Colorado/Canyon 1/T P.U. and Chassis-Cab

General Information ..... **See " Light Duty General Information" section**
Camper Loading ..... **See Online Order Guide – Light Duty Information**
Trailering Information ..... **See " Light Duty Trailering Information" section**
Model and Option Weights ..... **See Online Order Guide – Model & Option Weight-Weight Calculator**
BODY BUILDERS INSTRUCTIONS **1**
Section 0 General Instructions **1**
Section 1 Body **2**
Air Conditioning 2
Section 2 Frame **3**
Flanges 3
Holes 3
Welding 3
Alterations 4
Shear Plate Attachments 4
Section 3 Front Suspension **4**
Section 4 Rear Suspension **5**
Section 5 Brakes **5**
Section 6 Engine **6**
Section 7 Transmission **7**
Section 8 Fuel and Exhaust **8**
Fuel Systems 8
Fuel Lines 8
Fuel Tank 9
Exhaust System 9
Section 9 Steering **10**
Section 10 Tires **11**

BODY BUILDERS INSTRUCTIONS – (Continued)

Section 12 – Electrical Battery and Battery Cables 11

Accessory Power Supply Feed 12

Section 13 – Cooling 13

Model Symbol Chart 14

VEHICLE GENERAL ARRANGEMENT

1/T2M43 15

1/T2T43 16

1/T2M53 17

1/T2M53 18

PICKUP WEIGHT DISTRIBUTION

1/T2M43 (SWB P/U Crew Cab) 19

1/T2T43 (LWB P/U Crew Cab) 20

1/T2M53 (SWB P/U Ext. Cab) 21

1/T2M53 (SWB Ext.Cab w/ZW9) 22

BODY

EXTERIOR

Pickup: General Arrangement – 1/T2M43 23

Pickup: General Arrangement – 1/T2T43 24

Pickup: General Arrangement – 1/T2M53 25

Pickup: General Arrangement – 1/T2M53 (w/ZW9) 26

Cab – Crew (43) – H/L/W, Hood Opening, Rear Window 27

Door Swings – Extended Cab (53) 28

Door Swings – Crew Cab (43) 29

BODY, EXTERIOR — Continued

Cab, Rear Profile – Extended (53) 30
Cab, Rear Profile – Crew (43) 31
Hood Profile 32
Front End Sheet Metal 33
Pickup Box, Tie Down Loops, Bulkhead Dividers, Two Tier Loading, PU Box Top 34
Pickup Box, Tie Down Loops, Bulkhead Dividers, Two Tier Loading, PU Box Top 35
Pickup Box, Tie Down Loops, Bulkhead Dividers, Two Tier Loading, PU Box Top 36
Pickup Box, Tie Down Loops, Bulkhead Dividers, Two Tier Loading, PU Box Top 37

INTERIOR

Cab Interior – Extended Cab (53) 38
Cab Interior – Crew Cab (43) 39
Seating Positions (53) 40
Seating Positions (43) 41

CHASSIS

FRAME AND CROSSMEMBER ARRANGEMENT

Frame and Crossmember – 1/T2M43 (SWB P/U Crew Cab) 42
Frame and Crossmember – 1/T2T43 (LWB P/U Crew Cab) 42
Frame and Crossmember – 1/T2M53 (SWB P/U Ext. Cab) 43
Frame and Crossmember – 1/T2M53 (SWB Ext. Cab w/ZW9) 43

SPARE TIRE

Spare Tire Location (full size) T Truck 44

TRAILER HITCH

Factory Installed Trailer Hitch, Option VR4 45

AXLE SUSPENSION

Front Axle / Tire Data 46

Rear Axle / Tire Data 47

FUEL SYSTEMS

1/T2M43 & 1/T2T43 Gas 49

1/T2M43 & 1/T2T43 Diesel 50

1/T2M53 & (SWB Ext. Cab w/ZW9) Gas 51

1/T2M53 Diesel 52

EXHAUST SYSTEMS

Exhaust System 1/T2M43 (SWB P/U Crew Cab) Gas 53

Exhaust System 1/T2M53 (SWB P/U Ext. Cab) Gas 53

Exhaust System 1/T2T43 (LWB P/U Crew Cab) Gas 54

Exhaust System 1/T2 (43) (LWB) Gas 54

Tailpipe Locations 1/T2 LFX, LCV Gas 55

Exhaust System 1/T2 Diesel LWN 56

Tailpipe Locations 1/T2 Diesel LWN 57

Colorado/Canyon 1/T P.U. and Chassis-Cab

BODY BUILDERS INSTRUCTIONS

The Incomplete Vehicle Document (IVD) is supplied with each incomplete vehicle, and provides information that should be used by intermediate and final stage manufacturers in determining conformity to applicable Federal Motor Vehicle Safety Standards (FMVSS). The IVD also includes information which must be followed in order to ensure that Environmental Protection Agency (EPA) and California emissions certification requirements and NHTSA Fuel Regulations are met.

The Body Builders Manual contains information that may be used in addition to the IVD for any manufacturer making alterations to a GM complete/incomplete vehicle. No alteration should be made to the incomplete vehicle which either directly or indirectly results in any component, assembly or system being in nonconformance with any applicable Federal Motor Vehicle Safety Standard or Emission Regulation. Intermediate and final stage manufacturers should be familiar with all Federal Motor Vehicle Safety Standards and Emission Regulations and aware of their specific responsibilities as manufacturers.

For further assistance contact Upfitter Integration at: 1 (800) 875-4742, or go to our Web site at **"http://www.gmupfitter.com."**

Section 0 — General Instructions

Check for proper clearance between body members and chassis components which may in any way affect the reliability and performance of the vehicle by developing abrasion and wear points from moving parts or degradation from extreme environment or thermal exposure or may increase interior noise.

Check headlamp aim and all vehicle illumination systems for proper operation when the vehicle has been completed. Re-aim headlamps when necessary. Check for proper operation of windshield washer, wipers and defroster system.

Extreme care must be taken when working on vehicles equipped with Powertrain Control Module (PCM), Body Control Module (BCM) or any electronic unit associated with an inflatable restraint system. (See Owner's Manual).

If arc-welding is employed on the chassis, precautions must be taken to protect all vehicle components, especially brake, fuel lines and fuel tank assembly, electrical wiring and ECM/PCM/TCM or BCM. To avoid electronic component damage, disconnect battery (batteries); disconnect the negative cable first, followed by the positive. To reconnect cables; connect the positive first, then the negative.

When welding components to the frame assembly, remove the wax coating in the area of the weld in order to obtain secure welds. After completion of the weld, a compatible corrosion protection should be applied to the affected weld areas.

All labels on the vehicle (any message applied to the vehicle or vehicle component that informs, instructs, or warns) must appear on the completed vehicle so the user can read them easily and without obstruction.

Service and service replacement parts for your add-on systems may not be available from a GM dealer. Those installing aftermarket systems should provide information as to where and how to obtain service.

Section 1 — Body

Body structures, interior and accessory arrangements must be designed into the vehicle to provide for proper load distribution on both axles and not to exceed any gross axle weight ratings. Lateral load equalization must also be maintained. The resultant Center of Gravity of the unladen vehicle must be within the limits tabulated in the FMVSS 105 section of the Incomplete Vehicle Document.

Body insulation provided by General Motors should not be removed. This includes any thermal or underbody heat shields. This insulation is provided to protect the vehicle body and occupants from excessive heat and/or provide noise attenuation. Any replacement material internal to the occupant compartment must be certified for MVSS standard on flammability. Areas of specific concern, but not limited to, are:

- Underbody exhaust, muffler and tail pipe shields and insulators.
- Front floor interior insulation.
- Dash mat insulation.
- Engine cowl insulation – interior and exterior.

If body builder installs seating other than that supplied with vehicle, it is the body builder's responsibility to ensure that the seating and restraint systems comply with FMVSS requirements. The restraint systems supplied with the vehicle were designed to accommodate the seating reference points and seat travel of the original equipment seats only.

Air Conditioning

For additional information refer to ***Engine – Section 6.***

NOTE: Air conditioning systems using R-134A refrigerant are equipped with metric fittings to prevent interchange with R-12 refrigerant components. Do not interchange R-134A components, refrigerant oil or service equipment with R-12 components, refrigerant oil or service equipment.

Section 2 — Frame

Hole drilling, welding, modifications, or alterations to the frame assembly are the responsibility of persons performing these operations. These same individuals assume complete responsibility for frame assembly reliability, performance after alterations and compliance to applicable FMVSS requirements.

The following procedures and specific precautionary instructions are recommended for proper installation of special bodies and/or equipment on GM frames. Failure to follow these recommendations could result in serious damage to the basic vehicle.

Flanges

Do not drill holes in frame flanges.

Holes

Holes to mount brackets, supports, and out-riggers must be drilled in the vertical side rail web with the following restrictions:

- Material between edge of hole and inside of upper or lower flange must not be less than 37 mm (1.50 in.) for low carbon steel (36,000 PSI yield).
- The minimum edge distance between any two (2) holes must be larger than twice the diameter of the larger hole.
- No holes should exceed 20 mm (0.75 in.) in diameter.
- All holes should be drilled in the frame using appropriate drilling practice and safety precautions.

Welding

CAUTION: Fueltank and fuel lines must be drained and all vapors purged to ensure noncombustible mixture before any welding, brazing or soldering.

When welding low carbon steel side rails, crossmembers and brackets (32,000 or 36,000 PSI yield strength), emphasis is placed upon weld application techniques to avoid stress risers that may adversely affect frame operating stresses.

When welding is performed anywhere on the vehicle, precautionary measures should be taken to prevent damage to electrical system wiring or components. Prior to any welding, parts or components which could be damaged by excessive temperatures must be removed or adequately shielded; the battery cables should be disconnected at the battery. Also prior to welding, the area to be welded and surrounding area must be cleaned of all frame protective coating. After welding, when parts are cool, carefully inspect wiring and electrical components.

for shorts or other damage which could draw excessive currents and possibly cause an electrical system short when the battery is reconnected. Apply protective coating to areas where coating was removed.

Alterations

If the wheelbase is modified the alterer must take responsibility for compliance with affected motor vehicle safety standards and for warranty on items such as driveshafts, universal joints, center bearings and rear transmission tailshaft, transfer case and transmission case fractures, output shaft bushings, bearings, brakes, fuel systems and any other related component failures. Additionally, the customer must be alerted in the modifier's owner's manual that parts for the reworked area are not available through the General Motors service parts system.

Shear Plate Attachments

Attachments of shear plates should be accomplished by using existing manufacturing holes already available in the frame side rails. Manufacturing holes, normally 16 mm in diameter, are consistently placed along the frame side member in the center of the web on each frame.

When additional holes are required for shear plate attachment, they should be no larger than 20 mm (0.75 in.) in diameter. Holes are to be drilled no closer than 63.5 mm (2.5 in.) apart. For holes drilled forward of the rear axle, centers are to be no closer than 63.5 mm (2.5 in.) from the top or bottom flanges and no closer than 89 mm (3.5 in.) from any suspension attachments. For frame holes drilled rearward of the rear axle, hole centers are to be no closer than 51 mm (2.0 in.) from the top or bottom flange and no closer than 89 mm (3.5 in.) from suspension attachments.

No additional holes or notching of either top or bottom frame flanges is allowed.

Rear bodies or platforms added to the vehicle must utilize the released attachment points used by the pick-up box, along with fasteners of the same diameter. These are minimum requirements; additional fasteners are permissible.

Section 3 — Front Suspension

See chassis data information for clearances and assistance in calculating trim heights.

Since there is a large variation in completed vehicle front weight due to differences in body weight and equipment, the front suspension alignment must be checked and reset if necessary after the vehicle is completed. Caster and camber should be set with reference to the "A" dimensions.

See Truck Service Manual for complete alignment procedure, specifications and measurement of the "A" dimension under "Diagnosis and Front Alignment" section.

Section 4 — Rear Suspension

Clearance to body should be provided for the suspension, axle, driveshaft and tires under the following conditions: (1) Axle in full jounce against the metal-to-metal stop, (2) Axle at 4.5° roll with one side of axle in full jounce at the metal-to-metal stop and (3) Axle at design position. Allowance for the tire chain clearance shown on a maximum grown tire must allow for (1.66 in.) clearance to the sides of the tire and (2.5 in.) to the top of the tire. Be sure sufficient clearance is provided for suspension, axle and tire and wheel in full vertical travel (up and down).

NOTE: Notification to the consumer may be required in certain states if tire chains cannot be used.

Pipes, wiring, conduits and any other related components must not be placed where they cross the path of motion of the rear axle, driveshaft, axle brake pipes, hoses, spring or tires. Such crossing could result in rupture, wear through, or separation due to normal axle motion.

See chassis data information for additional clearances and for assistance in calculating trim heights.

Section 5 — Brakes

See Truck Service Manual for brake specifications.

Due to the critical nature of brake systems, anyone making modifications or alterations must assume complete responsibility for system reliability, performance and certification to FMVSS 105 or FMVSS 121.

It is mandatory that no change be made to the brake main cylinder location, brake pedal push rod length or pedal position.

Ensure that hydraulic brake system is free of air and hydraulic leaks. Bleed brakes if required, following procedures as outlined in truck chassis service manual. Ensure that vacuum booster system or hydroboost system is functional and free of leaks.

Check master cylinder fluid level and fill as necessary. (Refer to Owner's Manual).

Check power steering fluid level for models equipped with hydroboost brake. (Refer to Owner's Manual).

Added floor covering or carpeting must not restrict service or parking brake pedal travel from released position to full pedal travel.

No body part or chassis-mounted component may be located within 2.0 in. of brake hose routing in all wheel and axle positions. All exhaust system components must also have a minimum of 2.0 in. clearance to brake hoses in closest positions. (Be sure to account for brake hose travel with suspension).

Body builder is to verify that the brake warning switch is operative. The brake warning switch on models equipped with vacuum-hydraulic brakes is located adjacent to the master cylinder vacuum unit. This includes both the brake system differential pressure and parking brake actuator switch.

Section 6 — Engine

For additional information refer to ***Body – Section 1.***

Air conditioning and auxiliary belt-driven equipment installation recommendations:

No alterations or additions to the accessory drive belt system will be warranted on serpentine belt systems.

The serpentine belt type of drive is designed as a total system, incorporating a single poly-V belt and an automatic tensioner. In this type of system, degrees of pulley wrap, belt tension, and pulley alignment are very critical factors. Modification is not recommended.

In some single belt serpentine systems, belt tension is determined by the automatic tensioner and its position relative to the belt. No adjustment is required.

Due to the critical nature of the accelerator system, anyone making modifications or alterations assumes complete responsibility for system reliability, performance and compliance to FMVSS 124. Caution must be exercised so that the accelerator cable is properly routed. Specifications are as follows:

- Route cable to maximize all bend radii. In no case should bend radii be less than 3 in. (76 mm).
- Minimum distance from exhaust manifold to be 6.0 in. (150 mm), unless a heat shield is provided.
- Do not use accelerator cable or clips to route wires, harnesses or other cables. Cable sheath must be clipped so as not to pinch inner cable. Cable must not be loose in clip allowing sheath to move when accelerator pedal is applied and released.
- Cable must not be subjected to kinking or routing across any sharp edges.
- Cable routing must be perpendicular to the surface of the front-of-dash at the dash fitting. No objects or routings should force cable to have a bend at the dash fitting. Flexible components (hoses, wires, conduits, etc.) must not be routed within 2.0 in. (50 mm) of moving parts or accelerator linkage unless routing is positively controlled.

- Caution must be taken so that the accelerator pedal remains properly located. Guidelines for accelerator pedal locations are as follows:
  - — Ensure that the accelerator can freely operate from idle to wide-open throttle position and return. Make sure that the pedal will not hang up on any nearby items such as carpets, floor, screws, wiring harnesses, etc. Engine cover should have at least one inch (25 mm) clearance to side of accelerator pedal with the carpet mat installed.
  - — Accelerator to brake pedal relationship has been designed to provide minimum driver movement and should not be altered in any way.

Gasoline engine induction and/or ignition system is certified in compliance with the Federal Vehicle Emission Standards. Any alterations to the systems or components could void compliance and render the vehicle illegal. System includes:

- Fuel system – throttle body and port fuel injection (PFI) or sequential central port injector (SCPI) and associated tubes, hoses and pipes, air cleaner outside air hose, mass air flow sensor, fuel pump and inlet manifold, fuel vapor canister.
- Exhaust system.
- Ignition system distributor and initial spark timing setting, spark plugs, spark plug wires.
- Crankcase ventilation system.

Section 7 — Transmission

Light duty models equipped with manual transmission have a clutch-operated start safety switch. Starter should operate whenever the ignition is turned to start and the clutch is fully depressed. Readjust if necessary as outlined in the Truck Service Manual.

Models equipped with automatic transmissions have a steering column mounted neutral/park start safety mechanical lockout feature, which interfaces with the steering column ignition switch. Starter should operate only when gear shift lever is in neutral or park position. Readjust the shift linkage or neutral start backup switch if necessary as outlined in the Truck Service Manual.

Models equipped with manual transmission use a hydraulic clutch actuator. Check fluid level as outlined in the vehicle owner's manual.

It is mandatory that no change be made to the clutch master cylinder location, clutch master or slave cylinder push rod length, or pedal position.

Section 8 — Fuel and Exhaust

Fuel Systems

Due to the critical nature of sealing the fuel system, anyone making modifications or alterations to the existing system must assume complete responsibility for the system reliability, performance and compliance to FMVSS 301.

The fuel evaporative emission control equipment is certified to be in compliance with the Federal and California Vehicle Emission Standards. Any alterations to systems or components and their location could void compliance. System includes but not limited to:

- Fuel tank, metering unit, lines including purge control solenoids and canister or canisters.

For these reasons, **NO ALTERATION OF THE FUEL SYSTEM IS RECOMMENDED.**

Fuel Lines

Fuel line routing precautions:

- 12 in. minimum clearance to exhaust system is required or a metal shield must be provided.
- Fuel lines should be clipped to chassis to prevent chafing. Metal clips must have rubber or plastic liners.
- Use corrosion resistant steel tubing with short sections of approved hose to connect components. Steel tube ends should be beaded for hose retention. Fuel supply is pressurized by an in-tank pump for PFI and SCPI systems. Coupled hose or nylon quick-connects must be used. Clamped hose is not acceptable for PFI and SCPI systems.

All engines require a fuel return system which returns excess fuel from the injection pump and injector nozzles back to fuel tanks. Care should be taken that these lines are not blocked nor their hoses pinched.

All gasoline engine vehicles are equipped with fuel evaporative emission control equipment which is certified to be in compliance with the Federal or applicable California vehicle emission standards. Alterations to fuel tank and metering unit, lines, canister or canisters, canister filters, canister purge control valves, relay switches, tank auxiliary vent valve, engine speed controller, or other devices/systems are therefore not allowable since vehicle adherence to C.A.R.B. and Federal regulations may be affected.

Fuel Tank

For vehicles with full frames, the tank must have a minimum clearance of 2 in. top, front, rear and sides to body and other supports.

Tank may be pressurized to 1.25 PSI maximum to check for final line leakage or for forcing fuel through the system. Pressures greater than this amount may be detrimental and affect tank durability.

The use of auxiliary fuel tanks is not recommended. If an auxiliary fuel tank is added, the alterer must take responsibility for compliance with affected motor vehicle safety standards.

Gasoline fueled vehicles are now equipped with a fuel pump return line. If an auxiliary tank is added, the tank selector valve must include a return port which returns fuel to the tank from which the fuel is being drawn.

In gasoline engines the fuel pump is located in the fuel tank. The battery must be disconnected before starting any work on the fuel system.

Conversions to gaseous fuel should be made in conformance with applicable Federal and State regulations. Removal of emission-control components, or the addition of gaseous fuel systems which could damage or reduce the longevity of those components and could also cause the mechanical and emission performance warranty to be voided.

Exhaust System

Particular care should be taken to prevent the possibility of exhaust fumes and carbon monoxide exposure to vehicle occupants in units completed by body builders. Holes and openings through the floor and all other parts of the body must be permanently and adequately sealed by the body builder to avoid exhaust intrusion into any occupant area. If it is necessary to change the exhaust outlet location, the exhaust discharge must be unobstructed and directed away from occupant areas. Alteration of the exhaust outlet or its position may increase exhaust noise and render the vehicle illegal in those areas with pass-by noise regulations. All vehicles > 10,000 lbs. GVWR come under Federal noise regulations, vehicles: ≤ 10,000 lbs. GVWR are regulated by various state and local regulations of the Environmental Protection Agency; see those regulations for rules, test procedure and noise levels permitted.

Tail pipe outlet location must be tested statically and with the vehicle in motion to ensure that exhaust gases do not penetrate side or rear windows or underbody seams and holes. Auxiliary power plants should also be tested under the same conditions. Tail pipe exit ahead of rear wheels is not recommended.

Check for leaks in exhaust systems and repair as required.

Any exhaust joint which has been disassembled must have the exhaust gasket replaced and the fasteners torqued to specifications. Re-check exhaust system for leaks.

Exhaust temperatures can exceed 1600ºF under extreme operating conditions, with pipe surface temperatures slightly less than this. Extreme care must be used when placing body components in the proximity of the exhaust system so as not to exceed the rated temperature limits of the components. Due to variants in underbody configurations of the vehicles, we are not in a position to make recommendations on how to insulate or design components in the proximity of the exhaust system.

Each manufacturer must make temperature checks of critical areas of his vehicle and adjust his design accordingly, or provide shielding to ensure safe operation of his body components.

The same can be said for the engine compartment. Obviously there will be additional heat radiated from the engine. How much is retained in the area will depend on how well this area is ventilated in your individual designs. Here again, temperature checks of interior areas surrounding the engine should be made to determine if your insulation is adequate. This is the same engineering practice we have followed on our complete vehicles incorporating these exhaust systems.

Exhaust system materials are selected and tested to withstand the operating environment of the vehicle. ***Do not modify the exhaust system in any way***. The tail pipes are made of 409 aluminized stainless steel.

Heatshields are mounted to the underbody and/or exhaust system components (catalytic converter, muffler and tail pipe). Shields for the propshaft hanger bearings are also provided in some vehicles.

Section 9 — Steering

Check power steering fluid level and system operations. (Refer to Owner's Manual).

The power steering hydraulic system should not be used to drive any other accessories.

Steering wheel and horn pad must not be altered or replaced.

The steering column mast jacket must not be altered.

Section 10 — Tires

Check wheel lug nuts for proper torque; specifications are provided in the Owner's Manual.

Substitution of tires of greater capacity than those offered as original equipment by vehicle manufacturer is not approved for use on original equipment wheels. Any usage of higher capacity tires must be accompanied by higher capacity wheels. However, the wheel offset and distance from centerline of rim to wheel mounting face must be the same as the replaced original equipment wheel to ensure proper wheel bearing loading and clearance of tires to body and chassis components.

Increasing tire and wheel capacity does not necessarily increase vehicle GVW ratings. It is recommended that tire chain clearance guideline, J683, from the Society of Automotive Engineers be adhered to in designing rear wheelhouse clearance.

Check tires and inflate to recommended tire pressure according to the tire pressure information provided in Owner's Manual and tire inflation label provided with vehicle.

Any substitution of tires may affect Speedometer/Odometer accuracy.

Section 12 — Electrical Battery and Battery Cables

The vehicle battery should be located and positioned to make use of the existing battery cables. If the battery requires relocation and longer cables are required, a proportionately larger gauge wire must be used. If in relocating the battery the negative ground cable is attached to frame rail, a cable of similar gauge be provided between the frame rail and the engine. This is required due to the heavy electrical loads imposed by the starting circuit. To ensure proper operation of the battery cables the following chart on length, gauge and materials must be strictly adhered to:

Combined length of positive and negative	
Cable Gauge	**Cable in Inches (Copper)**
4	66
2	107
0	170

If the battery is remotely mounted (other than in the engine compartment) the 'sense' circuit in the generator regulator shall be used. The sense circuit consists of a 7.76 OHM 1/4 watt resistor connected in series between the 'S' terminal of the generator and the B+ terminal of the battery.

Modifications/add-on wiring must be carefully reviewed to ensure compatibility with the base vehicle wiring by reviewing system schematics, wire routing paths, harness connections, etc. Due to the wide range of modifications that may be required for vocational needs, it is not feasible for the O.E.M. to take into account all potential revisions. For this reason, any person modifying existing vehicle wiring must assume responsibility that the revisions have not degraded the electrical system performance. Any add-on wiring must be properly fused and routed to prevent cut, pinch, and chafe problems, as well as avoid exposure to excessive heat. Care must be exercised that existing vehicle interfaces do not have their current load capabilities exceeded, and that the respective control devices are not overloaded. Added wire size should be at least as large as the wire to which it is attaching in order for fuse protection to be maintained.

A Packard electric wiring repair kit is available through Kent-Moore (GM P/N 12085264, Kent-Moore P/N J38125-4). This kit contains instructions, tools and components for making repairs to wiring harness components. This kit would also greatly assist in accomplishing necessary add-on wiring such as body marker lamps, so that system reliability/durability is maintained.

Electrical wiring components can be obtained through your authorized GM dealer. Many Packard Electric components are also available through Pioneer Standard Company (1 800-PACKARD). Pioneer may also be able to assist in making necessary wiring additions by providing custom wiring stubs or jumpers to your specifications.

Fusible Link Repair Procedure:

1. Cut damaged fusible link from wiring harness assembly splice.
2. Strip insulation from harness wire as required to splice on new fusible link.
3. Fabricate a new fusible link wire approximately 6 to 8 in. long from the same wire size as the original link. (Acceptable fusible link material will be imprinted with the wire size and the wording to identify it as fusible link. Fusible link cable is not the same as normal vehicle wiring.)
4. Terminate fusible link harness wire with a suitable compression splice clip, and solder with an electrical grade rosin core solder. Wrap splice area with tape to provide electrical insulation, as well as mechanical strain relief at the splice.
5. Strip, terminate, solder, and insulate remaining end of fusible link with appropriate termination to be compatible with the rest of the electrical system.
6. For further information, refer to the instruction manual in the wiring repair kit referenced elsewhere in this section.

Accessory Power Supply Feed:

For power requirements to service additional devices to be added by body builder/upfitter, the power supply source must be at the junction block on the front of dash above battery using the small on the left-hand side of junction block.

NOTE: A ground stud has also been provided above the junction block.

Section 13 — Cooling

To provide satisfactory engine cooling, the following conditions must be met:

1. Do not locate any large objects in front of the radiator core or grille such as batteries, spare tires, lights/sirens, etc. They restrict air flow into the radiator core and influence fan blade stress.
2. Grille opening, size configuration and the external baffles provided should not be altered in any manner. Any reduction in cooling ability may adversely affect engine/transmission performance.
3. Fan clutches not conforming to the original equipment specifications may not operate correctly and may stay “on” continuously, never come on, or cycle on and off excessively. This will result in a reduction of fuel economy, engine overheat at times, and annoying cycling respectively.
4. Continuous coolant flow is necessary from heater connection on engine-to-heater connection on radiator to control transmission oil temperatures during closed thermostat (warm-up) operation. Do not alter this flow as it may result in premature engine or transmission failure.
5. If a heater unit is not installed in the vehicle or a heater shut-off-valve is required, a line connecting the heater connection on the engine to the heater connection on the radiator must be installed. When a shut-off valve is required in heating system, it must be teed into the system in such a manner as to maintain continuous flow between engine heater connection-radiator heater connection at all times.
6. Use GM 6277M Long Life Coolant only.

Do not install any internal flow restrictors.

- Heater hose: 3-way or 4-way valves must be used to provide constant water flow through the intake manifold pad area.
- If in-line shut-off valve is used in combination with 3-way valves, shut-off valve must not be closed until 3-way valve at engine is in the proper position.

Valve Sources		
3	Red-White Valve Corp., Carson, CA	(213) 549-1010
	Ranco Controls Div., Delaware, OH	(614) 876-8022
4	Ranco Controls Div., Delaware, OH	(614) 876-8022

Be sure to add coolant to system after adding capacity to system (heaters).

Colorado/Canyon 1/T P.U. and Chassis-Cab

Model Symbol Chart

				TRUCK (Optional)		
ENGINEERING MODEL	**MODEL / MERCHANDISING DESCRIPTION**	**MODEL / MERCHANDISING DESCRIPTION**	**FRT/RR GAWR (kg/lbs)**	**GVWR (kg/lbs)**	**WHEELBASE (mm/in)**	**CAB-TO-AXLE (mm/in)**
1/T2T43		43 Crew Cab	1360.8kg/3200 lbs 1587.6kg/3500 lbs	2721.6kg/6000 lbs C5J	LWB (3568.7mm/140.5”)	43 (917.7mm/36.13”)
1/T2M	53 Extended Cab	43 Crew Cab	1360.8kg/3200 lbs 1587.6kg/3500 lbs	2721.6kg/6000 lbs (43)C5J 2676.2kg/5900 lbs (53)C4F	SWB (3258.8mm/128.3”)	53 (919.4mm/36.2”) 43 (608.0mm/23.94”)
1/T2T43 4WD		43 Crew Cab	1360.8kg/3200 lbs 1587.6kg/3500 lbs	2721.6kg/6000 lbs C4F	LWB (3568.7mm/140.5”)	43 (917.7mm/36.13”)
1/T2M 4WD	53 Extended Cab	43 Crew Cab	1360.8kg/3200 lbs 1587.6kg/3500 lbs	2721.6kg/6000 lbs (43)C5J 2676.2kg/5900 lbs (53)C4F	SWB (3258.8mm/128.3”)	53 (919.4mm/36.2”) 43 (608.0mm/23.94”)
1/T2M53 2WD (w/ZW9)	53 Extended Cab		1360.8kg/3200 lbs 1587.6kg/3500 lbs	2676.2kg/5900 lbs C4F	SWB (3258.8mm/128.3”)	53 (919.4mm/36.2”)

Colorado/Canyon 1/T P.U. and Chassis-Cab

1/T2M43

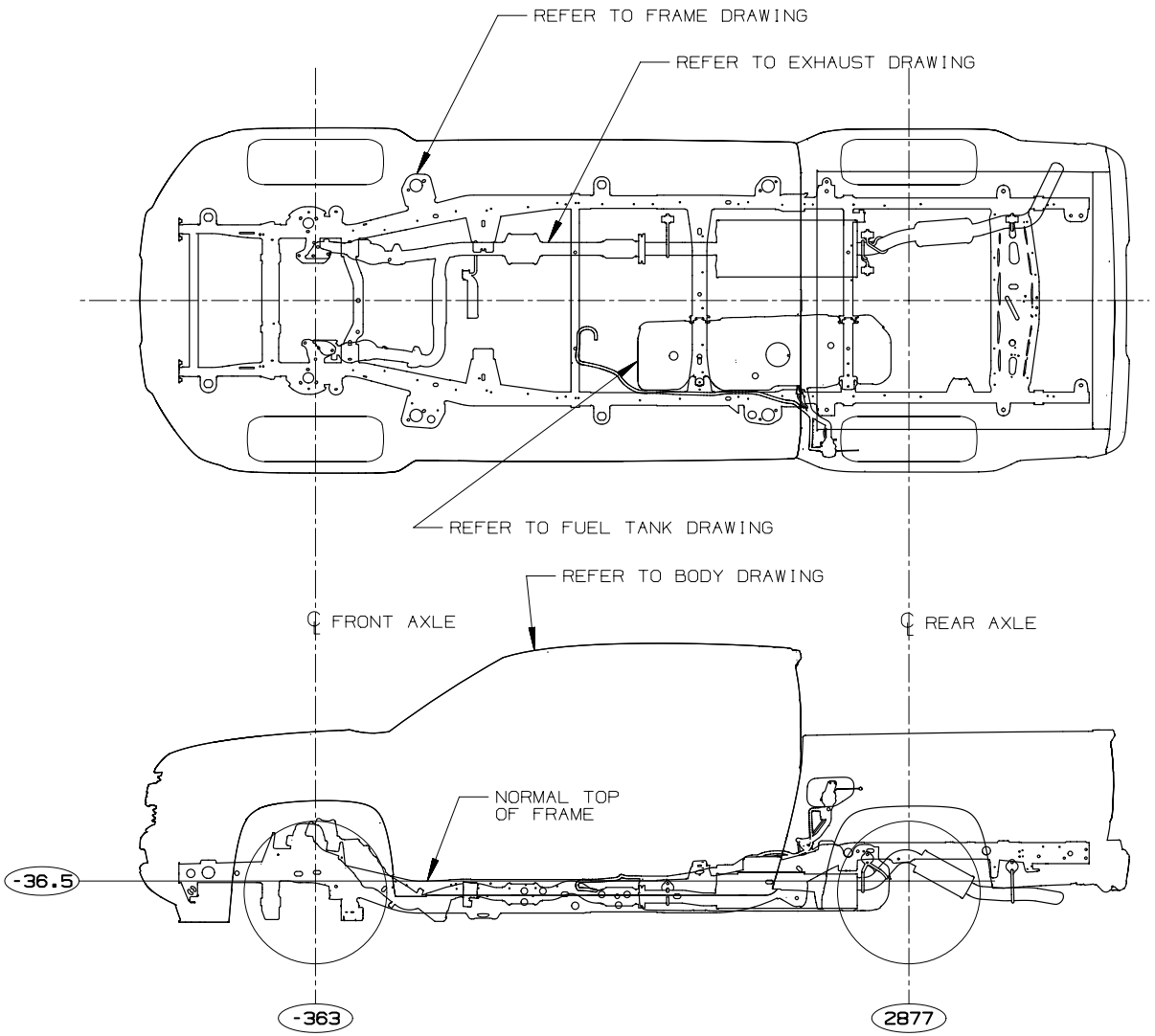

FOR: 1/T2M43 (SWB P/U CREW CAB) GENERAL ARRANGEMENT [ ] = INCHES TD006074.3

Colorado/Canyon 1/T P.U. and Chassis-Cab

1/T2T43

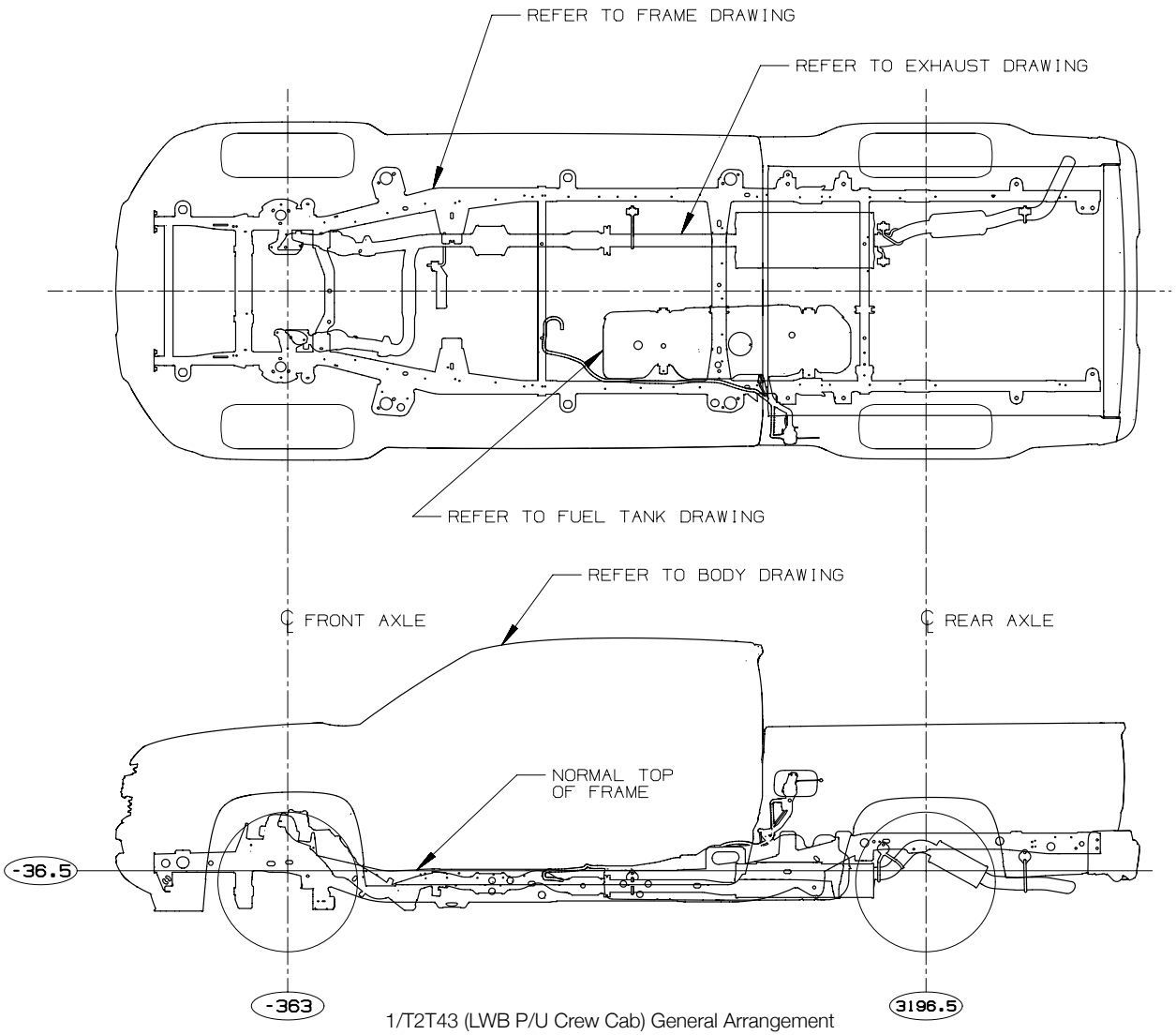

1/T2T43 (LWB P/U Crew Cab) General Arrangement

FOR: 1/T2T43 (LWB P/U Crew Cab) CREW CAB GENERAL ARRANGEMENT [ ] = INCHES TD006074.4

Colorado/Canyon 1/T P.U. and Chassis-Cab

1/T2M53

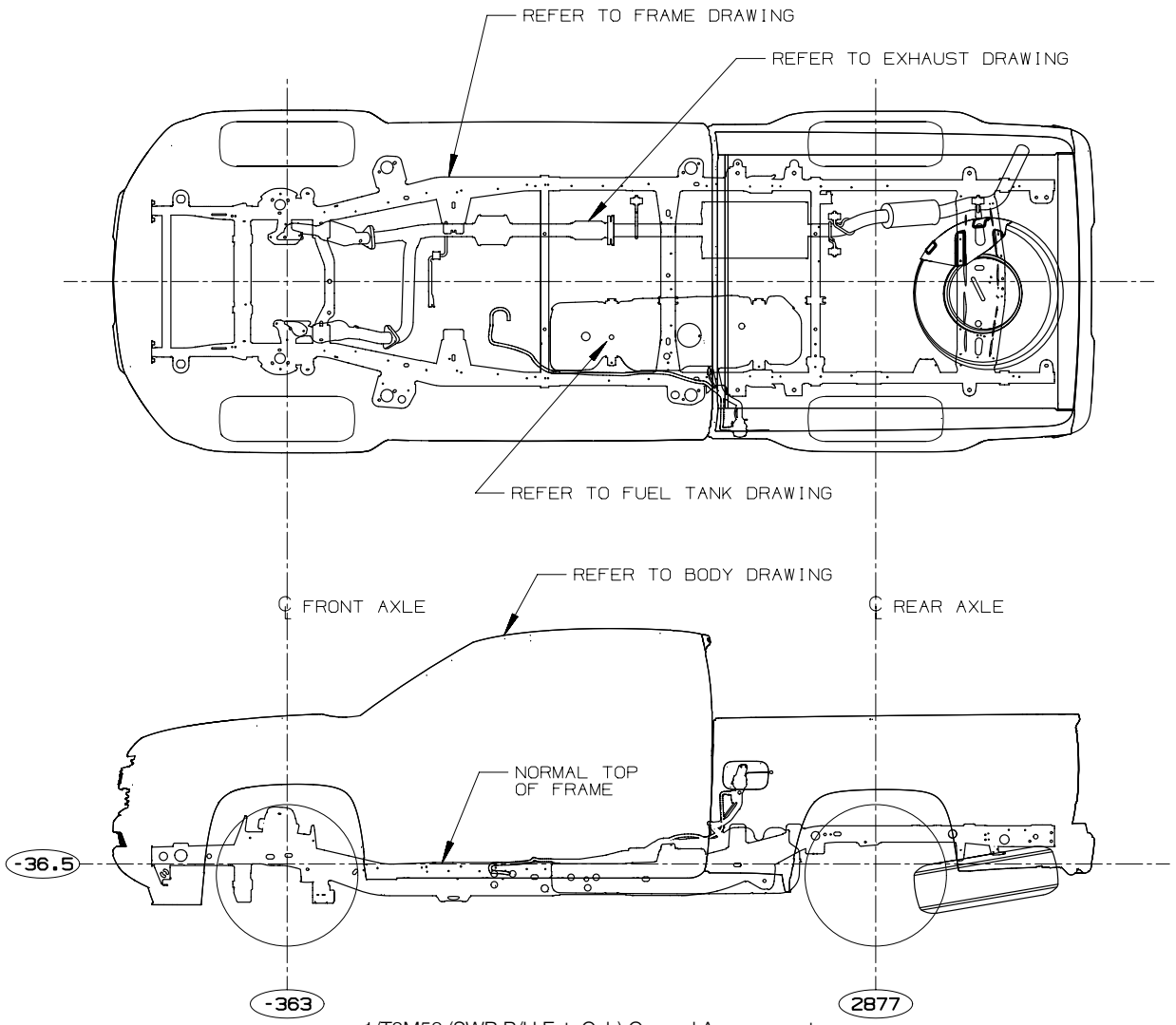

1/T2M53 (SWB P/U Ext. Cab) General Arrangement

FOR: 1/T2M53 (SWB P/U EXTENDED CAB) GENERAL ARRANGEMENT [ ] = INCHES TD006074.5

Colorado/Canyon 1/T P.U. and Chassis-Cab

1/T2M53

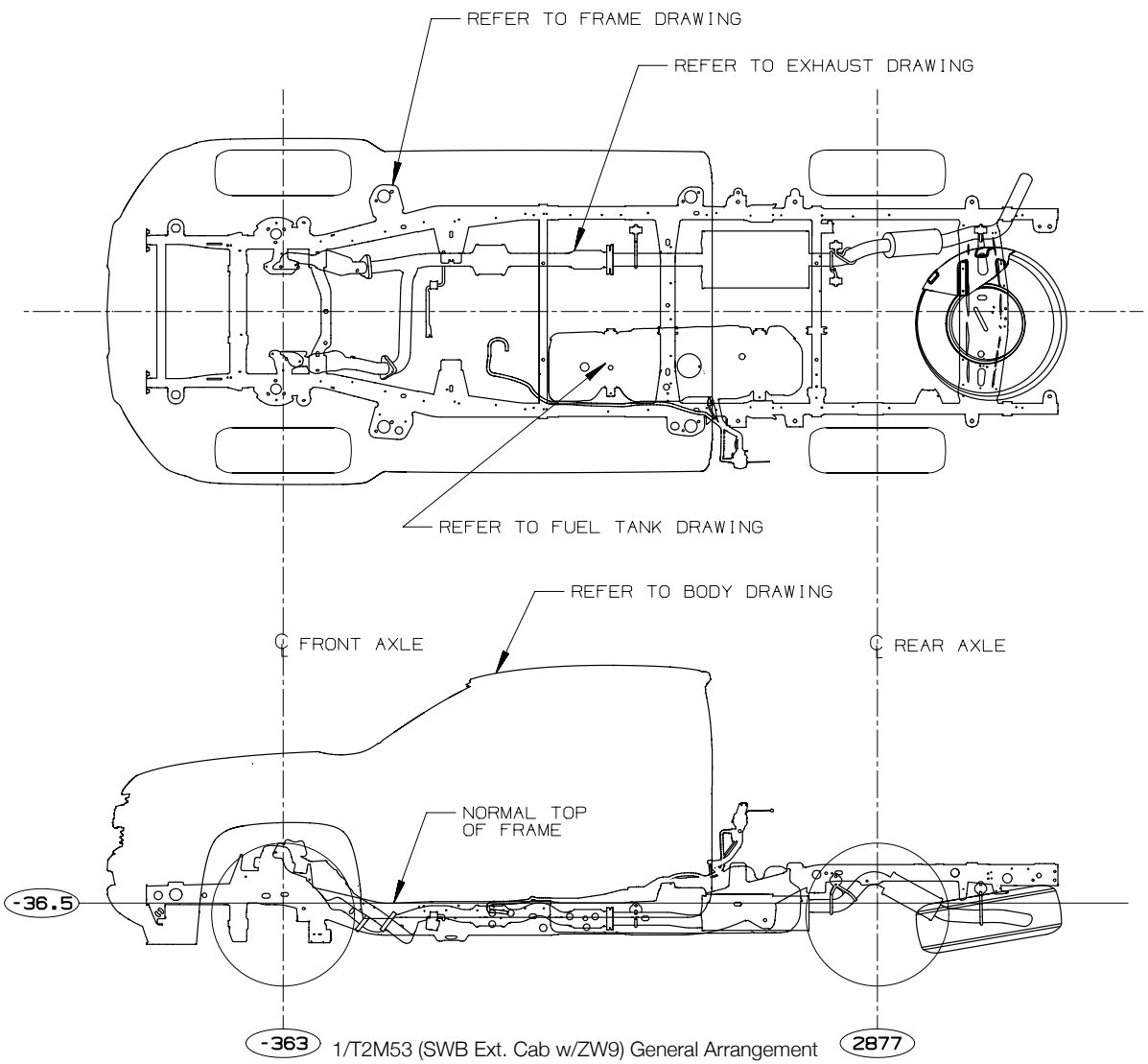

Colorado/Canyon 1/T P.U. and Chassis-Cab

Crew Cab Pickup – 1/T2M43

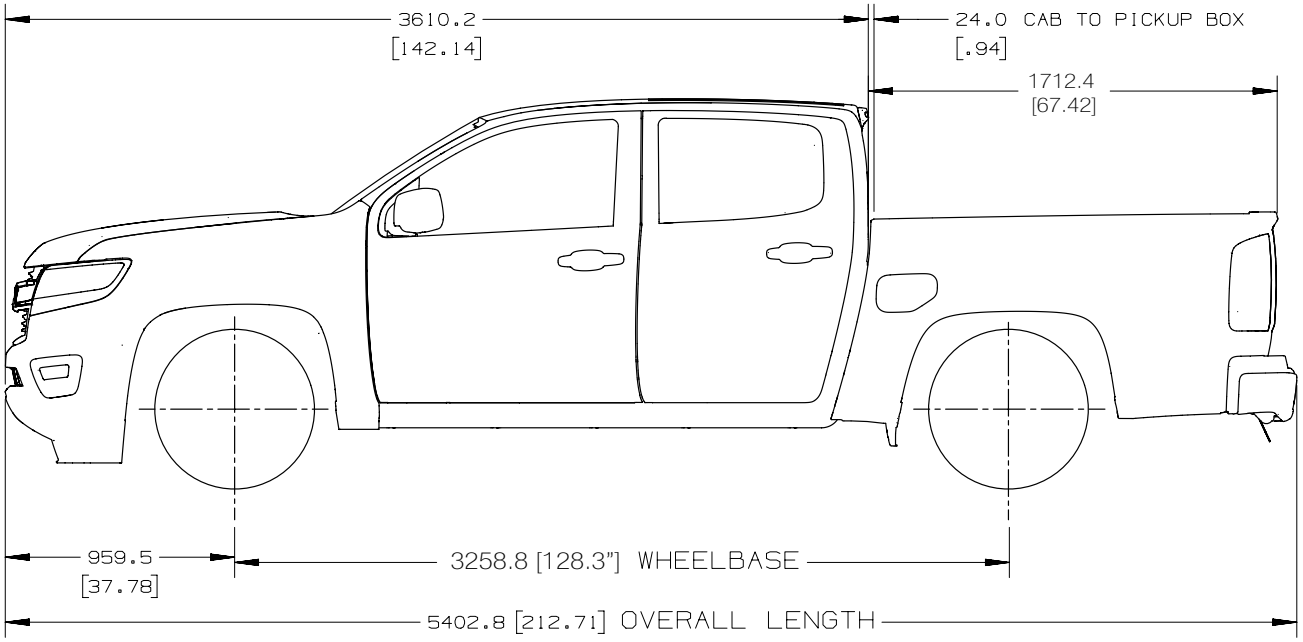

		CARGO WEIGHT DISTRIBUTION	
MODEL	WHEELBASE	% FRONT AXLE	% REAR AXLE
12M43	3258.8 [128.3"]	10	90
T2M43	3258.8 [128.3"]	10	90

NOTE: BODY LENGTH IS IN INCHES FOR EQUATION:

CA = CAB TO REAR AXLE DIMENSION
BC = BODY CLEARANCE BETWEEN BODY AND CAB
B = BOX LENGTH
WB = WHEEL BASE

$$100 \times \frac{\text{(CENTER OF GRAVITY OF PAYLOAD TO REAR AXLE DIMENSION)}}{\text{WHEEL BASE}} = \%\ \text{BODY AND PAYLOAD AT FRONT AXLE}$$

$$100 \times \frac{CA - [\,(BC) + B/2\,]}{\text{WHEEL BASE}} = \%\ \text{BODY PAYLOAD AT FRONT AXLE}$$

1/T 2M43,2015 PAYLOAD DISTRIBUTION

23NOV2013 AJW

[ ]=INCHES

TD006098.3

Colorado/Canyon 1/T P.U. and Chassis-Cab

Crew Cab Pickup – 1/T2T43

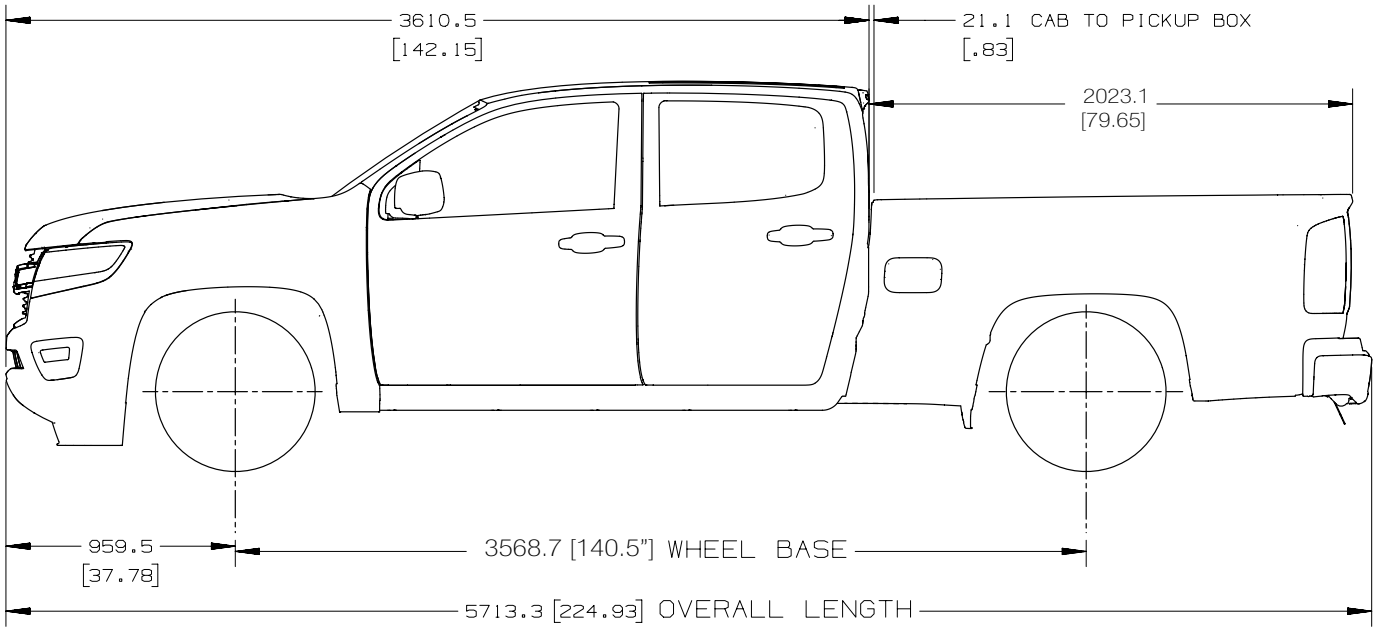

		CARGO WEIGHT DISTRIBUTION	
MODEL	WHEELBASE	% FRONT AXLE	% REAR AXLE
12T43	3568.7 [140.5"]	5	95
T2T43	3568.7 [140.5"]	5	95

NOTE: BODY LENGTH IS IN INCHES FOR EQUATION:

CA = CAB TO REAR AXLE DIMENSION
BC = BODY CLEARANCE BETWEEN BODY AND CAB
B = BOX LENGTH
WB = WHEEL BASE

$$100 \times \frac{\text{(CENTER OF GRAVITY OF PAYLOAD TO REAR AXLE DIMENSION)}}{\text{WHEELBASE}} = \%\ \text{BODY AND PAYLOAD AT FRONT AXLE}$$

$$100 \times \frac{CA - [\,(BC) + B/2\,]}{\text{WHEELBASE}} = \%\ \text{BODY PAYLOAD AT FRONT AXLE}$$

1/T 2M53, 2015 PAYLOAD DISTRIBUTION

23NOV2013 AJW

[ ]=INCHES

TD006098.4

Colorado/Canyon 1/T P.U. and Chassis-Cab

Extended Cab Pickup – 1/T2M53

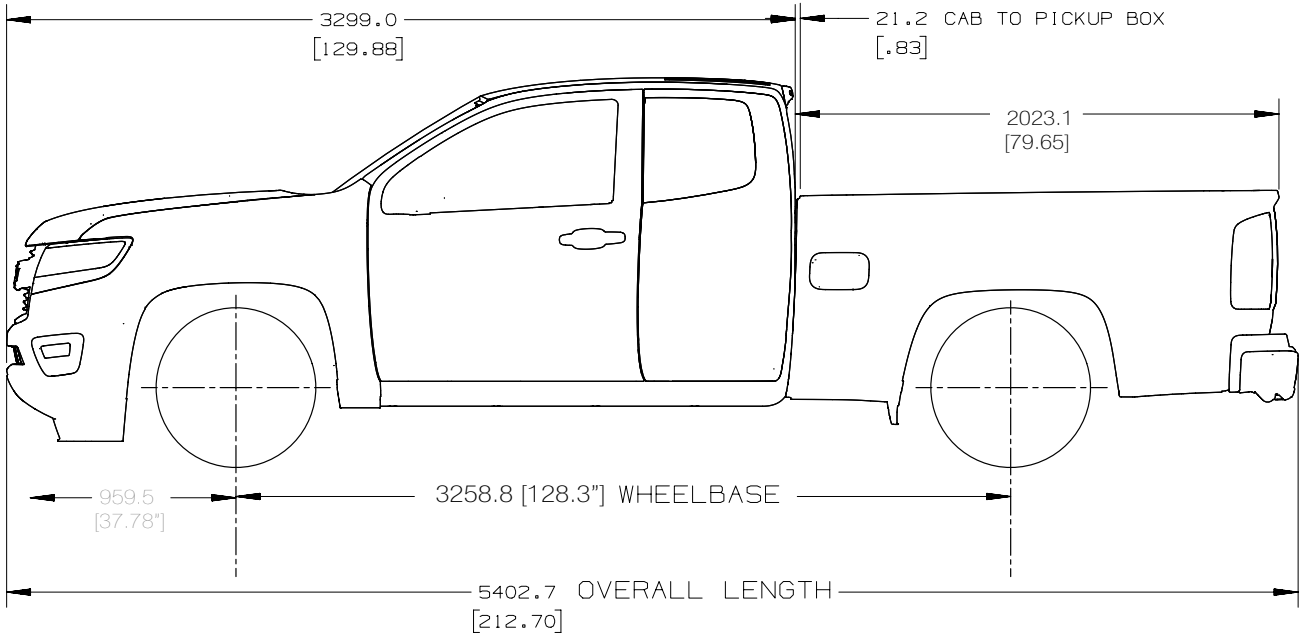

		CARGO WEIGHT DISTRIBUTION	
MODEL	WHEELBASE	% FRONT AXLE	% REAR AXLE
12M53	3258.8 [128.3"]	5	95
T2M53	3258.8 [128.3"]	5	95

NOTE: BODY LENGTH IS IN INCHES FOR EQUATION:

CA = CAB TO REAR AXLE DIMENSION
BC = BODY CLEARANCE BETWEEN BODY AND CAB
B = BOX LENGTH
WB = WHEEL BASE

$$100 \times \frac{\text{(CENTER OF GRAVITY OF PAYLOAD TO REAR AXLE DIMENSION)}}{\text{WHEELBASE}} = \%\ \text{BODY AND PAYLOAD AT FRONT AXLE}$$

$$100 \times \frac{CA - [\,(BC) + B/2\,]}{\text{WHEELBASE}} = \%\ \text{BODY PAYLOAD AT FRONT AXLE}$$

1/T 2M53, 2015 PAYLOAD DISTRIBUTION

25NOV2013 AJW

[ ]= INCHES

TD006098.5

Colorado/Canyon 1/T P.U. and Chassis-Cab

Extended Chassis-Cab – 1/T2M53

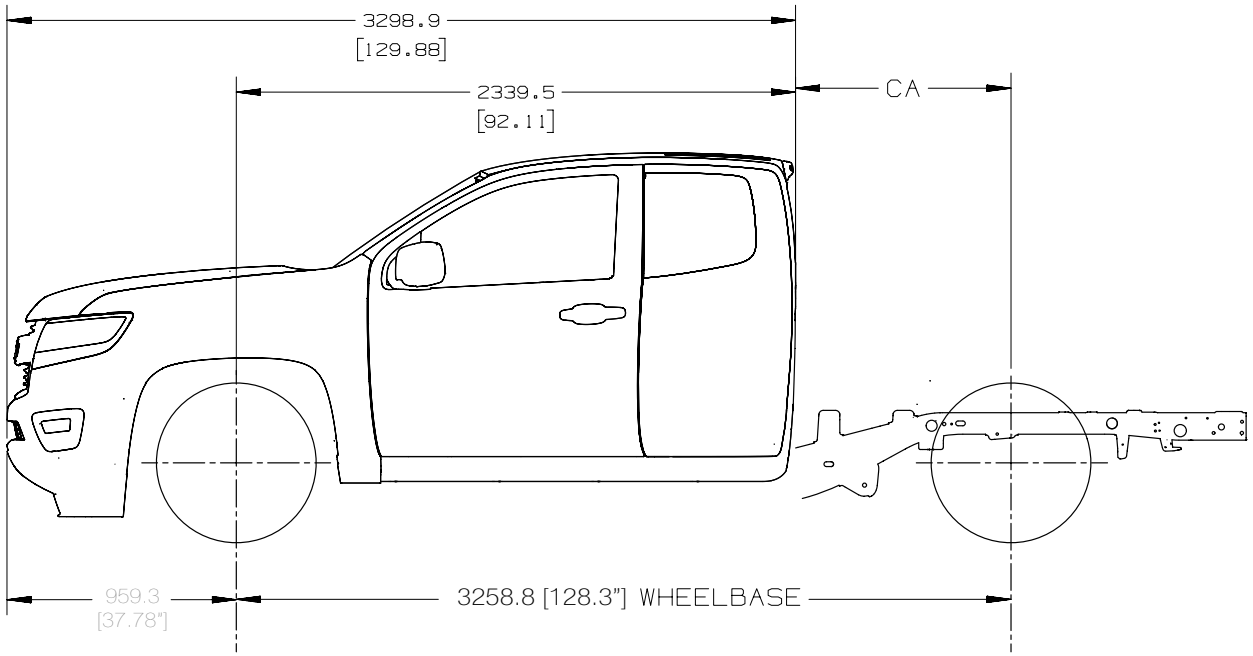

		BODY PAYLOAD DISTRIBUTION REGULAR CAB % FRONT/REAR AXLE		
			BODY LENGTH-FEET	
MODEL	WHEELBASE	CA	6	
12M53	3258.8 [128.3"]	919.48 [36.2"]	-0/100	
T2M53	3258.8 [128.3"]	919.48 [36.2"]	-0/100	

DIMENSIONS ARE SHOWN NOMINAL
ESTIMATES BASED ON EVEN DISTRIBUTION OF WEIGHT
PERCENTAGES ALLOW FOR [3.00] CB (CAB/BODY CLEARENCE)

$$\frac{\text{CA - CB - (1/2 X UPFIT BODY LENGTH)}}{\text{WHEELBASE}} = \%\ \text{BODY AND PAYLOAD WEIGHT AT FRONT AXLE}$$

[ ]= INCHES

TD006098.6

Colorado/Canyon 1/T P.U. and Chassis-Cab

Pickup General Arrangement – 1/T2M43

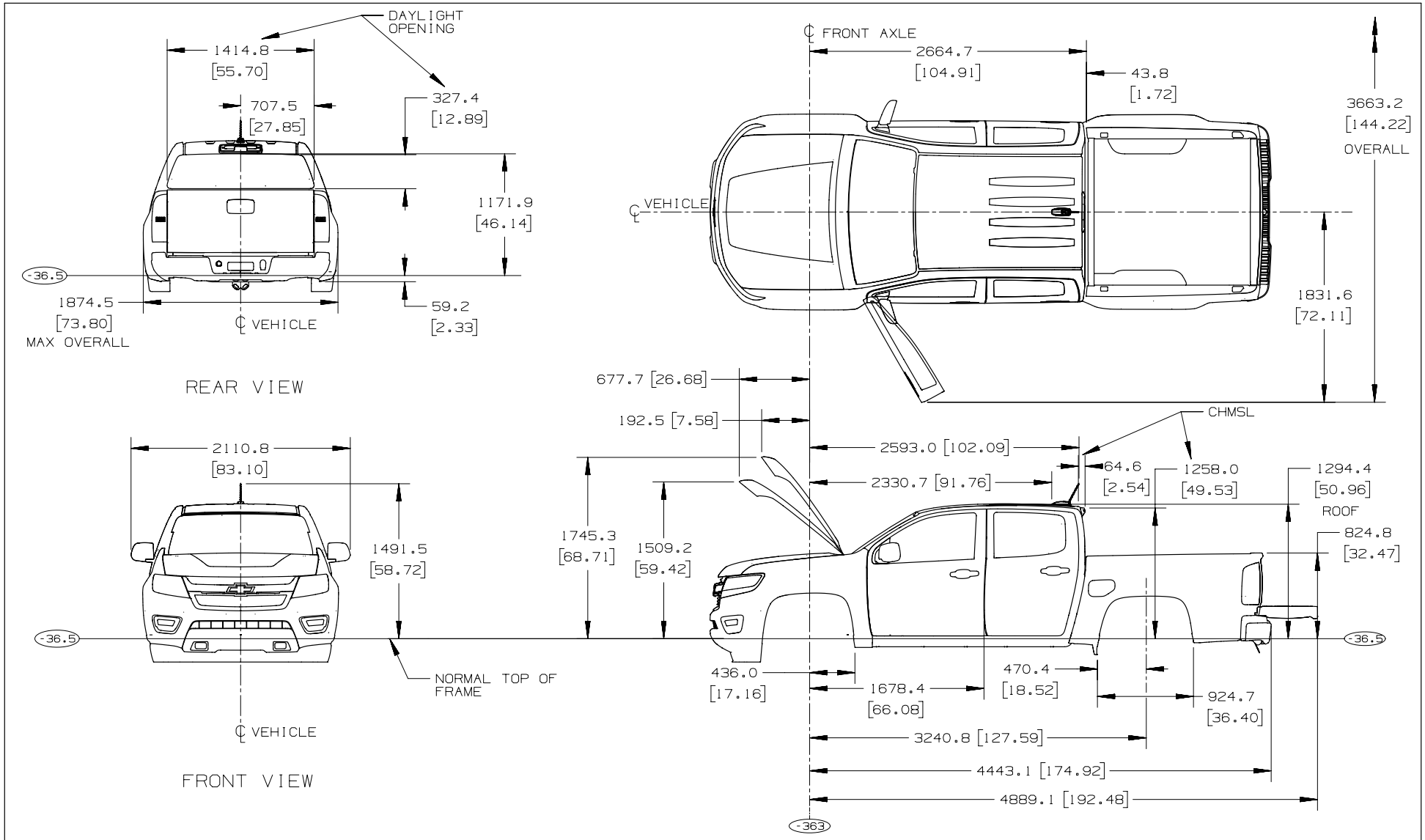

Colorado/Canyon 1/T P.U. and Chassis-Cab

Pickup General Arrangement – 1/T2T43

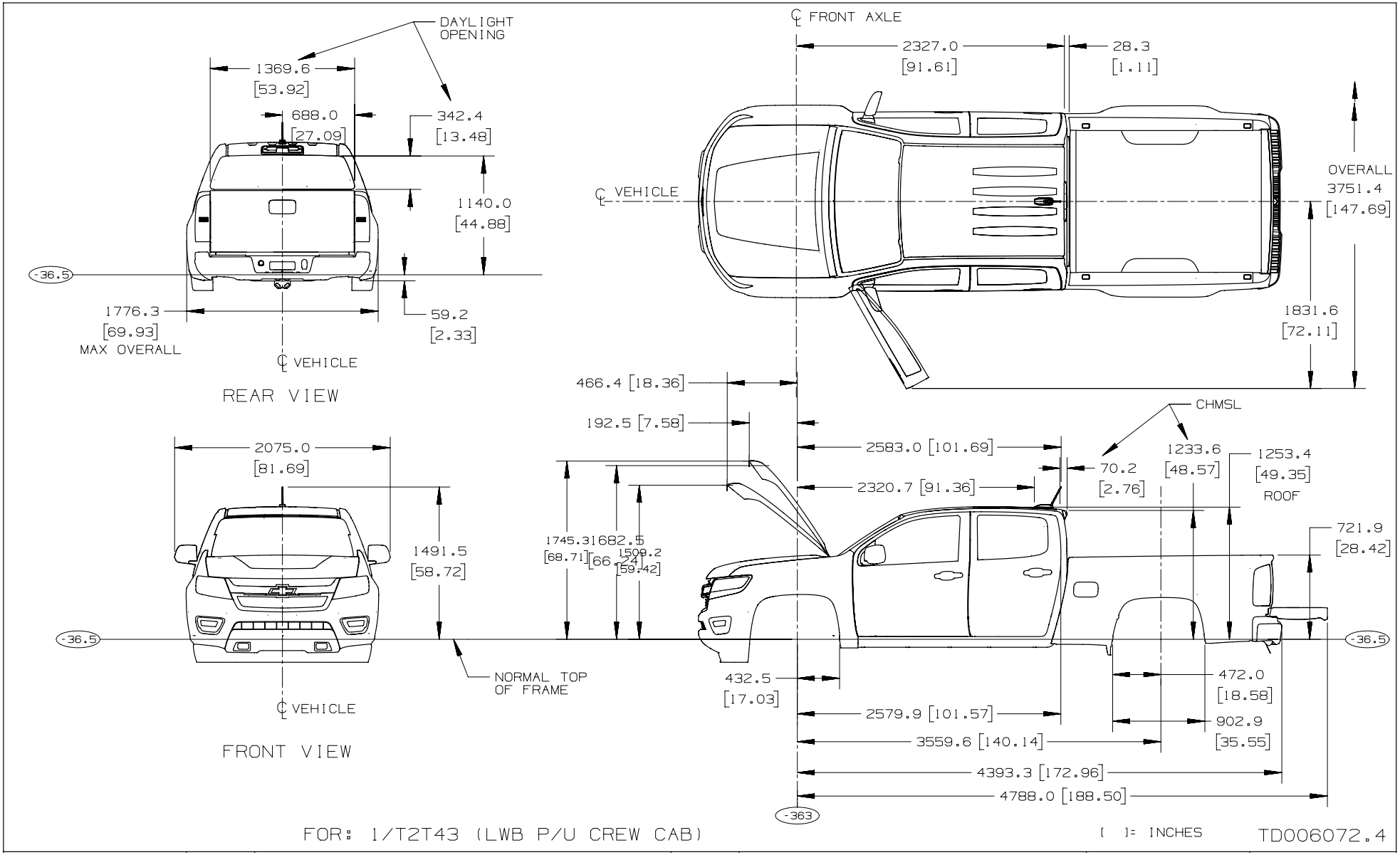

Colorado/Canyon 1/T P.U. and Chassis-Cab

Pickup General Arrangement – 1/T2M53

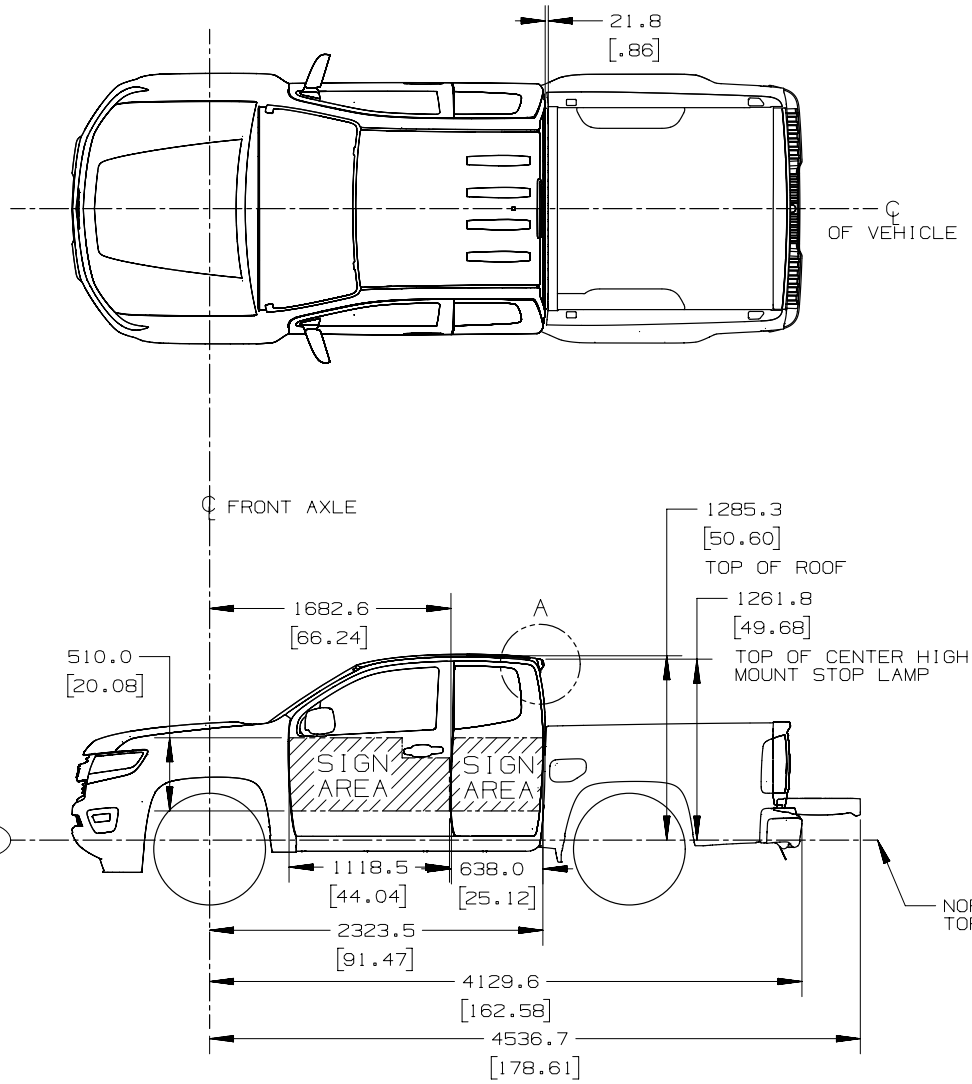

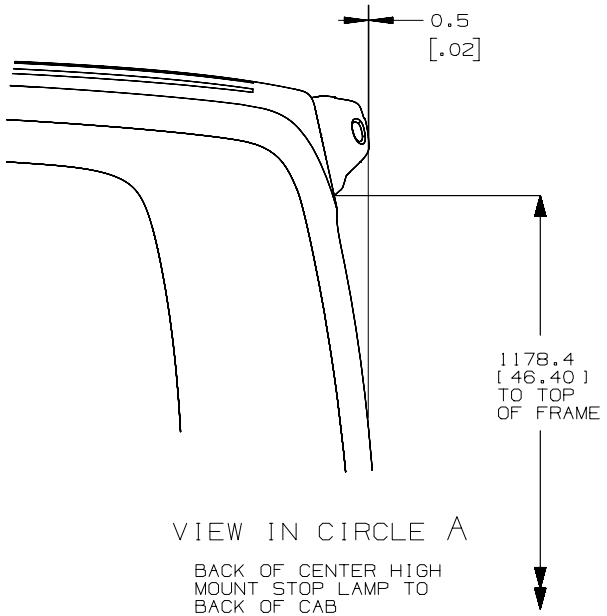

FOR: 1/T2M53 (SWB P/U EXT CAB EXTERIOR)

[ ] = INCHES TD006075.4

Colorado/Canyon 1/T P.U. and Chassis-Cab

Chassis-Cab: General Arrangement – 1/T2M53 (w/ZW9)

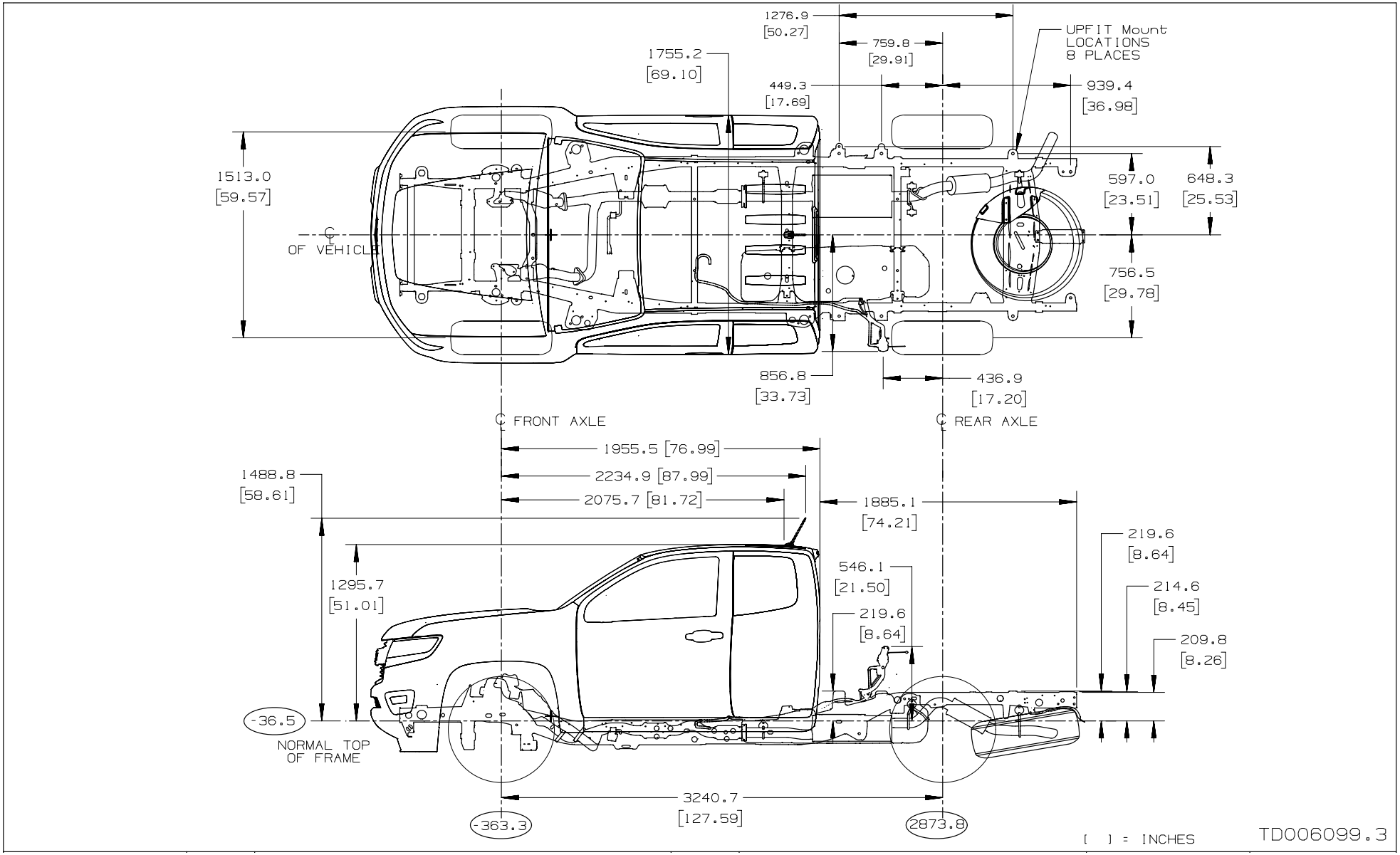

Colorado/Canyon 1/T P.U. and Chassis-Cab

Cab – Crew (43) – H/L/W, Hood Opening, Rear Window

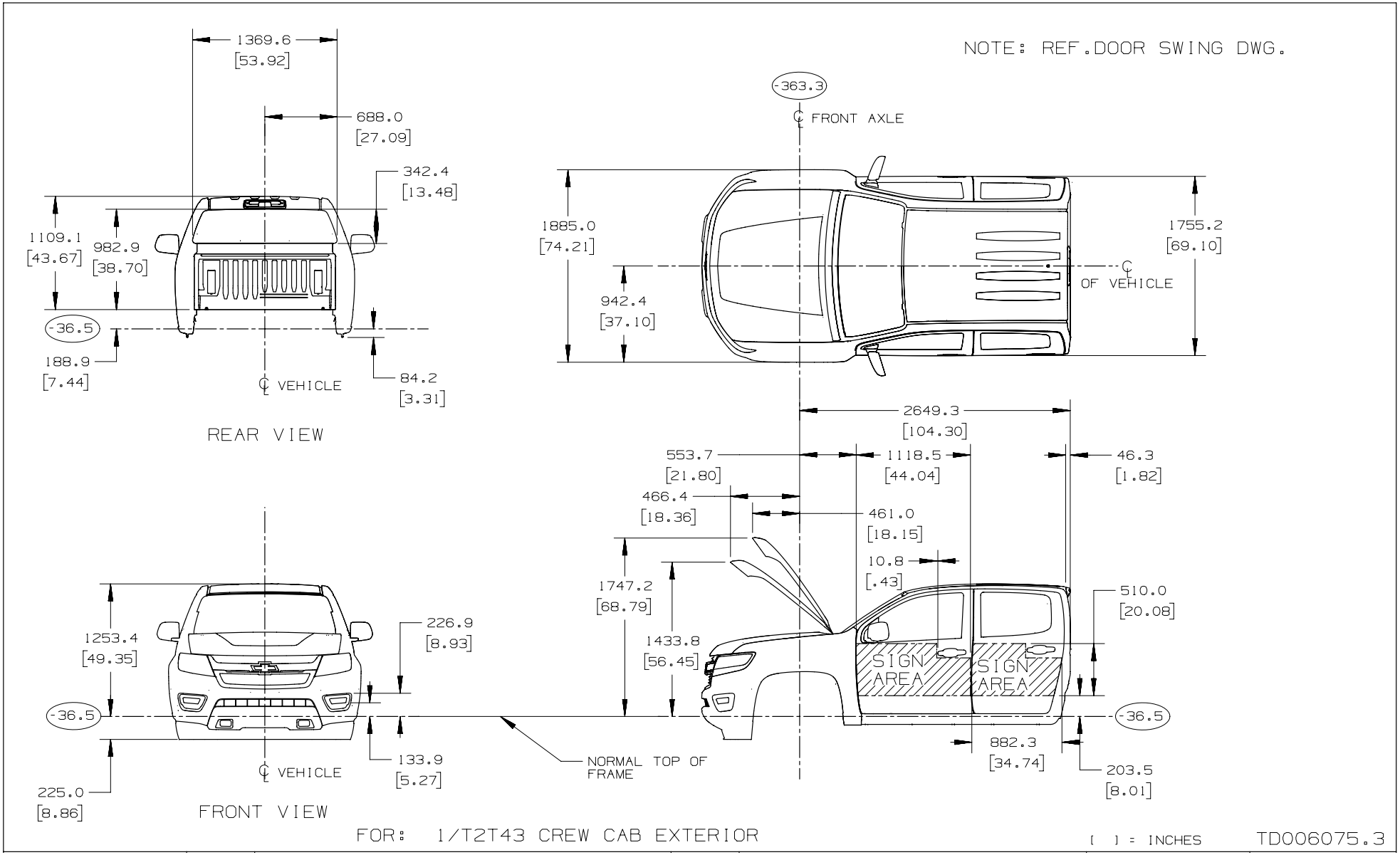

Door Swings – Extended Cab (53)

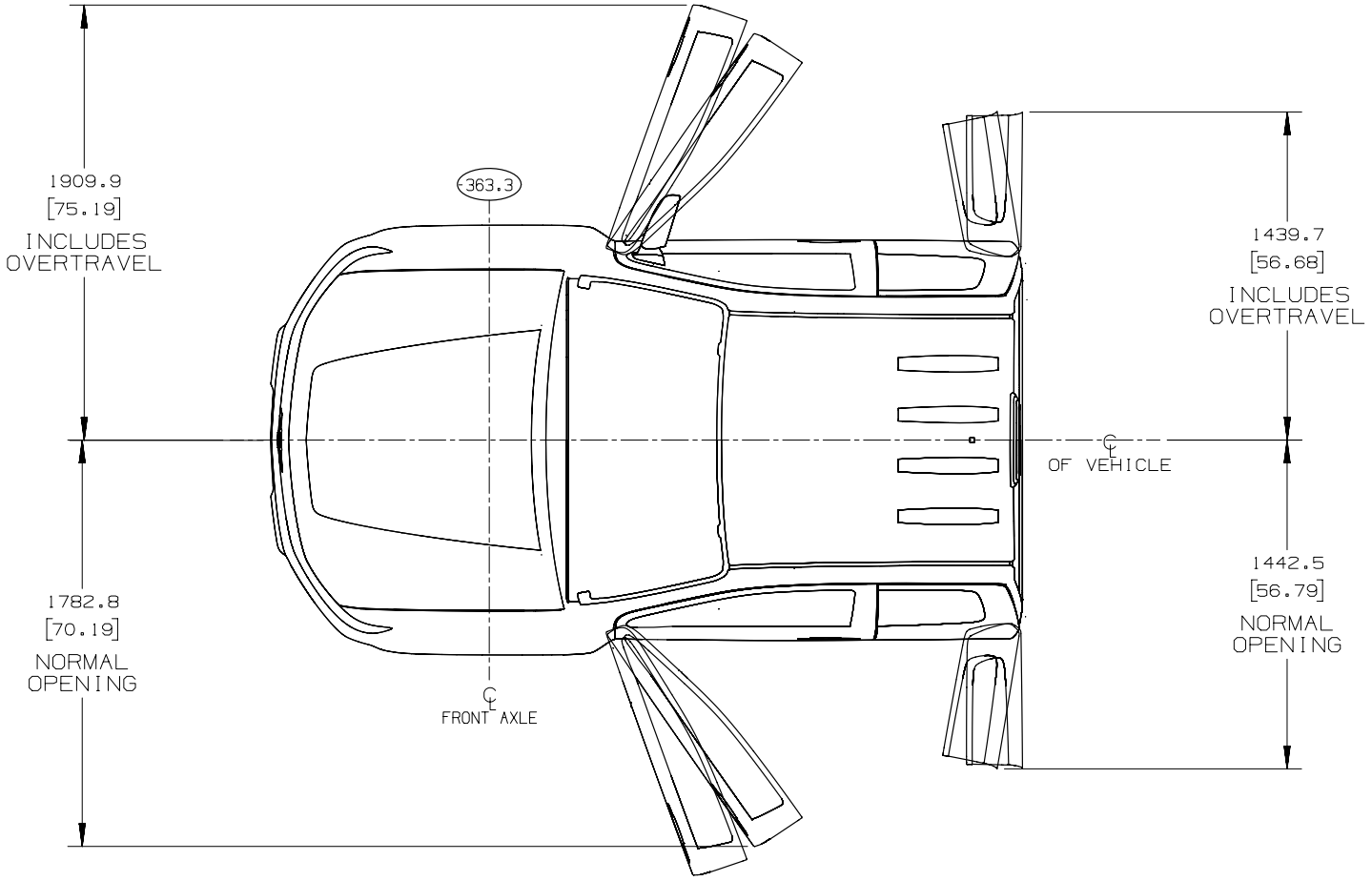

FOR: 1/T2M53 DOOR SWINGS

[ ]=INCHES

02DEC2013 AJW

TD006308.3

Door Swings – Crew Cab (43)

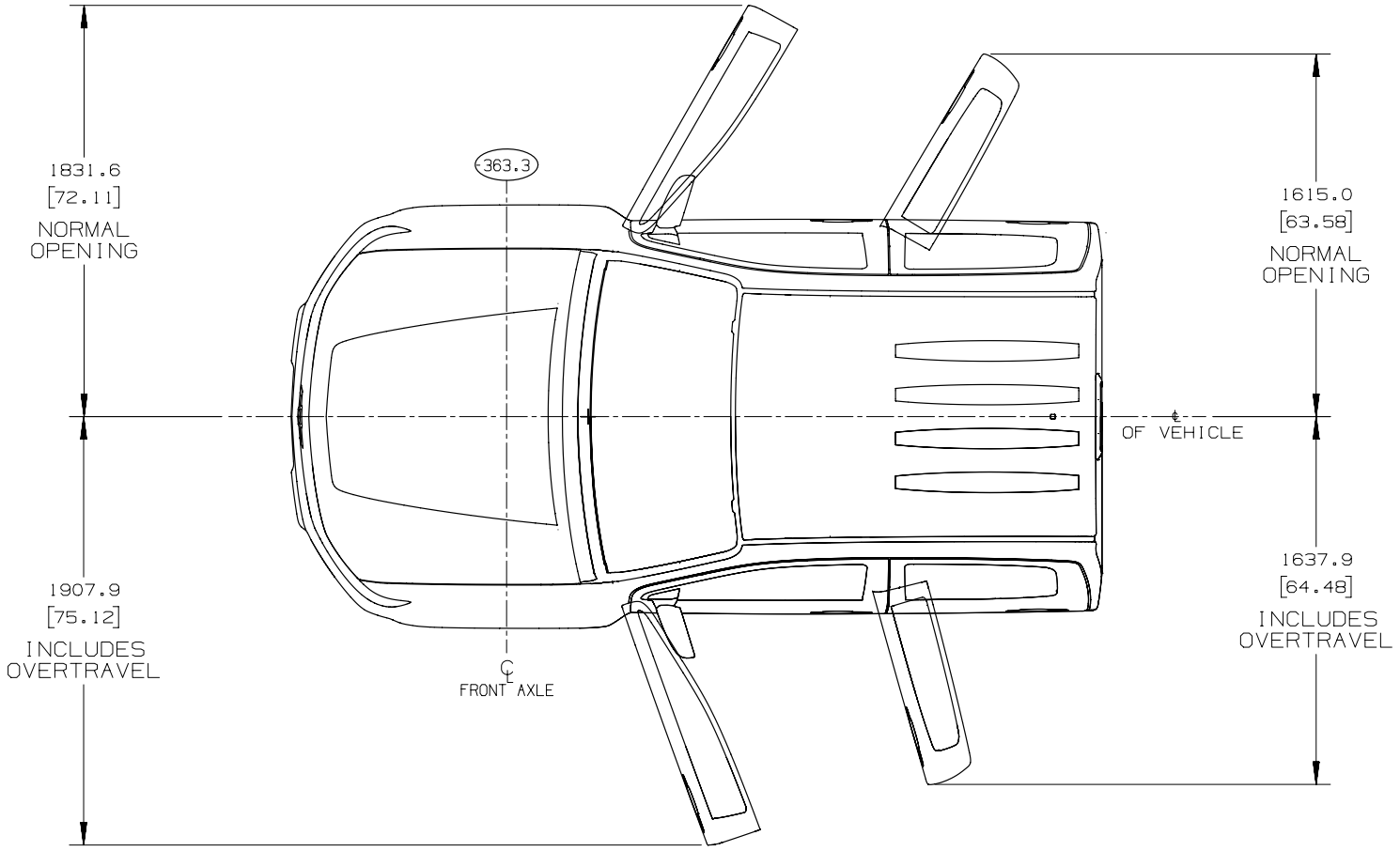

FOR: 1/T2T43 DOOR SWINGS

[ ]=INCHES

03DEC2013 AJW

TD006308.4

Colorado/Canyon 1/T P.U. and Chassis-Cab

Cab, Rear Profile – Extended (53)

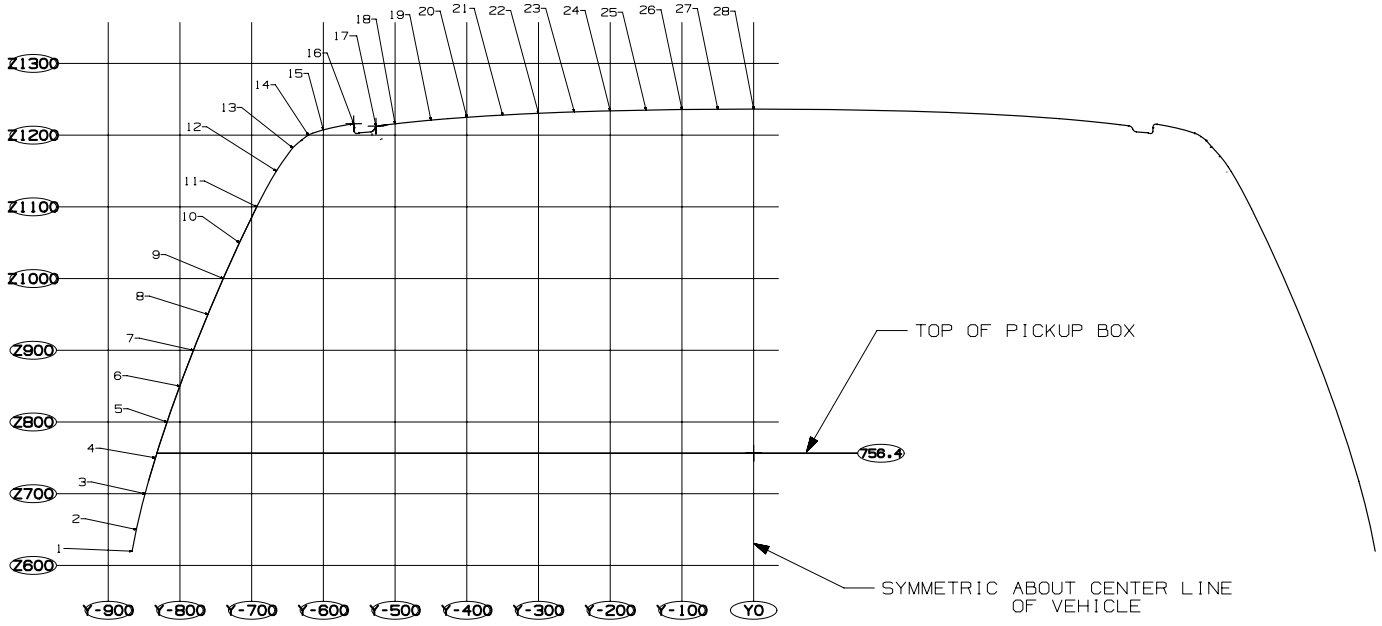

SECTION B-B

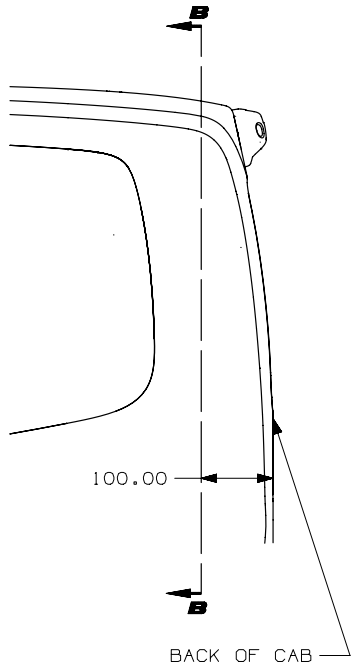

SIDE VIEW

DRIVER SIDE COORDINATES

PT#	WIDTH	HEIGHT
1	-866.72	619.80
2	-860.83	650.00
3	-848.69	700.00
4	-834.29	750.00
5	-818.07	800.00
6	-800.00	850.00
7	-781.29	900.00
8	-761.05	950.00
9	-739.66	1000.00
10	-717.06	1050.00

PT#	WIDTH	HEIGHT
11	-692.87	1100.00
12	-665.47	1150.00
13	-642.82	1182.33
14	-620.83	1200.00
15	-600.00	1207.36
16	-557.71	1215.95
17	-526.64	1212.53
18	-500.00	1215.80
19	-450.00	1220.92
20	-400.00	1224.93

PT#	WIDTH	HEIGHT
21	-350.00	1228.06
22	-300.00	1230.52
23	-250.00	1232.44
24	-200.00	1233.92
25	-150.00	1235.02
26	-100.00	1235.77
27	-50.00	1236.20
28	0.00	1236.34

12DEC2013 AW

[ ]=INCHES

TD006078.5

Colorado/Canyon 1/T P.U. and Chassis-Cab

Cab, Rear Profile – Crew (43)

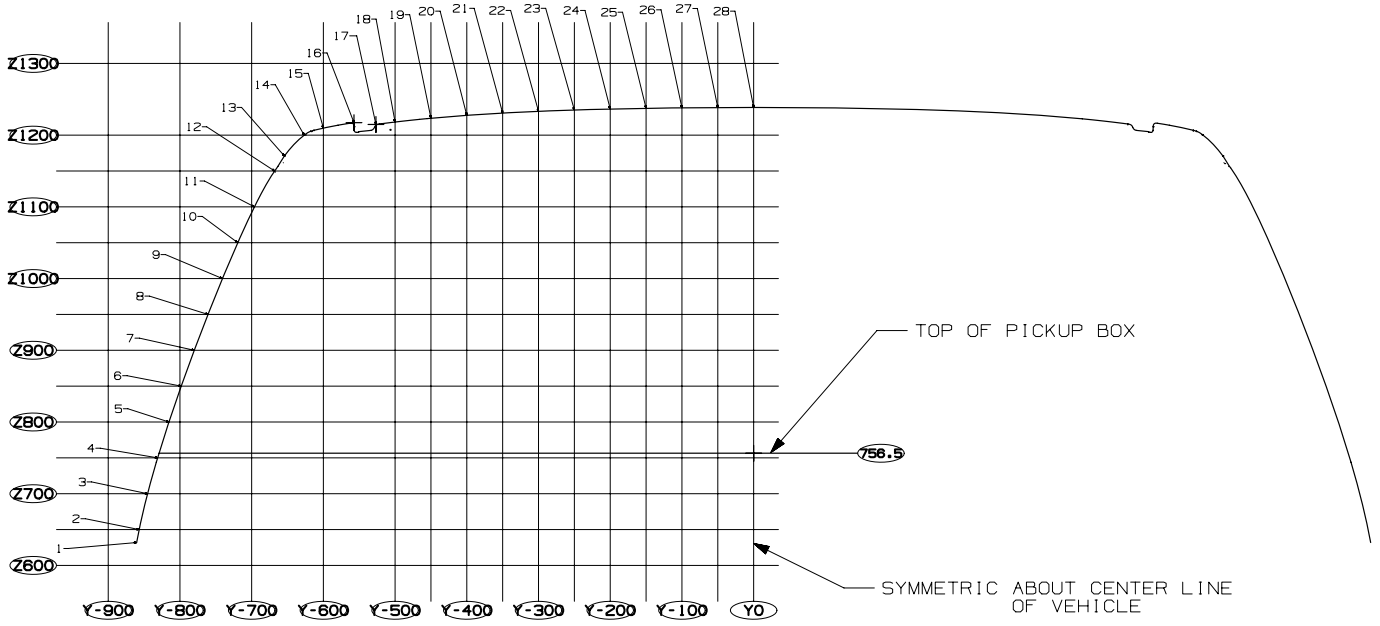

SECTION C-C

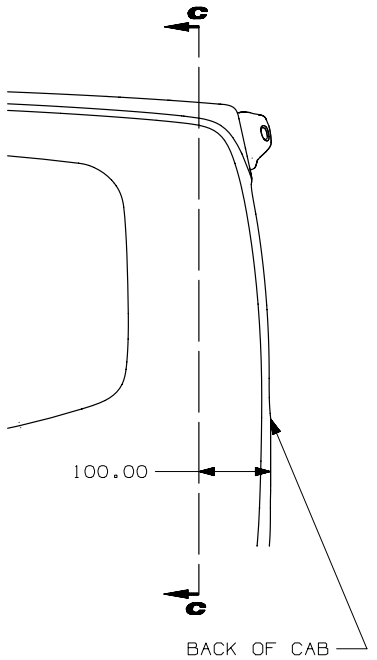

SIDE VIEW

DRIVER SIDE COORDINATES

PT#	WIDTH	HEIGHT
1	-860.39	631.92
2	-856.87	650.00
3	-845.17	700.00
4	-831.15	750.00
5	-815.36	800.00
6	-798.22	850.00
7	-780.02	900.00
8	-760.85	950.00
9	-740.72	1000.00
10	-719.37	1050.00

PT#	WIDTH	HEIGHT
11	-696.13	1100.00
12	-667.99	1150.00
13	-654.20	1170.48
14	-625.67	1200.00
15	-600.00	1209.81
16	-557.71	1217.40
17	-526.69	1214.90
18	-500.00	1218.27
19	-450.00	1223.55
20	-400.00	1227.63

PT#	WIDTH	HEIGHT
21	-350.00	1230.80
22	-300.00	1233.23
23	-250.00	1235.07
24	-200.00	1236.45
25	-150.00	1237.45
26	-100.00	1238.12
27	-50.00	1238.49
28	0.00	1238.60

12DEC2013 AW

[ ]=INCHES

TD006078.6

Colorado/Canyon 1/T P.U. and Chassis-Cab

Hood Profile

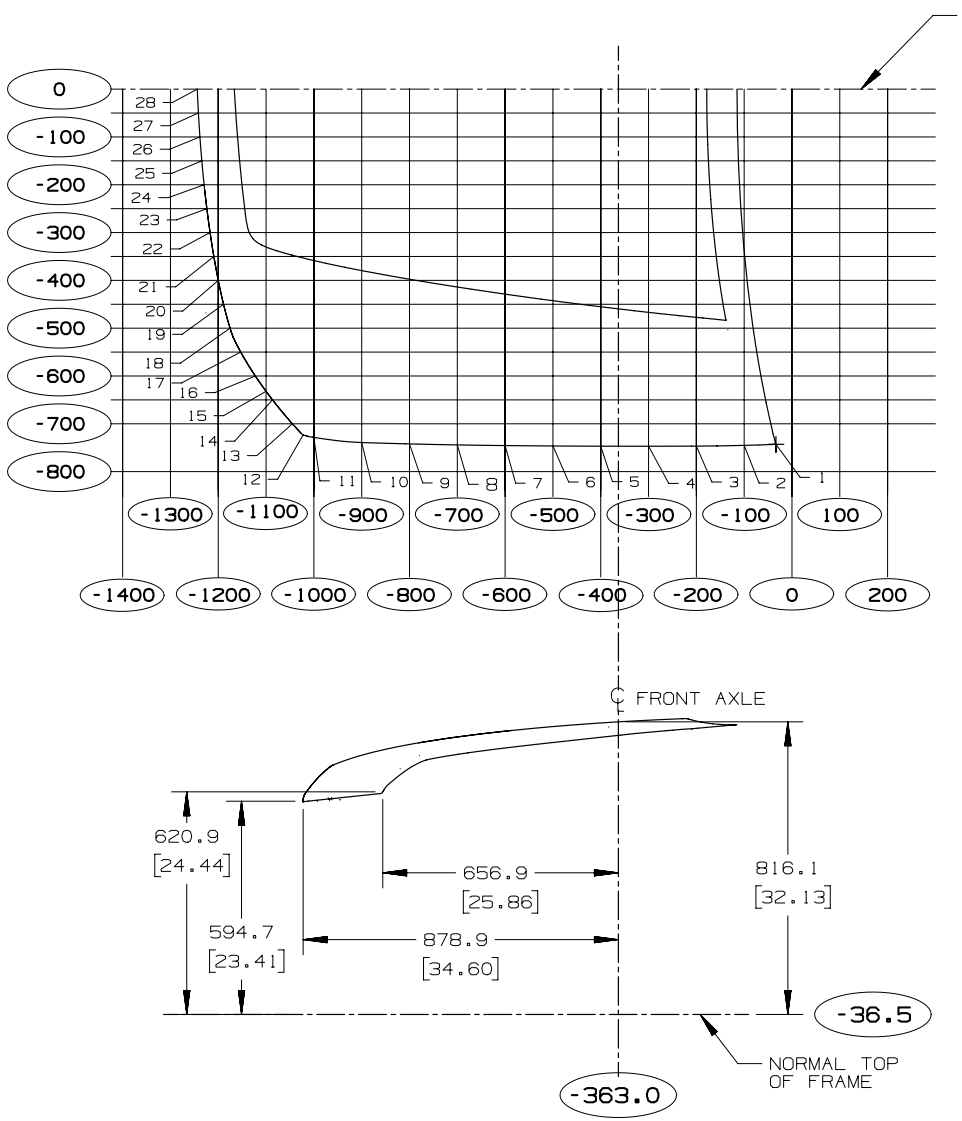

PT #	LENGTH	WIDTH
1	-33.5	-743.0
2	-100.0	-745.1
3	-200.0	-746.6
4	-300.0	-746.9
5	-400.0	-746.8
6	-500.0	-746.4
7	-600.0	-745.6
8	-700.0	-744.2
9	-800.0	-742.1
10	-900.0	-739.1
11	-1000.0	-728.5
12	-1022.9	-722.3
13	-1045.0	-700.0
14	-1086.4	-650.0
15	-1100.0	-632.0
16	-1122.5	-600.0
17	-1153.1	-550.0
18	-1175.3	-500.0
19	-1189.0	-450.0
20	-1200.0	-400.0
21	-1209.3	-350.0
22	-1217.1	-300.0
23	-1223.9	-250.0
24	-1229.5	-200.0
25	-1234.4	-150.0
26	-1238.4	-100.0
27	-1241.5	-50.0
28	-1243.9	0.0

DRIVER SIDE COORDINATES

HOOD PROFILE GMC (T) & CHEVY (1), 2015

[ ]= INCHES

TD006100.3

Colorado/Canyon 1/T P.U. and Chassis-Cab

Front End Sheet Metal

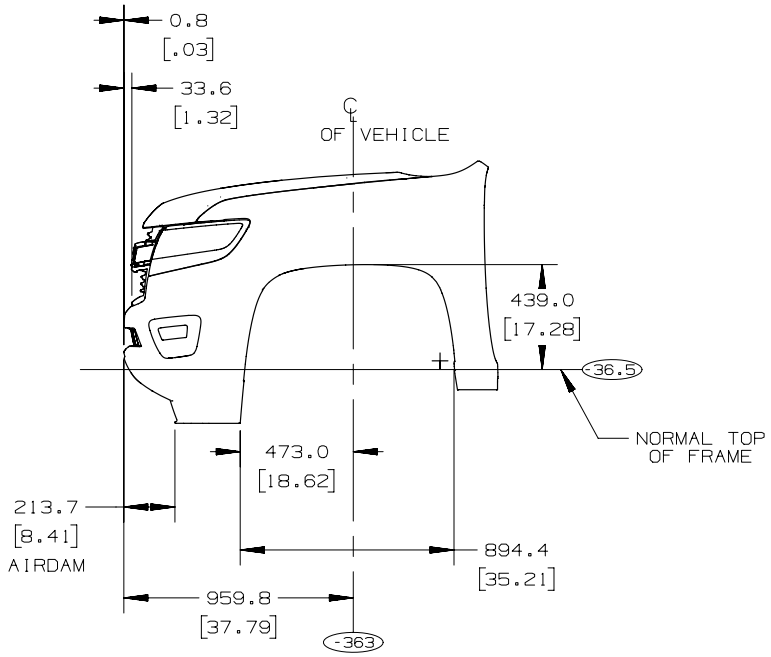

CHEVROLET (BASE M,T)

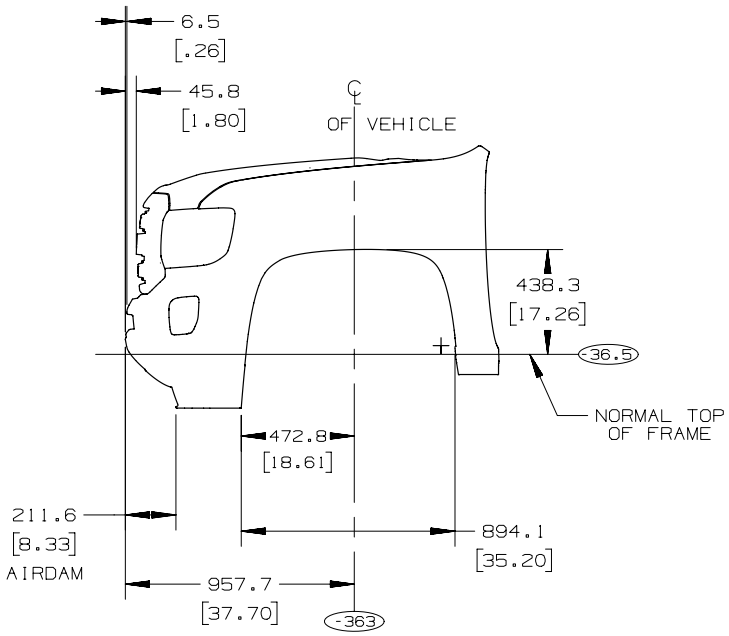

GMC (BASE M,T)

04DEC13 LE [ ]=INCHES TD006076

Colorado/Canyon 1/T P.U. and Chassis-Cab

Pickup Box, Tie Down Loops, Bulkhead Dividers, Two Tier Loading, PU Box Top

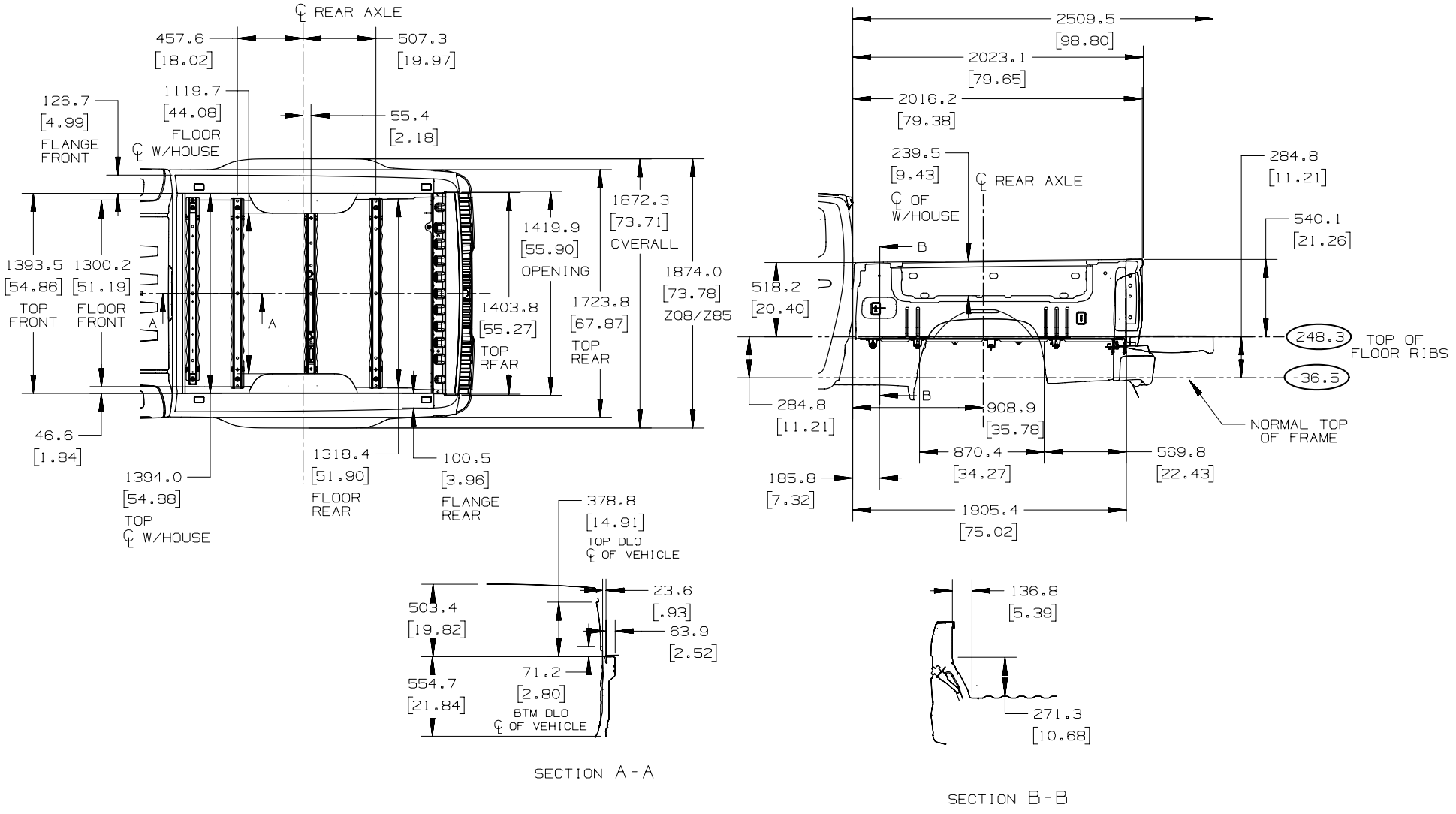

FOR: 1/T 6FT. BOX (LWB P/U: CREW/EXT CAB)

TD006079.3

Colorado/Canyon 1/T P.U. and Chassis-Cab

Pickup Box, Tie Down Loops, Bulkhead Dividers, Two Tier Loading, PU Box Top

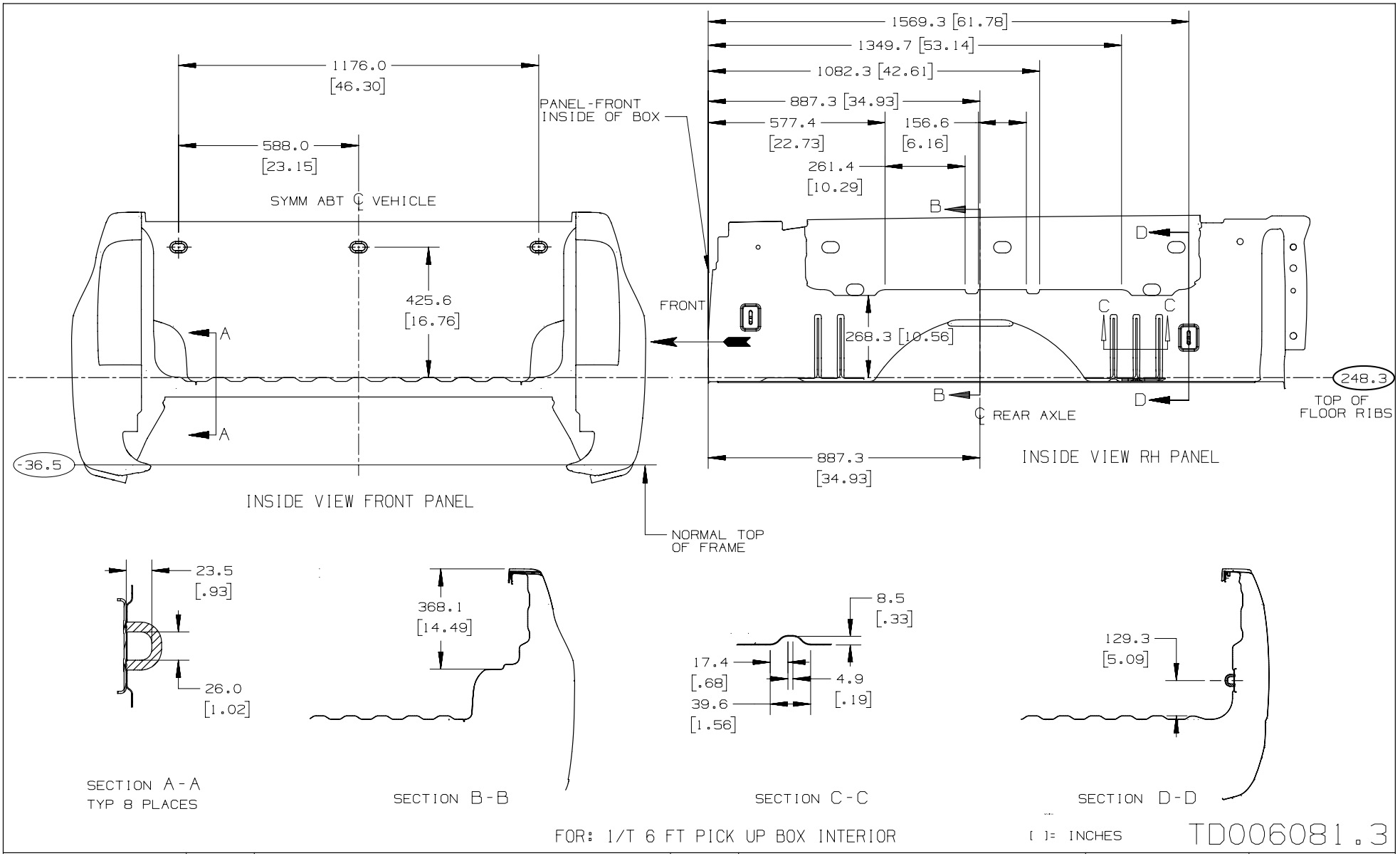

Colorado/Canyon 1/T P.U. and Chassis-Cab

Pickup Box, Tie Down Loops, Bulkhead Dividers, Two Tier Loading, PU Box Top

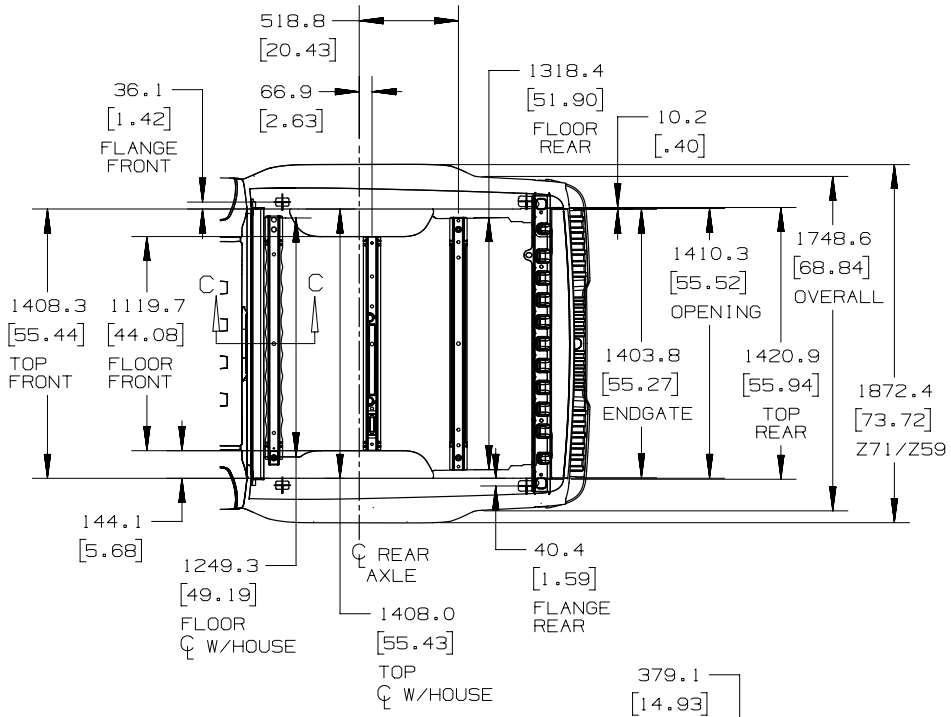

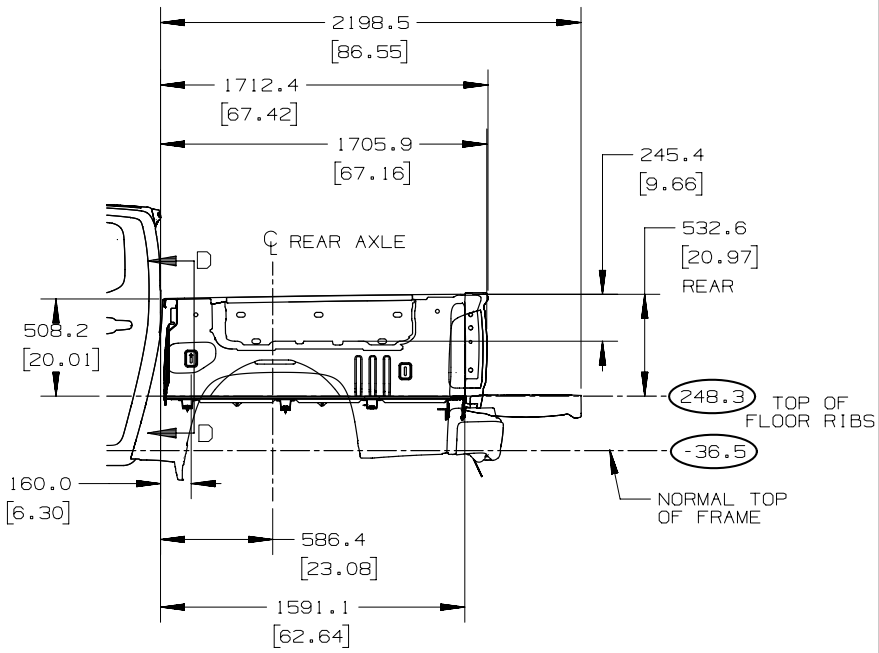

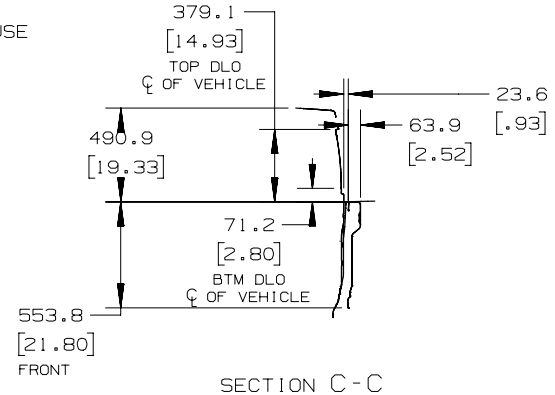

SECTION C-C

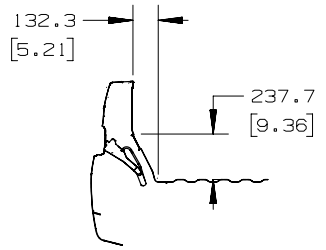

SECTION D-D

FOR: 1/T 5 FT BOX (SWB P/U CREW EXT CAB)

[ ]= INCHES

TD006079.4

Colorado/Canyon 1/T P.U. and Chassis-Cab

Pickup Box, Tie Down Loops, Bulkhead Dividers, Two Tier Loading, PU Box Top

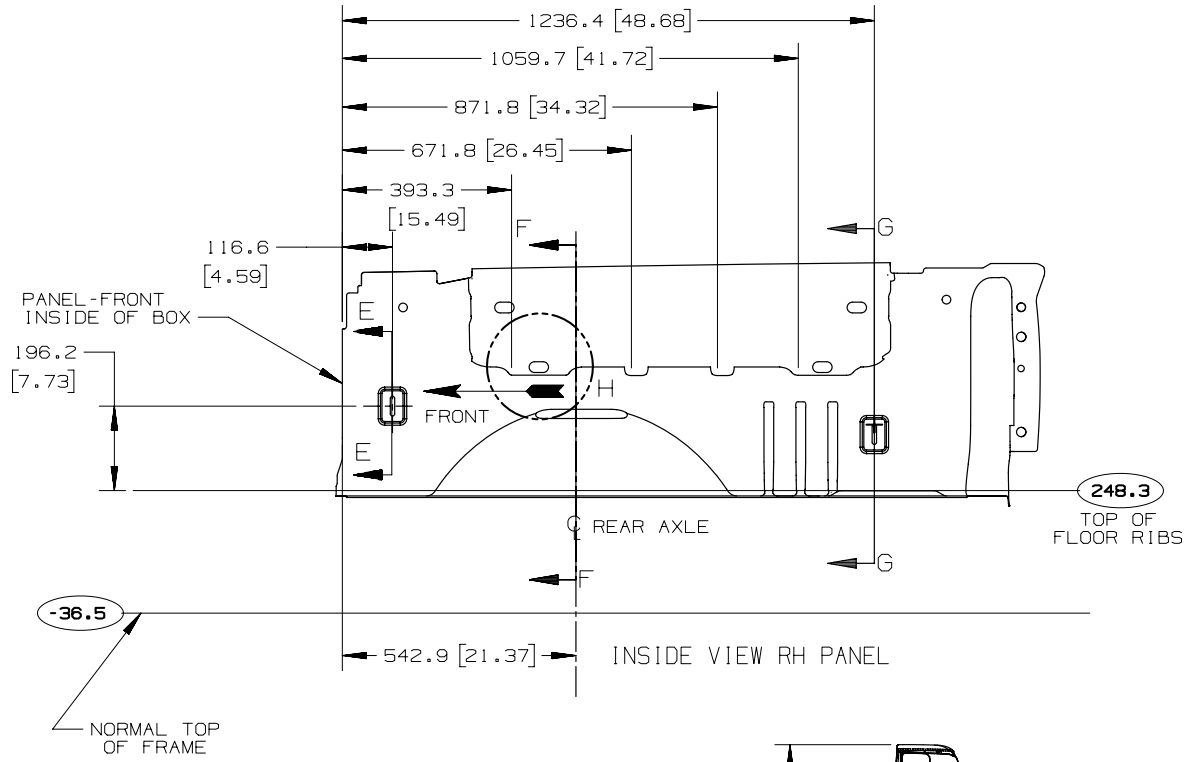

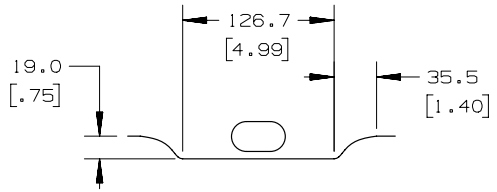

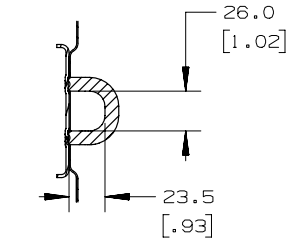

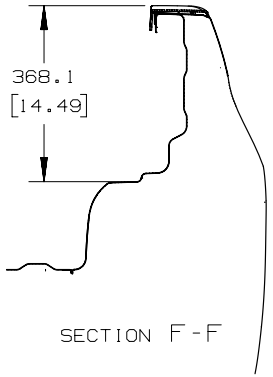

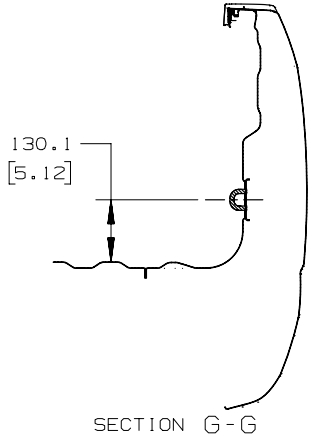

FOR: 1/T 5 FT PICK UP BOX INTERIOR

[ ]= INCHES

TD006081.4

Colorado/Canyon 1/T P.U. and Chassis-Cab

Cab Interior – Extended Cab (53)

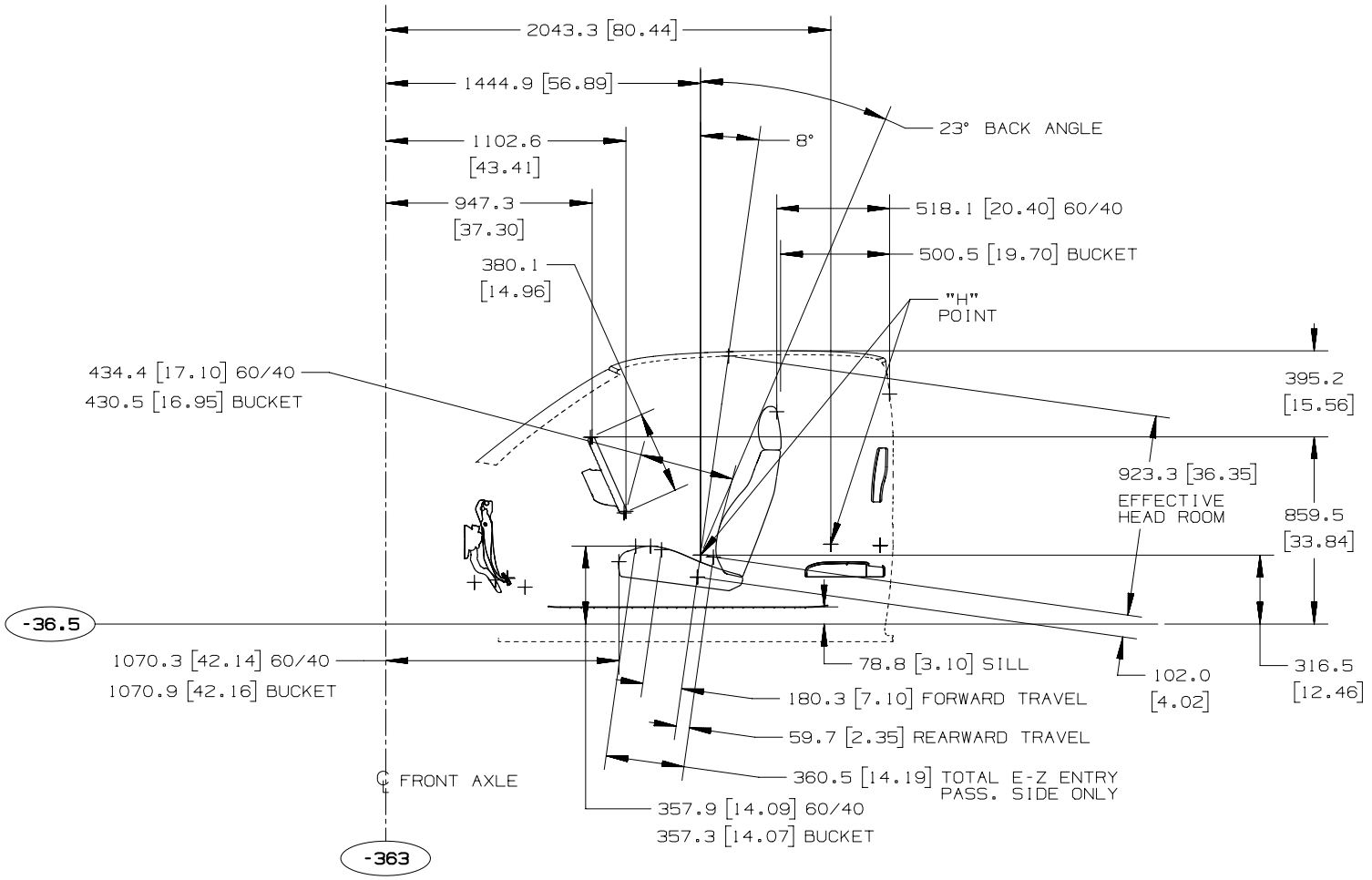

FOR: 1/T2M53 EXTENDED CAB, INTERIOR

[ ]= INCHES

TD006088.4

Cab Interior – Crew Cab (43)

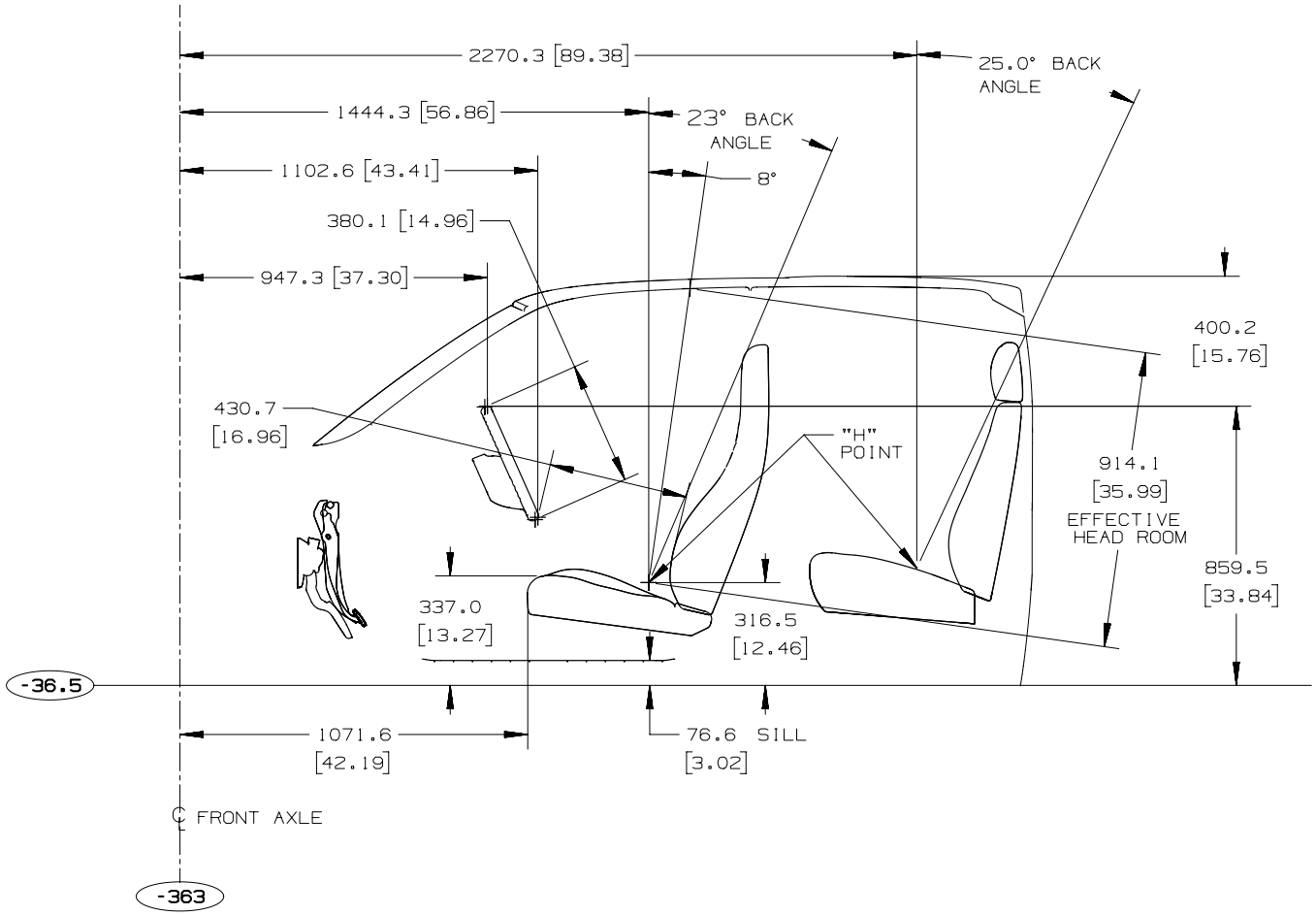

FOR: 1/T2T43CREW CAB,INTERIOR

[ ]= INCHES

TD006088.5

Colorado/Canyon 1/T P.U. and Chassis-Cab

Seating Positions (53)

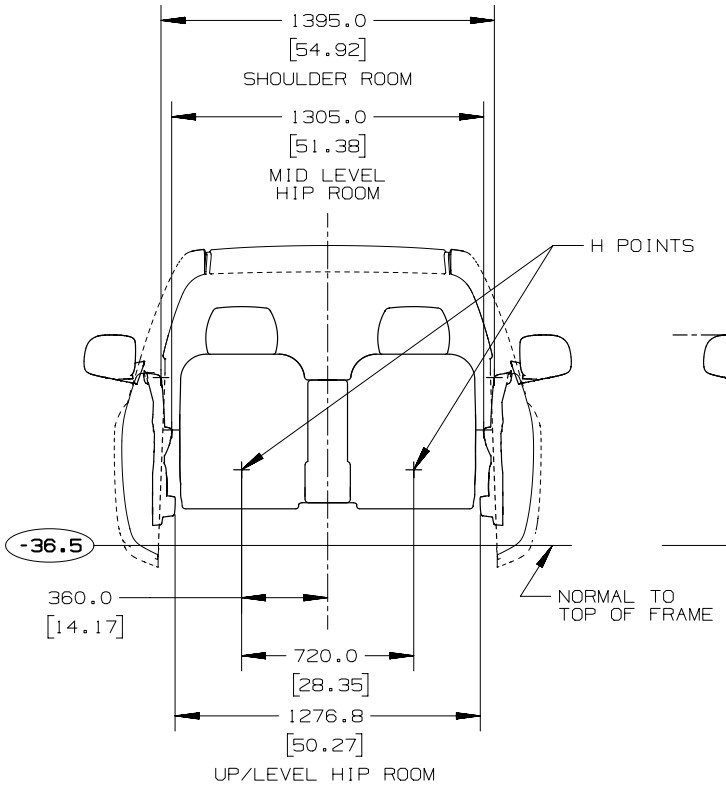

FRONT VIEW FOR:
60/40 FRONT SEATS

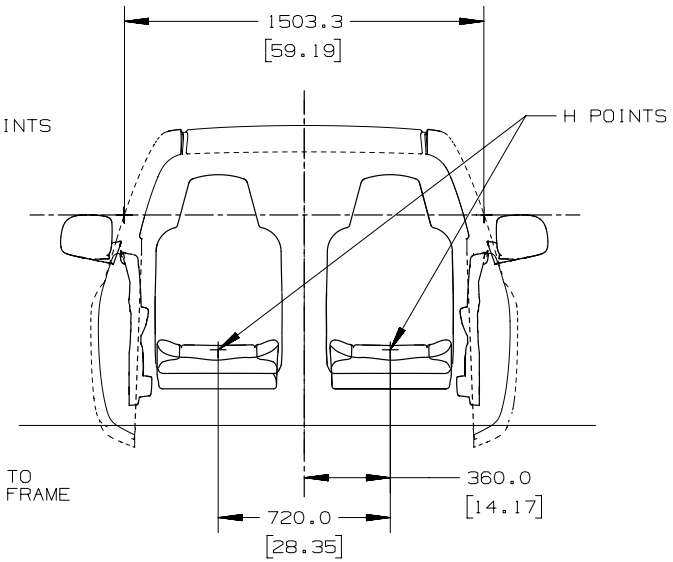

FRONT VIEW FOR:
BUCKET FRONT SEATS

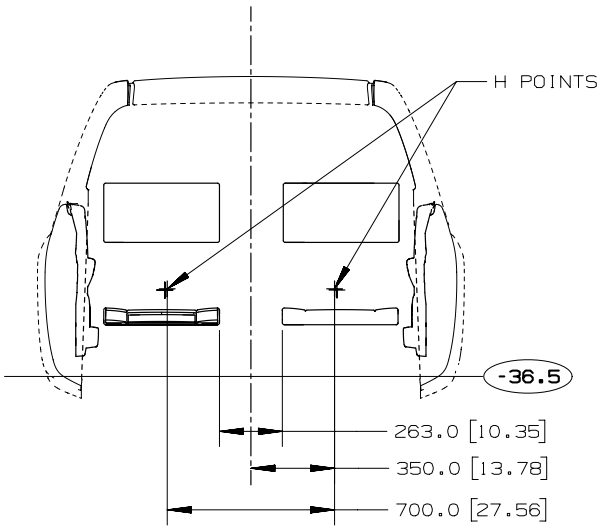

FRONT VIEW FOR: EXTENDED CAB,
REAR JUMP SEATS

FOR: 1/T2M53 (SWB P/U CREW CAB)

[ ]= INCHES

TD006088.6

Colorado/Canyon 1/T P.U. and Chassis-Cab

Seating Positions (43)

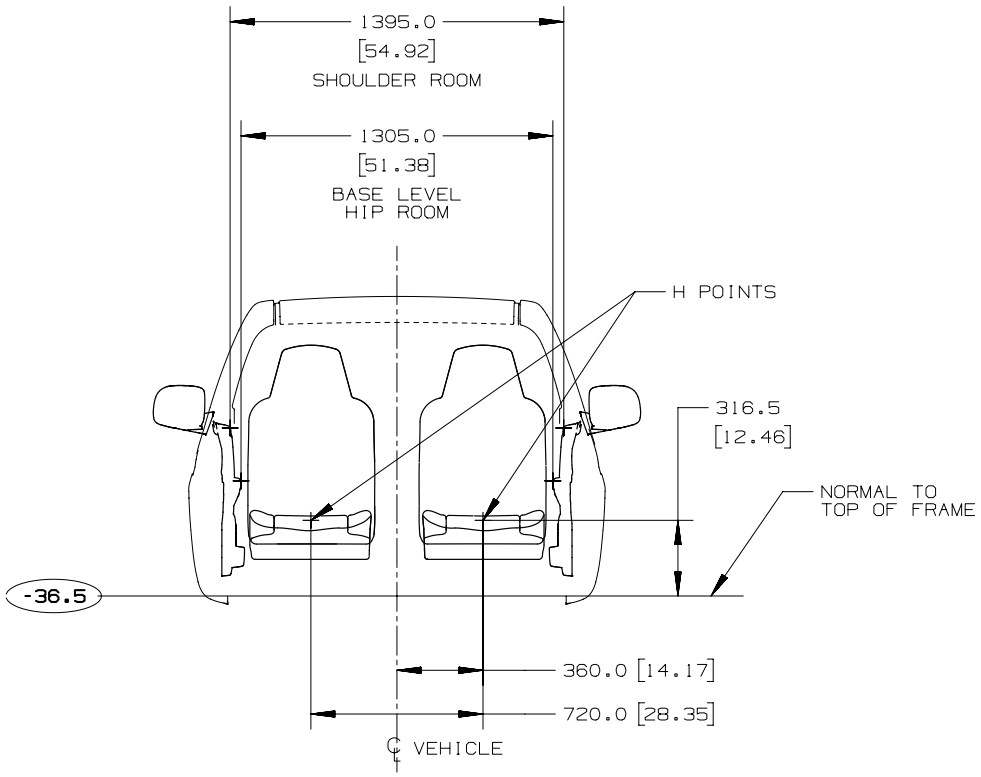

FRONT VIEW FOR:
BUCKET FRONT SEATS

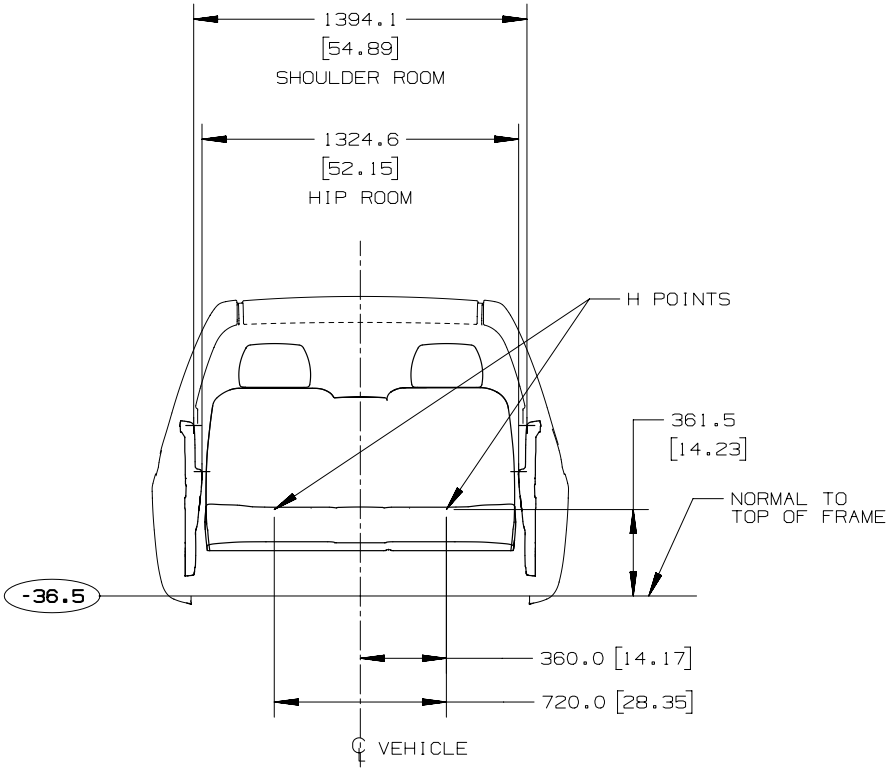

FRONT VIEW FOR: CREW CAB,
REAR SEATS

FOR: 1/T2T43 INTERIOR SEATING (LWB P/U CREW CAB)

[ ]= INCHES TD006088.7

Colorado/Canyon 1/T P.U. and Chassis-Cab

Frame and Crossmember – 1/T (43) Crew Cab Pickup

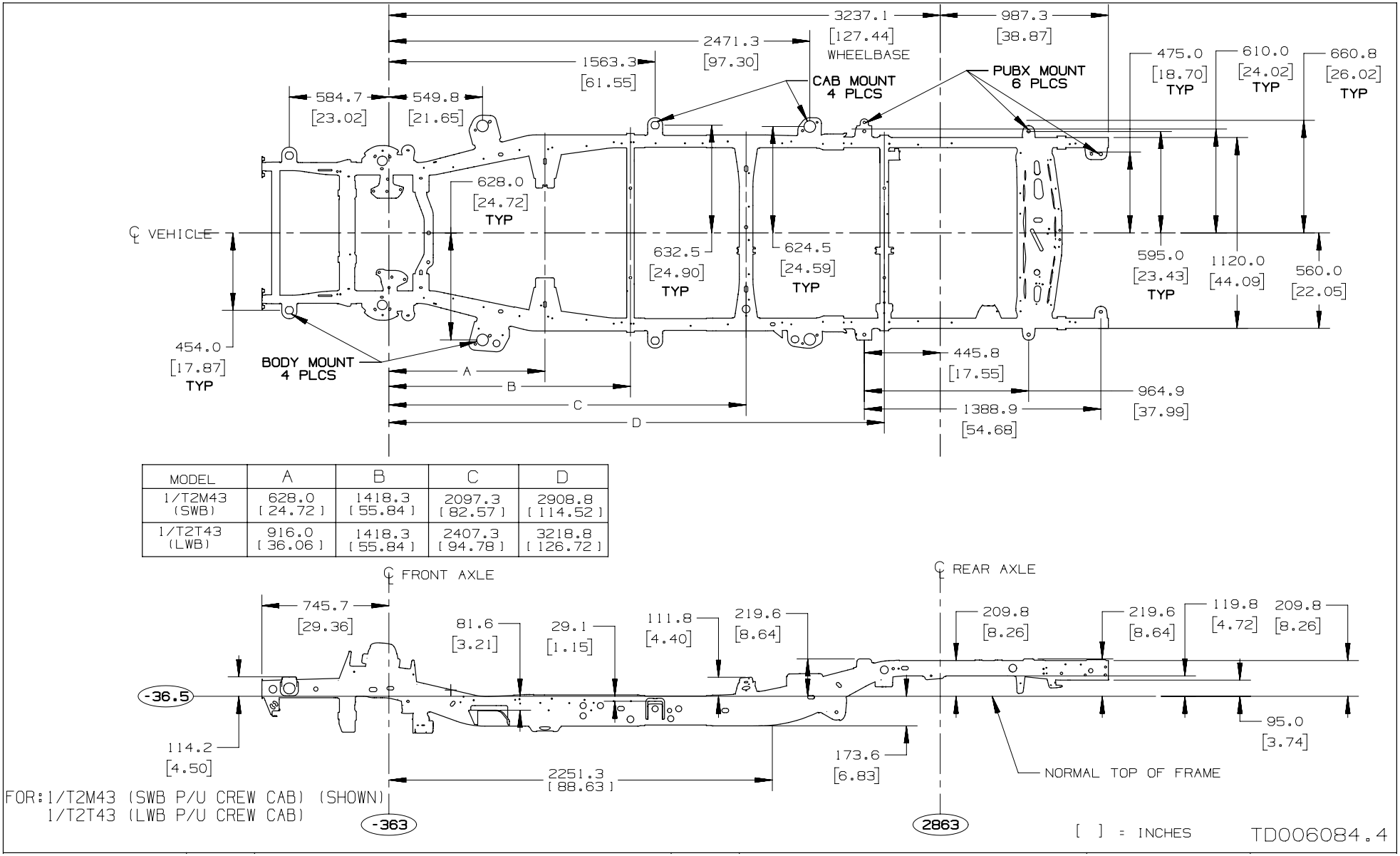

MODEL	A	B	C	D
1/T2M43 (SWB)	628.0 [24.72]	1418.3 [55.84]	2097.3 [82.57]	2908.8 [114.52]
1/T2T43 (LWB)	916.0 [36.06]	1418.3 [55.84]	2407.3 [94.78]	3218.8 [126.72]

Colorado/Canyon 1/T P.U. and Chassis-Cab

Frame and Crossmember – 1/T (53) Extended Cab Pickup and ZW9

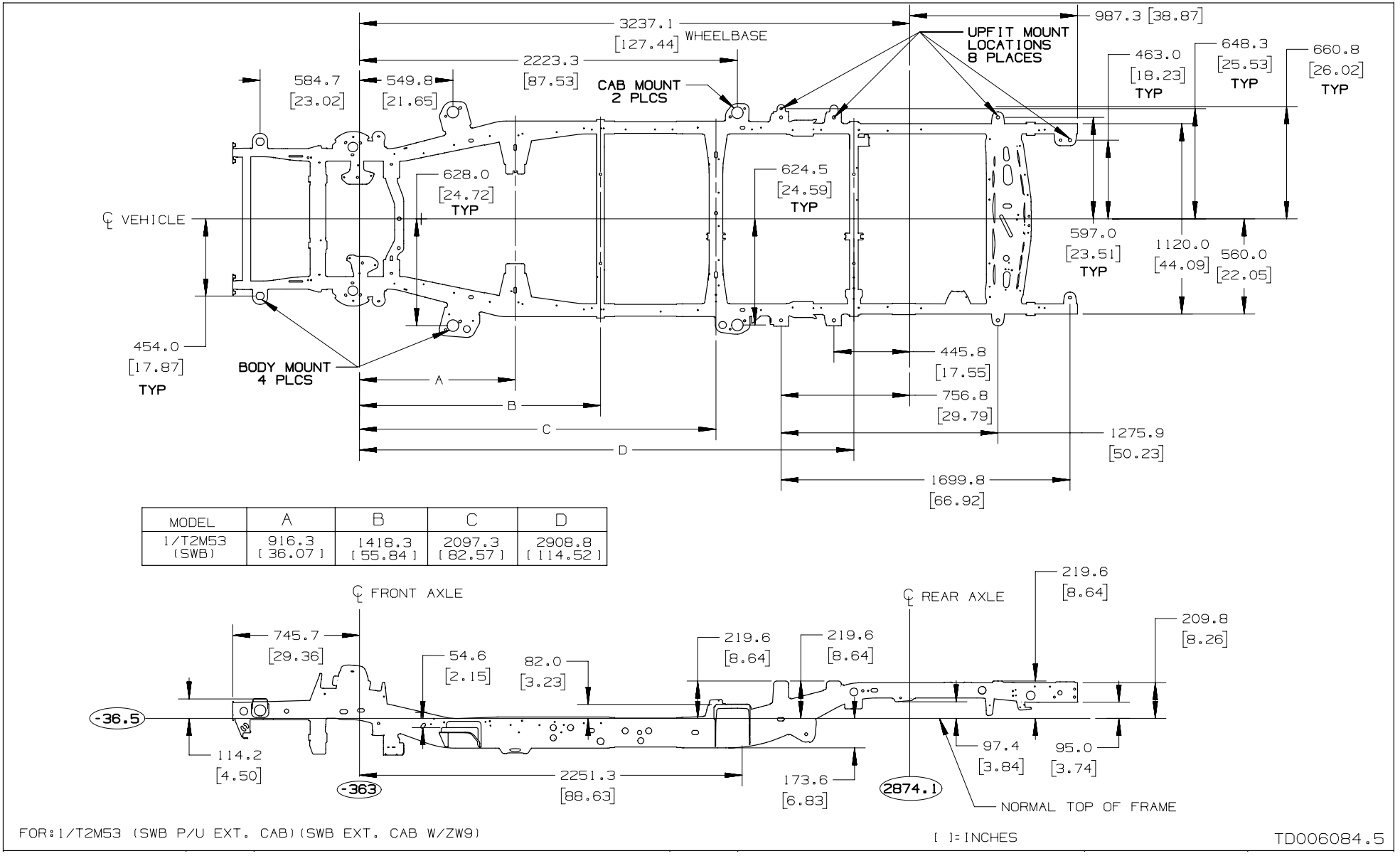

MODEL	A	B	C	D
1/T2M53 (SWB)	916.3 [36.07]	1418.3 [55.84]	2097.3 [82.57]	2908.8 [114.52]

FOR:1/T2M53 (SWB P/U EXT. CAB)(SWB EXT. CAB W/ZW9)

[ ]=INCHES

TD006084.5

Colorado/Canyon 1/T P.U. and Chassis-Cab

Spare Tire Location

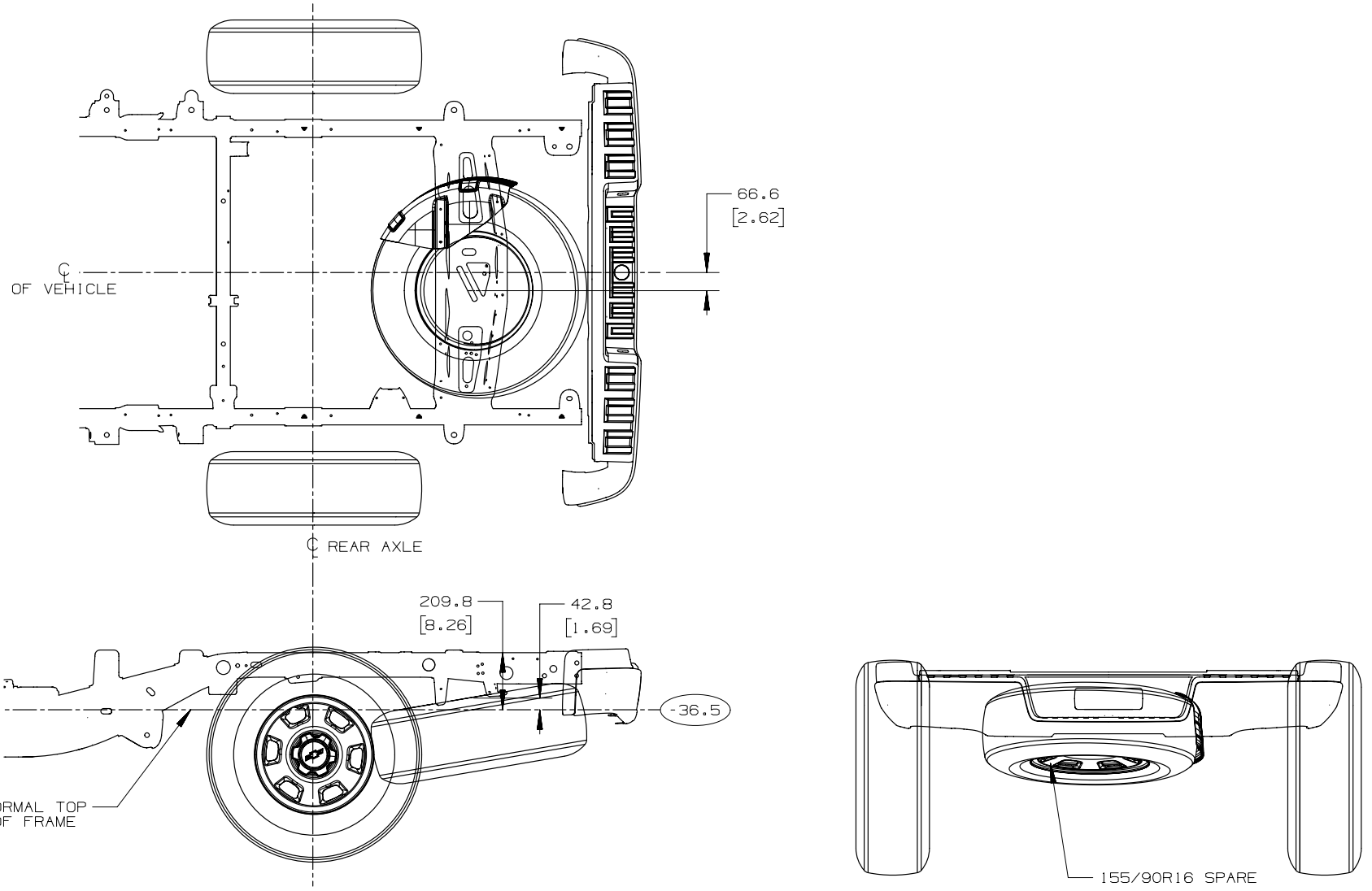

FOR: 1/T2M43 (SWB P/U CREW CAB), 1/T2T43 (LWB P/U CREW CAB), 1/T2M53 (SWB P/U EXT. CAB), 1/T2M53 (SWB EXT. CAB W/ZW9)

[ ] = INCHES

TD006083.4

Colorado/Canyon 1/T P.U. and Chassis-Cab

Factory Installed Trailer Hitch, Option VR4

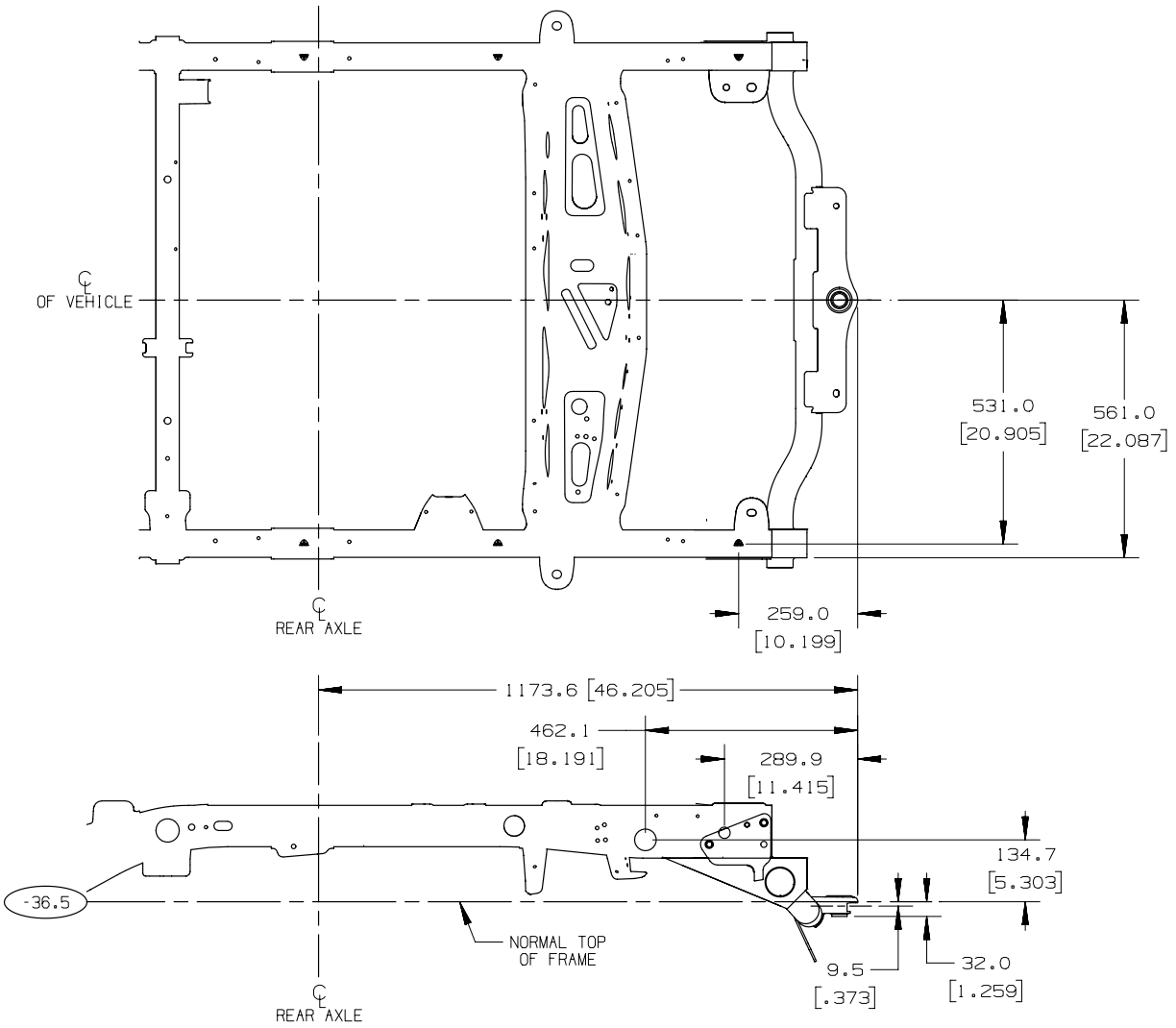

FOR: 1/T2M43 (SWB P/U CREW CAB), 1/T2T43 (LWB P/U CREW CAB), 1/T2M53 (SWB P/U EXT. CAB), 1/T2M53 (SWB EXT. CAB W/ZW9)

27DEC2013 AW

[ ]= INCHES

AND31425.3

Colorado/Canyon 1/T P.U. and Chassis-Cab

Front Axle / Tire Data

SERIES	OPT	SLR	TIRE 16", 17", 18"	GVW	TRACK	WHEEL OFFSET	Max Tire Width	*Ground Clearance
1T2T43	QJJ	362.0	265/70R16	3200	1586.0	33.0	264.9	220.0
1T2T43	QHR, QHE	361.7	255/65R17	3200	1586.0	33.0	254.8	219.7
1T2T43	QIA	362.0	265/60R18	3200	1586.0	33.0	264.9	220.0
1T2M43	QJJ	362.0	265/70R16	3200	1586.0	33.0	264.9	220.0
1T2M43	QHR, QHE	361.7	255/65R17	3200	1586.0	33.0	254.8	219.7
1T2M43	QIA	362.0	265/60R18	3200	1586.0	33.0	264.9	220.0
1T2M53	QJJ	362.0	265/70R16	3200	1586.0	33.0	264.9	220.0
1T2M53	QHR, QHE	361.7	255/65R17	3200	1586.0	33.0	254.8	219.7
1T2M53	QIA	362.0	265/60R18	3200	1586.0	33.0	264.9	220.0
1T2M53 (w/ZW9)	QJJ	362.0	265/70R16	3200	1586.0	33.0	264.9	220.0
1T2M53 (w/ZW9)	QHR, QHE	361.7	255/65R17	3200	1586.0	33.0	254.8	219.7
1T2M53 (w/ZW9)	QIA	362.0	265/60R18	3200	1586.0	33.0	264.9	220.0

Wheel attachment: 120.00mm Bolt Circle x 6 lug(M14x1.5)

*taken at lowest point of front suspension

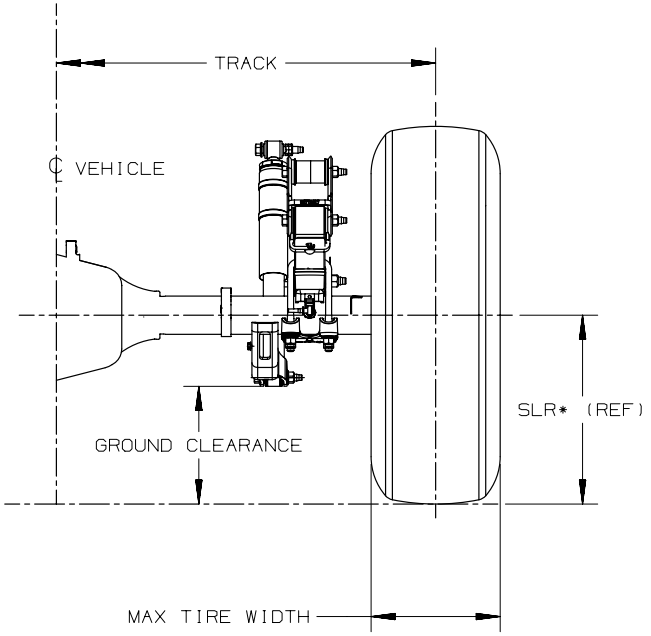

◇ ALL SEASON TIRE

□ ON/OFF ROAD TIRE

* MINIMUM GROUND CLEARANCE TO BE CALCULATED BY USING GROSS AXLE WEIGHT AND INFLATING TIRE PRESSURE AS RECOMENDED (35 PSI)

FRONT AXLE/TIRE DATA: 1/T2M43 (SWB P/U CREW CAB), 1/T2T43 (LWB P/U CREWCAB, 1/T2M53 (SWB P/U EXT. CAB), 1/T2M53 (SWB EXT. CAB W/ZW9)

METRIC CONVERSION TO INCHES
MM / 25.4 = INCHES

ANE88663.3

Colorado/Canyon 1/T P.U. and Chassis-Cab

Rear Axle / Tire Data

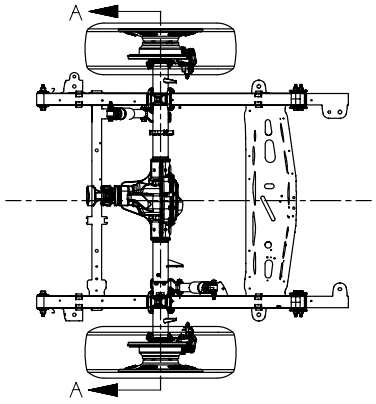

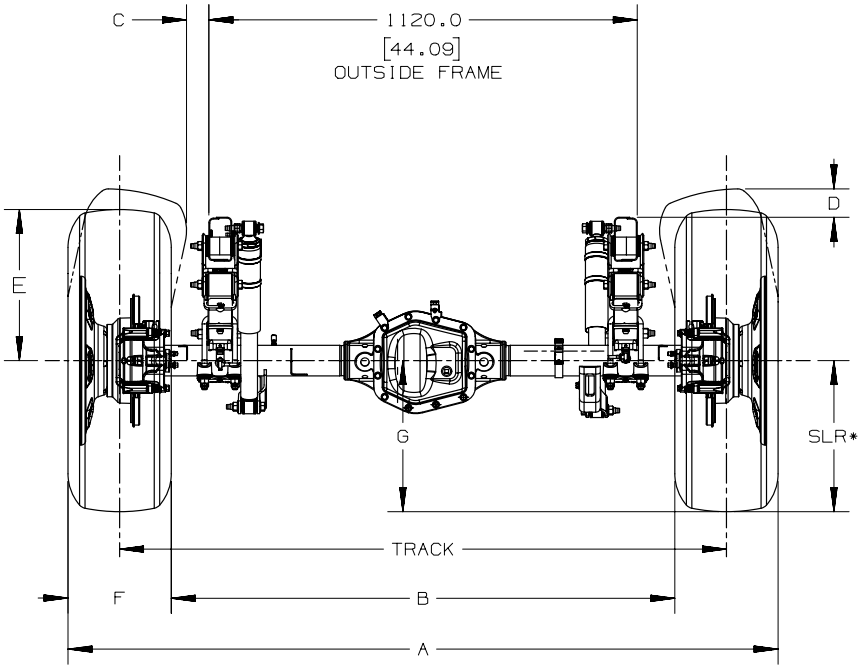

SECTION A-A
ROTATED 90°

* MINIMUM GROUND CLEARANCE TO BE CALCULATED BY USING GROSS AXLE WEIGHT AND INFLATING TIRE PRESSURE AS RECOMMENDED (35 PSI)

◇ ALL SEASON TIRE
□ ON/OFF ROAD TIRE

REAR AXLE/TIRE DATA CHART; 1/T2M43 (SWB P/U CREW CAB), 1/T2T43 (LWB P/U CREW CAB), 1/T2M53 (SWB P/U EXT. CAB), 1/T2M53 (SWB EXT. CAB W/ZW9)

METRIC CONVERSION TO INCHES
MM / 25.4 = INCHES

ANE89377.3

Rear Axle / Tire Data (cont'd)

SERIES	OPT	SLR	TIRE 16", 17", 18"	GVW	TRACK	WHEEL OFFSET
1T2T43	QJJ	370.0	265/70R16	3500	1586.0	33.0
1T2T43	QHR,QHE	369.7	255/65R17	3500	1586.0	33.0
1T2T43	QIA	369.9	265/60R18	3500	1586.0	33.0
1T2M43	QJJ	370.0	265/70R16	3500	1586.0	33.0
1T2M43	QHR,QHE	369.7	255/65R17	3500	1586.0	33.0
1T2M43	QIA	369.9	265/60R18	3500	1586.0	33.0
1T2M53	QJJ	370.0	265/70R16	3500	1586.0	33.0
1T2M53	QHR,QHE	369.7	255/65R17	3500	1586.0	33.0
1T2M53	QIA	369.9	265/60R18	3500	1586.0	33.0
1T2M53 (w/ZW9)	QJJ	370.0	265/70R16	3500	1586.0	33.0
1T2M53 (w/ZW9)	QHR,QHE	369.7	255/65R17	3500	1586.0	33.0
1T2M53 (w/ZW9)	QIA	369.9	265/60R18	3500	1586.0	33.0

DIM A	DIM B	DIM C	DIM D	DIM E	DIM F	DIM G	`HE'
1850.9	1321.0	78	195	395.00	264.9	388.7	749.3
1840.8	1331.2	81	187	387.00	254.8	381.6	749.0
1850.9	1321.0	70	193	392.00	264.9	387.6	749.3
1850.9	1321.0	78	195	395.00	264.9	388.7	749.3
1840.8	1331.2	81	187	387.00	254.8	381.6	749.0
1850.9	1321.0	70	193	392.00	264.9	387.6	749.3
1850.9	1321.0	78	195	395.00	264.9	388.7	749.3
1840.8	1331.2	81	187	387.00	254.8	381.6	749.0
1850.9	1321.0	70	193	392.00	264.9	387.6	749.3
1850.9	1321.0	78	195	TBD	264.9	388.7	TBD
1840.8	1331.2	81	187	TBD	254.8	381.6	TBD
1850.9	1321.0	70	193	TBD	264.9	387.6	TBD

HE = Rear `TOP OF FRAME' Min/Max Curb (w/base equipment). BOF + 114.80 (4.52 Frame Height) = HE
SLR = C/L Rear Axle at EPA (Avg of Min/Max Curb, base equipment)
Wheel attachment: 120.00mm Bolt Circle x 6 lug(M14x1.5)

Colorado/Canyon 1/T P.U. and Chassis-Cab

Fuel Systems, 1T2M43, 1/T2T43 Gas

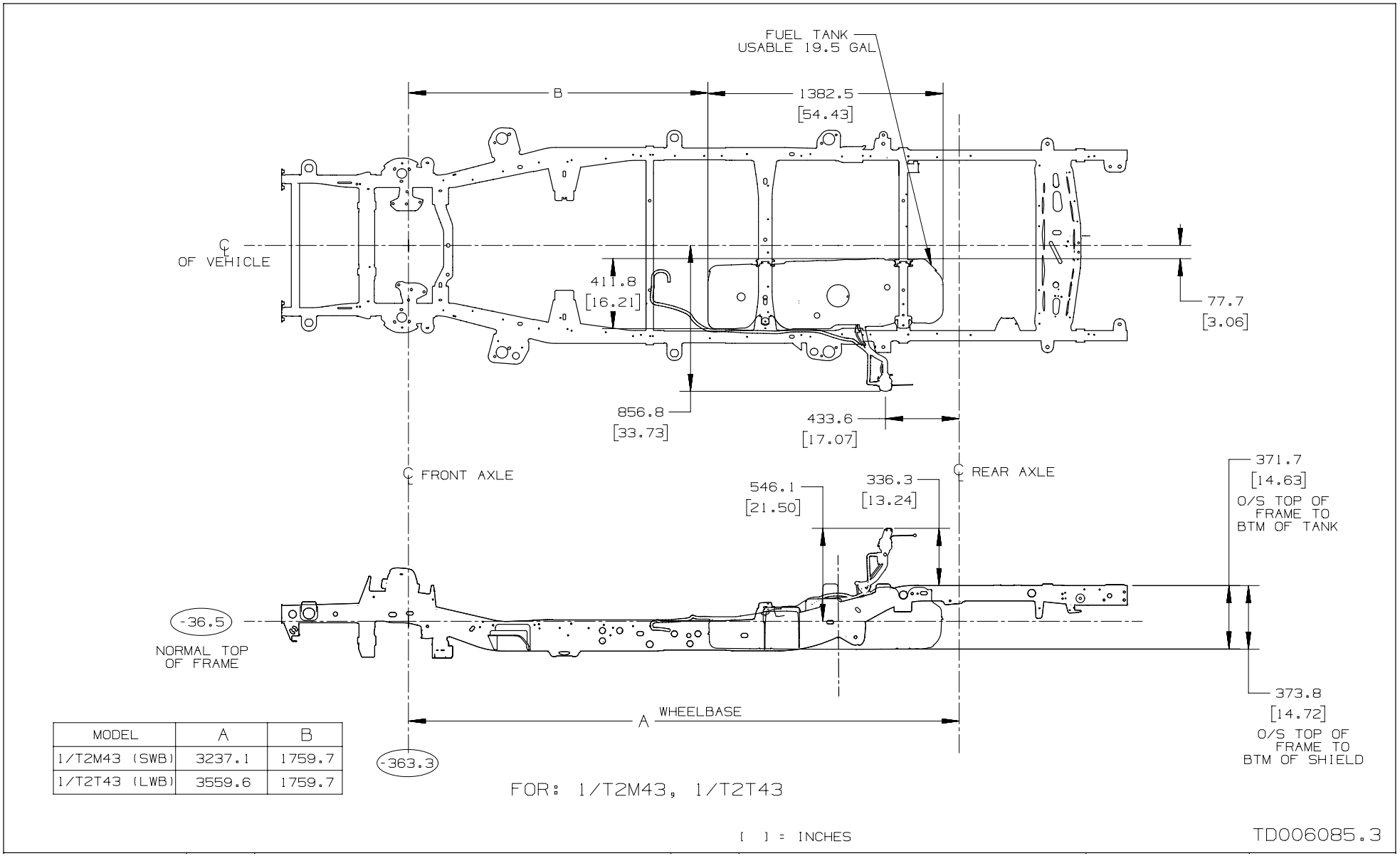

MODEL	A	B
1/T2M43 (SWB)	3237.1	1759.7
1/T2T43 (LWB)	3559.6	1759.7

Colorado/Canyon 1/T P.U. and Chassis-Cab

Fuel Systems, 1/T2M43, 1/T2T43 Diesel

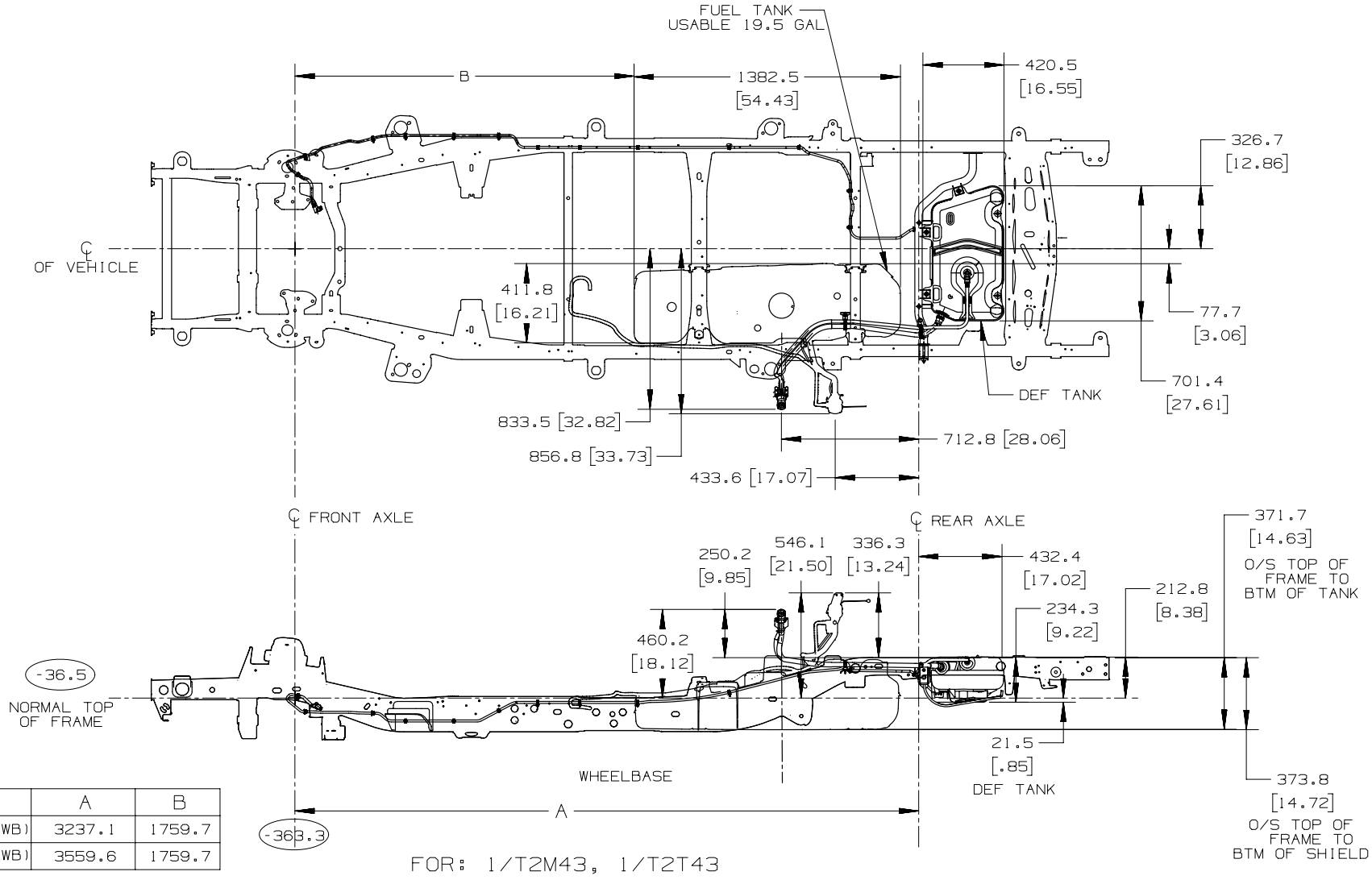

MODEL	A	B
1/T2M43 (SWB)	3237.1	1759.7
1/T2T43 (LWB)	3559.6	1759.7

FOR: 1/T2M43, 1/T2T43

[ ] = INCHES

TD006085.3

Colorado/Canyon 1/T P.U. and Chassis-Cab

Fuel Systems, 1/T2 M53 Gas & w/ZW9

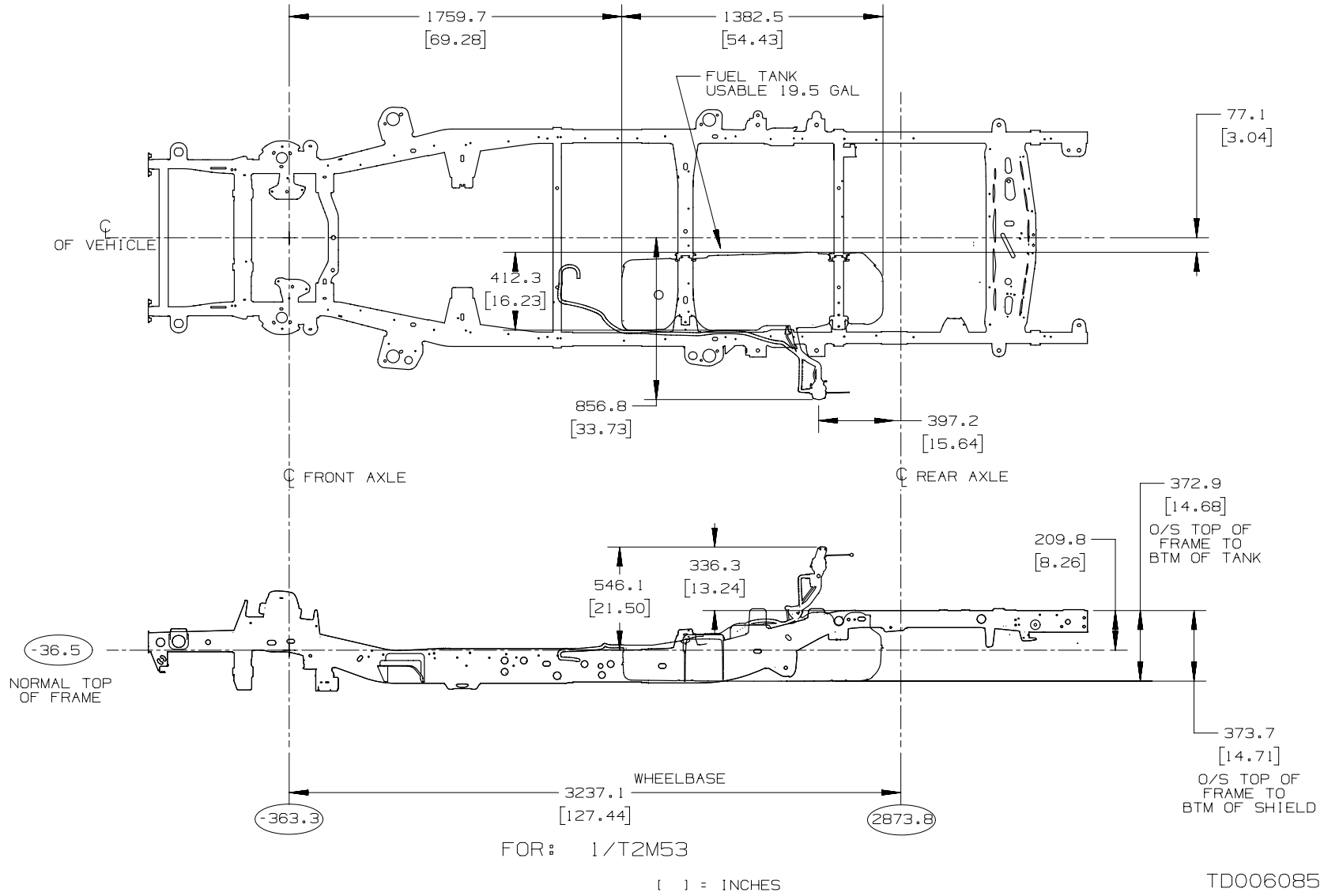

Fuel Systems, 1/T2 M53 Diesel

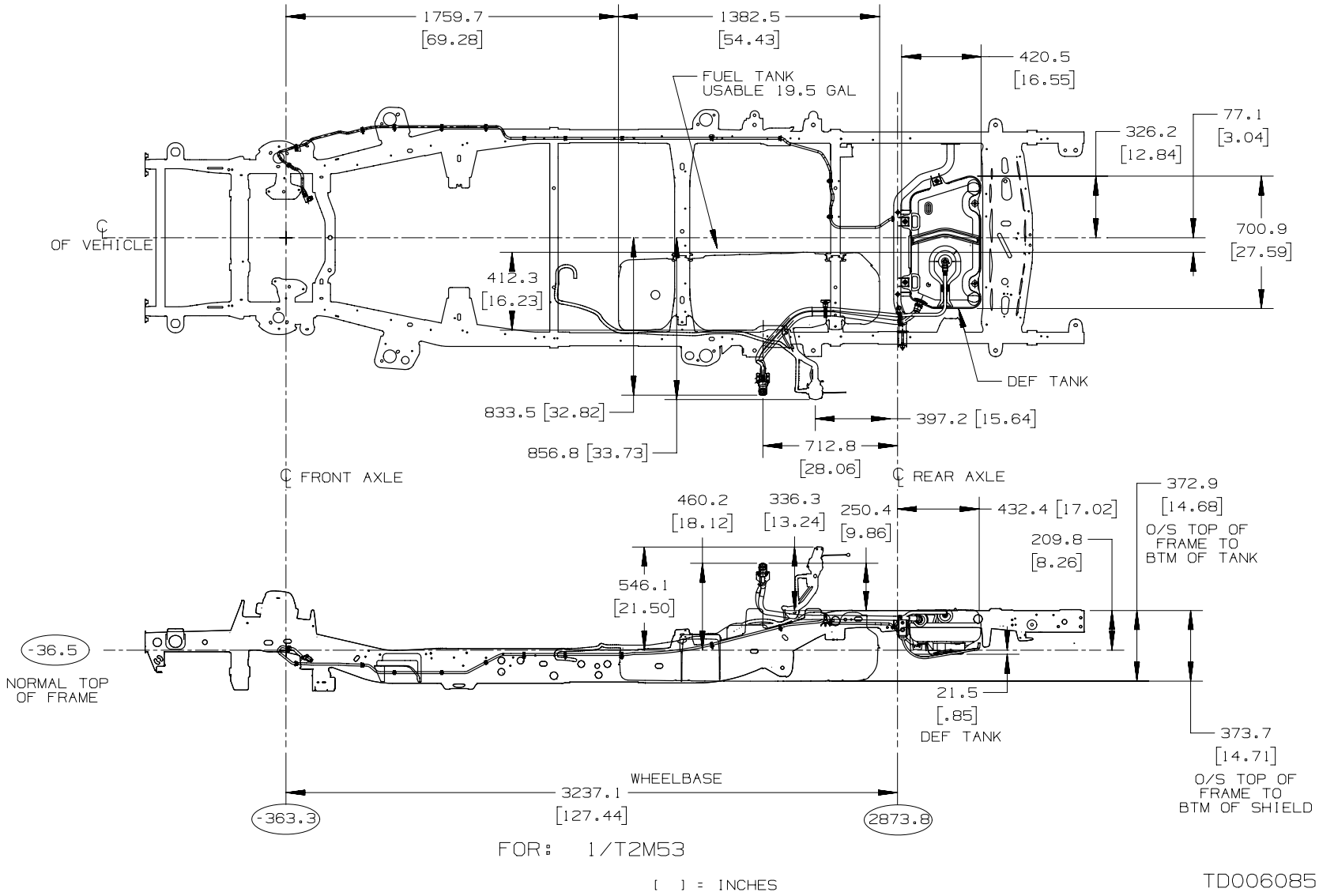

Exhaust Systems, 1/T2M (43/53) (SWB) Gas, LFX, LCV

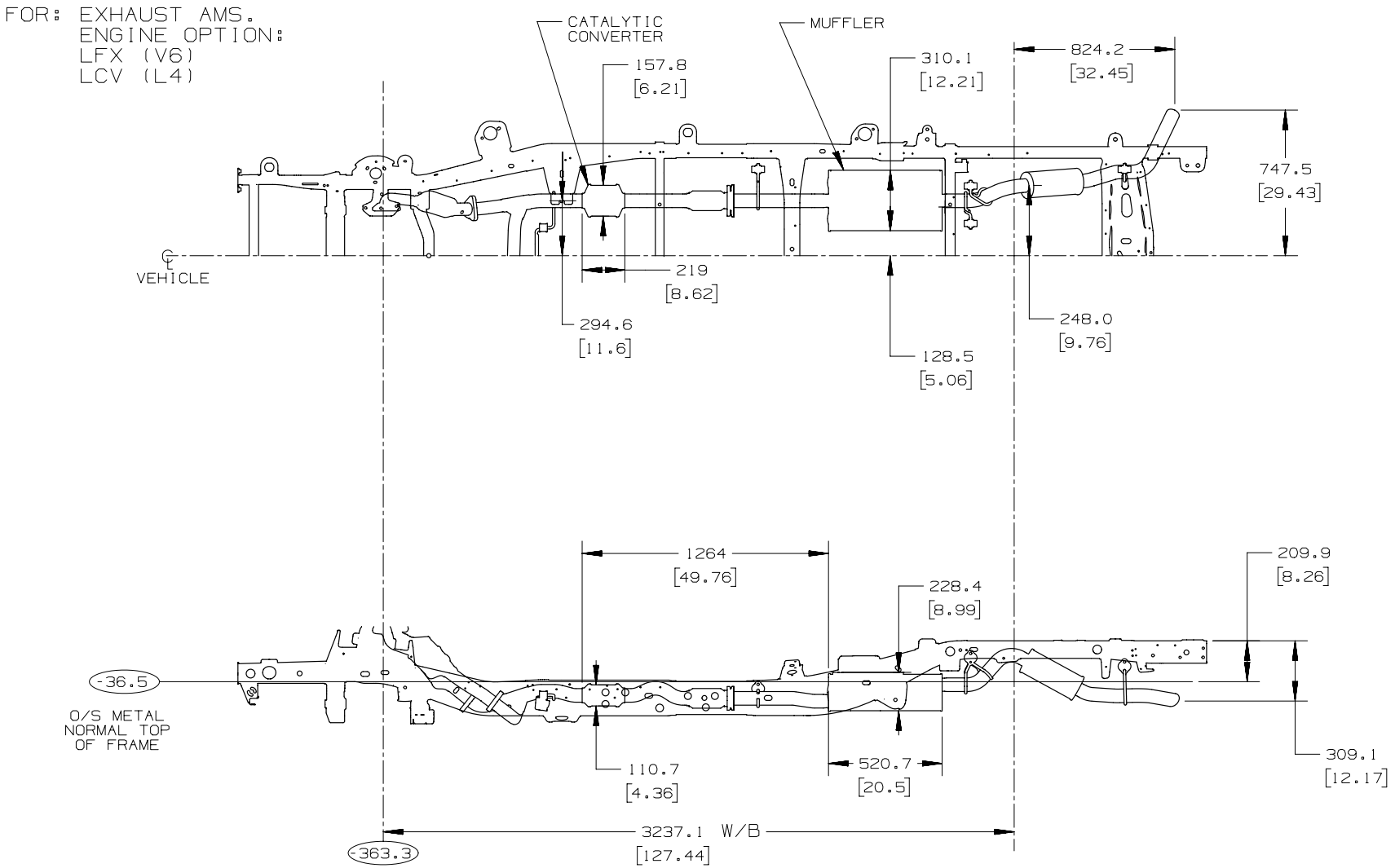

Exhaust Systems, 1/T2 (43) (LWB) Gas

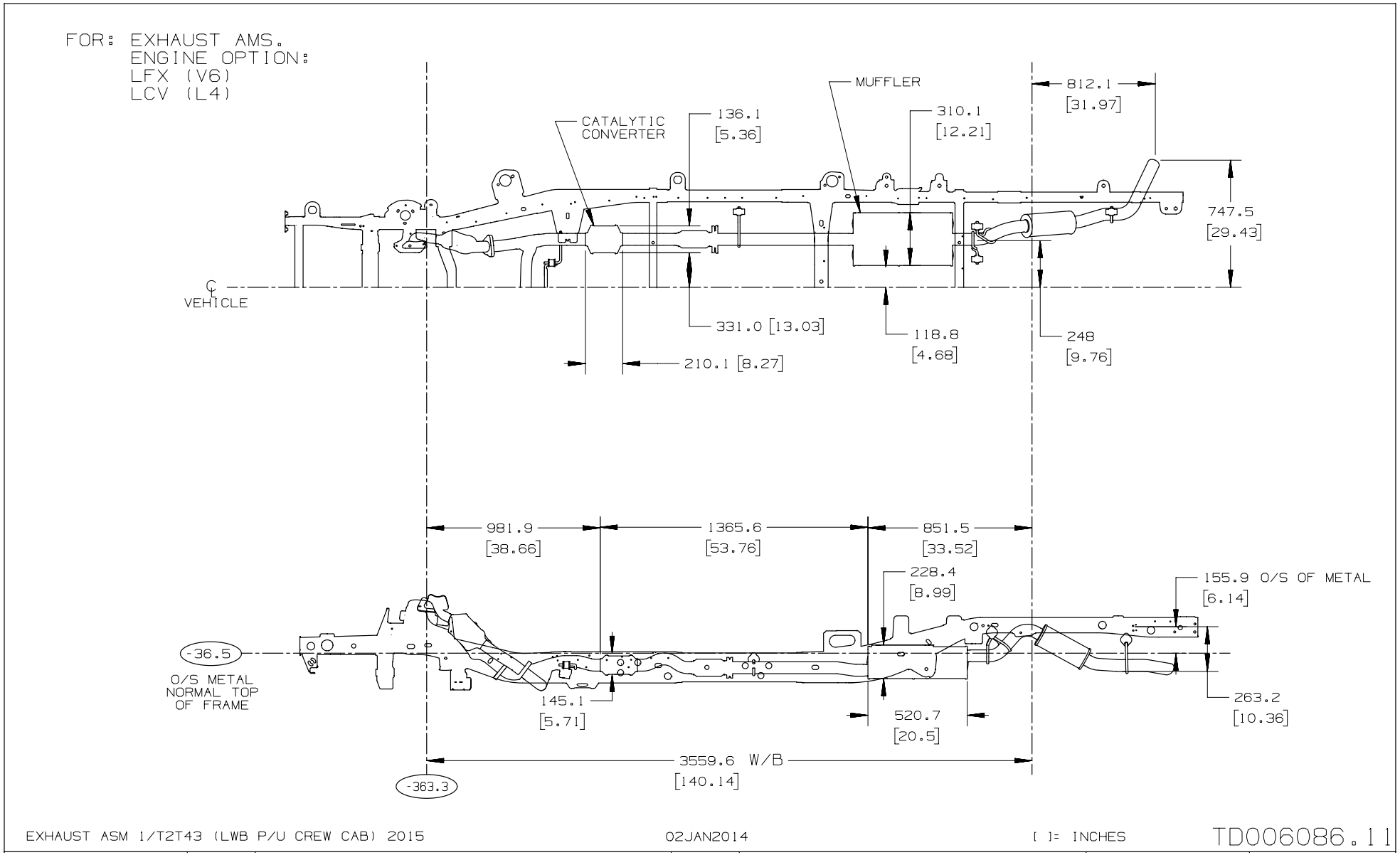

Colorado/Canyon 1/T P.U. and Chassis-Cab

Tailpipe Locations 1/T2 Gas, LFX, LCV

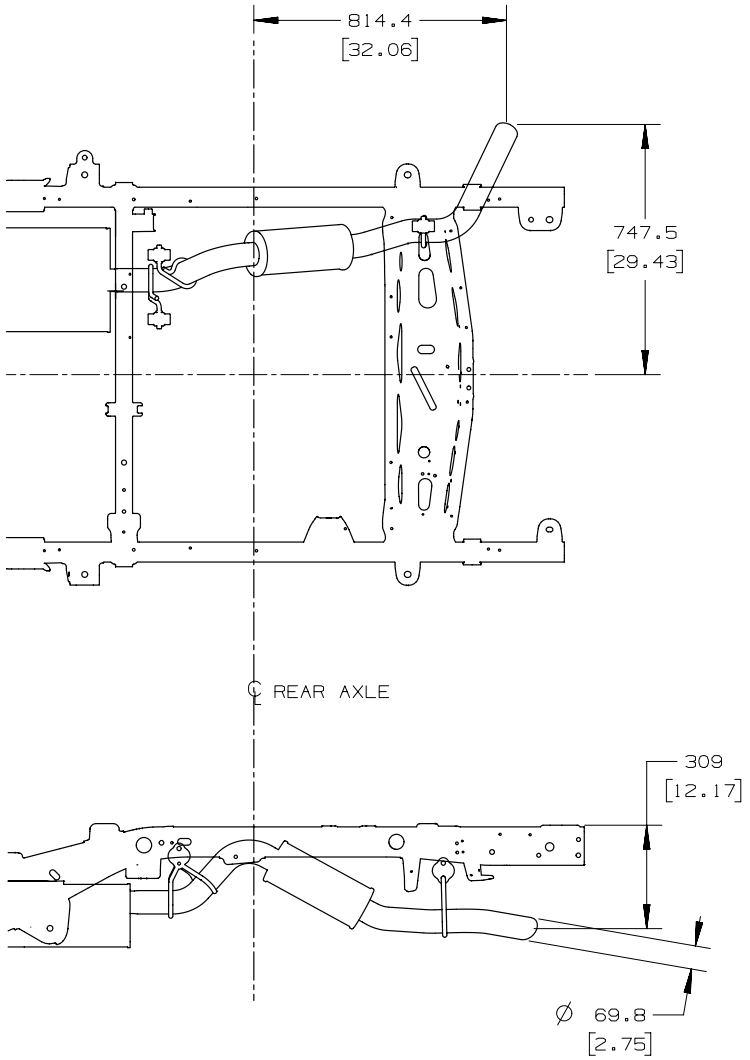

FOR: 1/T2 GAS (LFX,LCV) TAIL PIPE LOCATIONS

1/T2 GAS (LFX,LCV) TAIL PIPE LOCATIONS 2015

[ ]= INCHES

TD006086.13

Exhaust Systems, 1/T2 Diesel LWN

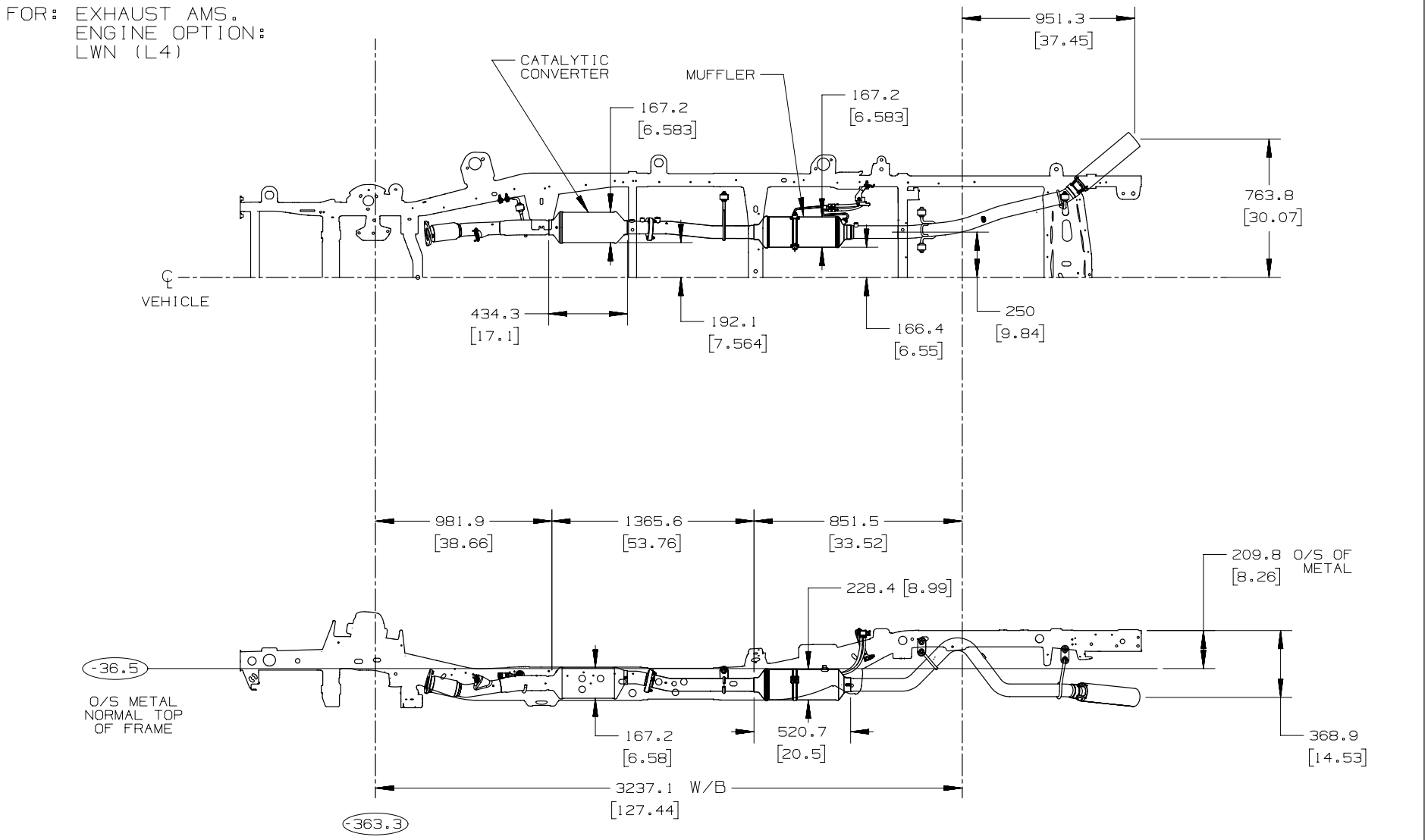

Colorado/Canyon 1/T P.U. and Chassis-Cab

Tailpipe Locations 1/T2 Diesel, LWN

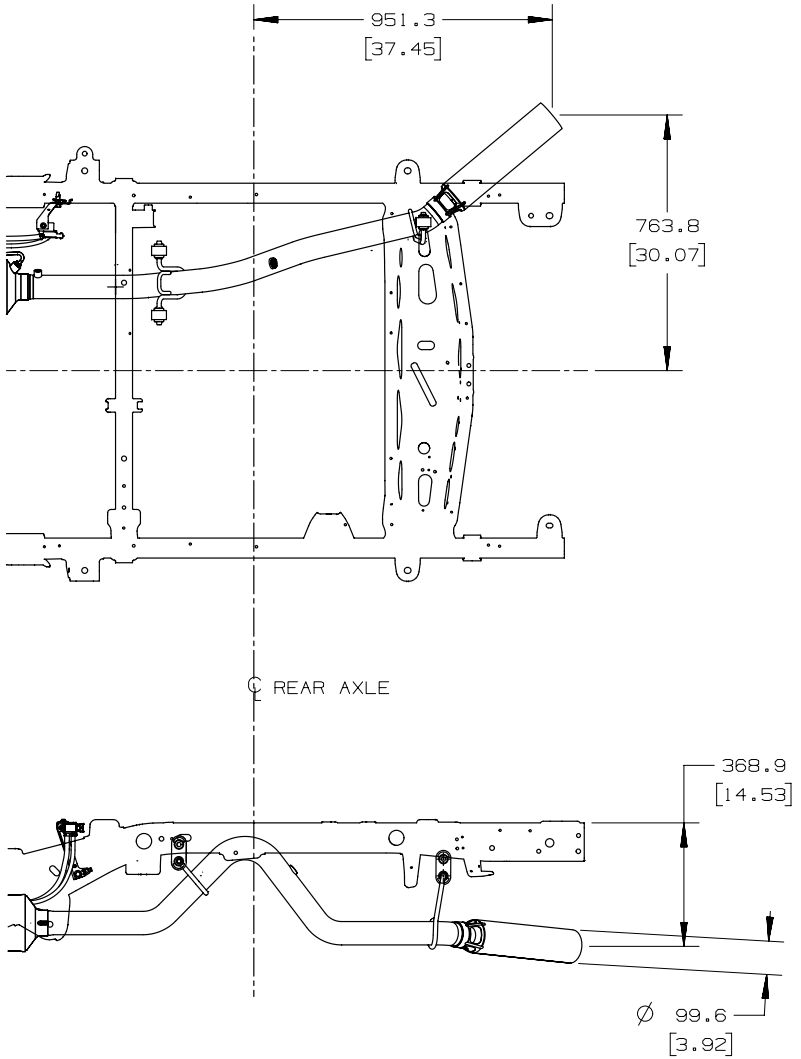

FOR: 1/T2 DIESEL (LWN) TAIL PIPE LOCATIONS

1/T2 DIESEL (LWN) TAIL PIPE LOCATIONS 2015

[ ]= INCHES

TD006086.15