Table of Contents

General Information 1-1
General Information 1-3

Body Systems 2-1
Fixed and Moveable Windows 2-3
Horns and Pedestrian Alerts 2-14
Lighting 2-17
Mirrors 2-54
Vehicle Access 2-67

Brakes 3-1
Trailer Brake Controls 3-3

Driver Information and Entertainment 4-1
Image Display Cameras 4-3

Engine/Propulsion 5-1
12 V Starting and Charging 5-3

HVAC 6-1
Heating, Ventilation, and Air Conditioning 6-3
HVAC - Automatic 6-4
HVAC - Manual 6-14

Power and Signal Distribution 7-1
Data Communications 7-3
Electrical Component and Inline Harness Connector End Views 7-27
Power Outlets 7-604
Wiring Systems and Power Management 7-615

Safety and Security 8-1
Immobilizer 8-3
Parking Assistance Systems 8-7
Seat Belts 8-14

Transmission 9-1
Power Take-Off 9-3
Shift Lock Control 9-12

INDEX INDEX-1

BLANK

Section 1

General Information

General Information 1-3
Introduction 1-3
Vehicle, Engine and Transmission ID and VIN Location, Derivative and Usage 1-3
Vehicle Certification, Tire Placard, and Anti-Theft Label 1-5
RPO Code List 1-7

BLANK

General Information

Introduction

Vehicle, Engine and Transmission ID and VIN Location, Derivative and Usage

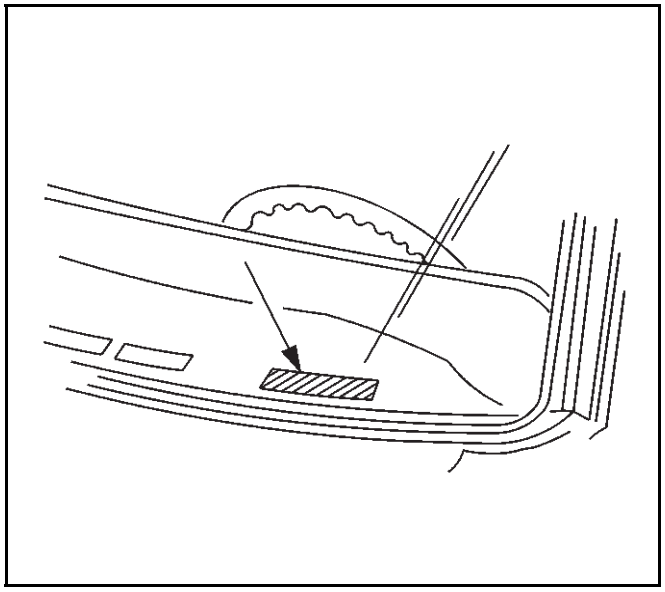

153729

The vehicle identification number (VIN) plate is the legal identifier of the vehicle. The VIN plate is located on the upper left corner of the instrument panel. The VIN number can be seen through the windshield from the outside of the vehicle:

Vehicle Identification Number (VIN) System

Position	Definition	Character	Description
1	Country of Origin	1	United States
2	Manufacturer	G	General Motors
3	Vehicle Brand/Type	D	GMC Incomplete Truck
		T	GMC Truck

Vehicle Identification Number (VIN) System (cont'd)

Position	Definition	Character	Description
4	GVWR/Brake System/Body Style	N	6,001–7,000 lbs/Hydraulic/Commercial Special Cutaway, Two (2) Door Cab pick-up, Motor Home Chassis
		P	6,001–7,000 lbs/Hydraulic/Crew Cab
		R	6,001–7,000 lbs/Hydraulic/Extended Cab
		U	7,001–8,000 lbs/Hydraulic/Crew Cab
		V	7,001–8,000 lbs/Hydraulic/Extended Cab
		0	9,001–10,000 lbs/Hydraulic/Commercial Special Cutaway, Two (2) Door Cab pick-up, Motor Home Chassis
		1	9,001–10,000 lbs/Hydraulic/Crew Cab
		2	9,001–10,000 lbs/Hydraulic/Extended Cab
		3	10,001–14,000 lbs/Hydraulic/Commercial Special Cutaway, Two (2) Door Cab pick-up, Motor Home Chassis
		4	10,001–14,000 lbs/Hydraulic/Crew Cab
		5	10,001–14,000 lbs/Hydraulic/Extended Cab
5/6	Chassis/Series	8/L	GMC Sierra 2500 Fleet/Base 2WD
		8/M	GMC Sierra 2500 SLE 2WD
		8/N	GMC Sierra 2500 SLT 2WD
		8/P	GMC Sierra 3500 Fleet/Base 2WD
		8/R	GMC Sierra 3500 SLE 2WD
		8/S	GMC Sierra 3500 SLT 2WD
		9/L	GMC Sierra 2500 Fleet/Base 4WD
		9/M	GMC Sierra 2500 SLE 4WD
		9/N	GMC Sierra 2500 SLT 4WD
		9/P	GMC Sierra 2500 SLT 4WD
		9/R	GMC Sierra 2500 Denali 4WD
7	Restraint System	E	RPO AY0 – Active Manual Belts, Airbags – Driver and Passenger – Front (1st row), Front Seat Side (1st row), Roof Side (all seating rows)
8	Engine Type	Y	L5P - ENGINE DIESEL, 8 CYL, 6.6L, DI, V8, TURBO, DURAMAX, GEN 5
		7	L8T - ENGINE GAS, 8 CYL, 6.6L, SIDI, VVT, CAST IRON
9	Check Digit	—	Check Digit
10	Model Year	L	2020
11	Plant Location	F	Flint, Michigan, USA
12–17	Plant Sequence Number	—	Plant Sequence Number

6.6LL (L5P) Engine ID and VIN Derivative Location

Engine Identification

6L90 (MYD) Transmission ID and VIN Derivative Location

Transmission Identification Information

Vehicle Certification, Tire Placard, and Anti-Theft Label

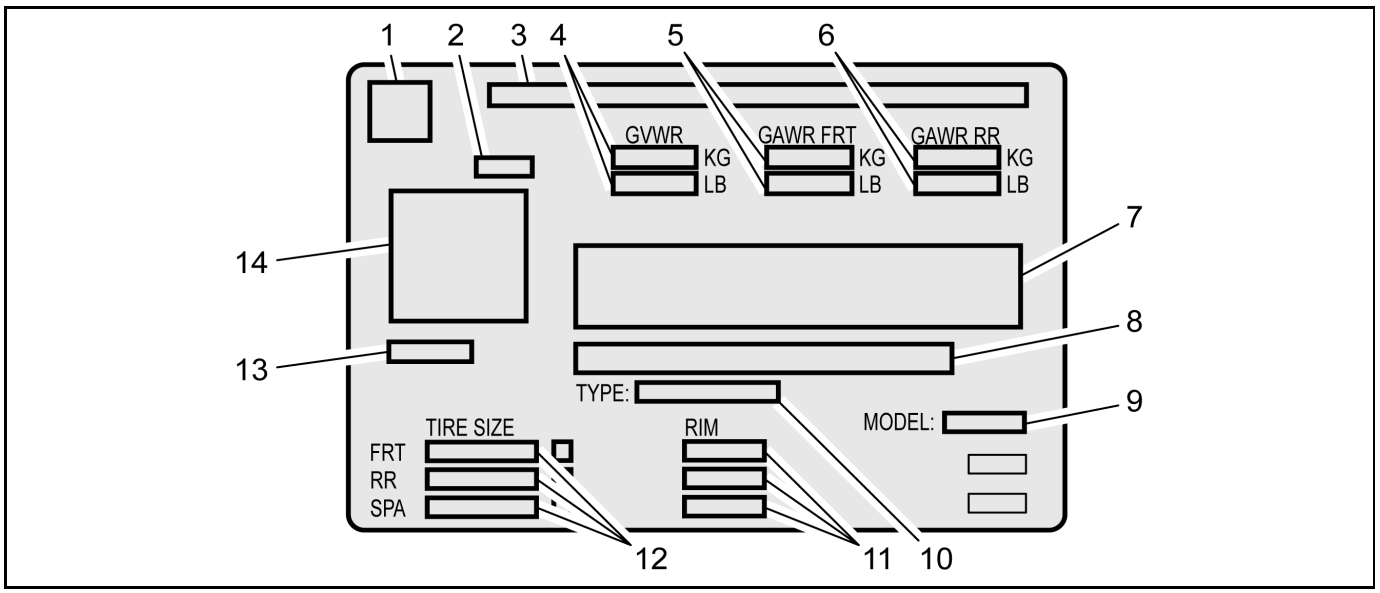

4992823

Vehicle Certification Label

Callout	Description
A vehicle-specific Certification label is attached to the vehicle's center pillar (B-pillar) and displays the following assessments:	
1	Logo
2	Final Date of Manufacture (Month and Year MM/YY) Date of manufacture is to reflect the date that the vehicle is counted as built. In those cases where a replacement label is needed, the replacement label should reflect the actual build date not the date of replacement.
3	Name of Manufacturer
4	Maximum Gross Vehicle Weight Rating (GVWR)
5	Maximum Gross Axle Weight Rating (GAWR) - Front
6	Maximum Gross Axle Weight Rating (GAWR) - Rear
7	Certification Statement
8	Vehicle Identification Number (VIN)
9	Engineering Model Number
10	Vehicle Class Type (Pass Car, etc.)
11	Original Equipment Rim Size
12	Original Equipment Tire Size
13	Paint Code
14	QR Code Once the QR code is scanned, the information will appear in this order on your smartphone or laptop: VIN, Model Year, Model, Build Month, Year, Engineering Book, Vehicle Order Number, 3 Digit RPO Codes sorted alphanumerically and the Paint Code (same code appears the lower left of the QR code)

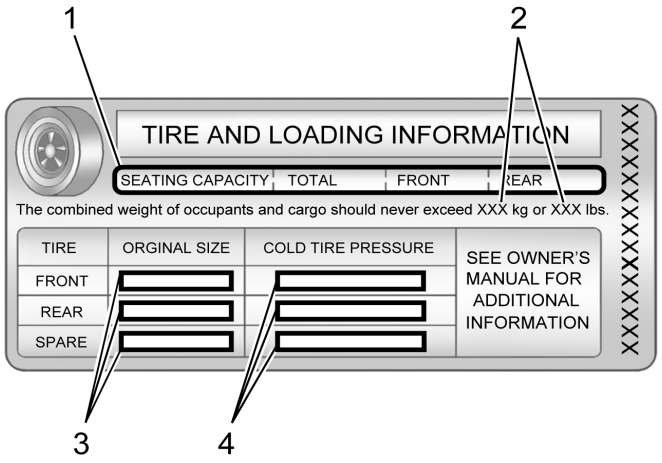
1
2
TIRE AND LOADING INFORMATION
SEATING CAPACITY
TOTAL
FRONT
REAR
The combined weight of occupants and cargo should never exceed XXX kg or XXX lbs.
TIRE
ORGINAL SIZE
COLD TIRE PRESSURE
FRONT
REAR
SPARE
SEE OWNER'S MANUAL FOR ADDITIONAL INFORMATION
XXXX

Anti-Theft Label

Callout	Description
This legal identifier is in the front corner of the instrument panel, on the driver side of the vehicle. It can be seen through the windshield from outside. The Vehicle Identification Number (VIN) also appears on the Vehicle Certification and certificates of title and registration.	
1	Vehicle Identification Number (VIN)

RPO Code List

The following table provides the description of the Regular Production Option (RPO) codes that are available on the vehicle. The vehicle's RPO list is printed on the Service Parts Identification Label.

RPO	Description
01U	PRIMARY COLOR-EXTERIOR, SPECIAL (02)
1CX	PACKAGE-CX OPTION 1
1LT	PACKAGE-LT OPTION 1
1LZ	PACKAGE-LZ OPTION 1
1SA	PACKAGE-OPTION 01
1WT	PACKAGE-WT OPTION 1
3LZ	PACKAGE-LZ OPTION 3
3SA	PACKAGE-SLE OPTION 1
4AA	INTERIOR TRIM-JET BLACK
4F2	INTERIOR TRIM-JET BLACK / KALAHARI
4JJ	INTERIOR TRIM-GIDEON/VY DK ATMOSPHERE
4JR	INTERIOR TRIM-DARK ASH GRAY/VY DK ATMOSPHERE
4JS	INTERIOR TRIM-JET BLACK/UMBER
4SA	PACKAGE-SLT OPTION 1
4SB	PACKAGE-SLT OPTION 2
5A7	WHEEL SPARE-NONE
5AZ	ACCESSORY-SAFETY KIT - UNIVERSAL
5H1	KEY-SINGLE KEY SYSTEM, 2 SPARE KEYS
5L5	THEFT DETERENT SYS-FLEET IMMOBILIZER MODIFICATIONS (SEO)
5LE	ACCESSORY-GARAGE DOOR OPENER
5M7	PROVISIONS-SPEEDOMETER CALIBRATION (SEO)
5N5	PROVISIONS-REAR CAMERA PREP AND CAMERA (SEO)
5SA	PACKAGE-DENALI OPTION 1
5VI	ACCESSORY-TIE DOWN RINGS - CARGO AREA
5Y1	SEAT CENTER-FRONT ROW 20% CENTER SEAT DELETE (SEO)
5Z4	TIRE & WHEEL-SPARE WHEEL & CARRIER - NONE (SEO)
63B	ACCESSORY-TONNEAU - RR COMPT - TRI FOLDING
63G	ACCESSORY-TAILGATE ASSIST LIGHTING
6K5	SALES PACKAGE-CONVENIENCE II
8F2	ORNAMENTATION-NONE
8Q3	SEAT RR-NONE (SEO)
8S3	ALARM B/U-ELECTRICAL, 97 DECIBELS (SEO)
8X8	LABEL INFORMATION-LABEL, FASTEN SEAT BELTS (SEO)
9B9	GOVERNOR-VEHICLE TOP SPEED LIMIT - 70 MPH (SEO)
9C2	GOVERNOR-VEHICLE TOP SPEED LIMIT - 65 MPH (SEO)
9D7	GOVERNOR-VEHICLE TOP SPEED LIMIT - 75 MPH (SEO)
9G8	EQUIPMENT-DAYTIME RUNNING LAMP & HEADLAMPS CONTROL - NONE (SEO)
9J4	BUMPER RR-(NONE)
9L3	TIRE SPARE-NONE
9L7	EQUIPMENT-ACSRY WRG JUNC BLK
9M4	DECAL-ENDGATE - NONE (SE0)
9R1	DECAL-PICKUP BOX SIDE - NONE (SEO)
9V5	COLOR-WOODLAND GREEN (SEO)
9W3	COLOR-WHEATLAND YELLOW, LEAD FREE (SEO)
9W4	COLOR-TANGIER ORANGE, LEAD FREE (SEO)
A2S	ADJUSTER DRIVER SEAT-4WAY, DISCONT MAN RECLINE, MAN FORE/AFT
A2X	ADJUSTER DRIVER SEAT-8WAY, PWR RECLINE, PWR FORE/AFT, PWR HEIGHT, PWR TILT
A45	MEMORY-SEAT ADJUSTER, MIRROR, POWER, DRIVER, PERSONALIZATION
A48	WINDOW RR-FULL WIDTH, SLIDING, POWER
A50	SEAT-FRT BKT
A52	SEAT-FRT BENCH
A60	LOCK CONTROL RR CMPT-LID, TAILGATE, KEY ACTIVATED
A68	SEAT RR-SPLIT, FOLDING
A6Q	WINDOW REG DRVR DR-MANUAL OPERATED
A6R	WINDOW REG PASS DR-MANUAL OPERATED
A7E	ADJUSTER PASS ST-4WAY, DISCONT MAN RECLINE, MAN FORE/AFT

RPO	Description
A7K	ADJUSTER PASS ST-8WAY, PWR RECLINE, PWR FORE/AFT, PWR HEIGHT, PWR TILT
AAC	PARTS PKG-SHIPPED LOOSE
AAK	ACCESSORY-FLOOR LINER - CONTOURED - ALT DESIGN 1
ACO	IDENTIFICATION-ACCESSORY CATALOG OFFERING
AE7	SEAT-FRT SPLIT, DRIVER, PASS
AED	WINDOW REG PASS DR-POWER OPERATED, EXPRESS DOWN
AEF	WINDOW REG PASS DR-POWER OPERATED, EXPRESS UP/DOWN
AEQ	WINDOW REG REAR DR-POWER OPERATED, EXPRESS DOWN
AKO	WINDOW TYPE-PRIVACY
AKP	WINDOW TYPE-SOLAR ABSORBING
AL0	SENSOR INDICATOR-INFLATABLE RESTRAINT, FRT PASS/CHILD PRESENCE DETECTOR
ANM	SALES PACKAGE-FIRE AND RESCUE
ANQ	SALES PACKAGE-SNOW PLOW SPECIAL EDITION
AQQ	LOCK CONTROL, ENTRY-REMOTE ENTRY, EXTENDED RANGE (MY 09 AND FUTURE)
ATH	LOCK CONTROL, ENTRY-REMOTE ENTRY, EXTENDED RANGE, PASSIVE ENTRY, ALL DOORS
AU3	LOCK CONTROL-SIDE DR, ELEC
AXG	WINDOW REG DRVR DR-POWER OPERATED, EXPRESS UP/DOWN
AXK	VEHICLE TYPE-TRUCK
AY0	RESTRAINT SYSTEM-SEAT, INFLATABLE, DRIVER & PASS FRT, SEAT SIDE, ROOF SIDE
AZ3	SEAT-FRT SPLIT, DRIVER, PASS, FULL FEATURE CENTER
B1J	LINER-RR WHEELHOUSE
B26	SALES PACKAGE-SAFETY PACKAGE VAR. 1
B30	COVERING FLOOR-CARPET
B32	COVERING FRT-FLOOR MATS, AUX
B33	COVERING REAR-FLOOR MATS, AUX
B34	COVERING FRT-FLOOR MATS, CARPETED INSERT
B35	COVERING REAR-FLOOR MATS, CARPETED INSERT
B59	SALES PACKAGE-FUNCTIONAL PACKAGE
BAG	PARTS PKG-EXPORT
BG9	COVERING FLOOR-RUBBER
BGP	SALES PACKAGE-SAFETY PACKAGE VAR. 2
BHP	COVER-WINTER GRILLE

RPO	Description
BPH	APPEARANCE PACKAGE-CHEVROLET "OFF ROAD"
BTM	SWITCH-ENGINE START, KEYLESS
BTV	REMOTE START-ENGINE
BVQ	STEPS, RUNNINGBOARD-SIDE, TUBULAR, CHROME
BWN	STEPS-CORNER ASSIST, BUMPER
C32	HEATER AIR SYSTEM-HEATING/ DEFROSTER SYSTEM, REINFORCED, ELECTRIC
C49	DEFOGGER-RR WINDOW, ELECTRIC
C59	VENT-AIR, CONSOLE, RR
C67	HVAC SYSTEM-AIR CONDITIONER FRT, ELECTRONIC CONTROLS
C9I	SWITCH-ROLL OVER SENSING
CF5	ROOF-SUN, GLASS, SLIDING, ELEC (DO NOT USE NEXT NEW MAJOR)
CGN	LINER-PUBX, SPRAY ON
CGO	COLLECTION GVW-COLLECTION GVW LESS THAN OR EQUAL TO 10,000 LBS
CJ2	HVAC SYSTEM-AIR CONDITIONER FRT, AUTO TEMP CONT, AUX TEMP CONT
CMD	PLANT CODE-FLINT, MI, USA (TRK)
CMT	SALES PACKAGE-GOOSE NECK/5TH WHEEL PREP AND CAMERA
CTT	HITCH ASSIST-GUIDELINES
D07	CONSOLE-FRT COMPT, FLOOR, CUSTOM
D31	MIRROR I/S R/V-TILT
D3K	COUNTRY-DOMINICAN REPUBLIC
D3L	COUNTRY-EL SALVADOR
D3M	COUNTRY-GUATEMALA
D3Q	COUNTRY-HONDURAS
D3S	COUNTRY-QATAR
D4C	COUNTRY-BAHRAIN
D4J	COUNTRY-US VIRGIN ISLAND
D5D	COUNTRY-NICARAGUA
D5P	COUNTRY-UNITED ARABIC EMIRATES
D72	HANDLE O/S DOOR-BLACK
D75	HANDLE O/S DOOR-BODY COLOR
DBG	MIRROR O/S-LH & RH, WFOV, MAN EXT, MAN FOLD,HTD, TURN SIG IND, R/CON, ELECT, AUX CLEAR, FLAT/CONV DR/PASS
DD8	MIRROR I/S R/V-LT SENSITIVE
DH6	MIRROR I/S FRT VAN-LH & RH, SUNSHADE, ILLUM
DLF	MIRROR O/S-LH & RH, RC, ELEC, HEAT, MAN FOLD, FLAT/DRVR, CNVXPASS
DMQ	DECAL-ALASKAN
DN1	DECAL-PICK UP BOX - DELETE
DNS	EQUIPMENT-SUPPLIER INSTALLED
DP9	MIRROR PROVISIONS-HOUSING, CHROME

RPO	Description
DRZ	MIRROR I/S R/V-LT SENSITIVE, FULL VIDEO DISPLAY
DT4	ASHTRAY-CIGARETTE LIGHTER
DUD	MIRROR O/S-LH & RH, WFOV, MANUAL, MAN FOLD, MAN EXT, FLAT/COVN DR/PASS
DWI	MIRROR O/S-LH&RH,WFOV,MAN EXT, PWR FLD,HTD,TURN SIG,R/CON,ELEC, AUX CARGO,AUX CLR,PERM LIGHT,FLAT LT SENS DR/PAS
DZC	MIRROR O/S-LH&RH,WFOV,PWR EXT, PWR FOLD,HTD,TURN SID,R/CON MEM, AUX CARGO,AUX CLR,PERM LT,FLAT LT SENS DR/PAS
DZW	CHASSIS-DUAL REAR WHEEL, RIDE & HANDLING
E20	HANDLE O/S DOOR-CHROME
E63	BODY EQUIPMENT-FLEETSIDE PICK-UP BOX
E6H	COUNTRY-OMAN
E6J	COUNTRY-PUERTO RICO
EF5	COUNTRY-PANAMA
EF7	COUNTRY-UNITED STATES OF AMERICA (USA)
EXP	EXPORT-
F48	CHASSIS DRIVE LINE-ALL WHEEL DRIVE (AWD)/FOUR WHEEL DRIVE(4WD), DRIVER SELECT
F60	SPRING FRONT-HEAVY DUTY
FE9	CERTIFICATION-EMISSION, FEDERAL
FHX	VEHICLE FUEL-DIESEL B20
FJW	VEHICLE FUEL-GASOLINE E15
FPF	EQUIPMENT-EMISSION-DIESEL DPF MANUAL REGENERATION
G1W	PRIMARY COLOR-EXTERIOR, ABALONE WHITE TRICOAT(140X)
G7C	PRIMARY COLOR-EXTERIOR, PULL ME OVER RED SOLID (130X)
G80	AXLE POSITRACTION-LIMITED SLIP
GA0	PRIMARY COLOR-EXTERIOR, SOME KINDA BLUE MET -1 (619D)
GAN	PRIMARY COLOR-EXTERIOR, SWITCHBLADE SILVER MET (G) 636R
GAZ	PRIMARY COLOR-EXTERIOR, SUMMIT WHITE (G) 8624
GBA	PRIMARY COLOR-EXTERIOR, BLACK (G) 8555
GCI	PRIMARY COLOR-EXTERIOR, HUDSON MET -1 (621D)
GF2	TRIM PACKAGE-CUSTOM
GF3	TRIM PACKAGE-LT
GF5	TRIM PACKAGE-WORK TRUCK
GF9	TRIM PACKAGE-LTZ
GFD	TRIM PACKAGE-HIGH COUNTRY
GFF	TRIM PACKAGE-BASE
GFG	TRIM PACKAGE-AT4
GFI	TRIM PACKAGE-SLE
GFU	TRIM PACKAGE-SLT
GFW	TRIM PACKAGE-DENALI
GJI	PRIMARY COLOR-EXTERIOR, DARK SHADOW MET -1 (626D)
GNK	PRIMARY COLOR-EXTERIOR, OXFORD MET-1 (334E)
GPJ	PRIMARY COLOR-EXTERIOR, GLORY RED TINT-2 (434B)
GT4	AXLE REAR-3.73 RATIO
GTY	AXLE-WIDE TRACK
GU6	AXLE REAR-3.42 RATIO
H0U	INTERIOR TRIM CONFIG-CLOTH, LEVEL 2, JET BLACK
H0Y	INTERIOR TRIM CONFIG-LEATHER, LEVEL 1, JET BLACK
H1T	INTERIOR TRIM CONFIG-CLOTH, LEVEL 1, JET BLACK
H1Y	INTERIOR TRIM CONFIG-LEATHER, LEVEL 2, JET BLACK
H2G	INTERIOR TRIM CONFIG-VINYL, LEVEL 1, JET BLACK
H2U	INTERIOR TRIM CONFIG-LEATHER, LEVEL 3, JET BLACK
H2X	INTERIOR TRIM CONFIG-LEATHER, LEVEL 4, JET BLACK
HS1	ALERT-SAFETY HAPTIC SEAT
HV5	INTERIOR TRIM CONFIG-CLOTH, LEVEL 2, GIDEON/VY DK ATMOSPHERE
HVC	INTERIOR TRIM CONFIG-LEATHER, LEVEL 1, GIDEON/VY DK ATMOSPHERE
HVD	INTERIOR TRIM CONFIG-LEATHER, LEVEL 2, JET BLACK/KALAHARI
HVE	INTERIOR TRIM CONFIG-LEATHER, LEVEL 2, GIDEON/VY DK ATMOSPHERE
HVG	INTERIOR TRIM CONFIG-LEATHER, LEVEL 3, JET BLACK / UMBER
HVH	INTERIOR TRIM CONFIG-LEATHER, LEVEL 4, MED DARK ASH GRAY / VY DK ATMOSPHERE
I20	ENGINEERING YEAR-2020
ICY	ACCESSORY-ARCTIC HOSE - POWER STEERING
IOR	RADIO-INFOTAINMENT SYSTEM - 3.X LOW HMI, MIDLEVEL CONNECTIVITY 3.X
IOS	RADIO-INFOTAINMENT SYSTEM - 3.X MID/ HIGH HMI, ENHANCED CONNECTIVITY, VOICE RECOGNITION, MID SD NAV CAPABLE
IOT	RADIO-INFOTAINMENT SYSTEM - 3.X MID/ HIGH HMI, ENHANCED CONNECTIVITY, VOICE RECOGNITION, PREMIUM SD NAV
J61	BRAKE SYSTEM-POWER, FRT & RR DISC, ABS, 17"

RPO	Description
JBP	BRAKE LINING WEAR SY-LIFE SPAN PROGNOSTIC INDICATOR
JHD	CONTROL-HILL DESCENT, GEAR HOLD
JK1	TIRE PRESS INDICATOR-LOW TIRE PRESSURE - NONE
JL1	CONTROL-INTEGRATED TRAILER BRAKE
K05	HEATER ENG-BLOCK
K1O	FILTER MONITOR-ENGINE AIR
K34	CRUISE CONTROL-AUTOMATIC, ELECTRONIC
K40	ENGINE BRAKE-EXHAUST
K47	AIR CLEANER-HIGH CAPACITY
K4B	BATTERY-LN3, FLA, 12V, 70AH, 730 SAE CCA, AUX
K4C	CHARGER-INDUCTIVE PORTABLE WIRELESS DEVICE
KA1	HEATER SEAT FRT-DRVR & PASS
KA6	HEATER SEAT-REAR
KC4	COOLING SYSTEM-ENG OIL
KC5	RECEPTACLE-ELECTRICAL, ACCESSORY (DNU NEW/MAJOR - USE KH8)
KC9	RECEPTACLE PUBX-ELECTRICAL, 110 VOLT
KCA	RECEPTACLE PUBX-ELECTRICAL, 230 VOLT
KHF	GENERATOR-170 AMP AND 220 AMP, DUAL
KI3	STEERING WHEEL HEAT-AUTOMATIC
KI4	RECEPTACLE I/P-ELECTRICAL, 110 VOLT
KI5	RECEPTACLE I/P-ELECTRICAL, 230 VOLT
KNP	COOLING SYSTEM-TRANS, HD
KPA	RECEPTACLE-ELECTRICAL, FRT CONSOLE RR, 12 VOLT
KQV	HEATER-SEAT, VENTED, FRT
KW5	GENERATOR-220 AMP
KW7	GENERATOR-170 AMP
L5P	ENGINE-DIESEL, 8 CYL, 6.6L, DI, V8, TURBO, DURAMAX, GEN 5, VAR. 1
L8T	ENGINE-GAS, 8 CYL, 6.6L, SIDI, VVT, CAST IRON
M1F	POWER TAKE OFF-RR PTO
MAH	MARKETING AREA-US, PUERTO RICO/USVI
MAM	MARKETING AREA-MIDDLE EAST
MBC	MARKETING AREA-CANADA
MBI	MARKETING AREA-ISRAEL
MCR	RECEPTACLE-MEMORY CARD (DO NOT USE NEXT NEW MAJOR)
MCX	MARKETING AREA-MEXICO
MCY	RECEPTACLE-USB ONLY (DO NOT USE NEXT NEW MAJOR, SEE BFO)
MCZ	PORT, MULTI ELEK DEV-USB (DO NOT USE NEXT NEW MAJOR, SEE BFO)
MGM	TRANSMISSION-AUTO 10 SPD, 10L1000, GRX, GEN 1, VAR 1
MGU	TRANSMISSION-AUTO 10 SPD, 10L1000, GRX, GEN 2, VAR 2
MYD	TRANSMISSION-AUTO 6 SPD, HMD, 6L90
N01	LOCK CONTROL-FUEL PLUG
N05	LOCK CONTROL-FUEL FILLER CAP
N06	STEERING COLUMN LOCK-ELECTRICAL
N2L	FUEL TANK-REAR TANK 40 GAL (151L)
N2M	FUEL TANK-FRONT TANK 23.5 GAL (89L)
N2N	FUEL TANK-DUAL TANK, FRONT TANK 23.5 GAL (89L) REAR TANK 40 GAL (151L)
N33	STEERING COLUMN-TILT TYPE
N37	STEERING COLUMN-TILT, TELESCOPING
N79	WHEEL SPARE-18 X 8.0, J, STEEL, DESIGN 2
NB5	EXHAUST SYSTEM-SINGLE (DO NOT USE NEXT NEW MAJOR, USE NC2)
NE1	CERTIFICATION-EMISSION, GEOGRAPHICALLY RESTRICTED REGISTRATION FOR VEHICLES UP TO 14, 000 LBS GVW (USE 2003 MDL YR
NK5	STEERING WHEEL-STANDARD
NP5	STEERING WHEEL-LEATHER WRAPPED
NQF	TRANSFER CASE-ELECTRIC SHIFT CONT, TWO SPEED, ALUM
NQH	TRANSFER CASE-ACTIVE, TWO SPEED, SWITCH ACTIVATED, ALUM
NTB	EMISSION SYSTEM-FEDERAL, TIER 3
NU9	EMISSION SYSTEM-CALIFORNIA, ULEV200
NUM	EMISSION SYSTEM-CALIFORNIA, LEV3 MDV 10-14K GVW
NV8	STEERING-POWER, MAGNETIC SPEED, VARIABLE ASSIST
NZ4	WHEEL SPARE-17 X 7.5, J, STEEL, DESIGN 2
NZZ	SALES PACKAGE-SKID PLATE, "OFF ROAD" SPORT
P03	COVER, WHEEL-VAR 3
P06	TRIM DISCS-WHEEL
PTO	ENGINE CONTROL-POWER TAKE OFF (PTO) CONTROLS
PTT	TRAILER TIRE PRESSUR-MANUAL LEARN
PYN	WHEEL-17 X 7.5, J, STEEL, DESIGN 7
PYQ	WHEEL-17 X 7.5, J, ALUMINUM, DESIGN 7
PYR	WHEEL-18 X 8.0, J, ALUMINUM, DESIGN 24
PYS	WHEEL-20 X 8.5, J, ALUMINUM, DESIGN 14
PYT	WHEEL-18 X 8.0, J, STEEL, DESIGN 2

RPO	Description
PYU	WHEEL-20 X 8.5, J, ALUMINUM, DESIGN 19
PYV	WHEEL-18 X 8.0, J, ALUMINUM, DESIGN 23
PYW	WHEEL-17 X 6.5, J, STEEL, DESIGN 2
PZ8	IMAGE ADJUSTMENT-HITCH VIEW
Q7R	WHEEL-20 X 8.5, J, ALUMINUM, DESIGN 13
QF6	TIRE ALL-LT275/70R18 E 125/122 S BW AT VAR 1
QF9	TIRE ALL-LT275/65R20 E 126/123 S BW AT VAR 1
QHQ	TIRE ALL-LT245/75R17 E 121/118R BW ALS
QK1	GATE TYPE-PUBX END STANDARD
QK2	GATE TYPE-PUBX END ENHANCED
QQO	TIRE ALL-LT235/80R17 E 120/117R BW ALS
QT2	GATE FUNCTION-MANUAL
QT3	GATE FUNCTION-MANUAL ASSIST
QT5	GATE FUNCTION-MANUAL ASSIST POWER RELEASE
QT6	GATE FUNCTION-POWER
QXT	TIRE ALL-LT265/70R17 E 121/118 Q BW AT
QZT	TIRE ALL-LT235/80R17 E 120/117R BW AT
R7O	SEAT RR-SPLIT, FOLDING, BASE STORAGE
R88	ACCESSORY-ILLUMINATED EMBLEM - EXTERIOR - DESIGN 2
RDI	ACCESSORY-KEYLESS ENTRY
REM	ACCESSORY TIRE-TIRE ALL - LT275/ 65R20 E 126/123 S BW AT VAR 1
RIA	ACCESSORY-FLOOR LINER - CONTOURED
RIK	ACCESSORY-BADGE - EXTERIOR, PACKAGE, DESIGN 1
RN2	ACCESSORY-ILLUMINATED EMBLEM - EXTERIOR - DESIGN 1
RQ9	WHEEL-20 X 8.5, J, ALUMINUM, DESIGN 1
RQA	WHEEL-20 X 8.5, J, ALUMINUM, DESIGN 2
RS7	WHEEL-17 X 6.5, J, ALUMINUM, DESIGN 1
RTH	WHEEL-20 X 8.5, J, ALUMINUM, DESIGN 3
RVG	ACCESSORY-ADAPTER - TRAILER HARNESS
RVQ	ACCESSORY-ASSIST STEPS - TUBULAR - OVAL - BLACK
RVS	ACCESSORY-ASSIST STEPS - TUBULAR - ROUND - BLACK
RW6	ACCESSORY-BED STORAGE BOX - FIXED FULL WIDTH - METAL
RW9	ACCESSORY-BED STORAGE BOX - SIDE FULL LENGTH - COMPOSITE
RWL	CHASSIS DRIVE LINE-REAR WHEEL DRIVE (RWD)

RPO	Description
RWR	ACCESSORY-CAMERA - REAR VISION
RWS	ACCESSORY-FLOOR MATS - CARPET
RXJ	ACCESSORY-CENTER CAP - WHEEL - DESIGN 2
RXQ	ACCESSORY-CONVENIENCE NET - BED MOUNTED
RYT	ACCESSORY-FIRST AID KIT
S08	ACCESSORY-HIGHWAY SAFETY KIT
S0D	ACCESSORY-HOOD INDUCTION VENT ASSEMBLY
S0M	ACCESSORY-ILLUMINATED DOOR SILLS
S0P	ACCESSORY-INSERT - FLOOR CONSOLE
S0T	ACCESSORY-INTERIOR TRIM KIT - ALTERNATE FINISH 1
S0Y	ACCESSORY-LAMPS - CARGO AREA
S1O	ACCESSORY-CONTAINER - LOCKABLE STORAGE - INTERIOR
S1V	ACCESSORY-HEADPHONES - RSE
S41	ACCESSORY-LINER - WHEEL HOUSE
S47	ACCESSORY-LUG NUTS
S54	ACCESSORY-NAVIGATION MAP UPDATES
S6L	ACCESSORY-PROTECTOR - ROCKER PANEL
S6N	ACCESSORY-RECEIVER COVER - TRAILER HITCH
S6P	ACCESSORY-REMOTE START KIT
SAF	LOCK-SPARE TIRE, HOIST SHAFT
SB7	ACCESSORY-DECAL PACKAGE - DESIGN 1
SB9	ACCESSORY-DECAL PACKAGE - DESIGN 2
SCZ	ACCESSORY-TAILGATE HANDLE - ALTERNATE FINISH - CHROME
SD5	ACCESSORY-TIRE PRESSURE MONITOR
SDE	ACCESSORY-TRAILER HITCH - REMOVABLE
SDI	ACCESSORY-TRIANGLE - REFLECTIVE
SF6	ACCESSORY-WHEEL FLARES - ALTERNATE DESIGN - PAINTED
SFE	ACCESSORY-WHEEL LOCKS
SFJ	ACCESSORY-WINDOW SHADES - REFLECTIVE
SFW	CALIBRATION-BACK UP ELECTRICAL ALARM (SEO)
SFZ	ACCESSORY-EMBLEM - EXTERIOR - DESIGN 1
SHH	ACCESSORY-WHEEL - 20 X 8.5 - J - ALUMINUM - DESIGN 1
SHL	ACCESSORY-WHEEL - 20 X 8.5 - J - ALUMINUM - DESIGN 2
SIE	ACCESSORY-PUBX TIERED STORAGE

RPO	Description
SIL	ACCESSORY-RSE - PORTABLE MEDIA CONNECTIVITY PKG - W/INTEGRATED POWER
SJ9	ACCESSORY-GRILLE / GRILLE INSERTS - ALTERNATE FINISH 1
SJB	ACCESSORY-GRILLE / GRILLE INSERTS - ALTERNATE FINISH 3
SKP	WHEEL SPARE-17 X 6.5, J, STEEL, DESIGN 1
SL7	ACCESSORY-PUBX LADDER / UTILITY RACK STANCHIONS
SNO	ACCESSORY-HITCH COMPLETION PKG - GOOSENECK
SNR	SEAT RR-SPLIT, FOLDING, DELUXE STORAGE
SPY	ACCESSORY-LUG NUTS - ALT FINISH
SPZ	ACCESSORY-WHEEL LOCKS - ALT FINISH
SR3	ACCESSORY-RSE - DUAL HEADREST DISPLAY W/WIRELESS CONNECTIVITY & DVD
SRW	CHASSIS-SINGLE REAR WHEEL, RIDE & HANDLING
SUR	ACCESSORY-TRAILER TIRE PRESSURE MONITOR
T3U	LAMP FRT FOG-FRT FOG
T4A	HEADLAMPS-HALOGEN
T4L	HEADLAMPS-LED
TDM	MODE-TEEN DRIVER SETTINGS
TGK	COLOR COMBINATION-SOLID, SPECIAL PAINT
TQ5	HEADLAMP HIGH BEAM-AUTO CONTROL
TRO	ACCESSORY-CAMERA PKG - TRAILERING AUX MOUNTED
TUF	ORNAMENTATION-EMBLEM, "TEXAS EDITION"
U01	LAMP-FIVE, ROOF MARKER, TRUCK
U12	LAMP-EXTR, OSRV MIRROR, TASK
U19	SPEEDOMETER-INST, KILO & MILES, KILO ODOMETER
U1D	INDICATOR-TRAILER INFORMATION
U2J	DIGITAL AUDIO SYSTEM-S-BAND - NONE
U2K	DIGITAL AUDIO SYSTEM-S-BAND
U2L	RECEPTION-HD
U73	ANTENNA-FIXED, RADIO
U95	SPEAKER SYSTEM-2, BASE
UD5	PARK ASSIST-FRONT AND REAR
UD7	PARK ASSIST-REAR
UDC	DISPLAY INSTRUMENT-DRIVER INFO ENHANCED (ONE COLOR GRAPHIC)
UDD	DISPLAY INSTRUMENT-DRIVER INFO ENHANCED (MULTI COLOR STANDARD GRAPHIC)
UDU	PROVISIONS-REAR CAMERA PREP

RPO	Description
UE0	COMMUNICATION SYSTEM-VEHICLE - NONE
UE1	COMMUNICATION SYSTEM-VEHICLE, ONSTAR
UE4	SENSOR INDICATOR-FOLLOWING DISTANCE
UEU	SENSOR INDICATOR-FORWARD COLLISION ALERT
UF2	LAMP-CARGO
UF3	SWITCH-HIGH IDLE
UFG	REAR CROSS TRAFFIC-ALERT
UFL	LANE ACTIVE SAFETY-DEPARTURE WARNING
UG1	OPENER-GARAGE DOOR, UNIVERSAL
UGA	HOOK-TOW, RED
UHS	DISPLAY INSTRUMENT-DRIVER INFO ENHANCED (MULTI COLOR ENHANCED GRAPHIC)
UHY	COLL IMMINENT BRK-LOW SPEED, VEH FWD MOVEMENT, BRAKE PREFILL, INTEGRATED BRAKE ASSIST
UIJ	INFOTAINMENT DISPLAY-NORMALLY BLACK COLOR (TFT), 8", WVGA 800X480P
UIK	INFOTAINMENT DISPLAY-NORMALLY BLACK COLOR (TFT), 8", WXGA 1280X768P
UIR	INFOTAINMENT DISPLAY-NORMALLY BLACK COLOR (TFT), 7", WVGA 800X480P
UJM	TIRE PRESS INDICATOR-MANUAL LEARN
UK3	CONTROL-STEERING WHEEL, ACCESSORY
UKC	SIDE ACTIVE SAFETY-OBSTACLE DETECTION ENHANCED
UL2	FREQUENCIES-EUROPEAN
UL4	FREQUENCIES-SOUTH AMERICA
UL8	FREQUENCIES-SAUDI ARABIAN
ULK	ACCESSORY-TOW HOOKS - RED
UMN	SPEEDOMETER-INST, MILES & KILO, MILES ODOMETER
UQA	SPEAKER SYSTEM-PREMIUM AUDIO, BRANDED AMPLIFIER
UQF	SPEAKER SYSTEM-STANDARD AUDIO
URC	SWITCH-FLEXRIDE MODE SYSTEM
USS	RECEPTACLE-USB CHARGE PORT (DO NOT USE NEXT NEW MAJOR, SEE BFO)
UTJ	THEFT DETERENT-ELECTRICAL, UNAUTHORIZED ENTRY
UV6	HEAD UP DISPLAY-WINDSHIELD
UVB	VISION-REAR VIEW, MONO, HD DIGITAL
UVC	VISION-REAR VIEW, MONO, ANALOG
UVI	VISION-270 & REAR TRAILER VIEW, MONO, HD DIGITAL(DO NOT USE AFTER MY2022)
UVN	VISION AUXILIARY-CARGO BED

RPO	Description
UVS	VISION-360 & TRAILER VIEW, MONO, HD DIGITAL (DO NOT USE AFTER MY2022)
UY2	WIRING PROVISIONS-CAMPER & 5TH WHEEL TRAILER
V46	BUMPER FRT-CHROME
V4D	CALIBRATION-SEPARATED STOP/TURN SIGNAL CIRCUITS
V76	HOOK-TOW
V78	VEHICLE STATEMENT-VEHICLE LABEL CONTENT - NO CERT STATEMENT (ENGLISH TEXT)
V87	VEHICLE STATEMENT-VEHICLE LABEL CONTENT - GULF STATES ORGANIZATION
V8C	VEHICLE STATEMENT-VEHICLE LABEL CONTENT - NO CERT STATEMENT
V8D	VEHICLE STATEMENT-VEHICLE LABEL CONTENT - U.S. FMVSS
V8E	VEHICLE STATEMENT-VEHICLE LABEL CONTENT - CANADA CMVSS
V8I	VEHICLE STATEMENT-VEHICLE LABEL CONTENT - ISRAEL FMVSS
VAV	ACCESSORY-FLOOR MATS - ALL WEATHER
VB5	BUMPER FRT-COLOR
VBJ	ACCESSORY-UNDERSEAT STORAGE
VBR	ACCESSORY-PUBX RUBBER MAT
VBX	LANGUAGE LABEL-ARABIC
VGC	PROTECTOR-FILM, PAINT ETCH PREVENTIVE
VH6	BUMPER FRT-BLACK
VJG	BUMPER RR-BLACK
VJH	BUMPER RR-CHROME
VK3	LICENSE PLATE FRONT-FRT MOUNTING PKG
VKU	ACCESSORY-MIRROR CAPS - CHROME
VKW	ACCESSORY-ORGANIZER - FRONT CONSOLE
VKY	ACCESSORY-DOOR HANDLES - ALTERNATE FINISH - CHROME
VOZ	ACCESSORY-TONNEAU - RR COMPT - HARD FOLDING - ALT DESIGN
VPB	ACCESSORY-TONNEAU - RR COMPT - VINYL W/ INTEGRAL CROSSBOW SUPPORTS
VPH	VEHICLE PREPARATION-OVERSEAS DELIVERY
VQK	ACCESSORY-SPLASH GUARDS - CUSTOM MOLDED
VQO	ACCESSORY-ASSIST STEPS - BLACK
VQY	ACCESSORY-TOW HOOKS - CHROME
VQZ	ACCESSORY-EXHAUST TIP - DESIGN 1
VST	ACCESSORY-SILL PLATES - ALTERNATE DESIGN 1
VSX	LABEL-TOWING

RPO	Description
VT5	BUMPER RR-COLOR KEYED
VT7	OWNERS MANUAL-ENGLISH LANGUAGE
VTS	OWNERS MANUAL-SPANISH LANGUAGE
VUK	ACCESSORY-TAILGATE LINER - PUBX
VV4	COMMUNICATION EQUIP-MOBILE INTERNET CONNECTIVITY
VW9	ACCESSORY-CENTER CAP - WHEEL - DESIGN 3
VXH	ACCESSORY-ASSIST STEPS - TUBULAR - CHROME - OVAL
VXJ	ACCESSORY-ASSIST STEPS - TUBULAR - CHROME - ROUND
VXT	VEHICLE TYPE-INCOMPLETE
VYU	PROVISIONS-SNOW PLOW PREP
VZX	ACCESSORY-PUBX BEDLINER
W09	ACCESSORY-TAILGATE GAP COVER
W0F	ACCESSORY-GRILLE COVER - WINTER PROTECTION
W2D	ACCESSORY-CARGO NET
WLD	WINDOW CONTROL-REMOTE EXPRESS DOWN, ALL WINDOWS
WMI	SHUTTERS-FRONT GRILLE, ACTIVE, UPR AND LWR
WML	VIN MODEL YEAR-2020
WPC	SALES PACKAGE-COMFORT AND CONVENIENCE
WPF	SALES PACKAGE-PREFERRED
X31	APPEARANCE PACKAGE-GMC "X31 OFF ROAD"
X88	MARKET BRAND-CHEVROLET
YF5	CERTIFICATION-EMISSION, CALIFORNIA
YM8	IDENTIFICATION-LIMITED PERSONALIZATION OPTION (LPO)
Z49	COUNTRY-CANADA
Z6A	PROVISIONS-SPECIAL EQUIPMENT, 5TH WHEEL/ GOOSENECK TRAILER HITCH PREP PACKAGE
Z71	CHASSIS PACKAGE-"OFF ROAD"
Z82	TRAILER PROVISIONS-SPECIAL EQUIPMENT, H.D.
Z85	CHASSIS PACKAGE-INCREASED CAPACITY
Z88	MARKET BRAND-GMC
ZHQ	TIRE SPARE-LT245/75R17 E 121/118 R BW ALS
ZL3	SALES PACKAGE-CONVENIENCE
ZL6	SALES PACKAGE-TRAILER INTEGRATION
ZLA	SALES PACKAGE-INFOTAINMENT
ZLQ	SALES PACKAGE-LS FLEET
ZQO	TIRE SPARE-LT235/80R17 E 120/117R BW HWY
ZW9	BODY EQUIPMENT-BASE BODY OR CHASSIS

RPO	Description
ZXT	TIRE SPARE-LT265/70R17/E BW TL
ZYG	TIRE SPARE-LT275/70R18 E 125/122 S BW AT VAR 1

RPO	Description
ZZT	TIRE SPARE-LT235/80R17 E 120/117 R BW AT

Section 2

Body Systems

Fixed and Moveable Windows 2-3
Schematic and Routing Diagrams 2-3
Moveable Window Schematics 2-4
Defogger Schematics 2-10
Description and Operation 2-11
Power Windows Description and Operation 2-11
Rear Window Defogger Description and Operation 2-12
Horns and Pedestrian Alerts 2-14
Schematic and Routing Diagrams 2-14
Horn Schematics 2-15
Description and Operation 2-16
Horns System Description and Operation 2-16
Lighting 2-17
Schematic and Routing Diagrams 2-17
Fog Lights Schematics 2-18
Exterior Lights Schematics 2-19
Interior Lights Schematics 2-42
Interior Lights Dimming Schematics 2-44
Description and Operation 2-48
Exterior Lighting Systems Description and Operation 2-48
Interior Lighting Systems Description and Operation 2-52
Mirrors 2-54
Schematic and Routing Diagrams 2-54
Inside Rearview Mirror Schematics 2-55
Outside Rearview Mirror Schematics 2-56
Description and Operation 2-63
Automatic Day-Night Mirror Description and Operation 2-63
Outside Mirror Description and Operation (Without A45) 2-63
Outside Mirror Description and Operation (With A45) 2-64
Vehicle Access 2-67
Schematic and Routing Diagrams 2-67
Door Lock/Indicator Schematics 2-68
Release Systems Schematics 2-72
Endgate Schematics 2-73
Description and Operation 2-77
Door Ajar Indicator Description and Operation 2-77
Endgate Description and Operation (QT5 Without MultiPro Tailgate) 2-78
Endgate Description and Operation (QT5 With MultiPro Tailgate) 2-78
Endgate Description and Operation (QT6) 2-79
Power Door Locks Description and Operation 2-80

BLANK

Fixed and Moveable Windows

Schematic and Routing Diagrams

Moveable Window Schematics (Driver Window (AXG))

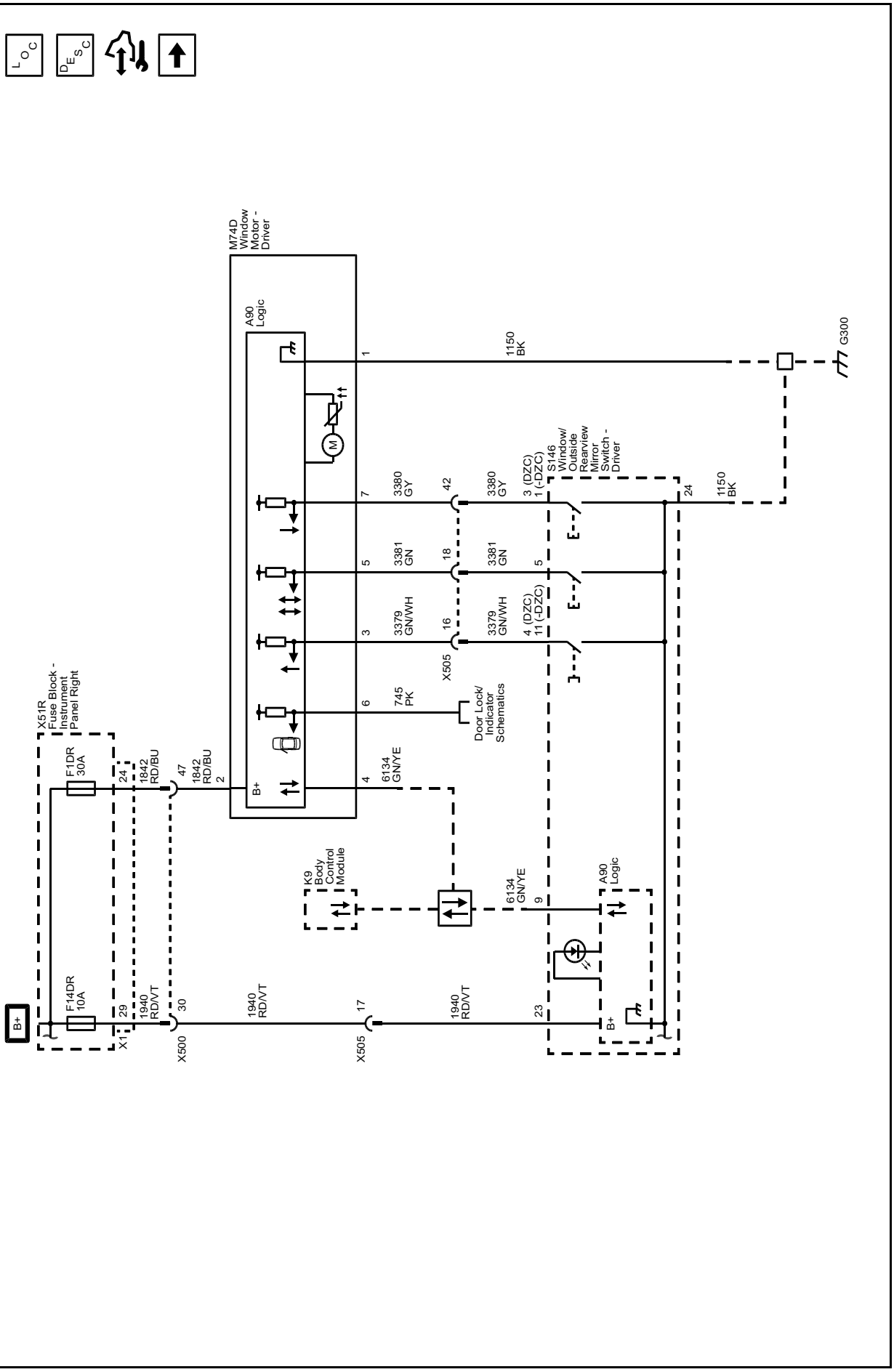

Moveable Window Schematics (Passenger Window (AED))

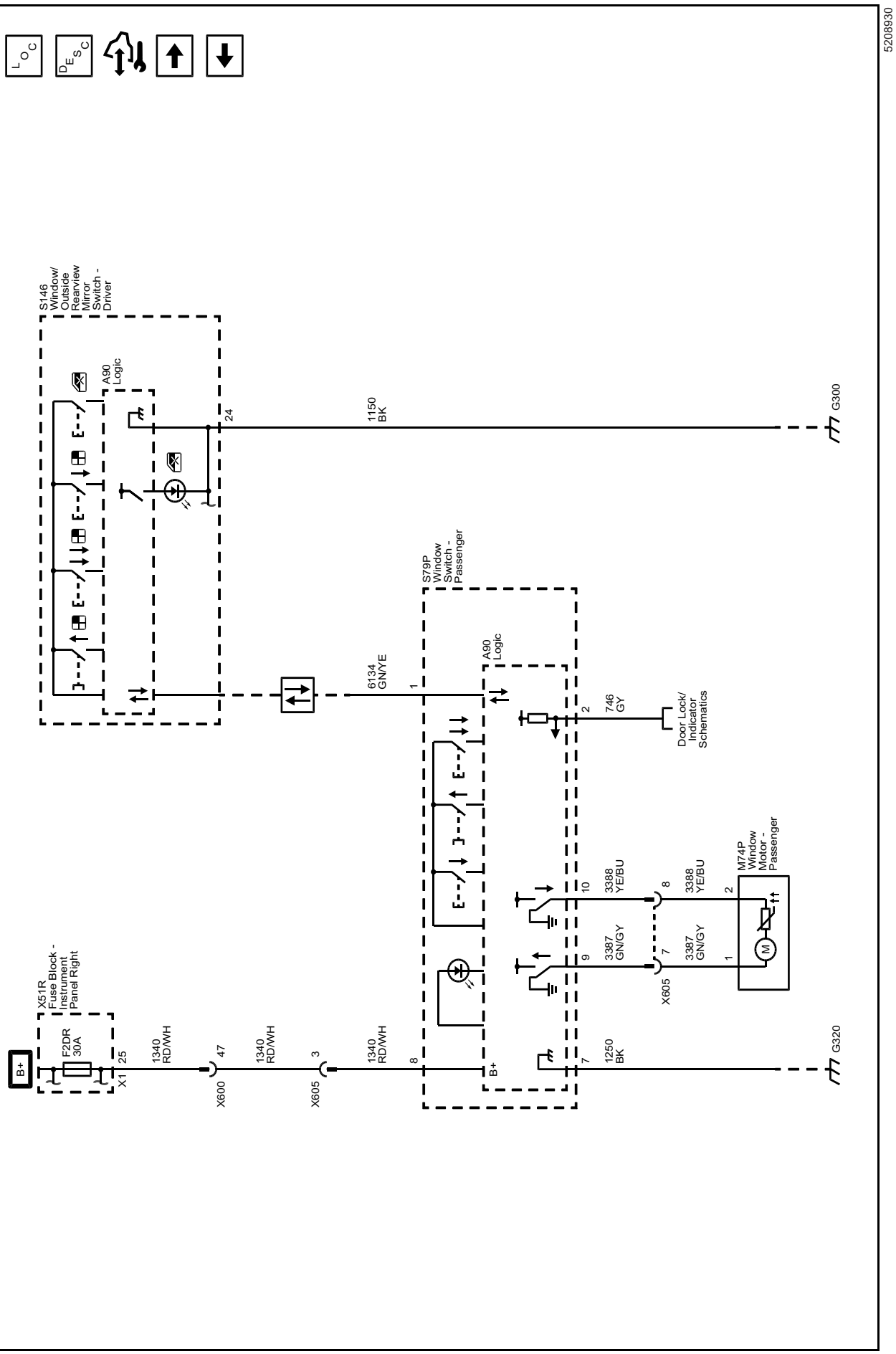

Moveable Window Schematics (Passenger Window (AEF))

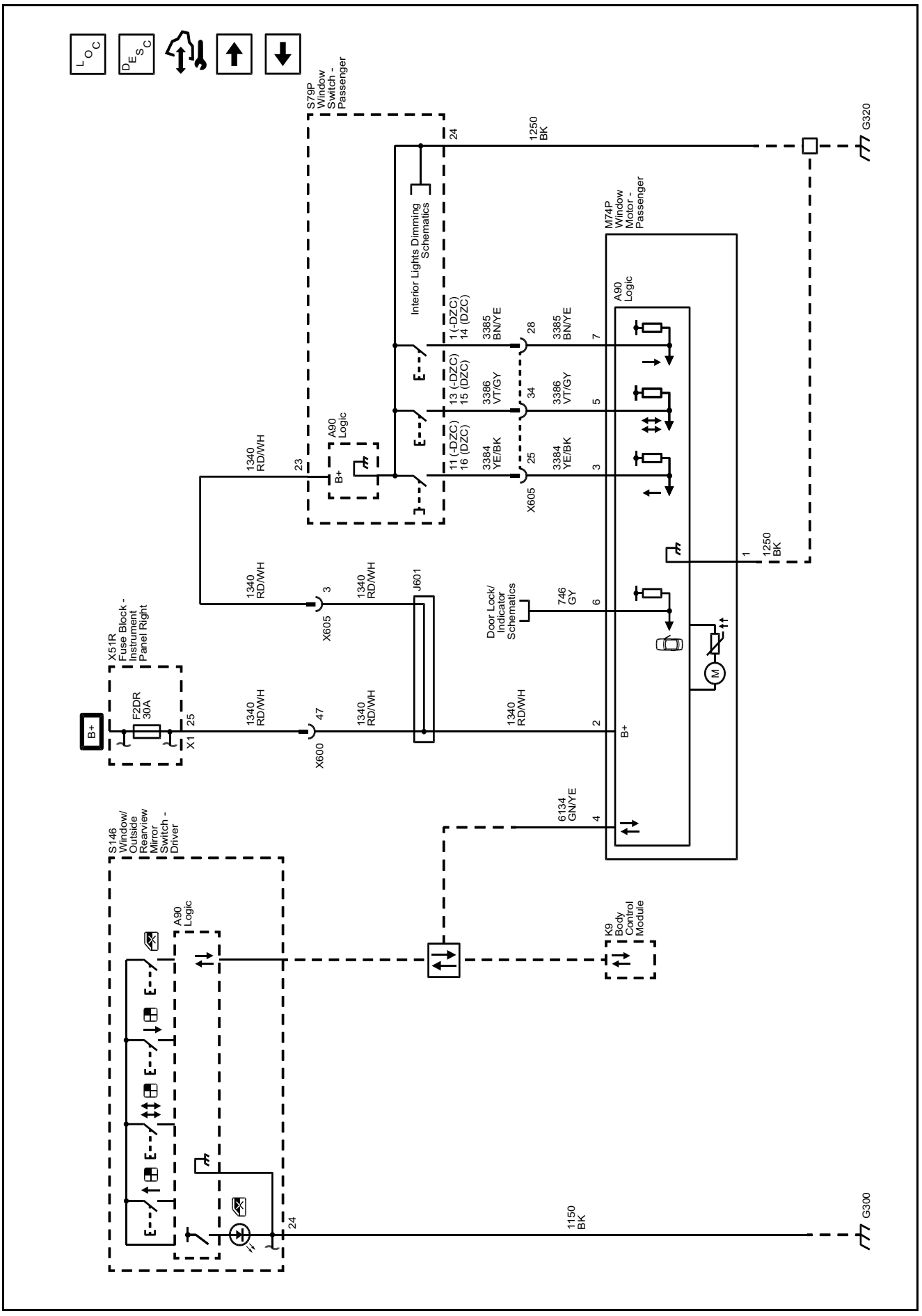

Moveable Window Schematics (Rear Windows (AEQ))

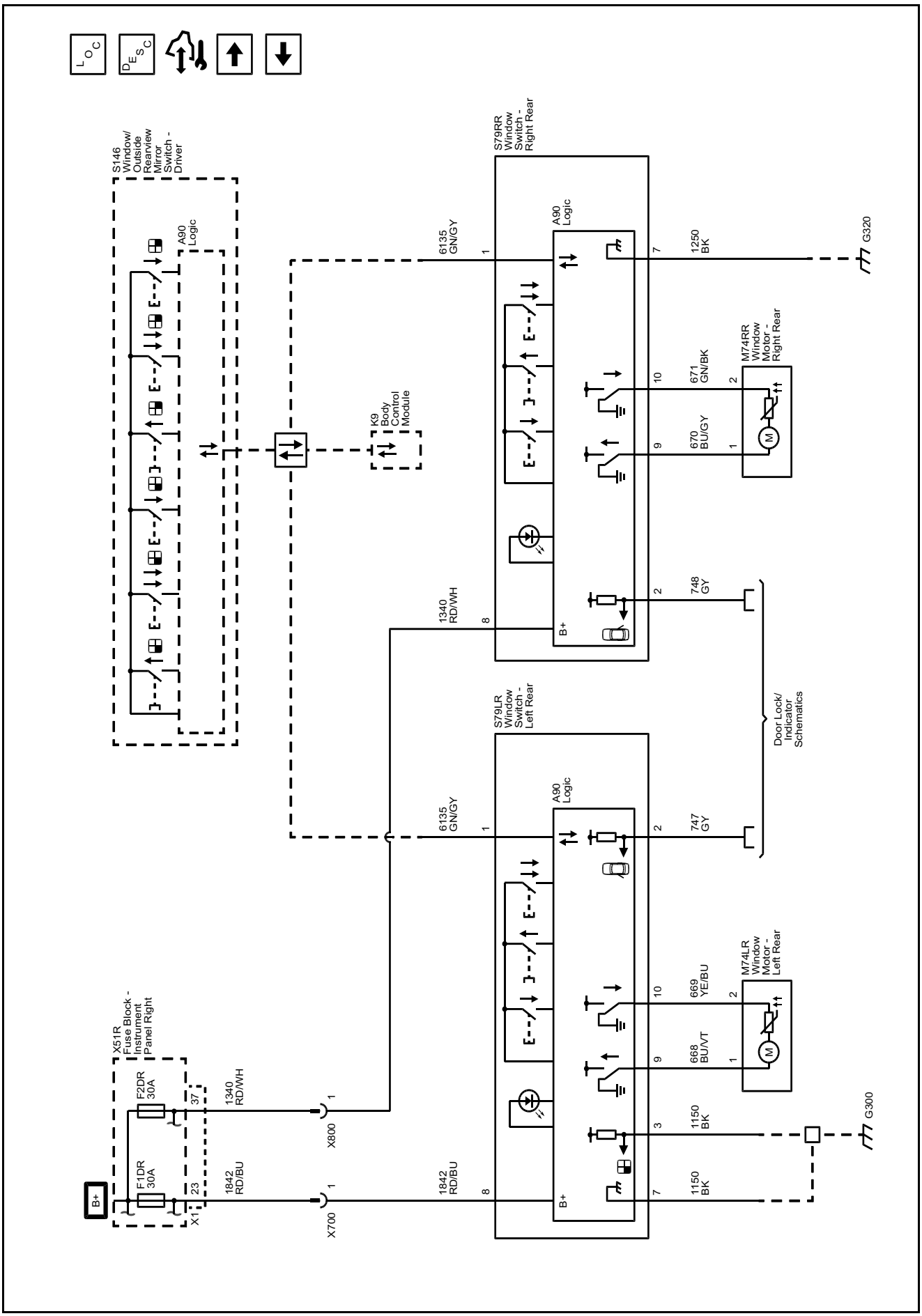

Moveable Window Schematics (Global Window Express Down Switch)

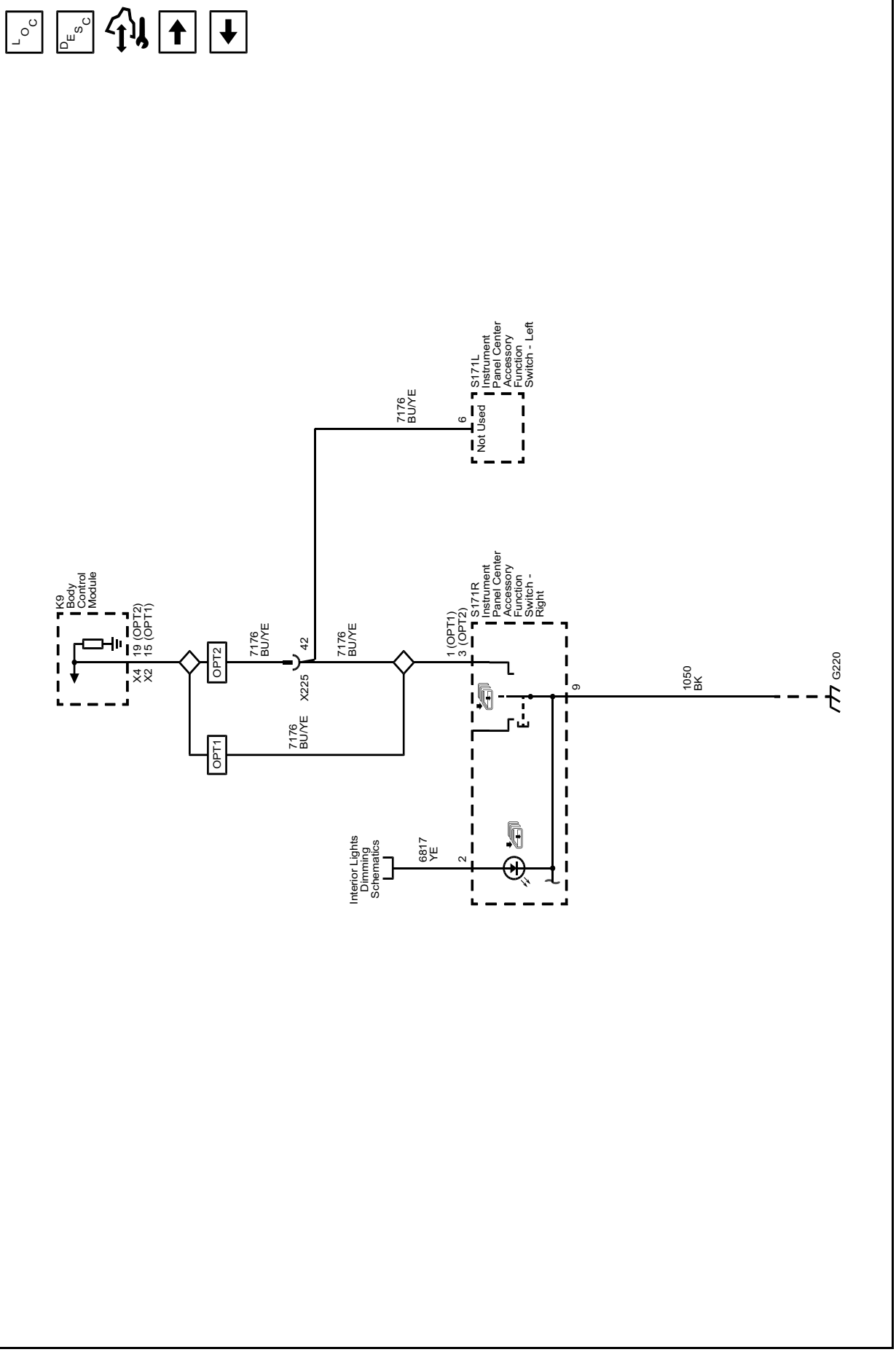

Moveable Window Schematics (Rear Sliding Window (A48))

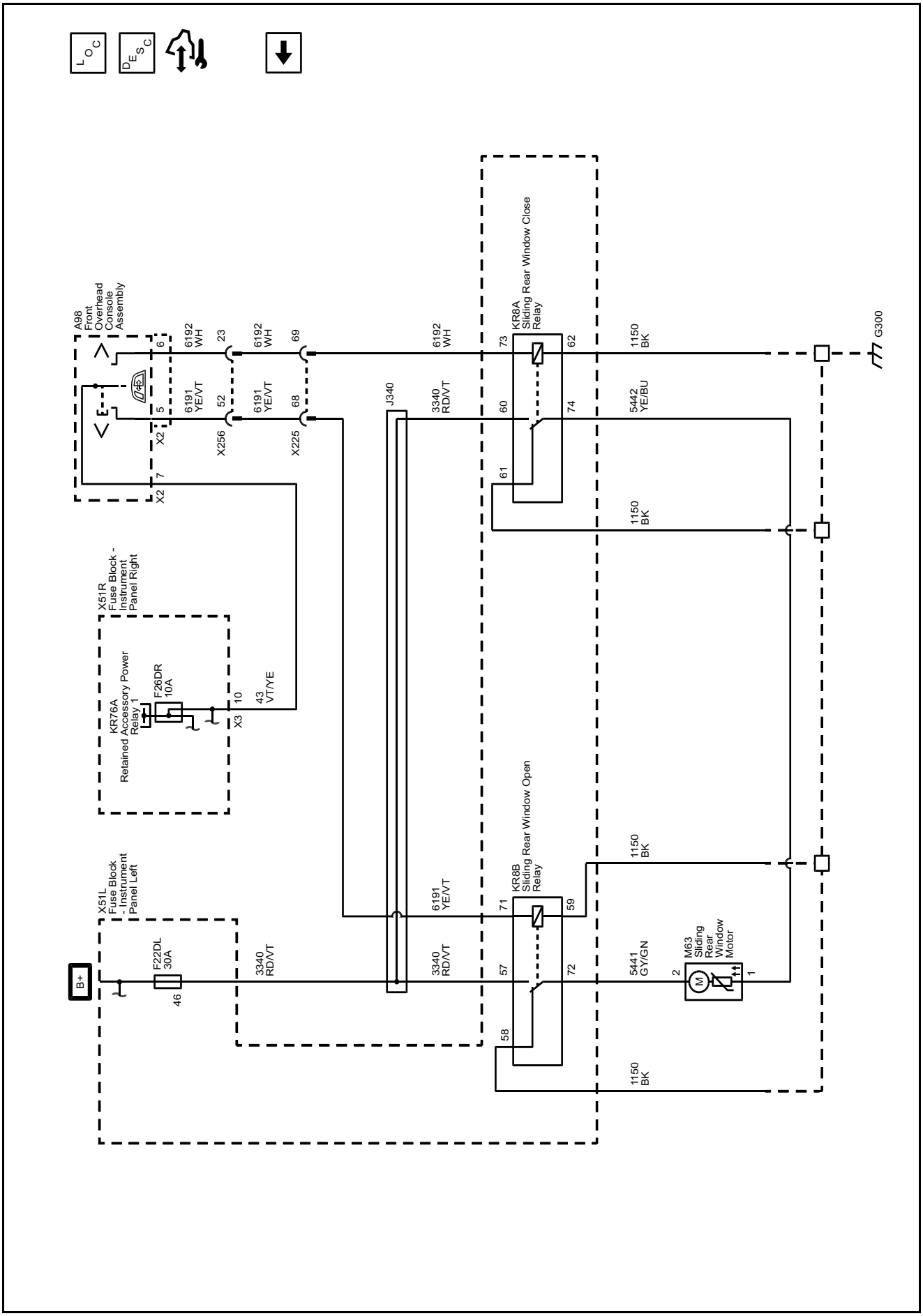

Defogger Schematics (Defogger)

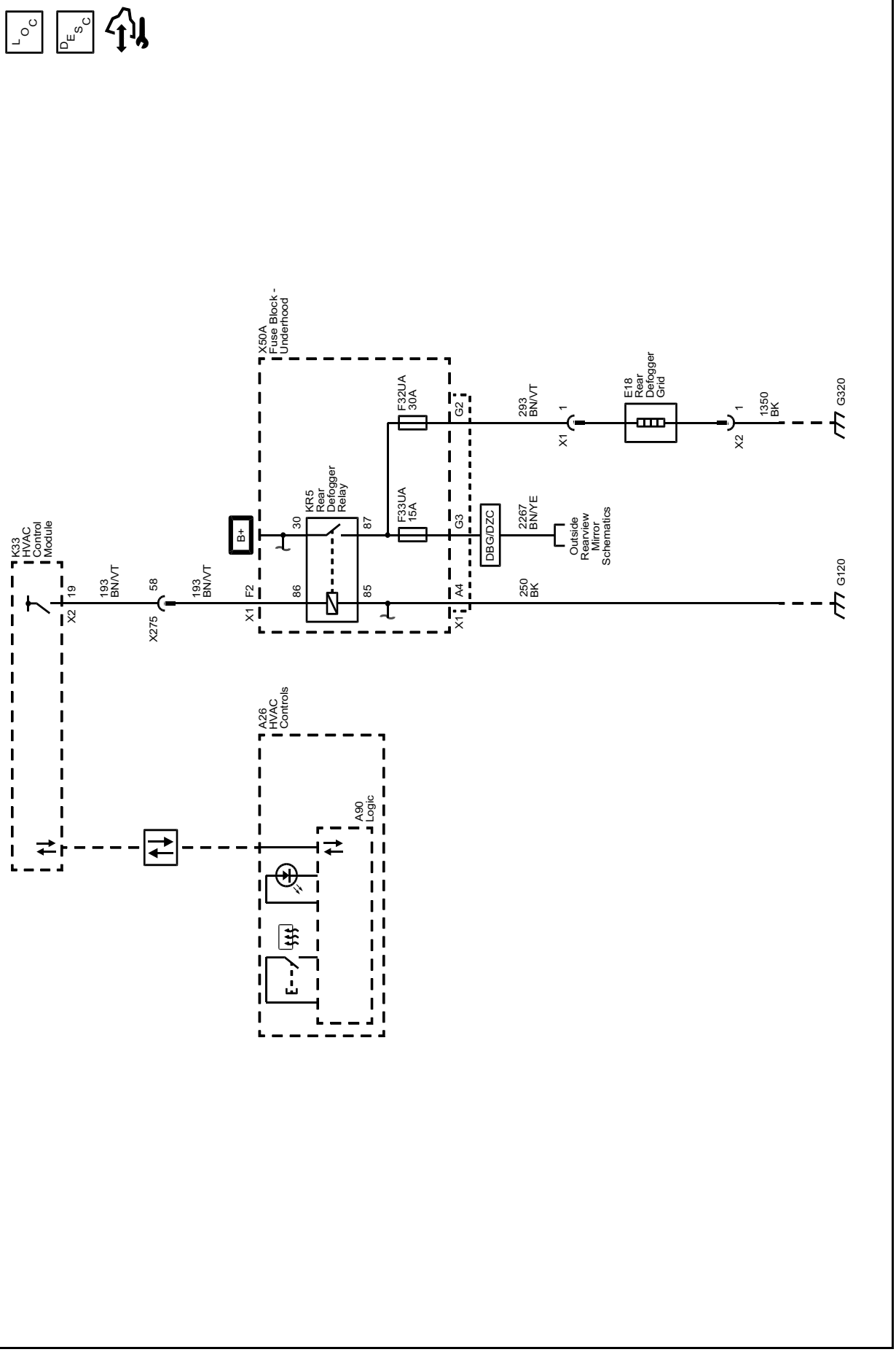

Description and Operation

Power Windows Description and Operation

Power Windows System Components

The power window system consists of the following components:

- Driver window switch
- Passenger window switch
- Left rear window switch
- Right rear window switch
- Global express down window switch
- Window motors in each of the doors
- 30A Fuse
- Body control module (BCM)

Power Window System

This vehicle may be equipped with the following power window configurations:

- Driver door with express up and express down window motor
- Passenger door with express up and express down window motor
- Passenger door with express down only window motor
- Left rear door with express down only window motor
- Right rear door with express down only window motor

Driver and Passenger Express Up and Express Down Power Window Motors

The driver and passenger doors contains a window motor is smart motor that will detect excessive resistance while performing the express up function and automatically reverse direction to prevent injury to any occupants that may become trapped between the closing window and the door frame. The automatic reverse safety feature can be overridden by pulling and holding the window switch.

The logic circuit within the window motor monitors the up, down and express signal circuits which are normally equal to B+ voltage. When a switch is used on the window switch, the contacts close causing a voltage drop within the appropriate signal circuit. The window motor will detect the voltage drop and will command the window to move in the direction requested.

The driver window switch communicates to the BCM by a serial data circuit. When the driver wishes to control the passenger window, the driver will use the appropriate switch on the driver window switch. When this switch is used, a serial data message is sent to the BCM requesting the passenger window motor command, the BCM will then send a serial data message to the passenger window motor which will then move in the direction requested.

Passenger, Left Rear and Right Rear Express Down Only Window Motors

For the passenger, right rear and left rear doors, when their window switch is pressed in the down position, battery positive voltage is applied to their respective window motor control circuit and ground to the other window motor control circuit causing that window to open. When the individual window switch is pulled in the up position, voltage and ground is applied to the window motor in the opposite direction causing that window to close. The return path to ground is supplied through the inactive control circuit being normally grounded through the window switch.

The passenger and rear window switches communicates to the BCM by a serial data circuit. When the driver wishes to control the passenger, left rear or right rear window, the driver will use the appropriate switch on the driver window switch. When this switch is used, a serial data message is sent to the BCM requesting a window motor command, the BCM will then send a serial data message to the appropriate door window switch which will then command that window to move in the direction requested.

Global Window Express Down Switch

The global express down switch (part of the instrument panel multifunction switch) may be used to commanded all windows to perform the express down function

Lockout Switch Feature

The driver window switch contains a window lockout switch, when the driver presses the window lockout switch, a serial data message is sent to the BCM which will send a disable command to the rear window switches, deactivating them. The rear windows will still function normally from the switches on the driver window switch.

Power Sliding Rear Window

NOTE: Power window lockout switch disables left rear and right rear passenger window switches only and has no effect on the operation of the power sliding window switch.

The power sliding rear window motor is controlled from the rear window OPEN/CLOSE switch through OPEN and CLOSE relays. The OPEN/CLOSE switch is supplied voltage from the body control module accessory voltage output circuit. When the switch is pressed in the OPEN or CLOSED position the OPEN or CLOSED relay coil will be supplied accessory voltage and energized through the appropriate relay control circuit. While the OPEN and CLOSE relays are in a de-energized state both motor control circuits will be closed to ground. When one of the relays is energized its motor control circuit will be closed to the battery voltage supply circuit and the other motor control circuit will remain grounded through the de-energized relay.

Rear Window Defogger Description and Operation

Rear Window Defogger System Components

The rear window defogger system consists of the following components:

- HVAC Control Module
- HVAC Controls
- Rear Defogger Relay
- Rear Defogger Grid
- Driver Outside Rearview Mirror
- Passenger Outside Rearview Mirror
- 40A Fuse

A26-K33-X50A Defogger Block Diagram

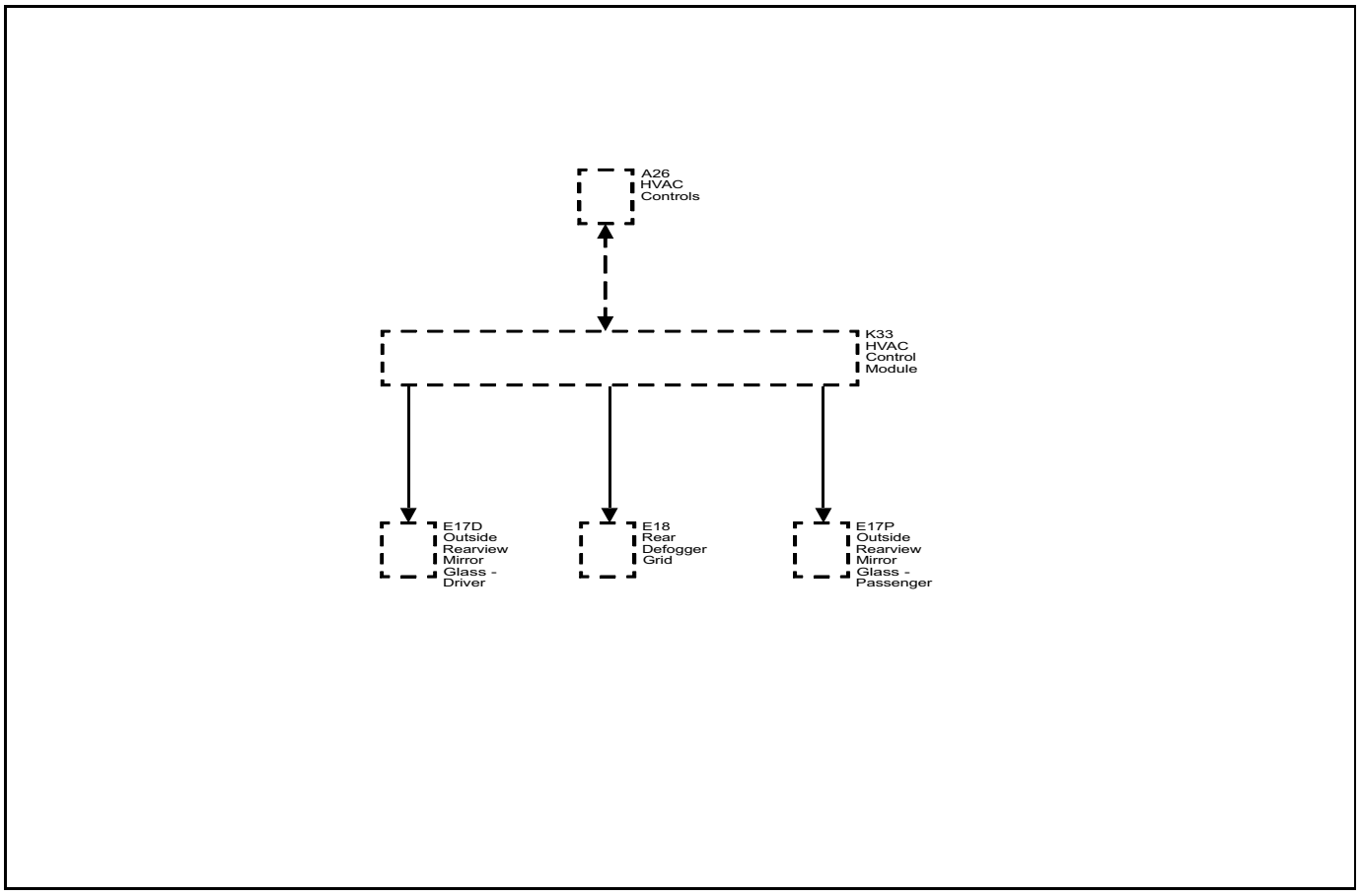

3511665

Rear Window Defogger Operation

The rear defog control system utilizes a single zone backlight design, driven with a single relay configuration. Additionally, up to two outside rear view mirrors can be heated if required. A switch for the customer to control the system is provided within the HVAC controls. Also included in the HVAC controls is an indicator to inform the customer with the current state of the system. The system is only operational when engine is running or during remote start.

Pressing the heated rear window switch causes the HVAC controls to send a serial data message to the HVAC control module requesting rear window defog operation. The HVAC control module upon receipt of the serial data message will provide voltage to the coil side of the rear defogger relay, this will energize the relay causing the relay switch contacts to close allowing B+ voltage to flow through the rear defogger grid control circuit to the rear defogger grid.

When the rear heated rear window switch is pressed and the engine is running, the rear window defogger grid will activate and will turn off automatically depending upon the vehicle speed (refer to owner's manual for rear window defogger operation cycles)

Heated Mirrors

The heated mirrors are also controlled through the rear defogger relay. Whenever the rear window defogger is turned on battery voltage is supplied to the mirror heater elements through the left and right mirror heater element control circuits.

Horns and Pedestrian Alerts

Schematic and Routing Diagrams

Horn Schematics (Horn)

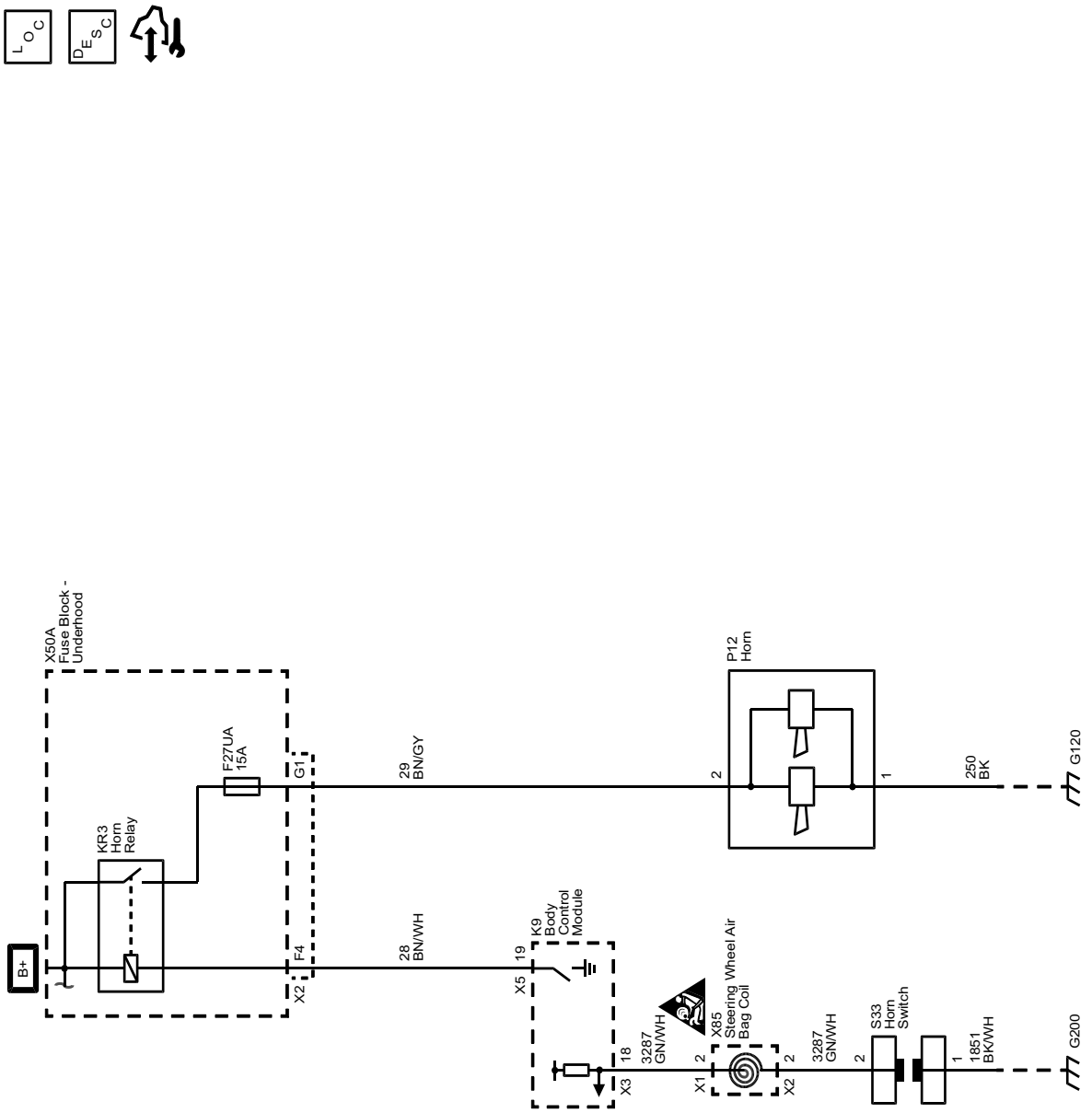

Description and Operation

Horns System Description and Operation

System Description

The horn system consists of the following components:

- HORN fuse
- Underhood fuse block (Contains PCB horn relay)
- Horn switch
- Horn assembly
- Body control module (BCM)

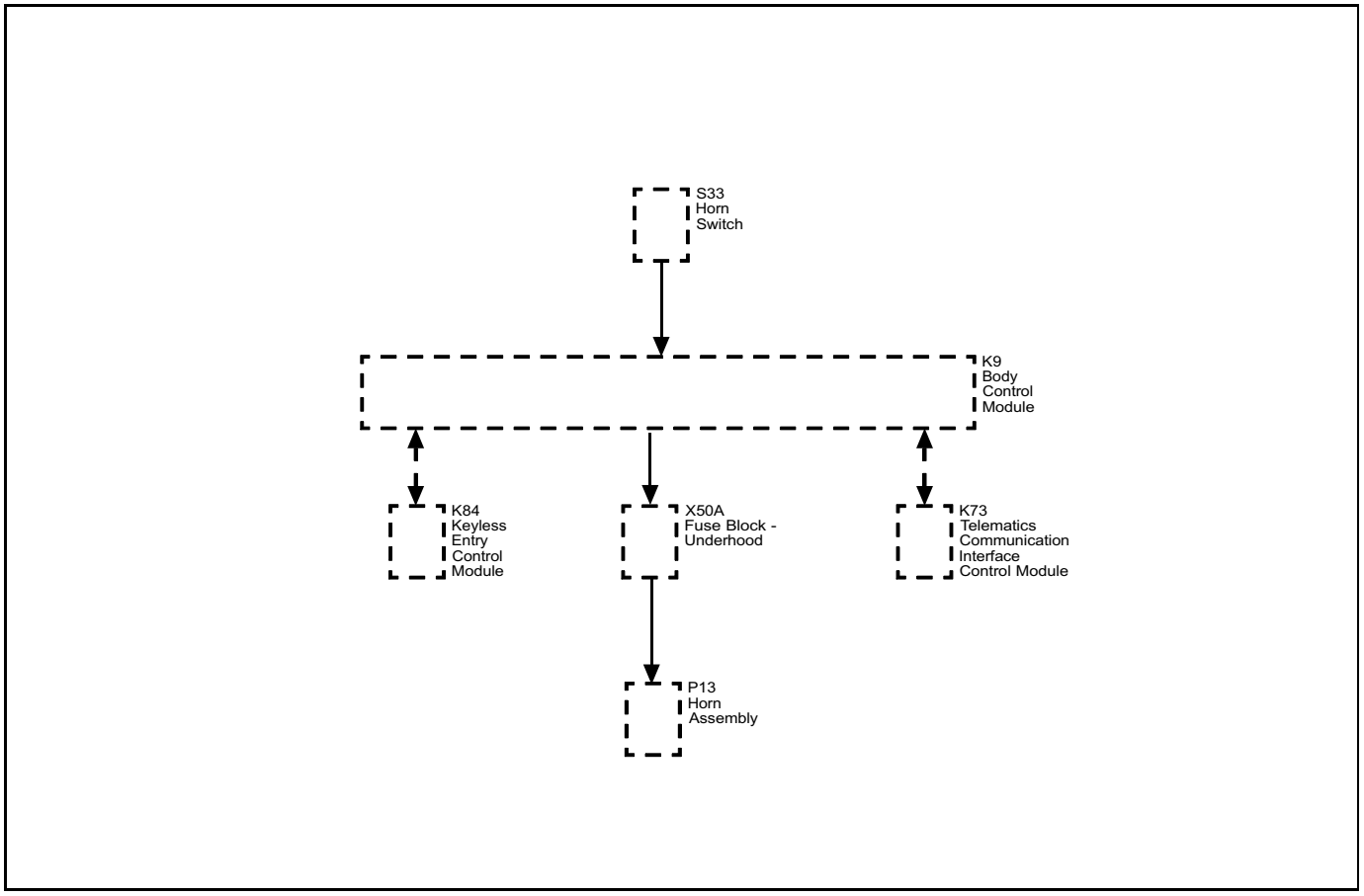

3270443

System Operation

The vehicle horn system is activated under the following conditions:

- When the horn switch is depressed
- The BCM commands the horns ON under any of the following conditions:
  - When the content theft deterrent system detects a vehicle intrusion—For further information refer to Theft Systems Description and Operation.
  - When the panic button is depressed on the remote control door lock transmitter—For further information refer to Keyless Entry System Description and Operation.
  - When the keyless entry system is used to lock the vehicle, a horn chirp may sound to notify the driver that the vehicle has been locked. The notification feature may be enabled or disabled through personalization. For further information refer to Keyless Entry System Description and Operation.
  - When the OnStar® system is used to sound the horns if equipped—For further information, refer to OnStar Description and Operation.

Circuit Operation

Battery positive voltage is applied at all times to the horn relay coil and the horn relay switch. Pressing either of the horn switches applies ground to the horn relay control circuit. The BCM may also apply ground to the horn relay control circuit as described above. When the horn relay control circuit is grounded, the horn relay is energized and battery positive voltage is applied to the horns through the horn control circuit. The horns sound as long as ground is applied to the horn relay control circuit.

Lighting

Schematic and Routing Diagrams

Fog Lights Schematics (Fog Lamps (T3U))

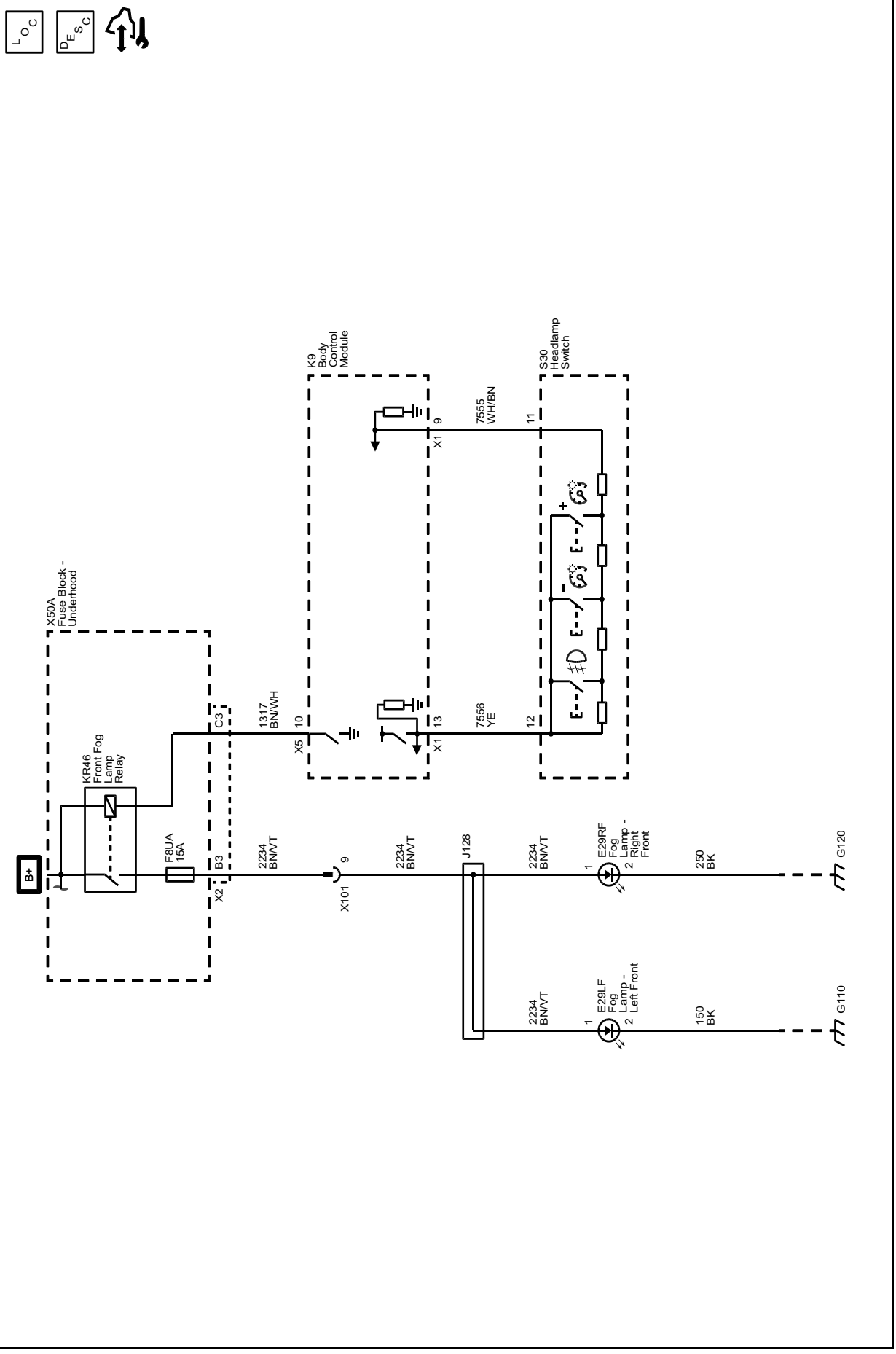

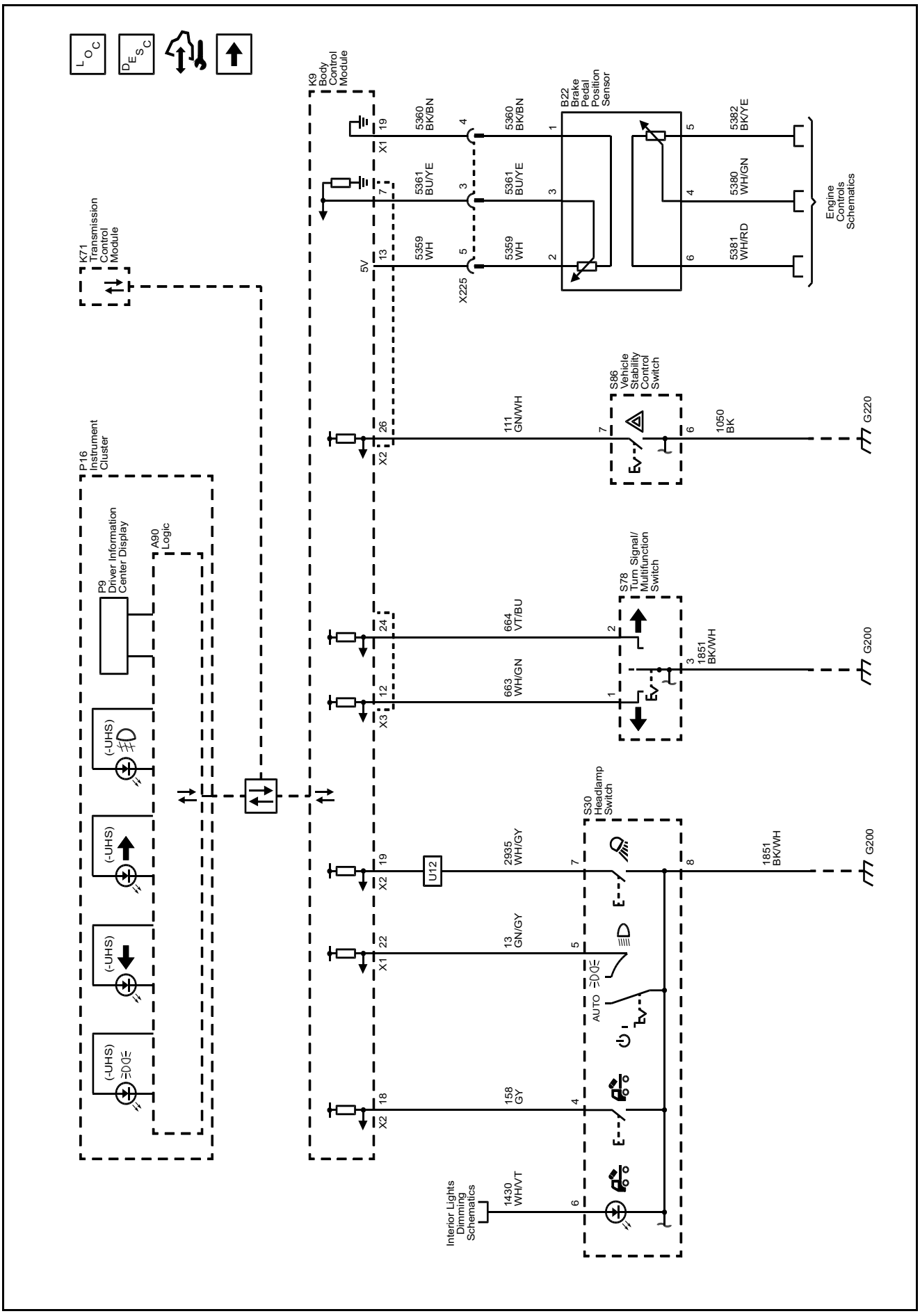
Exterior Lights Schematics (Controls and Indictors)
5241260
K9 Body Control Module
K71 Transmission Control Module
P16 Instrument Cluster
P9 Driver Information Center Display
A90 Logic
B22 Brake Pedal Position Sensor
S86 Vehicle Stability Control Switch
S78 Turn Signal/ Multifunction Switch
S30 Headlamp Switch
U12
X225
5360 BK/BN
5361 BU/YE
5359 WH
5382 BK/YE
5380 WH/GN
5381 WH/RD
Engine Controls Schematics
111 GN/WH
1050 BK
G220
664 VT/BU
663 WH/GN
1851 BK/WH
G200
2935 WH/GY
13 GN/GY
158 GY
1430 WH/VT
Interior Lights Dimming Schematics
(-UHS)
AUTO

Exterior Lights Schematics (Front Turn Signals, Park Lamps, and Side Marker Lamps (X88 with T4A))

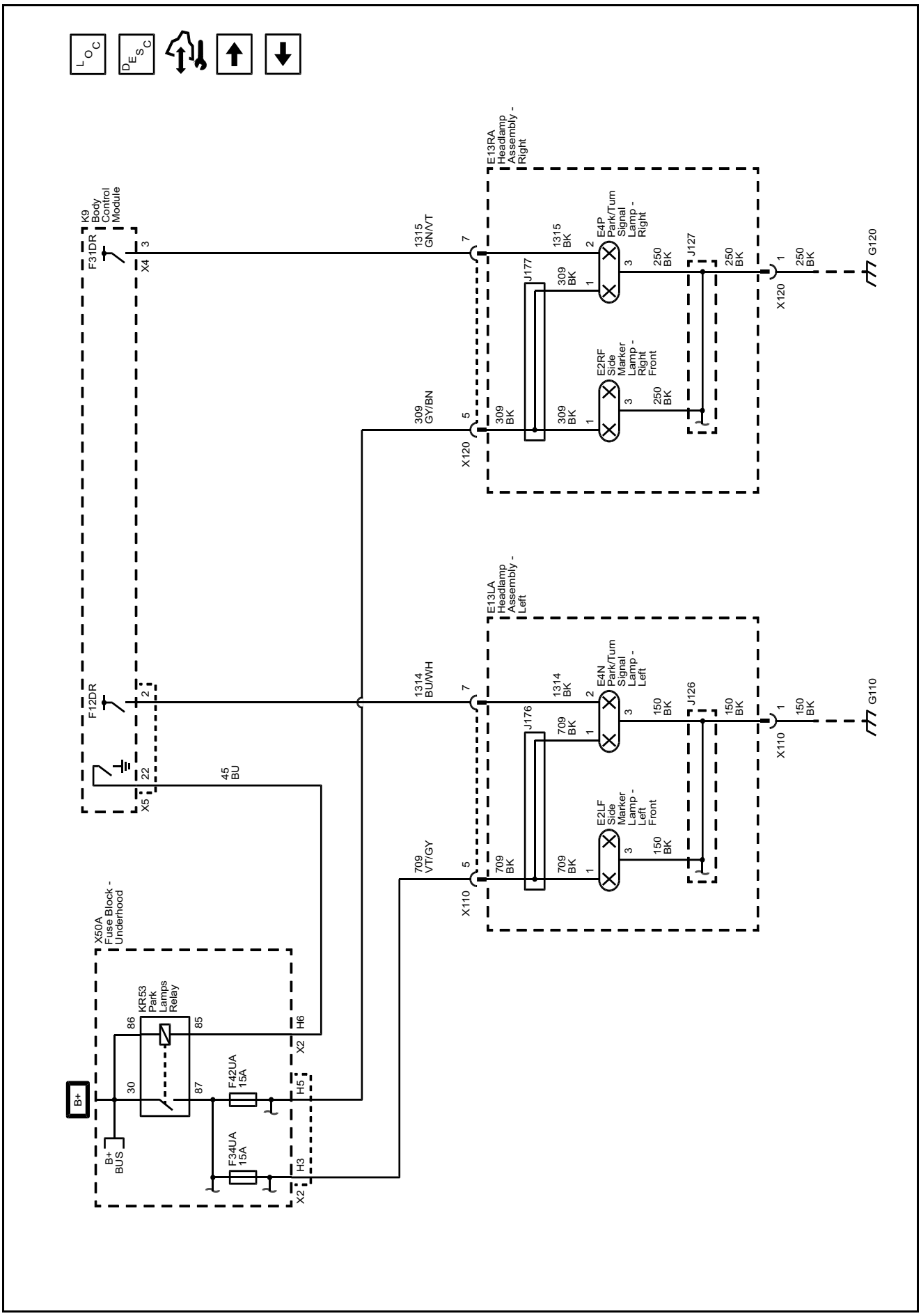

Exterior Lights Schematics (Front Turn Signals, Park Lamps, and Side Marker Lamps - Left (X88 with T4L))

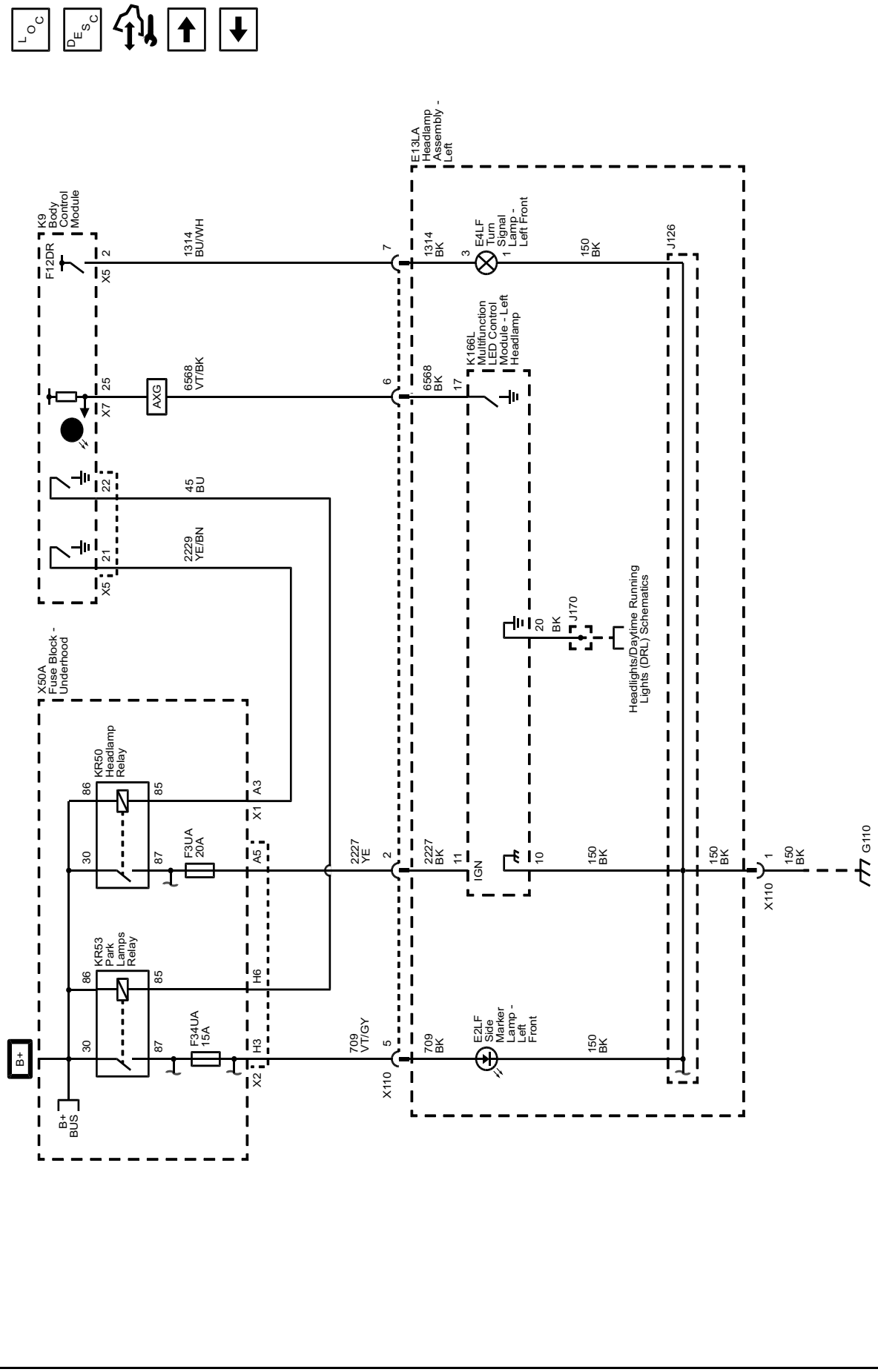

Exterior Lights Schematics (Front Turn Signals, Park Lamps, and Side Marker Lamps - Right (X88 with T4L))

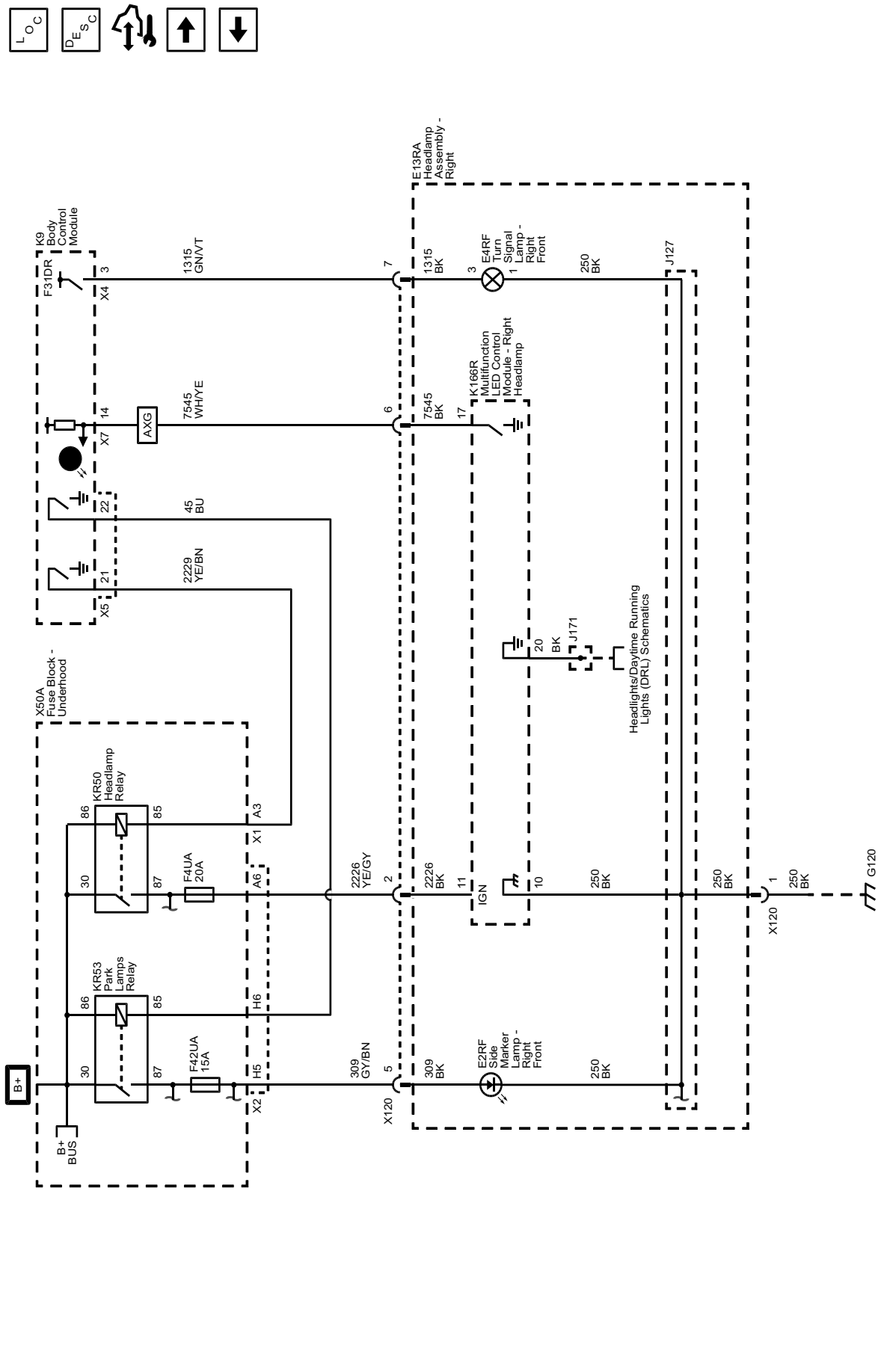

Exterior Lights Schematics (Front Turn Signals, Park Lamps, and Side Marker Lamps (Z88 with GFF/GFI))

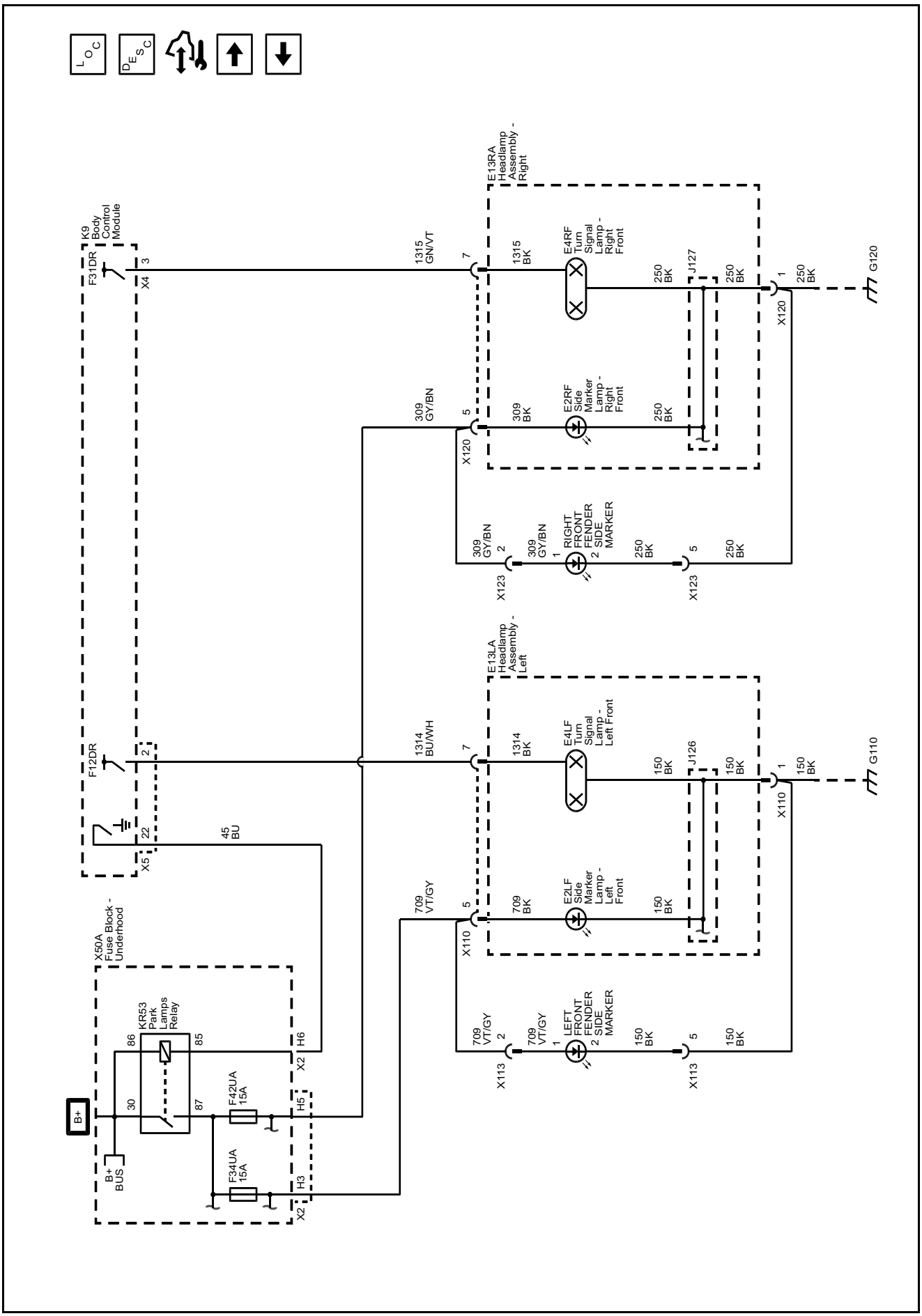

Exterior Lights Schematics (Front Turn Signals, Park Lamps, and Side Marker Lamps - Left (Z88 with GFU/GFG/GFW))

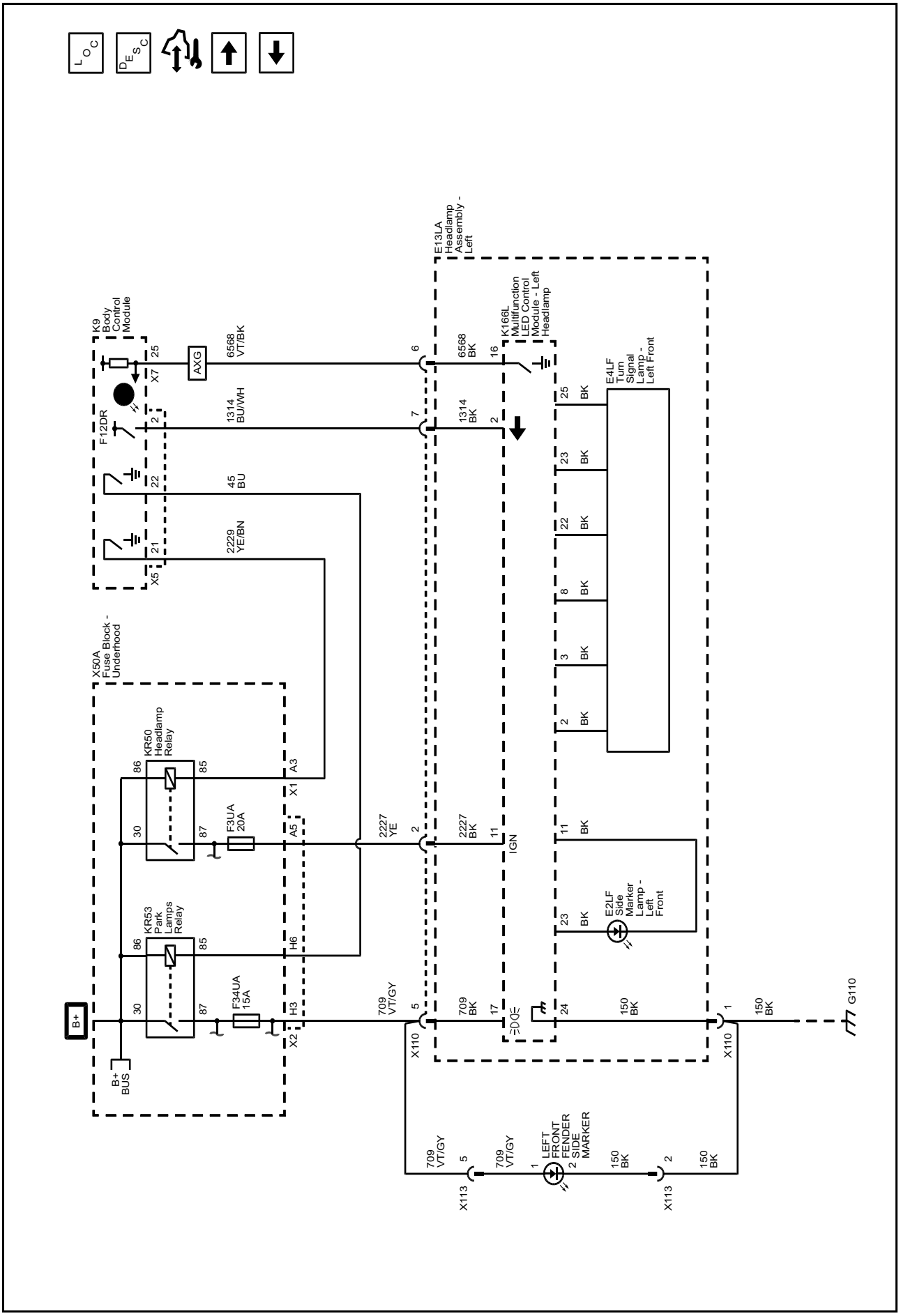

Exterior Lights Schematics (Front Turn Signals, Park Lamps, and Side Marker Lamps - Right (Z88 with GFU/GFG/GFW))

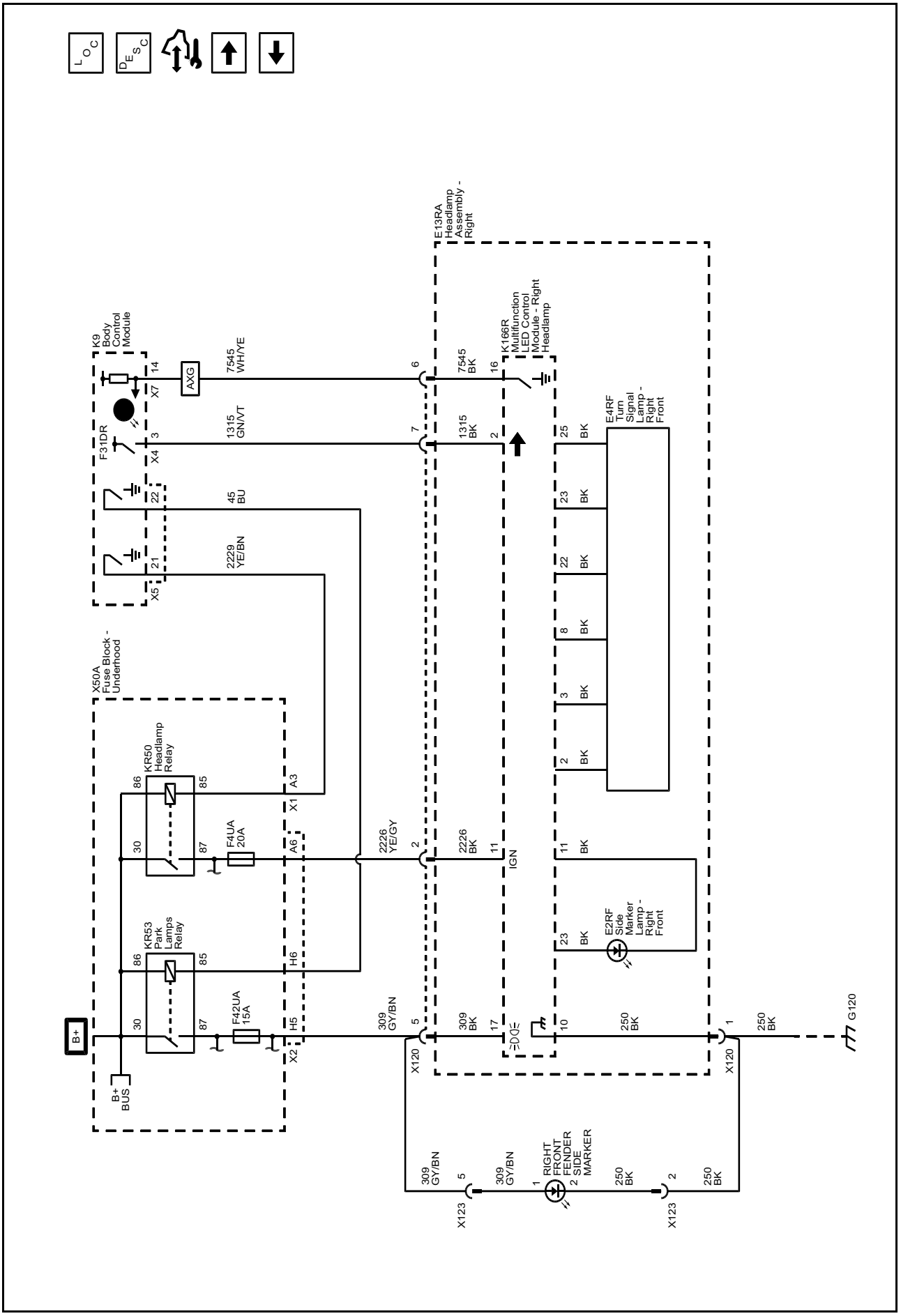

Exterior Lights Schematics (Park Lamps - Mirror (DBG/DWI/DZC) and Roof (U01))

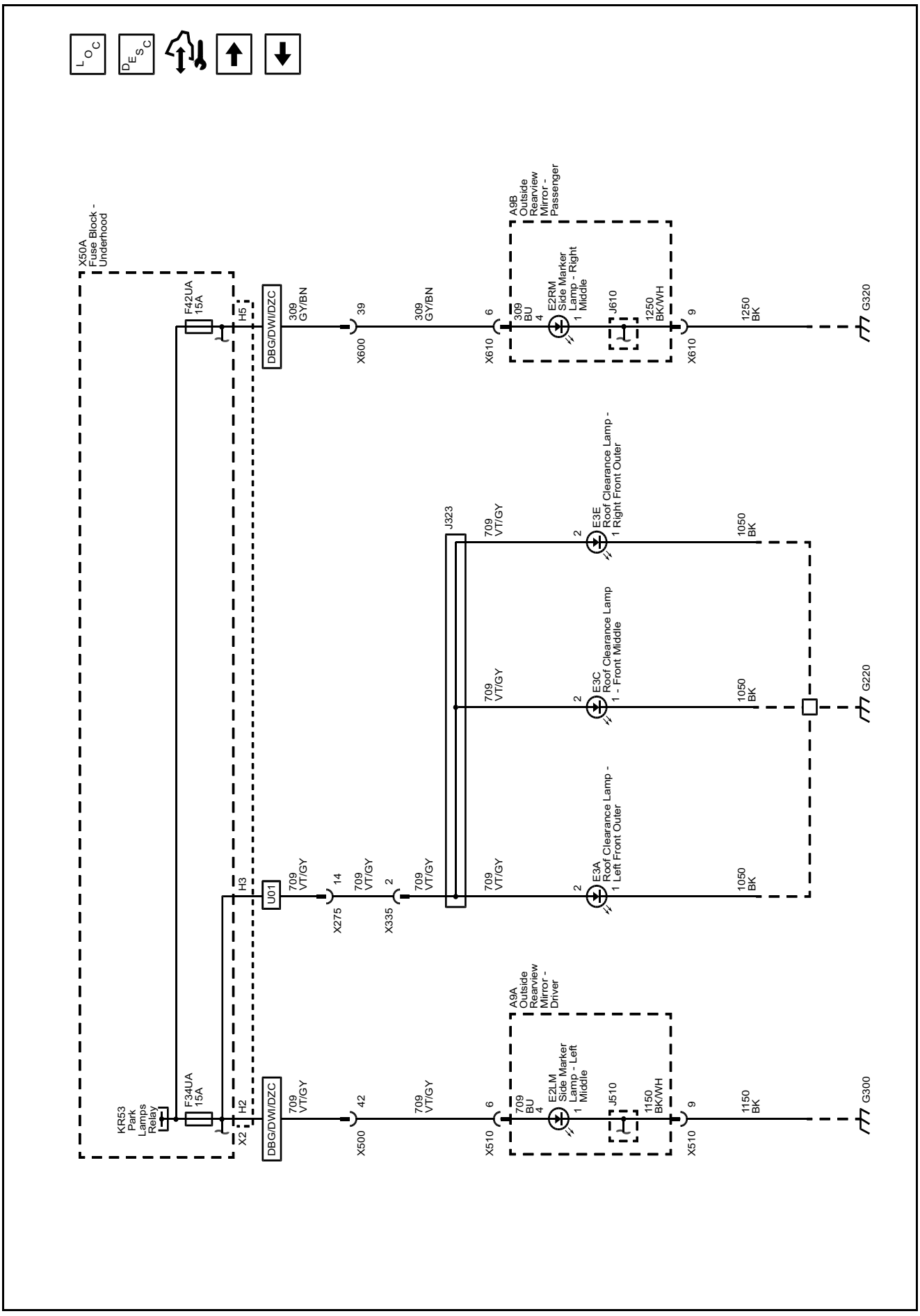

Exterior Lights Schematics (Turn Signal Lamps - Mirror (DBG/DWI/DZC))

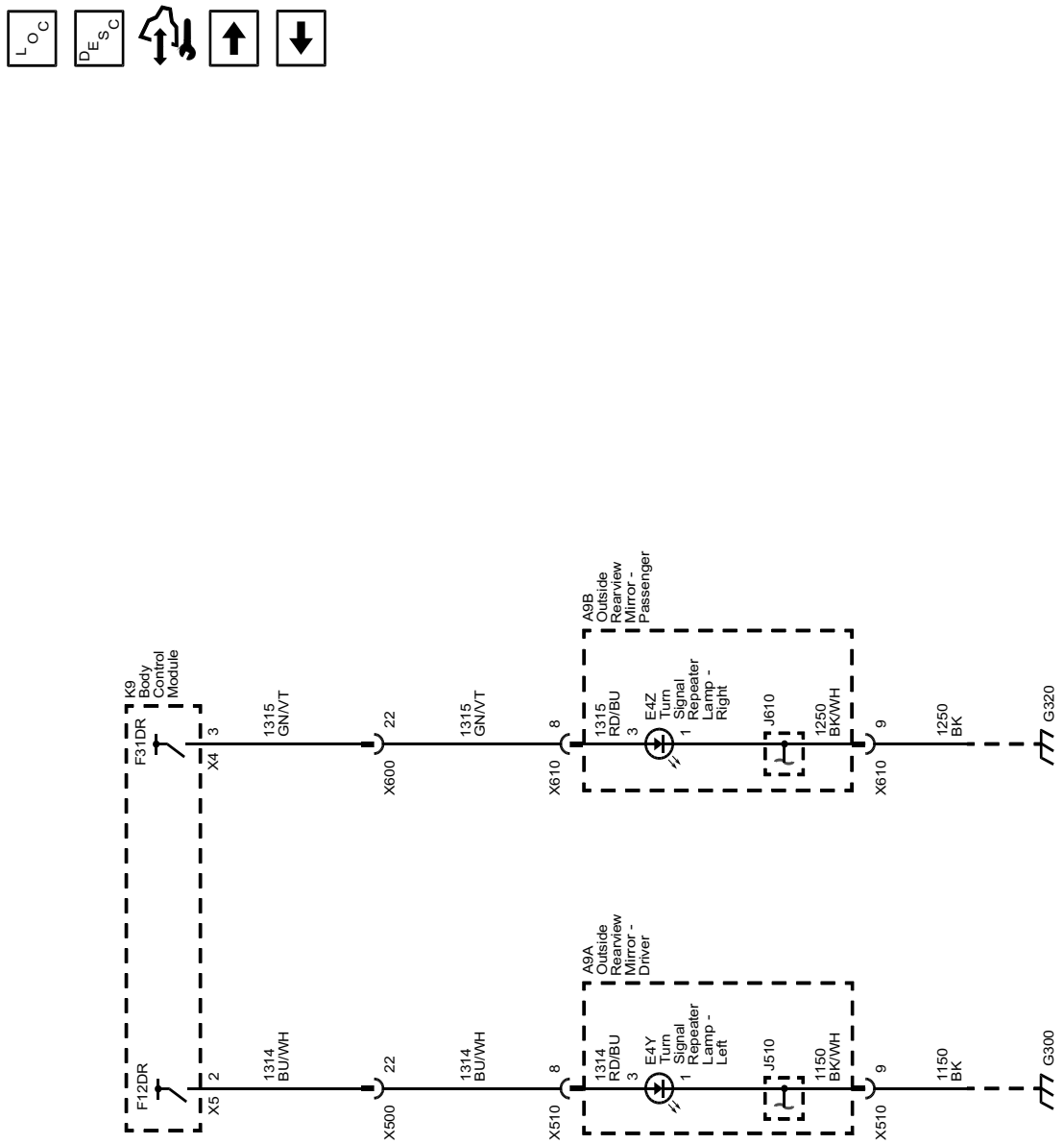

Exterior Lights Schematics (Mirrors (DWI/DLF/DZC))

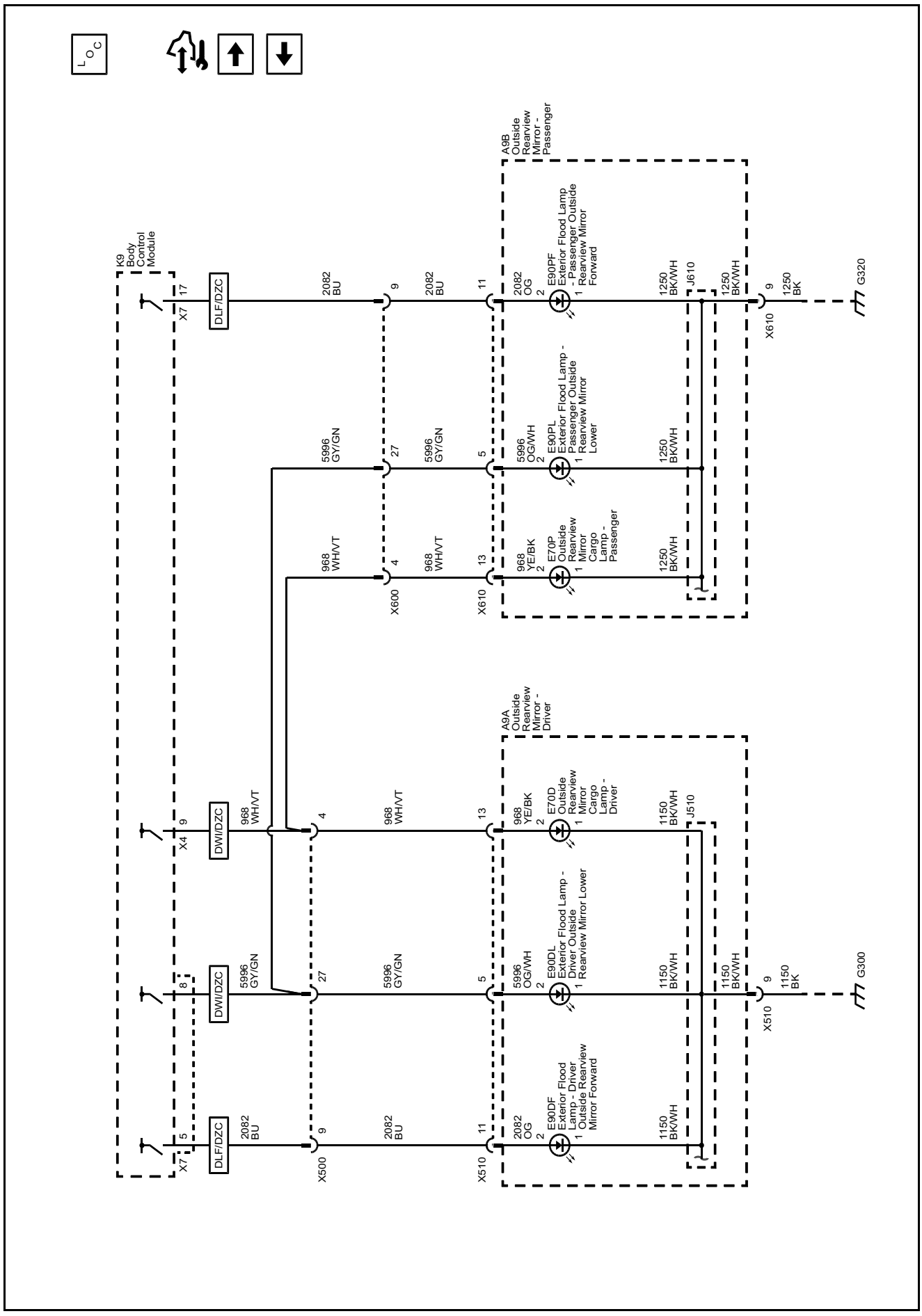

Exterior Lights Schematics (Tail Lamp Assembly - Left (GF3/GF5 with SRW))

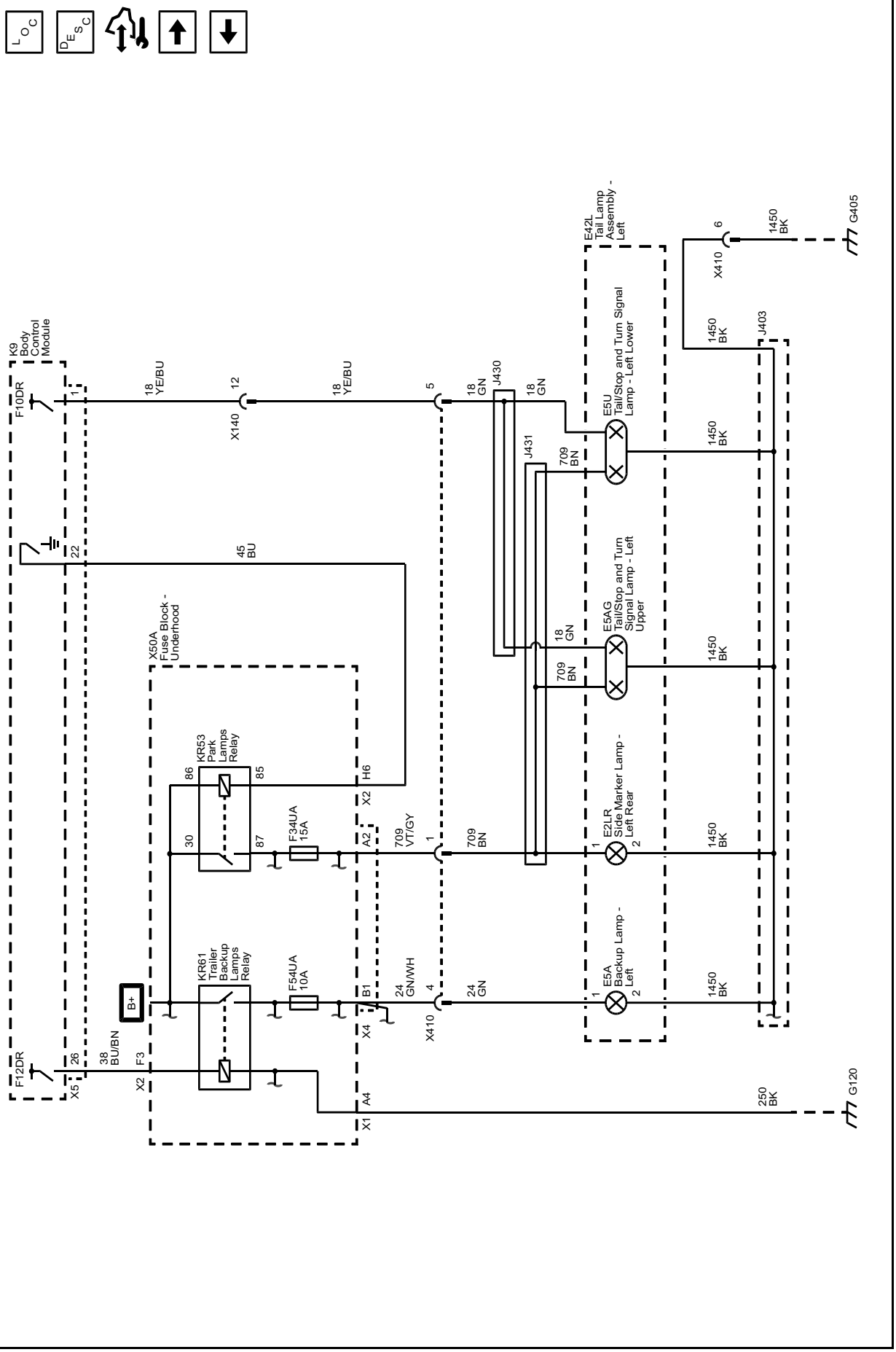

Exterior Lights Schematics (Tail Lamp Assembly - Right (GF3/GF5 with SRW))

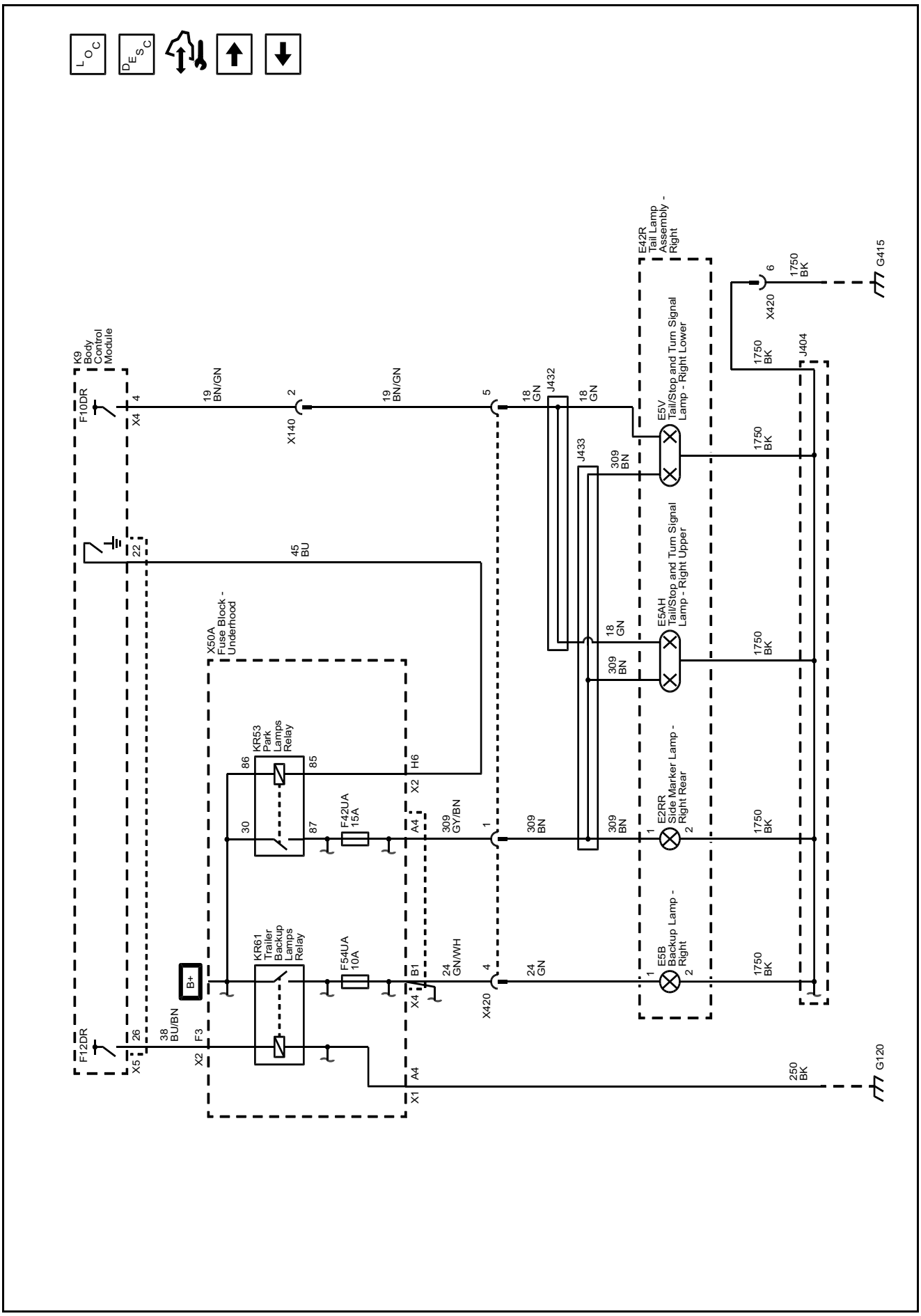

Exterior Lights Schematics (Tail Lamp Assembly - Left (X88 with DZW or GF2/GF9/GFD with SRW))

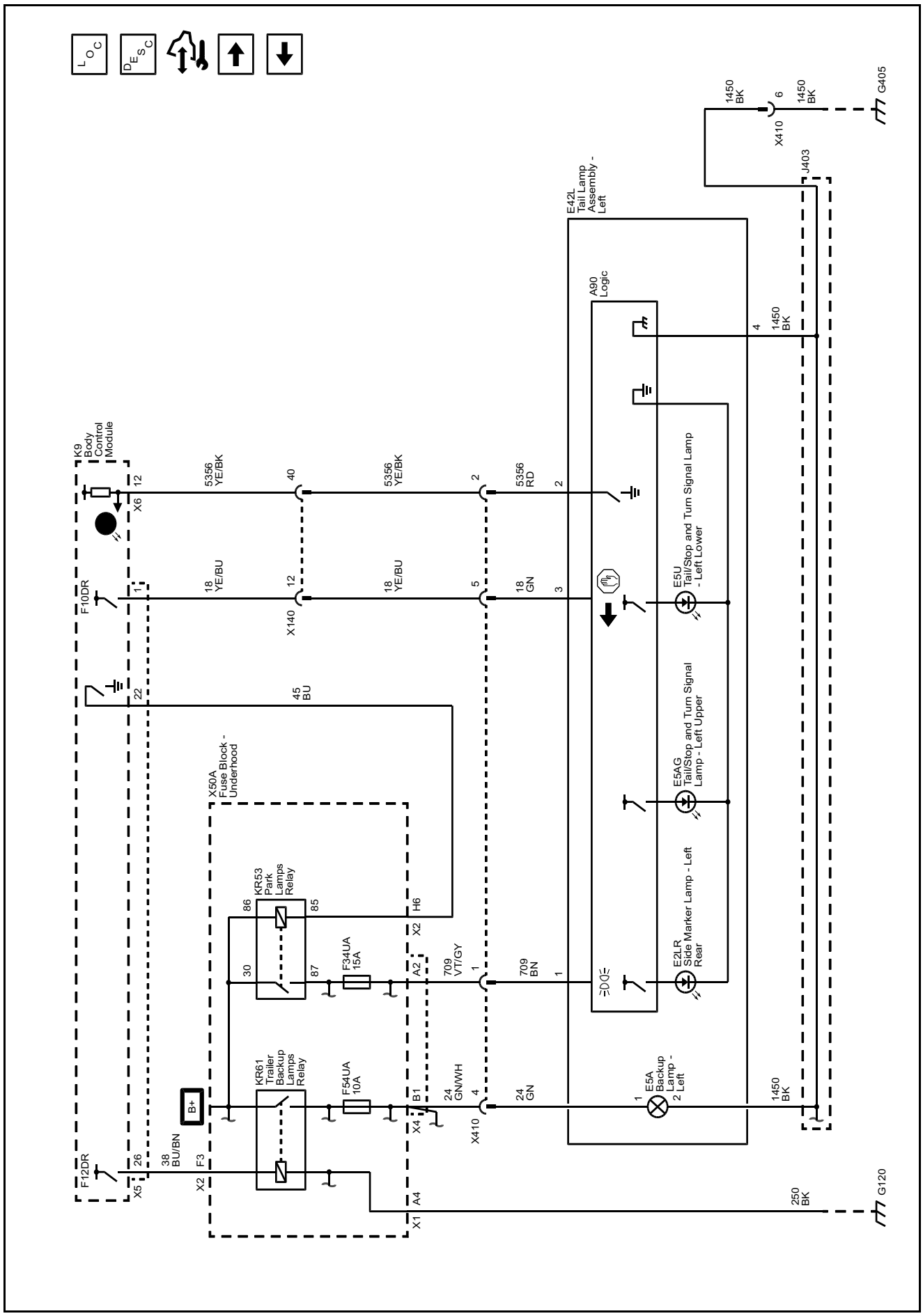

Exterior Lights Schematics (Tail Lamp Assembly - Right (X88 with DZW or GF2/GF9/GFD with SRW))

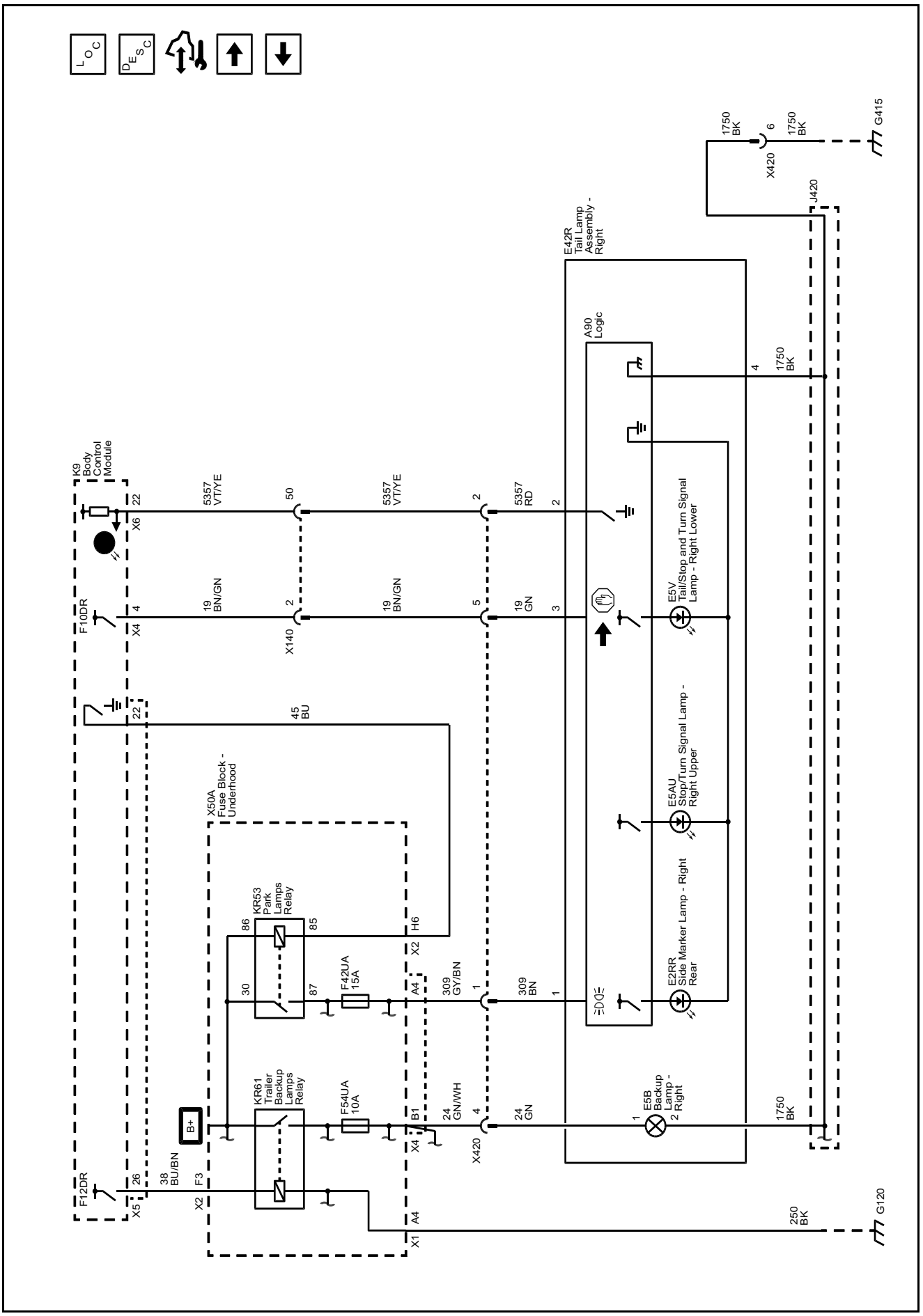

Exterior Lights Schematics (Tail Lamp Assembly - Left (GFF/GFI with SRW))

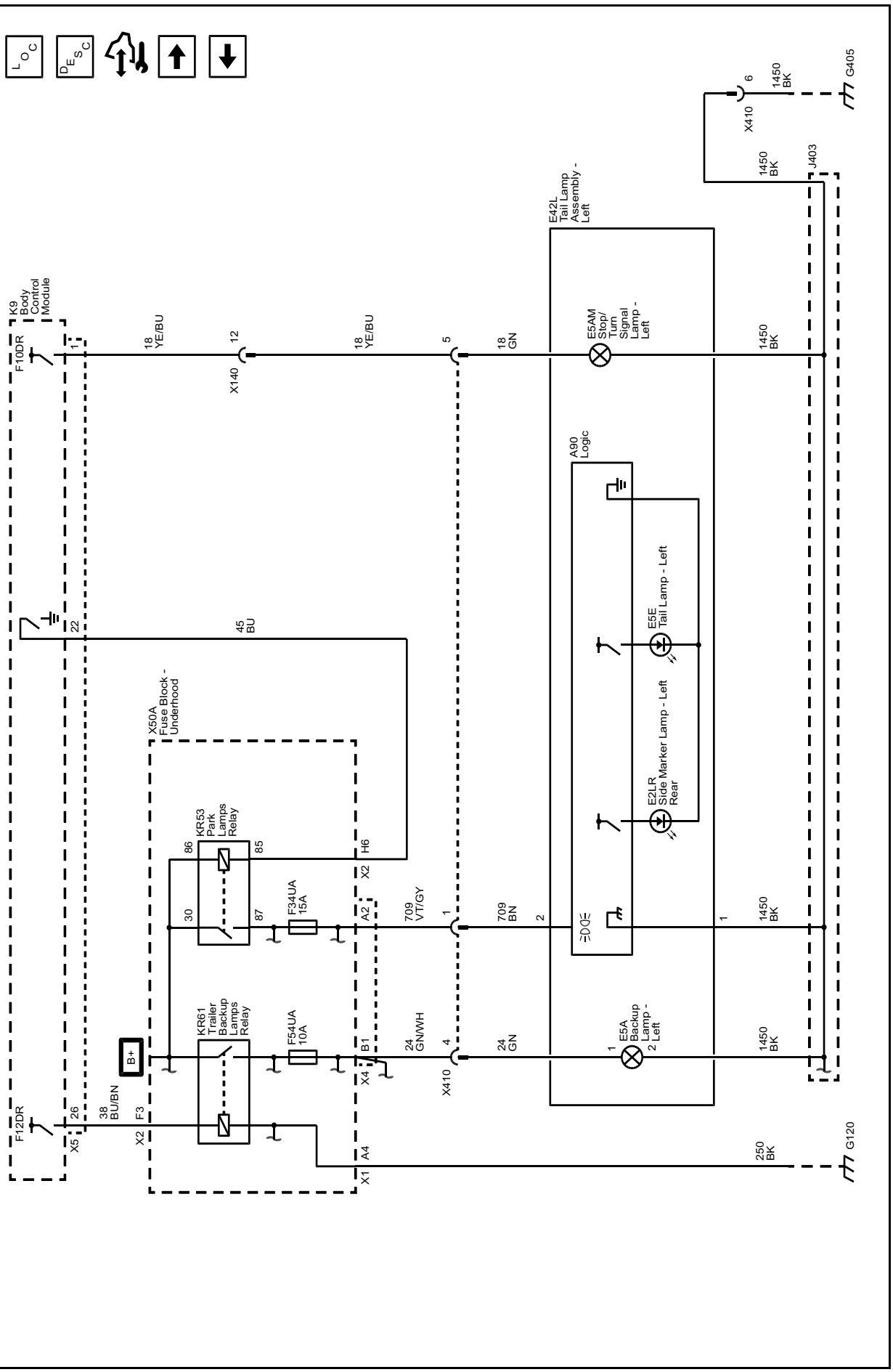

Exterior Lights Schematics (Tail Lamp Assembly - Right (GFF/GFI with SRW))

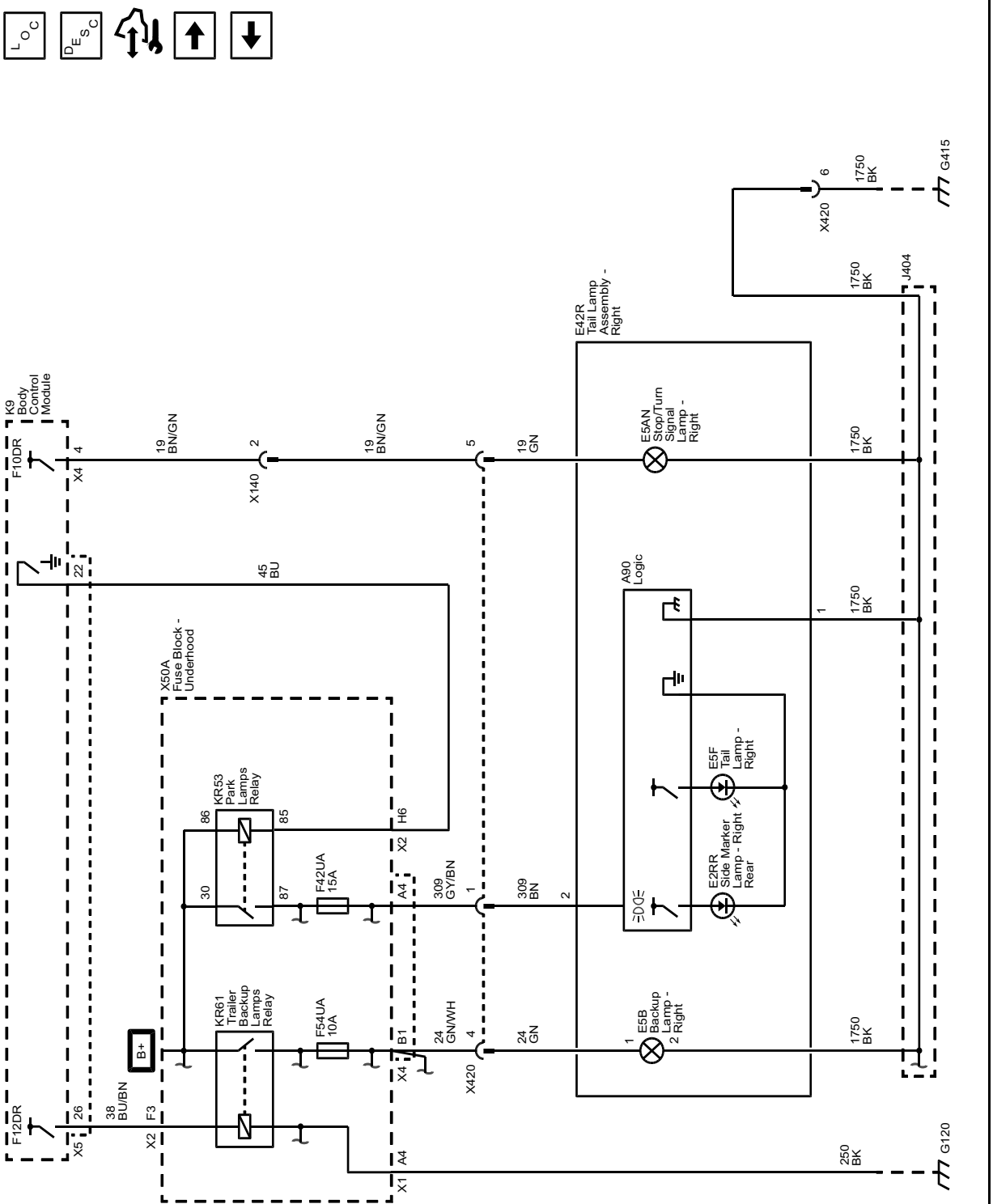

Exterior Lights Schematics (Tail Lamp Assembly - Left (Z88 with DZW or GFU/GFG/GFW with SRW))

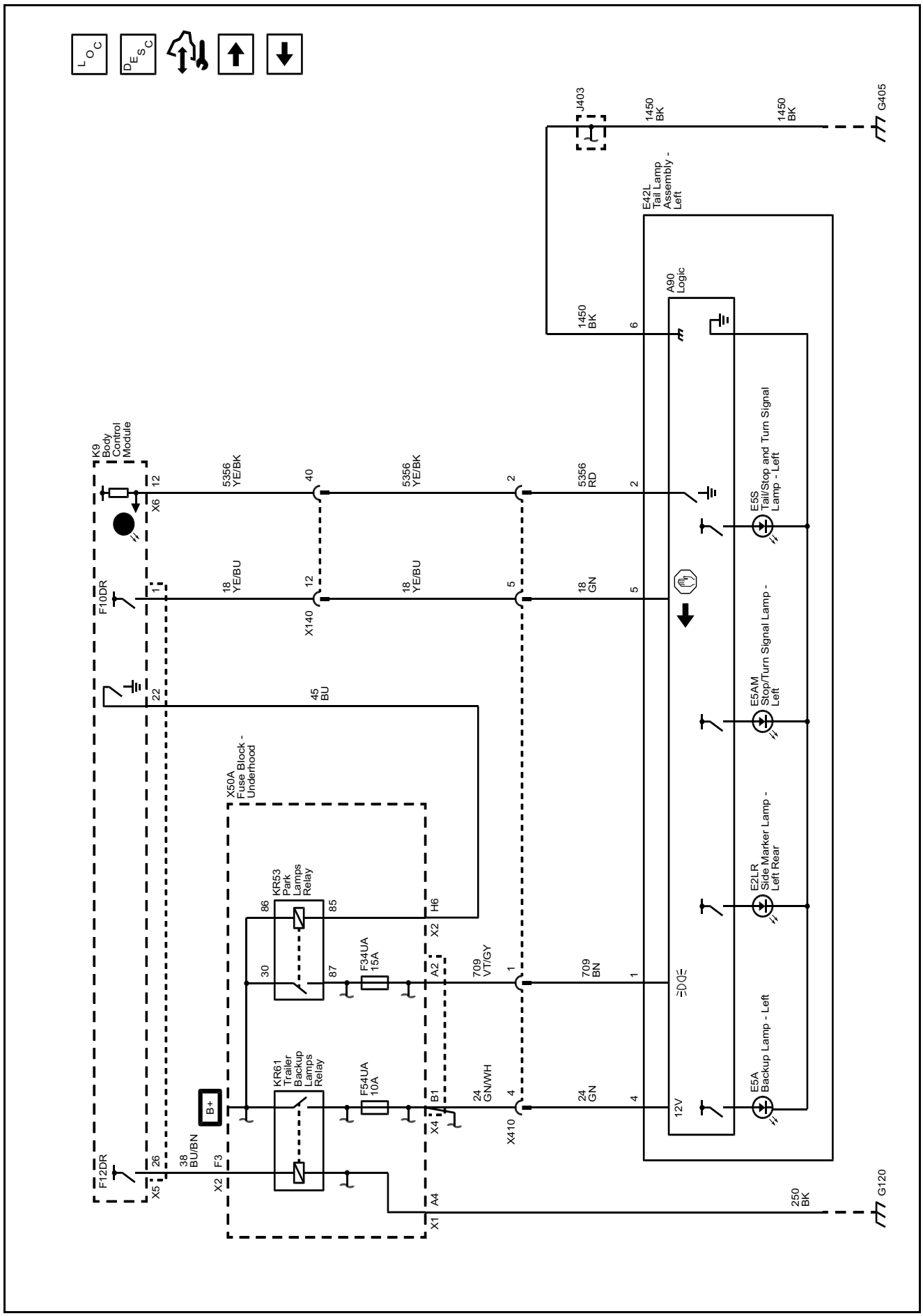

Exterior Lights Schematics (Tail Lamp Assembly - Right (Z88 with DZW or GFU/GFG/GFW with SRW))

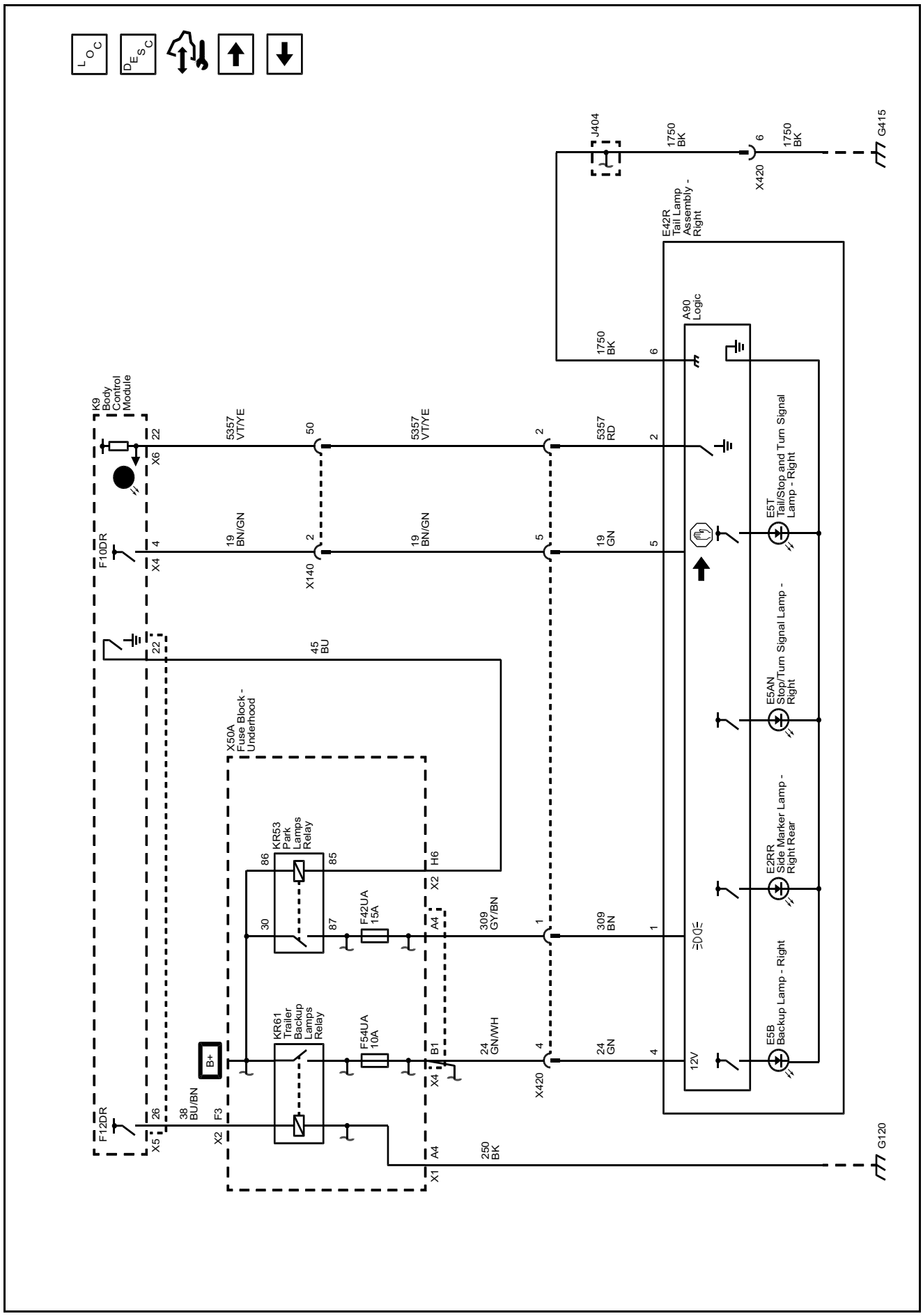

Exterior Lights Schematics (Tail Lamp Assemblies (ZW9))

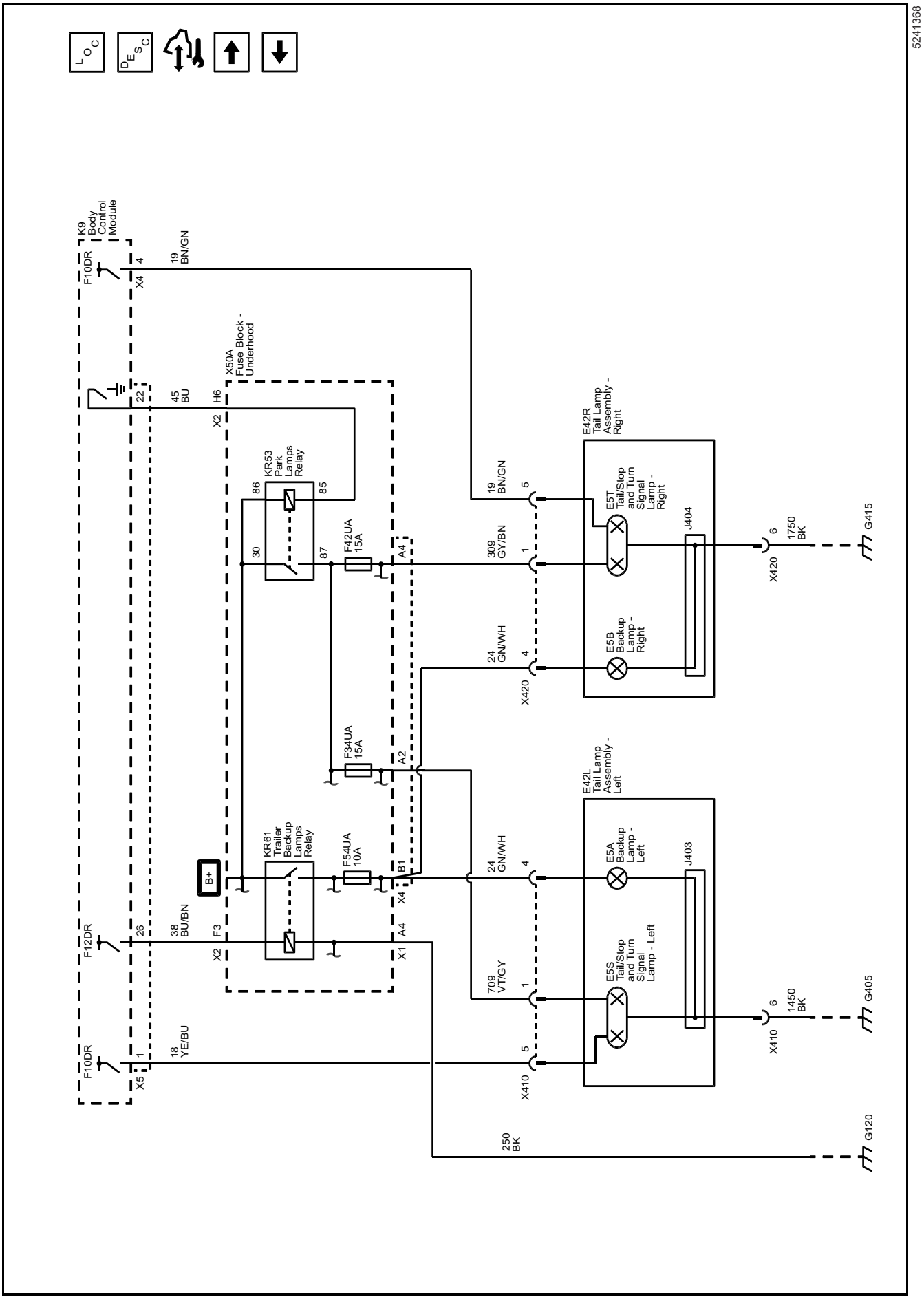

Exterior Lights Schematics (Center High Mounted Stop Lamp)

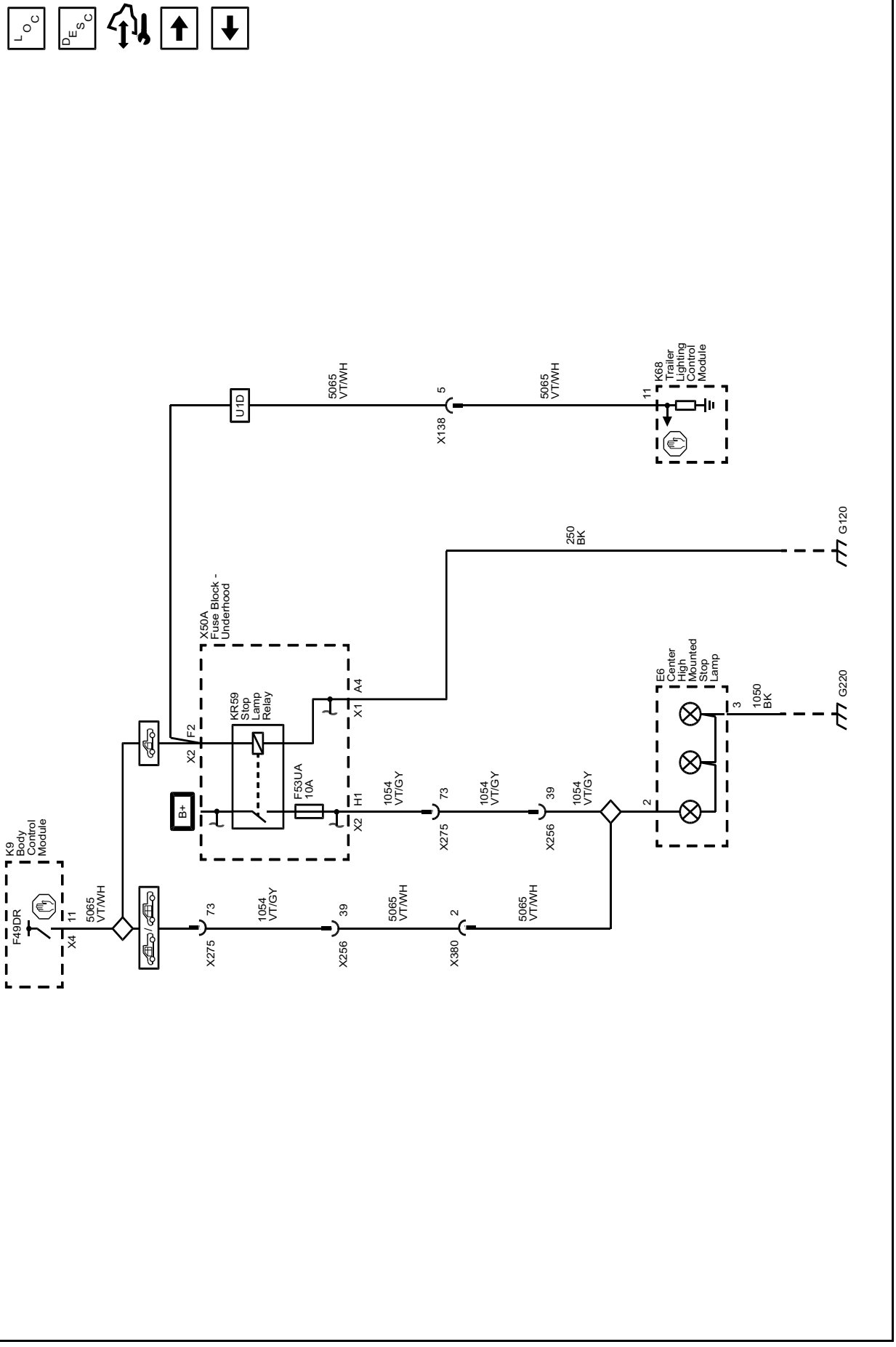

Exterior Lights Schematics (License Plate Lamps)

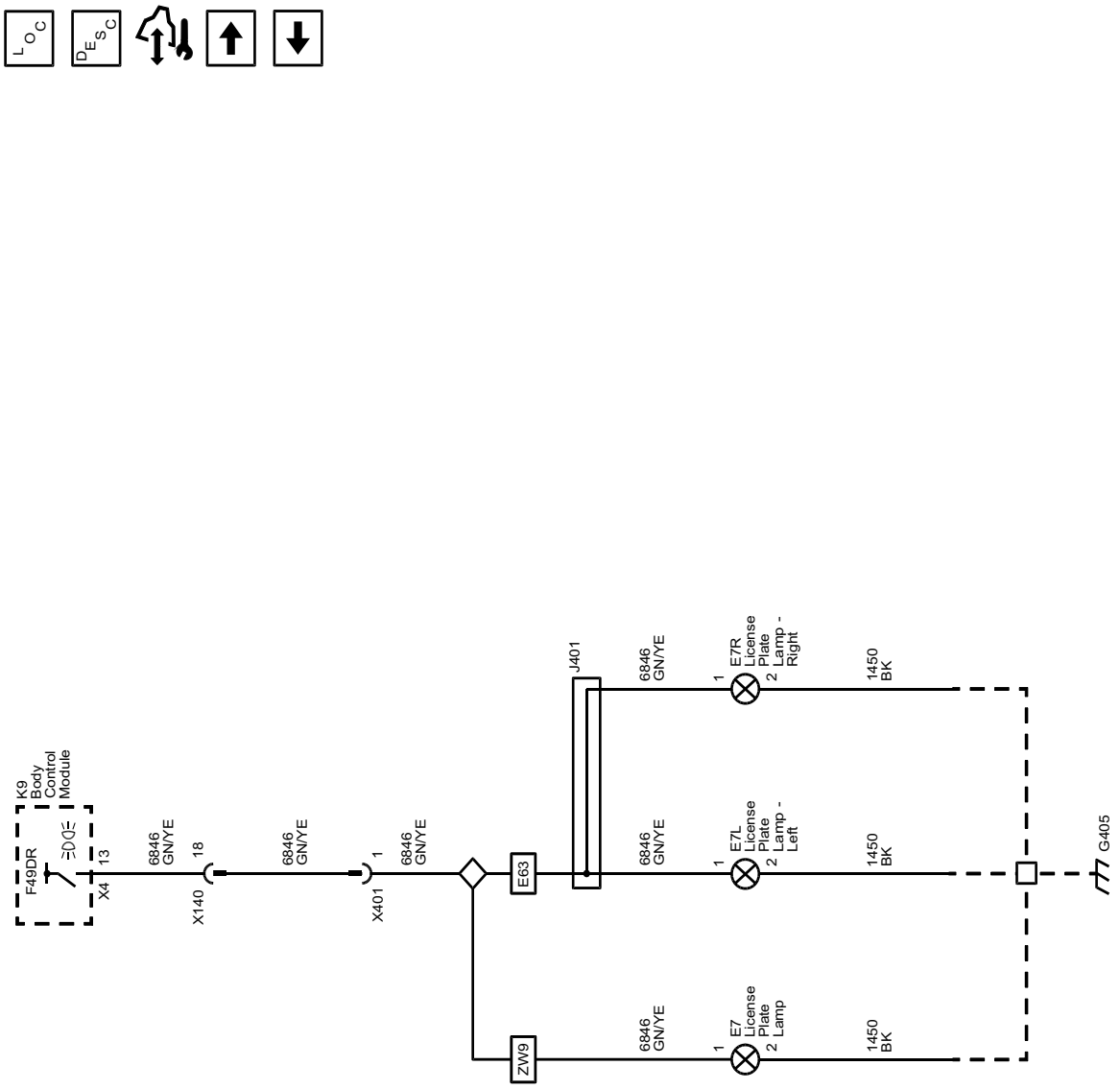

Exterior Lights Schematics (Park Lamps - Rear Clearance)

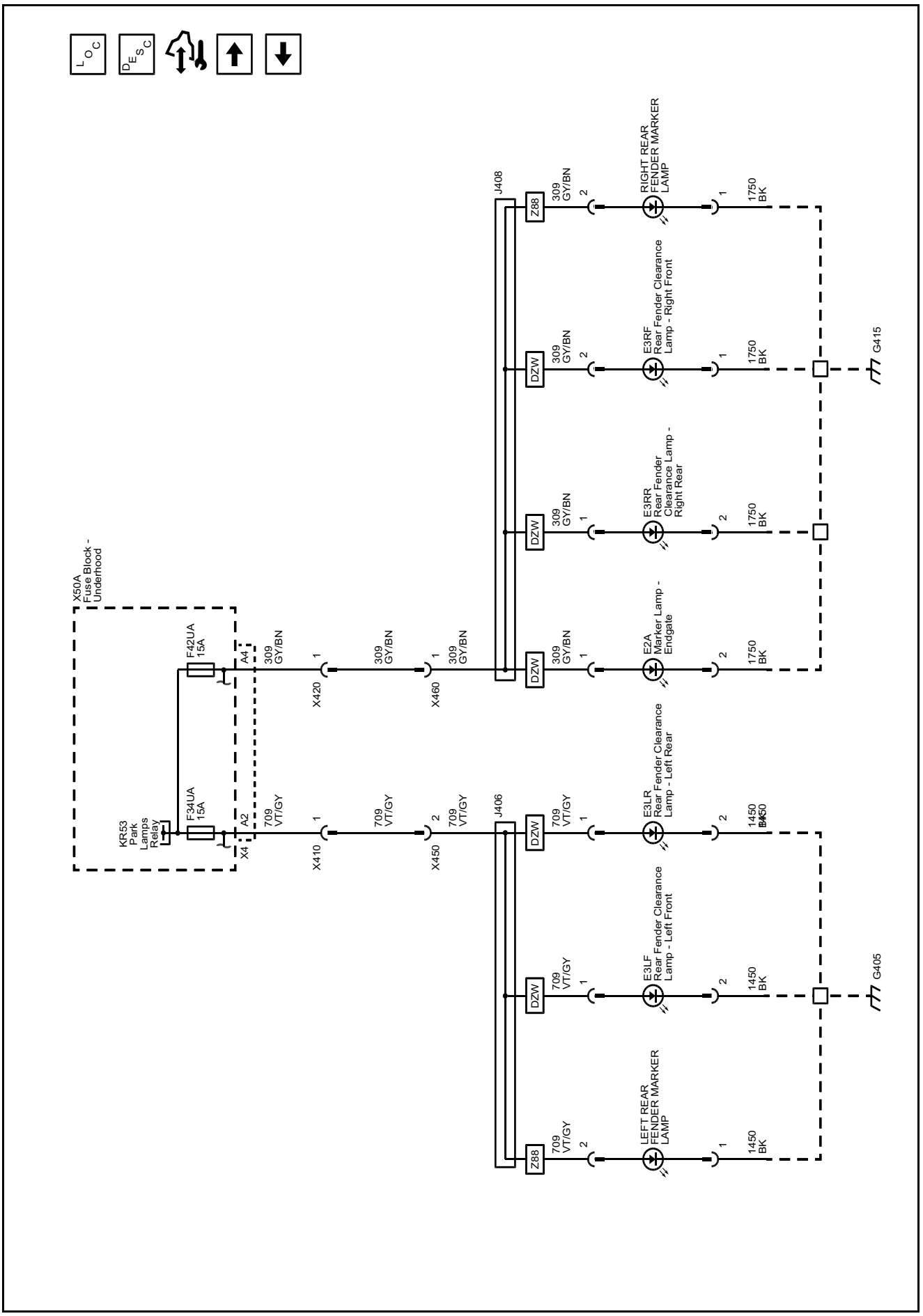

Exterior Lights Schematics (Cargo Lamps)

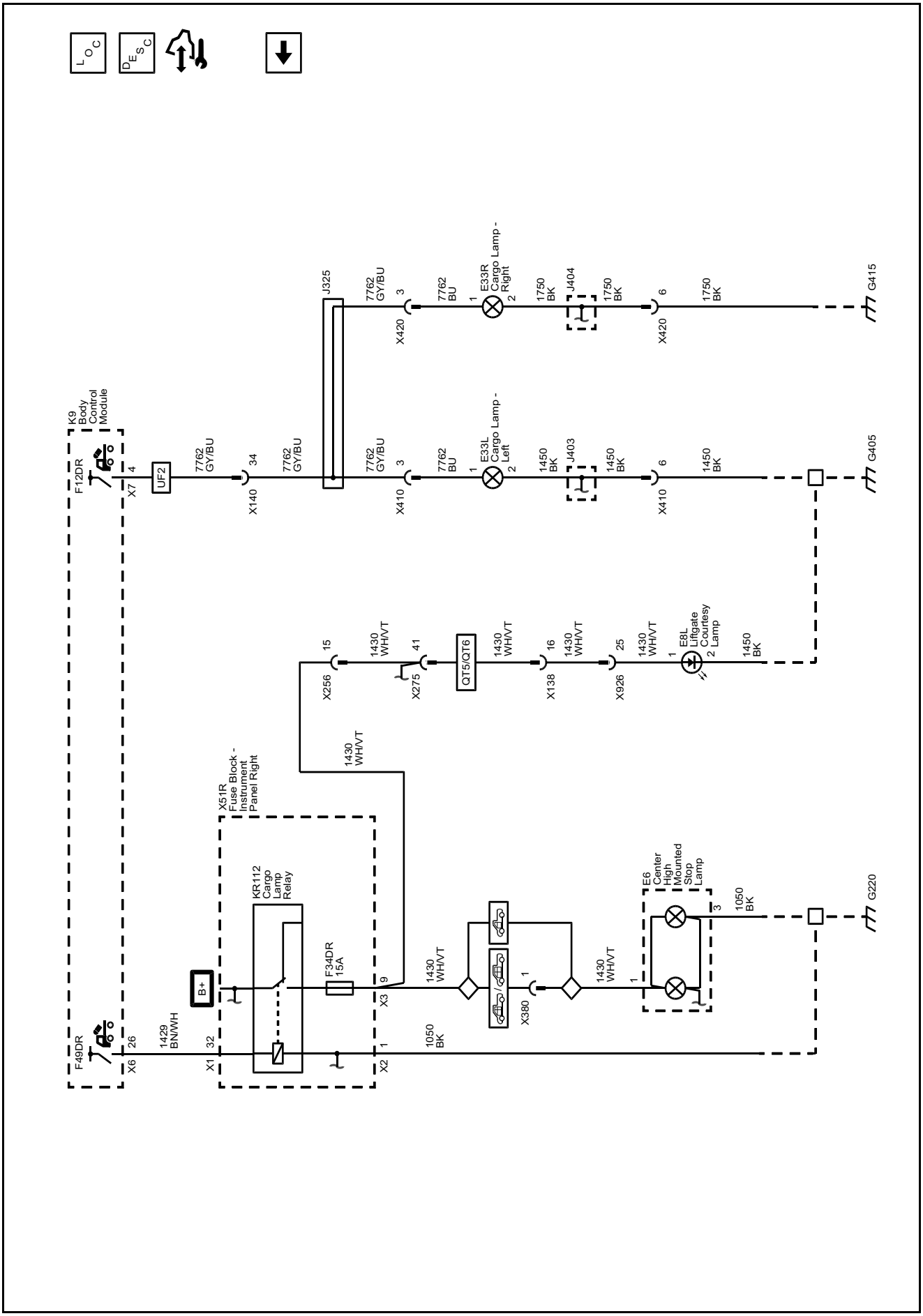

Interior Lights Schematics (Controls and Overhead Lamps)

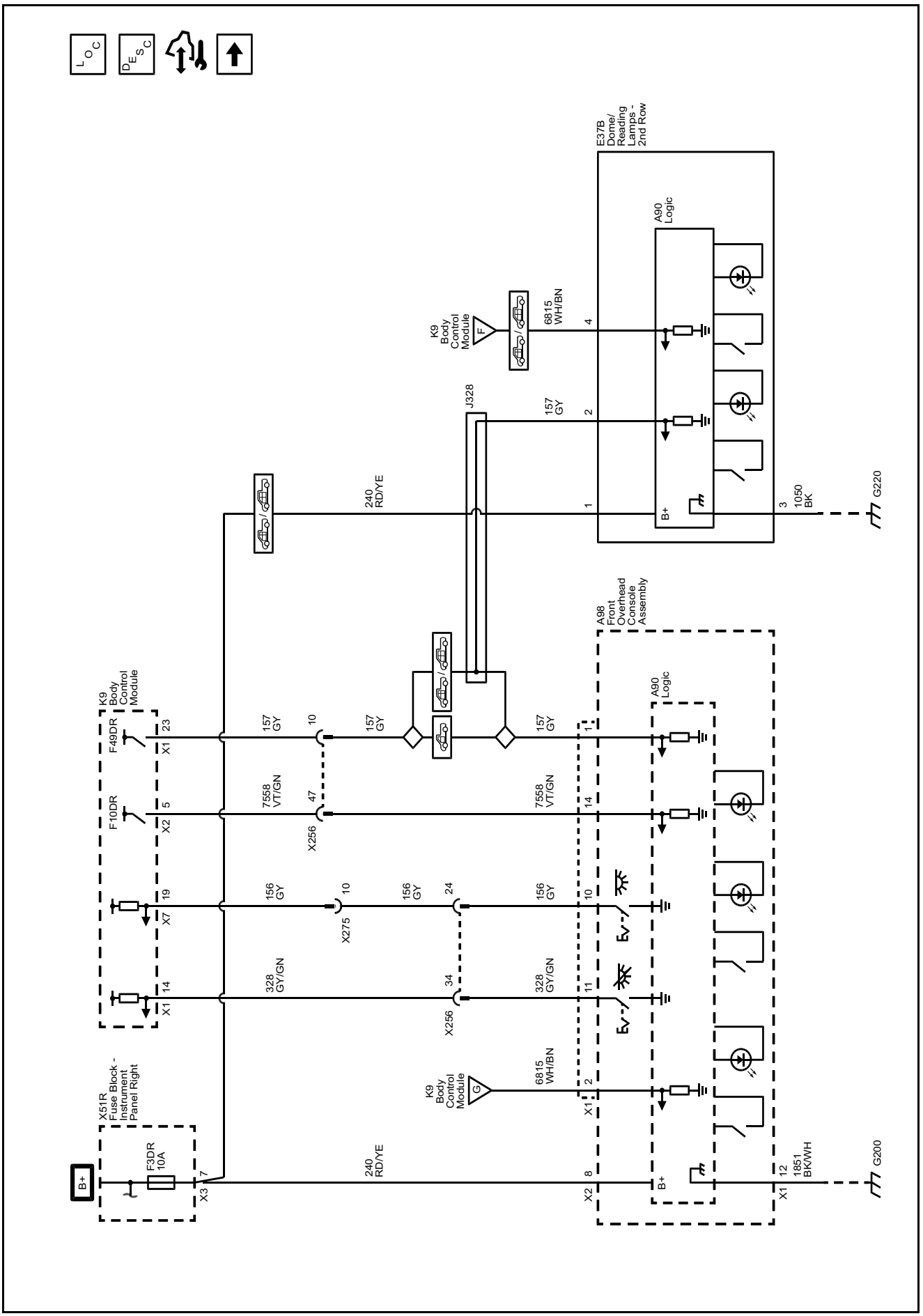

Interior Lights Schematics (Cargo Lamp Indicator, Sunshade, Center Console, and Door Lamps)

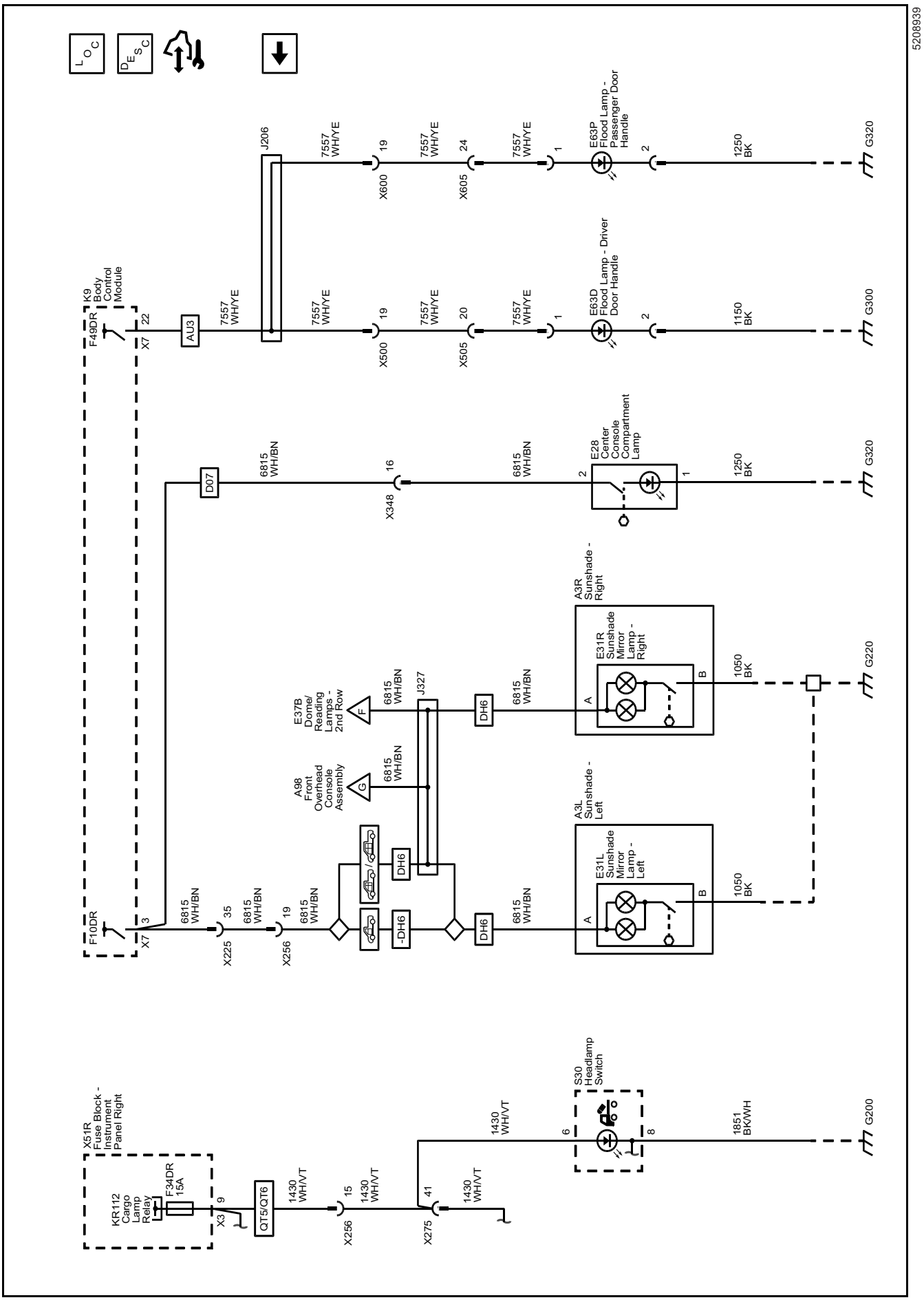

Interior Lights Dimming Schematics (Controls and Backlights (1 of 2))

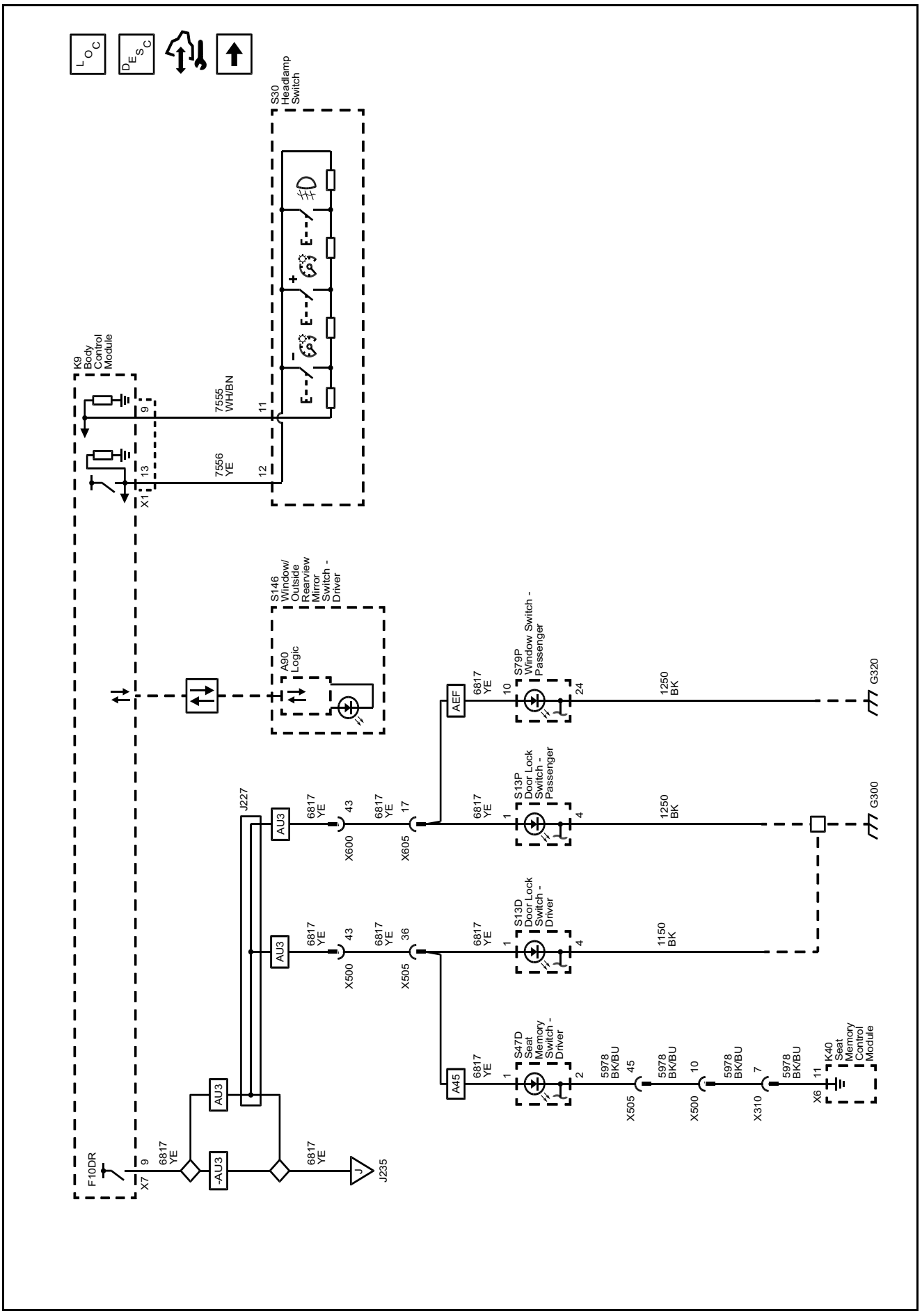

Interior Lights Dimming Schematics (Backlights (2 of 2))

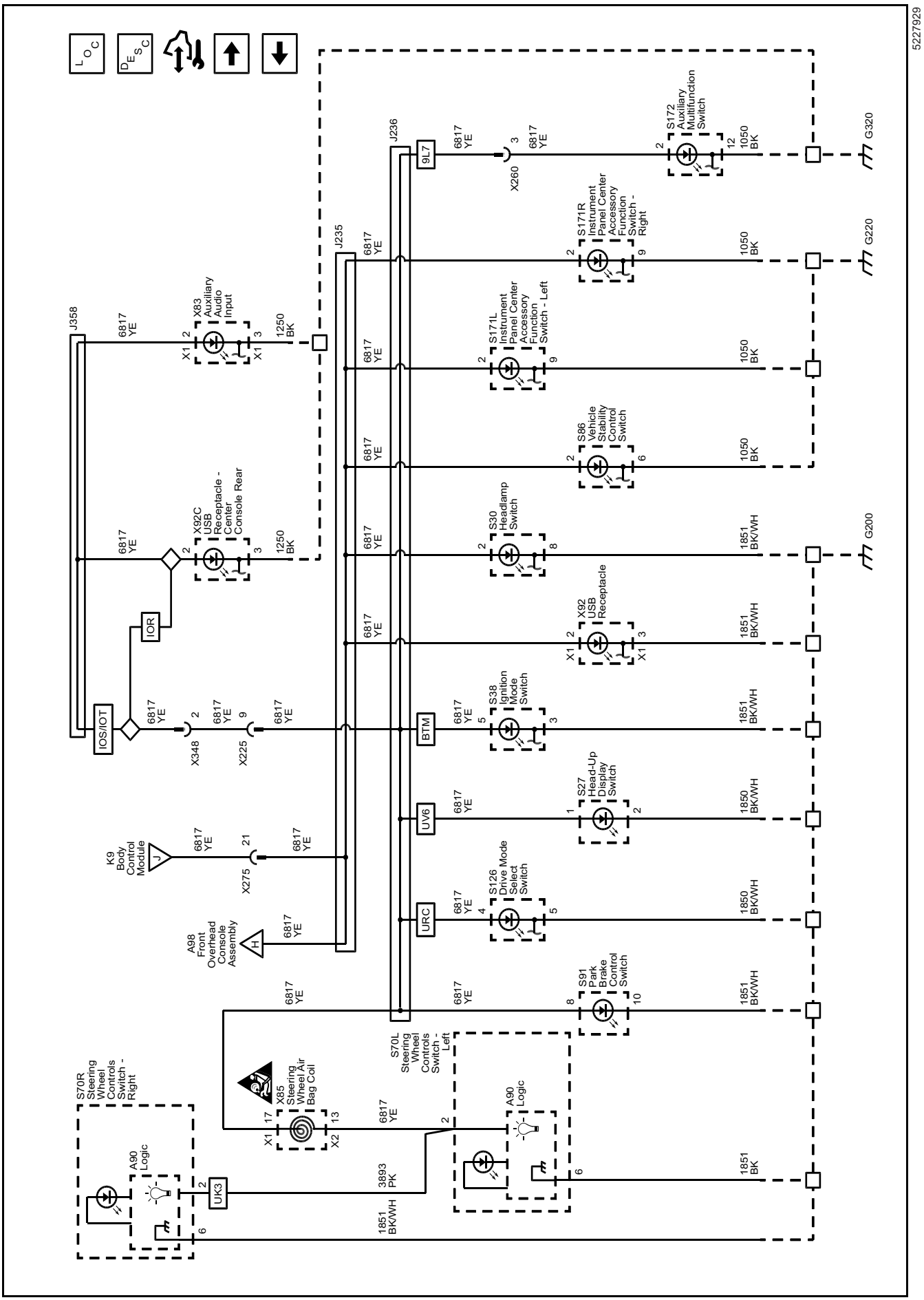

Interior Lights Dimming Schematics (Front Overhead Console Assembly)

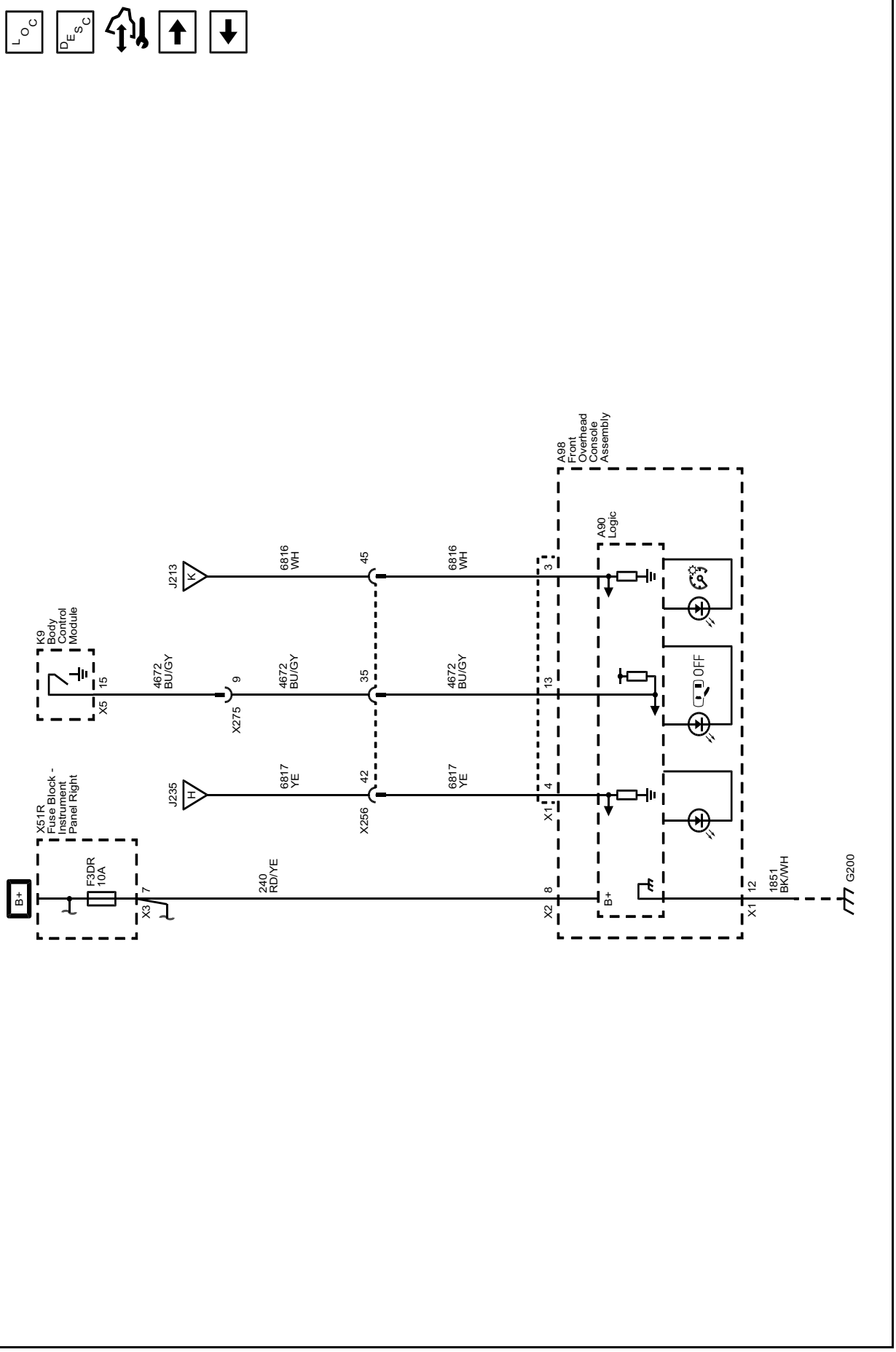

Interior Lights Dimming Schematics (Indicators)

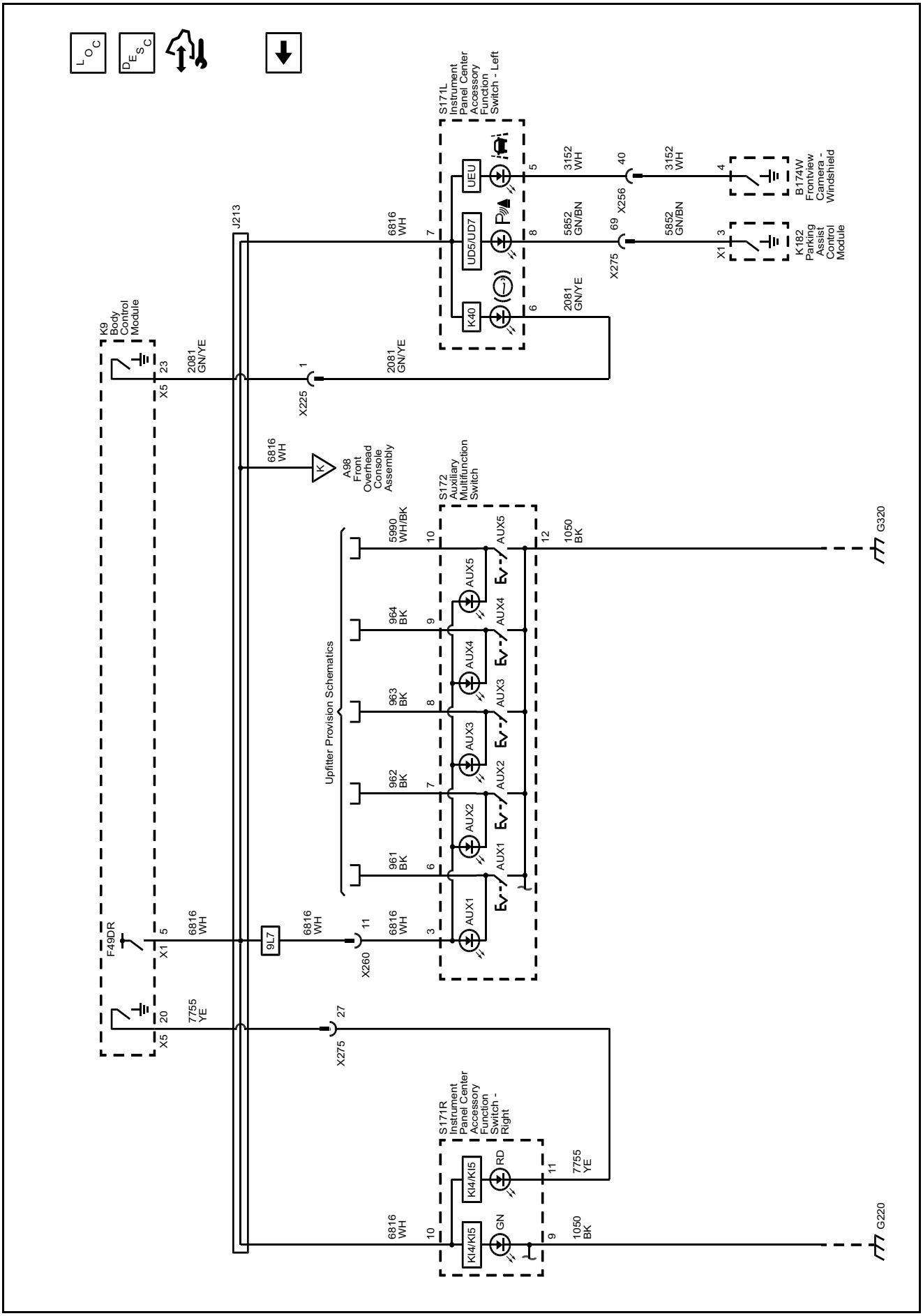

Description and Operation

Exterior Lighting Systems Description and Operation

The exterior lighting system consist of the following lamps:

- Automatic high beam assist
- Backup lamps
- Daytime running lamps
- Front fog lamps
- Hazard warning lamps
- Headlamps
- Park, tail, license, and marker lamps
- Stop lamps
- Turn signal lamps
- Trailer lighting

Low Beam Headlamps

The headlamps may be turned ON in 3 different ways:

- When the headlamp switch is placed in the ON position, for normal operation
- When the headlamp switch is placed in the AUTO position, for automatic lamp control
- When the headlamp switch is placed in the AUTO position, with the windshield wipers ON in daylight conditions, after a 6 second delay

The BCM will also command the low beam headlamps ON during daylight conditions when the following conditions are met:

- Headlamp switch in the AUTO position
- Windshield wipers ON
- Vehicle in any gear but PARK

When the BCM commands the low beam headlamps ON, the vehicle operator will notice the interior backlighting for the instrument cluster and the various switches with backlighting control will dim to the level of brightness selected by the instrument panel dimmer switch.

The body control module (BCM) monitors three signal circuits from the headlamp switch. When the headlamp switch is in the AUTO position, all three signal circuits are open. When placed in the AUTO position, the BCM monitors inputs from the ambient light sensor to determine if headlamps are required or if daytime running lamps will be activated based on outside lighting conditions. When the headlamp switch is placed in the OFF position, the headlamp switch headlamps OFF signal circuit is grounded, indicating to the BCM that the exterior lamps should be turned OFF. With the headlamp switch in the PARK position, the headlamp switch park lamps ON signal circuit is grounded, indicating that the park lamps have been requested. When the headlamp switch is placed in the HEADLAMP position, both the headlamp switch park lamps ON signal circuit and the headlamp switch headlamps ON signal circuit are grounded. The BCM responds to the inputs by illuminating the park lamps and headlamps. When the low beam headlamps are requested, the BCM applies B+ to both low beam headlamp control circuits illuminating the low beam headlamps.

High Beam Headlamps

When the low beam headlamps are ON and the turn signal/multifunction switch is placed in the high beam position, ground is applied to the BCM through the high beam signal circuit. The BCM responds to the high beam request by applying ground to the high beam relay control circuit which energizes the high beam relay. With the high beam relay energized, the switch contacts close allowing battery voltage to flow through the high beam fuse to the high beam control circuits to there respective high beam solenoid actuators located within the headlamp assemblies. With the left and right high beam solenoid actuators active, the solenoid shutters open in each headlamp assembly exposing the remaining portion of the headlamp that was covered by the shutters illuminating the high beams at full intensity.

Automatic High Beam Assist (AHBA)

The automatic high beam assist (AHBA) system operates the high beam headlamps ON and OFF automatically when the system is activated and certain conditions are met. The AHBA system consists of a front camera module that detects light and is able to identify approaching vehicles on an even, straight road at a distance of greater than 0.4 km (0.25 mi). The front camera module analyzes light color, intensity, and movement. The AHBA system will turn OFF the high beam headlamps when approaching vehicle headlamps or preceding vehicle taillights are detected by the front camera module. AHBA can be deactivated when the headlamp dimmer switch is moved from the neutral position to the high beam or flash to pass positions. AHBA can be reactivated by operating the high beam select switch from the neutral position to the high beam position twice within 2 seconds.

AHBA System Activation

- Vehicle ON
- Headlamp switch placed in the AUTO position
- Headlamp dimmer switch must be in the neutral position
- Outside lighting conditions must be dark
- Vehicle speed greater than 25 mph (40 km/h)

AHBA System Operation

The following are conditions that the AHBA system will turn the high beam headlamps off during operation:

- The system detects approaching traffic headlamps
- The system detects preceding traffic tail lamps
- Ambient light level too high due to towns or twilight situations
- The vehicle’s speed drops below 13 mph (22 km/h)
- Delay

Note: AHBA may not operate properly if any of the following conditions exist:

- Approaching and preceding vehicles lamps are undetectable due to dirt, snow, road spray, smoke, fog, or any other airborne conditions.
- The front camera module is covered with ice, dirt, snow, haze, or is obstructed.
- The vehicle is being driven on winding or hilly road conditions which would make any on coming vehicle headlamps undetectable by the AHBA.

AHBA System Deactivation

- Manually operating the headlamp dimmer switch from neutral to high beam position
- AHBA is deactivated automatically when the front or rear fog lamps are turned ON

AHBA System Indicator

The status of the AHBA system is shown by a green indicator located on the instrument panel cluster. When AHBA is active, the indicator will be illuminated continuously. If the operator deactivates the AHBA system, the indicator will turn off.

Daytime Running Lamps

The daytime running lamps will illuminate continuously when the following conditions are met:

- The ignition is in the RUN or CRANK position
- The shift lever is out of the PARK position for vehicles equipped with automatic transmissions or the parking brake is released for vehicles with manual transmissions
- The low and high beam headlamps are OFF

The ambient light sensor is used to monitor outside lighting conditions. The ambient light sensor provides a voltage signal that will vary between 0.2 and 4.9 volts depending on outside lighting conditions. The body control module (BCM) provides a 5 V reference signal to the ambient light sensor and the HVAC control module provides a low reference ground. The BCM monitors the ambient light sensor signal circuit to determine if outside lighting conditions are correct for either daytime running lights or automatic lamp control when the headlamp switch is in the AUTO position. In daylight conditions the BCM applies B+ to both daytime running lamp control circuits to the left and right multifunction light emitting diode (LED) control modules located in each headlamp assembly. The multifunction LED control modules respond the to the B+ input from the BCM by illuminating the left and right daytime running lamp LED's. Any function or condition that turns on the low beam headlamps will cancel daytime running lamps operation.

Flash to Pass

When the turn signal/multifunction switch is momentarily placed in the flash to pass position, ground is applied to the turn signal/multifunction switch. The turn signal/multifunction switch applies ground to the body control module (BCM) through the flash to pass switch signal circuit. The BCM responds to the flash to pass request by applying ground to the high beam relay control circuit. This energizes the high beam relay, closing the switch side contacts of the high beam relay, applying battery voltage to the 3 pin high beam fuse. Battery voltage is applied from the high beam fuse through the high beam control circuit to the high beam headlamp assemblies. This causes the high beam headlamps to illuminate at full brightness momentarily.

Front Fog Lamps

The front fog lamp relay is supplied with battery voltage at all times. The front fog lamp switch signal circuit is grounded momentarily by pressing the front fog lamp switch. The body control module (BCM) energizes the front fog lamp relay by applying ground to the front fog lamp relay control circuit. When the front fog lamp relay is energized, the relay switch contacts close and battery voltage is applied through the front fog lamp fuse to the front fog lamp supply voltage circuit which illuminates the front fog lamps.

Hazard Lamps

The hazard flashers may be activated in any power mode. The hazard switch signal circuit is momentarily grounded when the hazard switch is pressed. The body control module (BCM) responds to the hazard switch signal input by supplying battery voltage to all four turn signal lamps in an ON and OFF duty cycle. When the hazard switch is activated, the BCM sends a serial data message to the instrument panel cluster requesting both turn signal indicators to be cycled ON and OFF.

The instrument panel dimmer switch controls the brightness of the interior backlighting components. When the instrument panel dimmer switch is placed in a desired brightness position, the body control module (BCM) receives a signal from the instrument panel dimmer switch and responds by applying a pulse width modulated voltage to the hazard switch light emitting diode (LED) backlighting control circuit illuminating the LED to the desired level of brightness.

Park, Tail, and License Lamps

When the headlamp switch is placed in the HEAD or PARK position, ground is applied to the park lamp switch ON signal circuit to the body control module (BCM). The BCM responds by applying voltage to the park lamps, tail lamps, and license lamps control circuits illuminating the park, tail, and license lamps.

Stop Lamps

The brake pedal position sensor is used to sense the action of the driver application of the brake pedal. The brake pedal position sensor provides an analog voltage signal that will increase as the brake pedal is applied. The body control module (BCM) provides a low reference signal and a 5 V reference voltage to the brake pedal position sensor. When the variable signal reaches a voltage threshold indicating the brakes have been applied, the BCM will apply battery voltage to the left and right stop lamp control circuits as well as the center high mounted stop lamp control circuit illuminating the left and right stop lamps and the center high mounted stop lamp.

Turn Signal Lamps

Ground is applied at all times to the turn signal/ multifunction switch. The turn signal lamps may only be activated with the ignition switch in the ON or START

positions. When the turn signal/multifunction switch is placed in either the TURN RIGHT or TURN LEFT position, ground is applied to the body control module (BCM) through either the right turn or left turn signal switch signal circuit. The BCM responds to the turn signal switch input by applying a pulsating voltage to the front and rear turn signal lamps through there respective control circuits. When a turn signal request is received by the BCM, a serial data message is sent to the instrument cluster requesting the respective turn signal indicator be pulsed ON and OFF. Vehicles equipped with LED turn signals use an additional turn outage detection circuit for detecting when a LED turn signal goes out. This circuit is necessary due to the low current draw of LEDs. The turn outage detection circuit allows the module to alert the driver of the vehicle that a turn signal is out.

Backup Lamps

Automatic Transmission

With the engine ON and the transmission in the REVERSE position, the transmission control module (TCM) sends a serial data message to the body control module (BCM). The message indicates that the gear selector is in the REVERSE position. The BCM applies battery voltage to the backup lamps control circuit illuminating the backup lamps. Once the driver moves the gear selector out of the REVERSE position, a message is sent by the TCM via serial data requesting the BCM to remove battery voltage from the backup lamps control circuit. The engine must be ON for the backup lamps to operate.

Manual Transmission

The engine control module (ECM) provides a signal circuit to the backup lamp switch which is permanently grounded. With the engine running and the transmission in the reverse position, the backup lamp switch signal circuit is pulled low and the ECM responds by sending a serial data message to the body control module (BCM). The message indicates that the gear selector is in the reverse position. The BCM energizes the backup lamp relay by applying battery voltage to the backup lamp relay control circuit. When the backup lamp relay is energized, the relay switch contacts close and battery voltage is applied through the backup lamp fuses to the backup lamp control circuits which illuminates the backup lamps. Once the driver moves the gear selector out of the reverse position, a message is sent by the ECM via serial data requesting the BCM to remove battery voltage from the backup lamp relay control circuit. The engine must be running for the backup lamps to operate.

Exterior Courtesy Lighting

Cargo Lamps

The cargo lamps are controlled by a cargo lamp relay and a dedicated cargo lamp control circuit from the body control module (BCM). The cargo lamp relay is supplied with ground at all times. The cargo lamp switch signal circuit is grounded momentarily by pressing the cargo lamp switch located within the headlamp switch. The body control module (BCM) responds by energizing the cargo lamp relay by applying battery voltage to the cargo lamp relay control circuit as well as the dedicated cargo lamp control circuit. When the cargo lamp relay is energized, the relay switch contacts close and battery voltage is applied through the cargo lamp fuse to the cargo lamp supply voltage circuit which illuminates the cargo lamps. Cargo lamps are located in the center high mounted stop lamp assembly, truck bed, and tailgate handle when equipped.

Forward Flood Lamps

The flood lamp switch signal circuit is grounded momentarily by pressing the flood lamp switch located within the headlamp switch. The body control module (BCM) responds by applying battery voltage to the exterior flood lamp control circuits which illuminates the forward exterior flood lamps located within the exterior mirror assemblies. If the exterior flood lamps are left on with the vehicle off, the lights will shut off after approximately 10 minutes to prevent total battery discharge. The exterior flood lamps will immediately turn off if the vehicle leaves the parked position.

Lower Flood Lamps

The body control module (BCM) supplies battery voltage to the exterior LED lighting located under each outside rearview mirror for approach lighting. When the keyless entry transmitter is operated to either the lock or unlock functions the LED lighting located under each outside rearview mirror are commanded ON for approach lighting.

Trailer Lighting (With U1D)

The trailer lighting control module is supplied with battery voltage as well as ignition voltage and is permanently grounded. For lighting operation, the trailer lighting control module receives serial data messages from the body control module (BCM) indicating what lamps have been activated on the vehicle. The trailer lighting control module responds by applying voltage to the appropriate control circuits for the requested lamps illuminating the lamps on the attached trailer. The trailer lighting control module constantly monitors for trailer connection status, trailer lighting faults, and trailer theft deterrent purposes, this is accomplished through the lighting circuits of the trailer to determine if a trailer is connected. With the key OFF, the trailer lighting control module will periodically pulse the lighting circuits of the trailer to verify it is still connected. The lights on the trailer may flash at different intervals with the key OFF depending on which type of lights the trailer is built with. If a trailer is disconnected with the key ON, the vehicle will display a trailer disconnected message until a trailer is reconnected or the ignition is cycled.

Backup Lamps

With the engine running and the transmission in the reverse position, the transmission control module (TCM) sends a serial data message that indicates the gear selector is in the reverse position. The Trailer Lighting Control Module responds by applying voltage to the X88 Trailer Connector on the Trailer Backup Lamps control circuit when a trailer is connected. Once the driver moves the gear selector out of the reverse position, a message is sent by the TCM via serial data

requesting the Trailer Lighting Control Module to remove battery voltage from the backup lamp control circuit.

Park Lamps

When the headlamp switch is placed in the HEAD or PARK position, ground is applied to the park lamp switch ON signal circuit to the body control module (BCM). The BCM responds by sending a serial data message to the Trailer Lighting Control Module. The Trailer Lighting Control Module responds by applying voltage to the X88 Trailer Connector on the Trailer Park Lamp control circuit when a trailer is connected.

Stop Lamps

The brake pedal position sensor is used to sense the action of the driver application of the brake pedal. The brake pedal position sensor provides an analog voltage signal that will increase as the brake pedal is applied. The body control module (BCM) provides a low reference signal and a 5 V reference voltage to the brake pedal position sensor. When the variable signal reaches a voltage threshold indicating the brakes have been applied, the BCM energizes the stop lamp relay circuit by applying voltage to the stop lamp relay control circuit. The Trailer Lighting Control Module senses the voltage on the stop lamp relay circuit and responds by applying voltage to the X88 Trailer Connector on the left and right Trailer Stop/Turn Signal Lamp control circuits when a trailer is connected.

Turn Signal Lamps

Ground is applied at all times to the turn signal/ multifunction switch. The turn signal lamps may only be activated with the ignition switch in the ON or START positions. When the turn signal/multifunction switch is placed in either the TURN RIGHT or TURN LEFT position, ground is applied to the body control module (BCM) through either the right turn or left turn signal switch signal circuit. The BCM responds by sending a serial data message to the Trailer Lighting Control Module. The Trailer Lighting Control Module responds by applying voltage to the X88 Trailer Connector on either the left or right Trailer Stop/Turn Signal Lamp control circuits when a trailer is connected.

Trailer Lighting (Without U1D)

Backup Lamps

For backup lamp operation, the backup lamp relay is supplied with battery voltage at all times. With the engine running and the transmission in the reverse position, the transmission control module (TCM) sends a serial data message to the body control module (BCM). The message indicates that the gear selector is in the reverse position. The BCM energizes the backup lamp relay by applying battery voltage to the backup lamp relay control circuit. When the backup lamp relay is energized, the relay switch contacts close and battery voltage is applied through the backup lamp fuses to the backup lamp control circuits which illuminates the backup lamps. Once the driver moves the gear selector out of the reverse position, a message is sent by the TCM via serial data requesting the BCM to remove battery voltage from the backup lamp relay control circuit.

Park Lamps

When the headlamp switch is placed in the HEAD or PARK position, ground is applied to the park lamp switch ON signal circuit to the body control module (BCM). The BCM responds by applying voltage to the park lamps, tail lamps, license lamps, and trailer park lamps control circuits illuminating the park, tail, license, and trailer park lamps.

Stop Lamps

For stop lamp operation, the left and right trailer stop/ turn signal lamp relay's are supplied with battery voltage at all times. The brake pedal position sensor is used to sense the action of the driver application of the brake pedal. The brake pedal position sensor provides an analog voltage signal that will increase as the brake pedal is applied. The body control module (BCM) provides a low reference signal and a 5 V reference voltage to the brake pedal position sensor. When the variable signal reaches a voltage threshold indicating the brakes have been applied, the BCM energizes the left and right trailer stop/turn signal lamp relay's by applying voltage to the left and right stop lamp relay control circuits. With the left and right trailer stop/turn signal lamp relay's energized, the relay switch contacts close and battery voltage is applied through the left and right trailer stop/turn signal fuse's to the trailer stop lamp control circuits which illuminates the trailer stop lamps.

Turn Signal Lamps

For turn signal lamp operation, the left and right trailer stop/turn signal lamp relay's are supplied with battery voltage at all times. Ground is applied at all times to the turn signal/multifunction switch. The turn signal lamps may only be activated with the ignition switch in the ON or START positions. When the turn signal/multifunction switch is placed in either the TURN RIGHT or TURN LEFT position, ground is applied to the body control module (BCM) through either the right turn or left turn signal switch signal circuit. The BCM responds to the turn signal switch input by applying a pulsating voltage to the left and right trailer stop/turn signal lamp relay control circuits energizing the relay's in an ON and OFF cycle. With the left and right trailer stop/turn signal lamp relay's energized, the relay switch contacts cycle ON and OFF applying battery voltage through the left and right trailer stop/turn signal fuse's to the trailer turn signal lamp control circuits which illuminates the trailer turn signal lamps in an ON and OFF cycle.

Battery Run Down Protection/ Inadvertent Power

To provide battery run down protection, the exterior lamps will be deactivated automatically under certain conditions. The BCM monitors the state of the headlamp switch. If the park or headlamp switch is ON when the ignition switch is placed in either the CRANK or RUN position and then placed in the OFF position, the BCM initiates a 10 minute timer. At the end of the 10 minutes, the BCM will turn off the control power output to the park lamp controls as well as the headlamp relay coils, deactivating the exterior lamps. This feature will be cancelled if any power mode other than OFF becomes active. The BCM will disable battery run down protection if any of the following conditions

exist. The park or headlamp switch is placed in the ON to OFF position, and back to the ON position during battery run down protection. The BCM determined that the park or headlamp switch was not active when the ignition was turned OFF.

Interior Lighting Systems Description and Operation

Interior Lamps

The interior lighting system consist of two groups. This first group includes lamps that may not be dimmed.

- Dome lamps
- Center console compartment lamps
- Reading lamps
- Sunshade mirror lamps

Dome Lamps

The dome lamp switch has 3 positions: DOOR, OFF, and ON. The ON position provides a ground for continuous operation and the dome lamp will remain illuminated until the switch is placed in either the DOOR or OFF position. When in the DOOR position, the dome lamp operation is controlled by the body control module (BCM). When any door is opened, the door ajar switch contacts close and the BCM receives a door-open input. The BCM illuminates the dome lamp when any door is opened or a door lock/unlock request is activated with the key fob. After all doors have been closed, the dome lamp will remain illuminated approximately 3 seconds after the last door closes. When the driver places the dome lamp switch in the OFF position, the dome lamp will be disabled. In the event that the dome lamp were to remain illuminated for more than 10 minutes with the ignition switch in the OFF position and no doors opened, the BCM will deactivate the dome lamp control circuit to prevent total battery discharge. The dome lamps will turn OFF using the theater dimming feature when controlled by the BCM.

Center Console Compartment Lamp

The inadvertent power supply voltage circuit from the BCM provides battery voltage to the center console compartment lamp. When the center console is opened, the center console compartment lamp switch contacts close providing a path to ground and the center console compartment lamp illuminates. If the operator inadvertently leaves the center console compartment door open with the center console compartment lamp ON, the BCM will turn all interior lamps OFF after 10 minutes has passed since any switch activation has been detected by the BCM.

Reading Lamps

The inadvertent power supply voltage circuit from the BCM provides battery positive voltage to each reading lamp. When a reading lamp switch is activated, the switch contacts close providing a path to ground and the reading lamp illuminates. If the operator inadvertently leaves a reading lamp ON, the BCM will turn all interior lamps OFF after 10 minutes has passed since any switch activation has been detected by the BCM.

Sunshade Mirror Lamps

The inadvertent power supply voltage circuit from the BCM provides battery voltage to each set of sunshade mirror lamps. When the sunshade mirror cover is opened, a switch closes providing ground and the sunshade lamps illuminate. If the operator inadvertently leaves a sunshade mirror cover open with the lamps ON, the BCM will turn all interior lamps OFF after 10 minutes has passed since any switch activation has been detected by the BCM.

Keyless Entry Interior Illumination

When the operator uses the keyless entry transmitter in order to unlock the doors, the BCM receives a door-unlock signal. The BCM must receive inputs from various systems that indicate that the ignition switch is OFF, the courtesy lamp switch is OFF, and all doors are closed before the BCM will activate the interior lamps. After all doors have been closed, the courtesy lamps will turn OFF immediately if the ignition switch is turned to the ON position, the door locks are LOCKED, or approximately 20 seconds after the last door closes. The BCM will turn off the courtesy lamps through the theater dimming feature. The BCM keeps the courtesy lamps on for 40 seconds after an alarm event is completed.

Interior Lamps Dimming

The second group includes lamps which may be dimmed. This group may use a combination of light emitting diodes (LED), incandescent lamps, and pulse width modulation (PWM) illumination.

- Dome/reading lamps – front
- Dome/reading lamps – rear
- Door lock switch – driver
- Door lock switch – passenger
- Garage door opener switch
- Headlamp switch
- HVAC control head assembly
- Multifunction switch – instrument panel
- Outside rearview mirror switch
- Park brake switch
- Radio
- Roof beacon switch
- Seat memory switch – driver
- Sliding rear window switch
- Steering wheel control switch – left
- Steering wheel control switch – right
- Sun roof switch
- Sun roof tilt switch
- Transfer case shift control switch
- Trailer brake control switch
- Window switch – driver
- Window switch – passenger

With the headlamp switch in the PARK or HEAD position, the park lamp switch signal circuit provides an input to the body control module (BCM). The BCM responds by applying voltage to the park lamps as well as the backlight dimming control circuits illuminating all components with interior backlighting. All interior

backlighting turns ON at the dimming level indicated by the instrument panel dimmer switch. The instrument panel dimmer switch is a momentary type switch and utilizes a resistor ladder to increase and decrease the brightness of the interior backlighting components. The instrument panel dimmer switch provides a voltage signal to the BCM that will increase as the brightness of the lights are increased and decrease as the brightness of the lights are decreased. The BCM provides a low reference signal and a B+ circuit to the instrument panel dimmer switch. When the instrument panel dimmer switch is held in the desired position, the dimmed voltage setting is applied from the instrument panel dimmer switch through the instrument panel dimmer switch signal circuit to the BCM. The BCM interprets the signal and applies a pulse width modulated voltage through the backlighting control circuits illuminating the interior backlighting to the requested level of brightness.

Battery Rundown Protection/ Inadvertent Power

The BCM inadvertent power supply voltage circuit provides battery voltage to all of the interior courtesy lamps. In the event that any of these lamps were to remain illuminated for a period of more than 10 minutes with the ignition switch in the OFF position, the BCM will deactivate the inadvertent power supply voltage circuit to prevent total battery discharge. If the ignition switch is turned to any position other than OFF, or if a lamp switch is activated during this 10 minute period, the timer resets for another 10 minutes.

Mirrors

Schematic and Routing Diagrams

Inside Rearview Mirror Schematics (Inside Rearview Mirror (DD8/DRZ))

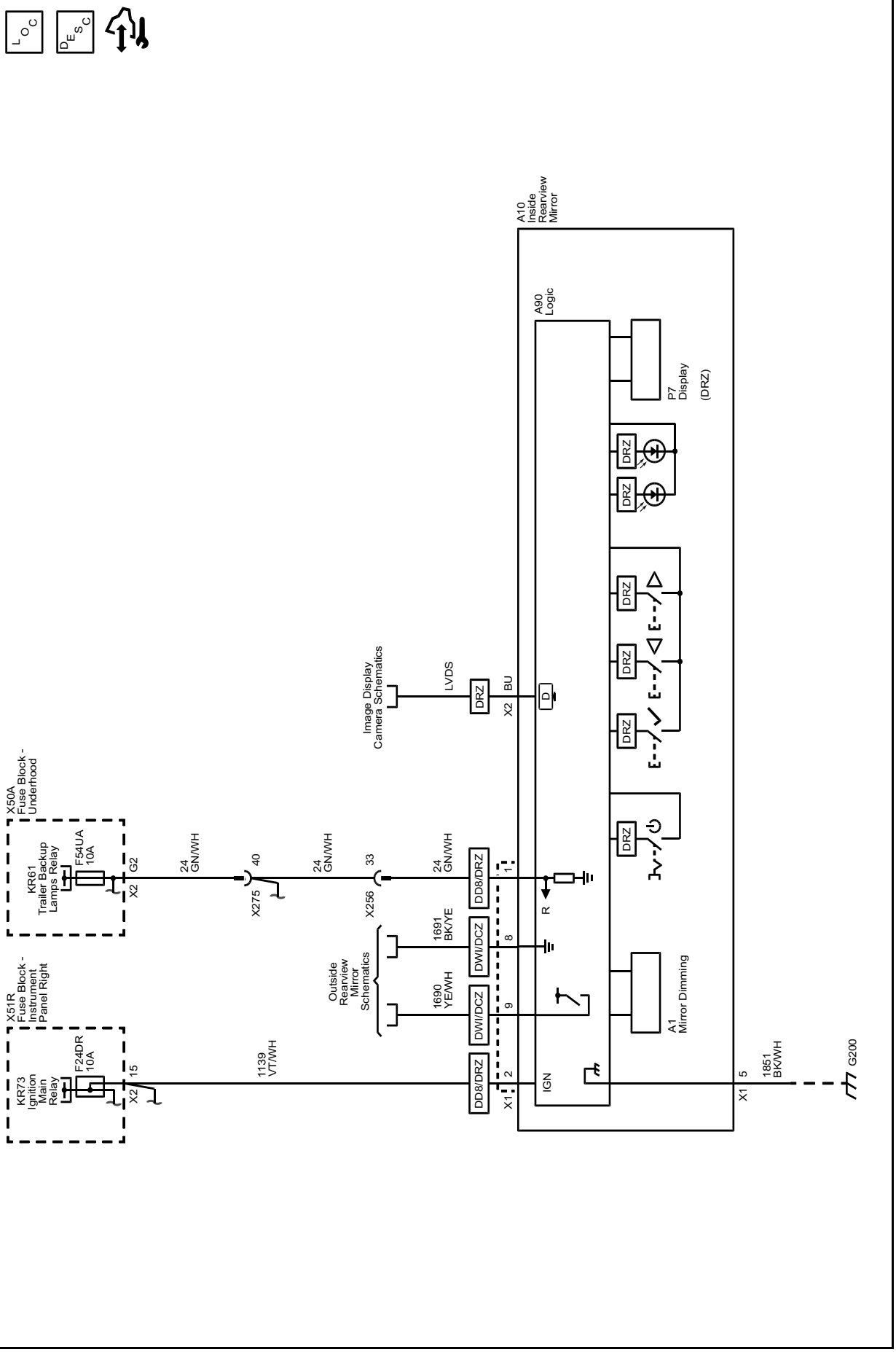

Outside Rearview Mirror Schematics (Controls and Driver (A45))

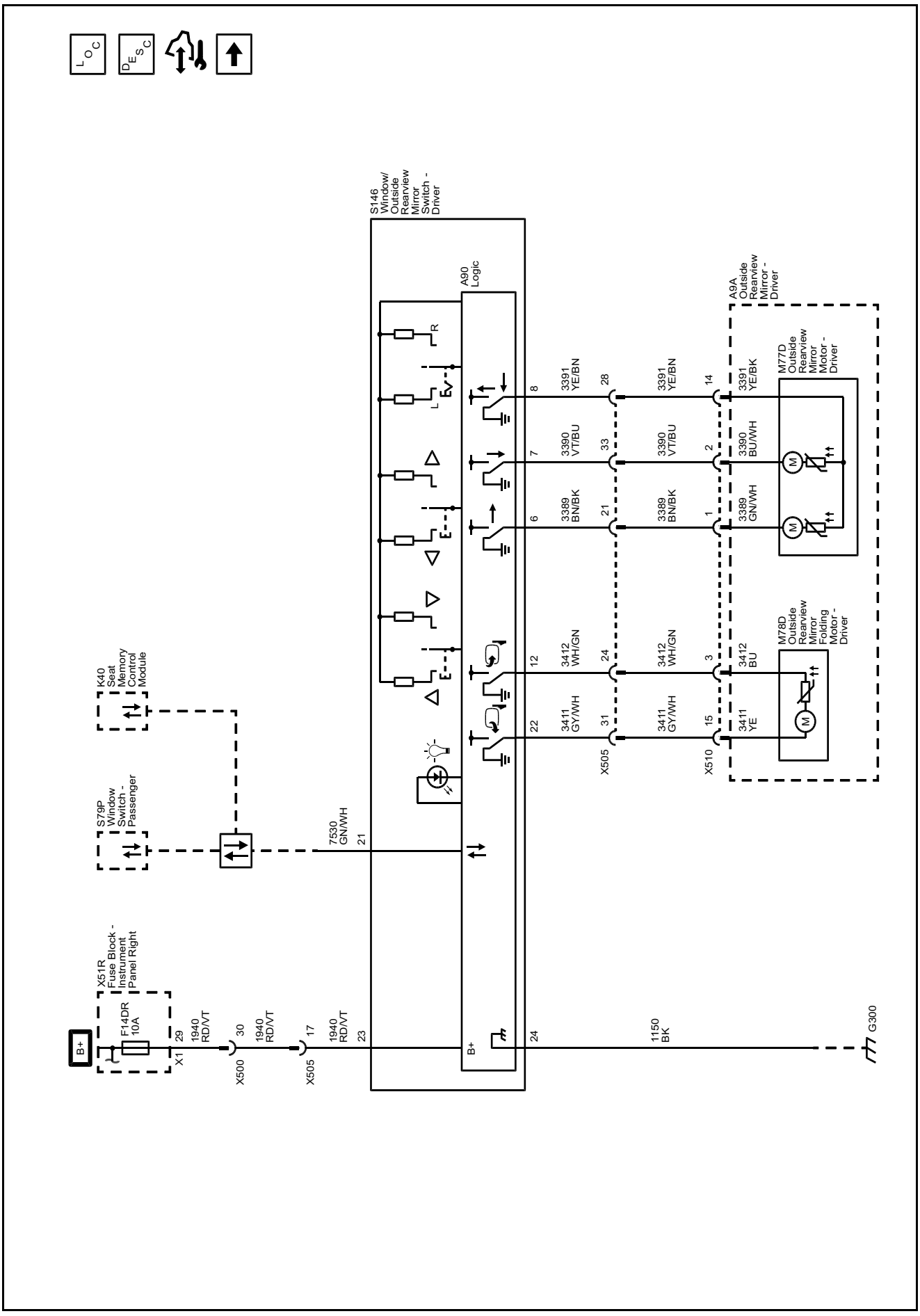

Outside Rearview Mirror Schematics (Controls and Driver (DZC))

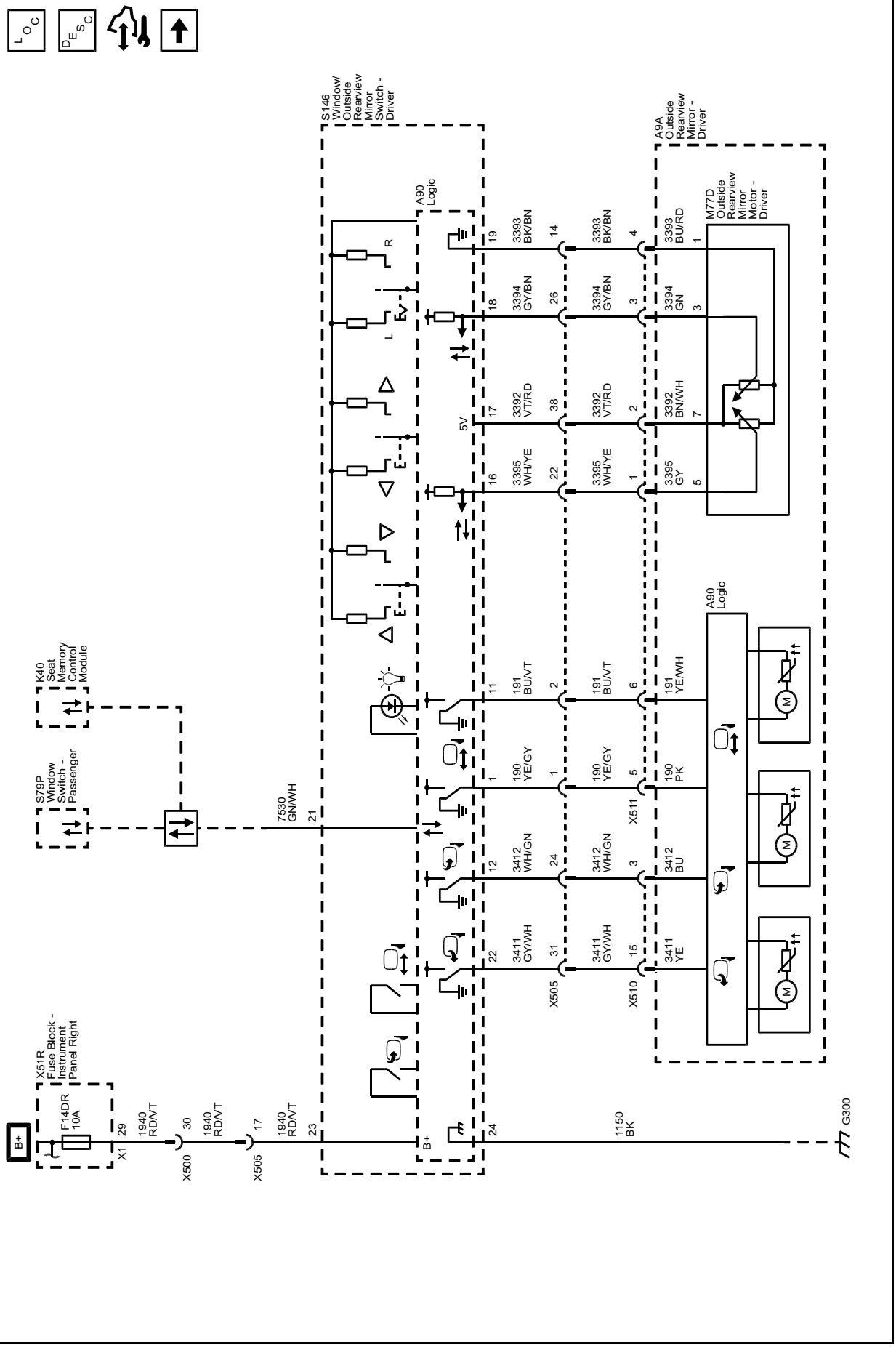

Outside Rearview Mirror Schematics (Passenger (A45))

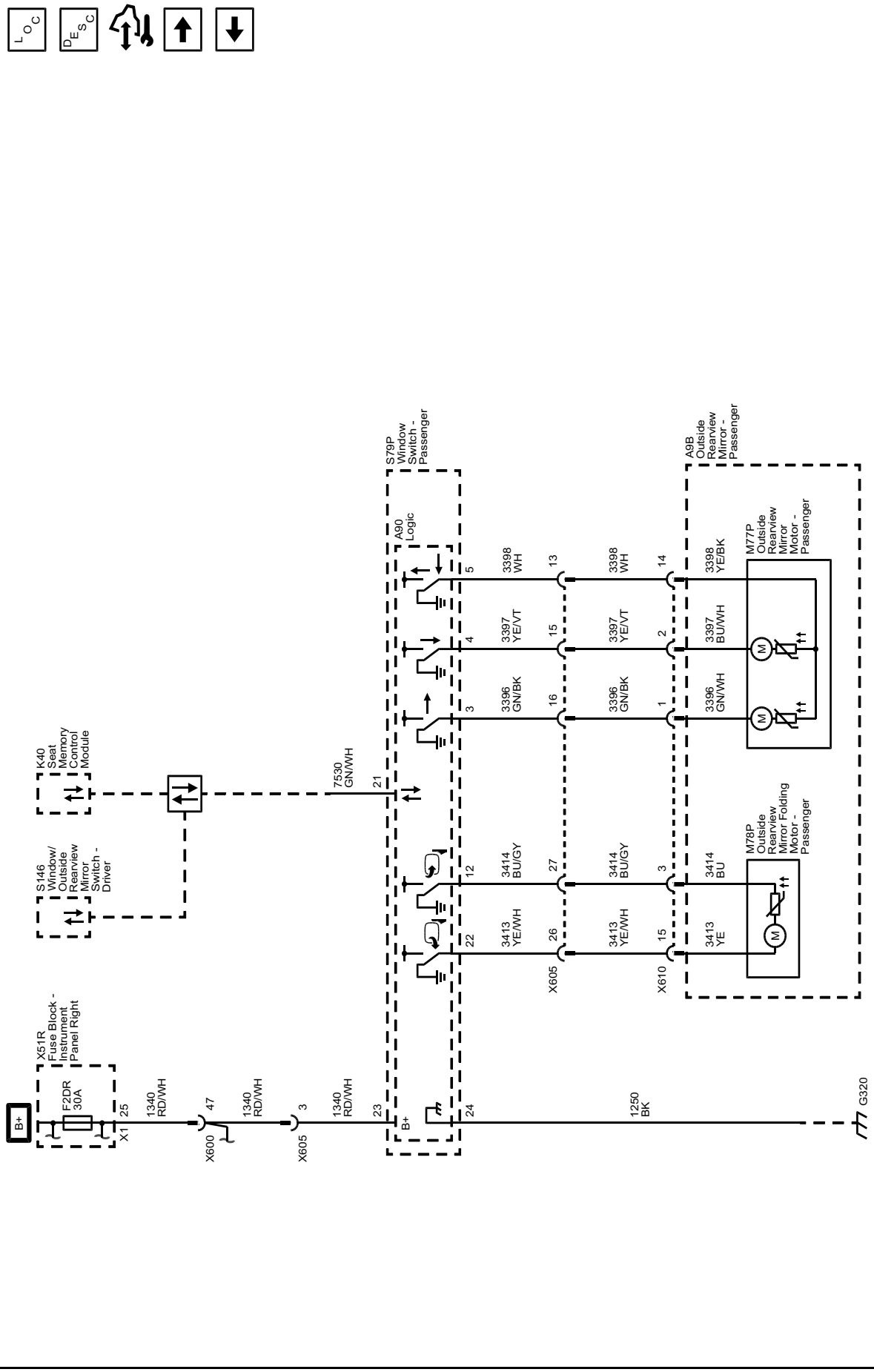

Outside Rearview Mirror Schematics (Passenger (DZC))

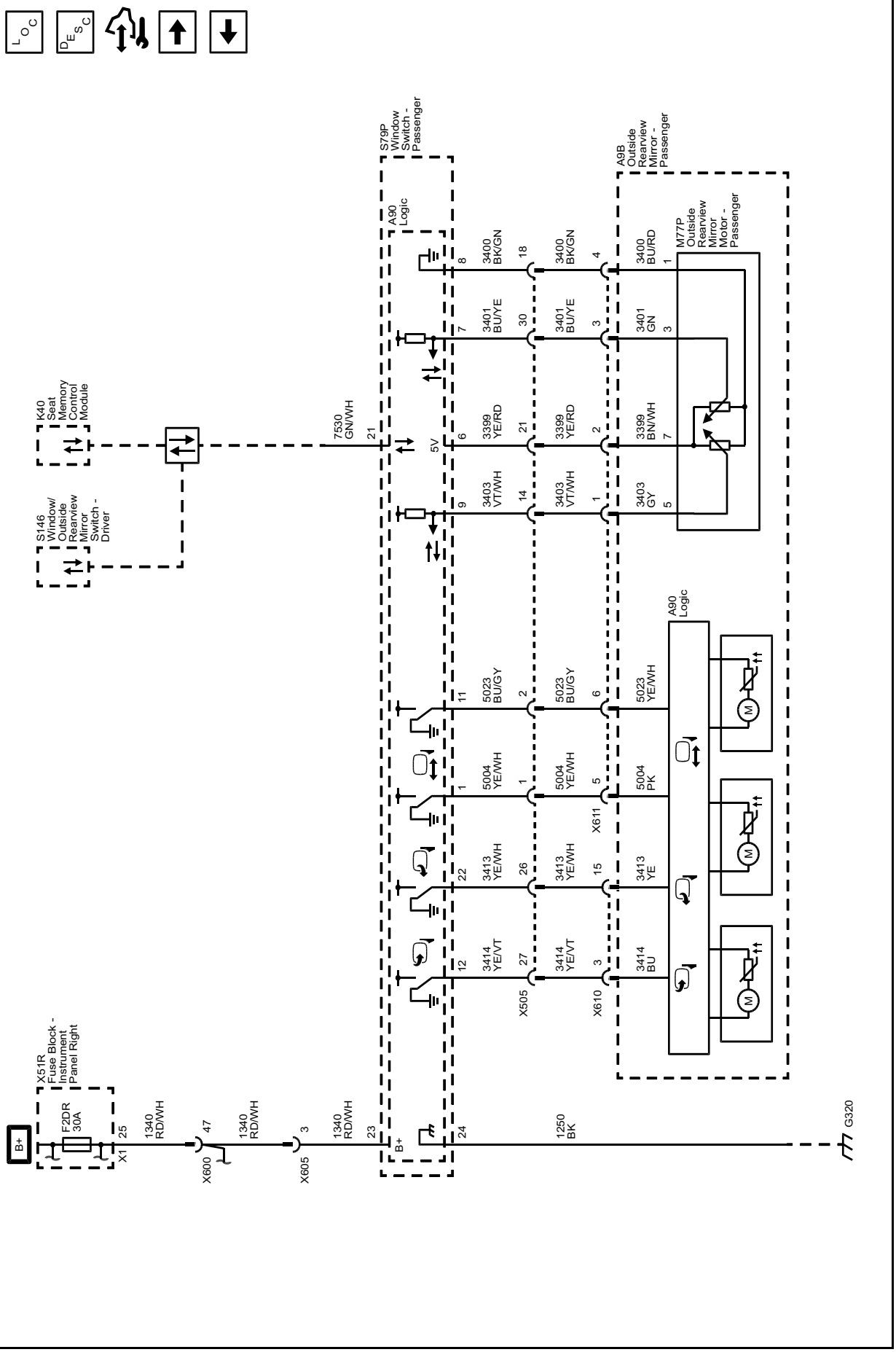

Outside Rearview Mirror Schematics (Position (AXG-A45))

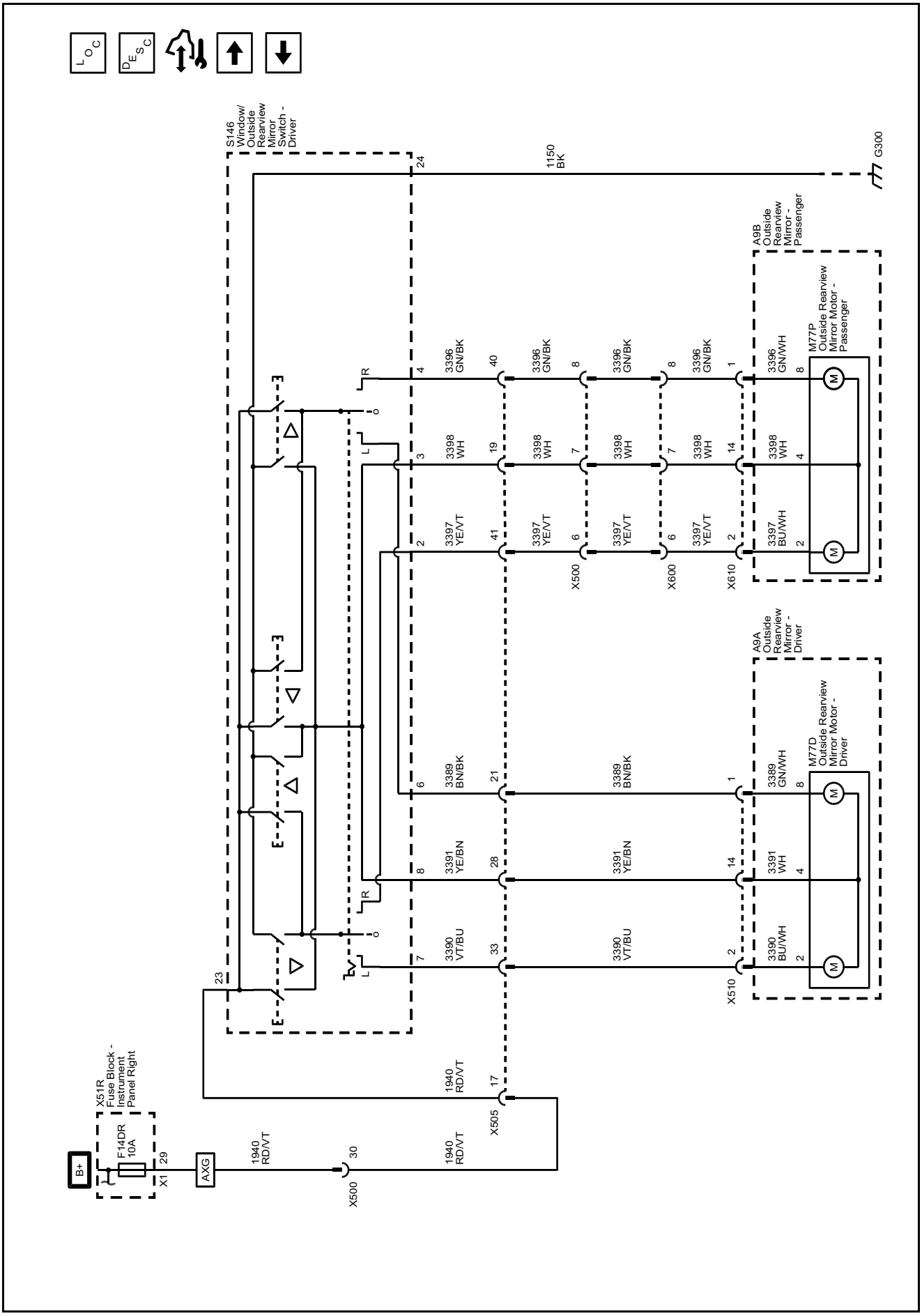

Outside Rearview Mirror Schematics (Folding (DWI without A45))

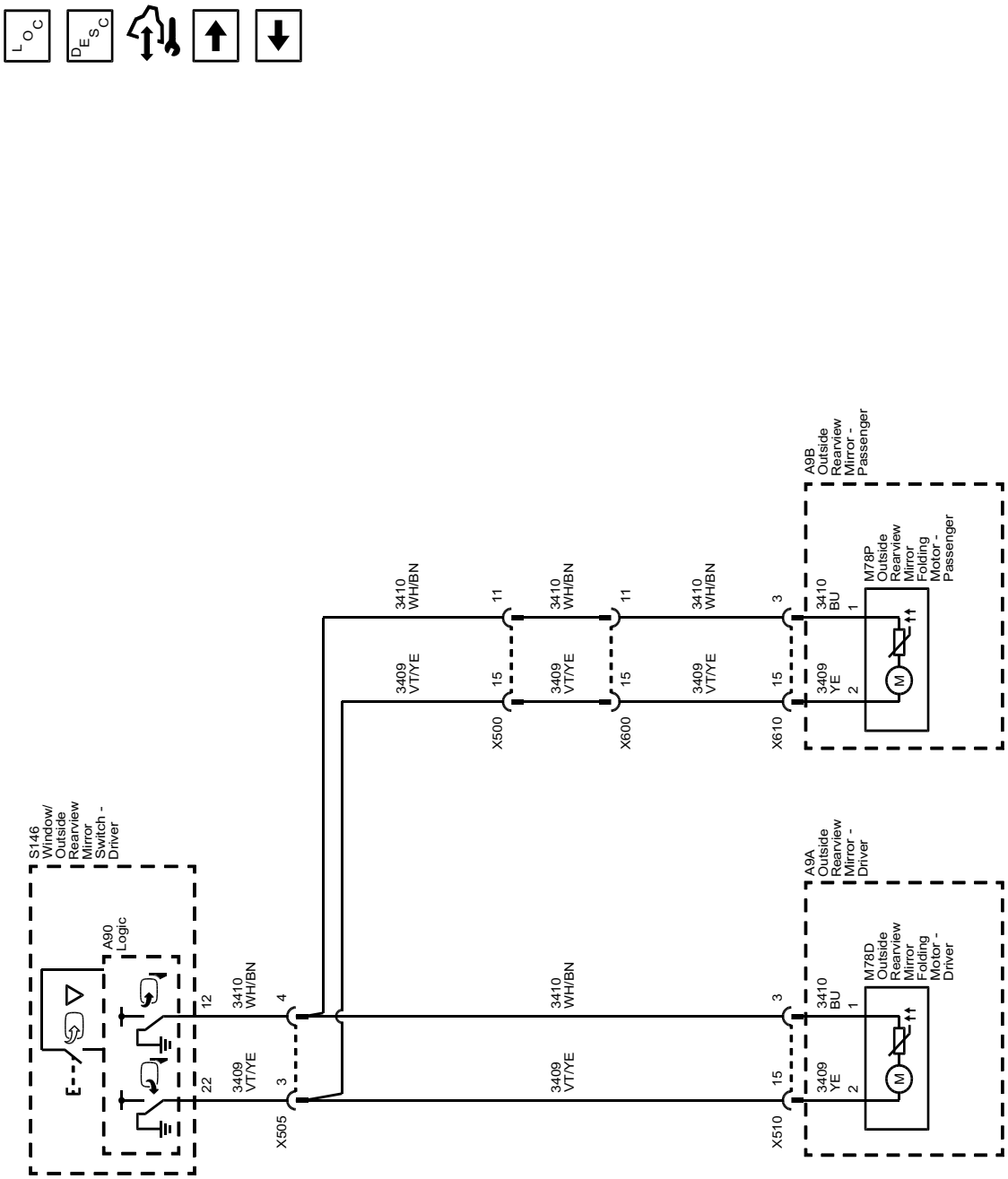

Outside Rearview Mirror Schematics (Dimming and Heating (DWI/DCZ))

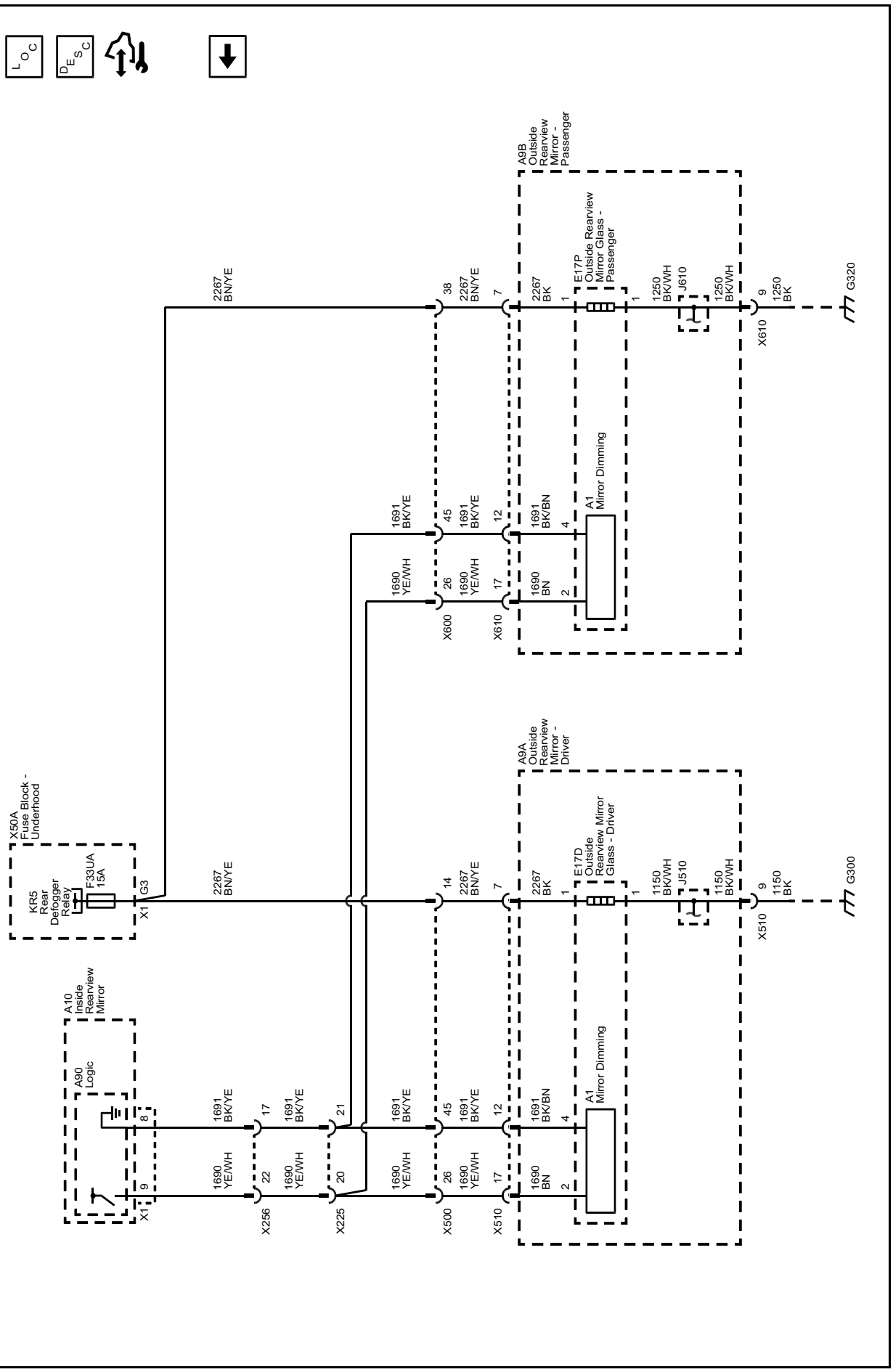

Description and Operation

Automatic Day-Night Mirror Description and Operation

Inside Rearview Mirror with the Automatic Day-Night Feature System Operation

The inside rearview mirror uses 2 photocell sensors. One sensor is the headlight sensor, located on the face side of the mirror. The headlight sensor is used to determine light conditions present at the mirror face. The other sensor is the ambient light sensor, located on the rear of the mirror or windshield side. The ambient light sensor is used to determine the exterior light conditions. With a low exterior light condition detected, and a high light condition from behind the car, at the headlight sensor, the inside rearview mirror will automatically darken the face of the mirror.

In the daytime, the mirror is in a normal state because of the high exterior light condition that is indicated by the ambient light sensor. With the gear selector lever in the REVERSE position and the engine running, backup lamp supply voltage is supplied as an input to the inside rearview mirror. The mirror monitors this input to disable the automatic day-night feature. This allows the driver to see objects in the mirror clearly when backing up, even during the night.

Driver Outside Rearview Mirror with Automatic Day-Night System Operation (If Equipped)

The automatic day-night feature of the driver outside rearview mirror is controlled by the inside rearview mirror. The inside rearview mirror supplies control and low reference to the driver outside rearview mirror. At night, with the automatic day-night feature enabled, the driver outside rearview mirror will automatically darken with the inside rearview mirror to reduce glare from headlamps behind the vehicle.

Outside Mirror Description and Operation (Without A45)

Power Mirror System Components

The power mirror system consists of the following components:

- Mirror direction switch — Controls the left, right, up and down movements of the mirrors
- Mirror select switch — Allows the operator to select the mirror to be moved
- Left outside mirror — Contains both the horizontal and vertical mirror motors
- Right outside mirror — Contains both the horizontal and vertical mirror motors

Each of the outside power mirrors contains 2 motors. The up-down motor operates the vertical directions and the left-right motor operates the horizontal directions. Each of the power mirror motors are internally circuit breaker protected.

Power Mirrors Without A45 Block Diagram

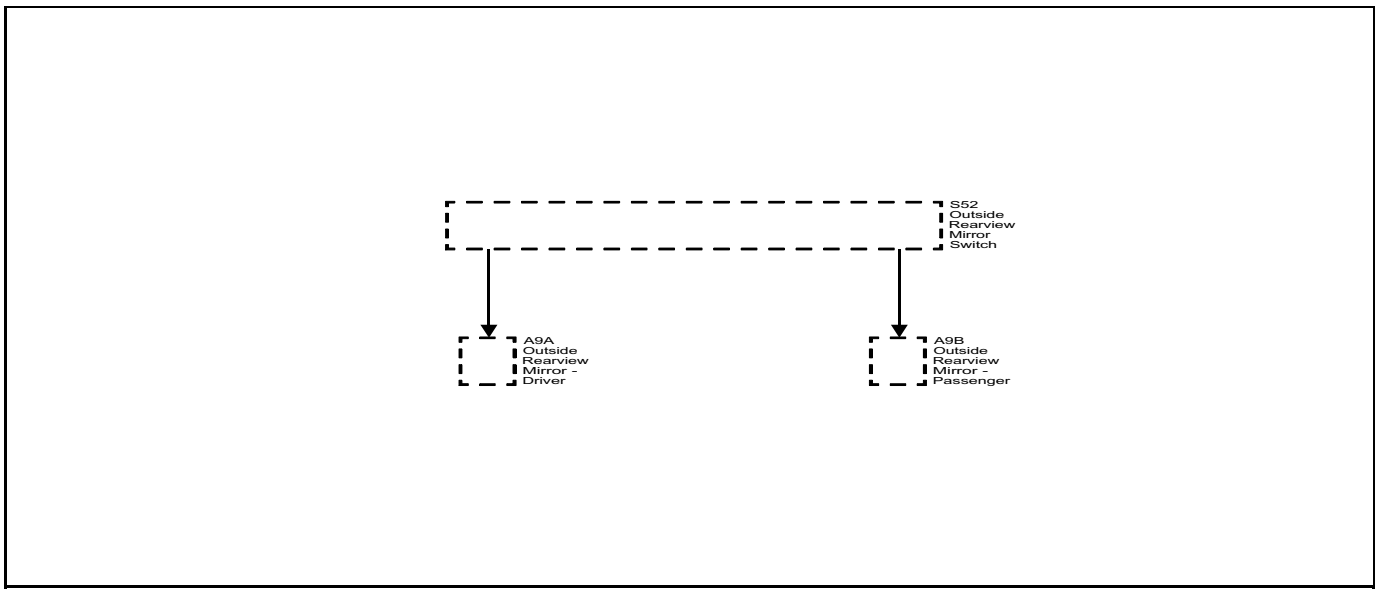

3270441

Power Mirror System Controls

The outside mirror switch incorporates a mirror select switch and a 4 position mirror direction switch.

The mirror select switch allows the driver to select the mirror to be moved by turning the switch to L position enabling the left outside mirror or turning the switch to R position enabling the right outside mirror.

The mirror direction switch is a 4 position switch that allows the operator to move the selected mirror up, down, left or right.

Power Mirror System Operation

The outside mirror switch receives power through the battery positive voltage circuit from the underhood fuse block. The outside mirror switch also receives a constant ground.

The 4 positions of the direction switch have multiple switch contacts. When not in use, the directional contacts are isolated from any circuit. Each of the contacts are connected to opposing sides of the appropriate mirror motors through the selector switch. The selector switch interrupts or completes these circuits depending on the position of the selector switch, L or R.

If the mirror select switch is placed in the L position and the up switch is pressed, battery voltage will be supplied to the driver outside mirror vertical motor through the driver mirror motor up control circuit and return to the mirror switch through the driver mirror motor left/down control circuit, then to ground and the mirror will move up. If the down switch is pressed, the driver mirror motor left/down control circuit supplies battery voltage and the driver mirror motor up control circuit completes the path to the mirror switch, then to ground and the mirror will move down.

The remainder of the mirror functions operate in the same manner as described above. Placing the mirror control switch in opposing positions, left/right or up/down, will reverse the voltage polarity to the mirror motor, utilizing the same circuits and the mirror will move accordingly.

Heated Mirrors

The heated mirrors are controlled through the rear defog relay. Whenever the rear window defogger is turned ON, battery voltage is supplied to the mirror heater elements through the left and right mirror heater element control circuits.

Outside Mirror Description and Operation (With A45)

Power Mirror System Components

The power mirror system consists of the following components:

- Memory Seat Control Module
- Outside Rearview Mirror Switch
- Passenger Window Switch
- Driver Outside Rearview Mirror
- Passenger Outside Rearview Mirror

Power Mirrors with A45 Block Diagram

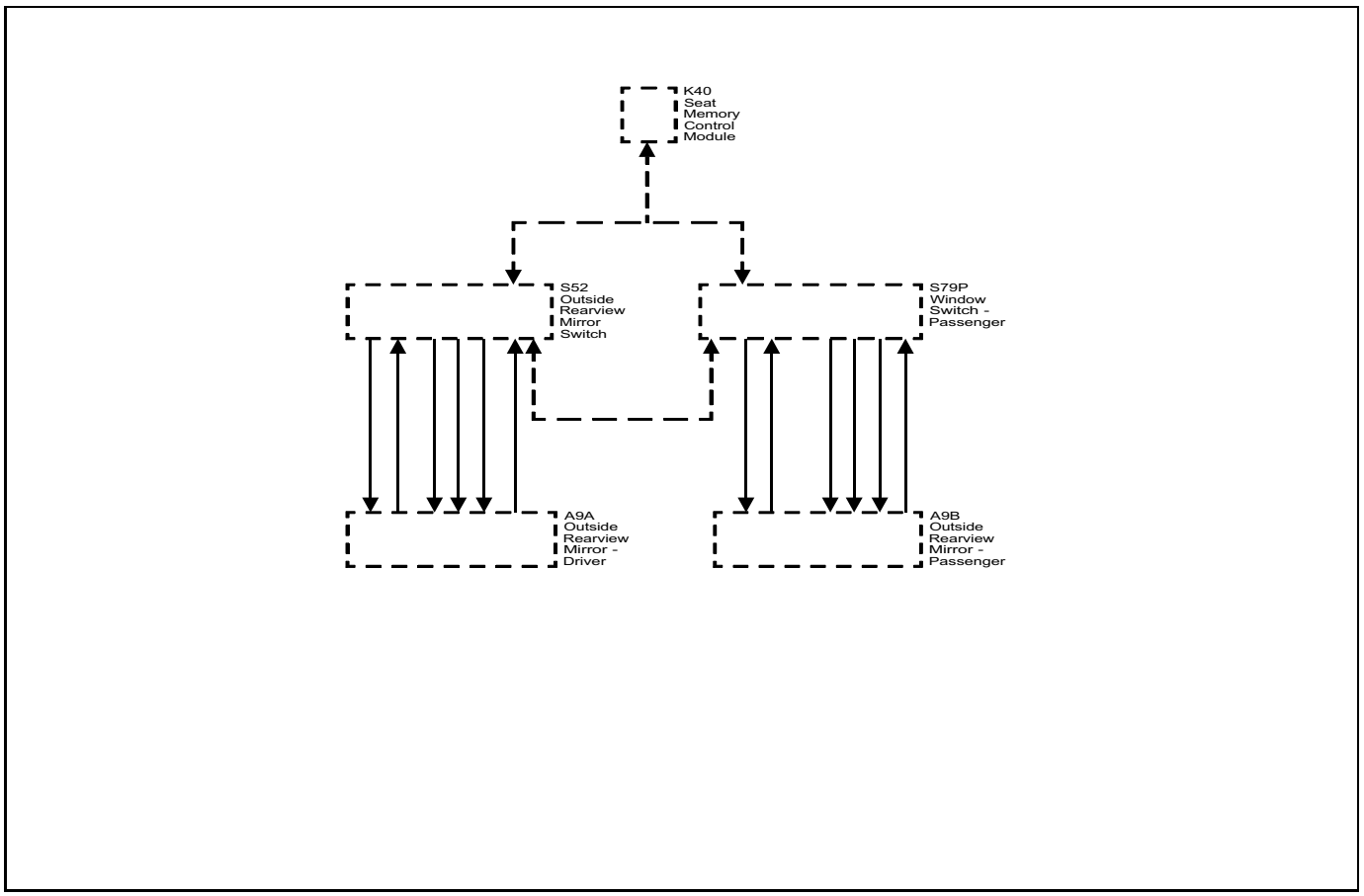

3520568

Power Mirror System Controls

The outside mirror switch and passenger window switch are on a serial data circuit with the memory seat control module as the master. The mirror select and directional control switches are inputs to the memory seat module through the serial data circuit. When the memory seat module receives switch inputs from the outside mirror switch, mirror output commands are sent to the appropriate switch through the serial data circuit. The outside mirror switch and passenger window switch control the left and right outside rear view mirrors through bi-directional motor control circuits. The motor control circuits are floating while in an inactive state and the switches will apply power and ground to the control circuits as necessary to move the mirror in the commanded direction.

Mirror position is determined by both horizontal and vertical position sensors in each of the power mirrors. The outside mirror switch and passenger window switch supply a 5 V reference, low reference, and horizontal and vertical position signal circuits to these sensors. The signal circuits are referenced from 5 V by the switches and the signal circuit voltage levels represent the mirror positions. The mirror positions are sent to the memory seat module through the serial data circuit where they are stored for memory mirror operation. When the memory seat module receives a memory recall command, the memory seat module will send the go to position commands to the outside mirror switch and passenger window switch. The switches will then drive the appropriate mirror motors to the commanded position sensor settings.

Mirror Folding

RPO: DWI or DZC

The outside rearview mirror switch sends the mirror select and mirror fold/unfold inputs to the memory seat control module through LIN data. When the memory seat control module receives a fold/unfold signal it will send a fold/unfold command to the outside rearview mirror switch and the passenger window switch. The outside mirrors will fold or unfold depending on their current state. The outside rearview mirror switch and the passenger window switch control the fold/unfold motors through bi-directional control circuits.
If equipped with auto folding mirrors, the BCM receives the input of the lock/unlock button being held on the transmitter and sends the signal to the memory seat module through serial data to command the mirrors to fold/unfold.

Mirror Extending

RPO: DZC

The outside rearview mirror switch sends the mirror select and mirror extend/retract inputs to the memory seat control module through LIN data. When the memory seat control module receives an extend/retract signal it will send a extend/retract command to the outside rearview mirror switch and the passenger

window switch. The outside mirrors will fold or unfold depending on their current state. The outside rearview mirror switch and the passenger window switch control the extend/retract motors through bi-directional control circuits.

Heated Mirrors

RPO: DBG, DWI, or DZC

The heated mirrors are controlled through the rear defog relay. Whenever the rear window defogger is turned on battery voltage is supplied to the mirror heater elements through the left and right mirror heater element control circuits.

Vehicle Access

Schematic and Routing Diagrams

Door Lock/Indicator Schematics (Ajar Switches)

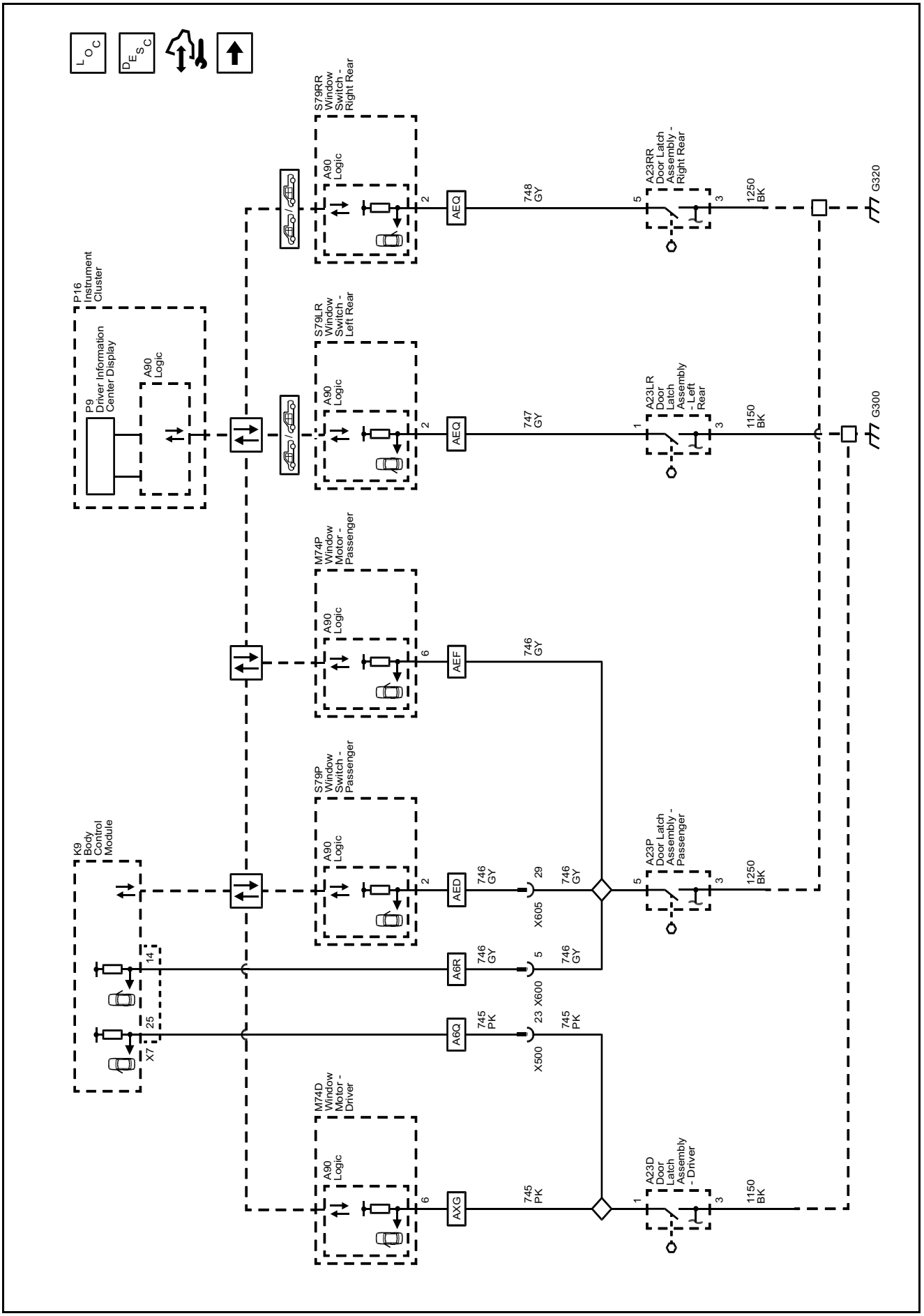

Door Lock/Indicator Schematics (Controls and Lock Indicators)

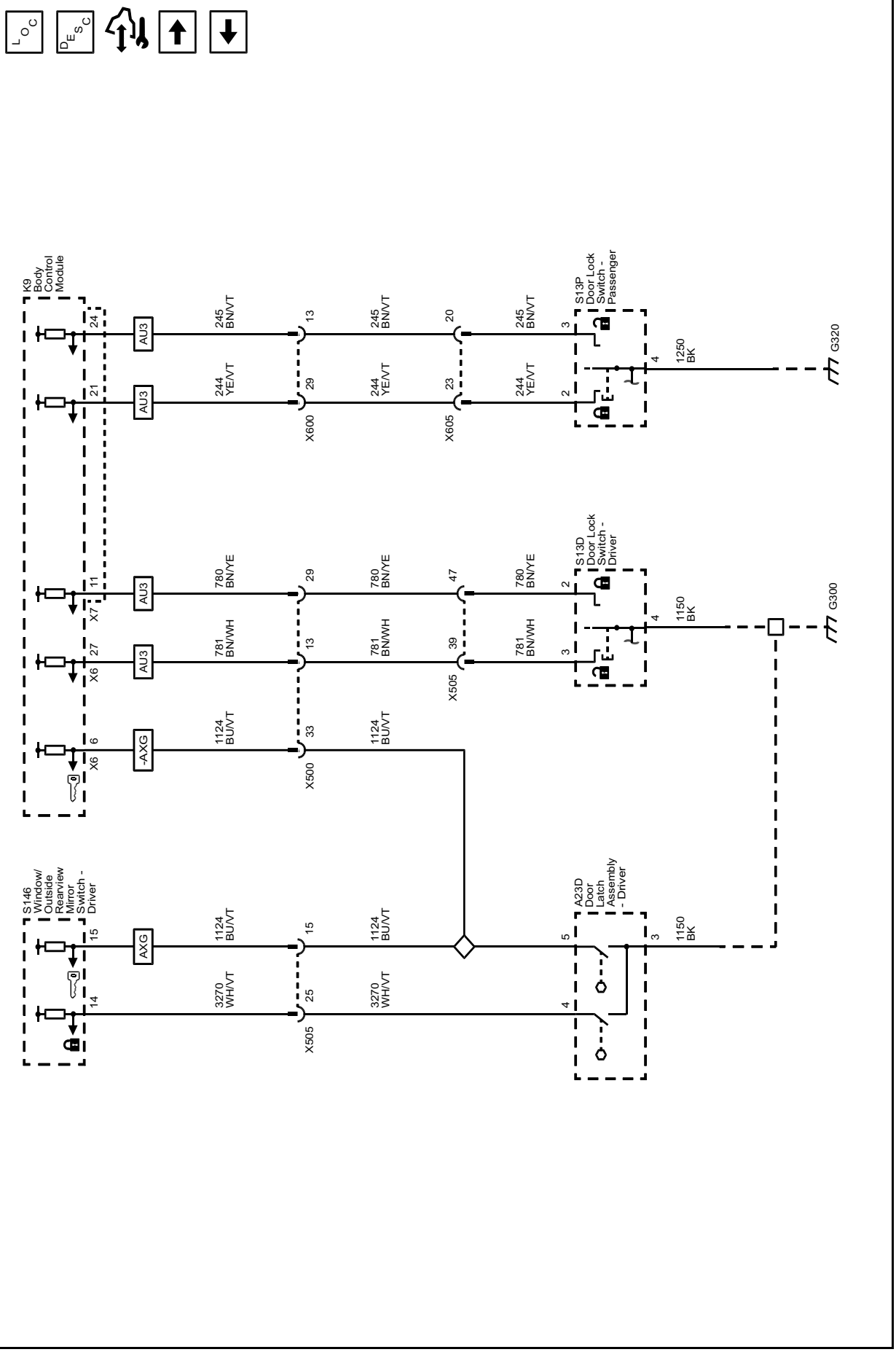

Door Lock/Indicator Schematics (Actuators)

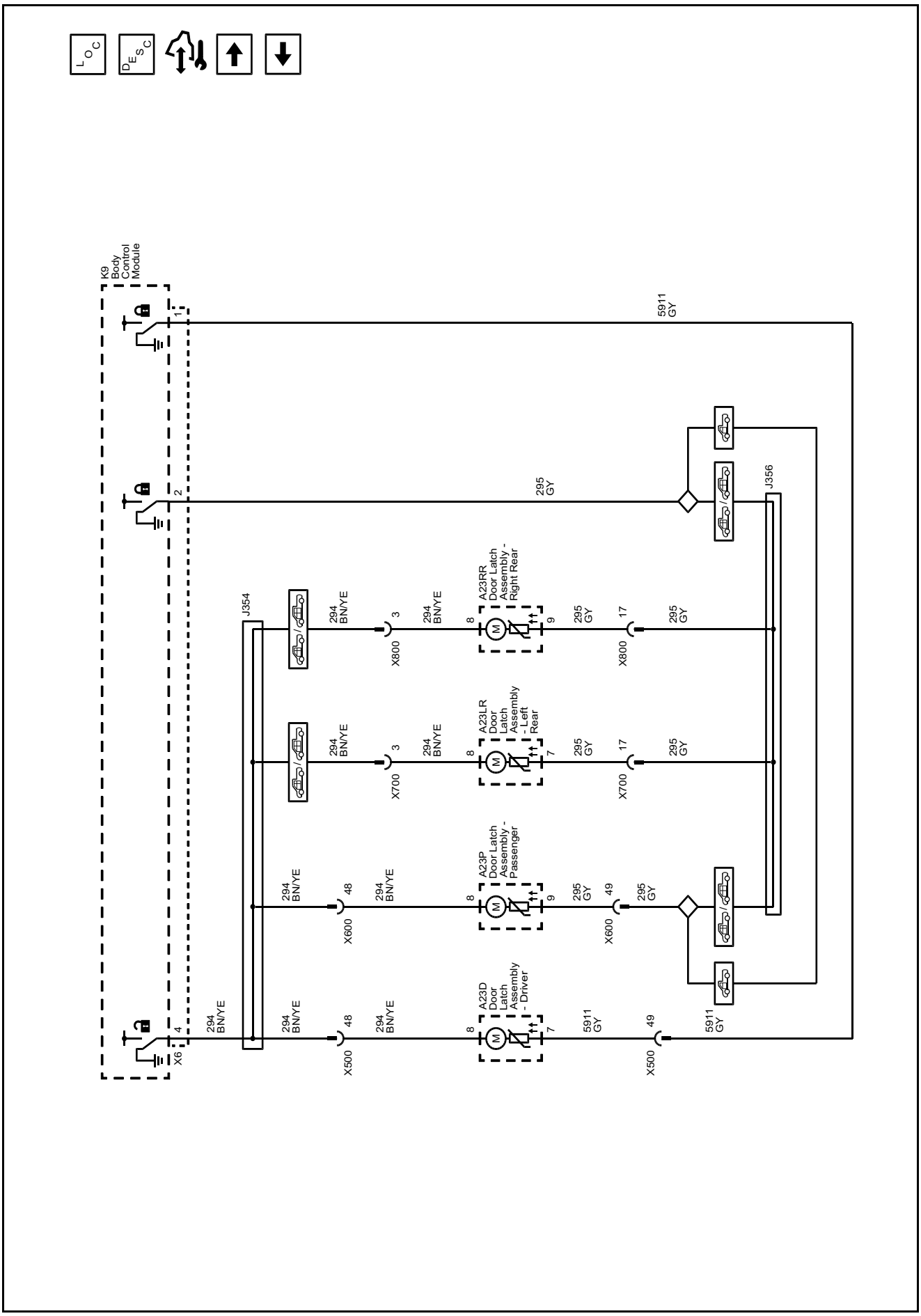

Door Lock/Indicator Schematics (Handle Switches)

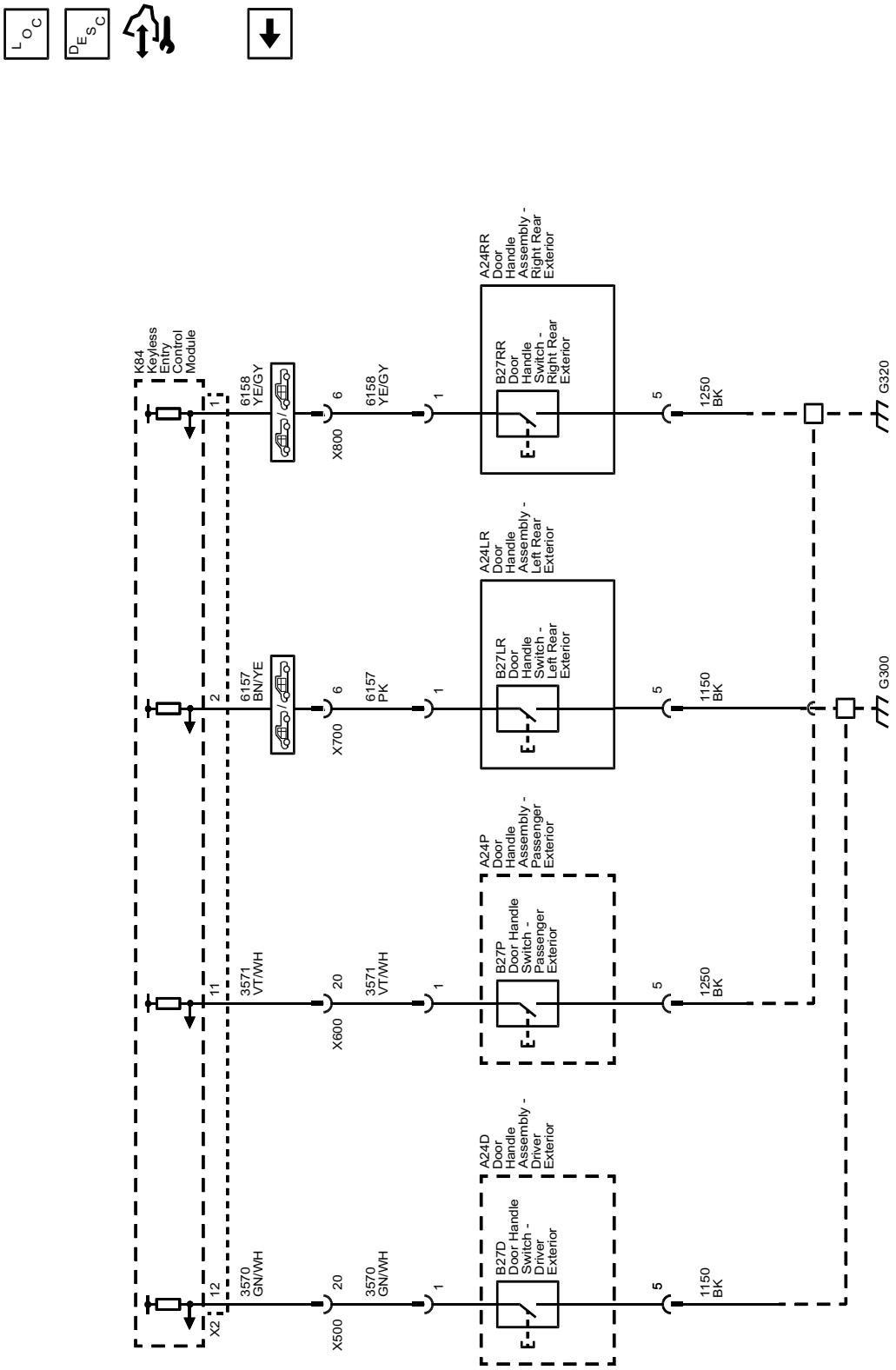

Release Systems Schematics (Endgate Release (QT5))

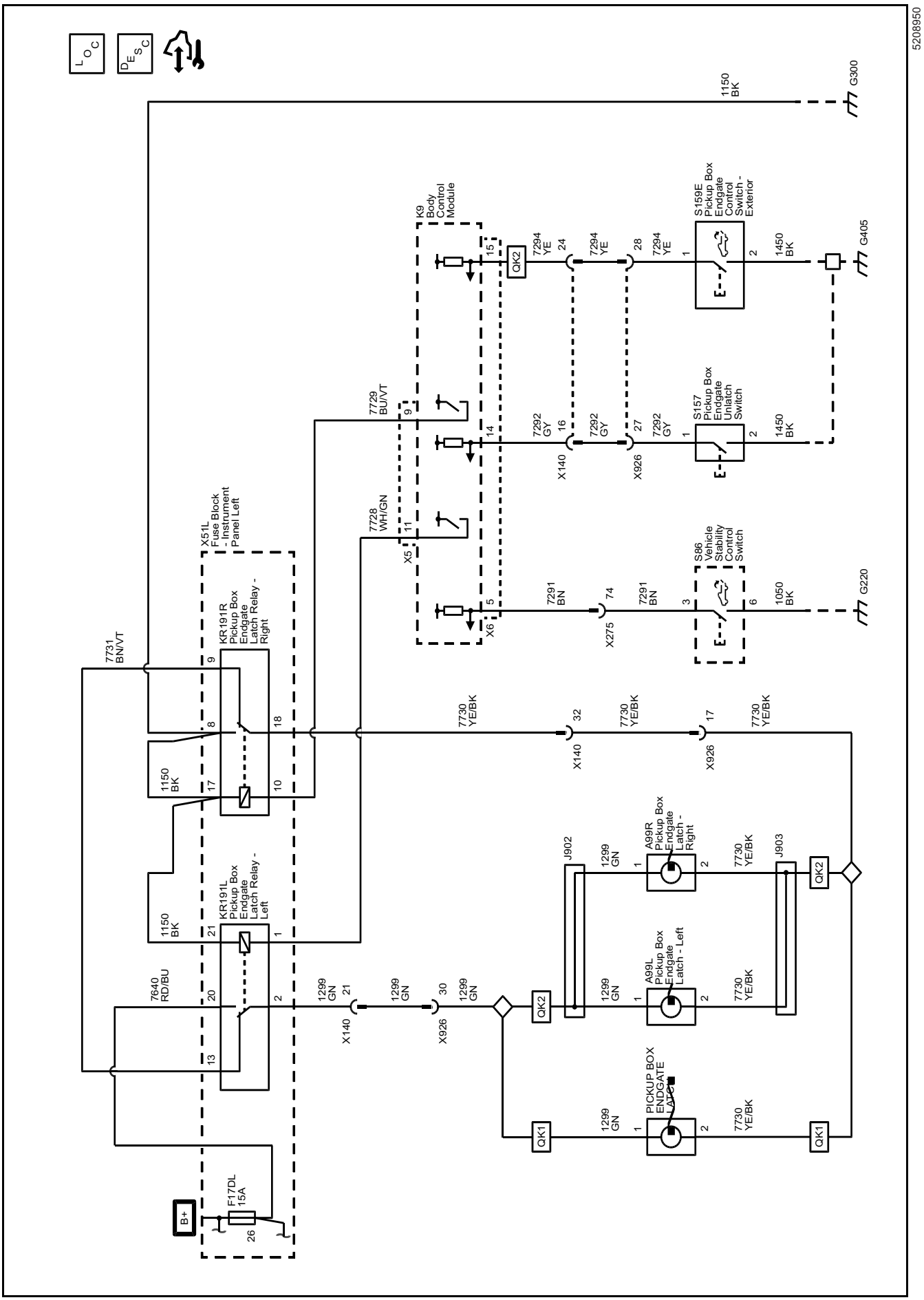

Endgate Schematics (Power Endgate Controls (QT6))

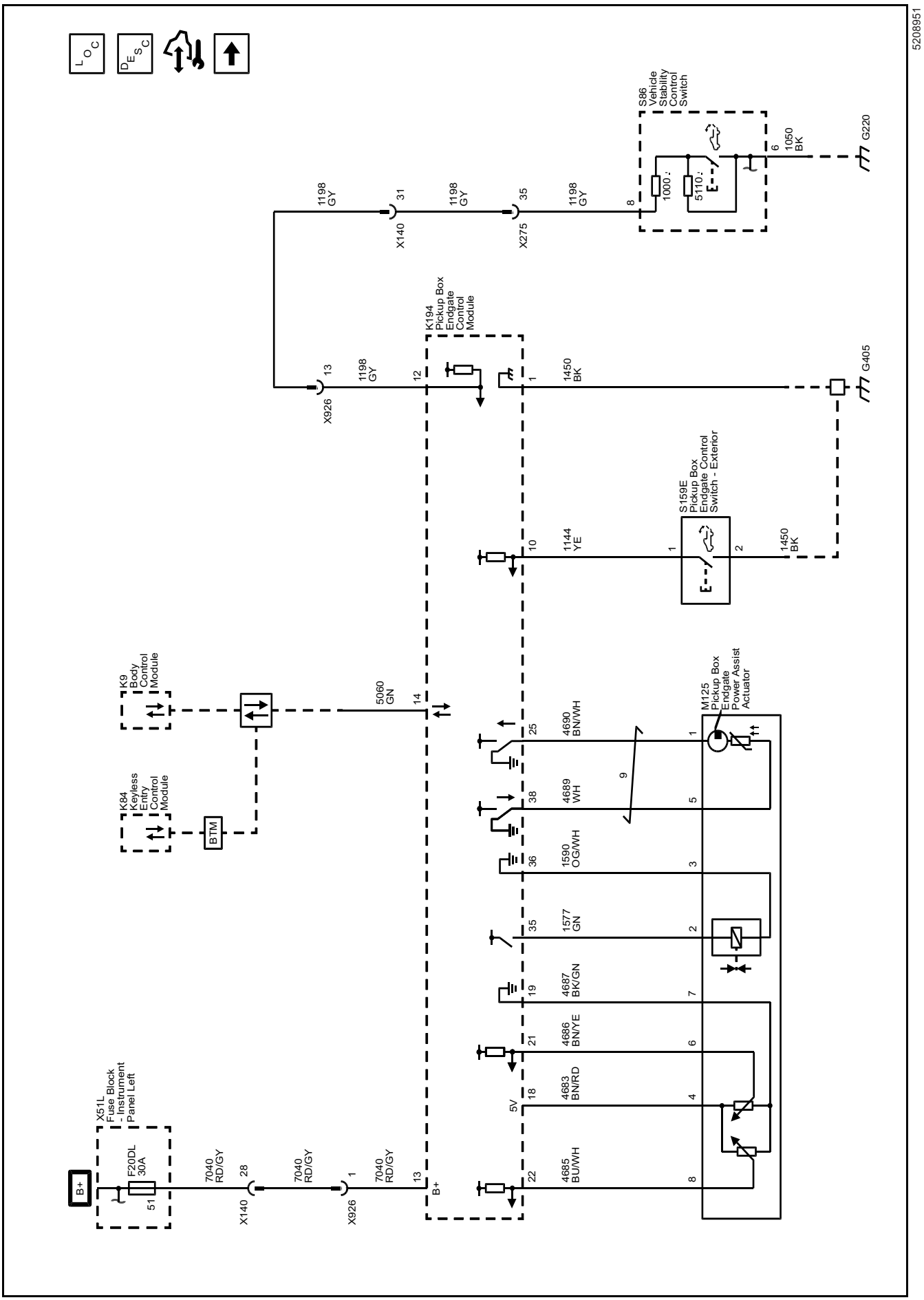

Endgate Schematics (Power Endgate Latches (QT6))

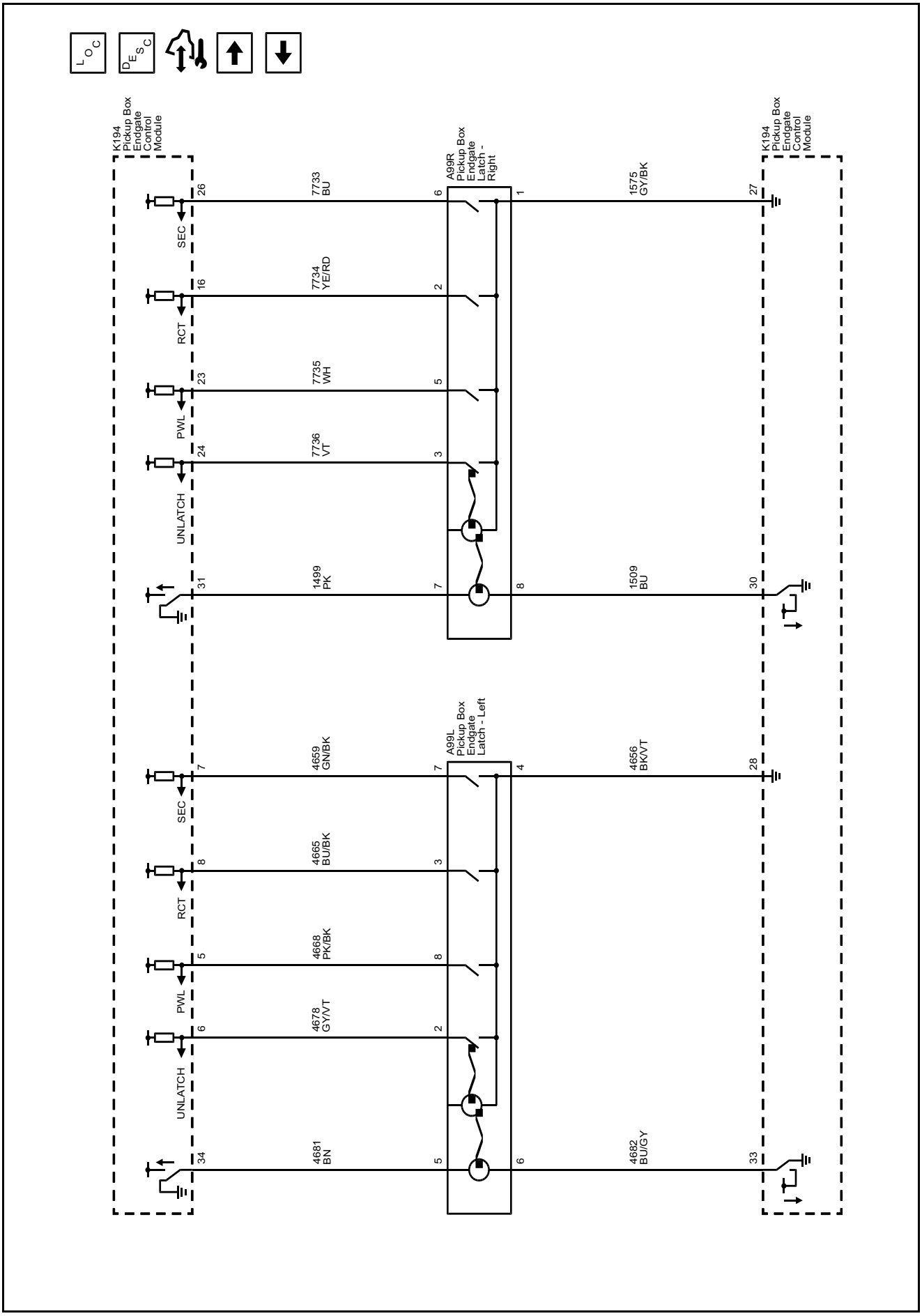

Endgate Schematics (Auxiliary Endgate Latch Controls and Switches (QK2))

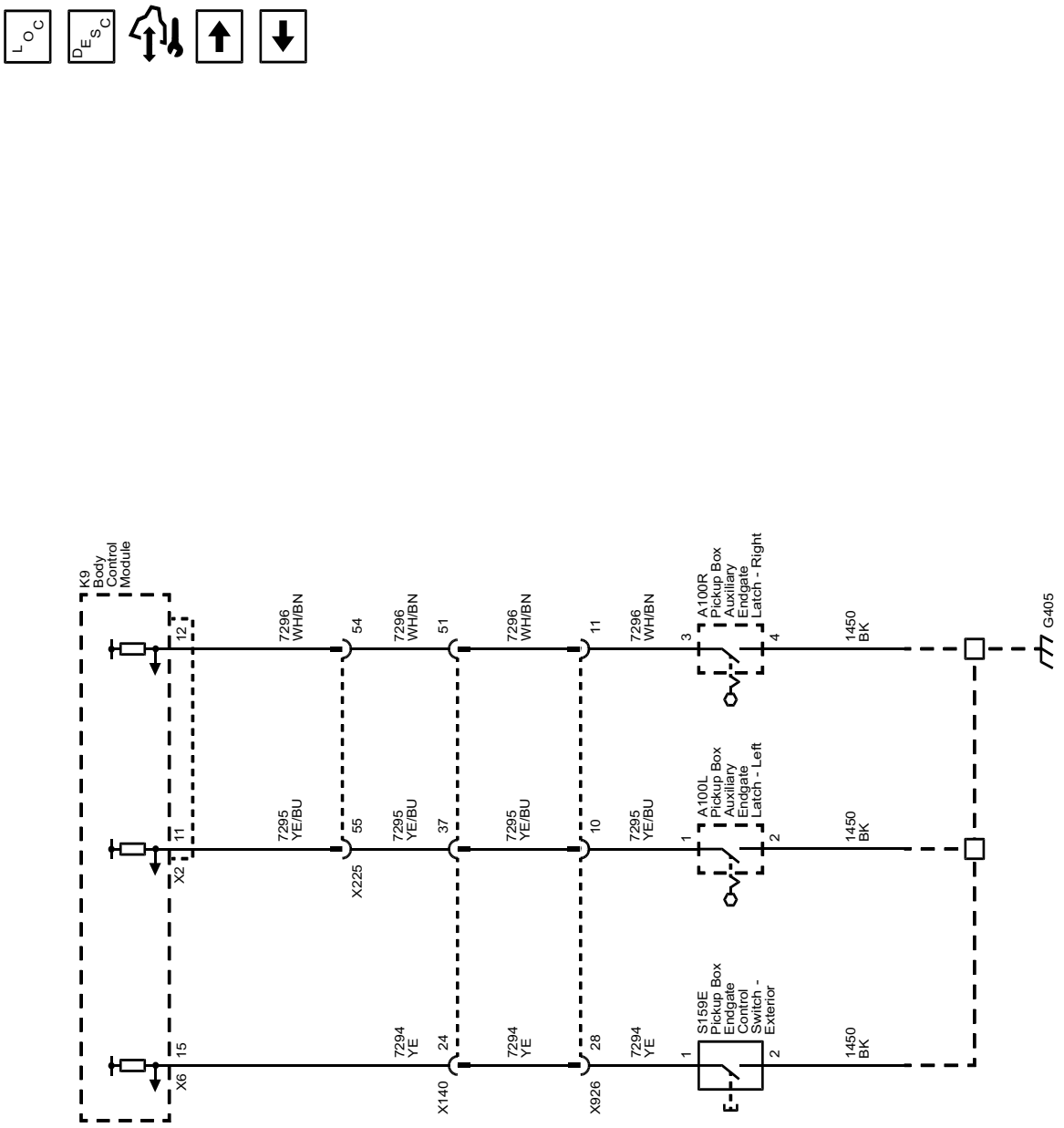

Endgate Schematics (Auxiliary Endgate Latch Motors (QK2))

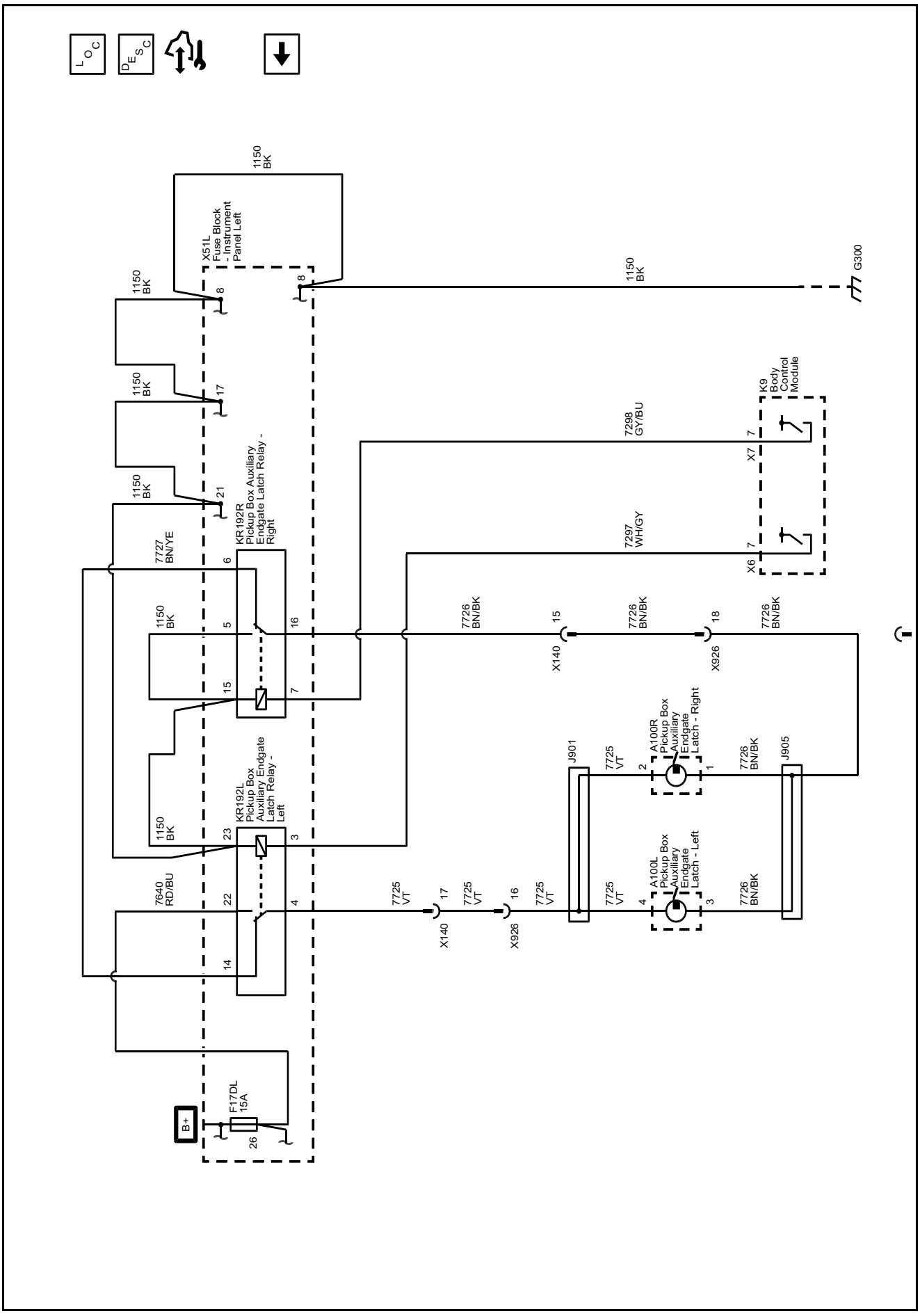

Description and Operation

Door Ajar Indicator Description and Operation

Door Ajar Indicator System Components

The door ajar indicator system consists of the following components:

- Body control module
- Instrument cluster
- Driver door latch
- Passenger door latch
- Left rear door latch
- Right rear door latch
- Driver window motor (AXG)
- Driver window switch (AEC)
- Passenger window motor (AEF)
- Passenger window switch (AED)
- Left rear window motor (AER)
- Left rear window switch (AEQ)
- Right rear window motor (AER)
- Right rear window switch (AEQ)

Door Ajar Indicator Block Diagram

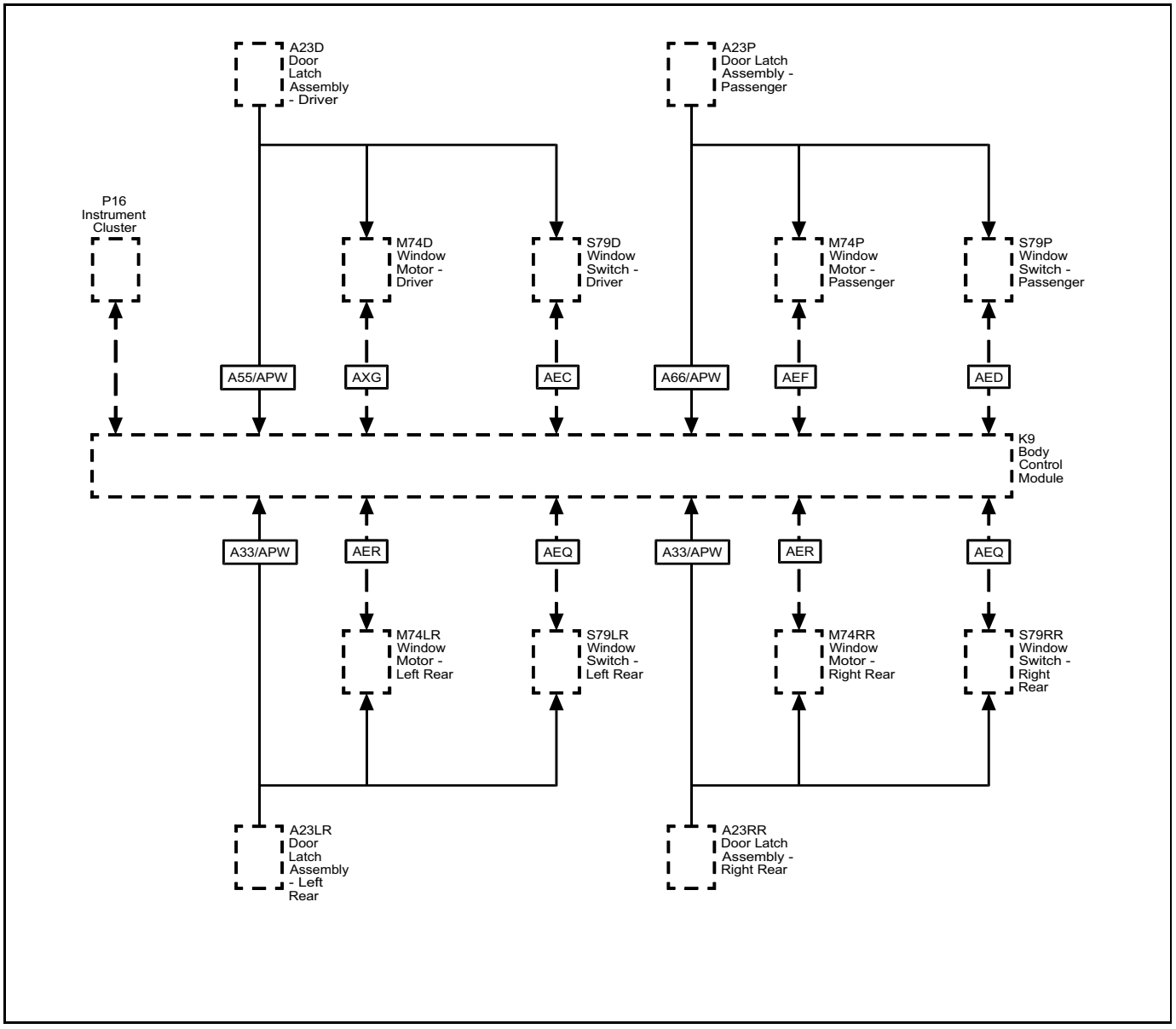

3556440

Door Ajar System

Depending upon if the vehicle is equipped with express up/down power windows, express down only power windows, power windows without any express functions or manual crank windows affects how the driver and passenger door ajar signal circuits are configured and monitored.

Driver, Passenger and Rear Door Ajar (AXG, AEF and AER)

The window motors provide a 12V signal to the respective door ajar switch within the door latch to indicate the status of the door. When the door is open, the contract within the ajar switch closes providing a ground part for the signal circuit. The window motor will detect the voltage drop in the ajar signal circuit and will send a serial data message to the body control module. The body control module will then send a message to the instrument cluster which will illuminate the door ajar icon.

Driver, Passenger and Rear Doors Ajar (AEC, AED and AEQ)

The driver, passenger and rear window switches provide a 12V signal to the respective door ajar switch within the door latch to indicate the status of the door. When the door is open, the contract within the ajar switch closes providing a ground part for the signal circuit. The window switch will detect the voltage drop in the ajar signal circuit and will send a serial data message to the body control module. The body control module will then send a message to the instrument cluster which will illuminate the door ajar icon.

Driver, Passenger and Rear Doors Ajar (A55, A66, A33 or Manual Crank Windows)

The body control module provides a 12V signal to each door ajar switch within the door latch to indicate the status of the door. When the door is open, the contract within the ajar switch closes providing a ground part for the signal circuit. The body control module will detect the voltage drop in the ajar signal circuit and will send a message to the instrument cluster which will illuminate the door ajar icon

Endgate Description and Operation (QT5 Without MultiPro Tailgate)

Endgate Release System Components

- Body control module (BCM)
- Pickup box endgate control switch-interior (Part of the instrument panel multifunction switch)
- Pickup box endgate control switch-exterior
- Pickup box endgate unlatch actuator
- Pickup box endgate unlatch relay

Endgate Release Operation (Without MutiPro Tailgate Option)

Interior Endgate Release Switch

The body control module monitors the voltage level of the endgate unlatch signal circuit so that when the switch is pressed contacts within the switch closes providing a ground path for the endgate unlatch signal circuit, the voltage within the signal circuit is pulled low, the body control module will detect the voltage drop and if the passenger doors are unlocked, will energize the pickup box endgate unlatch relay.

Exterior Endgate Release Switch

The body control module monitors the status of the vehicle doors, if the doors are locked the body control module will ignore the request from the exterior pickup box endgate control switch. If the passenger doors have been commanded to unlock, pressing the exterior pickup box endgate control switch will close contacts within the switch and provide a ground path for the endgate unlatch signal circuit, the body control module will detect the voltage drop and will energize the pickup box endgate unlatch relay.

If the vehicle has been equipped with the passive keyless entry system and the keyless entry transmitter is within 3 feet (1 meter) of the endgate, pressing the exterior pickup box endgate control switch will also function in the same manner but without unlocking the passenger doors. Refer to Keyless Entry System Description and Operation for more information on the passive keyless entry system.

Pickup Box Endgate Unlatch actuator

When body control module receives a endgate release command from the exterior pickup box endgate control switch, the body control module applies brief pulse of voltage to the pickup box endgate unlatch relay control circuit, which energizes the coil side of the relay. The switch side of the pickup box endgate unlatch relay then momentarily closes, supplying a brief pulse of battery positive voltage to the pickup box endgate unlatch actuator. The pickup box endgate unlatch actuator is continuously grounded and when it receives the voltage pulse, it will become energized and the latch will activate releasing the endgate so that it may be manually lowered to an open position.

Endgate Description and Operation (QT5 With MultiPro Tailgate)

Endgate Release System Components

- Body control module (BCM)
- Pickup box endgate control switch-interior (Part of the instrument panel multifunction switch)
- Pickup box endgate control switch-exterior
- Left pickup box endgate latch
- Right pickup box endgate latch
- Left pickup box auxiliary endgate latch
- Right pickup box auxiliary endgate latch
- Left pickup box endgate latch relay
- Right pickup box endgate latch relay
- Left pickup box auxiliary endgate latch relay
- Right pickup box auxiliary endgate latch relay

Endgate Release Operation (With MutiPro Tailgate Option)

Interior Endgate Release Switch

The body control module monitors the voltage level of the endgate unlatch signal circuit so that when the switch is pressed contacts within the switch closes providing a ground path for the endgate unlatch signal circuit, the voltage within the signal circuit is pulled low, the body control module will detect the voltage drop

and if the passenger doors are unlocked, will energize the left pickup box endgate latch relay and right pickup box endgate latch relay.

Exterior Endgate Release Switch

The body control module monitors the status of the vehicle doors, if the doors are locked the body control module will ignore the request from the exterior pickup box endgate control switch. If the passenger doors have been commanded to unlock, pressing the appropriate exterior pickup box endgate control switch will close contacts within the switch and provide a ground path for the major or minor endgate unlatch signal circuit, the body control module will detect the voltage drop and will energize the appropriate pickup box endgate latch relays.

If the vehicle has been equipped with the passive keyless entry system and the keyless entry transmitter is within 3 feet (1 meter) of the endgate, pressing the exterior pickup box endgate control switch will also function in the same manner but without unlocking the passenger doors. Refer to Keyless Entry System Description and Operation for more information on the passive keyless entry system.

Major Pickup Box Endgate

Note: The auxiliary pickup box endgate must be in the latched position before commanding the major pickup box endgate to release. The body control module will disable the major pickup box endgate release function if the auxiliary pickup box endgate is open or ajar.

When body control module receives a major endgate release command from the exterior pickup box endgate control switch, the body control module applies brief pulse of voltage to the left and right pickup box endgate latch relay control circuits, which energizes the coil side of the relays. The switch side of the left and right pickup box endgate latch relay then momentarily closes, supplying a brief pulse of battery positive voltage to the left and right pickup box endgate latches. The left and right pickup box endgate latches will become energized and the latches will activate releasing the major endgate so that it may be manually lowered to an open position.

Minor Pickup Box Endgate

When body control module receives a major endgate release command from the exterior pickup box endgate control switch, the body control module applies brief pulse of voltage to the left and right pickup box auxiliary endgate latch relay control circuits, which energizes the coil side of the relays. The switch side of the left and right pickup box auxiliary endgate latch relay then momentarily closes, supplying a brief pulse of battery positive voltage to the left and right pickup box auxiliary endgate latches. The left and right pickup box auxiliary endgate latches will become energized and the latches will activate releasing the minor endgate so that it may be manually lowered to an open position.

Endgate Description and Operation (QT6)

System Description

The power endgate system consists of the following components:

- Rear gate module
- Pickup box endgate power assist actuator
- Pickup box endgate position sensor (part of the power assist actuator)
- Interior pickup box endgate control switch (Part of the Instrument panel multifunction switch)
- Exterior pickup box endgate control switch
- Right pickup box endgate latch assembly
- Left pickup box endgate latch assembly
- Keyless entry transmitter
- Remote control door lock receiver

Operation

The power endgate can be commanded to power open and power close by the following methods:

- An open or close command from the interior pickup box endgate control switch
- An open or close command from the exterior pickup box endgate control switch
- An open or close request by a signal from the keyless entry transmitter to the remote control door lock receiver

The rear gate module will respond to a request by commanding the left and right pickup box endgate latches to release the endgate and activate the pickup box endgate power assist actuator and lower the endgate or to raise and cinch the endgate closed.

Power Latch

The rear gate module continuously monitors power endgate operation and calculates its location and direction of travel from an endgate position sensor (part of the power assist actuator). One input returns the position of the endgate relative to the x-axis and y-axis. The rear gate module then uses these 2 inputs together to calculate its angle relative to the endgate.

The left and right pickup box endgate latches are bi-directional motors and latch or unlatch operation is the result of the direction of the motor rotation. The rear gate module controls the left and right pickup box endgate latches through the control circuits by supplying power and ground in the appropriate polarity. The motor control circuits are monitored by the rear gate module prior to activation for a high or low condition and during motor operation for an insufficient current flow condition. The ratchet, pawl, and sector switches are part of the left and right pickup box endgate latches and are used by the rear gate module to determine the state of the latch during the process of latching or unlatching. Each of the latch switch signal circuits are supplied battery voltage and monitored within the rear gate module. The latch switches share a common low reference circuit from the rear gate module and when the switch contacts close the signal circuit goes low and the rear gate module determines the switch to be active.

The exterior pickup box endgate control switch signal circuit is supplied battery voltage by the rear gate module. When the switch is pressed the contacts close and the signal circuit goes low, the rear gate module will detect the voltage drop and will command the endgate to release and lower or to power raise the endgate to the closed position.

For vehicles without the optional passive keyless entry, when the exterior pickup box endgate control switch is pressed, the rear gate module will check the status of the vehicle door locks by sending a serial data message to the body control module requesting the door lock status. If the vehicle doors are locked, the rear gate module will ignore the signal from the exterior pickup box endgate control switch. If the vehicle doors are unlocked, the rear gate module will permit the endgate to unlatch and power open when the exterior pickup box endgate control switch is pressed.

For vehicles with the optional passive keyless entry system, the keyless entry control module monitors the proximity of the keyless entry transmitter. If the exterior pickup box endgate control switch is pressed and the keyless entry transmitter is within range, the keyless entry control module will send a serial data message to the rear gate module indicating the presence of the keyless entry transmitter and the rear gate module will permit the endgate to unlatch and power open. If the doors are locked and the keyless entry transmitter is not within range, the rear gate module will ignore the signal from the exterior pickup box endgate control switch.

Manual Endgate Operation

The endgate can be manually closed from the full-open position when the endgate is lifted in a continuous motion. If the endgate motion is stopped between the full-open and half-closed positions, the lift to close feature can engage and power close the endgate. If the touch pad is pressed during power operation, the endgate will stop and allow manual operation. The endgate must be held after stopping, or it will continue to open

Tailgate Release Unavailable Driver Information Center Message

Power Endgate Functions Disabled Without Setting DTCs

The driver information center displays Tailgate Release Unavailable when a thermal inhibit occurs in the latch or drive unit or the position count is out of range.

The power endgate functions will be restored by performing the following actions:

- Closing the endgate which will reset the position counts
- Closing the endgate and removing the F20DL 30A fuse for greater than 5 minutes

Power Endgate Functions Disabled With DTCs Current

The driver information center displays Tailgate Release Unavailable when the rear gate module control module detects a malfunction in the power endgate system and the system is disabled.

Power Door Locks Description and Operation

Door Lock System Components

The power door lock system consists of the following components:

- Driver door lock switch
- Passenger door lock switch
- Key cylinder switch
- Body control module (BCM)
- Driver door latch
- Passenger door latch
- Left rear door latch
- Right rear door latch
- Exterior door handle switches
- Keyless entry control module

Power Door Locks Block Diagram

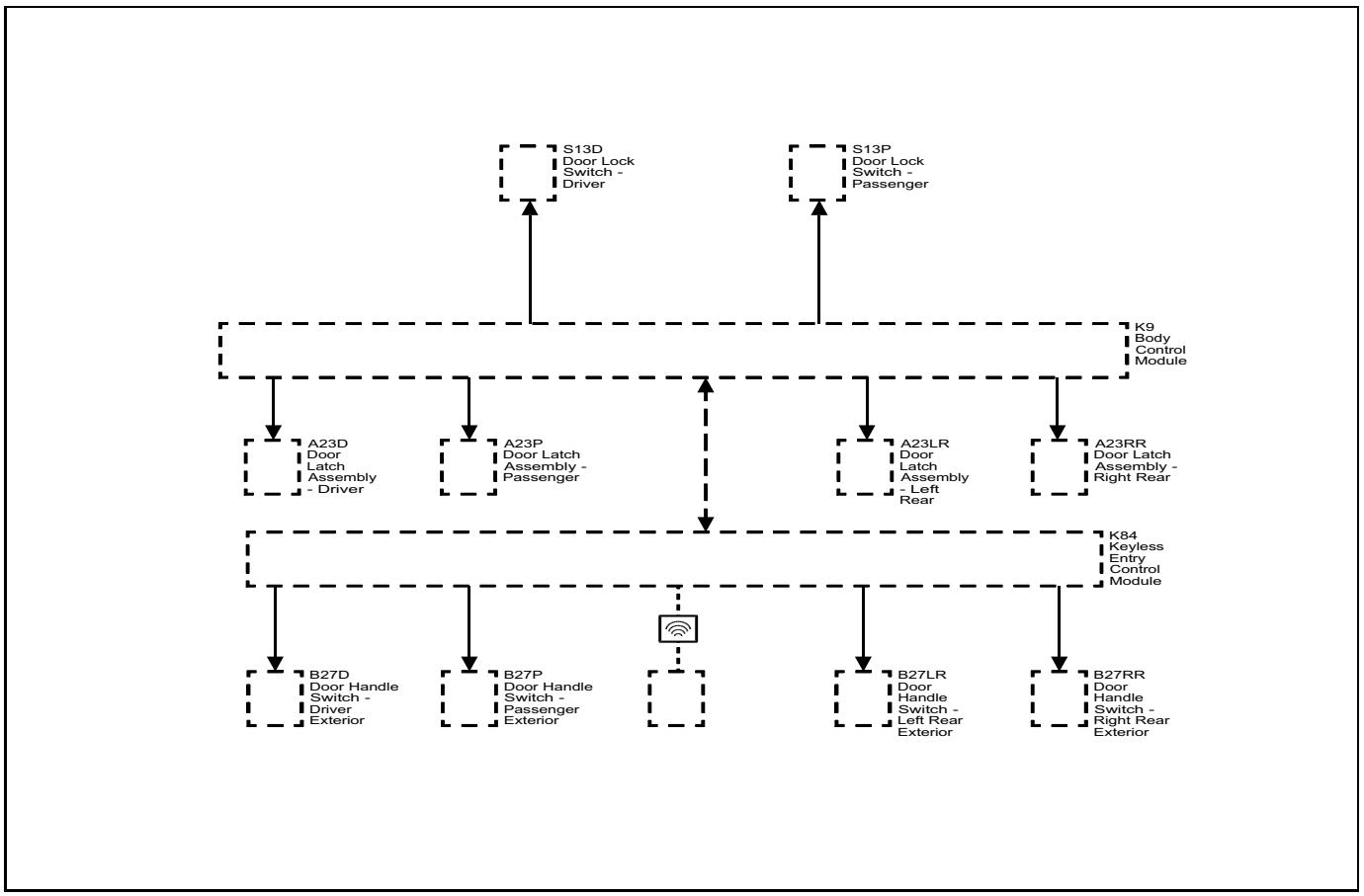

3270435

Door Lock and Unlock Operation

When the driver or passenger door lock switch is activated in the lock or unlock position, the BCM will receive a ground signal on either the door lock switch lock or unlock signal circuits.

The BCM, upon receipt of a lock switch lock or unlock signal, will supply battery voltage to the door lock actuator lock or unlock control circuits. Since the opposite side of the lock actuator is connected to ground through the other lock actuator control circuit, the doors will then lock or unlock as commanded.

The following three circuits are used to operate the lock:

- Driver door unlock
- Passenger door unlock
- All door lock

The driver door lock actuator is isolated so it can be unlocked by itself using the keyless entry transmitter.

Key Cylinder Switch

The driver window switch monitors the voltage level of the driver door lock motor status signal circuit. When the key is inserted into the driver door key cylinder and turned to the Lock position, a switch within the driver door latch closes causing the voltage to drop within the driver door lock motor status signal circuit. The driver window switch will detect the drop in voltage and will send a serial data message to the BCM commanding all the doors to Lock.

The driver key cylinder switch is used by the customer for programming the keyless entry transmitters, The driver window/outside rearview mirror switch monitors the voltage level of the key switch unlock signal circuit and when it detects a reprogramming request, it will send a serial data message to the body control module.

Passive Door Lock/Unlock Operation

The exterior door handle switch signal circuits provide inputs to the keyless entry control module when the exterior door handle switches are activated. These inputs allow the keyless entry control module to detect a door lock or a door unlock request. The keyless entry control module provides a 12 V signal to each exterior door handle switch via the door handle switch signal circuits. When a door handle switch is pressed, the switch closes and the voltage signal within the signal circuit is pulled to ground. The keyless entry control module will detect the voltage drop and a low frequency antenna will transmit a challenge to the keyless entry transmitter. If the challenge is met, the keyless entry transmitter will respond and the keyless entry control module will send a serial data message to the body control module to command the door(s) to be locked or unlocked

BLANK

Section 3

Brakes

Trailer Brake Controls 3-3
Schematic and Routing Diagrams 3-3
Trailer Brake Control Schematics 3-4
Description and Operation 3-6
Trailer Brake Controls Description and Operation 3-6

BLANK

Trailer Brake Controls

Schematic and Routing Diagrams

Trailer Brake Control Schematics (Trailer Brake (Z82-JL1/U1D))

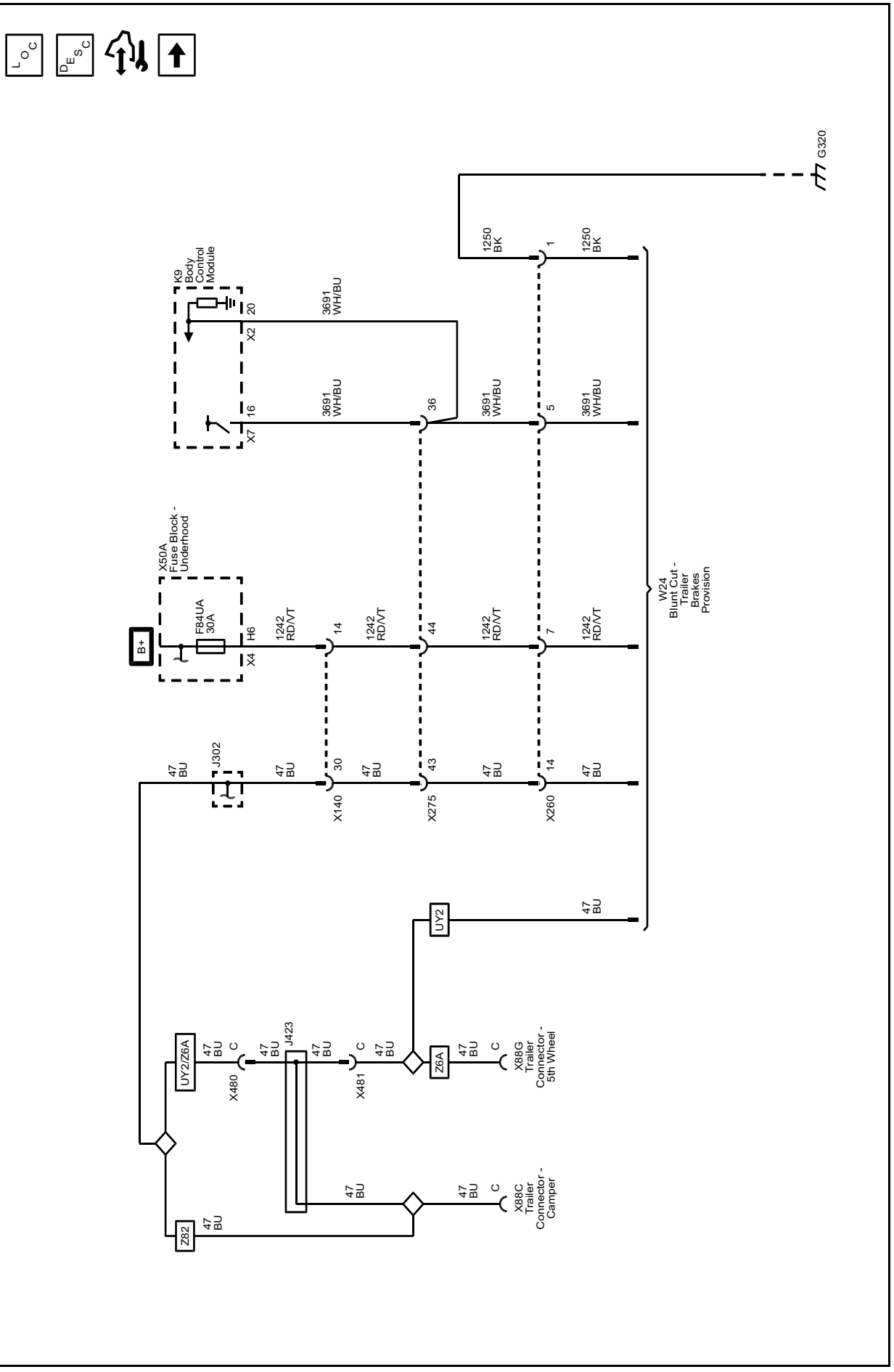

Trailer Brake Control Schematics (Trailer Brake (JL1))

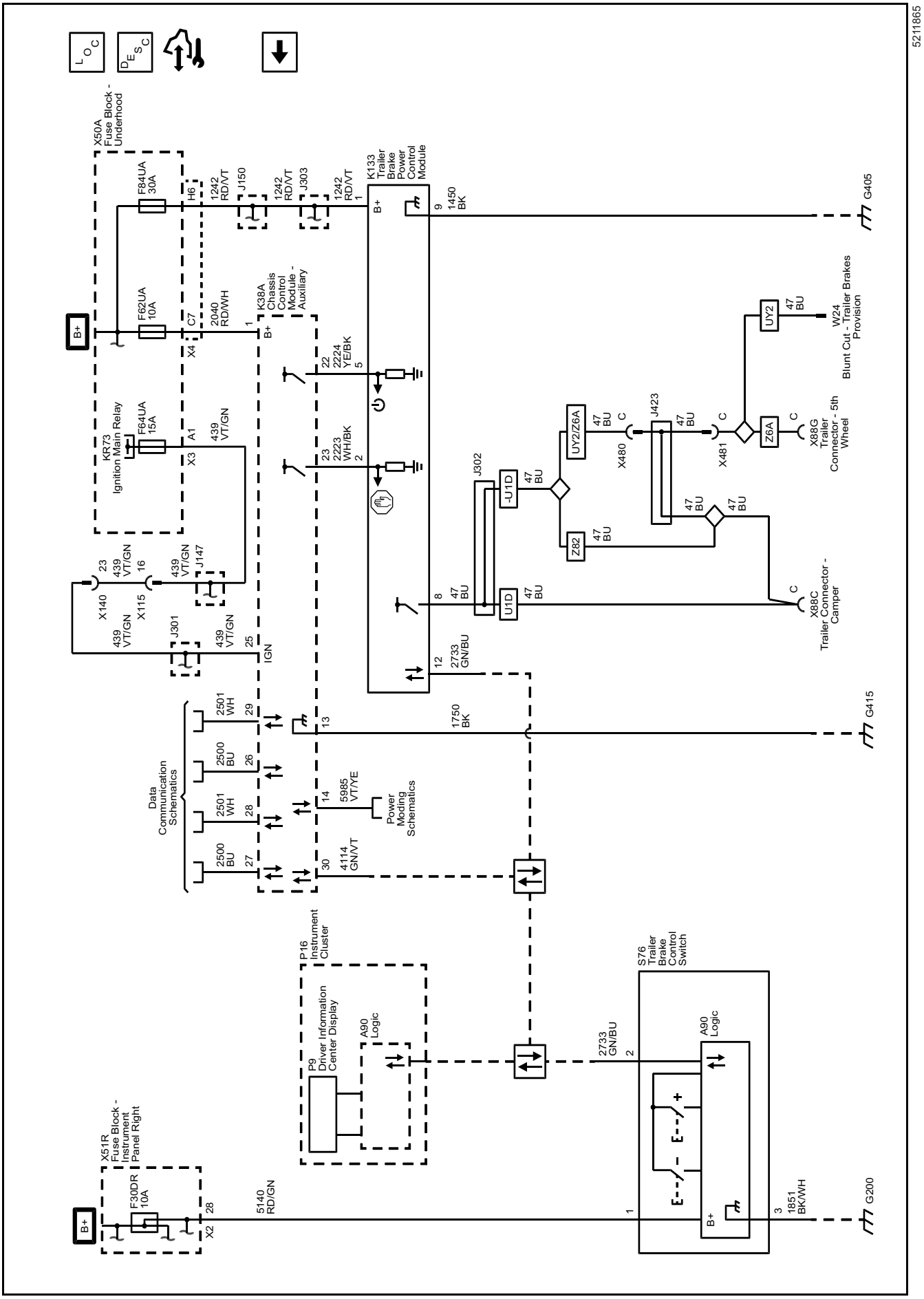

Description and Operation

Trailer Brake Controls Description and Operation

A trailer brake control system is used to control the amount of trailer braking power that is made available to trailers with brakes that require a controlled electrical output signal for actuation.

The power output to the trailer brakes is based on both the amount of braking being applied by the vehicle's brake system and on the type of trailer brakes detected.

The Trailer Brake Control System is compatible with two types of Trailer Brake Systems as listed below:

1. **Electric Brakes** A controlled electrical output signal energizes an electric-magnet/lever arm assembly that directly actuates the brake mechanism. The GDS name for this system is "Electromagnetic Brakes".
2. **Electric Over Hydraulic Brakes** A controlled electrical output signal energizes a remote, trailer mounted hydraulic pump to build brake pressure in a closed hydraulic system on the trailer. The hydraulic fluid pressure actuates the brake mechanism. The GDS name for this system is "Electrohydraulic Brakes".

Trailer Brake Output Versus Trailer Brake Type

- The trailer brake system characterizes the trailer brakes as either Electric Brake or Electric Over Hydraulic Brake automatically. This characterization may be affected by the number, type, and age of the trailer brake magnets, as well as any other devices installed on the trailer brakes (i.e. adapters for Electric Over Hydraulic brake functionality).
- The trailer brake system is fully operational with either characterization.
- Some features of the trailer brake system may be different based on the trailer brake type characterization. An example of this is at zero speed, where pressing the service brake pedal will produce output when the trailer brakes are characterized as Electric Brakes, but not when characterized as Electric Over Hydraulic Brakes.
- Sliding the manual trailer brake apply lever will produce output at zero speed for either characterization.

The user gain allows the driver to adjust the amount of trailer brake output to match the trailer load and road surface. The controller determines the desired trailer brake output and provides a control signal to the K133 Trailer Brake Power Control Module. The K133 Trailer Brake Power Control Module amplifies the signal and provides the output required to activate the Electric or Electric Over Hydraulic trailer brakes.

The trailer brake control can support up to a maximum of four axles with electric trailer brakes (8 brake magnets).

Connecting a trailer that is not compatible with the trailer brake system may result in reduced or complete loss of trailer braking. There may be an increase in stopping distance or trailer instability which could result in personal injury or damage to the vehicle, trailer or other property. An aftermarket controller may be available for use with trailers with surge or air trailer brake systems.

To determine the type of brakes on your trailer and the availability of controllers, check with your trailer manufacturer or dealer. Do not power up an aftermarket controller with the factory brake controller at the same time.

The vehicle is equipped with the following trailer braking components:

- K38A Chassis Control Module-Auxiliary
- K133 Trailer Brake Power Control Module
- S76 Trailer Brake Control Panel
- Manual Trailer Brake Apply
- Trailer Gain Adjustment
- Trailer Brake Driver Information Center Display

Chassis Control Module-Auxiliary

The K38A Chassis Control Module-Auxiliary is a serviceable GMLAN module. The chassis control module sends the low power commanded duty cycle signal to the trailer brake power control module. The trailer brake power control module amplifies the signal and provides an output that is required to drive the trailer brakes.

Trailer Brake Power Control Module

The K133 Trailer Brake Power Control Module (TBPM) is a solid state power switching module that supplies power to the trailer brakes at the input command duty cycle. Diagnostic messages are sent from the TBPM to the CCM on a dedicated LIN bus.

Trailer Brake Control Panel

The S76 Trailer Brake Control Panel contains the trailer gain and manual apply switches. It is located on the instrument panel to the left of the steering column. Refer to the instrument panel overview for more information on the location. The control panel and switches allows you to adjust the amount of output, referred to as trailer gain, available to the Electric or Electric Over Hydraulic brakes. It also allows you to manually apply the trailer brakes. The trailer brake control panel and switches are used along with the trailer brake display page on the driver information center to adjust and display power output to the trailer brakes.

Manual Trailer Brake Apply

The manual trailer brake apply lever is located on the S76 Trailer Brake Control Panel and is used to apply the trailer's Electric or Electric Over Hydraulic brakes independent of the vehicle's brakes. This lever is used in the trailer gain adjustment procedure to properly adjust the power output to the trailer brakes.

Sliding the lever to the left will apply only the trailer brakes. The power output to the trailer is indicated in the trailer brake display page in the Driver Information Center (DIC). If the vehicle's service brakes are applied while using the manual trailer brake apply lever, the trailer output power will be the greater of the two.

The trailer and the vehicle's brake lamps will come on when either the vehicle's braking or manual trailer brakes are applied.

Trailer Gain Adjustment

Trailer gain should be set for a specific trailering condition and must be adjusted any time vehicle loading, trailer loading or road surface conditions change. It is important to re-adjust trailer gain any time the tow vehicle, trailer loading or road surface conditions change or it you notice trailer wheel lock-up at any time while you are towing.

Setting the trailer gain properly is needed for the best trailer stopping performance. A trailer that is over-gained may result in locked trailer brakes. A trailer that is under-gained may result in not enough trailer braking. Both of these conditions may result in poor stopping and stability of the vehicle and trailer.

Trailer Gain Adjustment Procedure

- Adjust trailer gain in 0.5 step increments up to 10 gain setting by using the gain adjustment +/− buttons on the trailer brake control panel switch. Pressing and holding a gain button will cause the trailer gain to continuously increment or decrement. To turn the output to the trailer off, set the gain to zero.
- Drive the tow vehicle and trailer combination on a level surface representative of the towing condition and free of traffic at approximately 32–40 km/h (20–25 mph) and fully apply the manual trailer brake apply lever mechanism located on the trailer brake control panel switch. Adjusting the trailer gain at slower speeds may result in an incorrect gain setting.
- Adjust the trailer gain to just below the threshold of trailer wheel lock-up . Trailer wheel lock-up may not occur if towing a heavily loaded trailer. In this case, adjust the trailer gain to the highest allowable setting for the towing condition.

Hill Start Assist

The hill start assist allows the driver to launch the vehicle without a roll back when the driver is moving their foot from the brake pedal to the accelerator pedal. Refer to the hill start assist system in the anti-lock brake system description and operation document for more information.

Trailer Sway Control

The trailer sway control can detect the vehicle yaw instability, caused by an attached trailer. Refer to the trailer sway control system in the anti-lock brake system description and operation document for more information.

Driver Information Center Indicators and Messages

The following indicators are used to inform the driver of several different conditions:

Trailer Connected

This message will be briefly displayed when a trailer with Electric or Electric Over Hydraulic brakes is first connected to the vehicle. This message will automatically turn off in about ten seconds. The driver can also acknowledge this message before it automatically turns off.

Check Trailer Wiring

This message will be displayed if:

- The system detects that a trailer with Electric or Electric Over Hydraulic brakes is connected to the vehicle and then the trailer harness becomes disconnected from the vehicle.
- The trailer connection is recognized initially and then a disconnect occurs while the vehicle is stationary. This message will automatically turn off in about thirty seconds. This message will also turn off if the driver acknowledges this message off or if the trailer harness is reconnected.
- A disconnect of the trailer wiring harness occurs while the vehicle is moving. The Check Trailer Wiring message will continue until the ignition is turned off. The message will also turn off if the driver acknowledges this message off or it the trailer harness is re-connected or repairs are completed.
- There is an electrical fault in the wiring to the electric trailer brakes. The Check Trailer Wiring message will continue as long as there is an electrical fault in the trailer wiring. This message will also turn off if the driver acknowledges this message off.
- A poor connection at the 7–way connector may cause the Check Trailer Wiring message. Some aftermarket 7–way trailer side connector adapters or plugs may cause deformation or excessive wear to the vehicle's trailer terminals. It is recommended that you use an OEM or Pollak heavy duty 7–way trailer side connector adapter.

Service Trailer Brake System

This message will be displayed when there is a problem with the trailer brake control system. The trailer brake system may not be fully functional, or may not be functioning at all. The trailer brake system is designed to provide trailer braking, if possible, even when faults prevent it from being fully functional. This reduced functionality includes:

1. Providing trailer braking when the master cylinder pressure or brake pedal switch are faulted.
2. Providing trailer braking when hill start assist and trailer sway control communication is faulted.
3. Providing trailer braking when certain manual trailer brake apply lever faults are present.

These conditions should be repaired to allow the trailer brake system to be fully functional.

Trailer Gain and Output Display

This display menu can be accessed by scrolling through the DIC menu, or any time the trailer gain +/− button is depressed, or the manual trailer brake apply lever is actuated. The trailer output is displayed from 0 to full output and indicates the output power provided to the trailer brakes, relative to the gain setting.

After the electrical connection is made to a trailer equipped with electric brakes or electric over hydraulic brakes, the TRAILER CONNECTED message will be

displayed momentarily on the DIC. The Trailer Brake Display Page can be selected on the DIC showing TRAILER GAIN and OUTPUT, after all vehicle related service messages are acknowledged by the driver.

Depending on which instrument panel cluster is in the vehicle, the DIC may display dashed lines, a greyed out display, or it may be blank signifying a disconnected trailer or a trailer brake fault condition.

Section 4

Driver Information and Entertainment

Image Display Cameras 4-3
Schematic and Routing Diagrams 4-3
Image Display Camera Schematics 4-4
Description and Operation 4-10
Rearview Camera Full Display Mirror Description and Operation 4-10
Rear Vision Camera Description and Operation (UVC) 4-10
Rear Vision Camera Description and Operation (UVB) 4-10
Surround Vision Camera Description and Operation (UV2) 4-10
Surround Vision Camera Description and Operation (Trailer Vision System (UVI/UVN/UVS)) 4-12

BLANK

Image Display Cameras

Schematic and Routing Diagrams

Image Display Camera Schematics (Rearview Camera (DRZ))

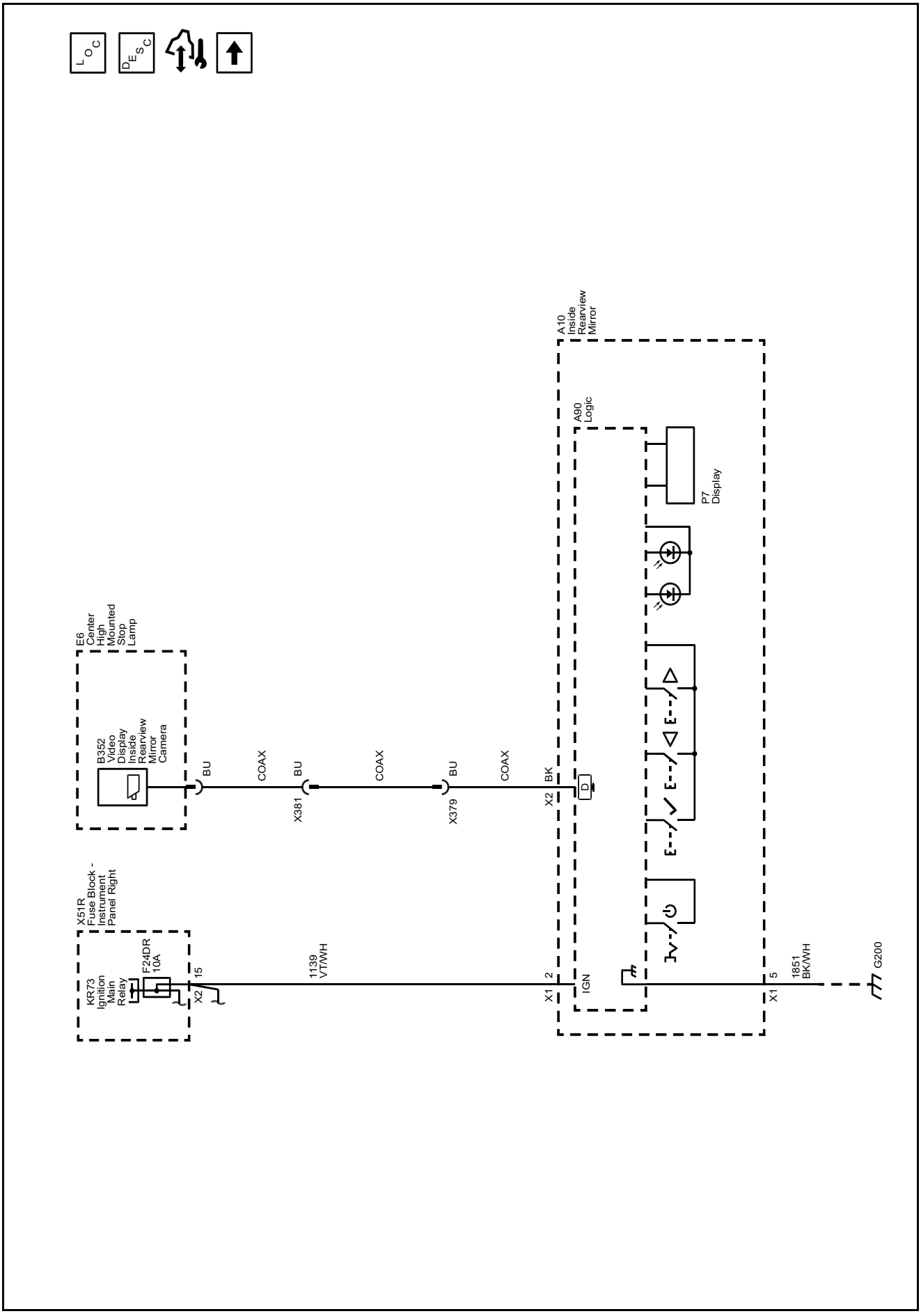

Image Display Camera Schematics (Rearview Camera (UVC-Chassis Cab))

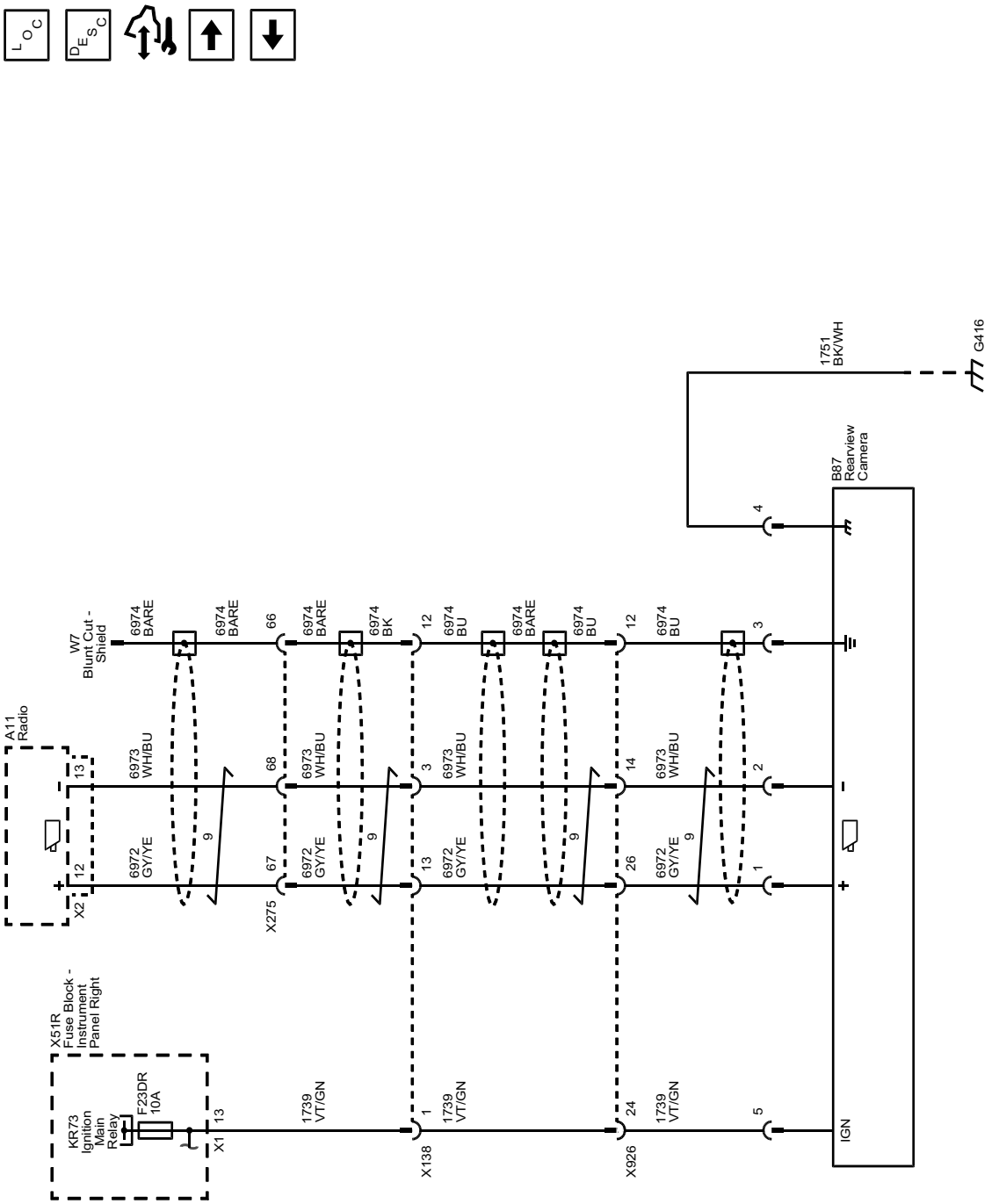

Image Display Camera Schematics (Rearview Camera (UVC+Chassis Cab))

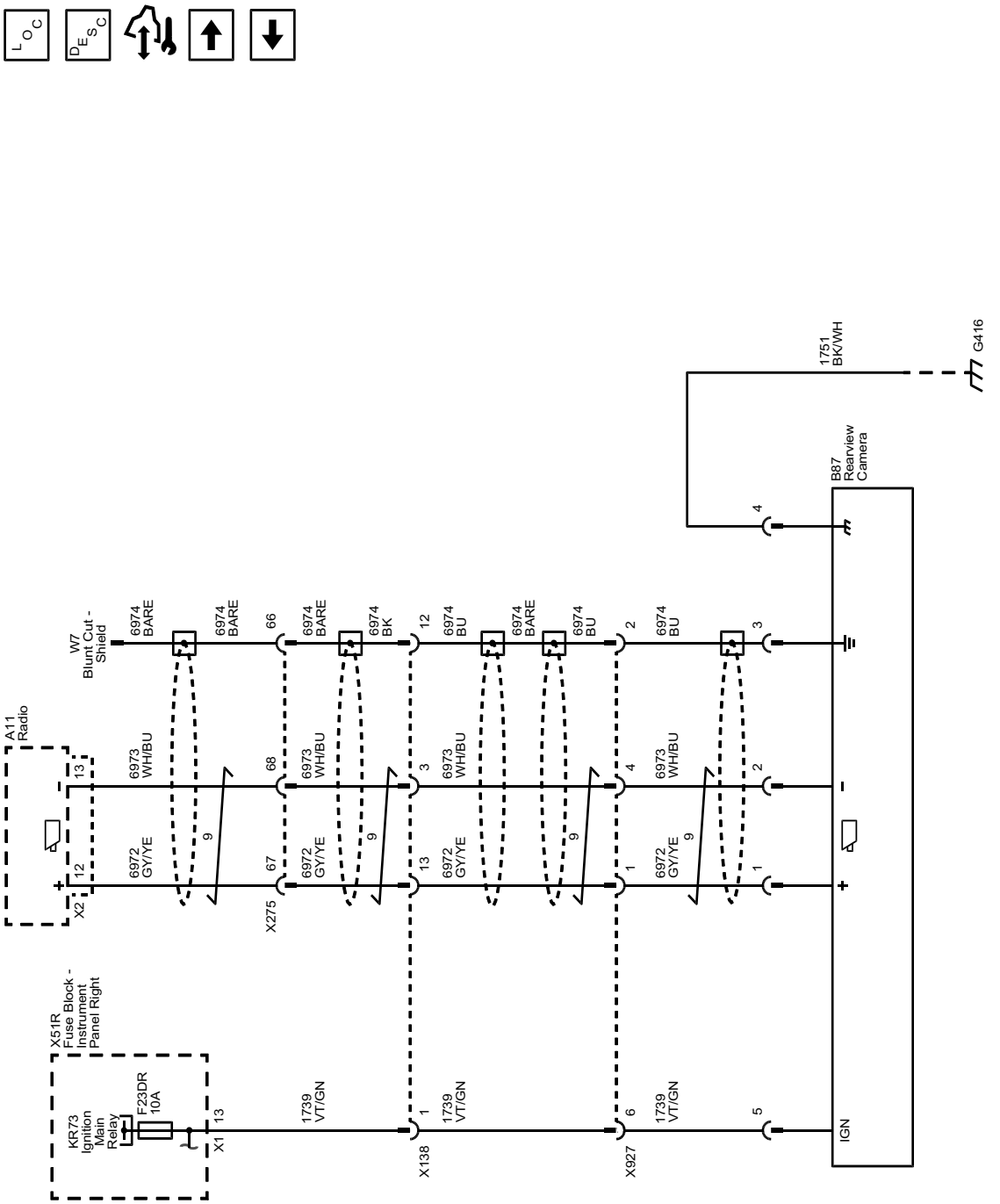

Image Display Camera Schematics (Rearview Camera (UVB))



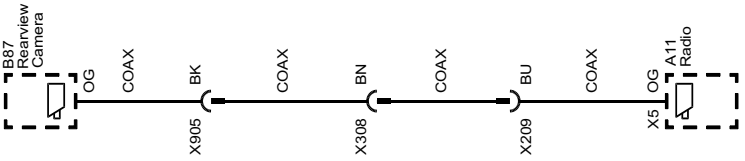

5211890

Image Display Camera Schematics (Surround Vision (UVI/UV2))

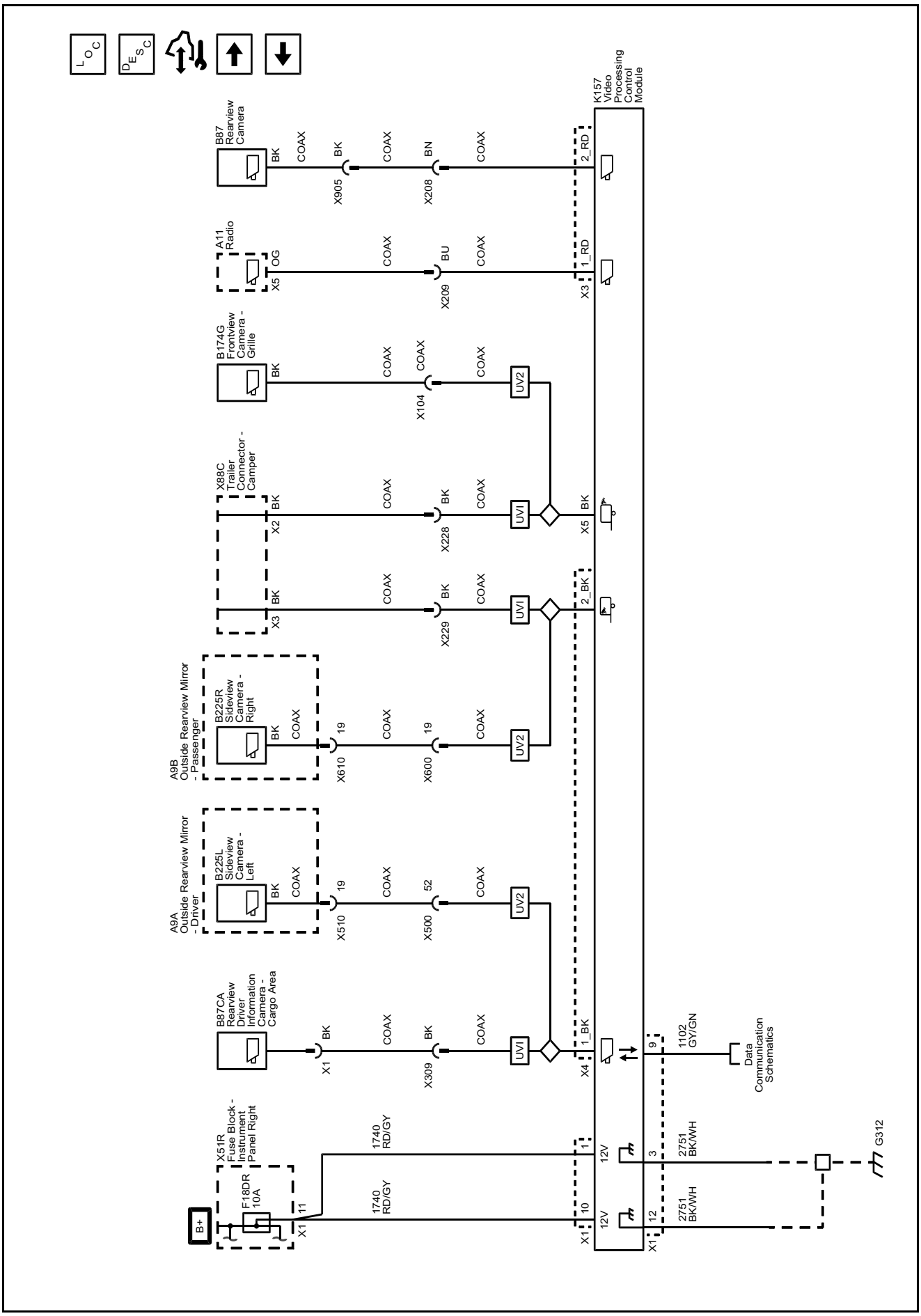

Image Display Camera Schematics (Surround Vision (UVS))

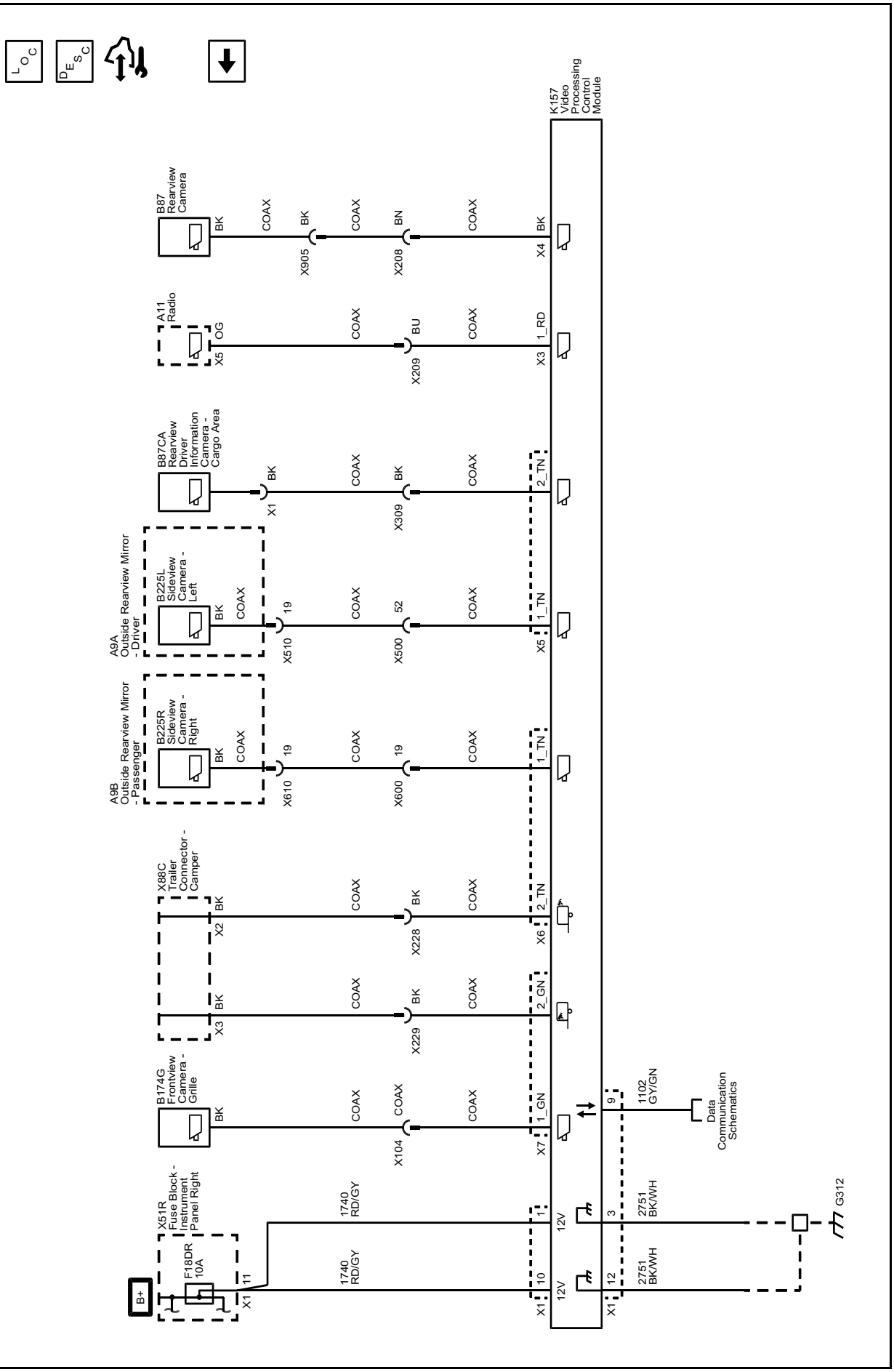

Description and Operation

Rearview Camera Full Display Mirror Description and Operation

If equipped, full display mirror provides a wider field of view than normally seen from the inside rearview mirror to assist when driving and changing lanes. When the tab under the inside rearview mirror is pulled rearward, a view of the area behind the vehicle displays on the mirror. The inside rearview camera full display mirror is connected to the outside rearview camera via a shielded coaxial cable.

When the tab under the inside rearview mirror is pulled rearward, a view of the area behind the vehicle displays on the mirror.

Adjust the rearview mirror for a clear view of the area behind the vehicle before turning on full display mirror. Use the three buttons on the bottom of the mirror to adjust the brightness, zoom, and tilt of the display. Make sure the light sensor is not covered when adjusting the brightness.

The inside rearview camera full display mirror may not work properly or display a clear image if:.

- It is dark.
- The sun or the beam of headlamps are shining directly into the camera lens.
- Ice, snow, mud, or anything else builds up on the camera lens. Clean the lens, rinse it with water, and wipe it with a soft cloth.

When the mirror detects that the camera is not sending a valid video signal, it “blue screens” with a “no video” decal for 3 seconds, then reverts back to the mirror.

Rear Vision Camera Description and Operation (UVC)

Rear Vision Camera System Operation

The rear vision camera system consists of a video camera located at the rear of the vehicle and the Rado.

When the transmission is placed into REVERSE, a signal indicates to the Radio that the vehicle is in reverse and image display is requested. The rear vision camera receives ignition voltage and a constant ground to power the camera. Video signal + and video signal – circuits carry the video image from the rear vision camera to the radio. Additionally, the video signal circuits are shielded to prevent any interference which may lead to a loss of video signal resolution and a degraded video image. The shield is provided a ground path by the rear vision camera.

The following conditions may cause a degraded rear vision camera image:

- Ice, snow, or mud has built up on the rear vision camera
- Dark conditions
- Extreme light conditions, such as glare from the sun or the headlights of another vehicle
- Damage to the rear of the vehicle
- Extreme high temperatures or extreme temperature changes

If a malfunction is detected in the system, Service Rear Vision Camera may be displayed on the Info Display Module as an indicator to the customer that a problem exists that requires service.

Rear Vision Camera Description and Operation (UVB)

Rear Vision Camera System Operation

The rear vision camera system consists of a video camera located at the rear of the vehicle and the Rado.

When the transmission is placed into REVERSE, a signal is sent to the Radio indicating that camera operation is requested. The rearview camera sends video information to the radio through a coax cable. The coax cable also provides power from the Radio to the rearview camera.

The following conditions may cause a degraded rear vision camera image:

- Ice, snow, or mud has built up on the rear vision camera
- Dark conditions
- Extreme light conditions, such as glare from the sun or the headlights of another vehicle
- Damage to the rear of the vehicle
- Extreme high temperatures or extreme temperature changes

If a malfunction is detected in the system, Service Rear Vision Camera may be displayed on the Info Display Module as an indicator to the customer that a problem exists that requires service.

Surround Vision Camera Description and Operation (UV2)

Warning: The Surround Vision cameras have blind spots and will not display all objects near the corners of the vehicle. Folding outside mirrors that are out of position may not display surround view correctly. Always check around the vehicle when parking or backing.

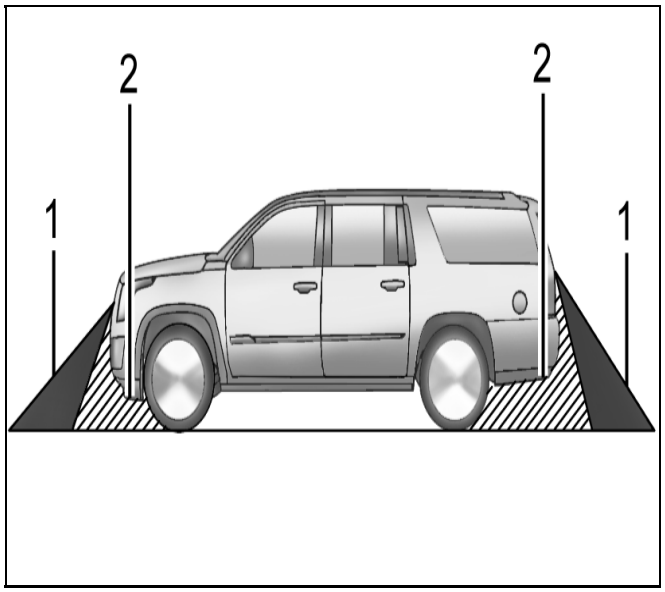

4291164

1. View Displayed by the Surround Vision Camera
2. Area Not Shown

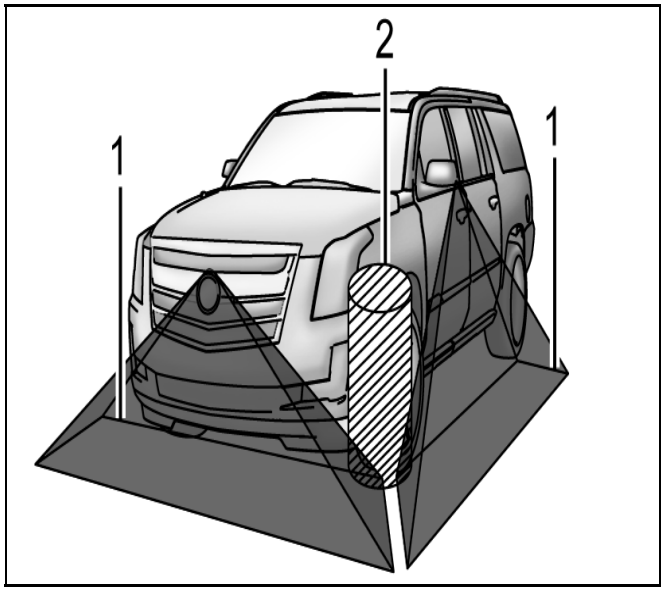

4291749

1. View Displayed by the Surround Vision Camera
2. Area Not Shown

The surround vision camera system consists of the following components:

- B87 Rearview Camera
- B174G Frontview Camera – Grille
- K157 Video Processing Control Module
- A11 Radio **OR** K74 Human Machine Interface Module
- B225L Sideview Camera – Left
- B225R Sideview Camera – Right
- X20 Memory Card Receptacle (with XVR)

When the vehicle is traveling at speeds slower than 6 mph (10kph) the video processing control module will power up the cameras and send a video signal to the radio or human machine interface module.

The following conditions may cause a degraded surround vision camera image:

- Ice, snow, or mud has built up on the rear vision camera
- Dark conditions
- Extreme light conditions, such as glare from the sun or the headlights of another vehicle
- Damage to the rear of the vehicle
- Extreme high temperatures or extreme temperature changes

Surround Vision displays an overhead view of the area surrounding the vehicle, along with the front or rear camera views in the center stack. The front camera is in the grille or near the front emblem, the side cameras are on the bottom of the outside rearview mirrors, and the rear vision camera is above the license plate.

Note: Images from the Sideview Cameras are only displayed when both front doors are properly closed.

Features of the Surround Vision System

- Rear camera (B87 Rearview Camera) view alongside overhead view is displayed in reverse
- Front camera (B174G Frontview Camera – Grille) view alongside overhead view is displayed after shifting out of reverse to Neutral or Drive
- Will display front view when front park assist object is within trigger range calibration value (30 cm (12 in) in a forward gear
- Image is removed from display when vehicle speed exceeds speed calibration (10kph/6 mph) or button press / screen touch

System Operation

The video processing control module is connected to each camera via a shielded coaxial cable. The coaxial cable provides power for the camera and also carries the video image from the cameras to the video processing control module for processing. The video processing control module will then send the processed image output to infotainment system via another coaxial cable.

The video processing control module receives CAN information from Rear Park Assist object detection module and Steering Wheel angle from body control module during Reverse. A warning triangle may display during the 360 surround view screen if Rear Parking Assist has detected an object during a reverse. This triangle changes from amber to red and increases in size the closer the object. Also a dynamic guideline is displayed in Reverse to show the projected path of the vehicle.

If equipped, the video processing control module system may have a memory card receptacle (with XVR) located in the trunk. The memory card receptacle interfaces with the video processing control module via a USB cable. The memory card receptacle also receives fused battery voltage and ground from the video processing control module. The video processing control module uses the memory card as a mass storage device, similar to a USB storage device.

Surround Vision Camera Description and Operation (Trailer Vision System (UVI/UVN/UVS))

Warning: The Surround Vision cameras have blind spots and will not display all objects near the corners of the vehicle. Folding outside mirrors that are out of position may not display surround view correctly. Always check around the vehicle when parking or backing.

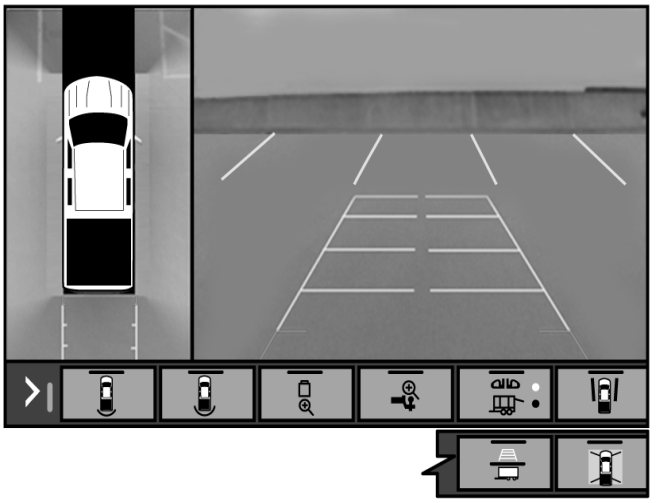

5147466

The Surround Vision- Trailer Vision camera systems consists of the following components:

UVI (4 channel)

- K157 Video Processing Control Module
- A11 Radio
- P17 Info Display Module
- B87 Rearview Camera
- B225L Sideview Camera – Left
- B225R Sideview Camera – Right
- Trailer Camera (if customer installed)

UVI with UVN (4 channel)

- K157 Video Processing Control Module
- A11 Radio
- P17 Info Display Module
- B87 Rearview Camera
- B87CA Rearview Driver Information Camera-Cargo Area
- Trailer Rearview Camera (if customer installed)
- Trailer Interior Camera (if customer installed)

UVS with UVN (8 channel)

- K157 Video Processing Control Module
- A11 Radio
- P17 Info Display Module
- B87 Rearview Camera
- B225L Sideview Camera – Left
- B225R Sideview Camera – Right
- B174G Frontview Camera – Grille
- B87CA Rearview Driver Information Camera-Cargo Area
- Trailer Rearview Camera (if customer installed)
- Trailer Interior Camera (if customer installed)

Features of the Surround Vision– Trailer Vision System

- Rear camera (B87 Rearview Camera) alongside overhead view is displayed in reverse
- Trailer Rearview Camera (if equipped) and Trailer Interior Camera (if equipped) view are displayed when selected via the Trailering application on the Infotainment screen. These cameras can also be configured to create a Transparent Trailer View when configured accordingly.
- Cargo Bed Camera view (if equipped) is displayed when selected via the Trailering application on the Infotainment screen.
- Image is removed from display when vehicle speed exceeds speed calibration (10kph/6 mph) or button press / screen touch
- Hitch View (when selected) displays a rear view camera image with a single guideline, which aids in aligning the truck to the trailer. If the driver shifts into PARK while in Hitch View, the parking brake is engaged to keep the vehicle from rocking when the driver gets out of the vehicle to hitch the trailer.
- Surround Vision displays an overhead view of the area surrounding the vehicle, along with the rear camera views in the center stack. The side cameras are on the bottom of the outside rearview mirrors, and the rear vision camera is above the license plate, and a rearview trailer camera can be mounted on the rear of a trailer.

  Note: Images from the Sideview Cameras are only displayed when both front doors are properly closed.

System Operation

The video processing control module is connected to each camera via a shielded coaxial cable. The coaxial cable provides power for the camera and also carries the video image from the cameras to the video processing control module for processing. The video processing control module will then send the processed image output to infotainment system via another coaxial cable.

The video processing control module receives CAN information from Rear Park Assist object detection module and Steering Wheel angle from body control module during Reverse. A warning triangle may display during the surround view screen if Rear Parking Assist has detected an object during a reverse. This triangle changes from amber to red and increases in size the closer the object. Also a dynamic guideline is displayed in Reverse to show the projected path of the vehicle.

When the vehicle is traveling at speeds slower than 6 mph (10kph) the video processing control module will power up the cameras and send a video signal to the radio.

The following conditions may cause a degraded surround vision camera image:

- Ice, snow, or mud has built up on any camera
- Dark conditions
- Extreme light conditions, such as glare from the sun or the headlights of another vehicle
- Body damage to the vehicle
- Extreme high temperatures or extreme temperature changes

BLANK

Section 5

Engine/Propulsion

12 V Starting and Charging 5-3
Schematic and Routing Diagrams 5-3
Starting and Charging Schematics 5-4
Auxiliary Battery Schematics 5-11
Description and Operation 5-12
Battery Description and Operation 5-12
Charging System Description and Operation . . . 5-12
Electrical Power Management Description and Operation 5-16
Load Shed System Description and Operation 5-18
Starting System Description and Operation 5-20

BLANK

12 V Starting and Charging

Schematic and Routing Diagrams

Starting and Charging Schematics (Starting (MYD))

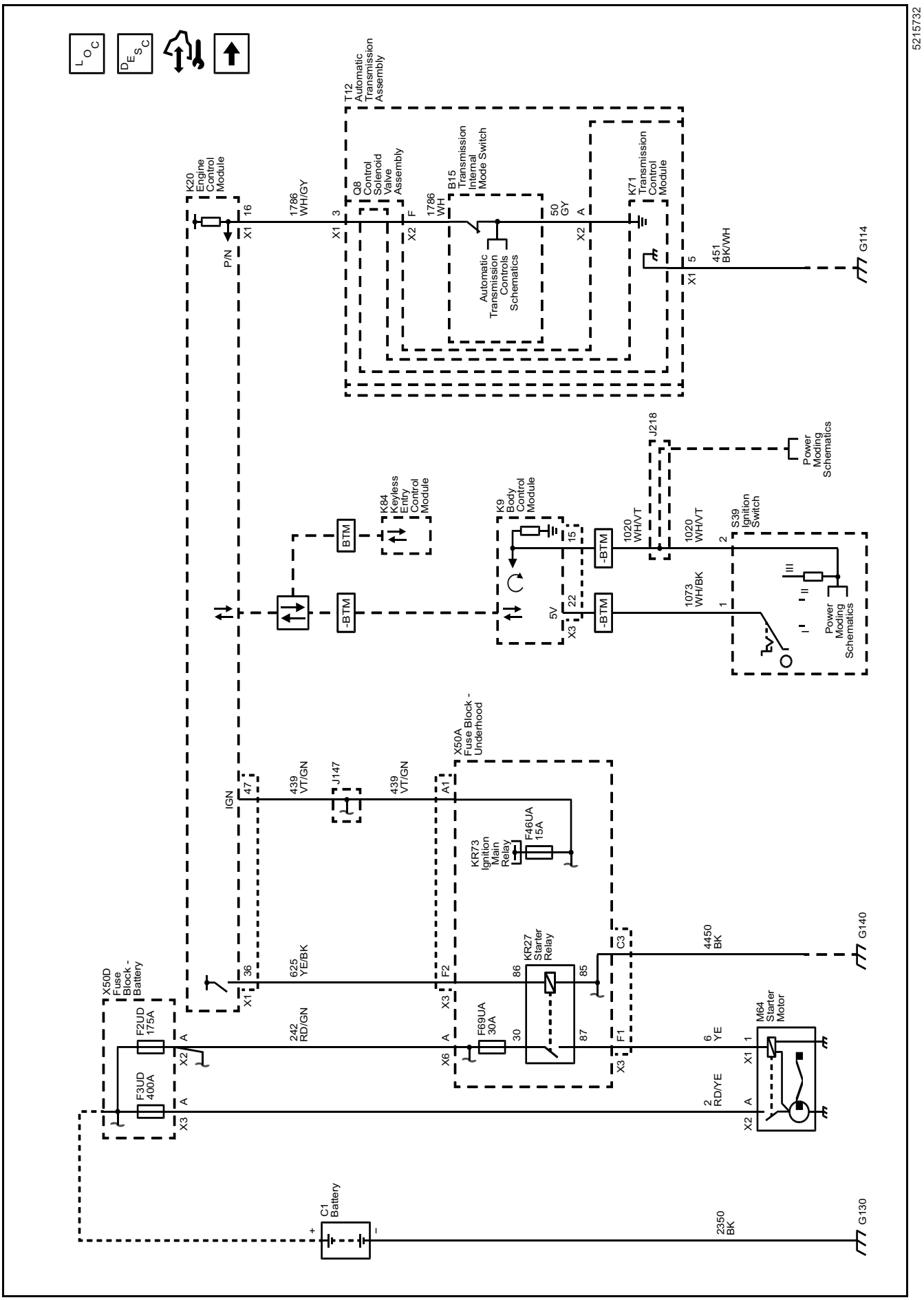

Starting and Charging Schematics (Starting(MGM/MGU))

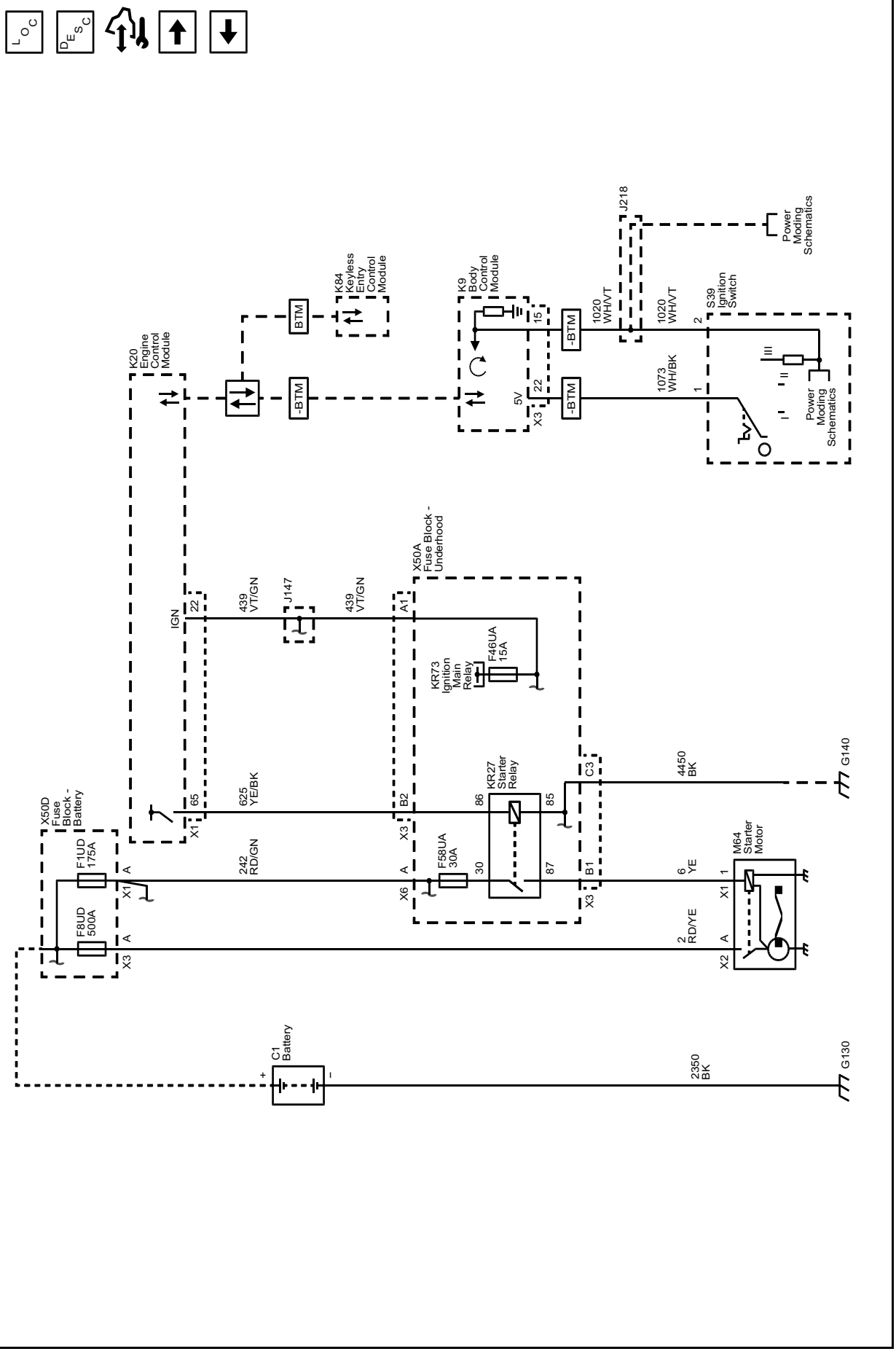

Starting and Charging Schematics (Charging (L8T))

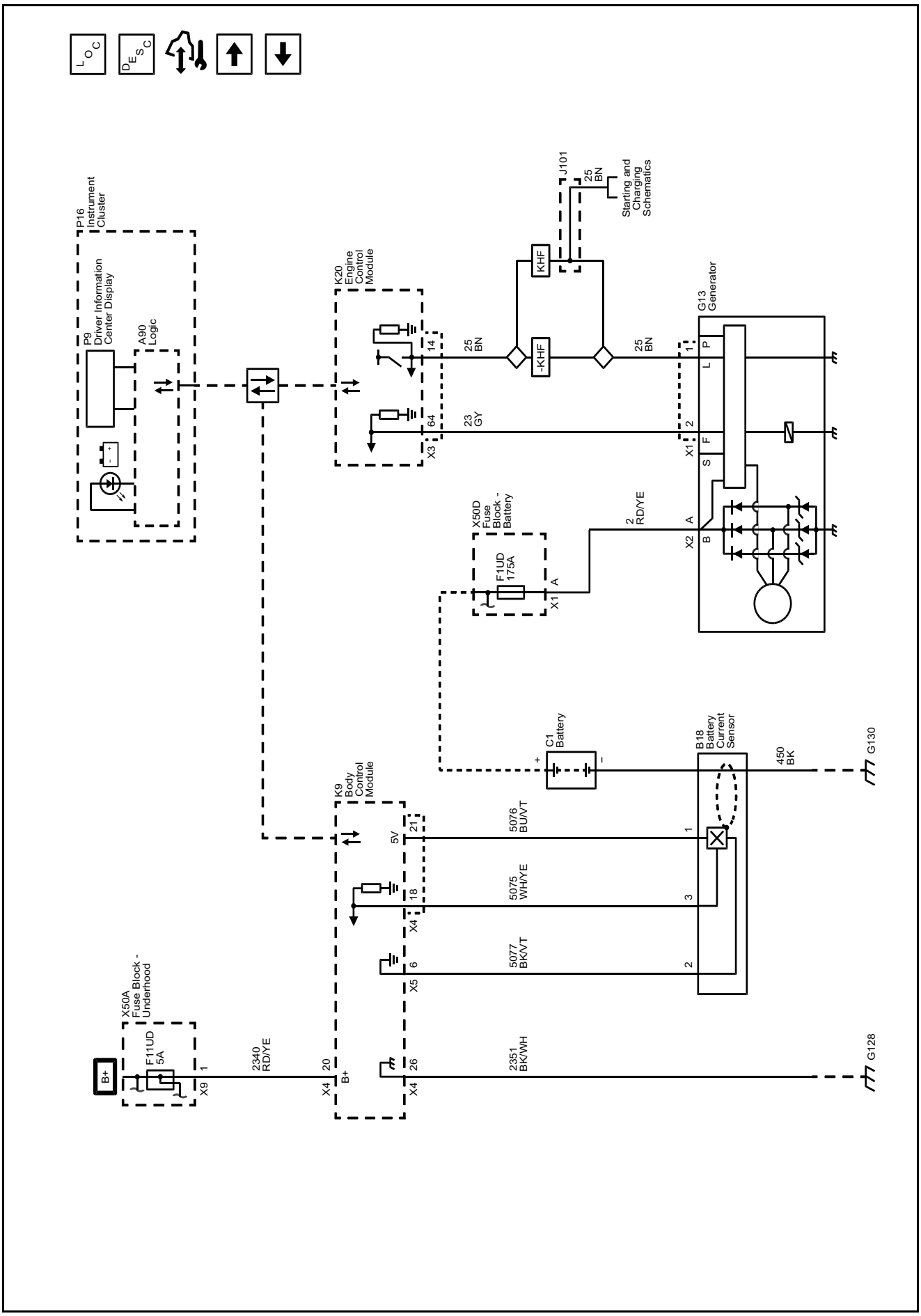

Starting and Charging Schematics (Charging Auliliary (L8T))

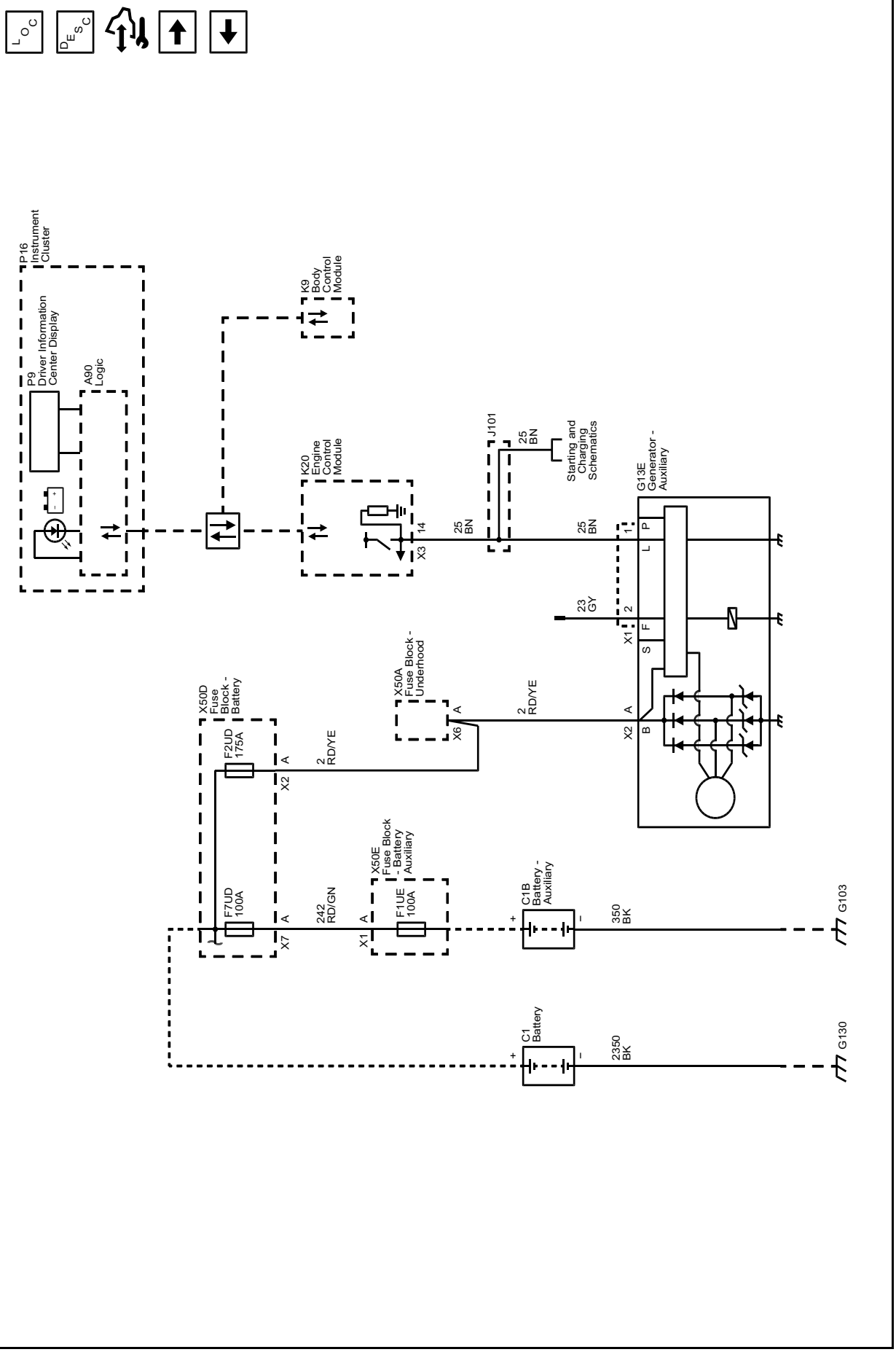

Starting and Charging Schematics (Charging (L5P))

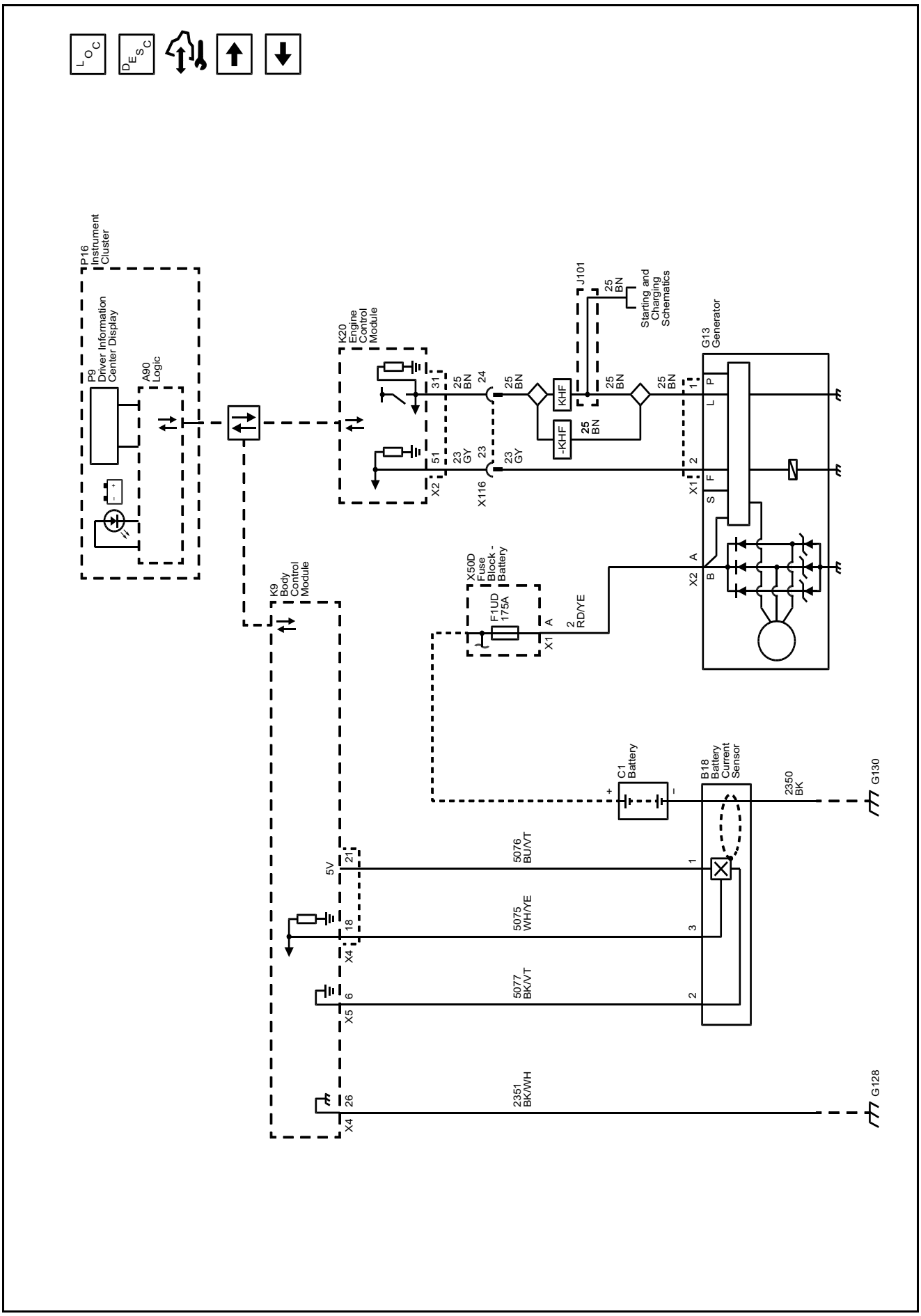

Starting and Charging Schematics (Charging Auxiliary (L5P))

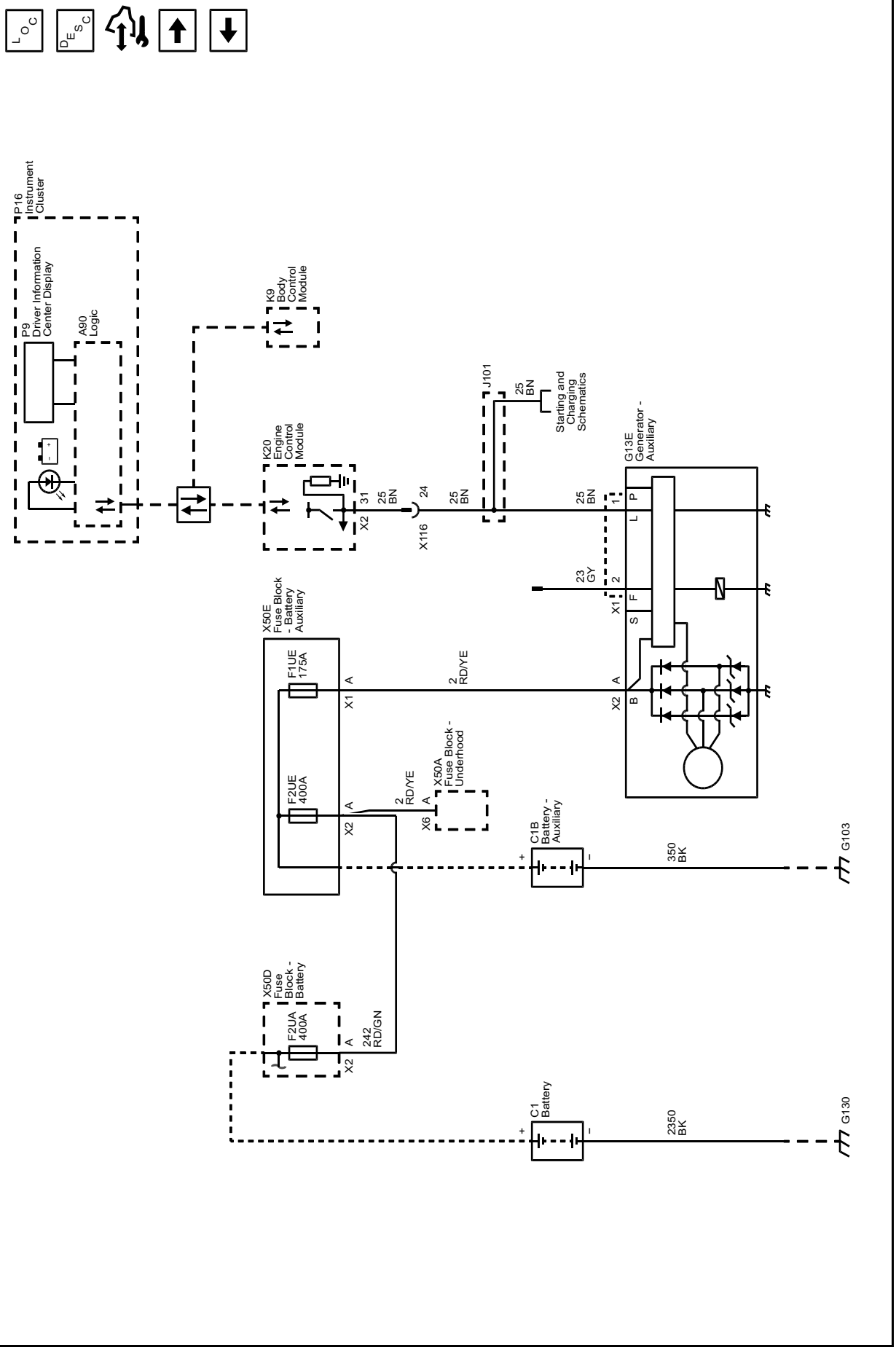

Starting and Charging Schematics (Charging (VYU))

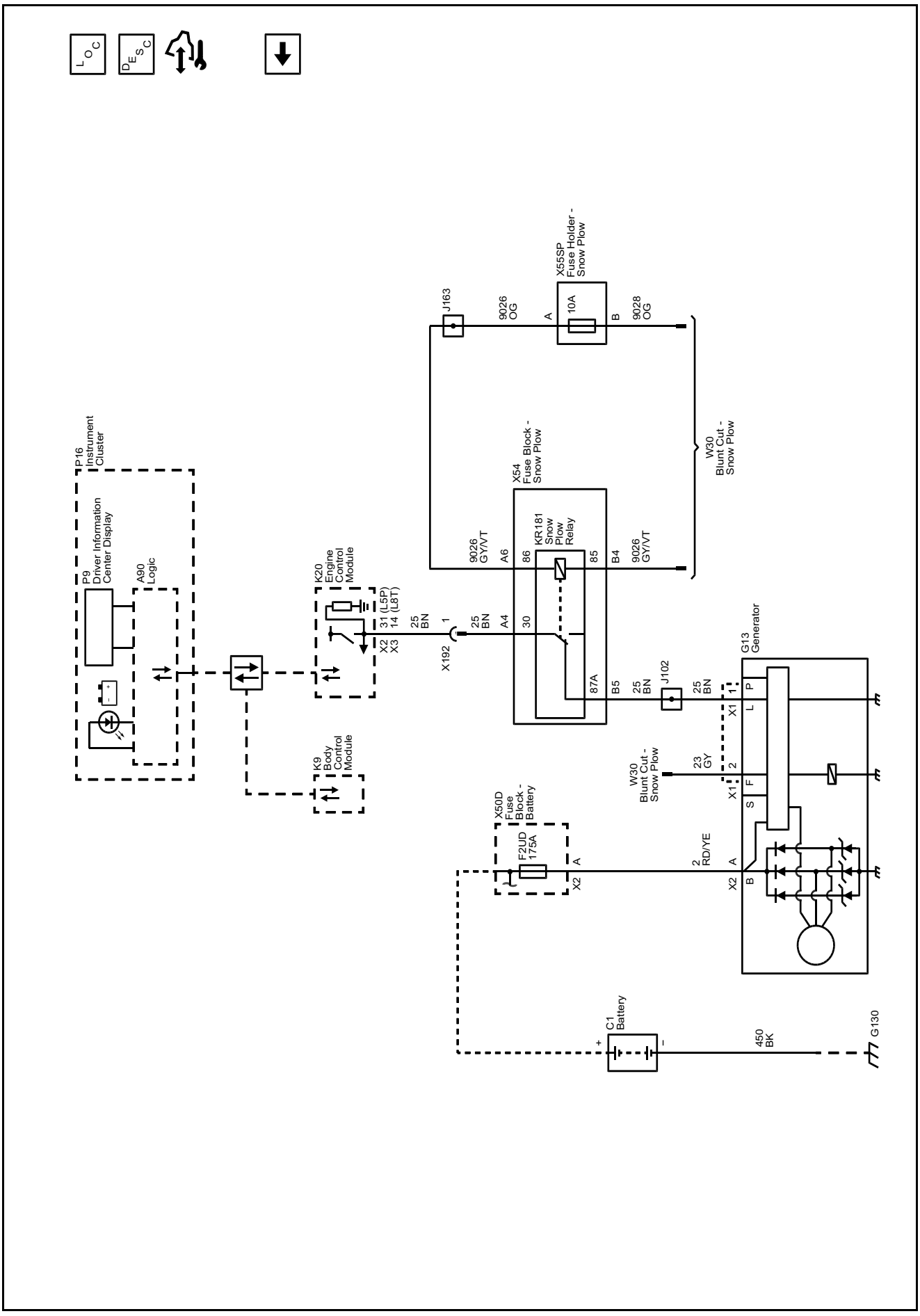

Auxiliary Battery Schematics (Auxiliary Battery Relays (K4B))

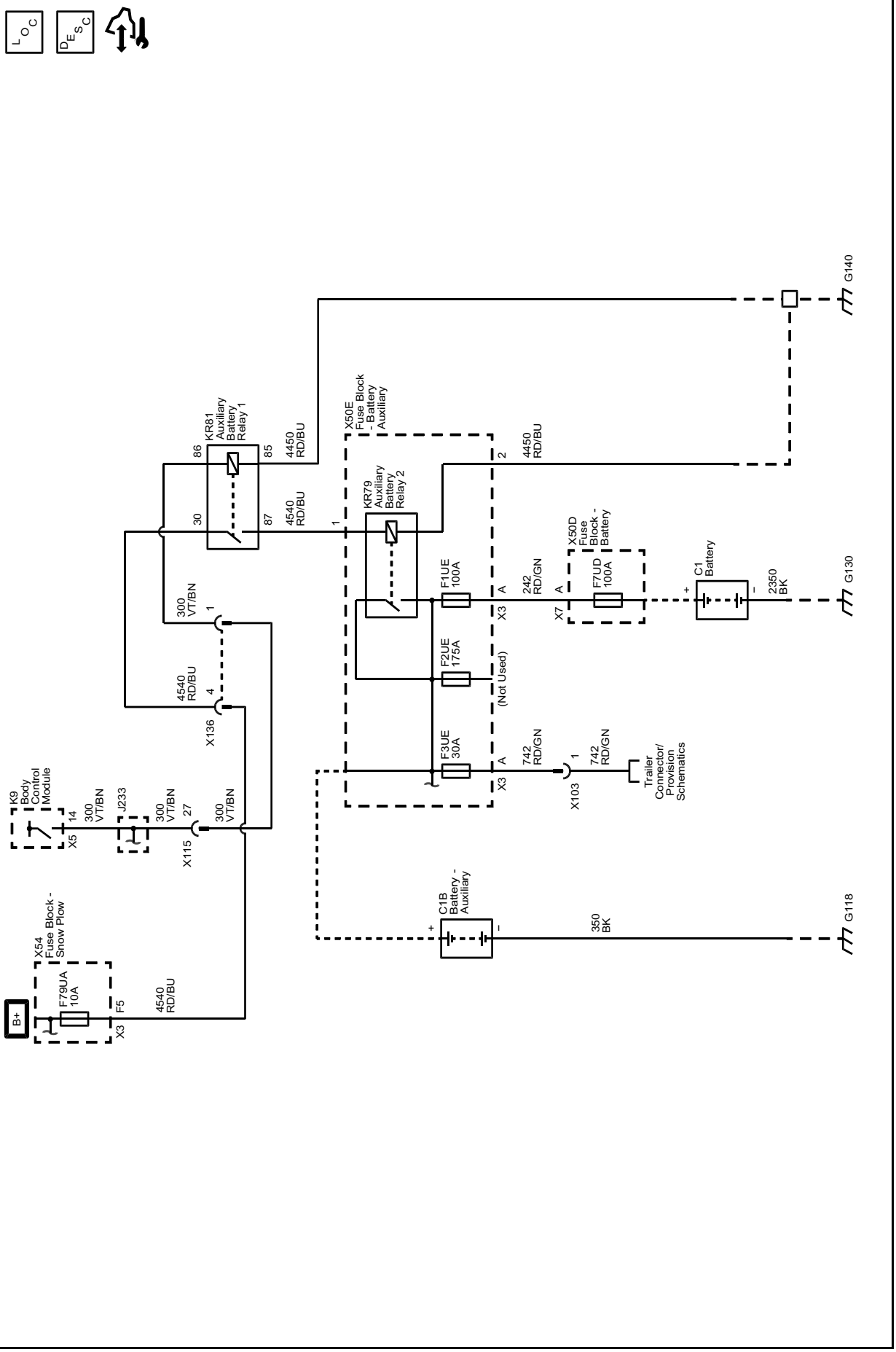

Description and Operation

Battery Description and Operation

Warning: Batteries produce explosive gases, contain corrosive acid, and supply levels of electrical current high enough to cause burns. Therefore, to reduce the risk of personal injury when working near a battery:

- ***Always shield your eyes and avoid leaning over the battery whenever possible.***
- ***Do not expose the battery to open flames or sparks.***
- ***Do not allow the battery electrolyte to contact the eyes or the skin. Flush immediately and thoroughly any contacted areas with water and get medical help.***
- ***Follow each step of the jump starting procedure in order.***
- ***Treat both the booster and the discharged batteries carefully when using the jumper cables.***

Batteries that are no longer wanted must be disposed of by an approved battery recycler and must never be thrown in the trash or sent to a landfill.

Batteries that are not part of the vehicle itself, not the battery under the hood, must only be transported on public streets for business purposes via approved hazardous material transportation procedures.

Battery storage, charging and testing facilities in repair shops must meet various requirements for ventilation, safety equipment, material segregation, etc.

The maintenance free battery is standard. There are no vent plugs in the cover. The battery is completely sealed except for 2 small vent holes in the side. These vent holes allow the small amount of gas that is produced in the battery to escape.

The battery has 3 functions as a major source of energy:

- Engine cranking
- Voltage stabilizer
- Alternate source of energy with generator overload

Battery Low Start Vehicle Message

The body control module (BCM) monitors battery positive voltage to determine battery state of charge. If one or more of the BCM battery positive voltage terminals measure less than approximately 11.6V compared to the BCM ground circuits, this message will display and four chimes may sound. Start the vehicle immediately. If the vehicle is not started and the battery continues to discharge, the climate controls, heated seats, and audio systems will shut off and the vehicle may require a jump start. These systems will function again after the vehicle is started.

Battery Ratings

A battery has 2 ratings:

- Cold cranking amperage
- Amperage hours

When a battery is replaced use a battery with similar ratings. See battery specification label on the original battery.

Amperage Hours

The amperage hour rating tells you how much amperage is available when discharged evenly over a 20 hour period. The amperage hour rating is cumulative, so in order to know how many constant amperage the battery will output for 20 h, you have to divide the amperage hour rating by 20. Example: If a battery has an amperage hour rating of 74, dividing by 20 = 3.75. Such a battery can carry a 3.75 A load for 20 hours before dropping to 10.5 V. (10.5 V is the fully discharged level, at which point the battery needs to be recharged.) A battery with an amperage hour rating of 55 will carry a 2.75 A load for 20 hours before dropping to 10.5 V.

Cold Cranking Amperage

The cold cranking amperage is an indication of the ability of the battery to crank the engine at cold temperatures. The cold cranking amperage rating is the minimum amperage the battery must maintain for 30 seconds at −18°C (0°F) while maintaining at least 7.2 V. See battery label for the cold cranking amperage rating of this battery.

Charging System Description and Operation

Electrical Power Management Overview

The electrical power management system is designed to monitor and control the charging system and send diagnostic messages to alert the driver of possible problems with the battery and generator. This electrical power management system primarily utilizes existing on-board computer capability to maximize the effectiveness of the generator, to manage the load, improve battery state-of-charge and life, and minimize the system's impact on fuel economy. The electrical power management system performs 3 functions:

- Monitor the battery voltage and estimate the battery condition
- Take corrective actions by boosting idle speeds, and adjusting the regulated voltage
- Perform diagnostics and driver notification

The battery condition is estimated during ignition/vehicle off and during ignition/vehicle on. During ignition/vehicle off the state-of-charge of the battery is determined by measuring the open-circuit voltage. The state-of-charge is a function of the acid concentration and the internal resistance of the battery, and is estimated by reading the battery open circuit voltage when the battery has been at rest for several hours.

Any time the ignition/vehicle is on, the vehicle algorithm continuously estimates battery state-of-charge based on adjusted net amp hours, battery capacity, initial state-of-charge, and calculated temperature.

While the engine is running, the battery degree of discharge is primarily determined by the integrated battery current sensor, to obtain net amp hours.

In addition, the electrical power management function is designed to perform regulated voltage control to improve battery state-of-charge, battery life, and fuel economy. This is accomplished by using knowledge of the battery state-of-charge and temperature to set the charging voltage to an optimum battery voltage level for recharging without detriment to battery life.

Charging System Components

Generator

The engine drive belt drives the generator. When the rotor is spun, it induces an alternating current (AC) into the stator windings. The AC voltage is then sent through a series of diodes for rectification. The rectified voltage has been converted into a direct current (DC) for use by the vehicles electrical system to maintain electrical loads and the battery charge. The voltage regulator integral to the generator controls the output of the generator; It is not serviceable. The voltage regulator controls the amount of current provided to the rotor. If the generator has field control circuit fault, the generator defaults to an output voltage of 13.8 V.

The generator is serviced as a complete assembly. If there is a diagnosed fault in the generator, it must be replaced as an assembly.

Generator Pulley

The pulley drives the Generator via the engine drive belt. There are 2 types of pulleys:

1. Conventional solid Pulley which is bolted to the Generator stator shaft. This Pulley can be serviced separately.

2. One Way Clutch Pulley or Overrunning Alternator Decoupler Pulley allows the Generator to spin freely when the engine rapidly slows down on sudden deceleration. This part is not serviceable and the Generator needs to be replaced as an assembly.

Body Control Module (BCM)

The BCM communicates with the Engine Control Module (ECM) and the instrument cluster for electrical power management operation. The BCM determines the output of the generator and sends the information to the ECM for control of the generator turn on signal circuit. It monitors the generator field duty cycle signal circuit information sent from the ECM for control of the generator. It monitors the battery current sensor, the battery positive voltage circuit, and estimates battery temperature to determine battery state of charge. The BCM also performs idle boost.

Battery Current Sensor (if applicable)

The Battery Current Sensor is a serviceable component that is connected to the negative battery cable at the battery. The battery current sensor is a 3-wire hall effect current sensor. The battery current sensor monitors the battery current. It directly inputs to the BCM. It creates a 5 volt Pulse Width Modulation (PWM) signal of 128 Hz with a duty cycle of 0–100%. Normal duty cycle is between 5–95%. Between 0–5% and 95–100% are for diagnostic purposes.

Battery Sensor Module (if applicable)

The BCM monitors the Battery Sensor Module for battery state of current, state of health, and battery charge via serial data. If the battery is determined to be in poor state of health or having a low state of charge, the BCM will not allow the ECM to perform an auto-stop.

Engine Control Module (ECM)

When the engine is running, the generator turn-on signal is sent to the generator from the ECM, turning on the regulator. The generator's voltage regulator controls current to the rotor, thereby controlling the output voltage. The rotor current is proportional to the electrical pulse width supplied by the regulator. When the engine is started, the regulator senses generator rotation by detecting AC voltage at the stator through an internal wire. Once the engine is running, the regulator varies the field current by controlling the pulse width. This regulates the generator output voltage for proper battery charging and electrical system operation. The generator field duty terminal is connected internally to the voltage regulator and externally to the ECM. When the voltage regulator detects a charging system problem, it grounds this circuit to signal the ECM that a problem exists. The ECM monitors the generator field duty cycle signal circuit, and receives control decisions based on information from the BCM.

Instrument Cluster

As a means of displaying the charging system functions, some vehicles may be equipped with a voltmeter gauge on the instrument cluster and/or a system voltage display in the driver information center. These will indicate the current vehicle system voltage.

The instrument cluster also provides customer notification if there is a concern with the charging system. There are two means of notification: a charge indicator on the instrument cluster and/or a service system message displayed on the Driver Information Center (DIC) if equipped.

Charging System Block Diagram

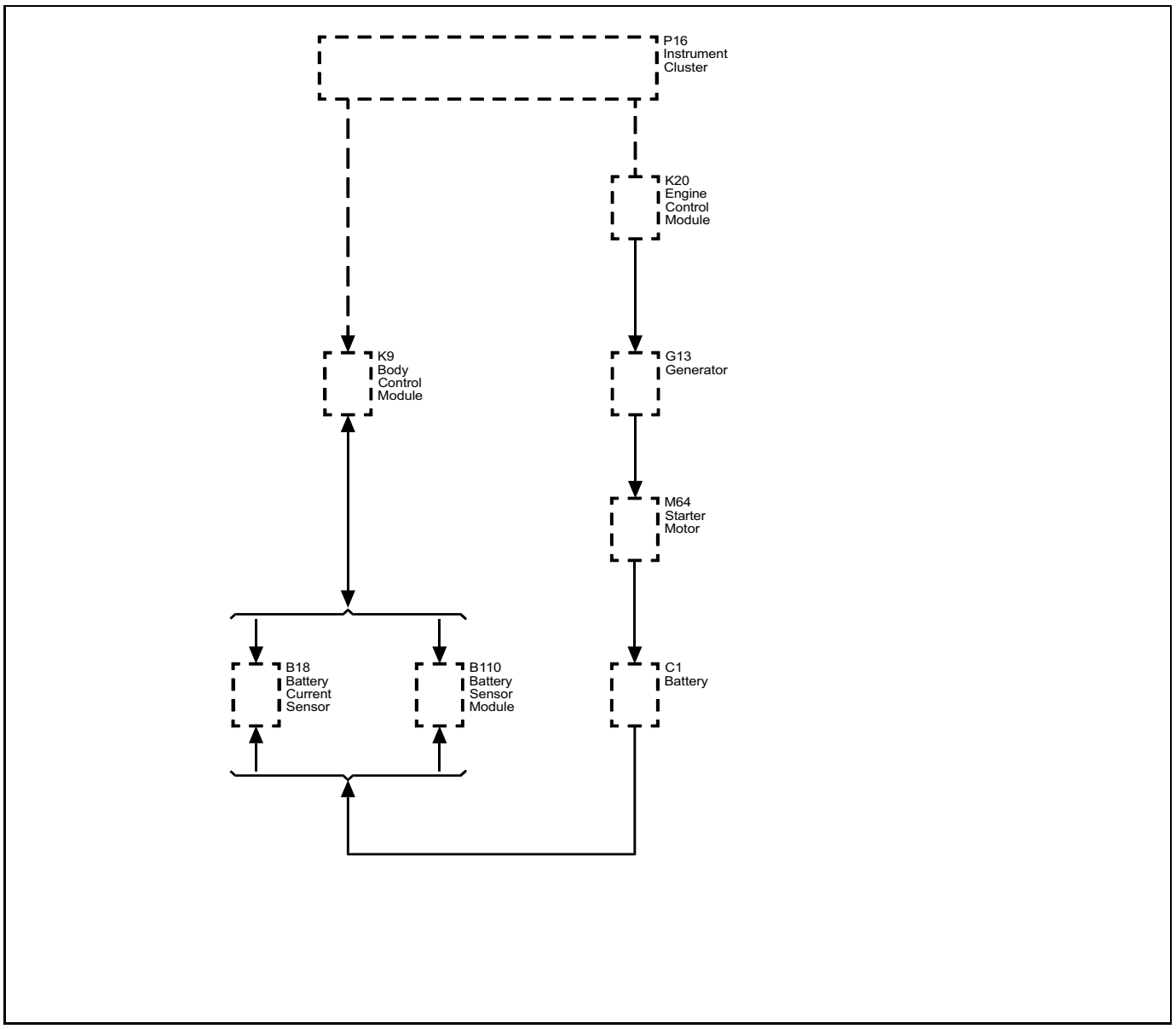

3603724

Charging System Operation

The purpose of the charging system is to maintain the battery charge and vehicle loads. There are 6 modes of operation and they include:

- Battery Sulfation Mode
- Charge Mode
- Fuel Economy Mode
- Head lamp Mode
- Start Up Mode
- Voltage Reduction Mode

The ECM Controls the Generator through the generator turn–on signal circuit, also known as the Generator L-terminal. The ECM monitors the generator performance though the Generator field duty cycle signal circuit, also known as the generator F-terminal.

The Generator turn–on signal (Generator L-terminal) is a Pulse Width Modulation (PWM) signal of 128 Hz with a duty cycle of 0–100%. Normal duty cycle is between 5–95%. 0–5% and 95–100% are for diagnostic purposes, with 0–5% monitoring for an open circuit and 95–100% monitoring for a short to ground at a fixed 13.8 V. The following table shows the commanded duty cycle and output voltage of the Generator:

Commanded Duty Cycle	Generator Output Voltage (+/- .25 V)
0–5%	13.8 V
10%	11 V
20%	11.56 V
30%	12.13 V
40%	12.69 V
50%	13.25 V
60%	13.81 V
70%	14.38 V
80%	14.94 V

Commanded Duty Cycle	Generator Output Voltage (+/- .25 V)
90%	15.5 V
95–100%	13.8 V

The Generator provides a PWM feedback signal of the Generator voltage output through the Generator field duty cycle signal circuit to the ECM. This information is sent to the Body Control Module (BCM). The Generator field duty cycle signal (Generator F-terminal) is a PWM signal of 60–460 Hz with a duty cycle of 0–100%. Normal duty cycle is between 5–100%. 0–5% is reserved for diagnostic purposes.

As the charging systems works to maintain the battery charge and manage vehicle electrical loads, it is normal for the voltmeter gauge on the instrument cluster or the system voltage displayed in the DIC to fluctuate or change. This does not indicate a malfunction. Depending on the battery state of charge and the vehicle electrical load, these values may be anywhere from 12.5 V to 15.5 V.

Charging System Modes

Battery Sulfation Mode

The BCM will enter this mode when the interpreted Generator output voltage is less than 13.2 V for 45 minutes. When this condition exists the BCM will enter Charge Mode for 2–3 minutes. The BCM will then determine which mode to enter depending on voltage requirements.

Charge Mode

The BCM will enter Charge Mode when ever one of the following conditions are met:

- Windshield wipers are ON for more than 3 s.
- Climate Control Voltage Boost Mode Request is true, as sensed by the HVAC control module via serial data. High speed cooling fan, rear defogger, and HVAC high speed blower operation can cause the BCM to enter the Charge Mode.
- The estimated battery temperature is less than 0° C (32°F).
- Battery State of Charge is less than 80%.
- Vehicle speed is greater than 145 km/h (90 mph)
- A current sensor malfunction exists.
- System voltage is determined to be below 12.56 V

When any one of these conditions is met, the system will set targeted generator output voltage to a charging voltage between 13.9–15.5 V, depending on the battery state of charge and estimated battery temperature.

Fuel Economy Mode

The BCM will enter Fuel Economy Mode when the estimated battery temperature is at least 0°C (32°F) but less than or equal to 80°C (176°F), the calculated battery current is less than 15 A and greater than −8 A, and the battery state-of-charge is greater than or equal to 80%. Its targeted generator output voltage is the open circuit voltage of the battery and can be between 12.5–13.1 V. When fuel economy mode is active, the generator is not charging, only maintaining open circuit battery voltage. The BCM will exit this mode and enter Charge Mode when any of the conditions described above are present.

Headlamp Mode

The BCM will enter Headlamp Mode when ever the head lamps are ON (high or low beams). Voltage will be regulated between 13.9–14.5 V.

Start Up Mode

When the engine is started the BCM sets a targeted generator output voltage of 14.5 V for 30 s.

Tow/Haul Mode (if applicable)

Pressing the Tow/Haul Mode button located on the center stack, the vehicle system voltage is raised and the remote (non-vehicle) battery will be charged. Having the headlamps on will raise the system voltage and if the Tow/Haul button is applied it will not serve any purpose. The voltage is regulated between 13.9-14.5 V.

Instrument Cluster Operation

Charge Indicator Operation

The instrument cluster illuminates the charge indicator and displays a warning message in the driver information center if equipped, when the one or more of the following occurs:

- The ECM detects that the generator output is less than 11 V or greater than 16 V. The instrument cluster receives a serial data message from the ECM requesting illumination.
- The instrument cluster determines that the system voltage is less than 11 V or greater than 16 V for more than 30 s. The instrument cluster receives a serial data message from the BCM indicating there is a system voltage range concern.
- The instrument cluster performs the displays test at the start of each ignition cycle. The indicator illuminates for approximately 3 s.

Driver Information Center Message: BATTERY NOT CHARGING SERVICE CHARGING SYSTEM or SERVICE BATTERY CHARGING SYSTEM

The BCM and the ECM will send a serial data message to the driver information center for the BATTERY NOT CHARGING SERVICE CHARGING SYSTEM or SERVICE BATTERY CHARGING SYSTEM message to be displayed. It is displayed when a charging system DTC is a current DTC. The message is turned off when the conditions for clearing the DTC have been met.

Voltmeter Gauge and/or System Voltage Display (if equipped)

As a means of displaying the charging system functions, some vehicles may be equipped with a voltmeter gauge on the instrument cluster and/or a system voltage display in the driver information center. These will indicate the current vehicle system voltage.

As the charging systems works to maintain the battery charge and manage vehicle electrical loads, it is normal for the voltmeter gauge on the instrument cluster or the system voltage display in the driver information center to fluctuate or change. This does not indicate a

malfunction. Depending on the battery state of charge and the vehicle electrical load, these values may be anywhere from 12.5 V to 15.5 V.

Electrical Power Management Description and Operation

Electrical Power Management

The electrical power management is used to monitor and control the charging system and alert the driver of possible problems within the charging system. The electrical power management system makes the most efficient use of the generator output, improves the battery state-of-charge, extends battery life, and manages system electrical loads.

The load shed operation is a means of reducing electrical loads during a low voltage or low battery state-of-charge condition.

The idle boost operation is a means of improving generator performance during a low voltage or low battery state-of-charge condition.

Each electrical power management function, either idle boost or load shed, is activated in incremental steps. For example, idle boost 1 must be active before idle boost 2 can be active. The criteria used by the body control module (BCM) to regulate electrical power management are outlined below:

Electrical Power Management Block Diagram

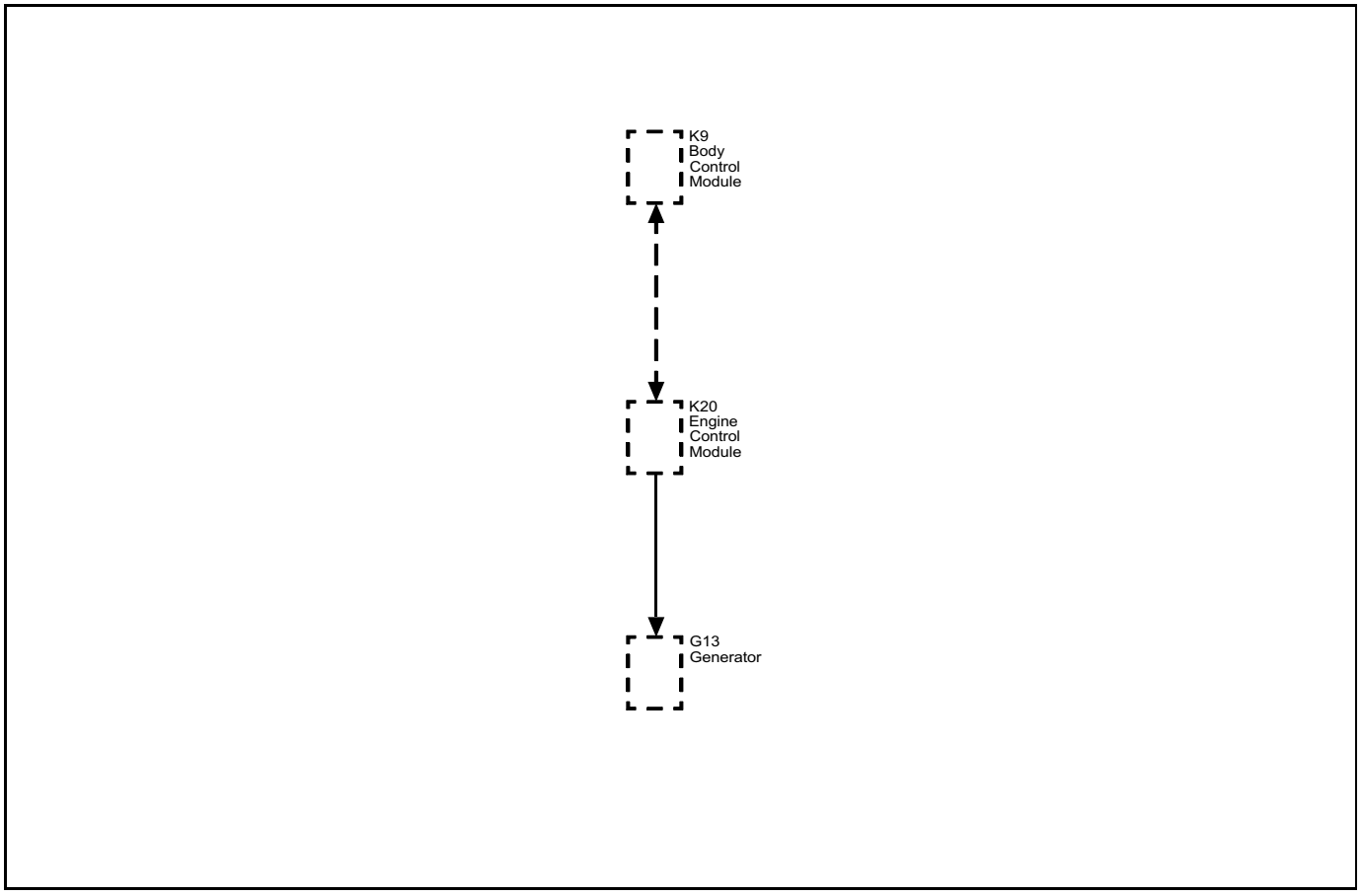

3621782

Idle Boost and Load Shed With Current Sensor

Function	Battery Temperature Calculation	Battery Voltage Calculation	Amp-Hour Calculation	Action Taken
Idle Boost 1 Start	Less Than −15°C (5°F)	Less Than 13 V	—	First level Idle boost requested
Idle Boost 1 Start	—	—	Battery has a net loss greater than 0.6 Ah	First level Idle boost requested
Idle Boost 1 Start	—	Less Than 11 V	—	First level Idle boost requested
Idle Boost 1 End	Greater Than −10°C (14°F)	Greater Than 12 V	Battery has a net loss less than 0.2 Ah	First level Idle boost request cancelled
Idle Boost 2 Start	—	—	Battery has a net loss greater than 1.6 Ah	Second level Idle boost requested
Idle Boost 2 Start	—	Less Than 11 V	—	Second level Idle boost requested
Idle Boost 2 End	—	Greater Than 12 V	Battery has a net loss less than 0.8 Ah	Second level Idle boost request cancelled
Load Shed 1 Start	—	—	Battery has a net loss of 4 Ah	Rear Defrost, Heated Mirrors, Heated Seats, HVAC cycled OFF for 20% of their cycle
Load Shed 1 Start	—	Less Than 11 V	—	Rear Defrost, Heated Mirrors, Heated Seats, HVAC cycled OFF for 20% of their cycle
Load Shed 1 End	—	Greater Than 12 V	Battery has a net loss of less than 2 Ah	Clear Load Shed 1
Idle Boost 3 Start	—	—	Battery has a net loss of 10 Ah	Third level Idle boost requested
Idle Boost 3 Start	—	Less Than 11 V	—	Third level Idle boost requested
Idle Boost 3 End	—	Greater Than 12 V	Battery has a net loss of less than 6.0 Ah	Third level Idle boost request cancelled
Load Shed 2 Start	—	—	Battery has a net loss greater than 12 Ah	Rear Defrost, Heated Mirrors, Heated Seats, HVAC cycled OFF for 50% of their cycle. The BATTERY SAVER ACTIVE message will be displayed on the DIC
Load Shed 2 Start	—	Less Than 11 V	—	Rear Defrost, Heated Mirrors, Heated Seats, HVAC cycled OFF for 50% of their cycle. The BATTERY SAVER ACTIVE message will be displayed on the DIC
Load Shed 2 End	—	Greater Than 12 V	Battery has a net loss of less than 8 Ah	Clear Load Shed 2
Load Shed 3 Start	—	Less Than 11.9 V	Battery has a net loss greater than 20 Ah	Rear Defrost, Heated Mirrors, Heated Seats, HVAC cycled OFF for 100% of their cycle. The BATTERY SAVER ACTIVE message will be displayed on the DIC

Idle Boost and Load Shed With Current Sensor (cont'd)

Function	Battery Temperature Calculation	Battery Voltage Calculation	Amp-Hour Calculation	Action Taken
Load Shed 3 Start	—	Less Than 11 V	—	Rear Defrost, Heated Mirrors, Heated Seats, HVAC cycled OFF for 100% of their cycle. The BATTERY SAVER ACTIVE message will be displayed on the DIC
Load Shed 3 End	—	Greater Than 12.6 V	Battery has a net loss of less than 13 Ah	Clear Load Shed 3

Idle Boost and Load Shed Without Current Sensor (based on battery voltage)

Function	Battery Temperature Calculation	Battery Voltage Calculation	Action Taken
Idle Boost 1 Start	Less Than −15°C (5°F)	Less Than 13 V	First level Idle boost requested
Idle Boost 1 Start	—	Less Than 12.6 V	First level Idle boost requested
Idle Boost 1 End	Greater Than −15°C (5°F)	—	First level Idle boost request cancelled
Idle Boost 1 End	—	Greater Than 13 V	First level Idle boost request cancelled
Idle Boost 2 Start	—	Less Than 12.4 V	Second level Idle boost requested
Idle Boost 2 End	—	Greater Than 12.5 V	Second level Idle boost request cancelled
Load Shed 1 Start	—	Less Than 12.3 V	Rear Defrost, Heated Mirrors, Heated Seats, HVAC cycled OFF for 20% of their cycle
Load Shed 1 End	—	Greater Than 12.4 V	Clear Load Shed 1
Idle Boost 3 Start	—	Less Than 10 V	Third level Idle boost requested
Idle Boost 3 End	—	Greater Than 12.3 V	Third level Idle boost request cancelled
Load Shed 2 Start	—	Less Than 12.1 V	Rear Defrost, Heated Mirrors, Heated Seats, HVAC cycled OFF for 50% of their cycle. The BATTERY SAVER ACTIVE message will be displayed on the DIC
Load Shed 2 End	—	Greater Than 12.2 V	Clear Load Shed 2
Load Shed 3 Start	—	Less Than 11.9 V	Rear Defrost, Heated Mirrors, Heated Seats, HVAC cycled OFF for 100% of their cycle. The BATTERY SAVER ACTIVE message will be displayed on the DIC
Load Shed 3 End	—	Greater Than 12.0 V	Clear Load Shed 3

Load Shed System Description and Operation

Electrical Power Management

The electrical power management is used to monitor and control the charging system and alert the driver of possible problems within the charging system. The electrical power management system makes the most efficient use of the generator output, improves the battery state-of-charge, extends battery life, and manages system electrical loads.

The load shed operation is a means of reducing electrical loads during a low voltage or low battery state-of-charge condition.

The idle boost operation is a means of improving generator performance during a low voltage or low battery state-of-charge condition.

Each electrical power management function, either idle boost or load shed, is discrete. No two functions are active at the same time. Idle boost is activated in incremental steps, idle boost 1 must be active before idle boost 2 can be active. The criteria used by the body control module (BCM) to regulate electrical power management are outlined below:

Function	Battery Temperature Calculation	Battery Voltage Calculation	Amp-Hour Calculation	Action Taken
Idle Boost 1 Start	Less Than −15°C (5°F)	Less Than 13 V	—	First level Idle boost requested
Idle Boost 1 Start	—	—	Battery has a net loss greater than 0.6 AH	First level Idle boost requested
Idle Boost 1 Start	—	Less Than 10.9 V	—	First level Idle boost requested
Idle Boost 1 End	Greater Than −15°C (5°F)	Greater Than −12 V	Battery has a net loss less than 0.2 AH	First level Idle boost request cancelled
Load Shed 1 Start	—	—	Battery has a net loss of 4 AH	Rear Defrost, Heated Mirrors, Heated Seats cycled OFF for 20% of their cycle
Load Shed 1 Start	—	Less Than 10.9 V	—	Rear Defrost, Heated Mirrors, Heated Seats cycled OFF for 20% of their cycle
Load Shed 1 End	—	Greater Than 12 V	Battery has a net loss of less than 2 AH	Clear Load Shed 1
Idle Boost 2 Start	—	—	Battery has a net loss greater than 1.6 AH	Second level Idle boost requested
Idle Boost 2 Start	—	Less Than 10.9 V	—	Second level Idle boost requested
Idle Boost 2 End	—	Greater Than 12 V	Battery has a net loss less than 0.8 AH	Second level Idle boost request cancelled
Idle Boost 3 Start	—	—	Battery has a net loss of 10.0 AH	Third level Idle boost requested
Idle Boost 3 Start	—	Less Than 10.9 V	—	Third level Idle boost requested
Idle Boost 3 End	—	Greater Than 12 V	Battery has a net loss of less than 6.0 AH	Third level Idle boost request cancelled
Load Shed 2 Start	—	Less Than 10.9 V	Battery has a net loss greater than 12 AH	Rear Defrost, Heated Mirrors, Heated Seats cycled OFF for 50% of their cycle. The BATTERY SAVER ACTIVE message will be displayed on the DIC
Load Shed 2 Start	—	Less Than 10.9 V	—	Rear Defrost, Heated Mirrors, Heated Seats cycled OFF for 50% of their cycle. The BATTERY SAVER ACTIVE message will be displayed on the DIC
Load Shed 2 End	—	Greater Than 12.6 V	Battery has a net loss of less than 10.5 AH	Clear Load Shed 2

Function	Battery Temperature Calculation	Battery Voltage Calculation	Amp-Hour Calculation	Action Taken
Load Shed 3 Start	—	Less Than 11.9 V	Battery has a net loss greater than 20 AH	Rear Defrost, Heated Mirrors, Heated Seats cycled OFF for 100% of their cycle. The BATTERY SAVER ACTIVE message will be displayed on the DIC
Load Shed 3 End	—	Greater Than 12.6 V	Battery has a net loss of less than 15 AH	Clear Load Shed 3

Starting System Description and Operation

Starter Motor Operation (Without KL9)

The starter motors are non-repairable. They have pole pieces that are arranged around the armature. Both solenoid windings are energized. The pull-in winding circuit is completed to the ground through the starter motor. The windings work together magnetically to pull and hold in the plunger. The plunger moves the shift lever. This action causes the starter drive assembly to rotate on the armature shaft spline as it engages with the flywheel ring gear on the engine. Moving at the same time, the plunger also closes the solenoid switch contacts in the starter solenoid. Full battery voltage is applied directly to the starter motor and it cranks the engine.

As soon as the solenoid switch contacts close, current stops flowing thorough the pull-in winding because battery voltage is applied to both ends of the windings. The hold-in winding remains energized. Its magnetic field is strong enough to hold the plunger, shift lever, starter drive assembly, and solenoid switch contacts in place to continue cranking the engine. When the engine starts, pinion overrun protects the armature from excessive speed until the switch is opened.

When the crank signal is removed, the starter relay opens and battery voltage is removed from the starter solenoid S terminal. Current flows from the motor contacts through both windings to the ground at the end of the hold-in winding. However, the direction of the current flow through the pull-in winding is now opposite the direction of the current flow when the winding was first energized.

The magnetic fields of the pull-in and hold-in windings now oppose one another. This action of the windings, along with the help of the return spring, causes the starter drive assembly to disengage and the solenoid switch contacts to open simultaneously. As soon as the contacts open, the starter circuit is turned off.

Enhanced Starter Motor Operation (KL9)

The Engine Stop/Start system in GM vehicles automatically turns off the engine when the vehicle comes to a stop under certain driving conditions, and can quickly restart the engine in about 0.3 seconds when commanded to do so.

In order to smoothly restart the engine as quickly as possible while managing the greater number of engine starts, the Stop/Start system uses an enhanced starter motor that operates differently from a conventional starter motor. It has a high performance electric motor and a stronger pinion engagement mechanism than a conventional starter. It also has independent control of the pinion and motor.

The enhanced starter motor continues using the typical pinion engagement mechanism with a starter solenoid that drives the pinion gear to engage or disengage the flywheel of the engine. When engaged, the starter motor can rotate the engine flywheel and, in turn, the crankshaft.

On the enhanced starter of a Stop/Start system the operation is done in two separate functions inside the solenoid, Starter Motor and Pinion Actuator. Each function controlled individually by the ECM. There are two separate relays to control the two separate parts of the enhanced solenoid:

- KR27 Starter Motor Relay
- KR27C Starter Pinion Actuator Relay

The two individually-controlled relays allow for smooth engagement of the pinion gear into the flywheel with minimum noise and wear.

When the vehicle is coming to a stop, just before the engine stops rotating (at approximately 50 RPM) during stop/start operation, the ECM energizes the Starter Pinion Solenoid Actuator Relay to easily push the pinion gear into the flywheel gear without gear clash. (Fig. 8) When the engine stops rotating during Stop/Start operation (Auto Stop mode), the starter pinion gear is fully engaged, ready for the starter motor to become energized to quickly start the engine again.

A secondary need for the starter pinion to be driven into the flywheel gear before the engine stops rotating is to address quickly changing demands on the engine. For example, when a driver is slowing nearly to a stop — and the Stop/Start system is preparing for Auto Stop mode — but suddenly decides to release the brake and accelerate

In this situation, the engine has already stopped rotating, or nearly so. A conventional starter cannot restart the engine until the engine has completely stopped. However, with the enhanced starter, the starter pinion gear is fully engaged and ready to begin rotating the engine even before it fully stops turning. Otherwise, the engine would actually have to stop rotating before the pinion can engage smoothly to begin a restart.

To prevent a lag in engine operation, the ECM uses predictive speed matching of the flywheel gear speed and the pinion gear speed to engage the pinion gear into the flywheel gear without gear clash before the

engine fully stops. By predicting how long it takes the starter motor to spin up using an algorithm, the pinion gear speed can be matched to the flywheel gear speed. The result is an almost instant restart that is possible at extremely low engine speeds.

Circuit Description

Keyless Start

When the Ignition mode switch is placed in the crank position, a discrete signal is supplied to the body control module (BCM) notifying it that the ignition is in the crank position. The BCM then sends a serial data message to the engine control module (ECM) that crank has been requested. The ECM then verifies that the clutch is fully depressed or the automatic transmission is in Park/Neutral. If it is, the ECM then supplies 12 V to the control circuit of the starter relay. When this occurs, battery positive voltage is supplied through the switch side of the crank relay to the S terminal of the starter solenoid.

Key Start

When the ignition switch is placed in the Start position, a discrete signal is supplied to the body control module (BCM) notifying it that the ignition is in the Start position. The BCM then sends a message to the engine control module (ECM) notifying it that CRANK has been requested. The ECM verifies that the transmission is in Park or Neutral. If it is, the ECM then supplies 12 V to the control circuit of the crank relay. When this occurs, battery positive voltage is supplied through the switch side of the crank relay to the S terminal of the starter solenoid.

Starting System Block Diagram

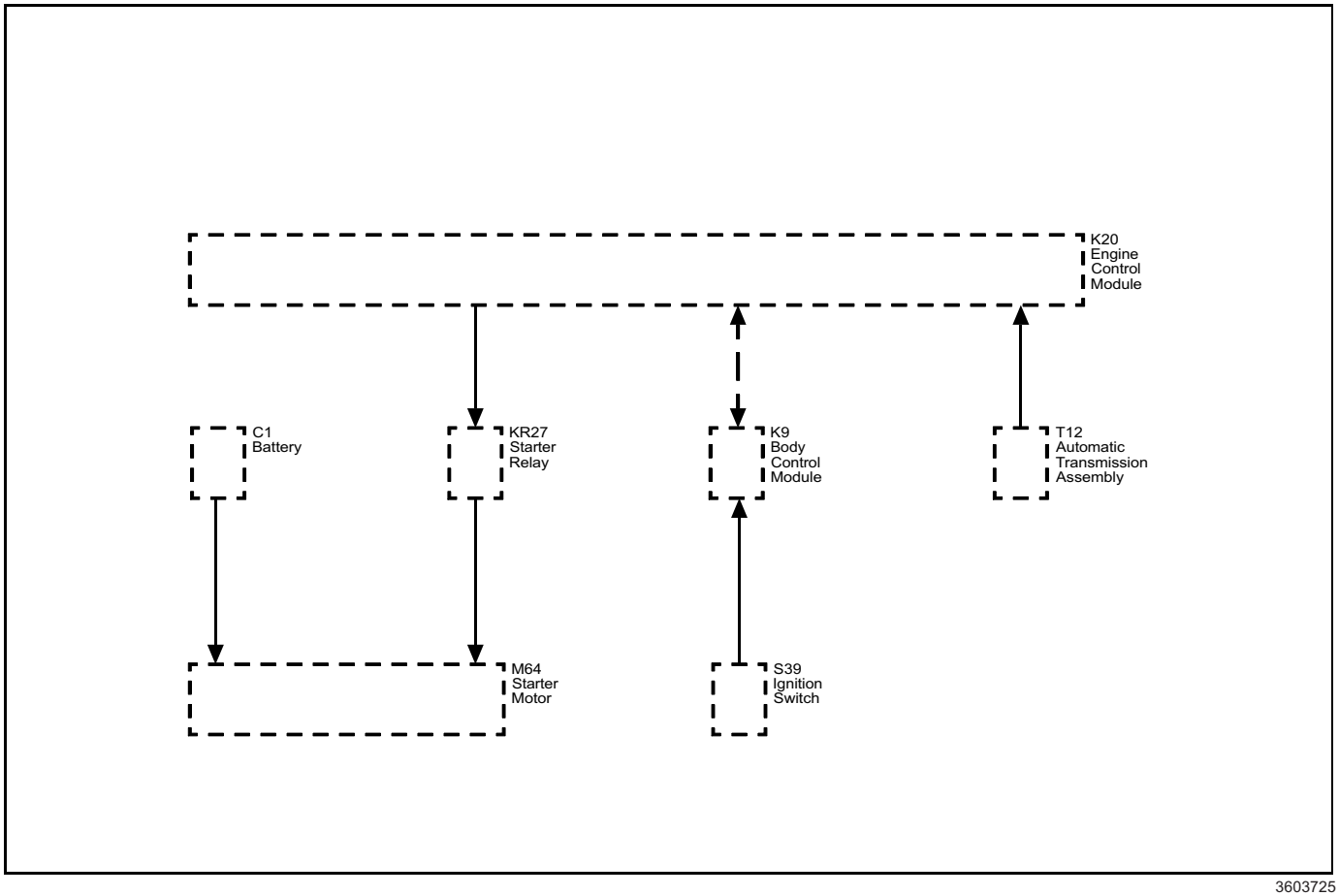

3603725

BLANK

Section 6

HVAC

Heating, Ventilation, and Air Conditioning 6-3
Description and Operation 6-3
Heating and Air Conditioning System Description and Operation 6-3
HVAC - Automatic 6-4
Schematic and Routing Diagrams 6-4
HVAC Schematics ((CJ2)) 6-5
Description and Operation 6-10
Automatic HVAC Description and Operation 6-10
HVAC - Manual 6-14
Schematic and Routing Diagrams 6-14
HVAC Schematics ((C67)) 6-15
Description and Operation 6-20
Manual HVAC Description and Operation 6-20

BLANK

Heating, Ventilation, and Air Conditioning

Description and Operation

Heating and Air Conditioning System Description and Operation

Engine Coolant

Engine coolant is the key element of the heating system. The engine thermostat controls the normal engine operating coolant temperature. Coolant pumped out of the engine enters the heater core through the inlet heater hose. The air flowing through the HVAC module absorbs the heat of the coolant flowing through the heater core. The coolant then exits the heater core through the heater outlet hose and returns back to the engine block.

Auxiliary Electric Heater

Vehicles equipped with a diesel engine come with an auxiliary electric heater. This 12V electrically powered heating element is positioned directly behind the regular coolant flow based heater core in the HVAC case. All airflow goes through the regular heater core first, and then through the auxiliary electric heater. The auxiliary electric heater is active when the outside ambient temperature is below **8°C (46°F)** , the coolant temperature is below **75°C (167°F)** , and the temperature air mix door is near the full hot position.

A/C Cycle

Refrigerant is the key element in an air conditioning system. R-134a is a very low temperature gases that can transfer the undesirable heat from the passenger compartment to the outside air.

The A/C compressor is belt driven and operates when the magnetic clutch is engaged. The compressor builds pressure in the A/C system. Compressing the refrigerant also adds heat to the refrigerant. The refrigerant is discharged from the compressor through the discharge hose, and forced to flow to the condenser and then through the balance of the A/C system. The A/C system is mechanically protected with the use of a high pressure relief valve. If the high pressure A/C switch were to fail or if the refrigerant system becomes restricted and refrigerant pressure continued to rise, the high pressure relief will pop open and release refrigerant from the system.

Compressed refrigerant enters the condenser in a high temperature, high pressure vapor state. As the refrigerant flows through the condenser, the heat of the refrigerant is transferred to the ambient air passing through the condenser. Cooling the refrigerant causes the refrigerant to condense and change from a vapor to a liquid state.

The condenser is located in front of the radiator for maximum heat transfer. The condenser is made of aluminum tubing and aluminum cooling fins, which allows rapid heat transfer for the refrigerant. The semi-cooled liquid refrigerant exits the condenser and flows through the liquid line, to the TXV.

The TXV is located at the evaporator inlet. The TXV is the dividing point for the high and the low pressure sides of the A/C system. As the refrigerant passes through the TXV, the refrigerant is lowered. Due to the pressure differential on the liquid refrigerant, the refrigerant will begin to boil at the TXV. The TXV also meters the amount of liquid refrigerant that can flow into the evaporator.

Refrigerant exiting the TXV flows into the evaporator core in a low pressure, liquid state. Ambient air is drawn through the HVAC module and passes through the evaporator core. Warm and moist air will cause the liquid refrigerant to boil inside the evaporator core.

The boiling refrigerant absorbs heat from the ambient air and draws moisture onto the evaporator. The refrigerant exits the evaporator through the suction line and back to the compressor, in a vapor state. This completes the A/C cycle of heat removal. At the compressor, the refrigerant is compressed again and the cycle of heat removal is repeated.

The conditioned air is distributed through the HVAC module for passenger comfort. The moisture removed from the passenger compartment will also change form, or condense, and is discharged from the HVAC module as water.

HVAC - Automatic

Schematic and Routing Diagrams

HVAC Schematics ((CJ2)) (HVAC Module Power, Ground, Serial Data, and Blower Motor)

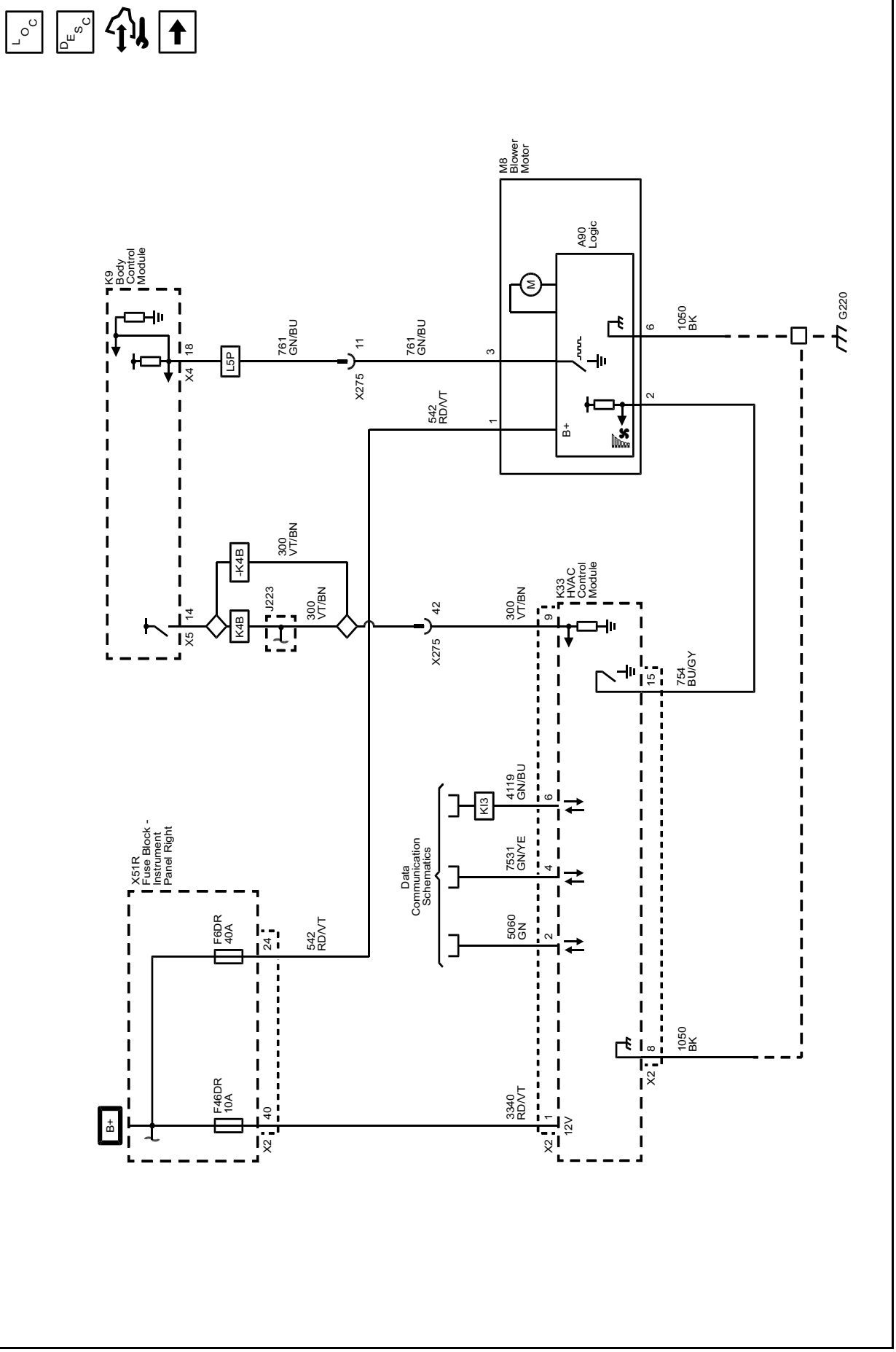

HVAC Schematics ((CJ2)) (HVAC Controls)

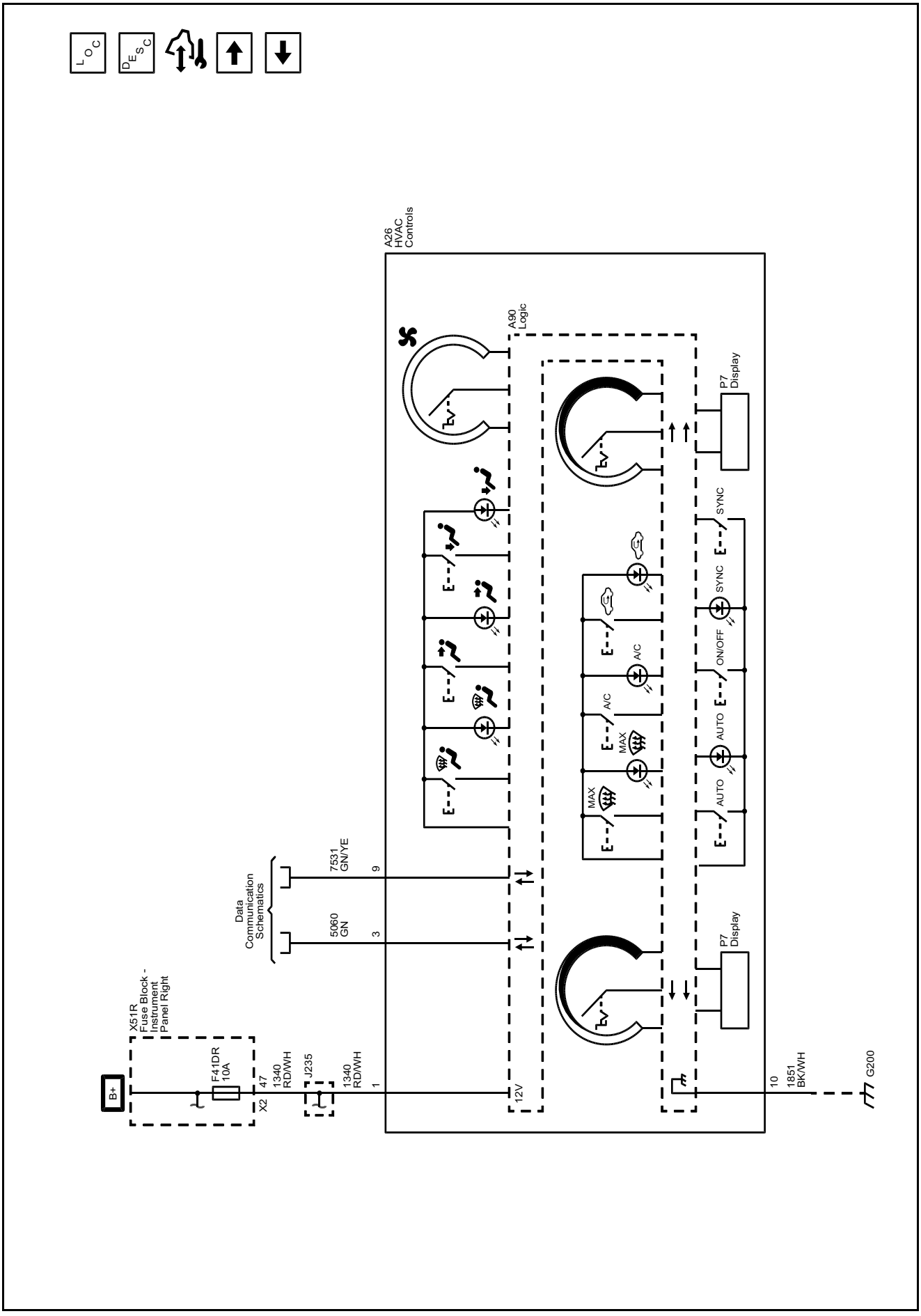

HVAC Schematics ((CJ2)) (Temperature and Mode)

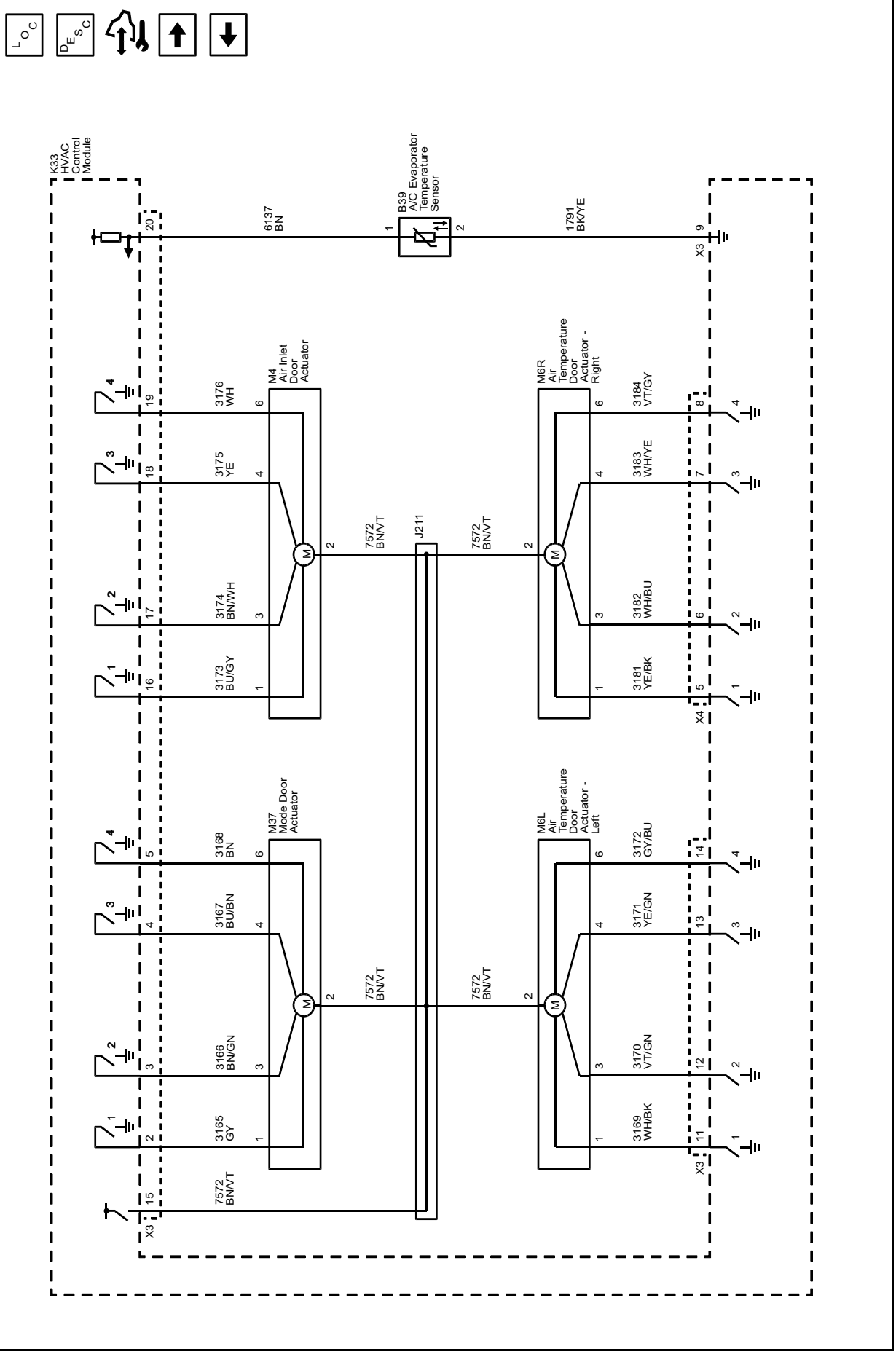

HVAC Schematics ((CJ2)) (Sunload Sensor)

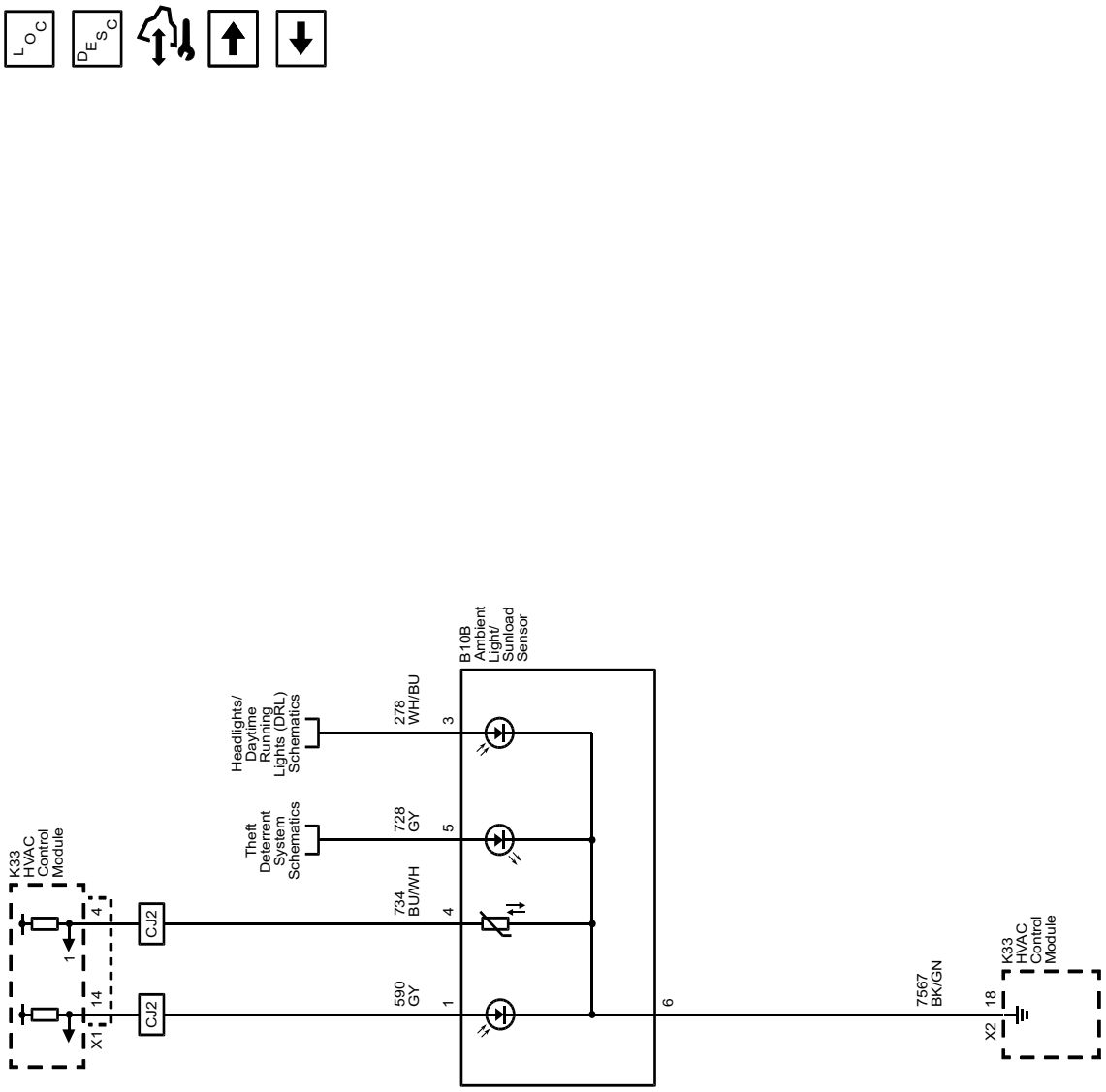

5215858

HVAC Schematics ((CJ2)) (A/C Compressor Controls)

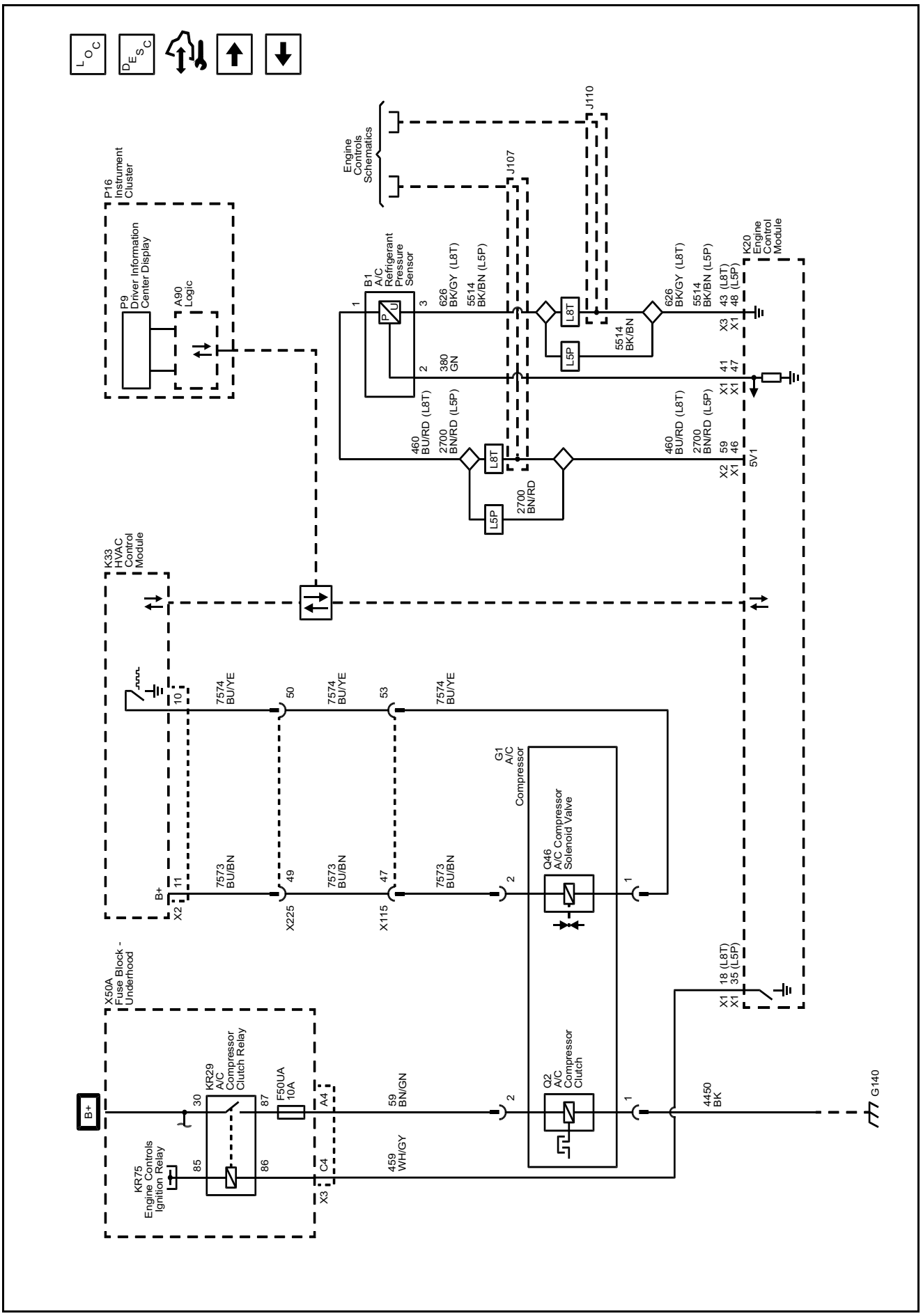

Description and Operation

Automatic HVAC Description and Operation

The air temperature and the air delivery description and operation are divided into eight areas:

- HVAC Control Components
- Air Speed
- Air Delivery
- Heating and A/C Operation
- Recirculation Operation
- Automatic Operation
- Engine Coolant and A/C System Refrigerant

HVAC Control Components

HVAC Controls

The HVAC controls contains all switches, buttons, and dials which are required to control the functions of the HVAC system and serve as interface between the operator and the HVAC control module. The selected values are passed to the HVAC control module via LIN-Bus.

HVAC Control Module

The HVAC control module is a GMLAN device that interfaces between the operator and the HVAC system to maintain and control desired air temperature and air distribution settings. The battery positive voltage circuit provides power that the HVAC control module uses for keep alive memory. If the battery positive voltage circuit loses power, all HVAC DTCs and settings will be erased from keep alive memory. The body control module (BCM), which is the vehicle mode master, provides a device ON-Signal. The HVAC control module provides blower, air delivery mode and air temperature settings.

The HVAC control module supports the following features:

Feature	Availability
Afterblow	Available if reprogrammed by the technician
Purge	Yes
Personalization	Yes
Actuator Calibration	Yes

Actuators

Doors in the HVAC case assembly are used to control air flow. The HVAC control module operates the doors through the use of actuators, with one actuator being used for each door. The system has the following air control doors and associated actuators: mode, temperature, right temperature (CJ2), and recirculation.

Each actuator used in the system is a 5-wire stepper motor. The HVAC control module supplies a 12 V reference voltage to the stepper motor and energizes the 4 stepper motor coils with a pulsed ground signal. The stepper motor moves the associated air control door into the calculated position in order to reach the selected position. The null point of the stepper motor will be calibrated, if the stepper motor is new. When the stepper motor is calibrated, the HVAC control module can drive the applicable coil to reach exactly the desired position of the air control door.

Blower Motor and Control Module

The blower motor control module varies the speed of the blower motor by varying the voltage to the motor. A battery voltage circuit, ground circuit, and speed request signal circuit from the HVAC control module allow the blower motor control module to operate. The HVAC control module provides a low side pulse width modulation (PWM) signal to the blower motor control module to request a specific motor speed. The blower motor control module translates the PWM signal and drives the motor accordingly.

The blower motor control module has a signal wire used to output a speed signal. The signal is monitored by the BCM, and the value is sent to the ECM via serial data. The ECM monitors the blower motor speed to modify the total commanded engine coolant flow rate, which is a percentage of available coolant flow sent to the heater core for occupant comfort and windshield defrosting. When the HVAC Blower Speed is determined to be zero, the ECM disables the heater core coolant flow to optimize engine coolant flow for fuel economy and emissions.

Evaporator Temperature Sensor

The evaporator temperature sensor is a 2-wire negative temperature co-efficient thermistor. The sensor operates within a temperature range of −40 to +85°C (−40 to +185°F). The sensor is installed at the evaporator and measures its temperature. If the temperature drops under 3°C (38°F), the compressor will be switched off in order to prevent evaporator icing.

A/C Refrigerant Pressure Sensor

The A/C refrigerant pressure sensor is a 3-wire piezoelectric pressure transducer. A 5 V reference voltage, low reference, and signal circuits enable the sensor to operate. The A/C pressure signal can be between 0.2–4.8 V. When the A/C refrigerant pressure is low, the signal value is near 0 V. When the A/C refrigerant pressure is high, the signal value is near 5 V. The engine control module (ECM) converts the voltage signal to a pressure value. When pressure is too high or too low, the ECM will not allow the A/C compressor clutch to engage.

A/C Compressor

The A/C compressor uses a conventional belt driven magnetic clutch to engage and mechanically turn the compressor. When the A/C switch is pressed, the HVAC control module sends an A/C request message to the ECM via serial data. If specific criteria is met, the ECM then grounds the A/C compressor clutch relay control circuit, which will switch the A/C compressor clutch relay. With the relay contacts closed, battery voltage is supplied to the permanently grounded A/C compressor clutch. The A/C compressor clutch will then be activated.

This A/C system utilizes a variable displacement solenoid valve to alter the amount of displacement created by the turning of the compressor. The HVAC control module provides both battery voltage and a pulse width modulated ground to the variable

displacement solenoid valve. When the A/C switch is pressed, the HVAC control module grounds the variable displacement solenoid using a (PWM) signal in order to determine the amount of compressor displacement. The performance of the A/C compressor is regulated based on cooling load.

Ambient Light/Sunload Sensor

The sunload sensor is connected to ground and to a 12 V clocked power supply through the HVAC control module. This clocked power supply is to power the sensor electronics and to work as a clock generator to the sunload sensor micro controller. The sensor uses a pulse signal for data identification and transferring the sun intensity measurement. At each positive transition from the clocked supply input, the sunload sensor micro controller will shift channels enabling new intensity measurement on the signal output to the HVAC control module. The signal voltage varies between 0–4 V.

The passenger compartment temperature sensor is a negative temperature co-efficient thermistor. A signal and low reference circuit enables the sensor to operate. As the air temperature increases, the sensor resistance decreases. The sensor signal varies between 0–5 V.

Bright or high intensity light causes the vehicles interior temperature to increase. The HVAC system compensates for the increased temperature by diverting additional cool air into the vehicle.

Windshield Temperature and Inside Moisture Sensor

The windshield temperature and inside moisture sensor includes the relative humidity sensor, windshield temperature sensor and humidity sensing element temperature sensor all in one assembly.

This sensor assembly provides information about:

- Relative humidity level at the windshield inside the vehicle
- Temperature of the windshield inside the vehicle
- Temperature of the humidity sensor element

Air Speed

The blower control switch is part of the HVAC controls. The selected value of the blower switch position is sent to the HVAC control module via LIN-Bus. The HVAC control module provides a low side pulse width modulation (PWM) signal to the blower motor control module to request a specific motor speed. The blower motor translates the PWM signal and drives the motor accordingly.

Afterblow

Afterblow is a feature that dries the evaporator core by operating the blower motor after the engine is turned OFF. This reduces the amount of microbial growth that can create undesirable odors. The vehicle does not come equipped with the afterblow feature turned ON. If the afterblow feature is required due to an odor concern, it must be enabled using the scan tool Afterblow configuration function.

After the HVAC control module has been programmed for afterblow, the following conditions must be met for afterblow to operate:

- The engine has been turned OFF for at least 30 minutes.
- The ambient air temperature is at least 21°C (70°F).
- The A/C compressor operated for more than 2 minutes before shut down.
- The system voltage is at least 12 volts.

Once the above conditions have been met, the blower motor will perform the following sequence up to 5 times. This could last up to an hour:

1. The blower motor will be OFF for 7–11 minutes.
2. The blower motor will RUN for 25–30 seconds.

Air Delivery

The HVAC control module controls the distribution of air by the use of recirculation and mode door actuator. The modes that may be selected are:

- Defrost
- Defog
- Panel
- Floor

The desired air distribution mode can be selected with the air distribution switches at the HVAC control. The HVAC control delivers the values to the HVAC control module via LIN-Bus. The HVAC control module controls the mode door actuator so that it drives the door to the calculated position. Depending on the position of the door, air is distributed through various ducts leading to the outlets in the dash. Turning the mode door to the defrost position, the HVAC control module will move the recirculation actuator to outside air, reducing window fogging. When defrost is selected, the blower motor will be activated, regardless of the coolant temperature. The HVAC control module enables a high volume of air delivered to the front defrost vents. A/C is available in all modes.

The rear window defogger does not affect the HVAC system.

Heating and A/C Operation

The purpose of the heating and A/C system is to provide heated and cooled air to the interior of the vehicle. The A/C system will also remove humidity from the interior and reduce windshield fogging. Regardless of the temperature setting, the following can affect the rate that the HVAC system can achieve the desired temperature:

- Recirculation actuator setting
- Difference between inside and desired temperature
- Blower motor speed setting
- Mode setting

When the A/C switch is pressed, the HVAC controls sends a signal to the HVAC control module via LIN-Bus. The HVAC control module evaluates this signal and sends an A/C request signal to the ECM via CAN-Bus. The ECM checks all preconditions before releasing and if all conditions are met sends a release signal back to the HVAC control module. The ECM will

provide a ground for the A/C compressor relay enabling it to close its internal contacts to send battery voltage to the A/C compressor clutch coil. The A/C compressor clutch will be activated. The performance of the A/C compressor is regulated via a variable A/C compressor solenoid valve. The HVAC control module supplies battery voltage to the A/C compressor. When the A/C switch is pressed, the HVAC control module provides a pulse width modulation (PWM) signal to the A/C compressor solenoid valve in order to command the performance of the A/C compressor.

The following conditions must be met in order to activate the A/C compressor:

- Battery voltage is between 9–18 V
- Engine coolant temperature is less than 124°C (255°F)
- Engine speed is greater than 600 RPM
- Engine speed is less than 5 500 RPM
- A/C high side pressure is between 269–2 929 kPa (39–425 PSI)
- Throttle position is less than 100%
- Evaporator temperature is greater than 3°C (38°F)
- ECM does not detect immoderate torque load
- ECM does not detect insufficient idle quality
- The ambient temperature is above 1°C (34°F)

The sensor information is used by the ECM to determine the following:

- The A/C high side pressure
- An A/C system load on the engine
- An immoderate A/C high side pressure
- The heat load at the A/C condenser

The air streams into the passenger compartment through the heater core and the evaporator core. The air temperature actuator drives the mixed air door to direct the airflow. If the interior temperature should be increased, the mixed air door is put into the position in which more air streams through the heater core. If the interior temperature should be decreased, the mixed air door is put into the position in which more air streams through the evaporator core.

Recirculation Operation

The recirculation switch is integrated into the HVAC control. The selected recirculation setting is sent to the HVAC control module via LIN-Bus. The HVAC control module controls the air intake using the recirculation actuator. In recirculation mode the recirculation door is positioned to block outside air from entering and circulate the air within the vehicle. In outside air mode the recirculation door is positioned to route outside air into the vehicle.

Recirculation is only available if the defrost mode is not active. When the defrost mode is active, the recirculation actuator positions the recirculation door so that outside air is circulated to the windshield to reduce fogging.

In automatic mode the values of the sensors are used as inputs for the HVAC control module to calculate the fog risk on passenger compartment side of the windshield. The A/C compressor and the defrost mode may activated to prevent or remove fog on the passenger compartment side of the windshield.

Automatic Operation

In automatic operation, the HVAC control module maintains the comfort level inside of the vehicle by controlling the A/C compressor clutch, the blower motor, the air temperature actuators, mode actuator and recirculation actuator.

To put the HVAC system in automatic mode, the following is required:

1. The auto switch must be activated.
2. The air temperature switch must not be in either the full hot or full cold position.

Once the desired temperature is reached, the blower motor, mode, recirculation and temperature actuators automatically adjust to maintain the temperature selected. The HVAC control module performs the following functions to maintain the desired air temperature:

- Monitors the following sensors:
  - Ambient air temperature sensor
  - Ambient light/sunload sensor
  - Windshield temperature and inside moisture sensor
- Regulate the blower motor speed
- Position the air temperature actuators
- Position the mode door actuator
- Position the recirculation actuator
- Request A/C operation
- Control of the A/C compressor

When the warmest position is selected in automatic operation the blower speed will increase gradually until the vehicle reaches normal operating temperature. When normal operating temperature is reached the blower stays on high speed and the air temperature actuators stays in the full heat position.

When the coldest position is selected in automatic operation the blower stays on high and the air temperature actuators stay in full cold position. The mode actuator remains in the panel position and the recirculation actuator will remain in the recirculation position.

Under cold ambient temperatures, the automatic HVAC system provides heat in the most efficient manner. The operator can select an extreme temperature setting but the system will not warm the vehicle any faster. Under warm ambient temperatures, the automatic HVAC system also provides air conditioning in the most efficient manner. Selecting an extreme cool temperature will not cool the vehicle any faster.

Electric Auxiliary Heater (C32)

Some models are equipped with an auxiliary electric heater to assist in warming the passenger compartment when the engine coolant has not sufficiently warmed to operating temperature. The heater is a 12 V positive temperature coefficient heating element located in the HVAC case just downstream of the traditional heater core. The HVAC control module will activate it when the outside temperature is less than approximately 8°C (46°F), the engine coolant temperature is less than approximately 75°C (167°F), and the temperature blend door is commanded to the full hot position.

Engine Coolant and A/C System Refrigerant

For information on engine coolant, coolant flow, A/C refrigerant, and the A/C refrigerant cycle, refer to *Heating and Air Conditioning System Description and Operation on page 6-3*.

HVAC - Manual

Schematic and Routing Diagrams

HVAC Schematics ((C67)) (HVAC Module Power, Ground, Serial Data, and Blower Motor)

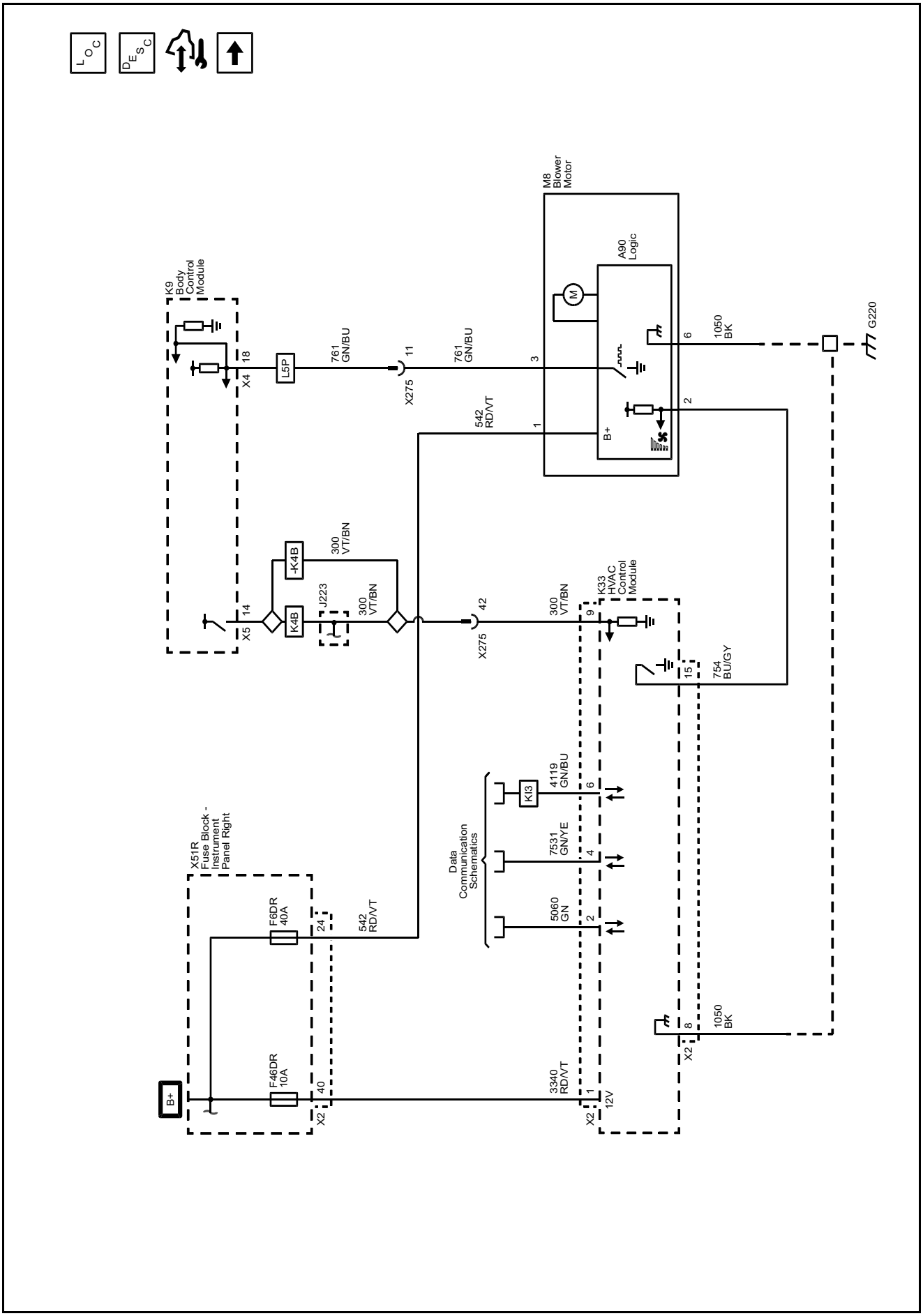

HVAC Schematics ((C67)) (HVAC Controls)

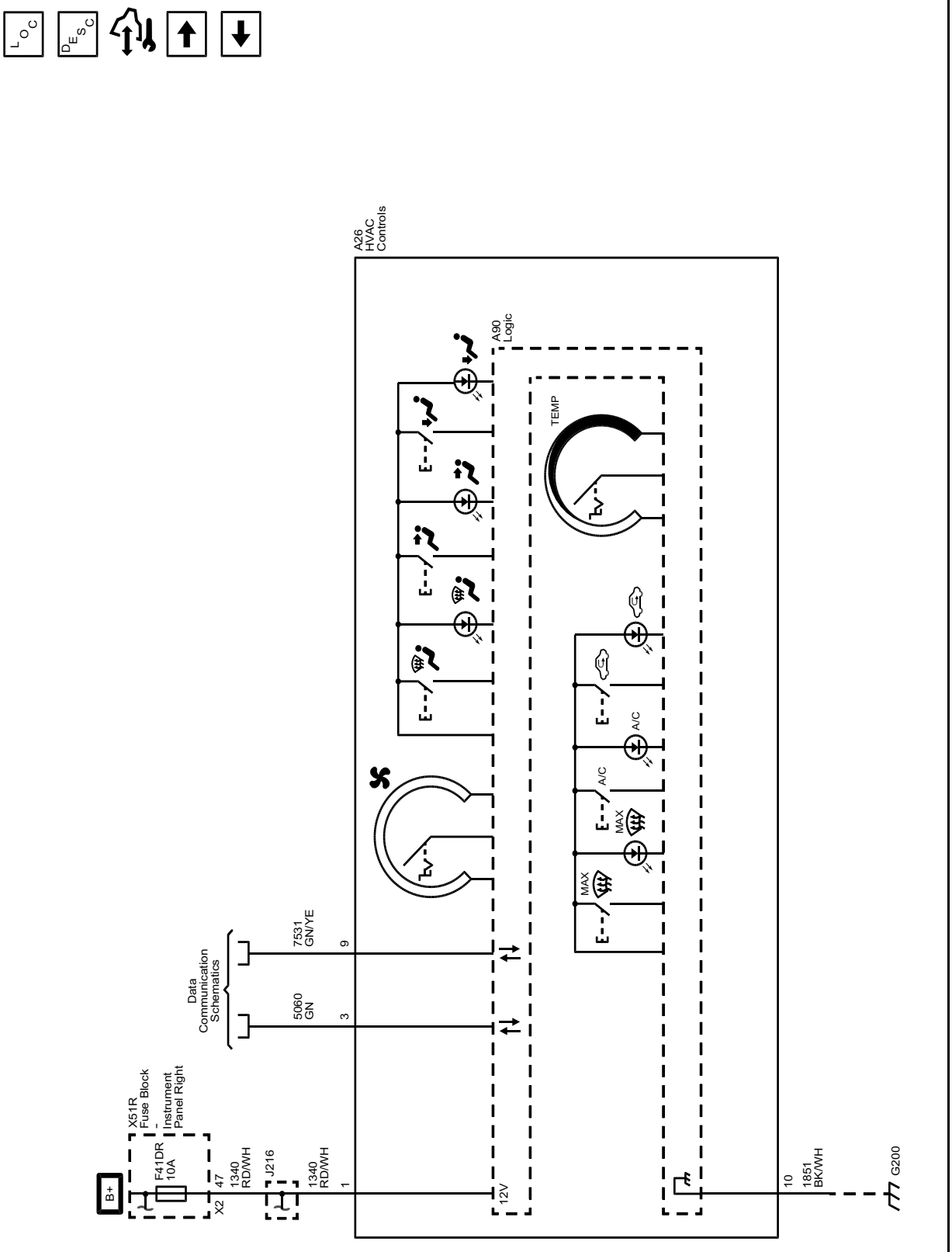

HVAC Schematics ((C67)) (Temperature and Mode)

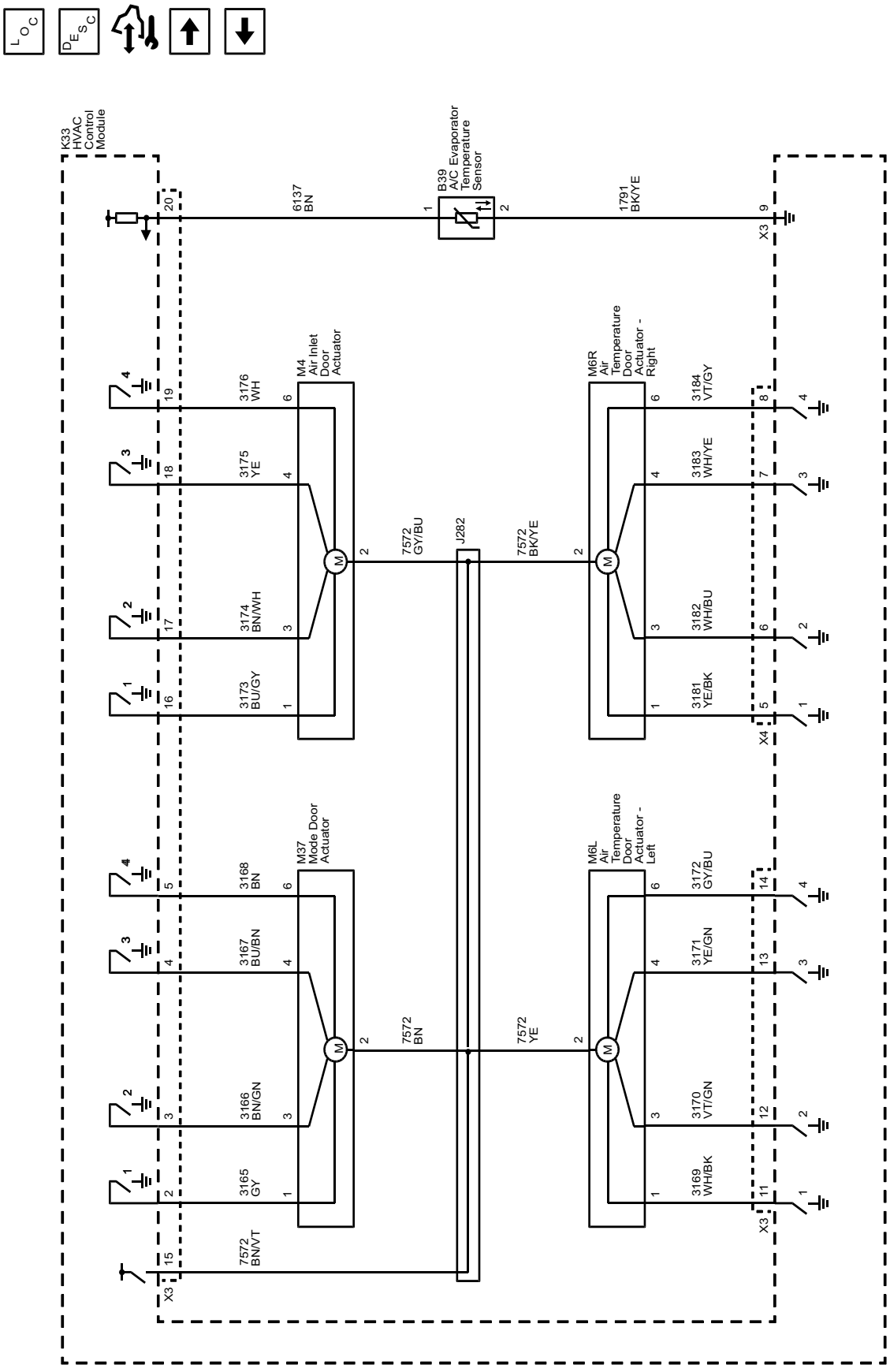

HVAC Schematics ((C67)) (A/C Compressor Controls)

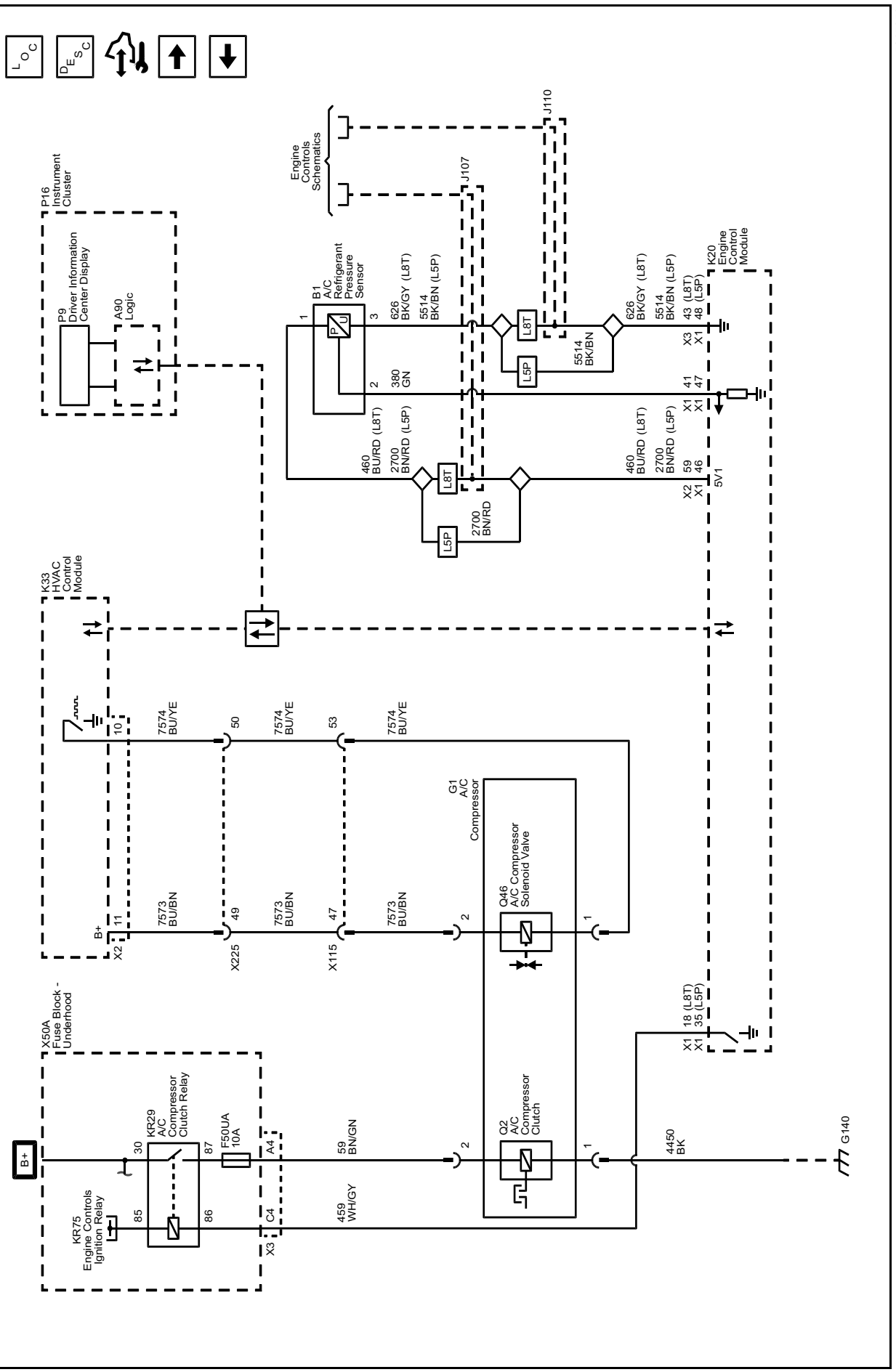

HVAC Schematics ((C67)) (Auxiliary Heater (C32))

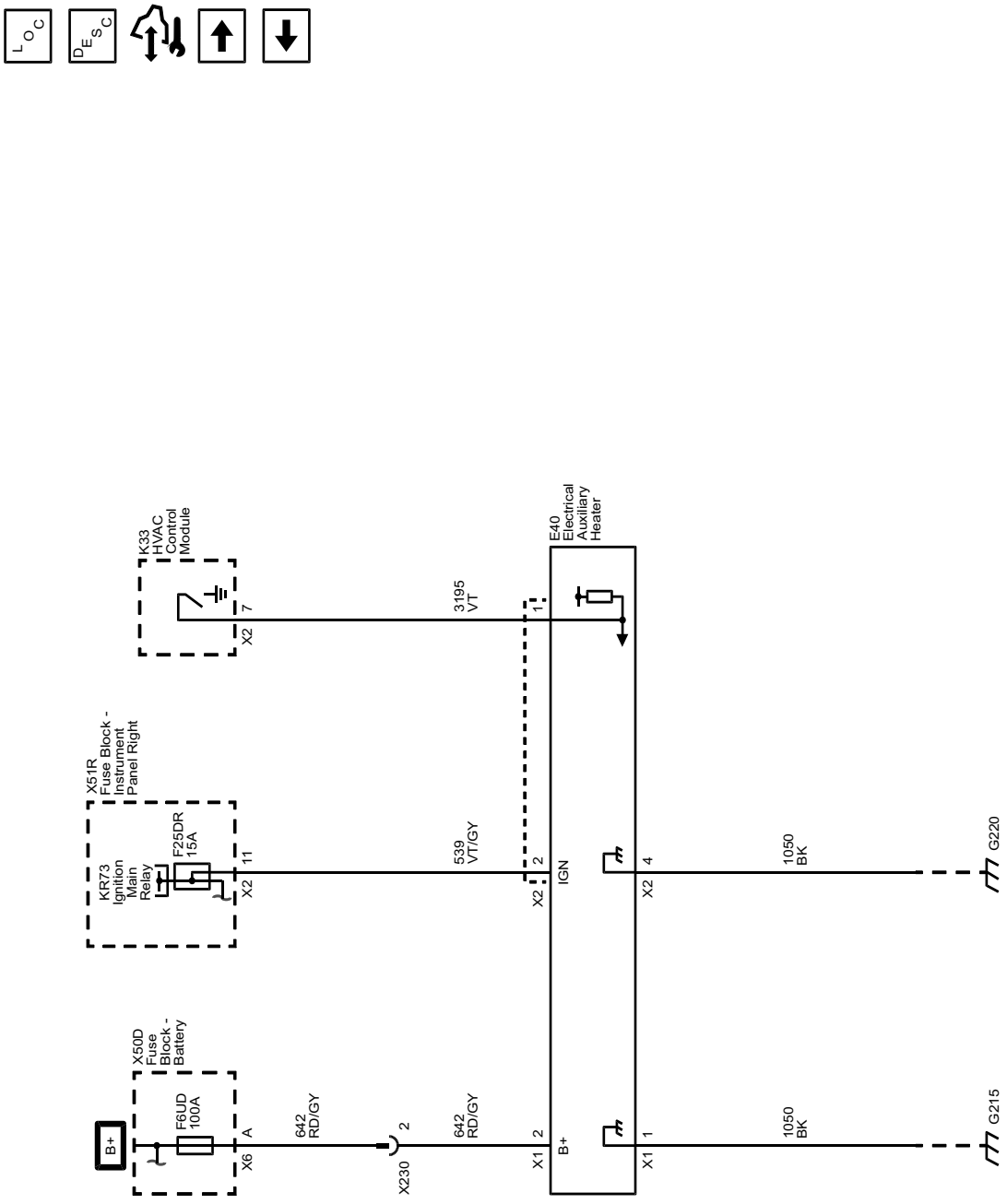

5215854

Description and Operation

Manual HVAC Description and Operation

The air temperature and the air delivery description and operation are divided into seven areas:

- HVAC Control Components
- Air Speed
- Air Delivery
- Heating and A/C Operation
- Recirculation Operation
- Engine Coolant and A/C System Refrigerant

HVAC Control Components

HVAC Controls

The HVAC controls contains all switches, buttons, and dials which are required to control the functions of the HVAC system and serve as interface between the operator and the HVAC control module. The selected values are passed to the HVAC control module via LIN-Bus.

HVAC Control Module

The HVAC control module is a GMLAN device that interfaces between the operator and the HVAC system to maintain and control desired air temperature and air distribution settings. The battery positive voltage circuit provides power that the HVAC control module uses for keep alive memory. If the battery positive voltage circuit loses power, all HVAC DTCs and settings will be erased from keep alive memory. The body control module (BCM), which is the vehicle mode master, provides a device ON-Signal. The HVAC control module provides blower, air delivery mode and air temperature settings.

The HVAC control module supports the following features:

Feature	Availability
Afterblow	Yes
Personalization	Yes
Actuator Calibration	Yes

Actuators

Doors in the HVAC case assembly are used to control air flow. The HVAC control module operates the doors through the use of actuators, with one actuator being used for each door. The system has the following air control doors and associated actuators: mode, temperature, and recirculation.

Each actuator used in the system is a 5-wire stepper motor. The HVAC control module supplies a 12 V reference voltage to the stepper motor and energizes the 4 stepper motor coils with a pulsed ground signal. The stepper motor moves the associated air control door into the calculated position in order to reach the selected position. The null point of the stepper motor will be calibrated, if the stepper motor is new. When the stepper motor is calibrated, the HVAC control module can drive the applicable coil to reach exactly the desired position of the air control door.

Blower Motor and Control Module

The blower motor control module varies the speed of the blower motor by varying the voltage to the motor. A battery voltage circuit, ground circuit, and speed request signal circuit from the HVAC control module allow the blower motor control module to operate. The HVAC control module provides a low side pulse width modulation (PWM) signal to the blower motor control module to request a specific motor speed. The blower motor control module translates the PWM signal and drives the motor accordingly.

The blower motor control module has a signal wire used to output a speed signal. The signal is monitored by the BCM, and the value is sent to the ECM via serial data. The ECM monitors the blower motor speed to modify the total commanded engine coolant flow rate, which is a percentage of available coolant flow sent to the heater core for occupant comfort and windshield defrosting. When the HVAC Blower Speed is determined to be zero, the ECM disables the heater core coolant flow to optimize engine coolant flow for fuel economy and emissions.

Evaporator Temperature Sensor

The evaporator temperature sensor is a 2-wire negative temperature co-efficient thermistor. The sensor operates within a temperature range of −40 to +85°C (−40 to +185°F). The sensor is installed at the evaporator and measures its temperature. If the temperature drops under 3°C (38°F), the compressor will be switched off in order to prevent evaporator icing.

A/C Refrigerant Pressure Sensor

The A/C refrigerant pressure sensor is a 3-wire piezoelectric pressure transducer. A 5 V reference voltage, low reference, and signal circuits enable the sensor to operate. The A/C pressure signal can be between 0.2–4.8 V. When the A/C refrigerant pressure is low, the signal value is near 0 V. When the A/C refrigerant pressure is high, the signal value is near 5 V. The engine control module (ECM) converts the voltage signal to a pressure value. When pressure is too high or too low, the ECM will not allow the A/C compressor clutch to engage.

A/C Compressor

The A/C compressor uses a conventional belt driven magnetic clutch to engage and mechanically turn the compressor. When the A/C switch is pressed, the HVAC control module sends an A/C request message to the ECM via serial data. If specific criteria is met, the ECM then grounds the A/C compressor clutch relay control circuit, which will switch the A/C compressor clutch relay. With the relay contacts closed, battery voltage is supplied to the permanently grounded A/C compressor clutch. The A/C compressor clutch will then be activated.

This A/C system utilizes a variable displacement solenoid valve to alter the amount of displacement created by the turning of the compressor. The HVAC control module provides both battery voltage and a pulse width modulated ground to the variable displacement solenoid valve. When the A/C switch is pressed, the HVAC control module grounds the variable displacement solenoid using a (PWM) signal in

order to determine the amount of compressor displacement. The performance of the A/C compressor is regulated based on cooling load.

Air Speed

The blower control switch is part of the HVAC controls. The selected value of the blower switch position is sent to the HVAC control module via LIN-Bus. The HVAC control module provides a low side pulse width modulation (PWM) signal to the blower motor control module to request a specific motor speed. The blower motor translates the PWM signal and drives the motor accordingly.

Afterblow

Afterblow is a feature that dries the evaporator core by operating the blower motor after the engine is turned OFF. This reduces the amount of microbial growth that can create undesirable odors. The vehicle does not come equipped with the afterblow feature turned ON. If the afterblow feature is required due to an odor concern, it must be enabled using the scan tool Afterblow configuration function.

After the HVAC control module has been programmed for afterblow, the following conditions must be met for afterblow to operate:

- The engine has been turned OFF for at least 30 minutes.
- The ambient air temperature is at least 21°C (70°F).
- The A/C compressor operated for more than 2 minutes before shut down.
- The system voltage is at least 12 volts.

Once the above conditions have been met, the blower motor will perform the following sequence up to 5 times. This could last up to an hour:

1. The blower motor will be OFF for 7–11 minutes.
2. The blower motor will RUN for 25–30 seconds.

Air Delivery

The HVAC control module controls the distribution of air by the use of recirculation and mode actuator. The modes that may be selected are:

- Defrost
- Defog
- Panel
- Floor

The desired air distribution mode can be selected with the air distribution switches at the HVAC controls. The HVAC controls delivers the values to the HVAC control module via LIN-Bus. The HVAC control module controls the air distribution actuator so that it drives the door to the calculated position. Depending on the position of the door, air is distributed through various ducts leading to the outlets in the dash. Turning the mode door to the defrost position, the HVAC control module will move the recirculation actuator to outside air, reducing window fogging. When defrost is selected, the blower motor will be activated, regardless of the coolant temperature. The HVAC control module enables a high volume of air delivered to the front defrost vents. A/C is available in all modes.

The rear window defogger does not affect the HVAC system.

Heating and A/C Operation

The purpose of the heating and A/C system is to provide heated and cooled air to the interior of the vehicle. The A/C system will also remove humidity from the interior and reduce windshield fogging. Regardless of the temperature setting, the following can affect the rate that the HVAC system can achieve the desired temperature:

- Recirculation actuator setting
- Difference between inside and desired temperature
- Blower motor speed setting
- Mode setting

When the A/C switch is pressed, the HVAC controls sends a signal to the HVAC control module via LIN-Bus. The HVAC control module evaluates this signal and sends an A/C request signal to the ECM via CAN-Bus. The ECM checks all preconditions before releasing and if all conditions are met sends a release signal back to the HVAC control module. The ECM will provide a ground for the A/C compressor relay enabling it to close its internal contacts to send battery voltage to the A/C compressor clutch coil. The A/C compressor clutch will be activated. The performance of the A/C compressor is regulated via a variable A/C compressor solenoid valve. The HVAC control module supplies battery voltage to the A/C compressor. When the A/C switch is pressed, the HVAC control module provides a pulse width modulation (PWM) signal to the A/C compressor solenoid valve in order to command the performance of the A/C compressor.

The following conditions must be met in order to activate the A/C compressor:

- Battery voltage is between 9–18 V
- Engine coolant temperature is less than 124°C (255°F)
- Engine speed is greater than 600 RPM
- Engine speed is less than 5 500 RPM
- A/C high side pressure is between 269–2 929 kPa (39–425 PSI)
- Throttle position is less than 100%
- Evaporator temperature is greater than 3°C (38°F)
- ECM does not detect immoderate torque load
- ECM does not detect insufficient idle quality
- The ambient temperature is above 1°C (34°F)

The sensor information is used by the ECM to determine the following:

- The A/C high side pressure
- An A/C system load on the engine
- An immoderate A/C high side pressure
- The heat load at the A/C condenser

The air streams into the passenger compartment through the heater core and the evaporator core. The air temperature actuator drives the mixed air door to induce the airflow. If the interior temperature should be increased, the mixed air door is put into the position in which more air streams through the heater core. If the

interior temperature should be decreased, the mixed air door is put into the position in which more air streams through the evaporator core.

Recirculation Operation

The recirculation switch is integrated into the HVAC control. The selected recirculation setting is sent to the HVAC control module via LIN-Bus. The HVAC control module controls the air intake using the recirculation actuator. In recirculation mode the recirculation door is positioned to block outside air from entering and circulate the air within the vehicle. In outside air mode the recirculation door is positioned to route outside air into the vehicle.

Recirculation is only available if the defrost mode is not active. When the defrost mode is active, the recirculation actuator positions the recirculation door so that outside air is circulated to the windshield to reduce fogging.

Electric Auxiliary Heater

Some models are equipped with an auxiliary electric heater to assist in warming the passenger compartment when the engine coolant has not sufficiently warmed to operating temperature. The heater is a 12 V positive temperature coefficient heating element located in the HVAC case just downstream of the traditional heater core. The HVAC control module will activate it when the outside temperature is less than approximately 8°C (46°F), the engine coolant temperature is less than approximately 75°C (167°F), and the temperature blend door is commanded to the full hot position.

Engine Coolant and A/C System Refrigerant

For information on engine coolant, coolant flow, A/C refrigerant, and the A/C refrigerant cycle, refer to *Heating and Air Conditioning System Description and Operation on page 6-3*.

Section 7

Power and Signal Distribution

Data Communications 7-3
Schematic and Routing Diagrams 7-3
Data Communication Schematics 7-4
Body Control System Schematics 7-18
Description and Operation 7-22
Data Link Communications Description and Operation 7-22

Electrical Component and Inline Harness Connector End Views 7-27
Visual Identification 7-27
Electrical Center Identification Views 7-27
Component Connector End Views 7-67
Inline Harness Connector End Views 7-399

Power Outlets 7-604
Schematic and Routing Diagrams 7-604
Cigar Lighter/Power Outlet Schematics 7-605
Description and Operation 7-612
Power Outlets Description and Operation 7-612

Wiring Systems and Power Management 7-615
Schematic and Routing Diagrams 7-615
Power Distribution Schematics 7-616
Power Moding Schematics 7-647
Ignition Lock Schematics 7-652
Ground Distribution Schematics 7-653
Upfitter Provision Schematics 7-668
Trailer Connector/Provision Schematics 7-671
Description and Operation 7-678
Power Mode Description and Operation 7-678
Retained Accessory Power Description and Operation 7-680
Trailering Description and Operation 7-681

BLANK

Data Communications

Schematic and Routing Diagrams

Data Communication Schematics (Data Link Connector and Serial Data Gateway Module Power and Ground)

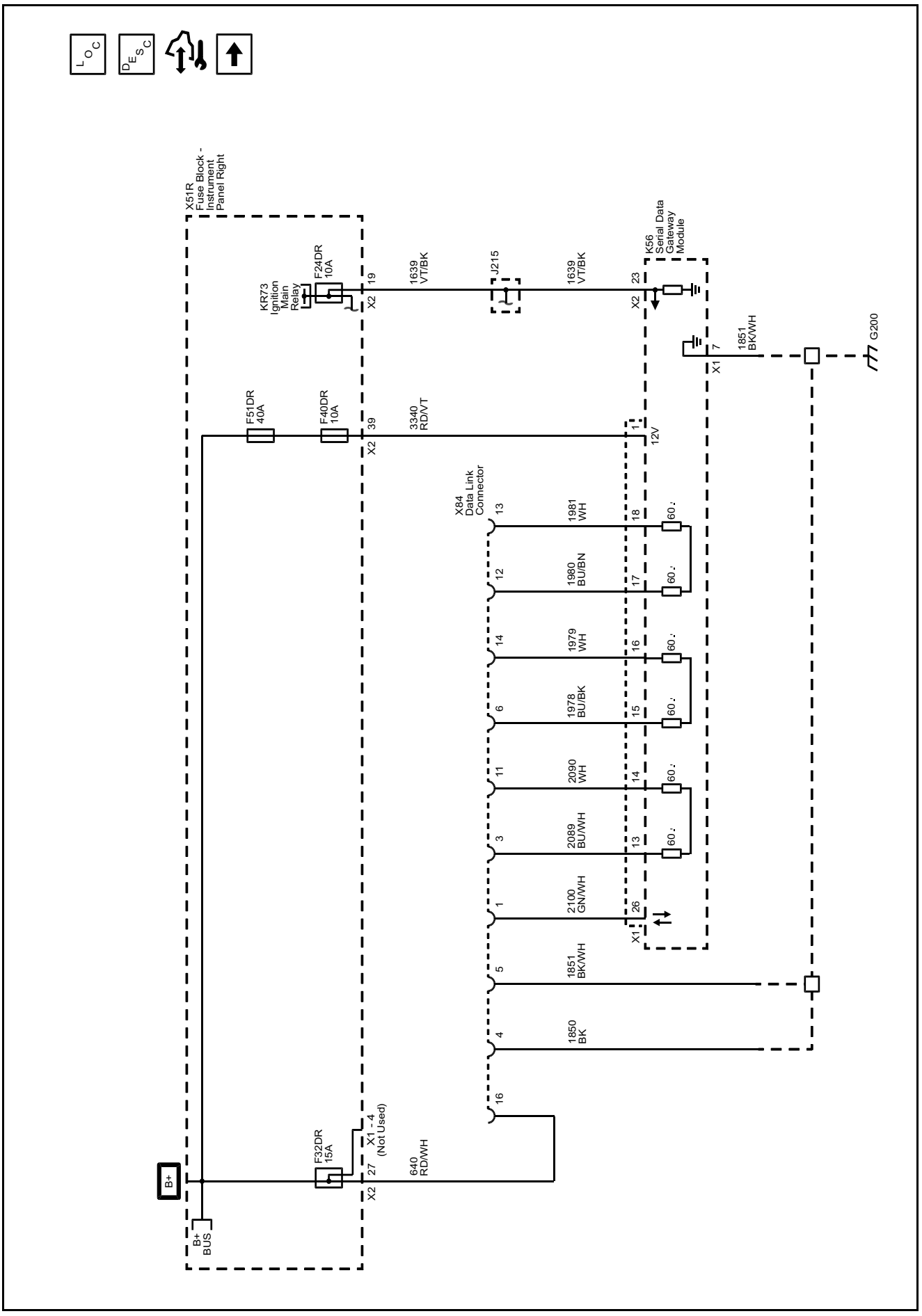

Data Communication Schematics (Low Sped GMLAN)

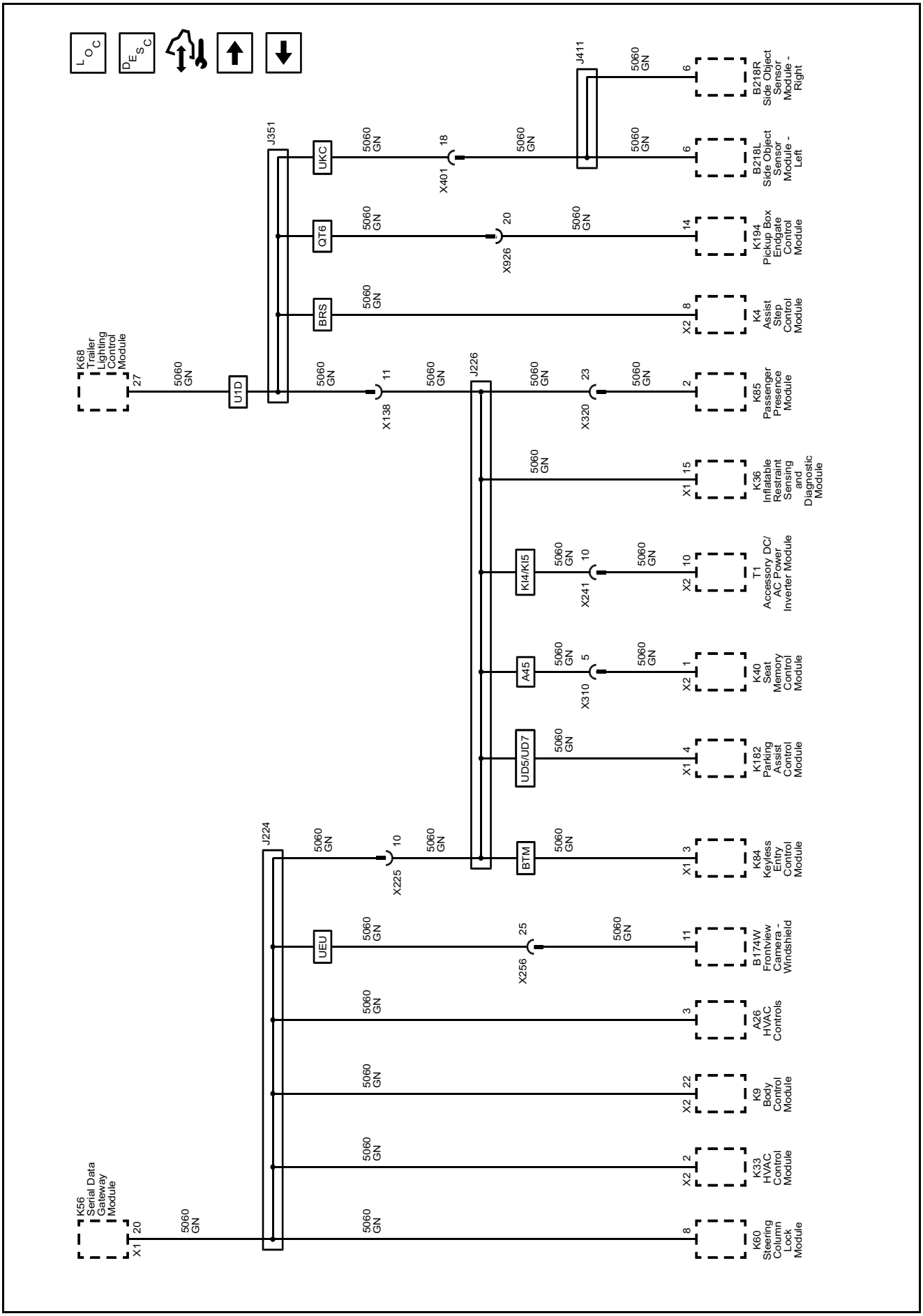

Data Communication Schematics (Gateway Isolated Low Speed GMLAN)

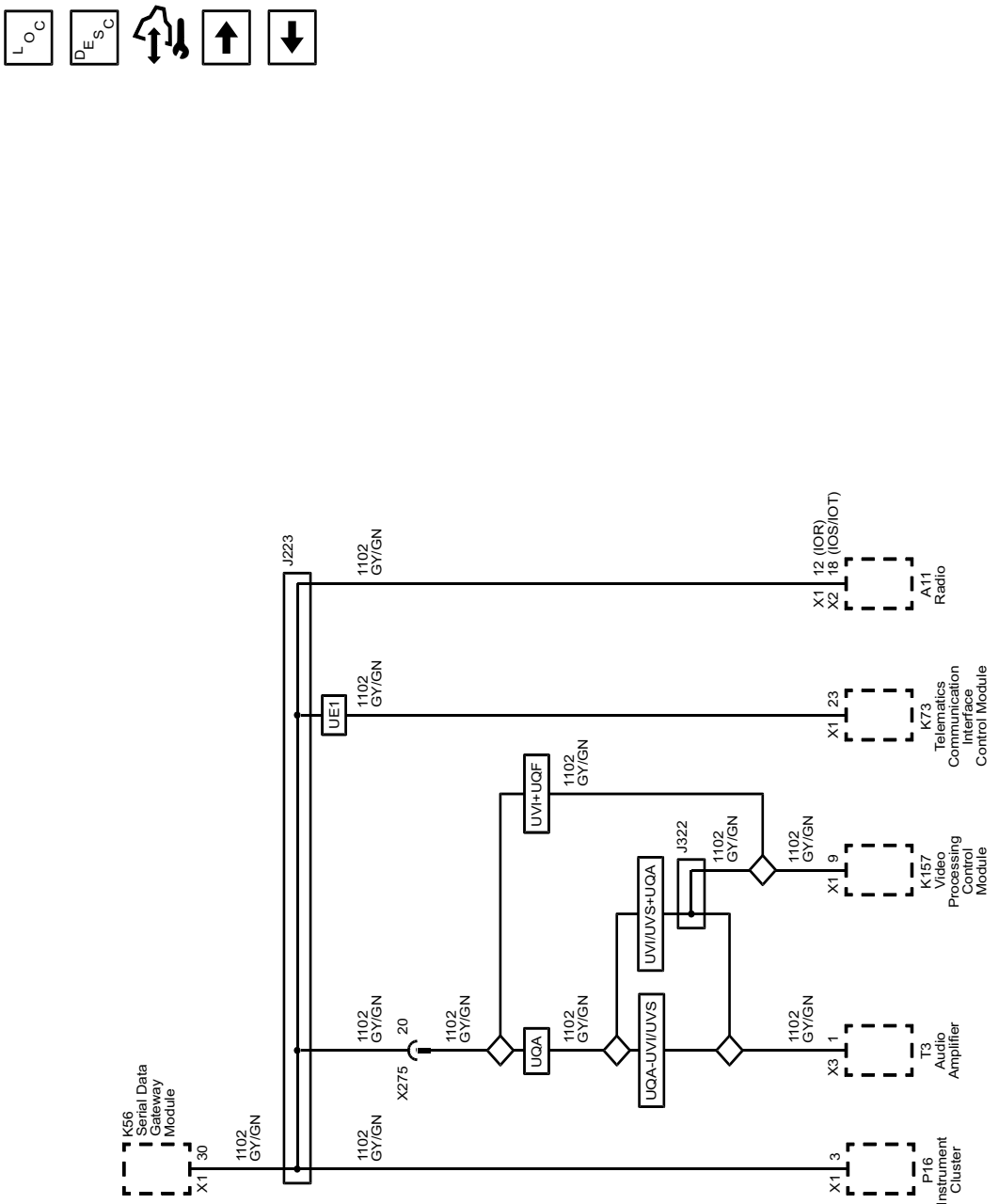

5215864

Data Communication Schematics (Communications Enable - High Speed GMLAN)

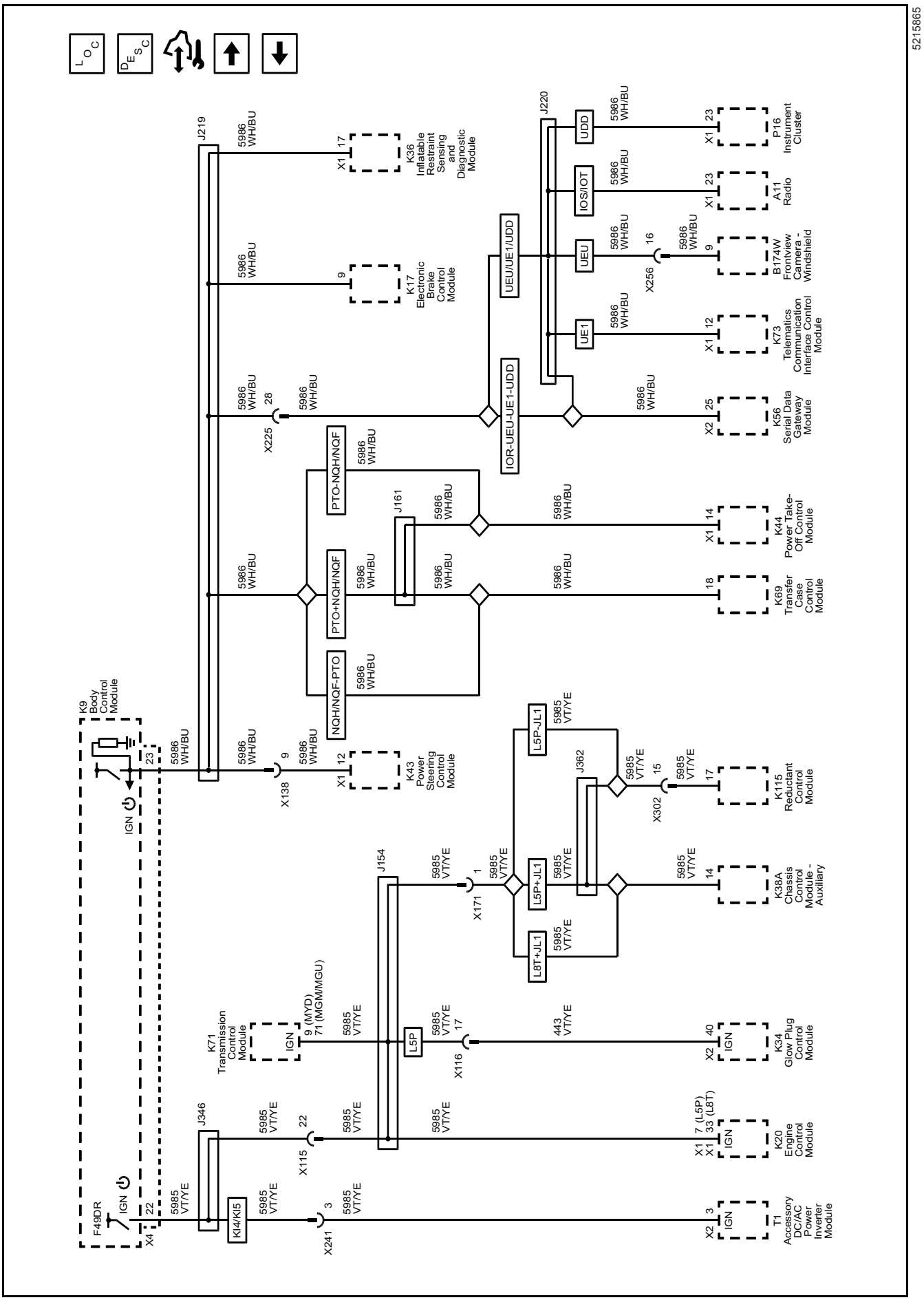

Data Communication Schematics (Powertrain Sensor High Speed GMLAN)

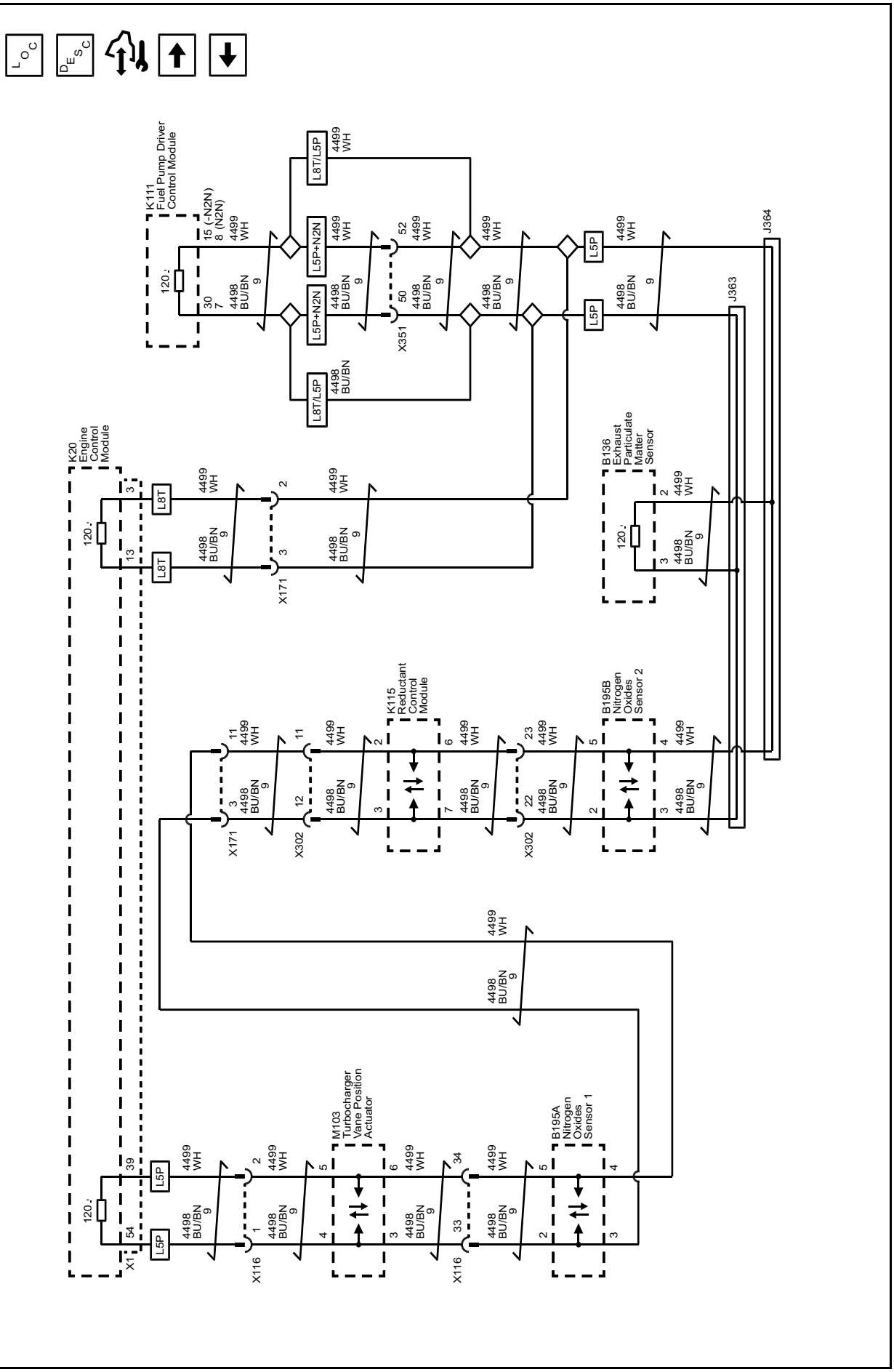

Data Communication Schematics (High Speed GMLAN (L5P))

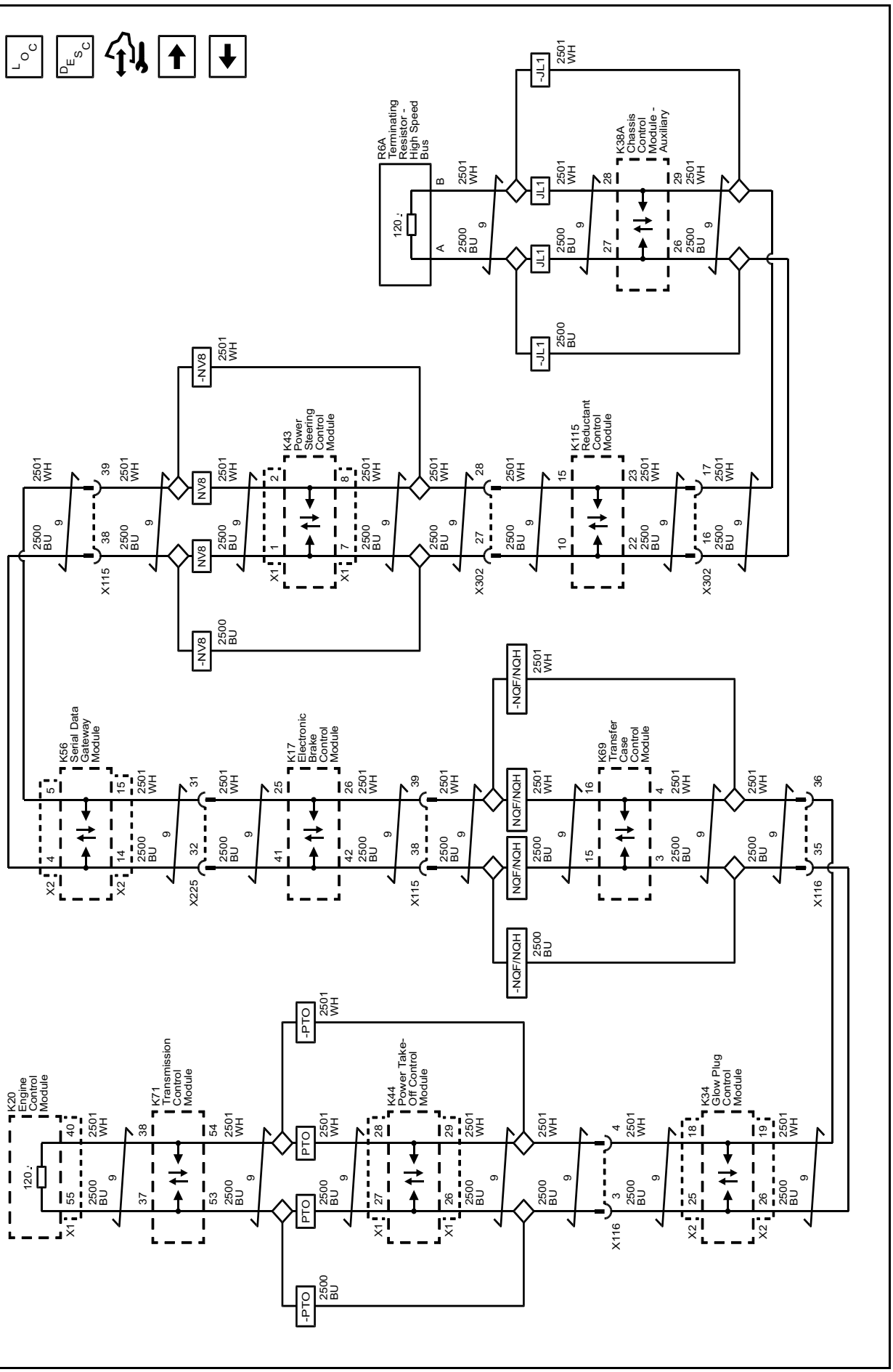

Data Communication Schematics (High Speed GMLAN (L8T))

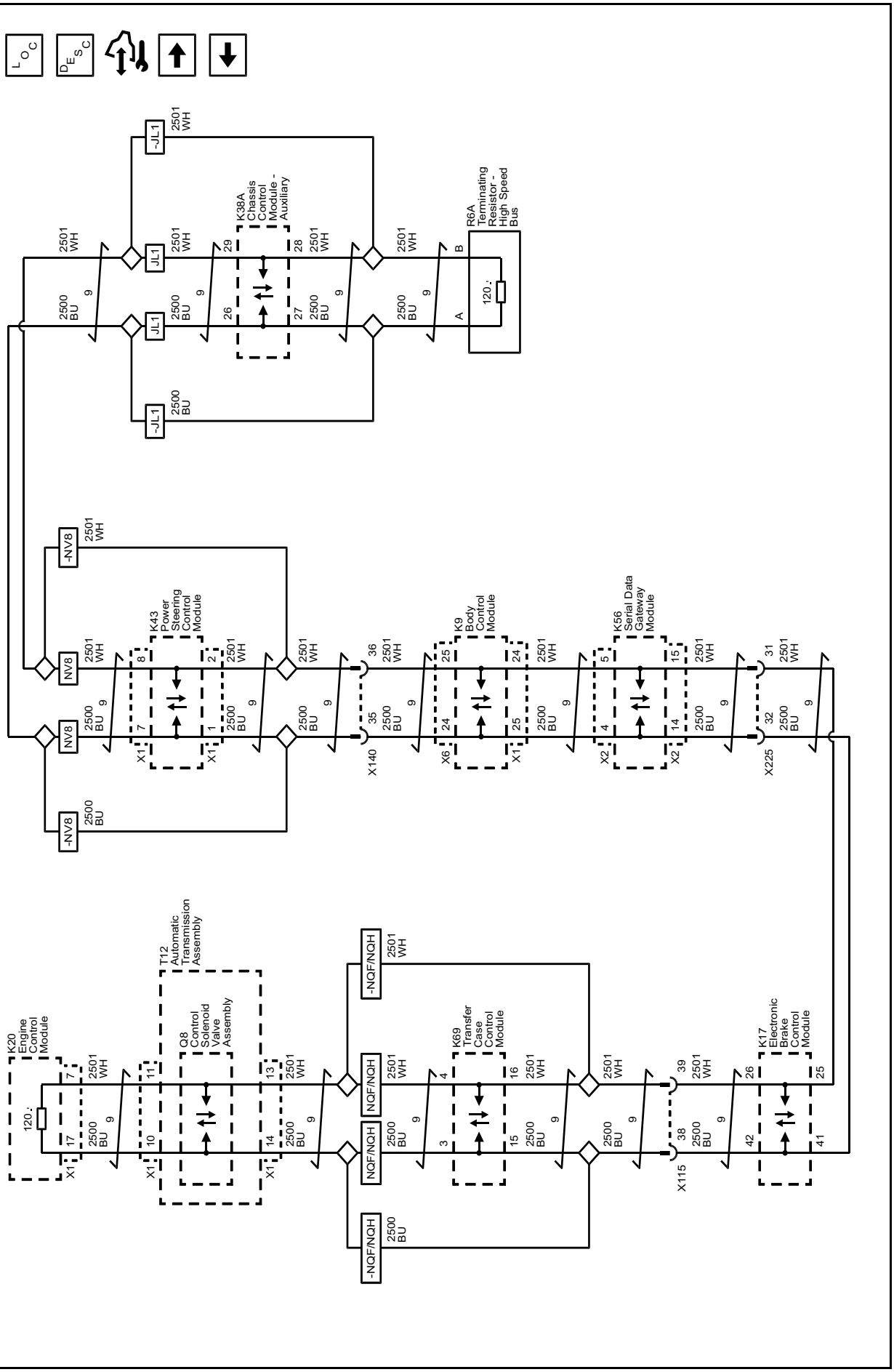

Data Communication Schematics (Gateway Isolated High Speed GMLAN)

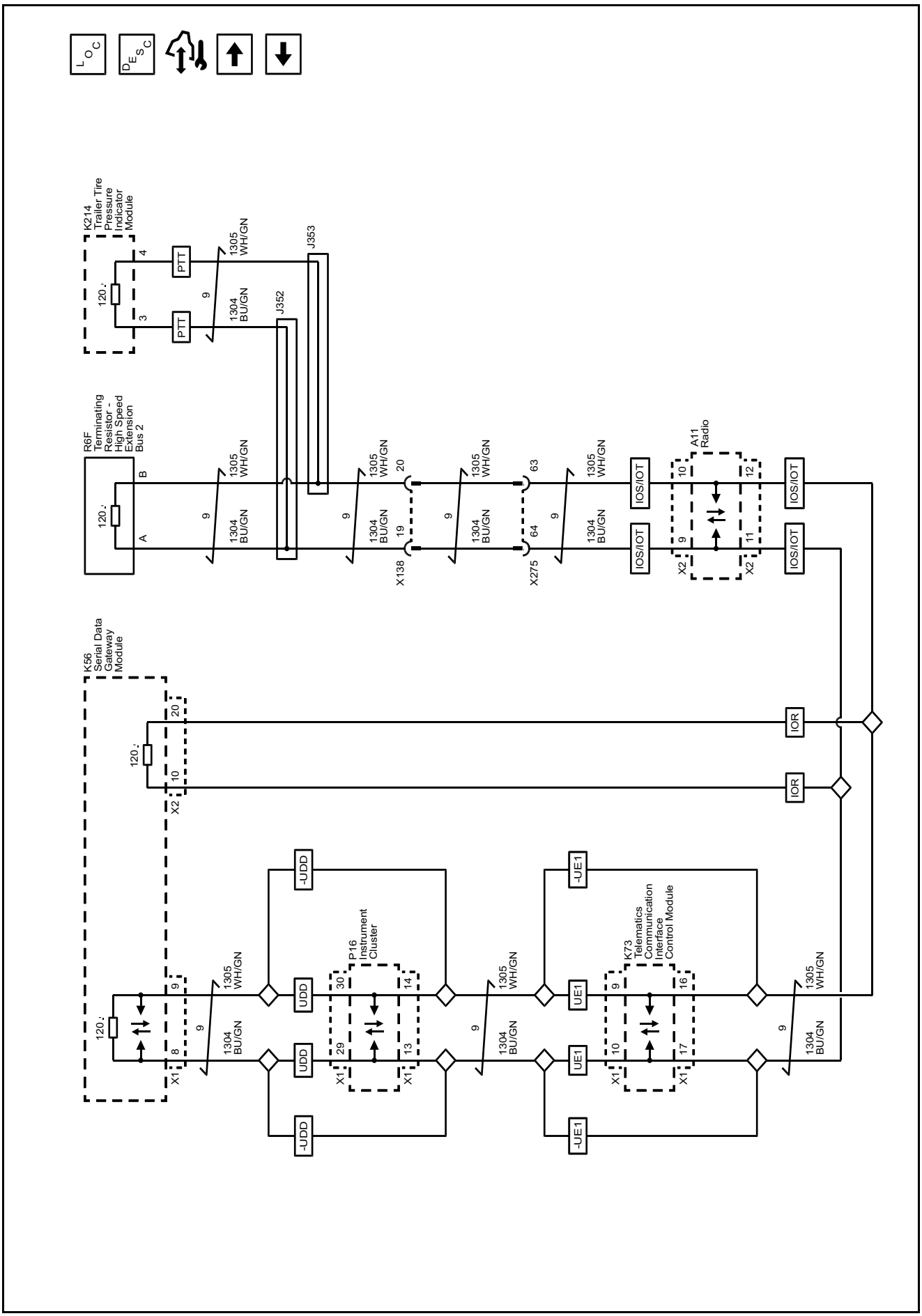

Data Communication Schematics (Gateway Expansion High Speed GMLAN (UEU))



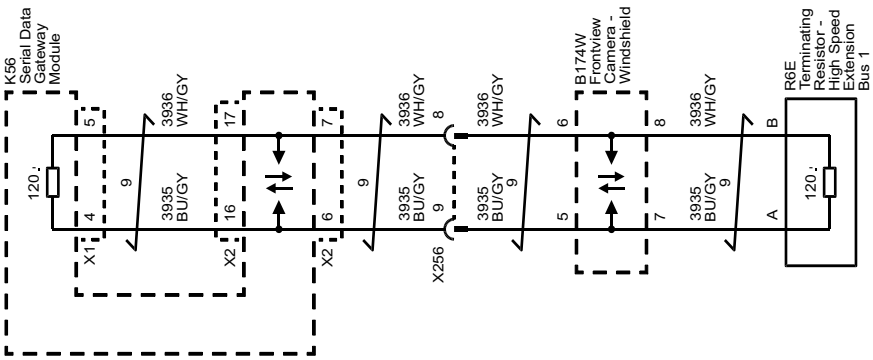

5227920

Data Communication Schematics (Chassis High Speed GMLAN)

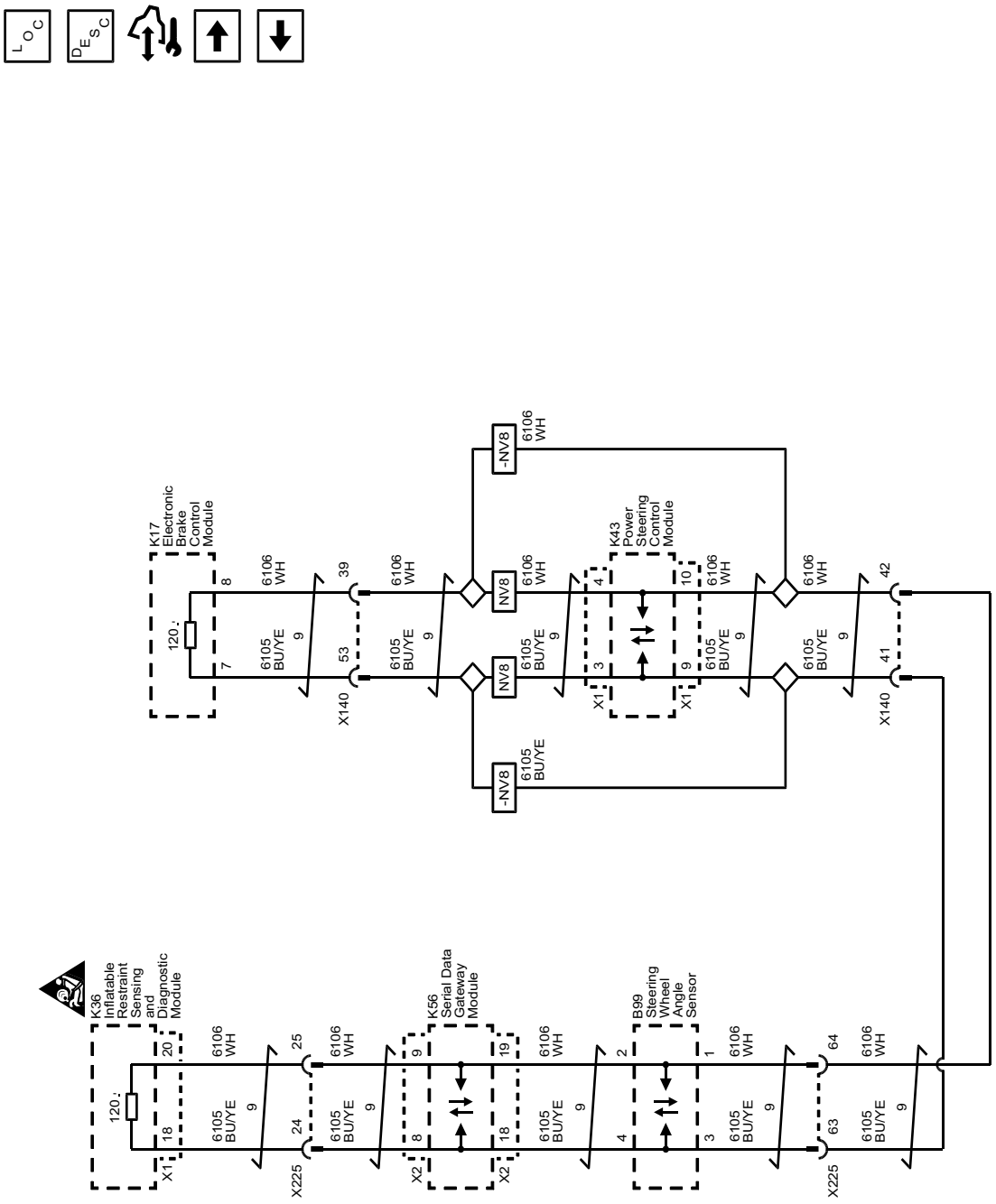

Data Communication Schematics (Object High Speed GMLAN (UKC))



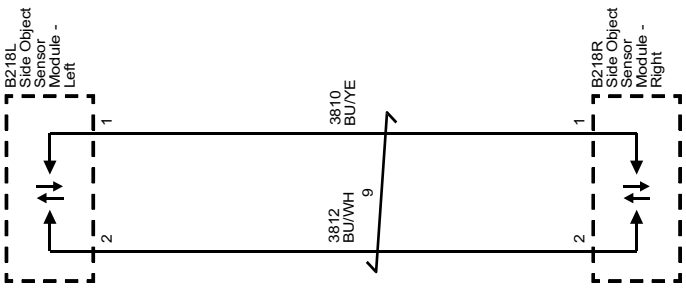

5217123

Data Communication Schematics (Ethernet Bus)



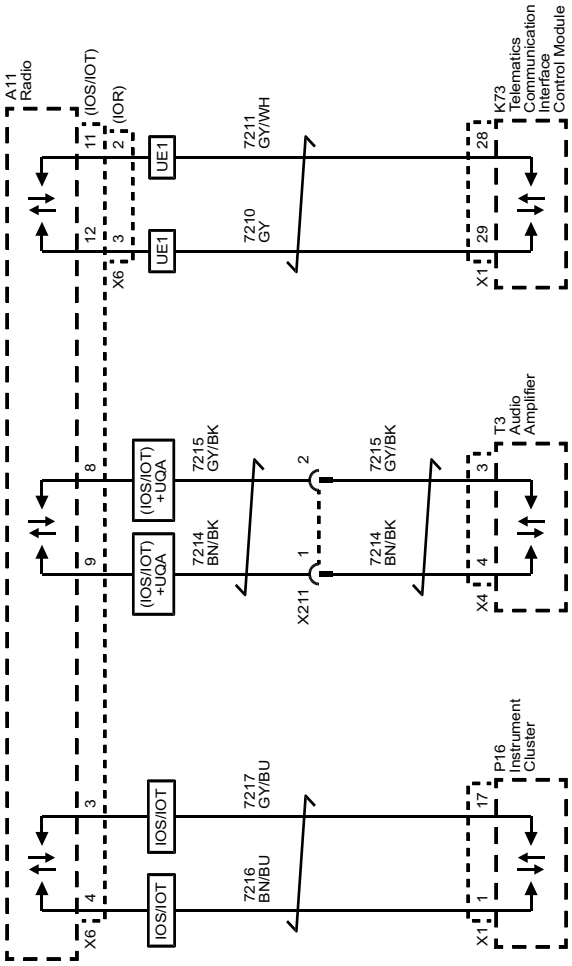

5217127

Data Communication Schematics (Linera Interconnect Network (1 of 2))

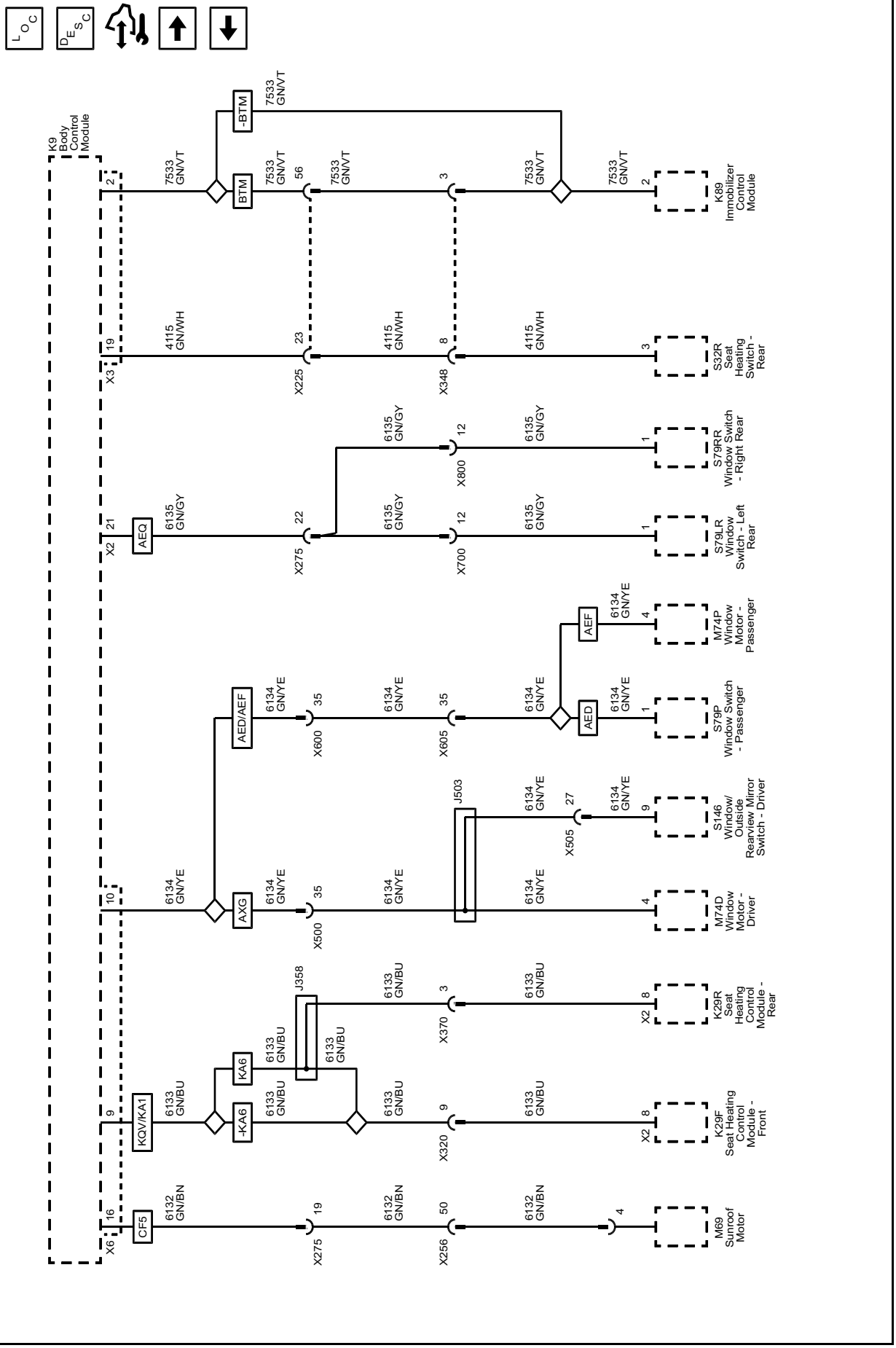

Data Communication Schematics (Linera Interconnect Network (2 of 2))

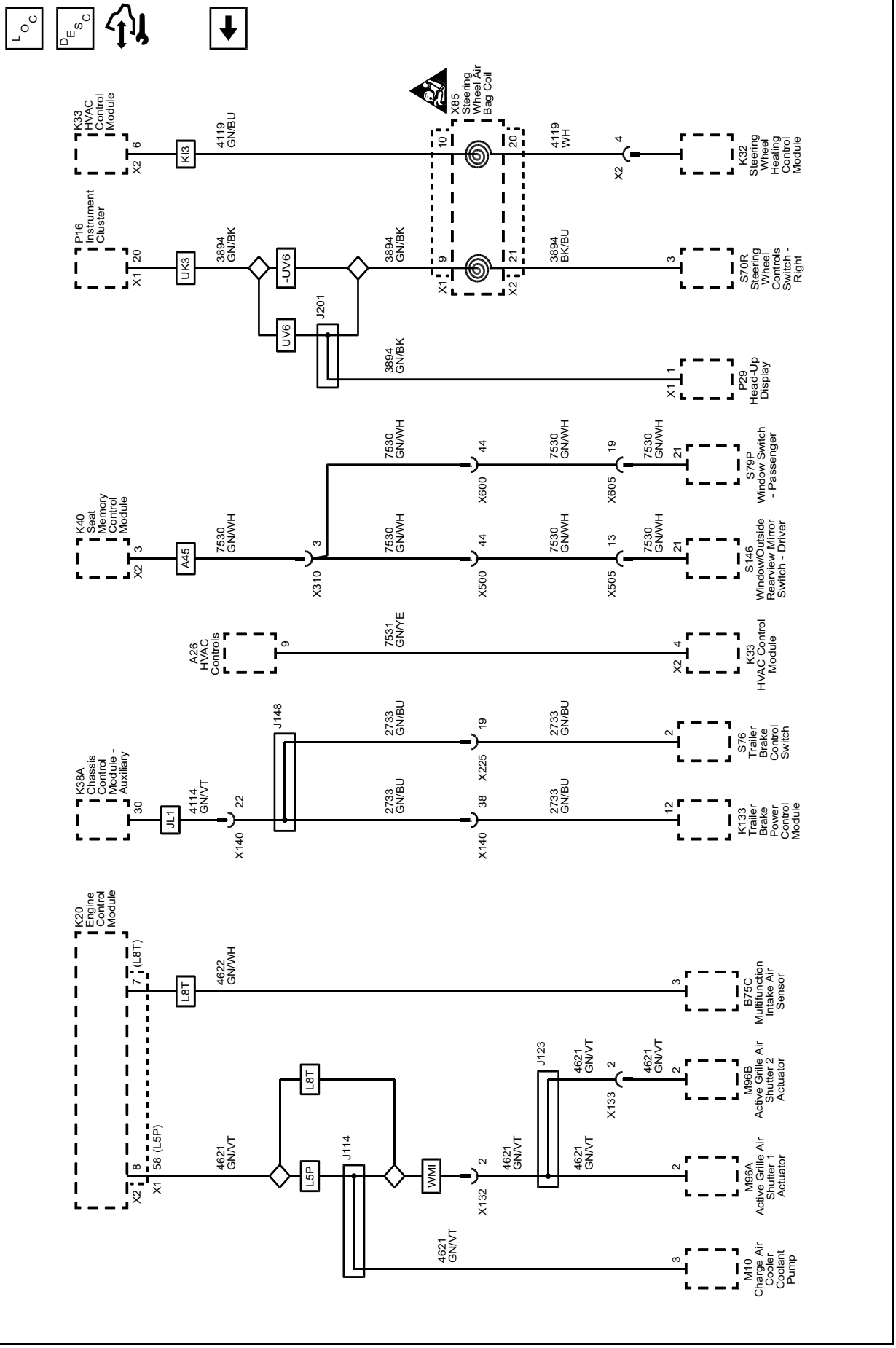

5217130

Body Control System Schematics (Module Power, Ground and Serial Data)

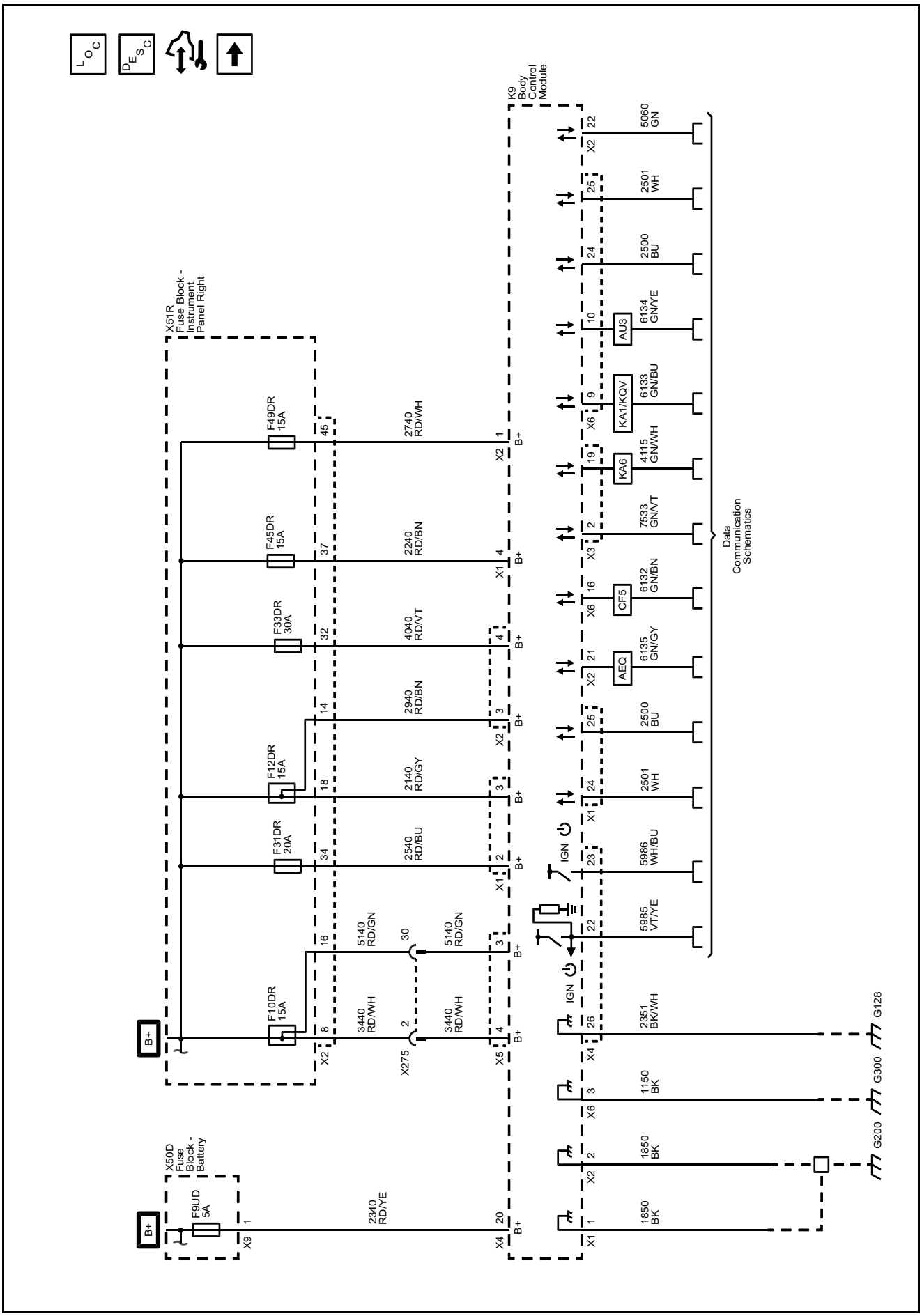

Body Control System Schematics (Subsystem Reference (1 of 3))

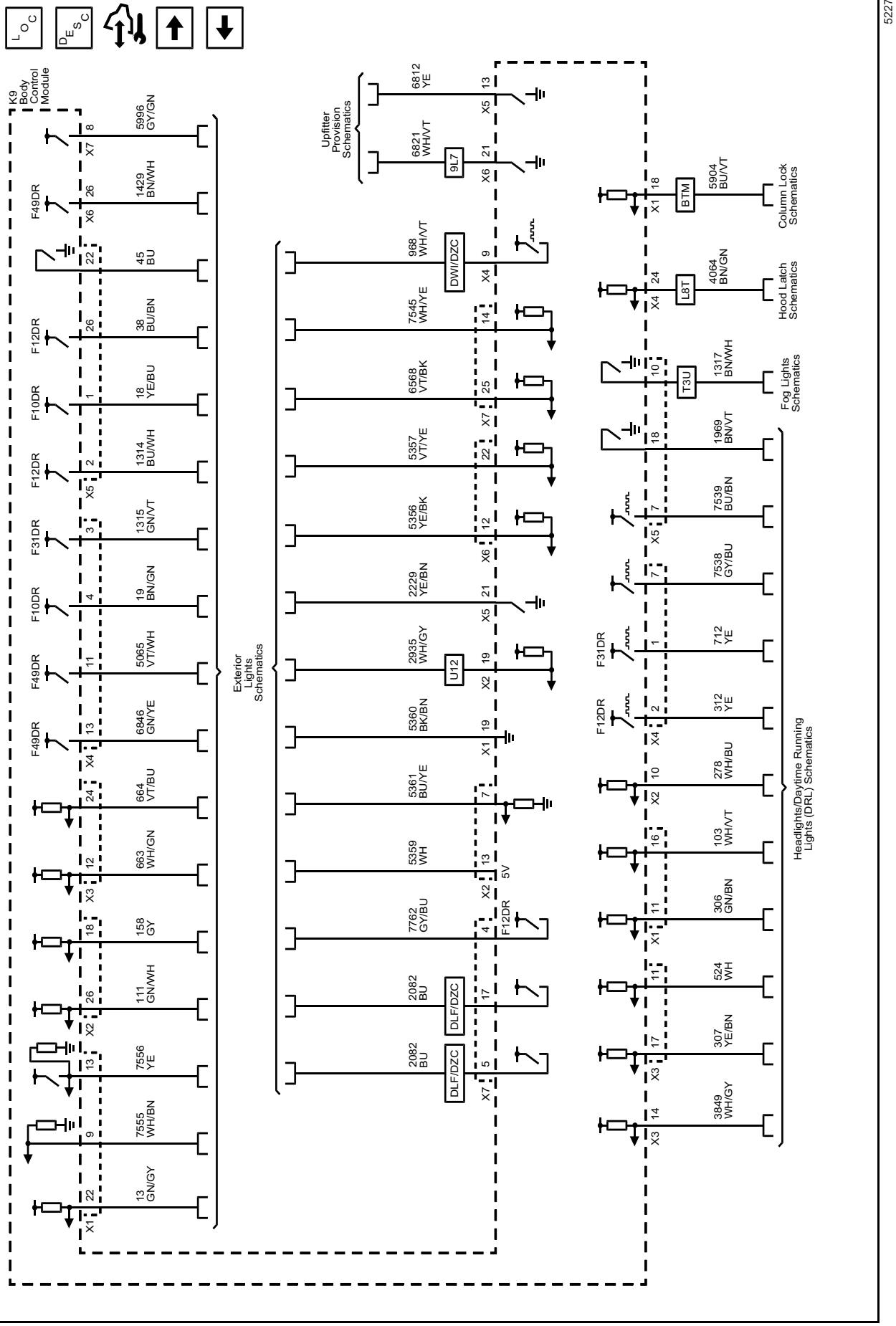

5227549

Body Control System Schematics (Subsystem Reference (2 of 3))

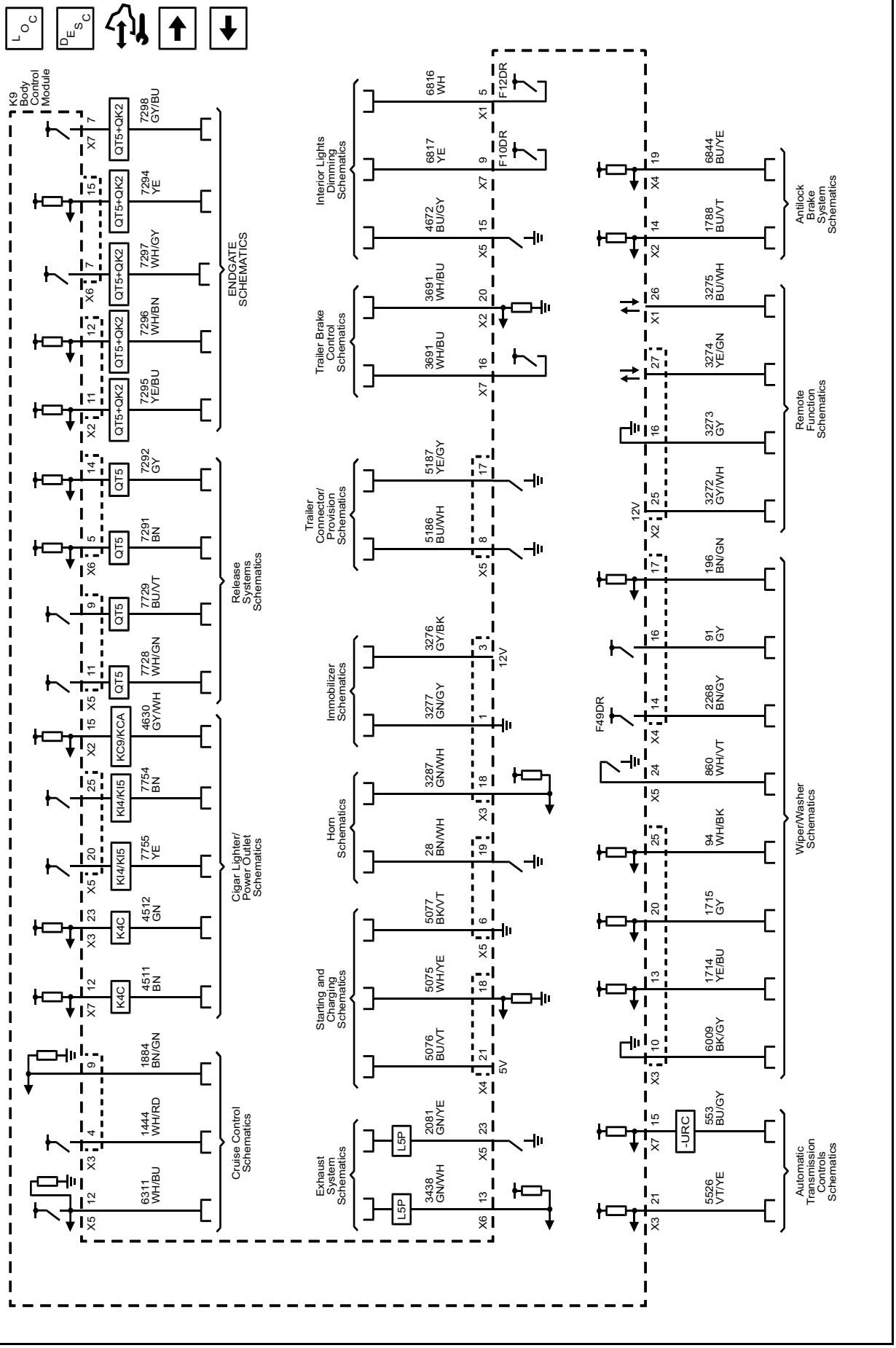

5227550

Body Control System Schematics (Subsystem Reference (3 of 3))

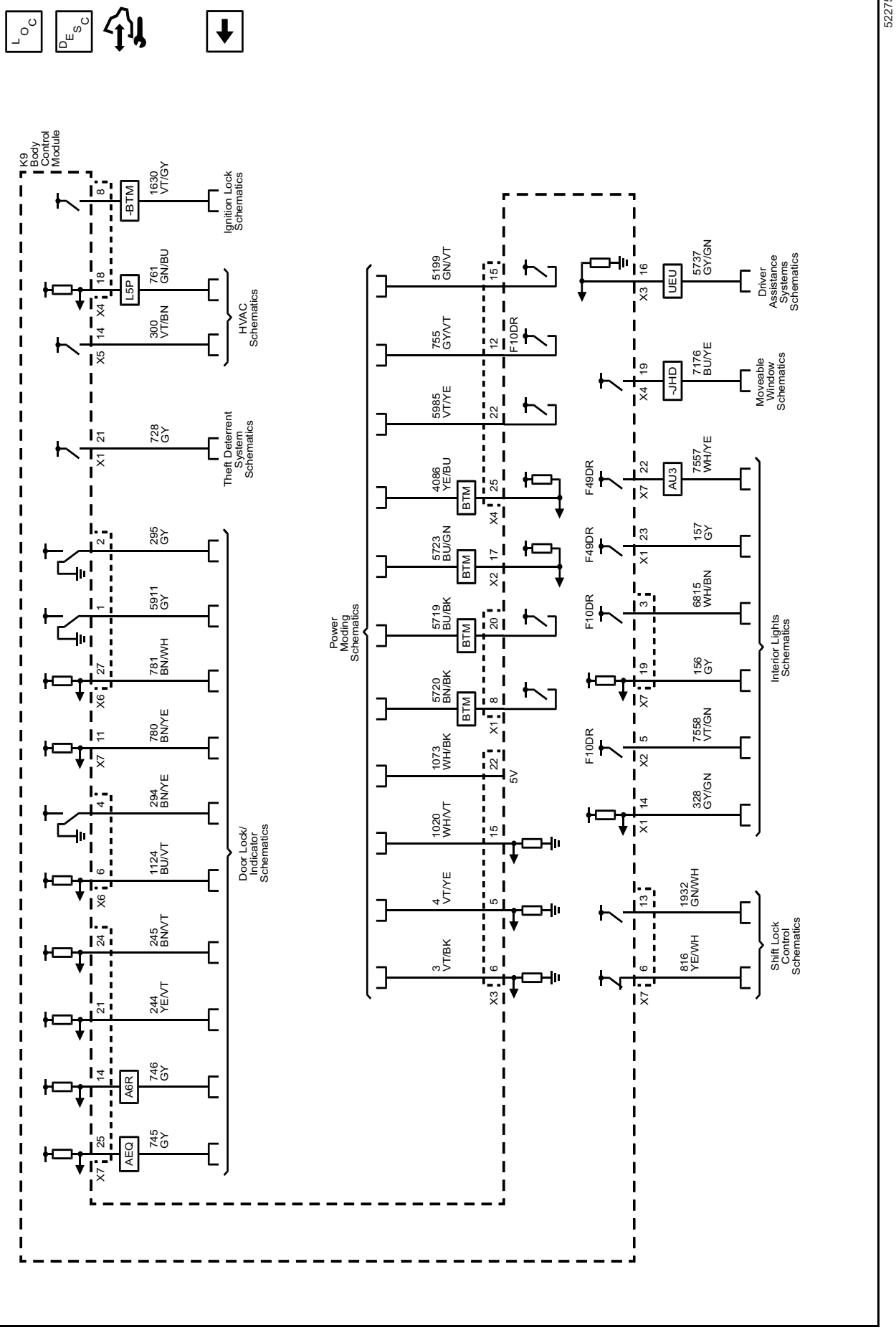

5227551

Description and Operation

Data Link Communications Description and Operation

Note: This is an overview of different serial data buses used by GM devices to communicate with each others. Use *Data Communication Schematics on page 7-4* to find out which serial data buses are configured for a specific vehicle.

Data Link Communications Overview

There are many components in a vehicle that rely on information from other sources, transmit information to other sources, or both. Serial data communication networks provide a reliable, cost effective, way for various components of the vehicle to “talk” to one another and share information.

GM uses a number of different communication buses to insure the timely and efficient exchange of information between devices. When compared to each other, some of these buses are different in nature as far as speed, signal characteristics, and behavior. An example of this is the High Speed GMLAN and Low Speed GMLAN Buses.

On the other hand, when other buses are compared to each other they have similar characteristics and simply operate in parallel. In this case they are used to group together components which have high interaction. Examples are the High Speed GMLAN, Powertrain Expansion, and Chassis Expansion Buses. This allows them to communicate with each other on a bus with reduced message congestion insuring faster and the more timely exchange of information than if all vehicle devices were on a single bus.

The majority of information that exists within a given network generally stays local; however some information will have to be shared on other networks. Control modules designated as Gateway’s perform the function of transferring information between the various buses. A Gateway module is connected to at least 2 buses and will interact with each network according to its message strategy and transmission models.

GMLAN provides the capability for a receiving device to monitor message transmissions from other devices in order to determine if messages of interest are not being received. The primary purpose is to allow reasonable default values to be substituted for the information no longer being received. Additionally, a device may set a Diagnostic Trouble Code (DTC) to indicate that the device it is expecting information from is no longer communicating. A lost communication DTC typically is set in devices other than the device with a communication failure.

K9 Body Control Module (BCM)

The K9 Body Control Module has discrete input and output terminals to control the vehicle's body functions. The K9 Body Control Module is wired to the High Speed GMLAN Bus, Low Speed GMLAN Bus and multiple Local Interconnect Network (LIN) Buses and acts as a gateway between them. The various K9 Body Control Module input and output circuits are illustrated in the corresponding functional areas on the K9 Body Control Module electrical schematics. Refer to the *Body Control System Schematics on page 7-18* for more detailed information.

Power Mode Master

The K9 Body Control Module functions as the power mode master. The ignition switch is a low current switch with multiple discrete ignition switch signals to the power mode master for determining the power mode that will be sent over the serial data circuits to the other devices that need this information; the power mode master will activate relays and other direct outputs of the power mode master as needed. Refer to *Power Mode Description and Operation on page 7-678* for a complete description of power mode functions.

Gateway

The K9 Body Control Module functions as a gateway or translator. The purpose of the gateway is to translate serial data messages between the High Speed GMLAN Bus and the Low Speed GMLAN Bus for communication between the various devices. The gateway will interact with each network according to that network's transmission protocol. All communication between the K9 Body Control Module and a scan tool is done through the primary High Speed GMLAN Bus.

K56 Serial Data Gateway Module (Gen 3)

Note: The Data Bus Diagnostic Tool will not work with vehicles equipped with K56 Serial Data Gateway Module gen 3.

This vehicle is equipped with a K56 Serial Data Gateway Module gen 3. The K56 Serial Data Gateway Module is used to handle communications between multiple GMLAN buses and functions as a gateway to isolate the secure networks from the unsecured networks. It was created to mitigate bus loading to support cyber security and new active/advanced safety features (if equipped). The K56 Serial Data Gateway Module is used as a frame-to-frame gateway for all functional messages. Communication between the K56 Serial Data Gateway Module and a scan tool is done through the primary High Speed GMLAN bus. When the K56 Serial Data Gateway Module is not communicating, the scan tool can not communicate with the vehicle.

The K56 Serial Data Gateway Module has two microprocessors within the electronic control unit. Each microprocessor is diagnosed/programmed independently via the scan tool because the two microprocessors do not talk internally. Each of these processors are responsible for managing the traffic for specific communication buses on the vehicle. The two particular buses that they will manage are high speed and low speed. If communication does not exist or the particular micros have not been programmed, control modules won’t be able to communicate with or through the K56 Serial Data Gateway Module.

Low speed Microprocessor

- The low speed microprocessor is programmable via the X84 Data Link Connector (DLC) terminal 1. This low speed bus between the X84 Data Link Connector and the K56 Serial Data Gateway Module is called the Low Speed DLC Bus.
- The low speed microprocessor is capable of gating signals between the Low Speed DLC, the primary Low Speed GMLAN, and the Gateway Isolated Low Speed GMLAN Buses.
- The low speed microprocessor is also capable of gating signals between the Object High Speed DLC Bus (DLC terminals 3 & 11) and the Object High Speed GMLAN Bus.

High speed Microprocessor

- The high speed micro is programmable via the X84 Data Link Connector (DLC) terminals 6 & 14. This high speed bus between the X84 Data Link Connector and the K56 Serial Data Gateway Module is called High Speed DLC Bus.
- The high speed micro is capable of gating signals between the High Speed DLC, the primary High Speed GMLAN, the Gateway Expansion High Speed GMLAN, and the Gateway Isolated High Speed GMLAN Buses.
- The high speed micro is also capable of gating signals between the Chassis High Speed DLC Bus (DLC terminals 12 & 13) and the Chassis High Speed GMLAN Bus.

High Speed GMLAN Bus (Circuits 2500 & 2501)

Note: Continuity check cannot be performed between the X84 Data Link Connector and control modules on the primary High Speed GMLAN Bus.

A primary High Speed GMLAN Bus is used where data needs to be exchanged at a high enough rate to minimize the delay between the occurrence of a change in sensor value and the reception of this information by a control device using the information to adjust vehicle system performance.

The primary High Speed GMLAN serial data network consists of two twisted wires. One signal circuit is identified as GMLAN-High and the other signal circuit is identified as GMLAN-Low. At each end of the data bus there is a 120 Ω termination resistor between the GMLAN-High and GMLAN-Low circuits.

Data symbols (1's and 0's) are transmitted sequentially at a rate of 500 Kbit/s. The data to be transmitted over the bus is represented by the voltage difference between the GMLAN-High signal voltage and the GMLAN-Low signal voltage.

When the two wire bus is at rest the GMLAN-High and GMLAN-Low signal circuits are not being driven and this represents a logic "1". In this state both signal circuits are at the same voltage of 2.5 V. The differential voltage is approximately 0 V.

When a logic "0" is to be transmitted, the GMLAN-High signal circuit is driven higher to about 3.5 V and the GMLAN-Low circuit is driven lower to about 1.5 V. The differential voltage becomes approximately 2.0 (+/- 0.5) V.

High Speed DLC Bus (Circuits 1978 & 1979)

Between the X84 Data Link Connector (DLC) terminals 6 & 14 and the K56 Serial Data Gateway Module terminals 15 X1 & 16 X1, there is a high speed bus called the High Speed DLC Bus. The High Speed DLC Bus is similar to the primary High Speed GMLAN Bus. Between the GMLAN-High and GMLAN-Low circuits, there is a 120 Ω termination resistor internal to the K56 Serial Data Gateway Module. There is no terminating resistor at the DLC.

The K56 Serial Data Gateway Module uses its high speed microprocessor to gate signals between the High Speed DLC, the primary High Speed GMLAN, the Gateway Expansion High Speed GMLAN, and the Gateway Isolated High Speed GMLAN Buses.

Chassis High Speed GMLAN Bus (Circuits 6105 & 6106) (if equipped)

Note: Continuity check cannot be performed between the X84 Data Link Connector and control modules on the Chassis High Speed GMLAN Bus.

The Chassis High Speed GMLAN Bus (or Chassis Expansion Bus) is basically a copy of the High Speed GMLAN Bus except that its use is reserved for chassis components. This implementation splits message congestion between two parallel buses helping to insure timely message transmission and reception. Sometimes communication is required between the Chassis High Speed GMLAN Bus and the primary High Speed GMLAN Bus. This is accomplished by using the K17 Electronic Brake Control Module as the Gateway module. Since the Chassis High Speed GMLAN Bus and primary High Speed GMLAN Bus operate in the same manner, the diagnostics for each are similar.

Chassis High Speed DLC Bus (Circuits 1980 & 1981)

Between the X84 Data Link Connector (DLC) terminals 12 & 13 and the K56 Serial Data Gateway Module terminals 17 X1 & 18 X1, there is a high speed bus called the Chassis High Speed DLC Bus. The Chassis High Speed DLC Bus is similar to the Chassis High Speed GMLAN Bus. Between the GMLAN-High and GMLAN-Low circuits, there is a 120 Ω termination resistor internal to the K56 Serial Data Gateway Module. There is no terminating resistor at the DLC.

The K56 Serial Data Gateway Module uses its high speed microprocessor to gate signals between the Chassis High Speed DLC Bus and the Chassis High Speed GMLAN Bus.

Powertrain High Speed GMLAN Bus (Circuits 7493 & 7494) (if equipped)

Note: Continuity check cannot be performed between the X84 Data Link Connector and control modules on the Powertrain High Speed GMLAN Bus.

The Powertrain High Speed GMLAN Bus (or Powertrain Expansion Bus) is basically a copy of the High Speed GMLAN Bus except that its use is reserved for Powertrain components. The bus is optional based upon feature content. Sometimes communication is required between the Powertrain High Speed GMLAN

Bus and the primary High Speed GMLAN Bus. This is accomplished by using the K20 Engine Control Module as the Gateway module. Since the Powertrain High Speed GMLAN Bus and the primary High Speed GMLAN Bus operate in the same manner, the diagnostics for each are similar.

Powertrain Sensor High Speed GMLAN Bus (Circuits 4498 & 4499) (if equipped)

Note: Continuity check cannot be performed between the X84 Data Link Connector and control modules on the Powertrain Sensor High Speed GMLAN Bus.

The Powertrain Sensor High Speed GMLAN Bus is basically a copy of the primary High Speed GMLAN Bus except that its use is reserved for Powertrain components. The bus is optional based upon feature content. Sometimes communication is required between the Powertrain Sensor High Speed GMLAN Bus and the primary High Speed GMLAN Bus. This is accomplished by using the K20 Engine Control Module as the Gateway module. Since the Powertrain Sensor High Speed GMLAN Bus and the primary High Speed GMLAN Bus operate in the same manner, the diagnostics for each are similar.

Object High Speed GMLAN Bus (Circuits 3811 & 3813) (if equipped)

Note: Continuity check cannot be performed between the X84 Data Link Connector and control modules on the Object High Speed GMLAN Bus.

The Object High Speed GMLAN Bus is basically a copy of the High Speed GMLAN Bus except that its use is reserved for the enhanced safety system. This implementation is used to isolate the heavy communication among the enhanced safety system devices from the other vehicle buses, reducing congestion. The K124 Active Safety Control Module is connected to the Object High Speed GMLAN Bus as well as the primary High Speed GMLAN Bus, the Chassis High Speed GMLAN Bus, and the Low Speed GMLAN Bus. The K124 Active Safety Control Module acts as a Gateway module for all required communication between the Object High Speed GMLAN Bus devices and devices on these other vehicle buses. The Object High Speed GMLAN Bus operates in the same manner as the Chassis High Speed GMLAN and primary High Speed GMLAN buses and so the diagnostics are similar. The Object High Speed GMLAN Bus is physically partitioned into a Front Object Bus and a Rear Object Bus with each partition having its own communication enable circuit to activate the partition, but functional operation of both is identical. The Front Object Bus standard devices are the K124 Active Safety Control Module, the K109 Frontview Camera Module (or B174W Frontview Camera – Windshield), and the B233B Radar Sensor Module – Long Range. The Front Object Bus optional devices are the B233LF Radar Sensor Module – Short Range Left Front and the B233RF Radar Sensor Module – Short Range Right Front. The Rear Object Bus is optional and when present will have the K124 Active Safety Control Module, B233LR Radar Sensor Module – Short Range Left Rear, and B233RR Radar Sensor Module – Short Range Right Rear on the bus. All Object High Speed GMLAN Bus components are powered by the K124 Active Safety Control Module via the communication enable circuits, except the K109 Frontview Camera Module (or B174W Frontview Camera – Windshield) which is powered directly by battery.

Object High Speed DLC Bus (Circuits 2089 & 2090)

Between the X84 Data Link Connector (DLC) terminals 3 & 11 and the K56 Serial Data Gateway Module terminals 13 X1 & 14 X1, there is a high speed bus called the Object High Speed DLC Bus. The Object High Speed DLC Bus is similar to the Object High Speed GMLAN Bus. Between the GMLAN-High and GMLAN-Low circuits, there is a 120 Ω termination resistor internal to the K56 Serial Data Gateway Module. There is no terminating resistor at the DLC.

The K56 Serial Data Gateway Module uses its low speed microprocessor to gate signals between the Object High Speed DLC Bus and the Object High Speed GMLAN Bus.

Gateway Isolated High Speed GMLAN Bus (Circuits 1304 & 1305)

Note: Continuity check cannot be performed between the X84 Data Link Connector (or control modules on the primary High Speed GMLAN Bus) and control modules on the Gateway Isolated High Speed GMLAN Bus.

The Gateway Isolated High Speed GMLAN Bus is an extension of the primary High Speed GMLAN Bus except it is separated from the primary High Speed GMLAN Bus by the K56 Serial Data Gateway Module for cybersecurity protection. The K56 Serial Data Gateway Module verifies data messages being transmitted from the control modules on the Gateway Isolated High Speed GMLAN Bus back to the primary High Speed GMLAN Bus are good with valid transmitter messages. This bus does not terminate to the X84 Data Link Connector.

The Gateway Isolated High Speed GMLAN Bus consists of two twisted wires. One signal circuit is identified as GMLAN-High and the other signal circuit is identified as GMLAN-Low. At each end of the data bus there is a 120 Ω termination resistor between the GMLAN-High and GMLAN-Low circuits.

Gateway Expansion High Speed GMLAN Bus (Circuits 3935 & 3936)

Note: Continuity check cannot be performed between the X84 Data Link Connector (or control modules on the primary High Speed GMLAN Bus) and control modules on the Gateway Expansion High Speed GMLAN Bus.

The Gateway Expansion High Speed GMLAN Bus is not cybersecurity protected and does not terminate at the X84 Data Link Connector. This expansion bus is created to alleviate the throughput on the primary High Speed GMLAN Bus.

The Gateway Expansion High Speed GMLAN Bus consists of two twisted wires. One signal circuit is identified as GMLAN-High and the other signal circuit is identified as GMLAN-Low. At each end of the data bus there is a 120 Ω termination resistor between the GMLAN-High and GMLAN-Low circuits.

Ethernet Bus (if equipped)

At the core of the infotainment system is the Radio Ethernet Audio Video Bridging switch which communicates directly to each contributing Infotainment module terminator. The Ethernet harness consists of twisted pair wires from point to point. Each device on the Ethernet infotainment system sends/receives data at 100 Mbit/s to/from a specified port at the A11 Radio. The Radio/Ethernet will also be used to program USB software update files to the devices connected to the Ethernet ports.

The A11 Radio is the Ethernet master. The Radio communicates with other devices and systems in the vehicle via GMLAN and LIN buses. Diagnostic Trouble Codes will be read on GMLAN to diagnose Ethernet, LIN and system faults. GMLAN will also be used for programming calibrations.

Media Oriented Systems Transport (MOST) Bus (Circuits 3997 & 3998) (if equipped)

The MOST Infotainment network is a dedicated high speed multimedia streaming data bus independent from GMLAN. The MOST Bus will be configured in a physical hardwired loop with each device within the bus sends and receives data on an assigned MOST addresses in a set order. Each device on the MOST Bus will be required to have twisted pair copper wires (2 transmit TX, 2 receive RX, and 1 electronic control line which is a 12 V wakeup signal line). The A11 Radio is the MOST Master and will monitor the bus for vehicle configuration, Infotainment data messages and errors on the bus. The MOST initialization consists of a short 100 ms low voltage pulse on the electronic control line (or MOST control line) connected to all devices contained on the MOST ring. This wakeup message once received by each device, will first respond with a generic device response. Once these initial responses on the MOST Bus are reported successfully without error to the A11 Radio, the second data request will record the MOST device addresses, their functionality requirements and capabilities within. The A11 Radio will learn this information and also record the address node sequence on the MOST Bus at this point. This node address list will now be stored within the A11 Radio as the MOST Bus configuration (called “Last Working MOST ID of Node 1 – 9” on scan tool data display).

When MOST receive, transmit, or control line faults are detected, transmit/receive messages will not received as expected from the wakeup request. The A11 Radio and the K74 Human Machine Interface Control Module will then perform diagnostics to isolate these MOST faults. If the MOST control line is shorted low to 0 V for excess amount of time, the A11 Radio will set a U2098 DTC and K74 Human Machine Interface Control Module will set a U0029 02 DTC. At this point the MOST Bus will be unable to communicate until the shorted MOST control line is repaired.

Once the shorted MOST control line diagnostics pass, the A11 Radio will attempt to resend the initial short pulse attempts up to 3 times on the MOST control line. If the expected responses are not received, the A11 Radio continues into a failure mode setting a U0028 DTC and will continue on to send one 300 ms long pulse, which will enable the furthest upstream transmitting device to become the surrogate MOST Master in this MOST fault/diagnostic mode. When the A11 Radio receives this new MOST Master identity, the surrogate MOST master device can be identified based on scan tool data parameter “Surrogate MOST Master Node Upstream Position”. The scan tool should be used to determine the MOST Bus configuration and direction by utilizing the “Last Working MOST ID of Node 1 – 9” parameters from the A11 Radio data display. When a fault is present, it will indicate the newly enabled “Surrogate MOST Master Node Upstream Position” from the A11 Radio. This will assist in determining where the MOST bus/control is at fault. The MOST device upstream from the surrogate MOST master device, transmit, receive, or control lines will be the suspect areas for diagnostics at this point. These faults can be associated with any of the MOST transmit, receive, or control line twisted copper wires or possibly an internal device fault.

The K74 Human Machine Interface Control Module will set a U0029 00 DTC when it diagnoses a MOST bus not communicating properly after one attempt. When the DTC U0029 00 is set by the K74 Human Machine Interface Control Module without the corresponding DTC U0028 from the A11 Radio, it will be an indication of an intermittent wiring/device condition.

FlexRay Bus (if equipped)

The FlexRay Bus is developed for safety related applications and higher data rate in real time application. The communication is time triggered. The FlexRay serial data network consists of two unshielded twisted wires to connect FlexRay nodes together. A FlexRay node is a device connected to a FlexRay Bus.

The FlexRay serial data network features 2 communication channels: channel A and channel B. Each channel may be operated at a data rate of up to 10 Mbit/s. FlexRay nodes can be connected to either both channels or a single channel. Each FlexRay channel consists of multiple branches. Each branch is a private bus. At each end of a branch, there is a 100 Ω terminating resistor connected between the pair of FlexRay serial data circuits. The terminating resistors can be external or internal to a FlexRay device.

The second FlexRay channel can be used as a redundant channel for fault toleration or to increase data rate of up to 20 Mbit/s. The dual channel configuration consists of two independent data channels for fault-tolerance. When one channel fails, the communication can still continue with reduced bandwidth.

Low Speed GMLAN Bus (Circuit 5060)

Note: Continuity check cannot be performed between the X84 Data Link Connector and control modules on the Low Speed GMLAN Bus.

Low Speed GMLAN Bus is used in applications where a high data rate is not required which allows for the use of less complex components. It is typically used for operator controlled functions where the response time requirements are slower than those required for dynamic vehicle control.

The Low Speed GMLAN Serial Data Network consists of a single wire, ground referenced bus with high side voltage drive. During on road vehicle operation data symbols (1's and 0's) are transmitted sequentially at the normal rate of 33.3 Kbit/s. For component programming only, a special high speed data mode of 83.3 Kbit/s may be used.

Unlike the high speed dual wire networks, the single wire low speed network does not use terminating resistors at either end of the network.

The data symbols to be transmitted over the bus are represented by different voltage signals on the bus. When the Low Speed GMLAN Bus is at rest and is not being driven, there is a low signal voltage of approximately 0.2 V. This represents a logic "1". When a logic "0" is to be transmitted, the signal voltage is driven higher to around 4.0 V or higher.

Low Speed DLC Bus (Circuit 2100)

Between the X84 Data Link Connector (DLC) terminal 1 and the K56 Serial Data Gateway Module terminal 26 X1, there is a low speed bus called the Low Speed DLC Bus. The Low Speed DLC Bus is similar to the primary Low Speed GMLAN Bus.

The K56 Serial Data Gateway Module uses its low speed microprocessor to gate signals between the Low Speed DLC, the primary Low Speed GMLAN, and the Gateway Isolated Low Speed GMLAN Buses.

Gateway Isolated Low Speed GMLAN Bus (Circuit 1102)

Note: Continuity check cannot be performed between the X84 Data Link Connector (or control modules on the primary Low Speed GMLAN Bus) and control modules on the Gateway Isolated Low Speed GMLAN Bus.

The Gateway Isolated Low Speed GMLAN Bus is an extension of the primary Low Speed GMLAN Bus except it is separated from the primary Low Speed GMLAN Bus by the K56 Serial Data Gateway Module for cybersecurity protection. The K56 Serial Data Gateway Module verifies data messages being transmitted from the control modules on the Gateway Isolated Low Speed GMLAN Bus back to the primary Low Speed GMLAN Bus are good with valid transmitter messages. This bus does not terminate to the X84 Data Link Connector.

Local Interconnect Network (LIN) Bus

The Local Interconnect Network (LIN) Bus consists of a single wire with a transmission rate of 10.417 Kbit/s. This bus is used to exchange information between a master control module and other smart devices which provide supporting functionality. This type of configuration does not require the capacity or speed of either a High Speed GMLAN Bus or Low Speed GMLAN Bus and is thus relatively simpler.

The data symbols (1's and 0's) to be transmitted are represented by different voltage levels on the communication bus. When the LIN Bus is at rest and is not being driven, the signal is in a high voltage state of approximately Vbatt. This represents a logic "1". When a logic "0" is to be transmitted, the signal voltage is driven low to about ground (0.0 V).

Communication Enable Circuit Description

Devices on High Speed GMLAN Bus enable or disable communication based on the voltage level of the Serial Data Communication Enable circuit or Accessory Wakeup Serial Data circuit. When the circuit voltage is high (around 12 V), communications are enabled. When the circuit is low, communications are disabled.

X84 Data Link Connector (DLC)

The X84 Data Link Connector is a standardized 16-cavity connector. Connector design and location is dictated by an industry wide standard, and is required to provide the following:

- Terminal 1: Low Speed GMLAN Serial Data #3 terminal (Low Speed DLC Bus)
- Terminal 3: High Speed GMLAN Serial Data (+)(13) terminal (Object High Speed DLC Bus)
- Terminal 4: Scan tool power ground terminal
- Terminal 5: Common signal ground terminal
- Terminal 6: High Speed GMLAN Serial Data (+)(11) terminal (High Speed DLC Bus)
- Terminal 11: High Speed GMLAN Serial Data (-)(13) terminal (Object High Speed DLC Bus)
- Terminal 12: High Speed GMLAN Serial Data (+)(12) terminal (Chassis High Speed DLC Bus)
- Terminal 13: High Speed GMLAN Serial Data (-)(12) terminal (Chassis High Speed DLC Bus)
- Terminal 14: High Speed GMLAN Serial Data (-)(11) terminal (High Speed DLC Bus)
- Terminal 16: Scan tool power, battery positive voltage terminal

Serial Data Reference

The scan tool communicates over the various buses on the vehicle. When a scan tool is installed on a vehicle, the scan tool will try to communicate with every device that could be optioned into the vehicle. If an option is not installed on the vehicle, the scan tool will display No Comm (or Not Connected) for that optional device. In order to avert misdiagnoses of No Communication with a specific device, refer to Data Link References for a list of devices and the buses they communicate with. Use schematics and specific vehicle build RPO codes to determine optional devices.

Electrical Component and Inline Harness Connector End Views

Visual Identification

Electrical Center Identification Views

X50A Fuse Block - Underhood Label

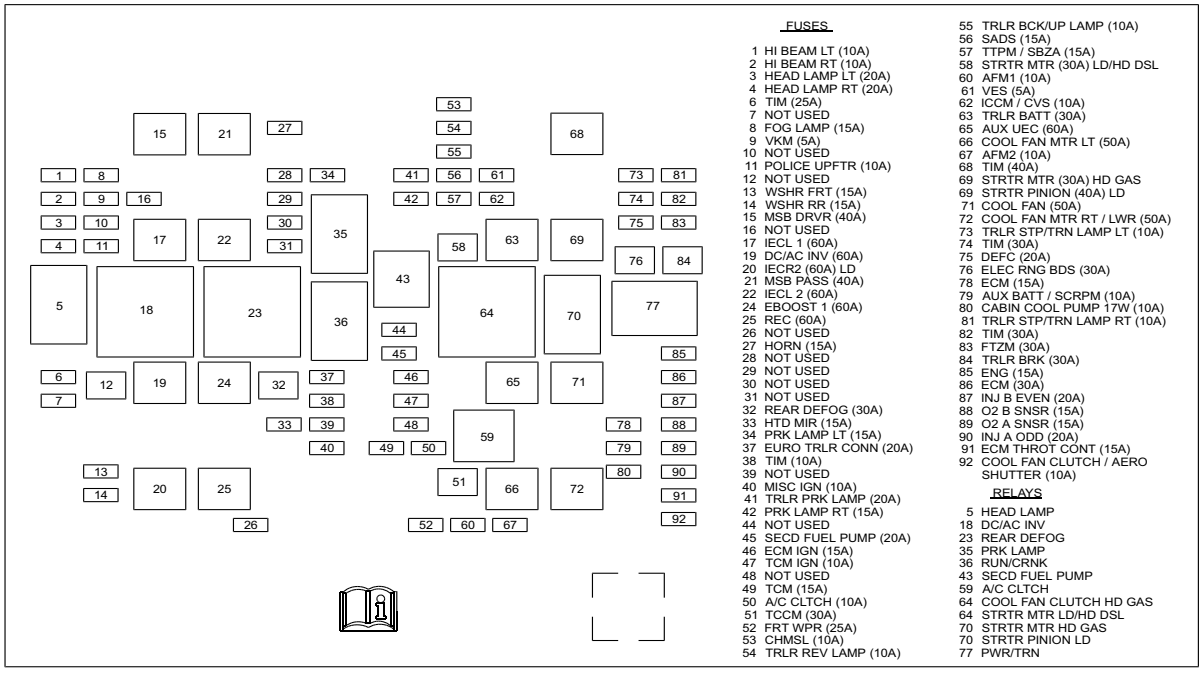

5233021

X50A Fuse Block - Underhood Top View

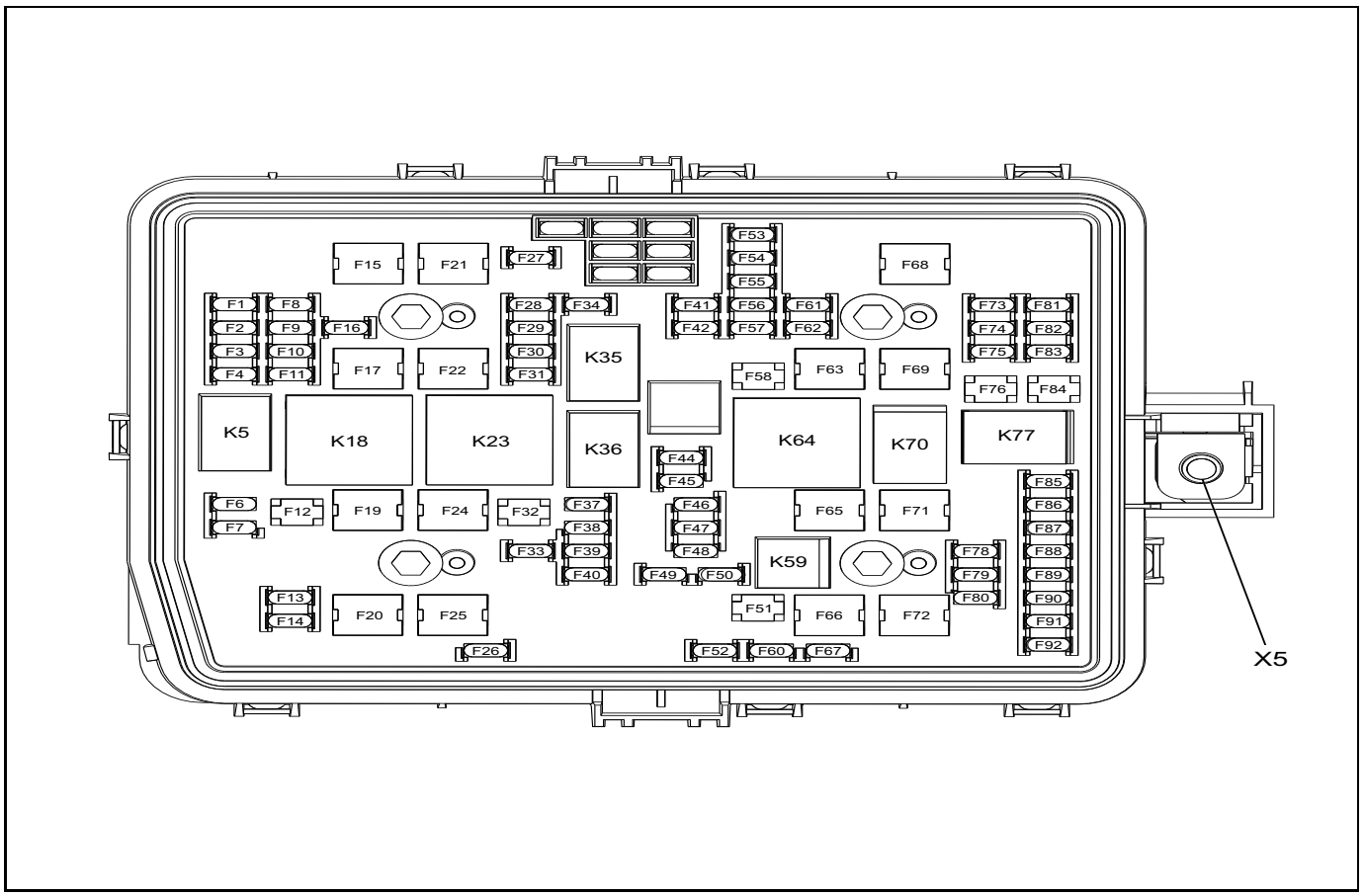

5252562

Usage Table

No.	Device Label Name	Device Assigned Name	Rating	Description
Fuses				
F1	HI BEAM LT	F1UA	10A	• E13LA Headlamp Assembly - Left
F2	HI BEAM RT	F2UA	10A	• E13RA Headlamp Assembly - Right
F3	HEAD LAMP LT	F3UA	20A	• E13LA Headlamp Assembly - Left
F4	HEAD LAMP RT	F4UA	20A	• E13RA Headlamp Assembly - Right
F6	TIM	F6UA	25A	• Not Used
F7	NOT USED	F7UA	10A	• Not Used
F8	FOG LAMP	F8UA	15A	• E29LF Fog Lamp - Left Front (T3U) • E29RF Fog Lamp - Right Front (T3U)
F9	VKM	F9UA	5A	• Not Used
F10	NOT USED	F10UA	10A	• Not Used
F11	POLICE UPFTR	F11UA	10A	• Not Used
F12	NOT USED	F12UA	30A	• Not Used
F13	WSHR FRT	F13UA	15A	• G24 Windshield Washer Pump
F14	WSHR RR	F14UA	15A	• Not Used
F15	MSB DRVR	F15UA	40A	• Not Used
F16	NOT USED	F16UA	15A	• Not Used
F17	IECL 1	F17UA	60A	• X51L Fuse Block - Instrument Panel Left (KA1/QT5)

Usage Table (cont'd)

No.	Device Label Name	Device Assigned Name	Rating	Description
F19	DC/AC INV	F19UA	60A	• T1 Accessory DC/AC Power Inverter Module (KI4/KI5)
F20	IECR2	F20UA	60A	• K17 Electronic Brake Control Module
F21	MSB PASS	F21UA	40A	• Not Used
F22	IECL 2	F22UA	60A	• X51L Fuse Block - Instrument Panel Left (BTM/A48)
F24	EBOOST 1	F24UA	60A	• K17 Electronic Brake Control Module
F25	REC	F25UA	60A	• Not Used
F26	NOT USED	F26UA	15A	• Not Used
F27	HORN	F27UA	15A	• P12 Horn
F28	NOT USED	F28UA	15A	• Not Used
F29	NOT USED	F29UA	15A	• Not Used
F30	NOT USED	F30UA	15A	• Not Used
F31	NOT USED	F31UA	15A	• Not Used
F32	REAR DEFOG	F32UA	30A	• E18 Rear Defogger Grid (C49)
F33	HTD MIR	F33UA	15A	• E17D Outside Rearview Mirror Glass - Driver (DBG/DWI/DZC) • E17P Outisde Rearview Mirror Glass - Passenger (DBG/DWI/DZC)
F34	PRK LAMP LT	F34UA	15A	• E3A Roof Clarence Lamp - Left Outer (U01) • E3C Roog Clarence Lamp - Front Middle (U01) • E3E Roof Clarence Lamp - Right Front Outer (U01) • E13LA Headlamp Assembly - Left E2LM Side Marker Lamp - Left Middle (DBG/DWI/DZC) • E42L Tail Lamp Assembly - Left
F37	EURO TRLR CONN	F37UA	20A	• Not Used
F38	TIM	F38UA	10A	• Not Used
F39	SPARE	F39UA	10A	• Not Used
F40	MISC IGN	F40UA	10A	• X51B Fuse Block - Instrument Panel Auxiliary • X176 (PTO)
F41	TRLR PRK LAMP	F41UA	20A	• Bumper Trailer Connector (Z82) • Bed Trailer Connector (Z6A) • Trailer Provisions (UY2)
F42	PRK LAMP RT	F42UA	15A	• E13RA Headlamp Assembly - Right • E42R Tail Lamp Assembly - Right • E2RM Side Marker Lamp - Right Middle (DBG/DWI/DZC)
F44	NOT USED	F44UA	5A	• Not Used
F45	SECO FUEL PUMP	F45UA	20A	• Not Used
F46	ECM IGN	F46UA	15A	• K20 Engine Control Module • K34 Glow Plug Module (L5P) • K111 Fuel Pump Control Module • K68 Trailer Lighting Control Module (U1D) • K38 Chassis Control Module - Auxiliary (JL1) • K115 Reductant Control Module (L5P)
F47	TCM IGN	F47UA	10A	• M26 Front Axle Engagement Actuator (NQH/NQF) • K71 Transmission Control Module (MGM/MGU) • Q8 Control Solenoid Valve Assembly (MYD)

Usage Table (cont'd)

No.	Device Label Name	Device Assigned Name	Rating	Description
F48	NOT USED	F48UA	10A	• Not Used
F49	TCM IGN	F49UA	15A	• Not Used
F50	A/C CLTCH	F50UA	10A	• Q2 A/C Compressor Clutch
F51	TCCM	F51UA	30A	• K69 Transfer Case Control Module (NQF/NQH)
F52	FRT WPR	F52UA	25A	• KR12B Windshield Wiper Relay • KR12C Windshield Wiper Speed Control Relay
F53	CHMSL	F53UA	10A	• E6 Center High Mounted Stop Lamp
F54	TRLR REV LAMP	F54UA	10A	• A10 Inside Rearview Mirror (DD8/DRZ) • A11 Radio • E42L Tail Lamp Assembly - Left • E42R Tail Lamp Assembly - Right
F55	TRLR BCK/ UP LAMP	F55UA	10A	• Bumper Trailer Connector (Z82) • Bed Trailer Connector (Z6A) • Trailer Provisions (UY2)
F56	SADS	F56UA	15A	• Not Used
F57	TTPM/SBZA	F57UA	15A	• B218L Side Object Sensor Module - Left (UKC) • B218R Side Object Sensor Module - Right (UKC) • K214 Trailer Tire Pressure Indicator Module (PTT)
F58	STRTR MTR LD/ HD DSL	F58UA	30A	• KR27 Starter Relay (L5P)
F60	AFM1	F60UA	10A	• Not Used
F61	VES	F61UA	5A	• K43 Power Steering Control Module (NV8)
F62	ICCM/CVS	F62UA	10A	• Q13 Evaporative Emission Vent Solenoid Valve (L8T)
F63	TRLR BATT	F63UA	30A	• Bumper Trailer Connector (Z82) • Bed Trailer Connector (Z6A) • Trailer Provisions (UY2) • X50E Fuse Block - Battery Auxiliary (K4B) X88 Trailer Connector (UD1)
F65	AUX UEC	F65UA	60A	• X50B Fuse Block - Underhood Auxiliary (L5P)
F66	COOL FAN MTR LT	F66UA	50A	• Not Used
F67	AFM2	F67UA	10A	• Not Used
F68	TIM	F68UA	40A	• Not Used
F69	STRTR MTR HD GAS|STRTR PINION LD	F69UA	30A|40A	• KR27 Starter Relay (L8T)
F71	COOL FAN	F71UA	50A	• Not Used
F72	COOL FAN MTR RT/LWR	F72UA	50A	• Not Used
F73	TRLR STP/TRN LAMP LT	F73UA	10A	• Bumper Trailer Connector (Z82) • Bed Trailer Connector (Z6A) • Trailer Provisions (UY2)
F74	TIM	F74UA	30A	• K68 Trailer Lighting Control Module (U1D)
F75	DEFC	F75UA	20A	• K115 Reductant Control Module (L5P)
F76	ELEC RNG BOS	F76UA	30A	• K4 Assist Step Control Module (BRS)
F78	ECM	F78UA	15A	• K20 Engine Control Module
F79	AUX BATT/ SCRPM	F79UA	10A	• X50E Fuse Block Auxiliary - Battery (K4B)

Usage Table (cont'd)

No.	Device Label Name	Device Assigned Name	Rating	Description
F80	CABIN COOL PUMP 17W	F80UA	10A	• M10 Charge Air Cooler Coolant Pump (L5P)
F81	TRLR STP/TRN LAMP RT	F81UA	10A	• Bumper Trailer Connector (Z82) • Bed Trailer Connector (Z6A) • Trailer Provisions (UY2)
F82	TIM	F82UA	30A	• K68 Trailer Lighting Control Module (U1D)
F83	FTZM	F83UA	30A	• K111 Fuel Pump Driver Control Module
F84	TRLR BRK	F84UA	30A	• K38A Chassis Control Module - Auxiliary (JL1) • W24 Blunt Cut - Trailer Brakes Provision
F85	ENG	F85UA	15A	• B75C Multifunction Intake Air Sensor (L5P)
F86	ECM	F86UA	30A	• K20 Engine Control Module
F87	INJ B EVEN	F87UA	20A	• K20 Engine Control Module (L8T) • T8B Ignition Coil 2 (L8T) • T8D Ignition Coil 4 (L8T) • T8F Ignition Coil 6 (L8T) • T8H Ignition Coil 8 (L8T)
F88	O2 B SNSR	F88UA	15A	• K20 Engine Control Module (L8T) • B198 Fuel Composition Sensor (FHS) • B75C Multifunction Intake Air Sensor (L8T) • B52D Heated Oxygen Sensor - Bank 1 Sensor 2 (L8T) • B52F Heated Oxygen Sensor - Bank 2 Sensor 2 (L8T)
F89	O2 A SNSR	F89UA	15A	• T1 Accessory DC/AC Power Inverter Module (KI4/KI5)
F90	INJ A ODD	F90UA	20A	• K20 Engine Control Module (L8T) • T8A Ignition Coil 1 (L8T) • T8C Ignition Coil 3 (L8T) • T8E Ignition Coil 5 (L8T) • T8G Ignition Coil 7 (L8T)
F91	ECM THROT CONT	F91UA	15A	• K20 Engine Control Module
F92	COOL FAN CLUTCH/AERO SHUTTER	F92UA	10A	• M96A Active Grille Air Shutter 1 Actuator (WMI) • M96B Active Grille Air Shutter 2 Actuator (WMI) • X50B Fuse Block - Underhood Auxiliary (L5P)
Relays				
K5	HEAD LAMP	KR50 Headlamp Relay	—	• F3UA • F4UA
K18	DC/AC INV	KR80 Accessory Relay	—	• F19UA (KI4/KI5)
K23	REAR DEFOG	KR5 Rear Defogger Relay	—	• F32UA • F33UA
K35	PRK LAMP	KR53 Park Lamps Relay	—	• F34UA • F41UA • F42UA

Usage Table (cont'd)

No.	Device Label Name	Device Assigned Name	Rating	Description
K36	RUN/CRNK	KR73 Ignition Main Relay	—	• F37UA • F38UA • F39UA • F40UA • F44UA • F46UA • F47UA • F48UA
K43	SECD FUEL PUMP	—	—	• Not Used
K59	A/C CLUTCH HD GAS	KR29 A/C Compressor Clutch Relay	—	• F50UA
K64	STRTR MTR LD/ HD DSL	KR27 Starter Motor	—	• M64 Starter Motor (L8T)
K70	STRTR MTR HD GAS	KR27 Starter Motor	—	• M64 Starter Motor (L5P)
K77	PWR/TRN	KR75 Engine Controls Ignition Relay	—	• F60UA • F67UA • F85UA • F86UA • F87UA • F88UA • F89UA • F90UA • F91UA • F92UA • KR29 A/C Compressor Clutch Relay • KR33 Auxiliary Heater Coolant Pump Relay
Note: Relays listed below are non-serviceable Printed Circuit Board (PCB) relays and are internal to the block.				
—	—	KR3 Horn Relay	—	• F27UA
—	—	KR11 Windshield Washer Pump Relay	—	• F13UA
—	—	KR12B Windshield Wiper Relay	—	• M75 Windshield Wiper Motor
—	—	KR12C Windshield Wiper Speed Control Relay	—	• M75 Windshield Wiper Motor
—	—	KR33 Auxiliary Heater Coolant Pump	—	• M10 Charge Air Cooler Coolant Pump (L5P)
—	—	KR46 Front Fog Lamp Relay	—	• F8UA
—	—	KR48 Headlamp High Beam Relay	—	• F1UA • F2UA
—	—	KR59 Stop Lamp Relay	—	• F53UA
—	—	KR61 Trailer Backup Lamps Relay	—	• F54UA • F55UA
—	—	KR63L Trailer Stop/Turn Signal Lamp Relay - Left	—	• F73UA

Usage Table (cont'd)

No.	Device Label Name	Device Assigned Name	Rating	Description
—	—	KR63R Trailer Stop/Turn Signal Lamp Relay - Right	—	• F81UA

X50A Fuse Block - Underhood Bottom View

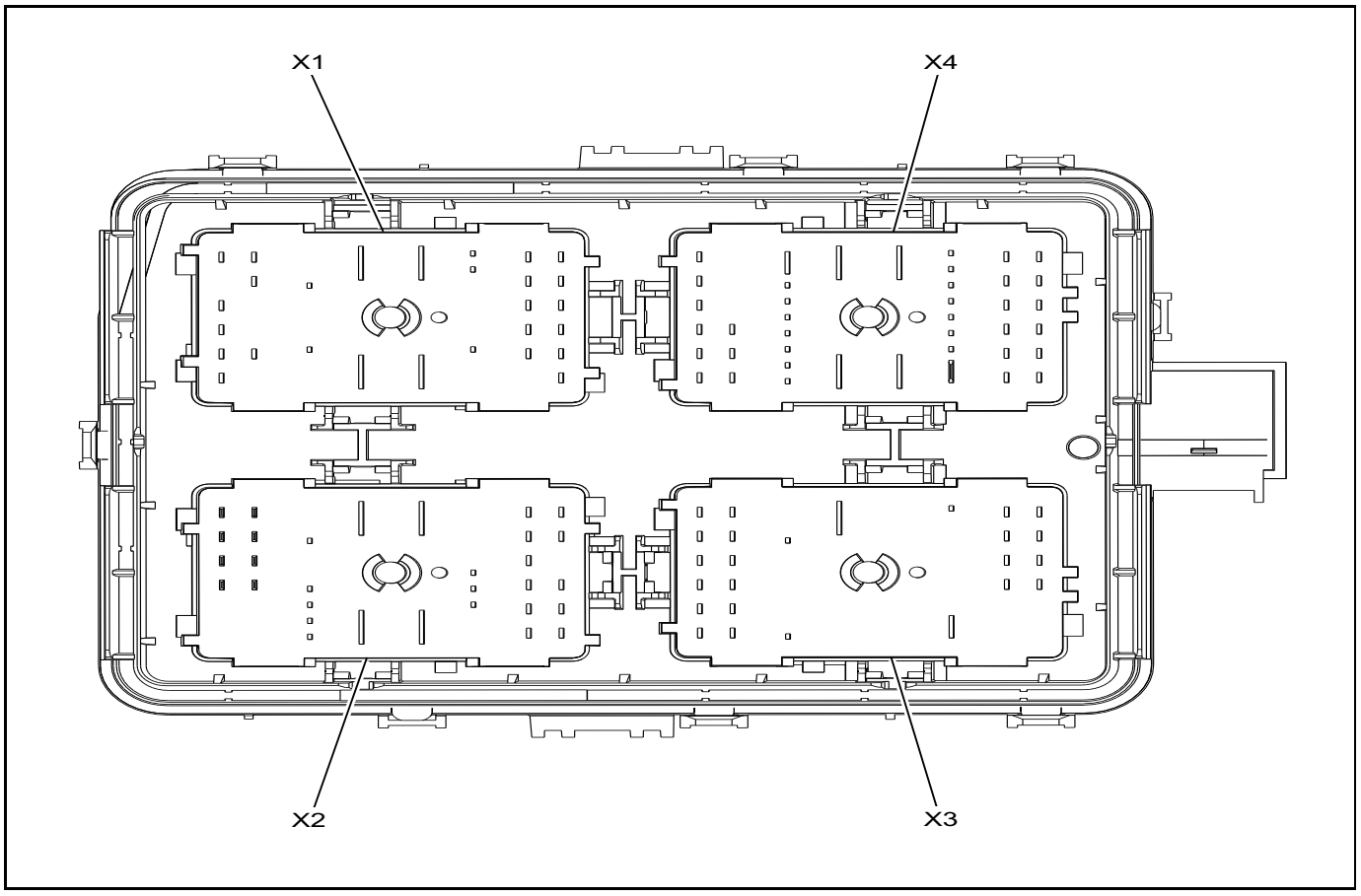

5233042

X50A Fuse Block - Underhood X1

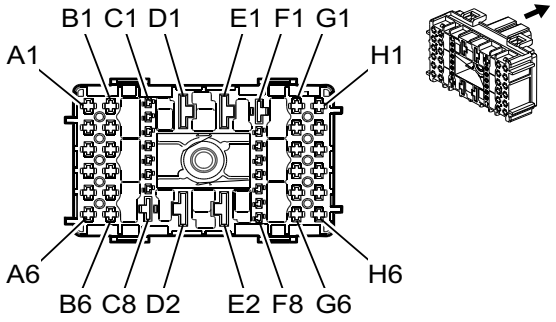

4994109

Connector Part Information

Harness Type: Body
OEM Connector: 33384590
Service Connector: 19370824
Description: 44-Way F 1.5, 2.8, 6.3 CTS, 9.5 MCON-LL Series (BU)

Terminal Part Information

Terminal Type ID	Terminated Lead	Diagnostic Test Probe	Terminal Removal Tool	Service Terminal	Tray Name	Core Crimp	Insulation Crimp
I	19332365	J-35616-14 (GN)	J-38125-215A	Not Available	Not Available	Not Available	Not Available
II	19332366	J-35616-35 (VT)	J-38125-215A	Not Available	Not Available	Not Available	Not Available
III	Not Available	J-35616-35 (VT)	J-38125-215A	Not Available	Not Available	Not Available	Not Available
IV	Not Required	J-35616-17 (LT GN)	Not Available	Not Available	Not Available	Not Available	Not Available

X50A Fuse Block - Underhood X1

Pin	Size	Color	Circuit	Function	Terminal Type ID	Option
A1 - A2	—	—	—	Not Occupied	—	—
A3	0.5	YE/BN	2229	Left Headlamp Relay Control	II	—
A4	0.5	BK	250	Ground	II	—
A5 - B4	—	—	—	Not Occupied	—	—
B5	0.5	GY/VT	228	Windshield Washer Pump Control	II	—
B6 - C2	—	—	—	Not Occupied	—	—
C3	0.35	WH/L-GN	4628	DC/AC Inverter Relay Control	I	—
C4 - C6	—	—	—	Not Occupied	—	—
C7	0.35	BN/GY	2268	Windshield Washer Relay Control	I	—
C8	—	—	—	Not Occupied	—	—
D1	10	BN/BK	4629	DC/AC Inverter Control	IV	—
D2	10	RD/VT	1640	Battery Positive Voltage	IV	—
E1	10	RD/YE	442	Battery Positive Voltage	IV	—
E2 - F1	—	—	—	Not Occupied	—	—
F2	0.5	BN/VT	193	Rear Defog Relay Control	I	—
F3 - F5	—	—	—	Not Occupied	—	—
F6	0.35	WH/VT	860	Front Windshield Wiper Switch High Signal	I	—
F7 - G1	—	—	—	Not Occupied	—	—
G2	2.5	BN/VT	293	Rear Defog Element Control	II	—
G3	0.5	BN/YE	2267	Mirror Heating Element Control	II	—
G4	0.35	L-GN/VT	5199	Run/Crank Relay Coil Control	III	—
G5	2	BK	150	Ground	II	—
G6	0.35	GY	91	Windshield Wiper Motor Relay Coil Control	II	—
H1 - H3	—	—	—	Not Occupied	—	—
H4	0.35 0.35	VT/WH VT/WH	239 239	Run/Crank Ignition 1 Voltage Run/Crank Ignition 1 Voltage	III II	— —
H5	2	WH	92	Windshield Wiper Motor High Speed Control	II	—
H6	2	YE/BN	95	Windshield Wiper Motor Low Speed Control	II	—

X50A Fuse Block - Underhood X2

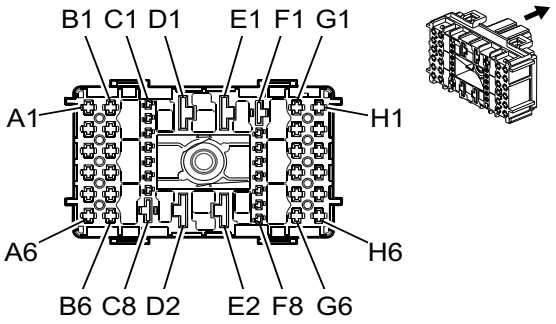

4994132

Connector Part Information

Harness Type: Body
OEM Connector: 33384594
Service Connector: 19371174
Description: 44-Way F 1.5, 2.8, 6.3 CTS, 9.5 MCON-LL Series (GN)

Terminal Part Information

Terminal Type ID	Terminated Lead	Diagnostic Test Probe	Terminal Removal Tool	Service Terminal	Tray Name	Core Crimp	Insulation Crimp
I	19332365	J-35616-14 (GN)	J-38125-215A	Not Available	Not Available	Not Available	Not Available
II	19332366	J-35616-35 (VT)	J-38125-215A	Not Available	Not Available	Not Available	Not Available
III	Not Available	J-35616-35 (VT)	J-38125-215A	Not Available	Not Available	Not Available	Not Available
IV	Not Required	J-35616-17 (LT GN)	Not Available	Not Available	Not Available	Not Available	Not Available

X50A Fuse Block - Underhood X2

Pin	Size	Color	Circuit	Function	Terminal Type ID	Option
A1 - A2	—	—	—	Not Occupied	—	—
A3	0.75	WH	711	Left Headlamp High Beam Control	II	—
A4	0.75	WH	311	Right Headlamp High Beam Control	II	—
A5	0.75	YE	2227	Left Headlamp Control	II	—
A6	0.75	YE/GY	2226	Right Headlamp Control	II	—
B1 - B2	—	—	—	Not Occupied	—	—
B3	0.5	BN/VT	2234	Front Fog Lamp Control	II	—
B4 - B6	—	—	—	Not Occupied	—	—
C1	0.5	BU/WH	5186	Left Trailer Turn Signal Lamp Control	I	—
C2	0.5	YE/GY	5187	Right Trailer Turn Signal Lamp Control	I	—
C3	0.5	BN/WH	1317	Fog Lamp Relay Control	I	—
C4	0.35	BN/VT	1969	Headlamp High Beam Relay Control	I	—
C5 - D1	—	—	—	Not Occupied	—	—
D2	10	RD/GY	2042	Battery Positive Voltage	IV	—

X50A Fuse Block - Underhood X2 (cont'd)

Pin	Size	Color	Circuit	Function	Terminal Type ID	Option
E1	—	—	—	Not Occupied	—	—
E2	10	RD/VT	2142	Battery Positive Voltage	IV	—
F1	—	—	—	Not Occupied	—	—
F2	0.35	VT/WH	5065	Stop Lamp Relay Coil Control	I	—
	0.5	VT/WH	5065	Stop Lamp Relay Coil Control	I	UD1
F3	0.35	BU/BN	38	Backup Lamp Relay Control	I	—
F4	0.35	BN/WH	28	Horn Relay Control	I	—
F5 - F8	—	—	—	Not Occupied	—	—
G1	0.75	BN/GY	29	Horn Control	II	—
G2	0.35	L-GN/WH	24	Backup Lamp Control	II	—
G3 - G6	—	—	—	Not Occupied	—	—
H1	0.35	VT/GY	1054	Stop Lamp Control	II	—
H2	0.5	VT/GY	709	Left Park Lamp Control	II	—
H3	0.35	VT/GY	709	Left Park Lamp Control	III	—
	0.5	VT/GY	709	Left Park Lamp Control	II	—
H4	—	—	—	Not Occupied	—	—
H5	0.5	GY/BN	309	Right Park Lamp Control	II	—
H6	0.35	BU	45	Park Lamp Relay Control	II	—

X50A Fuse Block - Underhood X3

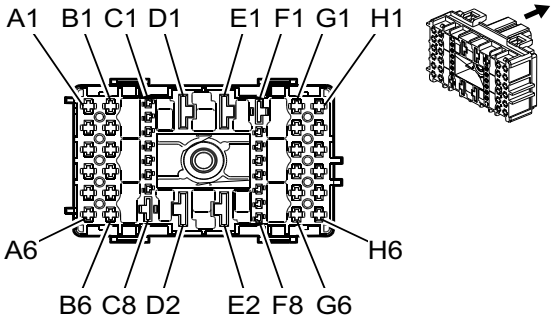

4992608

Connector Part Information

Harness Type: Engine
OEM Connector: 33384584
Service Connector: 19371176
Description: 44-Way F 1.5, 2.8, 6.3 CTS, 9.5 MCON-LL Series (GY)

Terminal Part Information

Terminal Type ID	Terminated Lead	Diagnostic Test Probe	Terminal Removal Tool	Service Terminal	Tray Name	Core Crimp	Insulation Crimp
I	13579915	J-35616-40 (BU)	J-38125-556	1241406-1	Lear 17	Not Available	Not Available
II	13582285	J-35616-35 (VT)	J-38125-557	1241388-1	Lear 17	2	4

Terminal Part Information (cont'd)

Terminal Type ID	Terminated Lead	Diagnostic Test Probe	Terminal Removal Tool	Service Terminal	Tray Name	Core Crimp	Insulation Crimp
III	13582285	J-35616-35 (VT)	J-38125-557	1241388-1	Lear 17	E	C
IV	13582286	J-35616-35 (VT)	J-38125-557	1241390-1	Lear 17	F	D
V	19332365	J-35616-14 (GN)	J-38125-215A	Not Available	Not Available	Not Available	Not Available
VI	19332366	J-35616-35 (VT)	J-38125-215A	Not Available	Not Available	Not Available	Not Available
VII	Not Available	J-35616-35 (VT)	J-38125-215A	Not Available	Not Available	Not Available	Not Available
VIII	Not Available	J-35616-35 (VT)	J-38125-557	1241390-1	Lear 17	F	D
IX	Not Required	J-35616-17 (LT GN)	Not Available	Not Available	Not Available	Not Available	Not Available

X50A Fuse Block - Underhood X3

Pin	Size	Color	Circuit	Function	Terminal Type ID	Option
A1	0.5	VT/GN	439	Run/Crank Ignition 1 Voltage	VI	L8T
	0.5	VT/GN	439	Run/Crank Ignition 1 Voltage	III	LP5
A2	0.5	VT/BK	2139	Run/Crank Ignition 1 Voltage	VI	L8T
	0.5	VT/BK	2139	Run/Crank Ignition 1 Voltage	III	LP5
A3	—	—	—	Not Occupied	—	—
A4	0.5	BN/GN	59	A/C Compressor Clutch Control	VI	L8T
	0.5	BN/GN	59	A/C Compressor Clutch Control	III	LP5
A5	0.75	RD/VT	7940	Battery Positive Voltage	III	—
A6	—	—	—	Not Occupied	—	—
B1	2.5	YE	6	Starter Solenoid Crank Ignition Voltage	IV	—
B2	0.5	YE/BK	625	Starter Enable Relay Control	III	—
B3	0.5	YE/BU	1465	Secondary Fuel Pump Relay Control	VI	—
B4 - B5	—	—	—	Not Occupied	—	—
B6	3	RD/GY	1342	Battery Positive Voltage	VII	L8T
	3	RD/GY	1342	Battery Positive Voltage	VIII	LP5
C1 - C2	—	—	—	Not Occupied	—	—
C3	1	BK	4450	Ground	V	—
C4	0.5	WH/GY	459	A/C Compressor Clutch Relay Control	V	—
C5	0.5	BK/WH	451	Signal Ground	V	—
C6 - C8	—	—	—	Not Occupied	—	—
D1	10	RD/VT	4040	Battery Positive Voltage	IX	—
D2 - E2	—	—	—	Not Occupied	—	—
F1	2.5	YE	6	Starter Solenoid Crank Ignition Voltage	I	—
F2	0.5	YE/BK	625	Starter Enable Relay Control	V	—
F3	0.5	RD/BN	440	Battery Positive Voltage	V	—
F4	0.5	YE	5991	Powertrain Relay Coil Control	V	—
F5	0.5	RD/WH	3440	Battery Positive Voltage	V	—
F6	—	—	—	Not Occupied	—	—

X50A Fuse Block - Underhood X3 (cont'd)

Pin	Size	Color	Circuit	Function	Terminal Type ID	Option
F7	0.5	WH/BK	2366	Cooling Fan Control Relay Speed Signal	V	L5P
	0.5	WH/BK	335	Low Speed Cooling Fan Relay Control	V	L5P
	0.5	VT/BU	5705	Powertrain Main Relay Fused Control 6	V	L5P/L8T
F8	0.5	VT/BU	5126	After Boil Heater Pump Control	V	—
G1	0.5	VT/BU	5294	Powertrain Main Relay Fused Supply 5	III	—
G2	0.75	VT/BU	5292	Powertrain Main Relay Fused Supply 3	VI	—
G3	—	—	—	Not Occupied	—	—
G4	0.5	VT/BU	5293	Powertrain Main Relay Fused Supply 4	VI	—
G5	1	VT/BU	5291	Powertrain Main Relay Fused Supply 2	VI	—
G6	0.75	VT/BU	5291	Powertrain Main Relay Fused Supply 2	VI	—
H1	2.5	VT/BU	5290	Powertrain Main Relay Fused Supply 1	IV	L5P
	2	VT/BU	5290	Powertrain Main Relay Fused Supply 1	IV	L8T
H2	1	VT/BU	5292	Powertrain Main Relay Fused Supply 3	II	—
H3	0.5	VT/BU	5294	Powertrain Main Relay Fused Supply 5	VI	—
H4 - H5	—	—	—	Not Occupied	—	—
H6	0.5	VT/BU	5290	Powertrain Main Relay Fused Supply 1	III	L5P
	0.5	VT/BU	5290	Powertrain Main Relay Fused Supply 1	VI	L8T

X50A Fuse Block - Underhood X4

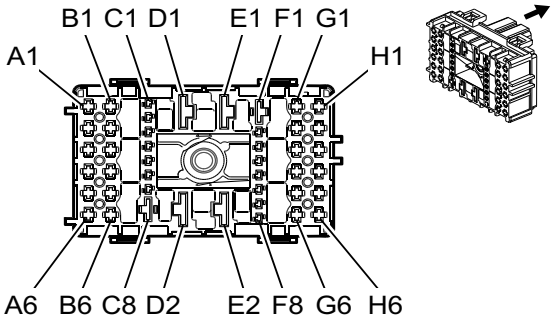

4993031

Connector Part Information

Harness Type: Chassis
OEM Connector: 33384574
Service Connector: 19371188
Description: 44-Way F 1.5, 2.8, 6.3 CTS, 9.5 MCON-LL Series (BK)

Terminal Part Information

Terminal Type ID	Terminated Lead	Diagnostic Test Probe	Terminal Removal Tool	Service Terminal	Tray Name	Core Crimp	Insulation Crimp
I	13582286	J-35616-35 (VT)	J-38125-557	1241390-1	Lear 17	F	D
II	19332365	J-35616-14 (GN)	J-38125-215A	Not Available	Not Available	Not Available	Not Available
III	19332366	J-35616-17 (LT GN)	J-38125-215A	Not Available	Not Available	Not Available	Not Available

Terminal Part Information (cont'd)

Terminal Type ID	Terminated Lead	Diagnostic Test Probe	Terminal Removal Tool	Service Terminal	Tray Name	Core Crimp	Insulation Crimp
IV	19332366	J-35616-35 (VT)	J-38125-215A	Not Available	Not Available	Not Available	Not Available

X50A Fuse Block - Underhood X4

Pin	Size	Color	Circuit	Function	Terminal Type ID	Option
A1	—	—	—	Not Occupied	—	—
A2	0.75	VT/GY	709	Left Park Lamp Control	IV	—
A3	1.5	GY/BN	2109	Trailer Park Lamp Control	IV	—
A4	0.75	GY/BN	309	Right Park Lamp Control	IV	—
A5 - A6	—	—	—	Not Occupied	—	—
B1	0.5	GN/WH	24	Backup Lamp Control	IV	—
B2	0.75	WH/GN	1624	Trailer Backup Lamp Control	IV	—
B3	—	—	—	Not Occupied	—	—
B4	0.5	RD/GN	1840	Battery Positive Voltage	IV	—
B5 - B6	—	—	—	Not Occupied	—	—
C1	0.5	RD/WH	5740	Battery Positive Voltage	II	—
C2 - C6	—	—	—	Not Occupied	—	—
C7	0.5	RD/WH	2040	Battery Positive Voltage	II	—
C8 - D1	—	—	—	Not Occupied	—	—
D2	4	RD/GN	742	Battery Positive Voltage	III	—
E1 - G2	—	—	—	Not Occupied	—	—
G3	0.75	YE/BU	318	Left Rear Trailer Stop/Turn Lamp Control	IV	—
G4	2.5 2.5	RD/YE RD/YE	5840 5840	Battery Positive Voltage Battery Positive Voltage	IV I	— —
G5	1	RD/WH	3440	Battery Positive Voltage	IV	—
G6 - H2	—	—	—	Not Occupied	—	—
H3	0.75	GN/VT	1619	Right Rear Trailer Stop/Turn Lamp Control	IV	—
H4	2	RD/VT	5640	Battery Positive Voltage	IV	—
H5	2.5 2.5	RD/VT RD/VT	5340 5340	Battery Positive Voltage Battery Positive Voltage	IV I	— —
H6	2.5	RD/VT	1242	Battery Positive Voltage	IV	—

X50B Fuse Block - Underhood Auxiliary Label (L5P)

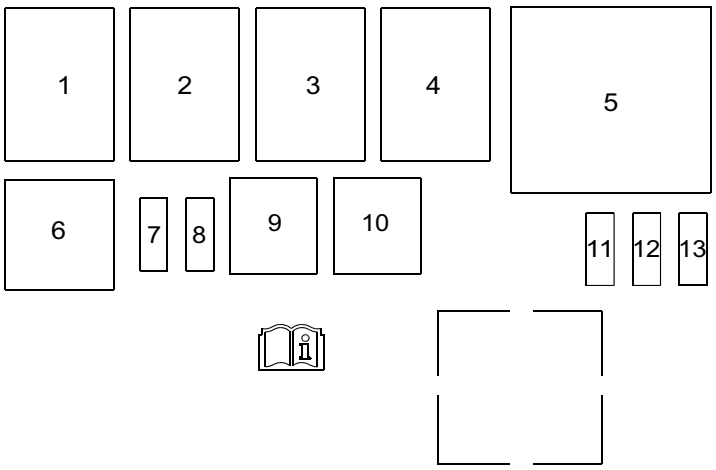

FUSES

7 SPARE(10A)
8 100WATTPUMP/ SPARE(20A)
9 SCR(40A)
10 FUELHTR(40A)
11 SMARTSENSORS(10A)
12 SCRPM(10A)
13 SPARE(10A)

RELAYS

1 SCR
2 FUELHTR
3 100WATTPUMP/ SPARE
4 SPARE
5 COOLFANCLUTCH (HDONLY)
6 PWRTRNSNSR

5233025

X50B Fuse Block - Underhood Auxiliary Top View

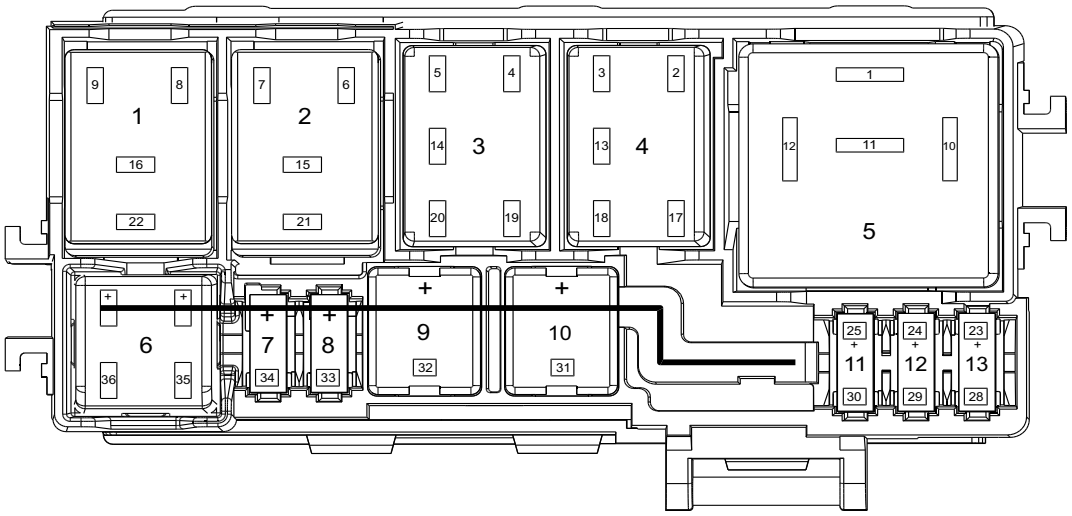

5252568

Usage Table

No.	Device Label Name	Device Assigned Name	Rating	Description
Fuses				
7	SPARE	F7UB	10A	• Not Used
8	100WATTPUMP/ SPARE	F8UB	20A	• Not Used
9	SCR	F9UB	40A	• KR121A Reductant Control Module Relay 1
10	FUELHTR	F10UB	40A	• KR22 Fuel Heater Relay
11	SMARTSENSORS	F11UB	10A	• B136 Exhaust Particulate Sensor • B195A Nitrogen Oxides Sensor 1 • B195B Nitrogen Oxides Sensor 2 • M103 TurboCharger Vane Position Actuator
12	SCRPM	F12UB	10A	• K111 Fuel Pump Driver Control Module • K115 Reductant Control Module
13	SPARE	F13UB	10A	• Not Used
Relays				
1	SCR	KR121A Reductant Control Module Relay 1	—	• K115 Reductant Control Module
2	FUELHTR	KR22 Fuel Heater Relay	—	• E11A Fuel Heater/Water in Fuel Sensor
3	100WATTPUMP/ SPARE	—	—	• Not Used

Usage Table (cont'd)

No.	Device Label Name	Device Assigned Name	Rating	Description
4	SPARE	—	—	• Not Used
5	COOLFAN-CLUTCH (HDONLY)	K20F Cooling Fan Relay	—	• K22 Cooling Fan Control Module
6	PWRTRNSNSR	KR121B Reductant Control Module Relay 1	—	• F11UB • F12UB

X50B Fuse Block - Underhood Auxiliary

—

Connector Part Information

Harness Type: Engine
OEM Connector: 35096237
Service Connector: -
Description: —

Terminal Part Information

Terminal Type ID	Terminated Lead	Diagnostic Test Probe	Terminal Removal Tool	Service Terminal	Tray Name	Core Crimp	Insulation Crimp
I	Not Required	J-35616-17 (LT GN)	No Tool Required	Not Required	Not Required	Not Required	Not Required
II	Not Required	J-35616-35 (VT)	No Tool Required	Not Required	Not Required	Not Required	Not Required
III	Not Required	J-35616-42 (RD)	No Tool Required	Not Required	Not Required	Not Required	Not Required
IV	Not Required	J-35616-43 (RD)	No Tool Required	Not Required	Not Required	Not Required	Not Required
V	Not Required	J-35616-4A (PU)	No Tool Required	Not Required	Not Required	Not Required	Not Required

X50B Fuse Block - Underhood Auxiliary

Pin	Size	Color	Circuit	Function	Terminal Type ID	Option
1	0.5	WH/BK	6341	Powertrain Relay Contact Signal	I	—
6	0.5	BU/L-GN	7071	Heater Fuel Control	III	—
7	2.5	VT/L-GN	355	Fuel Filter Heater Voltage	III	—
8	0.5	L-GN/D-BU	3889	DEF Power Module Relay Control	III	—
9	2.5	BU	3921	DEF Heater Supply 1	III	—
10	0.5	BK	4450	Ground	I	—
11	0.5	WH	2368	Cooling Fan Control Signal	I	—
12	0.5 0.5	WH/BK WH/BK	2366 335	Cooling Fan Control Relay Speed Signal Low Speed Cooling Fan Relay Control	I I	— —
15	2.5	VT/L-GN	355	Fuel Filter Heater Voltage	III	—
16	2.5	BU	3921	DEF Heater Supply 1	III	—
19	1	YE/D-BU	5126	After Boil Heater Pump Control	II	—
20	1	YE/D-BU	5126	After Boil Heater Pump Control	II	—
21	2.5	VT/L-GN	355	Fuel Filter Heater Voltage	III	—
22	2.5	BU	3921	DEF Heater Supply 1	III	—
24	1.5 1.5	L-GN/GY RD	9999 9999	— —	II II	— —
25	1.5	L-GN/GY	9999	—	II	—
26	10	RD/VT	4040	Battery Positive Voltage	I	—
29	0.5	VT/L-GN	4320	Powertrain Sensor Bus Enable	II	—
30	2.5	VT/D-BU	3674	NOx Sensor 1 Control	V	—
31	2.5	VT/L-GN	355	Fuel Filter Heater Voltage	IV	—
32	2.5	BU	3921	DEF Heater Supply 1	IV	—
33	1	YE/D-BU	5126	After Boil Heater Pump Control	II	—

X50B Fuse Block - Underhood Auxiliary (cont'd)

Pin	Size	Color	Circuit	Function	Terminal Type ID	Option
35	1.5	RD	9999	—	II	—
36	0.5	L-GN/ D-BU	3889	DEF Power Module Relay Control	II	—

X50D Fuse Block - Battery Top View

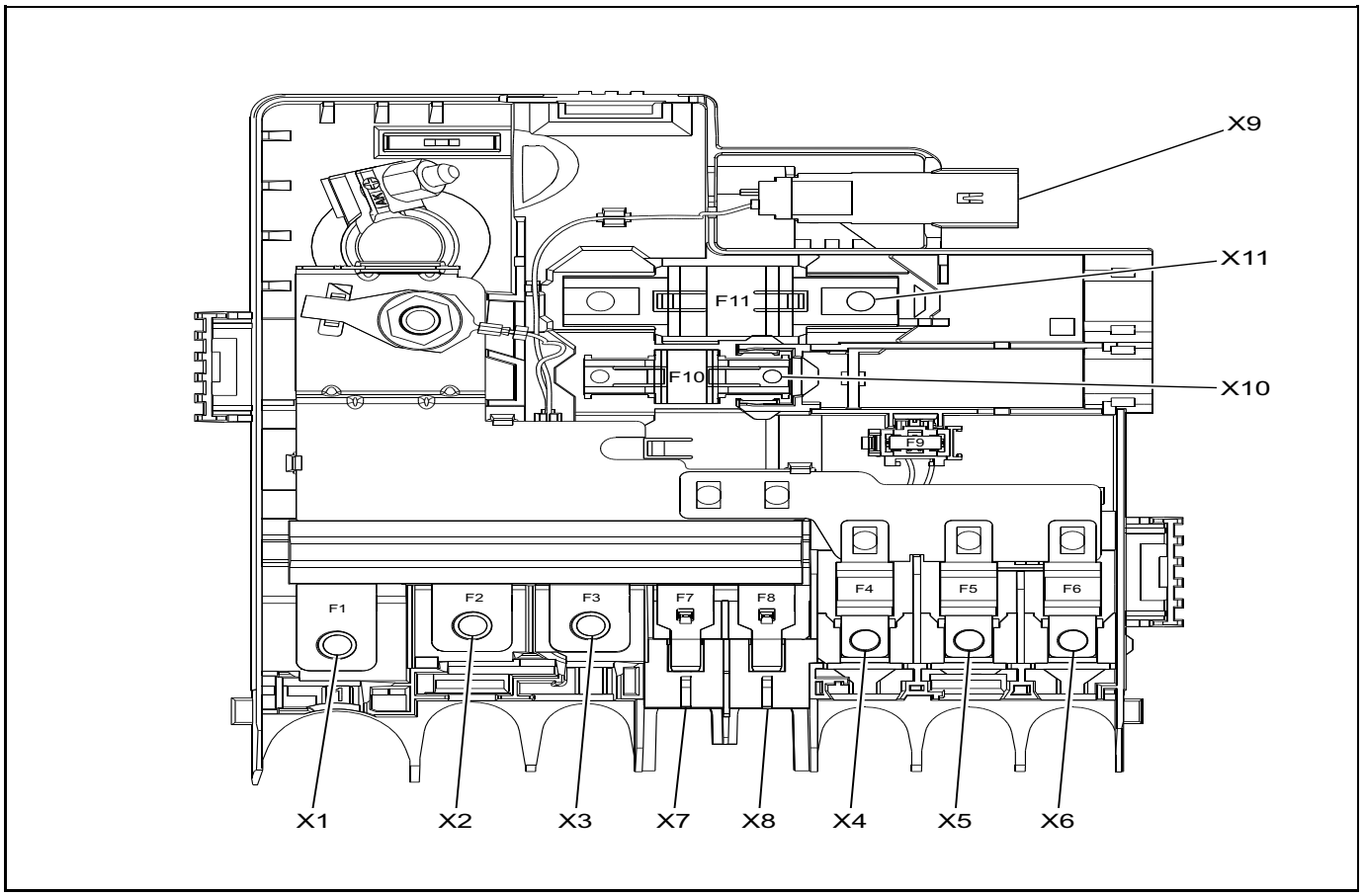

5070128

Usage Table

No.	Device Label Name	Device Assigned Name	Rating	Description
Fuses				
F1	—	F1UD	175A	• G13E Generator - Auxiliary (KHF) • X50A Fuse Block - Underhood (L8T+KW7)
F2	—	F2UD	175A (L8T) 400A (L5P)	• X50E Fuse Block Battery Auxiliary (L5P) • X50A Fuse Block - Underhood (L8T)
F3	—	F3UD	400A (L8T) 500A (L5P)	• M64 Starter Motor
F4	—	F4UD	60A	• X51R Fuse Block - Instrument Panel Right
F5	—	F5UD	60A	• X51R Fuse Block - Instrument Panel Right
F6	—	F6UD	100A	• E40 Electric Auxiliary Heater (C32)
F7	—	F7UD	100A (K4B) 125A (L5P)	• X50E Fuse Block - Battery Auxiliary (K4B) • K34 Glow Plug Control Module (L5P)

Usage Table (cont'd)

No.	Device Label Name	Device Assigned Name	Rating	Description
F8	—	F8UD	150A	• Not Used
F9	—	F9UD	5A	• K9 Body Control Module
F10	—	F10UD	60A	• X51B Fuse Block - Instrument Panel Auxiliary
F11	—	F11UD	200A	• Not Used

X50D Fuse Block - Battery X4

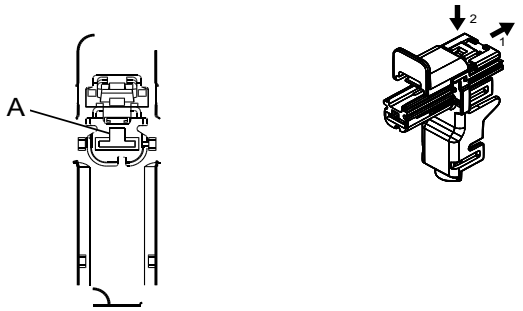

4994183

Connector Part Information

Harness Type: Body
OEM Connector: 33297578
Service Connector: -
Description: 1-Way F 6.3 Series (BK)

Terminal Part Information

Terminal Type ID	Terminated Lead	Diagnostic Test Probe	Terminal Removal Tool	Service Terminal	Tray Name	Core Crimp	Insulation Crimp
I	Not Required	J-35616-42 (RD)	No Tool Required	Not Required	Not Required	Not Required	Not Required

X50D Fuse Block - Battery X4

Pin	Size	Color	Circuit	Function	Terminal Type ID	Option
A	5	RD/GY	142	Battery Positive Voltage	I	—

X50D Fuse Block - Battery X5

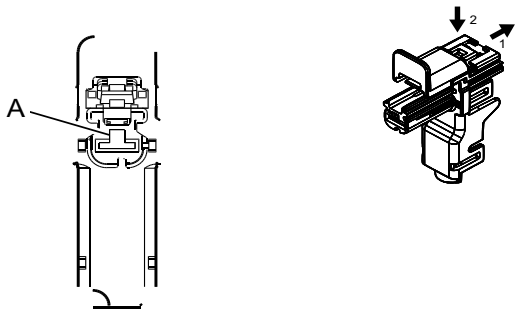

4994171

Connector Part Information

Harness Type: Body
OEM Connector: 33297579
Service Connector: -
Description: 1-Way F 6.3 Series (BU)

Terminal Part Information

Terminal Type ID	Terminated Lead	Diagnostic Test Probe	Terminal Removal Tool	Service Terminal	Tray Name	Core Crimp	Insulation Crimp
I	Not Required	J-35616-42 (RD)	No Tool Required	Not Required	Not Required	Not Required	Not Required

X50D Fuse Block - Battery X5

Pin	Size	Color	Circuit	Function	Terminal Type ID	Option
A	6	RD/WH	342	Battery Positive Voltage	I	—

X50D Fuse Block - Battery X6 (C32)

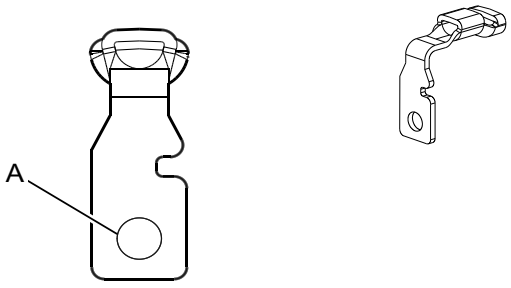

5194789

Connector Part Information

Harness Type: Body
OEM Connector: 35085117
Service Connector: -
Description: 1-Way Ring Terminal

Terminal Part Information

Terminal Type ID	Terminated Lead	Diagnostic Test Probe	Terminal Removal Tool	Service Terminal	Tray Name	Core Crimp	Insulation Crimp
I	Not Required	Not Available	No Tool Required	Not Required	Not Required	Not Required	Not Required

X50D Fuse Block - Battery X6 (C32)

Pin	Size	Color	Circuit	Function	Terminal Type ID	Option
A	10	RD/GY	642	Battery Positive Voltage	I	—

X50D Fuse Block - Battery X9

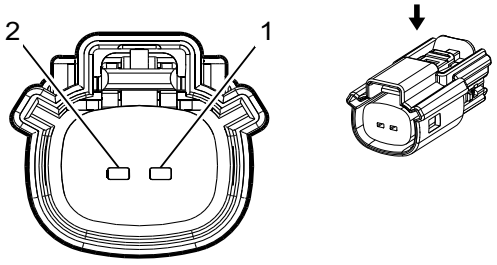

2474713

Connector Part Information

Harness Type: Body
OEM Connector: 13782480
Service Connector: 13577534
Description: 2-Way F 150 MX Series, Sealed (BK)

Terminal Part Information

Terminal Type ID	Terminated Lead	Diagnostic Test Probe	Terminal Removal Tool	Service Terminal	Tray Name	Core Crimp	Insulation Crimp
I	Not Required	J-35616-2A (GY)	No Tool Required	Not Required	Not Required	Not Required	Not Required

X50D Fuse Block - Battery X9

Pin	Size	Color	Circuit	Function	Terminal Type ID	Option
1	0.75	RD/YE	2340	Battery Positive Voltage	I	—
2	—	—	—	Not Occupied	—	—

X50D Fuse Block - Battery X10 (9L7)

—

Connector Part Information

Harness Type: Auxiliary Fuse Block
OEM Connector: 13624367
Service Connector: Service by Cable Assembly — See Part Catalog
Description: 1-Way Ring Terminal

Terminal Part Information

Terminal Type ID	Terminated Lead	Diagnostic Test Probe	Terminal Removal Tool	Service Terminal	Tray Name	Core Crimp	Insulation Crimp
I	Not Required	No Tool Required	No Tool Required	Not Required	Not Required	Not Required	Not Required

X50D Fuse Block - Battery X10 (9L7)

Pin	Size	Color	Circuit	Function	Terminal Type ID	Option
1	10	RD/D-BU	42	Battery Positive Voltage	I	—

X51B Fuse BLock - Instrument Panel Auxiliary Label (9L7)

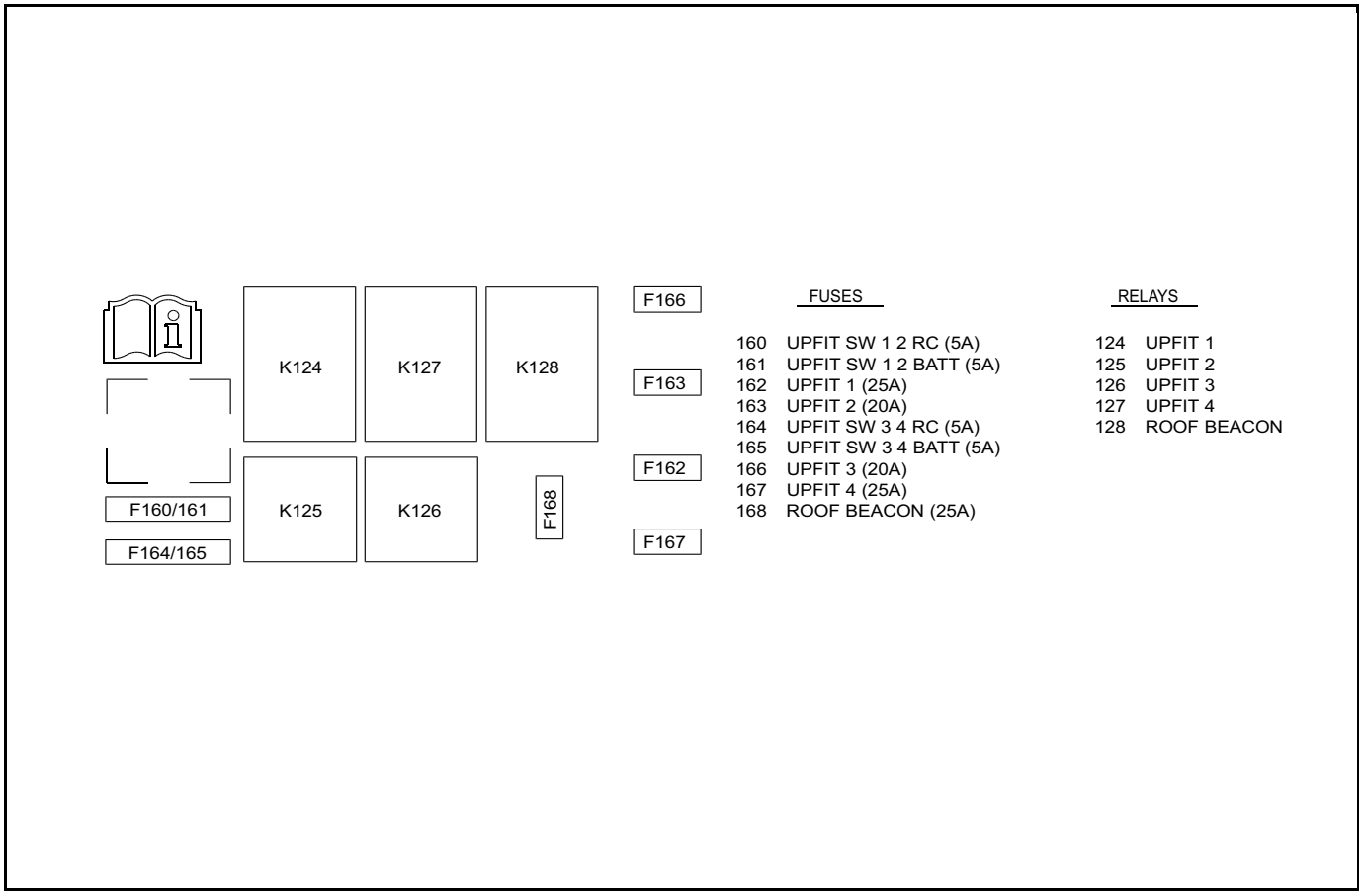

5357105

X51B Fuse Block - Instrument Panel Auxiliary (9L7)

—

Connector Part Information

Harness Type: Auxiliary Instrument Panel
OEM Connector: 33323307
Service Connector: Service by Harness - See Part Catalog
Description: Wire Entry Fuse Block

Terminal Part Information

Terminal Type ID	Terminated Lead	Diagnostic Test Probe	Terminal Removal Tool	Service Terminal	Tray Name	Core Crimp	Insulation Crimp
I	Not Required	J-35616-22 (RD)	No Tool Required	Not Required	Not Required	Not Required	Not Required
II	Not Required	J-35616-35 (VT)	No Tool Required	Not Required	Not Required	Not Required	Not Required

X51B Fuse Block - Instrument Panel Auxiliary (9L7)

Pin	Size	Color	Circuit	Function	Terminal Type ID	Option
1	2.5	YE/BN	968	Auxiliary 4 Control	II	—
2	2.5	BU	965	Auxiliary 1 Control	II	—
3	2.5	GY/BK	966	Auxiliary 2 Control	II	—
4	2.5	BN/WH	967	Auxiliary 3 Control	II	—
5	2.5	OG/WH	968	Auxiliary 4 Control	II	—
6	2.5	BU	965	Auxiliary 1 Control	II	—
7	2.5	GY/BK	966	Auxiliary 2 Control	II	—
8	2.5	BN/WH	967	Auxiliary 3 Control	II	—
9	2.5	GN/BU	5989	Emergency Lamp Relay Contact Control	II	—
10	2.5	GN/BU	5989	Emergency Lamp Relay Contact Control	II	—
11	2.5	GN/BU	5989	Emergency Lamp Relay Contact Control	II	—
13	0.35	BU	903	Battery Positive Voltage	II	—
14	0.5	WH/BK	5990	Emergency Lamp Switch Signal	II	—
15	2.5	RD/BU	42	Battery Positive Voltage	II	—
16	2.5	RD/BU	42	Battery Positive Voltage	II	—
17	0.35	BK	963	Auxiliary 3 Switch Signal	II	—
18	2.5	OG/WH	968	Auxiliary 4 Control	II	—
20	0.35	BU	903	Battery Positive Voltage	II	—
21	0.35	BU	903	Battery Positive Voltage	II	—
22	2.5	BN/WH	967	Auxiliary 3 Control	II	—
23	0.35	BK	964	Auxiliary 4 Switch Signal	II	—
24	2.5	RD/BU	42	Battery Positive Voltage	II	—
25	2.5	RD/BU	42	Battery Positive Voltage	II	—
26	0.35	BK	962	Auxiliary 2 Switch Signal	II	—
27	2.5	BU	965	Auxiliary 1 Control	II	—
29	0.35	RD/BU	42	Battery Positive Voltage	II	—
30	0.35	RD/BU	42	Battery Positive Voltage	II	—
31	2.5	GY/BK	966	Auxiliary 2 Control	II	—
32	0.35	BK	961	Auxiliary 1 Switch Signal	II	—

X51B Fuse Block - Instrument Panel Auxiliary (9L7) (cont'd)

Pin	Size	Color	Circuit	Function	Terminal Type ID	Option
33	2.5	RD/BU	42	Battery Positive Voltage	II	—
34	0.5	VT/GN	39	Run/Crank Ignition 1 Voltage	II	—
35	0.5	VT/GN	39	Run/Crank Ignition 1 Voltage	II	—
36	5	RD/BU	42	Battery Positive Voltage	I	—
37	0.35	BU	903	Battery Positive Voltage	II	—
38	0.35	RD/BU	42	Battery Positive Voltage	II	—
39	2.5	RD/BU	42	Battery Positive Voltage	II	—
40	2.5	RD/BU	42	Battery Positive Voltage	II	—
41	2.5	RD/BU	42	Battery Positive Voltage	II	—
42	2.5	RD/BU	42	Battery Positive Voltage	II	—
43	2.5	RD/BU	42	Battery Positive Voltage	II	—

X51L Fuse Block - Instrument Panel Left Label

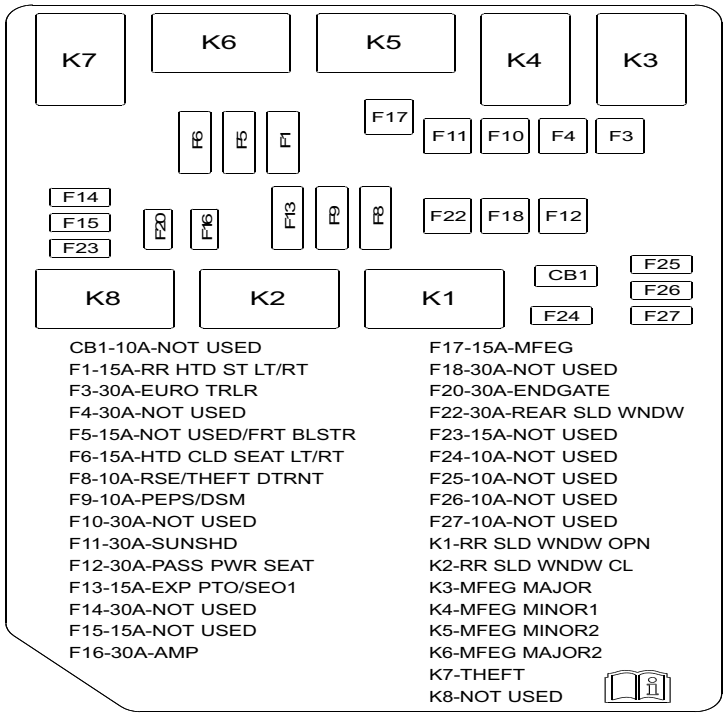

5233030

X51L Fuse Block - Instrument Panel Left Top View

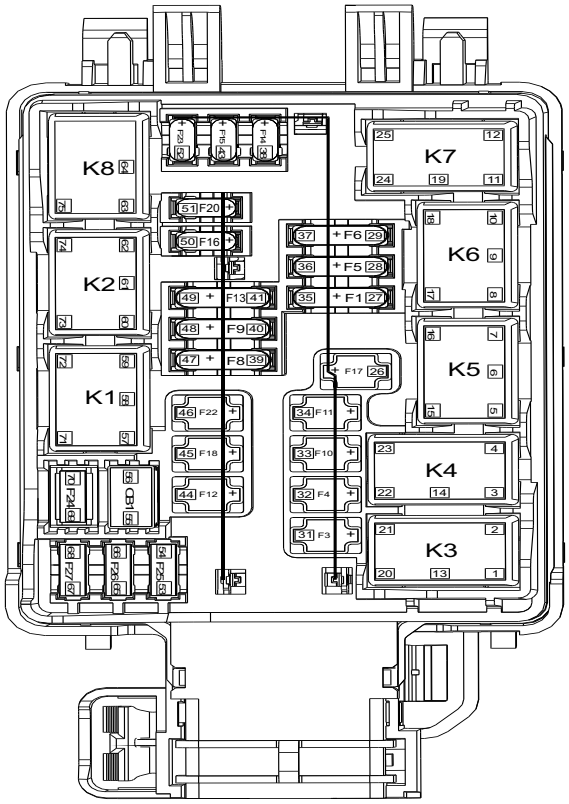

5252577

Usage Table

No.	Device Label Name	Device Assigned Name	Rating	Description
Fuses				
F1	Rear Heated Seats Left/Right	F1DL	15A	• K29R Seat Heating Control Module - Rear (KA6)
F3	Not Used	F3DL	30A	• Not Used
F4	Not Used	F4DL	30A	• Not Used
F5	Not Used	F5DL	15A	• Not Used
F6	Heated and Cooled Seats Left/Right	F6DL	15A	• K29F Seat Heating Control Module - Front (KA1)
F8	Not Used	F8DL	10A	• Not Used
F9	Passive Entry/ Passive Start/ Driver Seat Module	F9DL	10A	• K84 Keyless Entry Control Module (BTM)
F10	Not Used	F10DL	30A	• Not Used
F11	Not Used	F11DL	30A	• Not Used
F12	Passenger Power Seat	F12DL	30A	• S64P Seat Adjuster Switch - Passenger (A7K)
F13	Export Power Take Off/Special Equipment Option 1	F13DL	15A	• K44 Power Take-Off Control Module (PTO) • X176 (PTO)
F14	Not Used	F14DL	30A	• Not Used

Usage Table (cont'd)

No.	Device Label Name	Device Assigned Name	Rating	Description
F15	Not Used	F15DL	15A	• Not Used
F16	AMP	F16DL	30A	• T3 Audio Amplifier (UQA)
F17	MFEG	F17DL	15A	• KR191L Pickup Box Endgate Latch Relay - Left (QT5) • KR192L Pickup Box Auxiliary Endgate Latch Relay - Left (QK2+QT5)
F18	Not Used	F18DL	30A	• Not Used
F20	Endgate	F20DL	30A	• K194 Pickup Box Endgate Control Module (QT6)
F22	Rear sliding window	F22DL	30A	• KR8A Sliding Rear Window Close Relay (A48) • KR8B Sliding Rear Window Open Relay (A48)
F23	Not Used	F23DL	15A	• Not Used
F24	Not Used	F24DL	10A	• Not Used
F25	Not Used	F25DL	10A	• Not Used
F26	Not Used	F26DL	10A	• Not Used
F27	Not Used	F27DL	10A	• Not Used
Circuit Breakers				
CB1	Spare	CB1DL	10A	• Not Used
Relays				
K1	Rear sliding window open	KR8B	—	• M63 Sliding Rear Window Motor (A48)
K2	Rear sliding window close	KR8A	—	• M63 Sliding Rear Window Motor (A48)
K3	MFEG Major 1	MFEG1A	—	• A99L Pickup Box Endgate Latch - Left (QK2) • A99R Pickup Box Endgate Latch - Right (QK2) • Pickup Box Endgate Latch (QK1)
K4	MFEG Minor 1	MFEG1B	—	• A99L Pickup Box Endgate Latch - Left (QK2) • A99R Pickup Box Endgate Latch - Right (QK2) • Pickup Box Endgate Latch (QK1)
K5	MFEG Minor 2	MFEG2B	—	• A100L Pickup Box Auxiliary Endgate Latch - Left (QK2) • A100R Pickup Box Auxiliary Endgate Latch - Right (QK2)
K6	MFEG Major 2	MFEG2A	—	• A100L Pickup Box Auxiliary Endgate Latch - Left (QK2) • A100R Pickup Box Auxiliary Endgate Latch - Right (QK2)
K7	Theft	—	—	• Not Used
K8	Not Used	—	—	• Not Used

X51L Fuse Block - Instrument Panel Left

—

Connector Part Information

Harness Type: Body
OEM Connector: 33333390
Service Connector: -
Description: Wire Entry Fuse Block

Terminal Part Information

Terminal Type ID	Terminated Lead	Diagnostic Test Probe	Terminal Removal Tool	Service Terminal	Tray Name	Core Crimp	Insulation Crimp
I	Not Required	J-35616-17 (LT GN)	No Tool Required	Not Required	Not Required	Not Required	Not Required
II	Not Required	J-35616-35 (VT)	No Tool Required	Not Required	Not Required	Not Required	Not Required
III	Not Required	J-35616-5 (PU)	No Tool Required	Not Required	Not Required	Not Required	Not Required

X51L Fuse Block - Instrument Panel Left

Pin	Size	Color	Circuit	Function	Terminal Type ID	Option
1	0.35	WH/L-GN	7728	Major Endgate High Relay Control	II	—
2	0.5	L-GN	1299	Major Endgate Motor Supply Voltage	II	—
3	0.35	WH/GY	7297	Minor Endgate High Relay Control	II	—
4	0.5	VT	7725	Minor Endgate Motor Supply Voltage	II	—
5	0.5	BK	1150	Ground	II	—
6	0.5	BN/YE	7727	Minor Endgate Motor Common	II	—
7	0.35	GY/D-BU	7298	Minor Endgate Low Relay Control	II	—
8	0.5	BK	1150	Ground	II	—
9	0.5	BN/VT	7731	Major Endgate Motor Common	II	—
10	0.35	BU/VT	7729	Major Endgate Low Relay Control	II	—
13	0.5	BN/VT	7731	Major Endgate Motor Common	II	—
14	0.5	BN/YE	7727	Minor Endgate Motor Common	II	—
15	0.5	BK	1150	Ground	II	—
16	0.5	BN/BK	7726	Minor Endgate Motor Return	II	—
17	0.5	BK	1150	Ground	II	—
18	0.5	YE/BK	7730	Major Endgate Motor Return	II	—
20	0.5	RD/D-BU	7640	Battery Positive Voltage	II	—
21	0.5	BK	1150	Ground	II	—
22	0.5	RD/D-BU	7640	Battery Positive Voltage	II	—
23	0.5	BK	1150	Ground	II	—
26	0.5	RD/D-BU	7640	Battery Positive Voltage	III	—
27	0.5	RD/YE	240	Battery Positive Voltage	II	—
29	0.5	RD/L-GN	5140	Battery Positive Voltage	II	—
30	5	RD/GY	2042	Battery Positive Voltage	I	—
35	0.5	RD/VT	340	Battery Positive Voltage	II	—
37	0.5	RD	6140	Battery Positive Voltage	II	—
40	0.5	RD/YE	4340	Battery Positive Voltage	II	—

X51L Fuse Block - Instrument Panel Left (cont'd)

Pin	Size	Color	Circuit	Function	Terminal Type ID	Option
41	0.5	RD/VT	2640	Battery Positive Voltage	II	—
42	5	RD/VT	2142	Battery Positive Voltage	I	—
44	2.5	RD/BN	1440	Battery Positive Voltage	III	—
46	2.5	RD/VT	3340	Battery Positive Voltage	III	—
49	0.5	RD/D-BU	4540	Battery Positive Voltage	II	—
50	2.5	RD/YE	3740	Battery Positive Voltage	II	—
51	2.5	RD/GY	7040	Battery Positive Voltage	II	—
57	2.5	RD/VT	3340	Battery Positive Voltage	II	—
58	2.5	BK	1150	Ground	II	—
59	0.5	BK	1150	Ground	II	—
60	2.5	RD/VT	3340	Battery Positive Voltage	II	—
61	2.5	BK	1150	Ground	II	—
62	0.5	BK	1150	Ground	II	—
71	0.35	YE/VT	6191	Power Sliding Window Switch Open Signal	II	—
72	2	GY/L-GN	5441	Endgate Window Regulator Down Signal	II	—
73	0.35	WH	6192	Power Sliding Window Switch Close Signal	II	—
74	2	YE/D-BU	5442	Endgate Window Regulator Up Signal	II	—

X51R Fuse Block - Instrument Panel Right Label

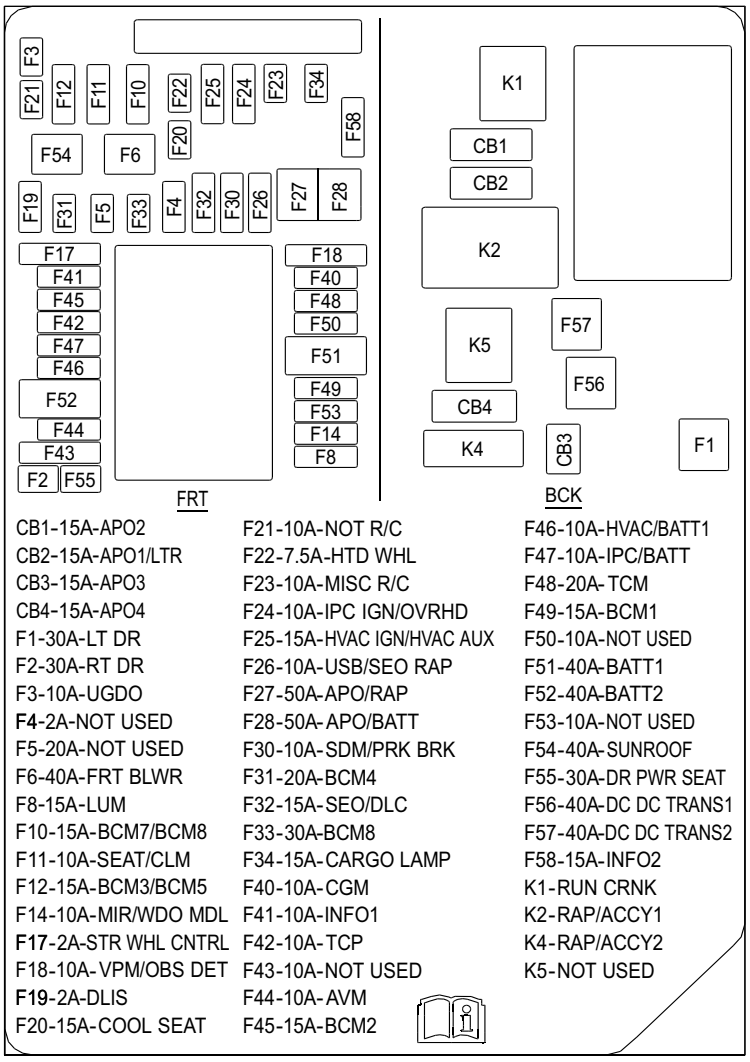

CB1-15A-APO2
CB2-15A-APO1/LTR
CB3-15A-APO3
CB4-15A-APO4
F1-30A-LT DR
F2-30A-RT DR
F3-10A-UGDO
F4-2A-NOT USED
F5-20A-NOT USED
F6-40A-FRT BLWR
F8-15A-LUM
F10-15A-BCM7/BCM8
F11-10A-SEAT/CLM
F12-15A-BCM3/BCM5
F14-10A-MIR/WDO MDL
F17-2A-STR WHL CNTRL
F18-10A-VPM/OBS DET
F19-2A-DLIS
F20-15A-COOL SEAT
F21-10A-NOT R/C
F22-7.5A-HTD WHL
F23-10A-MISC R/C
F24-10A-IPC IGN/OVRHD
F25-15A-HVAC IGN/HVAC AUX
F26-10A-USB/SEO RAP
F27-50A-APO/RAP
F28-50A-APO/BATT
F30-10A-SDM/PRK BRK
F31-20A-BCM4
F32-15A-SEO/DLC
F33-30A-BCM8
F34-15A-CARGO LAMP
F40-10A-CGM
F41-10A-INFO1
F42-10A-TCP
F43-10A-NOT USED
F44-10A-AVM
F45-15A-BCM2
F46-10A-HVAC/BATT1
F47-10A-IPC/BATT
F48-20A-TCM
F49-15A-BCM1
F50-10A-NOT USED
F51-40A-BATT1
F52-40A-BATT2
F53-10A-NOT USED
F54-40A-SUNROOF
F55-30A-DR PWR SEAT
F56-40A-DC DC TRANS1
F57-40A-DC DC TRANS2
F58-15A-INFO2
K1-RUN CRNK
K2-RAP/ACCY1
K4-RAP/ACCY2
K5-NOT USED

5233032

X51R Fuse Block - Instrument Panel Right Top View

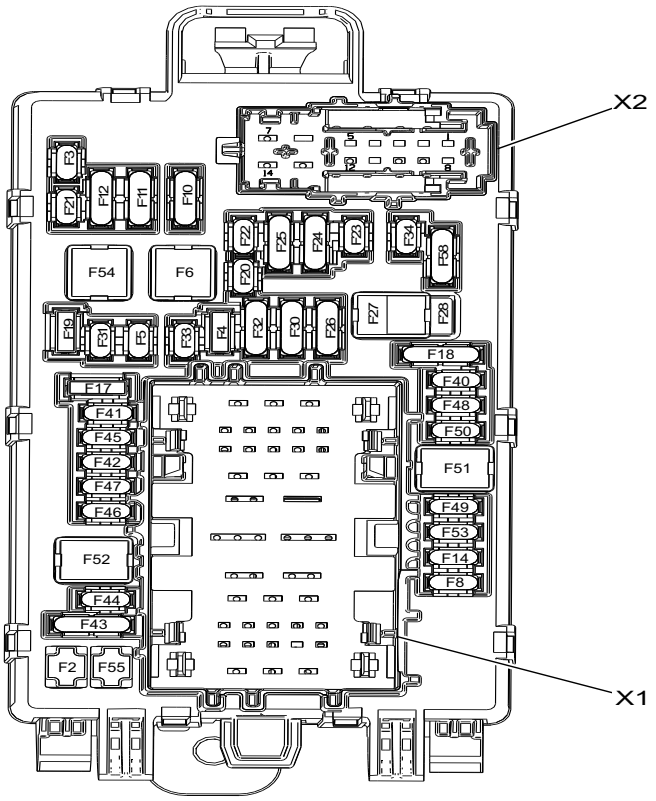

5252580

Usage Table

No.	Device Label Name	Device Assigned Name	Rating	Description
Fuses				
F1	RT DOOR	F1DR	30A	• M74D Window Motor - Driver (AXG) • S79LR Window Switch - Left Rear(AEQ)
F2	LT DOOR	F2DR	30A	• M74P Window Motor - Passenger (AEF) • S79P Window Switch - Passenger (AED)
F3	UGDO ISRVM	F3DR	10A	• A98 Front Overhead Console Assembly • E37B Dome/Reading Lamp - 2nd Row (Crew/ Extended Cab)
F4	NOT USED	F4DR	2A	• Not Used
F5	NOT USED	F5DR	20A	• Not Used
F6	FRT BLWR	F6DR	40A	• M8 Blower Motor
F8	LUMBAR	F8DR	15A	• S65D Seat Lumbar Support Switch - Driver (A2X) • S65P Seat Lumbar Support Switch - Passenger (A7K)
F10	BCM6/BCM7	F10DR	15A	• K9 Body Control Module
F11	SEAT/CLM LOCK	F11DR	10A	• F19DR (-BTM) • K40 Seat Memory Control Module (A45) • K60 Steering Column Lock Module (BTM)
F12	BCM3/BCM5	F12DR	15A	• K9 Body Control Module
F14	MIR/WDO MDL	F14DR	10A	• S146 Window/Outside Rearview Mirror Switch - Driver (AXG)

Usage Table (cont'd)

No.	Device Label Name	Device Assigned Name	Rating	Description
F17	STR WHL CNTRL	F17DR	2A	• S70L Steering Wheel Controls Switch - Left (UK3) • S70R Steering Wheel Controls Switch - Right (UK3)
F18	VPM/OBS DET	F18DR	10A	• B174W Frontview Camera - Windshield (UEU/UHX) • K157 Video Processing Control Module (UVI/UV2) • K182 Parking Assist Control Module (UD5/UD7)
F19	DLIS	F19DR	2A	• S39 Ignition Switch (-BTM)
F20	COOL SEAT	F20DR	15A	• M73A Seat Blower Motor - Driver Back (KQV) • M73B Seat Blower Motor - Passenger Back (KQV) • M73C Seat Blower Motor - Driver Cushion (KQV) • M73D Seat Blower Motor - Passenger Cushion (KQV)
F21	NOT R/C	F21DR	10A	• K60 Steering Colmn Lock Module (BTM)
F22	HTD WHL	F22DR	7.5A	• K32 Steering Wheel Heating Control Module (KI3)
F23	MISC RC	F23DR	10A	• B87 Rearview Camera (UVC)
F24	IPC/HUD/CGM ISRVM	F24DR	10A	• A10 Inside Rearview Mirror (DD8/DRZ) • A98 Front Overhead Console Assembly • K56 Serial Data Gateway Module • P16 Instrument Cluster • P43 Collision Alert Indicators ((UHX/UEU)-UV6) • S171R Instrument Panel Center Accessory Function Switch - Right
F25	HVAC IGN	F25DR	15A	• E40 Electrical Auxiliary Heater (C32)
F26	USB/SEO RAP	F26DR	10A	• T22 Mobile Device Wireless Charger Module (K4C) • X92B USB Receptacle - Rear Seat (AZ3) ,X92C USB Receptacle Center Console Rear (D07) • X260 (L5P)
F27	APO/RAP	F27DR	50A	• CB1DR • CB2DR
F28	APO/BATT	F28DR	50A	• CB1DR • CB2DR
F30	SDM/PRK SW	F30DR	10A	• K85 Passenger Presence Module • K36 Inflatable Restraint Sensing and Diagnostic Module • S76 Trailer Brake Control Switch (JL1)
F31	BCM4	F31DR	20A	• K9 Body Control Module
F32	SEO/DLC	F32DR	10A	• X84 Data Link Connector
F33	BCM8	F33DR	30A	• K9 Body Control Module
F34	CARGO LAMP	F34DR	15A	• E2A Marker Lamp - Endgate (QT5/QT6) • E6 Center High Mounted Stop Lamp • S30 Headlamp Switch
F40	CGM	F40DR	10A	• K56 Serial Data Gateway Module
F41	INFO1	F41DR	10A	• A26 HVAC Controls • P17 Info Display Module (IOS/IOT/(IOR+UIJ)) • P29 Head-Up Display (UV6) • S32R Seat Heating Switch - Rear (KA6) • X83 Auxiliary Audio Input • X92 USB Receptacle
F42	TCP	F42DR	10A	• K73 Telematics Communication Interface Control Module (UE1)
F43	NOT USED	F43DR	10A	• Not Used

Usage Table (cont'd)

No.	Device Label Name	Device Assigned Name	Rating	Description
F44	NOT USED	F44DR	10A	• Not Used
F45	BCM2	F45DR	15A	• K9 Body Control Module
F46	HVAC/BATT1	F46DR	10A	• K33 HVAC Control Module
F47	IPC/BATT	F47DR	10A	• P16 Instrument Cluster
F48	TCM	F48DR	20A	• K71 Transmission Control Module (MGM/MGU) • Q8 Control Solenoid Valve Assembly (MYD)
F49	BCM1	F49DR	15A	• K9 Body Control Module
F50	NOT USED	F50DR	10A	• Not Used
F51	BATT1	F51DR	40A	• F18DR • F40DR • F48DR • F49DR • F58DR
F52	BATT2	F52DR	40A	• F17DR • F41DR • F42DR • F44DR • F45DR • F46DR • F47DR
F53	NOT USED	F53DR	10A	• Not Used
F54	SUNROOF	F54DR	40A	• M69 Sunroof Motor (CF5)
F55	DR PWR SEAT	F55DR	30A	• S64D Seat Adjuster Switch - Driver (A2X-A45) • K40 Seat Memory Control Module (A45)
F56	DCDC TRANS1	F56DR	40A	• Not Used
F57	DCDC TRANS2	F57DR	40A	• Not Used
F58	INFO2	F58DR	15A	• A11 Radio

X51R Fuse Block - Instrument Panel Right Bottom View

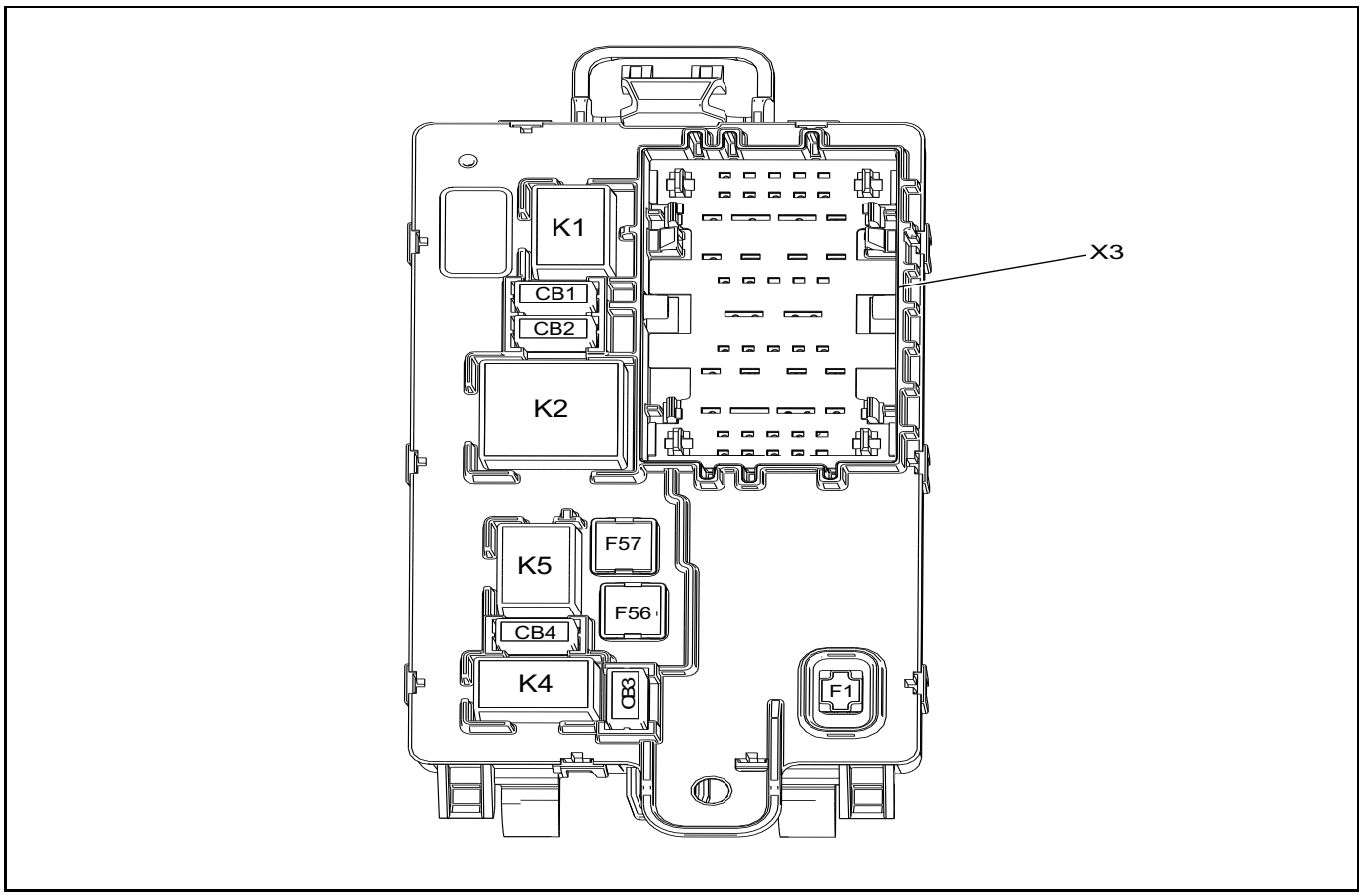

5252583

Usage Table

No.	Device Label Name	Device Assigned Name	Rating	Description
Circuit Breakers				
CB1	APO2	CB1DR	20A	• X80G Accessory Power Receptacle - Instrument Panel
CB2	APO1	CB2DR	20A	• X80L Accessory Power Receptacle - Center Console Rear (D07) • X80M Accessory Power Receptacle - Rear Seat (KPA)
CB3	APO3	CB3DR	20A	• Not Used
CB4	APO4	CB4DR	20A	• Not Used
Fuses				
F1	LT DR	F1DR	30A	• M74D Window Motor - Driver (AXG) • S79LR Window Switch - Left Rear (AEQ)
F56	DC DC TRANS1	F56DR	40A	• Not Used
F57	DC DC TRANS2	F57DR	40A	• Not Used
Relays				
K1	RUN CRANK	KR73 Ignition Main Relay	—	• F20DR • F21DR • F22DR • F23DR • F24DR • F25DR

Usage Table (cont'd)

No.	Device Label Name	Device Assigned Name	Rating	Description
K2	RAP/ACCY1	KR76A Retained Accessory Power Relay 1	—	• F26DR • F27DR
K4	RAP/ACCY2	KR76B Retained Accessory Power Relay 2	—	• CB3DR • CB4DR
K5	NOT USED	—	—	• Not Used

X51R Fuse Block - Instrument Panel Right X1

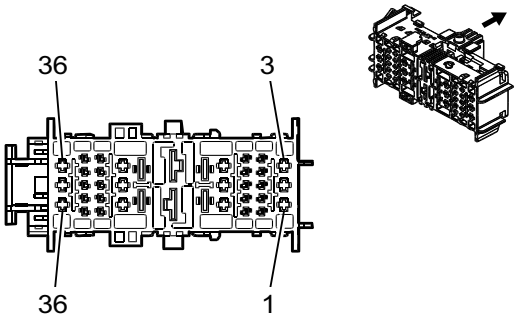

4994712

Connector Part Information

Harness Type: Body
OEM Connector: 33371909
Service Connector: 19371181
Description: 38-Way F 1.5, 2.8, 6.3 CTS Series (BU)

Terminal Part Information

Terminal Type ID	Terminated Lead	Diagnostic Test Probe	Terminal Removal Tool	Service Terminal	Tray Name	Core Crimp	Insulation Crimp
I	19332365	J-35616-14 (GN)	J-38125-215A	Not Available	Not Available	Not Available	Not Available
II	19332366	J-35616-35 (VT)	J-38125-215A	Not Available	Not Available	Not Available	Not Available
III	19371175	J-35616-17 (LT GN)	J-38125-215A	Not Available	Not Available	Not Available	Not Available
IV	Not Available	J-35616-2A (GY)	J-38125-11A	Not Available	Not Available	Not Available	Not Available
V	Not Required	J-35616-17 (LT GN)	Not Available	Not Available	Not Available	Not Available	Not Available

X51R Fuse Block - Instrument Panel Right X1

Pin	Size	Color	Circuit	Function	Terminal Type ID	Option
1	0.5	VT/WH	4939	Run/Crank Ignition 1 Voltage	II	—
2	—	—	—	Not Occupied	—	—
3	1	RD/L-GN	1840	Battery Positive Voltage	II	—
4	—	—	—	Not Occupied	—	—

X51R Fuse Block - Instrument Panel Right X1 (cont'd)

Pin	Size	Color	Circuit	Function	Terminal Type ID	Option
5	0.5	RD/L-GN	4440	Battery Positive Voltage	IV	—
6	0.35	VT/YE	143	Accessory Ignition Voltage	I	—
7	—	—	—	Not Occupied	—	—
8	0.35 0.35 0.35	VT VT/YE VT/YE	4601 43 43	Retained Accessory Power Fused Control Accessory Ignition Voltage Accessory Ignition Voltage	IV IV I	K4C L5P -L5P
9	0.35	RD/L-GN	3140	Battery Positive Voltage	I	—
10	0.35 0.35	GY/L-GN GY/VT	4083 755	RAP Relay 2 Coil Control RAP Relay Coil Control	I I	BTM -BTM
11	0.35	RD/GY	1740	Battery Positive Voltage	IV	—
12	—	—	—	Not Occupied	—	—
13	0.5	VT/L-GN	1739	Run/Crank Ignition 1 Voltage	IV	—
14	0.35	RD/BN	1140	Battery Positive Voltage	II	—
15	0.35	L-GN/VT	5199	Run/Crank Relay Coil Control	II	—
16	1.5	RD/WH	1040	Battery Positive Voltage	II	—
17 - 18	—	—	—	Not Occupied	—	—
19	10	RD/GY	142	Battery Positive Voltage	V	—
20	6	RD/WH	342	Battery Positive Voltage	III	—
21 - 22	—	—	—	Not Occupied	—	—
23	2.5	RD/D-BU	1842	Battery Positive Voltage	II	—
24	2.5	RD/D-BU	1842	Battery Positive Voltage	II	—
25	2.5	RD/WH	1340	Battery Positive Voltage	II	—
26 - 28	—	—	—	Not Occupied	—	—
29	0.35	RD/VT	1940	Battery Positive Voltage	I	—
30	0.75	RD/YE	8840	Battery Positive Voltage	IV	—
31	—	—	—	Not Occupied	—	—
32	0.35	BN/WH	1429	Standing Lamp Relay Control	I	—
33 - 35	—	—	—	Not Occupied	—	—
36	2.5	RD/YE	5040	Battery Positive Voltage	II	—
37	2.5	RD/WH	1340	Battery Positive Voltage	II	—
38	—	—	—	Not Occupied	—	—

X51R Fuse Block - Instrument Panel Right X2

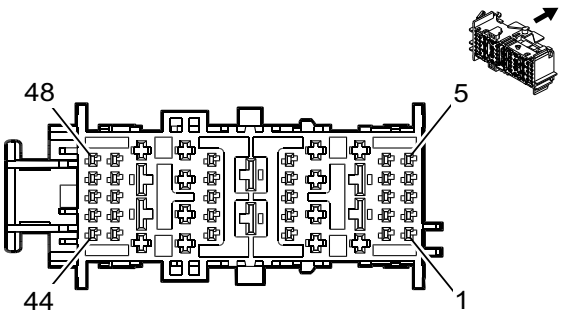

4997272

Connector Part Information

Harness Type: Instrument Panel
OEM Connector: 33371910
Service Connector: 19371180
Description: 48-Way F 1.5, 2.8, 6.3 CTS Series (GN)

Terminal Part Information

Terminal Type ID	Terminated Lead	Diagnostic Test Probe	Terminal Removal Tool	Service Terminal	Tray Name	Core Crimp	Insulation Crimp
I	13579915	J-35616-40 (BU)	J-38125-556	1241406-1	Lear 17	Not Available	Not Available
II	13579921	J-35616-40 (BU)	J-38125-556	1241406-1	Lear 17	F	1
III	19332365	J-35616-14 (GN)	J-38125-215A	Not Available	Not Available	Not Available	Not Available
IV	19332366	J-35616-35 (VT)	J-38125-215A	Not Available	Not Available	Not Available	Not Available
V	19371175	J-35616-17 (LT GN)	J-38125-215A	Not Available	Not Available	Not Available	Not Available
VI	Not Available	J-35616-2A (GY)	J-38125-11A	Not Available	Not Available	Not Available	Not Available

X51R Fuse Block - Instrument Panel Right X2

Pin	Size	Color	Circuit	Function	Terminal Type ID	Option
1	0.5	BK	1050	Ground	VI	—
2 - 5	—	—	—	Not Occupied	—	—
6	0.75	RD/YE	2340	Battery Positive Voltage	VI	—
7	0.75	RD/YE	2340	Battery Positive Voltage	VI	—
8	0.5	RD/WH	3440	Battery Positive Voltage	VI	—
9	0.5 0.35	RD/GY RD/GY	4140 4140	Battery Positive Voltage Battery Positive Voltage	III VI	BTM -BTM
10	0.35	BU/VT	807	OFF /Accessory Ignition Voltage	III	—
11	0.5	VT/GY	539	Run/Crank Ignition 1 Voltage	IV	—
12 - 13	—	—	—	Not Occupied	—	—
14	0.5	RD/BN	2940	Battery Positive Voltage	IV	—
15	0.5	VT/WH	1139	Run/Crank Ignition 1 Voltage	IV	—
16	0.5	RD/L-GN	5140	Battery Positive Voltage	IV	—
17	—	—	—	Not Occupied	—	—
18	0.5	RD/GY	2140	Battery Positive Voltage	IV	—
19	0.35	VT/BK	1639	Run/Crank Ignition 1 Voltage	III	—
20 - 23	—	—	—	Not Occupied	—	—
24	4	RD/VT	542	Battery Positive Voltage	II	—
25	2.5	RD/L-GN	3140	Battery Positive Voltage	I	—
26	—	—	—	Not Occupied	—	—
27	0.5	RD/WH	640	Battery Positive Voltage	VI	—
28	0.35	RD/L-GN	5140	Battery Positive Voltage	III	—
29	0.35	RD/D-BU	540	Battery Positive Voltage	III	—
30	0.35	RD/GY	4140	Battery Positive Voltage	III	—
31	1.5	RD/BN	4240	Battery Positive Voltage	IV	—

X51R Fuse Block - Instrument Panel Right X2 (cont'd)

Pin	Size	Color	Circuit	Function	Terminal Type ID	Option
32	2.5	RD/VT	4040	Battery Positive Voltage	IV	—
33	—	—	—	Not Occupied	—	—
34	1	RD/D-BU	2540	Battery Positive Voltage	IV	—
35 - 36	—	—	—	Not Occupied	—	—
37	0.75	RD/BN	2240	Battery Positive Voltage	V	—
38	—	—	—	Not Occupied	—	—
39	0.35	RD/VT	3340	Battery Positive Voltage	III	—
40	0.35	RD/VT	3340	Battery Positive Voltage	III	—
41	0.35	RD/YE	3040	Battery Positive Voltage	III	—
42	0.5	RD/D-BU	3240	Battery Positive Voltage	VI	—
43 - 44	—	—	—	Not Occupied	—	—
45	0.5	RD/WH	2740	Battery Positive Voltage	VI	—
46	0.35	RD/GY	2840	Battery Positive Voltage	III	—
47	0.35	RD/WH	1340	Battery Positive Voltage	III	—
48	—	—	—	Not Occupied	—	—

X51R Fuse Block - Instrument Panel Right X3 (Crew Cab)

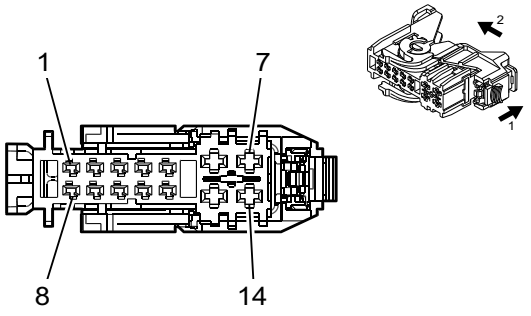

4992260

Connector Part Information

Harness Type: Headliner
OEM Connector: 33297528
Service Connector: 13513732
Description: 14-Way F 150, 280 CTS Series, Sealed (GY)

Terminal Part Information

Terminal Type ID	Terminated Lead	Diagnostic Test Probe	Terminal Removal Tool	Service Terminal	Tray Name	Core Crimp	Insulation Crimp
I	19119592	J-35616-4A (PU)	J-38125-557	Not Available	Not Available	Not Available	Not Available
II	Not Available	J-35616-2A (GY)	J-38125-11A	Not Available	Not Available	Not Available	Not Available

X51R Fuse Block - Instrument Panel Right X3 (Crew Cab)

Pin	Size	Color	Circuit	Function	Terminal Type ID	Option
1 - 6	—	—	—	Not Occupied	—	—
7	0.35	RD/YE	240	Battery Positive Voltage	I	—
8	—	—	—	Not Occupied	—	—
9	0.35	WH/VT	1430	Exterior Courtesy Lamp Control	II	—
	0.5	WH/VT	1430	Exterior Courtesy Lamp Control	II	—
10	0.35	VT/YE	43	Accessory Ignition Voltage	II	—
11	—	—	—	Not Occupied	—	—
12	0.35	RD/L-GN	3140	Battery Positive Voltage	II	—
13	—	—	—	Not Occupied	—	—
14	0.35	VT/WH	1139	Run/Crank Ignition 1 Voltage	I	—

X51R Fuse Block - Instrument Panel Right X3 (Extended Cab/Regular Cab)

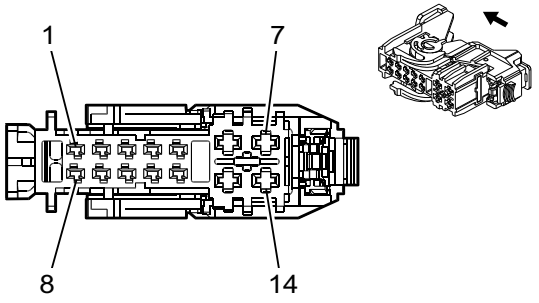

5190115

Connector Part Information

Harness Type: Headliner
OEM Connector: 33377074
Service Connector: -
Description: 14-Way F 1.5, 2.8 MCP Series (GY)

Terminal Part Information

Terminal Type ID	Terminated Lead	Diagnostic Test Probe	Terminal Removal Tool	Service Terminal	Tray Name	Core Crimp	Insulation Crimp
I	19119592	J-35616-4A (PU)	J-38125-557	Not Available	Not Available	Not Available	Not Available
II	19332365	J-35616-14 (GN)	J-38125-215A	Not Available	Not Available	Not Available	Not Available
III	Not Available	J-35616-2A (GY)	J-38125-11A	Not Available	Not Available	Not Available	Not Available

X51R Fuse Block - Instrument Panel Right X3 (Extended Cab/Regular Cab)

Pin	Size	Color	Circuit	Function	Terminal Type ID	Option
1 - 6	—	—	—	Not Occupied	—	—
7	0.35	RD/YE	240	Battery Positive Voltage	I	—
8	—	—	—	Not Occupied	—	—

X51R Fuse Block - Instrument Panel Right X3 (Extended Cab/Regular Cab) (cont'd)

Pin	Size	Color	Circuit	Function	Terminal Type ID	Option
9	0.35	WH/VT	1430	Exterior Courtesy Lamp Control	III	—
	0.5	WH/VT	1430	Exterior Courtesy Lamp Control	III	—
10	0.35	VT/YE	43	Accessory Ignition Voltage	II	—
11	—	—	—	Not Occupied	—	—
12	0.35	RD/L-GN	3140	Battery Positive Voltage	II	—
13	—	—	—	Not Occupied	—	—
14	0.35	VT/WH	1139	Run/Crank Ignition 1 Voltage	I	—

X54 Fuse Block - Snow Plow (VYU)

—

Connector Part Information

Harness Type: Snow Plow Jumper
OEM Connector: 33391084
Service Connector: Service by Harness - See Part Catalog
Description: Fuse Holder

Terminal Part Information

Terminal Type ID	Terminated Lead	Diagnostic Test Probe	Terminal Removal Tool	Service Terminal	Tray Name	Core Crimp	Insulation Crimp
I	Not Required	Not Available	No Tool Required	Not Required	Not Required	Not Required	Not Required

X54 Fuse Block - Snow Plow (VYU)

Pin	Size	Color	Circuit	Function	Terminal Type ID	Option
B4	—	BN	25	Charge Indicator Control	I	—
B6	—	BN	9026	—	I	—
C4	—	WH/BU	9030	—	I	—
C5	—	BN	25	Charge Indicator Control	I	—

X55SP Fuse Holder - Snow Plow (VYU)

—

Connector Part Information

Harness Type: Snow Plow Jumper
OEM Connector: 33391084
Service Connector: Service by Harness - See Part Catalog
Description: Fuse Holder

Terminal Part Information

Terminal Type ID	Terminated Lead	Diagnostic Test Probe	Terminal Removal Tool	Service Terminal	Tray Name	Core Crimp	Insulation Crimp
I	Not Required	J-35616-64B (LT BU)	No Tool Required	Not Required	Not Required	Not Required	Not Required

X55SP Fuse Holder - Snow Plow (VYU)

Pin	Size	Color	Circuit	Function	Terminal Type ID	Option
A	1	OG	9026	—	I	—
B	1	OG	9028	—	I	—

Component Connector End Views

A10 Inside Rearview Mirror X1

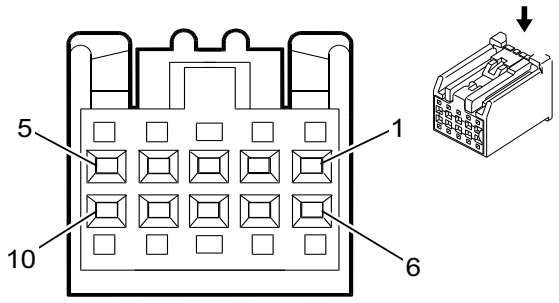

2180211

Connector Part Information

Harness Type: Headliner
OEM Connector: 13815336
Service Connector: 13577390
Description: 10-Way F 0.64 Kaizen Series (BK)

Terminal Part Information

Terminal Type ID	Terminated Lead	Diagnostic Test Probe	Terminal Removal Tool	Service Terminal	Tray Name	Core Crimp	Insulation Crimp
I	13575867	J-35616-64B (LT BU)	J-38125-215A	SAIT-A03T-M064	Yazaki 14	P	P

A10 Inside Rearview Mirror X1

Pin	Size	Color	Circuit	Function	Terminal Type ID	Option
1	0.35	L-GN/WH	24	Backup Lamp Control	I	—
2	0.35	VT/WH	1139	Run/Crank Ignition 1 Voltage	I	—
3 - 4	—	—	—	Not Occupied	—	—
5	0.35	BK/WH	1851	Signal Ground	I	—
6 - 7	—	—	—	Not Occupied	—	—
8	0.35	BK/YE	1691	Automatic Day/Night Mirror Low Reference	I	—
9	0.35	YE/WH	1690	Automatic Day/Night Mirror Signal	I	—
10	—	—	—	Not Occupied	—	—

A11 Radio X1 (IOR)

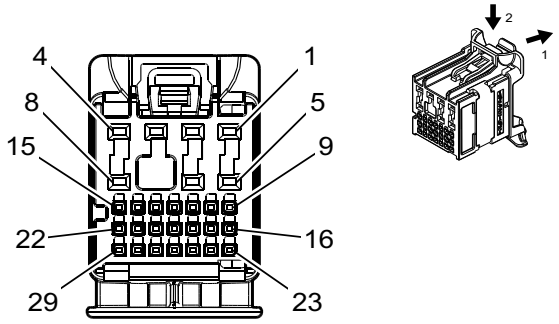

4584346

Connector Part Information

Harness Type: Instrument Panel
OEM Connector: 33303653
Service Connector: 13506123
Description: 29-Way F 0.5 NANO, 1.2 MCON Series Sealed (GN)

Terminal Part Information

Terminal Type ID	Terminated Lead	Diagnostic Test Probe	Terminal Removal Tool	Service Terminal	Tray Name	Core Crimp	Insulation Crimp
I	19354361	EL-35616-58 (BK)	EL-38125-58	Not Available	Not Available	Not Available	Not Available
II	19370818	J-35616-16 (LT GN)	J-38125-559	Not Available	Not Available	Not Available	Not Available
III	19371240	J-35616-16 (LT GN)	J-38125-559	Not Available	Not Available	Not Available	Not Available

A11 Radio X1 (IOR)

Pin	Size	Color	Circuit	Function	Terminal Type ID	Option
1	0.75	RD/YE	2340	Battery Positive Voltage	II	—
2	0.75	RD/YE	2340	Battery Positive Voltage	II	—
3	0.75	BK/WH	2751	Signal Ground	II	—
4	0.35	BU/RD	2807	Radio Keypad Voltage Reference	III	—

A11 Radio X1 (IOR) (cont'd)

Pin	Size	Color	Circuit	Function	Terminal Type ID	Option
5	0.35	BK/L-GN	2804	Radio Display Backlight Low Reference	III	—
6	0.75	BK/WH	2751	Signal Ground	II	—
7	—	—	—	Not Occupied	—	—
8	0.5	L-GN/BK	116	Left Rear Speaker Signal (-)	III	—
9	0.35	GY/D-BU	2803	Radio Display Touch Interrupt Request Signal	I	—
10	—	—	—	Not Occupied	—	—
11	0.35	L-GN/WH	24	Backup Lamp Control	I	—
12	0.35	GY/L-GN	1102	Low Speed GMLAN Serial Data #2	I	—
13 - 14	—	—	—	Not Occupied	—	—
15	0.35	BU/GY	2808	Radio Keypad Dimming Control	I	—
16 - 20	—	—	—	Not Occupied	—	—
21	0.35	GY/VT	3363	Navigation Display Dimming Control	I	—
22	0.35	BU/L-GN	2813	Radio Display Backlight Dimming Control	I	—
23	0.35	VT/D-BU	6091	Crankshaft Position Sensor Replicated Signal	I	—
24	0.35	BN/WH	2809	Radio Keypad Power Signal	I	—
25	0.35	VT/WH	2810	Radio Keypad Button Signal	I	—
26	0.35	BU	4315	Radio Volume Up Signal	I	—
27	0.35	GY/BN	4314	Radio Volume Down Signal	I	—
28 - 29	—	—	—	Not Occupied	—	—

A11 Radio X1 (IOS/IOT)

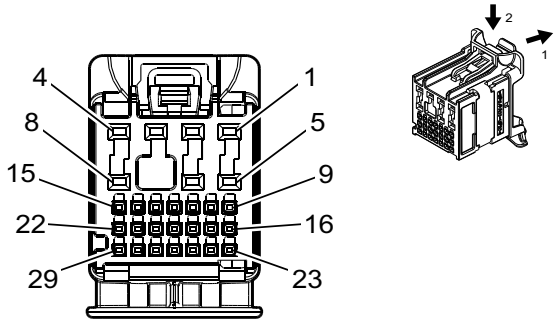

4496253

Connector Part Information

Harness Type: Instrument Panel
OEM Connector: 33303954
Service Connector: 13506123
Description: 29-Way F 0.5 NANO, 1.2 MCON Series Sealed (BK)

Terminal Part Information

Terminal Type ID	Terminated Lead	Diagnostic Test Probe	Terminal Removal Tool	Service Terminal	Tray Name	Core Crimp	Insulation Crimp
I	19354361	EL-35616-58 (BK)	EL-38125-58	Not Available	Not Available	Not Available	Not Available

Terminal Part Information (cont'd)

Terminal Type ID	Terminated Lead	Diagnostic Test Probe	Terminal Removal Tool	Service Terminal	Tray Name	Core Crimp	Insulation Crimp
II	19370818	J-35616-16 (LT GN)	J-38125-559	Not Available	Not Available	Not Available	Not Available
III	19371240	J-35616-16 (LT GN)	J-38125-559	Not Available	Not Available	Not Available	Not Available
IV	Not Available	J-35616-14 (GN)	J-38125-215A	Not Available	Not Available	Not Available	Not Available

A11 Radio X1 (IOS/IOT)

Pin	Size	Color	Circuit	Function	Terminal Type ID	Option
1	0.75	RD/YE	2340	Battery Positive Voltage	II	—
2	0.75	RD/YE	2340	Battery Positive Voltage	II	—
3	1	BK/WH	2751	Signal Ground	IV	—
4 - 5	—	—	—	Not Occupied	—	—
6	1	BK/WH	2751	Signal Ground	IV	—
7	—	—	—	Not Occupied	—	—
8	0.5	L-GN/BK	116	Left Rear Speaker Signal (-)	III	—
9	0.35 0.35	GY/YE BU	5149 655	Voice Recognition Audio Signal Cellular Telephone Microphone Signal	I I	(IOS/IOT)+UE1 UE1
10	0.35 0.35	BK/GY BK/BN	5152 654	Voice Recognition Audio Low Reference Cellular Telephone Microphone Low Reference	I I	(IOS/IOT)+UE1 UE1
11	0.35	VT/YE	7043	Microphone (+) Signal	I	—
12	0.35	BU/BK	7044	Microphone (-) Low Reference	I	—
13 - 29	—	—	—	Not Occupied	—	—

A11 Radio X2 (IOR)

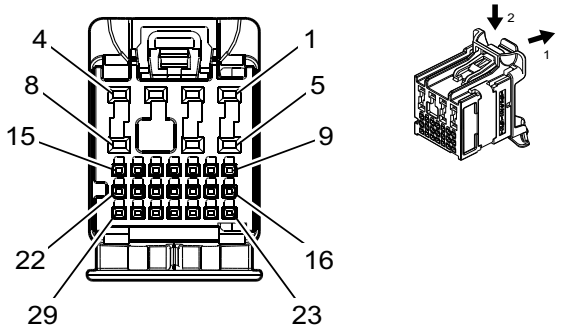

4584398

Connector Part Information

Harness Type: Instrument Panel
OEM Connector: 33303654
Service Connector: 13506123
Description: 29-Way F 0.5 NANO, 1.2 MCON Series Sealed (GY)

Terminal Part Information

Terminal Type ID	Terminated Lead	Diagnostic Test Probe	Terminal Removal Tool	Service Terminal	Tray Name	Core Crimp	Insulation Crimp
I	19354361	EL-35616-58 (BK)	EL-38125-58	Not Available	Not Available	Not Available	Not Available
II	19370818	J-35616-16 (LT GN)	J-38125-559	Not Available	Not Available	Not Available	Not Available
III	19371240	J-35616-16 (LT GN)	J-38125-559	Not Available	Not Available	Not Available	Not Available

A11 Radio X2 (IOR)

Pin	Size	Color	Circuit	Function	Terminal Type ID	Option
1	0.5	L-GN	199	Left Rear Speaker Control (+)	III	—
2	0.75	BU	201	Left Front Speaker Control (+) 1	II	—
3	0.75	YE	200	Right Front Speaker Control (+) 1	II	—
4	0.5	BU/BK	115	Right Rear Speaker Signal (-)	III	—
5	0.75	BN/D-BU	118	Left Front Speaker Signal (-) 1	II	—
6	0.75	YE/BK	117	Right Front Speaker Signal (-) 1	II	—
7	—	—	—	Not Occupied	—	—
8	0.5	WH	46	Right Rear Speaker Control (+)	III	—
9	0.35 0.35	BK/GY BK/BN	5152 654	Voice Recognition Audio Low Reference Cellular Telephone Microphone Low Reference	I I	IOR+UE1 UE1
10	0.35 0.35	GY/YE BU	5149 655	Voice Recognition Audio Signal Cellular Telephone Microphone Signal	I I	IOR+UE1 UE1
11	—	—	—	Not Occupied	—	—
12	0.35	GY/YE	6972	Camera Signal 2 +	I	—
13	0.35	WH/D-BU	6973	Camera Signal 2	I	—
14 - 29	—	—	—	Not Occupied	—	—

A11 Radio X2 (IOS/IOT)

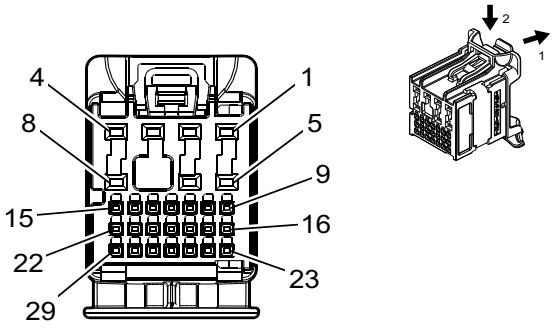

4578560

Connector Part Information

Harness Type: Instrument Panel
OEM Connector: 33303967
Service Connector: 84655160
Description: 29-Way F 0.5 NANO, 1.2 MCON Series Sealed (GY)

Terminal Part Information

Terminal Type ID	Terminated Lead	Diagnostic Test Probe	Terminal Removal Tool	Service Terminal	Tray Name	Core Crimp	Insulation Crimp
I	19354361	EL-35616-58 (BK)	EL-38125-58	Not Available	Not Available	Not Available	Not Available
II	19370818	J-35616-16 (LT GN)	J-38125-559	Not Available	Not Available	Not Available	Not Available
III	19371240	J-35616-16 (LT GN)	J-38125-559	Not Available	Not Available	Not Available	Not Available

A11 Radio X2 (IOS/IOT)

Pin	Size	Color	Circuit	Function	Terminal Type ID	Option
1	0.5	L-GN	199	Left Rear Speaker Control (+)	III	—
2	0.75	BU	201	Left Front Speaker Control (+) 1	II	—
3	0.75	YE/BK	117	Right Front Speaker Signal (-) 1	II	—
4	0.5	BU/BK	115	Right Rear Speaker Signal (-)	III	—
5	0.75	BN/D-BU	118	Left Front Speaker Signal (-) 1	II	—
6	0.75	YE	200	Right Front Speaker Control (+) 1	II	—
7	—	—	—	Not Occupied	—	—
8	0.5	WH	46	Right Rear Speaker Control (+)	III	—
9	0.35	BU/L-GN	1304	High Speed GMLAN Serial Data (+)9	I	—
10	0.35	WH/L-GN	1305	High Speed GMLAN Serial Data (-)9	I	—
11	0.35	BU/L-GN	1304	High Speed GMLAN Serial Data (+)9	I	—
12	0.35	WH/L-GN	1305	High Speed GMLAN Serial Data (-)9	I	—
13	0.35	L-GN/WH	24	Backup Lamp Control	I	—
14 - 17	—	—	—	Not Occupied	—	—
18	0.35	GY/L-GN	1102	Low Speed GMLAN Serial Data #2	I	—
19 - 27	—	—	—	Not Occupied	—	—
28	0.35	WH/D-BU	5986	Serial Data Communication Enable	I	—
29	—	—	—	Not Occupied	—	—

A11 Radio X6 (IOR)

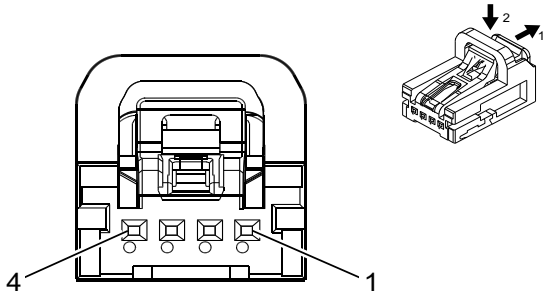

5200696

Connector Part Information

Harness Type: Instrument Panel
OEM Connector: 35068218

Service Connector: -
Description: 4-Way F Mini 50 Series (BK)

Terminal Part Information

Terminal Type ID	Terminated Lead	Diagnostic Test Probe	Terminal Removal Tool	Service Terminal	Tray Name	Core Crimp	Insulation Crimp
I	Not Required	EL-35616-58 (BK)	No Tool Required	Not Required	Not Required	Not Required	Not Required

A11 Radio X6 (IOR)

Pin	Size	Color	Circuit	Function	Terminal Type ID	Option
1	—	—	—	Not Occupied	—	—
2	0.35	GY/WH	7211	Ethernet Bus 4 (+)	I	—
3	0.35	GY	7210	Ethernet Bus 4 (-)	I	—
4	—	—	—	Not Occupied	—	—

A11 Radio X6 (IOS/IOT)

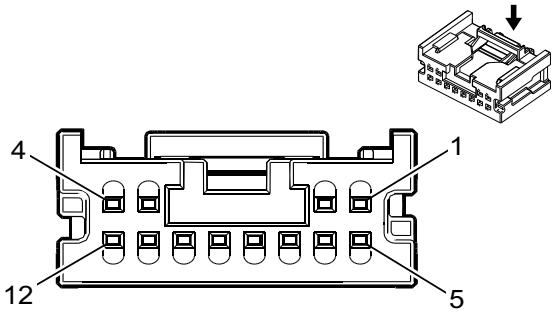

3824362

Connector Part Information

Harness Type: Instrument Panel
OEM Connector: 33235297
Service Connector: 13507121
Description: 12-Way F Mini 50 Series (BK)

Terminal Part Information

Terminal Type ID	Terminated Lead	Diagnostic Test Probe	Terminal Removal Tool	Service Terminal	Tray Name	Core Crimp	Insulation Crimp
I	19333221	EL-35616-58 (BK)	EL-38125-58	Not Available	Not Available	Not Available	Not Available

A11 Radio X6 (IOS/IOT)

Pin	Size	Color	Circuit	Function	Terminal Type ID	Option
1 - 2	—	—	—	Not Occupied	—	—
3	0.35	GY/D-BU	7217	Ethernet Bus 7 (+)	I	—
4	0.35	BN/D-BU	7216	Ethernet Bus 7 (-)	I	—

A11 Radio X6 (IOS/IOT) (cont'd)

Pin	Size	Color	Circuit	Function	Terminal Type ID	Option
5 - 7	—	—	—	Not Occupied	—	—
8	0.35	GY/BK	7215	Ethernet Bus 6 (+)	I	—
9	0.35	BN/BK	7214	Ethernet Bus 6 (-)	I	—
10	—	—	—	Not Occupied	—	—
11	0.35	GY/WH	7211	Ethernet Bus 4 (+)	I	—
12	0.35	GY	7210	Ethernet Bus 4 (-)	I	—

A14D Seat Lumbar Support Pump - Driver (A2X)

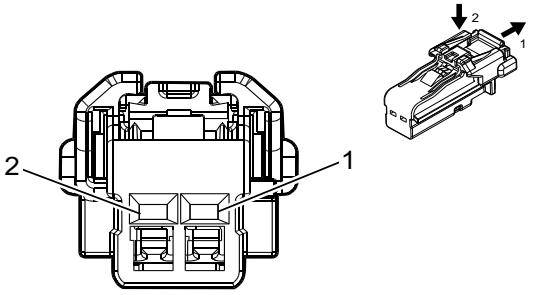

4115691

Connector Part Information

Harness Type: Driver Seat
OEM Connector: 6098-8431
Service Connector: Service by Harness - See Part Catalog
Description: 2-Way F 1.2 Series (BK)

Terminal Part Information

Terminal Type ID	Terminated Lead	Diagnostic Test Probe	Terminal Removal Tool	Service Terminal	Tray Name	Core Crimp	Insulation Crimp
I	Not Required	J-35616-16 (LT GN)	No Tool Required	Not Required	Not Required	Not Required	Not Required

A14D Seat Lumbar Support Pump - Driver (A2X)

Pin	Size	Color	Circuit	Function	Terminal Type ID	Option
1	0.75	L-BU	611	Driver Power Seat Lumbar Motor Forward Control	I	—
2	0.75	VT	610	Driver Power Seat Lumbar Motor Rearward Control	I	—

A14P Seat Lumbar Support Pump - Passenger (A7K)

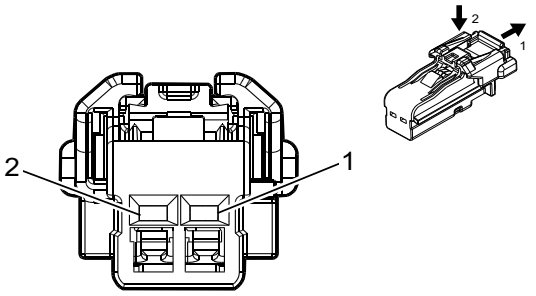

4115691

Connector Part Information

Harness Type: Passenger Seat
OEM Connector: 6098-8431
Service Connector: Service by Harness - See Part Catalog
Description: 2-Way F 1.2 Series (BK)

Terminal Part Information

Terminal Type ID	Terminated Lead	Diagnostic Test Probe	Terminal Removal Tool	Service Terminal	Tray Name	Core Crimp	Insulation Crimp
I	Not Required	J-35616-16 (LT GN)	No Tool Required	Not Required	Not Required	Not Required	Not Required

A14P Seat Lumbar Support Pump - Passenger (A7K)

Pin	Size	Color	Circuit	Function	Terminal Type ID	Option
1	0.75	L-BU	211	Passenger Power Seat Lumbar Motor Forward Control	I	—
2	0.75	VT	210	Passenger Power Seat Lumbar Motor Rearward Control	I	—

A16 Transfer Case Motor

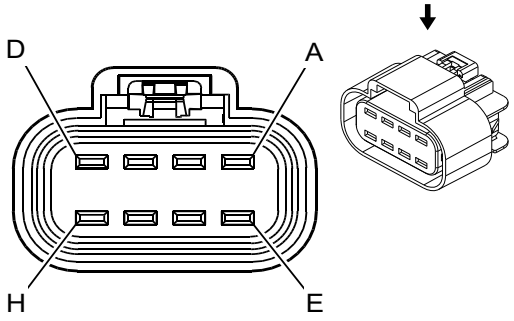

646372

Connector Part Information

Harness Type: Engine
OEM Connector: 13538370

Service Connector: 19369184
Description: 8-Way F 280 GT Series, Sealed (BK)

Terminal Part Information

Terminal Type ID	Terminated Lead	Diagnostic Test Probe	Terminal Removal Tool	Service Terminal	Tray Name	Core Crimp	Insulation Crimp
I	Not Required	J-35616-4A (PU)	No Tool Required	Not Required	Not Required	Not Required	Not Required

A16 Transfer Case Motor

Pin	Size	Color	Circuit	Function	Terminal Type ID	Option
A	3	YE/GY	1552	Transfer Case Motor Clockwise Control	I	—
B	0.75	BK	952	—	I	—
C	0.75	YE/BN	1569	Transfer Case Lock Solenoid Control	I	—
D	3	YE/VT	1553	Transfer Case Motor Counter Clockwise Control	I	—
E	0.5	YE	7474	Incremental Encoder Direction Signal	I	—
F	0.5	BU/GY	7473	Incremental Encoder Impulse Signal	I	—
G	0.5	WH/L-GN	7475	Incremental Encoder Sensor 8V Reference	I	—
H	0.5	VT	7476	Incremental Encoder Sensor Low Reference	I	—

A22 Radio Controls (UIR)

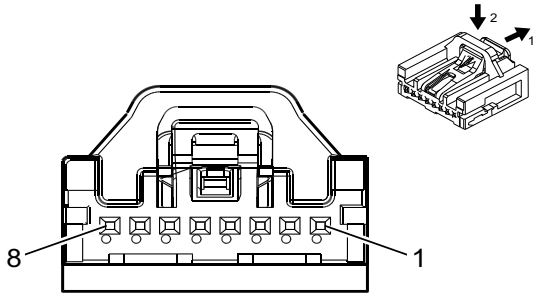

5200269

Connector Part Information

Harness Type: Instrument Panel
OEM Connector: 35068228
Service Connector: -
Description: 8-Way F Mini 50 Series (BK)

Terminal Part Information

Terminal Type ID	Terminated Lead	Diagnostic Test Probe	Terminal Removal Tool	Service Terminal	Tray Name	Core Crimp	Insulation Crimp
I	Not Required	EL-35616-58 (BK)	No Tool Required	Not Required	Not Required	Not Required	Not Required

A22 Radio Controls (UIR)

Pin	Size	Color	Circuit	Function	Terminal Type ID	Option
1	0.35	BU/RD	2807	Radio Keypad Voltage Reference	I	—
2	—	—	—	Not Occupied	—	—
3	0.35	BN/WH	2809	Radio Keypad Power Signal	I	—
4	0.35	BK/YE	2806	Radio Keypad Low Reference	I	—
5	0.35	BU/GY	2808	Radio Keypad Dimming Control	I	—
6	0.35	VT/WH	2810	Radio Keypad Button Signal	I	—
7	0.35	BU	4315	Radio Volume Up Signal	I	—
8	0.35	GY/BN	4314	Radio Volume Down Signal	I	—

A23D Door Latch Assembly - Driver

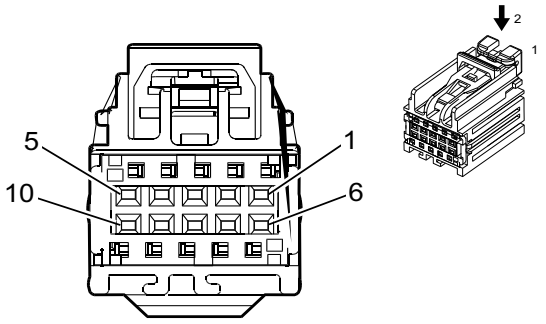

4622549

Connector Part Information

Harness Type: Driver Door
OEM Connector: 33320811
Service Connector: Service by Harness - See Part Catalog
Description: 10-Way F 0.64 YESC Kaizen Series (GN)

Terminal Part Information

Terminal Type ID	Terminated Lead	Diagnostic Test Probe	Terminal Removal Tool	Service Terminal	Tray Name	Core Crimp	Insulation Crimp
I	Not Required	J-35616-64B (LT BU)	No Tool Required	Not Required	Not Required	Not Required	Not Required

A23D Door Latch Assembly - Driver

Pin	Size	Color	Circuit	Function	Terminal Type ID	Option
1	0.5	PK	745	Left Front Door Ajar Switch Signal	I	—
2	0.5	WH/YE	3574	Driver Door Open Switch Signal	I	—
3	0.75	BK	1150	Ground	I	—
4	0.35	WH/VT	3270	Driver Door Lock Motor Status Signal	I	—
5	0.5	BU/VT	1124	Door Lock Key Switch Unlock Signal	I	—
6	—	—	—	Not Occupied	—	—
7	0.75	GY	5911	Door Lock Actuator Lock Control 2	I	—
8	0.75	BN/YE	294	Door Lock Actuator Unlock Control	I	—

A23D Door Latch Assembly - Driver (cont'd)

Pin	Size	Color	Circuit	Function	Terminal Type ID	Option
9 - 10	—	—	—	Not Occupied	—	—

A23LR Door Latch Assembly - Left Rear

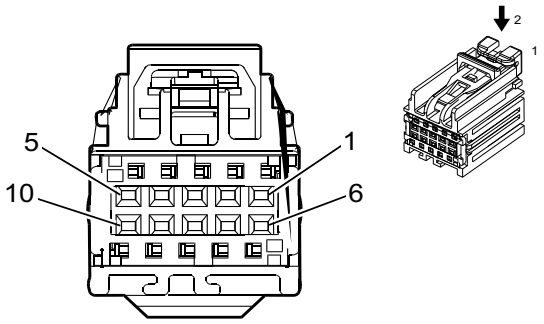

4622549

Connector Part Information

Harness Type: Left Rear Door
OEM Connector: 33320811
Service Connector: Service by Harness - See Part Catalog
Description: 10-Way F 0.64 YESC Kaizen Series (GN)

Terminal Part Information

Terminal Type ID	Terminated Lead	Diagnostic Test Probe	Terminal Removal Tool	Service Terminal	Tray Name	Core Crimp	Insulation Crimp
I	Not Required	J-35616-64B (LT BU)	No Tool Required	Not Required	Not Required	Not Required	Not Required

A23LR Door Latch Assembly - Left Rear

Pin	Size	Color	Circuit	Function	Terminal Type ID	Option
1	0.5	GY	747	Left Rear Door Ajar Switch Signal	I	—
2	—	—	—	Not Occupied	—	—
3	0.75	BK	1150	Ground	I	—
4 - 6	—	—	—	Not Occupied	—	—
7	0.75	GY	295	Door Lock Actuator Lock Control	I	—
8	0.75	BN/YE	294	Door Lock Actuator Unlock Control	I	—
9 - 10	—	—	—	Not Occupied	—	—

A23P Door Latch Assembly - Passenger

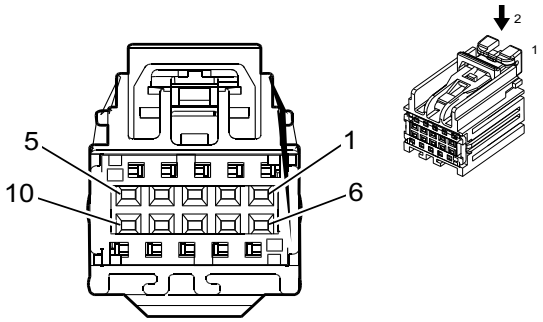

4622549

Connector Part Information

Harness Type: Passenger Door
OEM Connector: 33320811
Service Connector: Service by Harness - See Part Catalog
Description: 10-Way F 0.64 YESC Kaizen Series (GN)

Terminal Part Information

Terminal Type ID	Terminated Lead	Diagnostic Test Probe	Terminal Removal Tool	Service Terminal	Tray Name	Core Crimp	Insulation Crimp
I	Not Required	J-35616-64B (LT BU)	No Tool Required	Not Required	Not Required	Not Required	Not Required

A23P Door Latch Assembly - Passenger

Pin	Size	Color	Circuit	Function	Terminal Type ID	Option
1 - 2	—	—	—	Not Occupied	—	—
3	0.75	BK	1250	Ground	I	—
4	—	—	—	Not Occupied	—	—
5	0.5	GY	746	Right Front Door Ajar Switch Signal	I	—
6 - 7	—	—	—	Not Occupied	—	—
8	0.75	BN/YE	294	Door Lock Actuator Unlock Control	I	—
9	0.75	GY	295	Door Lock Actuator Lock Control	I	—
10	—	—	—	Not Occupied	—	—

A23RR Door Latch Assembly - Right Rear

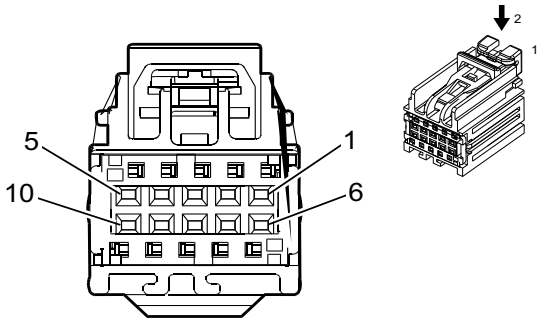

4622549

Connector Part Information

Harness Type: Right Rear Door
OEM Connector: 33320811
Service Connector: Service by Harness - See Part Catalog
Description: 10-Way F 0.64 YESC Kaizen Series (GN)

Terminal Part Information

Terminal Type ID	Terminated Lead	Diagnostic Test Probe	Terminal Removal Tool	Service Terminal	Tray Name	Core Crimp	Insulation Crimp
I	Not Required	J-35616-64B (LT BU)	No Tool Required	Not Required	Not Required	Not Required	Not Required

A23RR Door Latch Assembly - Right Rear

Pin	Size	Color	Circuit	Function	Terminal Type ID	Option
1 - 2	—	—	—	Not Occupied	—	—
3	0.5	BK	1250	Ground	I	—
4	—	—	—	Not Occupied	—	—
5	0.5	GY	748	Right Rear Door Ajar Switch Signal	I	—
6 - 7	—	—	—	Not Occupied	—	—
8	0.75	BN/YE	294	Door Lock Actuator Unlock Control	I	—
9	0.75	GY	295	Door Lock Actuator Lock Control	I	—
10	—	—	—	Not Occupied	—	—

A24D Door Handle Assembly - Driver Exterior (BTM)

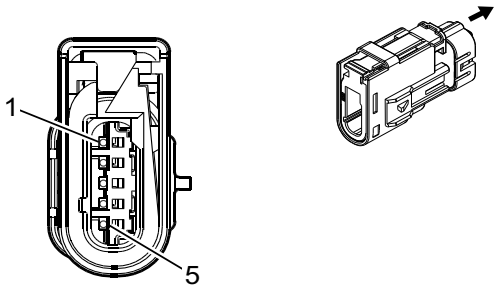

4808321

Connector Part Information

Harness Type: Driver Door
OEM Connector: 35028909
Service Connector: Service by Harness - See Part Catalog
Description: 5-Way M 1.2 Series, Sealed (NA)

Terminal Part Information

Terminal Type ID	Terminated Lead	Diagnostic Test Probe	Terminal Removal Tool	Service Terminal	Tray Name	Core Crimp	Insulation Crimp
I	Not Required	J-35616-17 (LT GN)	No Tool Required	Not Required	Not Required	Not Required	Not Required

A24D Door Handle Assembly - Driver Exterior (BTM)

Pin	Size	Color	Circuit	Function	Terminal Type ID	Option
1	0.5	L-GN/WH	3570	Driver Door Handle Switch Signal	I	—
2	0.5	VT	3560	Passive Entry Driver Door Antenna Signal Hi	I	—
3	—	—	—	Not Occupied	—	—
4	0.5	VT/GY	3561	Passive Entry Driver Door Antenna Signal Lo	I	—
5	0.75	BK	1150	Ground	I	—

A24LR Door Handle Assembly - Left Rear Exterior (BTM)

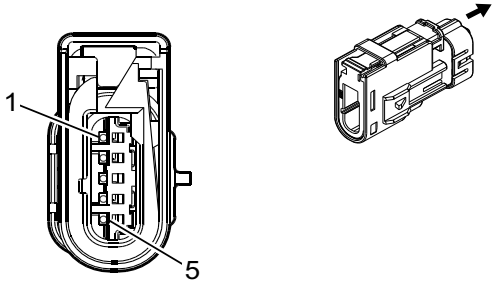

4808325

Connector Part Information

Harness Type: Left Rear Door
OEM Connector: 35028907
Service Connector: Service by Harness - See Part Catalog
Description: 5-Way M 1.2 Series, Sealed (BK)

Terminal Part Information

Terminal Type ID	Terminated Lead	Diagnostic Test Probe	Terminal Removal Tool	Service Terminal	Tray Name	Core Crimp	Insulation Crimp
I	Not Required	J-35616-17 (LT GN)	No Tool Required	Not Required	Not Required	Not Required	Not Required

A24LR Door Handle Assembly - Left Rear Exterior (BTM)

Pin	Size	Color	Circuit	Function	Terminal Type ID	Option
1	0.5	PK	6157	Left Rear Door Handle Switch Signal	I	—
2 - 4	—	—	—	Not Occupied	—	—
5	0.75	BK	1150	Ground	I	—

A24P Door Handle Assembly - Passenger Exterior (BTM)

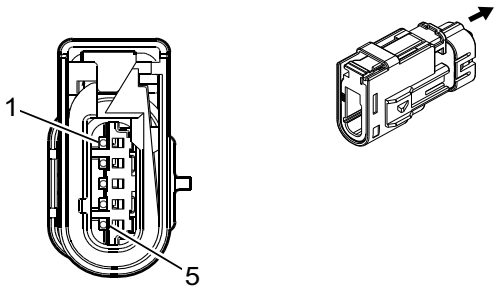

4808321

Connector Part Information

Harness Type: Passenger Door
OEM Connector: 35028909
Service Connector: Service by Harness - See Part Catalog
Description: 5-Way M 1.2 Series, Sealed (NA)

Terminal Part Information

Terminal Type ID	Terminated Lead	Diagnostic Test Probe	Terminal Removal Tool	Service Terminal	Tray Name	Core Crimp	Insulation Crimp
I	Not Required	J-35616-17 (LT GN)	No Tool Required	Not Required	Not Required	Not Required	Not Required

A24P Door Handle Assembly - Passenger Exterior (BTM)

Pin	Size	Color	Circuit	Function	Terminal Type ID	Option
1	0.5	VT/WH	3571	Passenger Door Handle Switch Signal	I	—

A24P Door Handle Assembly - Passenger Exterior (BTM) (cont'd)

Pin	Size	Color	Circuit	Function	Terminal Type ID	Option
2	0.5	L-GN/YE	3562	Passive Entry Passenger Door Antenna Signal Hi	I	—
3	—	—	—	Not Occupied	—	—
4	0.5	L-GN/BK	3563	Passive Entry Passenger Door Antenna Signal Lo	I	—
5	0.75	BK	1250	Ground	I	—

A24RR Door Handle Assembly - Right Rear Exterior (BTM)

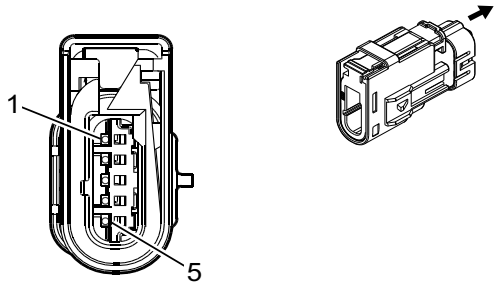

4808325

Connector Part Information

Harness Type: Right Rear Door
OEM Connector: 35028907
Service Connector: Service by Harness - See Part Catalog
Description: 5-Way M 1.2 Series, Sealed (BK)

Terminal Part Information

Terminal Type ID	Terminated Lead	Diagnostic Test Probe	Terminal Removal Tool	Service Terminal	Tray Name	Core Crimp	Insulation Crimp
I	Not Required	J-35616-17 (LT GN)	No Tool Required	Not Required	Not Required	Not Required	Not Required

A24RR Door Handle Assembly - Right Rear Exterior (BTM)

Pin	Size	Color	Circuit	Function	Terminal Type ID	Option
1	0.5	YE/GY	6158	Right Rear Door Handle Switch Signal	I	—
2 - 4	—	—	—	Not Occupied	—	—
5	0.75	BK	1250	Ground	I	—

A26 HVAC Controls

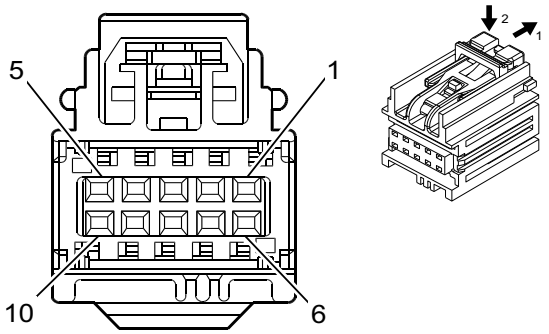

4822741

Connector Part Information

Harness Type: Instrument Panel
OEM Connector: 33353271
Service Connector: 13509648
Description: 10-Way F 0.64 YESC Kaizen Series (BK)

Terminal Part Information

Terminal Type ID	Terminated Lead	Diagnostic Test Probe	Terminal Removal Tool	Service Terminal	Tray Name	Core Crimp	Insulation Crimp
I	13575742	J-35616-64B (LT BU)	J-38125-215A	SAIT-A03T-M064	Yazaki 14	P	P
II	13575867	J-35616-64B (LT BU)	J-38125-215A	SAIT-A03T-M064	Yazaki 14	P	P
III	19300631	J-35616-64B (LT BU)	J-38125-215A	Not Available	Not Available	Not Available	Not Available

A26 HVAC Controls

Pin	Size	Color	Circuit	Function	Terminal Type ID	Option
1	0.5	RD/WH	1340	Battery Positive Voltage	I	—
2	—	—	—	Not Occupied	—	—
3	0.35	L-GN	5060	Low Speed GMLAN Serial Data	II	—
4 - 8	—	—	—	Not Occupied	—	—
9	0.35	L-GN/YE	7531	Local Interconnect Network Serial Data Bus 9	III	—
10	0.5	BK/WH	1851	Signal Ground	I	—

A98 Front Overhead Console Assembly X1

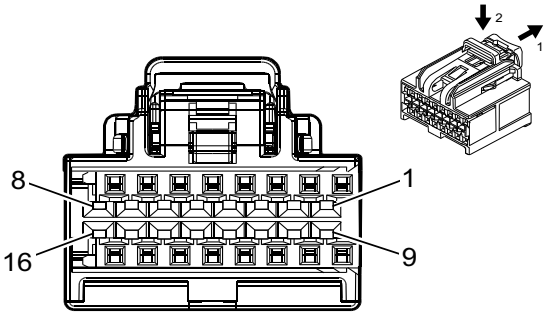

4873254

Connector Part Information

Harness Type: Headliner
OEM Connector: 35016344
Service Connector: 13519739
Description: 16-Way F 0.64 OCS Series (GY)

Terminal Part Information

Terminal Type ID	Terminated Lead	Diagnostic Test Probe	Terminal Removal Tool	Service Terminal	Tray Name	Core Crimp	Insulation Crimp
I	19300660	J-35616-64B (LT BU)	Not Available	Not Available	Not Available	Not Available	Not Available

A98 Front Overhead Console Assembly X1

Pin	Size	Color	Circuit	Function	Terminal Type ID	Option
1	0.35	GY	157	Interior Lamp Control	I	—
2	0.5	WH/BN	6815	Inadvertent Power Control	I	—
3	0.35	WH	6816	Indicator Dimming Control	I	—
4	0.35	YE	6817	LED Backlight Dimming Control	I	—
5	0.35	BK	1050	Ground	I	—
6	0.35	BU	2307	Passenger Air Bag On Indicator Control	I	—
7	0.35	L-GN	2308	Passenger Air Bag Off Indicator Control	I	—
8	0.35	VT/WH	1139	Run/Crank Ignition 1 Voltage	I	—
9	0.35	VT/WH	5234	Passenger Seat Belt Indicator Control	I	—
10	0.35	GY	156	Courtesy Lamp Switch Signal	I	—
11	0.35	GY/L-GN	328	Interior Lamp Defeat Switch Signal	I	—
12	0.35	BK/WH	1851	Signal Ground	I	—
13	0.35	BU/GY	4672	Dome Lamp Off Indicator Control	I	—
14	0.35	VT/L-GN	7558	LED Ambient Lighting Control 2	I	—
15 - 16	—	—	—	Not Occupied	—	—

A98 Front Overhead Console Assembly X2

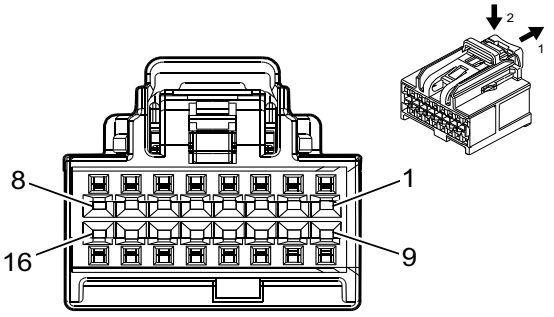

4873243

Connector Part Information

Harness Type: Headliner
OEM Connector: 35016343
Service Connector: 13519738
Description: 16-Way F 0.64 OCS Series (BK)

Terminal Part Information

Terminal Type ID	Terminated Lead	Diagnostic Test Probe	Terminal Removal Tool	Service Terminal	Tray Name	Core Crimp	Insulation Crimp
I	19300660	J-35616-64B (LT BU)	Not Available	Not Available	Not Available	Not Available	Not Available

A98 Front Overhead Console Assembly X2

Pin	Size	Color	Circuit	Function	Terminal Type ID	Option
1	0.35	YE/VT	2516	Keypad Green LED Control	I	—
2	0.35	BN/WH	2517	Keypad Red LED Control	I	—
3	0.35	L-GN/WH	2514	Keypad Signal	I	—
4	0.35	L-GN/BK	2515	Keypad Control	I	—
5	0.35	YE/VT	6191	Power Sliding Window Switch Open Signal	I	—
6	0.35	WH	6192	Power Sliding Window Switch Close Signal	I	—
7	0.35	VT/YE	43	Accessory Ignition Voltage	I	—
8	0.35	RD/YE	240	Battery Positive Voltage	I	—
9	0.35	BU/VT	5027	Sunroof Switch Data 1 Signal	I	—
10	0.35	WH/L-GN	3031	Sunroof Vent Switch Signal	I	—
11	0.35	BK/GY	128	Sunroof Switch Low Reference	I	—
12 - 16	—	—	—	Not Occupied	—	—

A99L Pickup Box Endgate Latch - Left (QK2)

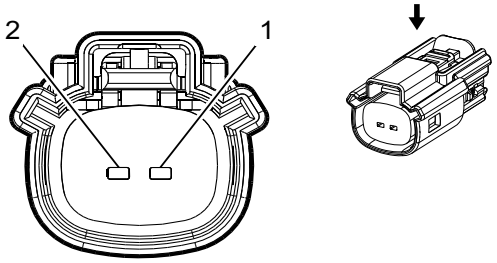

2474713

Connector Part Information

Harness Type: Endgate
OEM Connector: 13782480
Service Connector: Service by Harness - See Part Catalog
Description: 2-Way F 150 MX Series, Sealed (BK)

Terminal Part Information

Terminal Type ID	Terminated Lead	Diagnostic Test Probe	Terminal Removal Tool	Service Terminal	Tray Name	Core Crimp	Insulation Crimp
I	Not Required	J-35616-2A (GY)	No Tool Required	Not Required	Not Required	Not Required	Not Required

A99L Pickup Box Endgate Latch - Left (QK2)

Pin	Size	Color	Circuit	Function	Terminal Type ID	Option
1	0.5	L-GN	1299	Major Endgate Motor Supply Voltage	I	—
2	0.5	YE/BK	7730	Major Endgate Motor Return	I	—

A99L Pickup Box Endgate Latch - Left (QT6)

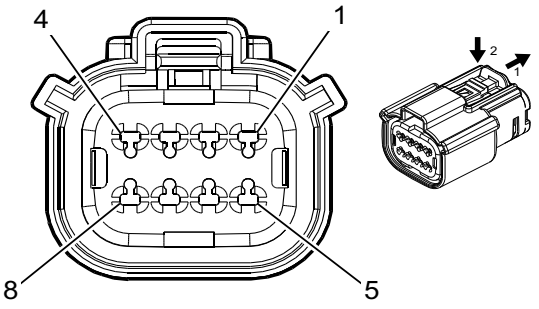

4846407

Connector Part Information

Harness Type: Endgate
OEM Connector: 35037827
Service Connector: Service by Harness - See Part Catalog
Description: 8-Way F 150 MX Series, Sealed (BK)

Terminal Part Information

Terminal Type ID	Terminated Lead	Diagnostic Test Probe	Terminal Removal Tool	Service Terminal	Tray Name	Core Crimp	Insulation Crimp
I	Not Required	J-35616-2A (GY)	No Tool Required	Not Required	Not Required	Not Required	Not Required

A99L Pickup Box Endgate Latch - Left (QT6)

Pin	Size	Color	Circuit	Function	Terminal Type ID	Option
1	—	—	—	Not Occupied	—	—
2	0.35	GY/VT	4678	Rear Closure Ajar Switch Signal 1	I	—
3	0.35	BU/BK	4665	Rear Closure Ajar Switch Signal 2	I	—
4	0.35	BK/VT	4656	Rear Closure Object Sensor Low Reference	I	—
5	1	BN	4681	Rear Closure Cinch Latch Motor Open Control	I	—
6	1	BU/GY	4682	Rear Closure Cinch Latch Motor Close Control	I	—
7	0.35	GN/BK	4659	Rear Closure Open	I	—
8	0.35	PK/BK	4668	Rear Closure Ajar Switch Signal 3	I	—

A99R Pickup Box Endgate Latch - Right (QK2)

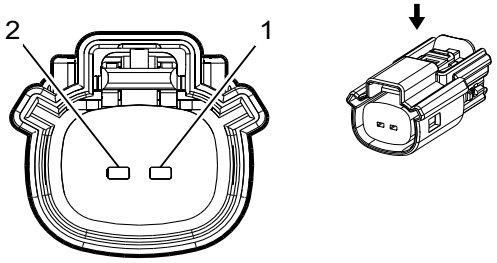

2474713

Connector Part Information

Harness Type: Endgate
OEM Connector: 13782480
Service Connector: Service by Harness - See Part Catalog
Description: 2-Way F 150 MX Series, Sealed (BK)

Terminal Part Information

Terminal Type ID	Terminated Lead	Diagnostic Test Probe	Terminal Removal Tool	Service Terminal	Tray Name	Core Crimp	Insulation Crimp
I	Not Required	J-35616-2A (GY)	No Tool Required	Not Required	Not Required	Not Required	Not Required

A99R Pickup Box Endgate Latch - Right (QK2)

Pin	Size	Color	Circuit	Function	Terminal Type ID	Option
1	0.5	L-GN	1299	Major Endgate Motor Supply Voltage	I	—
2	0.5	YE/BK	7730	Major Endgate Motor Return	I	—

A99R Pickup Box Endgate Latch - Right (QT6)

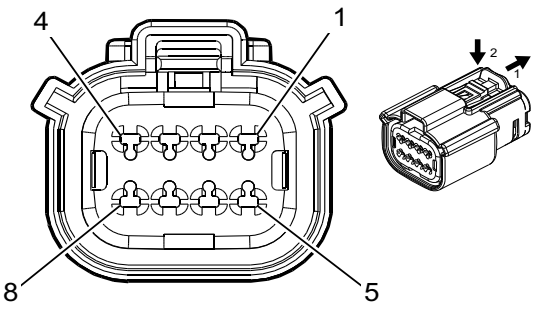

4846407

Connector Part Information

Harness Type: Endgate
OEM Connector: 35037827
Service Connector: Service by Harness - See Part Catalog
Description: 8-Way F 150 MX Series, Sealed (BK)

Terminal Part Information

Terminal Type ID	Terminated Lead	Diagnostic Test Probe	Terminal Removal Tool	Service Terminal	Tray Name	Core Crimp	Insulation Crimp
I	Not Required	J-35616-2A (GY)	No Tool Required	Not Required	Not Required	Not Required	Not Required

A99R Pickup Box Endgate Latch - Right (QT6)

Pin	Size	Color	Circuit	Function	Terminal Type ID	Option
1	0.35	GY/BK	1575	Rear Closure Sensor Low Reference 2	I	—
2	0.35	YE/RD	7734	Rear Closure Latch 2 Rachet Status	I	—
3	0.35	VT	7736	Rear Closure Latch 2 Unlatch Status	I	—
4	—	—	—	Not Occupied	—	—
5	0.35	WH	7735	Rear Closure Latch 2 Pawl Status	I	—
6	0.35	BU	7733	Rear Closure Latch 2 Sector Status	I	—
7	1	PK	1499	Rear Closure Cinch Latch Motor 2 Cinch Control	I	—
8	1	BU	1509	Rear Closure Cinch Latch Motor 2 Release Control	I	—

A100L Pickup Box Auxiliary Endgate Latch - Left (QK2/QT5)

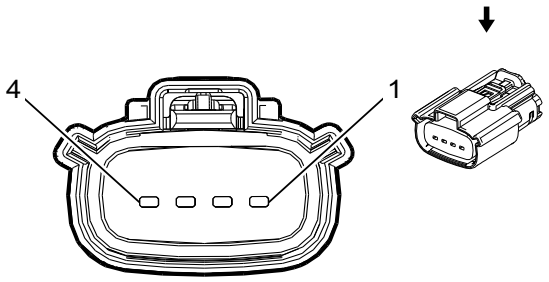

2474747

Connector Part Information

Harness Type: Endgate
OEM Connector: 13815807
Service Connector: Service by Harness - See Part Catalog
Description: 4-Way F 150 MX Series, Sealed (BK)

Terminal Part Information

Terminal Type ID	Terminated Lead	Diagnostic Test Probe	Terminal Removal Tool	Service Terminal	Tray Name	Core Crimp	Insulation Crimp
I	Not Required	J-35616-2A (GY)	No Tool Required	Not Required	Not Required	Not Required	Not Required

A100L Pickup Box Auxiliary Endgate Latch - Left (QK2/QT5)

Pin	Size	Color	Circuit	Function	Terminal Type ID	Option
1	0.5	YE/D-BU	7295	Left Minor Endgate Ajar Signal	I	—
2	0.75	BK	1450	Ground	I	—
3	0.5	BN/BK	7726	Minor Endgate Motor Return	I	—
4	0.5	VT	7725	Minor Endgate Motor Supply Voltage	I	—

A100R Pickup Box Auxiliary Endgate Latch - Right (QK2/QT5)

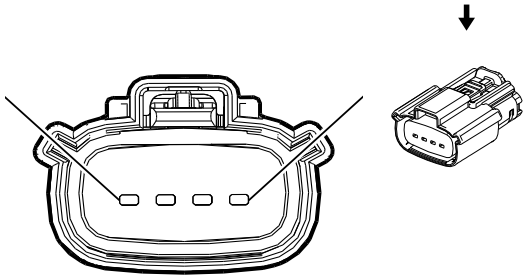

2474747

Connector Part Information

Harness Type: Endgate
OEM Connector: 13815807
Service Connector: Service by Harness - See Part Catalog
Description: 4-Way F 150 MX Series, Sealed (BK)

Terminal Part Information

Terminal Type ID	Terminated Lead	Diagnostic Test Probe	Terminal Removal Tool	Service Terminal	Tray Name	Core Crimp	Insulation Crimp
I	Not Required	J-35616-2A (GY)	No Tool Required	Not Required	Not Required	Not Required	Not Required
I	Not Required	J-35616-2A (GY)	No Tool Required	Not Required	Not Required	Not Required	Not Required

A100R Pickup Box Auxiliary Endgate Latch - Right (QK2/QT5)

Pin	Size	Color	Circuit	Function	Terminal Type ID	Option
1	0.5	BN/BK	7726	Minor Endgate Motor Return	I	—
2	0.5	VT	7725	Minor Endgate Motor Supply Voltage	I	—
3	0.35	WH/BN	7296	Right Minor Endgate Ajar Signal	I	—
4	0.75	BK	1450	Ground	I	—

B1 A/C Refrigerant Pressure Sensor

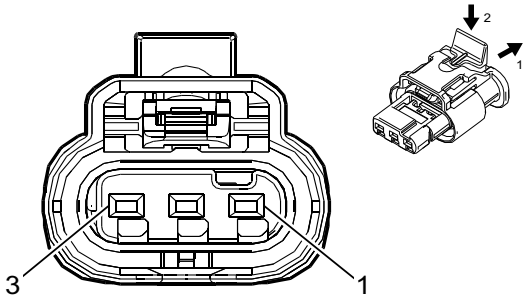

4249125

Connector Part Information

Harness Type: Engine
OEM Connector: 33176362
Service Connector: 19366844
Description: 3-Way F 1.2 MCP Series, Sealed (BN)

Terminal Part Information

Terminal Type ID	Terminated Lead	Diagnostic Test Probe	Terminal Removal Tool	Service Terminal	Tray Name	Core Crimp	Insulation Crimp
I	Not Required	J-35616-16 (LT GN)	No Tool Required	Not Required	Not Required	Not Required	Not Required

B1 A/C Refrigerant Pressure Sensor

Pin	Size	Color	Circuit	Function	Terminal Type ID	Option
1	0.5	BN/RD	2700	A/C Pressure Sensor 5V Reference	I	L5P+(CJ2/C67)
	0.5	BU/RD	460	Engine Control Sensors 5 Volt Reference (1)	I	L8T+(CJ2/C67)
2	0.5	L-GN	380	A/C Refrigerant Pressure Sensor Signal	I	—
3	0.5	BK/BN	5514	A/C Refrigerant Pressure Sensor Low Reference	I	L5P+(CJ2/C67)
	0.5	BK/GY	626	Engine Control Sensors Low Reference (3)	I	L8T+(CJ2/C67)

B5LF Wheel Speed Sensor - Left Front

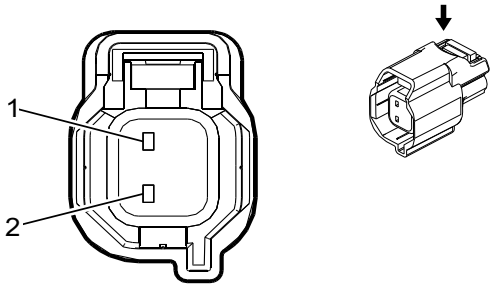

2900396

Connector Part Information

Harness Type: Chassis
OEM Connector: 15503634
Service Connector: 19366856
Description: 2-Way F 1.5 Series (L-GY)

Terminal Part Information

Terminal Type ID	Terminated Lead	Diagnostic Test Probe	Terminal Removal Tool	Service Terminal	Tray Name	Core Crimp	Insulation Crimp
I	Not Required	J-35616-14 (GN)	No Tool Required	Not Required	Not Required	Not Required	Not Required

B5LF Wheel Speed Sensor - Left Front

Pin	Size	Color	Circuit	Function	Terminal Type ID	Option
1	0.5	GY/WH	7064	Wheel Speed Sensor Control Left Front	I	—
2	0.5	GY	830	Wheel Speed Sensor Signal Left Front	I	—

B5LR Wheel Speed Sensor - Left Rear (DZW)

—

Connector Part Information

Harness Type: Rear Axle
OEM Connector: 84166201
Service Connector: Service by Harness - See Part Catalog
Description: —

Terminal Part Information

Terminal Type ID	Terminated Lead	Diagnostic Test Probe	Terminal Removal Tool	Service Terminal	Tray Name	Core Crimp	Insulation Crimp
I	Not Required	Not Available	No Tool Required	Not Required	Not Required	Not Required	Not Required

B5LR Wheel Speed Sensor - Left Rear (DZW)

Pin	Size	Color	Circuit	Function	Terminal Type ID	Option
1	0.75	TN	7127	Wheel Speed Sensor Control Left Rear	I	—
2	0.75	OG	884	Wheel Speed Sensor Signal Left Rear	I	—

B5LR Wheel Speed Sensor - Left Rear (DZW+Chassis Cab)

—

Connector Part Information

Harness Type: Rear Axle
OEM Connector: 84642115
Service Connector: Service by Harness - See Part Catalog
Description: —

Terminal Part Information

Terminal Type ID	Terminated Lead	Diagnostic Test Probe	Terminal Removal Tool	Service Terminal	Tray Name	Core Crimp	Insulation Crimp
I	Not Required	Not Available	No Tool Required	Not Required	Not Required	Not Required	Not Required

B5LR Wheel Speed Sensor - Left Rear (DZW+Chassis Cab)

Pin	Size	Color	Circuit	Function	Terminal Type ID	Option
1	0.75	TN	7127	Wheel Speed Sensor Control Left Rear	I	—
2	0.75	OG	884	Wheel Speed Sensor Signal Left Rear	I	—

B5LR Wheel Speed Sensor - Left Rear (DZW-Chassis Cab)

—

Connector Part Information

Harness Type: Rear Axle
OEM Connector: 84642115
Service Connector: Service by Harness - See Part Catalog
Description: —

Terminal Part Information

Terminal Type ID	Terminated Lead	Diagnostic Test Probe	Terminal Removal Tool	Service Terminal	Tray Name	Core Crimp	Insulation Crimp
I	Not Required	Not Available	No Tool Required	Not Required	Not Required	Not Required	Not Required

B5LR Wheel Speed Sensor - Left Rear (DZW-Chassis Cab)

Pin	Size	Color	Circuit	Function	Terminal Type ID	Option
1	0.75	TN	7127	Wheel Speed Sensor Control Left Rear	I	—
2	0.75	OG	884	Wheel Speed Sensor Signal Left Rear	I	—

B5LR Wheel Speed Sensor - Left Rear (SRW)

—

Connector Part Information

Harness Type: Rear Axle
OEM Connector: 84609174
Service Connector: Service by Harness - See Part Catalog
Description: —

Terminal Part Information

Terminal Type ID	Terminated Lead	Diagnostic Test Probe	Terminal Removal Tool	Service Terminal	Tray Name	Core Crimp	Insulation Crimp
I	Not Required	Not Available	No Tool Required	Not Required	Not Required	Not Required	Not Required

B5LR Wheel Speed Sensor - Left Rear (SRW)

Pin	Size	Color	Circuit	Function	Terminal Type ID	Option
1	0.75	TN	7127	Wheel Speed Sensor Control Left Rear	I	—
2	0.75	OG	884	Wheel Speed Sensor Signal Left Rear	I	—

B5RF Wheel Speed Sensor - Right Front

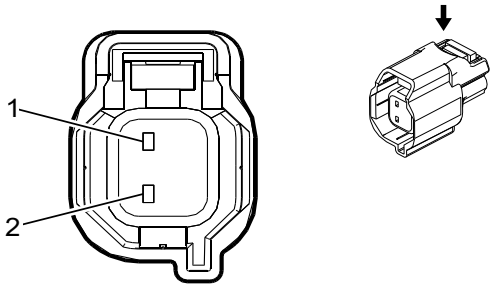

2900396

Connector Part Information

Harness Type: Engine
OEM Connector: 15503634
Service Connector: 19366856
Description: 2-Way F 1.5 Series (L-GY)

Terminal Part Information

Terminal Type ID	Terminated Lead	Diagnostic Test Probe	Terminal Removal Tool	Service Terminal	Tray Name	Core Crimp	Insulation Crimp
I	Not Required	J-35616-14 (GN)	No Tool Required	Not Required	Not Required	Not Required	Not Required
II	Not Required	J-35616-2A (GY)	No Tool Required	Not Required	Not Required	Not Required	Not Required

B5RF Wheel Speed Sensor - Right Front

Pin	Size	Color	Circuit	Function	Terminal Type ID	Option
1	0.5	GY/BN	7065	Wheel Speed Sensor Control Right Front	II	L5P
	0.5	GY/BN	7065	Wheel Speed Sensor Control Right Front	I	L8T
2	0.5	YE	872	Wheel Speed Sensor Signal Right Front	II	L5P
	0.5	YE	872	Wheel Speed Sensor Signal Right Front	I	L8T

B5RR Wheel Speed Sensor - Right Rear (DRZ)

—

Connector Part Information

Harness Type: Rear Axle
OEM Connector: 84609177
Service Connector: Service by Harness - See Part Catalog
Description: Wheel Speed Sensor

Terminal Part Information

Terminal Type ID	Terminated Lead	Diagnostic Test Probe	Terminal Removal Tool	Service Terminal	Tray Name	Core Crimp	Insulation Crimp
I	Not Required	Not Available	No Tool Required	Not Required	Not Required	Not Required	Not Required

B5RR Wheel Speed Sensor - Right Rear (DRZ)

Pin	Size	Color	Circuit	Function	Terminal Type ID	Option
1	0.75	TN	7128	Wheel Speed Sensor Control Right Rear	I	—
2	0.75	OG	882	Wheel Speed Sensor Signal Right Rear	I	—

B5RR Wheel Speed Sensor - Right Rear (DRZ+Chassis Cab)

—

Connector Part Information

Harness Type: Rear Axle
OEM Connector: 84642116
Service Connector: Service by Harness - See Part Catalog
Description: —

Terminal Part Information

Terminal Type ID	Terminated Lead	Diagnostic Test Probe	Terminal Removal Tool	Service Terminal	Tray Name	Core Crimp	Insulation Crimp
I	Not Required	Not Available	No Tool Required	Not Required	Not Required	Not Required	Not Required

B5RR Wheel Speed Sensor - Right Rear (DRZ+Chassis Cab)

Pin	Size	Color	Circuit	Function	Terminal Type ID	Option
1	0.75	TN	7128	Wheel Speed Sensor Control Right Rear	I	—
2	0.75	OG	882	Wheel Speed Sensor Signal Right Rear	I	—

B5RR Wheel Speed Sensor - Right Rear (DRZ-Chassis Cab)

—

Connector Part Information

Harness Type: Rear Axle
OEM Connector: 84642116
Service Connector: Service by Harness - See Part Catalog
Description: —

Terminal Part Information

Terminal Type ID	Terminated Lead	Diagnostic Test Probe	Terminal Removal Tool	Service Terminal	Tray Name	Core Crimp	Insulation Crimp
I	Not Required	Not Available	No Tool Required	Not Required	Not Required	Not Required	Not Required

B5RR Wheel Speed Sensor - Right Rear (DRZ-Chassis Cab)

Pin	Size	Color	Circuit	Function	Terminal Type ID	Option
1	0.75	TN	7128	Wheel Speed Sensor Control Right Rear	I	—
2	0.75	OG	882	Wheel Speed Sensor Signal Right Rear	I	—

B5RR Wheel Speed Sensor - Right Rear (DZW)

—

Connector Part Information

Harness Type: Rear Axle
OEM Connector: 84166202
Service Connector: Service by Harness - See Part Catalog
Description: —

Terminal Part Information

Terminal Type ID	Terminated Lead	Diagnostic Test Probe	Terminal Removal Tool	Service Terminal	Tray Name	Core Crimp	Insulation Crimp
I	Not Required	Not Available	No Tool Required	Not Required	Not Required	Not Required	Not Required

B5RR Wheel Speed Sensor - Right Rear (DZW)

Pin	Size	Color	Circuit	Function	Terminal Type ID	Option
1	0.75	TN	7128	Wheel Speed Sensor Control Right Rear	I	—
2	0.75	OG	882	Wheel Speed Sensor Signal Right Rear	I	—

B5RR Wheel Speed Sensor - Right Rear (SRW)

—

Connector Part Information

Harness Type: Rear Axle
OEM Connector: 84609175
Service Connector: Service by Harness - See Part Catalog
Description: —

Terminal Part Information

Terminal Type ID	Terminated Lead	Diagnostic Test Probe	Terminal Removal Tool	Service Terminal	Tray Name	Core Crimp	Insulation Crimp
I	Not Required	Not Available	No Tool Required	Not Required	Not Required	Not Required	Not Required

B5RR Wheel Speed Sensor - Right Rear (SRW)

Pin	Size	Color	Circuit	Function	Terminal Type ID	Option
1	0.75	TN	7128	Wheel Speed Sensor Control Right Rear	I	—
2	0.75	OG	882	Wheel Speed Sensor Signal Right Rear	I	—

B10B Ambient Light/Sunload Sensor

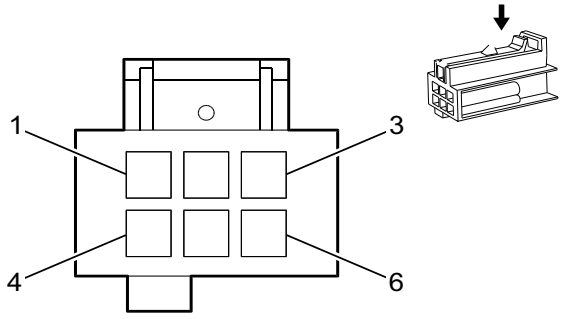

2282896

Connector Part Information

Harness Type: Instrument Panel
OEM Connector: 15338980
Service Connector: 19333315
Description: 6-Way F 0.64 Micro-Quadlock Series (BK)

Terminal Part Information

Terminal Type ID	Terminated Lead	Diagnostic Test Probe	Terminal Removal Tool	Service Terminal	Tray Name	Core Crimp	Insulation Crimp
I	Not Required	J-35616-64B (LT BU)	No Tool Required	Not Required	Not Required	Not Required	Not Required

B10B Ambient Light/Sunload Sensor

Pin	Size	Color	Circuit	Function	Terminal Type ID	Option
1	0.35	GY	590	Solar Sensor Driver Signal	I	—
2	—	—	—	Not Occupied	—	—
3	0.35	WH/D-BU	278	Ambient Light Sensor Signal	I	—
4	0.35	BU/WH	734	Inside Air Temperature Sensor Signal	I	—
5	0.35	GY	728	Security Indicator Control	I	—
6	0.35	BK/L-GN	7567	Solar Sensor Low Reference	I	—

B18 Battery Current Sensor

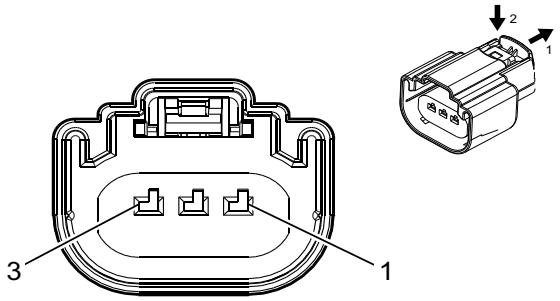

4569745

Connector Part Information

Harness Type: Body
OEM Connector: 33343869
Service Connector: 19179750
Description: 3-Way F 150 MX Series, Sealed (BK)

Terminal Part Information

Terminal Type ID	Terminated Lead	Diagnostic Test Probe	Terminal Removal Tool	Service Terminal	Tray Name	Core Crimp	Insulation Crimp
I	Not Required	J-35616-14 (GN)	No Tool Required	Not Required	Not Required	Not Required	Not Required

B18 Battery Current Sensor

Pin	Size	Color	Circuit	Function	Terminal Type ID	Option
1	0.35	BU/VT	5076	Current Sensor Control	I	—
2	0.35	BK/VT	5077	Current Sensor Low Reference	I	—
3	0.35	WH/YE	5075	Current Sensor Signal	I	—

B20 Brake Fluid Level Switch

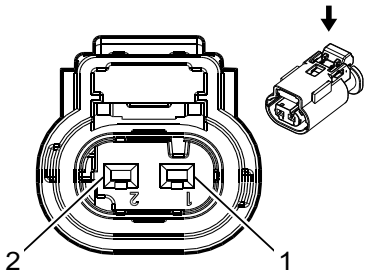

2717066

Connector Part Information

Harness Type: Body
OEM Connector: 13735326
Service Connector: 13587326
Description: 2-Way F 1.2 Multilock Series, Sealed (BK)

Terminal Part Information

Terminal Type ID	Terminated Lead	Diagnostic Test Probe	Terminal Removal Tool	Service Terminal	Tray Name	Core Crimp	Insulation Crimp
I	Not Required	J-35616-16 (LT GN)	No Tool Required	Not Required	Not Required	Not Required	Not Required

B20 Brake Fluid Level Switch

Pin	Size	Color	Circuit	Function	Terminal Type ID	Option
1	0.5	L-GN/GY	333	Brake Fluid Level Sensor Signal	I	—
2	0.75	BK	150	Ground	I	—

B22 Brake Pedal Position Sensor

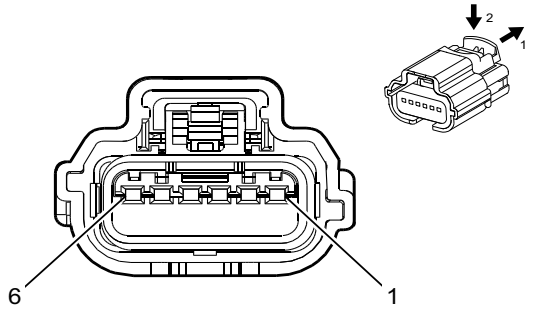

4773396

Connector Part Information

Harness Type: Body
OEM Connector: 35199160
Service Connector: 84683650
Description: 6-Way F 64 Series, Sealed (NA)

Terminal Part Information

Terminal Type ID	Terminated Lead	Diagnostic Test Probe	Terminal Removal Tool	Service Terminal	Tray Name	Core Crimp	Insulation Crimp
I	Not Required	J-35616-64B (LT BU)	No Tool Required	Not Required	Not Required	Not Required	Not Required

B22 Brake Pedal Position Sensor

Pin	Size	Color	Circuit	Function	Terminal Type ID	Option
1	0.35	BK/BN	5360	Brake Apply Sensor Low Reference	I	—
2	0.35	WH	5359	Brake Apply Sensor Control	I	—
3	0.35	BU/YE	5361	Brake Apply Sensor Signal	I	—
4	0.35	WH/L-GN	5380	Brake Position Sensor Signal	I	—
5	0.35	BK/YE	5382	Brake Position Sensor Low Reference	I	—
6	0.35	WH/RD	5381	Brake Position Sensor 5V Reference	I	—

B23 Camshaft Position Sensor (L5P)

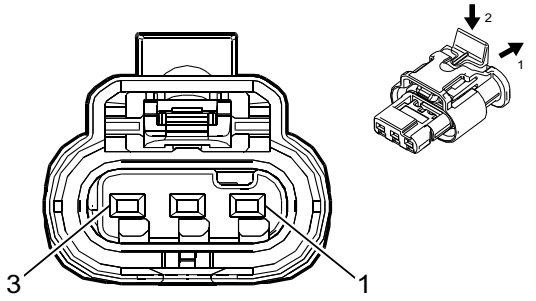

4249125

Connector Part Information

Harness Type: Glow Plug Jumper
OEM Connector: 13594670
Service Connector: Service by Harness - See Part Catalog
Description: 3-Way F 1.2 MCP Series, Sealed (BN)

Terminal Part Information

Terminal Type ID	Terminated Lead	Diagnostic Test Probe	Terminal Removal Tool	Service Terminal	Tray Name	Core Crimp	Insulation Crimp
I	Not Required	J-35616-16 (LT GN)	No Tool Required	Not Required	Not Required	Not Required	Not Required

B23 Camshaft Position Sensor (L5P)

Pin	Size	Color	Circuit	Function	Terminal Type ID	Option
1	0.5	GY/YE	5297	Camshaft Position Exhaust Sensor Control 1	I	L5P
2	0.5	BK/GY	5296	Camshaft Position Exhaust Sensor Low Reference 1	I	L5P
3	0.5	VT/BK	5273	Camshaft Position Exhaust Sensor 1	I	L5P

B23 Camshaft Position Sensor (L8T)

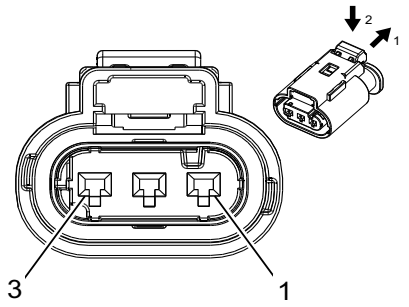

2717069

Connector Part Information

Harness Type: Engine Jumper
OEM Connector: 13763990
Service Connector: Service by Harness - See Part Catalog
Description: 3-Way F 1.2 Multilock Series, Sealed (BK)

Terminal Part Information

Terminal Type ID	Terminated Lead	Diagnostic Test Probe	Terminal Removal Tool	Service Terminal	Tray Name	Core Crimp	Insulation Crimp
I	Not Required	J-35616-16 (LT GN)	No Tool Required	Not Required	Not Required	Not Required	Not Required

B23 Camshaft Position Sensor (L8T)

Pin	Size	Color	Circuit	Function	Terminal Type ID	Option
1	0.5	GY/D-BU	5300	Camshaft Position Intake Sensor Control 1	I	—
2	0.5	BK/L-GN	5301	Camshaft Position Intake Sensor Low Reference 1	I	—
3	0.5	YE/VT	5275	Camshaft Position Intake Sensor 1	I	—

B24LF Mobile Telephone Microphone - Left Front

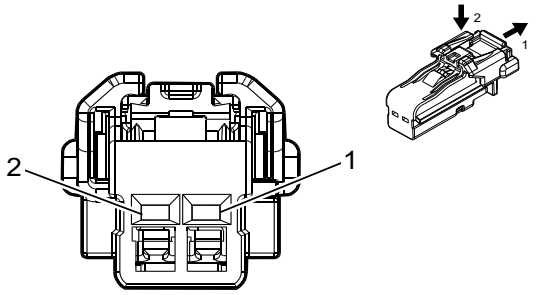

4115691

Connector Part Information

Harness Type: Headliner
OEM Connector: 35026312
Service Connector: 19352066
Description: 2-Way F 1.2 Series (BK)

Terminal Part Information

Terminal Type ID	Terminated Lead	Diagnostic Test Probe	Terminal Removal Tool	Service Terminal	Tray Name	Core Crimp	Insulation Crimp
I	Not Required	J-35616-16 (LT GN)	No Tool Required	Not Required	Not Required	Not Required	Not Required

B24LF Mobile Telephone Microphone - Left Front

Pin	Size	Color	Circuit	Function	Terminal Type ID	Option
1	0.35	BK/BN	654	Cellular Telephone Microphone Low Reference	I	—
2	0.35	BU	655	Cellular Telephone Microphone Signal	I	—

B24RF Mobile Telephone Microphone - Right Front (IOS/IOT)

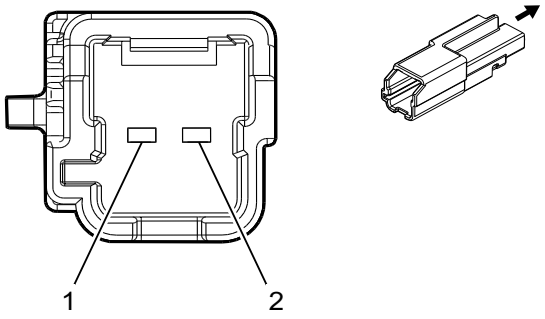

4116495

Connector Part Information

Harness Type: Headliner
OEM Connector: 33251047
Service Connector: 19332377
Description: 2-Way M 1.2 Series (GY)

Terminal Part Information

Terminal Type ID	Terminated Lead	Diagnostic Test Probe	Terminal Removal Tool	Service Terminal	Tray Name	Core Crimp	Insulation Crimp
I	Not Required	J-35616-13 (BU)	No Tool Required	Not Required	Not Required	Not Required	Not Required

B24RF Mobile Telephone Microphone - Right Front (IOS/IOT)

Pin	Size	Color	Circuit	Function	Terminal Type ID	Option
1	0.35	BU/BK	7044	Microphone (-) Low Reference	I	—
2	0.35	VT/YE	7043	Microphone (+) Signal	I	—

B26 Crankshaft Position Sensor (L5P)

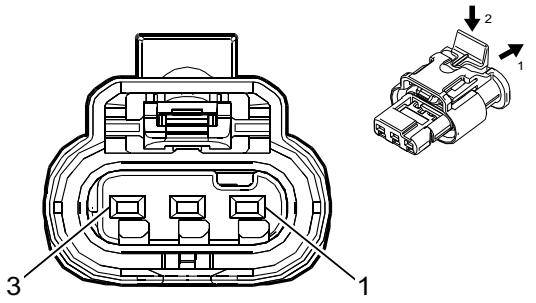

4249125

Connector Part Information

Harness Type: Engine Jumper
OEM Connector: 13594670
Service Connector: Service by Harness - See Part Catalog
Description: 3-Way F 1.2 MCP Series, Sealed (BN)

Terminal Part Information

Terminal Type ID	Terminated Lead	Diagnostic Test Probe	Terminal Removal Tool	Service Terminal	Tray Name	Core Crimp	Insulation Crimp
I	Not Required	J-35616-16 (LT GN)	No Tool Required	Not Required	Not Required	Not Required	Not Required

B26 Crankshaft Position Sensor (L5P)

Pin	Size	Color	Circuit	Function	Terminal Type ID	Option
1	0.5	VT/BU	6270	Crankshaft 60X Sensor 5V Reference	I	L5P
2	0.5	BK/VT	6272	Crankshaft 60X Sensor Low Reference	I	L5P
3	0.5	GN	6271	Crankshaft 60X Sensor Signal	I	L5P

B26 Crankshaft Position Sensor (L8T)

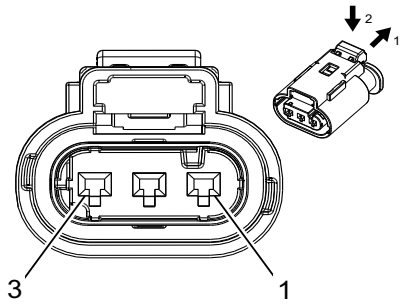

2717069

Connector Part Information

Harness Type: Engine
OEM Connector: 13763990
Service Connector: 84601390
Description: 3-Way F 1.2 Multilock Series, Sealed (BK)

Terminal Part Information

Terminal Type ID	Terminated Lead	Diagnostic Test Probe	Terminal Removal Tool	Service Terminal	Tray Name	Core Crimp	Insulation Crimp
I	Not Required	J-35616-16 (LT GN)	No Tool Required	Not Required	Not Required	Not Required	Not Required

B26 Crankshaft Position Sensor (L8T)

Pin	Size	Color	Circuit	Function	Terminal Type ID	Option
1	0.5	L-GN	6271	Crankshaft 60X Sensor Signal	I	—
2	0.5	BK/VT	6272	Crankshaft 60X Sensor Low Reference	I	—
3	0.5	VT/D-BU	6270	Crankshaft 60X Sensor 5V Reference	I	—

B33 Engine Coolant Level Switch (L5P)

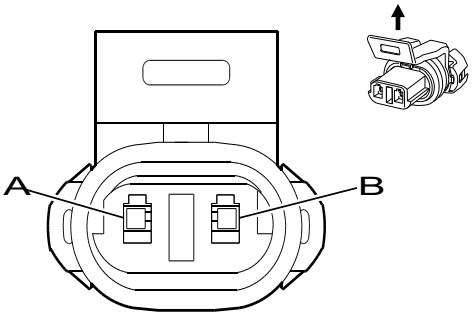

655783

Connector Part Information

Harness Type: Engine
OEM Connector: 15324243
Service Connector: -
Description: 2-Way F 150 Metri-Pack Series, Sealed (GY)

Terminal Part Information

Terminal Type ID	Terminated Lead	Diagnostic Test Probe	Terminal Removal Tool	Service Terminal	Tray Name	Core Crimp	Insulation Crimp
I	Not Required	J-35616-14 (GN)	No Tool Required	Not Required	Not Required	Not Required	Not Required

B33 Engine Coolant Level Switch (L5P)

Pin	Size	Color	Circuit	Function	Terminal Type ID	Option
A	0.5	BU/YE	68	Low Coolant Level Indicator Control	I	—

B33 Engine Coolant Level Switch (L5P) (cont'd)

Pin	Size	Color	Circuit	Function	Terminal Type ID	Option
B	0.75	BK/WH	451	Signal Ground	I	—

B34 Engine Coolant Temperature Sensor (L5P)

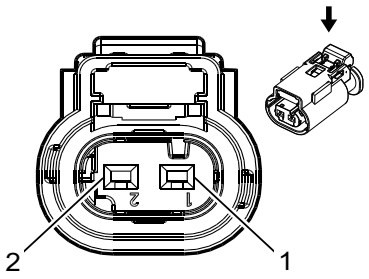

2717066

Connector Part Information

Harness Type: Engine Jumper
OEM Connector: 13503566
Service Connector: Service by Harness - See Part Catalog
Description: 2-Way F 1.2 Multilock Series, Sealed (BK)

Terminal Part Information

Terminal Type ID	Terminated Lead	Diagnostic Test Probe	Terminal Removal Tool	Service Terminal	Tray Name	Core Crimp	Insulation Crimp
I	Not Required	J-35616-16 (LT GN)	No Tool Required	Not Required	Not Required	Not Required	Not Required

B34 Engine Coolant Temperature Sensor (L5P)

Pin	Size	Color	Circuit	Function	Terminal Type ID	Option
1	0.5	BK/BN	2761	Coolant Temperature Sensor Low Reference	I	L5P
2	0.5	BU	410	Engine Coolant Temperature Sensor Signal	I	L5P

B35 Engine Oil Level Switch (L5P)

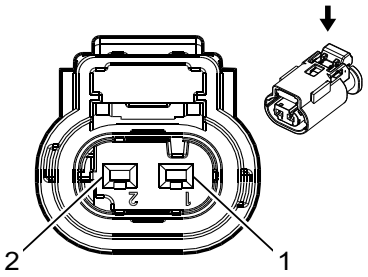

2717066

Connector Part Information

Harness Type: Engine Jumper
OEM Connector: 13503566
Service Connector: Service by Harness - See Part Catalog
Description: 2-Way F 1.2 Multilock Series, Sealed (BK)

Terminal Part Information

Terminal Type ID	Terminated Lead	Diagnostic Test Probe	Terminal Removal Tool	Service Terminal	Tray Name	Core Crimp	Insulation Crimp
I	Not Required	J-35616-16 (LT GN)	No Tool Required	Not Required	Not Required	Not Required	Not Required

B35 Engine Oil Level Switch (L5P)

Pin	Size	Color	Circuit	Function	Terminal Type ID	Option
1	0.5	BK/WH	151	Signal Ground	I	L5P
2	0.5	BN/GN	1174	Oil Level Switch Signal	I	L5P

B35 Engine Oil Level Switch (L8T)

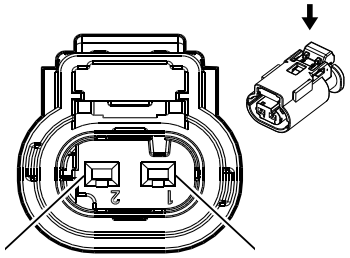

2717066

Connector Part Information

Harness Type: Engine
OEM Connector: 13735326
Service Connector: 13587326
Description: 2-Way F 1.2 Multilock Series, Sealed (BK)

Terminal Part Information

Terminal Type ID	Terminated Lead	Diagnostic Test Probe	Terminal Removal Tool	Service Terminal	Tray Name	Core Crimp	Insulation Crimp
I	Not Required	J-35616-16 (LT GN)	No Tool Required	Not Required	Not Required	Not Required	Not Required

B35 Engine Oil Level Switch (L8T)

Pin	Size	Color	Circuit	Function	Terminal Type ID	Option
1	0.5	BN/L-GN	1174	Oil Level Switch Signal	I	—
2	1	BK/WH	451	Signal Ground	I	—

B36 Engine Oil Temperature Sensor (L8T)

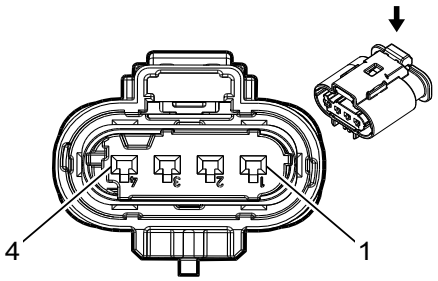

2717079

Connector Part Information

Harness Type: Engine
OEM Connector: 13815341
Service Connector: 13587299
Description: 4-Way F 1.2 Multilock Series, Sealed (BK)

Terminal Part Information

Terminal Type ID	Terminated Lead	Diagnostic Test Probe	Terminal Removal Tool	Service Terminal	Tray Name	Core Crimp	Insulation Crimp
I	Not Required	J-35616-16 (LT GN)	No Tool Required	Not Required	Not Required	Not Required	Not Required

B36 Engine Oil Temperature Sensor (L8T)

Pin	Size	Color	Circuit	Function	Terminal Type ID	Option
1	0.5	BK/YE	548	Engine Control Sensors Low Reference (1)	I	—
2 - 3	—	—	—	Not Occupied	—	—
4	0.5	BN/BU	357	Oil Temperature Sensor Signal	I	—

B37B Engine Oil Pressure Sensor (L5P)

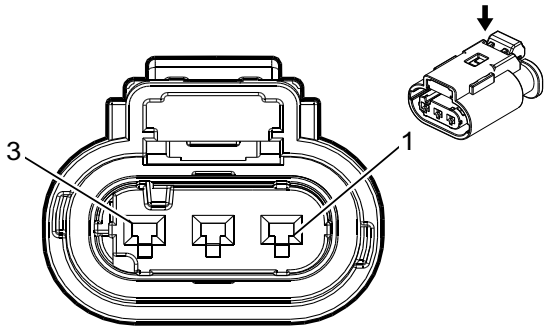

3240107

Connector Part Information

Harness Type: Engine Jumper
OEM Connector: 13503573
Service Connector: Service by Harness - See Part Catalog
Description: 3-Way F 1.2 Multilock Series, Sealed (BK)

Terminal Part Information

Terminal Type ID	Terminated Lead	Diagnostic Test Probe	Terminal Removal Tool	Service Terminal	Tray Name	Core Crimp	Insulation Crimp
I	Not Required	J-35616-16 (LT GN)	No Tool Required	Not Required	Not Required	Not Required	Not Required

B37B Engine Oil Pressure Sensor (L5P)

Pin	Size	Color	Circuit	Function	Terminal Type ID	Option
1	0.5	YE/BN	331	Oil Pressure Sensor Signal	I	L5P
2	0.5	BK/VT	2755	Oil Pressure Sensor Low Reference	I	L5P
3	0.5	WH/RD	2705	Oil Pressure Sensor 5V Reference	I	L5P

B37B Engine Oil Pressure Sensor (L8T)

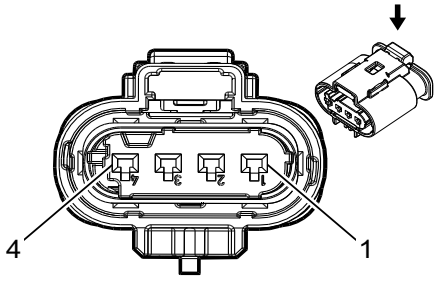

2717079

Connector Part Information

Harness Type: Engine
OEM Connector: 13815341

Service Connector: 13587299
Description: 4-Way F 1.2 Multilock Series, Sealed (BK)

Terminal Part Information

Terminal Type ID	Terminated Lead	Diagnostic Test Probe	Terminal Removal Tool	Service Terminal	Tray Name	Core Crimp	Insulation Crimp
I	Not Required	J-35616-16 (LT GN)	No Tool Required	Not Required	Not Required	Not Required	Not Required

B37B Engine Oil Pressure Sensor (L8T)

Pin	Size	Color	Circuit	Function	Terminal Type ID	Option
1	0.5	BK/YE	548	Engine Control Sensors Low Reference (1)	I	—
2 - 3	—	—	—	Not Occupied	—	—
4	0.5	BN/D-BU	357	Oil Temperature Sensor Signal	I	—

B47 Fuel Pressure Sensor (L5P)

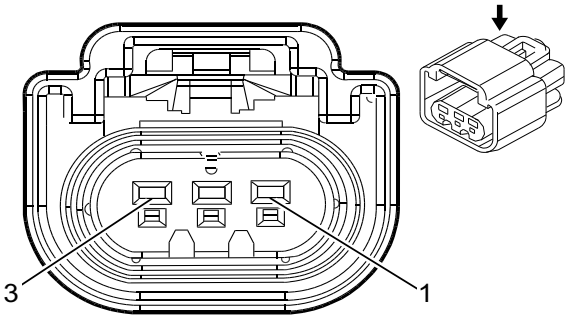

1860942

Connector Part Information

Harness Type: Chassis
OEM Connector: 13511131
Service Connector: 19168035
Description: 3-Way F 150 GT Series, Sealed (BK)

Terminal Part Information

Terminal Type ID	Terminated Lead	Diagnostic Test Probe	Terminal Removal Tool	Service Terminal	Tray Name	Core Crimp	Insulation Crimp
I	Not Required	J-35616-14 (GN)	No Tool Required	Not Required	Not Required	Not Required	Not Required

B47 Fuel Pressure Sensor (L5P)

Pin	Size	Color	Circuit	Function	Terminal Type ID	Option
1	0.5	BU/WH	7446	Fuel Line Pressure Sensor Signal	I	L5P
	0.75	BU/WH	7446	Fuel Line Pressure Sensor Signal	I	L5P+N2N
	0.5	BU/WH	7446	Fuel Line Pressure Sensor Signal	I	L5P-N2N
2	0.5	BK/YE	7447	Fuel Line Pressure Sensor Low Reference	I	—

B47 Fuel Pressure Sensor (L5P) (cont'd)

Pin	Size	Color	Circuit	Function	Terminal Type ID	Option
3	0.5	BN/RD	7445	Fuel Line Pressure Sensor 5V Reference	I	—

B47 Fuel Pressure Sensor (L8T+N2N)

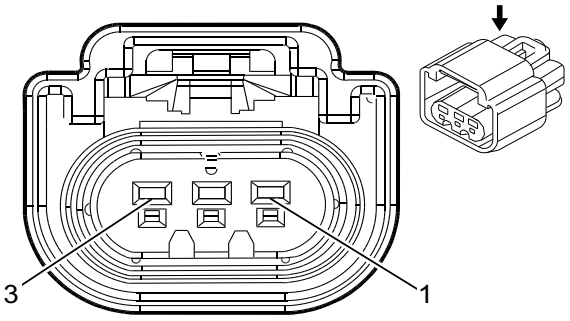

1860942

Connector Part Information

Harness Type: Chassis
OEM Connector: 13511131
Service Connector: 19168035
Description: 3-Way F 150 GT Series, Sealed (BK)

Terminal Part Information

Terminal Type ID	Terminated Lead	Diagnostic Test Probe	Terminal Removal Tool	Service Terminal	Tray Name	Core Crimp	Insulation Crimp
I	Not Required	J-35616-14 (GN)	No Tool Required	Not Required	Not Required	Not Required	Not Required

B47 Fuel Pressure Sensor (L8T+N2N)

Pin	Size	Color	Circuit	Function	Terminal Type ID	Option
1	0.5	BU/WH	7446	Fuel Line Pressure Sensor Signal	I	—
2	0.5	BK/YE	7447	Fuel Line Pressure Sensor Low Reference	I	—
3	0.5	BN/RD	7445	Fuel Line Pressure Sensor 5V Reference	I	—

B47 Fuel Pressure Sensor (L8T+N2N+Regular Cab)

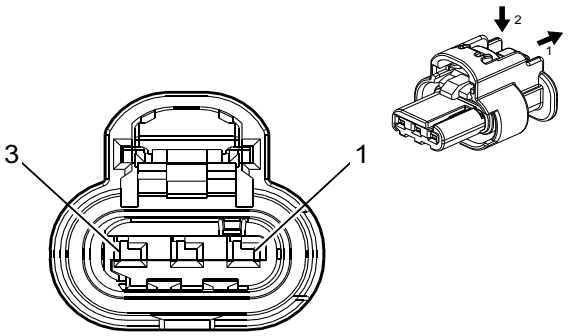

4581126

Connector Part Information

Harness Type: Chassis
OEM Connector: 33358800
Service Connector: 19366844
Description: 3-Way F 1.2 MCON-CB Series, Sealed (BK)

Terminal Part Information

Terminal Type ID	Terminated Lead	Diagnostic Test Probe	Terminal Removal Tool	Service Terminal	Tray Name	Core Crimp	Insulation Crimp
I	Not Required	J-35616-16 (LT GN)	No Tool Required	Not Required	Not Required	Not Required	Not Required

B47 Fuel Pressure Sensor (L8T+N2N+Regular Cab)

Pin	Size	Color	Circuit	Function	Terminal Type ID	Option
1	0.5	BU/WH	7446	Fuel Line Pressure Sensor Signal	I	—
2	0.5	BK/YE	7447	Fuel Line Pressure Sensor Low Reference	I	—
3	0.5	BN/RD	7445	Fuel Line Pressure Sensor 5V Reference	I	—

B47 Fuel Pressure Sensor (L8T-N2N)

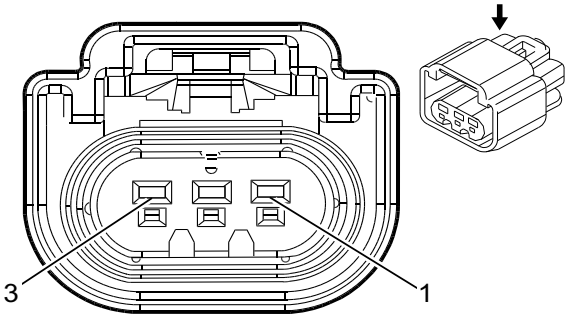

1860942

Connector Part Information

Harness Type: Chassis
OEM Connector: 13511131

Service Connector: 19168035
Description: 3-Way F 150 GT Series, Sealed (BK)

Terminal Part Information

Terminal Type ID	Terminated Lead	Diagnostic Test Probe	Terminal Removal Tool	Service Terminal	Tray Name	Core Crimp	Insulation Crimp
I	Not Required	J-35616-14 (GN)	No Tool Required	Not Required	Not Required	Not Required	Not Required

B47 Fuel Pressure Sensor (L8T-N2N)

Pin	Size	Color	Circuit	Function	Terminal Type ID	Option
1	0.5	BU/WH	7446	Fuel Line Pressure Sensor Signal	I	—
2	0.5	BK/YE	7447	Fuel Line Pressure Sensor Low Reference	I	—
3	0.5	BN/RD	7445	Fuel Line Pressure Sensor 5V Reference	I	—

B47 Fuel Pressure Sensor (L8T-N2N/Chassis Cab)

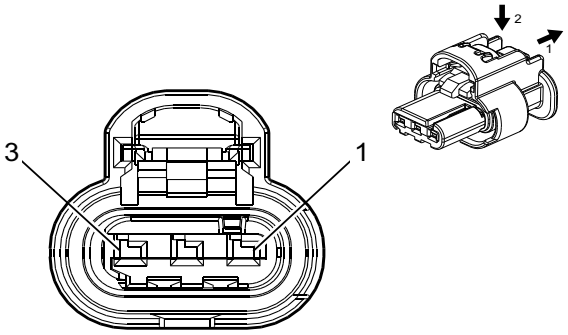

4581126

Connector Part Information

Harness Type: Chassis
OEM Connector: 33358800
Service Connector: 19366844
Description: 3-Way F 1.2 MCON-CB Series, Sealed (BK)

Terminal Part Information

Terminal Type ID	Terminated Lead	Diagnostic Test Probe	Terminal Removal Tool	Service Terminal	Tray Name	Core Crimp	Insulation Crimp
I	Not Required	J-35616-16 (LT GN)	No Tool Required	Not Required	Not Required	Not Required	Not Required

B47 Fuel Pressure Sensor (L8T-N2N/Chassis Cab)

Pin	Size	Color	Circuit	Function	Terminal Type ID	Option
1	0.5	BN/RD	7445	Fuel Line Pressure Sensor 5V Reference	I	—
2	0.5	BK/YE	7447	Fuel Line Pressure Sensor Low Reference	I	—
3	0.5	BU/WH	7446	Fuel Line Pressure Sensor Signal	I	—

B47 Fuel Pressure Sensor (L8T-N2N+Crew Cab)

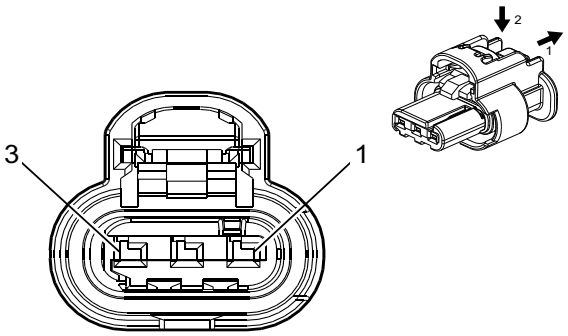

4581126

Connector Part Information

Harness Type: Chassis
OEM Connector: 33358800
Service Connector: 19366844
Description: 3-Way F 1.2 MCON-CB Series, Sealed (BK)

Terminal Part Information

Terminal Type ID	Terminated Lead	Diagnostic Test Probe	Terminal Removal Tool	Service Terminal	Tray Name	Core Crimp	Insulation Crimp
I	Not Required	J-35616-16 (LT GN)	No Tool Required	Not Required	Not Required	Not Required	Not Required

B47 Fuel Pressure Sensor (L8T-N2N+Crew Cab)

Pin	Size	Color	Circuit	Function	Terminal Type ID	Option
1	0.5	BN/RD	7445	Fuel Line Pressure Sensor 5V Reference	I	—
2	0.5	BK/YE	7447	Fuel Line Pressure Sensor Low Reference	I	—
3	0.5	BU/WH	7446	Fuel Line Pressure Sensor Signal	I	—

B47 Fuel Pressure Sensor (L8T-N2N+Extended Cab)

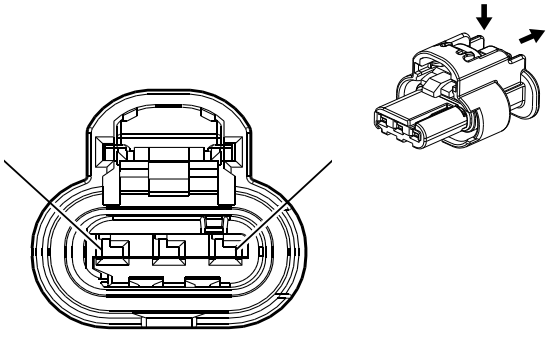

4581126

Connector Part Information

Harness Type: Chassis
OEM Connector: 33358800

Service Connector: 19366844
Description: 3-Way F 1.2 MCON-CB Series, Sealed (BK)

Terminal Part Information

Terminal Type ID	Terminated Lead	Diagnostic Test Probe	Terminal Removal Tool	Service Terminal	Tray Name	Core Crimp	Insulation Crimp
I	Not Required	J-35616-16 (LT GN)	No Tool Required	Not Required	Not Required	Not Required	Not Required

B47 Fuel Pressure Sensor (L8T-N2N+Extended Cab)

Pin	Size	Color	Circuit	Function	Terminal Type ID	Option
1	0.5	BU/WH	7446	Fuel Line Pressure Sensor Signal	I	—
2	0.5	BK/YE	7447	Fuel Line Pressure Sensor Low Reference	I	—
3	0.5	BN/RD	7445	Fuel Line Pressure Sensor 5V Reference	I	—

B47B Fuel Rail Pressure Sensor (L5P)

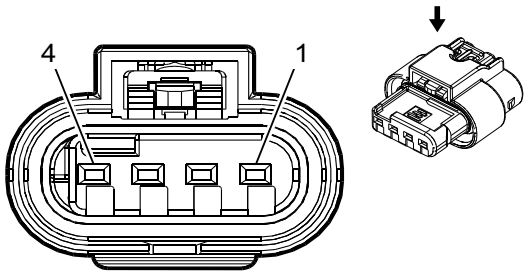

2596543

Connector Part Information

Harness Type: Engine Jumper
OEM Connector: 13576418
Service Connector: Service by Harness - See Part Catalog
Description: 4-Way F 1.2 MCP Series, Sealed (BK)

Terminal Part Information

Terminal Type ID	Terminated Lead	Diagnostic Test Probe	Terminal Removal Tool	Service Terminal	Tray Name	Core Crimp	Insulation Crimp
I	Not Required	J-35616-16 (LT GN)	No Tool Required	Not Required	Not Required	Not Required	Not Required

B47B Fuel Rail Pressure Sensor (L5P)

Pin	Size	Color	Circuit	Function	Terminal Type ID	Option
1	0.5	BN/RD	2917	Fuel Rail Pressure Sensor 5V Reference	I	L5P
2	0.5	BN/YE	2161	Fuel Rail Pressure Sensor 2 Signal	I	L5P
3	0.5	BK/GN	2919	Fuel Rail Pressure Sensor Low Reference	I	L5P
4	0.5	BU/WH	2918	Fuel Rail Pressure Sensor Signal	I	L5P

B52 Heated Oxygen Sensor (L8T)

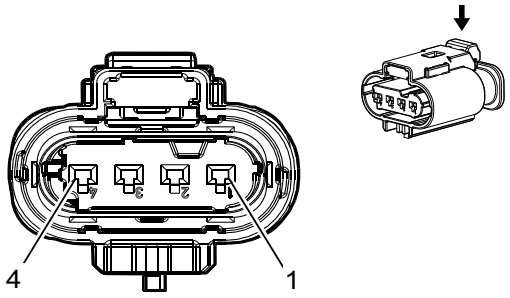

4381050

Connector Part Information

Harness Type: Engine
OEM Connector: 33253021
Service Connector: 19354075
Description: 4-Way F 1.2 Multilock Series, Sealed (BK)

Terminal Part Information

Terminal Type ID	Terminated Lead	Diagnostic Test Probe	Terminal Removal Tool	Service Terminal	Tray Name	Core Crimp	Insulation Crimp
I	Not Required	J-35616-16 (LT GN)	No Tool Required	Not Required	Not Required	Not Required	Not Required

B52 Heated Oxygen Sensor (L8T)

Pin	Size	Color	Circuit	Function	Terminal Type ID	Option
1	0.5	L-GN/YE	3212	Heated Oxygen Sensor Heater Low Control Bank 2 Sensor 1	I	—
2	0.75	VT/D-BU	5293	Powertrain Main Relay Fused Supply 4	I	—
3	0.5	YE/WH	3211	Heated Oxygen Sensor Low Signal Bank 2 Sensor 1	I	—
4	0.5	VT/WH	3210	Heated Oxygen Sensor High Signal Bank 2 Sensor 1	I	—

B52C Heated Oxygen Sensor - Bank 1 Sensor 1 (L8T)

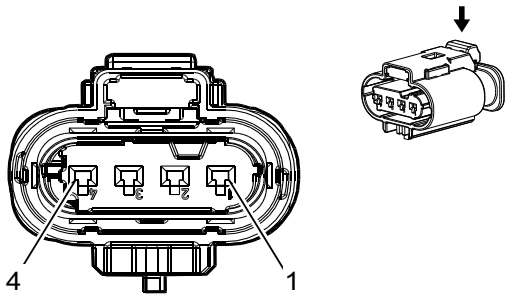

4381050

Connector Part Information

Harness Type: Engine
OEM Connector: 33253021
Service Connector: 19354075
Description: 4-Way F 1.2 Multilock Series, Sealed (BK)

Terminal Part Information

Terminal Type ID	Terminated Lead	Diagnostic Test Probe	Terminal Removal Tool	Service Terminal	Tray Name	Core Crimp	Insulation Crimp
I	Not Required	J-35616-16 (LT GN)	No Tool Required	Not Required	Not Required	Not Required	Not Required

B52C Heated Oxygen Sensor - Bank 1 Sensor 1 (L8T)

Pin	Size	Color	Circuit	Function	Terminal Type ID	Option
1	0.5	GY/WH	3113	Heated Oxygen Sensor Heater Low Control Bank 1 Sensor 1	I	—
2	0.75	VT/D-BU	5293	Powertrain Main Relay Fused Supply 4	I	—
3	0.5	WH/BK	3111	Heated Oxygen Sensor Low Signal Bank 1 Sensor 1	I	—
4	0.5	VT/GY	3110	Heated Oxygen Sensor High Signal Bank 1 Sensor 1	I	—

B52D Heated Oxygen Sensor - Bank 1 Sensor 2 (L8T)

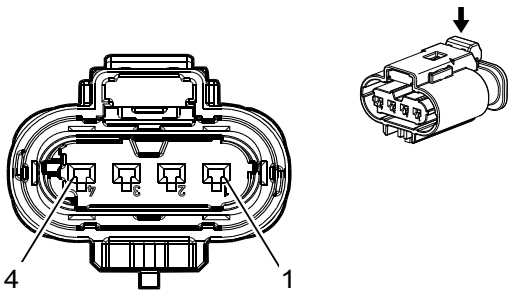

4036370

Connector Part Information

Harness Type: Engine
OEM Connector: 15532690
Service Connector: 19330920
Description: 4-Way F 1.2 Multilock Series, Sealed (GY)

Terminal Part Information

Terminal Type ID	Terminated Lead	Diagnostic Test Probe	Terminal Removal Tool	Service Terminal	Tray Name	Core Crimp	Insulation Crimp
I	Not Required	J-35616-16 (LT GN)	No Tool Required	Not Required	Not Required	Not Required	Not Required

B52D Heated Oxygen Sensor - Bank 1 Sensor 2 (L8T)

Pin	Size	Color	Circuit	Function	Terminal Type ID	Option
1	0.5	GY/WH	3122	Heated Oxygen Sensor Heater Low Control Bank 1 Sensor 2	I	—
2	0.75	VT/D-BU	5294	Powertrain Main Relay Fused Supply 5	I	—
3	0.5	WH/YE	3121	Heated Oxygen Sensor Low Signal Bank 1 Sensor 2	I	—
4	0.5	VT/D-BU	3120	Heated Oxygen Sensor High Signal Bank 1 Sensor 2	I	—

B52F Heated Oxygen Sensor - Bank 2 Sensor 2 (L8T)

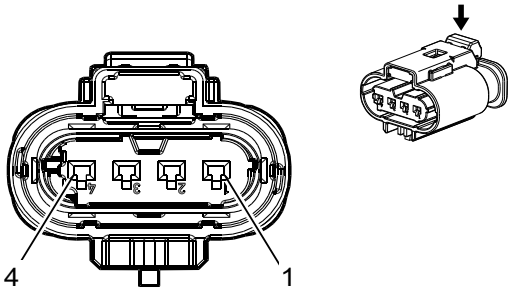

4036370

Connector Part Information

Harness Type: Engine
OEM Connector: 15532690
Service Connector: 19330920
Description: 4-Way F 1.2 Multilock Series, Sealed (GY)

Terminal Part Information

Terminal Type ID	Terminated Lead	Diagnostic Test Probe	Terminal Removal Tool	Service Terminal	Tray Name	Core Crimp	Insulation Crimp
I	Not Required	J-35616-16 (LT GN)	No Tool Required	Not Required	Not Required	Not Required	Not Required

B52F Heated Oxygen Sensor - Bank 2 Sensor 2 (L8T)

Pin	Size	Color	Circuit	Function	Terminal Type ID	Option
1	0.5	WH/BN	3223	Heated Oxygen Sensor Heater Low Control Bank 2 Sensor 2	I	—
2	0.75	VT/D-BU	5294	Powertrain Main Relay Fused Supply 5	I	—
3	0.5	YE/D-BU	3221	Heated Oxygen Sensor Low Signal Bank 2 Sensor 2	I	—
4	0.5	VT/L-GN	3220	Heated Oxygen Sensor High Signal Bank 2 Sensor 2	I	—

B55 Engine Hood Switch

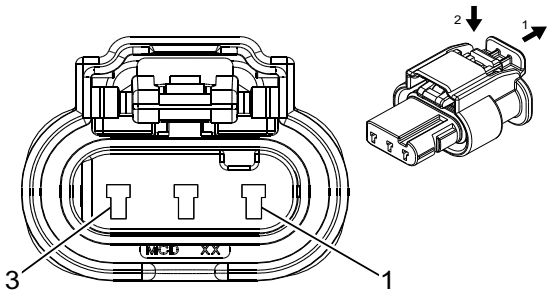

4421568

Connector Part Information

Harness Type: Body
OEM Connector: 33320864
Service Connector: 19368220
Description: 3-Way F 1.2 MCON-LL Series, Sealed (BK)

Terminal Part Information

Terminal Type ID	Terminated Lead	Diagnostic Test Probe	Terminal Removal Tool	Service Terminal	Tray Name	Core Crimp	Insulation Crimp
I	Not Required	J-35616-16 (LT GN)	No Tool Required	Not Required	Not Required	Not Required	Not Required

B55 Engine Hood Switch

Pin	Size	Color	Circuit	Function	Terminal Type ID	Option
1	0.35	YE	4063	Hood Status A Signal	I	—
2	0.35	BN/L-GN	4064	Hood Status B Signal	I	—
3	0.75	BK	150	Ground	I	—

B59L Front Impact Sensor - Left

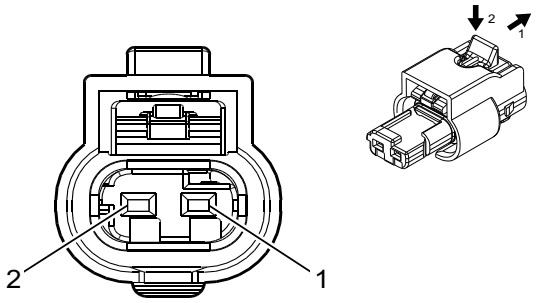

4539129

Connector Part Information

Harness Type: Body
OEM Connector: 33364940
Service Connector: 19354841
Description: 2-Way F 1.2 MCON-CB Series, Sealed (BK)

Terminal Part Information

Terminal Type ID	Terminated Lead	Diagnostic Test Probe	Terminal Removal Tool	Service Terminal	Tray Name	Core Crimp	Insulation Crimp
I	Not Required	J-35616-16 (LT GN)	No Tool Required	Not Required	Not Required	Not Required	Not Required

B59L Front Impact Sensor - Left

Pin	Size	Color	Circuit	Function	Terminal Type ID	Option
1	0.5	OG/YE	354	Left Front Discriminating Sensor Signal	I	—
2	0.5	BK/OG	5045	Left Front Discriminating Sensor Low Reference	I	—

B59R Front Impact Sensor - Right

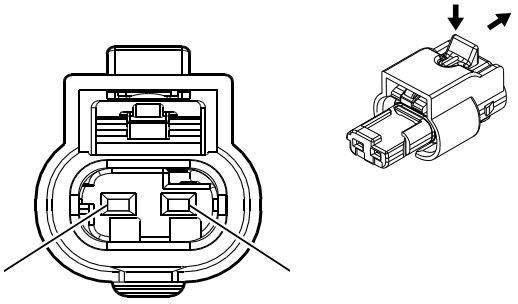

4539129

Connector Part Information

Harness Type: Body
OEM Connector: 33364940
Service Connector: 19354841
Description: 2-Way F 1.2 MCON-CB Series, Sealed (BK)

Terminal Part Information

Terminal Type ID	Terminated Lead	Diagnostic Test Probe	Terminal Removal Tool	Service Terminal	Tray Name	Core Crimp	Insulation Crimp
I	Not Required	J-35616-16 (LT GN)	No Tool Required	Not Required	Not Required	Not Required	Not Required

B59R Front Impact Sensor - Right

Pin	Size	Color	Circuit	Function	Terminal Type ID	Option
1	0.5	OG/L-GN	1409	Right Front Discriminating Sensor Signal	I	—
2	0.5	BK/OG	5600	Right Front Discriminating Sensor Low Reference	I	—

B61P Seat Belt Tension Sensor - Passenger

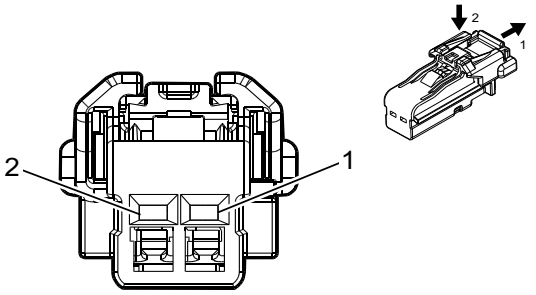

4115691

Connector Part Information

Harness Type: Body
OEM Connector: 35026312
Service Connector: 19352066
Description: 2-Way F 1.2 Series (BK)

Terminal Part Information

Terminal Type ID	Terminated Lead	Diagnostic Test Probe	Terminal Removal Tool	Service Terminal	Tray Name	Core Crimp	Insulation Crimp
I	Not Required	J-35616-16 (LT GN)	No Tool Required	Not Required	Not Required	Not Required	Not Required

B61P Seat Belt Tension Sensor - Passenger

Pin	Size	Color	Circuit	Function	Terminal Type ID	Option
1	0.5	GY/OG	3946	Automatic Locking Retractor Switch Low Reference	I	—
2	0.5	OG/BN	3947	Automatic Locking Retractor Switch Signal	I	—

B63LF Side Impact Sensor - Left Front

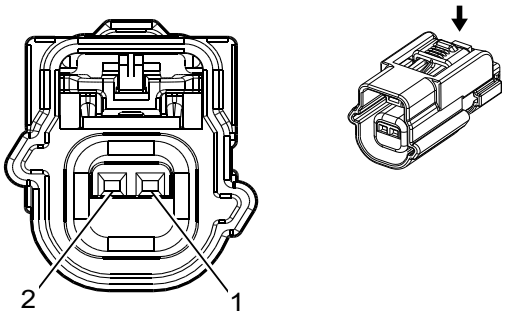

3931604

Connector Part Information

Harness Type: Driver Door
OEM Connector: 33503704
Service Connector: Service by Harness - See Part Catalog
Description: 2-Way F 0.64 Series, Sealed

Terminal Part Information

Terminal Type ID	Terminated Lead	Diagnostic Test Probe	Terminal Removal Tool	Service Terminal	Tray Name	Core Crimp	Insulation Crimp
I	Not Required	J-35616-64B (LT BU)	No Tool Required	Not Required	Not Required	Not Required	Not Required

B63LF Side Impact Sensor - Left Front

Pin	Size	Color	Circuit	Function	Terminal Type ID	Option
1	0.75	OG/L-GN	2132	Left Front Side Impact Sensing Module Signal	I	—
2	0.75	BK/OG	6628	Left Front Side Impact Sensing Module Low Reference	I	—

B63LR Side Impact Sensor - Left Rear

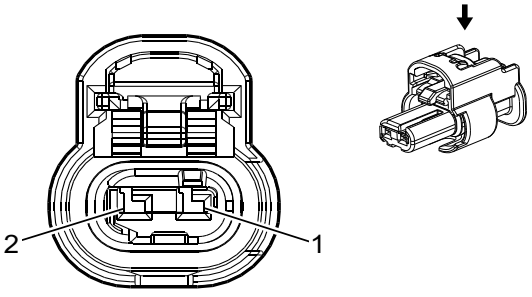

4649903

Connector Part Information

Harness Type: Left Rear Door
OEM Connector: 33327048

Service Connector: Service by Harness - See Part Catalog
Description: 2-Way F 1.2 MCON Series, Sealed (BK)

Terminal Part Information

Terminal Type ID	Terminated Lead	Diagnostic Test Probe	Terminal Removal Tool	Service Terminal	Tray Name	Core Crimp	Insulation Crimp
I	Not Required	J-35616-16 (LT GN)	No Tool Required	Not Required	Not Required	Not Required	Not Required

B63LR Side Impact Sensor - Left Rear

Pin	Size	Color	Circuit	Function	Terminal Type ID	Option
1	0.5	OG/D-BU	6622	Left Rear Side Impact Sensing Module Signal	I	—
2	0.5	BK/OG	6623	Left Rear Side Impact Sensing Module Low Reference	I	—

B63RF Side Impact Sensor - Right Front

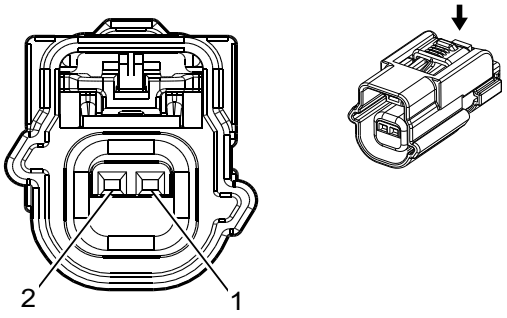

3931604

Connector Part Information

Harness Type: Passenger Door
OEM Connector: 33503704
Service Connector: Service by Harness - See Part Catalog
Description: 2-Way F 0.64 Series, Sealed

Terminal Part Information

Terminal Type ID	Terminated Lead	Diagnostic Test Probe	Terminal Removal Tool	Service Terminal	Tray Name	Core Crimp	Insulation Crimp
I	Not Required	J-35616-64B (LT BU)	No Tool Required	Not Required	Not Required	Not Required	Not Required

B63RF Side Impact Sensor - Right Front

Pin	Size	Color	Circuit	Function	Terminal Type ID	Option
1	0.75	BN/OG	2134	Right Front Side Impact Sensing Module Signal	I	—
2	0.75	BK/OG	6629	Right Front Side Impact Sensing Module Low Reference	I	—

B63RR Side Impact Sensor - Right Rear

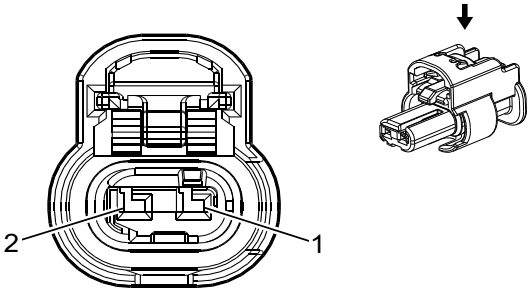

4649903

Connector Part Information

Harness Type: Right Rear Door
OEM Connector: 33327048
Service Connector: Service by Harness - See Part Catalog
Description: 2-Way F 1.2 MCON Series, Sealed (BK)

Terminal Part Information

Terminal Type ID	Terminated Lead	Diagnostic Test Probe	Terminal Removal Tool	Service Terminal	Tray Name	Core Crimp	Insulation Crimp
I	Not Required	J-35616-16 (LT GN)	No Tool Required	Not Required	Not Required	Not Required	Not Required

B63RR Side Impact Sensor - Right Rear

Pin	Size	Color	Circuit	Function	Terminal Type ID	Option
1	0.5	OG/VT	6624	Right Middle Side Impact Sensing Module Signal	I	—
2	0.5	BK/OG	6625	Right Middle Side Impact Sensing Module Low Reference	I	—

B65 Intake Manifold Pressure and Air Temperature Sensor (L5P)

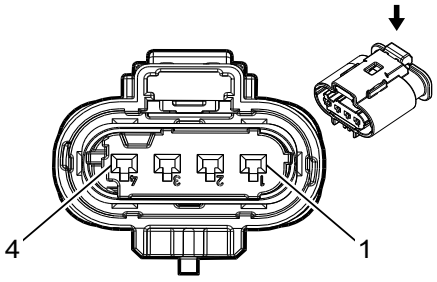

2717079

Connector Part Information

Harness Type: Glow Plug Jumper
OEM Connector: 13503575

Service Connector: Service by Harness - See Part Catalog
Description: 4-Way F 1.2 Multilock Series, Sealed (BK)

Terminal Part Information

Terminal Type ID	Terminated Lead	Diagnostic Test Probe	Terminal Removal Tool	Service Terminal	Tray Name	Core Crimp	Insulation Crimp
I	Not Required	J-35616-16 (LT GN)	No Tool Required	Not Required	Not Required	Not Required	Not Required

B65 Intake Manifold Pressure and Air Temperature Sensor (L5P)

Pin	Size	Color	Circuit	Function	Terminal Type ID	Option
1	0.5	BN	7348	Induction Air Temperature Sensor 2 Signal	I	L5P
2	0.5	GY/RD	2704	Manifold Absolute Pressure Sensor 5V Reference	I	L5P
3	0.5	BK/GN	469	Manifold Absolute Pressure Sensor Low Reference	I	L5P
4	0.5	GN/WH	432	Manifold Absolute Pressure Sensor Signal	I	L5P

B68A Knock Sensor 1 (L8T)

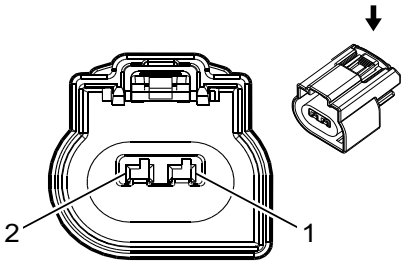

2717073

Connector Part Information

Harness Type: Engine
OEM Connector: 13814755
Service Connector: 19301207
Description: 2-Way F 150 MX Series, Sealed (BK)

Terminal Part Information

Terminal Type ID	Terminated Lead	Diagnostic Test Probe	Terminal Removal Tool	Service Terminal	Tray Name	Core Crimp	Insulation Crimp
I	Not Required	J-35616-2A (GY)	No Tool Required	Not Required	Not Required	Not Required	Not Required

B68A Knock Sensor 1 (L8T)

Pin	Size	Color	Circuit	Function	Terminal Type ID	Option
1	0.75	VT/GY	496	Knock Sensor Signal 1	I	—
2	0.75	BK/YE	1716	Knock Sensor Low Reference 1	I	—

B68B Knock Sensor 2 (L8T)

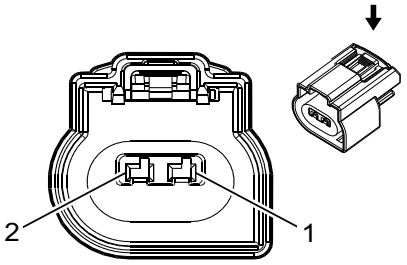

2717073

Connector Part Information

Harness Type: Engine
OEM Connector: 13814755
Service Connector: 19301207
Description: 2-Way F 150 MX Series, Sealed (BK)

Terminal Part Information

Terminal Type ID	Terminated Lead	Diagnostic Test Probe	Terminal Removal Tool	Service Terminal	Tray Name	Core Crimp	Insulation Crimp
I	Not Required	J-35616-2A (GY)	No Tool Required	Not Required	Not Required	Not Required	Not Required

B68B Knock Sensor 2 (L8T)

Pin	Size	Color	Circuit	Function	Terminal Type ID	Option
1	0.75	WH/GY	1876	Knock Sensor Signal 2	I	—
2	0.75	BK/GY	2303	Knock Sensor Low Reference 2	I	—

B74 Manifold Absolute Presure Sensor (L8T)

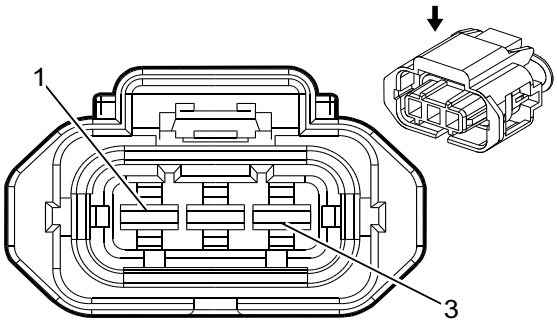

1914850

Connector Part Information

Harness Type: Engine
OEM Connector: 15397338

Service Connector: 13585845
Description: 3-Way F 2.8 Junior Power Timer Series, Sealed (BK)

Terminal Part Information

Terminal Type ID	Terminated Lead	Diagnostic Test Probe	Terminal Removal Tool	Service Terminal	Tray Name	Core Crimp	Insulation Crimp
I	Not Required	J-35616-35 (VT)	No Tool Required	Not Required	Not Required	Not Required	Not Required

B74 Manifold Absolute Presure Sensor (L8T)

Pin	Size	Color	Circuit	Function	Terminal Type ID	Option
1	0.5	GY/RD	2704	Manifold Absolute Pressure Sensor 5V Reference	I	—
2	0.5	BK/L-GN	469	Manifold Absolute Pressure Sensor Low Reference	I	—
3	0.5	L-GN/WH	432	Manifold Absolute Pressure Sensor Signal	I	—

B75C Multifunction Intake Air Sensor (L5P)

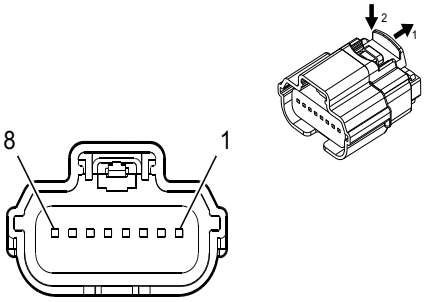

4708234

Connector Part Information

Harness Type: Engine
OEM Connector: 35192853
Service Connector: 84677313
Description: 8-Way F 64 Series, Sealed (BK)

Terminal Part Information

Terminal Type ID	Terminated Lead	Diagnostic Test Probe	Terminal Removal Tool	Service Terminal	Tray Name	Core Crimp	Insulation Crimp
I	Not Required	J-35616-64B (LT BU)	No Tool Required	Not Required	Not Required	Not Required	Not Required

B75C Multifunction Intake Air Sensor (L5P)

Pin	Size	Color	Circuit	Function	Terminal Type ID	Option
1	0.5	WH/D-BU	6289	Induction Air Temperature Sensor Signal	I	—

B75C Multifunction Intake Air Sensor (L5P) (cont'd)

Pin	Size	Color	Circuit	Function	Terminal Type ID	Option
2	0.5 0.5	WH/RD WH/RD	3056 3201	Turbo Intake Pressure Sensor High Reference Bank 2 Throttle Inlet Absolute Pressure Sensor 5V Reference	I I	— —
3	0.5	BK/VT	2760	Intake Air Temperature Sensor Low Reference	I	—
4	0.5 0.5	YE/WH YE/WH	3057 3200	Turbo Intake Pressure Sensor Signal Bank 2 Throttle Inlet Absolute Pressure Sensor Signal	I I	— —
5	0.5	VT/D-BU	5294	Powertrain Main Relay Fused Supply 5	I	—
6	0.5	L-GN/WH	492	Mass Air Flow Sensor Signal	I	—
7	0.75	BK/WH	451	Signal Ground	I	—
8	0.5	BN/GY	4008	Humidity Sensor Signal	I	—

B75C Multifunction Intake Air Sensor (L8T)

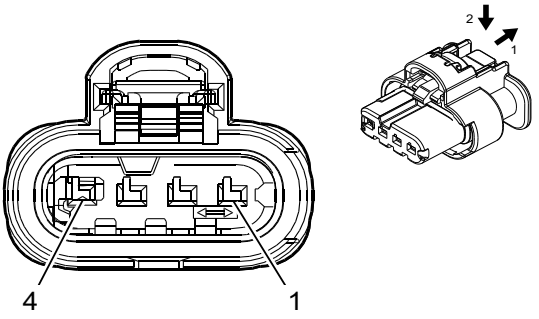

4934614

Connector Part Information

Harness Type: Engine
OEM Connector: 33367416
Service Connector: 19371196
Description: 4-Way F 1.2 MCON-CB Series, Sealed (BK)

Terminal Part Information

Terminal Type ID	Terminated Lead	Diagnostic Test Probe	Terminal Removal Tool	Service Terminal	Tray Name	Core Crimp	Insulation Crimp
I	Not Required	J-35616-16 (LT GN)	No Tool Required	Not Required	Not Required	Not Required	Not Required

B75C Multifunction Intake Air Sensor (L8T)

Pin	Size	Color	Circuit	Function	Terminal Type ID	Option
1	0.5	VT/D-BU	5294	Powertrain Main Relay Fused Supply 5	I	—
2	0.5	L-GN/WH	492	Mass Air Flow Sensor Signal	I	—
3	0.5	L-GN/WH	4622	Local Interconnect Network Serial Data Bus 22	I	—
4	1	BK/WH	451	Signal Ground	I	—

B87 Rearview Camera (UVC+IOR)

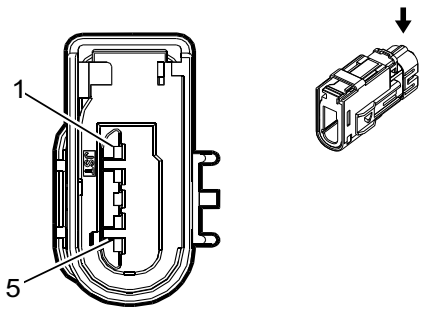

3277922

Connector Part Information

Harness Type: Rearview Camera
OEM Connector: 13934096
Service Connector: Service by Harness - See Part Catalog
Description: 5-Way M 1.2 Series, Sealed (L-GY)

Terminal Part Information

Terminal Type ID	Terminated Lead	Diagnostic Test Probe	Terminal Removal Tool	Service Terminal	Tray Name	Core Crimp	Insulation Crimp
I	Not Required	J-35616-13 (BU)	No Tool Required	Not Required	Not Required	Not Required	Not Required
II	Not Required	J-35616-17 (LT GN)	No Tool Required	Not Required	Not Required	Not Required	Not Required

B87 Rearview Camera (UVC+IOR)

Pin	Size	Color	Circuit	Function	Terminal Type ID	Option
1	0.5 0.35	GY/YE BU	6972 6974	Camera Signal 2 + Camera Low Reference	II I	UVC UVC+IOR
2	0.5	WH/D-BU	6973	Camera Signal 2	II	—
3	0.35 0.5	BU GY/YE	6974 6972	Camera Low Reference Camera Signal 2 +	I II	UVC UVC+IOR
4	0.5 0.5	BK BK/WH	9901 1751	— Signal Ground	II II	UVC UVC+IOR
5	0.5 0.5	BK VT/L-GN	9901 1739	— Run/Crank Ignition 1 Voltage	II II	UVC UVC+IOR

B87 Rearview Camera (UVC+IOR+QK1)

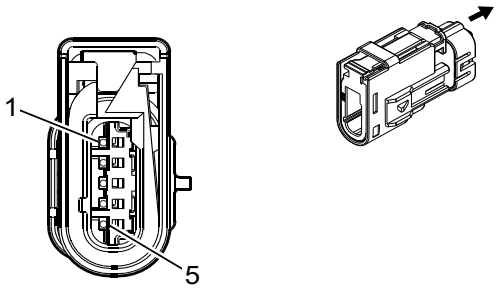

4808321

Connector Part Information

Harness Type: Endgate
OEM Connector: 35028910
Service Connector: Service by Harness - See Part Catalog
Description: 5-Way M 1.2 Series, Sealed (GY)

Terminal Part Information

Terminal Type ID	Terminated Lead	Diagnostic Test Probe	Terminal Removal Tool	Service Terminal	Tray Name	Core Crimp	Insulation Crimp
I	Not Required	J-35616-13 (BU)	No Tool Required	Not Required	Not Required	Not Required	Not Required
II	Not Required	J-35616-17 (LT GN)	No Tool Required	Not Required	Not Required	Not Required	Not Required

B87 Rearview Camera (UVC+IOR+QK1)

Pin	Size	Color	Circuit	Function	Terminal Type ID	Option
1	0.5	GY/YE	6972	Camera Signal 2 +	II	—
2	0.5	WH/BU	6973	Camera Signal 2	II	—
3	0.35	BU	6974	Camera Low Reference	I	—
4	0.5	BK/WH	1751	Signal Ground	II	—
5	0.5	VT/GN	1739	Run/Crank Ignition 1 Voltage	II	—

B99 Steering Wheel Angle Sensor

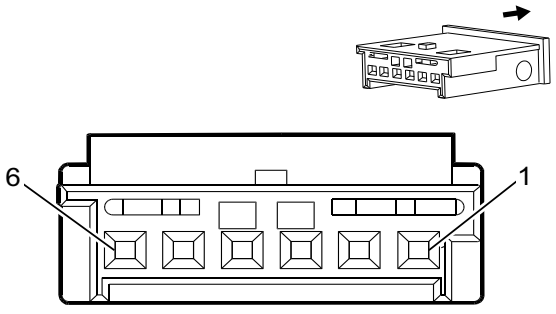

1862024

Connector Part Information

Harness Type: Instrument Panel
OEM Connector: 10820415
Service Connector: 13505903
Description: 6-Way F 0.64 Micro-Quadlock Series (BK)

Terminal Part Information

Terminal Type ID	Terminated Lead	Diagnostic Test Probe	Terminal Removal Tool	Service Terminal	Tray Name	Core Crimp	Insulation Crimp
I	Not Required	J-35616-64B (LT BU)	No Tool Required	Not Required	Not Required	Not Required	Not Required

B99 Steering Wheel Angle Sensor

Pin	Size	Color	Circuit	Function	Terminal Type ID	Option
1	0.35	WH	6106	High Speed GMLAN Serial Data (-) 2	I	—
2	0.35	WH	6106	High Speed GMLAN Serial Data (-) 2	I	—
3	0.35	BU/YE	6105	High Speed GMLAN Serial Data (+) 2	I	—
4	0.35	BU/YE	6105	High Speed GMLAN Serial Data (+) 2	I	—
5	0.35	L-GN/BN	2087	Combined Vehicle Inertial Sensor Supply Voltage	I	—
6	0.35	BK/WH	1851	Signal Ground	I	—

B107 Accelerator Pedal Position Sensor

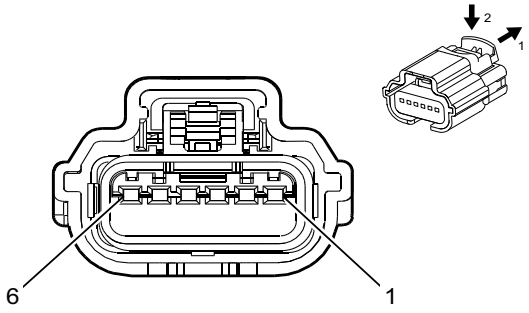

5157678

Connector Part Information

Harness Type: Body
OEM Connector: 35199156
Service Connector: 19356496
Description: 6-Way F 64 Series, Sealed (BK)

Terminal Part Information

Terminal Type ID	Terminated Lead	Diagnostic Test Probe	Terminal Removal Tool	Service Terminal	Tray Name	Core Crimp	Insulation Crimp
I	Not Required	J-35616-64B (LT BU)	No Tool Required	Not Required	Not Required	Not Required	Not Required

B107 Accelerator Pedal Position Sensor

Pin	Size	Color	Circuit	Function	Terminal Type ID	Option
1	0.35	WH/RD	1164	Accelerator Pedal Position 5V Reference 1	I	—
2	0.35	YE/WH	1161	Accelerator Pedal Position Signal 1	I	—
3	0.35	BK/D-BU	1271	Accelerator Pedal Position Low Reference 1	I	—
4	0.35	BK/VT	1272	Accelerator Pedal Position Low Reference 2	I	—
5	0.35	L-GN/WH	1162	Accelerator Pedal Position Signal 2	I	—
6	0.35	BN/RD	1274	Accelerator Pedal Position 5V Reference 2	I	—

B118B Windshield Washer Fluid Level Switch

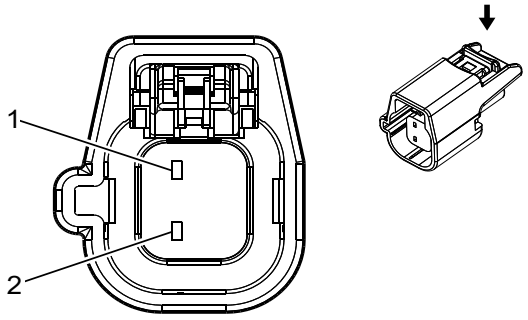

3958652

Connector Part Information

Harness Type: Body
OEM Connector: 33113086
Service Connector: 13593220
Description: 2-Way F 1.5 Series (L-GY)

Terminal Part Information

Terminal Type ID	Terminated Lead	Diagnostic Test Probe	Terminal Removal Tool	Service Terminal	Tray Name	Core Crimp	Insulation Crimp
I	Not Required	J-35616-14 (GN)	No Tool Required	Not Required	Not Required	Not Required	Not Required

B118B Windshield Washer Fluid Level Switch

Pin	Size	Color	Circuit	Function	Terminal Type ID	Option
1	0.35	VT	185	Low Washer Fluid Indicator Control	I	—
2	0.75	BK	150	Ground	I	—

B130A Exhaust Gas Recirculation Temperature Sensor 1 (L5P)

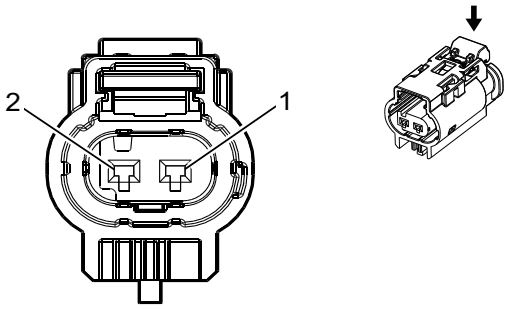

5207726

Connector Part Information

Harness Type: Glow Plug Jumper
OEM Connector: 13583199
Service Connector: Service by Harness - See Part Catalog
Description: 2-Way F 1.2 Multilock Series, Sealed (GY)

Terminal Part Information

Terminal Type ID	Terminated Lead	Diagnostic Test Probe	Terminal Removal Tool	Service Terminal	Tray Name	Core Crimp	Insulation Crimp
I	Not Required	J-35616-16 (LT GN)	No Tool Required	Not Required	Not Required	Not Required	Not Required

B130A Exhaust Gas Recirculation Temperature Sensor 1 (L5P)

Pin	Size	Color	Circuit	Function	Terminal Type ID	Option
1	0.5	WH/BN	3237	Exhaust Gas Recirculation Temperature Sensor Signal	I	L5P
2	0.5	BK/BU	6274	Exhaust Gas Recirculation Temperature Sensor Low Reference	I	L5P

B130B Exhaust Gas Recirculation Temperature Sensor 2 (L5P)

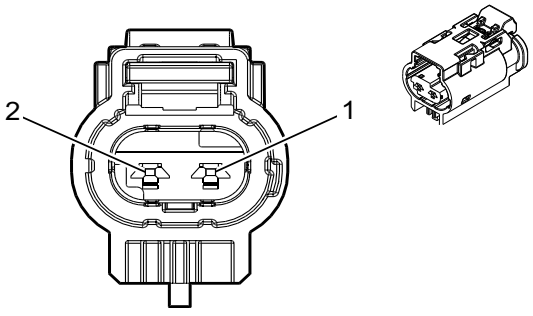

4451423

Connector Part Information

Harness Type: Glow Plug Jumper
OEM Connector: 13583201

Service Connector: Service by Harness - See Part Catalog
Description: 2-Way F 1.2 Multilock Series, Sealed (BK)

Terminal Part Information

Terminal Type ID	Terminated Lead	Diagnostic Test Probe	Terminal Removal Tool	Service Terminal	Tray Name	Core Crimp	Insulation Crimp
I	Not Required	J-35616-16 (LT GN)	No Tool Required	Not Required	Not Required	Not Required	Not Required

B130B Exhaust Gas Recirculation Temperature Sensor 2 (L5P)

Pin	Size	Color	Circuit	Function	Terminal Type ID	Option
1	0.5	YE/GN	3236	Exhaust Gas Recirculation Temperature Sensor 2 Signal	I	L5P
2	0.5	BK/YE	6275	Exhaust Gas Recirculation Temperature Sensor 2 Low Reference	I	L5P

B131A Exhaust Temperature Sensor 1 (L5P)

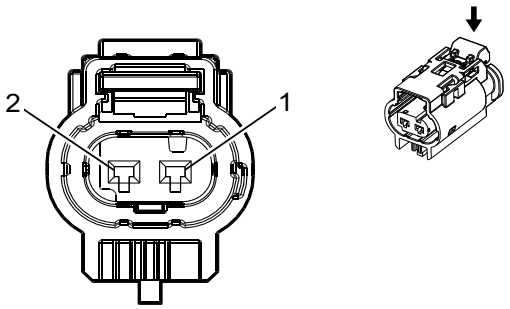

3747581

Connector Part Information

Harness Type: Glow Plug Jumper
OEM Connector: 13583195
Service Connector: Service by Harness - See Part Catalog
Description: 2-Way F 1.2 Multilock Series, Sealed (BK)

Terminal Part Information

Terminal Type ID	Terminated Lead	Diagnostic Test Probe	Terminal Removal Tool	Service Terminal	Tray Name	Core Crimp	Insulation Crimp
I	Not Required	J-35616-16 (LT GN)	No Tool Required	Not Required	Not Required	Not Required	Not Required

B131A Exhaust Temperature Sensor 1 (L5P)

Pin	Size	Color	Circuit	Function	Terminal Type ID	Option
1	0.5	BU/WH	5277	Exhaust Gas Temperature Sensor 1	I	L5P
2	0.5	BK/BN	6782	Exhaust Gas Temperature Sensor 1 Low Reference	I	L5P

B131B Exhaust Temperature Sensor 2 (L5P)

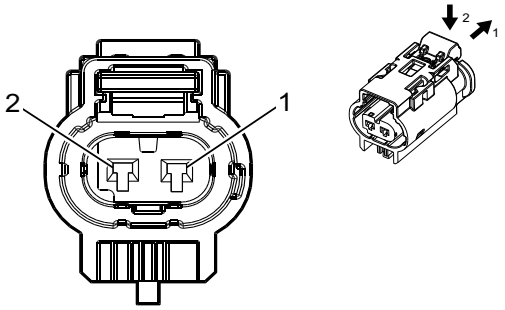

3747580

Connector Part Information

Harness Type: Glow Plug Jumper
OEM Connector: 13583197
Service Connector: Service by Harness - See Part Catalog
Description: 2-Way F 1.2 Multilock Series, Sealed (GY)

Terminal Part Information

Terminal Type ID	Terminated Lead	Diagnostic Test Probe	Terminal Removal Tool	Service Terminal	Tray Name	Core Crimp	Insulation Crimp
I	Not Required	J-35616-16 (LT GN)	No Tool Required	Not Required	Not Required	Not Required	Not Required

B131B Exhaust Temperature Sensor 2 (L5P)

Pin	Size	Color	Circuit	Function	Terminal Type ID	Option
1	0.5	BU/GN	5377	Exhaust Gas Temperature Sensor 2	I	L5P
2	0.5	BK/BU	6783	Exhaust Gas Temperature Sensor 2 Low Reference	I	L5P

B131C Exhaust Temperature Sensor 3 (L5P)

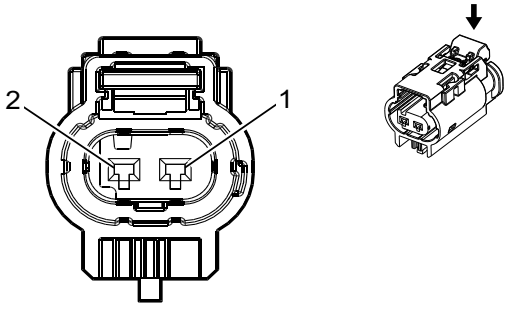

5207726

Connector Part Information

Harness Type: Chassis
OEM Connector: 33180624

Service Connector: 19332628
Description: 2-Way F 1.2 Multilock Series, Sealed (GY)

Terminal Part Information

Terminal Type ID	Terminated Lead	Diagnostic Test Probe	Terminal Removal Tool	Service Terminal	Tray Name	Core Crimp	Insulation Crimp
I	Not Required	J-35616-16 (LT GN)	No Tool Required	Not Required	Not Required	Not Required	Not Required

B131C Exhaust Temperature Sensor 3 (L5P)

Pin	Size	Color	Circuit	Function	Terminal Type ID	Option
1	0.5	GY/L-GN	5378	Exhaust Gas Temperature Sensor 3	I	—
2	0.5	BK/L-GN	3657	Exhaust Gas Temperature Sensor 3 Low Reference	I	—

B131D Exhaust Temperature Sensor 4 (L5P)

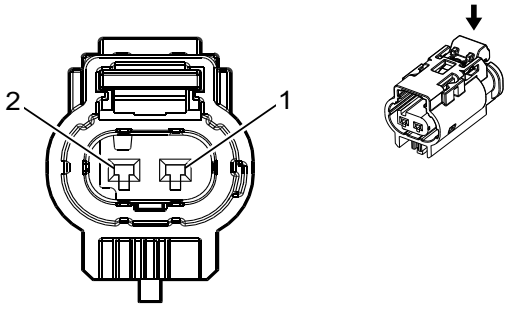

5207726

Connector Part Information

Harness Type: Chassis
OEM Connector: 33180624
Service Connector: 19332628
Description: 2-Way F 1.2 Multilock Series, Sealed (GY)

Terminal Part Information

Terminal Type ID	Terminated Lead	Diagnostic Test Probe	Terminal Removal Tool	Service Terminal	Tray Name	Core Crimp	Insulation Crimp
I	Not Required	J-35616-16 (LT GN)	No Tool Required	Not Required	Not Required	Not Required	Not Required

B131D Exhaust Temperature Sensor 4 (L5P)

Pin	Size	Color	Circuit	Function	Terminal Type ID	Option
1	0.5	VT/BN	3658	Exhaust Gas Temperature Sensor 4 Signal	I	—
2	0.5	BK/GY	3659	Exhaust Gas Temperature Sensor 4 Low Reference	I	—

B131E Exhaust Temperature Sensor 5 (L5P)

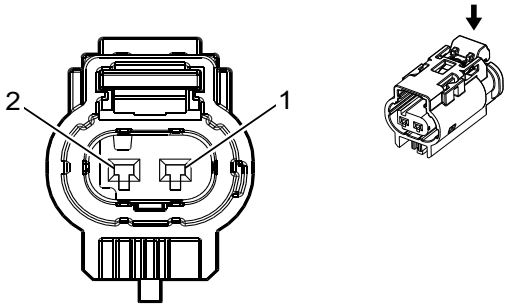

5207726

Connector Part Information

Harness Type: Chassis
OEM Connector: 33180624
Service Connector: 19332628
Description: 2-Way F 1.2 Multilock Series, Sealed (GY)

Terminal Part Information

Terminal Type ID	Terminated Lead	Diagnostic Test Probe	Terminal Removal Tool	Service Terminal	Tray Name	Core Crimp	Insulation Crimp
I	Not Required	J-35616-16 (LT GN)	No Tool Required	Not Required	Not Required	Not Required	Not Required

B131E Exhaust Temperature Sensor 5 (L5P)

Pin	Size	Color	Circuit	Function	Terminal Type ID	Option
1	0.5	BU/GY	3660	Exhaust Gas Temperature Sensor 5 Signal	I	—
2	0.5	BK/VT	3661	Exhaust Gas Temperature Sensor 5 Low Reference	I	—

B136 Exhaust Particulate Matter Sensor (L5P)

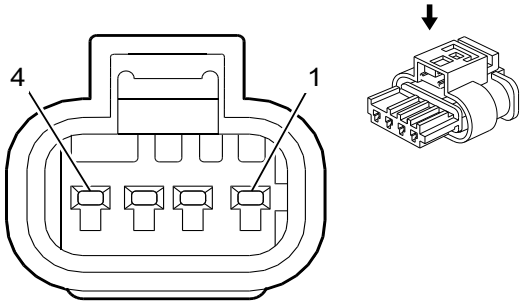

2487928

Connector Part Information

Harness Type: Chassis
OEM Connector: 13781047

Service Connector: 13581092
Description: 4-Way F 1.2 Series, Sealed (BK)

Terminal Part Information

Terminal Type ID	Terminated Lead	Diagnostic Test Probe	Terminal Removal Tool	Service Terminal	Tray Name	Core Crimp	Insulation Crimp
I	Not Required	J-35616-16 (LT GN)	No Tool Required	Not Required	Not Required	Not Required	Not Required

B136 Exhaust Particulate Matter Sensor (L5P)

Pin	Size	Color	Circuit	Function	Terminal Type ID	Option
1	1	BK/WH	1651	Signal Ground	I	—
2	0.5	WH	4499	High Speed GMLAN Serial Data (-) 7	I	—
3	0.5	BU/BN	4498	High Speed GMLAN Serial Data (+) 7	I	—
4	1	VT/D-BU	3674	NOx Sensor 1 Control	I	—

B139 Transfer Case 2WD/4WD Actuator Position Sensor (NQH/NQF)

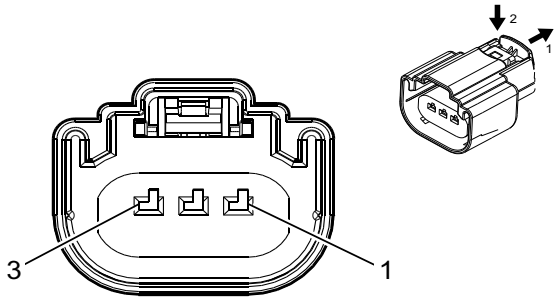

4569745

Connector Part Information

Harness Type: Engine
OEM Connector: 33343869
Service Connector: 19179750
Description: 3-Way F 150 MX Series, Sealed (BK)

Terminal Part Information

Terminal Type ID	Terminated Lead	Diagnostic Test Probe	Terminal Removal Tool	Service Terminal	Tray Name	Core Crimp	Insulation Crimp
I	Not Required	J-35616-14 (GN)	No Tool Required	Not Required	Not Required	Not Required	Not Required
II	Not Required	J-35616-2A (GY)	No Tool Required	Not Required	Not Required	Not Required	Not Required

B139 Transfer Case 2WD/4WD Actuator Position Sensor (NQH/NQF)

Pin	Size	Color	Circuit	Function	Terminal Type ID	Option
1	0.5	WH/RD	7477	Rotary Position Sensor 5V Reference	I	L5P
	0.5	WH/RD	7477	Rotary Position Sensor 5V Reference	II	L8T

B139 Transfer Case 2WD/4WD Actuator Position Sensor (NQH/NQF) (cont'd)

Pin	Size	Color	Circuit	Function	Terminal Type ID	Option
2	0.5	WH/L-GN	7479	Rotary Position Sensor Signal	I	L5P
	0.5	WH/L-GN	7479	Rotary Position Sensor Signal	II	L8T
3	0.5	YE/BK	7478	Rotary Position Sensor Low Reference	I	L5P
	0.5	YE/BK	7478	Rotary Position Sensor Low Reference	II	L8T

B150 Fuel Tank Pressure Sensor (L8T-(N2M/N2N)+Crew Cab)

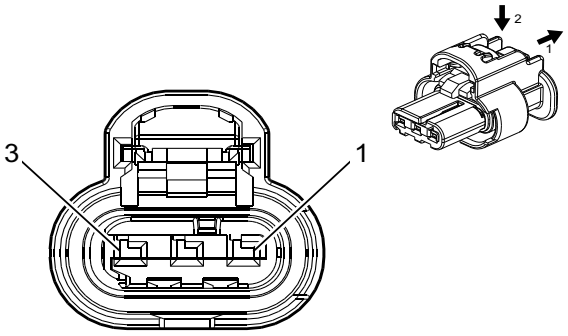

4778903

Connector Part Information

Harness Type: Chassis
OEM Connector: 33358808
Service Connector: 19369810
Description: 3-Way F 1.2 MCON-CB Series, Sealed (BK)

Terminal Part Information

Terminal Type ID	Terminated Lead	Diagnostic Test Probe	Terminal Removal Tool	Service Terminal	Tray Name	Core Crimp	Insulation Crimp
I	Not Required	J-35616-16 (LT GN)	No Tool Required	Not Required	Not Required	Not Required	Not Required

B150 Fuel Tank Pressure Sensor (L8T-(N2M/N2N)+Crew Cab)

Pin	Size	Color	Circuit	Function	Terminal Type ID	Option
1	0.5	BU/WH	890	Fuel Tank Pressure Sensor Signal	I	—
2	0.5	BK/BN	6284	Fuel Tank Vapor Pressure Sensor Low Reference	I	—
3	0.5	YE/RD	2709	Fuel Tank Pressure Sensor 5V Reference	I	—

B150 Fuel Tank Pressure Sensor (L8T-(N2M/N2N)+Extended Cab)

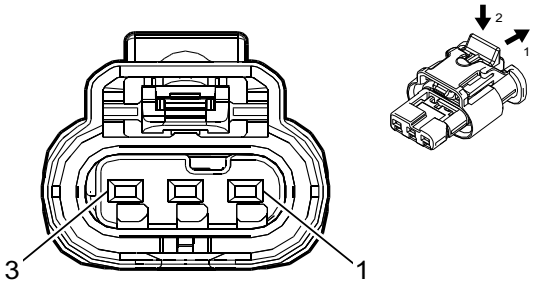

4256077

Connector Part Information

Harness Type: Chassis
OEM Connector: 33278539
Service Connector: 19369810
Description: 3-Way F 1.2 MCP Series, Sealed (BN)

Terminal Part Information

Terminal Type ID	Terminated Lead	Diagnostic Test Probe	Terminal Removal Tool	Service Terminal	Tray Name	Core Crimp	Insulation Crimp
I	Not Required	J-35616-16 (LT GN)	No Tool Required	Not Required	Not Required	Not Required	Not Required

B150 Fuel Tank Pressure Sensor (L8T-(N2M/N2N)+Extended Cab)

Pin	Size	Color	Circuit	Function	Terminal Type ID	Option
1	0.5	BU/WH	890	Fuel Tank Pressure Sensor Signal	I	—
2	0.5	BK/BN	6284	Fuel Tank Vapor Pressure Sensor Low Reference	I	—
3	0.5	YE/RD	2709	Fuel Tank Pressure Sensor 5V Reference	I	—

B150 Fuel Tank Pressure Sensor (L8T-(N2M/N2N)+Regular Cab)

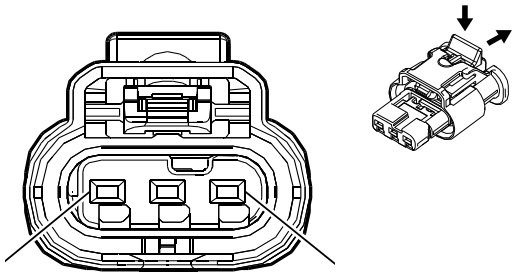

4256077

Connector Part Information

Harness Type: Chassis
OEM Connector: 33278539

Service Connector: 19369810
Description: 3-Way F 1.2 MCP Series, Sealed (BN)

Terminal Part Information

Terminal Type ID	Terminated Lead	Diagnostic Test Probe	Terminal Removal Tool	Service Terminal	Tray Name	Core Crimp	Insulation Crimp
I	Not Required	J-35616-16 (LT GN)	No Tool Required	Not Required	Not Required	Not Required	Not Required

B150 Fuel Tank Pressure Sensor (L8T-(N2M/N2N)+Regular Cab)

Pin	Size	Color	Circuit	Function	Terminal Type ID	Option
1	0.5	BU/WH	890	Fuel Tank Pressure Sensor Signal	I	—
2	0.5	BK/BN	6284	Fuel Tank Vapor Pressure Sensor Low Reference	I	—
3	0.5	YE/RD	2709	Fuel Tank Pressure Sensor 5V Reference	I	—

B150 Fuel Tank Pressure Sensor (L8T+(N2N/N2M)+Regular Cab)

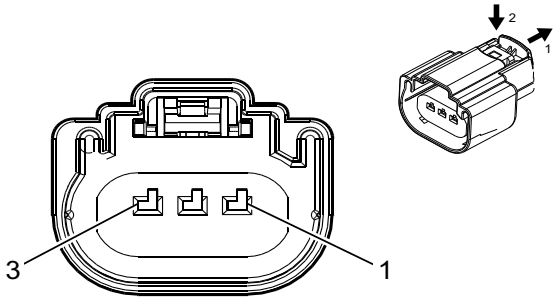

4589538

Connector Part Information

Harness Type: Chassis
OEM Connector: 33343864
Service Connector: 84569854
Description: 3-Way F 150 MX Series, Sealed (GY)

Terminal Part Information

Terminal Type ID	Terminated Lead	Diagnostic Test Probe	Terminal Removal Tool	Service Terminal	Tray Name	Core Crimp	Insulation Crimp
I	Not Required	J-35616-14 (GN)	No Tool Required	Not Required	Not Required	Not Required	Not Required

B150 Fuel Tank Pressure Sensor (L8T+(N2N/N2M)+Regular Cab)

Pin	Size	Color	Circuit	Function	Terminal Type ID	Option
1	0.5	BU/WH	890	Fuel Tank Pressure Sensor Signal	I	—
2	0.5	BK/BN	6284	Fuel Tank Vapor Pressure Sensor Low Reference	I	—
3	0.5	YE/RD	2709	Fuel Tank Pressure Sensor 5V Reference	I	—

B150 Fuel Tank Pressure Sensor (L8T+N2M+Regular Cab)

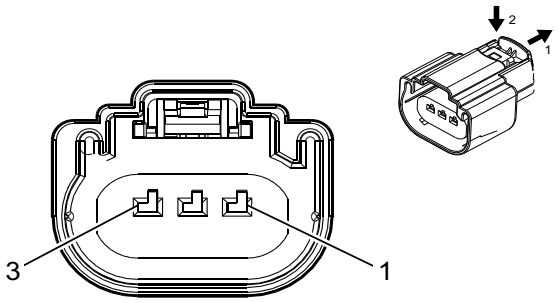

4589538

Connector Part Information

Harness Type: Chassis
OEM Connector: 33343864
Service Connector: 84569854
Description: 3-Way F 150 MX Series, Sealed (GY)

Terminal Part Information

Terminal Type ID	Terminated Lead	Diagnostic Test Probe	Terminal Removal Tool	Service Terminal	Tray Name	Core Crimp	Insulation Crimp
I	Not Required	J-35616-14 (GN)	No Tool Required	Not Required	Not Required	Not Required	Not Required

B150 Fuel Tank Pressure Sensor (L8T+N2M+Regular Cab)

Pin	Size	Color	Circuit	Function	Terminal Type ID	Option
1	0.5	BU/WH	890	Fuel Tank Pressure Sensor Signal	I	—
2	0.5	BK/BN	6284	Fuel Tank Vapor Pressure Sensor Low Reference	I	—
3	0.5	YE/RD	2709	Fuel Tank Pressure Sensor 5V Reference	I	—

B150 Fuel Tank Pressure Sensor (L8T+N2N)

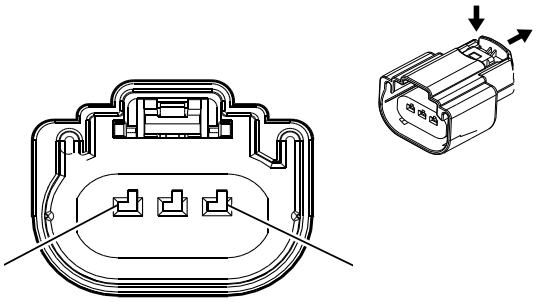

4589538

Connector Part Information

Harness Type: Chassis
OEM Connector: 33343864
Service Connector: 84569854
Description: 3-Way F 150 MX Series, Sealed (GY)

Terminal Part Information

Terminal Type ID	Terminated Lead	Diagnostic Test Probe	Terminal Removal Tool	Service Terminal	Tray Name	Core Crimp	Insulation Crimp
I	Not Required	J-35616-14 (GN)	No Tool Required	Not Required	Not Required	Not Required	Not Required

B150 Fuel Tank Pressure Sensor (L8T+N2N)

Pin	Size	Color	Circuit	Function	Terminal Type ID	Option
1	0.5	BU/WH	890	Fuel Tank Pressure Sensor Signal	I	—
2	0.5	BK/BN	6284	Fuel Tank Vapor Pressure Sensor Low Reference	I	—
3	0.5	YE/RD	2709	Fuel Tank Pressure Sensor 5V Reference	I	—

B150 Fuel Tank Pressure Sensor (L8T+N2N+Crew Cab)

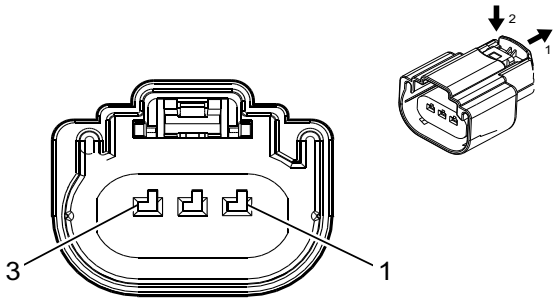

4589538

Connector Part Information

Harness Type: Chassis
OEM Connector: 33343864
Service Connector: 84569854
Description: 3-Way F 150 MX Series, Sealed (GY)

Terminal Part Information

Terminal Type ID	Terminated Lead	Diagnostic Test Probe	Terminal Removal Tool	Service Terminal	Tray Name	Core Crimp	Insulation Crimp
I	Not Required	J-35616-14 (GN)	No Tool Required	Not Required	Not Required	Not Required	Not Required

B150 Fuel Tank Pressure Sensor (L8T+N2N+Crew Cab)

Pin	Size	Color	Circuit	Function	Terminal Type ID	Option
1	0.5	BU/WH	890	Fuel Tank Pressure Sensor Signal	I	—

B150 Fuel Tank Pressure Sensor (L8T+N2N+Crew Cab) (cont'd)

Pin	Size	Color	Circuit	Function	Terminal Type ID	Option
2	0.5	BK/BN	6284	Fuel Tank Vapor Pressure Sensor Low Reference	I	—
3	0.5	YE/RD	2709	Fuel Tank Pressure Sensor 5V Reference	I	—

B150 Fuel Tank Pressure Sensor (L8T+N2N+Regular Cab)

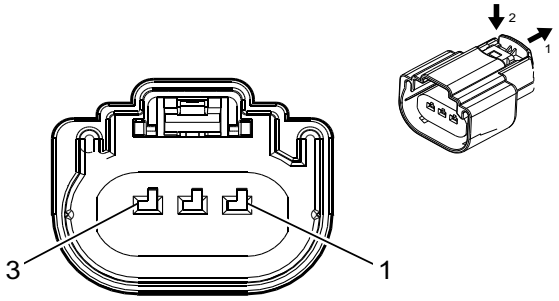

4589538

Connector Part Information

Harness Type: Chassis
OEM Connector: 33343864
Service Connector: 84569854
Description: 3-Way F 150 MX Series, Sealed (GY)

Terminal Part Information

Terminal Type ID	Terminated Lead	Diagnostic Test Probe	Terminal Removal Tool	Service Terminal	Tray Name	Core Crimp	Insulation Crimp
I	Not Required	J-35616-14 (GN)	No Tool Required	Not Required	Not Required	Not Required	Not Required

B150 Fuel Tank Pressure Sensor (L8T+N2N+Regular Cab)

Pin	Size	Color	Circuit	Function	Terminal Type ID	Option
1	0.5	BU/WH	890	Fuel Tank Pressure Sensor Signal	I	—
2	0.5	BK/BN	6284	Fuel Tank Vapor Pressure Sensor Low Reference	I	—
3	0.5	YE/RD	2709	Fuel Tank Pressure Sensor 5V Reference	I	—

B150 Fuel Tank Pressure Sensor (L8T-N2M+Crew Cab)

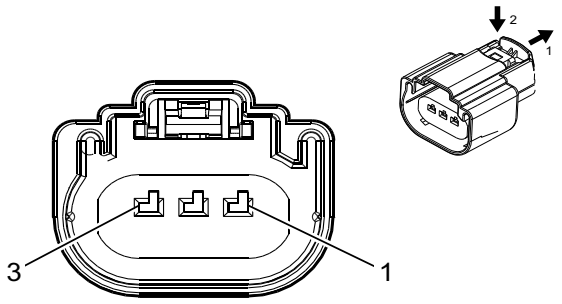

4589538

Connector Part Information

Harness Type: Chassis
OEM Connector: 33343864
Service Connector: 84569854
Description: 3-Way F 150 MX Series, Sealed (GY)

Terminal Part Information

Terminal Type ID	Terminated Lead	Diagnostic Test Probe	Terminal Removal Tool	Service Terminal	Tray Name	Core Crimp	Insulation Crimp
I	Not Required	J-35616-14 (GN)	No Tool Required	Not Required	Not Required	Not Required	Not Required

B150 Fuel Tank Pressure Sensor (L8T-N2M+Crew Cab)

Pin	Size	Color	Circuit	Function	Terminal Type ID	Option
1	0.5	BU/WH	890	Fuel Tank Pressure Sensor Signal	I	—
2	0.5	BK/BN	6284	Fuel Tank Vapor Pressure Sensor Low Reference	I	—
3	0.5	YE/RD	2709	Fuel Tank Pressure Sensor 5V Reference	I	—

B150 Fuel Tank Pressure Sensor (L8T-N2N)

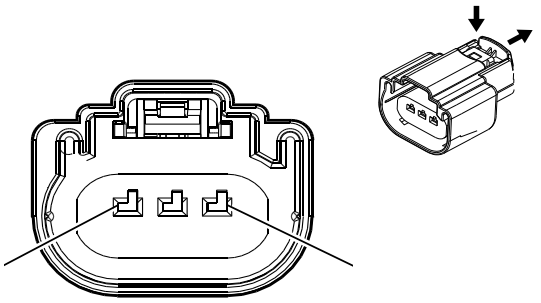

4589538

Connector Part Information

Harness Type: Chassis
OEM Connector: 33343864

Service Connector: 84569854
Description: 3-Way F 150 MX Series, Sealed (GY)

Terminal Part Information

Terminal Type ID	Terminated Lead	Diagnostic Test Probe	Terminal Removal Tool	Service Terminal	Tray Name	Core Crimp	Insulation Crimp
I	Not Required	J-35616-14 (GN)	No Tool Required	Not Required	Not Required	Not Required	Not Required

B150 Fuel Tank Pressure Sensor (L8T-N2N)

Pin	Size	Color	Circuit	Function	Terminal Type ID	Option
1	0.5	BU/WH	890	Fuel Tank Pressure Sensor Signal	I	—
2	0.5	BK/BN	6284	Fuel Tank Vapor Pressure Sensor Low Reference	I	—
3	0.5	YE/RD	2709	Fuel Tank Pressure Sensor 5V Reference	I	—

B150 Fuel Tank Pressure Sensor (L8T-N2N/N2L)

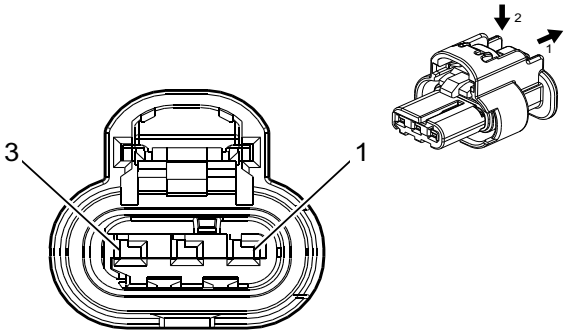

4778903

Connector Part Information

Harness Type: Chassis
OEM Connector: 33358808
Service Connector: 19369810
Description: 3-Way F 1.2 MCON-CB Series, Sealed (BK)

Terminal Part Information

Terminal Type ID	Terminated Lead	Diagnostic Test Probe	Terminal Removal Tool	Service Terminal	Tray Name	Core Crimp	Insulation Crimp
I	Not Required	J-35616-16 (LT GN)	No Tool Required	Not Required	Not Required	Not Required	Not Required

B150 Fuel Tank Pressure Sensor (L8T-N2N/N2L)

Pin	Size	Color	Circuit	Function	Terminal Type ID	Option
1	0.5	BU/WH	890	Fuel Tank Pressure Sensor Signal	I	—
2	0.5	BK/BN	6284	Fuel Tank Vapor Pressure Sensor Low Reference	I	—
3	0.5	YE/RD	2709	Fuel Tank Pressure Sensor 5V Reference	I	—

B150 Fuel Tank Pressure Sensor (L8T-N2N/N2M)

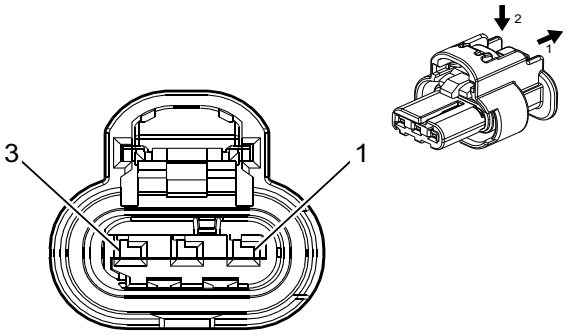

4778903

Connector Part Information

Harness Type: Chassis
OEM Connector: 33358808
Service Connector: 19369810
Description: 3-Way F 1.2 MCON-CB Series, Sealed (BK)

Terminal Part Information

Terminal Type ID	Terminated Lead	Diagnostic Test Probe	Terminal Removal Tool	Service Terminal	Tray Name	Core Crimp	Insulation Crimp
I	Not Required	J-35616-16 (LT GN)	No Tool Required	Not Required	Not Required	Not Required	Not Required

B150 Fuel Tank Pressure Sensor (L8T-N2N/N2M)

Pin	Size	Color	Circuit	Function	Terminal Type ID	Option
1	0.5	BU/WH	890	Fuel Tank Pressure Sensor Signal	I	—
2	0.5	BK/BN	6284	Fuel Tank Vapor Pressure Sensor Low Reference	I	—
3	0.5	YE/RD	2709	Fuel Tank Pressure Sensor 5V Reference	I	—

B153D Seat Belt Buckle - Driver

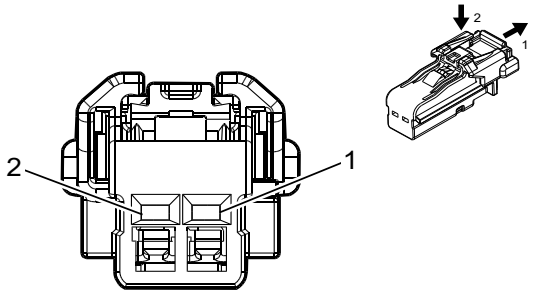

4115691

Connector Part Information

Harness Type: Driver Seat
OEM Connector: 6098-8431
Service Connector: Service by Harness - See Part Catalog
Description: 2-Way F 1.2 Series (BK)

Terminal Part Information

Terminal Type ID	Terminated Lead	Diagnostic Test Probe	Terminal Removal Tool	Service Terminal	Tray Name	Core Crimp	Insulation Crimp
I	Not Required	J-35616-16 (LT GN)	No Tool Required	Not Required	Not Required	Not Required	Not Required

B153D Seat Belt Buckle - Driver

Pin	Size	Color	Circuit	Function	Terminal Type ID	Option
1	0.5	BK/OG	1363	Driver Seat Belt Switch Low Reference	I	—
2	0.35	OG/BN	238	Driver Seat Belt Switch Signal	I	—

B153P Seat Belt Buckle - Passenger

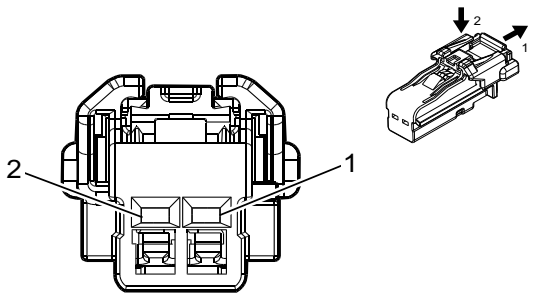

4115691

Connector Part Information

Harness Type: Passenger Seat
OEM Connector: 6098-8431
Service Connector: Service by Harness - See Part Catalog
Description: 2-Way F 1.2 Series (BK)

Terminal Part Information

Terminal Type ID	Terminated Lead	Diagnostic Test Probe	Terminal Removal Tool	Service Terminal	Tray Name	Core Crimp	Insulation Crimp
I	Not Required	J-35616-16 (LT GN)	No Tool Required	Not Required	Not Required	Not Required	Not Required

B153P Seat Belt Buckle - Passenger

Pin	Size	Color	Circuit	Function	Terminal Type ID	Option
1	0.5	BK/OG	1361	Passenger Seat Belt Switch Low Reference	I	—
2	0.35	OG/VT	1362	Passenger Seat Belt Switch Signal	I	—

B154 Diesel Particulate Filter Exhaust Differential Pressure Sensor (L5P)

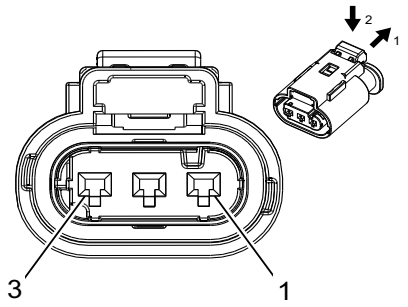

2717069

Connector Part Information

Harness Type: Chassis
OEM Connector: 13763990
Service Connector: 84601390
Description: 3-Way F 1.2 Multilock Series, Sealed (BK)

Terminal Part Information

Terminal Type ID	Terminated Lead	Diagnostic Test Probe	Terminal Removal Tool	Service Terminal	Tray Name	Core Crimp	Insulation Crimp
I	Not Required	J-35616-16 (LT GN)	No Tool Required	Not Required	Not Required	Not Required	Not Required

B154 Diesel Particulate Filter Exhaust Differential Pressure Sensor (L5P)

Pin	Size	Color	Circuit	Function	Terminal Type ID	Option
1	0.5	BU	6053	Exhaust Pressure Sensor Signal 1	I	—
2	0.5	BK/YE	6055	Exhaust Pressure Sensor Low Reference 1	I	—
3	0.5	WH/RD	6054	Exhaust Pressure Sensor 5V Reference 1	I	—

B172LF Brake Pad Wear Sensor - Left Front

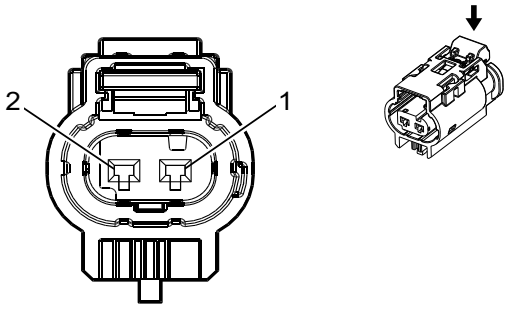

3747581

Connector Part Information

Harness Type: Chassis
OEM Connector: 33226772
Service Connector: 19332719
Description: 2-Way F 1.2 Multilock Series, Sealed (BK)

Terminal Part Information

Terminal Type ID	Terminated Lead	Diagnostic Test Probe	Terminal Removal Tool	Service Terminal	Tray Name	Core Crimp	Insulation Crimp
I	Not Required	J-35616-16 (LT GN)	No Tool Required	Not Required	Not Required	Not Required	Not Required

B172LF Brake Pad Wear Sensor - Left Front

Pin	Size	Color	Circuit	Function	Terminal Type ID	Option
1	0.5	WH	1612	Brake Lining Wear Sensor Signal Left Front	I	—
2	0.75	BK/WH	1751	Signal Ground	I	—

B172LR Brake Pad Wear Sensor - Left Rear

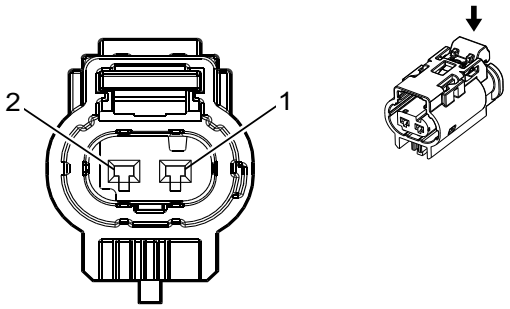

3747581

Connector Part Information

Harness Type: Rear Axle
OEM Connector: 10094234
Service Connector: Service by Harness - See Part Catalog
Description: 2-Way F 1.2 Multilock Series, Sealed (BK)

Terminal Part Information

Terminal Type ID	Terminated Lead	Diagnostic Test Probe	Terminal Removal Tool	Service Terminal	Tray Name	Core Crimp	Insulation Crimp
I	Not Required	J-35616-16 (LT GN)	No Tool Required	Not Required	Not Required	Not Required	Not Required

B172LR Brake Pad Wear Sensor - Left Rear

Pin	Size	Color	Circuit	Function	Terminal Type ID	Option
1	0.75	GN/YE	1616	Brake Lining Wear Sensor Signal Rear	I	—
2	0.75	BK/WH	1751	Signal Ground	I	—

B174W Frontview Camera - Windshield (UEU/UHX)

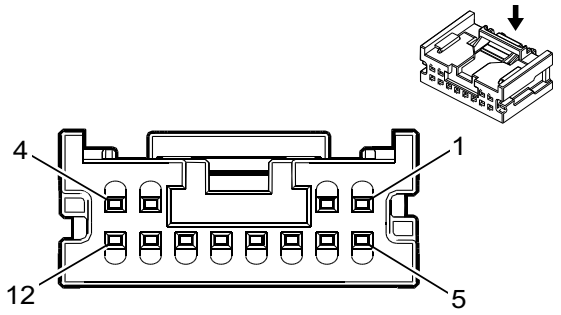

3824362

Connector Part Information

Harness Type: Headliner
OEM Connector: 33235297
Service Connector: 13507121
Description: 12-Way F Mini 50 Series (BK)

Terminal Part Information

Terminal Type ID	Terminated Lead	Diagnostic Test Probe	Terminal Removal Tool	Service Terminal	Tray Name	Core Crimp	Insulation Crimp
I	19333221	EL-35616-58 (BK)	EL-38125-58	Not Available	Not Available	Not Available	Not Available

B174W Frontview Camera - Windshield (UEU/UHX)

Pin	Size	Color	Circuit	Function	Terminal Type ID	Option
1	0.35	BK/WH	1851	Signal Ground	I	—
2	—	—	—	Not Occupied	—	—
3	0.35	RD/L-GN	3140	Battery Positive Voltage	I	—
4	0.35	WH	3152	Lane Departure Warning Indicator Control	I	—
5	0.35	BU/GY	3935	High Speed GMLAN Serial Data (+) 8	I	—
6	0.35	WH/GY	3936	High Speed GMLAN Serial Data (-) 8	I	—
7	0.35	BU/GY	3935	High Speed GMLAN Serial Data (+) 8	I	—
8	0.35	WH/GY	3936	High Speed GMLAN Serial Data (-) 8	I	—
9	0.35	WH/D-BU	5986	Serial Data Communication Enable	I	—
10	0.35	GY/WH	3153	Lane Departure Warning Disable Switch Signal	I	—
11	0.35	L-GN	5060	Low Speed GMLAN Serial Data	I	—
12	—	—	—	Not Occupied	—	—

B193A Charge Air Cooler Inlet Temperature Sensor (L5P)

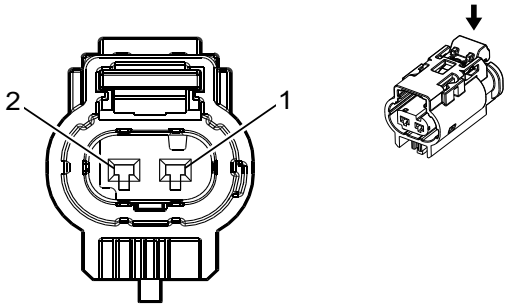

3747581

Connector Part Information

Harness Type: Glow Plug Jumper
OEM Connector: 13583195
Service Connector: Service by Harness - See Part Catalog
Description: 2-Way F 1.2 Multilock Series, Sealed (BK)

Terminal Part Information

Terminal Type ID	Terminated Lead	Diagnostic Test Probe	Terminal Removal Tool	Service Terminal	Tray Name	Core Crimp	Insulation Crimp
I	Not Required	J-35616-16 (LT GN)	No Tool Required	Not Required	Not Required	Not Required	Not Required

B193A Charge Air Cooler Inlet Temperature Sensor (L5P)

Pin	Size	Color	Circuit	Function	Terminal Type ID	Option
1	0.5	GN	3683	Charge Air Cooler Inlet Temperature Sensor Signal	I	L5P
2	0.5	YE/BK	3682	Charge Air Cooler Inlet Temperature Sensor Low Reference	I	L5P

B193B Charge Air Cooler Outlet Temperature Sensor (L5P)

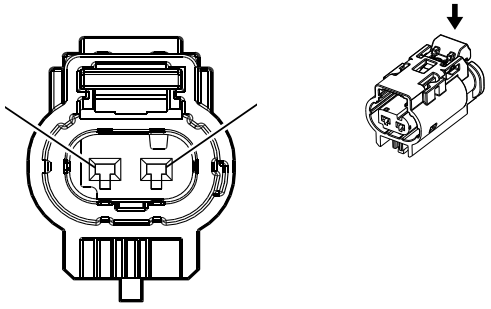

3747581

Connector Part Information

Harness Type: Engine
OEM Connector: 33226772

Service Connector: 19332719
Description: 2-Way F 1.2 Multilock Series, Sealed (BK)

Terminal Part Information

Terminal Type ID	Terminated Lead	Diagnostic Test Probe	Terminal Removal Tool	Service Terminal	Tray Name	Core Crimp	Insulation Crimp
I	Not Required	J-35616-16 (LT GN)	No Tool Required	Not Required	Not Required	Not Required	Not Required

B193B Charge Air Cooler Outlet Temperature Sensor (L5P)

Pin	Size	Color	Circuit	Function	Terminal Type ID	Option
1	0.5	BN	3681	Charge Air Cooler Outlet Temperature Sensor Signal	I	—
2	0.5	YE/D-BU	3680	Charge Air Cooler Outlet Temperature Sensor Low Reference	I	—

B195A Nitrogen Oxides Sensor 1 (L5P)

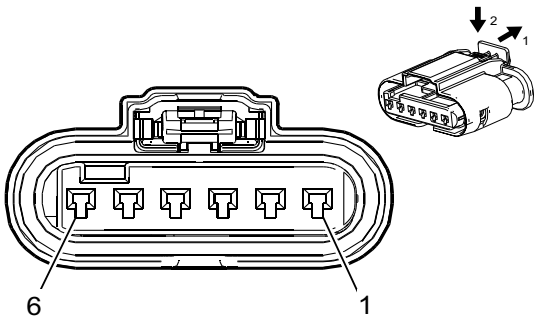

3960142

Connector Part Information

Harness Type: Engine
OEM Connector: 33230495
Service Connector: 19368560
Description: 6-Way F 1.2 MCON-LL Series, Sealed (BK)

Terminal Part Information

Terminal Type ID	Terminated Lead	Diagnostic Test Probe	Terminal Removal Tool	Service Terminal	Tray Name	Core Crimp	Insulation Crimp
I	Not Required	J-35616-16 (LT GN)	No Tool Required	Not Required	Not Required	Not Required	Not Required

B195A Nitrogen Oxides Sensor 1 (L5P)

Pin	Size	Color	Circuit	Function	Terminal Type ID	Option
1	0.5	VT/D-BU	3674	NOx Sensor 1 Control	I	—
2	0.5	BU/BN	4498	High Speed GMLAN Serial Data (+) 7	I	—
3	0.5	BU/BN	4498	High Speed GMLAN Serial Data (+) 7	I	—
4	0.5	WH	4499	High Speed GMLAN Serial Data (-) 7	I	—

B195A Nitrogen Oxides Sensor 1 (L5P) (cont'd)

Pin	Size	Color	Circuit	Function	Terminal Type ID	Option
5	0.5	WH	4499	High Speed GMLAN Serial Data (-) 7	I	—
6	0.5	BK/WH	451	Signal Ground	I	—

B195B Nitrogen Oxides Sensor 2 (L5P)

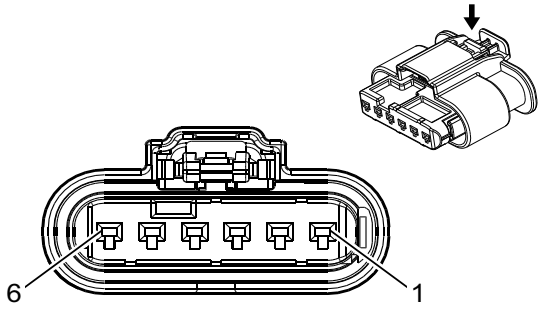

4455148

Connector Part Information

Harness Type: Chassis
OEM Connector: 33226735
Service Connector: 19368561
Description: 6-Way F 1.2 MCON-LL Series, Sealed (GY)

Terminal Part Information

Terminal Type ID	Terminated Lead	Diagnostic Test Probe	Terminal Removal Tool	Service Terminal	Tray Name	Core Crimp	Insulation Crimp
I	Not Required	J-35616-16 (LT GN)	No Tool Required	Not Required	Not Required	Not Required	Not Required

B195B Nitrogen Oxides Sensor 2 (L5P)

Pin	Size	Color	Circuit	Function	Terminal Type ID	Option
1	1	VT/D-BU	3674	NOx Sensor 1 Control	I	—
2	0.5	BU/BN	4498	High Speed GMLAN Serial Data (+) 7	I	—
3	0.5	BU/BN	4498	High Speed GMLAN Serial Data (+) 7	I	—
4	0.5	WH	4499	High Speed GMLAN Serial Data (-) 7	I	—
5	0.5	WH	4499	High Speed GMLAN Serial Data (-) 7	I	—
6	1	BK/WH	1651	Signal Ground	I	—

B218L Side Object Sensor Module - Left (UKC)

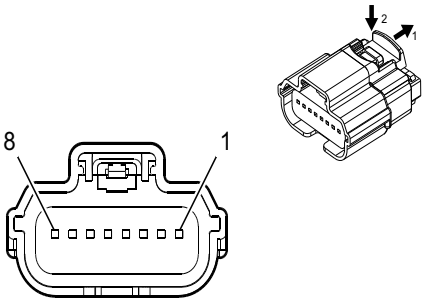

4708234

Connector Part Information

Harness Type: Rear Fascia
OEM Connector: 33204059
Service Connector: Service by Harness - See Part Catalog
Description: 8-Way F 64 Series, Sealed (BK)

Terminal Part Information

Terminal Type ID	Terminated Lead	Diagnostic Test Probe	Terminal Removal Tool	Service Terminal	Tray Name	Core Crimp	Insulation Crimp
I	Not Required	J-35616-64B (LT BU)	No Tool Required	Not Required	Not Required	Not Required	Not Required

B218L Side Object Sensor Module - Left (UKC)

Pin	Size	Color	Circuit	Function	Terminal Type ID	Option
1	0.5	BU/YE	3810	High Speed GMLAN Serial Data (-) 5	I	—
2	0.5	BU/WH	3812	High Speed GMLAN Serial Data (+) 5	I	—
3	0.5	BK/WH	1751	Signal Ground	I	—
4 - 5	—	—	—	Not Occupied	—	—
6	0.5	GN	5060	Low Speed GMLAN Serial Data	I	—
7	0.35	GY/YE	1760	Left Side Object Detection LED Control	I	—
8	0.5	RD/GN	1840	Battery Positive Voltage	I	—

B218R Side Object Sensor Module - Right (UKC)

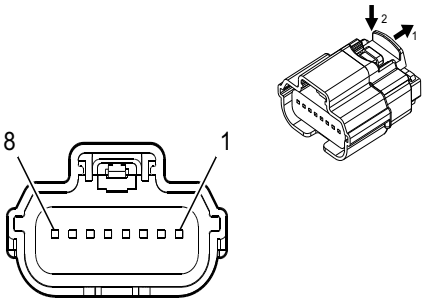

4708234

Connector Part Information

Harness Type: Rear Fascia
OEM Connector: 33204059
Service Connector: Service by Harness - See Part Catalog
Description: 8-Way F 64 Series, Sealed (BK)

Terminal Part Information

Terminal Type ID	Terminated Lead	Diagnostic Test Probe	Terminal Removal Tool	Service Terminal	Tray Name	Core Crimp	Insulation Crimp
I	Not Required	J-35616-64B (LT BU)	No Tool Required	Not Required	Not Required	Not Required	Not Required

B218R Side Object Sensor Module - Right (UKC)

Pin	Size	Color	Circuit	Function	Terminal Type ID	Option
1	0.5	BU/YE	3810	High Speed GMLAN Serial Data (-) 5	I	—
2	0.5	BU/WH	3812	High Speed GMLAN Serial Data (+) 5	I	—
3	0.5	BK/WH	1751	Signal Ground	I	—
4 - 5	—	—	—	Not Occupied	—	—
6	0.5	GN	5060	Low Speed GMLAN Serial Data	I	—
7	0.35	GY	1761	Right Side Object Detection LED Control	I	—
8	0.5	RD/GN	1840	Battery Positive Voltage	I	—

B306A Parking Assist Sensor - Front Left Outer (UD5)

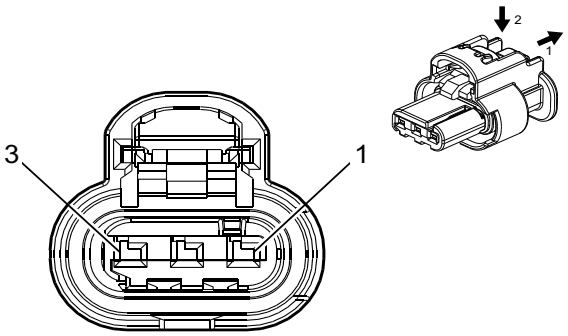

4581126

Connector Part Information

Harness Type: Front Fascia
OEM Connector: 33358800
Service Connector: Service by Harness - See Part Catalog
Description: 3-Way F 1.2 MCON-CB Series, Sealed (BK)

Terminal Part Information

Terminal Type ID	Terminated Lead	Diagnostic Test Probe	Terminal Removal Tool	Service Terminal	Tray Name	Core Crimp	Insulation Crimp
I	Not Required	J-35616-16 (LT GN)	No Tool Required	Not Required	Not Required	Not Required	Not Required

B306A Parking Assist Sensor - Front Left Outer (UD5)

Pin	Size	Color	Circuit	Function	Terminal Type ID	Option
1	0.5	YE/VT	5213	Front Parking Left/Right/Mid Sensor	I	—
2	0.5	VT/WH	5215	Front Parking Left Corner Sensor	I	—
3	0.5	BK/D-BU	5214	Front Parking Sensor Low Reference	I	—

B306B Parking Assist Sensor - Front Left Middle (UD5)

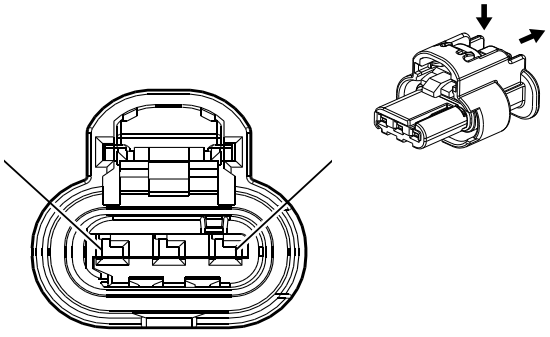

4581126

Connector Part Information

Harness Type: Front Fascia
OEM Connector: 33358800

Service Connector: Service by Harness - See Part Catalog
Description: 3-Way F 1.2 MCON-CB Series, Sealed (BK)

Terminal Part Information

Terminal Type ID	Terminated Lead	Diagnostic Test Probe	Terminal Removal Tool	Service Terminal	Tray Name	Core Crimp	Insulation Crimp
I	Not Required	J-35616-16 (LT GN)	No Tool Required	Not Required	Not Required	Not Required	Not Required

B306B Parking Assist Sensor - Front Left Middle (UD5)

Pin	Size	Color	Circuit	Function	Terminal Type ID	Option
1	0.5	YE/VT	5213	Front Parking Left/Right/Mid Sensor	I	—
2	0.5	YE/GY	5216	Front Parking Left Mid Sensor	I	—
3	0.5	BK/D-BU	5214	Front Parking Sensor Low Reference	I	—

B306C Parking Assist Sensor - Front Right Middle (UD5)

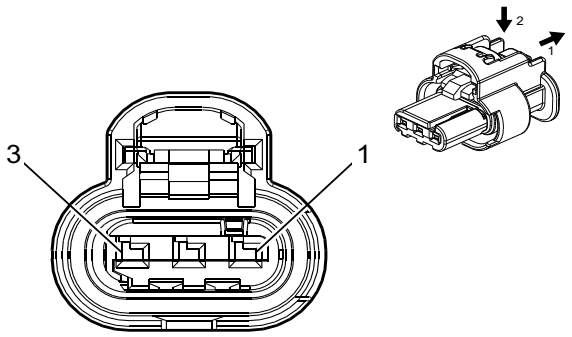

4581126

Connector Part Information

Harness Type: Front Fascia
OEM Connector: 33358800
Service Connector: Service by Harness - See Part Catalog
Description: 3-Way F 1.2 MCON-CB Series, Sealed (BK)

Terminal Part Information

Terminal Type ID	Terminated Lead	Diagnostic Test Probe	Terminal Removal Tool	Service Terminal	Tray Name	Core Crimp	Insulation Crimp
I	Not Required	J-35616-16 (LT GN)	No Tool Required	Not Required	Not Required	Not Required	Not Required

B306C Parking Assist Sensor - Front Right Middle (UD5)

Pin	Size	Color	Circuit	Function	Terminal Type ID	Option
1	0.5	YE/VT	5213	Front Parking Left/Right/Mid Sensor	I	—
2	0.5	VT/GY	5218	Front Parking Right Mid Sensor	I	—
3	0.5	BK/D-BU	5214	Front Parking Sensor Low Reference	I	—

B306D Parking Assist Sensor - Front Right Outer (UD5)

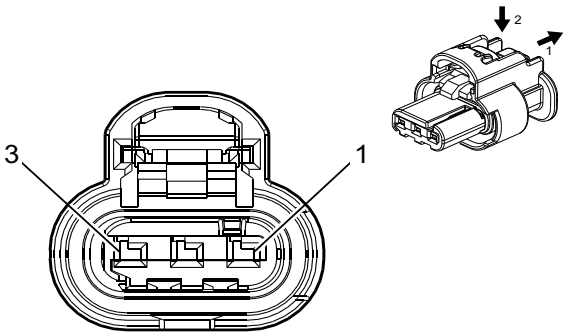

4581126

Connector Part Information

Harness Type: Front Fascia
OEM Connector: 33358800
Service Connector: Service by Harness - See Part Catalog
Description: 3-Way F 1.2 MCON-CB Series, Sealed (BK)

Terminal Part Information

Terminal Type ID	Terminated Lead	Diagnostic Test Probe	Terminal Removal Tool	Service Terminal	Tray Name	Core Crimp	Insulation Crimp
I	Not Required	J-35616-16 (LT GN)	No Tool Required	Not Required	Not Required	Not Required	Not Required

B306D Parking Assist Sensor - Front Right Outer (UD5)

Pin	Size	Color	Circuit	Function	Terminal Type ID	Option
1	0.5	YE/VT	5213	Front Parking Left/Right/Mid Sensor	I	—
2	0.5	WH/GY	5217	Front Parking Right Corner Sensor	I	—
3	0.5	BK/D-BU	5214	Front Parking Sensor Low Reference	I	—

B306E Parking Assist Sensor - Rear Left Outer (UD5/UD7)

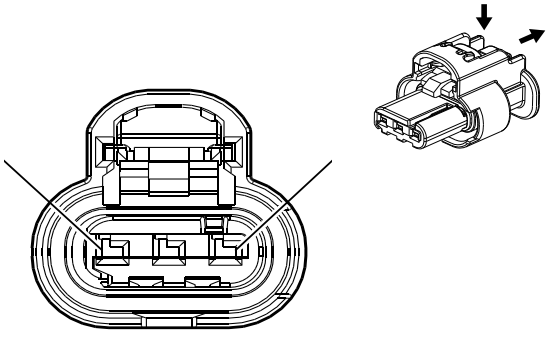

4581126

Connector Part Information

Harness Type: Rear Fascia
OEM Connector: 33358800

Service Connector: Service by Harness - See Part Catalog
Description: 3-Way F 1.2 MCON-CB Series, Sealed (BK)

Terminal Part Information

Terminal Type ID	Terminated Lead	Diagnostic Test Probe	Terminal Removal Tool	Service Terminal	Tray Name	Core Crimp	Insulation Crimp
I	Not Required	J-35616-16 (LT GN)	No Tool Required	Not Required	Not Required	Not Required	Not Required

B306E Parking Assist Sensor - Rear Left Outer (UD5/UD7)

Pin	Size	Color	Circuit	Function	Terminal Type ID	Option
1	0.5	BN/WH	2374	Object Sensor Control	I	—
2	0.5	YE	2375	Left Rear Corner Object Sensor Signal	I	—
3	0.5	BK/GY	2379	Object Sensor Low Reference	I	—

B306F Parking Assist Sensor - Rear Left Middle (UD5/UD7)

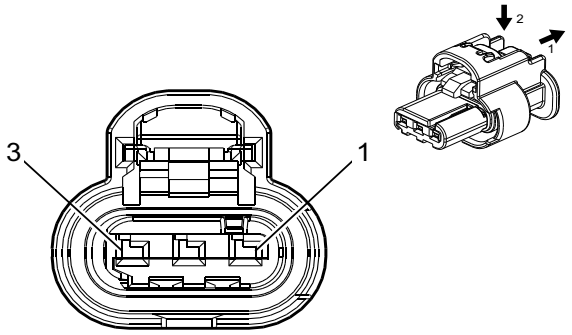

4581126

Connector Part Information

Harness Type: Rear Fascia
OEM Connector: 33358800
Service Connector: Service by Harness - See Part Catalog
Description: 3-Way F 1.2 MCON-CB Series, Sealed (BK)

Terminal Part Information

Terminal Type ID	Terminated Lead	Diagnostic Test Probe	Terminal Removal Tool	Service Terminal	Tray Name	Core Crimp	Insulation Crimp
I	Not Required	J-35616-16 (LT GN)	No Tool Required	Not Required	Not Required	Not Required	Not Required

B306F Parking Assist Sensor - Rear Left Middle (UD5/UD7)

Pin	Size	Color	Circuit	Function	Terminal Type ID	Option
1	0.5	BN/WH	2374	Object Sensor Control	I	—
2	0.5	YE/BU	2376	Left Rear Middle Object Sensor Signal	I	—
3	0.5	BK/GY	2379	Object Sensor Low Reference	I	—

B306G Parking Assist Sensor - Rear Right Middle (UD5/UD7)

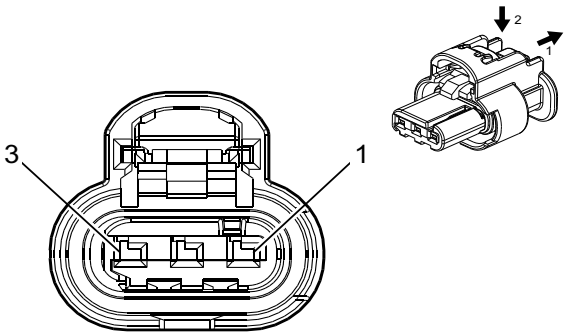

4581126

Connector Part Information

Harness Type: Rear Fascia
OEM Connector: 33358800
Service Connector: Service by Harness - See Part Catalog
Description: 3-Way F 1.2 MCON-CB Series, Sealed (BK)

Terminal Part Information

Terminal Type ID	Terminated Lead	Diagnostic Test Probe	Terminal Removal Tool	Service Terminal	Tray Name	Core Crimp	Insulation Crimp
I	Not Required	J-35616-16 (LT GN)	No Tool Required	Not Required	Not Required	Not Required	Not Required

B306G Parking Assist Sensor - Rear Right Middle (UD5/UD7)

Pin	Size	Color	Circuit	Function	Terminal Type ID	Option
1	0.5	BN/WH	2374	Object Sensor Control	I	—
2	0.5	YE/WH	2377	Right Rear Middle Object Sensor Signal	I	—
3	0.5	BK/GY	2379	Object Sensor Low Reference	I	—

B306H Parking Assist Sensor - Rear Right Outer (UD5/UD7)

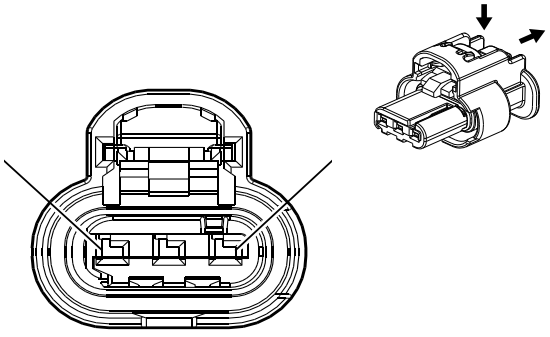

4581126

Connector Part Information

Harness Type: Rear Fascia
OEM Connector: 33358800

Service Connector: Service by Harness - See Part Catalog
Description: 3-Way F 1.2 MCON-CB Series, Sealed (BK)

Terminal Part Information

Terminal Type ID	Terminated Lead	Diagnostic Test Probe	Terminal Removal Tool	Service Terminal	Tray Name	Core Crimp	Insulation Crimp
I	Not Required	J-35616-16 (LT GN)	No Tool Required	Not Required	Not Required	Not Required	Not Required

B306H Parking Assist Sensor - Rear Right Outer (UD5/UD7)

Pin	Size	Color	Circuit	Function	Terminal Type ID	Option
1	0.5	BN/WH	2374	Object Sensor Control	I	—
2	0.5	YE/VT	2378	Right Rear Corner Object Sensor Signal	I	—
3	0.5	BK/GY	2379	Object Sensor Low Reference	I	—

E2LM Side Marker Lamp - Left Middle

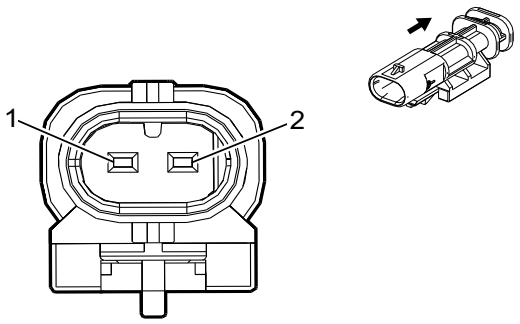

5200722

Connector Part Information

Harness Type: Left Tail Lamp Assembly
OEM Connector: 35085132
Service Connector: Service by Harness - See Part Catalog
Description: 2-Way M 1.2 Multilock Series, Sealed (BK)

Terminal Part Information

Terminal Type ID	Terminated Lead	Diagnostic Test Probe	Terminal Removal Tool	Service Terminal	Tray Name	Core Crimp	Insulation Crimp
I	Not Required	J-35616-17 (LT GN)	No Tool Required	Not Required	Not Required	Not Required	Not Required

E2LM Side Marker Lamp - Left Middle

Pin	Size	Color	Circuit	Function	Terminal Type ID	Option
1	0.5	BK	1450	Ground	I	—
2	0.5	VT/GY	709	Left Park Lamp Control	I	—

E2R Side Marker Lamp - Rear

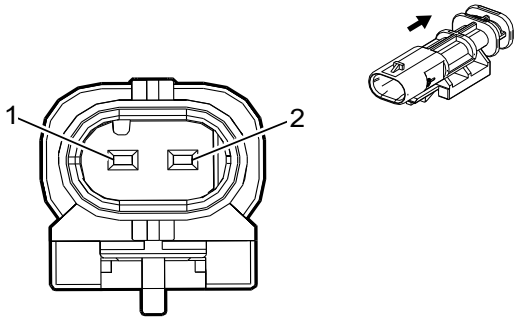

2474755

Connector Part Information

Harness Type: Right Tail Lamp Assembly
OEM Connector: 33207247
Service Connector: Service by Harness - See Part Catalog
Description: 2-Way M 1.2 Multilock Series, Sealed (BK)

Terminal Part Information

Terminal Type ID	Terminated Lead	Diagnostic Test Probe	Terminal Removal Tool	Service Terminal	Tray Name	Core Crimp	Insulation Crimp
I	Not Required	J-35616-17 (LT GN)	No Tool Required	Not Required	Not Required	Not Required	Not Required

E2R Side Marker Lamp - Rear

Pin	Size	Color	Circuit	Function	Terminal Type ID	Option
1	0.5	GY/BN	309	Right Park Lamp Control	I	—
2	0.5	BK	1450	Ground	I	—

E2RM Side Marker Lamp - Right Middle

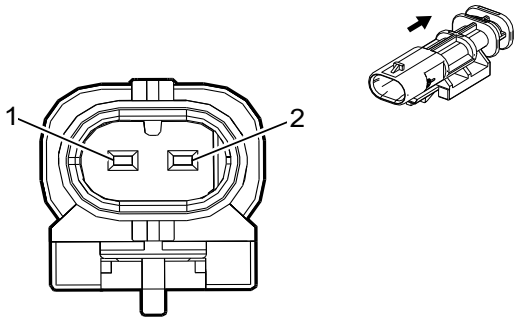

5200722

Connector Part Information

Harness Type: Right Tail Lamp Assembly
OEM Connector: 35085132
Service Connector: Service by Harness - See Part Catalog
Description: 2-Way M 1.2 Multilock Series, Sealed (BK)

Terminal Part Information

Terminal Type ID	Terminated Lead	Diagnostic Test Probe	Terminal Removal Tool	Service Terminal	Tray Name	Core Crimp	Insulation Crimp
I	Not Required	J-35616-17 (LT GN)	No Tool Required	Not Required	Not Required	Not Required	Not Required

E2RM Side Marker Lamp - Right Middle

Pin	Size	Color	Circuit	Function	Terminal Type ID	Option
1	0.5	BK	1750	Ground	I	—
2	0.5	GY/BN	309	Right Park Lamp Control	I	—

E3A Roof Clearance Lamp - Left Front Outer (U01)

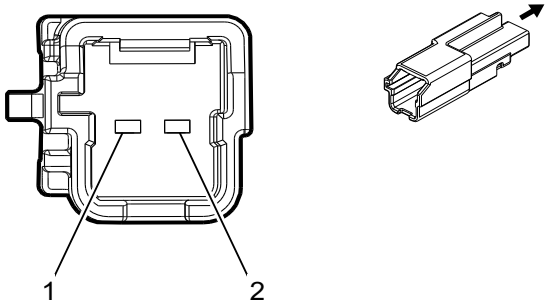

4116496

Connector Part Information

Harness Type: Interior Roof Light
OEM Connector: 33189233
Service Connector: Service by Harness - See Part Catalog
Description: 2-Way M 1.2 Series (BK)

Terminal Part Information

Terminal Type ID	Terminated Lead	Diagnostic Test Probe	Terminal Removal Tool	Service Terminal	Tray Name	Core Crimp	Insulation Crimp
I	Not Required	J-35616-17 (LT GN)	No Tool Required	Not Required	Not Required	Not Required	Not Required

E3A Roof Clearance Lamp - Left Front Outer (U01)

Pin	Size	Color	Circuit	Function	Terminal Type ID	Option
1	0.35	BK	1050	Ground	I	—
2	0.35	VT/GY	709	Left Park Lamp Control	I	—

E3C Roof Clearance Lamp - Front Middle (U01)

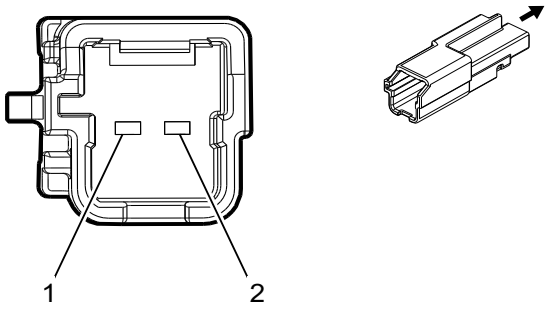

4116496

Connector Part Information

Harness Type: Interior Roof Light
OEM Connector: 33189233
Service Connector: Service by Harness - See Part Catalog
Description: 2-Way M 1.2 Series (BK)

Terminal Part Information

Terminal Type ID	Terminated Lead	Diagnostic Test Probe	Terminal Removal Tool	Service Terminal	Tray Name	Core Crimp	Insulation Crimp
I	Not Required	J-35616-17 (LT GN)	No Tool Required	Not Required	Not Required	Not Required	Not Required

E3C Roof Clearance Lamp - Front Middle (U01)

Pin	Size	Color	Circuit	Function	Terminal Type ID	Option
1	0.35	BK	1050	Ground	I	—
2	0.35	VT/GY	709	Left Park Lamp Control	I	—

E3E Roof Clearance Lamp - Right Front Outer (U01)

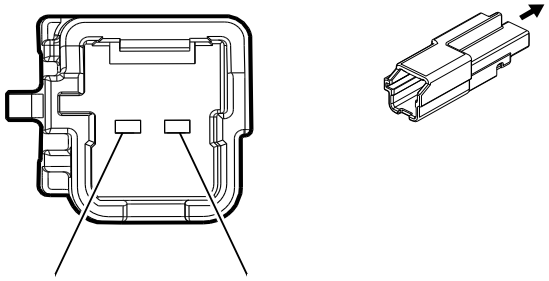

4116496

Connector Part Information

Harness Type: Interior Roof Light
OEM Connector: 33189233
Service Connector: Service by Harness - See Part Catalog
Description: 2-Way M 1.2 Series (BK)

Terminal Part Information

Terminal Type ID	Terminated Lead	Diagnostic Test Probe	Terminal Removal Tool	Service Terminal	Tray Name	Core Crimp	Insulation Crimp
I	Not Required	J-35616-17 (LT GN)	No Tool Required	Not Required	Not Required	Not Required	Not Required

E3E Roof Clearance Lamp - Right Front Outer (U01)

Pin	Size	Color	Circuit	Function	Terminal Type ID	Option
1	0.35	BK	1050	Ground	I	—
2	0.35	VT/GY	709	Left Park Lamp Control	I	—

E3LF Rear Fender Clearance Lamp - Left Front (DZW)

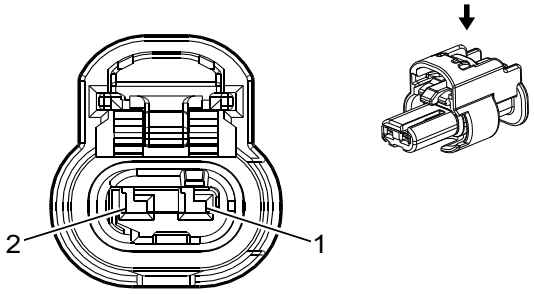

4649903

Connector Part Information

Harness Type: Left Tail Lamp Assembly
OEM Connector: 33327048
Service Connector: Service by Harness - See Part Catalog
Description: 2-Way F 1.2 MCON Series, Sealed (BK)

Terminal Part Information

Terminal Type ID	Terminated Lead	Diagnostic Test Probe	Terminal Removal Tool	Service Terminal	Tray Name	Core Crimp	Insulation Crimp
I	Not Required	J-35616-16 (LT GN)	No Tool Required	Not Required	Not Required	Not Required	Not Required

E3LF Rear Fender Clearance Lamp - Left Front (DZW)

Pin	Size	Color	Circuit	Function	Terminal Type ID	Option
1	0.5	VT/GY	709	Left Park Lamp Control	I	—
2	0.5	BK	1450	Ground	I	—

E3LR Rear Fender Clearance Lamp - Left Rear (DZW)

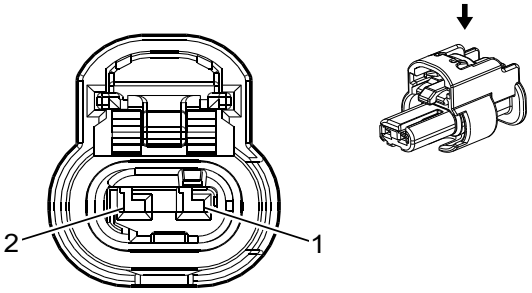

4649903

Connector Part Information

Harness Type: Left Tail Lamp Assembly
OEM Connector: 33327048
Service Connector: Service by Harness - See Part Catalog
Description: 2-Way F 1.2 MCON Series, Sealed (BK)

Terminal Part Information

Terminal Type ID	Terminated Lead	Diagnostic Test Probe	Terminal Removal Tool	Service Terminal	Tray Name	Core Crimp	Insulation Crimp
I	Not Required	J-35616-16 (LT GN)	No Tool Required	Not Required	Not Required	Not Required	Not Required

E3LR Rear Fender Clearance Lamp - Left Rear (DZW)

Pin	Size	Color	Circuit	Function	Terminal Type ID	Option
1	0.5	VT/GY	709	Left Park Lamp Control	I	—
2	0.5	BK	1450	Ground	I	—

E3RF Rear Fender Clearance Lamp - Right Front (DZW)

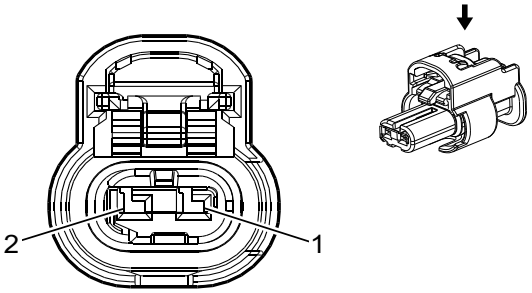

4335931

Connector Part Information

Harness Type: Right Tail Lamp Assembly
OEM Connector: 33371691
Service Connector: Service by Harness - See Part Catalog
Description: 2-Way F 1.2 MCON Series, Sealed (BK)

Terminal Part Information

Terminal Type ID	Terminated Lead	Diagnostic Test Probe	Terminal Removal Tool	Service Terminal	Tray Name	Core Crimp	Insulation Crimp
I	Not Required	J-35616-16 (LT GN)	No Tool Required	Not Required	Not Required	Not Required	Not Required

E3RF Rear Fender Clearance Lamp - Right Front (DZW)

Pin	Size	Color	Circuit	Function	Terminal Type ID	Option
1	0.5	BK	1750	Ground	I	—
2	0.5	GY/BN	309	Right Park Lamp Control	I	—

E3RR Rear Fender Clearance Lamp - Right Rear (DZW)

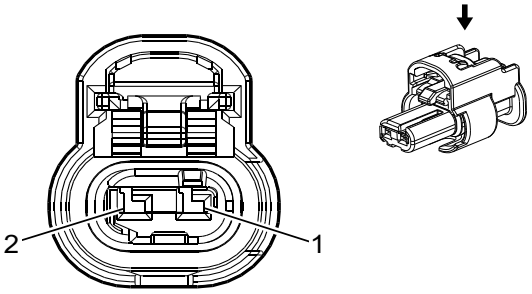

4649903

Connector Part Information

Harness Type: Right Tail Lamp Assembly
OEM Connector: 33327048
Service Connector: Service by Harness - See Part Catalog
Description: 2-Way F 1.2 MCON Series, Sealed (BK)

Terminal Part Information

Terminal Type ID	Terminated Lead	Diagnostic Test Probe	Terminal Removal Tool	Service Terminal	Tray Name	Core Crimp	Insulation Crimp
I	Not Required	J-35616-16 (LT GN)	No Tool Required	Not Required	Not Required	Not Required	Not Required

E3RR Rear Fender Clearance Lamp - Right Rear (DZW)

Pin	Size	Color	Circuit	Function	Terminal Type ID	Option
1	0.5	GY/BN	309	Right Park Lamp Control	I	—
2	0.5	BK	1750	Ground	I	—

E6 Center High Mounted Stop Lamp (Crew Cab/Extended Cab)

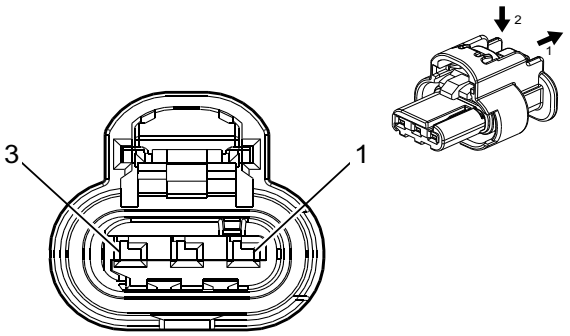

4581126

Connector Part Information

Harness Type: Center High Mount Stop Lamp Jumper
OEM Connector: 33358800
Service Connector: Service by Harness - See Part Catalog
Description: 3-Way F 1.2 MCON-CB Series, Sealed (BK)

Terminal Part Information

Terminal Type ID	Terminated Lead	Diagnostic Test Probe	Terminal Removal Tool	Service Terminal	Tray Name	Core Crimp	Insulation Crimp
I	Not Required	J-35616-16 (LT GN)	No Tool Required	Not Required	Not Required	Not Required	Not Required

E6 Center High Mounted Stop Lamp (Crew Cab/Extended Cab)

Pin	Size	Color	Circuit	Function	Terminal Type ID	Option
1	0.35	WH/VT	1430	Exterior Courtesy Lamp Control	I	—
2	0.35	VT/WH	5065	Stop Lamp Relay Coil Control	I	—
3	0.35	BK	1050	Ground	I	—

E6 Center High Mounted Stop Lamp (Regular Cab)

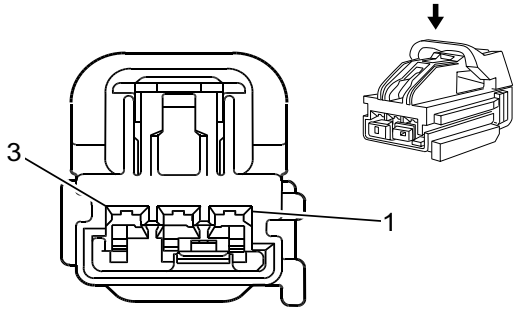

1787799

Connector Part Information

Harness Type: Headliner
OEM Connector: 10847008

Service Connector: 19149536
Description: 3-Way F 1.5 Kaizen Series (L-GY)

Terminal Part Information

Terminal Type ID	Terminated Lead	Diagnostic Test Probe	Terminal Removal Tool	Service Terminal	Tray Name	Core Crimp	Insulation Crimp
I	Not Required	J-35616-2A (GY)	No Tool Required	Not Required	Not Required	Not Required	Not Required

E6 Center High Mounted Stop Lamp (Regular Cab)

Pin	Size	Color	Circuit	Function	Terminal Type ID	Option
1	0.35	WH/VT	1430	Exterior Courtesy Lamp Control	I	—
2	0.5	VT/GY	1054	Stop Lamp Control	I	—
3	0.35	BK	1050	Ground	I	—

E7L License Plate Lamp - Left (E63)

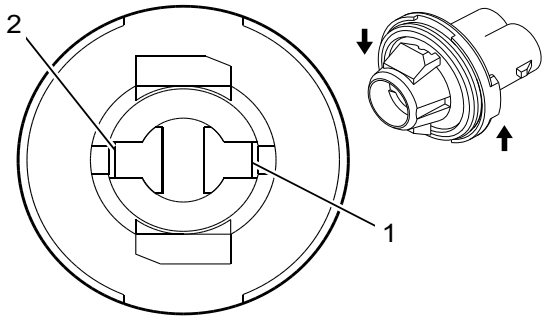

5153536

Connector Part Information

Harness Type: Rear Fascia
OEM Connector: 15324946
Service Connector: Service by Harness - See Part Catalog
Description: 2-Way F Lamp Socket Wedge Base, Type W-2 (D-GY)

Terminal Part Information

Terminal Type ID	Terminated Lead	Diagnostic Test Probe	Terminal Removal Tool	Service Terminal	Tray Name	Core Crimp	Insulation Crimp
I	Not Required	Not Available	No Tool Required	Not Required	Not Required	Not Required	Not Required

E7L License Plate Lamp - Left (E63)

Pin	Size	Color	Circuit	Function	Terminal Type ID	Option
1 - 2	—	—	—	Not Occupied	—	—
A	0.5	GN/YE	6846	Rear License Lamp Control	I	—
B	0.5	BK	1450	Ground	I	—

E7R License Plate Lamp - Right (E63)

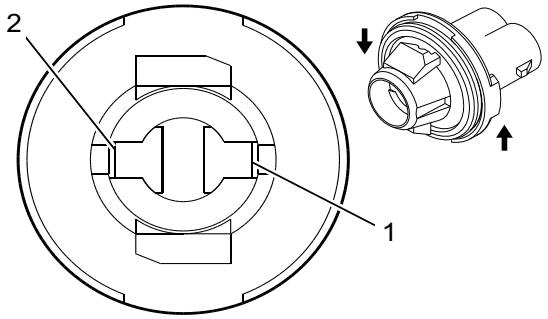

5153536

Connector Part Information

Harness Type: Rear Fascia
OEM Connector: 15324946
Service Connector: Service by Harness - See Part Catalog
Description: 2-Way F Lamp Socket Wedge Base, Type W-2 (D-GY)

Terminal Part Information

Terminal Type ID	Terminated Lead	Diagnostic Test Probe	Terminal Removal Tool	Service Terminal	Tray Name	Core Crimp	Insulation Crimp
I	Not Required	Not Available	No Tool Required	Not Required	Not Required	Not Required	Not Required

E7R License Plate Lamp - Right (E63)

Pin	Size	Color	Circuit	Function	Terminal Type ID	Option
1 - 2	—	—	—	Not Occupied	—	—
A	0.5	GN/YE	6846	Rear License Lamp Control	I	—
B	0.5	BK	1450	Ground	I	—

E8L Liftgate Courtesy Lamp (QT5/QT6)

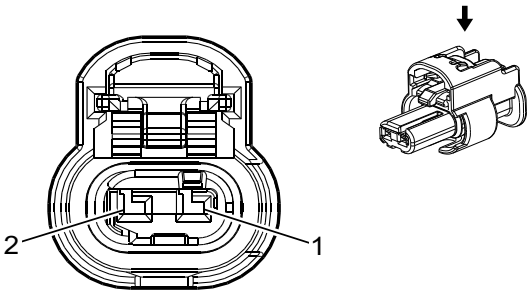

4649903

Connector Part Information

Harness Type: Endgate
OEM Connector: 33327048

Service Connector: Service by Harness - See Part Catalog
Description: 2-Way F 1.2 MCON Series, Sealed (BK)

Terminal Part Information

Terminal Type ID	Terminated Lead	Diagnostic Test Probe	Terminal Removal Tool	Service Terminal	Tray Name	Core Crimp	Insulation Crimp
I	Not Required	J-35616-16 (LT GN)	No Tool Required	Not Required	Not Required	Not Required	Not Required

E8L Liftgate Courtesy Lamp (QT5/QT6)

Pin	Size	Color	Circuit	Function	Terminal Type ID	Option
1	0.35	WH/VT	1430	Exterior Courtesy Lamp Control	I	—
2	0.75	BK	1450	Ground	I	—

E11A Fuel Heater/Water in Fuel Sensor (L5P)

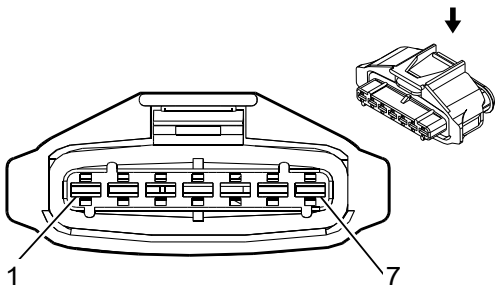

2537256

Connector Part Information

Harness Type: Chassis
OEM Connector: 10774827
Service Connector: 19354080
Description: 7-Way F 2.8 Junior Power Timer Series, Sealed (BK)

Terminal Part Information

Terminal Type ID	Terminated Lead	Diagnostic Test Probe	Terminal Removal Tool	Service Terminal	Tray Name	Core Crimp	Insulation Crimp
I	Not Required	J-35616-35 (VT)	No Tool Required	Not Required	Not Required	Not Required	Not Required

E11A Fuel Heater/Water in Fuel Sensor (L5P)

Pin	Size	Color	Circuit	Function	Terminal Type ID	Option
1	2.5	BK	1750	Ground	I	—
2	2.5	VT/L-GN	355	Fuel Filter Heater Voltage	I	—
3	0.5	WH/RD	6862	Water In Fuel Sensor 5V Reference	I	—
4	0.5	BK/D-BU	6863	Water In Fuel Sensor Low Reference	I	—
5	0.5	BU/YE	6861	Water In Fuel Sensor Signal	I	—

E11A Fuel Heater/Water in Fuel Sensor (L5P) (cont'd)

Pin	Size	Color	Circuit	Function	Terminal Type ID	Option
6	0.5	BN/VT	455	Fuel Filter Temperature Signal	I	—
7	0.5	BK/VT	412	Fuel Filter Temperature Sensor Low Reference	I	—

E12A Glow Plug 1 (L5P)

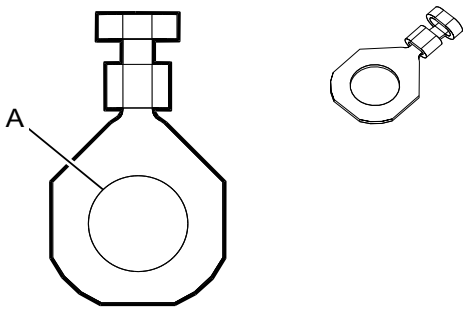

3240148

Connector Part Information

Harness Type: Glow Plug Jumper
OEM Connector: 7009-253
Service Connector: Service by Harness - See Part Catalog
Description: 1-Way Ring Terminal

Terminal Part Information

Terminal Type ID	Terminated Lead	Diagnostic Test Probe	Terminal Removal Tool	Service Terminal	Tray Name	Core Crimp	Insulation Crimp
I	Not Required	Not Available	No Tool Required	Not Required	Not Required	Not Required	Not Required

E12A Glow Plug 1 (L5P)

Pin	Size	Color	Circuit	Function	Terminal Type ID	Option
A	2	GY/BU	1581	Glow Plug Control 1	I	L5P

E12B Glow Plug 2 (L5P)

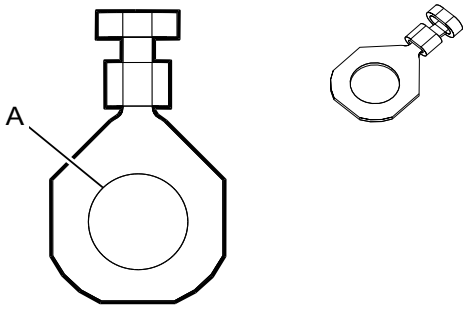

3240148

Connector Part Information

Harness Type: Glow Plug Jumper
OEM Connector: 7009-253
Service Connector: Service by Harness - See Part Catalog
Description: 1-Way Ring Terminal

Terminal Part Information

Terminal Type ID	Terminated Lead	Diagnostic Test Probe	Terminal Removal Tool	Service Terminal	Tray Name	Core Crimp	Insulation Crimp
I	Not Required	Not Available	No Tool Required	Not Required	Not Required	Not Required	Not Required

E12B Glow Plug 2 (L5P)

Pin	Size	Color	Circuit	Function	Terminal Type ID	Option
A	2	GY/BN	1582	Glow Plug Control 2	I	L5P

E12C Glow Plug 3 (L5P)

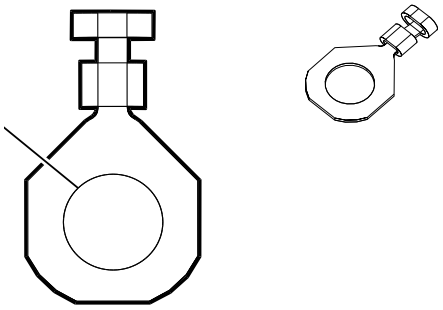

3240148

Connector Part Information

Harness Type: Glow Plug Jumper
OEM Connector: 7009-253
Service Connector: Service by Harness - See Part Catalog
Description: 1-Way Ring Terminal

Terminal Part Information

Terminal Type ID	Terminated Lead	Diagnostic Test Probe	Terminal Removal Tool	Service Terminal	Tray Name	Core Crimp	Insulation Crimp
I	Not Required	Not Available	No Tool Required	Not Required	Not Required	Not Required	Not Required

E12C Glow Plug 3 (L5P)

Pin	Size	Color	Circuit	Function	Terminal Type ID	Option
A	2	GY/GN	1583	Glow Plug Control 3	I	L5P

E12D Glow Plug 4 (L5P)

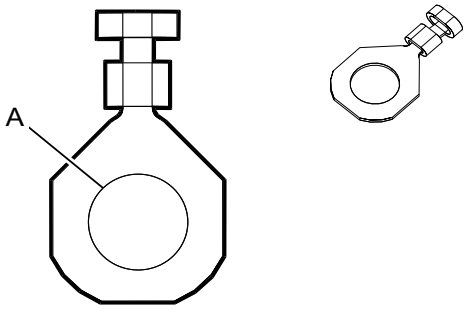

3240148

Connector Part Information

Harness Type: Glow Plug Jumper
OEM Connector: 7009-253
Service Connector: Service by Harness - See Part Catalog
Description: 1-Way Ring Terminal

Terminal Part Information

Terminal Type ID	Terminated Lead	Diagnostic Test Probe	Terminal Removal Tool	Service Terminal	Tray Name	Core Crimp	Insulation Crimp
I	Not Required	Not Available	No Tool Required	Not Required	Not Required	Not Required	Not Required

E12D Glow Plug 4 (L5P)

Pin	Size	Color	Circuit	Function	Terminal Type ID	Option
A	2	GY/YE	1584	Glow Plug Control 4	I	L5P

E12E Glow Plug 5 (L5P)

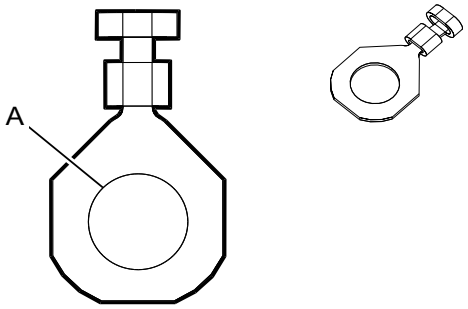

3240148

Connector Part Information

Harness Type: Glow Plug Jumper
OEM Connector: 7009-253
Service Connector: Service by Harness - See Part Catalog
Description: 1-Way Ring Terminal

Terminal Part Information

Terminal Type ID	Terminated Lead	Diagnostic Test Probe	Terminal Removal Tool	Service Terminal	Tray Name	Core Crimp	Insulation Crimp
I	Not Required	Not Available	No Tool Required	Not Required	Not Required	Not Required	Not Required

E12E Glow Plug 5 (L5P)

Pin	Size	Color	Circuit	Function	Terminal Type ID	Option
A	2	GY/WH	1585	Glow Plug Control 5	I	L5P

E12F Glow Plug 6 (L5P)

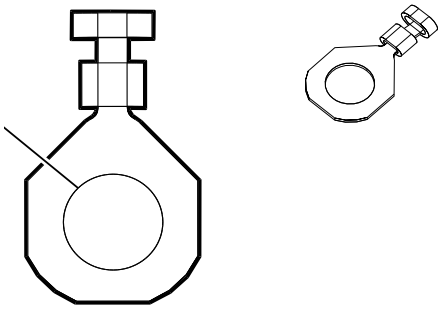

3240148

Connector Part Information

Harness Type: Glow Plug Jumper
OEM Connector: 7009-253
Service Connector: Service by Harness - See Part Catalog
Description: 1-Way Ring Terminal

Terminal Part Information

Terminal Type ID	Terminated Lead	Diagnostic Test Probe	Terminal Removal Tool	Service Terminal	Tray Name	Core Crimp	Insulation Crimp
I	Not Required	Not Available	No Tool Required	Not Required	Not Required	Not Required	Not Required

E12F Glow Plug 6 (L5P)

Pin	Size	Color	Circuit	Function	Terminal Type ID	Option
A	2	GY/VT	1586	Glow Plug Control 6	I	L5P

E12G Glow Plug 7 (L5P)

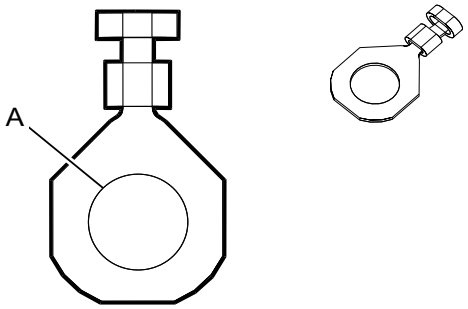

3240148

Connector Part Information

Harness Type: Glow Plug Jumper
OEM Connector: 7009-253
Service Connector: Service by Harness - See Part Catalog
Description: 1-Way Ring Terminal

Terminal Part Information

Terminal Type ID	Terminated Lead	Diagnostic Test Probe	Terminal Removal Tool	Service Terminal	Tray Name	Core Crimp	Insulation Crimp
I	Not Required	Not Available	No Tool Required	Not Required	Not Required	Not Required	Not Required

E12G Glow Plug 7 (L5P)

Pin	Size	Color	Circuit	Function	Terminal Type ID	Option
A	2	WH/BK	1587	Glow Plug Control 7	I	L5P

E12H Glow Plug 8 (L5P)

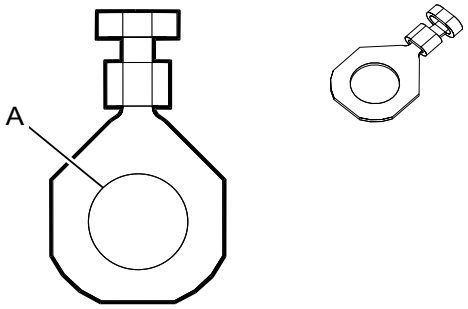

3240148

Connector Part Information

Harness Type: Glow Plug Jumper
OEM Connector: 7009-253
Service Connector: Service by Harness - See Part Catalog
Description: 1-Way Ring Terminal

Terminal Part Information

Terminal Type ID	Terminated Lead	Diagnostic Test Probe	Terminal Removal Tool	Service Terminal	Tray Name	Core Crimp	Insulation Crimp
I	Not Required	Not Available	No Tool Required	Not Required	Not Required	Not Required	Not Required

E12H Glow Plug 8 (L5P)

Pin	Size	Color	Circuit	Function	Terminal Type ID	Option
A	2	WH/BU	1588	Glow Plug Control 8	I	L5P

E14A Seat Heating Element - Driver Back (KA1)

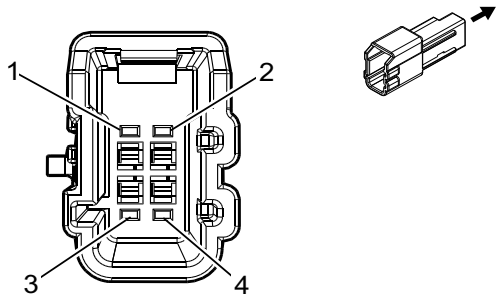

4293695

Connector Part Information

Harness Type: Driver Seat
OEM Connector: 6098-7781
Service Connector: Service by Harness - See Part Catalog
Description: 4-Way M 1.2 Series (GY)

Terminal Part Information

Terminal Type ID	Terminated Lead	Diagnostic Test Probe	Terminal Removal Tool	Service Terminal	Tray Name	Core Crimp	Insulation Crimp
I	Not Required	J-35616-13 (BU)	No Tool Required	Not Required	Not Required	Not Required	Not Required

E14A Seat Heating Element - Driver Back (KA1)

Pin	Size	Color	Circuit	Function	Terminal Type ID	Option
1	0.75	BN	2432	Driver Heated Back Element Control	I	—
2	0.5	L-BU	2425	Driver Heated Back NTC Signal	I	—
3	0.5	BK/VT	2426	Driver Heated Back NTC Low Reference	I	—
4	0.75	BN/BK	2078	Driver Heated Seat Element Low Reference	I	—

E14B Seat Heating Element - Driver Cushion (KA1)

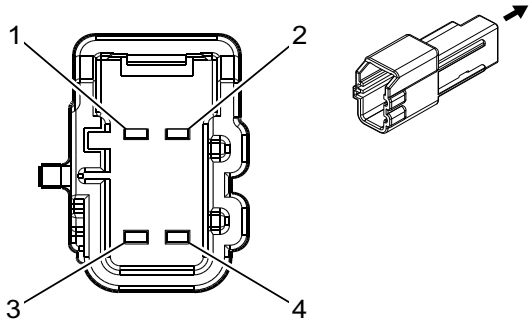

4210503

Connector Part Information

Harness Type: Driver Seat
OEM Connector: 6098-7779
Service Connector: Service by Harness - See Part Catalog
Description: 4-Way M 1.2 Series (BK)

Terminal Part Information

Terminal Type ID	Terminated Lead	Diagnostic Test Probe	Terminal Removal Tool	Service Terminal	Tray Name	Core Crimp	Insulation Crimp
I	Not Required	J-35616-13 (BU)	No Tool Required	Not Required	Not Required	Not Required	Not Required

E14B Seat Heating Element - Driver Cushion (KA1)

Pin	Size	Color	Circuit	Function	Terminal Type ID	Option
1	0.75	BN/VT	2077	Driver Heated Seat Element Control	I	—
2	0.5	YE/GY	2079	Driver Heated Seat NTC Signal	I	—
3	0.5	BK/YE	2080	Driver Heated Seat NTC Low Reference	I	—
4	0.75	BN/BK	2078	Driver Heated Seat Element Low Reference	I	—

E14C Seat Heating Element - Passenger Back (KA1)

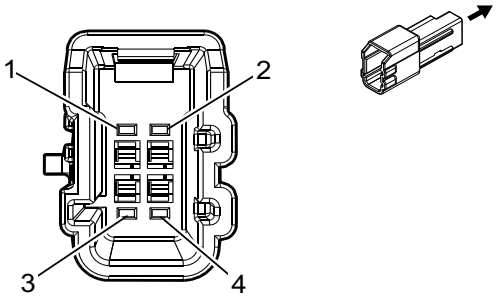

4293695

Connector Part Information

Harness Type: Passenger Seat
OEM Connector: 6098-7781
Service Connector: Service by Harness - See Part Catalog
Description: 4-Way M 1.2 Series (GY)

Terminal Part Information

Terminal Type ID	Terminated Lead	Diagnostic Test Probe	Terminal Removal Tool	Service Terminal	Tray Name	Core Crimp	Insulation Crimp
I	Not Required	J-35616-13 (BU)	No Tool Required	Not Required	Not Required	Not Required	Not Required

E14C Seat Heating Element - Passenger Back (KA1)

Pin	Size	Color	Circuit	Function	Terminal Type ID	Option
1	0.75	WH/BN	2481	Passenger Heated Back Element Control	I	—
2	0.5	WH/L-BU	2436	Passenger Heated Back NTC Signal	I	—
3	0.5	BK/L-GN	2482	Passenger Heated Back NTC Low Reference	I	—
4	0.75	GY/BK	2480	Passenger Heated Seat Element Low Reference	I	—

E14D Seat Heating Element - Passenger Cushion (KA1)

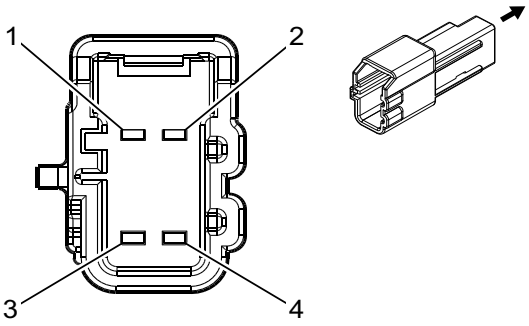

4210503

Connector Part Information

Harness Type: Passenger Seat
OEM Connector: 6098-7779
Service Connector: Service by Harness - See Part Catalog
Description: 4-Way M 1.2 Series (BK)

Terminal Part Information

Terminal Type ID	Terminated Lead	Diagnostic Test Probe	Terminal Removal Tool	Service Terminal	Tray Name	Core Crimp	Insulation Crimp
I	Not Required	J-35616-13 (BU)	No Tool Required	Not Required	Not Required	Not Required	Not Required

E14D Seat Heating Element - Passenger Cushion (KA1)

Pin	Size	Color	Circuit	Function	Terminal Type ID	Option
1	0.75	BN/L-BU	2479	Passenger Heated Seat Element Control	I	—
2	0.5	WH/GY	2434	Passenger Heated Seat NTC Signal	I	—
3	0.5	BK/GY	2435	Passenger Heated Seat NTC Low Reference	I	—
4	0.75	GY/BK	2480	Passenger Heated Seat Element Low Reference	I	—

E14F Seat Heating Element - Left Rear Cushion (KA6)

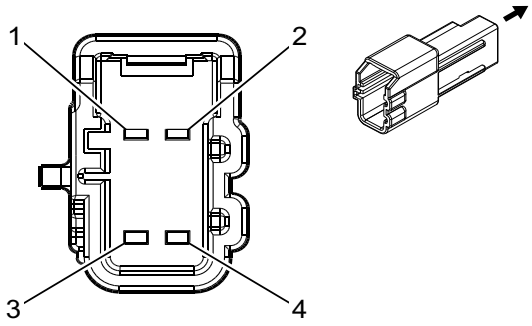

4210503

Connector Part Information

Harness Type: Rear Seat
OEM Connector: 6098-7779
Service Connector: Service by Harness - See Part Catalog
Description: 4-Way M 1.2 Series (BK)

Terminal Part Information

Terminal Type ID	Terminated Lead	Diagnostic Test Probe	Terminal Removal Tool	Service Terminal	Tray Name	Core Crimp	Insulation Crimp
I	Not Required	J-35616-13 (BU)	No Tool Required	Not Required	Not Required	Not Required	Not Required

E14F Seat Heating Element - Left Rear Cushion (KA6)

Pin	Size	Color	Circuit	Function	Terminal Type ID	Option
1	0.75	GY	2294	Left Rear Heated Seat Cushion Element Control	I	—
2	0.75	WH/L-BU	7047	Left Rear Cushion NTC Signal	I	—
3	0.75	L-BU/WH	7048	Left Rear Cushion NTC Low Reference	I	—
4	0.75	BN/BK	2295	Left Rear Heated Seat Cushion Element Low Reference	I	—

E14H Seat Heating Element - Right Rear Cushion (KA6)

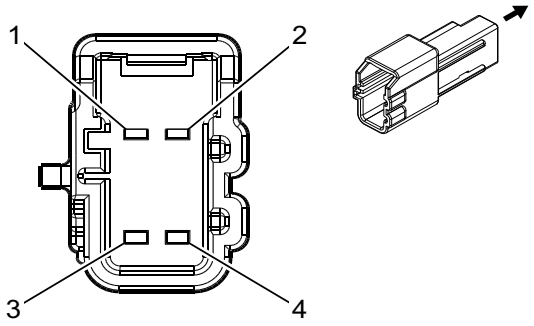

4210503

Connector Part Information

Harness Type: Rear Seat
OEM Connector: 6098-7779
Service Connector: Service by Harness - See Part Catalog
Description: 4-Way M 1.2 Series (BK)

Terminal Part Information

Terminal Type ID	Terminated Lead	Diagnostic Test Probe	Terminal Removal Tool	Service Terminal	Tray Name	Core Crimp	Insulation Crimp
I	Not Required	J-35616-13 (BU)	No Tool Required	Not Required	Not Required	Not Required	Not Required

E14H Seat Heating Element - Right Rear Cushion (KA6)

Pin	Size	Color	Circuit	Function	Terminal Type ID	Option
1	0.75	L-GN/BN	2296	Right Rear Heated Seat Cushion Element Control	I	—
2	0.75	YE/WH	7053	Right Rear Cushion NTC Signal	I	—
3	0.75	WH/BK	7054	Right Rear Cushion NTC Low Reference	I	—
4	0.75	L-GN/BK	2297	Right Rear Heated Seat Cushion Element Low Reference	I	—

E18 Rear Defogger Grid X1 (C49)

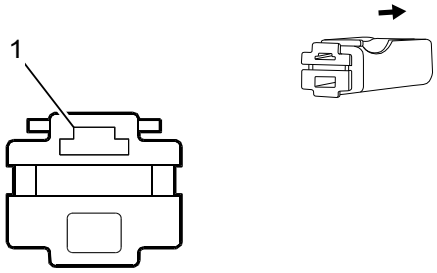

1413086

Connector Part Information

Harness Type: Body
OEM Connector: 13511619
Service Connector: 19367647
Description: 1-Way F 250 Series (BK)

Terminal Part Information

Terminal Type ID	Terminated Lead	Diagnostic Test Probe	Terminal Removal Tool	Service Terminal	Tray Name	Core Crimp	Insulation Crimp
I	Not Required	J-35616-42 (RD)	No Tool Required	Not Required	Not Required	Not Required	Not Required

E18 Rear Defogger Grid X1 (C49)

Pin	Size	Color	Circuit	Function	Terminal Type ID	Option
1	2.5	BN/VT	293	Rear Defog Element Control	I	—

E18 Rear Defogger Grid X2 (C49)

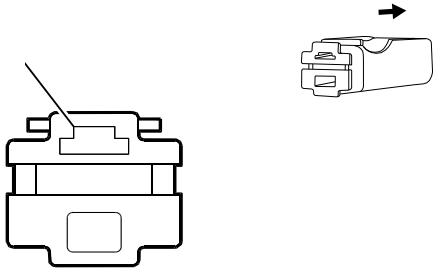

1413086

Connector Part Information

Harness Type: Body
OEM Connector: 13511619
Service Connector: 19367647
Description: 1-Way F 250 Series (BK)

Terminal Part Information

Terminal Type ID	Terminated Lead	Diagnostic Test Probe	Terminal Removal Tool	Service Terminal	Tray Name	Core Crimp	Insulation Crimp
I	Not Required	J-35616-42 (RD)	No Tool Required	Not Required	Not Required	Not Required	Not Required

E18 Rear Defogger Grid X2 (C49)

Pin	Size	Color	Circuit	Function	Terminal Type ID	Option
1	2.5	BK	1350	Ground	I	—

E28 Center Console Compartment Lamp (D07)

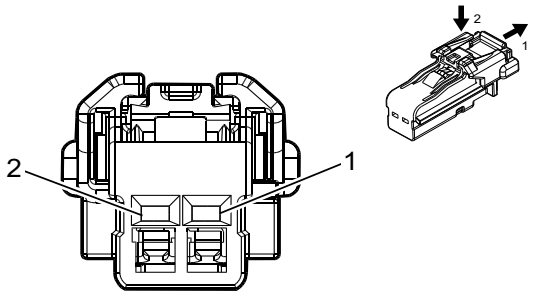

4115691

Connector Part Information

Harness Type: Floor Console
OEM Connector: 35026312
Service Connector: Service by Harness - See Part Catalog
Description: 2-Way F 1.2 Series (BK)

Terminal Part Information

Terminal Type ID	Terminated Lead	Diagnostic Test Probe	Terminal Removal Tool	Service Terminal	Tray Name	Core Crimp	Insulation Crimp
I	Not Required	J-35616-16 (LT GN)	No Tool Required	Not Required	Not Required	Not Required	Not Required

E28 Center Console Compartment Lamp (D07)

Pin	Size	Color	Circuit	Function	Terminal Type ID	Option
1	0.5	BK	1250	Ground	I	—
2	0.5	WH/BN	6815	Inadvertent Power Control	I	—

E29LF Fog Lamp - Left Front (T3U)

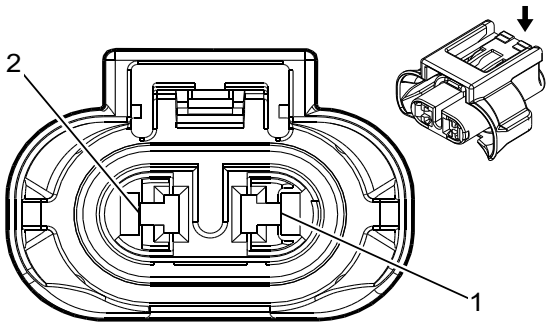

3404058

Connector Part Information

Harness Type: Front Fascia
OEM Connector: 13818129
Service Connector: Service by Harness - See Part Catalog
Description: 2-Way F 2.8 APEX Series, Sealed (BK)

Terminal Part Information

Terminal Type ID	Terminated Lead	Diagnostic Test Probe	Terminal Removal Tool	Service Terminal	Tray Name	Core Crimp	Insulation Crimp
I	Not Required	J-35616-35 (VT)	No Tool Required	Not Required	Not Required	Not Required	Not Required

E29LF Fog Lamp - Left Front (T3U)

Pin	Size	Color	Circuit	Function	Terminal Type ID	Option
1	0.5	BN/VT	2234	Front Fog Lamp Control	I	—
2	0.5	BK	150	Ground	I	—

E29RF Fog Lamp - Right Front (T3U)

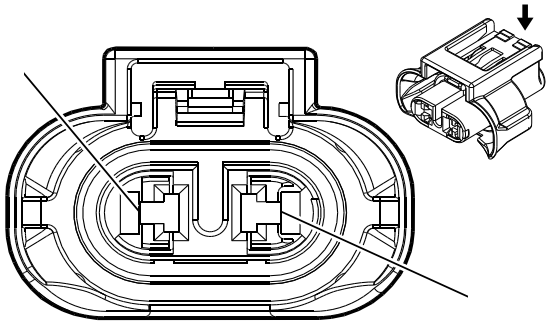

3404058

Connector Part Information

Harness Type: Front Fascia
OEM Connector: 13818129
Service Connector: Service by Harness - See Part Catalog
Description: 2-Way F 2.8 APEX Series, Sealed (BK)

Terminal Part Information

Terminal Type ID	Terminated Lead	Diagnostic Test Probe	Terminal Removal Tool	Service Terminal	Tray Name	Core Crimp	Insulation Crimp
I	Not Required	J-35616-35 (VT)	No Tool Required	Not Required	Not Required	Not Required	Not Required

E29RF Fog Lamp - Right Front (T3U)

Pin	Size	Color	Circuit	Function	Terminal Type ID	Option
1	0.5	BN/VT	2234	Front Fog Lamp Control	I	—
2	0.5	BK	250	Ground	I	—

E31L Sunshade Mirror Lamp - Left (DH6)

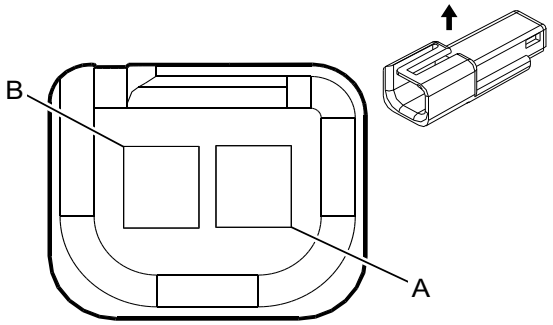

35441

Connector Part Information

Harness Type: Headliner
OEM Connector: 12047663
Service Connector: 13584278
Description: 2-Way M 150 Metri-Pack Series (BK)

Terminal Part Information

Terminal Type ID	Terminated Lead	Diagnostic Test Probe	Terminal Removal Tool	Service Terminal	Tray Name	Core Crimp	Insulation Crimp
I	Not Required	J-35616-3 (GY)	No Tool Required	Not Required	Not Required	Not Required	Not Required

E31L Sunshade Mirror Lamp - Left (DH6)

Pin	Size	Color	Circuit	Function	Terminal Type ID	Option
A	0.5	WH/BN	6815	Inadvertent Power Control	I	—
B	0.5	BK	1050	Ground	I	—

E31R Sunshade Mirror Lamp - Right (DH6)

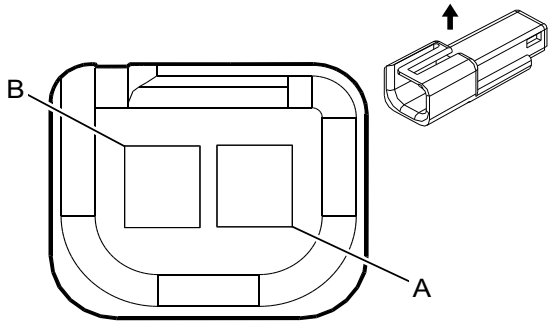

35441

Connector Part Information

Harness Type: Headliner
OEM Connector: 12047663
Service Connector: 13584278
Description: 2-Way M 150 Metri-Pack Series (BK)

Terminal Part Information

Terminal Type ID	Terminated Lead	Diagnostic Test Probe	Terminal Removal Tool	Service Terminal	Tray Name	Core Crimp	Insulation Crimp
I	Not Required	J-35616-3 (GY)	No Tool Required	Not Required	Not Required	Not Required	Not Required

E31R Sunshade Mirror Lamp - Right (DH6)

Pin	Size	Color	Circuit	Function	Terminal Type ID	Option
A	0.5	WH/BN	6815	Inadvertent Power Control	I	—
B	0.5	BK	1050	Ground	I	—

E37B Dome/Reading Lamps - 2nd Row (Crew Cab/Extended Cab)

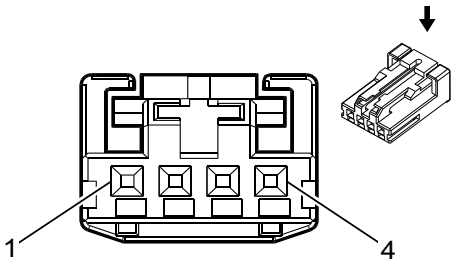

2717162

Connector Part Information

Harness Type: Headliner
OEM Connector: 13969166
Service Connector: 13587297
Description: 4-Way F 0.64 Micro-Quadlock Series (BK)

Terminal Part Information

Terminal Type ID	Terminated Lead	Diagnostic Test Probe	Terminal Removal Tool	Service Terminal	Tray Name	Core Crimp	Insulation Crimp
I	Not Required	J-35616-64B (LT BU)	No Tool Required	Not Required	Not Required	Not Required	Not Required

E37B Dome/Reading Lamps - 2nd Row (Crew Cab/Extended Cab)

Pin	Size	Color	Circuit	Function	Terminal Type ID	Option
1	0.35	RD/YE	240	Battery Positive Voltage	I	—
2	0.35	GY	157	Interior Lamp Control	I	—
3	0.5	BK	1050	Ground	I	—
4	0.5	WH/BN	6815	Inadvertent Power Control	I	—

E40 Electrical Auxiliary Heater X2 (C32)

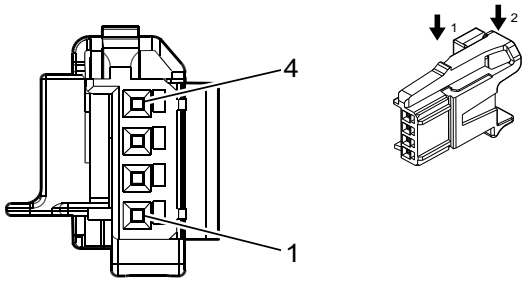

5191926

Connector Part Information

Harness Type: Instrument Panel
OEM Connector: 33358011
Service Connector: 84724190
Description: 4-Way F 0.64 Micro-Quadlock Series (BK)

Terminal Part Information

Terminal Type ID	Terminated Lead	Diagnostic Test Probe	Terminal Removal Tool	Service Terminal	Tray Name	Core Crimp	Insulation Crimp
I	Not Required	J-35616-64B (LT BU)	No Tool Required	Not Required	Not Required	Not Required	Not Required

E40 Electrical Auxiliary Heater X2 (C32)

Pin	Size	Color	Circuit	Function	Terminal Type ID	Option
1	0.35	VT	3195	Auxiliary Heater Control	I	—
2	0.5	VT/GY	539	Run/Crank Ignition 1 Voltage	I	—
3	—	—	—	Not Occupied	—	—
4	0.5	BK	1050	Ground	I	—

E63D Flood Lamp - Driver Door Handle (AU3)

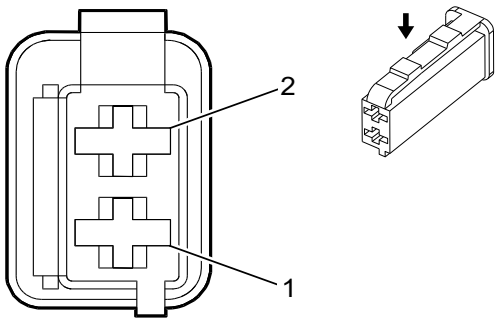

2339593

Connector Part Information

Harness Type: Driver Door Trim
OEM Connector: 13670097
Service Connector: Service by Harness - See Part Catalog
Description: 2-Way F 1.6 Timer Series (BK)

Terminal Part Information

Terminal Type ID	Terminated Lead	Diagnostic Test Probe	Terminal Removal Tool	Service Terminal	Tray Name	Core Crimp	Insulation Crimp
I	Not Required	J-35616-14 (GN)	No Tool Required	Not Required	Not Required	Not Required	Not Required

E63D Flood Lamp - Driver Door Handle (AU3)

Pin	Size	Color	Circuit	Function	Terminal Type ID	Option
1	0.35	WH/YE	7557	LED Ambient Lighting Control 1	I	—
2	0.35	BK	1150	Ground	I	—

E63P Flood Lamp - Passenger Door Handle (AU3)

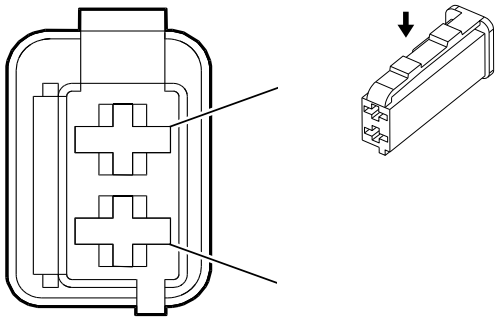

2339593

Connector Part Information

Harness Type: Passenger Door Trim
OEM Connector: 13670097
Service Connector: Service by Harness - See Part Catalog
Description: 2-Way F 1.6 Timer Series (BK)

Terminal Part Information

Terminal Type ID	Terminated Lead	Diagnostic Test Probe	Terminal Removal Tool	Service Terminal	Tray Name	Core Crimp	Insulation Crimp
I	Not Required	J-35616-14 (GN)	No Tool Required	Not Required	Not Required	Not Required	Not Required

E63P Flood Lamp - Passenger Door Handle (AU3)

Pin	Size	Color	Circuit	Function	Terminal Type ID	Option
1	0.35	WH/YE	7557	LED Ambient Lighting Control 1	I	—
2	0.35	BK	1250	Ground	I	—

F105L Roof Rail Air Bag - Left

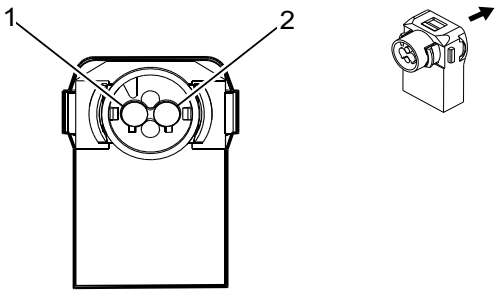

4679778

Connector Part Information

Harness Type: Body
OEM Connector: 33345783
Service Connector: 19355491
Description: 2-Way F ABX-5 Series (GY with YE Cover)

Terminal Part Information

Terminal Type ID	Terminated Lead	Diagnostic Test Probe	Terminal Removal Tool	Service Terminal	Tray Name	Core Crimp	Insulation Crimp
I	Not Required	J-35616-64B (LT BU)	No Tool Required	Not Required	Not Required	Not Required	Not Required

F105L Roof Rail Air Bag - Left

Pin	Size	Color	Circuit	Function	Terminal Type ID	Option
1	0.5	OG/L-GN	5019	Left Front Head Curtain Module High Control	I	—
2	0.5	VT/OG	5020	Left Front Head Curtain Module Low Control	I	—

F105R Roof Rail Air Bag - Right

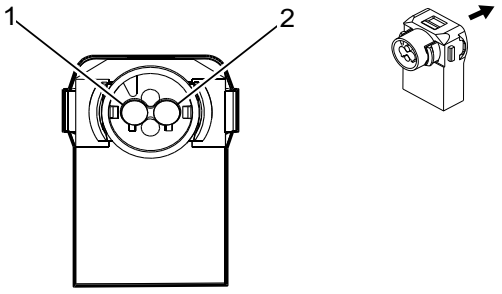

4679778

Connector Part Information

Harness Type: Body
OEM Connector: 33345783
Service Connector: 19355491
Description: 2-Way F ABX-5 Series (GY with YE Cover)

Terminal Part Information

Terminal Type ID	Terminated Lead	Diagnostic Test Probe	Terminal Removal Tool	Service Terminal	Tray Name	Core Crimp	Insulation Crimp
I	Not Required	J-35616-64B (LT BU)	No Tool Required	Not Required	Not Required	Not Required	Not Required

F105R Roof Rail Air Bag - Right

Pin	Size	Color	Circuit	Function	Terminal Type ID	Option
1	0.5	OG/GY	5021	Right Front Head Curtain Module High Control	I	—
2	0.5	WH/OG	5022	Right Front Head Curtain Module Low Control	I	—

F106D Seat Side Air Bag - Driver

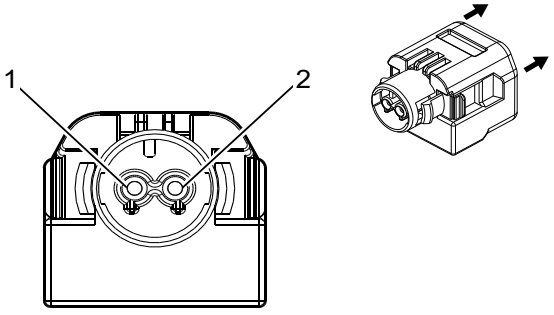

4772226

Connector Part Information

Harness Type: Driver Seat
OEM Connector: 1-1802367-1
Service Connector: Service by Harness - See Part Catalog
Description: 2-Way F 1.0 Series (PK with YE Cover)

Terminal Part Information

Terminal Type ID	Terminated Lead	Diagnostic Test Probe	Terminal Removal Tool	Service Terminal	Tray Name	Core Crimp	Insulation Crimp
I	Not Required	Not Available	No Tool Required	Not Required	Not Required	Not Required	Not Required

F106D Seat Side Air Bag - Driver

Pin	Size	Color	Circuit	Function	Terminal Type ID	Option
1	0.5	OG/L-BU	3068	Driver Side Impact Module High Control	I	—
2	0.5	BK/OG	3069	Driver Side Impact Module Low Control	I	—

F106P Seat Side Air Bag - Passenger

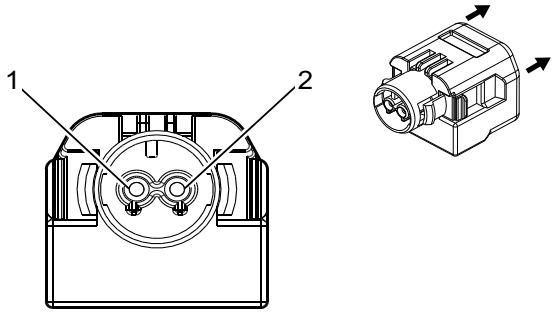

4772226

Connector Part Information

Harness Type: Passenger Seat
OEM Connector: 1801935-1
Service Connector: Service by Harness - See Part Catalog
Description: 2-Way F 1.0 Series (PK with YE Cover)

Terminal Part Information

Terminal Type ID	Terminated Lead	Diagnostic Test Probe	Terminal Removal Tool	Service Terminal	Tray Name	Core Crimp	Insulation Crimp
I	Not Required	Not Available	No Tool Required	Not Required	Not Required	Not Required	Not Required

F106P Seat Side Air Bag - Passenger

Pin	Size	Color	Circuit	Function	Terminal Type ID	Option
1	0.5	OG/GY	3066	Passenger Side Impact Module High Control	I	—
2	0.5	L-BU/OG	3067	Passenger Side Impact Module Low Control	I	—

F112D Seat Belt Retractor Pretensioner - Driver

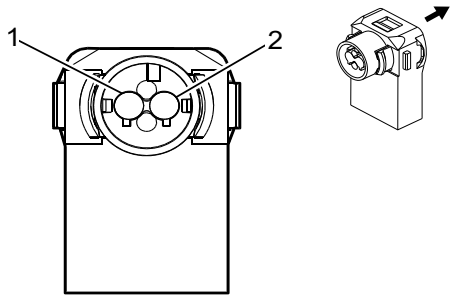

4241364

Connector Part Information

Harness Type: Body
OEM Connector: 33345778
Service Connector: 19355490
Description: 2-Way F ABX-5 Series (PU with YE Cover)

Terminal Part Information

Terminal Type ID	Terminated Lead	Diagnostic Test Probe	Terminal Removal Tool	Service Terminal	Tray Name	Core Crimp	Insulation Crimp
I	Not Required	J-35616-64B (LT BU)	No Tool Required	Not Required	Not Required	Not Required	Not Required

F112D Seat Belt Retractor Pretensioner - Driver

Pin	Size	Color	Circuit	Function	Terminal Type ID	Option
1	0.5	OG/WH	3477	Driver Seat Belt Retractor Pretensioner High Control	I	—
2	0.5	GY/OG	3478	Driver Seat Belt Retractor Pretensioner Low Control	I	—

F112P Seat Belt Retractor Pretensioner - Passenger

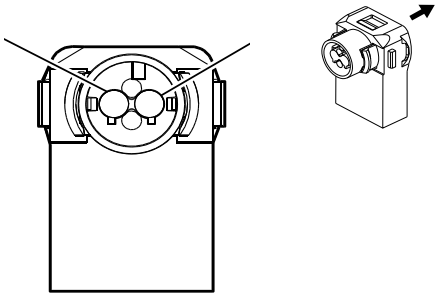

4241364

Connector Part Information

Harness Type: Body
OEM Connector: 33345778

Service Connector: 19355490
Description: 2-Way F ABX-5 Series (PU with YE Cover)

Terminal Part Information

Terminal Type ID	Terminated Lead	Diagnostic Test Probe	Terminal Removal Tool	Service Terminal	Tray Name	Core Crimp	Insulation Crimp
I	Not Required	J-35616-64B (LT BU)	No Tool Required	Not Required	Not Required	Not Required	Not Required

F112P Seat Belt Retractor Pretensioner - Passenger

Pin	Size	Color	Circuit	Function	Terminal Type ID	Option
1	0.5	OG/L-GN	3475	Passenger Seat Belt Retractor Pretensioner High Control	I	—
2	0.5	WH/OG	3476	Passenger Seat Belt Retractor Pretensioner Low Control	I	—

F113D Seat Belt Anchor Pretensioner - Driver

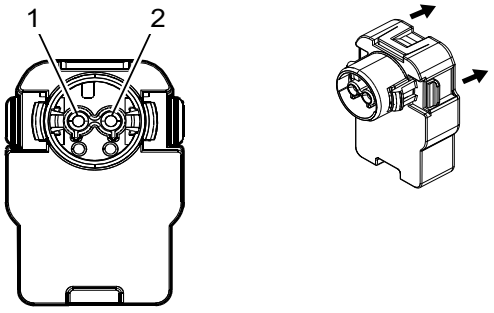

4823732

Connector Part Information

Harness Type: Body
OEM Connector: 1-1801930-1
Service Connector: 13598467
Description: 2-Way F 1.0 Series (PK with YE Cover)

Terminal Part Information

Terminal Type ID	Terminated Lead	Diagnostic Test Probe	Terminal Removal Tool	Service Terminal	Tray Name	Core Crimp	Insulation Crimp
I	Not Required	J-35616-64B (LT BU)	No Tool Required	Not Required	Not Required	Not Required	Not Required

F113D Seat Belt Anchor Pretensioner - Driver

Pin	Size	Color	Circuit	Function	Terminal Type ID	Option
1	0.5	OG/YE	3481	Driver Seat Belt Anchor Pretensioner High Control	I	—
2	0.5	YE/OG	3482	Driver Seat Belt Anchor Pretensioner Low Control	I	—

F113P Seat Belt Anchor Pretensioner - Passenger

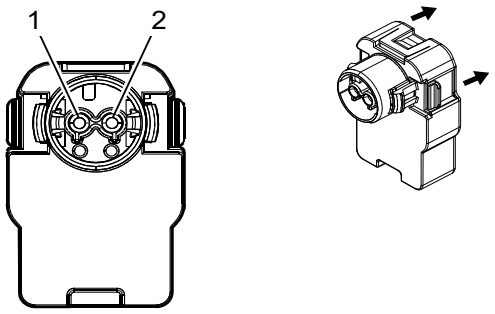

4823732

Connector Part Information

Harness Type: Body
OEM Connector: 1-1801930-1
Service Connector: 13598467
Description: 2-Way F 1.0 Series (PK with YE Cover)

Terminal Part Information

Terminal Type ID	Terminated Lead	Diagnostic Test Probe	Terminal Removal Tool	Service Terminal	Tray Name	Core Crimp	Insulation Crimp
I	Not Required	J-35616-64B (LT BU)	No Tool Required	Not Required	Not Required	Not Required	Not Required

F113P Seat Belt Anchor Pretensioner - Passenger

Pin	Size	Color	Circuit	Function	Terminal Type ID	Option
1	0.5	OG/BN	3479	Passenger Seat Belt Anchor Pretensioner High Control	I	—
2	0.5	GY/OG	3480	Passenger Seat Belt Anchor Pretensioner Low Control	I	—

G13 Generator X1 (L5P)

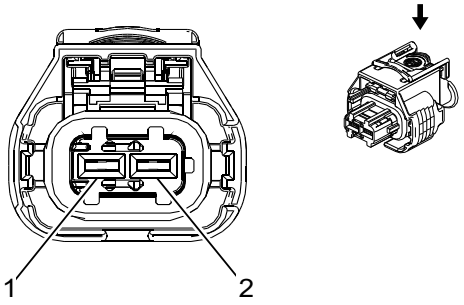

2577394

Connector Part Information

Harness Type: Engine
OEM Connector: 13930085
Service Connector: 13384371
Description: 2-Way F 2.8 Series, Sealed (BK)

Terminal Part Information

Terminal Type ID	Terminated Lead	Diagnostic Test Probe	Terminal Removal Tool	Service Terminal	Tray Name	Core Crimp	Insulation Crimp
I	Not Required	J-35616-35 (VT)	No Tool Required	Not Required	Not Required	Not Required	Not Required

G13 Generator X1 (L5P)

Pin	Size	Color	Circuit	Function	Terminal Type ID	Option
1	0.75	BN	25	Charge Indicator Control	I	—
	0.75	BN	25	Charge Indicator Control	I	KHF
2	0.5	GY	23	Generator Field Duty Cycle Signal	I	—

G13 Generator X1 (L8T)

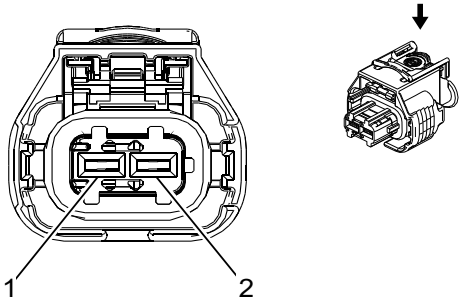

2577394

Connector Part Information

Harness Type: Engine
OEM Connector: 13930085
Service Connector: 13384371
Description: 2-Way F 2.8 Series, Sealed (BK)

Terminal Part Information

Terminal Type ID	Terminated Lead	Diagnostic Test Probe	Terminal Removal Tool	Service Terminal	Tray Name	Core Crimp	Insulation Crimp
I	Not Required	J-35616-35 (VT)	No Tool Required	Not Required	Not Required	Not Required	Not Required

G13 Generator X1 (L8T)

Pin	Size	Color	Circuit	Function	Terminal Type ID	Option
1	0.5	BN	25	Charge Indicator Control	I	—
	0.75	BN	25	Charge Indicator Control	I	—
	0.75	BN	25	Charge Indicator Control	I	KHF
	0.5	BN	25	Charge Indicator Control	I	VYU
2	0.5	GY	23	Generator Field Duty Cycle Signal	I	—

G13 Generator X1 (VYU)

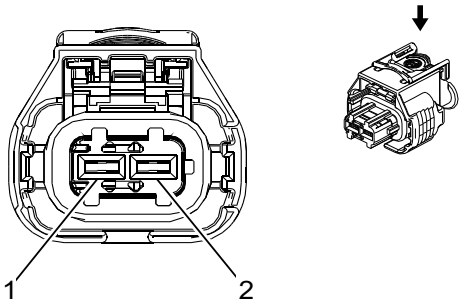

2577394

Connector Part Information

Harness Type: Snow Plow
OEM Connector: 13930085
Service Connector: Service by Harness - See Part Catalog
Description: 2-Way F 2.8 Series, Sealed (BK)

Terminal Part Information

Terminal Type ID	Terminated Lead	Diagnostic Test Probe	Terminal Removal Tool	Service Terminal	Tray Name	Core Crimp	Insulation Crimp
I	Not Required	J-35616-35 (VT)	No Tool Required	Not Required	Not Required	Not Required	Not Required

G13 Generator X1 (VYU)

Pin	Size	Color	Circuit	Function	Terminal Type ID	Option
1	0.5	BN	25	Charge Indicator Control	I	—
2	0.5	GY	23	Generator Field Duty Cycle Signal	I	—

G13E Generator - Auxiliary X2

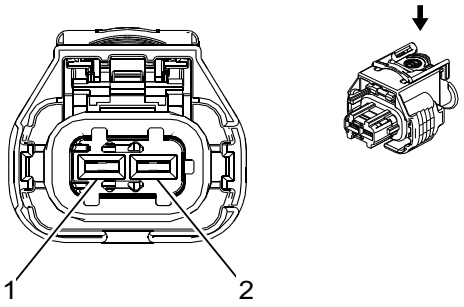

2577394

Connector Part Information

Harness Type: Engine
OEM Connector: 13930085
Service Connector: 13384371
Description: 2-Way F 2.8 Series, Sealed (BK)

Terminal Part Information

Terminal Type ID	Terminated Lead	Diagnostic Test Probe	Terminal Removal Tool	Service Terminal	Tray Name	Core Crimp	Insulation Crimp
I	Not Required	J-35616-35 (VT)	No Tool Required	Not Required	Not Required	Not Required	Not Required

G13E Generator - Auxiliary X2

Pin	Size	Color	Circuit	Function	Terminal Type ID	Option
1	0.75	BN	25	Charge Indicator Control	I	—
2	0.5	GY	23	Generator Field Duty Cycle Signal	I	—

G13E Generator - Auxiliary X2 (KHF)

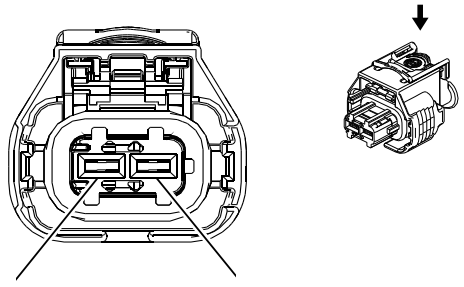

2577394

Connector Part Information

Harness Type: Engine
OEM Connector: 13930085
Service Connector: 13384371
Description: 2-Way F 2.8 Series, Sealed (BK)

Terminal Part Information

Terminal Type ID	Terminated Lead	Diagnostic Test Probe	Terminal Removal Tool	Service Terminal	Tray Name	Core Crimp	Insulation Crimp
I	Not Required	J-35616-35 (VT)	No Tool Required	Not Required	Not Required	Not Required	Not Required

G13E Generator - Auxiliary X2 (KHF)

Pin	Size	Color	Circuit	Function	Terminal Type ID	Option
1	0.75	BN	25	Charge Indicator Control	I	—
2	0.5	GY	23	Generator Field Duty Cycle Signal	I	—

G13E Generator - Auxiliary X2 (L8T)

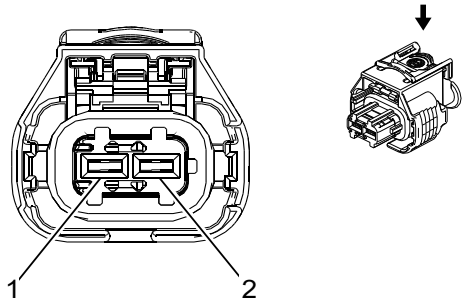

2577394

Connector Part Information

Harness Type: Engine
OEM Connector: 13930085
Service Connector: 13384371
Description: 2-Way F 2.8 Series, Sealed (BK)

Terminal Part Information

Terminal Type ID	Terminated Lead	Diagnostic Test Probe	Terminal Removal Tool	Service Terminal	Tray Name	Core Crimp	Insulation Crimp
I	Not Required	J-35616-35 (VT)	No Tool Required	Not Required	Not Required	Not Required	Not Required

G13E Generator - Auxiliary X2 (L8T)

Pin	Size	Color	Circuit	Function	Terminal Type ID	Option
1	0.75	BN	25	Charge Indicator Control	I	—
2	0.5	GY	23	Generator Field Duty Cycle Signal	I	—

G13E Generator - Auxiliary X2 (VYU)

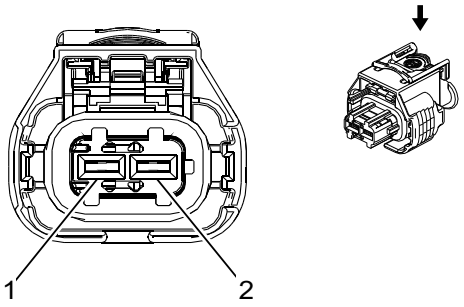

2577394

Connector Part Information

Harness Type: Snow Plow
OEM Connector: 13930085
Service Connector: Service by Harness - See Part Catalog
Description: 2-Way F 2.8 Series, Sealed (BK)

Terminal Part Information

Terminal Type ID	Terminated Lead	Diagnostic Test Probe	Terminal Removal Tool	Service Terminal	Tray Name	Core Crimp	Insulation Crimp
I	Not Required	J-35616-35 (VT)	No Tool Required	Not Required	Not Required	Not Required	Not Required

G13E Generator - Auxiliary X2 (VYU)

Pin	Size	Color	Circuit	Function	Terminal Type ID	Option
1	0.5	BN	25	Charge Indicator Control	I	—
2	0.5	GY	23	Generator Field Duty Cycle Signal	I	—

G24 Windshield Washer Pump

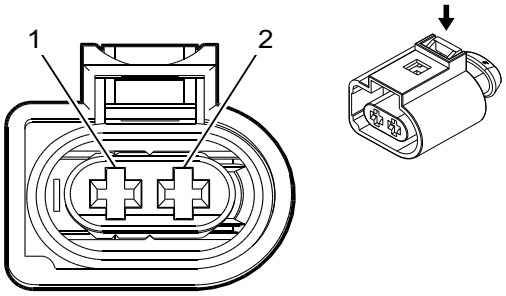

2474738

Connector Part Information

Harness Type: Body
OEM Connector: 10863916
Service Connector: 19368727
Description: 2-Way F 2.8 MDK5 Series, Sealed (BK)

Terminal Part Information

Terminal Type ID	Terminated Lead	Diagnostic Test Probe	Terminal Removal Tool	Service Terminal	Tray Name	Core Crimp	Insulation Crimp
I	Not Required	J-35616-4A (PU)	No Tool Required	Not Required	Not Required	Not Required	Not Required

G24 Windshield Washer Pump

Pin	Size	Color	Circuit	Function	Terminal Type ID	Option
1	0.5	GY/VT	228	Windshield Washer Pump Control	I	—
2	0.75	BK	150	Ground	I	—

K9 Body Control Module X1

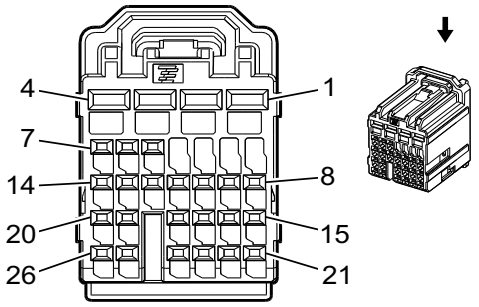

2537268

Connector Part Information

Harness Type: Instrument Panel
OEM Connector: 13824335
Service Connector: 13576031
Description: 26-Way F 0.64, 2.8 Series (NA)

Terminal Part Information

Terminal Type ID	Terminated Lead	Diagnostic Test Probe	Terminal Removal Tool	Service Terminal	Tray Name	Core Crimp	Insulation Crimp
I	13575578	J-35616-35 (VT)	J-38125-553	8100-4445	Sumitomo 22	F	D
II	13582297	J-35616-64B (LT BU)	J-38125-215A	Not Available	Not Available	Not Available	Not Available
III	13582326	J-35616-35 (VT)	J-38125-553	8100-4444	Sumitomo 22	2	A
IV	19366999	J-35616-35 (VT)	J-38125-553	8100-4443	Sumitomo 22	E	A

K9 Body Control Module X1

Pin	Size	Color	Circuit	Function	Terminal Type ID	Option
1	2.5	BK	1850	Ground	I	—
2	1	RD/D-BU	2540	Battery Positive Voltage	III	—
3	0.5	RD/GY	2140	Battery Positive Voltage	IV	—

K9 Body Control Module X1 (cont'd)

Pin	Size	Color	Circuit	Function	Terminal Type ID	Option
4	0.75	RD/BN	2240	Battery Positive Voltage	III	—
5	0.5	WH	6816	Indicator Dimming Control	II	—
6 - 7	—	—	—	Not Occupied	—	—
8	0.35	BN/BK	5720	Ignition Mode Switch Accessory LED Signal	II	—
9	0.35	WH/BN	7555	Lighting Control Switch Signal	II	—
10	—	—	—	Not Occupied	—	—
11	0.35	L-GN/BN	306	Headlamp Switch Headlamps Off Signal Control	II	—
12	—	—	—	Not Occupied	—	—
13	0.35	YE	7556	Lighting Control Switch Reference	II	—
14	0.35	GY/L-GN	328	Interior Lamp Defeat Switch Signal	II	—
15	—	—	—	Not Occupied	—	—
16	0.35	WH/VT	103	Headlamp Switch On Signal	II	—
17	—	—	—	Not Occupied	—	—
18	0.35	BU/VT	5904	Steering Column Lock Status Signal	II	—
19	0.35	BK/BN	5360	Brake Apply Sensor Low Reference	II	—
20	0.35	BU/BK	5719	Ignition Mode Switch Start LED Signal	II	—
21	0.35	GY	728	Security Indicator Control	II	—
22	0.35	L-GN/GY	13	Headlamp Switch Park Lamp Signal	II	—
23	0.35	GY	157	Interior Lamp Control	II	—
24	0.35	WH	2501	High Speed GMLAN Serial Data (-) 1	II	—
25	0.35	BU	2500	High Speed GMLAN Serial Data (+) 1	II	—
26	0.35	BU/WH	3275	Remote Function Actuator Receive Signal	II	—

K9 Body Control Module X2

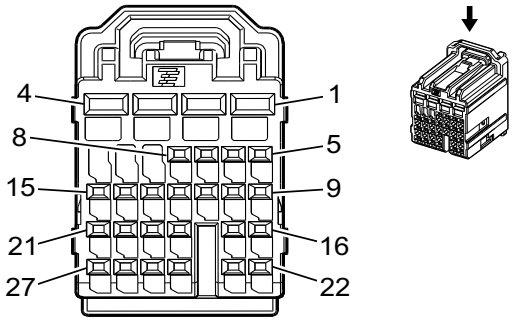

2537269

Connector Part Information

Harness Type: Instrument Panel
OEM Connector: 13824336
Service Connector: 13576032
Description: 27-Way F 0.64, 2.8 Series (BU)

Terminal Part Information

Terminal Type ID	Terminated Lead	Diagnostic Test Probe	Terminal Removal Tool	Service Terminal	Tray Name	Core Crimp	Insulation Crimp
I	13575578	J-35616-35 (VT)	J-38125-553	8100-4445	Sumitomo 22	F	D
II	13582297	J-35616-64B (LT BU)	J-38125-215A	Not Available	Not Available	Not Available	Not Available
III	19366999	J-35616-35 (VT)	J-38125-553	8100-4443	Sumitomo 22	E	A

K9 Body Control Module X2

Pin	Size	Color	Circuit	Function	Terminal Type ID	Option
1	0.5	RD/WH	2740	Battery Positive Voltage	III	—
2	2.5	BK	1850	Ground	I	—
3	0.5	RD/BN	2940	Battery Positive Voltage	III	—
4	2.5	RD/VT	4040	Battery Positive Voltage	I	—
5	0.35	VT/GN	7558	LED Ambient Lighting Control 2	II	—
6	—	—	—	Not Occupied	—	—
7	0.35	BU/YE	5361	Brake Apply Sensor Signal	II	—
8 - 9	—	—	—	Not Occupied	—	—
10	0.35	WH/BU	278	Ambient Light Sensor Signal	II	—
11	0.35	YE/BU	7295	Left Minor Endgate Ajar Signal	II	—
12	0.35	WH/BN	7296	Right Minor Endgate Ajar Signal	II	—
13	0.35	WH	5359	Brake Apply Sensor Control	II	—
14	0.35	BU/VT	1788	Traction Control Switch Signal 1	II	—
15	0.35 0.35	GY/WH GY/WH	4630 7176	AC Power Outlet Switch Signal All Windows Open Switch Signal	II II	— —
16	0.35	GY	3273	Remote Function Actuator Low Reference	II	—
17	0.35	BU/GN	5723	Ignition Mode Switch Mode Voltage	II	—
18	0.35	GY	158	Cargo Lamp Switch Signal	II	—
19	0.35	WH/GY	2935	Task Lamp Switch Signal	II	—
20	0.5	WH/BU	3691	Trailer Brake Apply Signal	II	—
21	0.5	GN/GY	6135	Local Interconnect Network Serial Data Bus 4	II	—
22	0.35	GN	5060	Low Speed GMLAN Serial Data	II	—
23 - 24	—	—	—	Not Occupied	—	—
25	0.35	GY/WH	3272	Remote Function Actuator Control	II	—
26	0.35	GN/WH	111	Hazard Switch Signal	II	—
27	0.35	YE/GN	3274	Remote Function Actuator Transmit Signal	II	—

K9 Body Control Module X3

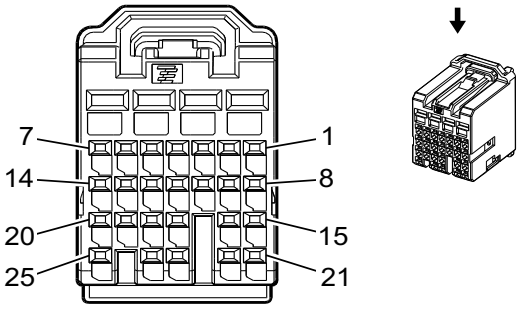

2537274

Connector Part Information

Harness Type: Instrument Panel
OEM Connector: 13824337
Service Connector: 13576037
Description: 25-Way F 0.64, 2.8 Series (GN)

Terminal Part Information

Terminal Type ID	Terminated Lead	Diagnostic Test Probe	Terminal Removal Tool	Service Terminal	Tray Name	Core Crimp	Insulation Crimp
I	13582297	J-35616-64B (LT BU)	J-38125-215A	Not Available	Not Available	Not Available	Not Available

K9 Body Control Module X3

Pin	Size	Color	Circuit	Function	Terminal Type ID	Option
1	0.35	L-GN/GY	3277	Vehicle Anti-Theft System Immobilizer Low Reference	I	BTM
	0.5	L-GN/GY	3277	Vehicle Anti-Theft System Immobilizer Low Reference	I	-BTM
2	0.35	L-GN/VT	7533	Local Interconnect Network Serial Data Bus 11	I	BTM
	0.5	L-GN/VT	7533	Local Interconnect Network Serial Data Bus 11	I	-BTM
3	0.35	GY/BK	3276	Vehicle Anti-Theft System Immobilizer Control	I	BTM
	0.5	GY/BK	3276	Vehicle Anti-Theft System Immobilizer Control	I	-BTM
4	0.35	WH/RD	1444	12V Reference	I	—
5	0.35	VT/YE	4	Accessory Ignition Voltage	I	—
6	0.35	VT/BK	3	Run/Crank Ignition 1 Voltage	I	—
7 - 8	—	—	—	Not Occupied	—	—
9	0.35	BN/L-GN	1884	Cruise Control Set/Coast/Resume/Accelerate Switch Signal	I	—
10	0.5	BK/GY	6009	Windshield Wiper Switch Low Reference	I	—
11	0.5	WH	524	Headlamp Dimmer Switch High Beam Signal	I	—
12	0.5	WH/L-GN	663	Hazard Switch Left Turn Signal	I	—
13	0.5	YE/D-BU	1714	Windshield Wiper Switch Low Signal	I	—
14	0.5	WH/GY	3849	High Beam Auto On/Off Switch Signal	I	—
15	0.35	WH/VT	1020	Off/Run/Crank Ignition Voltage	I	—
16	0.35	GY/L-GN	5737	Adaptive Cruise Control Gap Up/Down Switch Signal	I	—
17	0.5	YE/BN	307	Headlamp Switch Flash To Pass Signal	I	—

K9 Body Control Module X3 (cont'd)

Pin	Size	Color	Circuit	Function	Terminal Type ID	Option
18	0.35	L-GN/WH	3287	Horn Switch Signal	I	—
19	0.35	L-GN/WH	4115	Local Interconnect Network Serial Data Bus 15	I	—
20	0.5	GY	1715	Windshield Wiper Switch High Signal	I	—
21	0.5	VT/YE	5526	Tap Up/Tap Down Switch Signal	I	—
22	0.35	WH/BK	1073	Ignition Key Resistor Signal	I	—
23	0.35	L-GN	4512	Wireless Charging System Charge Indicator Control	I	—
24	0.5	VT/D-BU	664	Hazard Switch Right Turn Signal	I	—
25	0.35	WH/BK	94	Windshield Washer Switch Signal	I	—

K9 Body Control Module X4

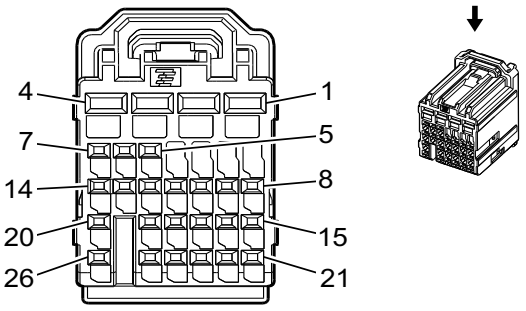

2537270

Connector Part Information

Harness Type: Body
OEM Connector: 13826914
Service Connector: 13576033
Description: 26-Way F 0.64, 2.8 Series (BK)

Terminal Part Information

Terminal Type ID	Terminated Lead	Diagnostic Test Probe	Terminal Removal Tool	Service Terminal	Tray Name	Core Crimp	Insulation Crimp
I	13575577	J-35616-35 (VT)	J-38125-553	8100-4443	Sumitomo 22	E	A
II	13582297	J-35616-64B (LT BU)	J-38125-215A	Not Available	Not Available	Not Available	Not Available
III	13582298	J-35616-64B (LT BU)	J-38125-215A	Not Available	Not Available	Not Available	Not Available
IV	13582326	J-35616-35 (VT)	J-38125-553	8100-4444	Sumitomo 22	2	A
V	13582326	J-35616-35 (VT)	J-38125-553	8100-4444	Sumitomo 22	E	A
VI	13582326	J-35616-35 (VT)	J-38125-553	8100-4444	Sumitomo 22	Not Available	Not Available
VII	19366999	J-35616-35 (VT)	J-38125-553	8100-4443	Sumitomo 22	E	A

K9 Body Control Module X4

Pin	Size	Color	Circuit	Function	Terminal Type ID	Option
1	0.75	YE	712	Left Headlamp Low Beam Control	IV	—
2	1	YE	312	Right Headlamp Low Beam Control	IV	—
3	0.35	GN/VT	1315	Right Front Turn Signal Lamp Control	I	—
	0.35	GN/VT	1315	Right Front Turn Signal Lamp Control	VI	—
	0.5	GN/VT	1315	Right Front Turn Signal Lamp Control	V	—
	0.5	GN/VT	1315	Right Front Turn Signal Lamp Control	VII	—
4	1	BN/GN	19	Right Rear Stop/Turn Lamp Control	IV	—
5 - 6	—	—	—	Not Occupied	—	—
7	0.35	GY/BU	7538	Left Front DRL Control	II	—
8	0.35	VT/GY	1630	Steering Column Key Cylinder Lock Solenoid Control	II	—
9	0.35	WH/VT	968	—	II	—
10	—	—	—	Not Occupied	—	—
11	0.35	VT/WH	5065	Stop Lamp Relay Coil Control	II	—
	0.35	VT/WH	5065	Stop Lamp Relay Coil Control	III	—
12	0.35	GY/VT	755	RAP Relay Coil Control	II	—
13	0.35	GN/YE	6846	Rear License Lamp Control	II	—
14	0.35	BN/GY	2268	Windshield Washer Relay Control	II	—
15	0.35	GN/VT	5199	Run/Crank Relay Coil Control	II	—
16	0.35	GY	91	Windshield Wiper Motor Relay Coil Control	II	—
17	0.35	BN/GN	196	Windshield Wiper Motor Park Switch Signal	II	—
18	0.35	WH/YE	5075	Current Sensor Signal	II	—
	0.35	WH/YE	5075	Current Sensor Signal	III	—
	0.35	GN/BU	761	Blower Speed Feedback Signal	III	—
19	0.35	BU/YE	6844	ABS/TCS Hill Descent Control Switch Signal	II	—
	0.35	BU/YE	7176	All Windows Open Switch Signal	II	—
20	0.75	RD/YE	2340	Battery Positive Voltage	III	—
21	0.35	BU/VT	5076	Current Sensor Control	II	—
22	0.35	VT/YE	5985	Accessory Wakeup Serial Data	II	—
23	0.35	WH/BU	5986	Serial Data Communication Enable	II	—
24	0.35	BN/GN	4064	Hood Status B Signal	II	—
25	0.35	YE/BU	4086	Pushbutton Start Challenge Active Signal	II	—
26	0.75	BK/WH	2351	Signal Ground	III	—

K9 Body Control Module X5

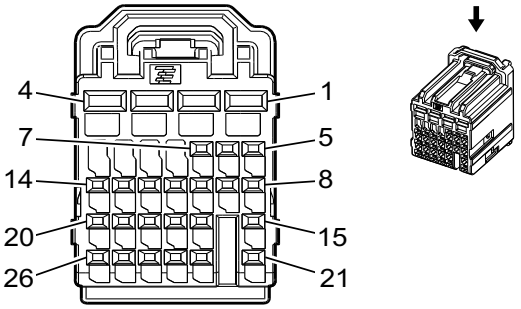

2537271

Connector Part Information

Harness Type: Body
OEM Connector: 13826916
Service Connector: 13576034
Description: 26-Way F 0.64, 2.8 Series (BN)

Terminal Part Information

Terminal Type ID	Terminated Lead	Diagnostic Test Probe	Terminal Removal Tool	Service Terminal	Tray Name	Core Crimp	Insulation Crimp
I	13575577	J-35616-35 (VT)	J-38125-553	8100-4443	Sumitomo 22	E	A
II	13582297	J-35616-64B (LT BU)	J-38125-215A	Not Available	Not Available	Not Available	Not Available
III	13582326	J-35616-35 (VT)	J-38125-553	8100-4444	Sumitomo 22	2	A
IV	19366999	J-35616-35 (VT)	J-38125-553	8100-4443	Sumitomo 22	E	A

K9 Body Control Module X5

Pin	Size	Color	Circuit	Function	Terminal Type ID	Option
1	1	YE/D-BU	18	Left Rear Stop/Turn Lamp Control	III	—
2	0.35	BU/WH	1314	Left Front Turn Signal Lamp Control	I	—
3	0.5	RD/L-GN	5140	Battery Positive Voltage	IV	—
4	0.5	RD/WH	3440	Battery Positive Voltage	IV	—
5	—	—	—	Not Occupied	—	—
6	0.35	BK/VT	5077	Current Sensor Low Reference	II	—
7	0.35	BU/BN	7539	Right Front DRL Control	II	—
8	0.5	BU/WH	5186	Left Trailer Turn Signal Lamp Control	II	—
9	0.35	BU/VT	7729	Major Endgate Low Relay Control	II	—
10	0.5	BN/WH	1317	Fog Lamp Relay Control	II	—
11	0.35	WH/L-GN	7728	Major Endgate High Relay Control	II	—
12	0.35	WH/D-BU	6311	Cruise/ETC/TCC Brake Signal	II	—
13	0.35	YE	6812	Out of Park Signal	II	—
14	0.35	VT/BN	300	Run Ignition 3 Voltage	II	—
15	0.35	BU/GY	4672	Dome Lamp Off Indicator Control	II	—
16	—	—	—	Not Occupied	—	—

K9 Body Control Module X5 (cont'd)

Pin	Size	Color	Circuit	Function	Terminal Type ID	Option
17	0.5	YE/GY	5187	Right Trailer Turn Signal Lamp Control	II	—
18	0.35	BN/VT	1969	Headlamp High Beam Relay Control	II	—
19	0.35	BN/WH	28	Horn Relay Control	II	—
20	0.35	YE	7755	AC Power Outlet Status Indicator Control	II	—
21	0.5	YE/BN	2229	Left Headlamp Relay Control	II	—
22	0.35	BU	45	Park Lamp Relay Control	II	—
23	0.5	L-GN/YE	2081	Exhaust Brake Switch Control	II	—
24	0.35	WH/VT	860	Front Windshield Wiper Switch High Signal	II	—
25	0.35	BN	7754	AC Power Outlet Enable	II	—
26	0.35	BU/BN	38	Backup Lamp Relay Control	II	—

K9 Body Control Module X6

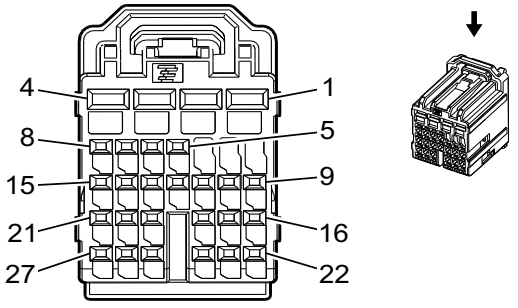

2537272

Connector Part Information

Harness Type: Body
OEM Connector: 13826917
Service Connector: 13576035
Description: 27-Way F 0.64, 2.8 Series (PK)

Terminal Part Information

Terminal Type ID	Terminated Lead	Diagnostic Test Probe	Terminal Removal Tool	Service Terminal	Tray Name	Core Crimp	Insulation Crimp
I	13575578	J-35616-35 (VT)	J-38125-553	8100-4445	Sumitomo 22	F	D
II	13582297	J-35616-64B (LT BU)	J-38125-215A	Not Available	Not Available	Not Available	Not Available
III	13582298	J-35616-64B (LT BU)	J-38125-215A	Not Available	Not Available	Not Available	Not Available
IV	13582326	J-35616-35 (VT)	J-38125-553	8100-4444	Sumitomo 22	2	A

K9 Body Control Module X6

Pin	Size	Color	Circuit	Function	Terminal Type ID	Option
1	0.75	GY	5911	Door Lock Actuator Lock Control 2	IV	—

K9 Body Control Module X6 (cont'd)

Pin	Size	Color	Circuit	Function	Terminal Type ID	Option
2	0.75	GY	295	Door Lock Actuator Lock Control	IV	—
3	2.5	BK	1150	Ground	I	—
4	0.75	BN/YE	294	Door Lock Actuator Unlock Control	IV	—
5	0.35	BN	7291	Major Endgate Release Switch Signal Interior	II	—
6	0.35	BU/VT	1124	Door Lock Key Switch Unlock Signal	II	—
7	0.35	WH/GY	7297	Minor Endgate High Relay Control	II	—
8	—	—	—	Not Occupied	—	—
9	0.35	L-GN/ D-BU	6133	Local Interconnect Network Serial Data Bus 2	II	—
10	0.35	L-GN/YE	6134	Local Interconnect Network Serial Data Bus 3	III	—
11	—	—	—	Not Occupied	—	—
12	0.35	YE/BK	5356	Left Tail Lamp Outage Detection Signal	II	—
13	0.35	L-GN/WH	3438	Exhaust Brake Switch Signal	II	—
14	0.35	GY	7292	Major Endgate Release Switch Signal Exterior	II	—
15	0.35	YE	7294	Minor Endgate Release Switch Discrete Signal Exterior	II	—
16	0.5	L-GN/BN	6132	Local Interconnect Network Serial Data Bus 1	II	—
17 - 20	—	—	—	Not Occupied	—	—
21	0.35	WH/VT	6821	Surveillance Switch Signal	II	—
22	0.35	VT/YE	5357	Right Tail Lamp Outage Detection Signal	II	—
23	—	—	—	Not Occupied	—	—
24	0.5	BU	2500	High Speed GMLAN Serial Data (+) 1	II	—
25	0.5	WH	2501	High Speed GMLAN Serial Data (-) 1	II	—
26	0.35	BN/WH	1429	Standing Lamp Relay Control	II	—
27	0.35	BN/WH	781	Driver Door Lock Switch Unlock Signal	II	—

K9 Body Control Module X7

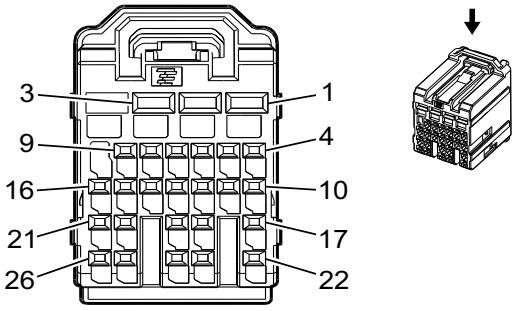

2537273

Connector Part Information

Harness Type: Body
OEM Connector: 13826915
Service Connector: 13576036
Description: 26-Way F 0.64, 2.8 Series (GY)

Terminal Part Information

Terminal Type ID	Terminated Lead	Diagnostic Test Probe	Terminal Removal Tool	Service Terminal	Tray Name	Core Crimp	Insulation Crimp
I	13582297	J-35616-64B (LT BU)	J-38125-215A	Not Available	Not Available	Not Available	Not Available
II	13582326	J-35616-35 (VT)	J-38125-553	8100-4444	Sumitomo 22	E	A
III	19366999	J-35616-35 (VT)	J-38125-553	8100-4443	Sumitomo 22	E	A

K9 Body Control Module X7

Pin	Size	Color	Circuit	Function	Terminal Type ID	Option
1 - 2	—	—	—	Not Occupied	—	—
3	0.5	WH/BN	6815	Inadvertent Power Control	III	—
	0.5	WH/BN	6815	Inadvertent Power Control	II	—
4	0.5	GY/BU	7762	Cargo Bed Lamp Control	I	—
5	0.35	BU	2082	Puddle Lamp Control	I	—
6	0.35	YE/WH	816	Brake Transmission Shift Interlock Solenoid Control	I	—
7	0.35	GY/BU	7298	Minor Endgate Low Relay Control	I	—
8	0.35	GY/GN	5996	Driver Outside Rear View Mirror Puddle Lamp Control	I	—
9	0.35	YE	6817	LED Backlight Dimming Control	I	—
10	—	—	—	Not Occupied	—	—
11	0.35	BN/YE	780	Driver Door Lock Switch Lock Signal	I	—
12	0.35	BN	4511	Wireless Charging System Fault Indicator Control	I	—
13	0.35	GN/WH	1932	Shift Select Switch Park Signal	I	—
14	0.35	WH/YE	7545	Right Front Turn Lamp Feedback Signal	I	—
15	0.35	BU/GY	553	Shift Select Switch Performance Signal	I	—
16	0.5	WH/BU	3691	Trailer Brake Apply Signal	I	—
17	0.35	BU	2082	Puddle Lamp Control	I	—
18	—	—	—	Not Occupied	—	—
19	0.35	GY	156	Courtesy Lamp Switch Signal	I	—
20	—	—	—	Not Occupied	—	—
21	0.35	YE/VT	244	Passenger Door Lock Switch Lock Control	I	—
22	0.35	WH/YE	7557	LED Ambient Lighting Control 1	I	—
23	—	—	—	Not Occupied	—	—
24	0.35	BN/VT	245	Passenger Door Lock Switch Unlock Control	I	—
25	0.35	VT/BK	6568	Front Turn Lamp Feedback Signal	I	—
26	—	—	—	Not Occupied	—	—

K17 Electronic Brake Control Module

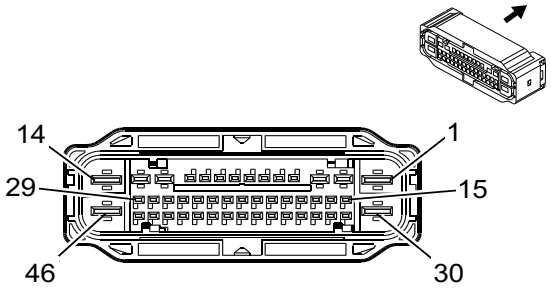

4162046

Connector Part Information

Harness Type: Body
OEM Connector: 33222138
Service Connector: 19333026
Description: 46-Way F 1.2 OCS, 2.8, 4.8 CTS Series, Sealed (GY)

Terminal Part Information

Terminal Type ID	Terminated Lead	Diagnostic Test Probe	Terminal Removal Tool	Service Terminal	Tray Name	Core Crimp	Insulation Crimp
I	19332900	J-35616-17 (LT GN)	J-38125-215A	Not Available	Not Available	Not Available	Not Available
II	19371240	J-35616-16 (LT GN)	J-38125-559	Not Available	Not Available	Not Available	Not Available
III	Not Available	J-35616-35 (VT)	J-38125-215A	Not Available	Not Available	Not Available	Not Available

K17 Electronic Brake Control Module

Pin	Size	Color	Circuit	Function	Terminal Type ID	Option
1	4	RD/YE	442	Battery Positive Voltage	I	—
2	2.5	WH	2001	Park Brake Motor Apply Left Rear Control	III	—
3	2.5	GY/BK	4369	Park Brake Motor Low Reference Left Rear	III	—
4	0.5	GY/WH	7064	Wheel Speed Sensor Control Left Front	II	—
5	0.5	GY	830	Wheel Speed Sensor Signal Left Front	II	—
6	—	—	—	Not Occupied	—	—
7	0.5	BU/YE	6105	High Speed GMLAN Serial Data (+) 2	II	—
8	0.5	WH	6106	High Speed GMLAN Serial Data (-) 2	II	—
9	0.5	WH/D-BU	5986	Serial Data Communication Enable	II	—
10	0.5	GY/BN	7065	Wheel Speed Sensor Control Right Front	II	—
11	0.5	YE	872	Wheel Speed Sensor Signal Right Front	II	—
12	2.5	L-GN/VT	1988	Park Brake Motor Apply Right Rear Control	III	—
13	2.5	GY	4368	Park Brake Motor Low Reference Right Rear	III	—
14	4	BK	150	Ground	I	—
15	0.5	GY/BK	7127	Wheel Speed Sensor Control Left Rear	II	—
16	0.5	BU	884	Wheel Speed Sensor Signal Left Rear	II	—
17 - 20	—	—	—	Not Occupied	—	—
21	0.35	BN	2417	Park Brake Switch Monitor Signal 2	II	—

K17 Electronic Brake Control Module (cont'd)

Pin	Size	Color	Circuit	Function	Terminal Type ID	Option
22	0.35	GY/RD	2414	Park Brake Switch Voltage Reference 1	II	—
23	0.35	YE/RD	2415	Park Brake Switch Voltage Reference 2	II	—
24	0.35	BU/VT	1134	Park Brake Switch Signal	II	—
25	0.5	WH	2501	High Speed GMLAN Serial Data (-) 1	II	—
26	0.5	WH	2501	High Speed GMLAN Serial Data (-) 1	II	—
27	0.5	L-GN/GY	333	Brake Fluid Level Sensor Signal	II	—
28	0.5	GY/YE	7128	Wheel Speed Sensor Control Right Rear	II	—
29	0.5	VT	882	Wheel Speed Sensor Signal Right Rear	II	—
30	4	RD/VT	1640	Battery Positive Voltage	I	—
31	0.35	BU/BK	2416	Park Brake Switch Monitor Signal 1	II	—
32	0.35	YE	2418	Park Brake Switch Test Signal	II	—
33 - 35	—	—	—	Not Occupied	—	—
36	0.35	L-GN/GY	817	Vehicle Speed Signal	II	—
37 - 38	—	—	—	Not Occupied	—	—
39	0.5	BN/D-BU	1602	Brake Lining Wear Sensor Signal Front	II	—
40	0.5	L-GN/YE	1616	Brake Lining Wear Sensor Signal Rear	II	—
41	0.5	BU	2500	High Speed GMLAN Serial Data (+) 1	II	—
42	0.5	BU	2500	High Speed GMLAN Serial Data (+) 1	II	—
43	0.35	L-GN/BN	2087	Combined Vehicle Inertial Sensor Supply Voltage	II	—
44 - 45	—	—	—	Not Occupied	—	—
46	4	BK	2250	Ground	I	—

K20 Engine Control Module X1 (L5P)

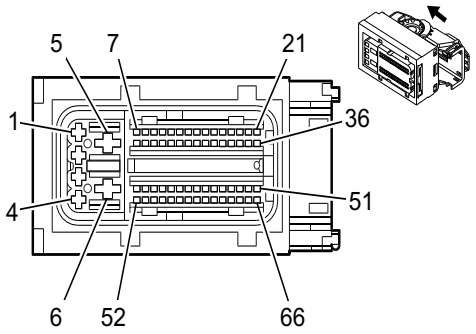

2498868

Connector Part Information

Harness Type: Engine
OEM Connector: 35059716
Service Connector: 19370822
Description: 66-Way F 0.64 MTS-B, 2.8 ATS, 6.3 Ducon Series, Sealed (BK)

Terminal Part Information

Terminal Type ID	Terminated Lead	Diagnostic Test Probe	Terminal Removal Tool	Service Terminal	Tray Name	Core Crimp	Insulation Crimp
I	13575862	J-35616-64B (LT BU)	J-38125-12A	1719532-5	Lear 7	J	J
II	13578863	J-35616-4A (PU)	J-38125-36	964280-2	Yazaki 15	E	C
III	13578863	J-35616-4A (PU)	J-38125-36	964280-2	Yazaki 15	Not Available	Not Available
IV	13584448	J-35616-64B (LT BU)	J-38125-215A	1719532-5	Lear 7	J	J
V	Not Available	J-35616-42 (RD)	J-38125-215A	Not Available	Not Available	Not Available	Not Available

K20 Engine Control Module X1 (L5P)

Pin	Size	Color	Circuit	Function	Terminal Type ID	Option
1	0.75	VT/D-BU	5290	Powertrain Main Relay Fused Supply 1	III	—
2	0.5	VT/D-BU	5290	Powertrain Main Relay Fused Supply 1	II	—
3	—	—	—	Not Occupied	—	—
4	0.5	RD/BN	440	Battery Positive Voltage	II	—
5	2.5	VT/D-BU	5290	Powertrain Main Relay Fused Supply 1	V	—
6	2.5	BK/WH	451	Signal Ground	V	—
7	0.5	VT/YE	5985	Accessory Wakeup Serial Data	IV	—
8 - 9	—	—	—	Not Occupied	—	—
10	0.5	L-GN/WH	492	Mass Air Flow Sensor Signal	IV	—
11	0.5	BU/GY	636	Outside Ambient Air Temperature Sensor Signal	IV	—
12	—	—	—	Not Occupied	—	—
13	0.5	WH/RD	1164	Accelerator Pedal Position 5V Reference 1	IV	—
14	0.5	BN/RD	1274	Accelerator Pedal Position 5V Reference 2	IV	—
15	0.5	L-GN/WH	1162	Accelerator Pedal Position Signal 2	IV	—
16	0.5	BK/VT	1272	Accelerator Pedal Position Low Reference 2	IV	—
17 - 20	—	—	—	Not Occupied	—	—
21	0.5	YE	2928	Fuel Metering Valve High Control	IV	—
22	0.5	VT/L-GN	439	Run/Crank Ignition 1 Voltage	IV	—
23	—	—	—	Not Occupied	—	—
24	0.5	WH/D-BU	6311	Cruise/ETC/TCC Brake Signal	IV	—
25	0.5	BN/GY	4008	Humidity Sensor Signal	IV	—
26	0.5	BK/D-BU	61	Outside Ambient Temperature Sensor Low Reference	IV	—
27	0.5	BK/D-BU	1271	Accelerator Pedal Position Low Reference 1	IV	—
28	0.5	YE/WH	1161	Accelerator Pedal Position Signal 1	IV	—
29 - 32	—	—	—	Not Occupied	—	—
33	0.5	BN/WH	419	Check Engine Indicator Control	IV	—
34	0.5	L-GN/BN	507	Wait To Start Indicator Control	IV	—
35	0.5	WH/GY	459	A/C Compressor Clutch Relay Control	IV	—
36	0.5	BN/BK	2929	Fuel Metering Valve Low Control	IV	—
37 - 38	—	—	—	Not Occupied	—	—
39	0.5	WH	4499	High Speed GMLAN Serial Data (-) 7	IV	—
40	0.5	WH	2501	High Speed GMLAN Serial Data (-) 1	I	—

K20 Engine Control Module X1 (L5P) (cont'd)

Pin	Size	Color	Circuit	Function	Terminal Type ID	Option
41 - 42	—	—	—	Not Occupied	—	—
43	0.5	BK/YE	5382	Brake Position Sensor Low Reference	IV	—
44	0.5	WH/RD	5381	Brake Position Sensor 5V Reference	IV	—
45	0.5	WH/D-BU	6289	Induction Air Temperature Sensor Signal	IV	—
46	0.5	BN/RD	2700	A/C Pressure Sensor 5V Reference	IV	—
47	0.5	L-GN	380	A/C Refrigerant Pressure Sensor Signal	IV	—
48	0.5	BK/BN	5514	A/C Refrigerant Pressure Sensor Low Reference	IV	—
49	—	—	—	Not Occupied	—	—
50	0.5	WH/BK	6341	Powertrain Relay Contact Signal	IV	—
51	0.5	YE	5991	Powertrain Relay Coil Control	IV	—
52 - 53	—	—	—	Not Occupied	—	—
54	0.5	BU/BN	4498	High Speed GMLAN Serial Data (+) 7	IV	—
55	0.5	BU	2500	High Speed GMLAN Serial Data (+) 1	I	—
56 - 57	—	—	—	Not Occupied	—	—
58	0.5	L-GN/VT	4621	Local Interconnect Network Serial Data Bus 21	IV	—
59	0.5	WH/L-GN	5380	Brake Position Sensor Signal	IV	—
60	0.5	BK/VT	2760	Intake Air Temperature Sensor Low Reference	IV	—
61	0.5	GY	4109	Driver Mode Switch 5V Reference	IV	—
62	0.5	WH/BN	2203	Enhanced Driver Mode 2 Switch Signal	IV	L5P
	0.5	WH/BN	4108	Driver Mode Switch Signal	IV	L5P
63	0.5	BK/VT	3109	Economy Mode Switch Low Reference	IV	—
64	—	—	—	Not Occupied	—	—
65	0.5	YE/BK	625	Starter Enable Relay Control	IV	—
66	0.5	L-GN/GY	465	Fuel Pump Primary Relay Control	IV	—

K20 Engine Control Module X2 (L5P)

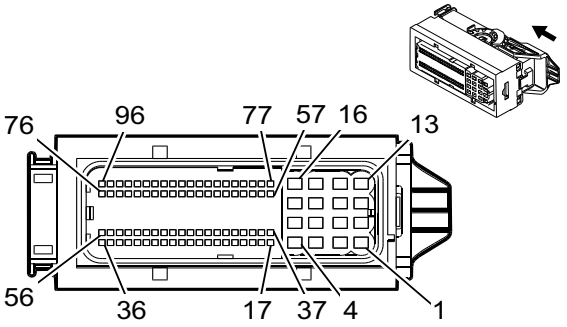

4115094

Connector Part Information

Harness Type: Glow Plug Jumper
OEM Connector: 12685985
Service Connector: Service by Harness - See Part Catalog
Description: 96-Way F 0.64 MTS-B, 2.8 ATS Series, Sealed (BK)

Terminal Part Information

Terminal Type ID	Terminated Lead	Diagnostic Test Probe	Terminal Removal Tool	Service Terminal	Tray Name	Core Crimp	Insulation Crimp
I	Not Required	J-35616-4A (PU)	No Tool Required	Not Required	Not Required	Not Required	Not Required
II	Not Required	J-35616-64B (LT BU)	No Tool Required	Not Required	Not Required	Not Required	Not Required

K20 Engine Control Module X2 (L5P)

Pin	Size	Color	Circuit	Function	Terminal Type ID	Option
1	0.75	VT/GN	4806	Direct Fuel Injector (DFI) High Voltage Control Cylinder 6	I	L5P
2	0.75	YE/GY	4807	Direct Fuel Injector (DFI) High Voltage Control Cylinder 7	I	L5P
3	0.75	GY/BU	4804	Direct Fuel Injector (DFI) High Voltage Control Cylinder 4	I	L5P
4	0.75	BN	4801	Direct Fuel Injector (DFI) High Voltage Control Cylinder 1	I	L5P
5	0.75	VT/GY	4906	Direct Fuel Injector (DFI) High Voltage Supply Cylinder 6	I	L5P
6	0.75	WH/YE	4907	Direct Fuel Injector (DFI) High Voltage Supply Cylinder 7	I	L5P
7	0.75	BU/WH	4904	Direct Fuel Injector (DFI) High Voltage Supply Cylinder 4	I	L5P
8	0.75	BN/WH	4901	Direct Fuel Injector (DFI) High Voltage Supply Cylinder 1	I	L5P
9	0.75	GN/GY	4903	Direct Fuel Injector (DFI) High Voltage Supply Cylinder 3	I	L5P
10	0.75	GY/WH	4908	Direct Fuel Injector (DFI) High Voltage Supply Cylinder 8	I	L5P
11	0.75	GN/WH	4905	Direct Fuel Injector (DFI) High Voltage Supply Cylinder 5	I	L5P
12	0.75	BU/GY	4902	Direct Fuel Injector (DFI) High Voltage Supply Cylinder 2	I	L5P
13	0.75	GN	4803	Direct Fuel Injector (DFI) High Voltage Control Cylinder 3	I	L5P
14	0.75	GY	4808	Direct Fuel Injector (DFI) High Voltage Control Cylinder 8	I	L5P
15	0.75	WH/GN	4805	Direct Fuel Injector (DFI) High Voltage Control Cylinder 5	I	L5P
16	0.75	BU	4802	Direct Fuel Injector (DFI) High Voltage Control Cylinder 2	I	L5P
17	0.5	BK/VT	2755	Oil Pressure Sensor Low Reference	II	L5P
18	0.5	YE/BN	331	Oil Pressure Sensor Signal	II	L5P
19	0.5	WH/RD	2705	Oil Pressure Sensor 5V Reference	II	L5P
20	0.5	BU/RD	5047	Exhaust Gas Recirculation 5V Reference 1	II	L5P
21	0.5	BN/WH	5763	Exhaust Gas Recirculation Valve Sensor Signal	II	L5P
22	0.5	BK/BN	2753	Exhaust Gas Recirculation Sensor Low Reference	II	L5P
23	—	—	—	Not Occupied	—	—
24	0.5	BN/YE	2161	Fuel Rail Pressure Sensor 2 Signal	II	L5P
25	—	—	—	Not Occupied	—	—
26	0.5	BN	7348	Induction Air Temperature Sensor 2 Signal	II	L5P
27 - 29	—	—	—	Not Occupied	—	—

K20 Engine Control Module X2 (L5P) (cont'd)

Pin	Size	Color	Circuit	Function	Terminal Type ID	Option
30	0.5	BU	410	Engine Coolant Temperature Sensor Signal	II	L5P
31	0.5	BN	25	Charge Indicator Control	II	L5P
32 - 36	—	—	—	Not Occupied	—	—
37	0.5	BK/GY	5296	Camshaft Position Exhaust Sensor Low Reference 1	II	L5P
38	0.5	VT/BK	5273	Camshaft Position Exhaust Sensor 1	II	L5P
39	0.5	GY/YE	5297	Camshaft Position Exhaust Sensor Control 1	II	L5P
40	0.5	VT/RD	3652	EGR Cooler Bypass Position Sensor 5V Reference	II	L5P
41	0.5	GN/GY	3654	EGR Cooler Bypass Position Sensor Signal	II	L5P
42	0.5	BK/BU	3653	EGR Cooler Bypass Position Sensor Low Reference	II	L5P
43	0.5	BK/BN	2752	Throttle Position Sensor Low Reference	II	L5P
44	0.5	BU/WH	3630	Throttle Position Sensor (SENT1) Signal	II	L5P
45	0.5	BN/RD	2701	Throttle Position Sensor 5V Reference	II	L5P
46 - 49	—	—	—	Not Occupied	—	—
50	0.5	BK/BN	2761	Coolant Temperature Sensor Low Reference	II	L5P
51	0.5	GY	23	Generator Field Duty Cycle Signal	II	L5P
52 - 56	—	—	—	Not Occupied	—	—
57	0.5	BK/GN	2919	Fuel Rail Pressure Sensor Low Reference	II	L5P
58	0.5	BU/WH	2918	Fuel Rail Pressure Sensor Signal	II	L5P
59	0.5	BN/RD	2917	Fuel Rail Pressure Sensor 5V Reference	II	L5P
60	0.5	GY/RD	2704	Manifold Absolute Pressure Sensor 5V Reference	II	L5P
61	0.5	GN/WH	432	Manifold Absolute Pressure Sensor Signal	II	L5P
62	0.5	BK/GN	469	Manifold Absolute Pressure Sensor Low Reference	II	L5P
63 - 68	—	—	—	Not Occupied	—	—
69	0.5	BN/BU	2926	Hydrocarbon Injector High Control	II	L5P
70	—	—	—	Not Occupied	—	—
71	0.5	VT/BU	6091	Crankshaft Position Sensor Replicated Signal	II	L5P
72	0.5	VT/BN	2927	Hydrocarbon Injector Low Control	II	L5P
73	—	—	—	Not Occupied	—	—
74	0.5	YE	581	Throttle Actuator Control Open	II	L5P
75	0.5	BN/WH	582	Throttle Actuator Control Close	II	L5P
76	0.75	BK/YE	2834	Fuel Rail Pressure Solenoid Low Reference	II	L5P
77 - 83	—	—	—	Not Occupied	—	—
84	0.5	BK/VT	6272	Crankshaft 60X Sensor Low Reference	II	L5P
85	0.5	GN	6271	Crankshaft 60X Sensor Signal	II	L5P
86	0.5	VT/BU	6270	Crankshaft 60X Sensor 5V Reference	II	L5P
87	0.5	BN/GN	1174	Oil Level Switch Signal	II	L5P
88 - 90	—	—	—	Not Occupied	—	—
91	0.5	BU/GN	7071	Heater Fuel Control	II	L5P
92	0.5	BN/VT	3656	EGR Cooler Bypass Motor Close Control	II	L5P
93	0.5	YE/GN	3655	EGR Cooler Bypass Motor Open Control	II	L5P
94	0.5	VT/BK	5746	Exhaust Gas Recirculation Valve Motor Low Signal	II	L5P

K20 Engine Control Module X2 (L5P) (cont'd)

Pin	Size	Color	Circuit	Function	Terminal Type ID	Option
95	0.5	WH/VT	5764	Exhaust Gas Recirculation Valve Motor High Signal	II	L5P
96	0.75	BU/WH	2530	Fuel Rail Pressure Solenoid Control	II	L5P

K20 Engine Control Module X3 (L5P)

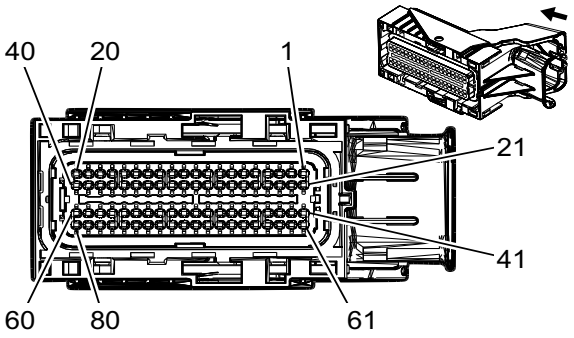

2474736

Connector Part Information

Harness Type: Engine
OEM Connector: 13782479
Service Connector: 13577545
Description: 80-Way F MX123 Series, Sealed (BK with BU Terminal Position Assurance)

Terminal Part Information

Terminal Type ID	Terminated Lead	Diagnostic Test Probe	Terminal Removal Tool	Service Terminal	Tray Name	Core Crimp	Insulation Crimp
I	19330179	J-35616-64B (LT BU)	J-38125-215A	Not Available	Not Available	Not Available	Not Available

K20 Engine Control Module X3 (L5P)

Pin	Size	Color	Circuit	Function	Terminal Type ID	Option
1	0.75	BN	3099	DEF Dosing Valve High Control	I	—
2	—	—	—	Not Occupied	—	—
3	0.5	L-GN/ D-BU	3889	DEF Power Module Relay Control	I	—
4 - 11	—	—	—	Not Occupied	—	—
12	0.5	YE/BK	3682	Charge Air Cooler Inlet Temperature Sensor Low Reference	I	—
13	0.5	YE/D-BU	3680	Charge Air Cooler Outlet Temperature Sensor Low Reference	I	—
14	0.5	BK/YE	3235	Exhaust Gas Recirculation Temperature Sensor 3 Low Reference	I	—
15	0.5	BK/D-BU	6274	Exhaust Gas Recirculation Temperature Sensor Low Reference	I	—
16	0.5	BK/VT	3661	Exhaust Gas Temperature Sensor 5 Low Reference	I	—

K20 Engine Control Module X3 (L5P) (cont'd)

Pin	Size	Color	Circuit	Function	Terminal Type ID	Option
17	0.5	BK/GY	3659	Exhaust Gas Temperature Sensor 4 Low Reference	I	—
18	0.5	BK/L-GN	3657	Exhaust Gas Temperature Sensor 3 Low Reference	I	—
19	0.5	BK/D-BU	6783	Exhaust Gas Temperature Sensor 2 Low Reference	I	—
20	0.5	BK/BN	6782	Exhaust Gas Temperature Sensor 1 Low Reference	I	—
21	0.75	BN/WH	3100	DEF Dosing Valve Low Control	I	—
22	0.5	YE/BN	1427	Gaseous Fuel Disable Signal	I	—
23 - 24	—	—	—	Not Occupied	—	—
25	0.5	WH/L-GN	6142	Power Take Off Engine Shutdown Signal	I	—
26 - 27	—	—	—	Not Occupied	—	—
28	0.5	WH/RD	3056	Turbo Intake Pressure Sensor High Reference Bank 2	I	—
29	0.5	YE/WH	3057	Turbo Intake Pressure Sensor Signal Bank 2	I	—
30 - 31	—	—	—	Not Occupied	—	—
32	0.5	L-GN	3683	Charge Air Cooler Inlet Temperature Sensor Signal	I	—
33	0.5	BN	3681	Charge Air Cooler Outlet Temperature Sensor Signal	I	—
34	0.5	YE/L-GN	3234	Exhaust Gas Recirculation Temperature Sensor 3 Signal	I	—
35	0.5	WH/BN	3237	Exhaust Gas Recirculation Temperature Sensor Signal	I	—
36	0.5	BU/GY	3660	Exhaust Gas Temperature Sensor 5 Signal	I	—
37	0.5	VT/BN	3658	Exhaust Gas Temperature Sensor 4 Signal	I	—
38	0.5	GY/L-GN	5378	Exhaust Gas Temperature Sensor 3	I	—
39	0.5	BU/L-GN	5377	Exhaust Gas Temperature Sensor 2	I	—
40	0.5	BU/WH	5277	Exhaust Gas Temperature Sensor 1	I	—
41 - 44	—	—	—	Not Occupied	—	—
45	0.5	BK/GY	3992	Internal Mode Switch Voltage Supply A	I	—
46	—	—	—	Not Occupied	—	—
47	0.5	YE/D-BU	3927	IMS Mode Switch Low Reference	I	—
48 - 54	—	—	—	Not Occupied	—	—
55	0.5	WH/D-BU	6319	ETRS Out of Park Switch 2 Signal	I	—
56 - 64	—	—	—	Not Occupied	—	—
65	0.5	BK/BN	6141	Cooling Fan Speed Low Reference	I	—
66	0.5	BU/VT	2364	Cooling Fan Speed Signal	I	—
67	0.5	GY/RD	2365	Cooling Fan Speed 5V Reference	I	—
68 - 75	—	—	—	Not Occupied	—	—
76	0.5	BK/YE	6055	Exhaust Pressure Sensor Low Reference 1	I	—
77	0.5	BU	6053	Exhaust Pressure Sensor Signal 1	I	—
78	0.5	WH/RD	6054	Exhaust Pressure Sensor 5V Reference 1	I	—
79 - 80	—	—	—	Not Occupied	—	—

K20 Engine Control Module X1 (L8T)

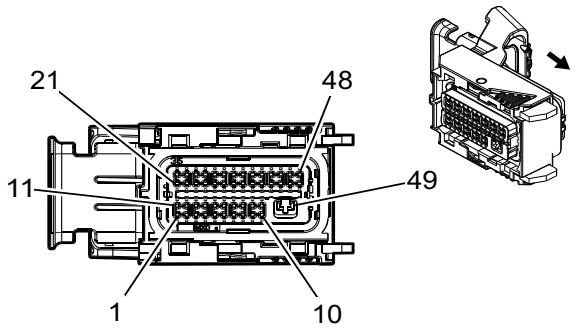

4596458

Connector Part Information

Harness Type: Engine
OEM Connector: 33315785
Service Connector: -
Description: 49-Way F 0.64, 2.8 Series, Sealed (BK with BU Terminal Position Assurance)

Terminal Part Information

Terminal Type ID	Terminated Lead	Diagnostic Test Probe	Terminal Removal Tool	Service Terminal	Tray Name	Core Crimp	Insulation Crimp
I	19330179	J-35616-64B (LT BU)	J-38125-215A	Not Available	Not Available	Not Available	Not Available
II	19354746	J-35616-64B (LT BU)	J-38125-215A	Not Available	Not Available	Not Available	Not Available
III	19355819	J-35616-64B (LT BU)	J-38125-215A	Not Available	Not Available	Not Available	Not Available
IV	Not Available	J-35616-35 (VT)	J-38125-12A	1326030-8	Lear 17	A	4

K20 Engine Control Module X1 (L8T)

Pin	Size	Color	Circuit	Function	Terminal Type ID	Option
1	0.5	L-GN/WH	492	Mass Air Flow Sensor Signal	I	—
2	—	—	—	Not Occupied	—	—
3	0.5	WH	4499	High Speed GMLAN Serial Data (-) 7	I	—
4 - 5	—	—	—	Not Occupied	—	—
6	0.5	WH/D-BU	6311	Cruise/ETC/TCC Brake Signal	I	—
7	0.5	WH	2501	High Speed GMLAN Serial Data (-) 1	II	—
8	0.5	BN/WH	419	Check Engine Indicator Control	I	—
9	0.5	YE	5991	Powertrain Relay Coil Control	I	—
10 - 11	—	—	—	Not Occupied	—	—
12	0.5	BU/GY	636	Outside Ambient Air Temperature Sensor Signal	I	—
13	0.5	BU/BN	4498	High Speed GMLAN Serial Data (+) 7	I	—
14	0.5	WH/L-GN	5380	Brake Position Sensor Signal	I	—
15	—	—	—	Not Occupied	—	—
16	0.5	WH/GY	1786	Transmission Park/Neutral Signal 1	I	—
17	0.5	BU	2500	High Speed GMLAN Serial Data (+) 1	I	—
18	0.5	WH/GY	459	A/C Compressor Clutch Relay Control	I	—

K20 Engine Control Module X1 (L8T) (cont'd)

Pin	Size	Color	Circuit	Function	Terminal Type ID	Option
19	—	—	—	Not Occupied	—	—
20	0.5	YE/BN	1427	Gaseous Fuel Disable Signal	III	—
21	0.5	L-GN/ D-BU	428	EVAP Canister Purge Solenoid Control	I	—
22	0.5	YE/D-BU	1465	Secondary Fuel Pump Relay Control	I	—
23	0.5	BK/L-GN	580	Engine Control Sensors Low Reference (2)	I	—
24	0.5	BK/D-BU	1271	Accelerator Pedal Position Low Reference 1	I	—
25 - 27	—	—	—	Not Occupied	—	—
28	0.5	BN/L-GN	1174	Oil Level Switch Signal	I	—
29	—	—	—	Not Occupied	—	—
30	0.5	BK/VT	1272	Accelerator Pedal Position Low Reference 2	I	—
31	—	—	—	Not Occupied	—	—
32	0.75	VT/D-BU	5291	Powertrain Main Relay Fused Supply 2	I	—
33	0.5	VT/YE	5985	Accessory Wakeup Serial Data	I	—
34	0.5	RD/BN	440	Battery Positive Voltage	I	—
35	—	—	—	Not Occupied	—	—
36	0.5	YE/BK	625	Starter Enable Relay Control	I	—
37	0.5	L-GN/GY	465	Fuel Pump Primary Relay Control	I	—
38	0.5	WH/RD	1164	Accelerator Pedal Position 5V Reference 1	I	—
39	0.5	YE/WH	1161	Accelerator Pedal Position Signal 1	I	—
40	0.5	YE/BN	331	Oil Pressure Sensor Signal	I	—
41	0.5	L-GN	380	A/C Refrigerant Pressure Sensor Signal	I	—
42 - 43	—	—	—	Not Occupied	—	—
44	0.5	L-GN/WH	1162	Accelerator Pedal Position Signal 2	I	—
45	0.5	BN/RD	1274	Accelerator Pedal Position 5V Reference 2	I	—
46	0.5	YE	4063	Hood Status A Signal	I	—
47	0.5	VT/L-GN	439	Run/Crank Ignition 1 Voltage	I	—
48	0.75	VT/D-BU	5290	Powertrain Main Relay Fused Supply 1	I	—
49	2	VT/D-BU	5290	Powertrain Main Relay Fused Supply 1	IV	—

K20 Engine Control Module X2 (L8T)

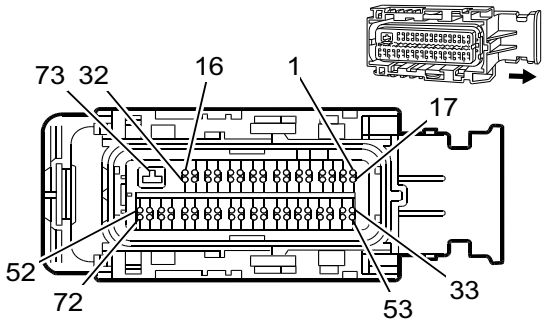

1590596

Connector Part Information

Harness Type: Engine
OEM Connector: 15499466
Service Connector: 88988931
Description: 73-Way F 0.64, 2.8 Series, Sealed (BK with BK Terminal Position Assurance)

Terminal Part Information

Terminal Type ID	Terminated Lead	Diagnostic Test Probe	Terminal Removal Tool	Service Terminal	Tray Name	Core Crimp	Insulation Crimp
I	19330179	J-35616-64B (LT BU)	J-38125-215A	Not Available	Not Available	Not Available	Not Available
II	Not Available	J-35616-35 (VT)	J-38125-12A	1326030-8	Lear 17	4	D

K20 Engine Control Module X2 (L8T)

Pin	Size	Color	Circuit	Function	Terminal Type ID	Option
1	0.5	L-GN/YE	3212	Heated Oxygen Sensor Heater Low Control Bank 2 Sensor 1	I	—
2	—	—	—	Not Occupied	—	—
3	0.5	BK/YE	548	Engine Control Sensors Low Reference (1)	I	—
4 - 6	—	—	—	Not Occupied	—	—
7	0.5	L-GN/WH	4622	Local Interconnect Network Serial Data Bus 22	I	—
8	0.5	L-GN/VT	4621	Local Interconnect Network Serial Data Bus 21	I	—
9	—	—	—	Not Occupied	—	—
10	0.5	VT/GY	3110	Heated Oxygen Sensor High Signal Bank 1 Sensor 1	I	—
11	0.5	WH/BK	3111	Heated Oxygen Sensor Low Signal Bank 1 Sensor 1	I	—
12	0.5	YE/D-BU	2124	Ignition Control 4	I	—
13	0.5	BN/D-BU	2126	Ignition Control 6	I	—
14 - 15	—	—	—	Not Occupied	—	—
16	0.75	VT/D-BU	5290	Powertrain Main Relay Fused Supply 1	I	—
17	0.5	GY/WH	3113	Heated Oxygen Sensor Heater Low Control Bank 1 Sensor 1	I	—
18 - 20	—	—	—	Not Occupied	—	—
21	0.5	WH/BN	2203	Enhanced Driver Mode 2 Switch Signal	I	—
	0.5	WH/BN	4108	Driver Mode Switch Signal	I	—
22 - 25	—	—	—	Not Occupied	—	—
26	0.5	VT/WH	3210	Heated Oxygen Sensor High Signal Bank 2 Sensor 1	I	—
27	0.5	YE/WH	3211	Heated Oxygen Sensor Low Signal Bank 2 Sensor 1	I	—
28	0.5	L-GN/ D-BU	2123	Ignition Control 3	I	—
29	0.5	BU/GY	2125	Ignition Control 5	I	—
30	0.5	BK/GY	2130	Ignition Control Low Reference Bank 2	I	—
31 - 32	—	—	—	Not Occupied	—	—
33	0.5	WH/BN	3223	Heated Oxygen Sensor Heater Low Control Bank 2 Sensor 2	I	—
34	—	—	—	Not Occupied	—	—
35	0.5	BU	179	Oil Pump Command Signal	I	—

K20 Engine Control Module X2 (L8T) (cont'd)

Pin	Size	Color	Circuit	Function	Terminal Type ID	Option
36	—	—	—	Not Occupied	—	—
37	0.75	VT/D-BU	5294	Powertrain Main Relay Fused Supply 5	I	—
38	—	—	—	Not Occupied	—	—
39	0.5	WH/RD	480	Engine Control Sensors 5 Volt Reference (2)	I	—
40 - 45	—	—	—	Not Occupied	—	—
46	0.5	YE/D-BU	3221	Heated Oxygen Sensor Low Signal Bank 2 Sensor 2	I	—
47	0.5	VT/L-GN	3220	Heated Oxygen Sensor High Signal Bank 2 Sensor 2	I	—
48 - 49	—	—	—	Not Occupied	—	—
50	0.75	BK/GY	2303	Knock Sensor Low Reference 2	I	—
51	0.75	BK/YE	1716	Knock Sensor Low Reference 1	I	—
52	0.5	BN/WH	582	Throttle Actuator Control Close	I	—
53	0.5	GY/WH	3122	Heated Oxygen Sensor Heater Low Control Bank 1 Sensor 2	I	—
54 - 58	—	—	—	Not Occupied	—	—
59	0.5	BU/RD	460	Engine Control Sensors 5 Volt Reference (1)	I	—
60 - 65	—	—	—	Not Occupied	—	—
66	0.5	WH/YE	3121	Heated Oxygen Sensor Low Signal Bank 1 Sensor 2	I	—
67	0.5	VT/D-BU	3120	Heated Oxygen Sensor High Signal Bank 1 Sensor 2	I	—
68 - 69	—	—	—	Not Occupied	—	—
70	0.75	WH/GY	1876	Knock Sensor Signal 2	I	—
71	0.75	VT/GY	496	Knock Sensor Signal 1	I	—
72	0.5	YE	581	Throttle Actuator Control Open	I	—
73	2.5	BK/WH	451	Signal Ground	II	—

K20 Engine Control Module X3 (L8T)

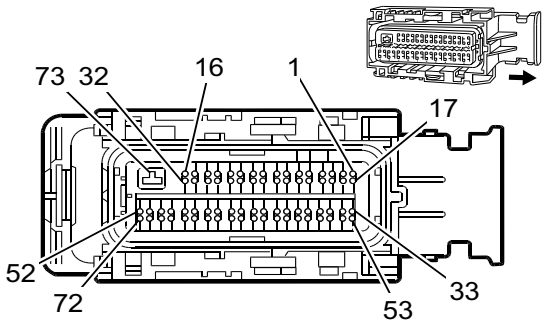

1590596

Connector Part Information

Harness Type: Engine
OEM Connector: 15497996
Service Connector: 88988372
Description: 73-Way F 0.64, 2.8 Series, Sealed (BK with GY Terminal Position Assurance)

Terminal Part Information

Terminal Type ID	Terminated Lead	Diagnostic Test Probe	Terminal Removal Tool	Service Terminal	Tray Name	Core Crimp	Insulation Crimp
I	19330179	J-35616-64B (LT BU)	J-38125-215A	Not Available	Not Available	Not Available	Not Available
II	19355819	J-35616-64B (LT BU)	J-38125-215A	Not Available	Not Available	Not Available	Not Available
III	Not Available	J-35616-35 (VT)	J-38125-12A	1326030-8	Lear 17	4	D

K20 Engine Control Module X3 (L8T)

Pin	Size	Color	Circuit	Function	Terminal Type ID	Option
1 - 4	—	—	—	Not Occupied	—	—
5	0.5	VT/BN	5284	Camshaft Phaser Intake Solenoid 1	I	—
6	0.5	VT/L-GN	4320	Powertrain Sensor Bus Enable	I	—
7	—	—	—	Not Occupied	—	—
8	0.5	YE/VT	5275	Camshaft Position Intake Sensor 1	I	—
9	0.5	GY/D-BU	5300	Camshaft Position Intake Sensor Control 1	I	—
10	0.5	L-GN	6271	Crankshaft 60X Sensor Signal	I	—
11	0.5	VT/D-BU	6091	Crankshaft Position Sensor Replicated Signal	I	—
12	0.5	BU/WH	2122	Ignition Control 2	I	—
13	0.5	VT/WH	2128	Ignition Control 8	I	—
14	0.5	BN	25	Charge Indicator Control	I	—
15	—	—	—	Not Occupied	—	—
16	0.75	YE	7301	High Pressure Fuel Pump Actuator High - Control	I	—
17 - 18	—	—	—	Not Occupied	—	—
19	0.5	BN/WH	400	Vehicle Speed Sensor Signal	I	—
20	—	—	—	Not Occupied	—	—
21	0.5	BK/BN	6753	Cam Phaser W Low Reference	I	—
22 - 23	—	—	—	Not Occupied	—	—
24	0.5	BK/L-GN	5301	Camshaft Position Intake Sensor Low Reference 1	I	—
25	0.5	VT/D-BU	6270	Crankshaft 60X Sensor 5V Reference	I	—
26	0.5	BK/VT	6272	Crankshaft 60X Sensor Low Reference	I	—
27	—	—	—	Not Occupied	—	—
28	0.5	L-GN/GY	2127	Ignition Control 7	I	—
29	0.5	BU/VT	2121	Ignition Control 1	I	—
30	0.5	BK/D-BU	2129	Ignition Control Low Reference Bank 1	I	—
31	—	—	—	Not Occupied	—	—
32	0.75	VT/BK	7300	High Pressure Fuel Pump Actuator Low - Control	I	—
33 - 35	—	—	—	Not Occupied	—	—
36	0.5	BK/BN	2752	Throttle Position Sensor Low Reference	I	—
37	0.5	BK/L-GN	469	Manifold Absolute Pressure Sensor Low Reference	I	—
38 - 39	—	—	—	Not Occupied	—	—
40	0.5	BN/D-BU	357	Oil Temperature Sensor Signal	II	—
41 - 42	—	—	—	Not Occupied	—	—

K20 Engine Control Module X3 (L8T) (cont'd)

Pin	Size	Color	Circuit	Function	Terminal Type ID	Option
43	0.5	BK/GY	626	Engine Control Sensors Low Reference (3)	I	—
44	0.75	VT/D-BU	5292	Powertrain Main Relay Fused Supply 3	I	—
45	0.75	L-GN	4803	Direct Fuel Injector (DFI) High Voltage Control Cylinder 3	I	—
46	0.75	GY/D-BU	4804	Direct Fuel Injector (DFI) High Voltage Control Cylinder 4	I	—
47	0.75	WH/L-GN	4805	Direct Fuel Injector (DFI) High Voltage Control Cylinder 5	I	—
48	0.75	L-GN/VT	4806	Direct Fuel Injector (DFI) High Voltage Control Cylinder 6	I	—
49	0.75	BU	4802	Direct Fuel Injector (DFI) High Voltage Control Cylinder 2	I	—
50	0.75	YE/GY	4807	Direct Fuel Injector (DFI) High Voltage Control Cylinder 7	I	—
51	0.75	GY	4808	Direct Fuel Injector (DFI) High Voltage Control Cylinder 8	I	—
52	0.75	BN	4801	Direct Fuel Injector (DFI) High Voltage Control Cylinder 1	I	—
53 - 54	—	—	—	Not Occupied	—	—
55	0.5	BN/RD	2701	Throttle Position Sensor 5V Reference	I	—
56	0.5	BU/WH	3630	Throttle Position Sensor (SENT1) Signal	I	—
57	0.5	GY/RD	2704	Manifold Absolute Pressure Sensor 5V Reference	I	—
58	0.5	L-GN/WH	432	Manifold Absolute Pressure Sensor Signal	I	—
59 - 60	—	—	—	Not Occupied	—	—
61	0.5	BU	410	Engine Coolant Temperature Sensor Signal	I	—
62	—	—	—	Not Occupied	—	—
63	0.5	BU/WH	2918	Fuel Rail Pressure Sensor Signal	I	—
64	0.5	GY	23	Generator Field Duty Cycle Signal	I	—
65	0.75	L-GN/BK	4903	Direct Fuel Injector (DFI) High Voltage Supply Cylinder 3	I	—
66	0.75	BU/WH	4904	Direct Fuel Injector (DFI) High Voltage Supply Cylinder 4	I	—
67	0.75	L-GN/WH	4905	Direct Fuel Injector (DFI) High Voltage Supply Cylinder 5	I	—
68	0.75	VT	4906	Direct Fuel Injector (DFI) High Voltage Supply Cylinder 6	I	—
69	0.75	BN/L-GN	4902	Direct Fuel Injector (DFI) High Voltage Supply Cylinder 2	I	—
70	0.75	WH/YE	4907	Direct Fuel Injector (DFI) High Voltage Supply Cylinder 7	I	—
71	0.75	WH/L-GN	4908	Direct Fuel Injector (DFI) High Voltage Supply Cylinder 8	I	—
72	0.75	BN/WH	4901	Direct Fuel Injector (DFI) High Voltage Supply Cylinder 1	I	—
73	2.5	BK/WH	451	Signal Ground	III	—

K29F Seat Heating Control Module - Front X1 (KA1)

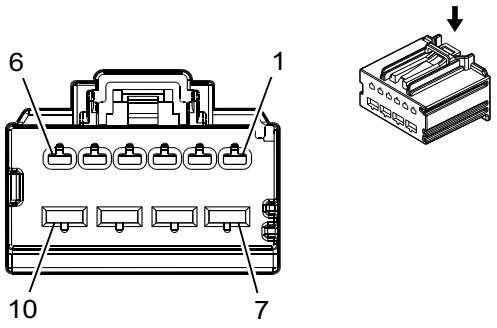

3791446

Connector Part Information

Harness Type: Passenger Seat
OEM Connector: 31372-1000
Service Connector: Service by Harness - See Part Catalog
Description: 10-Way F 1.5, 2.8 Series (BK)

Terminal Part Information

Terminal Type ID	Terminated Lead	Diagnostic Test Probe	Terminal Removal Tool	Service Terminal	Tray Name	Core Crimp	Insulation Crimp
I	Not Required	J-35616-2A (GY)	No Tool Required	Not Required	Not Required	Not Required	Not Required
II	Not Required	J-35616-4A (PU)	No Tool Required	Not Required	Not Required	Not Required	Not Required

K29F Seat Heating Control Module - Front X1 (KA1)

Pin	Size	Color	Circuit	Function	Terminal Type ID	Option
1	0.75	WH/BN	2481	Passenger Heated Back Element Control	I	—
2	0.75	BN/L-BU	2479	Passenger Heated Seat Element Control	I	—
3	0.75	GY/BK	2480	Passenger Heated Seat Element Low Reference	I	—
4	0.75	BN/BK	2078	Driver Heated Seat Element Low Reference	I	—
5	0.75	BN	2432	Driver Heated Back Element Control	I	—
6	0.75	BN/VT	2077	Driver Heated Seat Element Control	I	—
7	0.75	RD	6140	Battery Positive Voltage	II	—
8	0.75	BK	1250	Ground	II	—
9	—	—	—	Not Occupied	—	—
10	0.75	RD/L-GN	5140	Battery Positive Voltage	II	—

K29F Seat Heating Control Module - Front X2 (KA1)

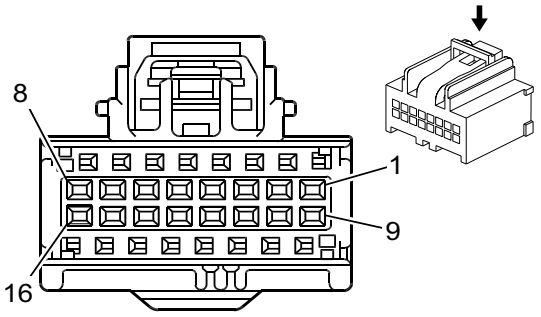

1653409

Connector Part Information

Harness Type: Passenger Seat
OEM Connector: 7283-9076-30
Service Connector: Service by Harness - See Part Catalog
Description: 16-Way F 0.64 Kaizen Series (BK)

Terminal Part Information

Terminal Type ID	Terminated Lead	Diagnostic Test Probe	Terminal Removal Tool	Service Terminal	Tray Name	Core Crimp	Insulation Crimp
I	Not Required	J-35616-64B (LT BU)	No Tool Required	Not Required	Not Required	Not Required	Not Required

K29F Seat Heating Control Module - Front X2 (KA1)

Pin	Size	Color	Circuit	Function	Terminal Type ID	Option
1	0.5	BK/YE	2080	Driver Heated Seat NTC Low Reference	I	—
2	0.5	BK/GY	2435	Passenger Heated Seat NTC Low Reference	I	—
3	0.5	L-BU	2425	Driver Heated Back NTC Signal	I	—
4	0.5	WH/L-BU	2436	Passenger Heated Back NTC Signal	I	—
5	0.5	WH/GY	2434	Passenger Heated Seat NTC Signal	I	—
6	0.5	YE/GY	2079	Driver Heated Seat NTC Signal	I	—
7	—	—	—	Not Occupied	—	—
8	0.5	L-GN/ L-BU	6133	Local Interconnect Network Serial Data Bus 2	I	—
9	0.35	L-GN/VT	5906	Driver Seat Vent Motor Control 1	I	—
10	0.5	WH	5908	Passenger Seat Vent Motor Control 1	I	—
11	0.5	BK/VT	2426	Driver Heated Back NTC Low Reference	I	—
12	0.5	BK/L-GN	2482	Passenger Heated Back NTC Low Reference	I	—
13 - 16	—	—	—	Not Occupied	—	—

K29F Seat Heating Control Module - Front X1 (KA6)

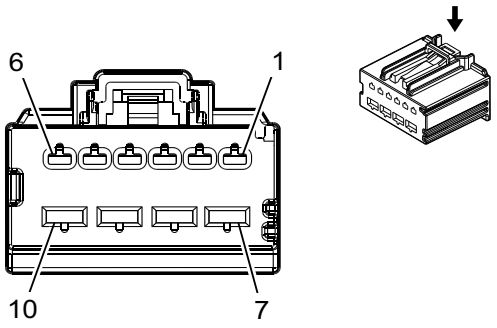

3791446

Connector Part Information

Harness Type: Rear Seat
OEM Connector: 31372-1000
Service Connector: Service by Harness - See Part Catalog
Description: 10-Way F 1.5, 2.8 Series (BK)

Terminal Part Information

Terminal Type ID	Terminated Lead	Diagnostic Test Probe	Terminal Removal Tool	Service Terminal	Tray Name	Core Crimp	Insulation Crimp
I	Not Required	J-35616-2A (GY)	No Tool Required	Not Required	Not Required	Not Required	Not Required
II	Not Required	J-35616-4A (PU)	No Tool Required	Not Required	Not Required	Not Required	Not Required

K29F Seat Heating Control Module - Front X1 (KA6)

Pin	Size	Color	Circuit	Function	Terminal Type ID	Option
1	—	—	—	Not Occupied	—	—
2	0.75	L-GN/BN	2296	Right Rear Heated Seat Cushion Element Control	I	—
3	0.75	L-GN/BK	2297	Right Rear Heated Seat Cushion Element Low Reference	I	—
4	0.75	BN/BK	2295	Left Rear Heated Seat Cushion Element Low Reference	I	—
5	—	—	—	Not Occupied	—	—
6	0.75	GY	2294	Left Rear Heated Seat Cushion Element Control	I	—
7	0.75	RD/YE	240	Battery Positive Voltage	II	—
8	1	BK	1150	Ground	II	—
9	—	—	—	Not Occupied	—	—
10	0.75	RD/VT	340	Battery Positive Voltage	II	—

K29F Seat Heating Control Module - Front X2 (KA6)

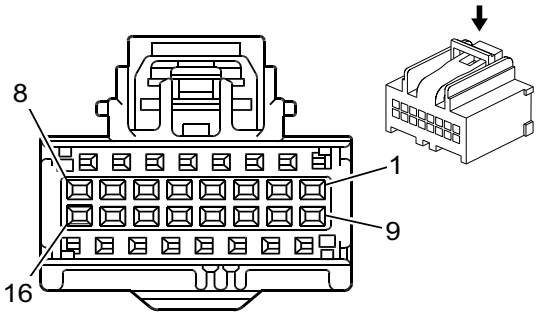

1653409

Connector Part Information

Harness Type: Rear Seat
OEM Connector: 7283-9076-30
Service Connector: Service by Harness - See Part Catalog
Description: 16-Way F 0.64 Kaizen Series (BK)

Terminal Part Information

Terminal Type ID	Terminated Lead	Diagnostic Test Probe	Terminal Removal Tool	Service Terminal	Tray Name	Core Crimp	Insulation Crimp
I	Not Required	J-35616-64B (LT BU)	No Tool Required	Not Required	Not Required	Not Required	Not Required

K29F Seat Heating Control Module - Front X2 (KA6)

Pin	Size	Color	Circuit	Function	Terminal Type ID	Option
1	0.75	L-BU/WH	7048	Left Rear Cushion NTC Low Reference	I	—
2	0.75	WH/BK	7054	Right Rear Cushion NTC Low Reference	I	—
3 - 4	—	—	—	Not Occupied	—	—
5	0.75	YE/WH	7053	Right Rear Cushion NTC Signal	I	—
6	0.75	WH/L-BU	7047	Left Rear Cushion NTC Signal	I	—
7	0.5	BK	1150	Ground	I	—
8	0.5	L-GN/ L-BU	6133	Local Interconnect Network Serial Data Bus 2	I	—
9 - 16	—	—	—	Not Occupied	—	—

K33 HVAC Control Module X1

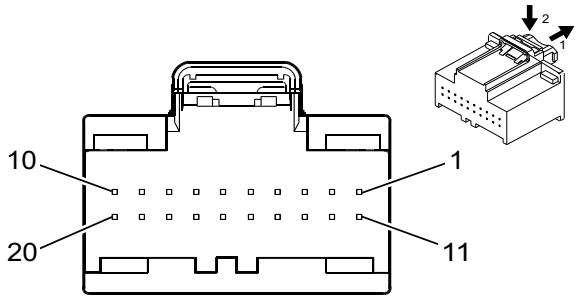

5109511

Connector Part Information

Harness Type: Instrument Panel
OEM Connector: 35162722
Service Connector: 13525993
Description: 20-Way F 0.64 Series (GN)

Terminal Part Information

Terminal Type ID	Terminated Lead	Diagnostic Test Probe	Terminal Removal Tool	Service Terminal	Tray Name	Core Crimp	Insulation Crimp
I	19300631	J-35616-64B (LT BU)	J-38125-215A	Not Available	Not Available	Not Available	Not Available

K33 HVAC Control Module X1

Pin	Size	Color	Circuit	Function	Terminal Type ID	Option
1 - 3	—	—	—	Not Occupied	—	—
4	0.35	BU/WH	734	Inside Air Temperature Sensor Signal	I	—
5 - 13	—	—	—	Not Occupied	—	—
14	0.35	GY	590	Solar Sensor Driver Signal	I	—
15 - 20	—	—	—	Not Occupied	—	—

K33 HVAC Control Module X2

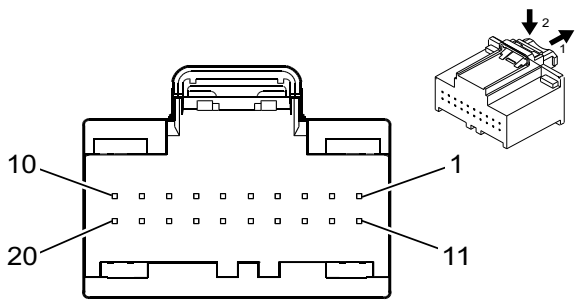

5109514

Connector Part Information

Harness Type: Instrument Panel
OEM Connector: 35162720
Service Connector: 13525992
Description: 20-Way F 0.64 Series (BN)

Terminal Part Information

Terminal Type ID	Terminated Lead	Diagnostic Test Probe	Terminal Removal Tool	Service Terminal	Tray Name	Core Crimp	Insulation Crimp
I	19300631	J-35616-64B (LT BU)	J-38125-215A	Not Available	Not Available	Not Available	Not Available

K33 HVAC Control Module X2

Pin	Size	Color	Circuit	Function	Terminal Type ID	Option
1	0.35	RD/VT	3340	Battery Positive Voltage	I	—
2	0.35	L-GN	5060	Low Speed GMLAN Serial Data	I	—
3	—	—	—	Not Occupied	—	—
4	0.35	L-GN/YE	7531	Local Interconnect Network Serial Data Bus 9	I	—
5	—	—	—	Not Occupied	—	—
6	0.35	L-GN/ D-BU	4119	Local Interconnect Network Serial Data Bus 19	I	—
7	0.35	VT	3195	Auxiliary Heater Control	I	—
8	0.5	BK	1050	Ground	I	—
9	0.35	VT/BN	300	Run Ignition 3 Voltage	I	—
10	0.35	BU/YE	7574	Electric Variable Displacement Control	I	—
11	0.35	BU/BN	7573	Electric Variable Displacement Supply	I	—
12 - 14	—	—	—	Not Occupied	—	—
15	0.35	BU/GY	754	Blower Motor Speed Control	I	—
16 - 17	—	—	—	Not Occupied	—	—
18	0.35	BK/L-GN	7567	Solar Sensor Low Reference	I	—
19	0.5	BN/VT	193	Rear Defog Relay Control	I	—
20	—	—	—	Not Occupied	—	—

K34 Glow Plug Control Module X2 (L5P)

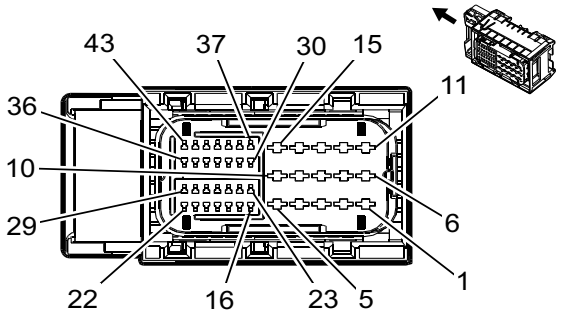

3553744

Connector Part Information

Harness Type: Glow Plug Jumper
OEM Connector: 10023701
Service Connector: Service by Harness - See Part Catalog
Description: 43-Way F 1.2, 2.8 Series, Sealed (BK)

Terminal Part Information

Terminal Type ID	Terminated Lead	Diagnostic Test Probe	Terminal Removal Tool	Service Terminal	Tray Name	Core Crimp	Insulation Crimp
I	Not Required	J-35616-16 (LT GN)	No Tool Required	Not Required	Not Required	Not Required	Not Required
II	Not Required	J-35616-4A (PU)	No Tool Required	Not Required	Not Required	Not Required	Not Required

K34 Glow Plug Control Module X2 (L5P)

Pin	Size	Color	Circuit	Function	Terminal Type ID	Option
1	—	—	—	Not Occupied	—	—
2	2	GY/YE	1584	Glow Plug Control 4	II	L5P
3	2	GY/GN	1583	Glow Plug Control 3	II	L5P
4	2	GY/BN	1582	Glow Plug Control 2	II	L5P
5	2	GY/BU	1581	Glow Plug Control 1	II	L5P
6 - 9	—	—	—	Not Occupied	—	—
10	2	BK	250	Ground	II	L5P
11	—	—	—	Not Occupied	—	—
12	2	GY/WH	1585	Glow Plug Control 5	II	L5P
13	2	GY/VT	1586	Glow Plug Control 6	II	L5P
14	2	WH/BK	1587	Glow Plug Control 7	II	L5P
15	2	WH/BU	1588	Glow Plug Control 8	II	L5P
16	0.5	BK	92	Windshield Wiper Motor High Speed Control	I	L5P
17	0.5	BK	93	Fuel Door Release Relay Control	I	L5P
18	0.5	WH	2501	High Speed GMLAN Serial Data (-) 1	I	L5P
19	0.5	WH	2501	High Speed GMLAN Serial Data (-) 1	I	L5P
20 - 22	—	—	—	Not Occupied	—	—
23	0.5	BK	23	Generator Field Duty Cycle Signal	I	L5P
24	0.5	BK	24	Backup Lamp Control	I	L5P
25	0.5	BU	2500	High Speed GMLAN Serial Data (+) 1	I	L5P
26	0.5	BU	2500	High Speed GMLAN Serial Data (+) 1	I	L5P
27 - 29	—	—	—	Not Occupied	—	—
30	0.5	BK	30	Fuel Level Sensor Signal	I	L5P
31	0.5	BK	31	Oil Pressure Indicator Control	I	L5P
32	—	—	—	Not Occupied	—	—
33	0.5	VT/BK	2139	Run/Crank Ignition 1 Voltage	I	L5P
34 - 36	—	—	—	Not Occupied	—	—
37	0.5	BK	37	Engine Metal Temperature Sensor Signal	I	L5P
38	0.5	BK	38	Backup Lamp Relay Control	I	L5P
39	—	—	—	Not Occupied	—	—
40	0.5	VT/YE	443	Accessory Ignition Voltage	I	L5P
41 - 43	—	—	—	Not Occupied	—	—

K36 Inflatable Restraint Sensing and Diagnostic Module X1 (Crew Cab)

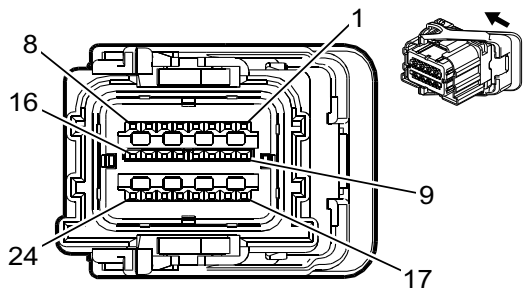

3240106

Connector Part Information

Harness Type: Body
OEM Connector: 35036798
Service Connector: -
Description: 24-Way F 0.64 Series, Sealed (YE)

Terminal Part Information

Terminal Type ID	Terminated Lead	Diagnostic Test Probe	Terminal Removal Tool	Service Terminal	Tray Name	Core Crimp	Insulation Crimp
I	19328872	J-35616-64B (LT BU)	J-38125-215A	Not Available	Not Available	Not Available	Not Available
II	19368490	J-35616-64B (LT BU)	J-38125-215A	Not Available	Not Available	Not Available	Not Available

K36 Inflatable Restraint Sensing and Diagnostic Module X1 (Crew Cab)

Pin	Size	Color	Circuit	Function	Terminal Type ID	Option
1	0.35	OG/L-GN	3023	Steering Wheel Module Stage 2 High Control	I	—
2	0.35	WH/OG	3022	Steering Wheel Module Stage 2 Low Control	I	—
3	0.35	BN/OG	3020	Steering Wheel Module Stage 1 Low Control	I	—
4	0.35	OG/VT	3021	Steering Wheel Module Stage 1 High Control	I	—
5	0.35	YE/OG	3025	Passenger IP Module Stage 1 High Control	I	—
6	0.35	OG/WH	3024	Passenger IP Module Stage 1 Low Control	I	—
7	0.35	OG/VT	3026	Passenger IP Module Stage 2 Low Control	I	—
8	0.35	GY/OG	3027	Passenger IP Module Stage 2 High Control	I	—
9	0.5	RD/L-GN	4440	Battery Positive Voltage	II	—
10	0.35	VT/WH	5234	Passenger Seat Belt Indicator Control	I	—
11	0.35	BU	2307	Passenger Air Bag On Indicator Control	I	—
12	0.35	L-GN	2308	Passenger Air Bag Off Indicator Control	I	—
13	0.5	BU/WH	3119	Roof Rail Air Bag Defeat Switch Signal	II	—
14	0.5	BN/WH	3895	Roof Rail Air Bag Defeat Switch Low Reference	II	—
15	0.35	L-GN	5060	Low Speed GMLAN Serial Data	I	—
16	—	—	—	Not Occupied	—	—
17	0.35	WH/D-BU	5986	Serial Data Communication Enable	I	—
18	0.5	BU/YE	6105	High Speed GMLAN Serial Data (+) 2	II	—

K36 Inflatable Restraint Sensing and Diagnostic Module X1 (Crew Cab) (cont'd)

Pin	Size	Color	Circuit	Function	Terminal Type ID	Option
19	0.5	BK/WH	2551	Signal Ground	II	—
20	0.5	WH	6106	High Speed GMLAN Serial Data (-) 2	II	—
21 - 24	—	—	—	Not Occupied	—	—

K36 Inflatable Restraint Sensing and Diagnostic Module X2 (Crew Cab)

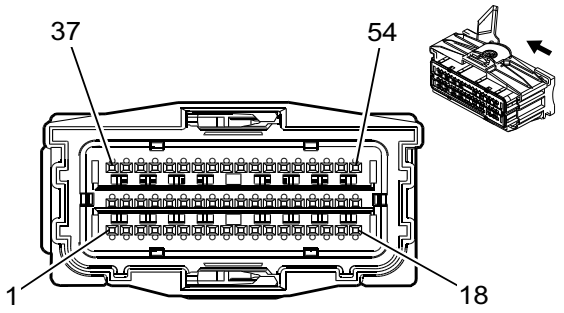

5197939

Connector Part Information

Harness Type: Body
OEM Connector: 35036051
Service Connector: -
Description: 54-Way F 0.64 Series, Sealed (YE)

Terminal Part Information

Terminal Type ID	Terminated Lead	Diagnostic Test Probe	Terminal Removal Tool	Service Terminal	Tray Name	Core Crimp	Insulation Crimp
I	19328872	J-35616-64B (LT BU)	J-38125-215A	Not Available	Not Available	Not Available	Not Available
II	19368490	J-35616-64B (LT BU)	J-38125-215A	Not Available	Not Available	Not Available	Not Available
III	Not Required	J-35616-64B (LT BU)	Not Available	Not Available	Not Available	Not Available	Not Available

K36 Inflatable Restraint Sensing and Diagnostic Module X2 (Crew Cab)

Pin	Size	Color	Circuit	Function	Terminal Type ID	Option
1 - 8	—	—	—	Not Occupied	—	—
9	0.5	OG/YE	3481	Driver Seat Belt Anchor Pretensioner High Control	III	—
10	0.5	YE/OG	3482	Driver Seat Belt Anchor Pretensioner Low Control	III	—
11	0.5	GY/OG	3480	Passenger Seat Belt Anchor Pretensioner Low Control	III	—
12	0.5	OG/BN	3479	Passenger Seat Belt Anchor Pretensioner High Control	III	—
13	0.5	OG/D-BU	3068	Driver Side Impact Module High Control	II	—
14	0.5	L-GN/OG	3069	Driver Side Impact Module Low Control	II	—

K36 Inflatable Restraint Sensing and Diagnostic Module X2 (Crew Cab) (cont'd)

Pin	Size	Color	Circuit	Function	Terminal Type ID	Option
15	0.35	BN/OG	3067	Passenger Side Impact Module Low Control	I	—
16	0.35	OG/GY	3066	Passenger Side Impact Module High Control	I	—
17	0.5	OG/L-GN	5019	Left Front Head Curtain Module High Control	III	—
18	0.5	VT/OG	5020	Left Front Head Curtain Module Low Control	III	—
19	0.35	OG/L-GN	2132	Left Front Side Impact Sensing Module Signal	I	—
20	0.35	BK/OG	6628	Left Front Side Impact Sensing Module Low Reference	I	—
21	0.35	BK/OG	6629	Right Front Side Impact Sensing Module Low Reference	I	—
22	0.35	BN/OG	2134	Right Front Side Impact Sensing Module Signal	I	—
23	0.5	OG/YE	354	Left Front Discriminating Sensor Signal	II	—
24	0.5	BK/OG	5045	Left Front Discriminating Sensor Low Reference	II	—
25	0.5	BK/OG	5600	Right Front Discriminating Sensor Low Reference	II	—
26	0.5	OG/L-GN	1409	Right Front Discriminating Sensor Signal	II	—
27	0.35	OG/D-BU	6622	Left Rear Side Impact Sensing Module Signal	I	—
28	0.35	BK/OG	6623	Left Rear Side Impact Sensing Module Low Reference	I	—
29	0.35	BK/OG	6627	Right Rear Side Impact Sensing Module Low Reference	I	—
30	0.35	OG/WH	6626	Right Rear Side Impact Sensing Module Signal	I	—
31 - 36	—	—	—	Not Occupied	—	—
37	0.5	OG/WH	3477	Driver Seat Belt Retractor Pretensioner High Control	III	—
38	0.5	GY/OG	3478	Driver Seat Belt Retractor Pretensioner Low Control	III	—
39	0.5	WH/OG	3476	Passenger Seat Belt Retractor Pretensioner Low Control	III	—
40	0.5	OG/L-GN	3475	Passenger Seat Belt Retractor Pretensioner High Control	III	—
41	0.35	OG/BN	238	Driver Seat Belt Switch Signal	I	—
42	0.35	OG/L-GN	5055	Driver Seat Position Switch Signal	I	—
43	0.35	BK/OG	1363	Driver Seat Belt Switch Low Reference	I	—
44	0.35	BK/OG	1361	Passenger Seat Belt Switch Low Reference	I	—
45	0.35	OG/VT	1362	Passenger Seat Belt Switch Signal	I	—
46 - 52	—	—	—	Not Occupied	—	—
53	0.5	OG/GY	5021	Right Front Head Curtain Module High Control	III	—
54	0.5	WH/OG	5022	Right Front Head Curtain Module Low Control	III	—

K36 Inflatable Restraint Sensing and Diagnostic Module X1 (Extended Cab/Regular Cab)

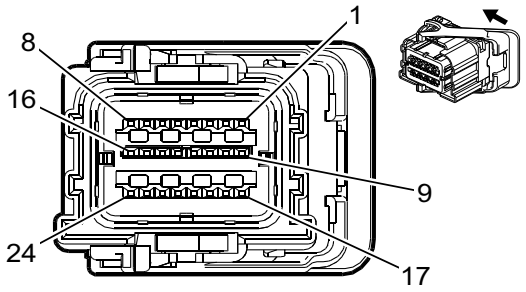

3240106

Connector Part Information

Harness Type: Body
OEM Connector: 33297289
Service Connector: -
Description: 24-Way F 0.64 Series, Sealed (YE)

Terminal Part Information

Terminal Type ID	Terminated Lead	Diagnostic Test Probe	Terminal Removal Tool	Service Terminal	Tray Name	Core Crimp	Insulation Crimp
I	19328872	J-35616-64B (LT BU)	J-38125-215A	Not Available	Not Available	Not Available	Not Available
II	19368490	J-35616-64B (LT BU)	J-38125-215A	Not Available	Not Available	Not Available	Not Available

K36 Inflatable Restraint Sensing and Diagnostic Module X1 (Extended Cab/Regular Cab)

Pin	Size	Color	Circuit	Function	Terminal Type ID	Option
1	0.35	OG/L-GN	3023	Steering Wheel Module Stage 2 High Control	I	—
2	0.35	WH/OG	3022	Steering Wheel Module Stage 2 Low Control	I	—
3	0.35	BN/OG	3020	Steering Wheel Module Stage 1 Low Control	I	—
4	0.35	OG/VT	3021	Steering Wheel Module Stage 1 High Control	I	—
5	0.35	YE/OG	3025	Passenger IP Module Stage 1 High Control	I	—
6	0.35	OG/WH	3024	Passenger IP Module Stage 1 Low Control	I	—
7	0.35	OG/VT	3026	Passenger IP Module Stage 2 Low Control	I	—
8	0.35	GY/OG	3027	Passenger IP Module Stage 2 High Control	I	—
9	0.5	RD/L-GN	4440	Battery Positive Voltage	II	—
10	0.35	VT/WH	5234	Passenger Seat Belt Indicator Control	I	—
11	0.35	BU	2307	Passenger Air Bag On Indicator Control	I	—
12	0.35	L-GN	2308	Passenger Air Bag Off Indicator Control	I	—
13	0.5	BU/WH	3119	Roof Rail Air Bag Defeat Switch Signal	II	—
14	0.5	BN/WH	3895	Roof Rail Air Bag Defeat Switch Low Reference	II	—
15	0.35	L-GN	5060	Low Speed GMLAN Serial Data	I	—
16	—	—	—	Not Occupied	—	—
17	0.35	WH/D-BU	5986	Serial Data Communication Enable	I	—
18	0.5	BU/YE	6105	High Speed GMLAN Serial Data (+) 2	II	—
19	0.5	BK/WH	2551	Signal Ground	II	—

K36 Inflatable Restraint Sensing and Diagnostic Module X1 (Extended Cab/Regular Cab) (cont'd)

Pin	Size	Color	Circuit	Function	Terminal Type ID	Option
20	0.5	WH	6106	High Speed GMLAN Serial Data (-) 2	II	—
21 - 24	—	—	—	Not Occupied	—	—

K36 Inflatable Restraint Sensing and Diagnostic Module X2 (Extended Cab/Regular Cab)

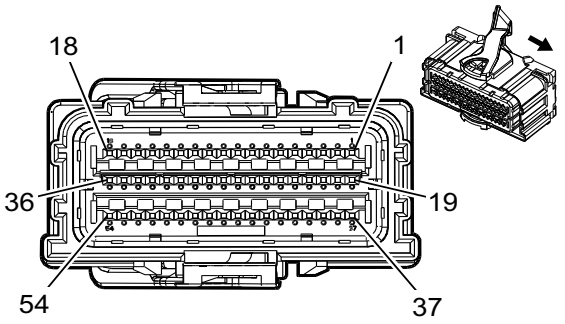

2817420

Connector Part Information

Harness Type: Body
OEM Connector: 33297285
Service Connector: -
Description: 54-Way F 0.64 Series, Sealed (YE)

Terminal Part Information

Terminal Type ID	Terminated Lead	Diagnostic Test Probe	Terminal Removal Tool	Service Terminal	Tray Name	Core Crimp	Insulation Crimp
I	19328872	J-35616-64B (LT BU)	J-38125-215A	Not Available	Not Available	Not Available	Not Available
II	19368490	J-35616-64B (LT BU)	J-38125-215A	Not Available	Not Available	Not Available	Not Available
III	Not Required	J-35616-64B (LT BU)	Not Available	Not Available	Not Available	Not Available	Not Available

K36 Inflatable Restraint Sensing and Diagnostic Module X2 (Extended Cab/Regular Cab)

Pin	Size	Color	Circuit	Function	Terminal Type ID	Option
1 - 8	—	—	—	Not Occupied	—	—
9	0.5	OG/YE	3481	Driver Seat Belt Anchor Pretensioner High Control	III	—
10	0.5	YE/OG	3482	Driver Seat Belt Anchor Pretensioner Low Control	III	—
11	0.5	GY/OG	3480	Passenger Seat Belt Anchor Pretensioner Low Control	III	—
12	0.5	OG/BN	3479	Passenger Seat Belt Anchor Pretensioner High Control	III	—
13	0.5	OG/D-BU	3068	Driver Side Impact Module High Control	II	—
14	0.5	L-GN/OG	3069	Driver Side Impact Module Low Control	II	—

K36 Inflatable Restraint Sensing and Diagnostic Module X2 (Extended Cab/Regular Cab) (cont'd)

Pin	Size	Color	Circuit	Function	Terminal Type ID	Option
15	0.35	BN/OG	3067	Passenger Side Impact Module Low Control	I	—
16	0.35	OG/GY	3066	Passenger Side Impact Module High Control	I	—
17	0.5	OG/L-GN	5019	Left Front Head Curtain Module High Control	III	—
18	0.5	VT/OG	5020	Left Front Head Curtain Module Low Control	III	—
19	0.35	OG/L-GN	2132	Left Front Side Impact Sensing Module Signal	I	—
20	0.35	BK/OG	6628	Left Front Side Impact Sensing Module Low Reference	I	—
21	0.35	BK/OG	6629	Right Front Side Impact Sensing Module Low Reference	I	—
22	0.35	BN/OG	2134	Right Front Side Impact Sensing Module Signal	I	—
23	0.5	OG/YE	354	Left Front Discriminating Sensor Signal	II	—
24	0.5	BK/OG	5045	Left Front Discriminating Sensor Low Reference	II	—
25	0.5	BK/OG	5600	Right Front Discriminating Sensor Low Reference	II	—
26	0.5	OG/L-GN	1409	Right Front Discriminating Sensor Signal	II	—
27	0.35	OG/D-BU	6622	Left Rear Side Impact Sensing Module Signal	I	—
28	0.35	BK/OG	6623	Left Rear Side Impact Sensing Module Low Reference	I	—
29	0.35	BK/OG	6627	Right Rear Side Impact Sensing Module Low Reference	I	—
30	0.35	OG/WH	6626	Right Rear Side Impact Sensing Module Signal	I	—
31 - 36	—	—	—	Not Occupied	—	—
37	0.5	OG/WH	3477	Driver Seat Belt Retractor Pretensioner High Control	III	—
38	0.5	GY/OG	3478	Driver Seat Belt Retractor Pretensioner Low Control	III	—
39	0.5	WH/OG	3476	Passenger Seat Belt Retractor Pretensioner Low Control	III	—
40	0.5	OG/L-GN	3475	Passenger Seat Belt Retractor Pretensioner High Control	III	—
41	0.35	OG/BN	238	Driver Seat Belt Switch Signal	I	—
42	0.35	OG/L-GN	5055	Driver Seat Position Switch Signal	I	—
43	0.35	BK/OG	1363	Driver Seat Belt Switch Low Reference	I	—
44	0.35	BK/OG	1361	Passenger Seat Belt Switch Low Reference	I	—
45	0.35	OG/VT	1362	Passenger Seat Belt Switch Signal	I	—
46 - 52	—	—	—	Not Occupied	—	—
53	0.5	OG/GY	5021	Right Front Head Curtain Module High Control	III	—
54	0.5	WH/OG	5022	Right Front Head Curtain Module Low Control	III	—

K38A Chassis Control Module - Auxiliary (L5P+N2N)

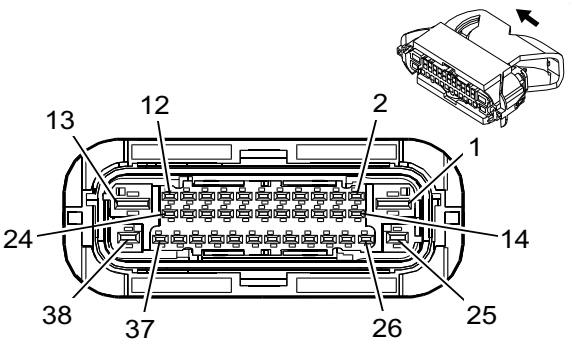

5199902

Connector Part Information

Harness Type: Chassis
OEM Connector: 33235479
Service Connector: -
Description: 38-Way F 1.5, 2.8, 4.8 MCP Series, Sealed (BK with BK Inner Connector)

Terminal Part Information

Terminal Type ID	Terminated Lead	Diagnostic Test Probe	Terminal Removal Tool	Service Terminal	Tray Name	Core Crimp	Insulation Crimp
I	13579914	J-35616-40 (BU)	J-38125-556	1241408-1	Lear 28	Not Available	Not Available
II	Not Available	J-35616-14 (GN)	J-38125-215A	Not Available	Not Available	Not Available	Not Available
III	Not Available	J-35616-35 (VT)	J-38125-215A	1241388-1	Lear 17	E	C

K38A Chassis Control Module - Auxiliary (L5P+N2N)

Pin	Size	Color	Circuit	Function	Terminal Type ID	Option
1	0.5	RD/WH	2040	Battery Positive Voltage	I	—
2 - 12	—	—	—	Not Occupied	—	—
13	0.75	BK	1750	Ground	I	—
14	0.5	VT/YE	5985	Accessory Wakeup Serial Data	II	—
15 - 21	—	—	—	Not Occupied	—	—
22	0.5	YE/BK	2224	Trailer Brake Enable Signal	II	—
23	0.5	WH/BK	2223	Trailer Brake Control Signal	II	—
24	—	—	—	Not Occupied	—	—
25	0.5	VT/L-GN	439	Run/Crank Ignition 1 Voltage	III	—
26	0.5	BU	2500	High Speed GMLAN Serial Data (+) 1	II	—
27	0.5	BU	2500	High Speed GMLAN Serial Data (+) 1	II	—
28	0.5	WH	2501	High Speed GMLAN Serial Data (-) 1	II	—
29	0.5	WH	2501	High Speed GMLAN Serial Data (-) 1	II	—
30	0.35	L-GN/VT	4114	Local Interconnect Network Serial Data Bus 14	II	—
31 - 38	—	—	—	Not Occupied	—	—

K38A Chassis Control Module - Auxiliary (-N2N)

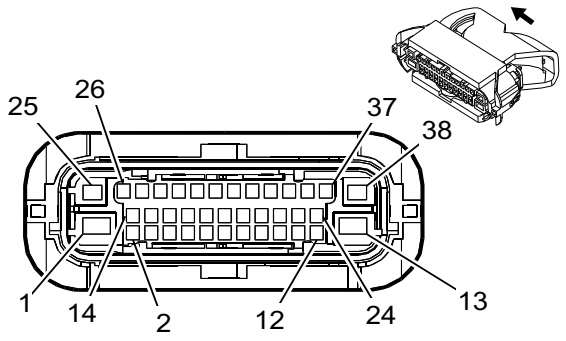

3240111

Connector Part Information

Harness Type: Chassis
OEM Connector: 13924619
Service Connector: 19119894
Description: 38-Way F 1.5 CTS, 2.8 MCP, 4.8 MCP Series, Sealed (BK with BK Inner Connector)

Terminal Part Information

Terminal Type ID	Terminated Lead	Diagnostic Test Probe	Terminal Removal Tool	Service Terminal	Tray Name	Core Crimp	Insulation Crimp
I	13579914	J-35616-40 (BU)	J-38125-556	1241408-1	Lear 28	Not Available	Not Available
II	Not Available	J-35616-14 (GN)	J-38125-215A	Not Available	Not Available	Not Available	Not Available
III	Not Available	J-35616-35 (VT)	J-38125-215A	1241388-1	Lear 17	E	C

K38A Chassis Control Module - Auxiliary (-N2N)

Pin	Size	Color	Circuit	Function	Terminal Type ID	Option
1	0.5	RD/WH	2040	Battery Positive Voltage	I	—
2 - 12	—	—	—	Not Occupied	—	—
13	0.75	BK	1750	Ground	I	—
14	0.5	VT/YE	5985	Accessory Wakeup Serial Data	II	—
15 - 21	—	—	—	Not Occupied	—	—
22	0.5	YE/BK	2224	Trailer Brake Enable Signal	II	—
23	0.5	WH/BK	2223	Trailer Brake Control Signal	II	—
24	—	—	—	Not Occupied	—	—
25	0.5	VT/L-GN	439	Run/Crank Ignition 1 Voltage	III	—
26	0.5	BU	2500	High Speed GMLAN Serial Data (+) 1	II	—
27	0.5	BU	2500	High Speed GMLAN Serial Data (+) 1	II	—
28	0.5	WH	2501	High Speed GMLAN Serial Data (-) 1	II	—
29	0.5	WH	2501	High Speed GMLAN Serial Data (-) 1	II	—
30	0.35	L-GN/VT	4114	Local Interconnect Network Serial Data Bus 14	II	—
31 - 38	—	—	—	Not Occupied	—	—

K40D Seat Memory Control Module - Driver X1 (A45)

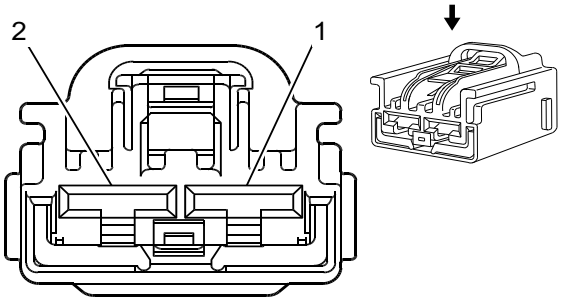

1817814

Connector Part Information

Harness Type: Driver Seat
OEM Connector: 7283-6458-40
Service Connector: Service by Harness - See Part Catalog
Description: 2-Way F 6.3 Series (L-GY)

Terminal Part Information

Terminal Type ID	Terminated Lead	Diagnostic Test Probe	Terminal Removal Tool	Service Terminal	Tray Name	Core Crimp	Insulation Crimp
I	Not Required	J-35616-42 (RD)	No Tool Required	Not Required	Not Required	Not Required	Not Required

K40D Seat Memory Control Module - Driver X1 (A45)

Pin	Size	Color	Circuit	Function	Terminal Type ID	Option
1	0.5	RD/BN	1140	Battery Positive Voltage	I	—
2	2.5	RD/YE	5040	Battery Positive Voltage	I	—

K40D Seat Memory Control Module - Driver X2 (A45)

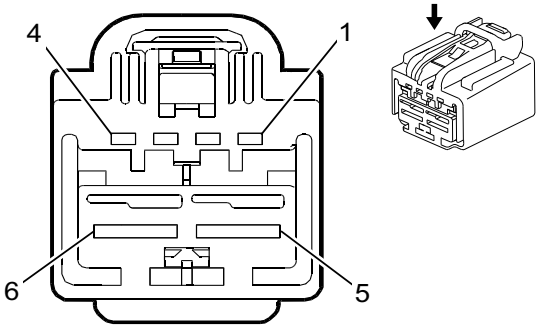

1798802

Connector Part Information

Harness Type: Driver Seat
OEM Connector: 7283-9749-30
Service Connector: Service by Harness - See Part Catalog
Description: 6-Way F YESC Kaizen Series (BK)

Terminal Part Information

Terminal Type ID	Terminated Lead	Diagnostic Test Probe	Terminal Removal Tool	Service Terminal	Tray Name	Core Crimp	Insulation Crimp
I	Not Required	J-35616-14 (GN)	No Tool Required	Not Required	Not Required	Not Required	Not Required
II	Not Required	J-35616-42 (RD)	No Tool Required	Not Required	Not Required	Not Required	Not Required

K40D Seat Memory Control Module - Driver X2 (A45)

Pin	Size	Color	Circuit	Function	Terminal Type ID	Option
1	0.5	L-GN	5060	Low Speed GMLAN Serial Data	I	—
2	—	—	—	Not Occupied	—	—
3	0.5	L-GN/WH	7530	Local Interconnect Network Serial Data Bus 8	I	—
4	—	—	—	Not Occupied	—	—
5	2.5	BK	1150	Ground	II	—
6	—	—	—	Not Occupied	—	—

K40D Seat Memory Control Module - Driver X3 (A45)

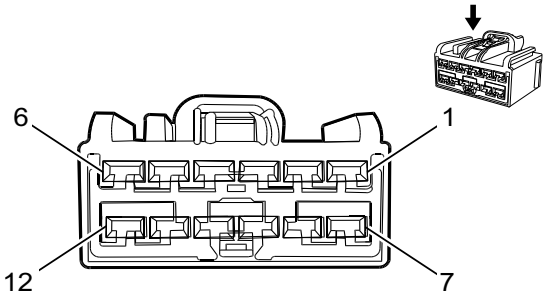

2231648

Connector Part Information

Harness Type: Driver Seat
OEM Connector: 7283-6467-40
Service Connector: Service by Harness - See Part Catalog
Description: 12-Way F 2.8 Kaizen Series (L-GY)

Terminal Part Information

Terminal Type ID	Terminated Lead	Diagnostic Test Probe	Terminal Removal Tool	Service Terminal	Tray Name	Core Crimp	Insulation Crimp
I	Not Required	J-35616-4A (PU)	No Tool Required	Not Required	Not Required	Not Required	Not Required

K40D Seat Memory Control Module - Driver X3 (A45)

Pin	Size	Color	Circuit	Function	Terminal Type ID	Option
1	1.5	L-GN/YE	276	Driver Power Seat Recline Motor Forward Control	I	—

K40D Seat Memory Control Module - Driver X3 (A45) (cont'd)

Pin	Size	Color	Circuit	Function	Terminal Type ID	Option
2	1.5	L-BU/YE	277	Driver Power Seat Recline Motor Rearward Control	I	—
3	1.5	L-GN/BN	286	Driver Power Seat Front Vertical Motor Up Control	I	—
4	1.5	L-BU/VT	287	Driver Power Seat Front Vertical Motor Down Control	I	—
5	1.5	YE	282	Driver Power Seat Rear Vertical Motor Up Control	I	—
6	1.5	GY/L-BU	283	Driver Power Seat Rear Vertical Motor Down Control	I	—
7 - 10	—	—	—	Not Occupied	—	—
11	1.5	YE/L-BU	285	Driver Power Seat Horizontal Motor Forward Control	I	—
12	1.5	GY/L-GN	284	Driver Power Seat Horizontal Motor Rearward Control	I	—

K40D Seat Memory Control Module - Driver X5 (A45)

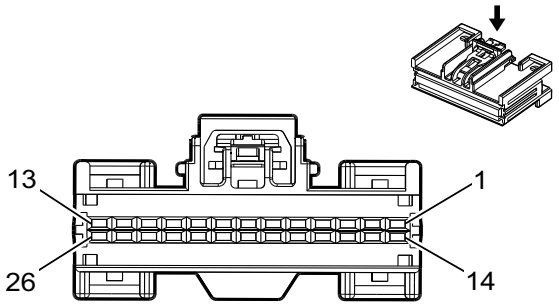

2916473

Connector Part Information

Harness Type: Driver Seat
OEM Connector: 7287-2043-30
Service Connector: Service by Harness - See Part Catalog
Description: 26-Way F 0.64 Series (BK)

Terminal Part Information

Terminal Type ID	Terminated Lead	Diagnostic Test Probe	Terminal Removal Tool	Service Terminal	Tray Name	Core Crimp	Insulation Crimp
I	Not Required	J-35616-64B (LT BU)	No Tool Required	Not Required	Not Required	Not Required	Not Required

K40D Seat Memory Control Module - Driver X5 (A45)

Pin	Size	Color	Circuit	Function	Terminal Type ID	Option
1	0.5	WH/RD	3298	Memory Sensor High Reference 2	I	—
2 - 3	—	—	—	Not Occupied	—	—
4	0.5	BN	3038	Right Rear Haptic Seat Motor Control	I	—

K40D Seat Memory Control Module - Driver X5 (A45) (cont'd)

Pin	Size	Color	Circuit	Function	Terminal Type ID	Option
5	0.5	YE/BN	3037	Left Rear Haptic Seat Motor Control	I	—
6	—	—	—	Not Occupied	—	—
7	0.5	YE/BN	1522	Power Seat Horizontal Forward Switch Signal	I	—
8	0.5	GY/L-GN	1523	Power Seat Horizontal Rearward Switch Signal	I	—
9	0.5	L-GN/BN	1518	Power Seat Front Vertical Up Switch Signal	I	—
10	0.5	L-BU/VT	1520	Power Seat Front Vertical Down Switch Signal	I	—
11	0.5	L-GN	569	Memory Seat Horizontal Motor Position Sensor Signal	I	—
12	0.5	BN/WH	557	Memory Seat Front Vertical Motor Position Sensor Signal	I	—
13 - 18	—	—	—	Not Occupied	—	—
19	0.5	YE	1519	Power Seat Rear Vertical Up Switch Signal	I	—
20	0.5	YE/L-BU	1521	Power Seat Rear Vertical Down Switch Signal	I	—
21	0.5	GY/BK	1269	Power Seat Recline Forward Switch Signal	I	—
22	0.5	L-GN/GY	1270	Power Seat Recline Rearward Switch Signal	I	—
23 - 24	—	—	—	Not Occupied	—	—
25	0.5	YE/L-BU	568	Memory Seat Rear Vertical Motor Position Sensor Signal	I	—
26	0.5	WH/BK	570	Driver Memory Seat Recline Motor Position Sensor Signal	I	—

K40D Seat Memory Control Module - Driver X6 (A45)

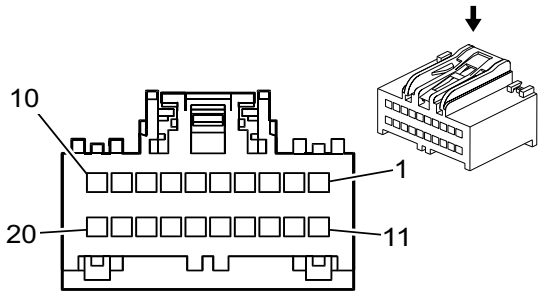

1715228

Connector Part Information

Harness Type: Driver Seat
OEM Connector: 31410-0201
Service Connector: Service by Harness - See Part Catalog
Description: 20-Way F USCAR 64 Series (GY)

Terminal Part Information

Terminal Type ID	Terminated Lead	Diagnostic Test Probe	Terminal Removal Tool	Service Terminal	Tray Name	Core Crimp	Insulation Crimp
I	Not Required	J-35616-64B (LT BU)	No Tool Required	Not Required	Not Required	Not Required	Not Required

K40D Seat Memory Control Module - Driver X6 (A45)

Pin	Size	Color	Circuit	Function	Terminal Type ID	Option
1 - 10	—	—	—	Not Occupied	—	—
11	0.5	BK/L-BU	5978	Memory Switch Low Reference	I	—
12	0.5	WH	615	Memory Seat Switch Signal 1	I	—
13 - 14	—	—	—	Not Occupied	—	—
15	0.5	L-BU/ L-GN	614	Memory Seat Switch Set Signal	I	—
16 - 20	—	—	—	Not Occupied	—	—

K43 Power Steering Control Module X1 (NV8)

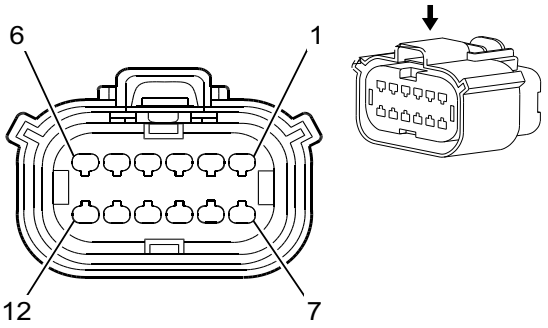

1825165

Connector Part Information

Harness Type: Chassis
OEM Connector: 13595088
Service Connector: 19150019
Description: 12-Way F 1.5 Series, Sealed (BK)

Terminal Part Information

Terminal Type ID	Terminated Lead	Diagnostic Test Probe	Terminal Removal Tool	Service Terminal	Tray Name	Core Crimp	Insulation Crimp
I	19300432	J-35616-2A (GY)	J-38125-217	Not Available	Not Available	Not Available	Not Available

K43 Power Steering Control Module X1 (NV8)

Pin	Size	Color	Circuit	Function	Terminal Type ID	Option
1	0.5	BU	2500	High Speed GMLAN Serial Data (+) 1	I	—
2	0.5	WH	2501	High Speed GMLAN Serial Data (-) 1	I	—
3	0.5	BU/YE	6105	High Speed GMLAN Serial Data (+) 2	I	—
4	0.5	WH	6106	High Speed GMLAN Serial Data (-) 2	I	—
5	0.5	RD/WH	5740	Battery Positive Voltage	I	—
6	—	—	—	Not Occupied	—	—
7	0.5	BU	2500	High Speed GMLAN Serial Data (+) 1	I	—
8	0.5	WH	2501	High Speed GMLAN Serial Data (-) 1	I	—
9	0.5	BU/YE	6105	High Speed GMLAN Serial Data (+) 2	I	—

K43 Power Steering Control Module X1 (NV8) (cont'd)

Pin	Size	Color	Circuit	Function	Terminal Type ID	Option
10	0.5	WH	6106	High Speed GMLAN Serial Data (-) 2	I	—
11	0.75 1	BK/WH BK/WH	1651 1651	Signal Ground Signal Ground	I I	L5P L8T
12	0.5	WH/D-BU	5986	Serial Data Communication Enable	I	—

K44 Power Take-Off Control Module X1 (PTO)

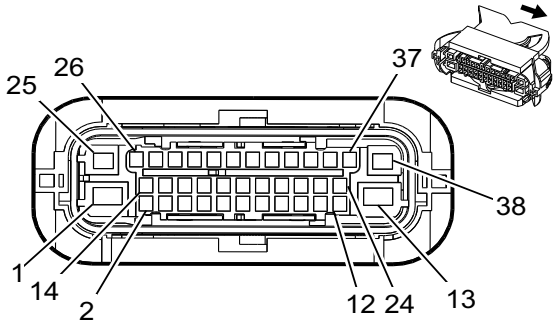

3240110

Connector Part Information

Harness Type: Engine
OEM Connector: 15498534
Service Connector: 19329924
Description: 38-Way F 1.5 CTS, 2.8 MCP, 4.8 MCP Series, Sealed (BK with BK Inner Connector)

Terminal Part Information

Terminal Type ID	Terminated Lead	Diagnostic Test Probe	Terminal Removal Tool	Service Terminal	Tray Name	Core Crimp	Insulation Crimp
I	13505347	J-35616-14 (GN)	J-38125-557	1241374-1	Lear 17	E	2
II	13579914	J-35616-40 (BU)	J-38125-556	1241408-1	Lear 28	Not Available	Not Available
III	13579915	J-35616-40 (BU)	J-38125-556	1241408-1	Lear 28	C	A
IV	Not Available	J-35616-14 (GN)	J-38125-215A	Not Available	Not Available	Not Available	Not Available
V	Not Available	J-35616-35 (VT)	J-38125-215A	1241388-1	Lear 17	E	C

K44 Power Take-Off Control Module X1 (PTO)

Pin	Size	Color	Circuit	Function	Terminal Type ID	Option
1	0.75	RD/D-BU	4540	Battery Positive Voltage	II	—
2 - 12	—	—	—	Not Occupied	—	—
13	1.5	BK/WH	451	Signal Ground	III	—
14	0.5	WH/D-BU	5986	Serial Data Communication Enable	IV	—
15	0.5	L-GN/WH	488	Power Take Off Control Switch	IV	—

K44 Power Take-Off Control Module X1 (PTO) (cont'd)

Pin	Size	Color	Circuit	Function	Terminal Type ID	Option
16 - 17	—	—	—	Not Occupied	—	—
18	0.5	BN/L-GN	4311	Power Take Off Enable In Cab Switch Normally Closed Signal	IV	—
19 - 24	—	—	—	Not Occupied	—	—
25	0.75	GY/L-GN	6239	Transmission Power Take Off Engage/ Disengage Signal Power	V	—
26	0.5	WH	2501	High Speed GMLAN Serial Data (-) 1	IV	—
27	0.5	BU	2500	High Speed GMLAN Serial Data (+) 1	IV	—
28	0.5	WH	2501	High Speed GMLAN Serial Data (-) 1	IV	—
29	0.5	BU	2500	High Speed GMLAN Serial Data (+) 1	I	—
30 - 38	—	—	—	Not Occupied	—	—

K44 Power Take-Off Control Module X2 (PTO)

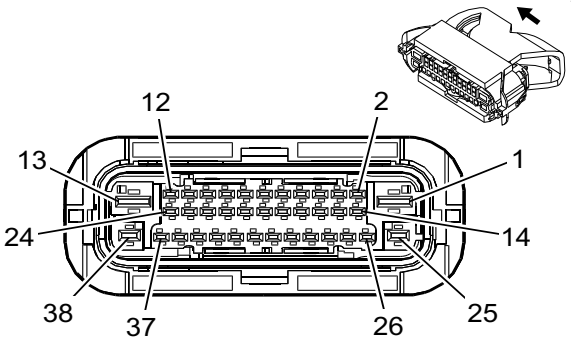

5141918

Connector Part Information

Harness Type: Engine
OEM Connector: 13670757
Service Connector: 19371190
Description: 38-Way F 1.5, 2.8, 4.8 MCP Series, Sealed (BK with BN Inner Connector)

Terminal Part Information

Terminal Type ID	Terminated Lead	Diagnostic Test Probe	Terminal Removal Tool	Service Terminal	Tray Name	Core Crimp	Insulation Crimp
I	13579914	J-35616-40 (BU)	J-38125-556	1241408-1	Lear 28	Not Available	Not Available
II	Not Available	J-35616-14 (GN)	J-38125-215A	Not Available	Not Available	Not Available	Not Available

K44 Power Take-Off Control Module X2 (PTO)

Pin	Size	Color	Circuit	Function	Terminal Type ID	Option
1 - 7	—	—	—	Not Occupied	—	—
8	0.5	BN/D-BU	4409	Power Take Off Load Relay Contact Signal	II	—
9	0.5	L-GN/WH	8236	—	II	—
10	0.5	L-GN/WH	8236	—	II	—

K44 Power Take-Off Control Module X2 (PTO) (cont'd)

Pin	Size	Color	Circuit	Function	Terminal Type ID	Option
11 - 12	—	—	—	Not Occupied	—	—
13	0.5	GY/BN	6388	Transmission High Side Driver 2 Signal	I	—
14 - 16	—	—	—	Not Occupied	—	—
17	0.5	BK/D-BU	7792	Transmission Control Sensors Low Reference (2)	II	—
18	0.5	WH/BN	7807	Clutch Pressure Sensor Signal Odd	II	—
19	0.5	BU/RD	7791	Transmission Control Sensors 5 Volt Reference (2)	II	—
20 - 27	—	—	—	Not Occupied	—	—
28	0.5	WH/L-GN	6142	Power Take Off Engine Shutdown Signal	II	—
29 - 34	—	—	—	Not Occupied	—	—
35	0.5	BU/GY	4308	Power Take Off Remote Throttle Signal	II	—
36	0.75	BU/BN	4408	Power Take Off Enable Signal	II	—
37 - 38	—	—	—	Not Occupied	—	—

K56 Serial Data Gateway Module X1

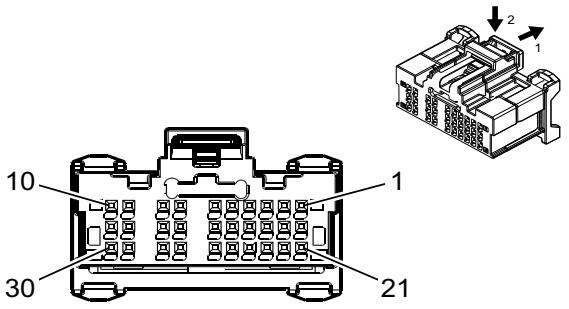

4900333

Connector Part Information

Harness Type: Instrument Panel
OEM Connector: 35077574
Service Connector: 13519319
Description: 30-Way F 0.5 MQS Series (BK with GY Terminal Position Assurance)

Terminal Part Information

Terminal Type ID	Terminated Lead	Diagnostic Test Probe	Terminal Removal Tool	Service Terminal	Tray Name	Core Crimp	Insulation Crimp
I	19370262	EL-35616-58 (BK)	EL-38125-58	Not Available	Not Available	Not Available	Not Available

K56 Serial Data Gateway Module X1

Pin	Size	Color	Circuit	Function	Terminal Type ID	Option
1	0.35	RD/VT	3340	Battery Positive Voltage	I	—
2 - 3	—	—	—	Not Occupied	—	—

K56 Serial Data Gateway Module X1 (cont'd)

Pin	Size	Color	Circuit	Function	Terminal Type ID	Option
4	0.35	BU/GY	3935	High Speed GMLAN Serial Data (+) 8	I	—
5	0.35	WH/GY	3936	High Speed GMLAN Serial Data (-) 8	I	—
6	—	—	—	Not Occupied	—	—
7	0.35	BK/WH	1851	Signal Ground	I	—
8	0.35	BU/L-GN	1304	High Speed GMLAN Serial Data (+)9	I	—
9	0.35	WH/L-GN	1305	High Speed GMLAN Serial Data (-)9	I	—
10 - 12	—	—	—	Not Occupied	—	—
13	0.35	BU/WH	2089	High Speed GMLAN Serial Data (+)(13)	I	—
14	0.35	WH	2090	High Speed GMLAN Serial Data (-)(13)	I	—
15	0.35	BU/BK	1978	High Speed GMLAN Serial Data (+)(11)	I	—
16	0.35	WH	1979	High Speed GMLAN Serial Data (-)(11)	I	—
17	0.35	BU/BN	1980	High Speed GMLAN Serial Data (+)(12)	I	—
18	0.35	WH	1981	High Speed GMLAN Serial Data (-)(12)	I	—
19	—	—	—	Not Occupied	—	—
20	0.35	L-GN	5060	Low Speed GMLAN Serial Data	I	—
21 - 25	—	—	—	Not Occupied	—	—
26	0.35	L-GN/WH	2100	Low Speed GMLAN Serial Data #3	I	—
27 - 29	—	—	—	Not Occupied	—	—
30	0.35	GY/L-GN	1102	Low Speed GMLAN Serial Data #2	I	—

K56 Serial Data Gateway Module X2

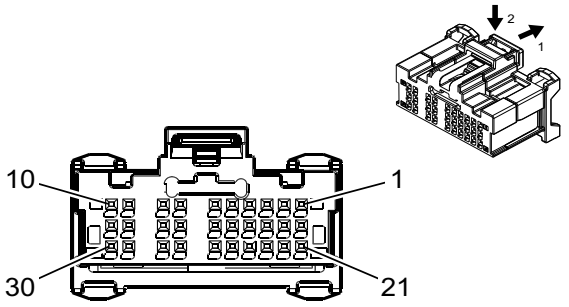

4897967

Connector Part Information

Harness Type: Instrument Panel
OEM Connector: 35074169
Service Connector: 13519320
Description: 30-Way F 0.5 MQS Series (BK with BU Terminal Position Assurance)

Terminal Part Information

Terminal Type ID	Terminated Lead	Diagnostic Test Probe	Terminal Removal Tool	Service Terminal	Tray Name	Core Crimp	Insulation Crimp
I	19370262	EL-35616-58 (BK)	EL-38125-58	Not Available	Not Available	Not Available	Not Available

K56 Serial Data Gateway Module X2

Pin	Size	Color	Circuit	Function	Terminal Type ID	Option
1 - 3	—	—	—	Not Occupied	—	—
4	0.35	BU	2500	High Speed GMLAN Serial Data (+) 1	I	—
5	0.35	WH	2501	High Speed GMLAN Serial Data (-) 1	I	—
6	0.35	BU/GY	3935	High Speed GMLAN Serial Data (+) 8	I	—
7	0.35	WH/GY	3936	High Speed GMLAN Serial Data (-) 8	I	—
8	0.35	BU/YE	6105	High Speed GMLAN Serial Data (+) 2	I	—
9	0.35	WH	6106	High Speed GMLAN Serial Data (-) 2	I	—
10	0.35	BU/L-GN	1304	High Speed GMLAN Serial Data (+)9	I	—
11 - 13	—	—	—	Not Occupied	—	—
14	0.35	BU	2500	High Speed GMLAN Serial Data (+) 1	I	—
15	0.35	WH	2501	High Speed GMLAN Serial Data (-) 1	I	—
16	0.35	BU/GY	3935	High Speed GMLAN Serial Data (+) 8	I	—
17	0.35	WH/GY	3936	High Speed GMLAN Serial Data (-) 8	I	—
18	0.35	BU/YE	6105	High Speed GMLAN Serial Data (+) 2	I	—
19	0.35	WH	6106	High Speed GMLAN Serial Data (-) 2	I	—
20	0.35	WH/L-GN	1305	High Speed GMLAN Serial Data (-)9	I	—
21 - 22	—	—	—	Not Occupied	—	—
23	0.35	VT/BK	1639	Run/Crank Ignition 1 Voltage	I	—
24	—	—	—	Not Occupied	—	—
25	0.35	WH/D-BU	5986	Serial Data Communication Enable	I	—
26 - 30	—	—	—	Not Occupied	—	—

K60 Steering Column Lock Module (BTM)

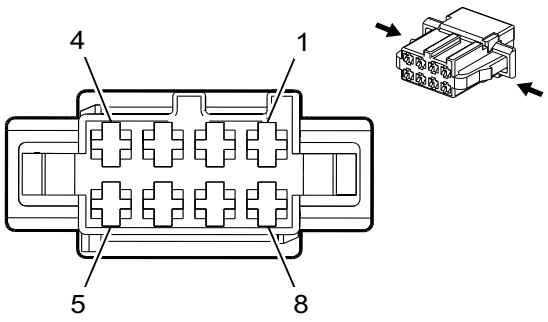

2173871

Connector Part Information

Harness Type: Instrument Panel
OEM Connector: 10718780
Service Connector: 13576545
Description: 8-Way F 1.6 Micro-Timer Series (BK)

Terminal Part Information

Terminal Type ID	Terminated Lead	Diagnostic Test Probe	Terminal Removal Tool	Service Terminal	Tray Name	Core Crimp	Insulation Crimp
I	Not Required	J-35616-14 (GN)	No Tool Required	Not Required	Not Required	Not Required	Not Required

K60 Steering Column Lock Module (BTM)

Pin	Size	Color	Circuit	Function	Terminal Type ID	Option
1	—	—	—	Not Occupied	—	—
2	0.35	BU/VT	5904	Steering Column Lock Status Signal	I	—
3	0.35	BU/VT	807	OFF /Accessory Ignition Voltage	I	—
4	0.35	L-GN/VT	1601	Steering Column Lock Signal	I	—
5	0.5	RD/GY	4140	Battery Positive Voltage	I	—
6	0.35	BK	1850	Ground	I	—
7	0.35	BK/WH	1851	Signal Ground	I	—
8	0.35	L-GN	5060	Low Speed GMLAN Serial Data	I	—

K68 Trailer Lighting Control Module (U1D)

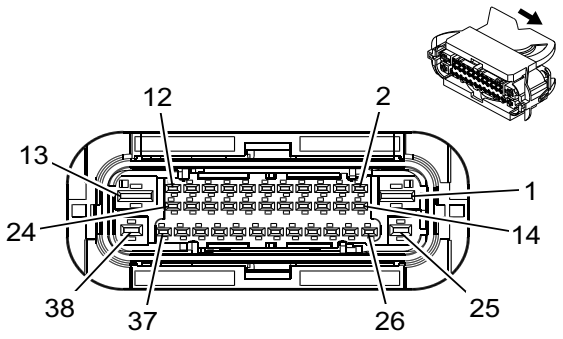

5199340

Connector Part Information

Harness Type: Chassis
OEM Connector: 33235465
Service Connector: -
Description: 38-Way F 1.5, 2.8, 4.8 MCP Series, Sealed (BK with BN Inner Connector)

Terminal Part Information

Terminal Type ID	Terminated Lead	Diagnostic Test Probe	Terminal Removal Tool	Service Terminal	Tray Name	Core Crimp	Insulation Crimp
I	13579915	J-35616-40 (BU)	J-38125-556	1241408-1	Lear 28	A	B
II	13582286	J-35616-35 (VT)	J-38125-557	1-968857-3	Lear 7	C	1
III	Not Available	J-35616-14 (GN)	J-38125-215A	Not Available	Not Available	Not Available	Not Available
IV	Not Available	No Tool Required	Not Available	Not Required	Not Required	Not Required	Not Required

K68 Trailer Lighting Control Module (U1D)

Pin	Size	Color	Circuit	Function	Terminal Type ID	Option
1	2.5	RD/YE	5840	Battery Positive Voltage	I	—
2	0.75	YE/GY	1618	Left Rear Trailer Stop/Turn Lamp Control	III	—
3	0.75	GN/VT	1619	Right Rear Trailer Stop/Turn Lamp Control	III	—
4 - 6	—	—	—	Not Occupied	—	—
7	0.75	GN/WH	5189	Trailer Backup Lamp Control	III	—
8 - 9	—	—	—	Not Occupied	—	—
10	0.5	VT/GN	439	Run/Crank Ignition 1 Voltage	III	—
11	0.5	VT/WH	5065	Stop Lamp Relay Coil Control	III	—
12	—	—	—	Not Occupied	—	—
13	2.5	BK	1750	Ground	I	—
14 - 24	—	—	—	Not Occupied	—	—
25	—	GY/BN	2109	Trailer Park Lamp Control	IV	—
26	—	—	—	Not Occupied	—	—
27	0.5	GN	5060	Low Speed GMLAN Serial Data	III	—
28 - 37	—	—	—	Not Occupied	—	—
38	2	RD/VT	5640	Battery Positive Voltage	II	—

K69 Transfer Case Control Module (NQH/NQF)

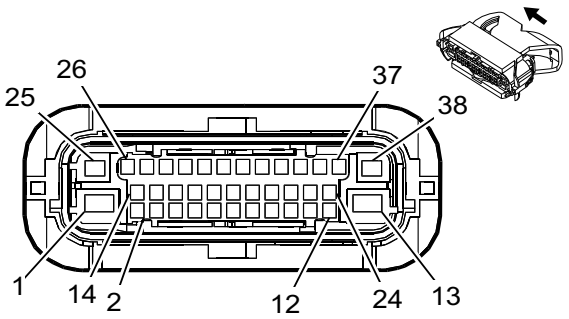

3240112

Connector Part Information

Harness Type: Engine
OEM Connector: 33110415
Service Connector: 19353395
Description: 38-Way F 1.5 CTS, 2.8 MCP, 4.8 MCP Series, Sealed (BK with BU Inner Connector)

Terminal Part Information

Terminal Type ID	Terminated Lead	Diagnostic Test Probe	Terminal Removal Tool	Service Terminal	Tray Name	Core Crimp	Insulation Crimp
I	13505347	J-35616-14 (GN)	J-38125-557	1241374-1	Lear 17	E	2
II	13579921	J-35616-40 (BU)	J-38125-556	1241408-1	Lear 28	B	G
III	13582286	J-35616-35 (VT)	J-38125-557	1-968857-3	Lear 7	C	1

Terminal Part Information (cont'd)

Terminal Type ID	Terminated Lead	Diagnostic Test Probe	Terminal Removal Tool	Service Terminal	Tray Name	Core Crimp	Insulation Crimp
IV	Not Available	J-35616-14 (GN)	J-38125-215A	Not Available	Not Available	Not Available	Not Available

K69 Transfer Case Control Module (NQH/NQF)

Pin	Size	Color	Circuit	Function	Terminal Type ID	Option
1	3	RD/GY	1342	Battery Positive Voltage	II	—
2	—	—	—	Not Occupied	—	—
3	0.5	BU	2500	High Speed GMLAN Serial Data (+) 1	I	—
	0.5	BU	2500	High Speed GMLAN Serial Data (+) 1	IV	—
4	0.5	WH	2501	High Speed GMLAN Serial Data (-) 1	IV	—
	0.5	WH	2501	High Speed GMLAN Serial Data (-) 1	I	—
5	0.5	WH/GN	7479	Rotary Position Sensor Signal	I	—
	0.5	WH/GN	7479	Rotary Position Sensor Signal	IV	—
6	—	—	—	Not Occupied	—	—
7	0.5	YE	7474	Incremental Encoder Direction Signal	I	—
	0.5	YE	7474	Incremental Encoder Direction Signal	IV	—
8	—	—	—	Not Occupied	—	—
9	0.5	YE/WH	1695	Four Wheel Drive Wheel Lock Indicator Control	IV	—
	0.5	YE/WH	1695	Four Wheel Drive Wheel Lock Indicator Control	I	—
10	0.5	BN	1560	Neutral Indicator Control	IV	—
	0.5	BN	1560	Neutral Indicator Control	I	—
11	—	—	—	Not Occupied	—	—
12	0.5	GY/BK	1570	Front Axle Actuator Control	I	—
	0.5	GY/BK	1570	Front Axle Actuator Control	IV	—
13	4	YE/VT	1553	Transfer Case Motor Counter Clockwise Control	II	—
14	—	—	—	Not Occupied	—	—
15	0.5	BU	2500	High Speed GMLAN Serial Data (+) 1	IV	—
	0.5	BU	2500	High Speed GMLAN Serial Data (+) 1	I	—
16	0.5	WH	2501	High Speed GMLAN Serial Data (-) 1	I	—
	0.5	WH	2501	High Speed GMLAN Serial Data (-) 1	IV	—
17	—	—	—	Not Occupied	—	—
18	0.5	WH/BU	5986	Serial Data Communication Enable	IV	—
	0.5	WH/BU	5986	Serial Data Communication Enable	I	—
19	0.5	BU/GY	7473	Incremental Encoder Impulse Signal	I	—
	0.5	BU/GY	7473	Incremental Encoder Impulse Signal	IV	—
20	0.5	WH/RD	7477	Rotary Position Sensor 5V Reference	I	—
	0.5	WH/RD	7477	Rotary Position Sensor 5V Reference	IV	—
21 - 23	—	—	—	Not Occupied	—	—
24	0.5	GN	953	—	I	—
	0.5	GN	953	—	IV	—
25	2.5	BK	4450	Ground	III	—
26	—	—	—	Not Occupied	—	—
27	0.5	GN	951	Knock Sensor Shield	I	—
	0.5	GN	951	Knock Sensor Shield	IV	—
28 - 29	—	—	—	Not Occupied	—	—
30	0.5	YE/BK	7478	Rotary Position Sensor Low Reference	IV	—
	0.5	YE/BK	7478	Rotary Position Sensor Low Reference	I	—

K69 Transfer Case Control Module (NQH/NQF) (cont'd)

Pin	Size	Color	Circuit	Function	Terminal Type ID	Option
31	0.5	WH/GN	7475	Incremental Encoder Sensor 8V Reference	IV	—
	0.5	WH/GN	7475	Incremental Encoder Sensor 8V Reference	I	—
32	—	—	—	Not Occupied	—	—
33	0.75	BK	952	—	IV	—
	0.75	BK	952	—	I	—
34	0.75	YE/BN	1569	Transfer Case Lock Solenoid Control	IV	—
	0.75	YE/BN	1569	Transfer Case Lock Solenoid Control	I	—
35	—	—	—	Not Occupied	—	—
36	0.5	VT	7476	Incremental Encoder Sensor Low Reference	IV	—
	0.5	VT	7476	Incremental Encoder Sensor Low Reference	I	—
37	—	—	—	Not Occupied	—	—
38	2.5	YE/GY	1552	Transfer Case Motor Clockwise Control	III	—

K71 Transmission Control Module (MGM/MGU)

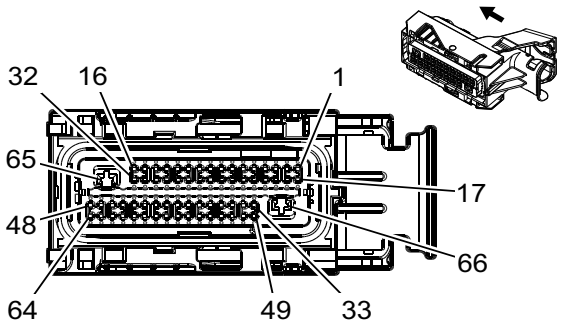

3621452

Connector Part Information

Harness Type: Engine
OEM Connector: 13965710
Service Connector: 19329822
Description: 66-Way F 0.64, 2.8 Series, Sealed (BK with BK Terminal Position Assurance)

Terminal Part Information

Terminal Type ID	Terminated Lead	Diagnostic Test Probe	Terminal Removal Tool	Service Terminal	Tray Name	Core Crimp	Insulation Crimp
I	13575797	J-35616-4A (PU)	J-38125-11A	7116-4152-02	Yazaki 9	Not Available	Not Available
II	19330179	J-35616-64B (LT BU)	J-38125-215A	Not Available	Not Available	Not Available	Not Available

K71 Transmission Control Module (MGM/MGU)

Pin	Size	Color	Circuit	Function	Terminal Type ID	Option
1	0.5	VT/WH	422	Torque Converter Clutch Solenoid Control	II	—
2	0.5	GY/L-GN	6403	Clutch D Control	II	—
3	0.5	WH/D-BU	4507	Transmission Clutch H Control	II	—

K71 Transmission Control Module (MGM/MGU) (cont'd)

Pin	Size	Color	Circuit	Function	Terminal Type ID	Option
4	0.5	WH	4508	Transmission Clutch G Control	II	—
5 - 6	—	—	—	Not Occupied	—	—
7	0.5	YE/L-GN	4170	Transmission Position Sensor B 9V Reference	II	—
8	0.5	YE/D-BU	4171	Transmission Position Sensor A 9V Reference	II	—
9 - 11	—	—	—	Not Occupied	—	—
12	0.5	L-GN/YE	6353	Input Speed Signal	II	—
13	0.5	L-GN/VT	4510	Transmission Intermediate Speed Signal	II	—
14	0.5	GY/D-BU	6358	Output Speed Signal	II	—
15	0.5	BN/WH	6254	Transmission Input Speed Sensor Signal	II	—
16	—	—	—	Not Occupied	—	—
17	0.5	L-GN/WH	1530	Transmission Mainline Pressure Solenoid Control	II	—
18	0.5	YE/BN	6404	Clutch E Control	II	—
19	0.5	GY	6402	Clutch C Control	II	—
20	0.5	VT	4509	Transmission Clutch F Control	II	—
21	—	—	—	Not Occupied	—	—
22	0.5	L-GN/BK	7819	Default Disable Solenoid Control	II	—
23	—	—	—	Not Occupied	—	—
24	0.5	L-GN/WH	2968	Transmission Auxiliary Oil Pump Control	II	—
25 - 27	—	—	—	Not Occupied	—	—
28	0.5	BK/BN	586	Transmission Oil Temperature Sensor Low Reference	II	—
29 - 32	—	—	—	Not Occupied	—	—
33	0.5	L-GN/GY	6387	Transmission High Side Driver 1 Signal Driver	II	—
34	—	—	—	Not Occupied	—	—
35	0.5	VT/BK	2139	Run/Crank Ignition 1 Voltage	II	—
36	—	—	—	Not Occupied	—	—
37	0.5	BU	2500	High Speed GMLAN Serial Data (+) 1	II	—
38	0.5	WH	2501	High Speed GMLAN Serial Data (-) 1	II	—
39 - 48	—	—	—	Not Occupied	—	—
49	0.5	GY/BN	6388	Transmission High Side Driver 2 Signal	II	—
50	—	—	—	Not Occupied	—	—
51	0.5	VT/YE	5985	Accessory Wakeup Serial Data	II	—
52	—	—	—	Not Occupied	—	—
53	0.5	BU	2500	High Speed GMLAN Serial Data (+) 1	II	—
54	0.5	WH	2501	High Speed GMLAN Serial Data (-) 1	II	—
55 - 62	—	—	—	Not Occupied	—	—
63	0.5	BN/WH	585	Transmission Oil Temperature Sensor Signal	II	—
64	0.5	L-GN/YE	3338	Transmission Internal Mode Switch Mode Control B	II	—
65	1.5	BK/WH	451	Signal Ground	I	—
66	1.5	RD/L-GN	1840	Battery Positive Voltage	I	—

K71 Transmission Control Module (MYD)

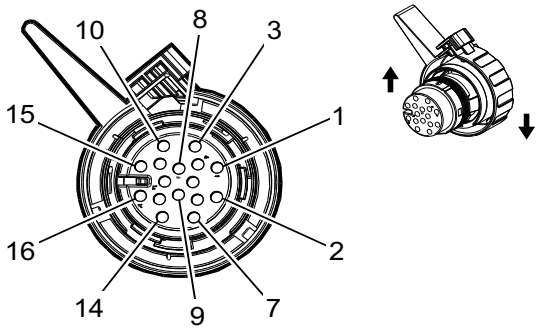

3277917

Connector Part Information

Harness Type: Engine
OEM Connector: 13878751
Service Connector: 19303772
Description: 16-Way F 1.5 Series, Sealed (BK)

Terminal Part Information

Terminal Type ID	Terminated Lead	Diagnostic Test Probe	Terminal Removal Tool	Service Terminal	Tray Name	Core Crimp	Insulation Crimp
I	13578919	J-35616-66 (YE)	J-38125-28	2 21 24 47220 0	Yazaki 12	E	1
II	13578920	J-35616-66 (YE)	J-38125-28	2 21 24 47220 0	Yazaki 12	E	1
III	Not Available	J-35616-66 (YE)	J-38125-28	2 21 24 47220 0	Yazaki 12	E	1

K71 Transmission Control Module (MYD)

Pin	Size	Color	Circuit	Function	Terminal Type ID	Option
1	0.75	RD/L-GN	1840	Battery Positive Voltage	II	—
2	1	BK/WH	451	Signal Ground	II	—
3	0.5	WH/GY	1786	Transmission Park/Neutral Signal 1	III	—
4	0.75	RD/L-GN	1840	Battery Positive Voltage	II	—
5	1	BK/WH	451	Signal Ground	II	—
6 - 8	—	—	—	Not Occupied	—	—
9	0.35	VT/YE	5985	Accessory Wakeup Serial Data	I	—
10	0.5	BU	2500	High Speed GMLAN Serial Data (+) 1	III	—
11	0.5	WH	2501	High Speed GMLAN Serial Data (-) 1	III	—
12	0.5	VT/BK	2139	Run/Crank Ignition 1 Voltage	III	—
13	0.5	WH	2501	High Speed GMLAN Serial Data (-) 1	III	—
14	0.5	BU	2500	High Speed GMLAN Serial Data (+) 1	III	—
15	—	—	—	Not Occupied	—	—
16	0.5 0.5	BN/WH BN/WH	400 6354	Vehicle Speed Sensor Signal Output Speed High (Replicated TOS) Input Signal	III III	— —

K73 Telematics Communication Interface Control Module X1

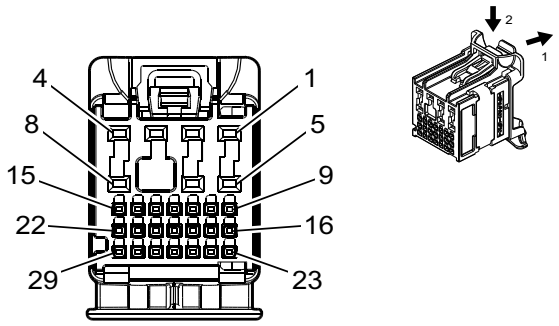

4496253

Connector Part Information

Harness Type: Instrument Panel
OEM Connector: 33303954
Service Connector: 13506123
Description: 29-Way F 0.5 NANO, 1.2 MCON Series Sealed (BK)

Terminal Part Information

Terminal Type ID	Terminated Lead	Diagnostic Test Probe	Terminal Removal Tool	Service Terminal	Tray Name	Core Crimp	Insulation Crimp
I	19354361	EL-35616-58 (BK)	EL-38125-58	Not Available	Not Available	Not Available	Not Available
II	19370262	EL-35616-58 (BK)	EL-38125-58	Not Available	Not Available	Not Available	Not Available
III	19371240	J-35616-16 (LT GN)	J-38125-559	Not Available	Not Available	Not Available	Not Available

K73 Telematics Communication Interface Control Module X1

Pin	Size	Color	Circuit	Function	Terminal Type ID	Option
1	0.5	RD/D-BU	3240	Battery Positive Voltage	III	—
2 - 3	—	—	—	Not Occupied	—	—
4	0.5	BK/WH	2751	Signal Ground	III	—
5	—	—	—	Not Occupied	—	—
6	0.35	L-GN/BK	2515	Keypad Control	III	—
7	—	—	—	Not Occupied	—	—
8	0.5	BK/WH	2751	Signal Ground	III	—
9	0.35 0.35	WH/L-GN WH/L-GN	1305 1305	High Speed GMLAN Serial Data (-)9 High Speed GMLAN Serial Data (-)9	I II	UDD -UDD
10	0.35 0.35	BU/L-GN BU/L-GN	1304 1304	High Speed GMLAN Serial Data (+)9 High Speed GMLAN Serial Data (+)9	I II	UDD -UDD
11	0.35	L-GN/WH	2514	Keypad Signal	I	—
12	0.35	WH/D-BU	5986	Serial Data Communication Enable	I	—
13	0.35	Bare	1792	Low Reference	I	—
14	0.35	BK/GY	5152	Voice Recognition Audio Low Reference	I	—
15	0.35	GY/YE	5149	Voice Recognition Audio Signal	I	—
16	0.35 0.35	WH/L-GN WH/L-GN	1305 1305	High Speed GMLAN Serial Data (-)9 High Speed GMLAN Serial Data (-)9	I II	IOR IOS|/IOT

K73 Telematics Communication Interface Control Module X1 (cont'd)

Pin	Size	Color	Circuit	Function	Terminal Type ID	Option
17	0.35	BU/L-GN	1304	High Speed GMLAN Serial Data (+)9	I	IOR
	0.35	BU/L-GN	1304	High Speed GMLAN Serial Data (+)9	II	IOS|/IOT
18	—	—	—	Not Occupied	—	—
19	0.35	YE/VT	2516	Keypad Green LED Control	I	—
20	0.35	Bare	1782	Low Reference	I	—
21	0.35	BK/BN	654	Cellular Telephone Microphone Low Reference	I	—
22	0.35	BU	655	Cellular Telephone Microphone Signal	I	—
23	0.35	GY/L-GN	1102	Low Speed GMLAN Serial Data #2	I	—
24 - 25	—	—	—	Not Occupied	—	—
26	0.35	BN/WH	2517	Keypad Red LED Control	I	—
27	—	—	—	Not Occupied	—	—
28	0.35	GY/WH	7211	Ethernet Bus 4 (+)	I	—
29	0.35	GY	7210	Ethernet Bus 4 (-)	I	—

K77 Remote Control Door Lock Receiver (AQQ)

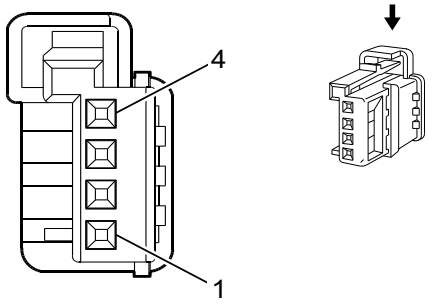

2179793

Connector Part Information

Harness Type: Body
OEM Connector: 10768790
Service Connector: 13584096
Description: 4-Way F 0.64 Micro-Quadlock Series (BK)

Terminal Part Information

Terminal Type ID	Terminated Lead	Diagnostic Test Probe	Terminal Removal Tool	Service Terminal	Tray Name	Core Crimp	Insulation Crimp
I	Not Required	J-35616-64B (LT BU)	No Tool Required	Not Required	Not Required	Not Required	Not Required

K77 Remote Control Door Lock Receiver (AQQ)

Pin	Size	Color	Circuit	Function	Terminal Type ID	Option
1	0.35	GY	3273	Remote Function Actuator Low Reference	I	—
2	0.35	YE/L-GN	3274	Remote Function Actuator Transmit Signal	I	—
3	0.35	BU/WH	3275	Remote Function Actuator Receive Signal	I	—

K77 Remote Control Door Lock Receiver (AQQ) (cont'd)

Pin	Size	Color	Circuit	Function	Terminal Type ID	Option
4	0.35	GY/WH	3272	Remote Function Actuator Control	I	—

K84 Keyless Entry Control Module X1 (BTM)

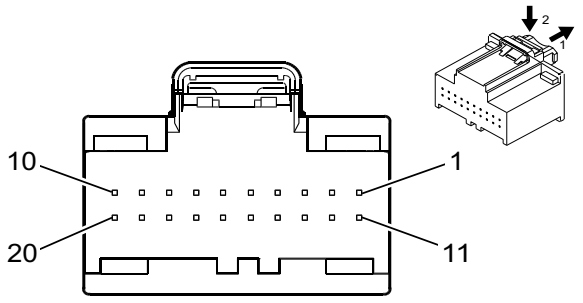

5109514

Connector Part Information

Harness Type: Body
OEM Connector: 35162720
Service Connector: 13525992
Description: 20-Way F 0.64 Series (BN)

Terminal Part Information

Terminal Type ID	Terminated Lead	Diagnostic Test Probe	Terminal Removal Tool	Service Terminal	Tray Name	Core Crimp	Insulation Crimp
I	13575742	J-35616-64B (LT BU)	J-38125-215A	SAIT-A03T-M064	Yazaki 14	P	P
II	13575867	J-35616-64B (LT BU)	J-38125-215A	SAIT-A03T-M064	Yazaki 14	P	P
III	19300631	J-35616-64B (LT BU)	J-38125-215A	Not Available	Not Available	Not Available	Not Available

K84 Keyless Entry Control Module X1 (BTM)

Pin	Size	Color	Circuit	Function	Terminal Type ID	Option
1	0.35	L-GN/VT	1601	Steering Column Lock Signal	II	—
	0.35	L-GN/VT	1601	Steering Column Lock Signal	III	—
2	0.5	RD/YE	4340	Battery Positive Voltage	III	—
	0.5	RD/YE	4340	Battery Positive Voltage	I	—
3	0.5	L-GN	5060	Low Speed GMLAN Serial Data	I	—
	0.5	L-GN	5060	Low Speed GMLAN Serial Data	III	—
4	—	—	—	Not Occupied	—	—
5	0.35	VT/YE	4	Accessory Ignition Voltage	II	—
	0.35	VT/YE	4	Accessory Ignition Voltage	III	—
6	—	—	—	Not Occupied	—	—
7	0.35	GY/L-GN	4083	RAP Relay 2 Coil Control	II	—
	0.35	GY/L-GN	4083	RAP Relay 2 Coil Control	III	—

K84 Keyless Entry Control Module X1 (BTM) (cont'd)

Pin	Size	Color	Circuit	Function	Terminal Type ID	Option
8	—	—	—	Not Occupied	—	—
9	0.35	WH/YE	3574	Driver Door Open Switch Signal	III	—
	0.35	WH/YE	3574	Driver Door Open Switch Signal	II	—
10	0.35	YE/D-BU	4086	Pushbutton Start Challenge Active Signal	II	—
	0.35	YE/D-BU	4086	Pushbutton Start Challenge Active Signal	III	—
11	0.35	L-GN/BK	3558	Passive Start Switch Signal 2	II	—
	0.35	L-GN/BK	3558	Passive Start Switch Signal 2	III	—
12	0.35	BK/GY	3559	Passive Start Switch 2 Low Reference	III	—
	0.35	BK/GY	3559	Passive Start Switch 2 Low Reference	II	—
13	0.35	VT/BK	3	Run/Crank Ignition 1 Voltage	II	—
	0.35	VT/BK	3	Run/Crank Ignition 1 Voltage	III	—
14	0.5	BK/WH	1151	Signal Ground	I	—
	0.5	BK/WH	1151	Signal Ground	III	—
15	0.35	GY/BK	3555	Passive Start Interior Antenna 2 Signal Lo	II	—
	0.35	GY/BK	3555	Passive Start Interior Antenna 2 Signal Lo	III	—
16	0.35	BN/BK	3552	Passive Start Interior Antenna 1 Signal Hi	II	—
	0.35	BN/BK	3552	Passive Start Interior Antenna 1 Signal Hi	III	—
17	0.35	WH	3553	Passive Start Interior Antenna 1 Signal Lo	III	—
	0.35	WH	3553	Passive Start Interior Antenna 1 Signal Lo	II	—
18 - 19	—	—	—	Not Occupied	—	—
20	0.35	BU	3554	Passive Start Interior Antenna 2 Signal Hi	III	—
	0.35	BU	3554	Passive Start Interior Antenna 2 Signal Hi	II	—

K84 Keyless Entry Control Module X2 (BTM)

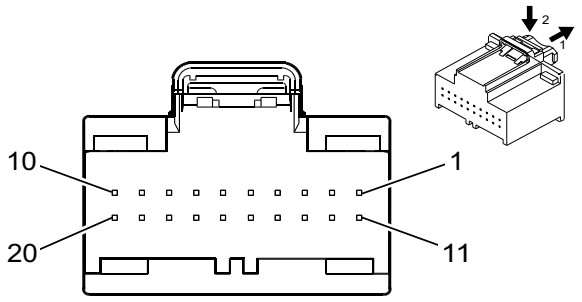

5109537

Connector Part Information

Harness Type: Body
OEM Connector: 35165309
Service Connector: 13525991
Description: 20-Way F 0.64 Series (GY)

Terminal Part Information

Terminal Type ID	Terminated Lead	Diagnostic Test Probe	Terminal Removal Tool	Service Terminal	Tray Name	Core Crimp	Insulation Crimp
I	13575742	J-35616-64B (LT BU)	J-38125-215A	SAIT-A03T-M064	Yazaki 14	P	P

Terminal Part Information (cont'd)

Terminal Type ID	Terminated Lead	Diagnostic Test Probe	Terminal Removal Tool	Service Terminal	Tray Name	Core Crimp	Insulation Crimp
II	13575867	J-35616-64B (LT BU)	J-38125-215A	SAIT-A03T-M064	Yazaki 14	P	P
III	19300631	J-35616-64B (LT BU)	J-38125-215A	Not Available	Not Available	Not Available	Not Available

K84 Keyless Entry Control Module X2 (BTM)

Pin	Size	Color	Circuit	Function	Terminal Type ID	Option
1	0.35	YE/GY	6158	Right Rear Door Handle Switch Signal	III	—
	0.35	YE/GY	6158	Right Rear Door Handle Switch Signal	II	—
2	0.35	BN/YE	6157	Left Rear Door Handle Switch Signal	II	—
	0.35	BN/YE	6157	Left Rear Door Handle Switch Signal	III	—
3 - 5	—	—	—	Not Occupied	—	—
6	0.5	VT	3560	Passive Entry Driver Door Antenna Signal Hi	I	—
	0.5	VT	3560	Passive Entry Driver Door Antenna Signal Hi	III	—
7	0.5	VT/GY	3561	Passive Entry Driver Door Antenna Signal Lo	I	—
	0.5	VT/GY	3561	Passive Entry Driver Door Antenna Signal Lo	III	—
8	—	—	—	Not Occupied	—	—
9	0.5	GN/BK	3563	Passive Entry Passenger Door Antenna Signal Lo	I	—
	0.5	GN/BK	3563	Passive Entry Passenger Door Antenna Signal Lo	III	—
10	—	—	—	Not Occupied	—	—
11	0.35	VT/WH	3571	Passenger Door Handle Switch Signal	II	—
	0.35	VT/WH	3571	Passenger Door Handle Switch Signal	III	—
12	0.35	GN/WH	3570	Driver Door Handle Switch Signal	III	—
	0.35	GN/WH	3570	Driver Door Handle Switch Signal	II	—
13 - 15	—	—	—	Not Occupied	—	—
16	0.5	BN/GN	3568	Passive Entry Rear Closure Antenna Signal Hi	I	—
	0.5	BN/GN	3568	Passive Entry Rear Closure Antenna Signal Hi	III	—
17	—	—	—	Not Occupied	—	—
18	0.5	GN/GY	3569	Passive Entry Rear Closure Antenna Signal Lo	I	—
	0.5	GN/GY	3569	Passive Entry Rear Closure Antenna Signal Lo	III	—
19	—	—	—	Not Occupied	—	—
20	0.5	GN/YE	3562	Passive Entry Passenger Door Antenna Signal Hi	III	—
	0.5	GN/YE	3562	Passive Entry Passenger Door Antenna Signal Hi	I	—

K85 Passenger Presence Module

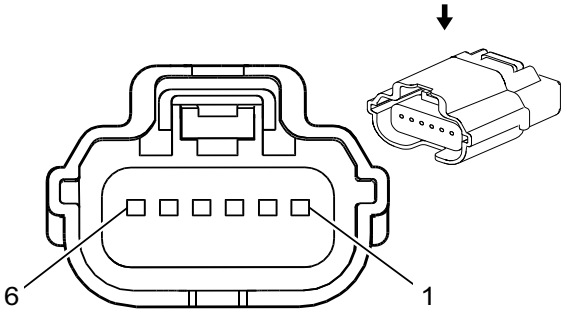

1974974

Connector Part Information

Harness Type: Passenger Seat
OEM Connector: 31404-6132
Service Connector: Service by Harness - See Part Catalog
Description: 6-Way F 0.64 Series, Sealed (BK)

Terminal Part Information

Terminal Type ID	Terminated Lead	Diagnostic Test Probe	Terminal Removal Tool	Service Terminal	Tray Name	Core Crimp	Insulation Crimp
I	Not Required	J-35616-64B (LT BU)	No Tool Required	Not Required	Not Required	Not Required	Not Required

K85 Passenger Presence Module

Pin	Size	Color	Circuit	Function	Terminal Type ID	Option
1	0.5	RD/L-GN	4440	Battery Positive Voltage	I	—
2	0.5	L-GN	5060	Low Speed GMLAN Serial Data	I	—
3	—	—	—	Not Occupied	—	—
4	0.5	BK/WH	2551	Signal Ground	I	—
5	0.5	GY/OG	3946	Automatic Locking Retractor Switch Low Reference	I	—
6	0.5	OG/BN	3947	Automatic Locking Retractor Switch Signal	I	—

K89 Immobilizer Control Module (-BTM)

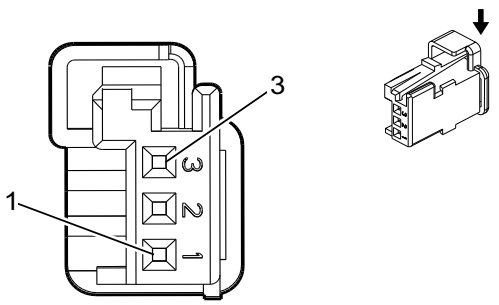

4218883

Connector Part Information

Harness Type: Instrument Panel
OEM Connector: 10763117
Service Connector: 19333317
Description: 3-Way F 0.64 Micro-Quadlock Series (BK)

Terminal Part Information

Terminal Type ID	Terminated Lead	Diagnostic Test Probe	Terminal Removal Tool	Service Terminal	Tray Name	Core Crimp	Insulation Crimp
I	Not Required	J-35616-64B (LT BU)	No Tool Required	Not Required	Not Required	Not Required	Not Required

K89 Immobilizer Control Module (-BTM)

Pin	Size	Color	Circuit	Function	Terminal Type ID	Option
1	0.5	L-GN/GY	3277	Vehicle Anti-Theft System Immobilizer Low Reference	I	—
2	0.5	L-GN/VT	7533	Local Interconnect Network Serial Data Bus 11	I	—
3	0.5	GY/BK	3276	Vehicle Anti-Theft System Immobilizer Control	I	—

K89 Immobilizer Control Module (BTM+D07)

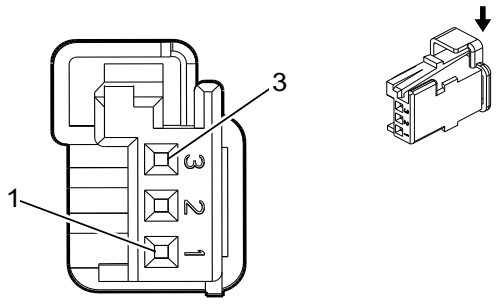

4218883

Connector Part Information

Harness Type: Floor Console
OEM Connector: 10763117
Service Connector: Service by Harness - See Part Catalog
Description: 3-Way F 0.64 Micro-Quadlock Series (BK)

Terminal Part Information

Terminal Type ID	Terminated Lead	Diagnostic Test Probe	Terminal Removal Tool	Service Terminal	Tray Name	Core Crimp	Insulation Crimp
I	Not Required	J-35616-64B (LT BU)	No Tool Required	Not Required	Not Required	Not Required	Not Required

K89 Immobilizer Control Module (BTM+D07)

Pin	Size	Color	Circuit	Function	Terminal Type ID	Option
1	0.5	L-GN/GY	3277	Vehicle Anti-Theft System Immobilizer Low Reference	I	—
2	0.35	L-GN/VT	7533	Local Interconnect Network Serial Data Bus 11	I	—
3	0.5	GY/BK	3276	Vehicle Anti-Theft System Immobilizer Control	I	—

K89 Immobilizer Control Module (BTM-D07)

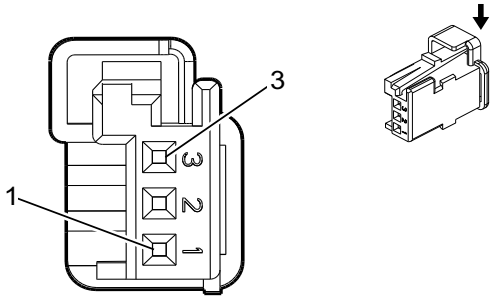

4218883

Connector Part Information

Harness Type: Front Center Seat
OEM Connector: 953697-1
Service Connector: Service by Harness - See Part Catalog
Description: 3-Way F 0.64 Micro-Quadlock Series (BK)

Terminal Part Information

Terminal Type ID	Terminated Lead	Diagnostic Test Probe	Terminal Removal Tool	Service Terminal	Tray Name	Core Crimp	Insulation Crimp
I	Not Required	J-35616-64B (LT BU)	No Tool Required	Not Required	Not Required	Not Required	Not Required

K89 Immobilizer Control Module (BTM-D07)

Pin	Size	Color	Circuit	Function	Terminal Type ID	Option
1	0.35	L-GN/GY	3277	Vehicle Anti-Theft System Immobilizer Low Reference	I	—
2	0.35	L-GN/VT	7533	Local Interconnect Network Serial Data Bus 11	I	—
3	0.35	GY/BK	3276	Vehicle Anti-Theft System Immobilizer Control	I	—

K111 Fuel Pump Driver Control Module (L5P)

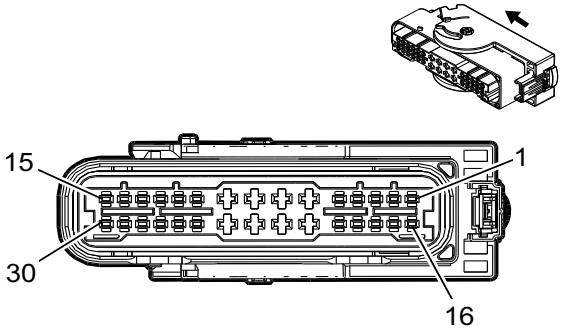

3240109

Connector Part Information

Harness Type: Chassis
OEM Connector: 33386317
Service Connector: 19354086
Description: 30-Way F 1.5, 2.8 Series, Sealed (BK)

Terminal Part Information

Terminal Type ID	Terminated Lead	Diagnostic Test Probe	Terminal Removal Tool	Service Terminal	Tray Name	Core Crimp	Insulation Crimp
I	19119592	J-35616-4A (PU)	J-38125-557	Not Available	Not Available	Not Available	Not Available
II	Not Available	J-35616-2A (GY)	J-38125-11A	Not Available	Not Available	Not Available	Not Available

K111 Fuel Pump Driver Control Module (L5P)

Pin	Size	Color	Circuit	Function	Terminal Type ID	Option
1	0.5	WH/RD	6862	Water In Fuel Sensor 5V Reference	II	—
2	0.5	BU/YE	6861	Water In Fuel Sensor Signal	II	—
3	0.5	BK/D-BU	6863	Water In Fuel Sensor Low Reference	II	—
4	0.5	BN/VT	455	Fuel Filter Temperature Signal	II	—
5 - 6	—	—	—	Not Occupied	—	—
7	2.5	RD/VT	5340	Battery Positive Voltage	I	—
8	2.5	GY	120	Fuel Pump Control	I	—
9	2.5	YE/GY	4137	Fuel Pump Supply Voltage Phase 2	I	—
10 - 11	—	—	—	Not Occupied	—	—
12	0.5	BN/RD	7445	Fuel Line Pressure Sensor 5V Reference	II	—
13	0.5	BU/VT	1589	Primary Fuel Level Sensor Signal	II	—
14	—	—	—	Not Occupied	—	—
15	0.5	WH	4499	High Speed GMLAN Serial Data (-) 7	II	—
16	0.5	VT/L-GN	4320	Powertrain Sensor Bus Enable	II	—
17	0.5	VT/L-GN	439	Run/Crank Ignition 1 Voltage	II	—
18	0.5	L-GN/GY	465	Fuel Pump Primary Relay Control	II	—
19	0.5	BK/VT	412	Fuel Filter Temperature Sensor Low Reference	II	—
20 - 21	—	—	—	Not Occupied	—	—
22	2.5	BK	1750	Ground	I	—

K111 Fuel Pump Driver Control Module (L5P) (cont'd)

Pin	Size	Color	Circuit	Function	Terminal Type ID	Option
23	0.5	BN	7444	Fuel System Control Module Shield Ground	I	—
24	2.5	WH/BN	4138	Fuel Pump Supply Voltage Phase 3	I	—
25	—	—	—	Not Occupied	—	—
26	0.5	BU/WH	7446	Fuel Line Pressure Sensor Signal	II	—
27	0.5	BK/YE	7447	Fuel Line Pressure Sensor Low Reference	II	—
28	0.5	BK/L-GN	6281	Fuel Level Sensor Low Reference	II	—
29	—	—	—	Not Occupied	—	—
30	0.5	BU/BN	4498	High Speed GMLAN Serial Data (+) 7	II	—

K111 Fuel Pump Driver Control Module (L5P+N2N)

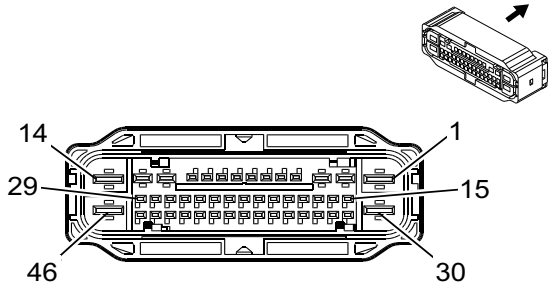

4162046

Connector Part Information

Harness Type: Fuel Tank Jumper
OEM Connector: 33222138
Service Connector: Service by Harness - See Part Catalog
Description: 46-Way F 1.2 OCS, 2.8, 4.8 CTS Series, Sealed (GY)

Terminal Part Information

Terminal Type ID	Terminated Lead	Diagnostic Test Probe	Terminal Removal Tool	Service Terminal	Tray Name	Core Crimp	Insulation Crimp
I	Not Required	J-35616-16 (LT GN)	No Tool Required	Not Required	Not Required	Not Required	Not Required
II	Not Required	J-35616-35 (VT)	No Tool Required	Not Required	Not Required	Not Required	Not Required
III	Not Required	J-35616-40 (BU)	No Tool Required	Not Required	Not Required	Not Required	Not Required

K111 Fuel Pump Driver Control Module (L5P+N2N)

Pin	Size	Color	Circuit	Function	Terminal Type ID	Option
1	2.5	WH/BN	4138	Fuel Pump Supply Voltage Phase 3	III	—
2	2.5	GY	120	Fuel Pump Control	II	—
3	0.5	VT/GN	439	Run/Crank Ignition 1 Voltage	II	—
4	0.5	WH/RD	6862	Water In Fuel Sensor 5V Reference	I	—

K111 Fuel Pump Driver Control Module (L5P+N2N) (cont'd)

Pin	Size	Color	Circuit	Function	Terminal Type ID	Option
5	—	—	—	Not Occupied	—	—
6	0.75	YE/BU	1465	Secondary Fuel Pump Relay Control	I	—
7	0.5	BU/BN	4498	High Speed GMLAN Serial Data (+) 7	I	—
8	0.5	WH	4499	High Speed GMLAN Serial Data (-) 7	I	—
9	—	—	—	Not Occupied	—	—
10	0.5	VT/GN	4320	Powertrain Sensor Bus Enable	I	—
11	0.5	GN/GY	465	Fuel Pump Primary Relay Control	I	—
12	2.5	BK/GN	1580	Fuel Pump Low Reference	II	—
13	2.5	BU/GN	2120	Secondary Fuel Pump Supply Voltage	II	—
14	2.5	BK	1750	Ground	III	—
15	0.75	BN	7444	Fuel System Control Module Shield Ground	I	—
16	0.5	BU/YE	6861	Water In Fuel Sensor Signal	I	—
17 - 18	—	—	—	Not Occupied	—	—
19	0.5	BN/RD	7445	Fuel Line Pressure Sensor 5V Reference	I	—
20	0.75	BU/WH	7446	Fuel Line Pressure Sensor Signal	I	—
21	0.5	BK/GN	6281	Fuel Level Sensor Low Reference	I	—
22	0.5	BK/BU	6282	Fuel Level Sensor 2 Low Reference	I	—
23	0.5	BK/BU	6863	Water In Fuel Sensor Low Reference	I	—
24	0.5	BK/VT	412	Fuel Filter Temperature Sensor Low Reference	I	—
25 - 29	—	—	—	Not Occupied	—	—
30	2.5	YE/GY	4137	Fuel Pump Supply Voltage Phase 2	III	—
31 - 34	—	—	—	Not Occupied	—	—
35	0.5	BK/YE	7447	Fuel Line Pressure Sensor Low Reference	I	—
36	0.5	BN/VT	455	Fuel Filter Temperature Signal	I	—
37	0.75	BU/VT	1589	Primary Fuel Level Sensor Signal	I	—
38	0.5	BU/WH	1937	Secondary Fuel Level Sensor Signal	I	—
39 - 45	—	—	—	Not Occupied	—	—
46	2.5	RD/VT	5340	Battery Positive Voltage	III	—

K111 Fuel Pump Driver Control Module (L5P-N2N)

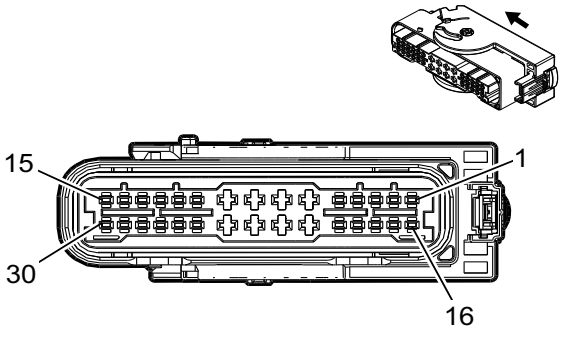

3240109

Connector Part Information

Harness Type: Chassis
OEM Connector: 33386317
Service Connector: 19354086
Description: 30-Way F 1.5, 2.8 Series, Sealed (BK)

Terminal Part Information

Terminal Type ID	Terminated Lead	Diagnostic Test Probe	Terminal Removal Tool	Service Terminal	Tray Name	Core Crimp	Insulation Crimp
I	19119592	J-35616-4A (PU)	J-38125-557	Not Available	Not Available	Not Available	Not Available
II	Not Available	J-35616-2A (GY)	J-38125-11A	Not Available	Not Available	Not Available	Not Available

K111 Fuel Pump Driver Control Module (L5P-N2N)

Pin	Size	Color	Circuit	Function	Terminal Type ID	Option
1	0.5	WH/RD	6862	Water In Fuel Sensor 5V Reference	II	—
2	0.5	BU/YE	6861	Water In Fuel Sensor Signal	II	—
3	0.5	BK/BU	6863	Water In Fuel Sensor Low Reference	II	—
4	0.5	BN/VT	455	Fuel Filter Temperature Signal	II	—
5 - 6	—	—	—	Not Occupied	—	—
7	2.5	RD/VT	5340	Battery Positive Voltage	I	—
8	2.5	GY	120	Fuel Pump Control	I	—
9	2.5	YE/GY	4137	Fuel Pump Supply Voltage Phase 2	I	—
10 - 11	—	—	—	Not Occupied	—	—
12	0.5	BN/RD	7445	Fuel Line Pressure Sensor 5V Reference	II	—
13	0.5	BU/VT	1589	Primary Fuel Level Sensor Signal	II	—
14	—	—	—	Not Occupied	—	—
15	0.5	WH	4499	High Speed GMLAN Serial Data (-) 7	II	—
16	0.5	VT/GN	4320	Powertrain Sensor Bus Enable	II	—
17	0.5	VT/GN	439	Run/Crank Ignition 1 Voltage	II	—
18	0.5	GN/GY	465	Fuel Pump Primary Relay Control	II	—
19	0.5	BK/VT	412	Fuel Filter Temperature Sensor Low Reference	II	—
20 - 21	—	—	—	Not Occupied	—	—
22	2.5	BK	1750	Ground	I	—
23	0.5	BN	7444	Fuel System Control Module Shield Ground	I	—
24	2.5	WH/BN	4138	Fuel Pump Supply Voltage Phase 3	I	—
25	—	—	—	Not Occupied	—	—
26	0.5	BU/WH	7446	Fuel Line Pressure Sensor Signal	II	—
27	0.5	BK/YE	7447	Fuel Line Pressure Sensor Low Reference	II	—
28	0.5	BK/GN	6281	Fuel Level Sensor Low Reference	II	—
29	—	—	—	Not Occupied	—	—
30	0.5	BU/BN	4498	High Speed GMLAN Serial Data (+) 7	II	—

K111 Fuel Pump Driver Control Module (L8T)

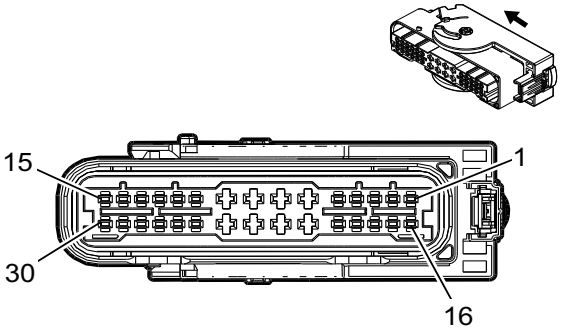

3240109

Connector Part Information

Harness Type: Chassis
OEM Connector: 33386317
Service Connector: 19354086
Description: 30-Way F 1.5, 2.8 Series, Sealed (BK)

Terminal Part Information

Terminal Type ID	Terminated Lead	Diagnostic Test Probe	Terminal Removal Tool	Service Terminal	Tray Name	Core Crimp	Insulation Crimp
I	19119592	J-35616-4A (PU)	J-38125-557	Not Available	Not Available	Not Available	Not Available
II	Not Available	J-35616-2A (GY)	J-38125-11A	Not Available	Not Available	Not Available	Not Available

K111 Fuel Pump Driver Control Module (L8T)

Pin	Size	Color	Circuit	Function	Terminal Type ID	Option
1 - 6	—	—	—	Not Occupied	—	—
7	2.5	RD/VT	5340	Battery Positive Voltage	I	—
8	2.5	GY	120	Fuel Pump Control	I	—
9	2.5	YE/GY	4137	Fuel Pump Supply Voltage Phase 2	I	—
10	0.5	YE/RD	2709	Fuel Tank Pressure Sensor 5V Reference	II	—
11	0.5	BU/WH	890	Fuel Tank Pressure Sensor Signal	II	—
12	0.5	BN/RD	7445	Fuel Line Pressure Sensor 5V Reference	II	—
13	0.5	BU/VT	1589	Primary Fuel Level Sensor Signal	II	—
14	—	—	—	Not Occupied	—	—
15	0.5	WH	4499	High Speed GMLAN Serial Data (-) 7	II	—
16	0.5	GN/BU	3889	DEF Power Module Relay Control	II	—
17	0.5	VT/GN	439	Run/Crank Ignition 1 Voltage	II	—
18	0.5	GN/GY	465	Fuel Pump Primary Relay Control	II	—
19 - 20	—	—	—	Not Occupied	—	—
21	0.5	WH	1310	EVAP Canister Vent Solenoid Control	I	—
22	2.5	BK	1750	Ground	I	—
23	0.5	BN	7444	Fuel System Control Module Shield Ground	I	—
24	2.5	WH/BN	4138	Fuel Pump Supply Voltage Phase 3	I	—
25	0.5	BK/BN	6284	Fuel Tank Vapor Pressure Sensor Low Reference	II	—

K111 Fuel Pump Driver Control Module (L8T) (cont'd)

Pin	Size	Color	Circuit	Function	Terminal Type ID	Option
26	0.5	BU/WH	7446	Fuel Line Pressure Sensor Signal	II	—
27	0.5	BK/YE	7447	Fuel Line Pressure Sensor Low Reference	II	—
28	0.5	BK/GN	6281	Fuel Level Sensor Low Reference	II	—
29	—	—	—	Not Occupied	—	—
30	0.5	BU/BN	4498	High Speed GMLAN Serial Data (+) 7	II	—

K111 Fuel Pump Driver Control Module (L8T/L5P-N2N)

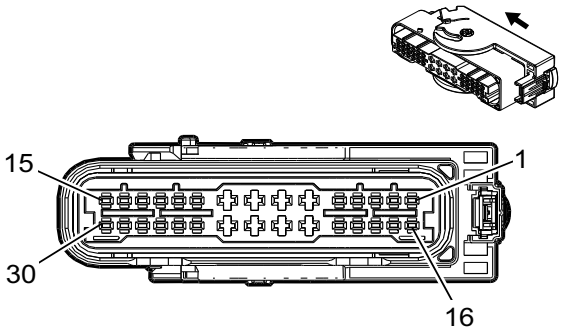

3240109

Connector Part Information

Harness Type: Chassis
OEM Connector: 33386317
Service Connector: 19354086
Description: 30-Way F 1.5, 2.8 Series, Sealed (BK)

Terminal Part Information

Terminal Type ID	Terminated Lead	Diagnostic Test Probe	Terminal Removal Tool	Service Terminal	Tray Name	Core Crimp	Insulation Crimp
I	19119592	J-35616-4A (PU)	J-38125-557	Not Available	Not Available	Not Available	Not Available
II	Not Available	J-35616-2A (GY)	J-38125-11A	Not Available	Not Available	Not Available	Not Available

K111 Fuel Pump Driver Control Module (L8T/L5P-N2N)

Pin	Size	Color	Circuit	Function	Terminal Type ID	Option
1	0.5	WH/RD	6862	Water In Fuel Sensor 5V Reference	II	—
2	0.5	BU/YE	6861	Water In Fuel Sensor Signal	II	—
3	0.5	BK/D-BU	6863	Water In Fuel Sensor Low Reference	II	—
4	0.5	BN/VT	455	Fuel Filter Temperature Signal	II	—
5 - 6	—	—	—	Not Occupied	—	—
7	2.5	RD/VT	5340	Battery Positive Voltage	I	—
8	2.5	GY	120	Fuel Pump Control	I	—
9	2.5	YE/GY	4137	Fuel Pump Supply Voltage Phase 2	I	—
10	0.5	YE/RD	2709	Fuel Tank Pressure Sensor 5V Reference	II	—

K111 Fuel Pump Driver Control Module (L8T/L5P-N2N) (cont'd)

Pin	Size	Color	Circuit	Function	Terminal Type ID	Option
11	0.5	BU/WH	890	Fuel Tank Pressure Sensor Signal	II	—
12	0.5	BN/RD	7445	Fuel Line Pressure Sensor 5V Reference	II	—
13	0.5	BU/VT	1589	Primary Fuel Level Sensor Signal	II	—
14	—	—	—	Not Occupied	—	—
15	0.5	WH	4499	High Speed GMLAN Serial Data (-) 7	II	—
16	0.5	VT/L-GN	4320	Powertrain Sensor Bus Enable	II	—
17	0.5	VT/L-GN	439	Run/Crank Ignition 1 Voltage	II	—
18	0.5	L-GN/GY	465	Fuel Pump Primary Relay Control	II	—
19	0.5	BK/VT	412	Fuel Filter Temperature Sensor Low Reference	II	—
20	—	—	—	Not Occupied	—	—
21	0.5	WH	1310	EVAP Canister Vent Solenoid Control	I	—
22	2.5	BK	1750	Ground	I	—
23	0.5	BN	7444	Fuel System Control Module Shield Ground	I	—
24	2.5	WH/BN	4138	Fuel Pump Supply Voltage Phase 3	I	—
25	0.5	BK/BN	6284	Fuel Tank Vapor Pressure Sensor Low Reference	II	—
26	0.5	BU/WH	7446	Fuel Line Pressure Sensor Signal	II	—
27	0.5	BK/YE	7447	Fuel Line Pressure Sensor Low Reference	II	—
28	0.5	BK/L-GN	6281	Fuel Level Sensor Low Reference	II	—
29	—	—	—	Not Occupied	—	—
30	0.5	BU/BN	4498	High Speed GMLAN Serial Data (+) 7	II	—

K111 Fuel Pump Driver Control Module (L8T+N2N)

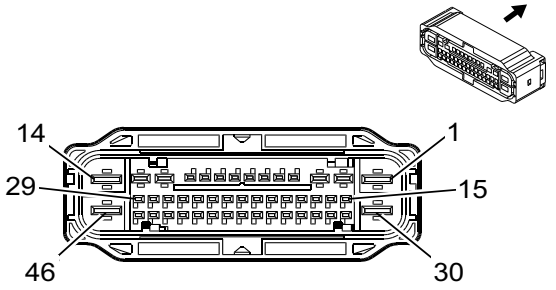

4162046

Connector Part Information

Harness Type: Chassis
OEM Connector: 33222138
Service Connector: 19333026
Description: 46-Way F 1.2 OCS, 2.8, 4.8 CTS Series, Sealed (GY)

Terminal Part Information

Terminal Type ID	Terminated Lead	Diagnostic Test Probe	Terminal Removal Tool	Service Terminal	Tray Name	Core Crimp	Insulation Crimp
I	13579915	J-35616-40 (BU)	J-38125-556	1241408-1	Lear 28	A	B
II	19371240	J-35616-16 (LT GN)	J-38125-559	Not Available	Not Available	Not Available	Not Available
III	Not Available	J-35616-35 (VT)	J-38125-215A	Not Available	Not Available	Not Available	Not Available

K111 Fuel Pump Driver Control Module (L8T+N2N)

Pin	Size	Color	Circuit	Function	Terminal Type ID	Option
1	2.5	WH/BN	4138	Fuel Pump Supply Voltage Phase 3	I	—
2	2.5	GY	120	Fuel Pump Control	III	—
3	0.5	VT/L-GN	439	Run/Crank Ignition 1 Voltage	III	—
4 - 5	—	—	—	Not Occupied	—	—
6	0.5	YE/BN	1427	Gaseous Fuel Disable Signal	II	—
7	0.5	BU/BN	4498	High Speed GMLAN Serial Data (+) 7	II	—
8	0.5	WH	4499	High Speed GMLAN Serial Data (-) 7	II	—
9	—	—	—	Not Occupied	—	—
10	0.5	VT/L-GN	4320	Powertrain Sensor Bus Enable	II	—
11	0.5	L-GN/GY	465	Fuel Pump Primary Relay Control	II	—
12	2.5	BK/L-GN	1580	Fuel Pump Low Reference	III	—
13	2.5	BU/L-GN	2120	Secondary Fuel Pump Supply Voltage	III	—
14	2.5	BK	1750	Ground	I	—
15	0.5	BN	7444	Fuel System Control Module Shield Ground	II	—
16 - 18	—	—	—	Not Occupied	—	—
19	0.5	BN/RD	7445	Fuel Line Pressure Sensor 5V Reference	II	—
20	0.5	BU/WH	7446	Fuel Line Pressure Sensor Signal	II	—
21	0.5	BK/L-GN	6281	Fuel Level Sensor Low Reference	II	—
22	0.5	BK/D-BU	6282	Fuel Level Sensor 2 Low Reference	II	—
23	0.5	BK/BN	6284	Fuel Tank Vapor Pressure Sensor Low Reference	II	—
24 - 29	—	—	—	Not Occupied	—	—
30	2.5	YE/GY	4137	Fuel Pump Supply Voltage Phase 2	I	—
31 - 34	—	—	—	Not Occupied	—	—
35	0.5	BK/YE	7447	Fuel Line Pressure Sensor Low Reference	II	—
36	—	—	—	Not Occupied	—	—
37	0.5	BU/VT	1589	Primary Fuel Level Sensor Signal	II	—
38	0.5	BU/WH	1937	Secondary Fuel Level Sensor Signal	II	—
39	0.5	YE/RD	2709	Fuel Tank Pressure Sensor 5V Reference	II	—
40	0.5	BU/WH	890	Fuel Tank Pressure Sensor Signal	II	—
41 - 42	—	—	—	Not Occupied	—	—
43	0.5	WH	1310	EVAP Canister Vent Solenoid Control	II	—
44 - 45	—	—	—	Not Occupied	—	—
46	2.5	RD/VT	5340	Battery Positive Voltage	I	—

K111 Fuel Pump Driver Control Module (L8T-N2N)

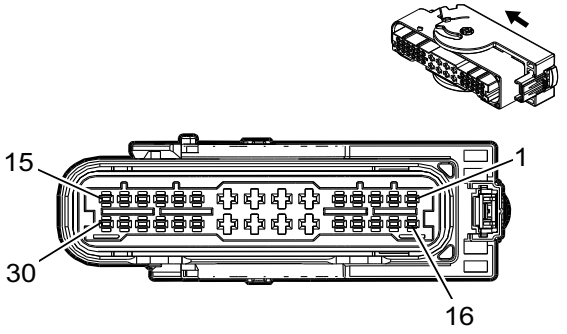

3240109

Connector Part Information

Harness Type: Chassis
OEM Connector: 33386317
Service Connector: 19354086
Description: 30-Way F 1.5, 2.8 Series, Sealed (BK)

Terminal Part Information

Terminal Type ID	Terminated Lead	Diagnostic Test Probe	Terminal Removal Tool	Service Terminal	Tray Name	Core Crimp	Insulation Crimp
I	19119592	J-35616-4A (PU)	J-38125-557	Not Available	Not Available	Not Available	Not Available
II	Not Available	J-35616-2A (GY)	J-38125-11A	Not Available	Not Available	Not Available	Not Available

K111 Fuel Pump Driver Control Module (L8T-N2N)

Pin	Size	Color	Circuit	Function	Terminal Type ID	Option
1 - 6	—	—	—	Not Occupied	—	—
7	2.5	RD/VT	5340	Battery Positive Voltage	I	—
8	2.5	GY	120	Fuel Pump Control	I	—
9	2.5	YE/GY	4137	Fuel Pump Supply Voltage Phase 2	I	—
10	0.5	YE/RD	2709	Fuel Tank Pressure Sensor 5V Reference	II	—
11	0.5	BU/WH	890	Fuel Tank Pressure Sensor Signal	II	—
12	0.5	BN/RD	7445	Fuel Line Pressure Sensor 5V Reference	II	—
13	0.5	BU/VT	1589	Primary Fuel Level Sensor Signal	II	—
14	—	—	—	Not Occupied	—	—
15	0.5	WH	4499	High Speed GMLAN Serial Data (-) 7	II	—
16	0.5	L-GN/D-BU	3889	DEF Power Module Relay Control	II	—
17	0.5	VT/L-GN	439	Run/Crank Ignition 1 Voltage	II	—
18	0.5	L-GN/GY	465	Fuel Pump Primary Relay Control	II	—
19 - 20	—	—	—	Not Occupied	—	—
21	0.5	WH	1310	EVAP Canister Vent Solenoid Control	I	—
22	2.5	BK	1750	Ground	I	—
23	0.5	BN	7444	Fuel System Control Module Shield Ground	I	—
24	2.5	WH/BN	4138	Fuel Pump Supply Voltage Phase 3	I	—

K111 Fuel Pump Driver Control Module (L8T-N2N) (cont'd)

Pin	Size	Color	Circuit	Function	Terminal Type ID	Option
25	0.5	BK/BN	6284	Fuel Tank Vapor Pressure Sensor Low Reference	II	—
26	0.5	BU/WH	7446	Fuel Line Pressure Sensor Signal	II	—
27	0.5	BK/YE	7447	Fuel Line Pressure Sensor Low Reference	II	—
28	0.5	BK/L-GN	6281	Fuel Level Sensor Low Reference	II	—
29	—	—	—	Not Occupied	—	—
30	0.5	BU/BN	4498	High Speed GMLAN Serial Data (+) 7	II	—

K133 Trailer Brake Power Control Module (JL1)

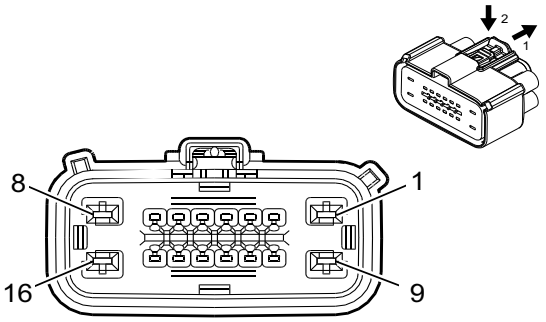

4624589

Connector Part Information

Harness Type: Chassis
OEM Connector: 33297568
Service Connector: 13599889
Description: 16-Way F 1.5, 2.8 Series, Sealed (GY)

Terminal Part Information

Terminal Type ID	Terminated Lead	Diagnostic Test Probe	Terminal Removal Tool	Service Terminal	Tray Name	Core Crimp	Insulation Crimp
I	19300432	J-35616-2A (GY)	J-38125-217	Not Available	Not Available	Not Available	Not Available
II	Not Available	J-35616-35 (VT)	J-38125-12A	1326030-8	Lear 17	4	D

K133 Trailer Brake Power Control Module (JL1)

Pin	Size	Color	Circuit	Function	Terminal Type ID	Option
1	2.5	RD/VT	1242	Battery Positive Voltage	II	—
2	0.5	WH/BK	2223	Trailer Brake Control Signal	I	—
3 - 4	—	—	—	Not Occupied	—	—
5	0.5	YE/BK	2224	Trailer Brake Enable Signal	I	—
6 - 7	—	—	—	Not Occupied	—	—
8	2.5	BU	47	Trailer Auxiliary Control	II	—
9	2.5	BK	1450	Ground	II	—

K133 Trailer Brake Power Control Module (JL1) (cont'd)

Pin	Size	Color	Circuit	Function	Terminal Type ID	Option
10 - 11	—	—	—	Not Occupied	—	—
12	0.5	L-GN/ D-BU	2733	Local Interconnect Network Bus 33	I	—
13 - 16	—	—	—	Not Occupied	—	—

K133 Trailer Brake Power Control Module (L5P/L8T-N2N)

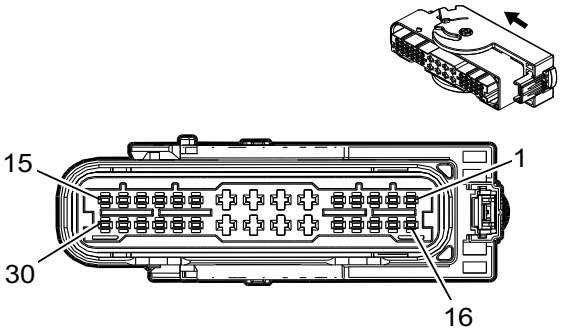

3240109

Connector Part Information

Harness Type: Chassis
OEM Connector: 33386317
Service Connector: 19354086
Description: 30-Way F 1.5, 2.8 Series, Sealed (BK)

Terminal Part Information

Terminal Type ID	Terminated Lead	Diagnostic Test Probe	Terminal Removal Tool	Service Terminal	Tray Name	Core Crimp	Insulation Crimp
I	19119592	J-35616-4A (PU)	J-38125-557	Not Available	Not Available	Not Available	Not Available
II	Not Available	J-35616-2A (GY)	J-38125-11A	Not Available	Not Available	Not Available	Not Available

K133 Trailer Brake Power Control Module (L5P/L8T-N2N)

Pin	Size	Color	Circuit	Function	Terminal Type ID	Option
1	0.5	WH/RD	6862	Water In Fuel Sensor 5V Reference	II	—
2	0.5	BU/YE	6861	Water In Fuel Sensor Signal	II	—
3	0.5	BK/BU	6863	Water In Fuel Sensor Low Reference	II	—
4	0.5	BN/VT	455	Fuel Filter Temperature Signal	II	—
5 - 6	—	—	—	Not Occupied	—	—
7	2.5	RD/VT	5340	Battery Positive Voltage	I	—
8	2.5	GY	120	Fuel Pump Control	I	—
9	2.5	YE/GY	4137	Fuel Pump Supply Voltage Phase 2	I	—
10	0.5	YE/RD	2709	Fuel Tank Pressure Sensor 5V Reference	II	—
11	0.5	BU/WH	890	Fuel Tank Pressure Sensor Signal	II	—

K133 Trailer Brake Power Control Module (L5P/L8T-N2N) (cont'd)

Pin	Size	Color	Circuit	Function	Terminal Type ID	Option
12	0.5	BN/RD	7445	Fuel Line Pressure Sensor 5V Reference	II	—
13	0.5	BU/VT	1589	Primary Fuel Level Sensor Signal	II	—
14	—	—	—	Not Occupied	—	—
15	0.5	WH	4499	High Speed GMLAN Serial Data (-) 7	II	—
16	0.5	VT/GN	4320	Powertrain Sensor Bus Enable	II	—
17	0.5	VT/GN	439	Run/Crank Ignition 1 Voltage	II	—
18	0.5	GN/GY	465	Fuel Pump Primary Relay Control	II	—
19	0.5	BK/VT	412	Fuel Filter Temperature Sensor Low Reference	II	—
20	—	—	—	Not Occupied	—	—
21	0.5	WH	1310	EVAP Canister Vent Solenoid Control	I	—
22	2.5	BK	1750	Ground	I	—
23	0.5	BN	7444	Fuel System Control Module Shield Ground	I	—
24	2.5	WH/BN	4138	Fuel Pump Supply Voltage Phase 3	I	—
25	0.5	BK/BN	6284	Fuel Tank Vapor Pressure Sensor Low Reference	II	—
26	0.5	BU/WH	7446	Fuel Line Pressure Sensor Signal	II	—
27	0.5	BK/YE	7447	Fuel Line Pressure Sensor Low Reference	II	—
28	0.5	BK/GN	6281	Fuel Level Sensor Low Reference	II	—
29	—	—	—	Not Occupied	—	—
30	0.5	BU/BN	4498	High Speed GMLAN Serial Data (+) 7	II	—

K157 Video Processing Control Module X1

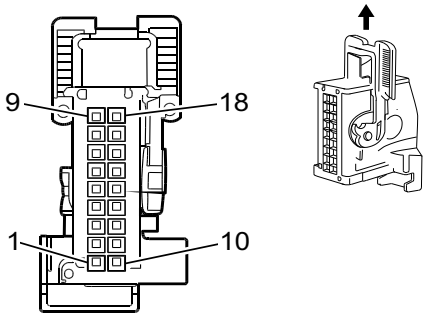

1567082

Connector Part Information

Harness Type: Body
OEM Connector: 10820547
Service Connector: 19369840
Description: 18-Way F Micro-Quadlock Series (BK)

Terminal Part Information

Terminal Type ID	Terminated Lead	Diagnostic Test Probe	Terminal Removal Tool	Service Terminal	Tray Name	Core Crimp	Insulation Crimp
I	13575587	J-35616-64B (LT BU)	J-38125-12A	Not Available	Not Available	Not Available	Not Available

Terminal Part Information (cont'd)

Terminal Type ID	Terminated Lead	Diagnostic Test Probe	Terminal Removal Tool	Service Terminal	Tray Name	Core Crimp	Insulation Crimp
II	13575859	J-35616-64B (LT BU)	J-38125-12A	Not Available	Not Available	Not Available	Not Available

K157 Video Processing Control Module X1

Pin	Size	Color	Circuit	Function	Terminal Type ID	Option
1	0.35	RD/GY	1740	Battery Positive Voltage	I	—
2	—	—	—	Not Occupied	—	—
3	0.75	BK/WH	2751	Signal Ground	II	—
4 - 8	—	—	—	Not Occupied	—	—
9	0.35	GY/L-GN	1102	Low Speed GMLAN Serial Data #2	I	—
10	0.35	RD/GY	1740	Battery Positive Voltage	I	—
11	—	—	—	Not Occupied	—	—
12	0.75	BK/WH	2751	Signal Ground	II	—
13 - 18	—	—	—	Not Occupied	—	—

K157 Video Processing Control Module X1 (UVI)

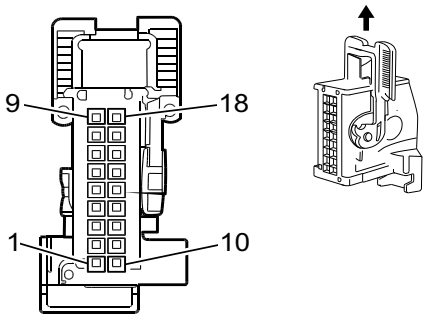

1567082

Connector Part Information

Harness Type: Body
OEM Connector: 10820547
Service Connector: 19369840
Description: 18-Way F Micro-Quadlock Series (BK)

Terminal Part Information

Terminal Type ID	Terminated Lead	Diagnostic Test Probe	Terminal Removal Tool	Service Terminal	Tray Name	Core Crimp	Insulation Crimp
I	13575587	J-35616-64B (LT BU)	J-38125-12A	Not Available	Not Available	Not Available	Not Available
II	13575859	J-35616-64B (LT BU)	J-38125-12A	Not Available	Not Available	Not Available	Not Available

K157 Video Processing Control Module X1 (UVI)

Pin	Size	Color	Circuit	Function	Terminal Type ID	Option
1	0.35	RD/GY	1740	Battery Positive Voltage	I	—
2	—	—	—	Not Occupied	—	—
3	0.75	BK/WH	2751	Signal Ground	II	—
4 - 8	—	—	—	Not Occupied	—	—
9	0.35	GY/GN	1102	Low Speed GMLAN Serial Data #2	I	—
10	0.35	RD/GY	1740	Battery Positive Voltage	I	—
11	—	—	—	Not Occupied	—	—
12	0.75	BK/WH	2751	Signal Ground	II	—
13 - 18	—	—	—	Not Occupied	—	—

K182 Parking Assist Control Module X1 (UD5/UD7)

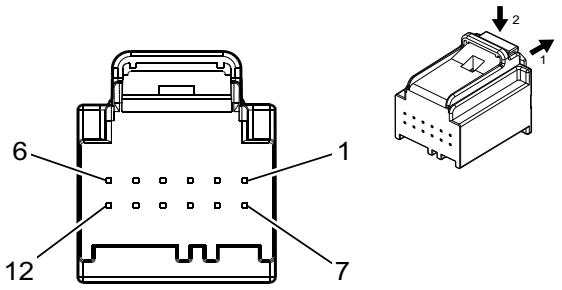

5095565

Connector Part Information

Harness Type: Body
OEM Connector: 35130710
Service Connector: 13525987
Description: 12-Way F 0.64 Series, Sealed (BK)

Terminal Part Information

Terminal Type ID	Terminated Lead	Diagnostic Test Probe	Terminal Removal Tool	Service Terminal	Tray Name	Core Crimp	Insulation Crimp
I	13575742	J-35616-64B (LT BU)	J-38125-215A	SAIT-A03T-M064	Yazaki 14	P	P
II	13575867	J-35616-64B (LT BU)	J-38125-215A	SAIT-A03T-M064	Yazaki 14	P	P
III	19300631	J-35616-64B (LT BU)	J-38125-215A	Not Available	Not Available	Not Available	Not Available

K182 Parking Assist Control Module X1 (UD5/UD7)

Pin	Size	Color	Circuit	Function	Terminal Type ID	Option
1	0.35	RD/GN	3140	Battery Positive Voltage	II	—
	0.35	RD/GN	3140	Battery Positive Voltage	III	—
2	—	—	—	Not Occupied	—	—

K182 Parking Assist Control Module X1 (UD5/UD7) (cont'd)

Pin	Size	Color	Circuit	Function	Terminal Type ID	Option
3	0.35	GN/BN	5852	Rear Park Assist LED Disable Signal	II	—
	0.35	GN/BN	5852	Rear Park Assist LED Disable Signal	III	—
4	0.35	GN	5060	Low Speed GMLAN Serial Data	II	—
	0.35	GN	5060	Low Speed GMLAN Serial Data	III	—
5 - 7	—	—	—	Not Occupied	—	—
8	0.35	GY/GN	2555	Rear Park Assist Disable Signal	II	—
	0.35	GY/GN	2555	Rear Park Assist Disable Signal	III	—
9	—	—	—	Not Occupied	—	—
10	0.35	BK/WH	1151	Signal Ground	II	—
	0.35	BK/WH	1151	Signal Ground	III	—
	0.5	BK/WH	1151	Signal Ground	I	—
	0.5	BK/WH	1151	Signal Ground	III	—
11 - 12	—	—	—	Not Occupied	—	—

K182 Parking Assist Control Module X2 (UD5/UD7)

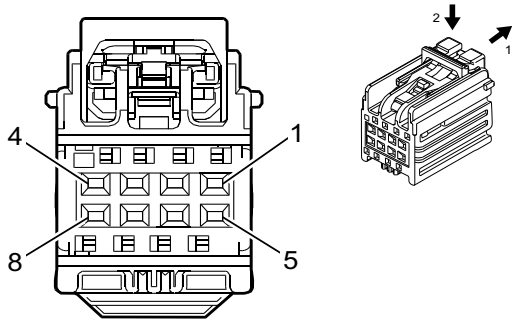

4280711

Connector Part Information

Harness Type: Body
OEM Connector: 33183559
Service Connector: 19355209
Description: 8-Way F YESC Kaizen Series (GY)

Terminal Part Information

Terminal Type ID	Terminated Lead	Diagnostic Test Probe	Terminal Removal Tool	Service Terminal	Tray Name	Core Crimp	Insulation Crimp
I	Not Required	J-35616-64B (LT BU)	No Tool Required	Not Required	Not Required	Not Required	Not Required

K182 Parking Assist Control Module X2 (UD5/UD7)

Pin	Size	Color	Circuit	Function	Terminal Type ID	Option
1	—	—	—	Not Occupied	—	—
2	0.5	YE/WH	2377	Right Rear Middle Object Sensor Signal	I	—
3	0.5	YE	2375	Left Rear Corner Object Sensor Signal	I	—
4	0.5	BN/WH	2374	Object Sensor Control	I	—

K182 Parking Assist Control Module X2 (UD5/UD7) (cont'd)

Pin	Size	Color	Circuit	Function	Terminal Type ID	Option
5	0.5	YE/VT	2378	Right Rear Corner Object Sensor Signal	I	—
6	0.5	YE/D-BU	2376	Left Rear Middle Object Sensor Signal	I	—
7	—	—	—	Not Occupied	—	—
8	0.5	BK/GY	2379	Object Sensor Low Reference	I	—

K182 Parking Assist Control Module X3 (UD5/UD7)

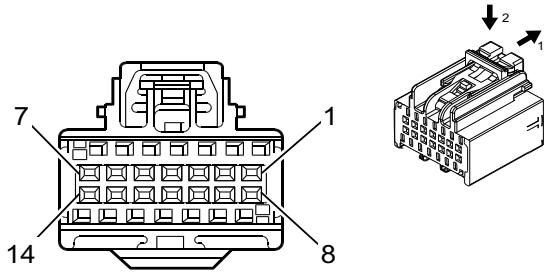

4547098

Connector Part Information

Harness Type: Body
OEM Connector: 35014564
Service Connector: 19354933
Description: 14-Way F 0.64 Kaizen Series (BU)

Terminal Part Information

Terminal Type ID	Terminated Lead	Diagnostic Test Probe	Terminal Removal Tool	Service Terminal	Tray Name	Core Crimp	Insulation Crimp
I	13575742	J-35616-64B (LT BU)	J-38125-215A	SAIT-A03T-M064	Yazaki 14	P	P

K182 Parking Assist Control Module X3 (UD5/UD7)

Pin	Size	Color	Circuit	Function	Terminal Type ID	Option
1	0.5	YE/VT	5213	Front Parking Left/Right/Mid Sensor	I	—
2 - 3	—	—	—	Not Occupied	—	—
4	0.5	YE/GY	5216	Front Parking Left Mid Sensor	I	—
5	0.5	WH/GY	5217	Front Parking Right Corner Sensor	I	—
6 - 7	—	—	—	Not Occupied	—	—
8	0.5	BK/D-BU	5214	Front Parking Sensor Low Reference	I	—
9	—	—	—	Not Occupied	—	—
10	0.5	VT/WH	5215	Front Parking Left Corner Sensor	I	—
11	0.5	VT/GY	5218	Front Parking Right Mid Sensor	I	—
12 - 14	—	—	—	Not Occupied	—	—

K194 Pickup Box Endgate Control Module (QT6)

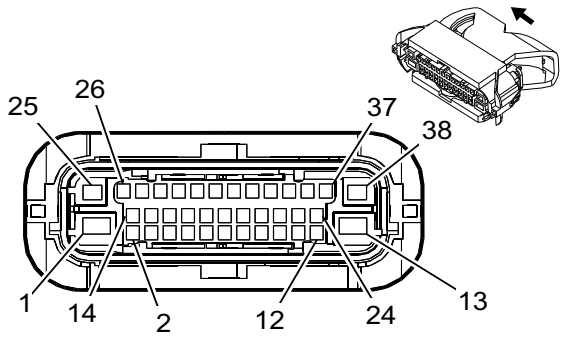

3240111

Connector Part Information

Harness Type: Endgate
OEM Connector: 13924619
Service Connector: Service by Harness - See Part Catalog
Description: 38-Way F 1.5 CTS, 2.8 MCP, 4.8 MCP Series, Sealed (BK with BK Inner Connector)

Terminal Part Information

Terminal Type ID	Terminated Lead	Diagnostic Test Probe	Terminal Removal Tool	Service Terminal	Tray Name	Core Crimp	Insulation Crimp
I	Not Required	J-35616-14 (GN)	No Tool Required	Not Required	Not Required	Not Required	Not Required
II	Not Required	J-35616-40 (BU)	No Tool Required	Not Required	Not Required	Not Required	Not Required
III	Not Required	J-35616-4A (PU)	No Tool Required	Not Required	Not Required	Not Required	Not Required

K194 Pickup Box Endgate Control Module (QT6)

Pin	Size	Color	Circuit	Function	Terminal Type ID	Option
1	2.5	BK	1450	Ground	II	—
2 - 4	—	—	—	Not Occupied	—	—
5	0.35	PK/BK	4668	Rear Closure Ajar Switch Signal 3	I	—
6	0.35	GY/VT	4678	Rear Closure Ajar Switch Signal 1	I	—
7	0.35	GN/BK	4659	Rear Closure Open	I	—
8	0.35	BU/BK	4665	Rear Closure Ajar Switch Signal 2	I	—
9	—	—	—	Not Occupied	—	—
10	0.35	YE	1144	Endgate Release Switch Discrete Signal Exterior	I	—
11	—	—	—	Not Occupied	—	—
12	0.5	GY	1198	Endgate Release Switch Analog Signal Interior	I	—
13	2.5	RD/GY	7040	Battery Positive Voltage	II	—
14	0.5	GN	5060	Low Speed GMLAN Serial Data	I	—
15	—	—	—	Not Occupied	—	—
16	0.35	YE/RD	7734	Rear Closure Latch 2 Rachet Status	I	—
17	—	—	—	Not Occupied	—	—
18	0.35	BN/RD	4683	Rear Closure Position Sensor Voltage Reference	I	—

K194 Pickup Box Endgate Control Module (QT6) (cont'd)

Pin	Size	Color	Circuit	Function	Terminal Type ID	Option
19	0.35	BK/GN	4687	Rear Closure Position Sensor Low Reference	I	—
20	—	—	—	Not Occupied	—	—
21	0.35	BN/YE	4686	Rear Closure Position Sensor Signal 2	I	—
22	0.35	BU/WH	4685	Rear Closure Position Sensor Signal 1	I	—
23	0.35	WH	7735	Rear Closure Latch 2 Pawl Status	I	—
24	0.35	VT	7736	Rear Closure Latch 2 Unlatch Status	I	—
25	1	BN/WH	4690	Rear Closure Open/Close Motor Close Control	III	—
26	0.35	BU	7733	Rear Closure Latch 2 Sector Status	I	—
27	0.35	GY/BK	1575	Rear Closure Sensor Low Reference 2	I	—
28	0.35	BK/VT	4656	Rear Closure Object Sensor Low Reference	I	—
29	—	—	—	Not Occupied	—	—
30	1	BU	1509	Rear Closure Cinch Latch Motor 2 Release Control	I	—
31	1	PK	1499	Rear Closure Cinch Latch Motor 2 Cinch Control	I	—
32	—	—	—	Not Occupied	—	—
33	1	BU/GY	4682	Rear Closure Cinch Latch Motor Close Control	I	—
34	1	BN	4681	Rear Closure Cinch Latch Motor Open Control	I	—
35	0.5	GN	1577	Rear Closure Clutch Control	I	—
36	0.5	OG/WH	1590	Rear Closure Clutch Return	I	—
37	—	—	—	Not Occupied	—	—
38	1	WH	4689	Rear Closure Open/Close Motor Open Control	III	—

K214 Trailer Tire Pressure Indicator Module (PTT)

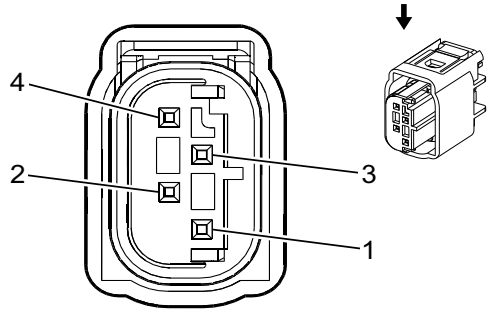

2173574

Connector Part Information

Harness Type: Chassis
OEM Connector: 13679454
Service Connector: 13314098
Description: 4-Way F 0.64 Micro-Quadlock Series, Sealed (BK)

Terminal Part Information

Terminal Type ID	Terminated Lead	Diagnostic Test Probe	Terminal Removal Tool	Service Terminal	Tray Name	Core Crimp	Insulation Crimp
I	Not Required	J-35616-64B (LT BU)	No Tool Required	Not Required	Not Required	Not Required	Not Required

K214 Trailer Tire Pressure Indicator Module (PTT)

Pin	Size	Color	Circuit	Function	Terminal Type ID	Option
1	0.5	RD/L-GN	1840	Battery Positive Voltage	I	—
2	0.75	BK	1750	Ground	I	—
3	0.5	BU/L-GN	1304	High Speed GMLAN Serial Data (+)9	I	—
4	0.5	WH/L-GN	1305	High Speed GMLAN Serial Data (-)9	I	—

M8 Blower Motor

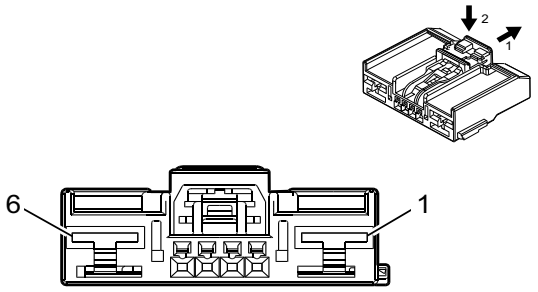

4650258

Connector Part Information

Harness Type: Instrument Panel
OEM Connector: 33395154
Service Connector: 19356432
Description: 6-Way F 0.64, 6.3 Series (BK)

Terminal Part Information

Terminal Type ID	Terminated Lead	Diagnostic Test Probe	Terminal Removal Tool	Service Terminal	Tray Name	Core Crimp	Insulation Crimp
I	Not Required	J-35616-42 (RD)	No Tool Required	Not Required	Not Required	Not Required	Not Required
II	Not Required	J-35616-64B (LT BU)	No Tool Required	Not Required	Not Required	Not Required	Not Required

M8 Blower Motor

Pin	Size	Color	Circuit	Function	Terminal Type ID	Option
1	4	RD/VT	542	Battery Positive Voltage	I	—
2	0.35	BU/GY	754	Blower Motor Speed Control	II	—
3	0.35	L-GN/ D-BU	761	Blower Speed Feedback Signal	II	—
4 - 5	—	—	—	Not Occupied	—	—

M8 Blower Motor (cont'd)

Pin	Size	Color	Circuit	Function	Terminal Type ID	Option
6	4	BK	1050	Ground	I	—

M10 Charge Air Cooler Coolant Pump (L5P)

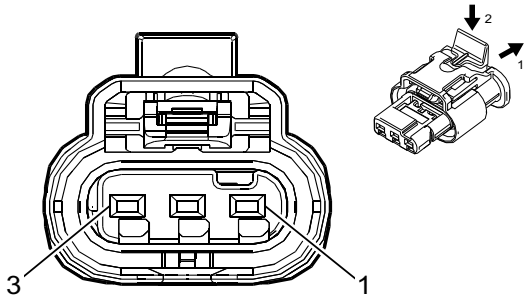

4249125

Connector Part Information

Harness Type: Engine
OEM Connector: 33176362
Service Connector: 19366844
Description: 3-Way F 1.2 MCP Series, Sealed (BN)

Terminal Part Information

Terminal Type ID	Terminated Lead	Diagnostic Test Probe	Terminal Removal Tool	Service Terminal	Tray Name	Core Crimp	Insulation Crimp
I	Not Required	J-35616-16 (LT GN)	No Tool Required	Not Required	Not Required	Not Required	Not Required

M10 Charge Air Cooler Coolant Pump (L5P)

Pin	Size	Color	Circuit	Function	Terminal Type ID	Option
1	0.5	BK	4450	Ground	I	—
2	0.5	VT/D-BU	5126	After Boil Heater Pump Control	I	—
3	0.5	L-GN/VT	4621	Local Interconnect Network Serial Data Bus 21	I	—

M26 Front Axle Engagement Actuator (NQH/NQF)

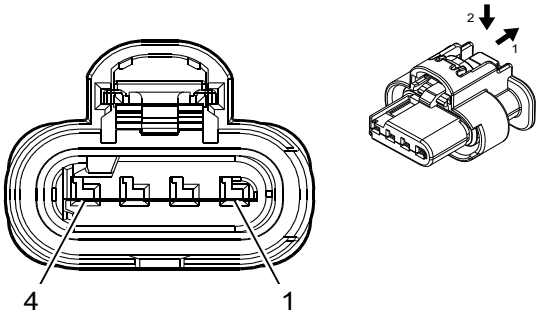

4210809

Connector Part Information

Harness Type: Transfer Case
OEM Connector: 33390897
Service Connector: Service by Harness - See Part Catalog
Description: 4-Way F 1.2 MCON-CB Series, Sealed (BK)

Terminal Part Information

Terminal Type ID	Terminated Lead	Diagnostic Test Probe	Terminal Removal Tool	Service Terminal	Tray Name	Core Crimp	Insulation Crimp
I	Not Required	J-35616-16 (LT GN)	No Tool Required	Not Required	Not Required	Not Required	Not Required

M26 Front Axle Engagement Actuator (NQH/NQF)

Pin	Size	Color	Circuit	Function	Terminal Type ID	Option
1	0.5	VT/BK	2139	Run/Crank Ignition 1 Voltage	I	—
2	0.5	GY/BK	1570	Front Axle Actuator Control	I	—
3	0.5	YE/WH	1695	Four Wheel Drive Wheel Lock Indicator Control	I	—
4	0.5	BK	4450	Ground	I	—

M50D Seat Front Vertical Motor - Driver

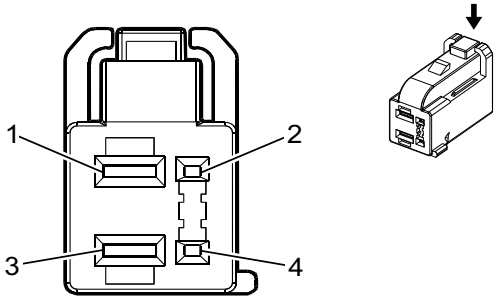

3683652

Connector Part Information

Harness Type: Driver Seat
OEM Connector: 2272784-1
Service Connector: Service by Harness - See Part Catalog
Description: 4-Way F 0.64, 2.8 Series (BK)

Terminal Part Information

Terminal Type ID	Terminated Lead	Diagnostic Test Probe	Terminal Removal Tool	Service Terminal	Tray Name	Core Crimp	Insulation Crimp
I	Not Required	J-35616-4A (PU)	No Tool Required	Not Required	Not Required	Not Required	Not Required
II	Not Required	J-35616-64B (LT BU)	No Tool Required	Not Required	Not Required	Not Required	Not Required

M50D Seat Front Vertical Motor - Driver

Pin	Size	Color	Circuit	Function	Terminal Type ID	Option
1	1.5	L-BU/VT	287	Driver Power Seat Front Vertical Motor Down Control	I	—
2	0.5	WH/RD	3298	Memory Sensor High Reference 2	II	—
3	1.5	L-GN/BN	286	Driver Power Seat Front Vertical Motor Up Control	I	—
4	0.5	BN/WH	557	Memory Seat Front Vertical Motor Position Sensor Signal	II	—

M50P Seat Front Vertical Motor - Passenger (A7K)

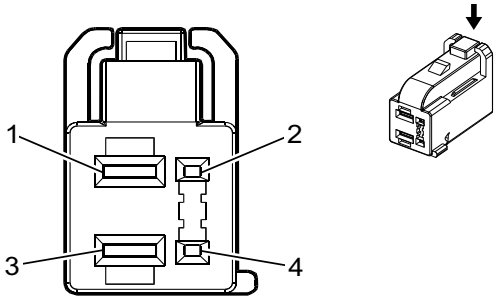

3683652

Connector Part Information

Harness Type: Passenger Seat
OEM Connector: 2272784-1
Service Connector: Service by Harness - See Part Catalog
Description: 4-Way F 0.64, 2.8 Series (BK)

Terminal Part Information

Terminal Type ID	Terminated Lead	Diagnostic Test Probe	Terminal Removal Tool	Service Terminal	Tray Name	Core Crimp	Insulation Crimp
I	Not Required	J-35616-4A (PU)	No Tool Required	Not Required	Not Required	Not Required	Not Required

M50P Seat Front Vertical Motor - Passenger (A7K)

Pin	Size	Color	Circuit	Function	Terminal Type ID	Option
1	1.5	L-GN/VT	297	Passenger Power Seat Front Vertical Motor Up Control	I	—
2	—	—	—	Not Occupied	—	—
3	1.5	L-GN/ L-BU	298	Passenger Power Seat Front Vertical Motor Down Control	I	—
4	—	—	—	Not Occupied	—	—

M51D Seat Horizontal Motor - Driver

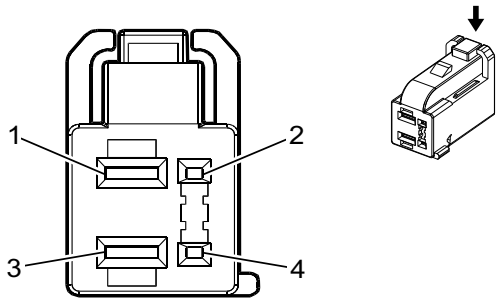

3683652

Connector Part Information

Harness Type: Driver Seat
OEM Connector: 2272784-1
Service Connector: Service by Harness - See Part Catalog
Description: 4-Way F 0.64, 2.8 Series (BK)

Terminal Part Information

Terminal Type ID	Terminated Lead	Diagnostic Test Probe	Terminal Removal Tool	Service Terminal	Tray Name	Core Crimp	Insulation Crimp
I	Not Required	J-35616-4A (PU)	No Tool Required	Not Required	Not Required	Not Required	Not Required
II	Not Required	J-35616-64B (LT BU)	No Tool Required	Not Required	Not Required	Not Required	Not Required

M51D Seat Horizontal Motor - Driver

Pin	Size	Color	Circuit	Function	Terminal Type ID	Option
1	1.5	GY/L-GN	284	Driver Power Seat Horizontal Motor Rearward Control	I	—
2	0.5	L-GN	569	Memory Seat Horizontal Motor Position Sensor Signal	II	—
3	1.5	YE/L-BU	285	Driver Power Seat Horizontal Motor Forward Control	I	—
4	0.5	WH/RD	3298	Memory Sensor High Reference 2	II	—

M51P Seat Horizontal Motor - Passenger (A7K)

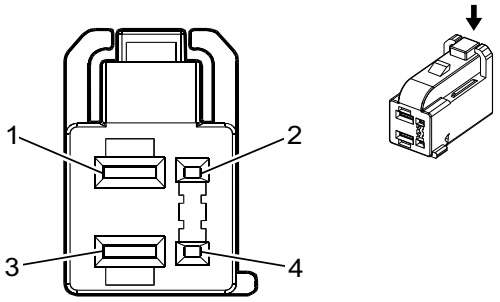

3683652

Connector Part Information

Harness Type: Passenger Seat
OEM Connector: 2272784-1
Service Connector: Service by Harness - See Part Catalog
Description: 4-Way F 0.64, 2.8 Series (BK)

Terminal Part Information

Terminal Type ID	Terminated Lead	Diagnostic Test Probe	Terminal Removal Tool	Service Terminal	Tray Name	Core Crimp	Insulation Crimp
I	Not Required	J-35616-4A (PU)	No Tool Required	Not Required	Not Required	Not Required	Not Required

M51P Seat Horizontal Motor - Passenger (A7K)

Pin	Size	Color	Circuit	Function	Terminal Type ID	Option
1	1.5	YE/L-BU	290	Passenger Power Seat Horizontal Motor Rearward Control	I	—
2	—	—	—	Not Occupied	—	—
3	1.5	YE/WH	296	Passenger Power Seat Horizontal Motor Forward Control	I	—
4	—	—	—	Not Occupied	—	—

M55D Seat Rear Vertical Motor - Driver

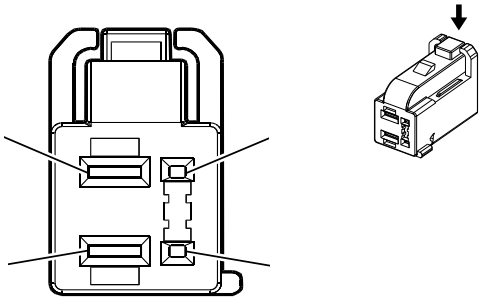

3683652

Connector Part Information

Harness Type: Driver Seat
OEM Connector: 2272784-1
Service Connector: Service by Harness - See Part Catalog
Description: 4-Way F 0.64, 2.8 Series (BK)

Terminal Part Information

Terminal Type ID	Terminated Lead	Diagnostic Test Probe	Terminal Removal Tool	Service Terminal	Tray Name	Core Crimp	Insulation Crimp
I	Not Required	J-35616-4A (PU)	No Tool Required	Not Required	Not Required	Not Required	Not Required
II	Not Required	J-35616-64B (LT BU)	No Tool Required	Not Required	Not Required	Not Required	Not Required

M55D Seat Rear Vertical Motor - Driver

Pin	Size	Color	Circuit	Function	Terminal Type ID	Option
1	1.5	GY/L-BU	283	Driver Power Seat Rear Vertical Motor Down Control	I	—
2	0.5	YE/L-BU	568	Memory Seat Rear Vertical Motor Position Sensor Signal	II	—
3	1.5	YE	282	Driver Power Seat Rear Vertical Motor Up Control	I	—
4	0.5	WH/RD	3298	Memory Sensor High Reference 2	II	—

M55P Seat Rear Vertical Motor - Passenger (A7K)

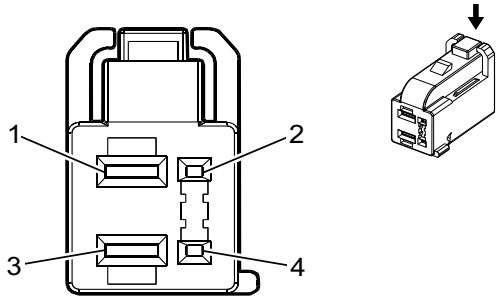

3683652

Connector Part Information

Harness Type: Passenger Seat
OEM Connector: 2272784-1
Service Connector: Service by Harness - See Part Catalog
Description: 4-Way F 0.64, 2.8 Series (BK)

Terminal Part Information

Terminal Type ID	Terminated Lead	Diagnostic Test Probe	Terminal Removal Tool	Service Terminal	Tray Name	Core Crimp	Insulation Crimp
I	Not Required	J-35616-4A (PU)	No Tool Required	Not Required	Not Required	Not Required	Not Required

M55P Seat Rear Vertical Motor - Passenger (A7K)

Pin	Size	Color	Circuit	Function	Terminal Type ID	Option
1	1.5	L-BU/WH	289	Passenger Power Seat Rear Vertical Motor Down Control	I	—
2	—	—	—	Not Occupied	—	—
3	1.5	L-GN/WH	288	Passenger Power Seat Rear Vertical Motor Up Control	I	—
4	—	—	—	Not Occupied	—	—

M56D Seat Recline Motor - Driver

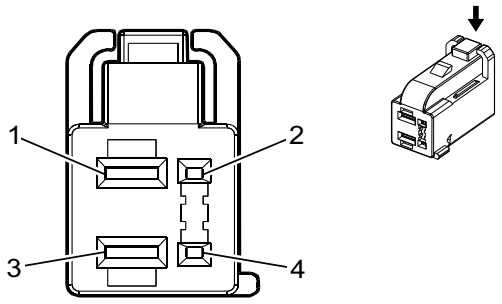

3683652

Connector Part Information

Harness Type: Driver Seat
OEM Connector: 2272784-1
Service Connector: Service by Harness - See Part Catalog
Description: 4-Way F 0.64, 2.8 Series (BK)

Terminal Part Information

Terminal Type ID	Terminated Lead	Diagnostic Test Probe	Terminal Removal Tool	Service Terminal	Tray Name	Core Crimp	Insulation Crimp
I	Not Required	J-35616-4A (PU)	No Tool Required	Not Required	Not Required	Not Required	Not Required
II	Not Required	J-35616-64B (LT BU)	No Tool Required	Not Required	Not Required	Not Required	Not Required

M56D Seat Recline Motor - Driver

Pin	Size	Color	Circuit	Function	Terminal Type ID	Option
1	1.5	L-GN/YE	276	Driver Power Seat Recline Motor Forward Control	I	—
2	0.5	WH/RD	3298	Memory Sensor High Reference 2	II	—
3	1.5	L-BU/YE	277	Driver Power Seat Recline Motor Rearward Control	I	—
4	0.5	WH/BK	570	Driver Memory Seat Recline Motor Position Sensor Signal	II	—

M56P Seat Recline Motor - Passenger (A7L)

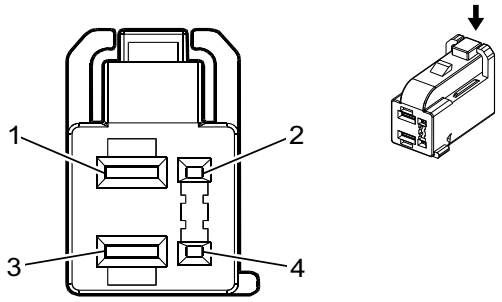

3683652

Connector Part Information

Harness Type: Passenger Seat
OEM Connector: 2272784-1
Service Connector: Service by Harness - See Part Catalog
Description: 4-Way F 0.64, 2.8 Series (BK)

Terminal Part Information

Terminal Type ID	Terminated Lead	Diagnostic Test Probe	Terminal Removal Tool	Service Terminal	Tray Name	Core Crimp	Insulation Crimp
I	Not Required	J-35616-4A (PU)	No Tool Required	Not Required	Not Required	Not Required	Not Required

M56P Seat Recline Motor - Passenger (A7L)

Pin	Size	Color	Circuit	Function	Terminal Type ID	Option
1	1.5	L-GN	76	Passenger Power Seat Recline Motor Forward Control	I	—
2	—	—	—	Not Occupied	—	—
3	1.5	L-BU/BN	77	Passenger Power Seat Recline Motor Rearward Control	I	—
4	—	—	—	Not Occupied	—	—

M63 Sliding Rear Window Motor (A48)

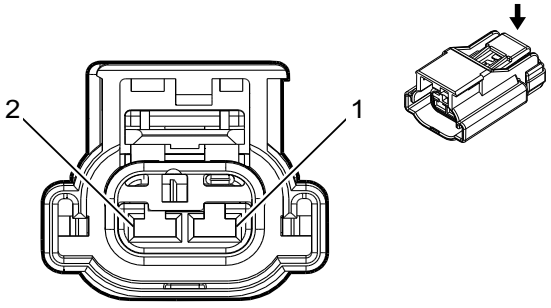

2716333

Connector Part Information

Harness Type: Body
OEM Connector: 13863838
Service Connector: 19301518
Description: 2-Way F 2.8 Series, Sealed (BK)

Terminal Part Information

Terminal Type ID	Terminated Lead	Diagnostic Test Probe	Terminal Removal Tool	Service Terminal	Tray Name	Core Crimp	Insulation Crimp
I	Not Required	J-35616-35 (VT)	No Tool Required	Not Required	Not Required	Not Required	Not Required

M63 Sliding Rear Window Motor (A48)

Pin	Size	Color	Circuit	Function	Terminal Type ID	Option
1	2	YE/D-BU	5442	Endgate Window Regulator Up Signal	I	—
2	2	GY/L-GN	5441	Endgate Window Regulator Down Signal	I	—

M64 Starter Motor X1 (L5P)

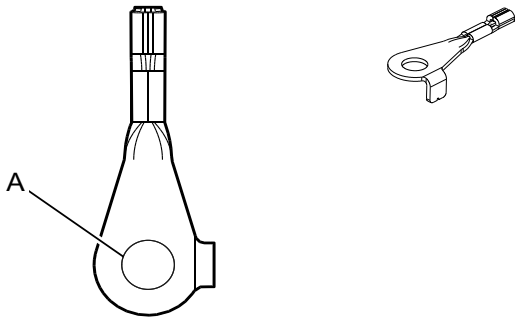

5200091

Connector Part Information

Harness Type: Engine
OEM Connector: 35181369
Service Connector: -
Description: 1-Way Ring Terminal

Terminal Part Information

Terminal Type ID	Terminated Lead	Diagnostic Test Probe	Terminal Removal Tool	Service Terminal	Tray Name	Core Crimp	Insulation Crimp
I	Not Required	Not Available	No Tool Required	Not Required	Not Required	Not Required	Not Required

M64 Starter Motor X1 (L5P)

Pin	Size	Color	Circuit	Function	Terminal Type ID	Option
A	2.5	YE	6	Starter Solenoid Crank Ignition Voltage	I	—

M64 Starter Motor X1 (L8T)

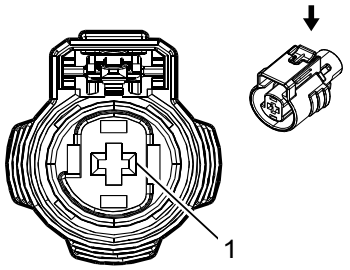

2717134

Connector Part Information

Harness Type: Engine
OEM Connector: 15526411
Service Connector: 19300471
Description: 1-Way F 2.8 MCP Series, Sealed (BK)

Terminal Part Information

Terminal Type ID	Terminated Lead	Diagnostic Test Probe	Terminal Removal Tool	Service Terminal	Tray Name	Core Crimp	Insulation Crimp
I	Not Required	J-35616-35 (VT)	No Tool Required	Not Required	Not Required	Not Required	Not Required

M64 Starter Motor X1 (L8T)

Pin	Size	Color	Circuit	Function	Terminal Type ID	Option
1	2.5	YE	6	Starter Solenoid Crank Ignition Voltage	I	—

M69 Sunroof Motor (CF5)

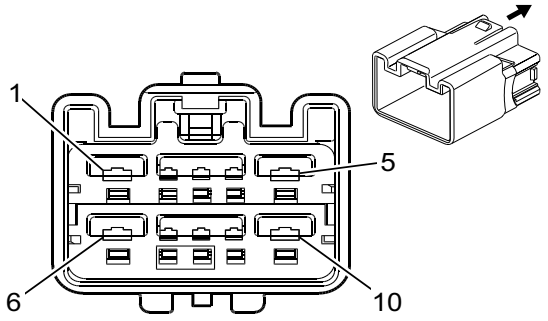

1851890

Connector Part Information

Harness Type: Headliner
OEM Connector: 13506926
Service Connector: 89047070
Description: 10-Way M YESC Kaizen Series (L-GY)

Terminal Part Information

Terminal Type ID	Terminated Lead	Diagnostic Test Probe	Terminal Removal Tool	Service Terminal	Tray Name	Core Crimp	Insulation Crimp
I	13575818	J-35616-3 (GY)	J-38125-553	Not Available	Not Available	Not Available	Not Available
II	13575824	J-35616-5 (PU)	J-38125-11A	7114-4112-02	Yazaki 9	C	D

M69 Sunroof Motor (CF5)

Pin	Size	Color	Circuit	Function	Terminal Type ID	Option
1 - 2	—	—	—	Not Occupied	—	—
3	0.35	BK/GY	128	Sunroof Switch Low Reference	I	—
4	0.35	L-GN/BN	6132	Local Interconnect Network Serial Data Bus 1	I	—
5	2.5	BK	1050	Ground	II	—
6	2.5	RD/L-GN	3140	Battery Positive Voltage	II	—
7	0.35	BU/VT	5027	Sunroof Switch Data 1 Signal	I	—
8	—	—	—	Not Occupied	—	—
9	0.35	WH/L-GN	3031	Sunroof Vent Switch Signal	I	—
10	—	—	—	Not Occupied	—	—

M73A Seat Blower Motor - Driver Back (KQV)

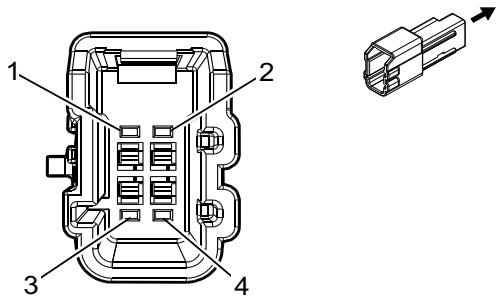

4293695

Connector Part Information

Harness Type: Driver Seat
OEM Connector: 6098-7781
Service Connector: Service by Harness - See Part Catalog
Description: 4-Way M 1.2 Series (GY)

Terminal Part Information

Terminal Type ID	Terminated Lead	Diagnostic Test Probe	Terminal Removal Tool	Service Terminal	Tray Name	Core Crimp	Insulation Crimp
I	Not Required	J-35616-13 (BU)	No Tool Required	Not Required	Not Required	Not Required	Not Required

M73A Seat Blower Motor - Driver Back (KQV)

Pin	Size	Color	Circuit	Function	Terminal Type ID	Option
1	0.75	VT/WH	4939	Run/Crank Ignition 1 Voltage	I	—
2	0.5	L-GN/VT	5906	Driver Seat Vent Motor Control 1	I	—
3	0.75	BK	1150	Ground	I	—
4	—	—	—	Not Occupied	—	—

M73B Seat Blower Motor - Passenger Back (KQV)

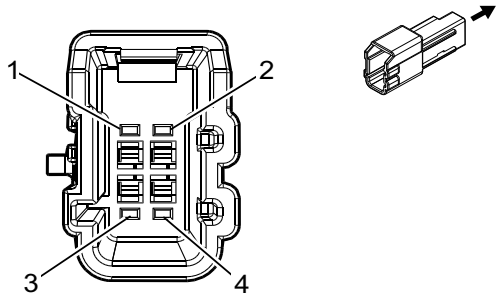

4293695

Connector Part Information

Harness Type: Passenger Seat
OEM Connector: 6098-7781
Service Connector: Service by Harness - See Part Catalog
Description: 4-Way M 1.2 Series (GY)

Terminal Part Information

Terminal Type ID	Terminated Lead	Diagnostic Test Probe	Terminal Removal Tool	Service Terminal	Tray Name	Core Crimp	Insulation Crimp
I	Not Required	J-35616-13 (BU)	No Tool Required	Not Required	Not Required	Not Required	Not Required

M73B Seat Blower Motor - Passenger Back (KQV)

Pin	Size	Color	Circuit	Function	Terminal Type ID	Option
1	0.75	VT/WH	4939	Run/Crank Ignition 1 Voltage	I	—
2	0.5	WH	5908	Passenger Seat Vent Motor Control 1	I	—
3	0.75	BK	1250	Ground	I	—
4	—	—	—	Not Occupied	—	—

M73C Seat Blower Motor - Driver Cushion (KQV)

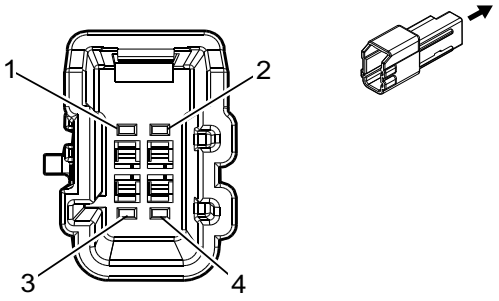

4293695

Connector Part Information

Harness Type: Driver Seat
OEM Connector: 6098-7781
Service Connector: Service by Harness - See Part Catalog
Description: 4-Way M 1.2 Series (GY)

Terminal Part Information

Terminal Type ID	Terminated Lead	Diagnostic Test Probe	Terminal Removal Tool	Service Terminal	Tray Name	Core Crimp	Insulation Crimp
I	Not Required	J-35616-13 (BU)	No Tool Required	Not Required	Not Required	Not Required	Not Required

M73C Seat Blower Motor - Driver Cushion (KQV)

Pin	Size	Color	Circuit	Function	Terminal Type ID	Option
1	0.75	VT/WH	4939	Run/Crank Ignition 1 Voltage	I	—
2	0.5	L-GN/VT	5906	Driver Seat Vent Motor Control 1	I	—
3	0.75	BK	1150	Ground	I	—
4	—	—	—	Not Occupied	—	—

M73D Seat Blower Motor - Passenger Cushion (KQV)

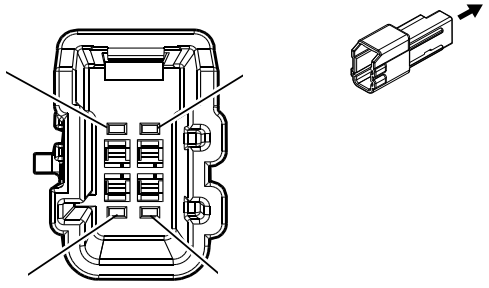

4293695

Connector Part Information

Harness Type: Passenger Seat
OEM Connector: 6098-7781
Service Connector: Service by Harness - See Part Catalog
Description: 4-Way M 1.2 Series (GY)

Terminal Part Information

Terminal Type ID	Terminated Lead	Diagnostic Test Probe	Terminal Removal Tool	Service Terminal	Tray Name	Core Crimp	Insulation Crimp
I	Not Required	J-35616-13 (BU)	No Tool Required	Not Required	Not Required	Not Required	Not Required

M73D Seat Blower Motor - Passenger Cushion (KQV)

Pin	Size	Color	Circuit	Function	Terminal Type ID	Option
1	0.75	VT/WH	4939	Run/Crank Ignition 1 Voltage	I	—
2	0.5	WH	5908	Passenger Seat Vent Motor Control 1	I	—
3	0.75	BK	1250	Ground	I	—
4	—	—	—	Not Occupied	—	—

M74D Window Motor - Driver (AXG)

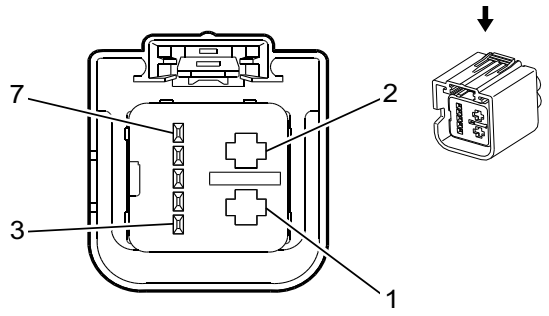

2282932

Connector Part Information

Harness Type: Driver Door
OEM Connector: 15504732
Service Connector: Service by Harness - See Part Catalog
Description: 7-Way F 0.64, 2.8 Kaizen Timer Series, Sealed (GY)

Terminal Part Information

Terminal Type ID	Terminated Lead	Diagnostic Test Probe	Terminal Removal Tool	Service Terminal	Tray Name	Core Crimp	Insulation Crimp
I	Not Required	J-35616-4A (PU)	No Tool Required	Not Required	Not Required	Not Required	Not Required
II	Not Required	J-35616-64B (LT BU)	No Tool Required	Not Required	Not Required	Not Required	Not Required

M74D Window Motor - Driver (AXG)

Pin	Size	Color	Circuit	Function	Terminal Type ID	Option
1	2.5	BK	1150	Ground	I	—
2	2.5	RD/D-BU	1842	Battery Positive Voltage	I	—
3	0.35	L-GN/WH	3379	Power Window Switch Driver Up Signal	II	—
4	0.5	L-GN/YE	6134	Local Interconnect Network Serial Data Bus 3	II	—
5	0.35	L-GN	3381	Power Window Switch Driver Express Signal	II	—
6	0.5	PK	745	Left Front Door Ajar Switch Signal	II	—
7	0.5	GY	3380	Power Window Switch Driver Down Signal	II	—

M74LR Window Motor - Left Rear (AEQ)

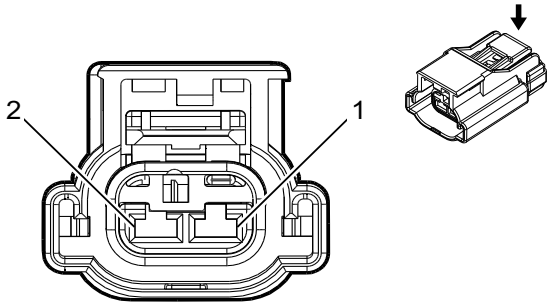

2716333

Connector Part Information

Harness Type: Left Rear Door
OEM Connector: 13863838
Service Connector: Service by Harness - See Part Catalog
Description: 2-Way F 2.8 Series, Sealed (BK)

Terminal Part Information

Terminal Type ID	Terminated Lead	Diagnostic Test Probe	Terminal Removal Tool	Service Terminal	Tray Name	Core Crimp	Insulation Crimp
I	Not Required	J-35616-35 (VT)	No Tool Required	Not Required	Not Required	Not Required	Not Required

M74LR Window Motor - Left Rear (AEQ)

Pin	Size	Color	Circuit	Function	Terminal Type ID	Option
1	2	BU/VT	668	Power Window Motor Left Rear Up Control	I	—
2	2	YE/D-BU	669	Power Window Motor Left Rear Down Control	I	—

M74P Window Motor - Passenger (AED)

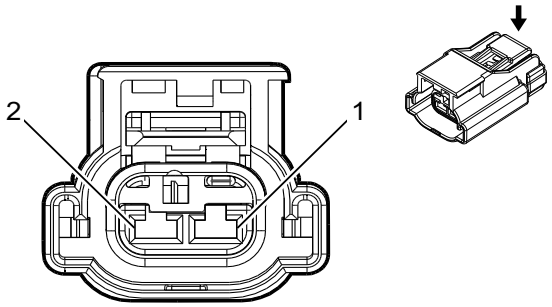

2716333

Connector Part Information

Harness Type: Passenger Door
OEM Connector: 13863838
Service Connector: Service by Harness - See Part Catalog
Description: 2-Way F 2.8 Series, Sealed (BK)

Terminal Part Information

Terminal Type ID	Terminated Lead	Diagnostic Test Probe	Terminal Removal Tool	Service Terminal	Tray Name	Core Crimp	Insulation Crimp
I	Not Required	J-35616-35 (VT)	No Tool Required	Not Required	Not Required	Not Required	Not Required

M74P Window Motor - Passenger (AED)

Pin	Size	Color	Circuit	Function	Terminal Type ID	Option
1	2	L-GN/GY	3387	Power Window Motor Passenger Up Control	I	—
2	2	YE/D-BU	3388	Power Window Motor Passenger Down Control	I	—

M74P Window Motor - Passenger (AEF)

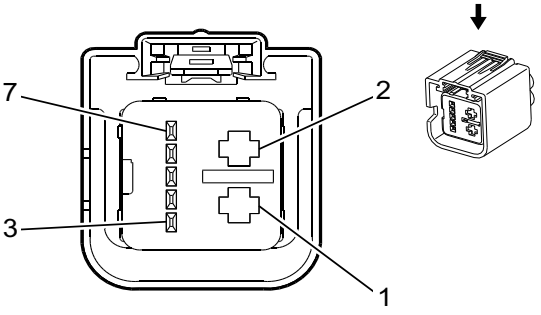

2282932

Connector Part Information

Harness Type: Passenger Door
OEM Connector: 15504732
Service Connector: Service by Harness - See Part Catalog
Description: 7-Way F 0.64, 2.8 Kaizen Timer Series, Sealed (GY)

Terminal Part Information

Terminal Type ID	Terminated Lead	Diagnostic Test Probe	Terminal Removal Tool	Service Terminal	Tray Name	Core Crimp	Insulation Crimp
I	Not Required	J-35616-4A (PU)	No Tool Required	Not Required	Not Required	Not Required	Not Required
II	Not Required	J-35616-64B (LT BU)	No Tool Required	Not Required	Not Required	Not Required	Not Required

M74P Window Motor - Passenger (AEF)

Pin	Size	Color	Circuit	Function	Terminal Type ID	Option
1	2.5	BK	1250	Ground	I	—
2	2.5	RD/WH	1340	Battery Positive Voltage	I	—
3	0.35	YE/BK	3384	Power Window Switch Passenger Up Signal	II	—
4	0.35	L-GN/YE	6134	Local Interconnect Network Serial Data Bus 3	II	—
5	0.35	VT/GY	3386	Power Window Switch Passenger Express Signal	II	—
6	0.5	GY	746	Right Front Door Ajar Switch Signal	II	—
7	0.5	BN/YE	3385	Power Window Switch Passenger Down Signal	II	—

M74RR Window Motor - Right Rear (AEQ)

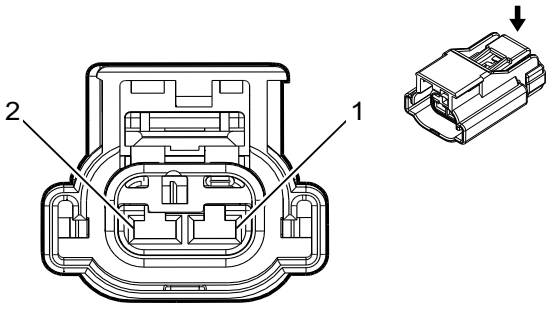

2716333

Connector Part Information

Harness Type: Right Rear Door
OEM Connector: 13863838
Service Connector: Service by Harness - See Part Catalog
Description: 2-Way F 2.8 Series, Sealed (BK)

Terminal Part Information

Terminal Type ID	Terminated Lead	Diagnostic Test Probe	Terminal Removal Tool	Service Terminal	Tray Name	Core Crimp	Insulation Crimp
I	Not Required	J-35616-35 (VT)	No Tool Required	Not Required	Not Required	Not Required	Not Required

M74RR Window Motor - Right Rear (AEQ)

Pin	Size	Color	Circuit	Function	Terminal Type ID	Option
1	2	BU/GY	670	Power Window Motor Right Rear Up Control	I	—

M74RR Window Motor - Right Rear (AEQ) (cont'd)

Pin	Size	Color	Circuit	Function	Terminal Type ID	Option
2	2	L-GN/BK	671	Power Window Motor Right Rear Down Control	I	—

M75 Windshield Wiper Motor

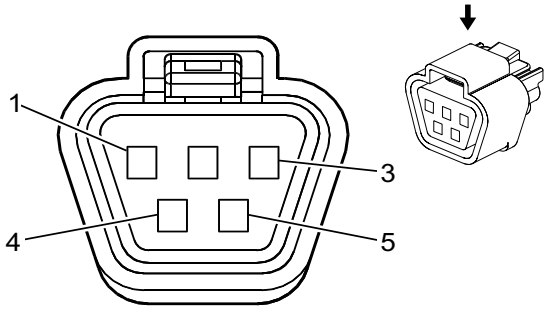

1715213

Connector Part Information

Harness Type: Body
OEM Connector: 15316488
Service Connector: 13587179
Description: 5-Way F 090 Series, Sealed (BK)

Terminal Part Information

Terminal Type ID	Terminated Lead	Diagnostic Test Probe	Terminal Removal Tool	Service Terminal	Tray Name	Core Crimp	Insulation Crimp
I	Not Required	J-35616-14 (GN)	No Tool Required	Not Required	Not Required	Not Required	Not Required
II	Not Required	J-35616-18 (BK)	No Tool Required	Not Required	Not Required	Not Required	Not Required

M75 Windshield Wiper Motor

Pin	Size	Color	Circuit	Function	Terminal Type ID	Option
1	2	YE/BN	95	Windshield Wiper Motor Low Speed Control	II	—
2	—	—	—	Not Occupied	—	—
3	0.35	BN/L-GN	196	Windshield Wiper Motor Park Switch Signal	I	—
4	2	WH	92	Windshield Wiper Motor High Speed Control	II	—
5	2	BK	150	Ground	II	—

M93 Key Capture Solenoid Actuator (BTM)

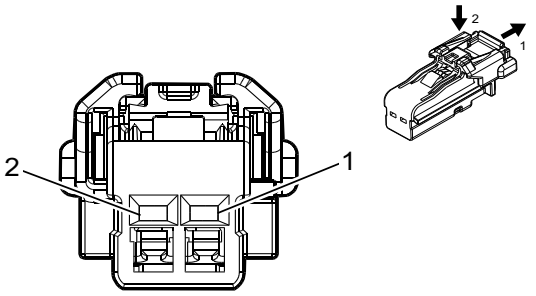

4115691

Connector Part Information

Harness Type: Instrument Panel
OEM Connector: 35026312
Service Connector: 19352066
Description: 2-Way F 1.2 Series (BK)

Terminal Part Information

Terminal Type ID	Terminated Lead	Diagnostic Test Probe	Terminal Removal Tool	Service Terminal	Tray Name	Core Crimp	Insulation Crimp
I	Not Required	J-35616-16 (LT GN)	No Tool Required	Not Required	Not Required	Not Required	Not Required

M93 Key Capture Solenoid Actuator (BTM)

Pin	Size	Color	Circuit	Function	Terminal Type ID	Option
1	0.35	VT/GY	1630	Steering Column Key Cylinder Lock Solenoid Control	I	—
2	0.35	BK	1850	Ground	I	—

M103 Turbocharger Vane Position Actuator (L5P)

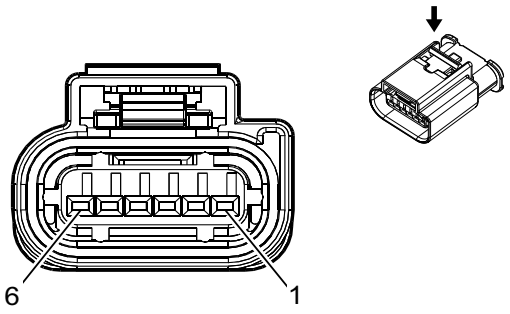

3747579

Connector Part Information

Harness Type: Glow Plug Jumper
OEM Connector: 13507080

Service Connector: Service by Harness - See Part Catalog
Description: 6-Way F 1.2 MCON Series, Sealed (BK)

Terminal Part Information

Terminal Type ID	Terminated Lead	Diagnostic Test Probe	Terminal Removal Tool	Service Terminal	Tray Name	Core Crimp	Insulation Crimp
I	Not Required	J-35616-16 (LT GN)	No Tool Required	Not Required	Not Required	Not Required	Not Required

M103 Turbocharger Vane Position Actuator (L5P)

Pin	Size	Color	Circuit	Function	Terminal Type ID	Option
1	0.5	VT/BU	3674	NOx Sensor 1 Control	I	L5P
2	0.5	BK/WH	151	Signal Ground	I	L5P
3	0.5	BU/BN	4498	High Speed GMLAN Serial Data (+) 7	I	L5P
4	0.5	BU/BN	4498	High Speed GMLAN Serial Data (+) 7	I	L5P
5	0.5	WH	4499	High Speed GMLAN Serial Data (-) 7	I	L5P
6	0.5	WH	4499	High Speed GMLAN Serial Data (-) 7	I	L5P

M104L Park Brake Actuator - Left

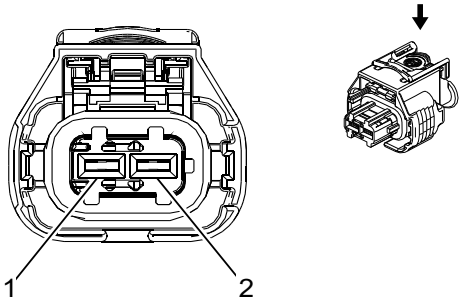

2577394

Connector Part Information

Harness Type: Rear Axle
OEM Connector: 1928405714
Service Connector: Service by Harness - See Part Catalog
Description: 2-Way F 2.8 Series, Sealed (BK)

Terminal Part Information

Terminal Type ID	Terminated Lead	Diagnostic Test Probe	Terminal Removal Tool	Service Terminal	Tray Name	Core Crimp	Insulation Crimp
I	Not Required	J-35616-35 (VT)	No Tool Required	Not Required	Not Required	Not Required	Not Required

M104L Park Brake Actuator - Left

Pin	Size	Color	Circuit	Function	Terminal Type ID	Option
1	2.5	GN/BK	4369	Park Brake Motor Low Reference Left Rear	I	—

M104L Park Brake Actuator - Left (cont'd)

Pin	Size	Color	Circuit	Function	Terminal Type ID	Option
2	2.5	WH	2001	Park Brake Motor Apply Left Rear Control	I	—

M104R Park Brake Actuator - Right

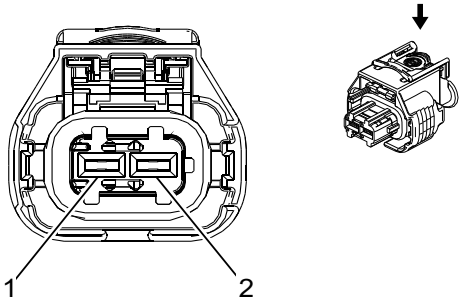

2577394

Connector Part Information

Harness Type: Rear Axle
OEM Connector: 1928405714
Service Connector: Service by Harness - See Part Catalog
Description: 2-Way F 2.8 Series, Sealed (BK)

Terminal Part Information

Terminal Type ID	Terminated Lead	Diagnostic Test Probe	Terminal Removal Tool	Service Terminal	Tray Name	Core Crimp	Insulation Crimp
I	Not Required	J-35616-35 (VT)	No Tool Required	Not Required	Not Required	Not Required	Not Required

M104R Park Brake Actuator - Right

Pin	Size	Color	Circuit	Function	Terminal Type ID	Option
1	2.5	GY	4368	Park Brake Motor Low Reference Right Rear	I	—
2	2.5	GN/VT	1988	Park Brake Motor Apply Right Rear Control	I	—

M125 Pickup Box Endgate Power Assist Actuator (QT6)

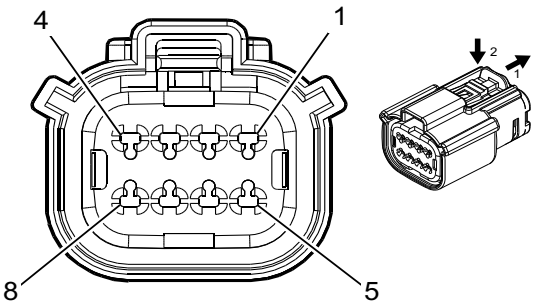

4846407

Connector Part Information

Harness Type: Endgate
OEM Connector: 35037827
Service Connector: Service by Harness - See Part Catalog
Description: 8-Way F 150 MX Series, Sealed (BK)

Terminal Part Information

Terminal Type ID	Terminated Lead	Diagnostic Test Probe	Terminal Removal Tool	Service Terminal	Tray Name	Core Crimp	Insulation Crimp
I	Not Required	J-35616-2A (GY)	No Tool Required	Not Required	Not Required	Not Required	Not Required

M125 Pickup Box Endgate Power Assist Actuator (QT6)

Pin	Size	Color	Circuit	Function	Terminal Type ID	Option
1	1	BN/WH	4690	Rear Closure Open/Close Motor Close Control	I	—
2	0.5	L-GN	1577	Rear Closure Clutch Control	I	—
3	0.5	OG/WH	1590	Rear Closure Clutch Return	I	—
4	0.35	BN/RD	4683	Rear Closure Position Sensor Voltage Reference	I	—
5	1	WH	4689	Rear Closure Open/Close Motor Open Control	I	—
6	0.35	BN/YE	4686	Rear Closure Position Sensor Signal 2	I	—
7	0.35	BK/L-GN	4687	Rear Closure Position Sensor Low Reference	I	—
8	0.35	BU/WH	4685	Rear Closure Position Sensor Signal 1	I	—

P3 Backup Alarm (8S3)

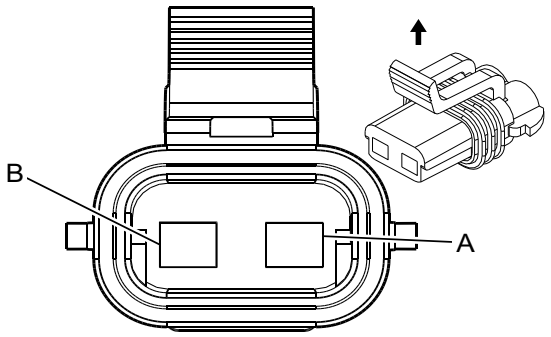

68721

Connector Part Information

Harness Type: Back up Alarm
OEM Connector: 15300027
Service Connector: Service by Harness - See Part Catalog
Description: 2-Way F 280 Metri-Pack Series, Sealed (BK)

Terminal Part Information

Terminal Type ID	Terminated Lead	Diagnostic Test Probe	Terminal Removal Tool	Service Terminal	Tray Name	Core Crimp	Insulation Crimp
I	Not Required	J-35616-4A (PU)	No Tool Required	Not Required	Not Required	Not Required	Not Required

P3 Backup Alarm (8S3)

Pin	Size	Color	Circuit	Function	Terminal Type ID	Option
A	1	L-GN	1624	Trailer Backup Lamp Control	I	—
B	1	WH	22	Trailer Ground	I	—

P12 Horn

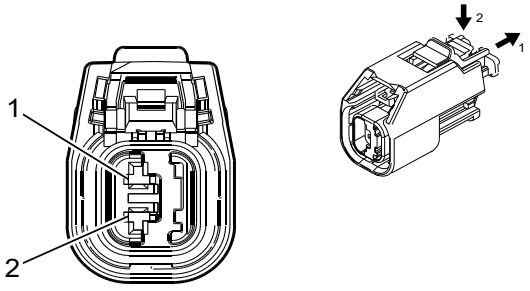

4889830

Connector Part Information

Harness Type: Body
OEM Connector: 33164011
Service Connector: 13586115
Description: 2-Way F 1.5 OCS Series, Sealed (BK)

Terminal Part Information

Terminal Type ID	Terminated Lead	Diagnostic Test Probe	Terminal Removal Tool	Service Terminal	Tray Name	Core Crimp	Insulation Crimp
I	Not Required	J-35616-14 (GN)	No Tool Required	Not Required	Not Required	Not Required	Not Required

P12 Horn

Pin	Size	Color	Circuit	Function	Terminal Type ID	Option
1	0.75	BK	250	Ground	I	—
2	0.75	BN/GY	29	Horn Control	I	—

P16 Instrument Cluster X1

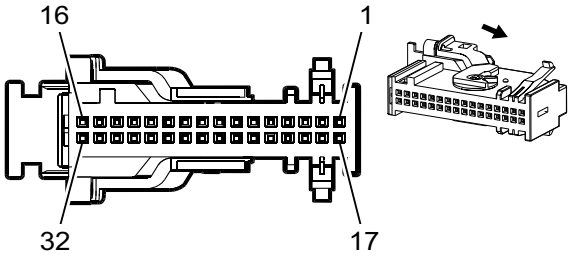

627214

Connector Part Information

Harness Type: Instrument Panel
OEM Connector: 12198036
Service Connector: 13511333
Description: 32-Way F 0.64 Micro-Quadlock Series (BK with GY Cover)

Terminal Part Information

Terminal Type ID	Terminated Lead	Diagnostic Test Probe	Terminal Removal Tool	Service Terminal	Tray Name	Core Crimp	Insulation Crimp
I	13579993	J-35616-64B (LT BU)	J-38125-12A	144969-1	Lear 25	E	2

P16 Instrument Cluster X1

Pin	Size	Color	Circuit	Function	Terminal Type ID	Option
1	0.35	BN/D-BU	7216	Ethernet Bus 7 (-)	I	—
2	—	—	—	Not Occupied	—	—
3	0.35	GY/L-GN	1102	Low Speed GMLAN Serial Data #2	I	—
4 - 6	—	—	—	Not Occupied	—	—
7	0.35	RD/GY	2840	Battery Positive Voltage	I	—
8	0.35	VT/BK	1639	Run/Crank Ignition 1 Voltage	I	—
9	—	—	—	Not Occupied	—	—
10	0.5	BU/YE	68	Low Coolant Level Indicator Control	I	—

P16 Instrument Cluster X1 (cont'd)

Pin	Size	Color	Circuit	Function	Terminal Type ID	Option
11	0.35	GY/BK	4787	Day Night LED Control	I	—
12	0.35	GY/YE	3885	Forward Collision Alert LED Control	I	—
13	0.35	BU/L-GN	1304	High Speed GMLAN Serial Data (+)9	I	—
14	0.35	WH/L-GN	1305	High Speed GMLAN Serial Data (-)9	I	—
15	—	—	—	Not Occupied	—	—
16	0.35	BN/WH	419	Check Engine Indicator Control	I	—
17	0.35	GY/D-BU	7217	Ethernet Bus 7 (+)	I	—
18	—	—	—	Not Occupied	—	—
19	0.5	BK/WH	1851	Signal Ground	I	—
20	0.35	L-GN/BK	3894	Local Interconnect Network Serial Data Bus 12	I	—
21 - 22	—	—	—	Not Occupied	—	—
23	0.35	WH/D-BU	5986	Serial Data Communication Enable	I	—
24	0.35	VT	185	Low Washer Fluid Indicator Control	I	—
25 - 28	—	—	—	Not Occupied	—	—
29	0.35	BU/L-GN	1304	High Speed GMLAN Serial Data (+)9	I	—
30	0.35	WH/L-GN	1305	High Speed GMLAN Serial Data (-)9	I	—
31	—	—	—	Not Occupied	—	—
32	0.35	L-GN/BN	507	Wait To Start Indicator Control	I	—

P17 Info Display Module X1 (IOR)

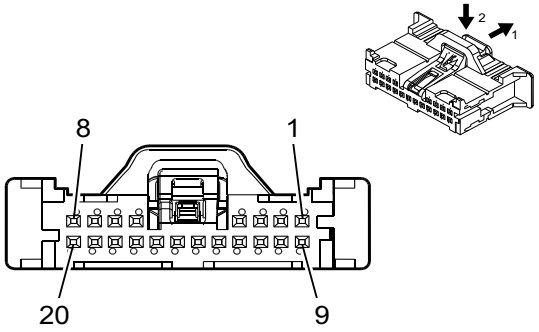

5200955

Connector Part Information

Harness Type: Instrument Panel
OEM Connector: 35068196
Service Connector: -
Description: 20-Way F Mini 50 Series (BK)

Terminal Part Information

Terminal Type ID	Terminated Lead	Diagnostic Test Probe	Terminal Removal Tool	Service Terminal	Tray Name	Core Crimp	Insulation Crimp
I	19370262	EL-35616-58 (BK)	EL-38125-58	Not Available	Not Available	Not Available	Not Available

P17 Info Display Module X1 (IOR)

Pin	Size	Color	Circuit	Function	Terminal Type ID	Option
1	0.35	BU/RD	2807	Radio Keypad Voltage Reference	I	—
2	0.35	GY/D-BU	2803	Radio Display Touch Interrupt Request Signal	I	—
3	—	—	—	Not Occupied	—	—
4	0.35	BU	4315	Radio Volume Up Signal	I	—
5	0.35	GY/BN	4314	Radio Volume Down Signal	I	—
6	0.35	BN/WH	2809	Radio Keypad Power Signal	I	—
7	0.35	VT/WH	2810	Radio Keypad Button Signal	I	—
8	0.35	BU/GY	2808	Radio Keypad Dimming Control	I	—
9	0.35	BU/L-GN	2813	Radio Display Backlight Dimming Control	I	—
10	—	—	—	Not Occupied	—	—
11	0.35	BK/L-GN	2804	Radio Display Backlight Low Reference	I	—
12	0.35	BU/RD	2807	Radio Keypad Voltage Reference	I	—
13	—	—	—	Not Occupied	—	—
14	0.35	BU	4315	Radio Volume Up Signal	I	—
15	0.35	GY/BN	4314	Radio Volume Down Signal	I	—
16	0.35	BN/WH	2809	Radio Keypad Power Signal	I	—
17	0.35	VT/WH	2810	Radio Keypad Button Signal	I	—
18	0.35	BU/GY	2808	Radio Keypad Dimming Control	I	—
19	0.35	GY/VT	3363	Navigation Display Dimming Control	I	—
20	0.35	BK/YE	2806	Radio Keypad Low Reference	I	—

P17 Info Display Module (IOS/IOT)

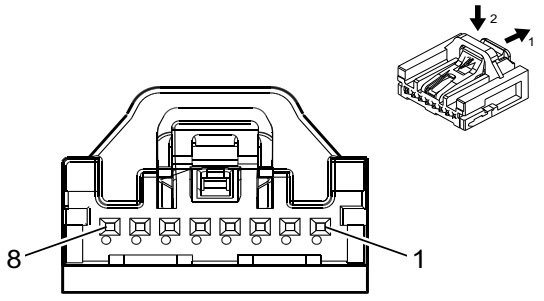

5200269

Connector Part Information

Harness Type: Instrument Panel
OEM Connector: 35068228
Service Connector: -
Description: 8-Way F Mini 50 Series (BK)

Terminal Part Information

Terminal Type ID	Terminated Lead	Diagnostic Test Probe	Terminal Removal Tool	Service Terminal	Tray Name	Core Crimp	Insulation Crimp
I	Not Required	EL-35616-58 (BK)	No Tool Required	Not Required	Not Required	Not Required	Not Required

P17 Info Display Module (IOS/IOT)

Pin	Size	Color	Circuit	Function	Terminal Type ID	Option
1	0.35	RD/WH	1340	Battery Positive Voltage	I	—
2 - 7	—	—	—	Not Occupied	—	—
8	0.35	BK/WH	2751	Signal Ground	I	—

P19AC Speaker - Subwoofer

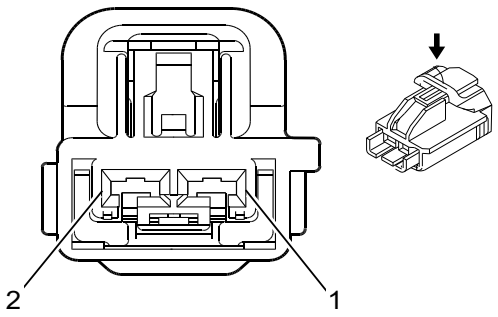

1803142

Connector Part Information

Harness Type: Body
OEM Connector: 10846819
Service Connector: 19367562
Description: 2-Way F YESC Kaizen Series (L-GY)

Terminal Part Information

Terminal Type ID	Terminated Lead	Diagnostic Test Probe	Terminal Removal Tool	Service Terminal	Tray Name	Core Crimp	Insulation Crimp
I	Not Required	J-35616-4A (PU)	No Tool Required	Not Required	Not Required	Not Required	Not Required

P19AC Speaker - Subwoofer

Pin	Size	Color	Circuit	Function	Terminal Type ID	Option
1	2.5	L-GN/BK	1794	Left/Rear Subwoofer Speaker (-) Low Reference	I	—
2	2.5	BU/GY	346	Left/Rear Subwoofer Speaker Control (+)	I	—

P19AG Speaker - Left Front Door

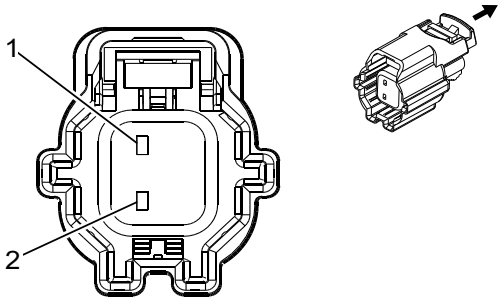

4223204

Connector Part Information

Harness Type: Driver Door
OEM Connector: 15548606
Service Connector: Service by Harness - See Part Catalog
Description: 2-Way F 150 MX Series (BK)

Terminal Part Information

Terminal Type ID	Terminated Lead	Diagnostic Test Probe	Terminal Removal Tool	Service Terminal	Tray Name	Core Crimp	Insulation Crimp
I	Not Required	J-35616-14 (GN)	No Tool Required	Not Required	Not Required	Not Required	Not Required

P19AG Speaker - Left Front Door

Pin	Size	Color	Circuit	Function	Terminal Type ID	Option
1	0.75	BN/D-BU	118	Left Front Speaker Signal (-) 1	I	—
2	0.75	BU	201	Left Front Speaker Control (+) 1	I	—

P19AH Speaker - Right Front Door

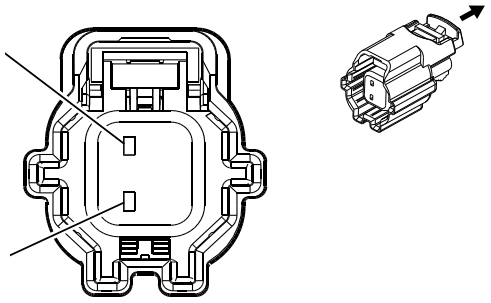

4223204

Connector Part Information

Harness Type: Passenger Door
OEM Connector: 15548606
Service Connector: Service by Harness - See Part Catalog
Description: 2-Way F 150 MX Series (BK)

Terminal Part Information

Terminal Type ID	Terminated Lead	Diagnostic Test Probe	Terminal Removal Tool	Service Terminal	Tray Name	Core Crimp	Insulation Crimp
I	Not Required	J-35616-14 (GN)	No Tool Required	Not Required	Not Required	Not Required	Not Required

P19AH Speaker - Right Front Door

Pin	Size	Color	Circuit	Function	Terminal Type ID	Option
1	0.75	YE/BK	117	Right Front Speaker Signal (-) 1	I	—
2	0.75	YE	200	Right Front Speaker Control (+) 1	I	—

P19AL Speaker - Left Rear Door (UQF/UQA)

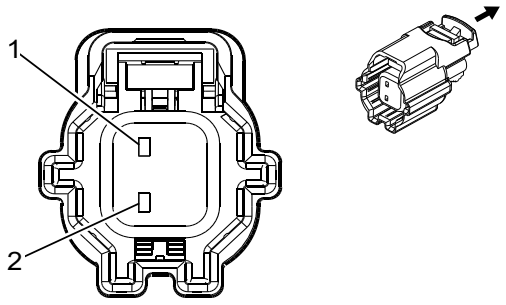

4223204

Connector Part Information

Harness Type: Left Rear Door
OEM Connector: 15548606
Service Connector: Service by Harness - See Part Catalog
Description: 2-Way F 150 MX Series (BK)

Terminal Part Information

Terminal Type ID	Terminated Lead	Diagnostic Test Probe	Terminal Removal Tool	Service Terminal	Tray Name	Core Crimp	Insulation Crimp
I	Not Required	J-35616-14 (GN)	No Tool Required	Not Required	Not Required	Not Required	Not Required

P19AL Speaker - Left Rear Door (UQF/UQA)

Pin	Size	Color	Circuit	Function	Terminal Type ID	Option
1	0.5	L-GN/BK	116	Left Rear Speaker Signal (-)	I	—
2	0.5	L-GN	199	Left Rear Speaker Control (+)	I	—

P19AM Speaker - Right Rear Door (UQF/UQA)

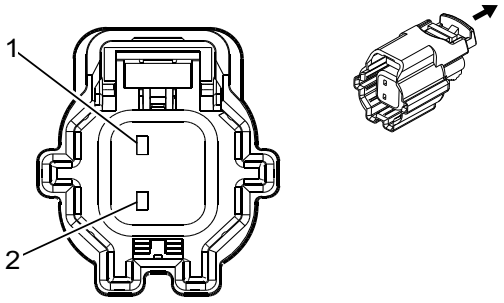

4223204

Connector Part Information

Harness Type: Right Rear Door
OEM Connector: 15548606
Service Connector: Service by Harness - See Part Catalog
Description: 2-Way F 150 MX Series (BK)

Terminal Part Information

Terminal Type ID	Terminated Lead	Diagnostic Test Probe	Terminal Removal Tool	Service Terminal	Tray Name	Core Crimp	Insulation Crimp
I	Not Required	J-35616-14 (GN)	No Tool Required	Not Required	Not Required	Not Required	Not Required

P19AM Speaker - Right Rear Door (UQF/UQA)

Pin	Size	Color	Circuit	Function	Terminal Type ID	Option
1	0.5	BU/BK	115	Right Rear Speaker Signal (-)	I	—
2	0.5	WH	46	Right Rear Speaker Control (+)	I	—

P19J Speaker - Left Instrument Panel (UQA)

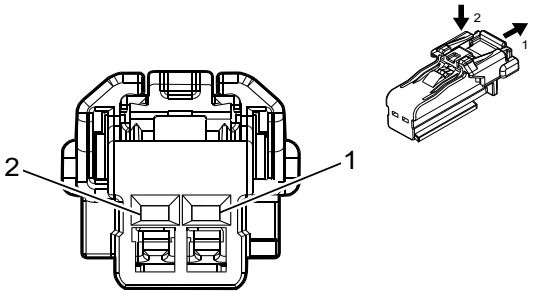

4373379

Connector Part Information

Harness Type: Instrument Panel
OEM Connector: 35034269
Service Connector: 19369632
Description: 2-Way F 1.2 Series (GY)

Terminal Part Information

Terminal Type ID	Terminated Lead	Diagnostic Test Probe	Terminal Removal Tool	Service Terminal	Tray Name	Core Crimp	Insulation Crimp
I	Not Required	J-35616-16 (LT GN)	No Tool Required	Not Required	Not Required	Not Required	Not Required

P19J Speaker - Left Instrument Panel (UQA)

Pin	Size	Color	Circuit	Function	Terminal Type ID	Option
1	0.75	BU/BN	1957	Left Front Midrange Speaker (-) Low Reference	I	—
2	0.75	BU/VT	1857	Left Front Midrange Speaker Control (+)	I	—

P19J Speaker - Left Instrument Panel (UQF/U95)

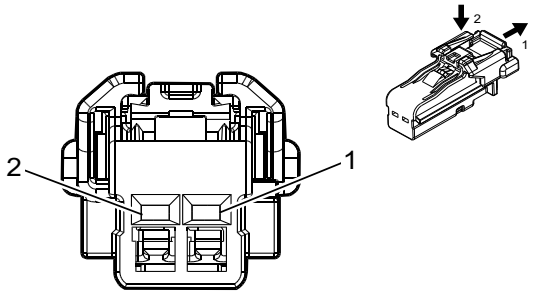

4115691

Connector Part Information

Harness Type: Instrument Panel
OEM Connector: 35026312
Service Connector: 19352066
Description: 2-Way F 1.2 Series (BK)

Terminal Part Information

Terminal Type ID	Terminated Lead	Diagnostic Test Probe	Terminal Removal Tool	Service Terminal	Tray Name	Core Crimp	Insulation Crimp
I	Not Required	J-35616-16 (LT GN)	No Tool Required	Not Required	Not Required	Not Required	Not Required

P19J Speaker - Left Instrument Panel (UQF/U95)

Pin	Size	Color	Circuit	Function	Terminal Type ID	Option
1	0.75	BN/D-BU	118	Left Front Speaker Signal (-) 1	I	—
2	0.75	BU	201	Left Front Speaker Control (+) 1	I	—

P19M Speaker - Left Rear Tweeter (UQF/UQA)

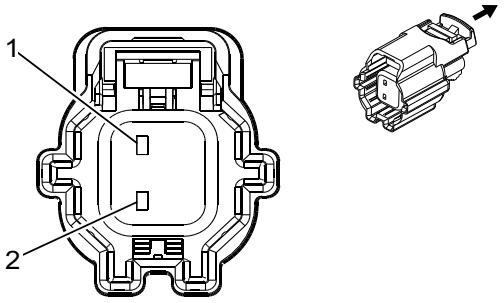

4223204

Connector Part Information

Harness Type: Right Rear Door
OEM Connector: 15548606
Service Connector: Service by Harness - See Part Catalog
Description: 2-Way F 150 MX Series (BK)

Terminal Part Information

Terminal Type ID	Terminated Lead	Diagnostic Test Probe	Terminal Removal Tool	Service Terminal	Tray Name	Core Crimp	Insulation Crimp
I	Not Required	J-35616-14 (GN)	No Tool Required	Not Required	Not Required	Not Required	Not Required

P19M Speaker - Left Rear Tweeter (UQF/UQA)

Pin	Size	Color	Circuit	Function	Terminal Type ID	Option
1	0.5	BU/BK	115	Right Rear Speaker Signal (-)	I	—
2	0.5	WH	46	Right Rear Speaker Control (+)	I	—

P19W Speaker - Right Instrument Panel (UQA)

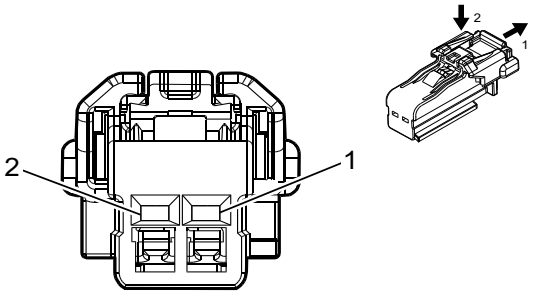

4373379

Connector Part Information

Harness Type: Instrument Panel
OEM Connector: 35034269
Service Connector: 19369632
Description: 2-Way F 1.2 Series (GY)

Terminal Part Information

Terminal Type ID	Terminated Lead	Diagnostic Test Probe	Terminal Removal Tool	Service Terminal	Tray Name	Core Crimp	Insulation Crimp
I	Not Required	J-35616-16 (LT GN)	No Tool Required	Not Required	Not Required	Not Required	Not Required

P19W Speaker - Right Instrument Panel (UQA)

Pin	Size	Color	Circuit	Function	Terminal Type ID	Option
1	0.75	BN/BK	1953	Right Front Midrange Speaker (-) Low Reference	I	—
2	0.75	WH/YE	1853	Right Front Midrange Speaker Control (+)	I	—

P19W Speaker - Right Instrument Panel (UQF/U95)

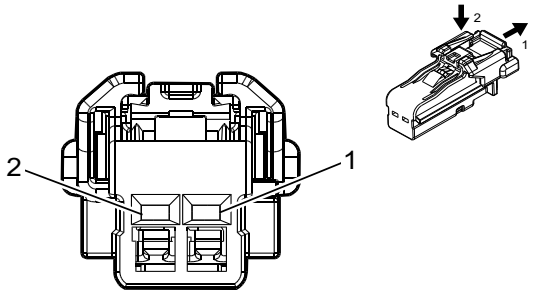

4115691

Connector Part Information

Harness Type: Instrument Panel
OEM Connector: 35026312
Service Connector: 19352066
Description: 2-Way F 1.2 Series (BK)

Terminal Part Information

Terminal Type ID	Terminated Lead	Diagnostic Test Probe	Terminal Removal Tool	Service Terminal	Tray Name	Core Crimp	Insulation Crimp
I	Not Required	J-35616-16 (LT GN)	No Tool Required	Not Required	Not Required	Not Required	Not Required

P19W Speaker - Right Instrument Panel (UQF/U95)

Pin	Size	Color	Circuit	Function	Terminal Type ID	Option
1	0.75	YE/BK	117	Right Front Speaker Signal (-) 1	I	—
2	0.75	YE	200	Right Front Speaker Control (+) 1	I	—

P29 Head-Up Display X1 (UV6)

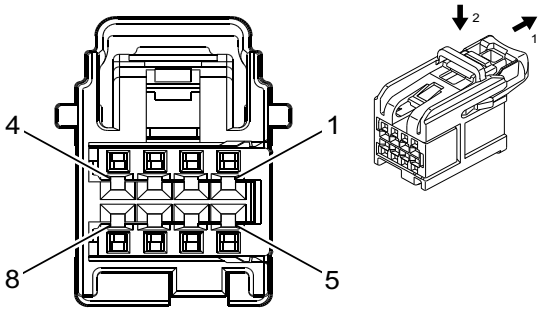

4935776

Connector Part Information

Harness Type: Instrument Panel
OEM Connector: 15526972
Service Connector: 19370429
Description: 8-Way F 0.64 OCS Series (BK)

Terminal Part Information

Terminal Type ID	Terminated Lead	Diagnostic Test Probe	Terminal Removal Tool	Service Terminal	Tray Name	Core Crimp	Insulation Crimp
I	Not Required	J-35616-64B (LT BU)	No Tool Required	Not Required	Not Required	Not Required	Not Required

P29 Head-Up Display X1 (UV6)

Pin	Size	Color	Circuit	Function	Terminal Type ID	Option
1	0.35	L-GN/BK	3894	Local Interconnect Network Serial Data Bus 12	I	—
2	—	—	—	Not Occupied	—	—
3	0.35	YE/WH	622	Head Up Display Switch Signal	I	—
4	0.35	BK/WH	1851	Signal Ground	I	—
5	—	—	—	Not Occupied	—	—
6	0.35	RD/WH	1340	Battery Positive Voltage	I	—
7	—	—	—	Not Occupied	—	—
8	0.35	BK/L-GN	5699	Head Up Display Switch Low Reference	I	—

P43 Collision Alert Indicators (UEU)

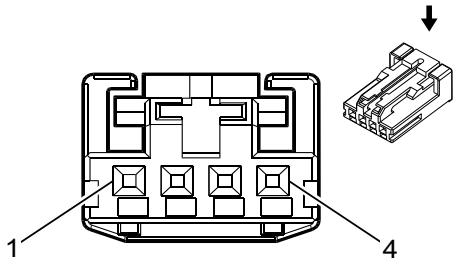

2717162

Connector Part Information

Harness Type: Instrument Panel
OEM Connector: 13969166
Service Connector: 13587297
Description: 4-Way F 0.64 Micro-Quadlock Series (BK)

Terminal Part Information

Terminal Type ID	Terminated Lead	Diagnostic Test Probe	Terminal Removal Tool	Service Terminal	Tray Name	Core Crimp	Insulation Crimp
I	Not Required	J-35616-64B (LT BU)	No Tool Required	Not Required	Not Required	Not Required	Not Required

P43 Collision Alert Indicators (UEU)

Pin	Size	Color	Circuit	Function	Terminal Type ID	Option
1	0.35	VT/BK	1639	Run/Crank Ignition 1 Voltage	I	—
2	0.35	GY/YE	3885	Forward Collision Alert LED Control	I	—
3	0.35	GY/BK	4787	Day Night LED Control	I	—
4	0.5	BK/WH	1851	Signal Ground	I	—

P45LR Seat Haptic Movement Motor - Driver Left Rear (-HS1)

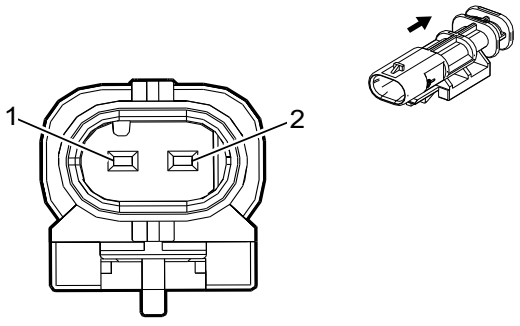

2474755

Connector Part Information

Harness Type: Driver Seat
OEM Connector: 2203314-1
Service Connector: Service by Harness - See Part Catalog
Description: 2-Way M 1.2 Multilock Series, Sealed (BK)

Terminal Part Information

Terminal Type ID	Terminated Lead	Diagnostic Test Probe	Terminal Removal Tool	Service Terminal	Tray Name	Core Crimp	Insulation Crimp
I	Not Required	J-35616-17 (LT GN)	No Tool Required	Not Required	Not Required	Not Required	Not Required

P45LR Seat Haptic Movement Motor - Driver Left Rear (-HS1)

Pin	Size	Color	Circuit	Function	Terminal Type ID	Option
1	0.5	BK	1150	Ground	I	—
2	0.5	YE/BN	3037	Left Rear Haptic Seat Motor Control	I	—

P45RR Seat Haptic Movement Motor - Driver Right Rear (HS1)

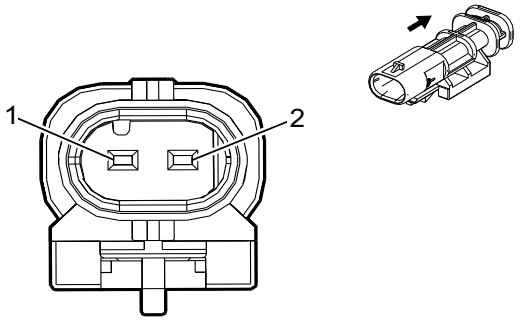

2474755

Connector Part Information

Harness Type: Driver Seat
OEM Connector: 2203314-1
Service Connector: Service by Harness - See Part Catalog
Description: 2-Way M 1.2 Multilock Series, Sealed (BK)

Terminal Part Information

Terminal Type ID	Terminated Lead	Diagnostic Test Probe	Terminal Removal Tool	Service Terminal	Tray Name	Core Crimp	Insulation Crimp
I	Not Required	J-35616-17 (LT GN)	No Tool Required	Not Required	Not Required	Not Required	Not Required

P45RR Seat Haptic Movement Motor - Driver Right Rear (HS1)

Pin	Size	Color	Circuit	Function	Terminal Type ID	Option
1	0.5	BK	1150	Ground	I	—
2	0.5	BN	3038	Right Rear Haptic Seat Motor Control	I	—

Q2 A/C Compressor Clutch

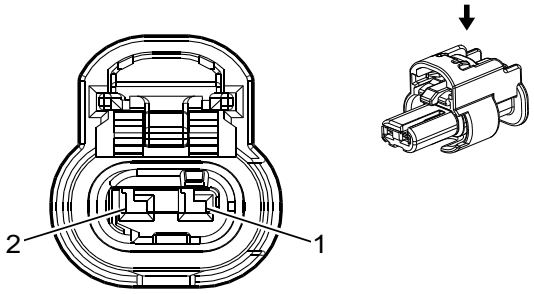

4649903

Connector Part Information

Harness Type: Engine
OEM Connector: 33327048
Service Connector: 19366858
Description: 2-Way F 1.2 MCON Series, Sealed (BK)

Terminal Part Information

Terminal Type ID	Terminated Lead	Diagnostic Test Probe	Terminal Removal Tool	Service Terminal	Tray Name	Core Crimp	Insulation Crimp
I	Not Required	J-35616-16 (LT GN)	No Tool Required	Not Required	Not Required	Not Required	Not Required

Q2 A/C Compressor Clutch

Pin	Size	Color	Circuit	Function	Terminal Type ID	Option
1	1	BK	4450	Ground	I	—
2	0.5	BN/L-GN	59	A/C Compressor Clutch Control	I	—

Q6 Camshaft Position Actuator Solenoid Valve (L8T)

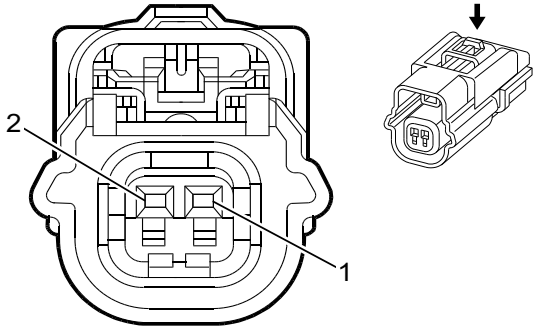

1664592

Connector Part Information

Harness Type: Engine Jumper
OEM Connector: 13528494

Service Connector: Service by Harness - See Part Catalog
Description: 2-Way F 0.64 Kaizen Series, Sealed (BK)

Terminal Part Information

Terminal Type ID	Terminated Lead	Diagnostic Test Probe	Terminal Removal Tool	Service Terminal	Tray Name	Core Crimp	Insulation Crimp
I	Not Required	J-35616-64B (LT BU)	No Tool Required	Not Required	Not Required	Not Required	Not Required

Q6 Camshaft Position Actuator Solenoid Valve (L8T)

Pin	Size	Color	Circuit	Function	Terminal Type ID	Option
1	0.5	BK/BN	6753	Cam Phaser W Low Reference	I	—
2	0.5	VT/BN	5284	Camshaft Phaser Intake Solenoid 1	I	—

Q12 Evaporative Emission Purge Solenoid Valve (L8T)

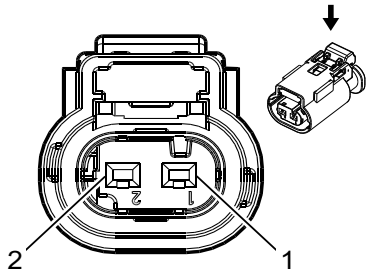

2717066

Connector Part Information

Harness Type: Engine
OEM Connector: 13735326
Service Connector: 13587326
Description: 2-Way F 1.2 Multilock Series, Sealed (BK)

Terminal Part Information

Terminal Type ID	Terminated Lead	Diagnostic Test Probe	Terminal Removal Tool	Service Terminal	Tray Name	Core Crimp	Insulation Crimp
I	Not Required	J-35616-17 (LT GN)	No Tool Required	Not Required	Not Required	Not Required	Not Required

Q12 Evaporative Emission Purge Solenoid Valve (L8T)

Pin	Size	Color	Circuit	Function	Terminal Type ID	Option
1	0.5	VT/D-BU	5293	Powertrain Main Relay Fused Supply 4	I	—
2	0.5	L-GN/ D-BU	428	EVAP Canister Purge Solenoid Control	I	—

Q13 Evaporative Emission Vent Solenoid Valve (L8T)

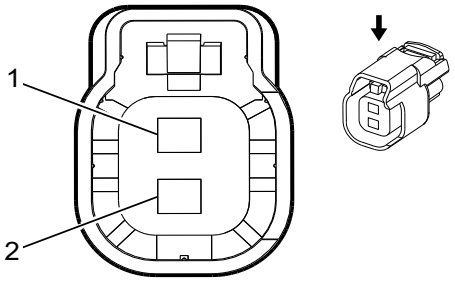

2422378

Connector Part Information

Harness Type: Chassis
OEM Connector: 13771883
Service Connector: 13579002
Description: 2-Way F 1.5 Series, Sealed (BK)

Terminal Part Information

Terminal Type ID	Terminated Lead	Diagnostic Test Probe	Terminal Removal Tool	Service Terminal	Tray Name	Core Crimp	Insulation Crimp
I	Not Required	J-35616-14 (GN)	No Tool Required	Not Required	Not Required	Not Required	Not Required

Q13 Evaporative Emission Vent Solenoid Valve (L8T)

Pin	Size	Color	Circuit	Function	Terminal Type ID	Option
1	0.5	WH	1310	EVAP Canister Vent Solenoid Control	I	—
2	0.5	RD/WH	2040	Battery Positive Voltage	I	—

Q14 Exhaust Gas Recirculation Valve (L5P)

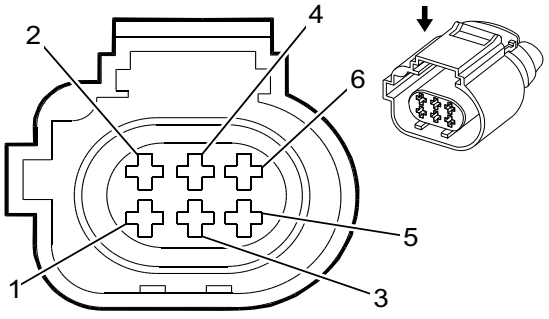

2216905

Connector Part Information

Harness Type: Glow Plug Jumper
OEM Connector: 284716-5
Service Connector: Service by Harness - See Part Catalog
Description: 6-Way F 1.6 Micro-Timer Series, Sealed (GY)

Terminal Part Information

Terminal Type ID	Terminated Lead	Diagnostic Test Probe	Terminal Removal Tool	Service Terminal	Tray Name	Core Crimp	Insulation Crimp
I	Not Required	J-35616-14 (GN)	No Tool Required	Not Required	Not Required	Not Required	Not Required

Q14 Exhaust Gas Recirculation Valve (L5P)

Pin	Size	Color	Circuit	Function	Terminal Type ID	Option
1	0.5	WH/VT	5764	Exhaust Gas Recirculation Valve Motor High Signal	I	L5P
2	0.5	BN/WH	5763	Exhaust Gas Recirculation Valve Sensor Signal	I	L5P
3	—	—	—	Not Occupied	—	—
4	0.5	BK/BN	2753	Exhaust Gas Recirculation Sensor Low Reference	I	L5P
5	0.5	VT/BK	5746	Exhaust Gas Recirculation Valve Motor Low Signal	I	L5P
6	0.5	BU/RD	5047	Exhaust Gas Recirculation 5V Reference 1	I	L5P

Q17A Fuel Injector 1 (L5P)

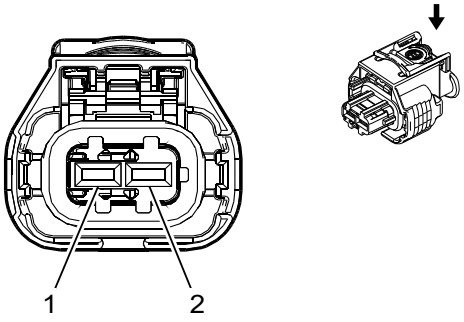

2845578

Connector Part Information

Harness Type: Glow Plug Jumper
OEM Connector: 13343445
Service Connector: Service by Harness - See Part Catalog
Description: 2-Way F 2.8 Series, Sealed (BK)

Terminal Part Information

Terminal Type ID	Terminated Lead	Diagnostic Test Probe	Terminal Removal Tool	Service Terminal	Tray Name	Core Crimp	Insulation Crimp
I	Not Required	J-35616-35 (VT)	No Tool Required	Not Required	Not Required	Not Required	Not Required

Q17A Fuel Injector 1 (L5P)

Pin	Size	Color	Circuit	Function	Terminal Type ID	Option
1	0.75	BN	4801	Direct Fuel Injector (DFI) High Voltage Control Cylinder 1	I	L5P

Q17A Fuel Injector 1 (L5P) (cont'd)

Pin	Size	Color	Circuit	Function	Terminal Type ID	Option
2	0.75	BN/WH	4901	Direct Fuel Injector (DFI) High Voltage Supply Cylinder 1	I	L5P

Q17B Fuel Injector 2 (L5P)

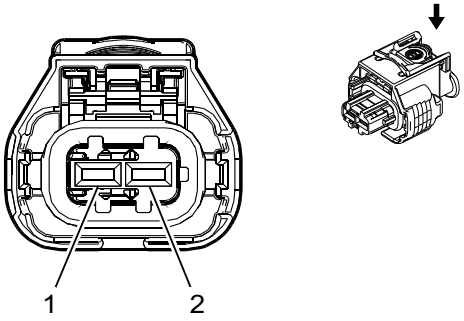

2845578

Connector Part Information

Harness Type: Glow Plug Jumper
OEM Connector: 13343445
Service Connector: Service by Harness - See Part Catalog
Description: 2-Way F 2.8 Series, Sealed (BK)

Terminal Part Information

Terminal Type ID	Terminated Lead	Diagnostic Test Probe	Terminal Removal Tool	Service Terminal	Tray Name	Core Crimp	Insulation Crimp
I	Not Required	J-35616-35 (VT)	No Tool Required	Not Required	Not Required	Not Required	Not Required

Q17B Fuel Injector 2 (L5P)

Pin	Size	Color	Circuit	Function	Terminal Type ID	Option
1	0.75	BU	4802	Direct Fuel Injector (DFI) High Voltage Control Cylinder 2	I	L5P
2	0.75	BU/GY	4902	Direct Fuel Injector (DFI) High Voltage Supply Cylinder 2	I	L5P

Q17C Fuel Injector 3 (L5P)

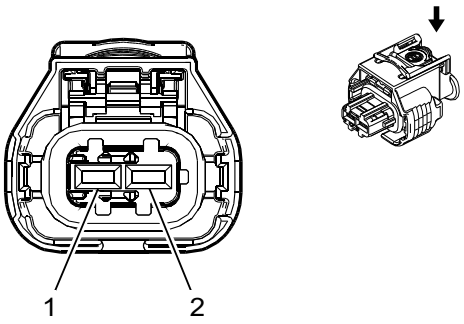

2845578

Connector Part Information

Harness Type: Glow Plug Jumper
OEM Connector: 13343445
Service Connector: Service by Harness - See Part Catalog
Description: 2-Way F 2.8 Series, Sealed (BK)

Terminal Part Information

Terminal Type ID	Terminated Lead	Diagnostic Test Probe	Terminal Removal Tool	Service Terminal	Tray Name	Core Crimp	Insulation Crimp
I	Not Required	J-35616-35 (VT)	No Tool Required	Not Required	Not Required	Not Required	Not Required

Q17C Fuel Injector 3 (L5P)

Pin	Size	Color	Circuit	Function	Terminal Type ID	Option
1	0.75	GN	4803	Direct Fuel Injector (DFI) High Voltage Control Cylinder 3	I	L5P
2	0.75	GN/GY	4903	Direct Fuel Injector (DFI) High Voltage Supply Cylinder 3	I	L5P

Q17D Fuel Injector 4 (L5P)

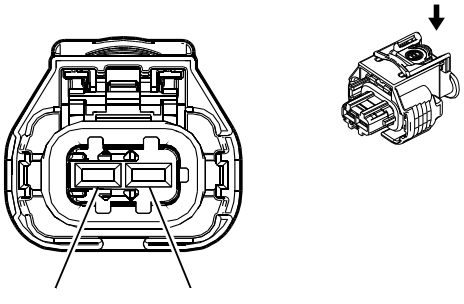

2845578

Connector Part Information

Harness Type: Glow Plug Jumper
OEM Connector: 13343445

Service Connector: Service by Harness - See Part Catalog
Description: 2-Way F 2.8 Series, Sealed (BK)

Terminal Part Information

Terminal Type ID	Terminated Lead	Diagnostic Test Probe	Terminal Removal Tool	Service Terminal	Tray Name	Core Crimp	Insulation Crimp
I	Not Required	J-35616-35 (VT)	No Tool Required	Not Required	Not Required	Not Required	Not Required

Q17D Fuel Injector 4 (L5P)

Pin	Size	Color	Circuit	Function	Terminal Type ID	Option
1	0.75	GY/BU	4804	Direct Fuel Injector (DFI) High Voltage Control Cylinder 4	I	L5P
2	0.75	BU/WH	4904	Direct Fuel Injector (DFI) High Voltage Supply Cylinder 4	I	L5P

Q17E Fuel Injector 5 (L5P)

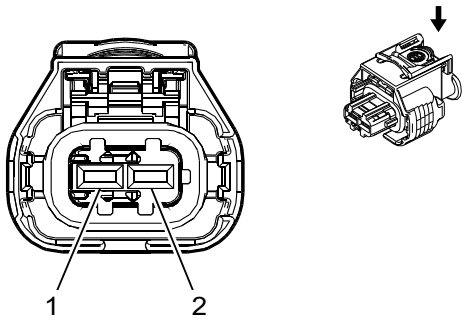

2845578

Connector Part Information

Harness Type: Glow Plug Jumper
OEM Connector: 13343445
Service Connector: Service by Harness - See Part Catalog
Description: 2-Way F 2.8 Series, Sealed (BK)

Terminal Part Information

Terminal Type ID	Terminated Lead	Diagnostic Test Probe	Terminal Removal Tool	Service Terminal	Tray Name	Core Crimp	Insulation Crimp
I	Not Required	J-35616-35 (VT)	No Tool Required	Not Required	Not Required	Not Required	Not Required

Q17E Fuel Injector 5 (L5P)

Pin	Size	Color	Circuit	Function	Terminal Type ID	Option
1	0.75	WH/GN	4805	Direct Fuel Injector (DFI) High Voltage Control Cylinder 5	I	L5P
2	0.75	GN/WH	4905	Direct Fuel Injector (DFI) High Voltage Supply Cylinder 5	I	L5P

Q17F Fuel Injector 6 (L5P)

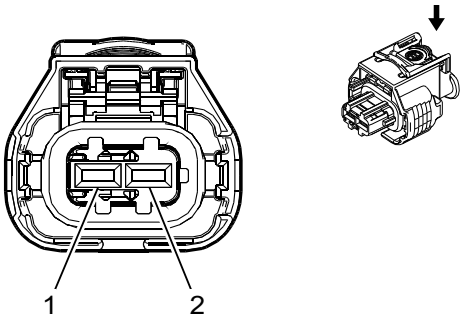

2845578

Connector Part Information

Harness Type: Glow Plug Jumper
OEM Connector: 13343445
Service Connector: Service by Harness - See Part Catalog
Description: 2-Way F 2.8 Series, Sealed (BK)

Terminal Part Information

Terminal Type ID	Terminated Lead	Diagnostic Test Probe	Terminal Removal Tool	Service Terminal	Tray Name	Core Crimp	Insulation Crimp
I	Not Required	J-35616-35 (VT)	No Tool Required	Not Required	Not Required	Not Required	Not Required

Q17F Fuel Injector 6 (L5P)

Pin	Size	Color	Circuit	Function	Terminal Type ID	Option
1	0.75	VT/GN	4806	Direct Fuel Injector (DFI) High Voltage Control Cylinder 6	I	L5P
2	0.75	VT/GY	4906	Direct Fuel Injector (DFI) High Voltage Supply Cylinder 6	I	L5P

Q17G Fuel Injector 7 (L5P)

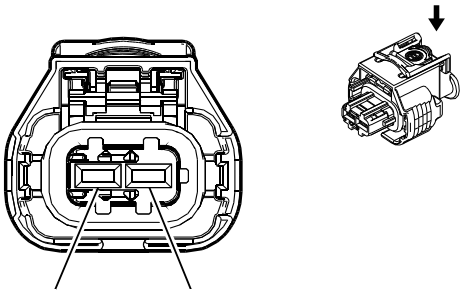

2845578

Connector Part Information

Harness Type: Glow Plug Jumper
OEM Connector: 13343445
Service Connector: Service by Harness - See Part Catalog
Description: 2-Way F 2.8 Series, Sealed (BK)

Terminal Part Information

Terminal Type ID	Terminated Lead	Diagnostic Test Probe	Terminal Removal Tool	Service Terminal	Tray Name	Core Crimp	Insulation Crimp
I	Not Required	J-35616-35 (VT)	No Tool Required	Not Required	Not Required	Not Required	Not Required

Q17G Fuel Injector 7 (L5P)

Pin	Size	Color	Circuit	Function	Terminal Type ID	Option
1	0.75	YE/GY	4807	Direct Fuel Injector (DFI) High Voltage Control Cylinder 7	I	L5P
2	0.75	WH/YE	4907	Direct Fuel Injector (DFI) High Voltage Supply Cylinder 7	I	L5P

Q17H Fuel Injector 8 (L5P)

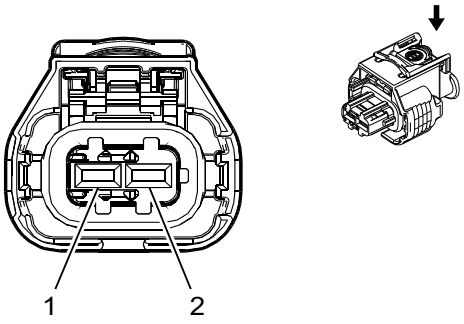

2845578

Connector Part Information

Harness Type: Glow Plug Jumper
OEM Connector: 13343445
Service Connector: Service by Harness - See Part Catalog
Description: 2-Way F 2.8 Series, Sealed (BK)

Terminal Part Information

Terminal Type ID	Terminated Lead	Diagnostic Test Probe	Terminal Removal Tool	Service Terminal	Tray Name	Core Crimp	Insulation Crimp
I	Not Required	J-35616-35 (VT)	No Tool Required	Not Required	Not Required	Not Required	Not Required

Q17H Fuel Injector 8 (L5P)

Pin	Size	Color	Circuit	Function	Terminal Type ID	Option
1	0.75	GY	4808	Direct Fuel Injector (DFI) High Voltage Control Cylinder 8	I	L5P
2	0.75	GY/WH	4908	Direct Fuel Injector (DFI) High Voltage Supply Cylinder 8	I	L5P

Q18A Fuel Pressure Regulator 1 (L5P)

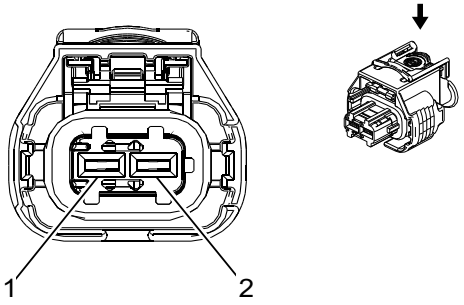

2577394

Connector Part Information

Harness Type: Engine Jumper
OEM Connector: 13343443
Service Connector: Service by Harness - See Part Catalog
Description: 2-Way F 2.8 Series, Sealed (BK)

Terminal Part Information

Terminal Type ID	Terminated Lead	Diagnostic Test Probe	Terminal Removal Tool	Service Terminal	Tray Name	Core Crimp	Insulation Crimp
I	Not Required	J-35616-35 (VT)	No Tool Required	Not Required	Not Required	Not Required	Not Required

Q18A Fuel Pressure Regulator 1 (L5P)

Pin	Size	Color	Circuit	Function	Terminal Type ID	Option
1	0.5	BN/BK	2929	Fuel Metering Valve Low Control	I	L5P
2	0.5	YE	2928	Fuel Metering Valve High Control	I	L5P

Q18B Fuel Pressure Regulator 2 (L5P)

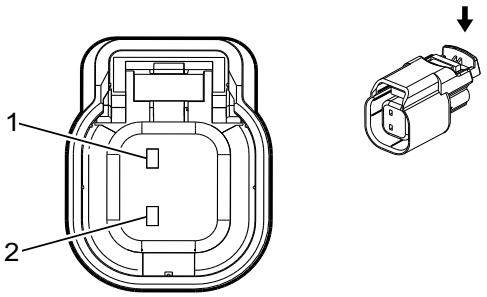

2792100

Connector Part Information

Harness Type: Glow Plug Jumper
OEM Connector: 13581410
Service Connector: Service by Harness - See Part Catalog
Description: 2-Way F 1.5 Series, Sealed (BK)

Terminal Part Information

Terminal Type ID	Terminated Lead	Diagnostic Test Probe	Terminal Removal Tool	Service Terminal	Tray Name	Core Crimp	Insulation Crimp
I	Not Required	J-35616-2A (GY)	No Tool Required	Not Required	Not Required	Not Required	Not Required

Q18B Fuel Pressure Regulator 2 (L5P)

Pin	Size	Color	Circuit	Function	Terminal Type ID	Option
1	0.75	BK/YE	2834	Fuel Rail Pressure Solenoid Low Reference	I	L5P
2	0.75	BU/WH	2530	Fuel Rail Pressure Solenoid Control	I	L5P

Q20 Intake Air Flow Valve (L5P)

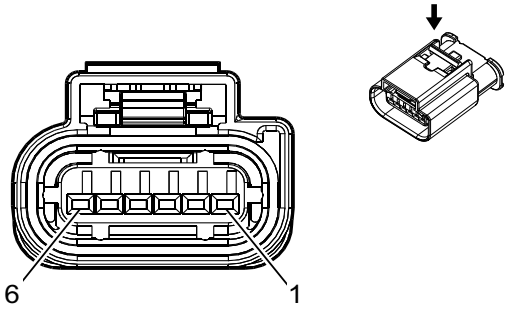

3747579

Connector Part Information

Harness Type: Glow Plug Jumper
OEM Connector: 13507087
Service Connector: Service by Harness - See Part Catalog
Description: 6-Way F 1.2 MCON Series, Sealed (BK)

Terminal Part Information

Terminal Type ID	Terminated Lead	Diagnostic Test Probe	Terminal Removal Tool	Service Terminal	Tray Name	Core Crimp	Insulation Crimp
I	Not Required	J-35616-16 (LT GN)	No Tool Required	Not Required	Not Required	Not Required	Not Required

Q20 Intake Air Flow Valve (L5P)

Pin	Size	Color	Circuit	Function	Terminal Type ID	Option
1	0.5	YE	581	Throttle Actuator Control Open	I	L5P
2	0.5	BN/WH	582	Throttle Actuator Control Close	I	L5P
3	0.5	BU/WH	3630	Throttle Position Sensor (SENT1) Signal	I	L5P
4	0.5	BK/BN	2752	Throttle Position Sensor Low Reference	I	L5P
5	0.5	BN/RD	2701	Throttle Position Sensor 5V Reference	I	L5P
6	—	—	—	Not Occupied	—	—

Q38 Throttle Body (L8T)

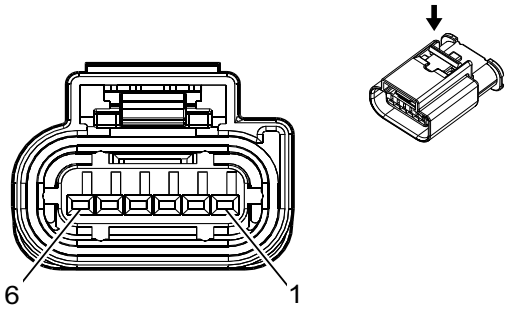

3747579

Connector Part Information

Harness Type: Engine
OEM Connector: 33220833
Service Connector: 19352911
Description: 6-Way F 1.2 MCON Series, Sealed (BK)

Terminal Part Information

Terminal Type ID	Terminated Lead	Diagnostic Test Probe	Terminal Removal Tool	Service Terminal	Tray Name	Core Crimp	Insulation Crimp
I	Not Required	J-35616-16 (LT GN)	No Tool Required	Not Required	Not Required	Not Required	Not Required

Q38 Throttle Body (L8T)

Pin	Size	Color	Circuit	Function	Terminal Type ID	Option
1	0.5	YE	581	Throttle Actuator Control Open	I	—
2	0.5	BN/WH	582	Throttle Actuator Control Close	I	—
3	0.5	BU/WH	3630	Throttle Position Sensor (SENT1) Signal	I	—
4	0.5	BK/BN	2752	Throttle Position Sensor Low Reference	I	—

Q38 Throttle Body (L8T) (cont'd)

Pin	Size	Color	Circuit	Function	Terminal Type ID	Option
5	0.5	BN/RD	2701	Throttle Position Sensor 5V Reference	I	—
6	—	—	—	Not Occupied	—	—

Q38 Throttle Body (L8T)

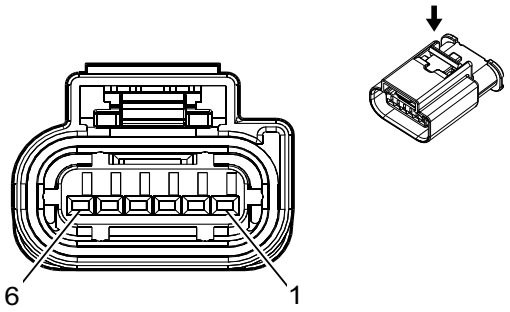

3747579

Connector Part Information

Harness Type: Engine
OEM Connector: 33220833
Service Connector: 19352911
Description: 6-Way F 1.2 MCON Series, Sealed (BK)

Terminal Part Information

Terminal Type ID	Terminated Lead	Diagnostic Test Probe	Terminal Removal Tool	Service Terminal	Tray Name	Core Crimp	Insulation Crimp
I	Not Required	J-35616-16 (LT GN)	No Tool Required	Not Required	Not Required	Not Required	Not Required

Q38 Throttle Body (L8T)

Pin	Size	Color	Circuit	Function	Terminal Type ID	Option
1	0.5	YE	581	Throttle Actuator Control Open	I	—
2	0.5	BN/WH	582	Throttle Actuator Control Close	I	—
3	0.5	BU/WH	3630	Throttle Position Sensor (SENT1) Signal	I	—
4	0.5	BK/BN	2752	Throttle Position Sensor Low Reference	I	—
5	0.5	BN/RD	2701	Throttle Position Sensor 5V Reference	I	—
6	—	—	—	Not Occupied	—	—

Q44 Engine Oil Pressure Control Solenoid Valve (L8T)

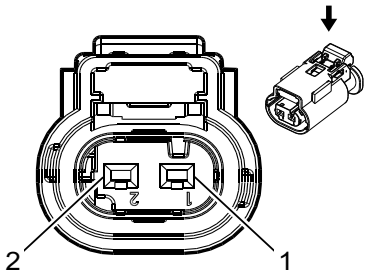

2717066

Connector Part Information

Harness Type: Engine Jumper
OEM Connector: 13735326
Service Connector: Service by Harness - See Part Catalog
Description: 2-Way F 1.2 Multilock Series, Sealed (BK)

Terminal Part Information

Terminal Type ID	Terminated Lead	Diagnostic Test Probe	Terminal Removal Tool	Service Terminal	Tray Name	Core Crimp	Insulation Crimp
I	Not Required	J-35616-16 (LT GN)	No Tool Required	Not Required	Not Required	Not Required	Not Required

Q44 Engine Oil Pressure Control Solenoid Valve (L8T)

Pin	Size	Color	Circuit	Function	Terminal Type ID	Option
1	0.5	VT/D-BU	5293	Powertrain Main Relay Fused Supply 4	I	—
2	0.5	BU	179	Oil Pump Command Signal	I	—

Q46 A/C Compressor Solenoid Valve

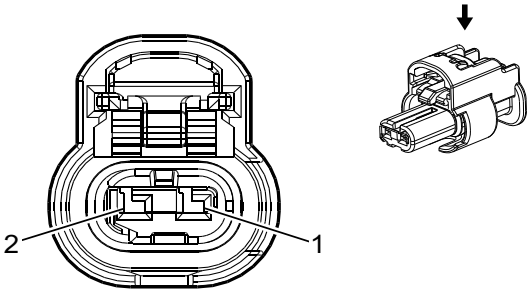

4335931

Connector Part Information

Harness Type: Engine
OEM Connector: 33371691
Service Connector: 19366843
Description: 2-Way F 1.2 MCON Series, Sealed (BK)

Terminal Part Information

Terminal Type ID	Terminated Lead	Diagnostic Test Probe	Terminal Removal Tool	Service Terminal	Tray Name	Core Crimp	Insulation Crimp
I	Not Required	J-35616-16 (LT GN)	No Tool Required	Not Required	Not Required	Not Required	Not Required

Q46 A/C Compressor Solenoid Valve

Pin	Size	Color	Circuit	Function	Terminal Type ID	Option
1	0.5	BU/YE	7574	Electric Variable Displacement Control	I	—
2	0.5	BU/BN	7573	Electric Variable Displacement Supply	I	—

Q47 Exhaust Gas Recirculation Cooler Bypass Solenoid Valve (L5P)

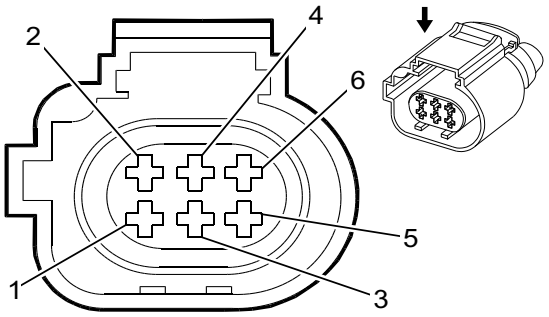

2216905

Connector Part Information

Harness Type: Glow Plug Jumper
OEM Connector: 284716-5
Service Connector: Service by Harness - See Part Catalog
Description: 6-Way F 1.6 Micro-Timer Series, Sealed (GY)

Terminal Part Information

Terminal Type ID	Terminated Lead	Diagnostic Test Probe	Terminal Removal Tool	Service Terminal	Tray Name	Core Crimp	Insulation Crimp
I	Not Required	J-35616-14 (GN)	No Tool Required	Not Required	Not Required	Not Required	Not Required

Q47 Exhaust Gas Recirculation Cooler Bypass Solenoid Valve (L5P)

Pin	Size	Color	Circuit	Function	Terminal Type ID	Option
1	0.5	BN/VT	3656	EGR Cooler Bypass Motor Close Control	I	L5P
2	0.5	GN/GY	3654	EGR Cooler Bypass Position Sensor Signal	I	L5P
3	—	—	—	Not Occupied	—	—
4	0.5	BK/BU	3653	EGR Cooler Bypass Position Sensor Low Reference	I	L5P
5	0.5	YE/GN	3655	EGR Cooler Bypass Motor Open Control	I	L5P
6	0.5	VT/RD	3652	EGR Cooler Bypass Position Sensor 5V Reference	I	L5P

Q61 Reductant Injector (L5P)

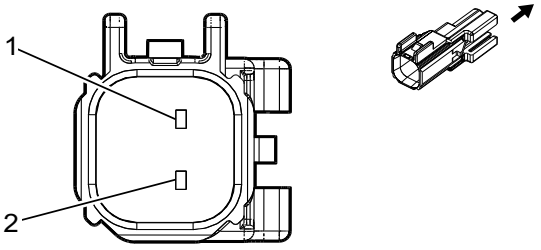

3271068

Connector Part Information

Harness Type: Engine
OEM Connector: 13719748
Service Connector: 19301583
Description: 2-Way M 1.5 Series, Sealed (BK)

Terminal Part Information

Terminal Type ID	Terminated Lead	Diagnostic Test Probe	Terminal Removal Tool	Service Terminal	Tray Name	Core Crimp	Insulation Crimp
I	Not Required	J-35616-3 (GY)	No Tool Required	Not Required	Not Required	Not Required	Not Required

Q61 Reductant Injector (L5P)

Pin	Size	Color	Circuit	Function	Terminal Type ID	Option
1	0.75	BN/WH	3100	DEF Dosing Valve Low Control	I	—
2	0.75	BN	3099	DEF Dosing Valve High Control	I	—

Q67 Exhaust Aftertreatment Fuel Injector (L5P+(Extended Cab/Regular Cab))

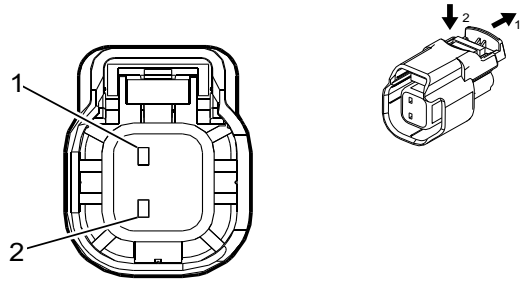

3028817

Connector Part Information

Harness Type: Chassis
OEM Connector: 13820418

Service Connector: 13580230
Description: 2-Way F 1.5 Series, Sealed (BK)

Terminal Part Information

Terminal Type ID	Terminated Lead	Diagnostic Test Probe	Terminal Removal Tool	Service Terminal	Tray Name	Core Crimp	Insulation Crimp
I	Not Required	J-35616-14 (GN)	No Tool Required	Not Required	Not Required	Not Required	Not Required

Q67 Exhaust Aftertreatment Fuel Injector (L5P+(Extended Cab/Regular Cab))

Pin	Size	Color	Circuit	Function	Terminal Type ID	Option
1	0.5	BN/D-BU	2926	Hydrocarbon Injector High Control	I	—
2	0.5	VT/BN	2927	Hydrocarbon Injector Low Control	I	—

Q67 Exhaust Aftertreatment Fuel Injector (L5P+Crew Cab)

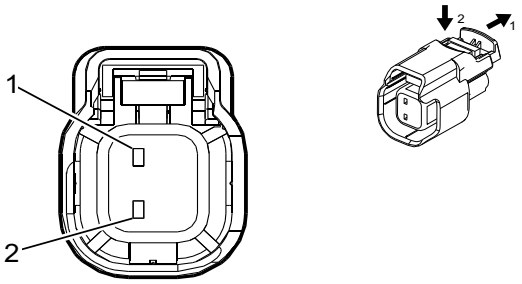

5199958

Connector Part Information

Harness Type: Chassis
OEM Connector: 35259174
Service Connector: -
Description: 2-Way F 1.5 Series, Sealed (BK)

Terminal Part Information

Terminal Type ID	Terminated Lead	Diagnostic Test Probe	Terminal Removal Tool	Service Terminal	Tray Name	Core Crimp	Insulation Crimp
I	Not Required	J-35616-14 (GN)	No Tool Required	Not Required	Not Required	Not Required	Not Required

Q67 Exhaust Aftertreatment Fuel Injector (L5P+Crew Cab)

Pin	Size	Color	Circuit	Function	Terminal Type ID	Option
1	0.5	BN/D-BU	2926	Hydrocarbon Injector High Control	I	—
2	0.5	VT/BN	2927	Hydrocarbon Injector Low Control	I	—

R6A Terminating Resistor - High Speed Bus

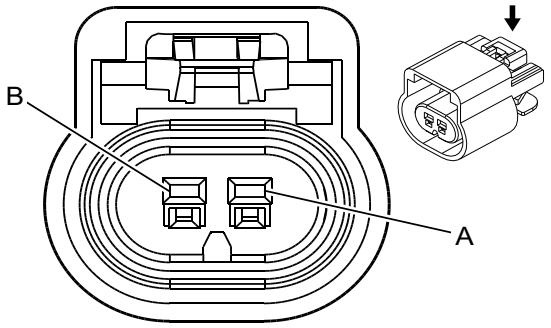

523630

Connector Part Information

Harness Type: Chassis
OEM Connector: 13510085
Service Connector: 13580114
Description: 2-Way F 150 GT Series, Sealed (BK)

Terminal Part Information

Terminal Type ID	Terminated Lead	Diagnostic Test Probe	Terminal Removal Tool	Service Terminal	Tray Name	Core Crimp	Insulation Crimp
I	Not Required	J-35616-14 (GN)	No Tool Required	Not Required	Not Required	Not Required	Not Required

R6A Terminating Resistor - High Speed Bus

Pin	Size	Color	Circuit	Function	Terminal Type ID	Option
A	0.5	BU	2500	High Speed GMLAN Serial Data (+) 1	I	—
B	0.5	WH	2501	High Speed GMLAN Serial Data (-) 1	I	—

R6E Terminating Resistor - High Speed Extension Bus 1 (UEU/UHX)

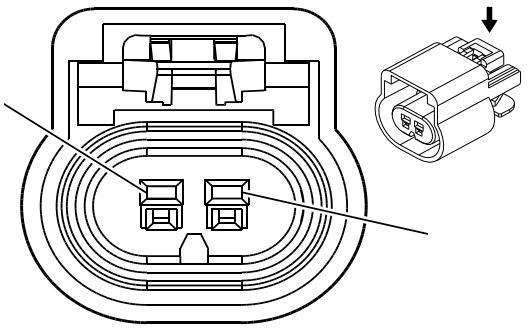

523630

Connector Part Information

Harness Type: Headliner
OEM Connector: 13510085
Service Connector: 13580114
Description: 2-Way F 150 GT Series, Sealed (BK)

Terminal Part Information

Terminal Type ID	Terminated Lead	Diagnostic Test Probe	Terminal Removal Tool	Service Terminal	Tray Name	Core Crimp	Insulation Crimp
I	Not Required	J-35616-14 (GN)	No Tool Required	Not Required	Not Required	Not Required	Not Required

R6E Terminating Resistor - High Speed Extension Bus 1 (UEU/UHX)

Pin	Size	Color	Circuit	Function	Terminal Type ID	Option
A	0.35	BU/GY	3935	High Speed GMLAN Serial Data (+) 8	I	—
B	0.35	WH/GY	3936	High Speed GMLAN Serial Data (-) 8	I	—

R6F Terminating Resistor - High Speed Extension Bus 2

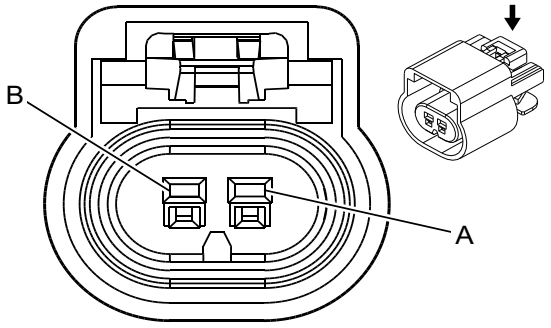

523630

Connector Part Information

Harness Type: Chassis
OEM Connector: 13510085
Service Connector: 13580114
Description: 2-Way F 150 GT Series, Sealed (BK)

Terminal Part Information

Terminal Type ID	Terminated Lead	Diagnostic Test Probe	Terminal Removal Tool	Service Terminal	Tray Name	Core Crimp	Insulation Crimp
I	Not Required	J-35616-14 (GN)	No Tool Required	Not Required	Not Required	Not Required	Not Required

R6F Terminating Resistor - High Speed Extension Bus 2

Pin	Size	Color	Circuit	Function	Terminal Type ID	Option
A	0.5	BU/L-GN	1304	High Speed GMLAN Serial Data (+)9	I	—
B	0.5	WH/L-GN	1305	High Speed GMLAN Serial Data (-)9	I	—

S2 Transmission Manual Shift Switch

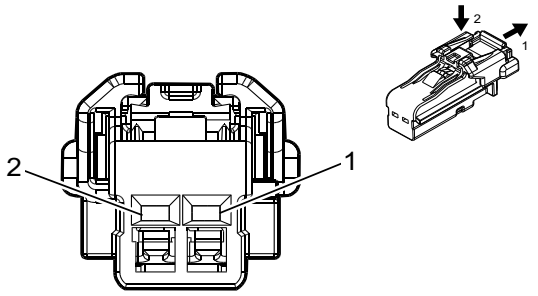

4115691

Connector Part Information

Harness Type: Instrument Panel
OEM Connector: 35026312
Service Connector: 19352066
Description: 2-Way F 1.2 Series (BK)

Terminal Part Information

Terminal Type ID	Terminated Lead	Diagnostic Test Probe	Terminal Removal Tool	Service Terminal	Tray Name	Core Crimp	Insulation Crimp
I	Not Required	J-35616-16 (LT GN)	No Tool Required	Not Required	Not Required	Not Required	Not Required

S2 Transmission Manual Shift Switch

Pin	Size	Color	Circuit	Function	Terminal Type ID	Option
1	0.5	VT/YE	5526	Tap Up/Tap Down Switch Signal	I	—
2	0.5	BK/WH	1851	Signal Ground	I	—

S3 Transmission Shift Lever

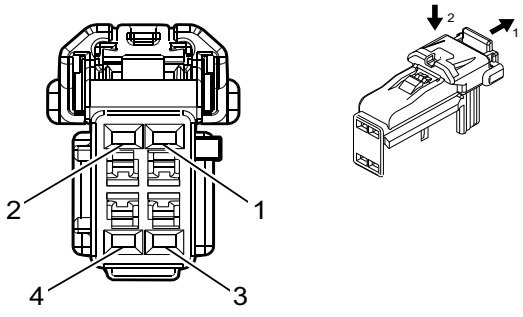

4872683

Connector Part Information

Harness Type: Instrument Panel
OEM Connector: 35029308
Service Connector: 19369633
Description: 4-Way F 1.2 Series (BK)

Terminal Part Information

Terminal Type ID	Terminated Lead	Diagnostic Test Probe	Terminal Removal Tool	Service Terminal	Tray Name	Core Crimp	Insulation Crimp
I	Not Required	J-35616-16 (LT GN)	No Tool Required	Not Required	Not Required	Not Required	Not Required

S3 Transmission Shift Lever

Pin	Size	Color	Circuit	Function	Terminal Type ID	Option
1	0.35	YE/WH	816	Brake Transmission Shift Interlock Solenoid Control	I	—
2	0.35	BK	1850	Ground	I	—
3	0.35	L-GN/WH	1932	Shift Select Switch Park Signal	I	—
4	0.35	BK	1850	Ground	I	—

S13D Door Lock Switch - Driver (AU3)

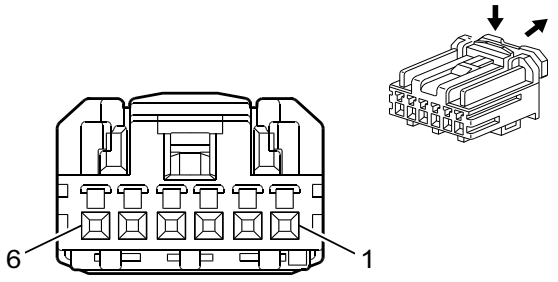

4650256

Connector Part Information

Harness Type: Driver Door Trim
OEM Connector: 33315784
Service Connector: Service by Harness - See Part Catalog
Description: 6-Way F 0.64 HCM Series (BK)

Terminal Part Information

Terminal Type ID	Terminated Lead	Diagnostic Test Probe	Terminal Removal Tool	Service Terminal	Tray Name	Core Crimp	Insulation Crimp
I	Not Required	J-35616-64B (LT BU)	No Tool Required	Not Required	Not Required	Not Required	Not Required

S13D Door Lock Switch - Driver (AU3)

Pin	Size	Color	Circuit	Function	Terminal Type ID	Option
1	0.35	YE	6817	LED Backlight Dimming Control	I	—
2	0.5	BN/YE	780	Driver Door Lock Switch Lock Signal	I	—
3	0.35	BN/WH	781	Driver Door Lock Switch Unlock Signal	I	—
4	0.35	BK	1150	Ground	I	—
5 - 6	—	—	—	Not Occupied	—	—

S13P Door Lock Switch - Passenger (AU3)

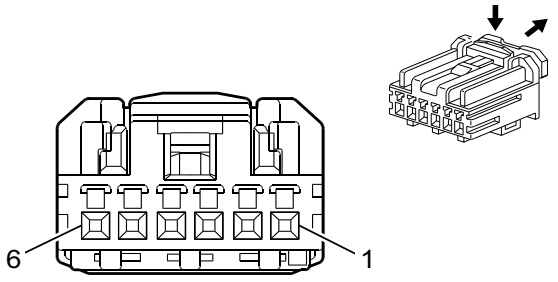

4650256

Connector Part Information

Harness Type: Passenger Door Trim
OEM Connector: 33315784
Service Connector: Service by Harness - See Part Catalog
Description: 6-Way F 0.64 HCM Series (BK)

Terminal Part Information

Terminal Type ID	Terminated Lead	Diagnostic Test Probe	Terminal Removal Tool	Service Terminal	Tray Name	Core Crimp	Insulation Crimp
I	Not Required	J-35616-64B (LT BU)	No Tool Required	Not Required	Not Required	Not Required	Not Required

S13P Door Lock Switch - Passenger (AU3)

Pin	Size	Color	Circuit	Function	Terminal Type ID	Option
1	0.35	YE	6817	LED Backlight Dimming Control	I	—
2	0.35	YE/VT	244	Passenger Door Lock Switch Lock Control	I	—
3	0.35	BN/VT	245	Passenger Door Lock Switch Unlock Control	I	—
4	0.35	BK	1250	Ground	I	—
5 - 6	—	—	—	Not Occupied	—	—

S27 Head-Up Display Switch (UV6)

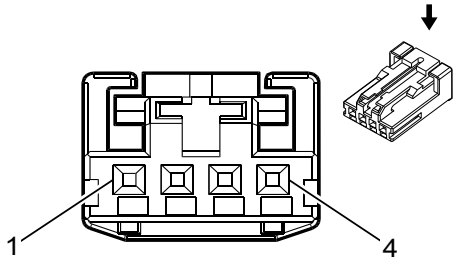

2717162

Connector Part Information

Harness Type: Instrument Panel
OEM Connector: 13969166
Service Connector: 13587297
Description: 4-Way F 0.64 Micro-Quadlock Series (BK)

Terminal Part Information

Terminal Type ID	Terminated Lead	Diagnostic Test Probe	Terminal Removal Tool	Service Terminal	Tray Name	Core Crimp	Insulation Crimp
I	Not Required	J-35616-64B (LT BU)	No Tool Required	Not Required	Not Required	Not Required	Not Required

S27 Head-Up Display Switch (UV6)

Pin	Size	Color	Circuit	Function	Terminal Type ID	Option
1	0.35	YE	6817	LED Backlight Dimming Control	I	—
2	0.35	BK	1850	Ground	I	—
3	0.35	BK/L-GN	5699	Head Up Display Switch Low Reference	I	—
4	0.35	YE/WH	622	Head Up Display Switch Signal	I	—

S27 Head-Up Display Switch (UVC)

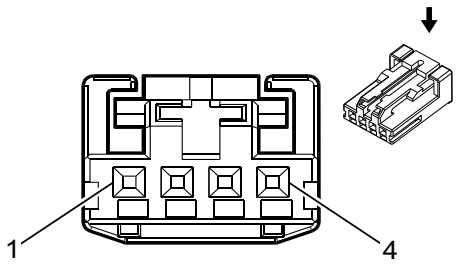

2717162

Connector Part Information

Harness Type: Instrument Panel
OEM Connector: 13969166
Service Connector: 13587297
Description: 4-Way F 0.64 Micro-Quadlock Series (BK)

Terminal Part Information

Terminal Type ID	Terminated Lead	Diagnostic Test Probe	Terminal Removal Tool	Service Terminal	Tray Name	Core Crimp	Insulation Crimp
I	Not Required	J-35616-64B (LT BU)	No Tool Required	Not Required	Not Required	Not Required	Not Required

S27 Head-Up Display Switch (UVC)

Pin	Size	Color	Circuit	Function	Terminal Type ID	Option
1	0.35	YE	6817	LED Backlight Dimming Control	I	—
2	0.35	BK	1850	Ground	I	—
3	0.35	BK/GN	5699	Head Up Display Switch Low Reference	I	—
4	0.35	YE/WH	622	Head Up Display Switch Signal	I	—

S30 Headlamp Switch

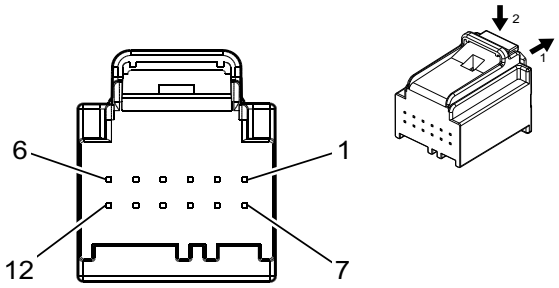

5095565

Connector Part Information

Harness Type: Instrument Panel
OEM Connector: 35130710
Service Connector: 13525987
Description: 12-Way F 0.64 Series, Sealed (BK)

Terminal Part Information

Terminal Type ID	Terminated Lead	Diagnostic Test Probe	Terminal Removal Tool	Service Terminal	Tray Name	Core Crimp	Insulation Crimp
I	13575742	J-35616-64B (LT BU)	J-38125-215A	SAIT-A03T-M064	Yazaki 14	P	P
II	13575867	J-35616-64B (LT BU)	J-38125-215A	SAIT-A03T-M064	Yazaki 14	P	P

S30 Headlamp Switch

Pin	Size	Color	Circuit	Function	Terminal Type ID	Option
1	0.35	WH/VT	103	Headlamp Switch On Signal	II	—
2	0.35	YE	6817	LED Backlight Dimming Control	II	—
3	0.35	L-GN/BN	306	Headlamp Switch Headlamps Off Signal Control	II	—
4	0.35	GY	158	Cargo Lamp Switch Signal	II	—
5	0.35	L-GN/GY	13	Headlamp Switch Park Lamp Signal	II	—
6	0.5	WH/VT	1430	Exterior Courtesy Lamp Control	I	—
7	0.35	WH/GY	2935	Task Lamp Switch Signal	II	—
8	0.35	BK/WH	1851	Signal Ground	II	—
9 - 10	—	—	—	Not Occupied	—	—
11	0.35	WH/BN	7555	Lighting Control Switch Signal	II	—

S30 Headlamp Switch (cont'd)

Pin	Size	Color	Circuit	Function	Terminal Type ID	Option
12	0.35	YE	7556	Lighting Control Switch Reference	II	—

S32R Seat Heating Switch - Rear (KA6)

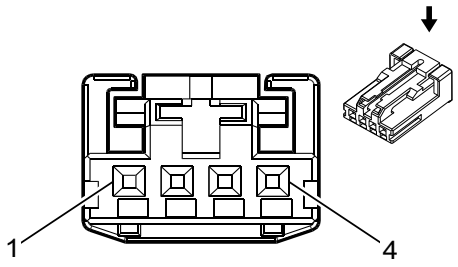

2717162

Connector Part Information

Harness Type: Floor Console
OEM Connector: 13969166
Service Connector: Service by Harness - See Part Catalog
Description: 4-Way F 0.64 Micro-Quadlock Series (BK)

Terminal Part Information

Terminal Type ID	Terminated Lead	Diagnostic Test Probe	Terminal Removal Tool	Service Terminal	Tray Name	Core Crimp	Insulation Crimp
I	Not Required	J-35616-64B (LT BU)	No Tool Required	Not Required	Not Required	Not Required	Not Required

S32R Seat Heating Switch - Rear (KA6)

Pin	Size	Color	Circuit	Function	Terminal Type ID	Option
1	0.5	RD/WH	1340	Battery Positive Voltage	I	—
2	—	—	—	Not Occupied	—	—
3	0.35	L-GN/WH	4115	Local Interconnect Network Serial Data Bus 15	I	—
4	0.5	BK	1250	Ground	I	—

S38 Ignition Mode Switch (BTM)

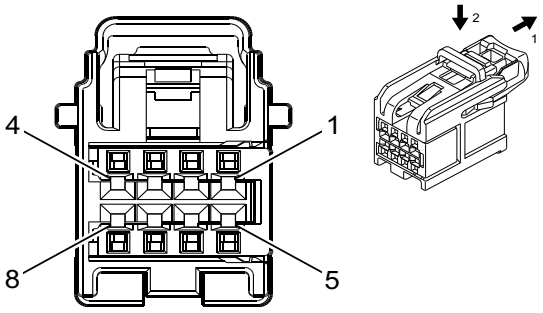

4232228

Connector Part Information

Harness Type: Instrument Panel
OEM Connector: 15526973
Service Connector: 19353873
Description: 8-Way F 0.64 OCS Series (GY)

Terminal Part Information

Terminal Type ID	Terminated Lead	Diagnostic Test Probe	Terminal Removal Tool	Service Terminal	Tray Name	Core Crimp	Insulation Crimp
I	Not Required	J-35616-64B (LT BU)	No Tool Required	Not Required	Not Required	Not Required	Not Required

S38 Ignition Mode Switch (BTM)

Pin	Size	Color	Circuit	Function	Terminal Type ID	Option
1	0.35	BU/BK	5719	Ignition Mode Switch Start LED Signal	I	—
2	0.35	BN/BK	5720	Ignition Mode Switch Accessory LED Signal	I	—
3	0.35	BK/WH	1851	Signal Ground	I	—
4	0.35	BU/L-GN	5723	Ignition Mode Switch Mode Voltage	I	—
5	0.35	YE	6817	LED Backlight Dimming Control	I	—
6	—	—	—	Not Occupied	—	—
7	0.35	BK/GY	3559	Passive Start Switch 2 Low Reference	I	—
8	0.35	L-GN/BK	3558	Passive Start Switch Signal 2	I	—

S39 Ignition Switch (-BTM)

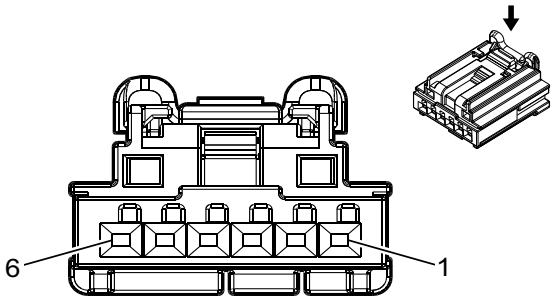

3960313

Connector Part Information

Harness Type: Instrument Panel
OEM Connector: 13920633
Service Connector: 19332786
Description: 6-Way F 0.64 Generation Y Series (BK)

Terminal Part Information

Terminal Type ID	Terminated Lead	Diagnostic Test Probe	Terminal Removal Tool	Service Terminal	Tray Name	Core Crimp	Insulation Crimp
I	Not Required	J-35616-64B (LT BU)	No Tool Required	Not Required	Not Required	Not Required	Not Required

S39 Ignition Switch (-BTM)

Pin	Size	Color	Circuit	Function	Terminal Type ID	Option
1	0.35	WH/BK	1073	Ignition Key Resistor Signal	I	—
2	0.5	WH/VT	1020	Off/Run/Crank Ignition Voltage	I	—
3	0.35	VT/YE	4	Accessory Ignition Voltage	I	—
4	0.35	RD/D-BU	540	Battery Positive Voltage	I	—
5	0.35	VT/BK	3	Run/Crank Ignition 1 Voltage	I	—
6	0.5	WH/VT	1020	Off/Run/Crank Ignition Voltage	I	—

S47D Seat Memory Switch - Driver (A45)

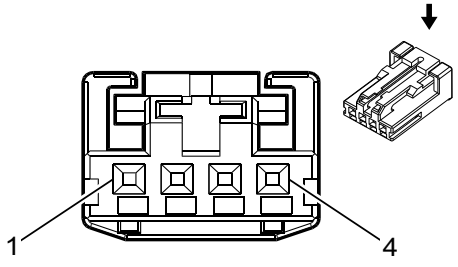

2717162

Connector Part Information

Harness Type: Driver Door Trim
OEM Connector: 13969166
Service Connector: Service by Harness - See Part Catalog
Description: 4-Way F 0.64 Micro-Quadlock Series (BK)

Terminal Part Information

Terminal Type ID	Terminated Lead	Diagnostic Test Probe	Terminal Removal Tool	Service Terminal	Tray Name	Core Crimp	Insulation Crimp
I	Not Required	J-35616-64B (LT BU)	No Tool Required	Not Required	Not Required	Not Required	Not Required

S47D Seat Memory Switch - Driver (A45)

Pin	Size	Color	Circuit	Function	Terminal Type ID	Option
1	0.35	YE	6817	LED Backlight Dimming Control	I	—
2	0.35	BK/D-BU	5978	Memory Switch Low Reference	I	—
3	0.35	WH	615	Memory Seat Switch Signal 1	I	—
4	0.35	BU/L-GN	614	Memory Seat Switch Set Signal	I	—

S64D Seat Adjuster Switch - Driver

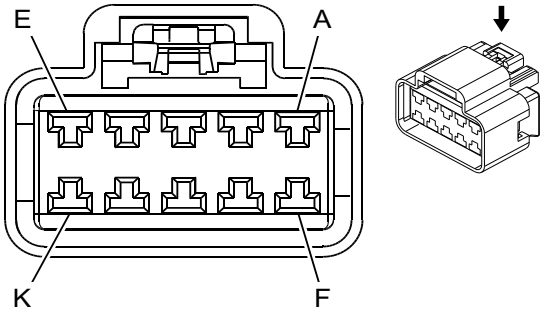

623046

Connector Part Information

Harness Type: Driver Seat
OEM Connector: 15326931
Service Connector: Service by Harness - See Part Catalog
Description: 10-Way F 280 GT Series (BK)

Terminal Part Information

Terminal Type ID	Terminated Lead	Diagnostic Test Probe	Terminal Removal Tool	Service Terminal	Tray Name	Core Crimp	Insulation Crimp
I	Not Required	J-35616-4A (PU)	No Tool Required	Not Required	Not Required	Not Required	Not Required

S64D Seat Adjuster Switch - Driver

Pin	Size	Color	Circuit	Function	Terminal Type ID	Option
A	0.5 1.5	L-GN/BN L-GN/BN	1518 286	Power Seat Front Vertical Up Switch Signal Driver Power Seat Front Vertical Motor Up Control	I I	A45 -A45
B	2.5	BK	1150	Ground	I	—
C	0.5 1.5	GY/L-GN GY/L-GN	1523 284	Power Seat Horizontal Rearward Switch Signal Driver Power Seat Horizontal Motor Rearward Control	I I	A45 -A45
D	0.5 1.5	YE/BN YE/L-BU	1522 285	Power Seat Horizontal Forward Switch Signal Driver Power Seat Horizontal Motor Forward Control	I I	A45 -A45
E	0.5 2.5	BK RD/YE	1150 5040	Ground Battery Positive Voltage	I I	A45 -A45
F	0.5 1.5	YE YE	1519 282	Power Seat Rear Vertical Up Switch Signal Driver Power Seat Rear Vertical Motor Up Control	I I	A45 -A45
G	0.5 1.5	L-GN/GY L-BU/YE	1270 277	Power Seat Recline Rearward Switch Signal Driver Power Seat Recline Motor Rearward Control	I I	A45 -A45
H	0.5 1.5	GY/BK L-GN/YE	1269 276	Power Seat Recline Forward Switch Signal Driver Power Seat Recline Motor Forward Control	I I	A45 -A45
J	0.5 1.5	YE/L-BU GY/L-BU	1521 283	Power Seat Rear Vertical Down Switch Signal Driver Power Seat Rear Vertical Motor Down Control	I I	A45 -A45
K	0.5 1.5	L-BU/VT L-BU/VT	1520 287	Power Seat Front Vertical Down Switch Signal Driver Power Seat Front Vertical Motor Down Control	I I	A45 -A45

S64P Seat Adjuster Switch - Passenger (A7K)

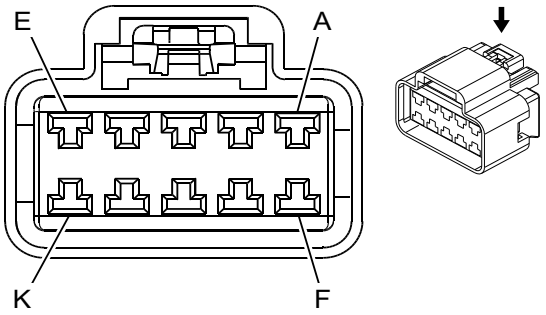

623046

Connector Part Information

Harness Type: Passenger Seat
OEM Connector: 15326931
Service Connector: Service by Harness - See Part Catalog
Description: 10-Way F 280 GT Series (BK)

Terminal Part Information

Terminal Type ID	Terminated Lead	Diagnostic Test Probe	Terminal Removal Tool	Service Terminal	Tray Name	Core Crimp	Insulation Crimp
I	Not Required	J-35616-4A (PU)	No Tool Required	Not Required	Not Required	Not Required	Not Required

S64P Seat Adjuster Switch - Passenger (A7K)

Pin	Size	Color	Circuit	Function	Terminal Type ID	Option
A	1.5	L-GN/L-BU	298	Passenger Power Seat Front Vertical Motor Down Control	I	—
B	2.5	BK	1250	Ground	I	—
C	1.5	YE/L-BU	290	Passenger Power Seat Horizontal Motor Rearward Control	I	—
D	1.5	YE/WH	296	Passenger Power Seat Horizontal Motor Forward Control	I	—
E	2.5	RD/BN	1440	Battery Positive Voltage	I	—
F	1.5	L-BU/WH	289	Passenger Power Seat Rear Vertical Motor Down Control	I	—
G	1.5	L-BU/BN	77	Passenger Power Seat Recline Motor Rearward Control	I	—
H	1.5	L-GN	76	Passenger Power Seat Recline Motor Forward Control	I	—
J	1.5	L-GN/WH	288	Passenger Power Seat Rear Vertical Motor Up Control	I	—
K	1.5	L-GN/VT	297	Passenger Power Seat Front Vertical Motor Up Control	I	—

S65D Seat Lumbar Support Switch - Driver (A2X)

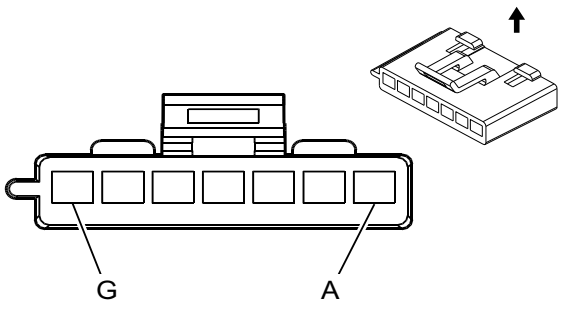

73146

Connector Part Information

Harness Type: Driver Seat
OEM Connector: 12052854
Service Connector: Service by Harness - See Part Catalog
Description: 7-Way F 280 Metri-Pack Series (BK)

Terminal Part Information

Terminal Type ID	Terminated Lead	Diagnostic Test Probe	Terminal Removal Tool	Service Terminal	Tray Name	Core Crimp	Insulation Crimp
I	Not Required	J-35616-4A (PU)	No Tool Required	Not Required	Not Required	Not Required	Not Required

S65D Seat Lumbar Support Switch - Driver (A2X)

Pin	Size	Color	Circuit	Function	Terminal Type ID	Option
A	—	—	—	Not Occupied	—	—
B	0.75	VT	610	Driver Power Seat Lumbar Motor Rearward Control	I	—
C	0.75	L-BU	611	Driver Power Seat Lumbar Motor Forward Control	I	—
D	—	—	—	Not Occupied	—	—
E	0.75	BK	1150	Ground	I	—
F	—	—	—	Not Occupied	—	—
G	0.75	RD/YE	8840	Battery Positive Voltage	I	—

S65P Seat Lumbar Support Switch - Passenger (A7K)

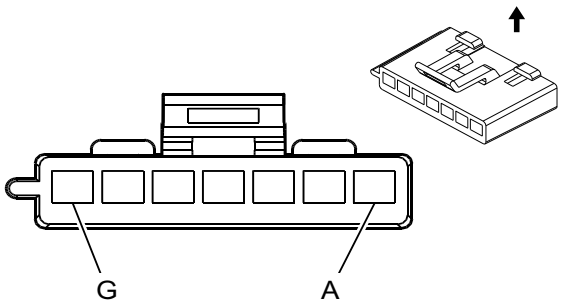

73146

Connector Part Information

Harness Type: Passenger Seat
OEM Connector: 12052854
Service Connector: Service by Harness - See Part Catalog
Description: 7-Way F 280 Metri-Pack Series (BK)

Terminal Part Information

Terminal Type ID	Terminated Lead	Diagnostic Test Probe	Terminal Removal Tool	Service Terminal	Tray Name	Core Crimp	Insulation Crimp
I	Not Required	J-35616-4A (PU)	No Tool Required	Not Required	Not Required	Not Required	Not Required

S65P Seat Lumbar Support Switch - Passenger (A7K)

Pin	Size	Color	Circuit	Function	Terminal Type ID	Option
A	—	—	—	Not Occupied	—	—

S65P Seat Lumbar Support Switch - Passenger (A7K) (cont'd)

Pin	Size	Color	Circuit	Function	Terminal Type ID	Option
B	0.75	VT	210	Passenger Power Seat Lumbar Motor Rearward Control	I	—
C	0.75	L-BU	211	Passenger Power Seat Lumbar Motor Forward Control	I	—
D	—	—	—	Not Occupied	—	—
E	0.75	BK	1250	Ground	I	—
F	—	—	—	Not Occupied	—	—
G	0.75	RD/YE	8840	Battery Positive Voltage	I	—

S76 Trailer Brake Control Switch

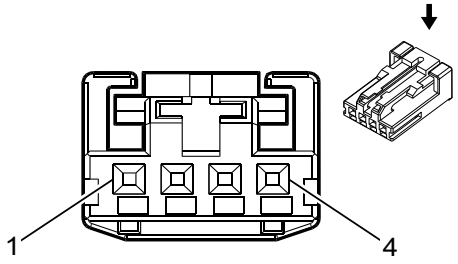

2717162

Connector Part Information

Harness Type: Instrument Panel
OEM Connector: 13969166
Service Connector: 13587297
Description: 4-Way F 0.64 Micro-Quadlock Series (BK)

Terminal Part Information

Terminal Type ID	Terminated Lead	Diagnostic Test Probe	Terminal Removal Tool	Service Terminal	Tray Name	Core Crimp	Insulation Crimp
I	Not Required	J-35616-64B (LT BU)	No Tool Required	Not Required	Not Required	Not Required	Not Required

S76 Trailer Brake Control Switch

Pin	Size	Color	Circuit	Function	Terminal Type ID	Option
1	0.35	RD/L-GN	5140	Battery Positive Voltage	I	—
2	0.35	L-GN/ D-BU	2733	Local Interconnect Network Bus 33	I	—
3	0.35	BK/WH	1851	Signal Ground	I	—
4	—	—	—	Not Occupied	—	—

S78 Turn Signal/Multifunction Switch

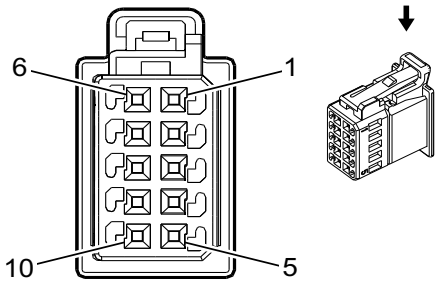

2830955

Connector Part Information

Harness Type: Instrument Panel
OEM Connector: 13650061
Service Connector: 19299776
Description: 10-Way F 0.64 Micro-Quadlock Series (BK)

Terminal Part Information

Terminal Type ID	Terminated Lead	Diagnostic Test Probe	Terminal Removal Tool	Service Terminal	Tray Name	Core Crimp	Insulation Crimp
I	13579993	J-35616-64B (LT BU)	J-38125-12A	144969-1	Lear 25	E	2

S78 Turn Signal/Multifunction Switch

Pin	Size	Color	Circuit	Function	Terminal Type ID	Option
1	0.5	WH/L-GN	663	Hazard Switch Left Turn Signal	I	—
2	0.5	VT/D-BU	664	Hazard Switch Right Turn Signal	I	—
3	0.5	BK/WH	1851	Signal Ground	I	—
4	0.5	WH/GY	3849	High Beam Auto On/Off Switch Signal	I	—
5	0.35	WH/BK	94	Windshield Washer Switch Signal	I	—
6	0.5	YE/BN	307	Headlamp Switch Flash To Pass Signal	I	—
7	0.5	WH	524	Headlamp Dimmer Switch High Beam Signal	I	—
8	0.5	BK/GY	6009	Windshield Wiper Switch Low Reference	I	—
9	0.5	GY	1715	Windshield Wiper Switch High Signal	I	—
10	0.5	YE/D-BU	1714	Windshield Wiper Switch Low Signal	I	—

S79LR Window Switch - Left Rear (AEQ)

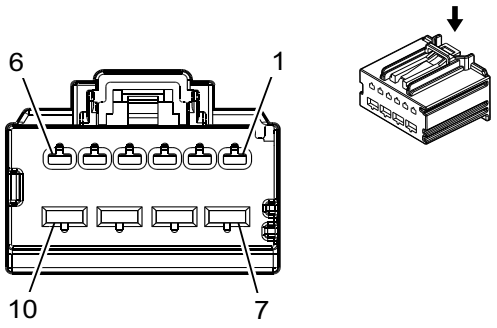

3791446

Connector Part Information

Harness Type: Left Rear Door
OEM Connector: 33175128
Service Connector: Service by Harness - See Part Catalog
Description: 10-Way F 1.5, 2.8 Series (BK)

Terminal Part Information

Terminal Type ID	Terminated Lead	Diagnostic Test Probe	Terminal Removal Tool	Service Terminal	Tray Name	Core Crimp	Insulation Crimp
I	Not Required	J-35616-2A (GY)	No Tool Required	Not Required	Not Required	Not Required	Not Required
II	Not Required	J-35616-4A (PU)	No Tool Required	Not Required	Not Required	Not Required	Not Required

S79LR Window Switch - Left Rear (AEQ)

Pin	Size	Color	Circuit	Function	Terminal Type ID	Option
1	0.5	L-GN/GY	6135	Local Interconnect Network Serial Data Bus 4	I	—
2	0.5	GY	747	Left Rear Door Ajar Switch Signal	I	—
3	0.75	BK	1150	Ground	I	—
4 - 6	—	—	—	Not Occupied	—	—
7	2.5	BK	1150	Ground	II	—
8	2.5	RD/D-BU	1842	Battery Positive Voltage	II	—
9	2	BU/VT	668	Power Window Motor Left Rear Up Control	II	—
10	2	YE/D-BU	669	Power Window Motor Left Rear Down Control	II	—

S79P Window Switch - Passenger (A45+AEF)

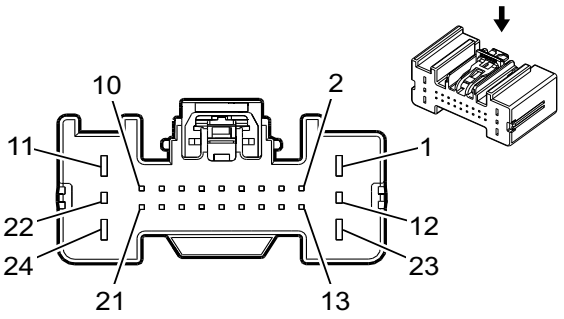

2871905

Connector Part Information

Harness Type: Passenger Door Trim
OEM Connector: 13706537
Service Connector: Service by Harness - See Part Catalog
Description: 24-Way F 0.64, 1.5, 2.8 Series (BK)

Terminal Part Information

Terminal Type ID	Terminated Lead	Diagnostic Test Probe	Terminal Removal Tool	Service Terminal	Tray Name	Core Crimp	Insulation Crimp
I	Not Required	J-35616-2A (GY)	No Tool Required	Not Required	Not Required	Not Required	Not Required
II	Not Required	J-35616-35 (VT)	No Tool Required	Not Required	Not Required	Not Required	Not Required
III	Not Required	J-35616-4A (PU)	No Tool Required	Not Required	Not Required	Not Required	Not Required
IV	Not Required	J-35616-64B (LT BU)	No Tool Required	Not Required	Not Required	Not Required	Not Required

S79P Window Switch - Passenger (A45+AEF)

Pin	Size	Color	Circuit	Function	Terminal Type ID	Option
1	0.5	YE/WH	5004	Right Folding Mirror Motor Extend Control	II	—
2	—	—	—	Not Occupied	—	—
3	0.35	L-GN/BK	3396	Passenger Mirror Motor Right (+) Left (-) Control	IV	—
4	0.35	YE/VT	3397	Passenger Mirror Motor Up (+) Down (-) Control	IV	—
5	0.35	WH	3398	Passenger Mirror Motor Common Control	IV	—
6	0.35	YE/RD	3399	Passenger Mirror Position Sensor 5V Reference	IV	—
7	0.35	BU/YE	3401	Passenger Mirror Position Sensor Up (+) Down (-) Signal	IV	—
8	0.35	BK/L-GN	3400	Passenger Mirror Position Sensor Low Reference	IV	—
9	0.35	VT/WH	3403	Passenger Mirror Position Sensor Left (-) Right (+) Signal	IV	—
10	0.35	YE	6817	LED Backlight Dimming Control	IV	—
11	0.5	BU/GY	5023	Right Folding Mirror Motor Retract Control	II	—
12	0.5	BU/GY	3414	Passenger Mirror Motor Fold In Control	I	—
13	—	—	—	Not Occupied	—	—
14	0.35	BN/YE	3385	Power Window Switch Passenger Down Signal	IV	—

S79P Window Switch - Passenger (A45+AEF) (cont'd)

Pin	Size	Color	Circuit	Function	Terminal Type ID	Option
15	0.35	VT/GY	3386	Power Window Switch Passenger Express Signal	IV	—
16	0.35	YE/BK	3384	Power Window Switch Passenger Up Signal	IV	—
17 - 20	—	—	—	Not Occupied	—	—
21	0.35	L-GN/WH	7530	Local Interconnect Network Serial Data Bus 8	IV	—
22	0.5	YE/WH	3413	Passenger Mirror Motor Fold Out Control	I	—
23	2.5	RD/WH	1340	Battery Positive Voltage	III	—
24	2.5	BK	1250	Ground	III	—

S79P Window Switch - Passenger (AED)

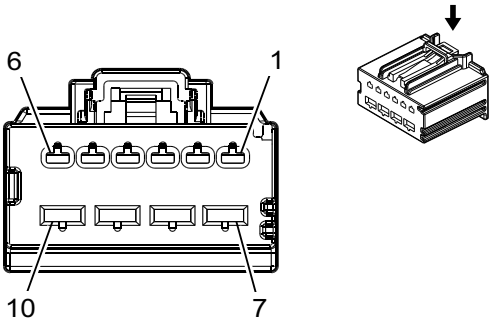

3791446

Connector Part Information

Harness Type: Passenger Door Trim
OEM Connector: 33175128
Service Connector: Service by Harness - See Part Catalog
Description: 10-Way F 1.5, 2.8 Series (BK)

Terminal Part Information

Terminal Type ID	Terminated Lead	Diagnostic Test Probe	Terminal Removal Tool	Service Terminal	Tray Name	Core Crimp	Insulation Crimp
I	Not Required	J-35616-2A (GY)	No Tool Required	Not Required	Not Required	Not Required	Not Required
II	Not Required	J-35616-4A (PU)	No Tool Required	Not Required	Not Required	Not Required	Not Required

S79P Window Switch - Passenger (AED)

Pin	Size	Color	Circuit	Function	Terminal Type ID	Option
1	0.35	L-GN/YE	6134	Local Interconnect Network Serial Data Bus 3	I	—
2	0.35	GY	746	Right Front Door Ajar Switch Signal	I	—
3 - 6	—	—	—	Not Occupied	—	—
7	2.5	BK	1250	Ground	II	—
8	2.5	RD/WH	1340	Battery Positive Voltage	II	—
9	2.5	L-GN/GY	3387	Power Window Motor Passenger Up Control	II	—

S79P Window Switch - Passenger (AED) (cont'd)

Pin	Size	Color	Circuit	Function	Terminal Type ID	Option
10	2.5	YE/D-BU	3388	Power Window Motor Passenger Down Control	II	—

S79RR Window Switch - Right Rear (AEQ)

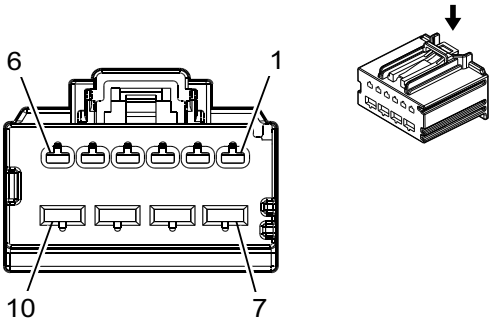

3791446

Connector Part Information

Harness Type: Right Rear Door
OEM Connector: 33175128
Service Connector: Service by Harness - See Part Catalog
Description: 10-Way F 1.5, 2.8 Series (BK)

Terminal Part Information

Terminal Type ID	Terminated Lead	Diagnostic Test Probe	Terminal Removal Tool	Service Terminal	Tray Name	Core Crimp	Insulation Crimp
I	Not Required	J-35616-2A (GY)	No Tool Required	Not Required	Not Required	Not Required	Not Required
II	Not Required	J-35616-4A (PU)	No Tool Required	Not Required	Not Required	Not Required	Not Required

S79RR Window Switch - Right Rear (AEQ)

Pin	Size	Color	Circuit	Function	Terminal Type ID	Option
1	0.5	L-GN/GY	6135	Local Interconnect Network Serial Data Bus 4	I	—
2	0.5	GY	748	Right Rear Door Ajar Switch Signal	I	—
3 - 6	—	—	—	Not Occupied	—	—
7	2.5	BK	1250	Ground	II	—
8	2.5	RD/WH	1340	Battery Positive Voltage	II	—
9	2	BU/GY	670	Power Window Motor Right Rear Up Control	II	—
10	2	L-GN/BK	671	Power Window Motor Right Rear Down Control	II	—

S86 Vehicle Stability Control Switch

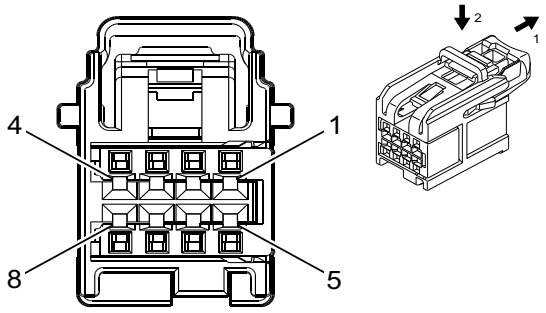

4935776

Connector Part Information

Harness Type: Instrument Panel
OEM Connector: 15526972
Service Connector: 19370429
Description: 8-Way F 0.64 OCS Series (BK)

Terminal Part Information

Terminal Type ID	Terminated Lead	Diagnostic Test Probe	Terminal Removal Tool	Service Terminal	Tray Name	Core Crimp	Insulation Crimp
I	Not Required	J-35616-64B (LT BU)	No Tool Required	Not Required	Not Required	Not Required	Not Required

S86 Vehicle Stability Control Switch

Pin	Size	Color	Circuit	Function	Terminal Type ID	Option
1	0.35	BU/VT	1788	Traction Control Switch Signal 1	I	—
2	0.35	YE	6817	LED Backlight Dimming Control	I	—
3	0.35	BN	7291	Major Endgate Release Switch Signal Interior	I	—
4 - 5	—	—	—	Not Occupied	—	—
6	0.5	BK	1050	Ground	I	—
7	0.35	L-GN/WH	111	Hazard Switch Signal	I	—
8	0.35	GY	1198	Endgate Release Switch Analog Signal Interior	I	—

S91 Park Brake Control Switch

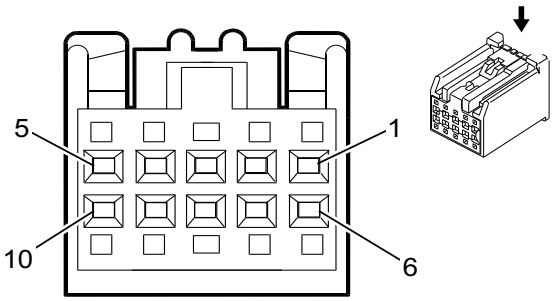

2180211

Connector Part Information

Harness Type: Instrument Panel
OEM Connector: 13815336
Service Connector: 13577390
Description: 10-Way F 0.64 Kaizen Series (BK)

Terminal Part Information

Terminal Type ID	Terminated Lead	Diagnostic Test Probe	Terminal Removal Tool	Service Terminal	Tray Name	Core Crimp	Insulation Crimp
I	19300631	J-35616-64B (LT BU)	J-38125-215A	Not Available	Not Available	Not Available	Not Available

S91 Park Brake Control Switch

Pin	Size	Color	Circuit	Function	Terminal Type ID	Option
1	0.35	BU/VT	1134	Park Brake Switch Signal	I	—
2	0.35	BU/BK	2416	Park Brake Switch Monitor Signal 1	I	—
3	0.35	GY/RD	2414	Park Brake Switch Voltage Reference 1	I	—
4	0.35	YE/RD	2415	Park Brake Switch Voltage Reference 2	I	—
5	0.35	BN	2417	Park Brake Switch Monitor Signal 2	I	—
6	0.35	YE	2418	Park Brake Switch Test Signal	I	—
7	—	—	—	Not Occupied	—	—
8	0.35	YE	6817	LED Backlight Dimming Control	I	—
9	—	—	—	Not Occupied	—	—
10	0.35	BK/WH	1851	Signal Ground	I	—

S126 Drive Mode Select Switch (URC)

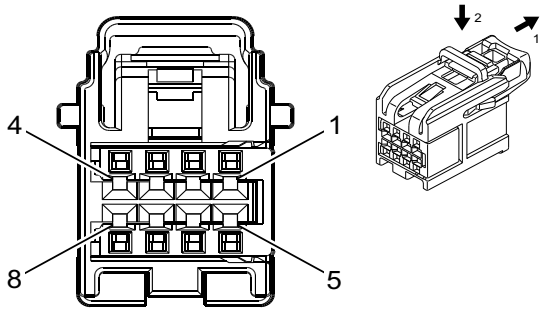

4232228

Connector Part Information

Harness Type: Instrument Panel
OEM Connector: 15526973
Service Connector: 19353873
Description: 8-Way F 0.64 OCS Series (GY)

Terminal Part Information

Terminal Type ID	Terminated Lead	Diagnostic Test Probe	Terminal Removal Tool	Service Terminal	Tray Name	Core Crimp	Insulation Crimp
I	Not Required	J-35616-64B (LT BU)	No Tool Required	Not Required	Not Required	Not Required	Not Required

S126 Drive Mode Select Switch (URC)

Pin	Size	Color	Circuit	Function	Terminal Type ID	Option
1	0.35	WH/BN	2203	Enhanced Driver Mode 2 Switch Signal	I	—
2	0.35	GY	4109	Driver Mode Switch 5V Reference	I	—
3	0.35	BK/GY	2204	Enhanced Driver Mode 1 Switch Low Reference	I	—
4	0.35	YE	6817	LED Backlight Dimming Control	I	—
5	0.35	BK	1850	Ground	I	—
6	0.35	VT/BN	300	Run Ignition 3 Voltage	I	—
7	0.35	BN	1560	Neutral Indicator Control	I	—
8	—	—	—	Not Occupied	—	—

S146 Window/Outside Rearview Mirror Switch - Driver

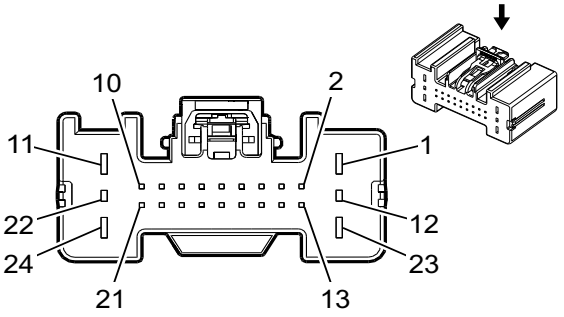

2871905

Connector Part Information

Harness Type: Driver Door Trim
OEM Connector: 13706537
Service Connector: Service by Harness - See Part Catalog
Description: 24-Way F 0.64, 1.5, 2.8 Series (BK)

Terminal Part Information

Terminal Type ID	Terminated Lead	Diagnostic Test Probe	Terminal Removal Tool	Service Terminal	Tray Name	Core Crimp	Insulation Crimp
I	Not Required	J-35616-2A (GY)	No Tool Required	Not Required	Not Required	Not Required	Not Required
II	Not Required	J-35616-35 (VT)	No Tool Required	Not Required	Not Required	Not Required	Not Required
III	Not Required	J-35616-64B (LT BU)	No Tool Required	Not Required	Not Required	Not Required	Not Required

S146 Window/Outside Rearview Mirror Switch - Driver

Pin	Size	Color	Circuit	Function	Terminal Type ID	Option
1	0.5	GY	3380	Power Window Switch Driver Down Signal	II	—
2	0.35	YE/VT	3397	Passenger Mirror Motor Up (+) Down (-) Control	III	—
3	0.35	WH	3398	Passenger Mirror Motor Common Control	III	—
4	0.5	L-GN/WH	3379	Power Window Switch Driver Up Signal	III	—
5	0.35	L-GN	3381	Power Window Switch Driver Express Signal	III	—
6	0.35	BN/BK	3389	Driver Mirror Motor Right (+) Left (-) Control	III	—
7	0.35	VT/D-BU	3390	Driver Mirror Motor Up (+) Down (-) Control	III	—
8	0.35	YE/BN	3391	Driver Mirror Motor Common Control	III	—
9	0.35	L-GN/YE	6134	Local Interconnect Network Serial Data Bus 3	III	—
10	—	—	—	Not Occupied	—	—
11	0.5	L-GN/WH	3379	Power Window Switch Driver Up Signal	II	—
12	0.35 0.35	WH/L-GN WH/BN	3412 3410	Driver Mirror Motor Fold In Control Mirror Motor Fold In Control	I I	AXG DWI
13	—	—	—	Not Occupied	—	—
14	0.35	WH/VT	3270	Driver Door Lock Motor Status Signal	III	—
15	0.35	BU/VT	1124	Door Lock Key Switch Unlock Signal	III	—
16	0.35	WH/YE	3395	Driver Mirror Position Sensor Left (-) Right (+) Signal	III	—

S146 Window/Outside Rearview Mirror Switch - Driver (cont'd)

Pin	Size	Color	Circuit	Function	Terminal Type ID	Option
17	0.35	VT/RD	3392	Driver Mirror Position Sensor 5V Reference	III	—
18	0.35	GY/BN	3394	Driver Mirror Position Sensor Up (+) Down (-) Signal	III	—
19	0.35	BK/BN	3393	Driver Mirror Position Sensor Low Reference	III	—
20	—	—	—	Not Occupied	—	—
21	0.5	L-GN/WH	7530	Local Interconnect Network Serial Data Bus 8	III	—
22	0.35	GY/WH	3411	Driver Mirror Motor Fold Out Control	I	AXG
	0.35	VT/YE	3409	Mirror Motor Fold Out Control	I	DWI
23	0.35	RD/VT	1940	Battery Positive Voltage	II	—
24	0.5	BK	1150	Ground	II	—

S157 Pickup Box Endgate Unlatch Switch ((QK1/QT2)+QT5)

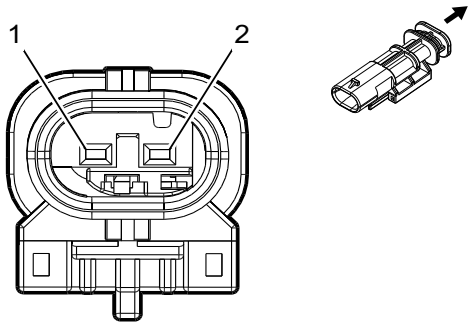

4994411

Connector Part Information

Harness Type: Endgate
OEM Connector: 35068608
Service Connector: Service by Harness - See Part Catalog
Description: 2-Way M 1.2 MCON Series (GY)

Terminal Part Information

Terminal Type ID	Terminated Lead	Diagnostic Test Probe	Terminal Removal Tool	Service Terminal	Tray Name	Core Crimp	Insulation Crimp
I	Not Required	J-35616-17 (LT GN)	No Tool Required	Not Required	Not Required	Not Required	Not Required

S157 Pickup Box Endgate Unlatch Switch ((QK1/QT2)+QT5)

Pin	Size	Color	Circuit	Function	Terminal Type ID	Option
1	0.5	GY	7292	Major Endgate Release Switch Signal Exterior	I	—
2	0.75	BK	1450	Ground	I	—

S157 Pickup Box Endgate Unlatch Switch (QK1/QT2)+QT5

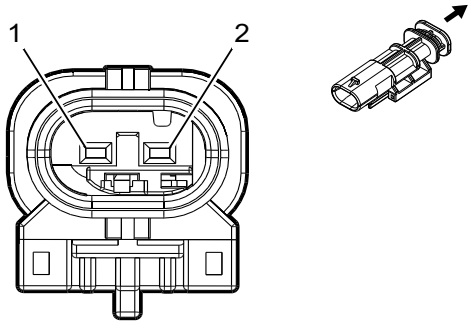

4994411

Connector Part Information

Harness Type: Endgate
OEM Connector: 35068608
Service Connector: Service by Harness - See Part Catalog
Description: 2-Way M 1.2 MCON Series (GY)

Terminal Part Information

Terminal Type ID	Terminated Lead	Diagnostic Test Probe	Terminal Removal Tool	Service Terminal	Tray Name	Core Crimp	Insulation Crimp
I	Not Required	J-35616-17 (LT GN)	No Tool Required	Not Required	Not Required	Not Required	Not Required

S157 Pickup Box Endgate Unlatch Switch (QK1/QT2)+QT5

Pin	Size	Color	Circuit	Function	Terminal Type ID	Option
1	0.5	GY	7292	Major Endgate Release Switch Signal Exterior	I	—
2	0.75	BK	1450	Ground	I	—

S159E Pickup Box Endgate Control Switch - Exterior (Q2K/QT5)

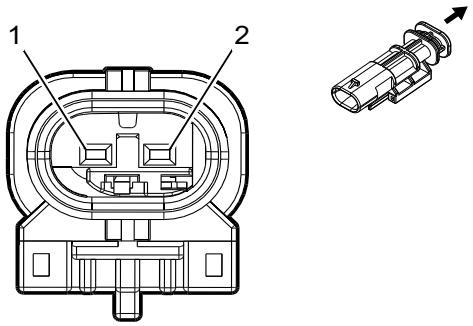

4994410

Connector Part Information

Harness Type: Endgate
OEM Connector: 35235497
Service Connector: Service by Harness - See Part Catalog
Description: 2-Way M 1.2 MCON Series (GY)

Terminal Part Information

Terminal Type ID	Terminated Lead	Diagnostic Test Probe	Terminal Removal Tool	Service Terminal	Tray Name	Core Crimp	Insulation Crimp
I	Not Required	J-35616-17 (LT GN)	No Tool Required	Not Required	Not Required	Not Required	Not Required

S159E Pickup Box Endgate Control Switch - Exterior (Q2K/QT5)

Pin	Size	Color	Circuit	Function	Terminal Type ID	Option
1	0.35	YE	7294	Minor Endgate Release Switch Discrete Signal Exterior	I	—
2	0.75	BK	1450	Ground	I	—

S159E Pickup Box Endgate Control Switch - Exterior (QT6)

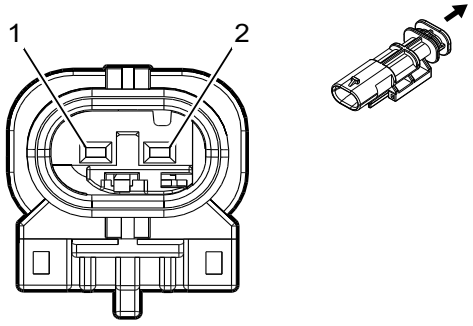

4994411

Connector Part Information

Harness Type: Endgate
OEM Connector: 35068608
Service Connector: Service by Harness - See Part Catalog
Description: 2-Way M 1.2 MCON Series (GY)

Terminal Part Information

Terminal Type ID	Terminated Lead	Diagnostic Test Probe	Terminal Removal Tool	Service Terminal	Tray Name	Core Crimp	Insulation Crimp
I	Not Required	J-35616-17 (LT GN)	No Tool Required	Not Required	Not Required	Not Required	Not Required

S159E Pickup Box Endgate Control Switch - Exterior (QT6)

Pin	Size	Color	Circuit	Function	Terminal Type ID	Option
1	0.35	YE	1144	Endgate Release Switch Discrete Signal Exterior	I	—
2	0.75	BK	1450	Ground	I	—

S160 Emergency Vehicle Siren Switch (L8T)

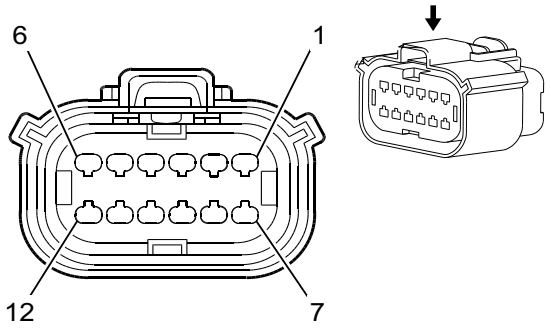

1825165

Connector Part Information

Harness Type: Engine
OEM Connector: 13653762
Service Connector: 19352907
Description: 12-Way F 1.5 Series, Sealed (BK)

Terminal Part Information

Terminal Type ID	Terminated Lead	Diagnostic Test Probe	Terminal Removal Tool	Service Terminal	Tray Name	Core Crimp	Insulation Crimp
I	13578813	J-35616-14 (GN)	J-38125-217	Not Available	Not Available	Not Available	Not Available

S160 Emergency Vehicle Siren Switch (L8T)

Pin	Size	Color	Circuit	Function	Terminal Type ID	Option
1	0.75	BN/WH	4901	Direct Fuel Injector (DFI) High Voltage Supply Cylinder 1	I	—
2	0.75	L-GN/BK	4903	Direct Fuel Injector (DFI) High Voltage Supply Cylinder 3	I	—
3	0.75	L-GN/WH	4905	Direct Fuel Injector (DFI) High Voltage Supply Cylinder 5	I	—
4	0.75	WH/YE	4907	Direct Fuel Injector (DFI) High Voltage Supply Cylinder 7	I	—
5	0.75	BN	4801	Direct Fuel Injector (DFI) High Voltage Control Cylinder 1	I	—
6	—	—	—	Not Occupied	—	—
7	0.75	L-GN	4803	Direct Fuel Injector (DFI) High Voltage Control Cylinder 3	I	—
8	0.75	WH/L-GN	4805	Direct Fuel Injector (DFI) High Voltage Control Cylinder 5	I	—
9	0.75	YE/GY	4807	Direct Fuel Injector (DFI) High Voltage Control Cylinder 7	I	—
10	0.5	WH/RD	480	Engine Control Sensors 5 Volt Reference (2)	I	—
11	0.5	BU/WH	2918	Fuel Rail Pressure Sensor Signal	I	—
12	0.5	BK/YE	548	Engine Control Sensors Low Reference (1)	I	—

S171L Instrument Panel Center Accessory Function Switch - Left

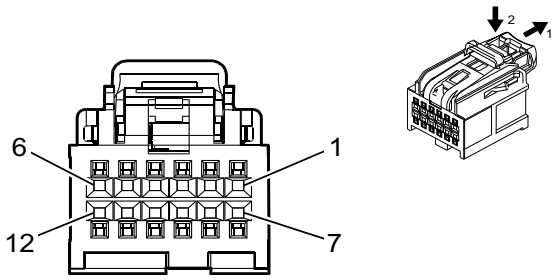

4975223

Connector Part Information

Harness Type: Instrument Panel
OEM Connector: 35016616
Service Connector: 13519750
Description: 12-Way F 0.64 OCS Series (BK)

Terminal Part Information

Terminal Type ID	Terminated Lead	Diagnostic Test Probe	Terminal Removal Tool	Service Terminal	Tray Name	Core Crimp	Insulation Crimp
I	19300660	J-35616-64B (LT BU)	J-38125-215A	Not Available	Not Available	Not Available	Not Available
II	19300660	J-35616-64B (LT BU)	Not Available	Not Available	Not Available	Not Available	Not Available

S171L Instrument Panel Center Accessory Function Switch - Left

Pin	Size	Color	Circuit	Function	Terminal Type ID	Option
1	0.35	GY/GN	2555	Rear Park Assist Disable Signal	II	—
2	0.35	YE	6817	LED Backlight Dimming Control	II	—
3	0.5	BU/WH	3119	Roof Rail Air Bag Defeat Switch Signal	II	—
4	0.35	GY/WH	3153	Lane Departure Warning Disable Switch Signal	II	—
5	0.35	WH	3152	Lane Departure Warning Indicator Control	II	—
6	0.35 0.35	BU/YE BU/YE	6844 7176	ABS/TCS Hill Descent Control Switch Signal All Windows Open Switch Signal	II II	— —
7	0.5	WH	6816	Indicator Dimming Control	II	—
8	0.35	GN/BN	5852	Rear Park Assist LED Disable Signal	II	—
9	0.5	BK	1050	Ground	II	—
10	0.5	BN/WH	3895	Roof Rail Air Bag Defeat Switch Low Reference	II	—
11	0.5	GN/YE	2081	Exhaust Brake Switch Control	I	—
12	0.35	GN/WH	3438	Exhaust Brake Switch Signal	I	—

S171R Instrument Panel Center Accessory Function Switch - Right

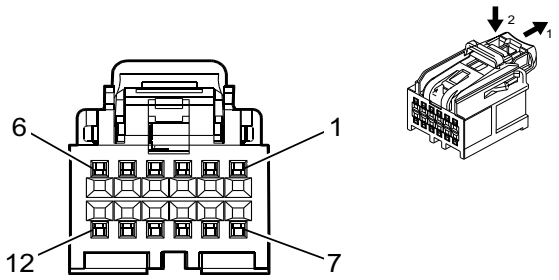

4997362

Connector Part Information

Harness Type: Instrument Panel
OEM Connector: 35016613
Service Connector: 13519752
Description: 12-Way F 0.64 OCS Series (BN)

Terminal Part Information

Terminal Type ID	Terminated Lead	Diagnostic Test Probe	Terminal Removal Tool	Service Terminal	Tray Name	Core Crimp	Insulation Crimp
I	19300660	J-35616-64B (LT BU)	J-38125-215A	Not Available	Not Available	Not Available	Not Available
II	19300660	J-35616-64B (LT BU)	Not Available	Not Available	Not Available	Not Available	Not Available

S171R Instrument Panel Center Accessory Function Switch - Right

Pin	Size	Color	Circuit	Function	Terminal Type ID	Option
1	0.35	GY/WH	4630	AC Power Outlet Switch Signal	II	—
	0.35	GY/WH	7176	All Windows Open Switch Signal	II	—
2	0.35	YE	6817	LED Backlight Dimming Control	II	—
3	0.35	BU/YE	6844	ABS/TCS Hill Descent Control Switch Signal	II	—
	0.35	BU/YE	7176	All Windows Open Switch Signal	II	—
4	0.35	VT/BK	1639	Run/Crank Ignition 1 Voltage	I	—
5	0.35	BN/L-GN	4311	Power Take Off Enable In Cab Switch Normally Closed Signal	I	—
6	—	—	—	Not Occupied	—	—
7	0.35	L-GN/WH	488	Power Take Off Control Switch	I	—
8	—	—	—	Not Occupied	—	—
9	0.5	BK	1050	Ground	II	—
10	0.35	WH	6816	Indicator Dimming Control	II	—
11	0.35	YE	7755	AC Power Outlet Status Indicator Control	II	—
12	0.35	BU/GY	553	Shift Select Switch Performance Signal	I	—

S172 Auxiliary Multifunction Switch (9L7)

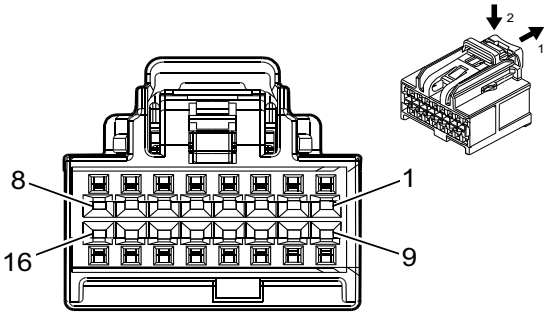

4873243

Connector Part Information

Harness Type: Auxiliary Fuse Block
OEM Connector: 35016343
Service Connector: Service by Harness - See Part Catalog
Description: 16-Way F 0.64 OCS Series (BK)

Terminal Part Information

Terminal Type ID	Terminated Lead	Diagnostic Test Probe	Terminal Removal Tool	Service Terminal	Tray Name	Core Crimp	Insulation Crimp
I	Not Required	J-35616-64B (LT BU)	No Tool Required	Not Required	Not Required	Not Required	Not Required

S172 Auxiliary Multifunction Switch (9L7)

Pin	Size	Color	Circuit	Function	Terminal Type ID	Option
1	—	—	—	Not Occupied	—	—
2	0.35	YE	6817	LED Backlight Dimming Control	I	—
3	0.35	WH	6816	Indicator Dimming Control	I	—
4 - 5	—	—	—	Not Occupied	—	—
6	0.35	BK	961	Auxiliary 1 Switch Signal	I	—
7	0.35	BK	962	Auxiliary 2 Switch Signal	I	—
8	0.35	BK	963	Auxiliary 3 Switch Signal	I	—
9	0.35 0.35	WH/VT BK	6821 964	Surveillance Switch Signal Auxiliary 4 Switch Signal	I I	9L7 9L7
10	0.5	WH/BK	5990	Emergency Lamp Switch Signal	I	—
11	—	—	—	Not Occupied	—	—
12	0.75	BK	1050	Ground	I	—
13 - 16	—	—	—	Not Occupied	—	—

T1 Accessory DC/AC Power Inverter Module X1 (KI4/KI5)

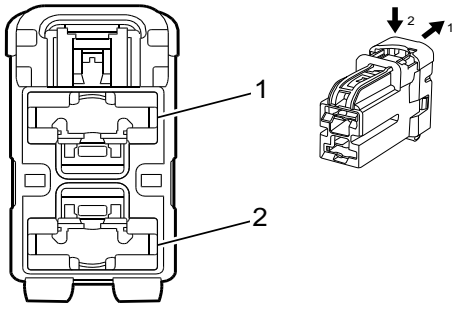

2453116

Connector Part Information

Harness Type: Body
OEM Connector: 13581928
Service Connector: -
Description: 2-Way F 9.5 Series (BK)

Terminal Part Information

Terminal Type ID	Terminated Lead	Diagnostic Test Probe	Terminal Removal Tool	Service Terminal	Tray Name	Core Crimp	Insulation Crimp
I	Not Required	J-35616-22 (RD)	No Tool Required	Not Required	Not Required	Not Required	Not Required

T1 Accessory DC/AC Power Inverter Module X1 (KI4/KI5)

Pin	Size	Color	Circuit	Function	Terminal Type ID	Option
1	5	BN/BK	4629	DC/AC Inverter Control	I	—
2	5	BK	1150	Ground	I	—

T1 Accessory DC/AC Power Inverter Module X2 (KI4/KI5)

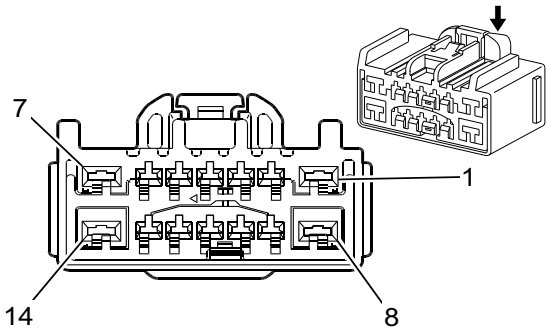

1540775

Connector Part Information

Harness Type: Power Inverter Module Jumper
OEM Connector: 33356826
Service Connector: Service by Harness - See Part Catalog
Description: 14-Way F 1.5, 2.8 Series (BU)

Terminal Part Information

Terminal Type ID	Terminated Lead	Diagnostic Test Probe	Terminal Removal Tool	Service Terminal	Tray Name	Core Crimp	Insulation Crimp
I	Not Required	J-35616-2A (GY)	No Tool Required	Not Required	Not Required	Not Required	Not Required
II	Not Required	J-35616-4A (PU)	No Tool Required	Not Required	Not Required	Not Required	Not Required

T1 Accessory DC/AC Power Inverter Module X2 (KI4/KI5)

Pin	Size	Color	Circuit	Function	Terminal Type ID	Option
1	0.75	BK	5683	120 V AC Phase A	II	—
2	—	—	—	Not Occupied	—	—
3	0.35	VT/YE	5985	Accessory Wakeup Serial Data	I	—
4	0.35	WH/GN	4628	DC/AC Inverter Relay Control	I	—
5	0.35	BU/BN	6807	DC To AC Inverter Control	I	—
6	—	—	—	Not Occupied	—	—
7	0.75	BK/WH	2264	120 VAC Phase A 2	II	—
8	0.75	RD	5684	120 V AC Phase B	II	—
9	0.35	Bare	514	Low Reference	I	—
10	0.35	GN	5060	Low Speed GMLAN Serial Data	I	—
11	—	—	—	Not Occupied	—	—
12	0.75	GN/BN	2266	DC To AC Inverter Control 2	I	—
13	0.35	Bare	2257	Drain Wire	I	—
14	0.75	RD/WH	2265	120 VAC Phase B 2	II	—

T1 Accessory DC/AC Power Inverter Module X2 (KI5)

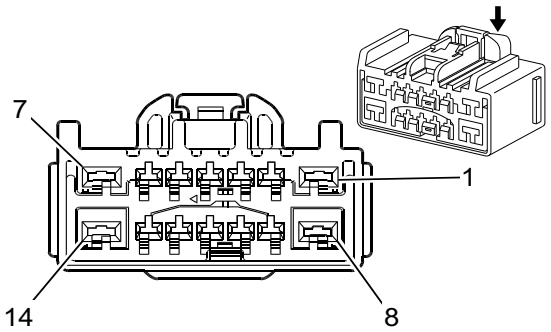

1540775

Connector Part Information

Harness Type: Power Inverter Module Jumper
OEM Connector: 33356826
Service Connector: Service by Harness - See Part Catalog
Description: 14-Way F 1.5, 2.8 Series (BU)

Terminal Part Information

Terminal Type ID	Terminated Lead	Diagnostic Test Probe	Terminal Removal Tool	Service Terminal	Tray Name	Core Crimp	Insulation Crimp
I	Not Required	J-35616-2A (GY)	No Tool Required	Not Required	Not Required	Not Required	Not Required
II	Not Required	J-35616-4A (PU)	No Tool Required	Not Required	Not Required	Not Required	Not Required

T1 Accessory DC/AC Power Inverter Module X2 (KI5)

Pin	Size	Color	Circuit	Function	Terminal Type ID	Option
1	0.75	BK	5683	120 V AC Phase A	II	—
2	—	—	—	Not Occupied	—	—
3	0.35	VT/YE	5985	Accessory Wakeup Serial Data	I	—
4	0.35	WH/L-GN	4628	DC/AC Inverter Relay Control	I	—
5	0.35	BU/BN	6807	DC To AC Inverter Control	I	—
6	—	—	—	Not Occupied	—	—
7	0.75	BK/WH	2264	120 VAC Phase A 2	II	—
8	0.75	RD	5684	120 V AC Phase B	II	—
9	0.35	Bare	514	Low Reference	I	—
10	0.35	L-GN	5060	Low Speed GMLAN Serial Data	I	—
11	—	—	—	Not Occupied	—	—
12	0.75	L-GN/BN	2266	DC To AC Inverter Control 2	I	—
13	0.35	Bare	2257	Drain Wire	I	—
14	0.75	RD/WH	2265	120 VAC Phase B 2	II	—

T3 Audio Amplifier X1 (UQA)

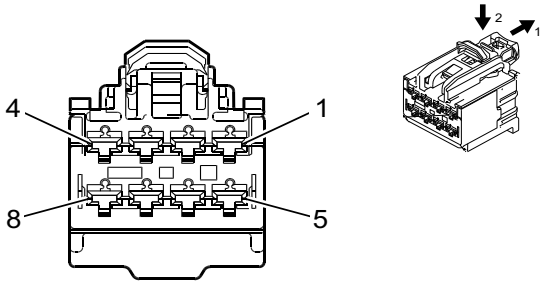

4875738

Connector Part Information

Harness Type: Body
OEM Connector: 33223792
Service Connector: 19369366
Description: 8-Way F 2.8 OCS Series (BK)

Terminal Part Information

Terminal Type ID	Terminated Lead	Diagnostic Test Probe	Terminal Removal Tool	Service Terminal	Tray Name	Core Crimp	Insulation Crimp
I	Not Required	J-35616-4A (PU)	No Tool Required	Not Required	Not Required	Not Required	Not Required

T3 Audio Amplifier X1 (UQA)

Pin	Size	Color	Circuit	Function	Terminal Type ID	Option
1	2.5	BU/GY	346	Left/Rear Subwoofer Speaker Control (+)	I	—
2	0.75	YE	200	Right Front Speaker Control (+) 1	I	—
3	0.75	BU	201	Left Front Speaker Control (+) 1	I	—
4	2.5	RD/YE	3740	Battery Positive Voltage	I	—
5	2.5	L-GN/BK	1794	Left/Rear Subwoofer Speaker (-) Low Reference	I	—
6	0.75	YE/BK	117	Right Front Speaker Signal (-) 1	I	—
7	0.75	BN/D-BU	118	Left Front Speaker Signal (-) 1	I	—
8	2.5	BK/WH	2751	Signal Ground	I	—

T3 Audio Amplifier X2 (UQA)

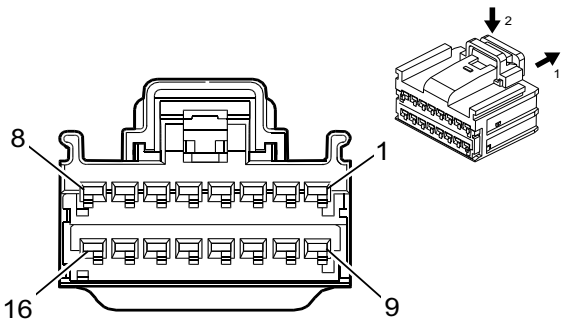

4332214

Connector Part Information

Harness Type: Body
OEM Connector: 15512506
Service Connector: 13591061
Description: 16-Way F 1.5 OCS Series (BK)

Terminal Part Information

Terminal Type ID	Terminated Lead	Diagnostic Test Probe	Terminal Removal Tool	Service Terminal	Tray Name	Core Crimp	Insulation Crimp
I	19301767	J-35616-2A (GY)	J-38125-215A	Not Available	Not Available	Not Available	Not Available

T3 Audio Amplifier X2 (UQA)

Pin	Size	Color	Circuit	Function	Terminal Type ID	Option
1	—	—	—	Not Occupied	—	—

T3 Audio Amplifier X2 (UQA) (cont'd)

Pin	Size	Color	Circuit	Function	Terminal Type ID	Option
2	0.75	BN/BK	1953	Right Front Midrange Speaker (-) Low Reference	I	—
3	0.75	BU/VT	1857	Left Front Midrange Speaker Control (+)	I	—
4	0.5	WH	46	Right Rear Speaker Control (+)	I	—
5	0.5	L-GN	199	Left Rear Speaker Control (+)	I	—
6 - 9	—	—	—	Not Occupied	—	—
10	0.75	WH/YE	1853	Right Front Midrange Speaker Control (+)	I	—
11	0.75	BU/BN	1957	Left Front Midrange Speaker (-) Low Reference	I	—
12	0.5	BU/BK	115	Right Rear Speaker Signal (-)	I	—
13	0.5	L-GN/BK	116	Left Rear Speaker Signal (-)	I	—
14 - 16	—	—	—	Not Occupied	—	—

T3 Audio Amplifier X3 (UQA)

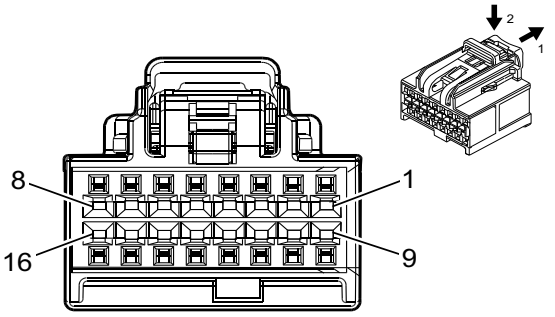

4873243

Connector Part Information

Harness Type: Body
OEM Connector: 35016343
Service Connector: 13519738
Description: 16-Way F 0.64 OCS Series (BK)

Terminal Part Information

Terminal Type ID	Terminated Lead	Diagnostic Test Probe	Terminal Removal Tool	Service Terminal	Tray Name	Core Crimp	Insulation Crimp
I	84619127	J-35616-64B (LT BU)	J-38125-215A	Not Available	Not Available	Not Available	Not Available

T3 Audio Amplifier X3 (UQA)

Pin	Size	Color	Circuit	Function	Terminal Type ID	Option
1	0.75	GY/L-GN	1102	Low Speed GMLAN Serial Data #2	I	—
2 - 16	—	—	—	Not Occupied	—	—

T3 Audio Amplifier X4 (UQA)

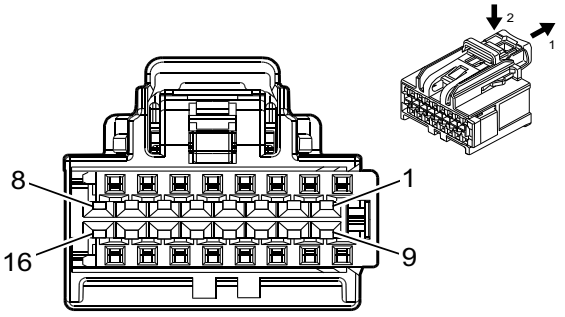

4256181

Connector Part Information

Harness Type: Body
OEM Connector: 35016345
Service Connector: 13519740
Description: 16-Way F 0.64 OCS Series (BN)

Terminal Part Information

Terminal Type ID	Terminated Lead	Diagnostic Test Probe	Terminal Removal Tool	Service Terminal	Tray Name	Core Crimp	Insulation Crimp
I	19300660	J-35616-64B (LT BU)	Not Available	Not Available	Not Available	Not Available	Not Available

T3 Audio Amplifier X4 (UQA)

Pin	Size	Color	Circuit	Function	Terminal Type ID	Option
1 - 2	—	—	—	Not Occupied	—	—
3	0.35	GY/BK	7215	Ethernet Bus 6 (+)	I	—
4	0.35	BN/BK	7214	Ethernet Bus 6 (-)	I	—
5 - 16	—	—	—	Not Occupied	—	—

T8A Ignition Coil 1 (L8T)

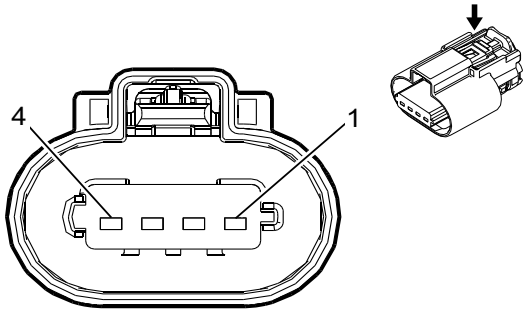

3240115

Connector Part Information

Harness Type: Engine
OEM Connector: 13863211
Service Connector: 19367596
Description: 4-Way F 150 MX Series, Sealed (BK)

Terminal Part Information

Terminal Type ID	Terminated Lead	Diagnostic Test Probe	Terminal Removal Tool	Service Terminal	Tray Name	Core Crimp	Insulation Crimp
I	Not Required	J-35616-14 (GN)	No Tool Required	Not Required	Not Required	Not Required	Not Required
II	Not Required	J-35616-2A (GY)	No Tool Required	Not Required	Not Required	Not Required	Not Required

T8A Ignition Coil 1 (L8T)

Pin	Size	Color	Circuit	Function	Terminal Type ID	Option
1	0.75	BK	4550	Ground	II	—
2	0.5	BK/D-BU	2129	Ignition Control Low Reference Bank 1	I	—
3	0.5	BU/VT	2121	Ignition Control 1	I	—
4	0.75	VT/D-BU	5291	Powertrain Main Relay Fused Supply 2	I	—

T8B Ignition Coil 2 (L8T)

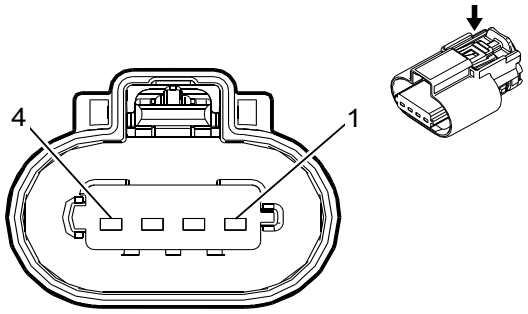

3240115

Connector Part Information

Harness Type: Engine
OEM Connector: 13863211
Service Connector: 19367596
Description: 4-Way F 150 MX Series, Sealed (BK)

Terminal Part Information

Terminal Type ID	Terminated Lead	Diagnostic Test Probe	Terminal Removal Tool	Service Terminal	Tray Name	Core Crimp	Insulation Crimp
I	Not Required	J-35616-14 (GN)	No Tool Required	Not Required	Not Required	Not Required	Not Required

T8B Ignition Coil 2 (L8T)

Pin	Size	Color	Circuit	Function	Terminal Type ID	Option
1	0.75	BK	4550	Ground	I	—
2	0.5	BK/GY	2130	Ignition Control Low Reference Bank 2	I	—
3	0.5	BU/WH	2122	Ignition Control 2	I	—
4	0.75	VT/D-BU	5292	Powertrain Main Relay Fused Supply 3	I	—

T8C Ignition Coil 3 (L8T)

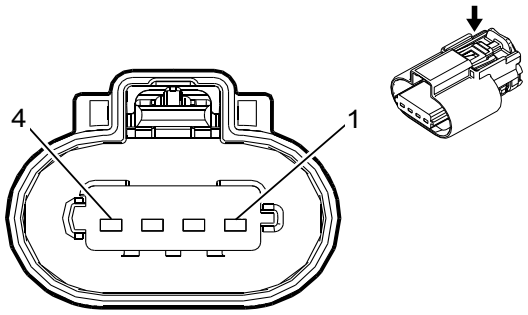

3240115

Connector Part Information

Harness Type: Engine
OEM Connector: 13863211
Service Connector: 19367596
Description: 4-Way F 150 MX Series, Sealed (BK)

Terminal Part Information

Terminal Type ID	Terminated Lead	Diagnostic Test Probe	Terminal Removal Tool	Service Terminal	Tray Name	Core Crimp	Insulation Crimp
I	Not Required	J-35616-14 (GN)	No Tool Required	Not Required	Not Required	Not Required	Not Required

T8C Ignition Coil 3 (L8T)

Pin	Size	Color	Circuit	Function	Terminal Type ID	Option
1	0.75	BK	4550	Ground	I	—
2	0.5	BK/D-BU	2129	Ignition Control Low Reference Bank 1	I	—
3	0.5	L-GN/D-BU	2123	Ignition Control 3	I	—
4	0.75	VT/D-BU	5291	Powertrain Main Relay Fused Supply 2	I	—

T8D Ignition Coil 4 (L8T)

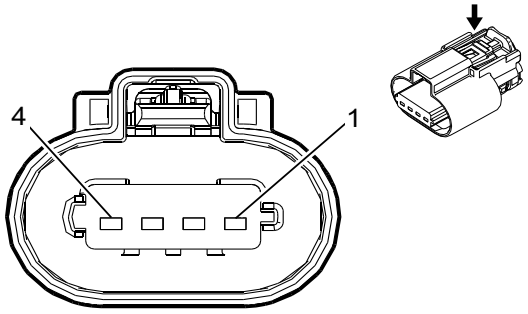

3240115

Connector Part Information

Harness Type: Engine
OEM Connector: 13863211
Service Connector: 19367596
Description: 4-Way F 150 MX Series, Sealed (BK)

Terminal Part Information

Terminal Type ID	Terminated Lead	Diagnostic Test Probe	Terminal Removal Tool	Service Terminal	Tray Name	Core Crimp	Insulation Crimp
I	Not Required	J-35616-14 (GN)	No Tool Required	Not Required	Not Required	Not Required	Not Required

T8D Ignition Coil 4 (L8T)

Pin	Size	Color	Circuit	Function	Terminal Type ID	Option
1	0.75	BK	4550	Ground	I	—
2	0.5	BK/GY	2130	Ignition Control Low Reference Bank 2	I	—
3	0.5	YE/D-BU	2124	Ignition Control 4	I	—
4	0.75	VT/D-BU	5292	Powertrain Main Relay Fused Supply 3	I	—

T8E Ignition Coil 5 (L8T)

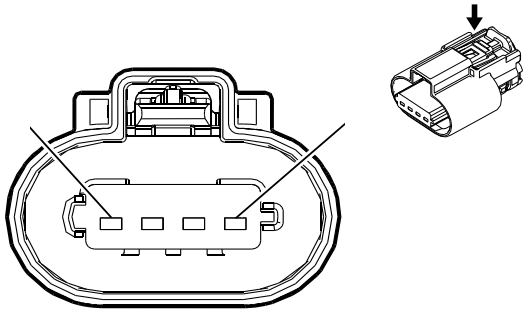

3240115

Connector Part Information

Harness Type: Engine
OEM Connector: 13863211
Service Connector: 19367596
Description: 4-Way F 150 MX Series, Sealed (BK)

Terminal Part Information

Terminal Type ID	Terminated Lead	Diagnostic Test Probe	Terminal Removal Tool	Service Terminal	Tray Name	Core Crimp	Insulation Crimp
I	Not Required	J-35616-14 (GN)	No Tool Required	Not Required	Not Required	Not Required	Not Required

T8E Ignition Coil 5 (L8T)

Pin	Size	Color	Circuit	Function	Terminal Type ID	Option
1	0.75	BK	4550	Ground	I	—
2	0.5	BK/D-BU	2129	Ignition Control Low Reference Bank 1	I	—
3	0.5	BU/GY	2125	Ignition Control 5	I	—
4	0.75	VT/D-BU	5291	Powertrain Main Relay Fused Supply 2	I	—

T8F Ignition Coil 6 (L8T)

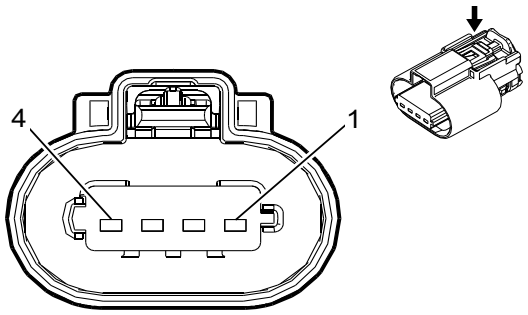

3240115

Connector Part Information

Harness Type: Engine
OEM Connector: 13863211
Service Connector: 19367596
Description: 4-Way F 150 MX Series, Sealed (BK)

Terminal Part Information

Terminal Type ID	Terminated Lead	Diagnostic Test Probe	Terminal Removal Tool	Service Terminal	Tray Name	Core Crimp	Insulation Crimp
I	Not Required	J-35616-14 (GN)	No Tool Required	Not Required	Not Required	Not Required	Not Required

T8F Ignition Coil 6 (L8T)

Pin	Size	Color	Circuit	Function	Terminal Type ID	Option
1	0.75	BK	4550	Ground	I	—
2	0.5	BK/GY	2130	Ignition Control Low Reference Bank 2	I	—
3	0.5	BN/D-BU	2126	Ignition Control 6	I	—
4	0.75	VT/D-BU	5292	Powertrain Main Relay Fused Supply 3	I	—

T8G Ignition Coil 7 (L8T)

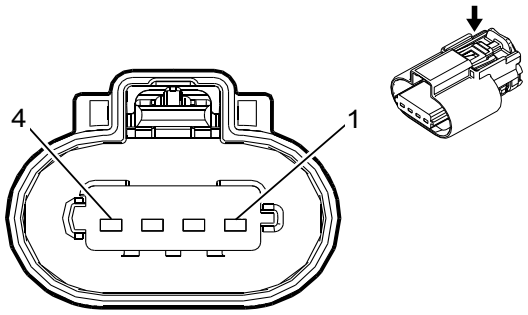

3240115

Connector Part Information

Harness Type: Engine
OEM Connector: 13863211
Service Connector: 19367596
Description: 4-Way F 150 MX Series, Sealed (BK)

Terminal Part Information

Terminal Type ID	Terminated Lead	Diagnostic Test Probe	Terminal Removal Tool	Service Terminal	Tray Name	Core Crimp	Insulation Crimp
I	Not Required	J-35616-14 (GN)	No Tool Required	Not Required	Not Required	Not Required	Not Required

T8G Ignition Coil 7 (L8T)

Pin	Size	Color	Circuit	Function	Terminal Type ID	Option
1	0.75	BK	4550	Ground	I	—
2	0.5	BK/D-BU	2129	Ignition Control Low Reference Bank 1	I	—
3	0.5	L-GN/GY	2127	Ignition Control 7	I	—
4	0.75	VT/D-BU	5291	Powertrain Main Relay Fused Supply 2	I	—

T8H Ignition Coil 8 (L8T)

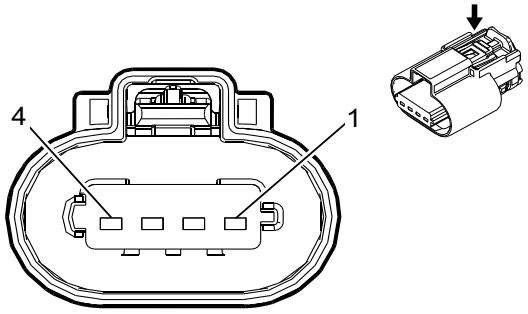

3240115

Connector Part Information

Harness Type: Engine
OEM Connector: 13863211
Service Connector: 19367596
Description: 4-Way F 150 MX Series, Sealed (BK)

Terminal Part Information

Terminal Type ID	Terminated Lead	Diagnostic Test Probe	Terminal Removal Tool	Service Terminal	Tray Name	Core Crimp	Insulation Crimp
I	Not Required	J-35616-14 (GN)	No Tool Required	Not Required	Not Required	Not Required	Not Required

T8H Ignition Coil 8 (L8T)

Pin	Size	Color	Circuit	Function	Terminal Type ID	Option
1	0.75	BK	4550	Ground	I	—
2	0.5	BK/GY	2130	Ignition Control Low Reference Bank 2	I	—
3	0.5	VT/WH	2128	Ignition Control 8	I	—
4	0.75	VT/D-BU	5292	Powertrain Main Relay Fused Supply 3	I	—

T10B Keyless Entry Antenna - Instrument Panel Compartment (BTM)

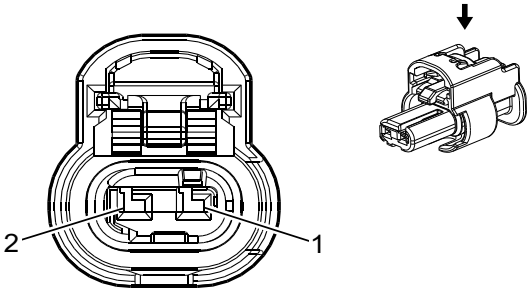

4649903

Connector Part Information

Harness Type: Instrument Panel
OEM Connector: 33327048
Service Connector: 19366858
Description: 2-Way F 1.2 MCON Series, Sealed (BK)

Terminal Part Information

Terminal Type ID	Terminated Lead	Diagnostic Test Probe	Terminal Removal Tool	Service Terminal	Tray Name	Core Crimp	Insulation Crimp
I	Not Required	J-35616-16 (LT GN)	No Tool Required	Not Required	Not Required	Not Required	Not Required

T10B Keyless Entry Antenna - Instrument Panel Compartment (BTM)

Pin	Size	Color	Circuit	Function	Terminal Type ID	Option
1	0.5	BN/BK	3552	Passive Start Interior Antenna 1 Signal Hi	I	—
2	0.5	WH	3553	Passive Start Interior Antenna 1 Signal Lo	I	—

T10E Keyless Entry Antenna - Rear Compartment (BTM)

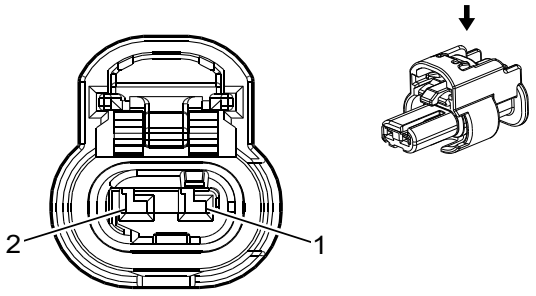

4649903

Connector Part Information

Harness Type: Chassis
OEM Connector: 33327048
Service Connector: 19366858
Description: 2-Way F 1.2 MCON Series, Sealed (BK)

Terminal Part Information

Terminal Type ID	Terminated Lead	Diagnostic Test Probe	Terminal Removal Tool	Service Terminal	Tray Name	Core Crimp	Insulation Crimp
I	Not Required	J-35616-16 (LT GN)	No Tool Required	Not Required	Not Required	Not Required	Not Required

T10E Keyless Entry Antenna - Rear Compartment (BTM)

Pin	Size	Color	Circuit	Function	Terminal Type ID	Option
1	0.5	BN/L-GN	3568	Passive Entry Rear Closure Antenna Signal Hi	I	—
2	0.5	L-GN/GY	3569	Passive Entry Rear Closure Antenna Signal Lo	I	—

T10J Keyless Entry Antenna - Center Console Front (BTM+D07)

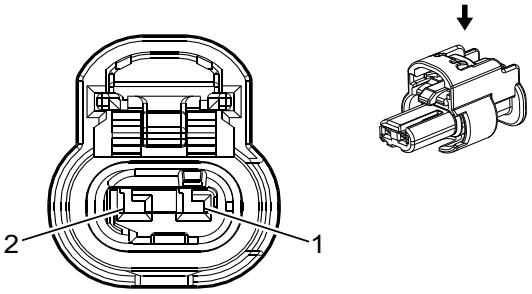

4649903

Connector Part Information

Harness Type: Floor Console
OEM Connector: 33327048
Service Connector: Service by Harness - See Part Catalog
Description: 2-Way F 1.2 MCON Series, Sealed (BK)

Terminal Part Information

Terminal Type ID	Terminated Lead	Diagnostic Test Probe	Terminal Removal Tool	Service Terminal	Tray Name	Core Crimp	Insulation Crimp
I	Not Required	J-35616-16 (LT GN)	No Tool Required	Not Required	Not Required	Not Required	Not Required

T10J Keyless Entry Antenna - Center Console Front (BTM+D07)

Pin	Size	Color	Circuit	Function	Terminal Type ID	Option
1	0.5	BU	3554	Passive Start Interior Antenna 2 Signal Hi	I	—
2	0.5	GY/BK	3555	Passive Start Interior Antenna 2 Signal Lo	I	—

T10V Keyless Entry Antenna - Front Middle Seat (BTM-D07)

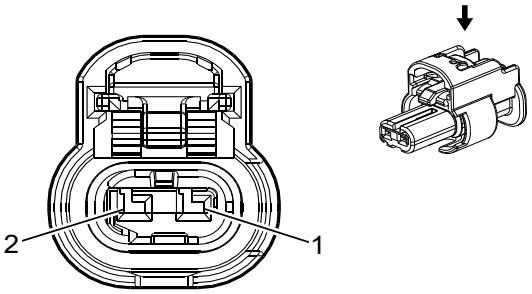

4335931

Connector Part Information

Harness Type: Front Center Seat
OEM Connector: 1-2296694-2

Service Connector: Service by Harness - See Part Catalog
Description: 2-Way F 1.2 MCON Series, Sealed (BK)

Terminal Part Information

Terminal Type ID	Terminated Lead	Diagnostic Test Probe	Terminal Removal Tool	Service Terminal	Tray Name	Core Crimp	Insulation Crimp
I	Not Required	J-35616-16 (LT GN)	No Tool Required	Not Required	Not Required	Not Required	Not Required

T10V Keyless Entry Antenna - Front Middle Seat (BTM-D07)

Pin	Size	Color	Circuit	Function	Terminal Type ID	Option
1	0.5	L-BU	3554	Passive Start Interior Antenna 2 Signal Hi	I	—
2	0.5	GY/BK	3555	Passive Start Interior Antenna 2 Signal Lo	I	—

T12 Automatic Transmission Assembly X1 (MGM/MGU)

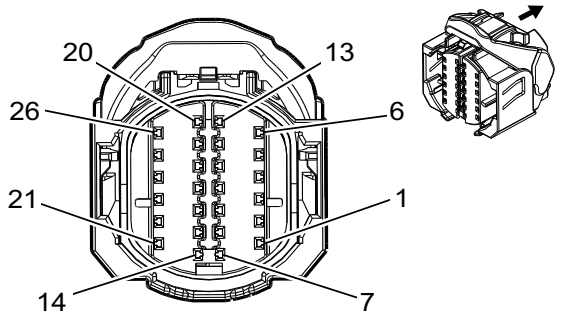

4420489

Connector Part Information

Harness Type: Engine
OEM Connector: 33178413
Service Connector: 13596549
Description: 26-Way F 1.2 MCON-CB Series, Sealed (BK)

Terminal Part Information

Terminal Type ID	Terminated Lead	Diagnostic Test Probe	Terminal Removal Tool	Service Terminal	Tray Name	Core Crimp	Insulation Crimp
I	19331733	J-35616-16 (LT GN)	J-38125-215A	Not Available	Not Available	Not Available	Not Available
II	Not Available	J-35616-16 (LT GN)	J-38125-215A	Not Available	Not Available	Not Available	Not Available

T12 Automatic Transmission Assembly X1 (MGM/MGU)

Pin	Size	Color	Circuit	Function	Terminal Type ID	Option
1	0.5	L-GN/YE	6353	Input Speed Signal	I	—
2	0.5	L-GN/VT	4510	Transmission Intermediate Speed Signal	I	—
3	0.5	BN/WH	6254	Transmission Input Speed Sensor Signal	I	—
4	0.5	GY/D-BU	6358	Output Speed Signal	I	—

T12 Automatic Transmission Assembly X1 (MGM/MGU) (cont'd)

Pin	Size	Color	Circuit	Function	Terminal Type ID	Option
5	0.5	L-GN/YE	3338	Transmission Internal Mode Switch Mode Control B	I	—
6	0.5	WH/D-BU	6319	ETRS Out of Park Switch 2 Signal	I	—
7	0.5	YE/L-GN	4170	Transmission Position Sensor B 9V Reference	I	—
8	0.5	YE/D-BU	4171	Transmission Position Sensor A 9V Reference	I	—
9	0.5	GY/BN	6388	Transmission High Side Driver 2 Signal	I	—
10	0.75	RD/VT	7940	Battery Positive Voltage	I	—
11	0.5	L-GN/GY	6387	Transmission High Side Driver 1 Signal Driver	I	—
12	0.5	BK/GY	3992	Internal Mode Switch Voltage Supply A	I	—
13	0.5	BN/WH	585	Transmission Oil Temperature Sensor Signal	I	—
14	0.5	YE/BN	6404	Clutch E Control	I	—
15	0.5	GY/L-GN	6403	Clutch D Control	I	—
16	0.5	GY	6402	Clutch C Control	I	—
17	1	BK	4450	Ground	II	—
18	0.5	L-GN/WH	2968	Transmission Auxiliary Oil Pump Control	I	—
19	0.5	L-GN/BK	7819	Default Disable Solenoid Control	I	—
20	0.5	YE/D-BU	3927	IMS Mode Switch Low Reference	I	—
21	0.5	VT	4509	Transmission Clutch F Control	I	—
22	0.5	WH/D-BU	4507	Transmission Clutch H Control	I	—
23	0.5	WH	4508	Transmission Clutch G Control	I	—
24	0.5	L-GN/WH	1530	Transmission Mainline Pressure Solenoid Control	I	—
25	0.5	VT/WH	422	Torque Converter Clutch Solenoid Control	I	—
26	0.5	BK/BN	586	Transmission Oil Temperature Sensor Low Reference	I	—

T22 Mobile Device Wireless Charger Module (K4C)

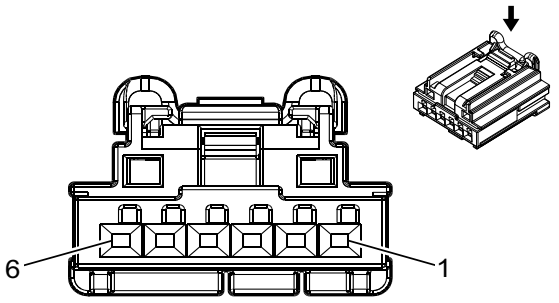

3960313

Connector Part Information

Harness Type: Floor Console
OEM Connector: 13920633
Service Connector: Service by Harness - See Part Catalog
Description: 6-Way F 0.64 Generation Y Series (BK)

Terminal Part Information

Terminal Type ID	Terminated Lead	Diagnostic Test Probe	Terminal Removal Tool	Service Terminal	Tray Name	Core Crimp	Insulation Crimp
I	Not Required	J-35616-64B (LT BU)	No Tool Required	Not Required	Not Required	Not Required	Not Required

T22 Mobile Device Wireless Charger Module (K4C)

Pin	Size	Color	Circuit	Function	Terminal Type ID	Option
1	0.5	VT	4601	Retained Accessory Power Fused Control	I	—
2	0.5	BK	1250	Ground	I	—
3	0.35	L-GN	4512	Wireless Charging System Charge Indicator Control	I	—
4	0.5	BN	4511	Wireless Charging System Fault Indicator Control	I	—
5 - 6	—	—	—	Not Occupied	—	—

X80C Accessory Power Receptacle - Cargo (K9C)

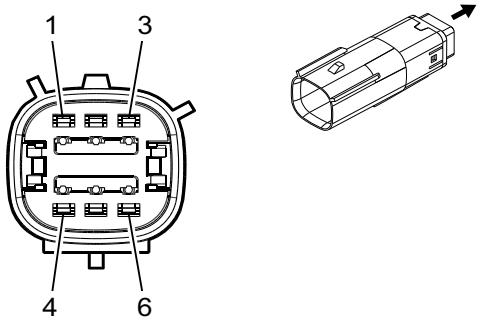

4992963

Connector Part Information

Harness Type: Chassis
OEM Connector: 15513475
Service Connector: 19371205
Description: 6-Way M 1.5 OCS Series, Sealed (GY)

Terminal Part Information

Terminal Type ID	Terminated Lead	Diagnostic Test Probe	Terminal Removal Tool	Service Terminal	Tray Name	Core Crimp	Insulation Crimp
I	Not Required	J-35616-3 (GY)	No Tool Required	Not Required	Not Required	Not Required	Not Required

X80C Accessory Power Receptacle - Cargo (K9C)

Pin	Size	Color	Circuit	Function	Terminal Type ID	Option
1	0.75	BK/WH	2264	120 VAC Phase A 2	I	—
2	0.75	RD/WH	2265	120 VAC Phase B 2	I	—
3	0.5	BN	2257	Drain Wire	I	—
4	0.75	L-GN/BN	2266	DC To AC Inverter Control 2	I	—

X80C Accessory Power Receptacle - Cargo (K9C) (cont'd)

Pin	Size	Color	Circuit	Function	Terminal Type ID	Option
5	0.5	BN	7754	AC Power Outlet Enable	I	—
6	1	BK	6650	Ground (66) Propulsion System	I	—

X80C Accessory Power Receptacle - Cargo (KC9)

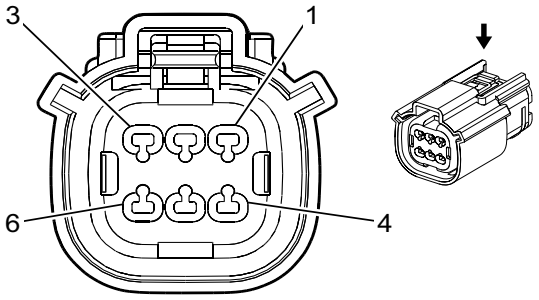

1986157

Connector Part Information

Harness Type: Power Outlet Jumper
OEM Connector: 15533832
Service Connector: Service by Harness - See Part Catalog
Description: 6-Way F 150 MX Series, Sealed (BK)

Terminal Part Information

Terminal Type ID	Terminated Lead	Diagnostic Test Probe	Terminal Removal Tool	Service Terminal	Tray Name	Core Crimp	Insulation Crimp
I	Not Required	J-35616-2A (GY)	No Tool Required	Not Required	Not Required	Not Required	Not Required

X80C Accessory Power Receptacle - Cargo (KC9)

Pin	Size	Color	Circuit	Function	Terminal Type ID	Option
1	0.5	BN	7754	AC Power Outlet Enable	I	—
2	0.75	L-GN/BN	2266	DC To AC Inverter Control 2	I	—
3	—	—	—	Not Occupied	—	—
4	0.75	BK/WH	2264	120 VAC Phase A 2	I	—
5	1	BK	6650	Ground (66) Propulsion System	I	—
6	0.75	RD/WH	2265	120 VAC Phase B 2	I	—

X80G Accessory Power Receptacle - Instrument Panel (D09)

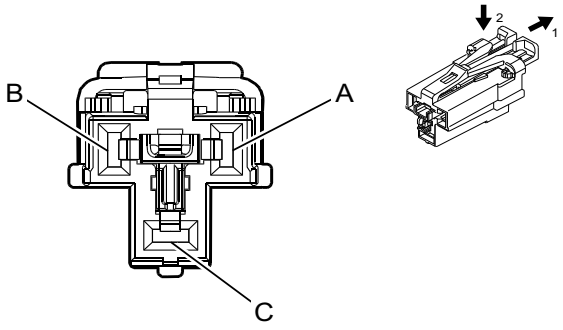

4872413

Connector Part Information

Harness Type: Instrument Panel
OEM Connector: 33386302
Service Connector: 19369281
Description: 3-Way F 2.8 APEX Series (GY)

Terminal Part Information

Terminal Type ID	Terminated Lead	Diagnostic Test Probe	Terminal Removal Tool	Service Terminal	Tray Name	Core Crimp	Insulation Crimp
I	Not Required	J-35616-35 (VT)	No Tool Required	Not Required	Not Required	Not Required	Not Required

X80G Accessory Power Receptacle - Instrument Panel (D09)

Pin	Size	Color	Circuit	Function	Terminal Type ID	Option
A	1.5	RD/BN	4240	Battery Positive Voltage	I	—
B	—	—	—	Not Occupied	—	—
C	1.5	BK	1050	Ground	I	—

X80L Accessory Power Receptacle - Center Console Rear (D07)

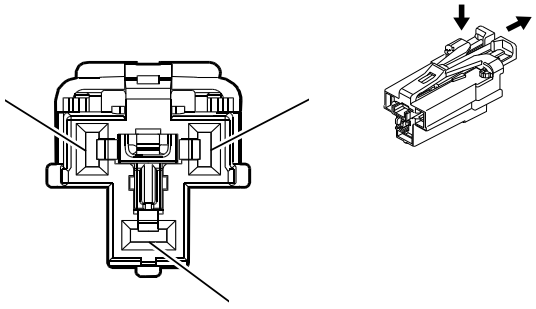

4872413

Connector Part Information

Harness Type: Floor Console
OEM Connector: 33386302

Service Connector: Service by Harness - See Part Catalog
Description: 3-Way F 2.8 APEX Series (GY)

Terminal Part Information

Terminal Type ID	Terminated Lead	Diagnostic Test Probe	Terminal Removal Tool	Service Terminal	Tray Name	Core Crimp	Insulation Crimp
I	Not Required	J-35616-35 (VT)	No Tool Required	Not Required	Not Required	Not Required	Not Required

X80L Accessory Power Receptacle - Center Console Rear (D07)

Pin	Size	Color	Circuit	Function	Terminal Type ID	Option
A	1.5	RD/WH	1040	Battery Positive Voltage	I	—
B	—	—	—	Not Occupied	—	—
C	1.5	BK	1250	Ground	I	—

X80M Accessory Power Receptacle - Rear Seat (KPA)

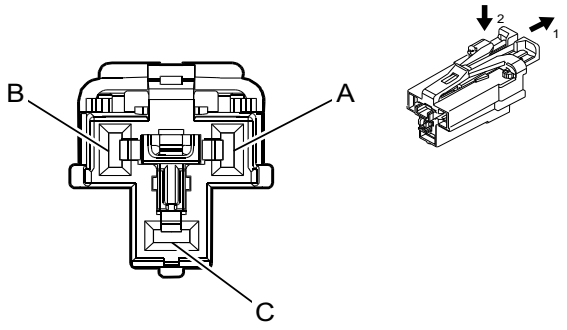

4872413

Connector Part Information

Harness Type: Front Center Seat
OEM Connector: 33386302
Service Connector: Service by Harness - See Part Catalog
Description: 3-Way F 2.8 APEX Series (GY)

Terminal Part Information

Terminal Type ID	Terminated Lead	Diagnostic Test Probe	Terminal Removal Tool	Service Terminal	Tray Name	Core Crimp	Insulation Crimp
I	Not Required	J-35616-35 (VT)	No Tool Required	Not Required	Not Required	Not Required	Not Required

X80M Accessory Power Receptacle - Rear Seat (KPA)

Pin	Size	Color	Circuit	Function	Terminal Type ID	Option
A	1.5	RD/WH	1040	Battery Positive Voltage	I	—
B	—	—	—	Not Occupied	—	—
C	1.5	BK	1150	Ground	I	—

X81 Accessory Power Receptacle - 110V AC X1 (KI4)

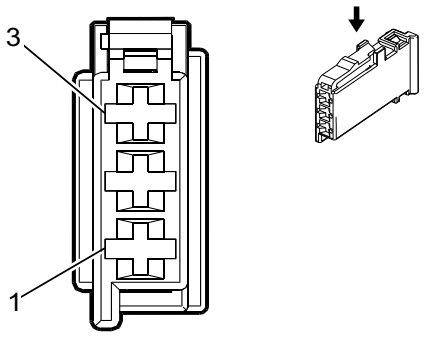

2039656

Connector Part Information

Harness Type: Instrument Panel
OEM Connector: 10865339
Service Connector: 93186706
Description: 3-Way F 1.6 Micro-Timer Series (BK)

Terminal Part Information

Terminal Type ID	Terminated Lead	Diagnostic Test Probe	Terminal Removal Tool	Service Terminal	Tray Name	Core Crimp	Insulation Crimp
I	Not Required	J-35616-14 (GN)	No Tool Required	Not Required	Not Required	Not Required	Not Required

X81 Accessory Power Receptacle - 110V AC X1 (KI4)

Pin	Size	Color	Circuit	Function	Terminal Type ID	Option
1	0.35	BN	7754	AC Power Outlet Enable	I	—
2	—	—	—	Not Occupied	—	—
3	0.75	BK	5683	120 V AC Phase A	I	—

X81 Accessory Power Receptacle - 110V AC X2 (KI4)

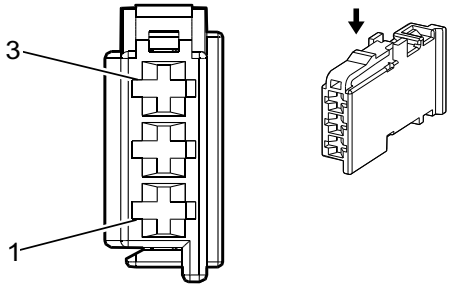

2236412

Connector Part Information

Harness Type: Instrument Panel
OEM Connector: 13648774

Service Connector: 19367740
Description: 3-Way F 1.6 Timer Series, Sealed (GY)

Terminal Part Information

Terminal Type ID	Terminated Lead	Diagnostic Test Probe	Terminal Removal Tool	Service Terminal	Tray Name	Core Crimp	Insulation Crimp
I	Not Required	J-35616-14 (GN)	No Tool Required	Not Required	Not Required	Not Required	Not Required

X81 Accessory Power Receptacle - 110V AC X2 (KI4)

Pin	Size	Color	Circuit	Function	Terminal Type ID	Option
1	0.35	BU/BN	6807	DC To AC Inverter Control	I	—
2	—	—	—	Not Occupied	—	—
3	0.75	RD	5684	120 V AC Phase B	I	—

X83 Auxiliary Audio Input X1

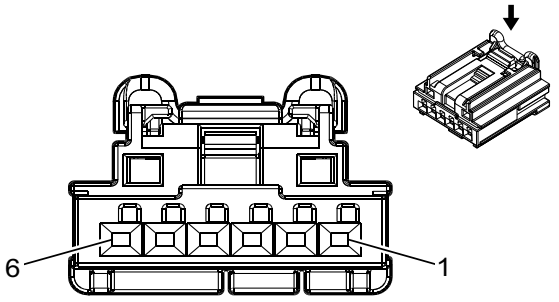

3960313

Connector Part Information

Harness Type: Floor Console
OEM Connector: 13920633
Service Connector: Service by Harness - See Part Catalog
Description: 6-Way F 0.64 Generation Y Series (BK)

Terminal Part Information

Terminal Type ID	Terminated Lead	Diagnostic Test Probe	Terminal Removal Tool	Service Terminal	Tray Name	Core Crimp	Insulation Crimp
I	Not Required	J-35616-64B (LT BU)	No Tool Required	Not Required	Not Required	Not Required	Not Required

X83 Auxiliary Audio Input X1

Pin	Size	Color	Circuit	Function	Terminal Type ID	Option
1	0.5	RD/WH	1340	Battery Positive Voltage	I	—
2	0.35	YE	6817	LED Backlight Dimming Control	I	—
3	0.5	BK	1250	Ground	I	—
4 - 6	—	—	—	Not Occupied	—	—

X84 Data Link Connector

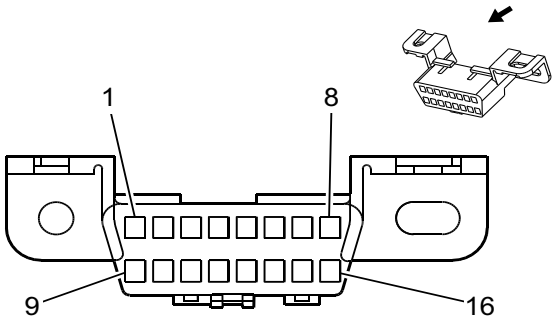

68793

Connector Part Information

Harness Type: Instrument Panel
OEM Connector: 12110250
Service Connector: 12110250
Description: 16-Way F 150 Metri-Pack Series (BK)

Terminal Part Information

Terminal Type ID	Terminated Lead	Diagnostic Test Probe	Terminal Removal Tool	Service Terminal	Tray Name	Core Crimp	Insulation Crimp
I	13580059	J-35616-14 (GN)	J-38125-12A	12129484	Delphi 19	E	C
II	Not Available	J-35616-14 (GN)	J-38125-12A	12129484	Delphi 19	E	C

X84 Data Link Connector

Pin	Size	Color	Circuit	Function	Terminal Type ID	Option
1	0.35	L-GN/WH	2100	Low Speed GMLAN Serial Data #3	II	—
2	—	—	—	Not Occupied	—	—
3	0.35	BU/WH	2089	High Speed GMLAN Serial Data (+)(13)	II	—
4	0.35	BK	1850	Ground	II	—
5	0.5	BK/WH	1851	Signal Ground	I	—
6	0.35	BU/BK	1978	High Speed GMLAN Serial Data (+)(11)	II	—
7 - 10	—	—	—	Not Occupied	—	—
11	0.35	WH	2090	High Speed GMLAN Serial Data (-)(13)	II	—
12	0.35	BU/BN	1980	High Speed GMLAN Serial Data (+)(12)	II	—
13	0.35	WH	1981	High Speed GMLAN Serial Data (-)(12)	II	—
14	0.35	WH	1979	High Speed GMLAN Serial Data (-)(11)	II	—
15	—	—	—	Not Occupied	—	—
16	0.5	RD/WH	640	Battery Positive Voltage	I	—

X85 Steering Wheel Air Bag Coil X1

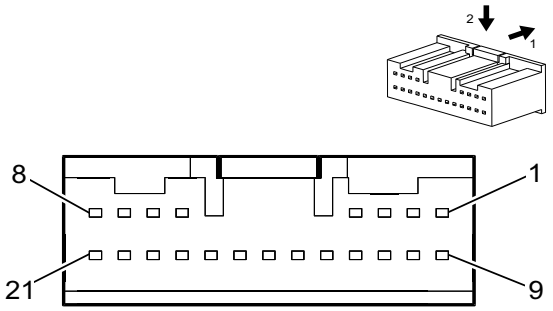

3960237

Connector Part Information

Harness Type: Instrument Panel
OEM Connector: 33291416
Service Connector: 13510218
Description: 21-Way F 0.64 Series, Sealed (YE)

Terminal Part Information

Terminal Type ID	Terminated Lead	Diagnostic Test Probe	Terminal Removal Tool	Service Terminal	Tray Name	Core Crimp	Insulation Crimp
I	13575742	J-35616-64B (LT BU)	J-38125-215A	SAIT-A03T-M064	Yazaki 14	P	P
II	13575864	J-35616-64B (LT BU)	J-38125-215A	SAIT-A03GF-M064	Yazaki 27	P	P
III	13575867	J-35616-64B (LT BU)	J-38125-215A	SAIT-A03T-M064	Yazaki 14	P	P

X85 Steering Wheel Air Bag Coil X1

Pin	Size	Color	Circuit	Function	Terminal Type ID	Option
1	0.5	BK/WH	1851	Signal Ground	I	—
2	0.35	L-GN/WH	3287	Horn Switch Signal	III	—
3 - 4	—	—	—	Not Occupied	—	—
5	0.35	OG/L-GN	3023	Steering Wheel Module Stage 2 High Control	II	—
6	0.35	WH/OG	3022	Steering Wheel Module Stage 2 Low Control	II	—
7	0.35	BN/OG	3020	Steering Wheel Module Stage 1 Low Control	II	—
8	0.35	OG/VT	3021	Steering Wheel Module Stage 1 High Control	II	—
9	0.35	L-GN/BK	3894	Local Interconnect Network Serial Data Bus 12	III	—
10	0.35	L-GN/ D-BU	4119	Local Interconnect Network Serial Data Bus 19	III	—
11	0.35	BN/L-GN	1884	Cruise Control Set/Coast/Resume/Accelerate Switch Signal	III	—
12	0.35	WH/RD	1444	12V Reference	III	—
13	—	—	—	Not Occupied	—	—
14	0.35	RD/YE	3040	Battery Positive Voltage	III	—
15	0.35	GY/L-GN	5737	Adaptive Cruise Control Gap Up/Down Switch Signal	III	—
16	—	—	—	Not Occupied	—	—
17	0.5	YE	6817	LED Backlight Dimming Control	I	—

X85 Steering Wheel Air Bag Coil X1 (cont'd)

Pin	Size	Color	Circuit	Function	Terminal Type ID	Option
18 - 19	—	—	—	Not Occupied	—	—
20	0.5	BK	1850	Ground	I	—
21	0.5	VT/WH	1139	Run/Crank Ignition 1 Voltage	I	—

X88C Trailer Connector - Camper

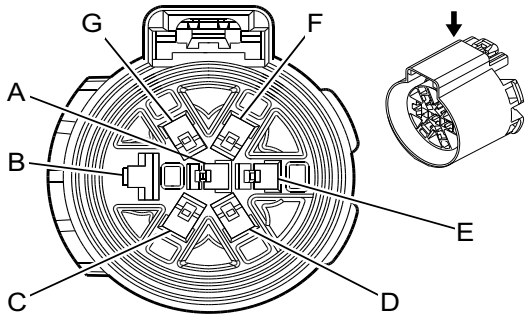

2056936

Connector Part Information

Harness Type: Chassis
OEM Connector: 13857223
Service Connector: 15306164
Description: 7-Way F 280, 630 Metri-Pack Series, Sealed (BK)

Terminal Part Information

Terminal Type ID	Terminated Lead	Diagnostic Test Probe	Terminal Removal Tool	Service Terminal	Tray Name	Core Crimp	Insulation Crimp
I	Not Required	J-35616-42 (RD)	No Tool Required	Not Required	Not Required	Not Required	Not Required
II	Not Required	J-35616-4A (PU)	No Tool Required	Not Required	Not Required	Not Required	Not Required

X88C Trailer Connector - Camper

Pin	Size	Color	Circuit	Function	Terminal Type ID	Option
A	0.75	L-GN/WH	5189	Trailer Backup Lamp Control	II	U1D
	0.75	WH/L-GN	1624	Trailer Backup Lamp Control	II	UY2/Z6A
B	5	BK	1750	Ground	I	U1D
	5	WH	22	Trailer Ground	I	UY2/Z6A
C	4	BU	47	Trailer Auxiliary Control	II	—
D	0.75	L-GN/VT	1619	Right Rear Trailer Stop/Turn Lamp Control	II	—
E	4	RD/L-GN	742	Battery Positive Voltage	II	—
F	0.75	GY/BN	2109	Trailer Park Lamp Control	II	U1D
	1.5	GY/BN	2109	Trailer Park Lamp Control	II	UY2/Z6A
	1.5	GY/BN	2109	Trailer Park Lamp Control	II	UY2/Z82
G	0.75	YE/GY	1618	Left Rear Trailer Stop/Turn Lamp Control	II	U1D
	0.75	YE/D-BU	318	Left Rear Trailer Stop/Turn Lamp Control	II	UY2/Z6A

X88G Trailer Connector - 5th Wheel

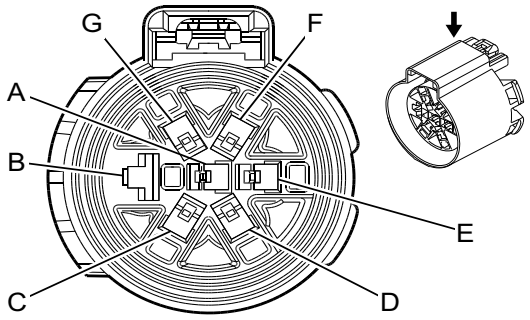

2056936

Connector Part Information

Harness Type: Back up Alarm
OEM Connector: 13857223
Service Connector: Service by Harness - See Part Catalog
Description: 7-Way F 280, 630 Metri-Pack Series, Sealed (BK)

Terminal Part Information

Terminal Type ID	Terminated Lead	Diagnostic Test Probe	Terminal Removal Tool	Service Terminal	Tray Name	Core Crimp	Insulation Crimp
I	Not Required	J-35616-42 (RD)	No Tool Required	Not Required	Not Required	Not Required	Not Required
II	Not Required	J-35616-4A (PU)	No Tool Required	Not Required	Not Required	Not Required	Not Required

X88G Trailer Connector - 5th Wheel

Pin	Size	Color	Circuit	Function	Terminal Type ID	Option
A	1	L-GN	1624	Trailer Backup Lamp Control	II	—
B	5	WH	22	Trailer Ground	I	—
C	3	BU	47	Trailer Auxiliary Control	II	—
D	0.8	D-GN	1619	Right Rear Trailer Stop/Turn Lamp Control	II	—
E	3	RD/BK	742	Battery Positive Voltage	II	—
F	1	BN	2109	Trailer Park Lamp Control	II	—
G	0.8	YE	1618	Left Rear Trailer Stop/Turn Lamp Control	II	—

X92 USB Receptacle X1 (IOS/IOT)

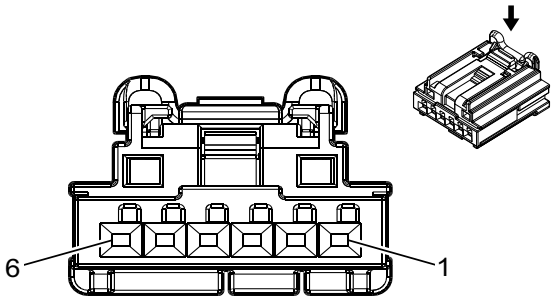

3960313

Connector Part Information

Harness Type: Instrument Panel
OEM Connector: 13920633
Service Connector: 19332786
Description: 6-Way F 0.64 Generation Y Series (BK)

Terminal Part Information

Terminal Type ID	Terminated Lead	Diagnostic Test Probe	Terminal Removal Tool	Service Terminal	Tray Name	Core Crimp	Insulation Crimp
I	Not Required	J-35616-64B (LT BU)	No Tool Required	Not Required	Not Required	Not Required	Not Required

X92 USB Receptacle X1 (IOS/IOT)

Pin	Size	Color	Circuit	Function	Terminal Type ID	Option
1	0.35	RD/WH	1340	Battery Positive Voltage	I	—
2	0.35	YE	6817	LED Backlight Dimming Control	I	—
3	0.35	BK/WH	1851	Signal Ground	I	—
4 - 6	—	—	—	Not Occupied	—	—

X92 USB Receptacle (USS)

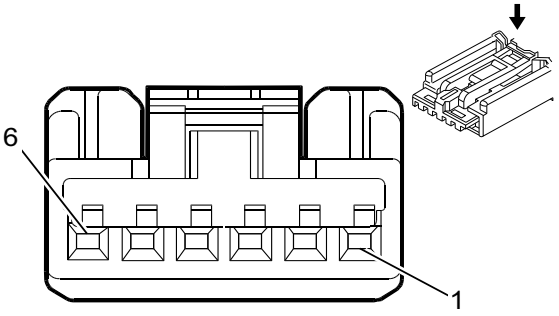

1862240

Connector Part Information

Harness Type: Front Center Seat
OEM Connector: AIT2PB-06-1AK
Service Connector: Service by Harness - See Part Catalog
Description: 6-Way F 0.64 Kaizen Series (BK)

Terminal Part Information

Terminal Type ID	Terminated Lead	Diagnostic Test Probe	Terminal Removal Tool	Service Terminal	Tray Name	Core Crimp	Insulation Crimp
I	Not Required	J-35616-64B (LT BU)	No Tool Required	Not Required	Not Required	Not Required	Not Required

X92 USB Receptacle (USS)

Pin	Size	Color	Circuit	Function	Terminal Type ID	Option
1 - 3	—	—	—	Not Occupied	—	—
4	0.5	BK	1150	Ground	I	—
5	—	—	—	Not Occupied	—	—
6	0.5	VT/YE	143	Accessory Ignition Voltage	I	—

X92C USB Receptacle - Center Console Rear (USS)

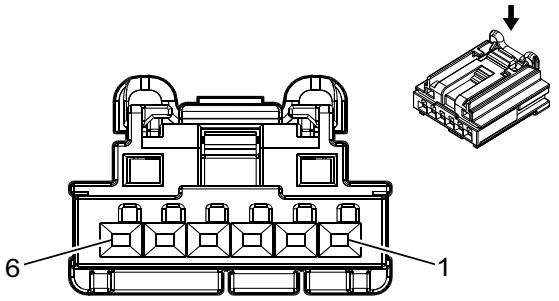

3960313

Connector Part Information

Harness Type: Floor Console
OEM Connector: 13920633
Service Connector: Service by Harness - See Part Catalog
Description: 6-Way F 0.64 Generation Y Series (BK)

Terminal Part Information

Terminal Type ID	Terminated Lead	Diagnostic Test Probe	Terminal Removal Tool	Service Terminal	Tray Name	Core Crimp	Insulation Crimp
I	Not Required	J-35616-64B (LT BU)	No Tool Required	Not Required	Not Required	Not Required	Not Required

X92C USB Receptacle - Center Console Rear (USS)

Pin	Size	Color	Circuit	Function	Terminal Type ID	Option
1	0.5	VT/YE	143	Accessory Ignition Voltage	I	—
2	0.35 0.5	YE YE	6817 6817	LED Backlight Dimming Control LED Backlight Dimming Control	I I	— —
3	0.5	BK	1250	Ground	I	—
4 - 6	—	—	—	Not Occupied	—	—

Inline Harness Connector End Views

X101 Front Fascia Harness to Body Harness (T3U)

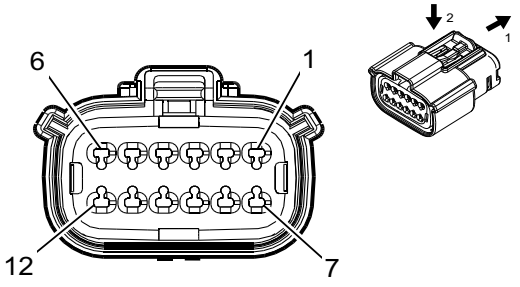

2871860

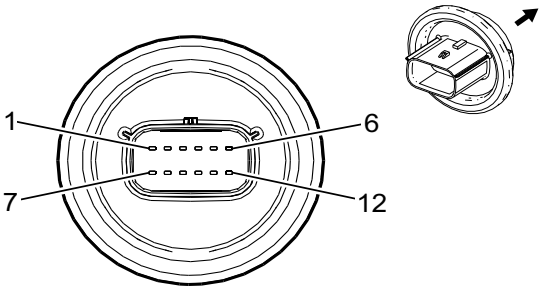

3238775

Connector Part Information

Harness Type: Front Fascia
OEM Connector: 35104104
Service Connector: Service by Harness - See Part Catalog
Description: 12-Way F 150 MX Series, Sealed (BK)

Connector Part Information

Harness Type: Body
OEM Connector: Not Available
Service Connector: -
Description: 12-Way M

Terminal Part Information

Terminal Type ID	Terminated Lead	Diagnostic Test Probe	Terminal Removal Tool	Service Terminal	Tray Name	Core Crimp	Insulation Crimp
I	Not Required	J-35616-2A (GY)	No Tool Required	Not Required	Not Required	Not Required	Not Required
II	Not Required	No Tool Required	Not Available	Not Available	Not Available	Not Available	Not Available

X101 Front Fascia Harness to Body Harness (T3U)

Pin	Size	Color	Circuit	Terminal Type ID	Option	Function	Pin	Size	Color	Circuit	Terminal Type ID	Option
1	0.5	BK	250	I	—	Ground	1	0.5	BK	250	II	—
2 - 3	—	—	—	—	—	Not Occupied	2 - 3	—	—	—	—	—
4	0.5	BK	150	I	—	Ground	4	0.5	BK	150	II	—
5 - 8	—	—	—	—	—	Not Occupied	5 - 8	—	—	—	—	—
9	0.5	BN/VT	2234	I	—	Front Fog Lamp Control	9	0.5	BN/VT	2234	II	—
10 - 12	—	—	—	—	—	Not Occupied	10 - 12	—	—	—	—	—

X101 Front Fascia Harness to Body Harness (T3U/UD5)

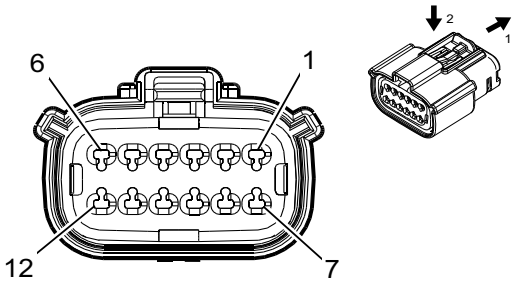

2871860

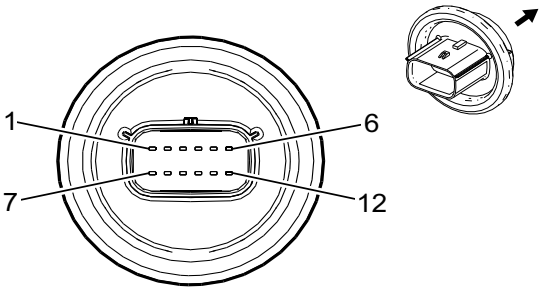

3238775

Connector Part Information

Harness Type: Front Fascia
OEM Connector: 33276998
Service Connector: Service by Harness - See Part Catalog
Description: 12-Way F 150 MX Series, Sealed (BK)

Connector Part Information

Harness Type: Body
OEM Connector: Not Available
Service Connector: -
Description: 12-Way M

Terminal Part Information

Terminal Type ID	Terminated Lead	Diagnostic Test Probe	Terminal Removal Tool	Service Terminal	Tray Name	Core Crimp	Insulation Crimp
I	Not Required	J-35616-2A (GY)	No Tool Required	Not Required	Not Required	Not Required	Not Required
II	Not Required	No Tool Required	Not Available	Not Available	Not Available	Not Available	Not Available

X101 Front Fascia Harness to Body Harness (T3U/UD5)

Pin	Size	Color	Circuit	Terminal Type ID	Option	Function	Pin	Size	Color	Circuit	Terminal Type ID	Option
1	0.5	BK	250	I	—	Ground	1	0.5	BK	250	II	—
2	0.5	VT/GY	5218	I	—	Front Parking Right Mid Sensor	2	0.5	VT/GY	5218	II	—
3	0.5	WH/GY	5217	I	—	Front Parking Right Corner Sensor	3	0.5	WH/GY	5217	II	—
4	0.5	BK	150	I	—	Ground	4	0.5	BK	150	II	—
5	0.5	VT/WH	5215	I	—	Front Parking Left Corner Sensor	5	0.5	VT/WH	5215	II	—
6	0.5	BK/D-BU	5214	I	—	Front Parking Sensor Low Reference	6	0.5	BK/D-BU	5214	II	—
7	0.5	YE/GY	5216	I	—	Front Parking Left Mid Sensor	7	0.5	YE/GY	5216	II	—
8	0.5	YE/VT	5213	I	—	Front Parking Left/Right/Mid Sensor	8	0.5	YE/VT	5213	II	—

X101 Front Fascia Harness to Body Harness (T3U/UD5) (cont'd)

Pin	Size	Color	Circuit	Terminal Type ID	Option	Function	Pin	Size	Color	Circuit	Terminal Type ID	Option
9	0.5	BN/ VT	2234	I	—	Front Fog Lamp Control	9	0.5	BN/ VT	2234	II	—
10 - 12	—	—	—	—	—	Not Occupied	10 - 12	—	—	—	—	—

X101 Front Fascia Harness to Body Harness (T3U/UD5+Crew Cab)

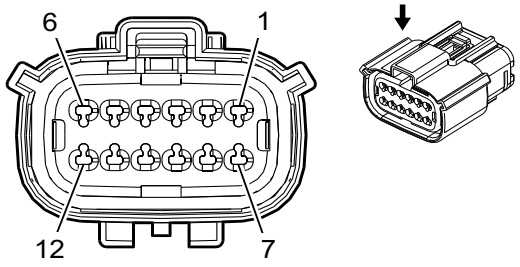

2424960

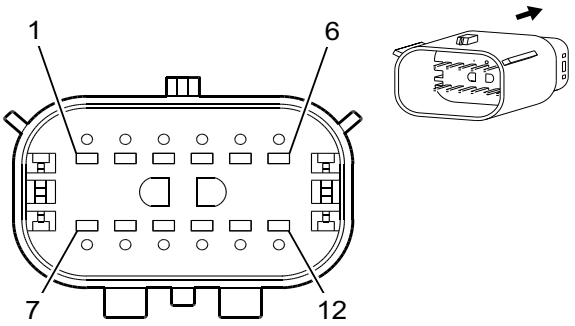

1825167

Connector Part Information

Harness Type: Front Fascia
OEM Connector: Not Available
Service Connector: Service by Harness - See Part Catalog
Description: 12-Way F

Connector Part Information

Harness Type: Body
OEM Connector: 33369138
Service Connector: 19369242
Description: 12-Way M 150 MX Series, Sealed (BK)

Terminal Part Information

Terminal Type ID	Terminated Lead	Diagnostic Test Probe	Terminal Removal Tool	Service Terminal	Tray Name	Core Crimp	Insulation Crimp
I	Not Required	Not Available	No Tool Required	Not Required	Not Required	Not Required	Not Required
II	19119395	J-35616-3 (GY)	J-38125-217	Not Available	Not Available	Not Available	Not Available
III	19119440	J-35616-3 (GY)	J-38125-217	Not Available	Not Available	Not Available	Not Available

X101 Front Fascia Harness to Body Harness (T3U/UD5+Crew Cab)

Pin	Size	Color	Circuit	Terminal Type ID	Option	Function	Pin	Size	Color	Circuit	Terminal Type ID	Option
1	0.5	BK	250	I	—	Ground	1	0.5	BK	250	II	—
2	0.5	VT/GY	5218	I	—	Front Parking Right Mid Sensor	2	0.5	VT/GY	5218	II	—
3	0.5	WH/GY	5217	I	—	Front Parking Right Corner Sensor	3	0.5	WH/GY	5217	II	—
4	0.75	BK	150	I	—	Ground	4	0.75	BK	150	III	—
5	0.5	VT/WH	5215	I	—	Front Parking Left Corner Sensor	5	0.5	VT/WH	5215	II	—
6	0.5	BK/D-BU	5214	I	—	Front Parking Sensor Low Reference	6	0.5	BK/D-BU	5214	II	—
7	0.5	YE/GY	5216	I	—	Front Parking Left Mid Sensor	7	0.5	YE/GY	5216	II	—

X101 Front Fascia Harness to Body Harness (T3U/UD5+Crew Cab) (cont'd)

Pin	Size	Color	Circuit	Terminal Type ID	Option	Function	Pin	Size	Color	Circuit	Terminal Type ID	Option
8	0.5	YE/ VT	5213	I	—	Front Parking Left/ Right/Mid Sensor	8	0.5	YE/ VT	5213	II	—
9	0.5	BN/ VT	2234	I	—	Front Fog Lamp Control	9	0.5	BN/ VT	2234	II	—
10 - 12	—	—	—	—	—	Not Occupied	10 - 12	—	—	—	—	—

X101 Front Fascia Harness to Body Harness (T3U/UD5+Extended Cab)

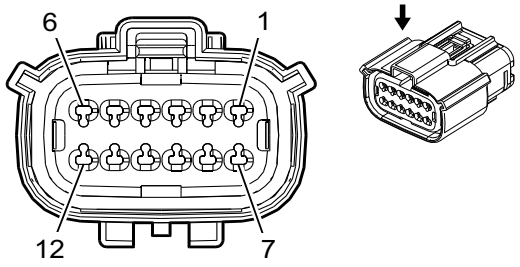

2424960

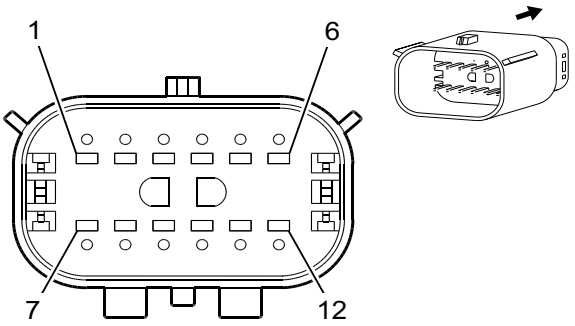

1825167

Connector Part Information

Harness Type: Front Fascia
OEM Connector: Not Available
Service Connector: Service by Harness - See Part Catalog
Description: 12-Way F

Connector Part Information

Harness Type: Body
OEM Connector: 33369138
Service Connector: 19369242
Description: 12-Way M 150 MX Series, Sealed (BK)

Terminal Part Information

Terminal Type ID	Terminated Lead	Diagnostic Test Probe	Terminal Removal Tool	Service Terminal	Tray Name	Core Crimp	Insulation Crimp
I	Not Required	Not Available	No Tool Required	Not Required	Not Required	Not Required	Not Required
II	19119395	J-35616-3 (GY)	J-38125-217	Not Available	Not Available	Not Available	Not Available
III	19119440	J-35616-3 (GY)	J-38125-217	Not Available	Not Available	Not Available	Not Available

X101 Front Fascia Harness to Body Harness (T3U/UD5+Extended Cab)

Pin	Size	Color	Circuit	Terminal Type ID	Option	Function	Pin	Size	Color	Circuit	Terminal Type ID	Option
1	0.5	BK	250	I	—	Ground	1	0.5	BK	250	II	—
2	0.5	VT/GY	5218	I	—	Front Parking Right Mid Sensor	2	0.5	VT/GY	5218	II	—
3	0.5	WH/GY	5217	I	—	Front Parking Right Corner Sensor	3	0.5	WH/GY	5217	II	—
4	0.75	BK	150	I	—	Ground	4	0.75	BK	150	III	—
5	0.5	VT/WH	5215	I	—	Front Parking Left Corner Sensor	5	0.5	VT/WH	5215	II	—
6	0.5	BK/D-BU	5214	I	—	Front Parking Sensor Low Reference	6	0.5	BK/D-BU	5214	II	—
7	0.5	YE/GY	5216	I	—	Front Parking Left Mid Sensor	7	0.5	YE/GY	5216	II	—

X101 Front Fascia Harness to Body Harness (T3U/UD5+Extended Cab) (cont'd)

Pin	Size	Color	Circuit	Terminal Type ID	Option	Function	Pin	Size	Color	Circuit	Terminal Type ID	Option
8	0.5	YE/ VT	5213	I	—	Front Parking Left/ Right/Mid Sensor	8	0.5	YE/ VT	5213	II	—
9	0.5	BN/ VT	2234	I	—	Front Fog Lamp Control	9	0.5	BN/ VT	2234	II	—
10 - 12	—	—	—	—	—	Not Occupied	10 - 12	—	—	—	—	—

X101 Front Fascia Harness to Body Harness (T3U/UD5+Regular Cab)

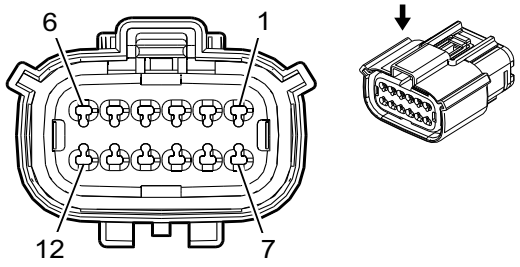

2424960

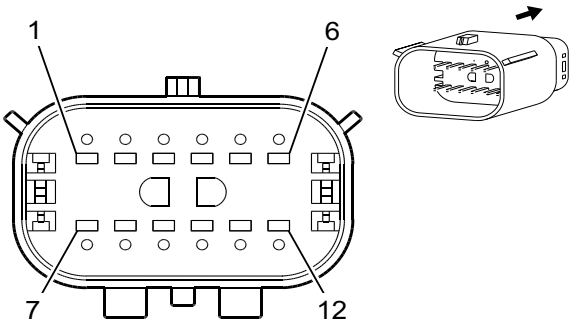

1825167

Connector Part Information

Harness Type: Front Fascia
OEM Connector: Not Available
Service Connector: Service by Harness - See Part Catalog
Description: 12-Way F

Connector Part Information

Harness Type: Body
OEM Connector: 35086558
Service Connector: 19369242
Description: 12-Way M 150 MX Series, Sealed (BK)

Terminal Part Information

Terminal Type ID	Terminated Lead	Diagnostic Test Probe	Terminal Removal Tool	Service Terminal	Tray Name	Core Crimp	Insulation Crimp
I	Not Required	Not Available	No Tool Required	Not Required	Not Required	Not Required	Not Required
II	19119395	J-35616-3 (GY)	J-38125-217	Not Available	Not Available	Not Available	Not Available
III	19119440	J-35616-3 (GY)	J-38125-217	Not Available	Not Available	Not Available	Not Available

X101 Front Fascia Harness to Body Harness (T3U/UD5+Regular Cab)

Pin	Size	Color	Circuit	Terminal Type ID	Option	Function	Pin	Size	Color	Circuit	Terminal Type ID	Option
1	0.5	BK	250	I	—	Ground	1	0.5	BK	250	II	—
2	0.5	VT/GY	5218	I	—	Front Parking Right Mid Sensor	2	0.5	VT/GY	5218	II	—
3	0.5	WH/GY	5217	I	—	Front Parking Right Corner Sensor	3	0.5	WH/GY	5217	II	—
4	0.75	BK	150	I	—	Ground	4	0.75	BK	150	III	—
5	0.5	VT/WH	5215	I	—	Front Parking Left Corner Sensor	5	0.5	VT/WH	5215	II	—
6	0.5	BK/D-BU	5214	I	—	Front Parking Sensor Low Reference	6	0.5	BK/D-BU	5214	II	—
7	0.5	YE/GY	5216	I	—	Front Parking Left Mid Sensor	7	0.5	YE/GY	5216	II	—

X101 Front Fascia Harness to Body Harness (T3U/UD5+Regular Cab) (cont'd)

Pin	Size	Color	Circuit	Terminal Type ID	Option	Function	Pin	Size	Color	Circuit	Terminal Type ID	Option
8	0.5	YE/ VT	5213	I	—	Front Parking Left/ Right/Mid Sensor	8	0.5	YE/ VT	5213	II	—
9	0.5	BN/ VT	2234	I	—	Front Fog Lamp Control	9	0.5	BN/ VT	2234	II	—
10 - 12	—	—	—	—	—	Not Occupied	10 - 12	—	—	—	—	—

X101 Front Fascia Harness to Body Harness (UD5)

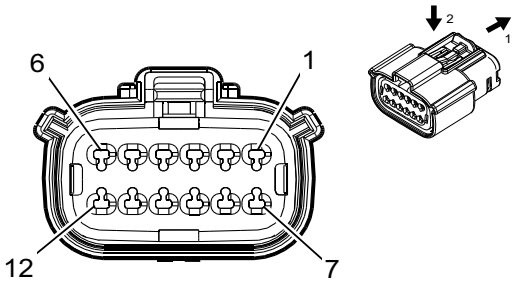

2871860

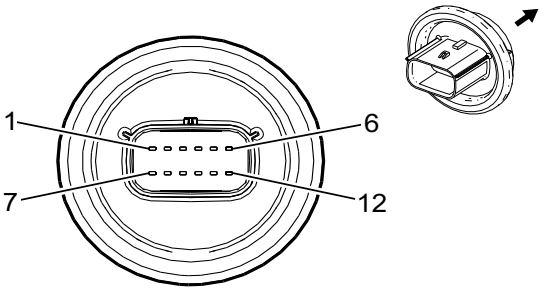

3238775

Connector Part Information

Harness Type: Front Fascia
OEM Connector: 35104106
Service Connector: Service by Harness - See Part Catalog
Description: 12-Way F 150 MX Series, Sealed (BK)

Connector Part Information

Harness Type: Body
OEM Connector: Not Available
Service Connector: -
Description: 12-Way M

Terminal Part Information

Terminal Type ID	Terminated Lead	Diagnostic Test Probe	Terminal Removal Tool	Service Terminal	Tray Name	Core Crimp	Insulation Crimp
I	Not Required	J-35616-2A (GY)	No Tool Required	Not Required	Not Required	Not Required	Not Required
II	Not Required	No Tool Required	Not Available	Not Available	Not Available	Not Available	Not Available

X101 Front Fascia Harness to Body Harness (UD5)

Pin	Size	Color	Circuit	Terminal Type ID	Option	Function	Pin	Size	Color	Circuit	Terminal Type ID	Option
1	—	—	—	—	—	Not Occupied	1	—	—	—	—	—
2	0.5	VT/GY	5218	I	—	Front Parking Right Mid Sensor	2	0.5	VT/GY	5218	II	—
3	0.5	WH/GY	5217	I	—	Front Parking Right Corner Sensor	3	0.5	WH/GY	5217	II	—
4	—	—	—	—	—	Not Occupied	4	—	—	—	—	—
5	0.5	VT/WH	5215	I	—	Front Parking Left Corner Sensor	5	0.5	VT/WH	5215	II	—
6	0.5	BK/D-BU	5214	I	—	Front Parking Sensor Low Reference	6	0.5	BK/D-BU	5214	II	—
7	0.5	YE/GY	5216	I	—	Front Parking Left Mid Sensor	7	0.5	YE/GY	5216	II	—

X101 Front Fascia Harness to Body Harness (UD5) (cont'd)

Pin	Size	Color	Circuit	Terminal Type ID	Option	Function	Pin	Size	Color	Circuit	Terminal Type ID	Option
8	0.5	YE/ VT	5213	I	—	Front Parking Left/ Right/Mid Sensor	8	0.5	YE/ VT	5213	II	—
9 - 12	—	—	—	—	—	Not Occupied	9 - 12	—	—	—	—	—

X103 Chassis Harness to Chassis Harness

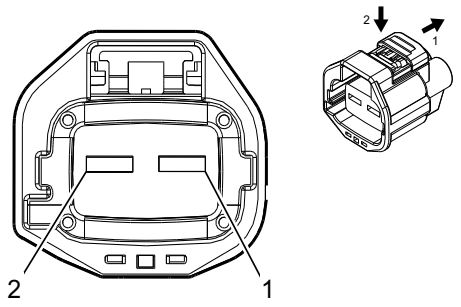

4584202

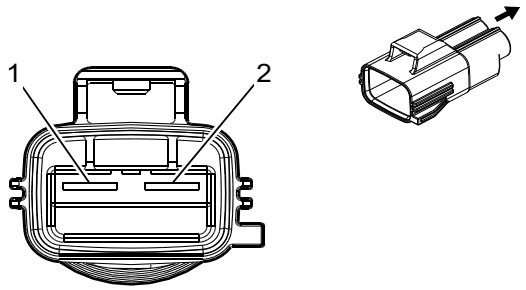

4789729

Connector Part Information

Harness Type: Chassis
OEM Connector: 13888959
Service Connector: 19355452
Description: 2-Way F 6.3 Series, Sealed (D-GY)

Connector Part Information

Harness Type: Chassis
OEM Connector: 35063672
Service Connector: 19368221
Description: 2-Way M 6.3 YESC Series, Sealed (GY)

Terminal Part Information

Terminal Type ID	Terminated Lead	Diagnostic Test Probe	Terminal Removal Tool	Service Terminal	Tray Name	Core Crimp	Insulation Crimp
I	Not Required	J-35616-42 (RD)	No Tool Required	Not Required	Not Required	Not Required	Not Required
II	Not Required	J-35616-43 (RD)	No Tool Required	Not Required	Not Required	Not Required	Not Required

X103 Chassis Harness to Chassis Harness

Pin	Size	Color	Circuit	Terminal Type ID	Option	Function	Pin	Size	Color	Circuit	Terminal Type ID	Option
1	4	RD/ L-GN	742	I	—	Battery Positive Voltage	1	4	RD/ L-GN	742	II	—
2	—	—	—	—	—	Not Occupied	2	—	—	—	—	—

X110 Body Harness to Left Front Headlamp Harness

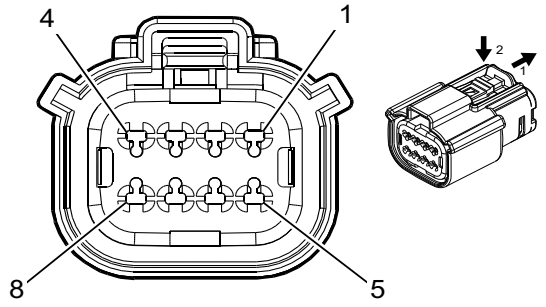

4846407

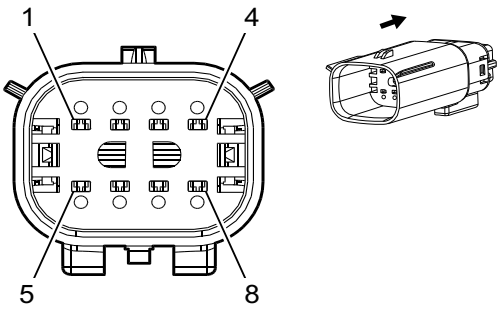

2667653

Connector Part Information

Harness Type: Body
OEM Connector: 35037827
Service Connector: 19366859
Description: 8-Way F 150 MX Series, Sealed (BK)

Connector Part Information

Harness Type: Left Front Headlamp
OEM Connector: Not Available
Service Connector: Service by Harness - See Part Catalog
Description: 8-Way M

Terminal Part Information

Terminal Type ID	Terminated Lead	Diagnostic Test Probe	Terminal Removal Tool	Service Terminal	Tray Name	Core Crimp	Insulation Crimp
I	Not Required	J-35616-2A (GY)	No Tool Required	Not Required	Not Required	Not Required	Not Required
II	Not Required	Not Available	No Tool Required	Not Required	Not Required	Not Required	Not Required

X110 Body Harness to Left Front Headlamp Harness

Pin	Size	Color	Circuit	Terminal Type ID	Option	Function	Pin	Size	Color	Circuit	Terminal Type ID	Option
1	0.75	BK	150	I	—	Ground	1	0.75	BK	150	II	—
2	0.75	YE	2227	I	—	Left Headlamp Control	2	0.75	YE	2227	II	—
3	0.75	YE	712	I	—	Left Headlamp Low Beam Control	3	0.75	YE	712	II	—
4	0.75	WH	711	I	—	Left Headlamp High Beam Control	4	0.75	WH	711	II	—
5	0.5	VT/GY	709	I	—	Left Park Lamp Control	5	0.5	VT/GY	709	II	—
6	0.35	VT/BK	6568	I	—	Front Turn Lamp Feedback Signal	6	0.35	VT/BK	6568	II	—
7	0.5	BU/WH	1314	I	—	Left Front Turn Signal Lamp Control	7	0.5	BU/WH	1314	II	—
8	0.35	GY/D-BU	7538	I	—	Left Front DRL Control	8	0.35	GY/D-BU	7538	II	—

X111 Engine Harness to Transfer Case Harness (NQH/HQF)

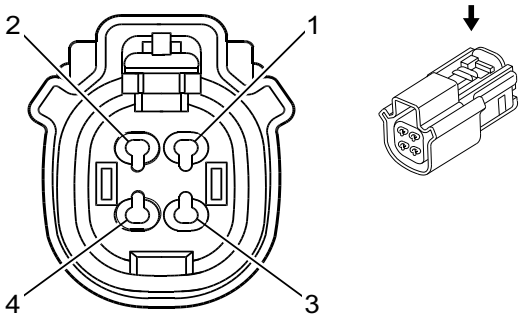

—

1960031

Connector Part Information

Harness Type: Engine
OEM Connector: 33346391
Service Connector: 19366645
Description: 4-Way F 150 MX Series, Sealed (BK)

Connector Part Information

Harness Type: Transfer Case
OEM Connector: Not Available
Service Connector: Service by Harness - See Part Catalog
Description: 4-Way M

Terminal Part Information

Terminal Type ID	Terminated Lead	Diagnostic Test Probe	Terminal Removal Tool	Service Terminal	Tray Name	Core Crimp	Insulation Crimp
I	Not Required	J-35616-14 (GN)	No Tool Required	Not Required	Not Required	Not Required	Not Required
II	Not Required	J-35616-2A (GY)	No Tool Required	Not Required	Not Required	Not Required	Not Required
III	Not Required	J-35616-3 (GY)	No Tool Required	Not Required	Not Required	Not Required	Not Required

X111 Engine Harness to Transfer Case Harness (NQH/HQF)

Pin	Size	Color	Circuit	Terminal Type ID	Option	Function	Pin	Size	Color	Circuit	Terminal Type ID	Option
1	1.5	BK	4450	I	—	Ground	1	1.5	BK	4450	III	—
2	0.5	YE/WH	1695	II	—	Four Wheel Drive Wheel Lock Indicator Control	2	0.5	YE/WH	1695	III	—
3	0.5	VT/BK	2139	II	—	Run/Crank Ignition 1 Voltage	3	0.5	VT/BK	2139	III	—
4	0.5	GY/BK	1570	II	—	Front Axle Actuator Control	4	0.5	GY/BK	1570	III	—

X111 Engine Harness to Transfer Case Harness (NQH/NQF)

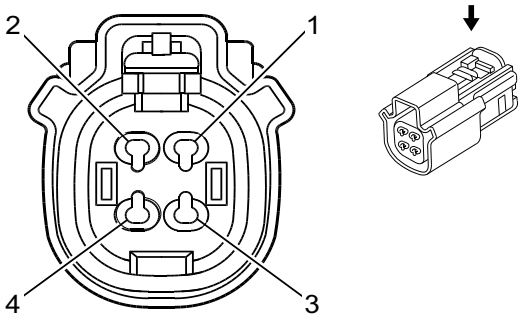

1960031

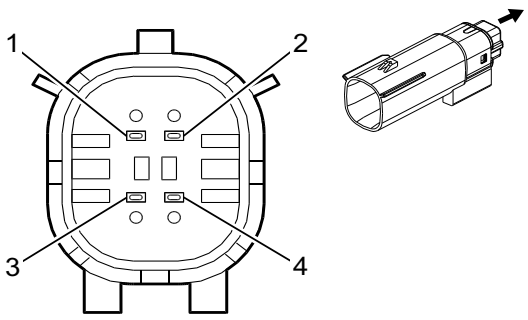

2368875

Connector Part Information

Harness Type: Engine
OEM Connector: 33346391
Service Connector: 19366645
Description: 4-Way F 150 MX Series, Sealed (BK)

Connector Part Information

Harness Type: Transfer Case
OEM Connector: 33344515
Service Connector: Service by Harness - See Part Catalog
Description: 4-Way M 150 MX Series, Sealed (BK)

Terminal Part Information

Terminal Type ID	Terminated Lead	Diagnostic Test Probe	Terminal Removal Tool	Service Terminal	Tray Name	Core Crimp	Insulation Crimp
I	Not Required	J-35616-2A (GY)	No Tool Required	Not Required	Not Required	Not Required	Not Required
II	Not Required	J-35616-3 (GY)	No Tool Required	Not Required	Not Required	Not Required	Not Required

X111 Engine Harness to Transfer Case Harness (NQH/NQF)

Pin	Size	Color	Circuit	Terminal Type ID	Option	Function	Pin	Size	Color	Circuit	Terminal Type ID	Option
1	1	BK	4450	I	—	Ground	1	0.5	BK	4450	II	—
2	0.5	YE/WH	1695	I	—	Four Wheel Drive Wheel Lock Indicator Control	2	0.5	YE/WH	1695	II	—
3	0.5	VT/BK	2139	I	—	Run/Crank Ignition 1 Voltage	3	0.5	VT/BK	2139	II	—
4	0.5	GY/BK	1570	I	—	Front Axle Actuator Control	4	0.5	GY/BK	1570	II	—

X112 Engine Harness to Engine Cooling Fan Harness (L5P)

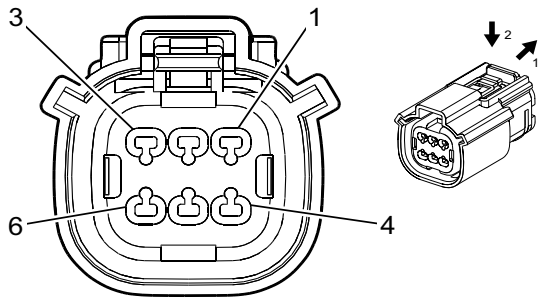

—

4574736

Connector Part Information

Harness Type: Engine
OEM Connector: 33367609
Service Connector: 13578533
Description: 6-Way F 150 MX Series, Sealed (BK)

Connector Part Information

Harness Type: Engine Cooling Fan
OEM Connector: Not Available
Service Connector: Service by Harness - See Part Catalog
Description: 6-Way M

Terminal Part Information

Terminal Type ID	Terminated Lead	Diagnostic Test Probe	Terminal Removal Tool	Service Terminal	Tray Name	Core Crimp	Insulation Crimp
I	Not Required	J-35616-2A (GY)	No Tool Required	Not Required	Not Required	Not Required	Not Required
II	Not Required	Not Available	No Tool Required	Not Required	Not Required	Not Required	Not Required

X112 Engine Harness to Engine Cooling Fan Harness (L5P)

Pin	Size	Color	Circuit	Terminal Type ID	Option	Function	Pin	Size	Color	Circuit	Terminal Type ID	Option
1	0.75	BK	4450	I	—	Ground	1	0.75	BK	4450	II	—
2	—	—	—	—	—	Not Occupied	2	—	—	—	—	—
3	0.5	WH	2368	I	—	Cooling Fan Control Signal	3	0.5	WH	2368	II	—
4	0.5	BK/BN	6141	I	—	Cooling Fan Speed Low Reference	4	0.5	BK/BN	6141	II	—
5	0.5	BU/VT	2364	I	—	Cooling Fan Speed Signal	5	0.5	BU/VT	2364	II	—
6	0.5	GY/RD	2365	I	—	Cooling Fan Speed 5V Reference	6	0.5	GY/RD	2365	II	—

X115 Body Harness to Engine Harness

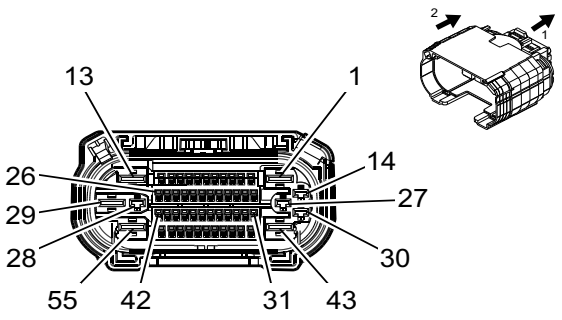

4992329

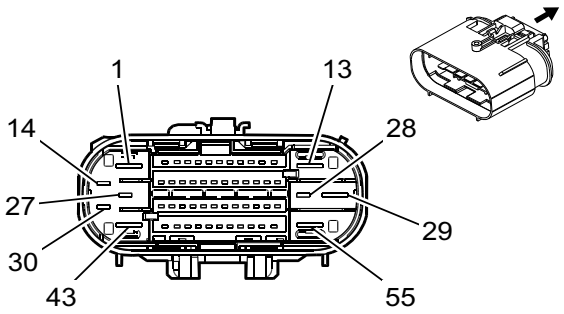

4994369

Connector Part Information

Harness Type: Body

OEM Connector: 35016653

Service Connector: 19371184

Description: 55-Way F 1.2 OCS, 2.8, 6.3 CTS Series, Sealed (GY)

Connector Part Information

Harness Type: Engine

OEM Connector: 35016655

Service Connector: -

Description: 55-Way M 1.2 OCS, 2.8, 6.3 CTS Series, Sealed (GY)

Terminal Part Information

Terminal Type ID	Terminated Lead	Diagnostic Test Probe	Terminal Removal Tool	Service Terminal	Tray Name	Core Crimp	Insulation Crimp
I	19119592	J-35616-4A (PU)	J-38125-557	Not Available	Not Available	Not Available	Not Available
II	19371240	J-35616-16 (LT GN)	J-38125-559	Not Available	Not Available	Not Available	Not Available
III	Not Available	J-25616-64B (LT BU)	J-38125-12A	Not Available	Not Available	Not Available	Not Available
IV	Not Available	J-35616-14 (GN)	J-38125-215A	Not Available	Not Available	Not Available	Not Available
V	Not Available	J-35616-42 (RD)	J-38125-215A	Not Available	Not Available	Not Available	Not Available
VI	NPN	J-35616-17 (LT GN)	J-38125-215A	Not Available	Not Available	Not Available	Not Available
VII	13584548	J-35616-5 (PU)	J-38125-215A	Not Available	Not Available	Not Available	Not Available
VIII	19370818	J-35616-17 (LT GN)	J-38125-215A	Not Available	Not Available	Not Available	Not Available
IX	84616651	J-35616-17 (LT GN)	J-38125-215A	Not Available	Not Available	Not Available	Not Available
X	Not Available	J-35616-17 (LT GN)	Not Available	Not Available	Not Available	Not Available	Not Available
XI	Not Available	J-35616-32 (OR)	J-38125-36	Not Available	Not Available	Not Available	Not Available

X115 Body Harness to Engine Harness

Pin	Size	Color	Circuit	Terminal Type ID	Option	Function	Pin	Size	Color	Circuit	Terminal Type ID	Option
1	—	—	—	—	—	Not Occupied	1	—	—	—	—	—
2	1	BK	9003	IV	—	Not Used Not Used	2	1 1	BK BK	9003 9000	VIII VIII	L5P L8T

X115 Body Harness to Engine Harness (cont'd)

Pin	Size	Color	Circuit	Terminal Type ID	Option	Function	Pin	Size	Color	Circuit	Terminal Type ID	Option
3	0.35	BK/ BU	1271	III	—	Accelerator Pedal Position Low Reference 1	3	0.5	BK/ BU	1271	IX	—
4	0.35	BN/ WH	419	II	—	Check Engine Indicator Control	4	0.5	BN/ WH	419	X	—
5	0.35	GN/ WH	1162	III	—	Accelerator Pedal Position Signal 2	5	0.5	GN/ WH	1162	IX	—
6	0.35	GN/ BN	507	II	—	Wait To Start Indicator Control	6	0.5	GN/ BN	507	X	—
7	0.5	RD/ VT	2640	II	—	Battery Positive Voltage	7	0.75	RD/ VT	2640	VIII	—
8	—	—	—	—	—	Not Occupied	8	—	—	—	—	—
9	0.35	VT/ WH	239	II	—	Run/Crank Ignition 1 Voltage	9	0.5	VT/ WH	239	X	—
10	0.5	RD/ BU	4540	II	—	Battery Positive Voltage	10	0.75	RD/ D-BU	4540	VIII	—
11	0.5	BU/ YE	68	II	—	Low Coolant Level Indicator Control	11	0.5	BU/ YE	68	X	—
12	1 1	GN/ WH BK	488 9003	IV IV	L5P L8T	Not Used Power Take Off Control Switch Not Used	12	1 0.5 1	BK GN/ WH BK	9003 488 9000	VIII X VIII	— L5P L8T
13	0.35	BN/ GN	4311	VI	—	Power Take Off Enable In Cab Switch Normally Closed Signal	13	0.5	BN/ GN	4311	XI	—
14	—	—	—	—	—	Not Occupied	14	—	—	—	—	—
15	0.35	YE	4063	II	—	Hood Status A Signal	15	0.5	YE	4063	X	—
16	0.5	VT/ GN	439	II	—	Run/Crank Ignition 1 Voltage	16	0.5	VT/ L-GN	439	X	—
17	0.35	WH/ BU	5986	II	—	Serial Data Communi-cation Enable	17	0.5	WH/ D-BU	5986	X	—
18	0.35	BK/ GY	2204	II	—	Engine Control Sensors Low Reference (3) Enhanced Driver Mode 1 Switch Low Reference	18	0.5 0.5	BK/ GY BK/ VT	626 3109	X X	L8T L5P

X115 Body Harness to Engine Harness (cont'd)

Pin	Size	Color	Circuit	Terminal Type ID	Option	Function	Pin	Size	Color	Circuit	Terminal Type ID	Option
19	0.35	WH/ BN	2203	II	—	Driver Mode Switch Signal Enhanced Driver Mode 2 Switch Signal	19	0.5 0.5	WH/ BN WH/ BN	4108 2203	X X	L5P L8T
20	0.35	GY	4109	II	—	Engine Control Sensors 5 Volt Reference (1) Driver Mode Switch 5V Reference	20	0.5 0.5	BU/ RD GY	460 4109	X X	L8T L5P
21	—	—	—	—	—	Not Occupied	21	—	—	—	—	—
22	0.35	VT/ YE	5985	II	—	Accessory Wakeup Serial Data	22	0.5	VT/ YE	5985	X	—
23 - 25	—	—	—	—	—	Not Occupied	23 - 25	—	—	—	—	—
26	0.35	BU/ GY	636	II	—	Outside Ambient Air Temperature Sensor Signal	26	0.5	BU/ GY	636	X	—
27	0.35	VT/ BN	300	I	—	Run Ignition 3 Voltage	27	0.5	VT/ BN	300	VII	—
28 - 30	—	—	—	—	—	Not Occupied	28 - 30	—	—	—	—	—
31	0.35	WH/ BU	6311	II	—	Cruise/ETC/ TCC Brake Signal	31	0.5	WH/ D-BU	6311	X	—
32	0.35	VT/ BU	6091	II	—	Crankshaft Position Sensor Replicated Signal	32	0.5	VT/ D-BU	6091	X	—
33	0.35	BN	1560	II	—	Neutral Indicator Control	33	0.5	BN	1560	X	—
34	—	—	—	—	—	Not Occupied	34	—	—	—	—	—
35	0.35	BK/ YE	5382	II	—	Engine Control Sensors Low Reference (3) Brake Position Sensor Low Reference	35	0.5 0.5	BK/ GY BK/ YE	626 5382	X X	L8T L5P
36	0.35	WH/ L-GN	5380	II	—	Brake Position Sensor Signal	36	0.5	WH/ L-GN	5380	X	—

X115 Body Harness to Engine Harness (cont'd)

Pin	Size	Color	Circuit	Terminal Type ID	Option	Function	Pin	Size	Color	Circuit	Terminal Type ID	Option
37	0.35	WH/ RD	5381	II	—	Engine Control Sensors 5 Volt Reference (2) Brake Position Sensor 5V Reference	37	0.5 0.5	WH/ RD WH/ RD	480 5381	X X	L8T L5P
38	0.5	BU	2500	II	—	High Speed GMLAN Serial Data (+) 1	38	0.5	BU	2500	X	—
39	0.5	WH	2501	II	—	High Speed GMLAN Serial Data (-) 1	39	0.5	WH	2501	X	—
40	0.35	BK/ VT	1272	III	—	Accelerator Pedal Position Low Reference 2	40	0.5	BK/ VT	1272	IX	—
41 - 42	—	—	—	—	—	Not Occupied	41 - 42	—	—	—	—	—
43	4	BK/ WH	2251	V	—	Signal Ground	43	4	BK/ WH	451	XI	—
44	1	RD/ L-GN	1840	IV	—	Battery Positive Voltage	44	1.5	RD/ L-GN	1840	X	—
45	0.5	GY/ BN	7065	II	—	Wheel Speed Sensor Control Right Front	45	0.5	GY/ BN	7065	X	—
46	0.35	BK/ L-GN	580	II	—	Outside Ambient Temperature Sensor Low Reference Engine Control Sensors Low Reference (2)	46	0.5 0.5	BK/ D-BU BK/ L-GN	61 580	X X	L5P L8T
47	0.35	BU/ BN	7573	II	—	Electric Variable Displace-ment Supply	47	0.5	BU/ BN	7573	X	—
48	—	—	—	—	—	Not Occupied	48	—	—	—	—	—
49	0.35	YE/ WH	1161	III	—	Accelerator Pedal Position Signal 1	49	0.5	YE/ WH	1161	IX	—
50	0.35	WH/ RD	1164	III	—	Accelerator Pedal Position 5V Reference 1	50	0.5	WH/ RD	1164	IX	—

X115 Body Harness to Engine Harness (cont'd)

Pin	Size	Color	Circuit	Terminal Type ID	Option	Function	Pin	Size	Color	Circuit	Terminal Type ID	Option
51	0.35	BN/RD	1274	III	—	Accelerator Pedal Position 5V Reference 2	51	0.5	BN/RD	1274	IX	—
52	0.5	YE	872	II	—	Wheel Speed Sensor Signal Right Front	52	0.5	YE	872	X	—
53	0.35	BU/YE	7574	II	—	Electric Variable Displace-ment Control	53	0.5	BU/YE	7574	X	—
54	1	BK	9003	IV	—	Not Used Not Used	54	1 1	BK BK	9003 9000	VIII VIII	L5P L8T
55	—	—	—	—	—	Not Occupied	55	—	—	—	—	—

X116 Engine Harness to Glow Plug Jumper Harness (L5P)

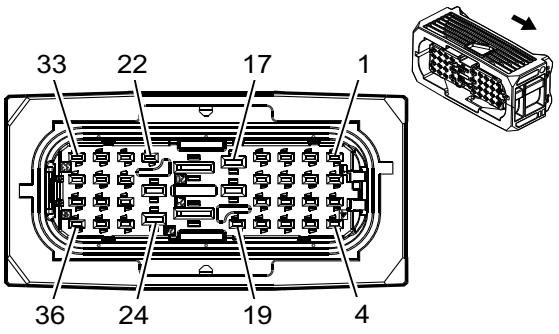

4204560

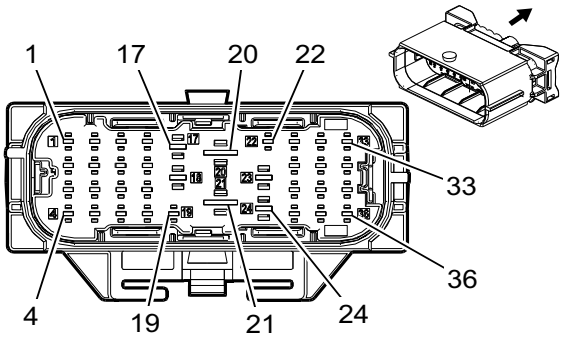

3960400

Connector Part Information

Harness Type: Engine
OEM Connector: 13929980
Service Connector: 19333092
Description: 36-Way F 1.5, 2.8 CTS, 6.3 MCP Series (BK)

Connector Part Information

Harness Type: Glow Plug Jumper
OEM Connector: 13594541
Service Connector: Service by Harness - See Part Catalog
Description: 36-Way M 1.5, 2.8, 5.8 Series, Sealed (BK)

Terminal Part Information

Terminal Type ID	Terminated Lead	Diagnostic Test Probe	Terminal Removal Tool	Service Terminal	Tray Name	Core Crimp	Insulation Crimp
I	19329758	J-35616-14 (GN)	J-38125-215A	Not Available	Not Available	Not Available	Not Available
II	Not Available	J-35616-14 (GN)	J-38125-215A	Not Available	Not Available	Not Available	Not Available
III	Not Available	J-35616-35 (VT)	J-38125-215A	1241388-1	Lear 17	E	C
IV	Not Available	J-35616-35 (VT)	J-38125-215A	Not Available	Not Available	Not Available	Not Available
V	Not Required	J-35616-3 (GY)	No Tool Required	Not Required	Not Required	Not Required	Not Required
VI	Not Required	J-35616-5 (PU)	No Tool Required	Not Required	Not Required	Not Required	Not Required

X116 Engine Harness to Glow Plug Jumper Harness (L5P)

Pin	Size	Color	Circuit	Terminal Type ID	Option	Function	Pin	Size	Color	Circuit	Terminal Type ID	Option
1	0.5	BU/BN	4498	I	—	High Speed GMLAN Serial Data (+) 7	1	0.5	BU/BN	4498	V	L5P
2	0.5	WH	4499	I	—	High Speed GMLAN Serial Data (-) 7	2	0.5	WH	4499	V	L5P
3	0.5	BU	2500	I	—	High Speed GMLAN Serial Data (+) 1	3	0.5	BU	2500	V	L5P
4	0.5	WH	2501	I	—	High Speed GMLAN Serial Data (-) 1	4	0.5	WH	2501	V	L5P

X116 Engine Harness to Glow Plug Jumper Harness (L5P) (cont'd)

Pin	Size	Color	Circuit	Terminal Type ID	Option	Function	Pin	Size	Color	Circuit	Terminal Type ID	Option
5	0.5	BK/ BN	6782	I	—	Exhaust Gas Temperature Sensor 1 Low Reference	5	0.5	BK/ BN	6782	V	L5P
6	0.5	BU/ WH	5277	I	—	Exhaust Gas Temperature Sensor 1	6	0.5	BU/ WH	5277	V	L5P
7	0.5	BK/ BU	6783	I	—	Exhaust Gas Temperature Sensor 2 Low Reference	7	0.5	BK/ BU	6783	V	L5P
8	0.5	BU/ GN	5377	I	—	Exhaust Gas Temperature Sensor 2	8	0.5	BU/ GN	5377	V	L5P
9	0.5	BK/ BU	6274	I	—	Exhaust Gas Recirculation Temperature Sensor Low Reference	9	0.5	BK/ BU	6274	V	L5P
10	0.5	WH/ BN	3237	I	—	Exhaust Gas Recirculation Temperature Sensor Signal	10	0.5	WH/ BN	3237	V	L5P
11	0.5 0.5	BK/ YE BK/ YE	3235 6275	I I	— —	Exhaust Gas Recirculation Temperature Sensor 3 Low Reference Exhaust Gas Recirculation Temperature Sensor 2 Low Reference	11	0.5	BK/ YE	6275	V	L5P
12	0.5 0.5	YE/ GN YE/ GN	3234 3236	I I	— —	Exhaust Gas Recirculation Temperature Sensor 3 Signal Exhaust Gas Recirculation Temperature Sensor 2 Signal	12	0.5	YE/ GN	3236	V	L5P
13	0.5	YE/ BK	3682	I	—	Charge Air Cooler Inlet Temperature Sensor Low Reference	13	0.5	YE/ BK	3682	V	L5P
14	0.5	GN	3683	I	—	Charge Air Cooler Inlet Temperature Sensor Signal	14	0.5	GN	3683	V	L5P
15	0.5	BN/ BK	2929	I	—	Fuel Metering Valve Low Control	15	0.5	BN/ BK	2929	V	L5P

X116 Engine Harness to Glow Plug Jumper Harness (L5P) (cont'd)

Pin	Size	Color	Circuit	Terminal Type ID	Option	Function	Pin	Size	Color	Circuit	Terminal Type ID	Option
16	0.5	YE	2928	I	—	Fuel Metering Valve High Control	16	0.5	YE	2928	V	L5P
17	0.5	VT/ YE	5985	IV	—	Accessory Wakeup Serial Data	17	0.5	VT/ YE	443	VI	L5P
18	0.5	VT/ BK	2139	IV	—	Run/Crank Ignition 1 Voltage	18	0.5	VT/ BK	2139	VI	L5P
19 - 21	—	—	—	—	—	Not Occupied	19 - 21	—	—	—	—	—
22	0.5	VT/ BU	3674	II	—	NOx Sensor 1 Control	22	0.5	VT/ BU	3674	V	L5P
23	0.5	GY	23	IV	—	Generator Field Duty Cycle Signal	23	0.5	GY	23	VI	L5P
24	0.75 0.75	BN BN	25 25	III IV	— —	Charge Indicator Control Charge Indicator Control	24	0.5	BN	25	VI	L5P
25 - 27	—	—	—	—	—	Not Occupied	25 - 27	—	—	—	—	—
28	0.5	VT/ BU	6091	I	—	Crankshaft Position Sensor Replicated Signal	28	0.5	VT/ BU	6091	V	L5P
29	—	—	—	—	—	Not Occupied	29	—	—	—	—	—
30	0.5	BU/ GN	7071	I	—	Heater Fuel Control	30	0.5	BU/ GN	7071	V	L5P
31	0.5	VT/ BN	2927	I	—	Hydrocarbon Injector Low Control	31	0.5	VT/ BN	2927	V	L5P
32	0.5	BN/ BU	2926	I	—	Hydrocarbon Injector High Control	32	0.5	BN/ BU	2926	V	L5P
33	0.5	BU/ BN	4498	I	—	High Speed GMLAN Serial Data (+) 7	33	0.5	BU/ BN	4498	V	L5P
34	0.5	WH	4499	I	—	High Speed GMLAN Serial Data (-) 7	34	0.5	WH	4499	V	L5P
35	0.5	BU	2500	I	—	High Speed GMLAN Serial Data (+) 1	35	0.5	BU	2500	V	L5P
36	0.5	WH	2501	I	—	High Speed GMLAN Serial Data (-) 1	36	0.5	WH	2501	V	L5P

X118 Glow Plug Jumper Harness to Engine Jumper Harness (L5P)

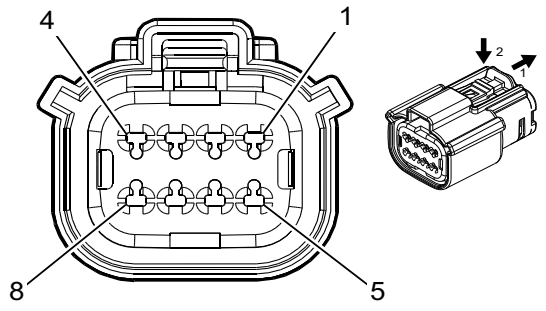

4846407

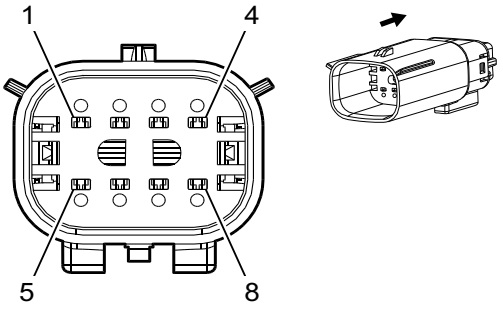

2667653

Connector Part Information

Harness Type: Glow Plug Jumper
OEM Connector: 13520069
Service Connector: Service by Harness - See Part Catalog
Description: 8-Way F 150 MX Series, Sealed (BK)

Connector Part Information

Harness Type: Engine Jumper
OEM Connector: 13520577
Service Connector: Service by Harness - See Part Catalog
Description: 8-Way M 150 MX Series, Sealed (BK)

Terminal Part Information

Terminal Type ID	Terminated Lead	Diagnostic Test Probe	Terminal Removal Tool	Service Terminal	Tray Name	Core Crimp	Insulation Crimp
I	Not Required	J-35616-14 (GN)	No Tool Required	Not Required	Not Required	Not Required	Not Required
II	Not Required	J-35616-3 (GY)	No Tool Required	Not Required	Not Required	Not Required	Not Required

X118 Glow Plug Jumper Harness to Engine Jumper Harness (L5P)

Pin	Size	Color	Circuit	Terminal Type ID	Option	Function	Pin	Size	Color	Circuit	Terminal Type ID	Option
1	0.5	VT/BU	6270	I	L5P	Crankshaft 60X Sensor 5V Reference	1	0.5	VT/BU	6270	II	L5P
2	0.5	BK/VT	6272	I	L5P	Crankshaft 60X Sensor Low Reference	2	0.5	BK/VT	6272	II	L5P
3	0.5	GN	6271	I	L5P	Crankshaft 60X Sensor Signal	3	0.5	GN	6271	II	L5P
4	0.5	BN/RD	2917	I	L5P	Fuel Rail Pressure Sensor 5V Reference	4	0.5	BN/RD	2917	II	L5P
5	0.5	BK/GN	2919	I	L5P	Fuel Rail Pressure Sensor Low Reference	5	0.5	BK/GN	2919	II	L5P
6	0.5	BU/WH	2918	I	L5P	Fuel Rail Pressure Sensor Signal	6	0.5	BU/WH	2918	II	L5P

X118 Glow Plug Jumper Harness to Engine Jumper Harness (L5P) (cont'd)

Pin	Size	Color	Circuit	Terminal Type ID	Option	Function	Pin	Size	Color	Circuit	Terminal Type ID	Option
7	0.5	BN/ YE	2161	I	L5P	Fuel Rail Pressure Sensor 2 Signal	7	0.5	BN/ YE	2161	II	L5P
8	—	—	—	—	—	Not Occupied	8	—	—	—	—	—

X118 Glow Plug Jumper Harness to Engine Jumper Harness (L8T)

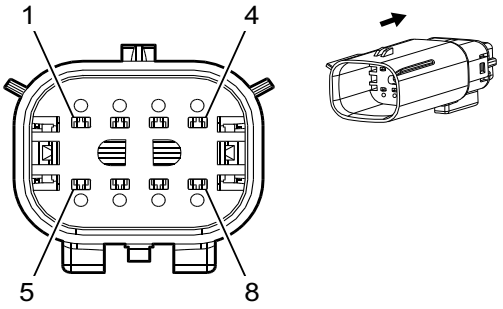

2667653

Connector Part Information

Harness Type: Glow Plug Jumper
OEM Connector: Not Available
Service Connector: Service by Harness - See Part Catalog
Description: 8-Way F

Connector Part Information

Harness Type: Engine Jumper
OEM Connector: 13520577
Service Connector: -
Description: 8-Way M 150 MX Series, Sealed (BK)

Terminal Part Information

Terminal Type ID	Terminated Lead	Diagnostic Test Probe	Terminal Removal Tool	Service Terminal	Tray Name	Core Crimp	Insulation Crimp
I	Not Required	J-35616-2A (GY)	No Tool Required	Not Required	Not Required	Not Required	Not Required
II	Not Required	J-35616-3 (GY)	No Tool Required	Not Required	Not Required	Not Required	Not Required

X118 Glow Plug Jumper Harness to Engine Jumper Harness (L8T)

Pin	Size	Color	Circuit	Terminal Type ID	Option	Function	Pin	Size	Color	Circuit	Terminal Type ID	Option
1	0.5	VT/BU	6270	I	L5P	Crankshaft 60X Sensor 5V Reference	1	0.5	VT/BU	6270	II	L5P
2	0.5	BK/VT	6272	I	L5P	Crankshaft 60X Sensor Low Reference	2	0.5	BK/VT	6272	II	L5P
3	0.5	GN	6271	I	L5P	Crankshaft 60X Sensor Signal	3	0.5	GN	6271	II	L5P
4	0.5	BN/RD	2917	I	L5P	Fuel Rail Pressure Sensor 5V Reference	4	0.5	BN/RD	2917	II	L5P
5	0.5	BK/GN	2919	I	L5P	Fuel Rail Pressure Sensor Low Reference	5	0.5	BK/GN	2919	II	L5P
6	0.5	BU/WH	2918	I	L5P	Fuel Rail Pressure Sensor Signal	6	0.5	BU/WH	2918	II	L5P

X118 Glow Plug Jumper Harness to Engine Jumper Harness (L8T) (cont'd)

Pin	Size	Color	Circuit	Terminal Type ID	Option	Function	Pin	Size	Color	Circuit	Terminal Type ID	Option
7	0.5	BN/ YE	2161	I	L5P	Fuel Rail Pressure Sensor 2 Signal	7	0.5	BN/ YE	2161	II	L5P

X120 Body Harness to Right Headlamp Harness

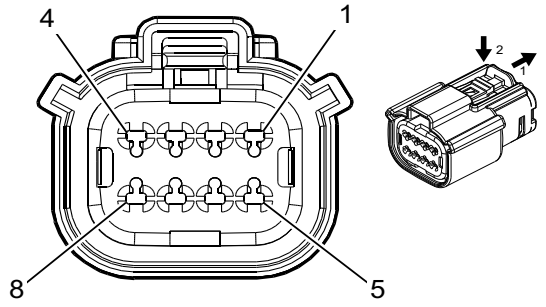

4846407

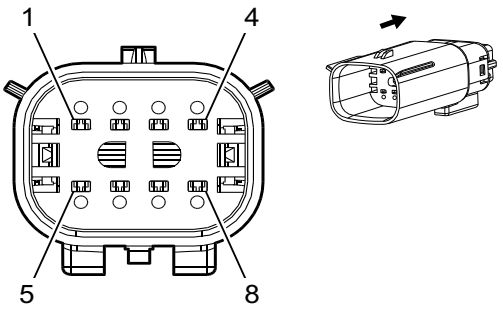

2667653

Connector Part Information

Harness Type: Body
OEM Connector: 35037827
Service Connector: 19366859
Description: 8-Way F 150 MX Series, Sealed (BK)

Connector Part Information

Harness Type: Right Headlamp
OEM Connector: Not Available
Service Connector: Service by Harness - See Part Catalog
Description: 8-Way M

Terminal Part Information

Terminal Type ID	Terminated Lead	Diagnostic Test Probe	Terminal Removal Tool	Service Terminal	Tray Name	Core Crimp	Insulation Crimp
I	Not Required	J-35616-2A (GY)	No Tool Required	Not Required	Not Required	Not Required	Not Required
II	Not Required	Not Available	No Tool Required	Not Required	Not Required	Not Required	Not Required

X120 Body Harness to Right Headlamp Harness

Pin	Size	Color	Circuit	Terminal Type ID	Option	Function	Pin	Size	Color	Circuit	Terminal Type ID	Option
1	0.75	BK	250	I	—	Ground	1	0.75	BK	250	II	—
2	0.75	YE/GY	2226	I	—	Right Headlamp Control	2	0.75	YE/GY	2226	II	—
3	1	YE	312	I	—	Right Headlamp Low Beam Control	3	1	YE	312	II	—
4	0.75	WH	311	I	—	Right Headlamp High Beam Control	4	0.75	WH	311	II	—
5	0.5	GY/BN	309	I	—	Right Park Lamp Control	5	0.5	GY/BN	309	II	—
6	0.35	WH/YE	7545	I	—	Right Front Turn Lamp Feedback Signal	6	0.35	WH/YE	7545	II	—
7	0.5	L-GN/VT	1315	I	—	Right Front Turn Signal Lamp Control	7	0.5	L-GN/VT	1315	II	—
8	0.35	BU/BN	7539	I	—	Right Front DRL Control	8	0.35	BU/BN	7539	II	—

X132 Engine Harness to Active Air Grille Shuttter Harness

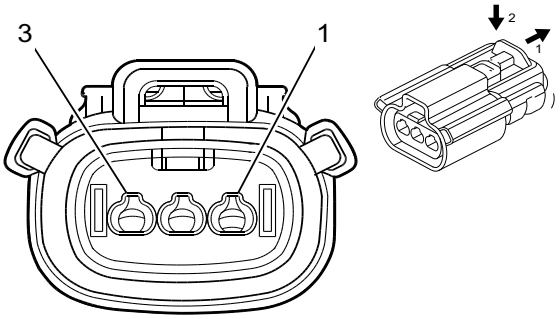

—

5095610

Connector Part Information

Harness Type: Engine
OEM Connector: 35143007
Service Connector: 84719651
Description: 3-Way F 1.5 Series, Sealed (BK)

Connector Part Information

Harness Type: Active Air Grille Shutter
OEM Connector: Not Available
Service Connector: Service by Harness - See Part Catalog
Description: 3-Way M

Terminal Part Information

Terminal Type ID	Terminated Lead	Diagnostic Test Probe	Terminal Removal Tool	Service Terminal	Tray Name	Core Crimp	Insulation Crimp
I	Not Required	J-35616-2A (GY)	No Tool Required	Not Required	Not Required	Not Required	Not Required
II	Not Required	Not Available	No Tool Required	Not Required	Not Required	Not Required	Not Required

X132 Engine Harness to Active Air Grille Shuttter Harness

Pin	Size	Color	Circuit	Terminal Type ID	Option	Function	Pin	Size	Color	Circuit	Terminal Type ID	Option
1	0.5	VT/D-BU	5705	I	—	Powertrain Main Relay Fused Control 6	1	0.5	VT/D-BU	5705	II	—
2	0.5	L-GN/VT	4621	I	—	Local Interconnect Network Serial Data Bus 21	2	0.5	L-GN/VT	4621	II	—
3	1	BK	4450	I	—	Ground	3	1	BK	4450	II	—

X136 Engine Harness to Auxiliary Battery Harness (K4B)

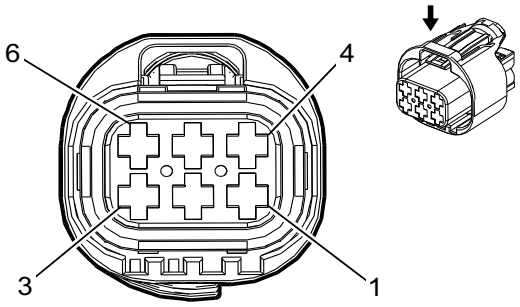

2042938

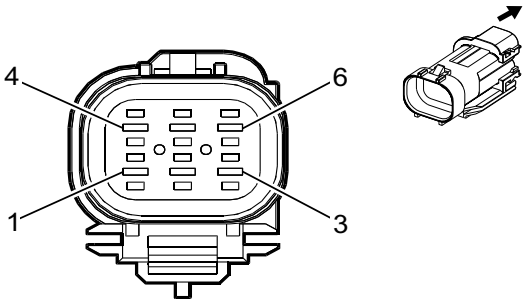

2042939

Connector Part Information

Harness Type: Engine

OEM Connector: 10866617

Service Connector: 19300330

Description: 6-Way F 2.8 Junior Power Timer Series, Sealed (GY)

Connector Part Information

Harness Type: Auxiliary Battery

OEM Connector: Not Available

Service Connector: Service by Harness - See Part Catalog

Description: 6-Way M

Terminal Part Information

Terminal Type ID	Terminated Lead	Diagnostic Test Probe	Terminal Removal Tool	Service Terminal	Tray Name	Core Crimp	Insulation Crimp
I	Not Required	J-35616-4A (PU)	No Tool Required	Not Required	Not Required	Not Required	Not Required
II	Not Required	Not Available	No Tool Required	Not Required	Not Required	Not Required	Not Required

X136 Engine Harness to Auxiliary Battery Harness (K4B)

Pin	Size	Color	Circuit	Terminal Type ID	Option	Function	Pin	Size	Color	Circuit	Terminal Type ID	Option
1	0.5	VT/BN	300	I	—	Run Ignition 3 Voltage	1	0.5	VT/BN	300	II	—
2	—	—	—	—	—	Not Occupied	2	—	—	—	—	—
3	0.5	RD/WH	3440	I	—	Battery Positive Voltage	3	0.5	RD/WH	3440	II	—
4	1	BK	4450	I	—	Ground	4	1	BK	4450	II	—
5 - 6	—	—	—	—	—	Not Occupied	5 - 6	—	—	—	—	—

X138 Body Harness to Chassis Harness

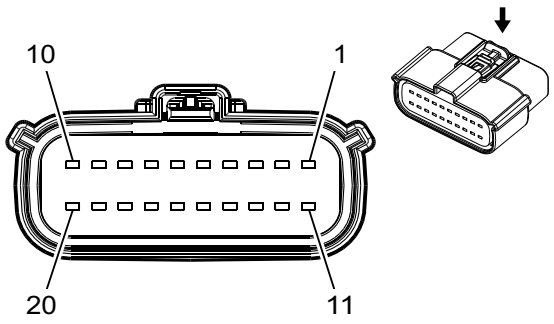

2871898

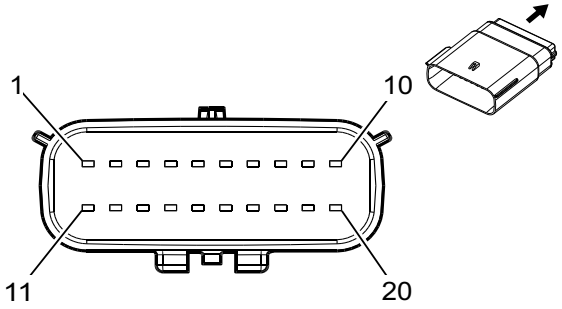

2871861

Connector Part Information

Harness Type: Body
OEM Connector: 13650143
Service Connector: 19300557
Description: 20-Way F 1.5 Series, Sealed (BK)

Connector Part Information

Harness Type: Chassis
OEM Connector: 33181044
Service Connector: 19351705
Description: 20-Way M 1.5 Series, Sealed (BK)

Terminal Part Information

Terminal Type ID	Terminated Lead	Diagnostic Test Probe	Terminal Removal Tool	Service Terminal	Tray Name	Core Crimp	Insulation Crimp
I	19300432	J-35616-2A (GY)	J-38125-217	Not Available	Not Available	Not Available	Not Available
II	19300635	J-35616-2A (GY)	J-38125-217	Not Available	Not Available	Not Available	Not Available
III	19119395	J-35616-3 (GY)	J-38125-217	Not Available	Not Available	Not Available	Not Available
IV	19119440	J-35616-3 (GY)	J-38125-217	Not Available	Not Available	Not Available	Not Available

X138 Body Harness to Chassis Harness

Pin	Size	Color	Circuit	Terminal Type ID	Option	Function	Pin	Size	Color	Circuit	Terminal Type ID	Option
1	0.5	VT/GN	1739	I	—	Run/Crank Ignition 1 Voltage	1	0.5	VT/GN	1739	III	—
2	—	—	—	—	—	Not Occupied	2	—	—	—	—	—
3	0.35	WH/BU	6973	II	—	Camera Signal 2	3	0.5	WH/BU	6973	III	—
4	0.75	GN/BN	2266	I	—	DC To AC Inverter Control 2	4	0.75	GN/BN	2266	IV	—
5	0.5	VT/WH	5065	I	—	Stop Lamp Relay Coil Control	5	0.5	VT/WH	5065	III	—
6	—	—	—	—	—	Not Occupied	6	—	—	—	—	—
7	0.5	BN/GN	3568	I	—	Passive Entry Rear Closure Antenna Signal Hi	7	0.5	BN/GN	3568	III	—

X138 Body Harness to Chassis Harness (cont'd)

Pin	Size	Color	Circuit	Terminal Type ID	Option	Function	Pin	Size	Color	Circuit	Terminal Type ID	Option
8	0.75	BK/ WH	2264	I	—	120 VAC Phase A 2	8	0.75	BK/ WH	2264	IV	—
9	0.5	WH/ BU	5986	I	—	Serial Data Communi-cation Enable	9	0.5	WH/ BU	5986	III	—
10	—	—	—	—	—	Not Occupied	10	—	—	—	—	—
11	0.35	GN	5060	II	—	Low Speed GMLAN Serial Data	11	0.5	GN	5060	III	—
12	0.35	BK	6974	II	—	Camera Low Reference	12	0.5	BU	6974	III	—
13	0.35	GY/ YE	6972	II	—	Camera Signal 2 +	13	0.5	GY/ YE	6972	III	—
14	0.75	RD/ WH	2265	I	—	120 VAC Phase B 2	14	0.75	RD/ WH	2265	IV	—
15	—	—	—	—	—	Not Occupied	15	—	—	—	—	—
16	1	WH/ VT	1430	I	—	Exterior Courtesy Lamp Control Exterior Courtesy Lamp Control	16	0.5 0.5	WH/ VT WH/ VT	1430 1430	IV III	— —
17	0.5	GN/ GY	3569	I	—	Passive Entry Rear Closure Antenna Signal Lo	17	0.5	GN/ GY	3569	III	—
18	0.35	BN	2257	II	—	Drain Wire	18	0.5	BN	2257	III	—
19	0.5	BU/ GN	1304	I	—	High Speed GMLAN Serial Data (+)9	19	0.5	BU/ GN	1304	III	—
20	0.5	WH/ GN	1305	I	—	High Speed GMLAN Serial Data (-)9	20	0.5	WH/ GN	1305	III	—

X140 Body Harness to Chassis Harness (Crew Cab)

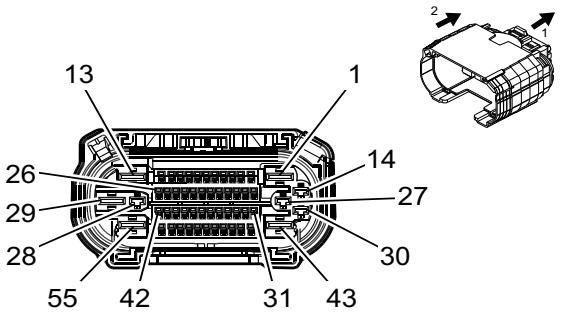

4992168

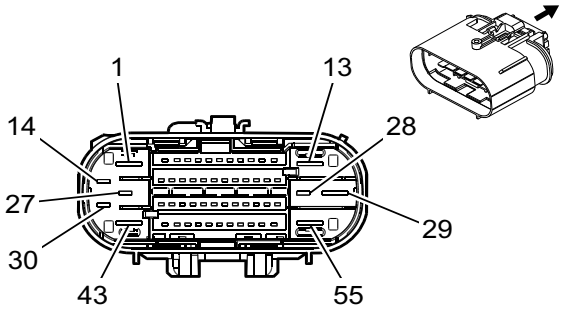

4993301

Connector Part Information

Harness Type: Body

OEM Connector: 35016652

Service Connector: 19371185

Description: 55-Way F 1.2 OCS, 2.8, 6.3 CTS Series, Sealed (BK)

Connector Part Information

Harness Type: Chassis

OEM Connector: 35205173

Service Connector: -

Description: 55-Way M 1.2 OCS, 2.8, 6.3 CTS Series, Sealed (BK)

Terminal Part Information

Terminal Type ID	Terminated Lead	Diagnostic Test Probe	Terminal Removal Tool	Service Terminal	Tray Name	Core Crimp	Insulation Crimp
I	13579915	J-35616-40 (BU)	J-38125-556	1241408-1	Lear 28	A	B
II	19371240	J-35616-16 (LT GN)	J-38125-559	Not Available	Not Available	Not Available	Not Available
III	Not Available	J-35616-14 (GN)	J-38125-215A	Not Available	Not Available	Not Available	Not Available
IV	Not Available	J-35616-35 (VT)	J-38125-215A	Not Available	Not Available	Not Available	Not Available
V	13575574	J-35616-5 (PU)	J-38125-36	Not Available	Not Available	Not Available	Not Available
VI	19331019	J-35616-5 (PU)	J-38125-215A	Not Available	Not Available	Not Available	Not Available
VII	19370818	J-35616-17 (LT GN)	J-38125-215A	Not Available	Not Available	Not Available	Not Available
VIII	Not Available	J-35616-17 (LT GN)	Not Available	Not Available	Not Available	Not Available	Not Available
IX	Not Available	J-35616-32 (OR)	J-38125-36	Not Available	Not Available	Not Available	Not Available

X140 Body Harness to Chassis Harness (Crew Cab)

Pin	Size	Color	Circuit	Terminal Type ID	Option	Function	Pin	Size	Color	Circuit	Terminal Type ID	Option
1	2.5	L-GN/VT	1988	I	—	Park Brake Motor Apply Right Rear Control	1	4	L-GN/VT	1988	IX	—
2	1	BN/L-GN	19	III	—	Right Rear Stop/Turn Lamp Control	2	1	BN/L-GN	19	VII	—

X140 Body Harness to Chassis Harness (Crew Cab) (cont'd)

Pin	Size	Color	Circuit	Terminal Type ID	Option	Function	Pin	Size	Color	Circuit	Terminal Type ID	Option
3	0.5	GY/ YE	7128	II	—	Wheel Speed Sensor Control Right Rear	3	0.5	GY/ YE	7128	VIII	—
4	0.5	VT	882	II	—	Wheel Speed Sensor Signal Right Rear	4	0.5	VT	882	VIII	—
5	0.35	GY/ YE	1760	II	—	Left Side Object Detection LED Control	5	0.5	GY/ YE	1760	VIII	—
6	0.5	GY/ WH	7064	II	—	Wheel Speed Sensor Control Left Front	6	0.5	GY/ WH	7064	VIII	—
7	0.5	GY	830	II	—	Wheel Speed Sensor Signal Left Front	7	0.5	GY	830	VIII	—
8 - 9	—	—	—	—	—	Not Occupied	8 - 9	—	—	—	—	—
10	0.5	GY/ BK	7127	II	—	Wheel Speed Sensor Control Left Rear	10	0.5	GY/ BK	7127	VIII	—
11	0.5	BU	884	II	—	Wheel Speed Sensor Signal Left Rear	11	0.5	BU	884	VIII	—
12	1	YE/ D-BU	18	III	—	Left Rear Stop/Turn Lamp Control	12	1	YE/ D-BU	18	VII	—
13	2.5	WH	2001	I	—	Park Brake Motor Apply Left Rear Control	13	4	WH	2001	IX	—
14	2	RD/ VT	1242	IV	—	Battery Positive Voltage	14	2.5	RD/ VT	1242	VI	—
15	0.5	BN/ BK	7726	II	—	Minor Endgate Motor Return	15	0.5	BN/ BK	7726	VIII	—
16	0.35	GY	7292	II	—	Major Endgate Release Switch Signal Exterior	16	0.5	GY	7292	VIII	—
17	0.5	VT	7725	II	—	Minor Endgate Motor Supply Voltage	17	0.5	VT	7725	VIII	—
18	0.35	L-GN/ YE	6846	II	—	Rear License Lamp Control	18	0.5	L-GN/ YE	6846	VIII	—

X140 Body Harness to Chassis Harness (Crew Cab) (cont'd)

Pin	Size	Color	Circuit	Terminal Type ID	Option	Function	Pin	Size	Color	Circuit	Terminal Type ID	Option
19	—	—	—	—	—	Not Occupied	19	—	—	—	—	—
20	0.5	L-GN/ YE	1616	II	—	Brake Lining Wear Sensor Signal Rear	20	0.5	L-GN/ YE	1616	VIII	—
21	0.5	L-GN	1299	II	—	Major Endgate Motor Supply Voltage	21	0.5	L-GN	1299	VIII	—
22	0.35 0.35	L-GN/ D-BU L-GN/ D-BU	2733 4114	II II	JL1 -N2N-L5P	Local Interconnect Network Bus 33 Local Interconnect Network Serial Data Bus 14	22	0.35	L-GN/ VT	4114	VIII	—
23	0.5	VT/ L-GN	439	II	—	Run/Crank Ignition 1 Voltage	23	0.5	VT/ L-GN	439	VIII	—
24	0.35	YE	7294	II	—	Minor Endgate Release Switch Discrete Signal Exterior	24	0.5	YE	7294	VIII	—
25	0.5	BN/ WH	2374	II	—	Object Sensor Control	25	0.5	BN/ WH	2374	VIII	—
26	0.5	YE/ D-BU	2376	II	—	Left Rear Middle Object Sensor Signal	26	0.5	YE/ D-BU	2376	VIII	—
27	—	—	—	—	—	Not Occupied	27	—	—	—	—	—
28	2.5	RD/ GY	7040	IV	—	Battery Positive Voltage	28	2.5	RD/ GY	7040	VI	—
29	2.5	GY/ BK	4369	I	—	Park Brake Motor Low Reference Left Rear	29	4	GY/ BK	4369	IX	—
30	2	BU	47	IV	—	Trailer Auxiliary Control	30	2.5	BU	47	V	—
31	0.35	GY	1198	II	—	Endgate Release Switch Analog Signal Interior	31	0.5	GY	1198	VIII	—
32	0.5	YE/ BK	7730	II	—	Major Endgate Motor Return	32	0.5	YE/ BK	7730	VIII	—
33	0.5	BN/ D-BU	1602	II	—	Brake Lining Wear Sensor Signal Front	33	0.5	WH	1612	VIII	—

X140 Body Harness to Chassis Harness (Crew Cab) (cont'd)

Pin	Size	Color	Circuit	Terminal Type ID	Option	Function	Pin	Size	Color	Circuit	Terminal Type ID	Option
34	0.5	GY/ D-BU	7762	II	—	Cargo Bed Lamp Control	34	0.5	GY/ D-BU	7762	VIII	—
35	0.5	BU	2500	II	—	High Speed GMLAN Serial Data (+) 1	35	0.5	BU	2500	VIII	—
36	0.5	WH	2501	II	—	High Speed GMLAN Serial Data (-) 1	36	0.5	WH	2501	VIII	—
37	0.35	YE/ D-BU	7295	II	—	Left Minor Endgate Ajar Signal	37	0.5	YE/ D-BU	7295	VIII	—
38	0.35	L-GN/ D-BU	2733	II	—	Local Interconnect Network Bus 33	38	0.5	L-GN/ D-BU	2733	VIII	—
39	0.5	WH	6106	II	—	High Speed GMLAN Serial Data (-) 2	39	0.5	WH	6106	VIII	—
40	0.35	YE/ BK	5356	II	—	Left Tail Lamp Outage Detection Signal	40	0.5	YE/ BK	5356	VIII	—
41	0.5	BU/ YE	6105	II	—	High Speed GMLAN Serial Data (+) 2	41	0.5	BU/ YE	6105	VIII	—
42	0.5	WH	6106	II	—	High Speed GMLAN Serial Data (-) 2	42	0.5	WH	6106	VIII	—
43	2.5	GY	4368	I	—	Park Brake Motor Low Reference Right Rear	43	4	GY	4368	IX	—
44	1	BK	9003	III	—	—	44	1	BK	9000	VII	—
45	0.5	BK/ GY	2379	II	—	Object Sensor Low Reference	45	0.5	BK/ GY	2379	VIII	—
46	0.5	YE/ WH	2377	II	—	Right Rear Middle Object Sensor Signal	46	0.5	YE/ WH	2377	VIII	—
47	0.5	YE/ VT	2378	II	—	Right Rear Corner Object Sensor Signal	47	0.5	YE/ VT	2378	VIII	—
48	0.35	GY	1761	II	—	Right Side Object Detection LED Control	48	0.5	GY	1761	VIII	—
49	0.5	BN	7754	II	—	AC Power Outlet Enable	49	0.5	BN	7754	VIII	—

X140 Body Harness to Chassis Harness (Crew Cab) (cont'd)

Pin	Size	Color	Circuit	Terminal Type ID	Option	Function	Pin	Size	Color	Circuit	Terminal Type ID	Option
50	0.35	VT/ YE	5357	II	—	Right Tail Lamp Outage Detection Signal	50	0.5	VT/ YE	5357	VIII	—
51	0.35	WH/ BN	7296	II	—	Right Minor Endgate Ajar Signal	51	0.5	WH/ BN	7296	VIII	—
52	0.5	YE	2375	II	—	Left Rear Corner Object Sensor Signal	52	0.5	YE	2375	VIII	—
53	0.5	BU/ YE	6105	II	—	High Speed GMLAN Serial Data (+) 2	53	0.5	BU/ YE	6105	VIII	—
54	1	BK	9003	III	—	—	54	1	BK	9001	VII	—
55	—	—	—	—	—	Not Occupied	55	—	—	—	—	—

X140 Body Harness to Chassis Harness (Extended Cab/Regular Cab)

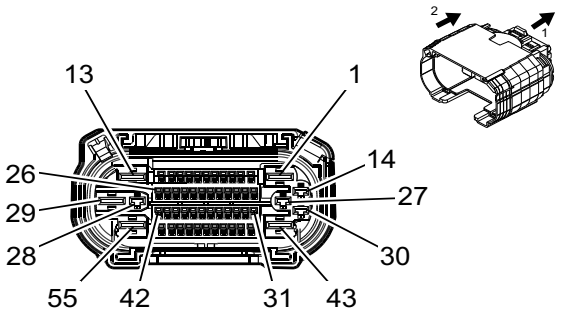

4992168

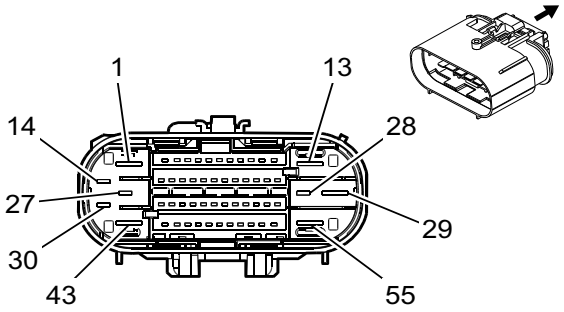

4994369

Connector Part Information

Harness Type: Body

OEM Connector: 35016652

Service Connector: 19371185

Description: 55-Way F 1.2 OCS, 2.8, 6.3 CTS Series, Sealed (BK)

Connector Part Information

Harness Type: Chassis

OEM Connector: 35016654

Service Connector: 19371183

Description: 55-Way M 1.2 OCS, 2.8, 6.3 CTS Series, Sealed (GY)

Terminal Part Information

Terminal Type ID	Terminated Lead	Diagnostic Test Probe	Terminal Removal Tool	Service Terminal	Tray Name	Core Crimp	Insulation Crimp
I	13579915	J-35616-40 (BU)	J-38125-556	1241408-1	Lear 28	A	B
II	19371240	J-35616-16 (LT GN)	J-38125-559	Not Available	Not Available	Not Available	Not Available
III	Not Available	J-35616-14 (GN)	J-38125-215A	Not Available	Not Available	Not Available	Not Available
IV	Not Available	J-35616-35 (VT)	J-38125-215A	Not Available	Not Available	Not Available	Not Available
V	13575574	J-35616-5 (PU)	J-38125-36	Not Available	Not Available	Not Available	Not Available
VI	19331019	J-35616-5 (PU)	J-38125-215A	Not Available	Not Available	Not Available	Not Available
VII	19370818	J-35616-17 (LT GN)	J-38125-215A	Not Available	Not Available	Not Available	Not Available
VIII	Not Available	J-35616-17 (LT GN)	Not Available	Not Available	Not Available	Not Available	Not Available
IX	Not Available	J-35616-32 (OR)	J-38125-36	Not Available	Not Available	Not Available	Not Available

X140 Body Harness to Chassis Harness (Extended Cab/Regular Cab)

Pin	Size	Color	Circuit	Terminal Type ID	Option	Function	Pin	Size	Color	Circuit	Terminal Type ID	Option
1	2.5	GN/VT	1988	I	—	Park Brake Motor Apply Right Rear Control	1	4	GN/VT	1988	IX	—
2	1	BN/GN	19	III	—	Right Rear Stop/Turn Lamp Control	2	1	BN/GN	19	VII	—

X140 Body Harness to Chassis Harness (Extended Cab/Regular Cab) (cont'd)

Pin	Size	Color	Circuit	Terminal Type ID	Option	Function	Pin	Size	Color	Circuit	Terminal Type ID	Option
3	0.5	GY/ YE	7128	II	—	Wheel Speed Sensor Control Right Rear	3	0.5	GY/ YE	7128	VIII	—
4	0.5	VT	882	II	—	Wheel Speed Sensor Signal Right Rear	4	0.5	VT	882	VIII	—
5	0.35	GY/ YE	1760	II	—	Left Side Object Detection LED Control	5	0.5	GY/ YE	1760	VIII	—
6	0.5	GY/ WH	7064	II	—	Wheel Speed Sensor Control Left Front	6	0.5	GY/ WH	7064	VIII	—
7	0.5	GY	830	II	—	Wheel Speed Sensor Signal Left Front	7	0.5	GY	830	VIII	—
8 - 9	—	—	—	—	—	Not Occupied	8 - 9	—	—	—	—	—
10	0.5	GY/ BK	7127	II	—	Wheel Speed Sensor Control Left Rear	10	0.5	GY/ BK	7127	VIII	—
11	0.5	BU	884	II	—	Wheel Speed Sensor Signal Left Rear	11	0.5	BU	884	VIII	—
12	1	YE/ BU	18	III	—	Left Rear Stop/Turn Lamp Control	12	1	YE/ BU	18	VII	—
13	2.5	WH	2001	I	—	Park Brake Motor Apply Left Rear Control	13	4	WH	2001	IX	—
14	2	RD/ VT	1242	IV	—	Battery Positive Voltage	14	2.5	RD/ VT	1242	VI	—
15	0.5	BN/ BK	7726	II	—	Minor Endgate Motor Return	15	0.5	BN/ BK	7726	VIII	—
16	0.35	GY	7292	II	—	Major Endgate Release Switch Signal Exterior	16	0.5	GY	7292	VIII	—
17	0.5	VT	7725	II	—	Minor Endgate Motor Supply Voltage	17	0.5	VT	7725	VIII	—
18	0.35	GN/ YE	6846	II	—	Rear License Lamp Control	18	0.5	L-GN/ YE	6846	VIII	—

X140 Body Harness to Chassis Harness (Extended Cab/Regular Cab) (cont'd)

Pin	Size	Color	Circuit	Terminal Type ID	Option	Function	Pin	Size	Color	Circuit	Terminal Type ID	Option
19	—	—	—	—	—	Not Occupied	19	—	—	—	—	—
20	0.5	GN/YE	1616	II	—	Brake Lining Wear Sensor Signal Rear	20	0.5	L-GN/YE	1616	VIII	—
21	0.5	GN	1299	II	—	Major Endgate Motor Supply Voltage	21	0.5	L-GN	1299	VIII	—
22	0.35 0.35	GN/BU GN/BU	2733 4114	II II	— —	Local Interconnect Network Bus 33 Local Interconnect Network Serial Data Bus 14	22	0.35	GN/VT	4114	VIII	—
23	0.5	VT/GN	439	II	—	Run/Crank Ignition 1 Voltage	23	0.5	VT/GN	439	VIII	—
24	0.35	YE	7294	II	—	Minor Endgate Release Switch Discrete Signal Exterior	24	0.5	YE	7294	VIII	—
25	0.5	BN/WH	2374	II	—	Object Sensor Control	25	0.5	BN/WH	2374	VIII	—
26	0.5	YE/BU	2376	II	—	Left Rear Middle Object Sensor Signal	26	0.5	YE/BU	2376	VIII	—
27	—	—	—	—	—	Not Occupied	27	—	—	—	—	—
28	2.5	RD/GY	7040	IV	—	Battery Positive Voltage	28	2.5	RD/GY	7040	VI	—
29	2.5	GY/BK	4369	I	—	Park Brake Motor Low Reference Left Rear	29	4	GY/BK	4369	IX	—
30	2	BU	47	IV	—	Trailer Auxiliary Control	30	2.5	BU	47	V	—
31	0.35	GY	1198	II	—	Endgate Release Switch Analog Signal Interior	31	0.5	GY	1198	VIII	—
32	0.5	YE/BK	7730	II	—	Major Endgate Motor Return	32	0.5	YE/BK	7730	VIII	—
33	0.5	BN/BU	1602	II	—	Brake Lining Wear Sensor Signal Front	33	0.5	WH	1612	VIII	—

X140 Body Harness to Chassis Harness (Extended Cab/Regular Cab) (cont'd)

Pin	Size	Color	Circuit	Terminal Type ID	Option	Function	Pin	Size	Color	Circuit	Terminal Type ID	Option
34	0.5	GY/BU	7762	II	—	Cargo Bed Lamp Control	34	0.5	GY/BU	7762	VIII	—
35	0.5	BU	2500	II	—	High Speed GMLAN Serial Data (+) 1	35	0.5	BU	2500	VIII	—
36	0.5	WH	2501	II	—	High Speed GMLAN Serial Data (-) 1	36	0.5	WH	2501	VIII	—
37	0.35	YE/BU	7295	II	—	Left Minor Endgate Ajar Signal	37	0.5	YE/BU	7295	VIII	—
38	0.35	GN/BU	2733	II	—	Local Interconnect Network Bus 33	38	0.5	GN/BU	2733	VIII	—
39	0.5	WH	6106	II	—	High Speed GMLAN Serial Data (-) 2	39	0.5	WH	6106	VIII	—
40	0.35	YE/BK	5356	II	—	Left Tail Lamp Outage Detection Signal	40	0.5	YE/BK	5356	VIII	—
41	0.5	BU/YE	6105	II	—	High Speed GMLAN Serial Data (+) 2	41	0.5	BU/YE	6105	VIII	—
42	0.5	WH	6106	II	—	High Speed GMLAN Serial Data (-) 2	42	0.5	WH	6106	VIII	—
43	2.5	GY	4368	I	—	Park Brake Motor Low Reference Right Rear	43	4	GY	4368	IX	—
44	1	BK	9003	III	—	—	44	1 1	BK BK	9000 9002	VII VII	— —
45	0.5	BK/GY	2379	II	—	Object Sensor Low Reference	45	0.5	BK/GY	2379	VIII	—
46	0.5	YE/WH	2377	II	—	Right Rear Middle Object Sensor Signal	46	0.5	YE/WH	2377	VIII	—
47	0.5	YE/VT	2378	II	—	Right Rear Corner Object Sensor Signal	47	0.5	YE/VT	2378	VIII	—
48	0.35	GY	1761	II	—	Right Side Object Detection LED Control	48	0.5	GY	1761	VIII	—
49	0.5	BN	7754	II	—	AC Power Outlet Enable	49	0.5	BN	7754	VIII	—

X140 Body Harness to Chassis Harness (Extended Cab/Regular Cab) (cont'd)

Pin	Size	Color	Circuit	Terminal Type ID	Option	Function	Pin	Size	Color	Circuit	Terminal Type ID	Option
50	0.35	VT/ YE	5357	II	—	Right Tail Lamp Outage Detection Signal	50	0.5	VT/ YE	5357	VIII	—
51	0.35	WH/ BN	7296	II	—	Right Minor Endgate Ajar Signal	51	0.5	WH/ BN	7296	VIII	—
52	0.5	YE	2375	II	—	Left Rear Corner Object Sensor Signal	52	0.5	YE	2375	VIII	—
53	0.5	BU/ YE	6105	II	—	High Speed GMLAN Serial Data (+) 2	53	0.5	BU/ YE	6105	VIII	—
54	1	BK	9003	III	—	—	54	1	BK	9001	VII	—
55	—	—	—	—	—	Not Occupied	55	—	—	—	—	—

X160 Engine Harness to Even Fuel Injector Harness (L8T)

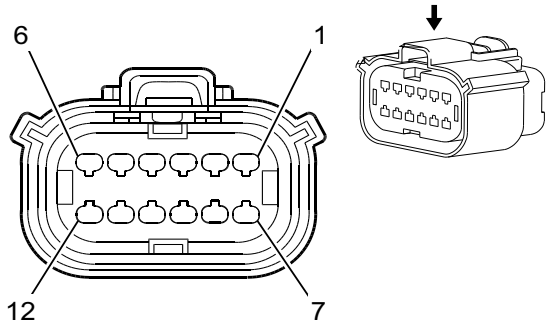

—

1825165

Connector Part Information

Harness Type: Engine
OEM Connector: 13653762
Service Connector: 19352907
Description: 12-Way F 1.5 Series, Sealed (BK)

Connector Part Information

Harness Type: Even Fuel Injector
OEM Connector: Not Available
Service Connector: Service by Harness - See Part Catalog
Description: 12-Way M

Terminal Part Information

Terminal Type ID	Terminated Lead	Diagnostic Test Probe	Terminal Removal Tool	Service Terminal	Tray Name	Core Crimp	Insulation Crimp
I	13578813	J-35616-14 (GN)	J-38125-217	Not Available	Not Available	Not Available	Not Available
II	Not Required	Not Available	No Tool Required	Not Required	Not Required	Not Required	Not Required

X160 Engine Harness to Even Fuel Injector Harness (L8T)

Pin	Size	Color	Circuit	Terminal Type ID	Option	Function	Pin	Size	Color	Circuit	Terminal Type ID	Option
1	0.75	BN/WH	4901	I	—	Direct Fuel Injector (DFI) High Voltage Supply Cylinder 1	1	0.75	BN/WH	4901	II	—
2	0.75	GN/BK	4903	I	—	Direct Fuel Injector (DFI) High Voltage Supply Cylinder 3	2	0.75	GN/BK	4903	II	—
3	0.75	GN/WH	4905	I	—	Direct Fuel Injector (DFI) High Voltage Supply Cylinder 5	3	0.75	GN/WH	4905	II	—
4	0.75	WH/YE	4907	I	—	Direct Fuel Injector (DFI) High Voltage Supply Cylinder 7	4	0.75	WH/YE	4907	II	—
5	0.75	BN	4801	I	—	Direct Fuel Injector (DFI) High Voltage Control Cylinder 1	5	0.75	BN	4801	II	—
6	—	—	—	—	—	Not Occupied	6	—	—	—	—	—

X160 Engine Harness to Even Fuel Injector Harness (L8T) (cont'd)

Pin	Size	Color	Circuit	Terminal Type ID	Option	Function	Pin	Size	Color	Circuit	Terminal Type ID	Option
7	0.75	GN	4803	I	—	Direct Fuel Injector (DFI) High Voltage Control Cylinder 3	7	0.75	GN	4803	II	—
8	0.75	WH/ GN	4805	I	—	Direct Fuel Injector (DFI) High Voltage Control Cylinder 5	8	0.75	WH/ GN	4805	II	—
9	0.75	YE/ GY	4807	I	—	Direct Fuel Injector (DFI) High Voltage Control Cylinder 7	9	0.75	YE/ GY	4807	II	—
10	0.5	WH/ RD	480	I	—	Engine Control Sensors 5 Volt Reference (2)	10	0.5	WH/ RD	480	II	—
11	0.5	BU/ WH	2918	I	—	Fuel Rail Pressure Sensor Signal	11	0.5	BU/ WH	2918	II	—
12	0.5	BK/ YE	548	I	—	Engine Control Sensors Low Reference (1)	12	0.5	BK/ YE	548	II	—

X161 Engine Harness to Bank 2 Fuel Rail Harness (L8T)

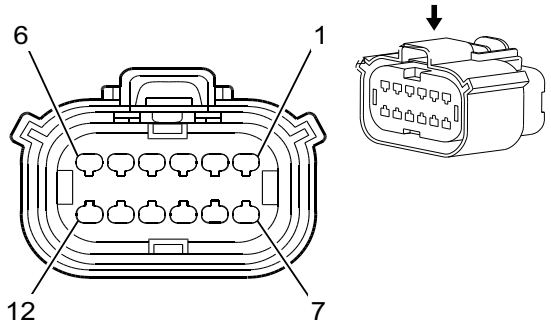

1825165

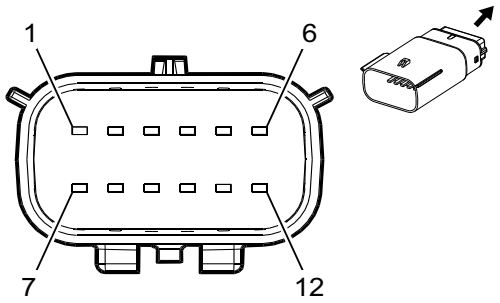

2687960

Connector Part Information

Harness Type: Engine
OEM Connector: 13922706
Service Connector: 19352907
Description: 12-Way F 1.5 Series, Sealed (BK)

Connector Part Information

Harness Type: Bank 2 Fuel Rail
OEM Connector: Not Available
Service Connector: Service by Harness - See Part Catalog
Description: 12-Way M

Terminal Part Information

Terminal Type ID	Terminated Lead	Diagnostic Test Probe	Terminal Removal Tool	Service Terminal	Tray Name	Core Crimp	Insulation Crimp
I	13578813	J-35616-14 (GN)	J-38125-217	Not Available	Not Available	Not Available	Not Available
II	Not Required	Not Available	No Tool Required	Not Required	Not Required	Not Required	Not Required

X161 Engine Harness to Bank 2 Fuel Rail Harness (L8T)

Pin	Size	Color	Circuit	Terminal Type ID	Option	Function	Pin	Size	Color	Circuit	Terminal Type ID	Option
1	0.75	BN/L-GN	4902	I	—	Direct Fuel Injector (DFI) High Voltage Supply Cylinder 2	1	0.75	BN/L-GN	4902	II	—
2	0.75	BU/WH	4904	I	—	Direct Fuel Injector (DFI) High Voltage Supply Cylinder 4	2	0.75	BU/WH	4904	II	—
3	0.75	VT	4906	I	—	Direct Fuel Injector (DFI) High Voltage Supply Cylinder 6	3	0.75	VT	4906	II	—
4	0.75	WH/L-GN	4908	I	—	Direct Fuel Injector (DFI) High Voltage Supply Cylinder 8	4	0.75	WH/L-GN	4908	II	—
5	0.75	BU	4802	I	—	Direct Fuel Injector (DFI) High Voltage Control Cylinder 2	5	0.75	BU	4802	II	—
6 - 7	—	—	—	—	—	Not Occupied	6 - 7	—	—	—	—	—

X161 Engine Harness to Bank 2 Fuel Rail Harness (L8T) (cont'd)

Pin	Size	Color	Circuit	Terminal Type ID	Option	Function	Pin	Size	Color	Circuit	Terminal Type ID	Option
8	0.75	GY/ D-BU	4804	I	—	Direct Fuel Injector (DFI) High Voltage Control Cylinder 4	8	0.75	GY/ D-BU	4804	II	—
9	0.75	L-GN/ VT	4806	I	—	Direct Fuel Injector (DFI) High Voltage Control Cylinder 6	9	0.75	L-GN/ VT	4806	II	—
10	0.75	GY	4808	I	—	Direct Fuel Injector (DFI) High Voltage Control Cylinder 8	10	0.75	GY	4808	II	—
11	0.75	VT/ BK	7300	I	—	High Pressure Fuel Pump Actuator Low - Control	11	0.75	VT/ BK	7300	II	—
12	0.75	YE	7301	I	—	High Pressure Fuel Pump Actuator High - Control	12	0.75	YE	7301	II	—

X171 Chassis Harness to Engine Harness

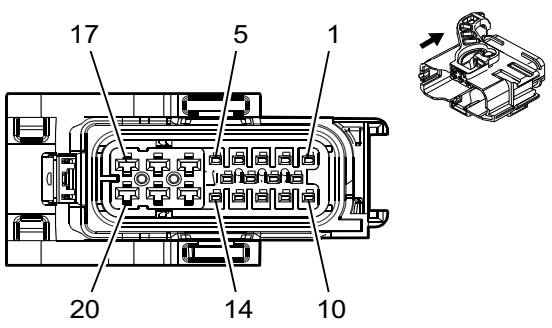

4994285

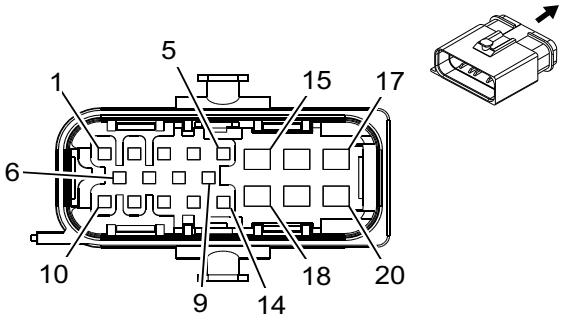

3825586

Connector Part Information

Harness Type: Chassis
OEM Connector: 13974124
Service Connector: 19371189
Description: 20-Way F 1.2, 2.8 MCP Series, Sealed (BK)

Connector Part Information

Harness Type: Engine
OEM Connector: 13942796
Service Connector: 19333031
Description: 20-Way M 1.2, 2.8 Multiple Contact Point Series (BK)

Terminal Part Information

Terminal Type ID	Terminated Lead	Diagnostic Test Probe	Terminal Removal Tool	Service Terminal	Tray Name	Core Crimp	Insulation Crimp
I	13582286	J-35616-35 (VT)	J-38125-557	1-968857-3	Lear 7	C	1
II	Not Available	J-35616-16 (LT GN)	J-38125-12A	Not Available	Not Available	Not Available	Not Available
III	Not Available	J-35616-16 (LT GN)	J-38125-215A	Not Available	Not Available	Not Available	Not Available
IV	Not Available	J-35616-35 (VT)	J-38125-215A	1241388-1	Lear 17	E	C
V	13575574	J-35616-5 (PU)	J-38125-36	Not Available	Not Available	Not Available	Not Available
VI	19329749	J-35616-17 (LT GN)	J-38125-215A	Not Available	Not Available	Not Available	Not Available
VII	Not Available	J-35616-5 (PU)	J-38125-36	1-962915-3	Yazaki 15	E	1

X171 Chassis Harness to Engine Harness

Pin	Size	Color	Circuit	Terminal Type ID	Option	Function	Pin	Size	Color	Circuit	Terminal Type ID	Option
1	0.5 0.5	VT/YE VT/YE	5985 5985	III II	L5P L8T	Accessory Wakeup Serial Data Accessory Wakeup Serial Data	1	0.5	VT/YE	5985	VI	—
2	0.5 0.5	WH WH	4499 4499	III II	L5P L8T	High Speed GMLAN Serial Data (-) 7 High Speed GMLAN Serial Data (-) 7	2	0.5	WH	4499	VI	—

X171 Chassis Harness to Engine Harness (cont'd)

Pin	Size	Color	Circuit	Terminal Type ID	Option	Function	Pin	Size	Color	Circuit	Terminal Type ID	Option
3	0.5 0.5	BU/BN BU/BN	4498 4498	III II	L5P L8T	High Speed GMLAN Serial Data (+) 7 High Speed GMLAN Serial Data (+) 7	3	0.5	BU/BN	4498	VI	—
4	0.5 0.5	BK/L-GN BK/L-GN	3657 3657	III II	L5P L8T	Exhaust Gas Temperature Sensor 3 Low Reference Exhaust Gas Temperature Sensor 3 Low Reference	4	0.5	BK/L-GN	3657	VI	—
5	0.5 0.5	GY/L-GN GY/L-GN	5378 5378	III II	L5P L8T	Exhaust Gas Temperature Sensor 3 Exhaust Gas Temperature Sensor 3	5	0.5	GY/L-GN	5378	VI	—
6	0.5 0.5	BK/GY BK/GY	3659 3659	III II	L5P L8T	Exhaust Gas Temperature Sensor 4 Low Reference Exhaust Gas Temperature Sensor 4 Low Reference	6	0.5	BK/GY	3659	VI	—
7	0.5 0.5	VT/L-GN VT/L-GN	4320 4320	III II	L5P L8T	Powertrain Sensor Bus Enable Powertrain Sensor Bus Enable	7	0.5	VT/L-GN	4320	VI	—
8	0.5 0.5	VT/BN YE/BN	3658 1427	III II	L5P L8T	Exhaust Gas Temperature Sensor 4 Signal Gaseous Fuel Disable Signal	8	0.5 0.5	VT/BN YE/BN	3658 1427	VI VI	L5P L8T
9	0.5 0.5	VT/BN VT/BN	2927 2927	III II	L5P L8T	Hydrocarbon Injector Low Control Hydrocarbon Injector Low Control	9	0.5	VT/BN	2927	VI	—
10	0.5 0.5	BN/D-BU BN/D-BU	2926 2926	III II	L5P L8T	Hydrocarbon Injector High Control Hydrocarbon Injector High Control	10	0.5	BN/D-BU	2926	VI	—

X171 Chassis Harness to Engine Harness (cont'd)

Pin	Size	Color	Circuit	Terminal Type ID	Option	Function	Pin	Size	Color	Circuit	Terminal Type ID	Option
11	0.75 0.75	YE/ D-BU YE/ BN	1465 1427	II II	L5P L8T	Secondary Fuel Pump Relay Control Gaseous Fuel Disable Signal	11	0.5	YE/ BN	1427	VI	—
12	0.5 0.5	BK/ VT BK/ VT	3661 3661	III II	L5P L8T	Exhaust Gas Temperature Sensor 5 Low Reference Exhaust Gas Temperature Sensor 5 Low Reference	12	0.5	BK/ VT	3661	VI	—
13	0.5 0.5	BU/ GY BU/ GY	3660 3660	III II	L5P L8T	Exhaust Gas Temperature Sensor 5 Signal Exhaust Gas Temperature Sensor 5 Signal	13	0.5	BU/ GY	3660	VI	—
14	0.5 0.5	L-GN/ GY L-GN/ GY	465 465	III II	L5P L8T	Fuel Pump Primary Relay Control Fuel Pump Primary Relay Control	14	0.5	L-GN/ GY	465	VI	—
15	1.5	VT/ D-BU	3674	I	—	NOx Sensor 1 Control	15	1.5	VT/ D-BU	3674	V	—
16	0.5	WH/ RD	6054	IV	—	Exhaust Pressure Sensor 5V Reference 1	16	0.5	WH/ RD	6054	VII	—
17	2.5	VT/ L-GN	355	I	—	Fuel Filter Heater Voltage	17	2.5	VT/ L-GN	355	V	—
18	2.5	BU	3921	I	—	DEF Heater Supply 1	18	2.5	BU	3921	V	—
19	0.5	BK/ YE	6055	IV	—	Exhaust Pressure Sensor Low Reference 1	19	0.5	BK/ YE	6055	VII	—
20	0.5	BU	6053	IV	—	Exhaust Pressure Sensor Signal 1	20	0.5	BU	6053	VII	—

X172 Glow Plug Jumper Harness to Engine Jumper Harness (L5P)

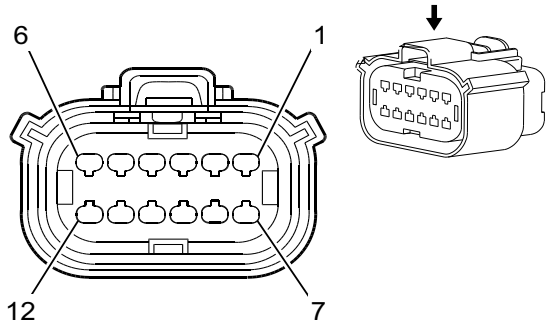

1825165

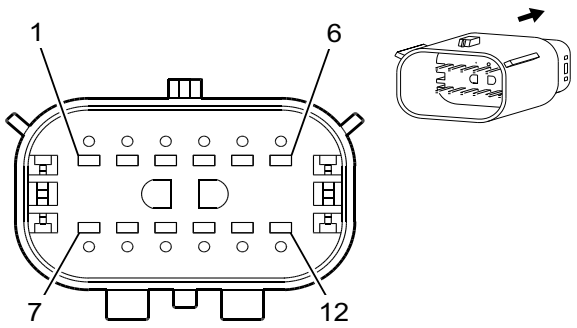

1825167

Connector Part Information

Harness Type: Glow Plug Jumper
OEM Connector: 13503526
Service Connector: Service by Harness - See Part Catalog
Description: 12-Way F 1.5 Series, Sealed (BK)

Connector Part Information

Harness Type: Engine Jumper
OEM Connector: 13520579
Service Connector: Service by Harness - See Part Catalog
Description: 12-Way M 150 MX Series, Sealed (BK)

Terminal Part Information

Terminal Type ID	Terminated Lead	Diagnostic Test Probe	Terminal Removal Tool	Service Terminal	Tray Name	Core Crimp	Insulation Crimp
I	Not Required	J-35616-14 (GN)	No Tool Required	Not Required	Not Required	Not Required	Not Required
II	Not Required	J-35616-3 (GY)	No Tool Required	Not Required	Not Required	Not Required	Not Required

X172 Glow Plug Jumper Harness to Engine Jumper Harness (L5P)

Pin	Size	Color	Circuit	Terminal Type ID	Option	Function	Pin	Size	Color	Circuit	Terminal Type ID	Option
1	0.5	WH/RD	2705	I	L5P	Oil Pressure Sensor 5V Reference	1	0.5	WH/RD	2705	II	L5P
2	0.5	BK/VT	2755	I	L5P	Oil Pressure Sensor Low Reference	2	0.5	BK/VT	2755	II	L5P
3	0.5	YE/BN	331	I	L5P	Oil Pressure Sensor Signal	3	0.5	YE/BN	331	II	L5P
4	0.5	BU	410	I	L5P	Engine Coolant Temperature Sensor Signal	4	0.5	BU	410	II	L5P
5	0.5	BK/BN	2761	I	L5P	Coolant Temperature Sensor Low Reference	5	0.5	BK/BN	2761	II	L5P
6	0.5	BK/WH	151	I	L5P	Signal Ground	6	0.5	BK/WH	151	II	L5P
7	0.5	BN/GN	1174	I	L5P	Oil Level Switch Signal	7	0.5	BN/GN	1174	II	L5P
8 - 9	—	—	—	—	—	Not Occupied	8 - 9	—	—	—	—	—

X172 Glow Plug Jumper Harness to Engine Jumper Harness (L5P) (cont'd)

Pin	Size	Color	Circuit	Terminal Type ID	Option	Function	Pin	Size	Color	Circuit	Terminal Type ID	Option
10	0.5	YE	2928	I	L5P	Fuel Metering Valve High Control	10	0.5	YE	2928	II	L5P
11	0.5	BN/ BK	2929	I	L5P	Fuel Metering Valve Low Control	11	0.5	BN/ BK	2929	II	L5P
12	—	—	—	—	—	Not Occupied	12	—	—	—	—	—

X176 Engine Harness to Engine Harness (PTO)

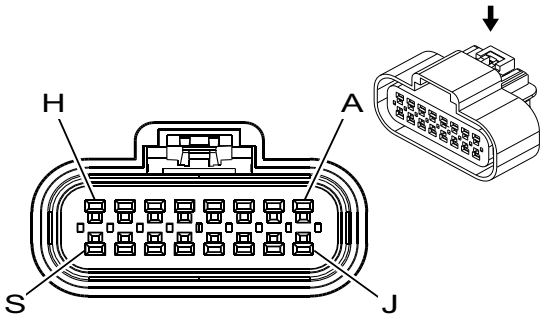

646383

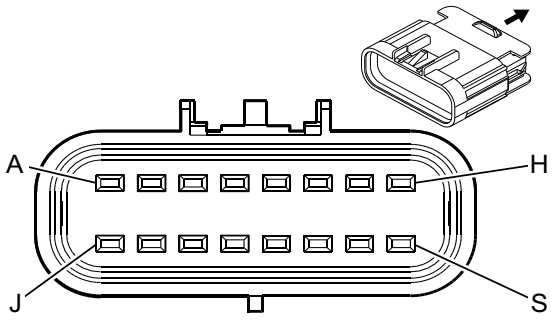

632345

Connector Part Information

Harness Type: Engine
OEM Connector: 15326863
Service Connector: 19180282
Description: 16-Way F 150 GT Series, Sealed (BK)

Connector Part Information

Harness Type: Engine
OEM Connector: 15326868
Service Connector: 15306364
Description: 16-Way M 150 Series, Sealed (BK)

Terminal Part Information

Terminal Type ID	Terminated Lead	Diagnostic Test Probe	Terminal Removal Tool	Service Terminal	Tray Name	Core Crimp	Insulation Crimp
I	13578912	J-35616-14 (GN)	J-38125-215A	12191819	Delphi 8	2	1
II	13578912	J-35616-4A (PU)	J-38125-215A	12191819	Delphi 8	E	1
III	Not Required	J-35616-17 (LT GN)	Not Available	Not Available	Not Available	Not Available	Not Available

X176 Engine Harness to Engine Harness (PTO)

Pin	Size	Color	Circuit	Terminal Type ID	Option	Function	Pin	Size	Color	Circuit	Terminal Type ID	Option
A	0.75	GY/GN	6239	I	—	Transmission Power Take Off Engage/ Disengage Signal Power	A	—	—	—	—	—
B - C	—	—	—	—	—	Not Occupied	B - C	—	—	—	—	—
D	0.75	BK	4450	I	—	Ground	D	—	—	—	—	—
E - F	—	—	—	—	—	Not Occupied	E - F	—	—	—	—	—
G	0.5	BN/BU	4409	II	—	Power Take Off Load Relay Contact Signal	G	—	—	—	—	—
H	—	—	—	—	—	Not Occupied	H	—	—	—	—	—
J	0.5	WH/GN	6142	II	—	Power Take Off Engine Shutdown Signal	J	—	—	—	—	—

X176 Engine Harness to Engine Harness (PTO) (cont'd)

Pin	Size	Color	Circuit	Terminal Type ID	Option	Function	Pin	Size	Color	Circuit	Terminal Type ID	Option
K	0.75	RD/ VT	2640	I	—	Battery Positive Voltage	K	—	—	—	—	—
L - M	—	—	—	—	—	Not Occupied	L - M	—	—	—	—	—
N	0.5 0.5	BU/ GY BU/ GY	4308 6089	II II	— —	Power Take Off Remote Throttle Signal Power Take Off Remote Switch Set Signal 1	N					
P	—	—	—	—	—	Not Occupied	P	—	—	—	—	—
R	—	—	—	—	—	Run/Crank Ignition 1 Voltage	R	0.5	VT/ WH	239	III	—
S	—	—	—	—	—	Not Occupied	S	—	—	—	—	—

X180 Engine Harness to Engine Jumper Harness (L8T)

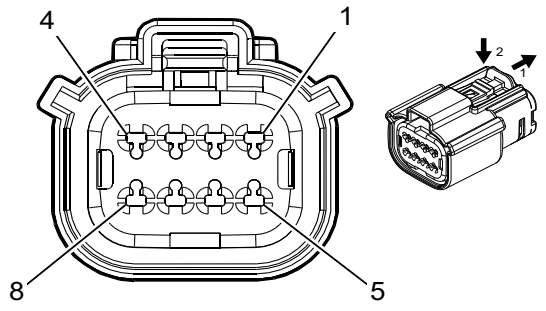

4846407

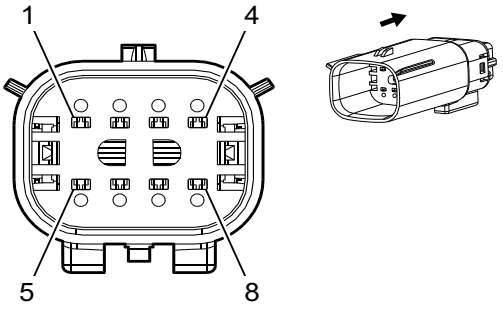

2667653

Connector Part Information

Harness Type: Engine
OEM Connector: 35063116
Service Connector: 19366859
Description: 8-Way F 150 MX Series, Sealed (BK)

Connector Part Information

Harness Type: Engine Jumper
OEM Connector: 35021067
Service Connector: Service by Harness - See Part Catalog
Description: 8-Way M 150 MX Series, Sealed (BK)

Terminal Part Information

Terminal Type ID	Terminated Lead	Diagnostic Test Probe	Terminal Removal Tool	Service Terminal	Tray Name	Core Crimp	Insulation Crimp
I	Not Required	J-35616-14 (GN)	No Tool Required	Not Required	Not Required	Not Required	Not Required
II	Not Required	J-35616-3 (GY)	No Tool Required	Not Required	Not Required	Not Required	Not Required

X180 Engine Harness to Engine Jumper Harness (L8T)

Pin	Size	Color	Circuit	Terminal Type ID	Option	Function	Pin	Size	Color	Circuit	Terminal Type ID	Option
1	0.5	GY/D-BU	5300	I	—	Camshaft Position Intake Sensor Control 1	1	0.5	GY/D-BU	5300	II	—
2	0.5	BK/L-GN	5301	I	—	Camshaft Position Intake Sensor Low Reference 1	2	0.5	BK/L-GN	5301	II	—
3	0.5	YE/VT	5275	I	—	Camshaft Position Intake Sensor 1	3	0.5	YE/VT	5275	II	—
4	0.5	BU	179	I	—	Oil Pump Command Signal	4	0.5	BU	179	II	—
5	0.5	VT/BN	5284	I	—	Camshaft Phaser Intake Solenoid 1	5	0.5	VT/BN	5284	II	—
6	0.5	BK/BN	6753	I	—	Cam Phaser W Low Reference	6	0.5	BK/BN	6753	II	—

X180 Engine Harness to Engine Jumper Harness (L8T) (cont'd)

Pin	Size	Color	Circuit	Terminal Type ID	Option	Function	Pin	Size	Color	Circuit	Terminal Type ID	Option
7	0.5	VT/ D-BU	5293	I	—	Powertrain Main Relay Fused Supply 4	7	0.5	VT/ D-BU	5293	II	—
8	—	—	—	—	—	Not Occupied	8	—	—	—	—	—

X181 Engine Harness to Engine Oil Pressure Jumper Harness (L8T)

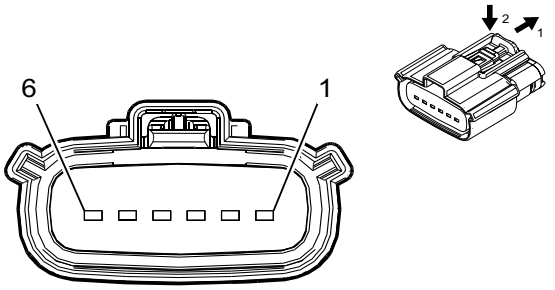

—

5126816

Connector Part Information

Harness Type: Engine
OEM Connector: 35149972
Service Connector: 19368640
Description: 6-Way F 1.5 Series, Sealed (BK)

Connector Part Information

Harness Type: Engine Oil Pressure Jumper
OEM Connector: Not Available
Service Connector: Service by Harness - See Part Catalog
Description: 6-Way M

Terminal Part Information

Terminal Type ID	Terminated Lead	Diagnostic Test Probe	Terminal Removal Tool	Service Terminal	Tray Name	Core Crimp	Insulation Crimp
I	Not Required	J-35616-2A (GY)	No Tool Required	Not Required	Not Required	Not Required	Not Required
II	Not Required	Not Available	No Tool Required	Not Required	Not Required	Not Required	Not Required

X181 Engine Harness to Engine Oil Pressure Jumper Harness (L8T)

Pin	Size	Color	Circuit	Terminal Type ID	Option	Function	Pin	Size	Color	Circuit	Terminal Type ID	Option
1	0.5	BU	410	I	—	Engine Coolant Temperature Sensor Signal	1	0.5	BU	410	II	—
2	0.5	BK/YE	548	I	—	Engine Control Sensors Low Reference (1)	2	0.5	BK/YE	548	II	—
3	0.5	YE/BN	331	I	—	Oil Pressure Sensor Signal	3	0.5	YE/BN	331	II	—
4	0.5	BK/YE	548	I	—	Engine Control Sensors Low Reference (1)	4	0.5	BK/YE	548	II	—
5	0.5	WH/RD	480	I	—	Engine Control Sensors 5 Volt Reference (2)	5	0.5	WH/RD	480	II	—
6	—	—	—	—	—	Not Occupied	6	—	—	—	—	—

X192 Snow Plow Harness to Snow Plow Harness (UVY)

—

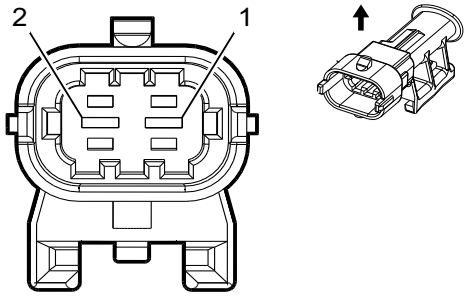

2667643

Connector Part Information

Harness Type: Snow Plow
OEM Connector: Not Available
Service Connector: Service by Harness - See Part Catalog
Description: 2-Way F

Connector Part Information

Harness Type: Snow Plow
OEM Connector: 10864494
Service Connector: Service by Harness - See Part Catalog
Description: 2-Way M 2.8 Timer Series, Sealed (BK)

Terminal Part Information

Terminal Type ID	Terminated Lead	Diagnostic Test Probe	Terminal Removal Tool	Service Terminal	Tray Name	Core Crimp	Insulation Crimp
I	Not Required	J-35616-4A (PU)	No Tool Required	Not Required	Not Required	Not Required	Not Required
II	Not Required	J-35616-5 (PU)	No Tool Required	Not Required	Not Required	Not Required	Not Required

X192 Snow Plow Harness to Snow Plow Harness (UVY)

Pin	Size	Color	Circuit	Terminal Type ID	Option	Function	Pin	Size	Color	Circuit	Terminal Type ID	Option
1	0.5	BN	25	I	—	Charge Indicator Control	1	0.5	BN	25	II	—
2	0.5	GY	23	I	—	Generator Field Duty Cycle Signal	2	0.5	GY	23	II	—

X205 Instrument Panel Harness to Passenger Instrument Panel Air Bag Jumper Harness

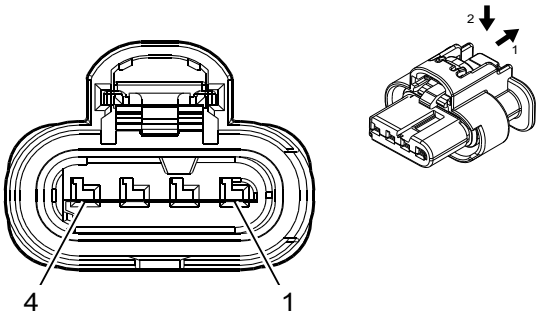

—

4900699

Connector Part Information

Harness Type: Instrument Panel
OEM Connector: 35053710
Service Connector: 19371193
Description: 4-Way F 1.2 MCON-CB Series, Sealed (YE)

Connector Part Information

Harness Type: Passenger Instrument Panel Air Bag Jumper
OEM Connector: Not Available
Service Connector: Service by Harness - See Part Catalog
Description: 4-Way M

Terminal Part Information

Terminal Type ID	Terminated Lead	Diagnostic Test Probe	Terminal Removal Tool	Service Terminal	Tray Name	Core Crimp	Insulation Crimp
I	Not Required	J-35616-16 (LT GN)	No Tool Required	Not Required	Not Required	Not Required	Not Required
II	Not Required	Not Available	No Tool Required	Not Required	Not Required	Not Required	Not Required

X205 Instrument Panel Harness to Passenger Instrument Panel Air Bag Jumper Harness

Pin	Size	Color	Circuit	Terminal Type ID	Option	Function	Pin	Size	Color	Circuit	Terminal Type ID	Option
1	0.35	YE/OG	3025	I	—	Passenger IP Module Stage 1 High Control	1	0.35	YE/OG	3025	II	—
2	0.35	OG/WH	3024	I	—	Passenger IP Module Stage 1 Low Control	2	0.35	OG/WH	3024	II	—
3	0.35	GY/OG	3027	I	—	Passenger IP Module Stage 2 High Control	3	0.35	GY/OG	3027	II	—
4	0.35	OG/VT	3026	I	—	Passenger IP Module Stage 2 Low Control	4	0.35	OG/VT	3026	II	—

X211 Instrument Panel Harness to Body Harness (UQA)

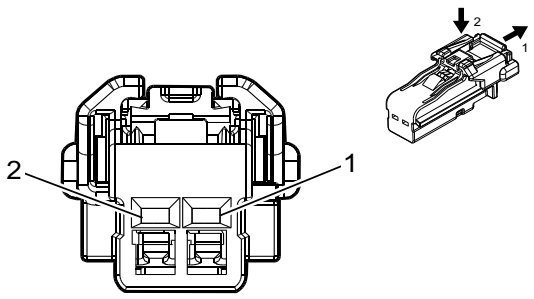

4115691

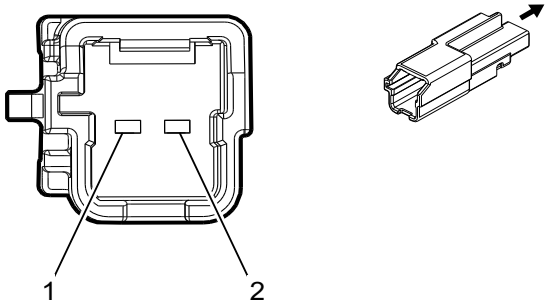

4116496

Connector Part Information

Harness Type: Instrument Panel
OEM Connector: 35026312
Service Connector: 19352066
Description: 2-Way F 1.2 Series (BK)

Connector Part Information

Harness Type: Body
OEM Connector: 33189233
Service Connector: 19332376
Description: 2-Way M 1.2 Series (BK)

Terminal Part Information

Terminal Type ID	Terminated Lead	Diagnostic Test Probe	Terminal Removal Tool	Service Terminal	Tray Name	Core Crimp	Insulation Crimp
I	Not Required	J-35616-16 (LT GN)	No Tool Required	Not Required	Not Required	Not Required	Not Required
II	Not Required	J-35616-17 (LT GN)	No Tool Required	Not Required	Not Required	Not Required	Not Required

X211 Instrument Panel Harness to Body Harness (UQA)

Pin	Size	Color	Circuit	Terminal Type ID	Option	Function	Pin	Size	Color	Circuit	Terminal Type ID	Option
1	0.35	BN/ BK	7214	I	—	Ethernet Bus 6 (-)	1	0.35	BN/ BK	7214	II	—
2	0.35	GY/ BK	7215	I	—	Ethernet Bus 6 (+)	2	0.35	GY/ BK	7215	II	—

X225 Instrument Panel Harness to Body Harness

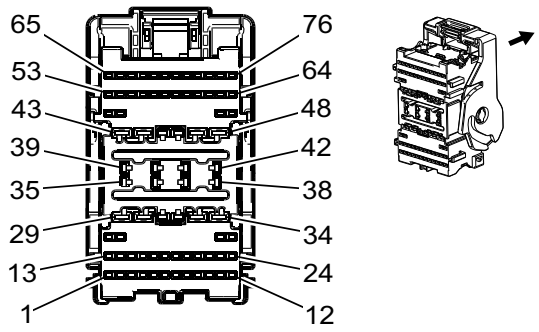

3960183

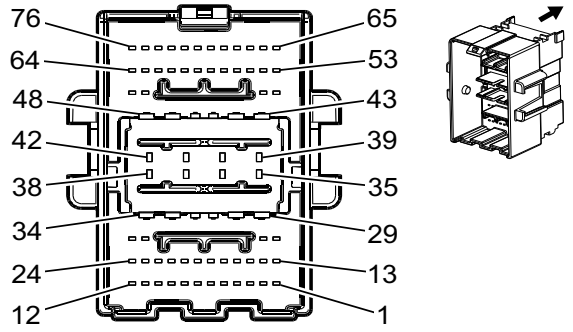

3960526

Connector Part Information

Harness Type: Instrument Panel
OEM Connector: 35142991
Service Connector: 84581287
Description: 76-Way F 1.2, 1.5, 2.8 YESC Series (BK)

Connector Part Information

Harness Type: Body
OEM Connector: 33303580
Service Connector: 19369989
Description: 76-Way M 1.2 MCON-CB, 1.5, 2.8 YESC Series (BK)

Terminal Part Information

Terminal Type ID	Terminated Lead	Diagnostic Test Probe	Terminal Removal Tool	Service Terminal	Tray Name	Core Crimp	Insulation Crimp
I	13575708	J-35616-2A (GY)	J-38125-11A	Not Available	Not Available	Not Available	Not Available
II	13578891	J-35616-2A (GY)	J-38125-11A	Not Available	Not Available	Not Available	Not Available
III	13578893	J-35616-4A (PU)	J-38125-11A	7116-4110-02	Yazaki 9	E	C
IV	13580025	J-35616-4A (PU)	J-38125-11A	7116-4111-02	Yazaki 9	E	A
V	13582232	J-35616-16 (LT GN)	J-38125-215A	Not Available	Not Available	Not Available	Not Available
VI	19300649	J-35616-4A (PU)	J-38125-215A	Not Available	Not Available	Not Available	Not Available
VII	19301767	J-35616-2A (GY)	J-38125-215A	Not Available	Not Available	Not Available	Not Available
VIII	19333323	J-35616-16 (LT GN)	J-38125-215A	Not Available	Not Available	Not Available	Not Available
IX	19367551	J-35616-16 (LT GN)	J-38125-215A	Not Available	Not Available	Not Available	Not Available
X	19371240	J-35616-16 (LT GN)	J-38125-559	Not Available	Not Available	Not Available	Not Available
XI	Not Available	J-35616-4A (PU)	J-38125-215A	Not Available	Not Available	Not Available	Not Available
XII	19352417	J-35616-3 (GY)	J-38125-215A	Not Available	Not Available	Not Available	Not Available
XIII	19352418	J-35616-3 (GY)	J-38125-215A	Not Available	Not Available	Not Available	Not Available
XIV	19354072	J-35616-5 (PU)	J-38125-215A	Not Available	Not Available	Not Available	Not Available
XV	19355729	J-35616-5 (PU)	J-38125-215A	Not Available	Not Available	Not Available	Not Available
XVI	19370818	J-35616-17 (LT GN)	J-38125-215A	Not Available	Not Available	Not Available	Not Available

Terminal Part Information (cont'd)

Terminal Type ID	Terminated Lead	Diagnostic Test Probe	Terminal Removal Tool	Service Terminal	Tray Name	Core Crimp	Insulation Crimp
XVII	Not Available	J-35616-17 (LT GN)	J-38125-215A	Not Available	Not Available	Not Available	Not Available
XVIII	Not Available	J-35616-17 (LT GN)	Not Available	Not Available	Not Available	Not Available	Not Available

X225 Instrument Panel Harness to Body Harness

Pin	Size	Color	Circuit	Terminal Type ID	Option	Function	Pin	Size	Color	Circuit	Terminal Type ID	Option
1	0.5	GN/YE	2081	IX	—	Exhaust Brake Switch Control	1	0.5	GN/YE	2081	XVIII	—
2	0.35	GN/WH	3438	VIII	—	Exhaust Brake Switch Signal	2	0.35	GN/WH	3438	XVIII	—
3	0.35	BU/YE	5361	VIII	—	Brake Apply Sensor Signal	3	0.35	BU/YE	5361	XVIII	—
4	0.35	BK/BN	5360	VIII	—	Brake Apply Sensor Low Reference	4	0.35	BK/BN	5360	XVIII	—
5	0.35	WH	5359	VIII	—	Brake Apply Sensor Control	5	0.35	WH	5359	XVIII	—
6	0.35	BK/GY	2204	VIII	—	Enhanced Driver Mode 1 Switch Low Reference	6	0.35	BK/GY	2204	XVIII	—
7	0.35	GY	4109	VIII	—	Driver Mode Switch 5V Reference	7	0.35	GY	4109	XVIII	—
8	0.35	WH/BN	2203	VIII	—	Enhanced Driver Mode 2 Switch Signal	8	0.35	WH/BN	2203	XVIII	—
9	0.35	YE	6817	VIII	—	LED Backlight Dimming Control	9	0.35	YE	6817	XVIII	—
10	0.35	GN	5060	VIII	—	Low Speed GMLAN Serial Data	10	0.35	GN	5060	XVIII	—
11	0.35	VT/GY	1630	VIII	—	Steering Column Key Cylinder Lock Solenoid Control	11	0.35	VT/GY	1630	XVIII	—
12	0.35	VT/BK	3	VIII	—	Run/Crank Ignition 1 Voltage	12	0.35	VT/BK	3	XVIII	—
13	0.35	GN/BK	3558	VIII	—	Passive Start Switch Signal 2	13	0.35	GN/BK	3558	XVIII	—
14	0.35	VT/YE	4	VIII	—	Accessory Ignition Voltage	14	0.35	VT/YE	4	XVIII	—

X225 Instrument Panel Harness to Body Harness (cont'd)

Pin	Size	Color	Circuit	Terminal Type ID	Option	Function	Pin	Size	Color	Circuit	Terminal Type ID	Option
15	0.35	OG/VT	3021	V	—	Steering Wheel Module Stage 1 High Control	15	0.35	OG/VT	3021	XVII	—
16	0.35	BN/OG	3020	V	—	Steering Wheel Module Stage 1 Low Control	16	0.35	BN/OG	3020	XVII	—
17	0.35	OG/GN	3023	V	—	Steering Wheel Module Stage 2 High Control	17	0.35	OG/GN	3023	XVII	—
18	0.35	WH/OG	3022	V	—	Steering Wheel Module Stage 2 Low Control	18	0.35	WH/OG	3022	XVII	—
19	0.35	GN/BU	2733	VIII	—	Local Interconnect Network Bus 33	19	0.35	GN/BU	2733	XVIII	—
20	0.35	YE/WH	1690	VIII	—	Automatic Day/Night Mirror Signal	20	0.35	YE/WH	1690	XVII	—
21	0.35	BK/YE	1691	VIII	—	Automatic Day/Night Mirror Low Reference	21	0.35	BK/YE	1691	XVII	—
22	0.35	GN	4512	VIII	—	Wireless Charging System Charge Indicator Control	22	0.35	GN	4512	XVIII	—
23	0.35	GN/WH	4115	VIII	—	Local Interconnect Network Serial Data Bus 15	23	0.35	GN/WH	4115	XVIII	—
24	0.35	BU/YE	6105	VIII	—	High Speed GMLAN Serial Data (+) 2	24	0.5	BU/YE	6105	XVIII	—
25	0.35	WH	6106	VIII	—	High Speed GMLAN Serial Data (-) 2	25	0.5	WH	6106	XVIII	—
26	0.35	BN/WH	419	VIII	—	Check Engine Indicator Control	26	0.35	BN/WH	419	XVIII	—
27	0.35	GN/GY	3277	VIII	—	Vehicle Anti-Theft System Immobilizer Low Reference	27	0.35	GN/GY	3277	XVIII	—
28	0.35	WH/BU	5986	VIII	—	Serial Data Communi-cation Enable	28	0.35	WH/BU	5986	XVIII	—

X225 Instrument Panel Harness to Body Harness (cont'd)

Pin	Size	Color	Circuit	Terminal Type ID	Option	Function	Pin	Size	Color	Circuit	Terminal Type ID	Option
29	—	—	—	—	—	Not Occupied	29	—	—	—	—	—
30	0.35	YE/ WH	816	III	—	Brake Transmission Shift Interlock Solenoid Control	30	0.35	YE/ WH	816	XIV	—
31	0.35	WH	2501	II	—	High Speed GMLAN Serial Data (-) 1	31	0.5	WH	2501	XII	—
32	0.35	BU	2500	II	—	High Speed GMLAN Serial Data (+) 1	32	0.5	BU	2500	XII	—
33	0.75	BU/ VT	1857	IV	—	Left Front Midrange Speaker Control (+)	33	0.75	BU/ VT	1857	XV	—
34	0.75	BU/ BN	1957	IV	—	Left Front Midrange Speaker (-) Low Reference	34	0.75	BU/ BN	1957	XV	—
35	0.5	WH/ BN	6815	VII	—	Inadvertent Power Control	35	0.5	WH/ BN	6815	XII	—
36	0.35	GN/ WH	1932	II	—	Shift Select Switch Park Signal	36	0.35	GN/ WH	1932	XII	—
37	0.35	GN/ WH	488	II	—	Power Take Off Control Switch	37	1	GN/ WH	488	XIII	—
38	0.35	BN/ GN	4311	II	—	Power Take Off Enable In Cab Switch Normally Closed Signal	38	0.35	BN/ GN	4311	XII	—
39	0.35	BU/ GY	553	II	—	Shift Select Switch Performance Signal	39	0.35	BU/ GY	553	XII	—
40	0.35	GN/ BN	2087	II	—	Combined Vehicle Inertial Sensor Supply Voltage	40	0.35	GN/ BN	2087	XII	—
41	—	—	—	—	—	Not Occupied	41	—	—	—	—	—
42	0.35 0.35	BU/ YE BU/ YE	6844 7176	I I	— —	ABS/TCS Hill Descent Control Switch Signal All Windows Open Switch Signal	42	0.35 0.35	BU/ YE BU/ YE	6844 7176	XII XII	— —
43	—	—	—	—	—	Not Occupied	43	—	—	—	—	—

X225 Instrument Panel Harness to Body Harness (cont'd)

Pin	Size	Color	Circuit	Terminal Type ID	Option	Function	Pin	Size	Color	Circuit	Terminal Type ID	Option
44	0.35	Bare	514	VI	—	Low Reference	44	0.35	Bare	514	XIV	—
45	0.75	BK	5683	I	—	120 V AC Phase A	45	0.75	BK	5683	XIII	—
46	0.75	RD	5684	I	—	120 V AC Phase B	46	0.75	RD	5684	XIII	—
47	0.75	BN/ BU	118	XI	—	Left Front Speaker Signal (-) 1	47	0.75	BN/ BU	118	XV	—
48	0.75	BU	201	XI	—	Left Front Speaker Control (+) 1	48	0.75	BU	201	XV	—
49	0.35	BU/ BN	7573	VIII	—	Electric Variable Displace-ment Supply	49	0.35	BU/ BN	7573	XVIII	—
50	0.35	BU/ YE	7574	VIII	—	Electric Variable Displace-ment Control	50	0.35	BU/ YE	7574	XVIII	—
51	0.5 0.5	GN GN	199 199	X IX	— —	Left Rear Speaker Control (+) Left Rear Speaker Control (+)	51	0.5	GN	199	XVIII	—
52	0.5 0.5	GN/ BK GN/ BK	116 116	X IX	— —	Left Rear Speaker Signal (-) Left Rear Speaker Signal (-)	52	0.5	GN/ BK	116	XVIII	—
53	0.35	GN/ BN	507	VIII	—	Wait To Start Indicator Control	53	0.35	GN/ BN	507	XVIII	—
54	0.35	WH/ BN	7296	VIII	—	Right Minor Endgate Ajar Signal	54	0.35	WH/ BN	7296	XVIII	—
55	0.35	YE/ BU	7295	VIII	—	Left Minor Endgate Ajar Signal	55	0.35	YE/ BU	7295	XVIII	—
56	0.35	GN/ VT	7533	VIII	—	Local Interconnect Network Serial Data Bus 11	56	0.35	GN/ VT	7533	XVIII	—
57 - 58	—	—	—	—	—	Not Occupied	57 - 58	—	—	—	—	—
59	0.35	BN	7754	VIII	—	AC Power Outlet Enable AC Power Outlet Enable	59	0.5 0.35	BN BN	7754 7754	XVI XVII	— —
60	0.35	GN/ VT	1601	VIII	—	Steering Column Lock Signal	60	0.35	GN/ VT	1601	XVIII	—

X225 Instrument Panel Harness to Body Harness (cont'd)

Pin	Size	Color	Circuit	Terminal Type ID	Option	Function	Pin	Size	Color	Circuit	Terminal Type ID	Option
61	0.35	BK/ GY	3559	VIII	—	Passive Start Switch 2 Low Reference	61	0.35	BK/ GY	3559	XVIII	—
62	—	—	—	—	—	Not Occupied	62	—	—	—	—	—
63	0.35	BU/ YE	6105	VIII	—	High Speed GMLAN Serial Data (+) 2	63	0.5	BU/ YE	6105	XVIII	—
64	0.35	WH	6106	VIII	—	High Speed GMLAN Serial Data (-) 2	64	0.5	WH	6106	XVIII	—
65	—	—	—	—	—	Not Occupied	65	—	—	—	—	—
66	0.5	BN/ BK	3552	X	—	Passive Start Interior Antenna 1 Signal Hi	66	0.35	BN/ BK	3552	XVIII	—
67	0.5	WH	3553	X	—	Passive Start Interior Antenna 1 Signal Lo	67	0.35	WH	3553	XVIII	—
68	0.35	YE/ VT	6191	VIII	—	Power Sliding Window Switch Open Signal	68	0.35	YE/ VT	6191	XVIII	—
69	0.35	WH	6192	VIII	—	Power Sliding Window Switch Close Signal	69	0.35	WH	6192	XVIII	—
70	0.35	GY/ BK	3276	VIII	—	Vehicle Anti-Theft System Immobilizer Control	70	0.35	GY/ BK	3276	XVIII	—
71	—	—	—	—	—	Not Occupied	71	—	—	—	—	—
72	0.35	BN	1560	VIII	—	Neutral Indicator Control	72	0.35	BN	1560	XVIII	—
73	0.5	BU/ YE	68	IX	—	Low Coolant Level Indicator Control	73	0.5	BU/ YE	68	XVIII	—
74	0.35	BU/ BN	6807	VIII	—	DC To AC Inverter Control	74	0.35	BU/ BN	6807	XVIII	—
75	0.35	VT	185	VIII	—	Low Washer Fluid Indicator Control	75	0.35	VT	185	XVIII	—
76	—	—	—	—	—	Not Occupied	76	—	—	—	—	—

X230 Auxiliary Heater Jumper Harness to Body Harness (C32)

—

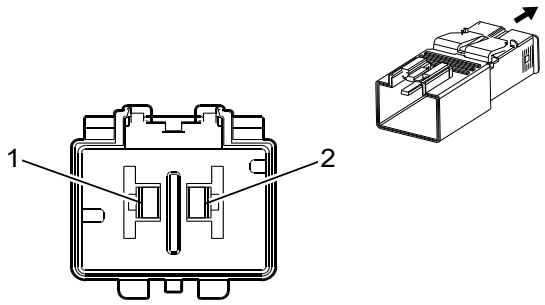

4891120

Connector Part Information

Harness Type: Auxiliary Heater Jumper
OEM Connector: Not Available
Service Connector: Service by Harness - See Part Catalog
Description: 2-Way F

Connector Part Information

Harness Type: Body
OEM Connector: 35134697
Service Connector: -
Description: 2-Way M 9.5 MCON-LL Series (BK)

Terminal Part Information

Terminal Type ID	Terminated Lead	Diagnostic Test Probe	Terminal Removal Tool	Service Terminal	Tray Name	Core Crimp	Insulation Crimp
I	Not Required	J-35616-16 (LT GN)	No Tool Required	Not Required	Not Required	Not Required	Not Required
II	Not Required	J-35616-17 (LT GN)	No Tool Required	Not Required	Not Required	Not Required	Not Required

X230 Auxiliary Heater Jumper Harness to Body Harness (C32)

Pin	Size	Color	Circuit	Terminal Type ID	Option	Function	Pin	Size	Color	Circuit	Terminal Type ID	Option
2	10	RD/ GY	642	I	—	Battery Positive Voltage	2	10	RD/ GY	642	II	—

X241 Body Harness to Power Inverter Module Jumper Harness (KI5)

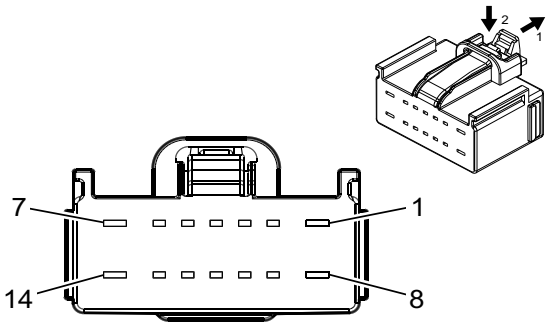

4934172

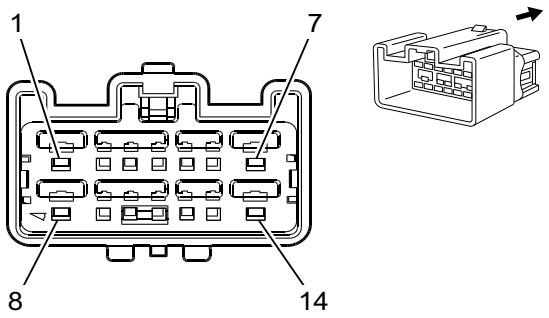

1283905

Connector Part Information

Harness Type: Body
OEM Connector: 33366376
Service Connector: 13513605
Description: 14-Way F 1.5, 2.8 Series (GY)

Connector Part Information

Harness Type: Power Inverter Module Jumper
OEM Connector: 10846900
Service Connector: Service by Harness - See Part Catalog
Description: 14-Way M 1.5, 2.8 Series (L-GY)

Terminal Part Information

Terminal Type ID	Terminated Lead	Diagnostic Test Probe	Terminal Removal Tool	Service Terminal	Tray Name	Core Crimp	Insulation Crimp
I	13575708	J-35616-2A (GY)	J-38125-11A	Not Available	Not Available	Not Available	Not Available
II	13578891	J-35616-2A (GY)	J-38125-11A	Not Available	Not Available	Not Available	Not Available
III	13580025	J-35616-4A (PU)	J-38125-11A	7116-4111-02	Yazaki 9	E	A
IV	Not Required	J-35616-3 (GY)	No Tool Required	Not Required	Not Required	Not Required	Not Required
V	Not Required	J-35616-5 (PU)	No Tool Required	Not Required	Not Required	Not Required	Not Required

X241 Body Harness to Power Inverter Module Jumper Harness (KI5)

Pin	Size	Color	Circuit	Terminal Type ID	Option	Function	Pin	Size	Color	Circuit	Terminal Type ID	Option
1	0.75	BK	5683	III	—	120 V AC Phase A	1	0.75	BK	5683	V	—
2	—	—	—	—	—	Not Occupied	2	—	—	—	—	—
3	0.35	VT/YE	5985	II	—	Accessory Wakeup Serial Data	3	0.35	VT/YE	5985	IV	—
4	0.35	WH/L-GN	4628	II	—	DC/AC Inverter Relay Control	4	0.35	WH/L-GN	4628	IV	—
5	0.35	BU/BN	6807	II	—	DC To AC Inverter Control	5	0.35	BU/BN	6807	IV	—
6	—	—	—	—	—	Not Occupied	6	—	—	—	—	—
7	0.75	BK/WH	2264	III	—	120 VAC Phase A 2	7	0.75	BK/WH	2264	V	—

X241 Body Harness to Power Inverter Module Jumper Harness (KI5) (cont'd)

Pin	Size	Color	Circuit	Terminal Type ID	Option	Function	Pin	Size	Color	Circuit	Terminal Type ID	Option
8	0.75	RD	5684	III	—	120 V AC Phase B	8	0.75	RD	5684	V	—
9	0.35	Bare	514	II	—	Low Reference	9	0.35	Bare	514	IV	—
10	0.35	L-GN	5060	II	—	Low Speed GMLAN Serial Data	10	0.35	L-GN	5060	IV	—
11	—	—	—	—	—	Not Occupied	11	—	—	—	—	—
12	0.75	L-GN/BN	2266	I	—	DC To AC Inverter Control 2	12	0.75	L-GN/BN	2266	IV	—
13	0.35	Bare	2257	II	—	Drain Wire	13	0.35	Bare	2257	IV	—
14	0.75	RD/WH	2265	III	—	120 VAC Phase B 2	14	0.75	RD/WH	2265	V	—

X256 Headliner Harness to Instrument Panel Harness

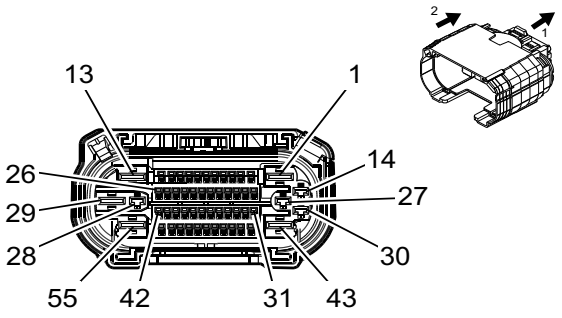

4992168

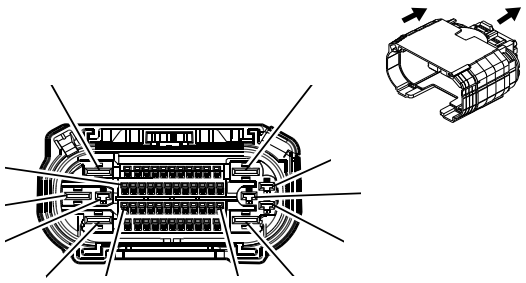

4992168

Connector Part Information

Harness Type: Headliner

OEM Connector: 35196713

Service Connector: -

Description: 55-Way F 1.2 OCS, 2.8, 6.3 CTS Series, Sealed (BK)

Connector Part Information

Harness Type: Instrument Panel

OEM Connector: 35205189

Service Connector: -

Description: 55-Way M 1.2 OCS, 2.8, 6.3 CTS Series, Sealed (BK)

Terminal Part Information

Terminal Type ID	Terminated Lead	Diagnostic Test Probe	Terminal Removal Tool	Service Terminal	Tray Name	Core Crimp	Insulation Crimp
I	13579915	J-35616-40 (BU)	J-38125-556	1241408-1	Lear 28	A	B
II	19371240	J-35616-16 (LT GN)	J-38125-559	Not Available	Not Available	Not Available	Not Available
III	Not Available	J-35616-35 (VT)	J-38125-215A	Not Available	Not Available	Not Available	Not Available
IV	13575574	J-35616-5 (PU)	J-38125-36	Not Available	Not Available	Not Available	Not Available
V	Not Available	J-35616-17 (LT GN)	Not Available	Not Available	Not Available	Not Available	Not Available
VI	Not Available	J-35616-32 (OR)	J-38125-36	Not Available	Not Available	Not Available	Not Available

X256 Headliner Harness to Instrument Panel Harness

Pin	Size	Color	Circuit	Terminal Type ID	Option	Function	Pin	Size	Color	Circuit	Terminal Type ID	Option
1	2.5	BK	1050	I	—	Ground	1	2.5	BK	1050	VI	—
2	—	—	—	—	—	Not Occupied	2	—	—	—	—	—
3	0.35	BU/BK	7044	II	—	Microphone (-) Low Reference	3	0.35	BU/BK	7044	V	—
4	0.35	VT/YE	7043	II	—	Microphone (+) Signal	4	0.35	VT/YE	7043	V	—
5	0.35	BU	655	II	—	Cellular Telephone Microphone Signal	5	0.35	BU	655	V	—

X256 Headliner Harness to Instrument Panel Harness (cont'd)

Pin	Size	Color	Circuit	Terminal Type ID	Option	Function	Pin	Size	Color	Circuit	Terminal Type ID	Option
6	0.35	BK/ BN	654	II	—	Cellular Telephone Microphone Low Reference	6	0.35	BK/ BN	654	V	—
7	0.35	BK	1782	II	—	Low Reference	7	0.35	BK	1782	V	—
8	0.35	WH/ GY	3936	II	—	High Speed GMLAN Serial Data (-) 8	8	0.35	WH/ GY	3936	V	—
9	0.35	BU/ GY	3935	II	—	High Speed GMLAN Serial Data (+) 8	9	0.35	BU/ GY	3935	V	—
10	0.35	GY	157	II	—	Interior Lamp Control	10	0.35	GY	157	V	—
11	0.35	BK/ WH	1851	II	—	Signal Ground	11	0.5	BK/ WH	1851	V	—
12 - 13	—	—	—	—	—	Not Occupied	12 - 13	—	—	—	—	—
14	2.5	RD/ L-GN	3140	III	—	Battery Positive Voltage	14	2.5	RD/ L-GN	3140	IV	—
15	0.5	WH/ VT	1430	II	—	Exterior Courtesy Lamp Control	15	0.5	WH/ VT	1430	V	—
16	0.35	WH/ D-BU	5986	II	—	Serial Data Communi-cation Enable	16	0.35	WH/ D-BU	5986	V	—
17	0.35	BK/ YE	1691	II	—	Automatic Day/Night Mirror Low Reference	17	0.35	BK/ YE	1691	V	—
18	—	—	—	—	—	Not Occupied	18	—	—	—	—	—
19	0.5	WH/ BN	6815	II	—	Inadvertent Power Control	19	0.5	WH/ BN	6815	V	—
20	0.35	L-GN	2308	II	—	Passenger Air Bag Off Indicator Control	20	0.35	L-GN	2308	V	—
21	0.35	BU	2307	II	—	Passenger Air Bag On Indicator Control	21	0.35	BU	2307	V	—
22	0.35	YE/ WH	1690	II	—	Automatic Day/Night Mirror Signal	22	0.35	YE/ WH	1690	V	—
23	0.35	WH	6192	II	—	Power Sliding Window Switch Close Signal	23	0.35	WH	6192	V	—
24	0.35	GY	156	II	—	Courtesy Lamp Switch Signal	24	0.35	GY	156	V	—

X256 Headliner Harness to Instrument Panel Harness (cont'd)

Pin	Size	Color	Circuit	Terminal Type ID	Option	Function	Pin	Size	Color	Circuit	Terminal Type ID	Option
25	0.35	L-GN	5060	II	—	Low Speed GMLAN Serial Data	25	0.35	L-GN	5060	V	—
26 - 29	—	—	—	—	—	Not Occupied	26 - 29	—	—	—	—	—
30	2.5	L-GN/ D-BU	5989	III	—	Emergency Lamp Relay Contact Control	30	2.5	L-GN/ D-BU	5989	IV	—
31	0.35	BN/ WH	2517	II	—	Keypad Red LED Control	31	0.35	BN/ WH	2517	V	—
32	0.35	YE/ VT	2516	II	—	Keypad Green LED Control	32	0.35	YE/ VT	2516	V	—
33	0.35	L-GN/ WH	24	II	—	Backup Lamp Control	33	0.35	L-GN/ WH	24	V	—
34	0.35	GY/ L-GN	328	II	—	Interior Lamp Defeat Switch Signal	34	0.35	GY/ L-GN	328	V	—
35	0.35	BU/ GY	4672	II	—	Dome Lamp Off Indicator Control	35	0.35	BU/ GY	4672	V	—
36	—	—	—	—	—	Not Occupied	36	—	—	—	—	—
37	0.35	GN/ WH	2514	II	—	Keypad Signal	37	0.35	L-GN/ WH	2514	V	—
38	0.35	GN/ BK	2515	II	—	Keypad Control	38	0.35	L-GN/ BK	2515	V	—
39	0.5 0.5	VT/ WH VT/ GY	5065 1054	II II	CREW CAB/ EXTEN-DED CAB REGU-LAR CAB	Stop Lamp Relay Coil Control Stop Lamp Control	39	0.35	VT/ GY	1054	V	—
40	0.35	WH	3152	II	—	Lane Departure Warning Indicator Control	40	0.35	WH	3152	V	—
41	0.35	GY/ WH	3153	II	—	Lane Departure Warning Disable Switch Signal	41	0.35	GY/ WH	3153	V	—
42	0.35	YE	6817	II	—	LED Backlight Dimming Control	42	0.35	YE	6817	V	—
43 - 44	—	—	—	—	—	Not Occupied	43 - 44	—	—	—	—	—
45	0.35	WH	6816	II	—	Indicator Dimming Control	45	0.35	WH	6816	V	—

X256 Headliner Harness to Instrument Panel Harness (cont'd)

Pin	Size	Color	Circuit	Terminal Type ID	Option	Function	Pin	Size	Color	Circuit	Terminal Type ID	Option
46	—	—	—	—	—	Not Occupied	46	—	—	—	—	—
47	0.35	VT/ L-GN	7558	II	—	LED Ambient Lighting Control 2	47	0.35	VT/ L-GN	7558	V	—
48	0.35	VT/ WH	5234	II	—	Passenger Seat Belt Indicator Control	48	0.35	VT/ WH	5234	V	—
49	—	—	—	—	—	Not Occupied	49	—	—	—	—	—
50	0.35	L-GN/ BN	6132	II	—	Local Interconnect Network Serial Data Bus 1	50	0.35	L-GN/ BN	6132	V	—
51	—	—	—	—	—	Not Occupied	51	—	—	—	—	—
52	0.35	YE/ VT	6191	II	—	Power Sliding Window Switch Open Signal	52	0.35	YE/ VT	6191	V	—
53 - 55	—	—	—	—	—	Not Occupied	53 - 55	—	—	—	—	—

X260 Auxiliary Instrument Panel Harness to Instrument Panel Harness (Z82)

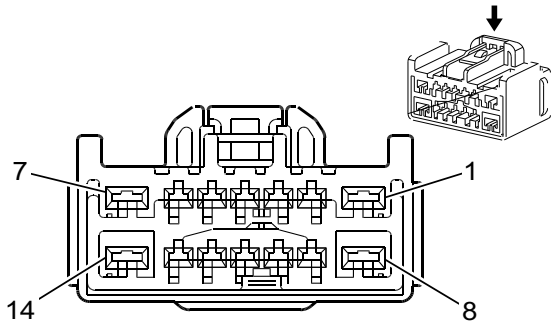

823290

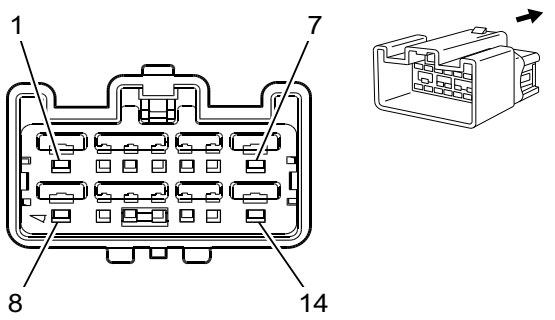

1283905

Connector Part Information

Harness Type: Auxiliary Instrument Panel
OEM Connector: 10847017
Service Connector: Service by Harness - See Part Catalog
Description: 14-Way F 1.5, 2.8 Series (L-GY)

Connector Part Information

Harness Type: Instrument Panel
OEM Connector: 10846900
Service Connector: 88956523
Description: 14-Way M 1.5, 2.8 Series (L-GY)

Terminal Part Information

Terminal Type ID	Terminated Lead	Diagnostic Test Probe	Terminal Removal Tool	Service Terminal	Tray Name	Core Crimp	Insulation Crimp
I	Not Required	J-35616-2A (GY)	No Tool Required	Not Required	Not Required	Not Required	Not Required
II	Not Required	J-35616-4A (PU)	No Tool Required	Not Required	Not Required	Not Required	Not Required
III	13575818	J-35616-3 (GY)	J-38125-553	Not Available	Not Available	Not Available	Not Available
IV	13575824	J-35616-5 (PU)	J-38125-11A	7114-4112-02	Yazaki 9	C	D

X260 Auxiliary Instrument Panel Harness to Instrument Panel Harness (Z82)

Pin	Size	Color	Circuit	Terminal Type ID	Option	Function	Pin	Size	Color	Circuit	Terminal Type ID	Option
1	2	BK	1250	II	—	Ground	1	2	BK	1250	IV	—
2 - 4	—	—	—	—	—	Not Occupied	2 - 4	—	—	—	—	—
5	0.5	WH/ D-BU	3691	I	—	Trailer Brake Apply Signal	5	0.5	WH/ D-BU	3691	III	—
6	—	—	—	—	—	Not Occupied	6	—	—	—	—	—
7	2	RD/ VT	1242	II	—	Battery Positive Voltage	7	2	RD/ VT	1242	IV	—
8 - 13	—	—	—	—	—	Not Occupied	8 - 13	—	—	—	—	—
14	2	BU	47	II	—	Trailer Auxiliary Control	14	2	BU	47	IV	—

X260 Auxiliary Fuse Block Harness to Instrument Panel Harness (-Z82)

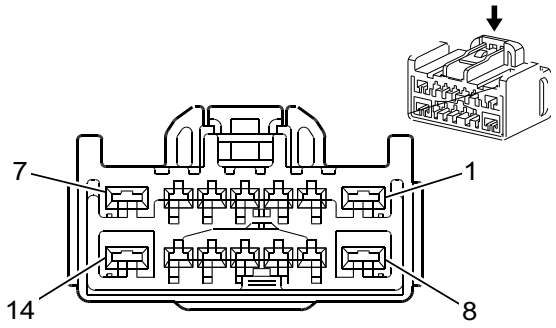

823290

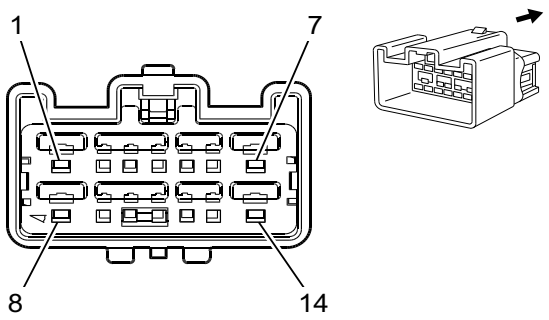

1283905

Connector Part Information

Harness Type: Auxiliary Fuse Block
OEM Connector: 10847017
Service Connector: Service by Harness - See Part Catalog
Description: 14-Way F 1.5, 2.8 Series (L-GY)

Connector Part Information

Harness Type: Instrument Panel
OEM Connector: 10846900
Service Connector: 88956523
Description: 14-Way M 1.5, 2.8 Series (L-GY)

Terminal Part Information

Terminal Type ID	Terminated Lead	Diagnostic Test Probe	Terminal Removal Tool	Service Terminal	Tray Name	Core Crimp	Insulation Crimp
I	Not Required	J-35616-2A (GY)	No Tool Required	Not Required	Not Required	Not Required	Not Required
II	Not Required	J-35616-4A (PU)	No Tool Required	Not Required	Not Required	Not Required	Not Required
III	13575818	J-35616-3 (GY)	J-38125-553	Not Available	Not Available	Not Available	Not Available
IV	13575824	J-35616-5 (PU)	J-38125-11A	7114-4112-02	Yazaki 9	C	D

X260 Auxiliary Fuse Block Harness to Instrument Panel Harness (-Z82)

Pin	Size	Color	Circuit	Terminal Type ID	Option	Function	Pin	Size	Color	Circuit	Terminal Type ID	Option
1	0.75	BK	1050	II	—	Ground	1	2	BK	1250	IV	—
2	—	—	—	—	—	Not Occupied	2	—	—	—	—	—
3	0.35	YE	6817	I	—	LED Backlight Dimming Control	3	0.5	YE	6817	III	—
4	0.35	WH/VT	6821	I	—	Surveillance Switch Signal	4	0.35	WH/VT	6821	III	—
5	0.5	WH/D-BU	3691	I	—	Trailer Brake Apply Signal	5	0.5	WH/D-BU	3691	III	—
6	—	—	—	—	—	Accessory Ignition Voltage	6	0.35	VT/YE	43	III	—
7	2	RD/VT	1242	II	—	Battery Positive Voltage	7	2	RD/VT	1242	IV	—

X260 Auxiliary Fuse Block Harness to Instrument Panel Harness (-Z82) (cont'd)

Pin	Size	Color	Circuit	Terminal Type ID	Option	Function	Pin	Size	Color	Circuit	Terminal Type ID	Option
8	2.5	L-GN/ D-BU	5989	II	—	Emergency Lamp Relay Contact Control	8	2.5	L-GN/ D-BU	5989	IV	—
9	—	—	—	—	—	Out of Park Signal	9	0.35	YE	6812	III	—
10	—	—	—	—	—	Vehicle Speed Signal	10	0.35	L-GN/ GY	817	III	—
11	0.35	WH	6816	I	—	Indicator Dimming Control	11	0.35	WH	6816	III	—
12	—	—	—	—	—	Not Occupied	12	—	—	—	—	—
13	0.5	VT/ L-GN	39	I	—	Run/Crank Ignition 1 Voltage	13	0.35	VT/ WH	239	III	—
14	2	BU	47	II	—	Trailer Auxiliary Control	14	2	BU	47	IV	—

X275 Instrument Panel Harness to Body Harness

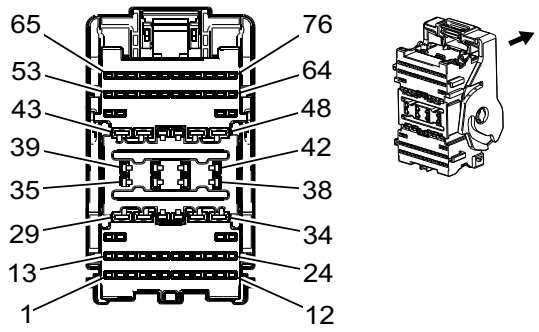

3960183

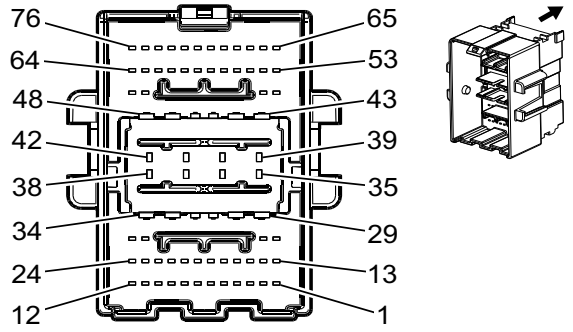

3960526

Connector Part Information

Harness Type: Instrument Panel
OEM Connector: 35142991
Service Connector: 84581287
Description: 76-Way F 1.2, 1.5, 2.8 YESC Series (BK)

Connector Part Information

Harness Type: Body
OEM Connector: 33303580
Service Connector: 19369989
Description: 76-Way M 1.2 MCON-CB, 1.5, 2.8 YESC Series (BK)

Terminal Part Information

Terminal Type ID	Terminated Lead	Diagnostic Test Probe	Terminal Removal Tool	Service Terminal	Tray Name	Core Crimp	Insulation Crimp
I	13575708	J-35616-2A (GY)	J-38125-11A	Not Available	Not Available	Not Available	Not Available
II	13578891	J-35616-2A (GY)	J-38125-11A	Not Available	Not Available	Not Available	Not Available
III	13580025	J-35616-4A (PU)	J-38125-11A	7116-4111-02	Yazaki 9	E	A
IV	13582232	J-35616-16 (LT GN)	J-38125-215A	Not Available	Not Available	Not Available	Not Available
V	13582322	J-35616-4A (PU)	J-38125-11A	7116-4110-02	Yazaki 9	E	C
VI	19301767	J-35616-2A (GY)	J-38125-215A	Not Available	Not Available	Not Available	Not Available
VII	19333323	J-35616-16 (LT GN)	J-38125-215A	Not Available	Not Available	Not Available	Not Available
VIII	19367551	J-35616-16 (LT GN)	J-38125-215A	Not Available	Not Available	Not Available	Not Available
IX	19371240	J-35616-16 (LT GN)	J-38125-559	Not Available	Not Available	Not Available	Not Available
X	Not Available	J-35616-4A (PU)	J-38125-215A	Not Available	Not Available	Not Available	Not Available
XI	13575824	J-35616-5 (PU)	J-38125-215A	Not Available	Not Available	Not Available	Not Available
XII	19333325	J-35616-13 (BU)	J-38125-215A	Not Available	Not Available	Not Available	Not Available
XIII	19352417	J-35616-3 (GY)	J-38125-215A	Not Available	Not Available	Not Available	Not Available
XIV	19352418	J-35616-3 (GY)	J-38125-215A	Not Available	Not Available	Not Available	Not Available
XV	19355729	J-35616-5 (PU)	J-38125-215A	Not Available	Not Available	Not Available	Not Available
XVI	19355731	J-35616-5 (PU)	J-38125-215A	Not Available	Not Available	Not Available	Not Available

Terminal Part Information (cont'd)

Terminal Type ID	Terminated Lead	Diagnostic Test Probe	Terminal Removal Tool	Service Terminal	Tray Name	Core Crimp	Insulation Crimp
XVII	Not Available	J-35616-17 (LT GN)	J-38125-215A	Not Available	Not Available	Not Available	Not Available
XVIII	Not Available	J-35616-17 (LT GN)	Not Available	Not Available	Not Available	Not Available	Not Available

X275 Instrument Panel Harness to Body Harness

Pin	Size	Color	Circuit	Terminal Type ID	Option	Function	Pin	Size	Color	Circuit	Terminal Type ID	Option
1	—	—	—	—	—	Not Occupied	1	—	—	—	—	—
2	0.5	RD/WH	3440	IX	—	Battery Positive Voltage	2	0.5	RD/WH	3440	XVIII	—
3	0.5	BN/WH	3895	VIII	—	Roof Rail Air Bag Defeat Switch Low Reference	3	0.5	BN/WH	3895	XVIII	—
4	0.5	BU/WH	3119	VIII	—	Roof Rail Air Bag Defeat Switch Signal	4	0.5	BU/WH	3119	XVIII	—
5	0.35	GY/GN	2555	VII	—	Rear Park Assist Disable Signal	5	0.35	GY/GN	2555	XVIII	—
6	—	—	—	—	—	Not Occupied	6	—	—	—	—	—
7	0.35	VT/WH	5234	VII	—	Passenger Seat Belt Indicator Control Passenger Seat Belt Indicator Control	7	0.35 0.35	VT/WH VT/WH	5234 5234	XII XVIII	— —
8	0.35	BU	2307	VII	—	Passenger Air Bag On Indicator Control	8	0.35	BU	2307	XVIII	—
9	0.35	BU/GY	4672	VII	—	Dome Lamp Off Indicator Control	9	0.35	BU/GY	4672	XVIII	—
10	0.35	GY	156	VII	—	Courtesy Lamp Switch Signal	10	0.35	GY	156	XVIII	—
11	0.35	GN/BU	761	VII	—	Blower Speed Feedback Signal	11	0.35	GN/BU	761	XVIII	—
12	0.35	GN/GY	817	VII	—	Vehicle Speed Signal	12	0.35	GN/GY	817	XVIII	—
13	0.35	GN	2308	VII	—	Passenger Air Bag Off Indicator Control	13	0.35	GN	2308	XVIII	—
14	0.35	VT/GY	709	IX	—	Left Park Lamp Control	14	0.35	VT/GY	709	XVIII	—

X275 Instrument Panel Harness to Body Harness (cont'd)

Pin	Size	Color	Circuit	Terminal Type ID	Option	Function	Pin	Size	Color	Circuit	Terminal Type ID	Option
15	0.35	YE/ OG	3025	IV	—	Passenger IP Module Stage 1 High Control	15	0.35	YE/ OG	3025	XVII	—
16	0.35	OG/ WH	3024	IV	—	Passenger IP Module Stage 1 Low Control	16	0.35	OG/ WH	3024	XVII	—
17	0.35	GY/ OG	3027	IV	—	Passenger IP Module Stage 2 High Control	17	0.35	GY/ OG	3027	XVII	—
18	0.35	OG/ VT	3026	IV	—	Passenger IP Module Stage 2 Low Control	18	0.35	OG/ VT	3026	XVII	—
19	0.35	GN/ BN	6132	VII	—	Local Interconnect Network Serial Data Bus 1	19	0.5	GN/ BN	6132	XVIII	—
20	0.35	GY/ GN	1102	VII	—	Low Speed GMLAN Serial Data #2 Low Speed GMLAN Serial Data #2	20	0.75 0.35	GY/ GN GY/ GN	1102 1102	XVIII XVII	— —
21	0.35	YE	6817	VII	—	LED Backlight Dimming Control	21	0.35	YE	6817	XVIII	—
22	0.5	GN/ GY	6135	VIII	—	Local Interconnect Network Serial Data Bus 4	22	0.35	GN/ GY	6135	XVII	—
23 - 26	—	—	—	—	—	Not Occupied	23 - 26	—	—	—	—	—
27	0.35	YE	7755	VII	—	AC Power Outlet Status Indicator Control	27	0.35	YE	7755	XVIII	—
28	0.35	VT/ WH	239	VII	—	Run/Crank Ignition 1 Voltage	28	0.35	VT/ WH	239	XVIII	—
29	2	BK	1250	X	—	Ground	29	2	BK	1250	XVI	—
30	0.5	RD/ GN	5140	V	—	Battery Positive Voltage	30	0.5	RD/ GN	5140	XI	—
31	0.5	BK/ WH	2751	I	—	Signal Ground	31	0.75	BK/ WH	2751	XIV	—
32	0.35	WH/ VT	6821	II	—	Surveillance Switch Signal	32	0.35	WH/ VT	6821	XIII	—
33	0.75	WH/ YE	1853	III	—	Right Front Midrange Speaker Control (+)	33	0.75	WH/ YE	1853	XV	—

X275 Instrument Panel Harness to Body Harness (cont'd)

Pin	Size	Color	Circuit	Terminal Type ID	Option	Function	Pin	Size	Color	Circuit	Terminal Type ID	Option
34	0.75	BN/ BK	1953	III	—	Right Front Midrange Speaker (-) Low Reference	34	0.75	BN/ BK	1953	XV	—
35	0.35	GY	1198	II	—	Endgate Release Switch Analog Signal Interior	35	0.35	GY	1198	XIII	—
36	0.5	WH/ BU	3691	VI	—	Trailer Brake Apply Signal	36	0.5	WH/ BU	3691	XIII	—
37	0.35	RD/ WH	1340	II	—	Battery Positive Voltage	37	0.35	RD/ WH	1340	XIII	—
38 - 39	—	—	—	—	—	Not Occupied	38 - 39	—	—	—	—	—
40	0.35 0.35	GN/ WH GN/ WH	24 24	VI I	— —	Backup Lamp Control Backup Lamp Control	40	0.35	GN/ WH	24	XIII	—
41	0.5	WH/ VT	1430	VI	—	Exterior Courtesy Lamp Control	41	1	WH/ VT	1430	XIV	—
42	0.35	VT/ BN	300	VI	—	Run Ignition 3 Voltage	42	0.35	VT/ BN	300	XIII	—
43	2	BU	47	X	—	Trailer Auxiliary Control	43	2	BU	47	XVI	—
44	2	RD/ VT	1242	X	—	Battery Positive Voltage	44	2	RD/ VT	1242	XVI	—
45	0.75	BK/ WH	2751	I	—	Signal Ground	45	0.75	BK/ WH	2751	XIV	—
46	0.35	VT/ BU	6091	II	—	Crankshaft Position Sensor Replicated Signal	46	0.35	VT/ BU	6091	XIII	—
47	0.75	YE/ BK	117	X	—	Right Front Speaker Signal (-) 1	47	0.75	YE/ BK	117	XV	—
48	0.75	YE	200	X	—	Right Front Speaker Control (+) 1	48	0.75	YE	200	XV	—
49 - 50	—	—	—	—	—	Not Occupied	49 - 50	—	—	—	—	—
51	0.5	WH	46	IX	—	Right Rear Speaker Control (+)	51	0.5	WH	46	XVIII	—
52	0.5	BU/ BK	115	IX	—	Right Rear Speaker Signal (-)	52	0.5	BU/ BK	115	XVIII	—
53	—	—	—	—	—	Not Occupied	53	—	—	—	—	—

X275 Instrument Panel Harness to Body Harness (cont'd)

Pin	Size	Color	Circuit	Terminal Type ID	Option	Function	Pin	Size	Color	Circuit	Terminal Type ID	Option
54	0.35	GY/ WH	3272	VII	—	Remote Function Actuator Control	54	0.35	GY/ WH	3272	XVIII	—
55	0.35	BU/ WH	3275	VII	—	Remote Function Actuator Receive Signal	55	0.35	BU/ WH	3275	XVIII	—
56	0.35	YE/ GN	3274	VII	—	Remote Function Actuator Transmit Signal	56	0.35	YE/ GN	3274	XVIII	—
57	0.35	GY	3273	VII	—	Remote Function Actuator Low Reference	57	0.35	GY	3273	XVIII	—
58	0.5	BN/ VT	193	VIII	—	Rear Defog Relay Control	58	0.5	BN/ VT	193	XVIII	—
59	0.35	YE	6812	VII	—	Out of Park Signal	59	0.35	YE	6812	XVIII	—
60	0.35	YE/ RD	2415	VII	—	Park Brake Switch Voltage Reference 2	60	0.35	YE/ RD	2415	XVIII	—
61	0.35	GY/ RD	2414	VII	—	Park Brake Switch Voltage Reference 1	61	0.35	GY/ RD	2414	XVIII	—
62	0.35	BU/ BK	2416	VII	—	Park Brake Switch Monitor Signal 1	62	0.35	BU/ BK	2416	XVIII	—
63	0.35	WH/ GN	1305	VII	—	High Speed GMLAN Serial Data (-)9	63	0.5	WH/ GN	1305	XVIII	—
64	0.35	BU/ GN	1304	VII	—	High Speed GMLAN Serial Data (+)9	64	0.5	BU/ GN	1304	XVIII	—
65	0.35	BN	2417	VII	—	Park Brake Switch Monitor Signal 2	65	0.35	BN	2417	XVIII	—
66	0.35	Bare	6974	VII	—	Camera Low Reference	66	0.35	Bare	6974	XII	—
67	0.35	GY/ YE	6972	VII	—	Camera Signal 2 +	67	0.35	GY/ YE	6972	XVIII	—
68	0.35	WH/ BU	6973	VII	—	Camera Signal 2	68	0.35	WH/ BU	6973	XVIII	—
69	0.35	GN/ BN	5852	VII	—	Rear Park Assist LED Disable Signal	69	0.35	GN/ BN	5852	XVIII	—
70	0.35	VT/ YE	43	VII	—	Accessory Ignition Voltage	70	0.35	VT/ YE	43	XVIII	—

X275 Instrument Panel Harness to Body Harness (cont'd)

Pin	Size	Color	Circuit	Terminal Type ID	Option	Function	Pin	Size	Color	Circuit	Terminal Type ID	Option
71	0.35	YE	2418	VII	—	Park Brake Switch Test Signal	71	0.35	YE	2418	XVIII	—
72	0.35	BU/VT	1134	VII	—	Park Brake Switch Signal	72	0.35	BU/VT	1134	XVIII	—
73	0.35	VT/GY	1054	VII	—	Stop Lamp Relay Coil Control Stop Lamp Control	73	0.35 0.35	VT/WH VT/GY	5065 1054	XVIII XVIII	— —
74	0.35	BN	7291	IX	—	Major Endgate Release Switch Signal Interior	74	0.35	BN	7291	XVIII	—
75 - 76	—	—	—	—	—	Not Occupied	75 - 76	—	—	—	—	—

X302 Diesel Exhaust Fluid Jumper Harness to Chassis Harness (L5P)

—

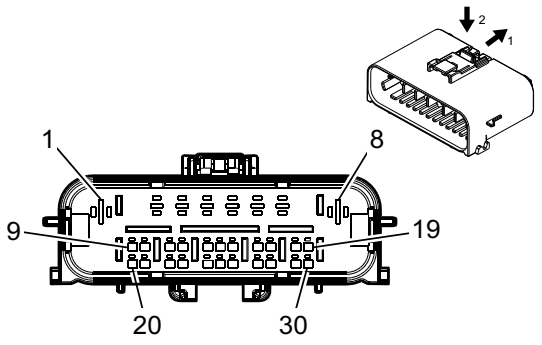

4817393

Connector Part Information

Harness Type: Diesel Exhaust Fluid Jumper
OEM Connector: Not Available
Service Connector: Service by Harness - See Part Catalog
Description: 30-Way F

Connector Part Information

Harness Type: Chassis
OEM Connector: 35099030
Service Connector: -
Description: 30-Way M 1.2 MCON-CB, 2.8 MCP Series, Sealed (BK)

Terminal Part Information

Terminal Type ID	Terminated Lead	Diagnostic Test Probe	Terminal Removal Tool	Service Terminal	Tray Name	Core Crimp	Insulation Crimp
I	Not Required	Not Available	No Tool Required	Not Required	Not Required	Not Required	Not Required
II	19300650	J-35616-43 (RD)	J-38125-557	Not Available	Not Available	Not Available	Not Available
III	19330704	J-35616-17 (LT GN)	J-38125-215A	Not Available	Not Available	Not Available	Not Available
IV	Not Available	J-35616-5 (PU)	J-38125-36	1-962915-3	Yazaki 15	E	1

X302 Diesel Exhaust Fluid Jumper Harness to Chassis Harness (L5P)

Pin	Size	Color	Circuit	Terminal Type ID	Option	Function	Pin	Size	Color	Circuit	Terminal Type ID	Option
1	2.5	BU	3921	I	—	DEF Heater Supply 1	1	2.5	BU	3921	II	—
2	1	RD/WH	3440	I	—	Battery Positive Voltage	2	1	RD/WH	3440	IV	—
7	0.75	BK/WH	1651	I	—	Signal Ground	7	0.75	BK/WH	1651	IV	—
8	2.5	BK/WH	1651	I	—	Signal Ground	8	2.5	BK/WH	1651	II	—
11	0.5	BU/BN	4498	I	—	High Speed GMLAN Serial Data (+) 7	11	0.5	BU/BN	4498	III	—
12	0.5	WH	4499	I	—	High Speed GMLAN Serial Data (-) 7	12	0.5	WH	4499	III	—
14	0.5	VT/L-GN	4320	I	—	Powertrain Sensor Bus Enable	14	0.5	VT/L-GN	4320	III	—

X302 Diesel Exhaust Fluid Jumper Harness to Chassis Harness (L5P) (cont'd)

Pin	Size	Color	Circuit	Terminal Type ID	Option	Function	Pin	Size	Color	Circuit	Terminal Type ID	Option
15	0.5	VT/ YE	5985	I	—	Accessory Wakeup Serial Data	15	0.5	VT/ YE	5985	III	—
16	0.5	BU	2500	I	—	High Speed GMLAN Serial Data (+) 1	16	0.5	BU	2500	III	—
17	0.5	WH	2501	I	—	High Speed GMLAN Serial Data (-) 1	17	0.5	WH	2501	III	—
22	0.5	BU/ BN	4498	I	—	High Speed GMLAN Serial Data (+) 7	22	0.5	BU/ BN	4498	III	—
23	0.5	WH	4499	I	—	High Speed GMLAN Serial Data (-) 7	23	0.5	WH	4499	III	—
25	0.5	VT/ L-GN	439	I	—	Run/Crank Ignition 1 Voltage	25	0.5	VT/ L-GN	439	III	—
27	0.5	BU	2500	I	—	High Speed GMLAN Serial Data (+) 1	27	0.5	BU	2500	III	—
28	0.5	WH	2501	I	—	High Speed GMLAN Serial Data (-) 1	28	0.5	WH	2501	III	—

X310 Driver Seat Harness to Body Harness (A45)

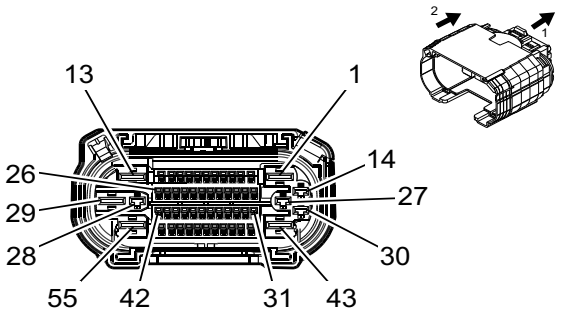

—

4992168

Connector Part Information

Harness Type: Driver Seat
OEM Connector: 35016652
Service Connector: Service by Harness - See Part Catalog
Description: 55-Way F 1.2 OCS, 2.8, 6.3 CTS Series, Sealed (BK)

Connector Part Information

Harness Type: Body
OEM Connector: Not Available
Service Connector: -
Description: 55-Way M

Terminal Part Information

Terminal Type ID	Terminated Lead	Diagnostic Test Probe	Terminal Removal Tool	Service Terminal	Tray Name	Core Crimp	Insulation Crimp
I	Not Required	J-35616-16 (LT GN)	No Tool Required	Not Required	Not Required	Not Required	Not Required
II	Not Required	J-35616-17 (LT GN)	No Tool Required	Not Required	Not Required	Not Required	Not Required
III	Not Required	Not Available	No Tool Required	Not Required	Not Required	Not Required	Not Required
IV	Not Available	No Tool Required	Not Available	Not Available	Not Available	Not Available	Not Available
V	Not Required	No Tool Required	Not Available	Not Available	Not Available	Not Available	Not Available

X310 Driver Seat Harness to Body Harness (A45)

Pin	Size	Color	Circuit	Terminal Type ID	Option	Function	Pin	Size	Color	Circuit	Terminal Type ID	Option
1	2.5	BK	1150	II	—	Ground	1	2.5	BK	1150	IV	—
2	—	—	—	—	—	Not Occupied	2	—	—	—	—	—
3	0.5	L-GN/WH	7530	I	—	Local Interconnect Network Serial Data Bus 8	3	0.5	L-GN/WH	7530	V	—
4	0.5	RD/BN	1140	I	—	Battery Positive Voltage	4	0.5	RD/BN	1140	V	—
5	0.5	L-GN	5060	I	—	Low Speed GMLAN Serial Data	5	0.5	L-GN	5060	V	—
6	0.5	L-BU/L-GN	614	I	—	Memory Seat Switch Set Signal	6	0.5	L-BU/L-GN	614	V	—

X310 Driver Seat Harness to Body Harness (A45) (cont'd)

Pin	Size	Color	Circuit	Terminal Type ID	Option	Function	Pin	Size	Color	Circuit	Terminal Type ID	Option
7	0.5	BK/ L-BU	5978	I	—	Memory Switch Low Reference	7	0.5	BK/ L-BU	5978	V	—
8	0.5	WH	615	I	—	Memory Seat Switch Signal 1	8	0.5	WH	615	V	—
9	—	—	—	—	—	Not Occupied	9	—	—	—	—	—
10	0.5	BK/ YE	2080	I	—	Driver Heated Seat NTC Low Reference	10	0.5	BK/ YE	2080	V	—
11	0.5	YE/ GY	2079	I	—	Driver Heated Seat NTC Signal	11	0.5	YE/ GY	2079	V	—
12	—	—	—	—	—	Not Occupied	12	—	—	—	—	—
13	2.5	RD/ YE	5040	II	—	Battery Positive Voltage	13	2.5	RD/ YE	5040	IV	—
14	—	—	—	—	—	Not Occupied	14	—	—	—	—	—
15	0.75	BN/ VT	2077	I	—	Driver Heated Seat Element Control	15	0.75	BN/ VT	2077	V	—
16	0.75	BN/ BK	2078	I	—	Driver Heated Seat Element Low Reference	16	0.75	BN/ BK	2078	V	—
17	0.5	BK/ VT	2426	I	—	Driver Heated Back NTC Low Reference	17	0.5	BK/ VT	2426	V	—
18	0.5	L-BU	2425	I	—	Driver Heated Back NTC Signal	18	0.5	L-BU	2425	V	—
19	0.75	BN	2432	I	—	Driver Heated Back Element Control	19	0.75	BN	2432	V	—
20	0.5	L-GN/ VT	5906	I	—	Driver Seat Vent Motor Control 1	20	0.5	L-GN/ VT	5906	V	—
21	0.75	VT/ WH	4939	I	—	Run/Crank Ignition 1 Voltage	21	0.75	VT/ WH	4939	V	—
22 - 28	—	—	—	—	—	Not Occupied	22 - 28	—	—	—	—	—
29	0.75	RD/ YE	8840	II	—	Battery Positive Voltage	29	0.75	RD/ YE	8840	V	—
30 - 31	—	—	—	—	—	Not Occupied	30 - 31	—	—	—	—	—
32	0.35	OG/ BN	238	I	—	Driver Seat Belt Switch Signal	32	0.35	OG/ BN	238	V	—

X310 Driver Seat Harness to Body Harness (A45) (cont'd)

Pin	Size	Color	Circuit	Terminal Type ID	Option	Function	Pin	Size	Color	Circuit	Terminal Type ID	Option
33	0.5	BK/ OG	1363	I	—	Driver Seat Belt Switch Low Reference	33	0.5	BK/ OG	1363	V	—
34	—	—	—	—	—	Not Occupied	34	—	—	—	—	—
35	0.5	OG/ L-BU	3068	III	—	Driver Side Impact Module High Control	35	0.5	OG/ L-BU	3068	V	—
36	0.5	BK/ OG	3069	III	—	Driver Side Impact Module Low Control	36	0.5	BK/ OG	3069	V	—
37 - 55	—	—	—	—	—	Not Occupied	37 - 55	—	—	—	—	—

X310 Driver Seat Harness to Body Harness (-A45)

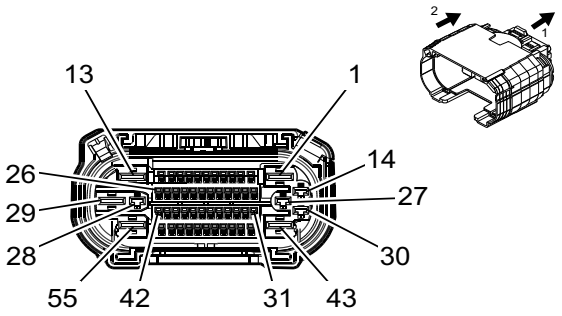

—

4992168

Connector Part Information

Harness Type: Driver Seat
OEM Connector: 35016652
Service Connector: Service by Harness - See Part Catalog
Description: 55-Way F 1.2 OCS, 2.8, 6.3 CTS Series, Sealed (BK)

Connector Part Information

Harness Type: Body
OEM Connector: Not Available
Service Connector: -
Description: 55-Way M

Terminal Part Information

Terminal Type ID	Terminated Lead	Diagnostic Test Probe	Terminal Removal Tool	Service Terminal	Tray Name	Core Crimp	Insulation Crimp
I	Not Required	J-35616-16 (LT GN)	No Tool Required	Not Required	Not Required	Not Required	Not Required
II	Not Required	Not Available	No Tool Required	Not Required	Not Required	Not Required	Not Required
III	Not Required	No Tool Required	Not Available	Not Available	Not Available	Not Available	Not Available

X310 Driver Seat Harness to Body Harness (-A45)

Pin	Size	Color	Circuit	Terminal Type ID	Option	Function	Pin	Size	Color	Circuit	Terminal Type ID	Option
1 - 31	—	—	—	—	—	Not Occupied	1 - 31	—	—	—	—	—
32	0.35	OG/ BN	238	I	—	Driver Seat Belt Switch Signal	32	0.35	OG/ BN	238	III	—
33	0.5	BK/ OG	1363	I	—	Driver Seat Belt Switch Low Reference	33	0.5	BK/ OG	1363	III	—
34	—	—	—	—	—	Not Occupied	34	—	—	—	—	—
35	0.5	OG/ L-BU	3068	II	—	Driver Side Impact Module High Control	35	0.5	OG/ L-BU	3068	III	—
36	0.5	BK/ OG	3069	II	—	Driver Side Impact Module Low Control	36	0.5	BK/ OG	3069	III	—

X310 Driver Seat Harness to Body Harness (-A45) (cont'd)

Pin	Size	Color	Circuit	Terminal Type ID	Option	Function	Pin	Size	Color	Circuit	Terminal Type ID	Option
37 - 55	—	—	—	—	—	Not Occupied	37 - 55	—	—	—	—	—

X310 Body Harness to Body Harness (Crew Cab)

—

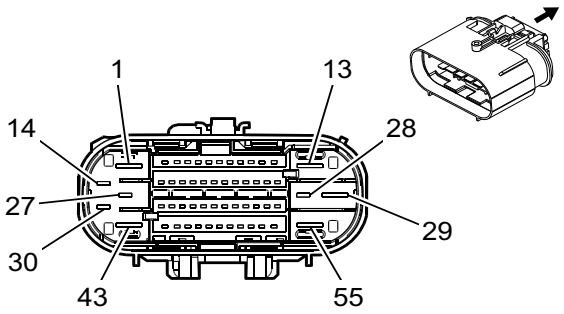

4993301

Connector Part Information

Harness Type: Body
OEM Connector: Not Available
Service Connector: -
Description: 55-Way F

Connector Part Information

Harness Type: Body
OEM Connector: 35205186
Service Connector: -
Description: 55-Way M 1.2 OCS, 2.8, 6.3 CTS Series, Sealed (BK)

Terminal Part Information

Terminal Type ID	Terminated Lead	Diagnostic Test Probe	Terminal Removal Tool	Service Terminal	Tray Name	Core Crimp	Insulation Crimp
I	Not Available	J-35616-16 (LT GN)	Not Available	Not Available	Not Available	Not Available	Not Available
II	Not Available	J-35616-31 (OR)	Not Available	Not Available	Not Available	Not Available	Not Available
III	Not Required	J-35616-16 (LT GN)	Not Available	Not Available	Not Available	Not Available	Not Available
IV	Not Required	J-35616-31 (OR)	Not Available	Not Available	Not Available	Not Available	Not Available
V	19370818	J-35616-17 (LT GN)	J-38125-215A	Not Available	Not Available	Not Available	Not Available
VI	84616651	J-35616-17 (LT GN)	J-38125-215A	Not Available	Not Available	Not Available	Not Available
VII	Not Available	J-35616-32 (OR)	J-38125-36	Not Available	Not Available	Not Available	Not Available

X310 Body Harness to Body Harness (Crew Cab)

Pin	Size	Color	Circuit	Terminal Type ID	Option	Function	Pin	Size	Color	Circuit	Terminal Type ID	Option
1	2.5 2.5	BK BK	1150 1150	II I	— —	Ground Ground	1	2.5	BK	1150	VII	—
3	0.35 0.35	GN/WH GN/WH	7530 7530	IV III	— —	Local Interconnect Network Serial Data Bus 8 Local Interconnect Network Serial Data Bus 8	3	0.35	GN/WH	7530	VI	—

X310 Body Harness to Body Harness (Crew Cab) (cont'd)

Pin	Size	Color	Circuit	Terminal Type ID	Option	Function	Pin	Size	Color	Circuit	Terminal Type ID	Option
4	0.35 0.35	RD/BN RD/BN	1140 1140	IV III	— —	Battery Positive Voltage Battery Positive Voltage	4	0.35	RD/BN	1140	VI	—
5	0.35 0.35	GN GN	5060 5060	IV III	— —	Low Speed GMLAN Serial Data Low Speed GMLAN Serial Data	5	0.35	GN	5060	VI	—
6	0.35 0.35	BU/GN BU/GN	614 614	IV III	— —	Memory Seat Switch Set Signal Memory Seat Switch Set Signal	6	0.35	BU/GN	614	VI	—
7	0.35 0.35	BK/BU BK/BU	5978 5978	IV III	— —	Memory Switch Low Reference Memory Switch Low Reference	7	0.35	BK/BU	5978	VI	—
8	0.35 0.35	WH WH	615 615	IV III	— —	Memory Seat Switch Signal 1 Memory Seat Switch Signal 1	8	0.35	WH	615	VI	—
10	0.35 0.35	BK/YE BK/YE	2080 2080	IV III	— —	Driver Heated Seat NTC Low Reference Driver Heated Seat NTC Low Reference	10	0.35	BK/YE	2080	VI	—
11	0.35 0.35	YE/GY YE/GY	2079 2079	IV III	— —	Driver Heated Seat NTC Signal Driver Heated Seat NTC Signal	11	0.35	YE/GY	2079	VI	—
13	2.5 2.5	RD/YE RD/YE	5040 5040	II I	— —	Battery Positive Voltage Battery Positive Voltage	13	2.5	RD/YE	5040	VII	—
15	0.75 0.75	BN/VT BN/VT	2077 2077	IV III	— —	Driver Heated Seat Element Control Driver Heated Seat Element Control	15	0.75	BN/VT	2077	V	—

X310 Body Harness to Body Harness (Crew Cab) (cont'd)

Pin	Size	Color	Circuit	Terminal Type ID	Option	Function	Pin	Size	Color	Circuit	Terminal Type ID	Option
16	0.75 0.75	BN/BK BN/BK	2078 2078	IV III	— —	Driver Heated Seat Element Low Reference Driver Heated Seat Element Low Reference	16	0.75	BN/BK	2078	V	—
17	0.35 0.35	BK/VT BK/VT	2426 2426	IV III	— —	Driver Heated Back NTC Low Reference Driver Heated Back NTC Low Reference	17	0.35	BK/VT	2426	VI	—
18	0.35 0.35	BU BU	2425 2425	IV III	— —	Driver Heated Back NTC Signal Driver Heated Back NTC Signal	18	0.35	BU	2425	VI	—
19	0.75 0.75	BN BN	2432 2432	IV III	— —	Driver Heated Back Element Control Driver Heated Back Element Control	19	0.75	BN	2432	V	—
20	0.35 0.35	GN/VT GN/VT	5906 5906	IV III	— —	Driver Seat Vent Motor Control 1 Driver Seat Vent Motor Control 1	20	0.35	GN/VT	5906	VI	—
21	0.5 0.5	VT/WH VT/WH	4939 4939	IV III	— —	Run/Crank Ignition 1 Voltage Run/Crank Ignition 1 Voltage	21	0.5	VT/WH	4939	VI	—
29	0.75 0.75	RD/YE RD/YE	8840 8840	IV III	— —	Battery Positive Voltage Battery Positive Voltage	29	0.75	RD/YE	8840	VII	—
31	0.35 0.35	OG/GN OG/GN	5055 5055	IV III	— —	Driver Seat Position Switch Signal Driver Seat Position Switch Signal	31	0.35	OG/GN	5055	VI	—
32	0.35 0.35	OG/BN OG/BN	238 238	IV III	— —	Driver Seat Belt Switch Signal Driver Seat Belt Switch Signal	32	0.35	OG/BN	238	VI	—

X310 Body Harness to Body Harness (Crew Cab) (cont'd)

Pin	Size	Color	Circuit	Terminal Type ID	Option	Function	Pin	Size	Color	Circuit	Terminal Type ID	Option
33	0.35 0.35	BK/OG BK/OG	1363 1363	IV III	— —	Driver Seat Belt Switch Low Reference Driver Seat Belt Switch Low Reference	33	0.35	BK/OG	1363	VI	—
35	0.5	OG/BU	3068	III	—	Driver Side Impact Module High Control	35	0.5	OG/BU	3068	VI	—
36	0.5 0.5	GN/OG GN/OG	3069 3069	IV III	— —	Driver Side Impact Module Low Control Driver Side Impact Module Low Control	36	0.5	GN/OG	3069	VI	—

X310 Driver Seat Harness to Body Harness (Crew Cab)

—

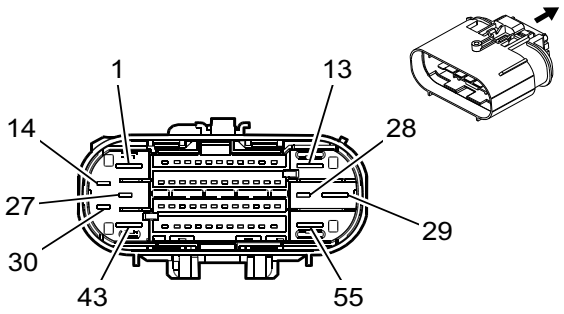

4993301

Connector Part Information

Harness Type: Driver Seat
OEM Connector: Not Available
Service Connector: Service by Harness - See Part Catalog
Description: 55-Way F

Connector Part Information

Harness Type: Body
OEM Connector: 35205186
Service Connector: -
Description: 55-Way M 1.2 OCS, 2.8, 6.3 CTS Series, Sealed (BK)

Terminal Part Information

Terminal Type ID	Terminated Lead	Diagnostic Test Probe	Terminal Removal Tool	Service Terminal	Tray Name	Core Crimp	Insulation Crimp
I	Not Required	Not Available	No Tool Required	Not Required	Not Required	Not Required	Not Required
II	19370818	J-35616-17 (LT GN)	J-38125-215A	Not Available	Not Available	Not Available	Not Available
III	84616651	J-35616-17 (LT GN)	J-38125-215A	Not Available	Not Available	Not Available	Not Available
IV	Not Available	J-35616-17 (LT GN)	Not Available	Not Available	Not Available	Not Available	Not Available
V	Not Available	J-35616-32 (OR)	J-38125-36	Not Available	Not Available	Not Available	Not Available

X310 Driver Seat Harness to Body Harness (Crew Cab)

Pin	Size	Color	Circuit	Terminal Type ID	Option	Function	Pin	Size	Color	Circuit	Terminal Type ID	Option
1	2.5	BK	1150	I	—	Ground	1	2.5	BK	1150	V	—
3	0.35	L-GN/WH	7530	I	—	Local Interconnect Network Serial Data Bus 8	3	0.35	L-GN/WH	7530	IV	—
4	0.35	RD/BN	1140	I	—	Battery Positive Voltage	4	0.35	RD/BN	1140	IV	—
5	0.35	L-GN	5060	I	—	Low Speed GMLAN Serial Data	5	0.35	L-GN	5060	IV	—
6	0.35	BU/L-GN	614	I	—	Memory Seat Switch Set Signal	6	0.35	BU/L-GN	614	IV	—
7	0.35	BK/D-BU	5978	I	—	Memory Switch Low Reference	7	0.35	BK/D-BU	5978	IV	—

X310 Driver Seat Harness to Body Harness (Crew Cab) (cont'd)

Pin	Size	Color	Circuit	Terminal Type ID	Option	Function	Pin	Size	Color	Circuit	Terminal Type ID	Option
8	0.35	WH	615	I	—	Memory Seat Switch Signal 1	8	0.35	WH	615	IV	—
10	0.35	BK/YE	2080	I	—	Driver Heated Seat NTC Low Reference	10	0.35	BK/YE	2080	IV	—
11	0.35	YE/GY	2079	I	—	Driver Heated Seat NTC Signal	11	0.35	YE/GY	2079	IV	—
13	2.5	RD/YE	5040	I	—	Battery Positive Voltage	13	2.5	RD/YE	5040	V	—
15	0.75	BN/VT	2077	I	—	Driver Heated Seat Element Control	15	0.75	BN/VT	2077	II	—
16	0.75	BN/BK	2078	I	—	Driver Heated Seat Element Low Reference	16	0.75	BN/BK	2078	II	—
17	0.35	BK/VT	2426	I	—	Driver Heated Back NTC Low Reference	17	0.35	BK/VT	2426	IV	—
18	0.35	BU	2425	I	—	Driver Heated Back NTC Signal	18	0.35	BU	2425	IV	—
19	0.75	BN	2432	I	—	Driver Heated Back Element Control	19	0.75	BN	2432	II	—
20	0.35	L-GN/VT	5906	I	—	Driver Seat Vent Motor Control 1	20	0.35	L-GN/VT	5906	IV	—
21	0.5	VT/WH	4939	I	—	Run/Crank Ignition 1 Voltage	21	0.5	VT/WH	4939	IV	—
29	0.75	RD/YE	8840	I	—	Battery Positive Voltage	29	0.75	RD/YE	8840	V	—
31	0.35	OG/L-GN	5055	I	—	Driver Seat Position Switch Signal	31	0.35	OG/L-GN	5055	IV	—
32	0.35	OG/BN	238	I	—	Driver Seat Belt Switch Signal	32	0.35	OG/BN	238	IV	—
33	0.35	BK/OG	1363	I	—	Driver Seat Belt Switch Low Reference	33	0.35	BK/OG	1363	IV	—
35	0.5	OG/D-BU	3068	I	—	Driver Side Impact Module High Control	35	0.5	OG/D-BU	3068	III	—
36	0.5	L-GN/OG	3069	I	—	Driver Side Impact Module Low Control	36	0.5	L-GN/OG	3069	III	—

X310 Driver Seat Harness to Body Harness (Extended Cab)

—

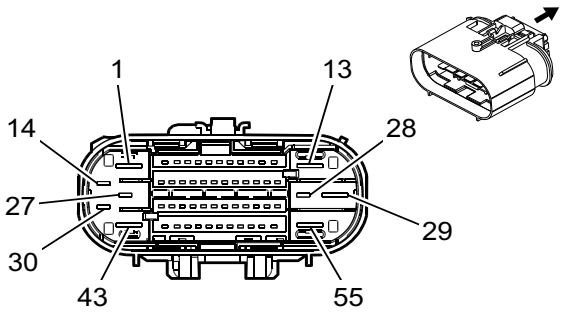

4993301

Connector Part Information

Harness Type: Driver Seat
OEM Connector: Not Available
Service Connector: Service by Harness - See Part Catalog
Description: 55-Way F

Connector Part Information

Harness Type: Body
OEM Connector: 35196707
Service Connector: 84727364
Description: 55-Way M 1.2 OCS, 2.8, 6.3 CTS Series, Sealed (BK)

Terminal Part Information

Terminal Type ID	Terminated Lead	Diagnostic Test Probe	Terminal Removal Tool	Service Terminal	Tray Name	Core Crimp	Insulation Crimp
I	Not Required	Not Available	No Tool Required	Not Required	Not Required	Not Required	Not Required
II	19370818	J-35616-17 (LT GN)	J-38125-215A	Not Available	Not Available	Not Available	Not Available
III	84616651	J-35616-17 (LT GN)	J-38125-215A	Not Available	Not Available	Not Available	Not Available
IV	Not Available	J-35616-17 (LT GN)	Not Available	Not Available	Not Available	Not Available	Not Available
V	Not Available	J-35616-32 (OR)	J-38125-36	Not Available	Not Available	Not Available	Not Available

X310 Driver Seat Harness to Body Harness (Extended Cab)

Pin	Size	Color	Circuit	Terminal Type ID	Option	Function	Pin	Size	Color	Circuit	Terminal Type ID	Option
1	2.5	BK	1150	I	—	Ground	1	2.5	BK	1150	V	—
2	1	BK	9003	I	—	—	2	1	BK	9003	II	—
3	0.35	L-GN/WH	7530	I	—	Local Interconnect Network Serial Data Bus 8	3	0.35	L-GN/WH	7530	IV	—
4	0.35	RD/BN	1140	I	—	Battery Positive Voltage	4	0.35	RD/BN	1140	IV	—
5	0.35	L-GN	5060	I	—	Low Speed GMLAN Serial Data	5	0.35	L-GN	5060	IV	—
6	0.35	BU/L-GN	614	I	—	Memory Seat Switch Set Signal	6	0.35	BU/L-GN	614	IV	—

X310 Driver Seat Harness to Body Harness (Extended Cab) (cont'd)

Pin	Size	Color	Circuit	Terminal Type ID	Option	Function	Pin	Size	Color	Circuit	Terminal Type ID	Option
7	0.35	BK/ D-BU	5978	I	—	Memory Switch Low Reference	7	0.35	BK/ D-BU	5978	IV	—
8	0.35	WH	615	I	—	Memory Seat Switch Signal 1	8	0.35	WH	615	IV	—
10	0.35	BK/ YE	2080	I	—	Driver Heated Seat NTC Low Reference	10	0.35	BK/ YE	2080	IV	—
11	0.35	YE/ GY	2079	I	—	Driver Heated Seat NTC Signal	11	0.35	YE/ GY	2079	IV	—
12	1	BK	9003	I	—	—	12	1	BK	9003	II	—
13	2.5	RD/ YE	5040	I	—	Battery Positive Voltage	13	2.5	RD/ YE	5040	V	—
15	0.75	BN/ VT	2077	I	—	Driver Heated Seat Element Control	15	0.75	BN/ VT	2077	II	—
16	0.75	BN/ BK	2078	I	—	Driver Heated Seat Element Low Reference	16	0.75	BN/ BK	2078	II	—
17	0.35	BK/ VT	2426	I	—	Driver Heated Back NTC Low Reference	17	0.35	BK/ VT	2426	IV	—
18	0.35	BU	2425	I	—	Driver Heated Back NTC Signal	18	0.35	BU	2425	IV	—
19	0.75	BN	2432	I	—	Driver Heated Back Element Control	19	0.75	BN	2432	II	—
20	0.35	L-GN/ VT	5906	I	—	Driver Seat Vent Motor Control 1	20	0.35	L-GN/ VT	5906	IV	—
21	0.5	VT/ WH	4939	I	—	Run/Crank Ignition 1 Voltage	21	0.5	VT/ WH	4939	IV	—
31	0.35	OG/ L-GN	5055	I	—	Driver Seat Position Switch Signal	31	0.35	OG/ L-GN	5055	IV	—
32	0.35	OG/ BN	238	I	—	Driver Seat Belt Switch Signal	32	0.35	OG/ BN	238	IV	—
33	0.35	BK/ OG	1363	I	—	Driver Seat Belt Switch Low Reference	33	0.35	BK/ OG	1363	IV	—
35	0.5	OG/ D-BU	3068	I	—	Driver Side Impact Module High Control	35	0.5	OG/ D-BU	3068	III	—

X310 Driver Seat Harness to Body Harness (Extended Cab) (cont'd)

Pin	Size	Color	Circuit	Terminal Type ID	Option	Function	Pin	Size	Color	Circuit	Terminal Type ID	Option
36	0.5	L-GN/OG	3069	I	—	Driver Side Impact Module Low Control	36	0.5	L-GN/OG	3069	III	—
44	1	BK	9003	I	—	—	44	1	BK	9003	II	—
54	1	BK	9003	I	—	—	54	1	BK	9003	II	—

X310 Driver Seat Harness to Body Harness (Regular Cab)

—

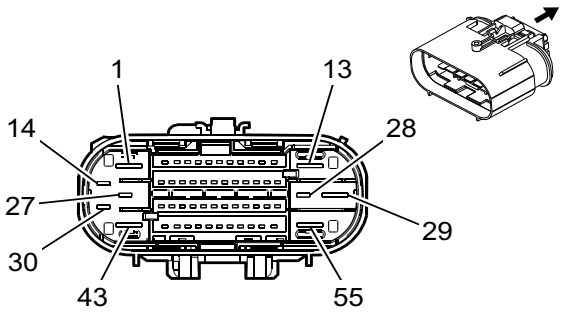

4993301

Connector Part Information

Harness Type: Driver Seat
OEM Connector: Not Available
Service Connector: Service by Harness - See Part Catalog
Description: 55-Way F

Connector Part Information

Harness Type: Body
OEM Connector: 35196707
Service Connector: 84727364
Description: 55-Way M 1.2 OCS, 2.8, 6.3 CTS Series, Sealed (BK)

Terminal Part Information

Terminal Type ID	Terminated Lead	Diagnostic Test Probe	Terminal Removal Tool	Service Terminal	Tray Name	Core Crimp	Insulation Crimp
I	Not Required	Not Available	No Tool Required	Not Required	Not Required	Not Required	Not Required
II	19370818	J-35616-17 (LT GN)	J-38125-215A	Not Available	Not Available	Not Available	Not Available
III	84616651	J-35616-17 (LT GN)	J-38125-215A	Not Available	Not Available	Not Available	Not Available
IV	Not Available	J-35616-17 (LT GN)	Not Available	Not Available	Not Available	Not Available	Not Available
V	Not Available	J-35616-32 (OR)	J-38125-36	Not Available	Not Available	Not Available	Not Available

X310 Driver Seat Harness to Body Harness (Regular Cab)

Pin	Size	Color	Circuit	Terminal Type ID	Option	Function	Pin	Size	Color	Circuit	Terminal Type ID	Option
1	2.5	BK	1150	I	—	Ground	1	2.5	BK	1150	V	—
10	0.35	BK/YE	2080	I	—	Driver Heated Seat NTC Low Reference	10	0.35	BK/YE	2080	IV	—
11	0.35	YE/GY	2079	I	—	Driver Heated Seat NTC Signal	11	0.35	YE/GY	2079	IV	—
13	2.5	RD/YE	5040	I	—	Battery Positive Voltage	13	2.5	RD/YE	5040	V	—
15	0.75	BN/VT	2077	I	—	Driver Heated Seat Element Control	15	0.75	BN/VT	2077	II	—

X310 Driver Seat Harness to Body Harness (Regular Cab) (cont'd)

Pin	Size	Color	Circuit	Terminal Type ID	Option	Function	Pin	Size	Color	Circuit	Terminal Type ID	Option
16	0.75	BN/ BK	2078	I	—	Driver Heated Seat Element Low Reference	16	0.75	BN/ BK	2078	II	—
17	0.35	BK/ VT	2426	I	—	Driver Heated Back NTC Low Reference	17	0.35	BK/ VT	2426	IV	—
18	0.35	BU	2425	I	—	Driver Heated Back NTC Signal	18	0.35	BU	2425	IV	—
19	0.75	BN	2432	I	—	Driver Heated Back Element Control	19	0.75	BN	2432	II	—
31	0.35	OG/ L-GN	5055	I	—	Driver Seat Position Switch Signal	31	0.35	OG/ L-GN	5055	IV	—
32	0.35	OG/ BN	238	I	—	Driver Seat Belt Switch Signal	32	0.35	OG/ BN	238	IV	—
33	0.35	BK/ OG	1363	I	—	Driver Seat Belt Switch Low Reference	33	0.35	BK/ OG	1363	IV	—
35	0.5	OG/ D-BU	3068	I	—	Driver Side Impact Module High Control	35	0.5	OG/ D-BU	3068	III	—
36	0.5	L-GN/ OG	3069	I	—	Driver Side Impact Module Low Control	36	0.5	L-GN/ OG	3069	III	—

X320 Passenger Seat Harness to Body Harness (A7E)

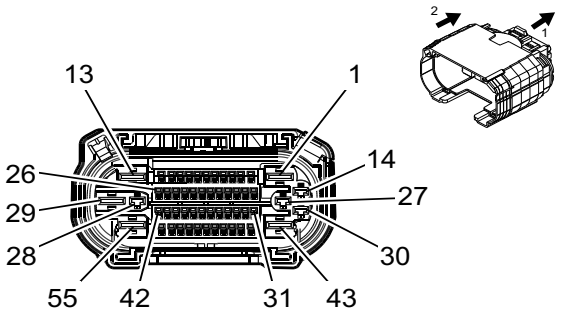

4992168

—

Connector Part Information

Harness Type: Passenger Seat
OEM Connector: 35016652
Service Connector: Service by Harness - See Part Catalog
Description: 55-Way F 1.2 OCS, 2.8, 6.3 CTS Series, Sealed (BK)

Connector Part Information

Harness Type: Body
OEM Connector: Not Available
Service Connector: -
Description: 55-Way M

Terminal Part Information

Terminal Type ID	Terminated Lead	Diagnostic Test Probe	Terminal Removal Tool	Service Terminal	Tray Name	Core Crimp	Insulation Crimp
I	Not Required	J-35616-16 (LT GN)	No Tool Required	Not Required	Not Required	Not Required	Not Required
II	Not Required	J-35616-17 (LT GN)	No Tool Required	Not Required	Not Required	Not Required	Not Required
III	Not Required	J-35616-35 (VT)	No Tool Required	Not Required	Not Required	Not Required	Not Required
IV	Not Required	Not Available	No Tool Required	Not Required	Not Required	Not Required	Not Required
V	Not Required	No Tool Required	Not Available	Not Available	Not Available	Not Available	Not Available

X320 Passenger Seat Harness to Body Harness (A7E)

Pin	Size	Color	Circuit	Terminal Type ID	Option	Function	Pin	Size	Color	Circuit	Terminal Type ID	Option
1	0.75	BK	1250	II	—	Ground	1	0.75	BK	1250	V	—
2 - 8	—	—	—	—	—	Not Occupied	2 - 8	—	—	—	—	—
9	0.5	L-GN/ L-BU	6133	I	—	Local Interconnect Network Serial Data Bus 2	9	0.5	L-GN/ L-BU	6133	V	—
10	0.5	BK/ YE	2080	I	—	Driver Heated Seat NTC Low Reference	10	0.5	BK/ YE	2080	V	—
11	0.5	YE/ GY	2079	I	—	Driver Heated Seat NTC Signal	11	0.5	YE/ GY	2079	V	—
12 - 13	—	—	—	—	—	Not Occupied	12 - 13	—	—	—	—	—

X320 Passenger Seat Harness to Body Harness (A7E) (cont'd)

Pin	Size	Color	Circuit	Terminal Type ID	Option	Function	Pin	Size	Color	Circuit	Terminal Type ID	Option
14	0.75	RD	6140	III	—	Battery Positive Voltage	14	0.75	RD	6140	V	—
15	0.75	BN/ VT	2077	I	—	Driver Heated Seat Element Control	15	0.75	BN/ VT	2077	V	—
16	0.75	BN/ BK	2078	I	—	Driver Heated Seat Element Low Reference	16	0.75	BN/ BK	2078	V	—
17	0.5	BK/ VT	2426	I	—	Driver Heated Back NTC Low Reference	17	0.5	BK/ VT	2426	V	—
18	0.5	L-BU	2425	I	—	Driver Heated Back NTC Signal	18	0.5	L-BU	2425	V	—
19	0.75	BN	2432	I	—	Driver Heated Back Element Control	19	0.75	BN	2432	V	—
20 - 21	—	—	—	—	—	Not Occupied	20 - 21	—	—	—	—	—
22	0.5	RD/ L-GN	4440	I	—	Battery Positive Voltage	22	0.5	RD/ L-GN	4440	V	—
23	0.5	L-GN	5060	I	—	Low Speed GMLAN Serial Data	23	0.5	L-GN	5060	V	—
24	0.5	GY/ OG	3946	I	—	Automatic Locking Retractor Switch Low Reference	24	0.5	GY/ OG	3946	V	—
25	0.5	OG/ BN	3947	I	—	Automatic Locking Retractor Switch Signal	25	0.5	OG/ BN	3947	V	—
26	0.5	BK/ WH	2551	I	—	Signal Ground	26	0.5	BK/ WH	2551	V	—
27	0.75	RD/ L-GN	5140	III	—	Battery Positive Voltage	27	0.75	RD/ L-GN	5140	V	—
28 - 31	—	—	—	—	—	Not Occupied	28 - 31	—	—	—	—	—
32	0.35	OG/ VT	1362	I	—	Passenger Seat Belt Switch Signal	32	0.35	OG/ VT	1362	V	—
33	0.5	BK/ OG	1361	I	—	Passenger Seat Belt Switch Low Reference	33	0.5	BK/ OG	1361	V	—
34	—	—	—	—	—	Not Occupied	34	—	—	—	—	—

X320 Passenger Seat Harness to Body Harness (A7E) (cont'd)

Pin	Size	Color	Circuit	Terminal Type ID	Option	Function	Pin	Size	Color	Circuit	Terminal Type ID	Option
35	0.5	OG/ GY	3066	IV	—	Passenger Side Impact Module High Control	35	0.5	OG/ GY	3066	V	—
36	0.5	L-BU/ OG	3067	IV	—	Passenger Side Impact Module Low Control	36	0.5	L-BU/ OG	3067	V	—
37 - 55	—	—	—	—	—	Not Occupied	37 - 55	—	—	—	—	—

X320 Passenger Seat Harness to Body Harness (A7K)

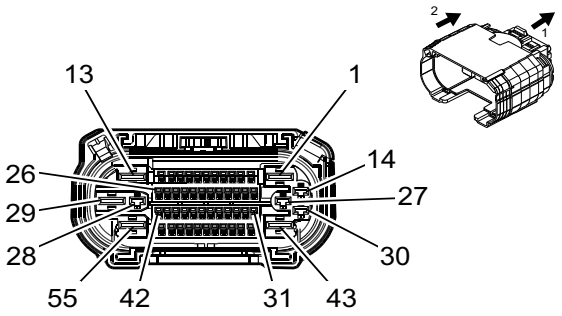

4992168

—

Connector Part Information

Harness Type: Passenger Seat
OEM Connector: 35016652
Service Connector: Service by Harness - See Part Catalog
Description: 55-Way F 1.2 OCS, 2.8, 6.3 CTS Series, Sealed (BK)

Connector Part Information

Harness Type: Body
OEM Connector: Not Available
Service Connector: -
Description: 55-Way M

Terminal Part Information

Terminal Type ID	Terminated Lead	Diagnostic Test Probe	Terminal Removal Tool	Service Terminal	Tray Name	Core Crimp	Insulation Crimp
I	Not Required	J-35616-16 (LT GN)	No Tool Required	Not Required	Not Required	Not Required	Not Required
II	Not Required	J-35616-17 (LT GN)	No Tool Required	Not Required	Not Required	Not Required	Not Required
III	Not Required	J-35616-35 (VT)	No Tool Required	Not Required	Not Required	Not Required	Not Required
IV	Not Required	Not Available	No Tool Required	Not Required	Not Required	Not Required	Not Required
V	Not Available	No Tool Required	Not Available	Not Available	Not Available	Not Available	Not Available
VI	Not Required	No Tool Required	Not Available	Not Available	Not Available	Not Available	Not Available

X320 Passenger Seat Harness to Body Harness (A7K)

Pin	Size	Color	Circuit	Terminal Type ID	Option	Function	Pin	Size	Color	Circuit	Terminal Type ID	Option
1	2.5	BK	1250	II	—	Ground	1	2.5	BK	1250	V	—
2 - 8	—	—	—	—	—	Not Occupied	2 - 8	—	—	—	—	—
9	0.5	L-GN/ L-BU	6133	I	—	Local Interconnect Network Serial Data Bus 2	9	0.5	L-GN/ L-BU	6133	VI	—
10	0.5	BK/ YE	2080	I	—	Driver Heated Seat NTC Low Reference	10	0.5	BK/ YE	2080	VI	—
11	0.5	YE/ GY	2079	I	—	Driver Heated Seat NTC Signal	11	0.5	YE/ GY	2079	VI	—

X320 Passenger Seat Harness to Body Harness (A7K) (cont'd)

Pin	Size	Color	Circuit	Terminal Type ID	Option	Function	Pin	Size	Color	Circuit	Terminal Type ID	Option
12	—	—	—	—	—	Not Occupied	12	—	—	—	—	—
13	2.5	RD/ BN	1440	II	—	Battery Positive Voltage	13	2.5	RD/ BN	1440	V	—
14	0.75	RD	6140	III	—	Battery Positive Voltage	14	0.75	RD	6140	VI	—
15	0.75	BN/ VT	2077	I	—	Driver Heated Seat Element Control	15	0.75	BN/ VT	2077	VI	—
16	0.75	BN/ BK	2078	I	—	Driver Heated Seat Element Low Reference	16	0.75	BN/ BK	2078	VI	—
17	0.5	BK/ VT	2426	I	—	Driver Heated Back NTC Low Reference	17	0.5	BK/ VT	2426	VI	—
18	0.5	L-BU	2425	I	—	Driver Heated Back NTC Signal	18	0.5	L-BU	2425	VI	—
19	0.75	BN	2432	I	—	Driver Heated Back Element Control	19	0.75	BN	2432	VI	—
20	0.35	L-GN/ VT	5906	I	—	Driver Seat Vent Motor Control 1	20	0.35	L-GN/ VT	5906	VI	—
21	0.75	VT/ WH	4939	I	—	Run/Crank Ignition 1 Voltage	21	0.75	VT/ WH	4939	VI	—
22	0.5	RD/ L-GN	4440	I	—	Battery Positive Voltage	22	0.5	RD/ L-GN	4440	VI	—
23	0.5	L-GN	5060	I	—	Low Speed GMLAN Serial Data	23	0.5	L-GN	5060	VI	—
24	0.5	GY/ OG	3946	I	—	Automatic Locking Retractor Switch Low Reference	24	0.5	GY/ OG	3946	VI	—
25	0.5	OG/ BN	3947	I	—	Automatic Locking Retractor Switch Signal	25	0.5	OG/ BN	3947	VI	—
26	0.5	BK/ WH	2551	I	—	Signal Ground	26	0.5	BK/ WH	2551	VI	—
27	0.75	RD/ L-GN	5140	III	—	Battery Positive Voltage	27	0.75	RD/ L-GN	5140	VI	—
28	—	—	—	—	—	Not Occupied	28	—	—	—	—	—
29	0.75	RD/ YE	8840	II	—	Battery Positive Voltage	29	0.75	RD/ YE	8840	VI	—

X320 Passenger Seat Harness to Body Harness (A7K) (cont'd)

Pin	Size	Color	Circuit	Terminal Type ID	Option	Function	Pin	Size	Color	Circuit	Terminal Type ID	Option
30 - 31	—	—	—	—	—	Not Occupied	30 - 31	—	—	—	—	—
32	0.35	OG/ VT	1362	I	—	Passenger Seat Belt Switch Signal	32	0.35	OG/ VT	1362	VI	—
33	0.5	BK/ OG	1361	I	—	Passenger Seat Belt Switch Low Reference	33	0.5	BK/ OG	1361	VI	—
34	—	—	—	—	—	Not Occupied	34	—	—	—	—	—
35	0.5	OG/ GY	3066	IV	—	Passenger Side Impact Module High Control	35	0.5	OG/ GY	3066	VI	—
36	0.5	L-BU/ OG	3067	IV	—	Passenger Side Impact Module Low Control	36	0.5	L-BU/ OG	3067	VI	—
37 - 55	—	—	—	—	—	Not Occupied	37 - 55	—	—	—	—	—

X320 Passenger Seat Harness to Body Harness (Crew Cab)

—

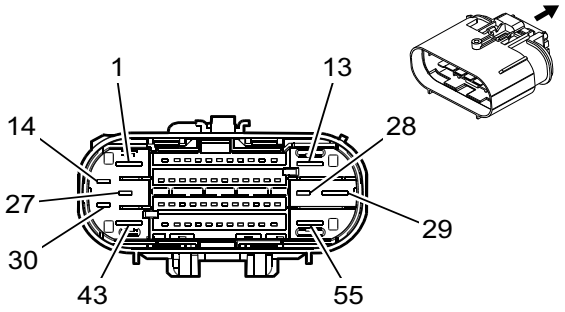

4993301

Connector Part Information

Harness Type: Passenger Seat
OEM Connector: Not Available
Service Connector: Service by Harness - See Part Catalog
Description: 55-Way F

Connector Part Information

Harness Type: Body
OEM Connector: 35205187
Service Connector: -
Description: 55-Way M 1.2 OCS, 2.8, 6.3 CTS Series, Sealed (BK)

Terminal Part Information

Terminal Type ID	Terminated Lead	Diagnostic Test Probe	Terminal Removal Tool	Service Terminal	Tray Name	Core Crimp	Insulation Crimp
I	Not Required	Not Available	No Tool Required	Not Required	Not Required	Not Required	Not Required
II	13584548	J-35616-5 (PU)	J-38125-215A	Not Available	Not Available	Not Available	Not Available
III	19370818	J-35616-17 (LT GN)	J-38125-215A	Not Available	Not Available	Not Available	Not Available
IV	Not Available	J-35616-17 (LT GN)	J-38125-215A	Not Available	Not Available	Not Available	Not Available
V	Not Available	J-35616-17 (LT GN)	Not Available	Not Available	Not Available	Not Available	Not Available
VI	Not Available	J-35616-32 (OR)	J-38125-36	Not Available	Not Available	Not Available	Not Available

X320 Passenger Seat Harness to Body Harness (Crew Cab)

Pin	Size	Color	Circuit	Terminal Type ID	Option	Function	Pin	Size	Color	Circuit	Terminal Type ID	Option
1	2.5	BK	1250	I	—	Ground	1	2.5	BK	1250	VI	—
9	0.35	L-GN/D-BU	6133	I	—	Local Interconnect Network Serial Data Bus 2	9	0.35	L-GN/D-BU	6133	V	—
10	0.35	BK/YE	2080	I	—	Driver Heated Seat NTC Low Reference	10	0.35	BK/YE	2080	V	—
11	0.35	YE/GY	2079	I	—	Driver Heated Seat NTC Signal	11	0.35	YE/GY	2079	V	—
13	2.5	RD/BN	1440	I	—	Battery Positive Voltage	13	2.5	RD/BN	1440	VI	—

X320 Passenger Seat Harness to Body Harness (Crew Cab) (cont'd)

Pin	Size	Color	Circuit	Terminal Type ID	Option	Function	Pin	Size	Color	Circuit	Terminal Type ID	Option
14	0.5	RD	6140	I	—	Battery Positive Voltage	14	0.5	RD	6140	II	—
15	0.75	BN/ VT	2077	I	—	Driver Heated Seat Element Control	15	0.75	BN/ VT	2077	III	—
16	0.75	BN/ BK	2078	I	—	Driver Heated Seat Element Low Reference	16	0.75	BN/ BK	2078	III	—
17	0.35	BK/ VT	2426	I	—	Driver Heated Back NTC Low Reference	17	0.35	BK/ VT	2426	V	—
18	0.35	BU	2425	I	—	Driver Heated Back NTC Signal	18	0.35	BU	2425	V	—
19	0.75	BN	2432	I	—	Driver Heated Back Element Control	19	0.75	BN	2432	III	—
20	0.35	L-GN/ VT	5906	I	—	Driver Seat Vent Motor Control 1	20	0.35	L-GN/ VT	5906	V	—
21	0.5	VT/ WH	4939	I	—	Run/Crank Ignition 1 Voltage	21	0.5	VT/ WH	4939	V	—
22	0.5	RD/ L-GN	4440	I	—	Battery Positive Voltage	22	0.5	RD/ L-GN	4440	V	—
23	0.35	L-GN	5060	I	—	Low Speed GMLAN Serial Data	23	0.35	L-GN	5060	V	—
24	0.5	GY/ OG	3946	I	—	Automatic Locking Retractor Switch Low Reference	24	0.5	GY/ OG	3946	V	—
25	0.5	OG/ BN	3947	I	—	Automatic Locking Retractor Switch Signal	25	0.5	OG/ BN	3947	V	—
26	0.5	BK/ WH	2551	I	—	Signal Ground	26	0.5	BK/ WH	2551	V	—
27	0.5	RD/ L-GN	5140	I	—	Battery Positive Voltage	27	0.5	RD/ L-GN	5140	II	—
29	0.75	RD/ YE	8840	I	—	Battery Positive Voltage	29	0.75	RD/ YE	8840	VI	—
32	0.35	OG/ VT	1362	I	—	Passenger Seat Belt Switch Signal	32	0.35	OG/ VT	1362	V	—
33	0.35	BK/ OG	1361	I	—	Passenger Seat Belt Switch Low Reference	33	0.35	BK/ OG	1361	V	—

X320 Passenger Seat Harness to Body Harness (Crew Cab) (cont'd)

Pin	Size	Color	Circuit	Terminal Type ID	Option	Function	Pin	Size	Color	Circuit	Terminal Type ID	Option
35	0.35	OG/ GY	3066	I	—	Passenger Side Impact Module High Control	35	0.35	OG/ GY	3066	IV	—
36	0.35	BN/ OG	3067	I	—	Passenger Side Impact Module Low Control	36	0.35	BN/ OG	3067	IV	—

X320 Passenger Seat Harness to Body Harness (Extended Cab)

—

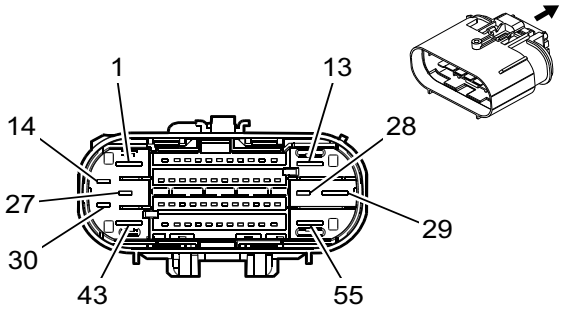

4993301

Connector Part Information

Harness Type: Passenger Seat
OEM Connector: Not Available
Service Connector: Service by Harness - See Part Catalog
Description: 55-Way F

Connector Part Information

Harness Type: Body
OEM Connector: 35196708
Service Connector: 84727364
Description: 55-Way M 1.2 OCS, 2.8, 6.3 CTS Series, Sealed (BK)

Terminal Part Information

Terminal Type ID	Terminated Lead	Diagnostic Test Probe	Terminal Removal Tool	Service Terminal	Tray Name	Core Crimp	Insulation Crimp
I	Not Required	Not Available	No Tool Required	Not Required	Not Required	Not Required	Not Required
II	13584548	J-35616-5 (PU)	J-38125-215A	Not Available	Not Available	Not Available	Not Available
III	19370818	J-35616-17 (LT GN)	J-38125-215A	Not Available	Not Available	Not Available	Not Available
IV	Not Available	J-35616-17 (LT GN)	J-38125-215A	Not Available	Not Available	Not Available	Not Available
V	Not Available	J-35616-17 (LT GN)	Not Available	Not Available	Not Available	Not Available	Not Available
VI	Not Available	J-35616-32 (OR)	J-38125-36	Not Available	Not Available	Not Available	Not Available

X320 Passenger Seat Harness to Body Harness (Extended Cab)

Pin	Size	Color	Circuit	Terminal Type ID	Option	Function	Pin	Size	Color	Circuit	Terminal Type ID	Option
1	2.5	BK	1250	I	—	Ground	1	2.5	BK	1250	VI	—
9	0.35	L-GN/D-BU	6133	I	—	Local Interconnect Network Serial Data Bus 2	9	0.35	L-GN/D-BU	6133	V	—
10	0.35	BK/YE	2080	I	—	Driver Heated Seat NTC Low Reference	10	0.35	BK/YE	2080	V	—
11	0.35	YE/GY	2079	I	—	Driver Heated Seat NTC Signal	11	0.35	YE/GY	2079	V	—
13	2.5	RD/BN	1440	I	—	Battery Positive Voltage	13	2.5	RD/BN	1440	VI	—

X320 Passenger Seat Harness to Body Harness (Extended Cab) (cont'd)

Pin	Size	Color	Circuit	Terminal Type ID	Option	Function	Pin	Size	Color	Circuit	Terminal Type ID	Option
14	0.5	RD	6140	I	—	Battery Positive Voltage	14	0.5	RD	6140	II	—
15	0.75	BN/ VT	2077	I	—	Driver Heated Seat Element Control	15	0.75	BN/ VT	2077	III	—
16	0.75	BN/ BK	2078	I	—	Driver Heated Seat Element Low Reference	16	0.75	BN/ BK	2078	III	—
17	0.35	BK/ VT	2426	I	—	Driver Heated Back NTC Low Reference	17	0.35	BK/ VT	2426	V	—
18	0.35	BU	2425	I	—	Driver Heated Back NTC Signal	18	0.35	BU	2425	V	—
19	0.75	BN	2432	I	—	Driver Heated Back Element Control	19	0.75	BN	2432	III	—
20	0.35	L-GN/ VT	5906	I	—	Driver Seat Vent Motor Control 1	20	0.35	L-GN/ VT	5906	V	—
21	0.5	VT/ WH	4939	I	—	Run/Crank Ignition 1 Voltage	21	0.5	VT/ WH	4939	V	—
22	0.5	RD/ L-GN	4440	I	—	Battery Positive Voltage	22	0.5	RD/ L-GN	4440	V	—
23	0.35	L-GN	5060	I	—	Low Speed GMLAN Serial Data	23	0.35	L-GN	5060	V	—
24	0.5	GY/ OG	3946	I	—	Automatic Locking Retractor Switch Low Reference	24	0.5	GY/ OG	3946	V	—
25	0.5	OG/ BN	3947	I	—	Automatic Locking Retractor Switch Signal	25	0.5	OG/ BN	3947	V	—
26	0.5	BK/ WH	2551	I	—	Signal Ground	26	0.5	BK/ WH	2551	V	—
27	0.5	RD/ L-GN	5140	I	—	Battery Positive Voltage	27	0.5	RD/ L-GN	5140	II	—
29	0.75	RD/ YE	8840	I	—	Battery Positive Voltage	29	0.75	RD/ YE	8840	VI	—
32	0.35	OG/ VT	1362	I	—	Passenger Seat Belt Switch Signal	32	0.35	OG/ VT	1362	V	—
33	0.35	BK/ OG	1361	I	—	Passenger Seat Belt Switch Low Reference	33	0.35	BK/ OG	1361	V	—

X320 Passenger Seat Harness to Body Harness (Extended Cab) (cont'd)

Pin	Size	Color	Circuit	Terminal Type ID	Option	Function	Pin	Size	Color	Circuit	Terminal Type ID	Option
35	0.35	OG/ GY	3066	I	—	Passenger Side Impact Module High Control	35	0.35	OG/ GY	3066	IV	—
36	0.35	BN/ OG	3067	I	—	Passenger Side Impact Module Low Control	36	0.35	BN/ OG	3067	IV	—

X320 Passenger Seat Harness to Body Harness (Regular Cab)

—

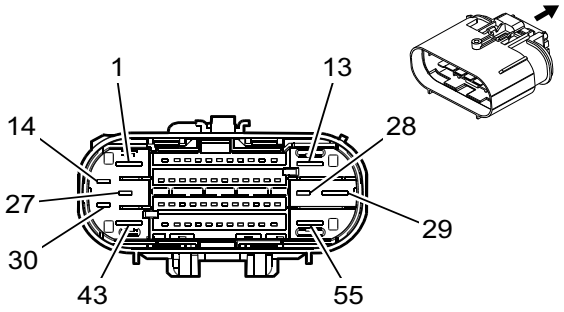

4993301

Connector Part Information

Harness Type: Passenger Seat
OEM Connector: Not Available
Service Connector: Service by Harness - See Part Catalog
Description: 55-Way F

Connector Part Information

Harness Type: Body
OEM Connector: 35196708
Service Connector: 84727364
Description: 55-Way M 1.2 OCS, 2.8, 6.3 CTS Series, Sealed (BK)

Terminal Part Information

Terminal Type ID	Terminated Lead	Diagnostic Test Probe	Terminal Removal Tool	Service Terminal	Tray Name	Core Crimp	Insulation Crimp
I	Not Required	Not Available	No Tool Required	Not Required	Not Required	Not Required	Not Required
II	13584548	J-35616-5 (PU)	J-38125-215A	Not Available	Not Available	Not Available	Not Available
III	19370818	J-35616-17 (LT GN)	J-38125-215A	Not Available	Not Available	Not Available	Not Available
IV	Not Available	J-35616-17 (LT GN)	J-38125-215A	Not Available	Not Available	Not Available	Not Available
V	Not Available	J-35616-17 (LT GN)	Not Available	Not Available	Not Available	Not Available	Not Available
VI	Not Available	J-35616-32 (OR)	J-38125-36	Not Available	Not Available	Not Available	Not Available

X320 Passenger Seat Harness to Body Harness (Regular Cab)

Pin	Size	Color	Circuit	Terminal Type ID	Option	Function	Pin	Size	Color	Circuit	Terminal Type ID	Option
1	2.5	BK	1250	I	—	Ground	1	2.5	BK	1250	VI	—
9	0.35	L-GN/D-BU	6133	I	—	Local Interconnect Network Serial Data Bus 2	9	0.35	L-GN/D-BU	6133	V	—
10	0.35	BK/YE	2080	I	—	Driver Heated Seat NTC Low Reference	10	0.35	BK/YE	2080	V	—
11	0.35	YE/GY	2079	I	—	Driver Heated Seat NTC Signal	11	0.35	YE/GY	2079	V	—
14	0.5	RD	6140	I	—	Battery Positive Voltage	14	0.5	RD	6140	II	—

X320 Passenger Seat Harness to Body Harness (Regular Cab) (cont'd)

Pin	Size	Color	Circuit	Terminal Type ID	Option	Function	Pin	Size	Color	Circuit	Terminal Type ID	Option
15	0.75	BN/ VT	2077	I	—	Driver Heated Seat Element Control	15	0.75	BN/ VT	2077	III	—
16	0.75	BN/ BK	2078	I	—	Driver Heated Seat Element Low Reference	16	0.75	BN/ BK	2078	III	—
17	0.35	BK/ VT	2426	I	—	Driver Heated Back NTC Low Reference	17	0.35	BK/ VT	2426	V	—
18	0.35	BU	2425	I	—	Driver Heated Back NTC Signal	18	0.35	BU	2425	V	—
19	0.75	BN	2432	I	—	Driver Heated Back Element Control	19	0.75	BN	2432	III	—
22	0.5	RD/ L-GN	4440	I	—	Battery Positive Voltage	22	0.5	RD/ L-GN	4440	V	—
23	0.35	L-GN	5060	I	—	Low Speed GMLAN Serial Data	23	0.35	L-GN	5060	V	—
24	0.5	GY/ OG	3946	I	—	Automatic Locking Retractor Switch Low Reference	24	0.5	GY/ OG	3946	V	—
25	0.5	OG/ BN	3947	I	—	Automatic Locking Retractor Switch Signal	25	0.5	OG/ BN	3947	V	—
26	0.5	BK/ WH	2551	I	—	Signal Ground	26	0.5	BK/ WH	2551	V	—
27	0.5	RD/ L-GN	5140	I	—	Battery Positive Voltage	27	0.5	RD/ L-GN	5140	II	—
32	0.35	OG/ VT	1362	I	—	Passenger Seat Belt Switch Signal	32	0.35	OG/ VT	1362	V	—
33	0.35	BK/ OG	1361	I	—	Passenger Seat Belt Switch Low Reference	33	0.35	BK/ OG	1361	V	—
35	0.35	OG/ GY	3066	I	—	Passenger Side Impact Module High Control	35	0.35	OG/ GY	3066	IV	—
36	0.35	BN/ OG	3067	I	—	Passenger Side Impact Module Low Control	36	0.35	BN/ OG	3067	IV	—

X335 Exterior Roof Lamp Harness to Instrument Panel Harness (U01)

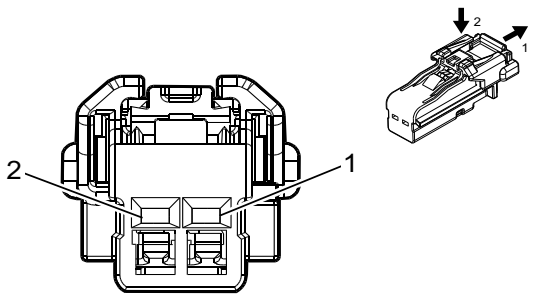

4115691

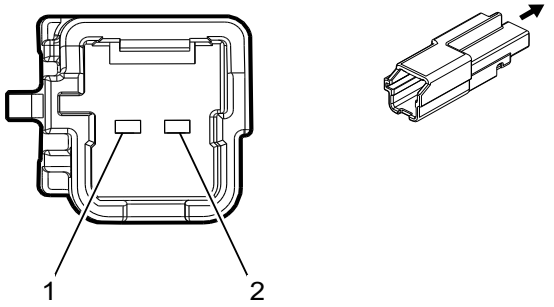

4116496

Connector Part Information

Harness Type: Exterior Roof Lamp
OEM Connector: 35026312
Service Connector: Service by Harness - See Part Catalog
Description: 2-Way F 1.2 Series (BK)

Connector Part Information

Harness Type: Instrument Panel
OEM Connector: 33189233
Service Connector: 19332376
Description: 2-Way M 1.2 Series (BK)

Terminal Part Information

Terminal Type ID	Terminated Lead	Diagnostic Test Probe	Terminal Removal Tool	Service Terminal	Tray Name	Core Crimp	Insulation Crimp
I	Not Required	J-35616-16 (LT GN)	No Tool Required	Not Required	Not Required	Not Required	Not Required
II	Not Required	J-35616-17 (LT GN)	No Tool Required	Not Required	Not Required	Not Required	Not Required

X335 Exterior Roof Lamp Harness to Instrument Panel Harness (U01)

Pin	Size	Color	Circuit	Terminal Type ID	Option	Function	Pin	Size	Color	Circuit	Terminal Type ID	Option
1	0.35	BK	1050	I	—	Ground	1	0.5	BK	1050	II	—
2	0.35	VT/ GY	709	I	—	Left Park Lamp Control	2	0.35	VT/ GY	709	II	—

X335 Interior Roof Light Harness to Instrument Panel Harness (U01)

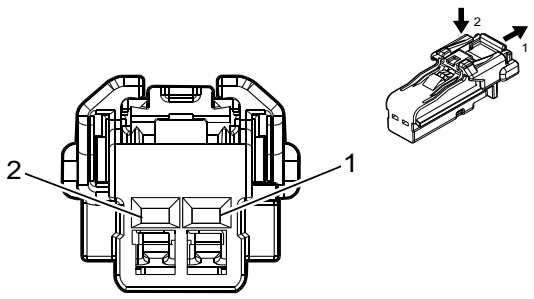

4115691

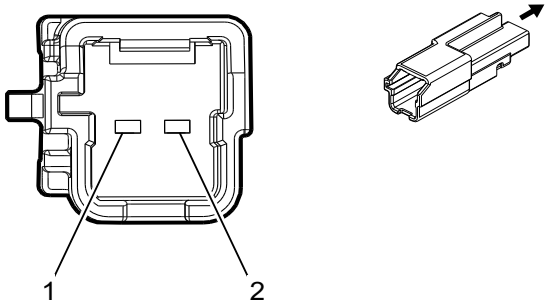

4116496

Connector Part Information

Harness Type: Interior Roof Light
OEM Connector: 33189235
Service Connector: Service by Harness - See Part Catalog
Description: 2-Way F 1.2 Series (BK)

Connector Part Information

Harness Type: Instrument Panel
OEM Connector: 33189233
Service Connector: 19332376
Description: 2-Way M 1.2 Series (BK)

Terminal Part Information

Terminal Type ID	Terminated Lead	Diagnostic Test Probe	Terminal Removal Tool	Service Terminal	Tray Name	Core Crimp	Insulation Crimp
I	Not Required	J-35616-16 (LT GN)	No Tool Required	Not Required	Not Required	Not Required	Not Required
II	Not Required	J-35616-17 (LT GN)	No Tool Required	Not Required	Not Required	Not Required	Not Required

X335 Interior Roof Light Harness to Instrument Panel Harness (U01)

Pin	Size	Color	Circuit	Terminal Type ID	Option	Function	Pin	Size	Color	Circuit	Terminal Type ID	Option
1	0.35	BK	1050	I	—	Ground	1	0.5	BK	1050	II	—
2	0.35	VT/ GY	709	I	—	Left Park Lamp Control	2	0.35	VT/ GY	709	II	—

X348 Body Harness to Floor Console Harness (D07)

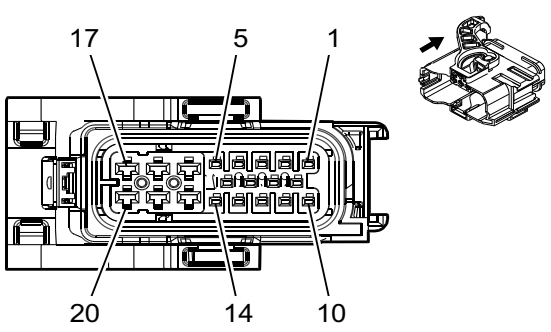

4994285

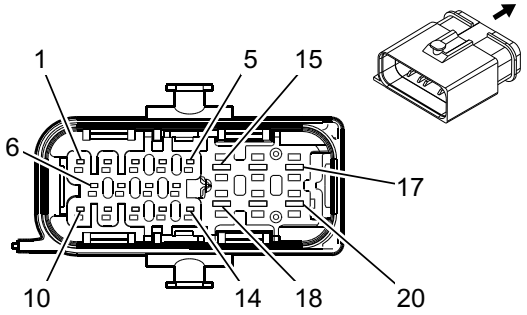

4500420

Connector Part Information

Harness Type: Body
OEM Connector: 13974124
Service Connector: 19371189
Description: 20-Way F 1.2, 2.8 MCP Series, Sealed (BK)

Connector Part Information

Harness Type: Floor Console
OEM Connector: 35137619
Service Connector: Service by Harness - See Part Catalog
Description: 20-Way M 1.2, 2.8 MCP Series, Sealed (BK)

Terminal Part Information

Terminal Type ID	Terminated Lead	Diagnostic Test Probe	Terminal Removal Tool	Service Terminal	Tray Name	Core Crimp	Insulation Crimp
I	13582286	J-35616-35 (VT)	J-38125-557	1-968857-3	Lear 7	C	1
II	Not Available	J-35616-16 (LT GN)	J-38125-12A	Not Available	Not Available	Not Available	Not Available
III	Not Available	J-35616-16 (LT GN)	J-38125-215A	Not Available	Not Available	Not Available	Not Available
IV	Not Available	J-35616-35 (VT)	J-38125-215A	1241388-1	Lear 17	E	C
V	Not Available	J-35616-4A (PU)	J-38125-215A	Not Available	Not Available	Not Available	Not Available
VI	Not Required	J-35616-17 (LT GN)	No Tool Required	Not Required	Not Required	Not Required	Not Required
VI	Not Required	J-35616-17 (LT GN)	No Tool Required	Not Required	Not Required	Not Required	Not Required
VII	Not Required	J-35616-5 (PU)	No Tool Required	Not Required	Not Required	Not Required	Not Required

X348 Body Harness to Floor Console Harness (D07)

Pin	Size	Color	Circuit	Terminal Type ID	Option	Function	Pin	Size	Color	Circuit	Terminal Type ID	Option
1	—	—	—	—	—	Not Occupied	1	—	—	—	—	—
2	0.35 0.35	YE YE	6817 6817	III II	— —	LED Backlight Dimming Control LED Backlight Dimming Control	2	0.5	YE	6817	VI	—

X348 Body Harness to Floor Console Harness (D07) (cont'd)

Pin	Size	Color	Circuit	Terminal Type ID	Option	Function	Pin	Size	Color	Circuit	Terminal Type ID	Option
3	0.35 0.35	GN/VT GN/VT	7533 7533	III II	— —	Local Interconnect Network Serial Data Bus 11 Local Interconnect Network Serial Data Bus 11	3	0.35	GN/VT	7533	VI	—
4	0.35 0.35	GN/GY GN/GY	3277 3277	III II	— —	Vehicle Anti-Theft System Immobilizer Low Reference Vehicle Anti-Theft System Immobilizer Low Reference	4	0.5	GN/GY	3277	VI	—
5	0.35 0.35	GY/BK GY/BK	3276 3276	III II	— —	Vehicle Anti-Theft System Immobilizer Control Vehicle Anti-Theft System Immobilizer Control	5	0.5	GY/BK	3276	VI	—
6	—	—	—	—	—	Not Occupied	6	—	—	—	—	—
7	0.35 0.35	RD/WH RD/WH	1340 1340	III II	— —	Battery Positive Voltage Battery Positive Voltage	7	0.5 0.35	RD/WH RD/WH	1340 1340	VI VI	— —
8	0.35	GN/WH	4115	III	—	Local Interconnect Network Serial Data Bus 15	8	0.35	GN/WH	4115	VI	—
9	0.35 0.35	VT/YE VT/YE	143 143	III II	— —	Accessory Ignition Voltage Accessory Ignition Voltage	9	0.5	VT/YE	143	VI	—
10	—	—	—	—	—	Not Occupied	10	—	—	—	—	—
11	0.35	VT	4601	III	—	Retained Accessory Power Fused Control	11	0.5	VT	4601	VI	—
12	0.35	GN	4512	III	—	Wireless Charging System Charge Indicator Control	12	0.35	GN	4512	VI	—

X348 Body Harness to Floor Console Harness (D07) (cont'd)

Pin	Size	Color	Circuit	Terminal Type ID	Option	Function	Pin	Size	Color	Circuit	Terminal Type ID	Option
13	0.35 0.35	GY/BK GY/BK	3555 3555	III II	— —	Passive Start Interior Antenna 2 Signal Lo Passive Start Interior Antenna 2 Signal Lo	13	0.5	GY/BK	3555	VI	—
14	0.35 0.35	BU BU	3554 3554	III II	— —	Passive Start Interior Antenna 2 Signal Hi Passive Start Interior Antenna 2 Signal Hi	14	0.5	BU	3554	VI	—
15	1.5	RD/WH	1040	I	—	Battery Positive Voltage	15	1.5	RD/WH	1040	VII	—
16	0.5	WH/BN	6815	IV	—	Inadvertent Power Control	16	0.5	WH/BN	6815	VII	—
17	1.5	BK	1250	I	—	Ground	17	1	BK	1250	VII	—
18	—	—	—	—	—	Not Occupied	18	—	—	—	—	—
19	0.35	BN	4511	V	—	Wireless Charging System Fault Indicator Control	19	0.5	BN	4511	VII	—
20	2	BK	1250	I	—	Ground	20	2	BK	1250	VII	—

X348 Body Harness to Front Center Seat Harness (-D07)

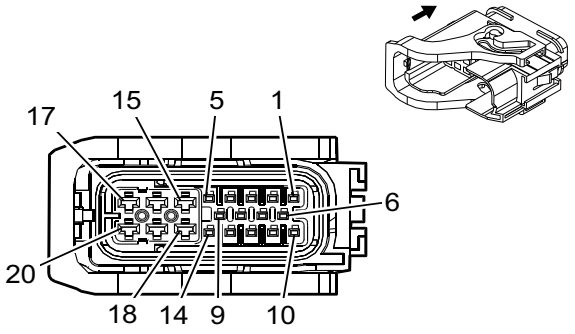

4287663

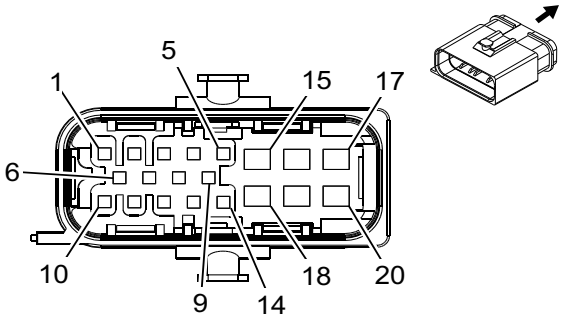

3825586

Connector Part Information

Harness Type: Body
OEM Connector: Not Available
Service Connector: -
Description: 20-Way F

Connector Part Information

Harness Type: Front Center Seat
OEM Connector: 13942796
Service Connector: Service by Harness - See Part Catalog
Description: 20-Way M 1.2, 2.8 Multiple Contact Point Series (BK)

Terminal Part Information

Terminal Type ID	Terminated Lead	Diagnostic Test Probe	Terminal Removal Tool	Service Terminal	Tray Name	Core Crimp	Insulation Crimp
I	Not Available	No Tool Required	Not Available	Not Available	Not Available	Not Available	Not Available
II	Not Required	No Tool Required	Not Available	Not Available	Not Available	Not Available	Not Available
III	Not Required	J-35616-17 (LT GN)	No Tool Required	Not Required	Not Required	Not Required	Not Required
IV	Not Required	J-35616-5 (PU)	No Tool Required	Not Required	Not Required	Not Required	Not Required

X348 Body Harness to Front Center Seat Harness (-D07)

Pin	Size	Color	Circuit	Terminal Type ID	Option	Function	Pin	Size	Color	Circuit	Terminal Type ID	Option
1 - 2	—	—	—	—	—	Not Occupied	1 - 2	—	—	—	—	—
3	0.35	L-GN/VT	7533	II	—	Local Interconnect Network Serial Data Bus 11	3	0.35	L-GN/VT	7533	III	—
4	0.35	L-GN/GY	3277	II	—	Vehicle Anti-Theft System Immobilizer Low Reference	4	0.35	L-GN/GY	3277	III	—
5	0.35	GY/BK	3276	II	—	Vehicle Anti-Theft System Immobilizer Control	5	0.35	GY/BK	3276	III	—
6 - 8	—	—	—	—	—	Not Occupied	6 - 8	—	—	—	—	—

X348 Body Harness to Front Center Seat Harness (-D07) (cont'd)

Pin	Size	Color	Circuit	Terminal Type ID	Option	Function	Pin	Size	Color	Circuit	Terminal Type ID	Option
9	0.5	VT/ YE	143	II	—	Accessory Ignition Voltage	9	0.5	VT/ YE	143	III	—
10 - 12	—	—	—	—	—	Not Occupied	10 - 12	—	—	—	—	—
13	0.5	GY/ BK	3555	II	—	Passive Start Interior Antenna 2 Signal Lo	13	0.5	GY/ BK	3555	III	—
14	0.5	L-BU	3554	II	—	Passive Start Interior Antenna 2 Signal Hi	14	0.5	L-BU	3554	III	—
15	1.5	RD/ WH	1040	I	—	Battery Positive Voltage	15	1.5	RD/ WH	1040	IV	—
16 - 19	—	—	—	—	—	Not Occupied	16 - 19	—	—	—	—	—
20	2	BK	1150	I	—	Ground	20	2	BK	1150	IV	—

X350 Chassis Harness to Fuel Tank Harness

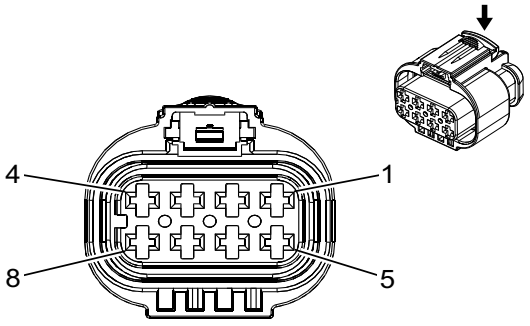

—

3749582

Connector Part Information

Harness Type: Chassis
OEM Connector: 33180742
Service Connector: 19354078
Description: 8-Way F 2.8 Series, Sealed (L-GY)

Connector Part Information

Harness Type: Fuel Tank
OEM Connector: Not Available
Service Connector: Service by Harness - See Part Catalog
Description: 8-Way M

Terminal Part Information

Terminal Type ID	Terminated Lead	Diagnostic Test Probe	Terminal Removal Tool	Service Terminal	Tray Name	Core Crimp	Insulation Crimp
I	Not Required	J-35616-4A (PU)	No Tool Required	Not Required	Not Required	Not Required	Not Required
II	Not Required	Not Available	No Tool Required	Not Required	Not Required	Not Required	Not Required

X350 Chassis Harness to Fuel Tank Harness

Pin	Size	Color	Circuit	Terminal Type ID	Option	Function	Pin	Size	Color	Circuit	Terminal Type ID	Option
1	2.5	GY	120	I	—	Fuel Pump Control	1	2.5	GY	120	II	—
2	2.5	YE/GY	4137	I	—	Fuel Pump Supply Voltage Phase 2	2	2.5	YE/GY	4137	II	—
3	2.5	WH/BN	4138	I	—	Fuel Pump Supply Voltage Phase 3	3	2.5	WH/BN	4138	II	—
4	0.5	BN	7444	I	—	Fuel System Control Module Shield Ground	4	0.5	BN	7444	II	—
5	0.5 0.75	BU/VT BU/VT	1589 1589	I I	N2M+L5P N2N+L5P	Primary Fuel Level Sensor Signal Primary Fuel Level Sensor Signal	5	0.5 0.75	BU/VT BU/VT	1589 1589	II II	N2M+L5P N2N+L5P
6	0.5	BK/L-GN	6281	I	—	Fuel Level Sensor Low Reference	6	0.5	BK/L-GN	6281	II	—
7 - 8	—	—	—	—	—	Not Occupied	7 - 8	—	—	—	—	—

X350 Chassis Harness to Fuel Tank Harness (L5P+N2L)

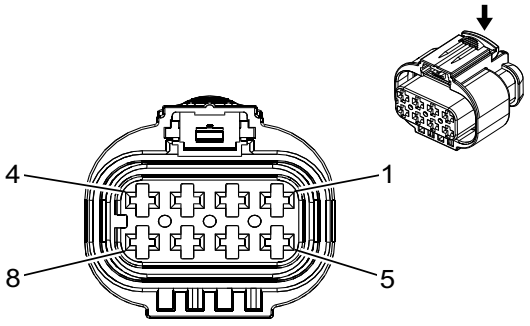

—

3749582

Connector Part Information

Harness Type: Chassis
OEM Connector: 33180742
Service Connector: 19354078
Description: 8-Way F 2.8 Series, Sealed (L-GY)

Connector Part Information

Harness Type: Fuel Tank
OEM Connector: Not Available
Service Connector: Service by Harness - See Part Catalog
Description: 8-Way M

Terminal Part Information

Terminal Type ID	Terminated Lead	Diagnostic Test Probe	Terminal Removal Tool	Service Terminal	Tray Name	Core Crimp	Insulation Crimp
I	Not Required	J-35616-4A (PU)	No Tool Required	Not Required	Not Required	Not Required	Not Required
II	Not Required	J-35616-5 (PU)	No Tool Required	Not Required	Not Required	Not Required	Not Required

X350 Chassis Harness to Fuel Tank Harness (L5P+N2L)

Pin	Size	Color	Circuit	Terminal Type ID	Option	Function	Pin	Size	Color	Circuit	Terminal Type ID	Option
1	2.5	GY	120	I	—	Fuel Pump Control	1	2.5	GY	120	II	—
2	2.5	YE/GY	4137	I	—	Fuel Pump Supply Voltage Phase 2	2	2.5	YE/GY	4137	II	—
3	2.5	WH/BN	4138	I	—	Fuel Pump Supply Voltage Phase 3	3	2.5	WH/BN	4138	II	—
4	0.5	BN	7444	I	—	Fuel System Control Module Shield Ground	4	0.5	BN	7444	II	—
5	0.5 0.5	BU/VT BU/VT	1589 1589	I I	— N2M+L5P	Primary Fuel Level Sensor Signal Primary Fuel Level Sensor Signal	5	0.5 0.5	BU/VT BU/VT	1589 1589	II II	— N2M+L5P
6	0.5	BK/GN	6281	I	—	Fuel Level Sensor Low Reference	6	0.5	BK/GN	6281	II	—
7 - 8	—	—	—	—	—	Not Occupied	7 - 8	—	—	—	—	—

X350 Chassis Harness to Fuel Tank Harness (L5P+N2M)

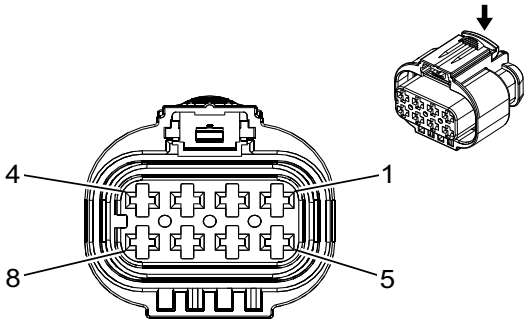

—

3749582

Connector Part Information

Harness Type: Chassis
OEM Connector: 33180742
Service Connector: 19354078
Description: 8-Way F 2.8 Series, Sealed (L-GY)

Connector Part Information

Harness Type: Fuel Tank
OEM Connector: Not Available
Service Connector: Service by Harness - See Part Catalog
Description: 8-Way M

Terminal Part Information

Terminal Type ID	Terminated Lead	Diagnostic Test Probe	Terminal Removal Tool	Service Terminal	Tray Name	Core Crimp	Insulation Crimp
I	Not Required	J-35616-4A (PU)	No Tool Required	Not Required	Not Required	Not Required	Not Required
II	Not Required	J-35616-5 (PU)	No Tool Required	Not Required	Not Required	Not Required	Not Required

X350 Chassis Harness to Fuel Tank Harness (L5P+N2M)

Pin	Size	Color	Circuit	Terminal Type ID	Option	Function	Pin	Size	Color	Circuit	Terminal Type ID	Option
1	2.5	GY	120	I	—	Fuel Pump Control	1	2.5	GY	120	II	—
2	2.5	YE/GY	4137	I	—	Fuel Pump Supply Voltage Phase 2	2	2.5	YE/GY	4137	II	—
3	2.5	WH/BN	4138	I	—	Fuel Pump Supply Voltage Phase 3	3	2.5	WH/BN	4138	II	—
4	0.5	BN	7444	I	—	Fuel System Control Module Shield Ground	4	0.5	BN	7444	II	—

X350 Chassis Harness to Fuel Tank Harness (L5P+N2M) (cont'd)

Pin	Size	Color	Circuit	Terminal Type ID	Option	Function	Pin	Size	Color	Circuit	Terminal Type ID	Option
5	0.5 0.75 0.5 0.75	BU/VT BU/VT BU/VT BU/VT	1589 1589 1589 1589	I I I I	— — N2M+L5P N2N+L5P	Primary Fuel Level Sensor Signal Primary Fuel Level Sensor Signal Primary Fuel Level Sensor Signal Primary Fuel Level Sensor Signal	5	0.5 0.75 0.5 0.75	BU/VT BU/VT BU/VT BU/VT	1589 1589 1589 1589	II II II II	— — N2M+L5P N2N+L5P
6	0.5	BK/GN	6281	I	—	Fuel Level Sensor Low Reference	6	0.5	BK/GN	6281	II	—
7 - 8	—	—	—	—	—	Not Occupied	7 - 8	—	—	—	—	—

X350 Chassis Harness to Fuel Tank Harness (L5P+N2N)

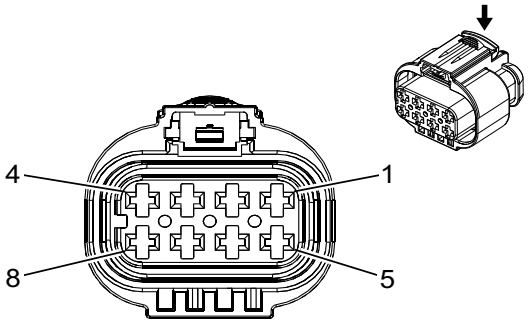

—

3749582

Connector Part Information

Harness Type: Chassis
OEM Connector: 33180742
Service Connector: 19354078
Description: 8-Way F 2.8 Series, Sealed (L-GY)

Connector Part Information

Harness Type: Fuel Tank
OEM Connector: Not Available
Service Connector: Service by Harness - See Part Catalog
Description: 8-Way M

Terminal Part Information

Terminal Type ID	Terminated Lead	Diagnostic Test Probe	Terminal Removal Tool	Service Terminal	Tray Name	Core Crimp	Insulation Crimp
I	Not Required	J-35616-4A (PU)	No Tool Required	Not Required	Not Required	Not Required	Not Required
II	Not Required	J-35616-5 (PU)	No Tool Required	Not Required	Not Required	Not Required	Not Required

X350 Chassis Harness to Fuel Tank Harness (L5P+N2N)

Pin	Size	Color	Circuit	Terminal Type ID	Option	Function	Pin	Size	Color	Circuit	Terminal Type ID	Option
1	2.5	GY	120	I	—	Fuel Pump Control	1	2.5	GY	120	II	—
2	2.5	YE/GY	4137	I	—	Fuel Pump Supply Voltage Phase 2	2	2.5	YE/GY	4137	II	—
3	2.5	WH/BN	4138	I	—	Fuel Pump Supply Voltage Phase 3	3	2.5	WH/BN	4138	II	—
4	0.5	BN	7444	I	—	Fuel System Control Module Shield Ground	4	0.5	BN	7444	II	—
5	0.5 0.75	BU/VT BU/VT	1589 1589	I I	— —	Primary Fuel Level Sensor Signal Primary Fuel Level Sensor Signal	5	0.5 0.75	BU/VT BU/VT	1589 1589	II II	— —
6	0.5	BK/GN	6281	I	—	Fuel Level Sensor Low Reference	6	0.5	BK/GN	6281	II	—
7 - 8	—	—	—	—	—	Not Occupied	7 - 8	—	—	—	—	—

X350 Chassis Harness to Fuel Tank Harness (L8T+N2N)

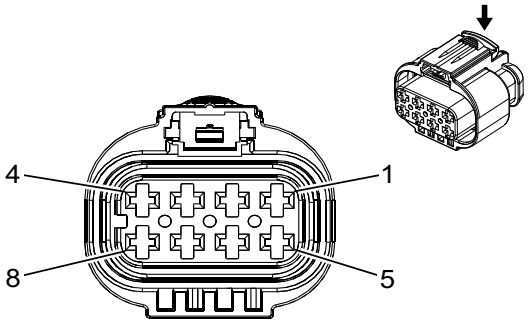

—

3749582

Connector Part Information

Harness Type: Chassis
OEM Connector: 33180742
Service Connector: 19354078
Description: 8-Way F 2.8 Series, Sealed (L-GY)

Connector Part Information

Harness Type: Fuel Tank
OEM Connector: Not Available
Service Connector: Service by Harness - See Part Catalog
Description: 8-Way M

Terminal Part Information

Terminal Type ID	Terminated Lead	Diagnostic Test Probe	Terminal Removal Tool	Service Terminal	Tray Name	Core Crimp	Insulation Crimp
I	Not Required	J-35616-4A (PU)	No Tool Required	Not Required	Not Required	Not Required	Not Required
II	Not Required	J-35616-5 (PU)	No Tool Required	Not Required	Not Required	Not Required	Not Required

X350 Chassis Harness to Fuel Tank Harness (L8T+N2N)

Pin	Size	Color	Circuit	Terminal Type ID	Option	Function	Pin	Size	Color	Circuit	Terminal Type ID	Option
1	2.5	GY	120	I	—	Fuel Pump Control	1	2.5	GY	120	II	—
2	2.5	YE/GY	4137	I	—	Fuel Pump Supply Voltage Phase 2	2	2.5	YE/GY	4137	II	—
3	2.5	WH/BN	4138	I	—	Fuel Pump Supply Voltage Phase 3	3	2.5	WH/BN	4138	II	—
4	0.5	BN	7444	I	—	Fuel System Control Module Shield Ground	4	0.5	BN	7444	II	—
5	0.5	BU/VT	1589	I	—	Primary Fuel Level Sensor Signal	5	0.5	BU/VT	1589	II	—
6	0.5	BK/GN	6281	I	—	Fuel Level Sensor Low Reference	6	0.5	BK/GN	6281	II	—
7 - 8	—	—	—	—	—	Not Occupied	7 - 8	—	—	—	—	—

X350 Chassis Harness to Fuel Tank Harness (-N2M/N2L)

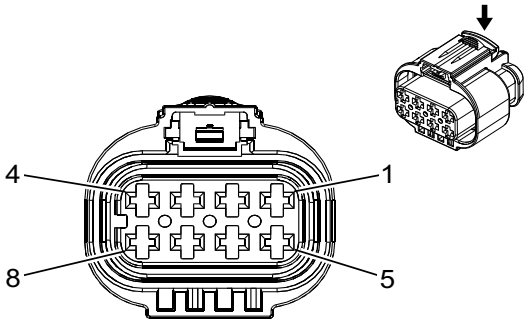

—

3749582

Connector Part Information

Harness Type: Chassis
OEM Connector: 33180742
Service Connector: 19354078
Description: 8-Way F 2.8 Series, Sealed (L-GY)

Connector Part Information

Harness Type: Fuel Tank
OEM Connector: Not Available
Service Connector: Service by Harness - See Part Catalog
Description: 8-Way M

Terminal Part Information

Terminal Type ID	Terminated Lead	Diagnostic Test Probe	Terminal Removal Tool	Service Terminal	Tray Name	Core Crimp	Insulation Crimp
I	Not Required	J-35616-4A (PU)	No Tool Required	Not Required	Not Required	Not Required	Not Required
II	Not Required	J-35616-5 (PU)	No Tool Required	Not Required	Not Required	Not Required	Not Required

X350 Chassis Harness to Fuel Tank Harness (-N2M/N2L)

Pin	Size	Color	Circuit	Terminal Type ID	Option	Function	Pin	Size	Color	Circuit	Terminal Type ID	Option
1	2.5	GY	120	I	—	Fuel Pump Control	1	2.5	GY	120	II	—
2	2.5	YE/GY	4137	I	—	Fuel Pump Supply Voltage Phase 2	2	2.5	YE/GY	4137	II	—
3	2.5	WH/BN	4138	I	—	Fuel Pump Supply Voltage Phase 3	3	2.5	WH/BN	4138	II	—
4	0.5	BN	7444	I	—	Fuel System Control Module Shield Ground	4	0.5	BN	7444	II	—
5	0.5 0.5	BU/VT BU/VT	1589 1589	I I	— N2M+L5P	Primary Fuel Level Sensor Signal Primary Fuel Level Sensor Signal	5	0.5 0.5	BU/VT BU/VT	1589 1589	II II	— N2M+L5P
6	0.5	BK/GN	6281	I	—	Fuel Level Sensor Low Reference	6	0.5	BK/GN	6281	II	—
7 - 8	—	—	—	—	—	Not Occupied	7 - 8	—	—	—	—	—

X350 Chassis Harness to Fuel Tank Harness (-N2N/N2L)

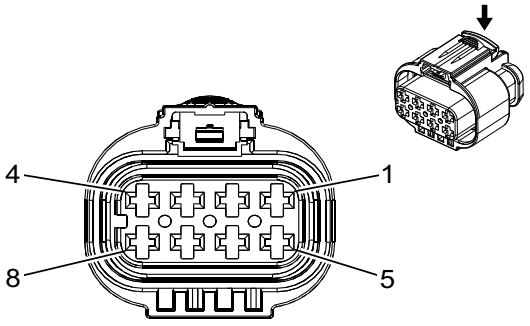

—

3749582

Connector Part Information

Harness Type: Chassis
OEM Connector: 33180742
Service Connector: 19354078
Description: 8-Way F 2.8 Series, Sealed (L-GY)

Connector Part Information

Harness Type: Fuel Tank
OEM Connector: Not Available
Service Connector: Service by Harness - See Part Catalog
Description: 8-Way M

Terminal Part Information

Terminal Type ID	Terminated Lead	Diagnostic Test Probe	Terminal Removal Tool	Service Terminal	Tray Name	Core Crimp	Insulation Crimp
I	Not Required	J-35616-4A (PU)	No Tool Required	Not Required	Not Required	Not Required	Not Required
II	Not Required	J-35616-5 (PU)	No Tool Required	Not Required	Not Required	Not Required	Not Required

X350 Chassis Harness to Fuel Tank Harness (-N2N/N2L)

Pin	Size	Color	Circuit	Terminal Type ID	Option	Function	Pin	Size	Color	Circuit	Terminal Type ID	Option
1	2.5	GY	120	I	—	Fuel Pump Control	1	2.5	GY	120	II	—
2	2.5	YE/GY	4137	I	—	Fuel Pump Supply Voltage Phase 2	2	2.5	YE/GY	4137	II	—
3	2.5	WH/BN	4138	I	—	Fuel Pump Supply Voltage Phase 3	3	2.5	WH/BN	4138	II	—
4	0.5	BN	7444	I	—	Fuel System Control Module Shield Ground	4	0.5	BN	7444	II	—
5	0.5 0.5	BU/VT BU/VT	1589 1589	I I	— N2M+L5P	Primary Fuel Level Sensor Signal Primary Fuel Level Sensor Signal	5	0.5 0.5	BU/VT BU/VT	1589 1589	II II	— N2M+L5P
6	0.5	BK/GN	6281	I	—	Fuel Level Sensor Low Reference	6	0.5	BK/GN	6281	II	—
7 - 8	—	—	—	—	—	Not Occupied	7 - 8	—	—	—	—	—

X350 Chassis Harness to Fuel Tank Harness (-N2N/N2M)

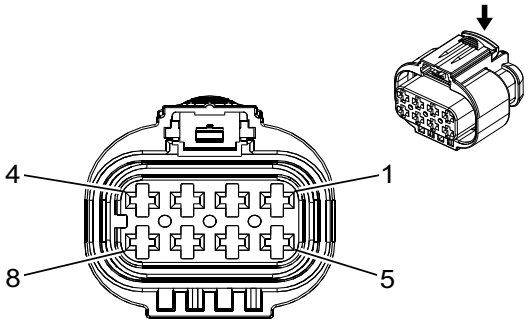

—

3749582

Connector Part Information

Harness Type: Chassis
OEM Connector: 33180742
Service Connector: 19354078
Description: 8-Way F 2.8 Series, Sealed (L-GY)

Connector Part Information

Harness Type: Fuel Tank
OEM Connector: Not Available
Service Connector: Service by Harness - See Part Catalog
Description: 8-Way M

Terminal Part Information

Terminal Type ID	Terminated Lead	Diagnostic Test Probe	Terminal Removal Tool	Service Terminal	Tray Name	Core Crimp	Insulation Crimp
I	Not Required	J-35616-4A (PU)	No Tool Required	Not Required	Not Required	Not Required	Not Required
II	Not Required	J-35616-5 (PU)	No Tool Required	Not Required	Not Required	Not Required	Not Required

X350 Chassis Harness to Fuel Tank Harness (-N2N/N2M)

Pin	Size	Color	Circuit	Terminal Type ID	Option	Function	Pin	Size	Color	Circuit	Terminal Type ID	Option
1	2.5	GY	120	I	—	Fuel Pump Control	1	2.5	GY	120	II	—
2	2.5	YE/GY	4137	I	—	Fuel Pump Supply Voltage Phase 2	2	2.5	YE/GY	4137	II	—
3	2.5	WH/BN	4138	I	—	Fuel Pump Supply Voltage Phase 3	3	2.5	WH/BN	4138	II	—
4	0.5	BN	7444	I	—	Fuel System Control Module Shield Ground	4	0.5	BN	7444	II	—
5	0.5 0.5	BU/VT BU/VT	1589 1589	I I	— N2M+L5P	Primary Fuel Level Sensor Signal Primary Fuel Level Sensor Signal	5	0.5 0.5	BU/VT BU/VT	1589 1589	II II	— N2M+L5P
6	0.5	BK/GN	6281	I	—	Fuel Level Sensor Low Reference	6	0.5	BK/GN	6281	II	—
7 - 8	—	—	—	—	—	Not Occupied	7 - 8	—	—	—	—	—

X351 Chassis Harness to Fuel Tank Jumper Harness (L5P)

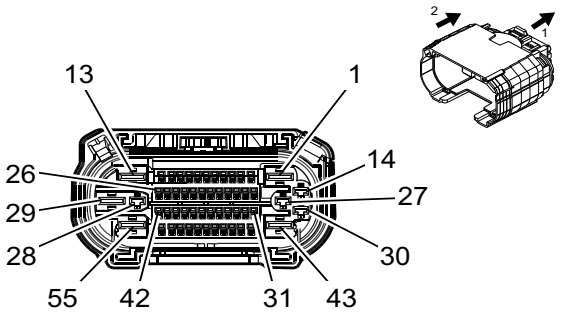

—

4992168

Connector Part Information

Harness Type: Chassis
OEM Connector: 35016652
Service Connector: 19371185
Description: 55-Way F 1.2 OCS, 2.8, 6.3 CTS Series, Sealed (BK)

Connector Part Information

Harness Type: Fuel Tank Jumper
OEM Connector: Not Available
Service Connector: Service by Harness - See Part Catalog
Description: 55-Way M

Terminal Part Information

Terminal Type ID	Terminated Lead	Diagnostic Test Probe	Terminal Removal Tool	Service Terminal	Tray Name	Core Crimp	Insulation Crimp
I	13579915	J-35616-40 (BU)	J-38125-556	1241408-1	Lear 28	A	B
II	19300649	J-35616-16 (LT GN)	J-38125-215A	Not Available	Not Available	Not Available	Not Available
III	Not Available	J-35616-35 (VT)	J-38125-215A	Not Available	Not Available	Not Available	Not Available
IV	NPN	J-35616-17 (LT GN)	J-38125-215A	Not Available	Not Available	Not Available	Not Available
V	Not Required	Not Available	No Tool Required	Not Required	Not Required	Not Required	Not Required

X351 Chassis Harness to Fuel Tank Jumper Harness (L5P)

Pin	Size	Color	Circuit	Terminal Type ID	Option	Function	Pin	Size	Color	Circuit	Terminal Type ID	Option
1	2.5	GY	120	I	—	Fuel Pump Control	1	2.5	GY	120	V	—
2	0.75 0.75	YE/D-BU YE/BN	1465 1427	II II	L5P L8T	Secondary Fuel Pump Relay Control Gaseous Fuel Disable Signal	2	0.75 0.75	YE/D-BU YE/BN	1465 1427	V V	L5P L8T
3	—	—	—	—	—	Not Occupied	3	—	—	—	—	—
4	0.5	BK/VT	412	II	—	Fuel Filter Temperature Sensor Low Reference	4	0.5	BK/VT	412	V	—
5	—	—	—	—	—	Not Occupied	5	—	—	—	—	—

X351 Chassis Harness to Fuel Tank Jumper Harness (L5P) (cont'd)

Pin	Size	Color	Circuit	Terminal Type ID	Option	Function	Pin	Size	Color	Circuit	Terminal Type ID	Option
6	0.5	VT/ L-GN	439	II	—	Run/Crank Ignition 1 Voltage	6	0.5	VT/ L-GN	439	V	—
7	—	—	—	—	—	Not Occupied	7	—	—	—	—	—
8	0.5	BN/ VT	455	II	—	Fuel Filter Temperature Signal	8	0.5	BN/ VT	455	V	—
9	—	—	—	—	—	Not Occupied	9	—	—	—	—	—
10	0.5	L-GN/ GY	465	II	—	Fuel Pump Primary Relay Control	10	0.5	L-GN/ GY	465	V	—
11	—	—	—	—	—	Not Occupied	11	—	—	—	—	—
12	0.75	BU/ VT	1589	II	—	Primary Fuel Level Sensor Signal	12	0.75	BU/ VT	1589	V	—
13	1	BK/ L-GN	1580	IV	—	Fuel Pump Low Reference	13	1	BK/ L-GN	1580	V	—
14	2.5	RD/ VT	5340	III	—	Battery Positive Voltage	14	2.5	RD/ VT	5340	V	—
15	—	—	—	—	—	Not Occupied	15	—	—	—	—	—
16	0.5	BU/ WH	1937	II	—	Secondary Fuel Level Sensor Signal	16	0.5	BU/ WH	1937	V	—
17	—	—	—	—	—	Not Occupied	17	—	—	—	—	—
18	0.5	BK/ L-GN	6281	II	—	Fuel Level Sensor Low Reference	18	0.5	BK/ L-GN	6281	V	—
19	—	—	—	—	—	Not Occupied	19	—	—	—	—	—
20	0.5	BK/ D-BU	6282	II	—	Fuel Level Sensor 2 Low Reference	20	0.5	BK/ D-BU	6282	V	—
21	—	—	—	—	—	Not Occupied	21	—	—	—	—	—
22	0.5	BU/ YE	6861	II	—	Water In Fuel Sensor Signal	22	0.5	BU/ YE	6861	V	—
23	0.5	WH/ RD	6862	II	—	Water In Fuel Sensor 5V Reference	23	0.5	WH/ RD	6862	V	—
24	0.5	BK/ D-BU	6863	II	—	Water In Fuel Sensor Low Reference	24	0.5	BK/ D-BU	6863	V	—
25	—	—	—	—	—	Not Occupied	25	—	—	—	—	—
26	0.5	BN/ RD	7445	II	—	Fuel Line Pressure Sensor 5V Reference	26	0.5	BN/ RD	7445	V	—

X351 Chassis Harness to Fuel Tank Jumper Harness (L5P) (cont'd)

Pin	Size	Color	Circuit	Terminal Type ID	Option	Function	Pin	Size	Color	Circuit	Terminal Type ID	Option
27	1	BU/ L-GN	2120	III	—	Secondary Fuel Pump Supply Voltage	27	1	BU/ L-GN	2120	V	—
28	2.5	YE/ GY	4137	III	—	Fuel Pump Supply Voltage Phase 2	28	2.5	YE/ GY	4137	V	—
29	—	—	—	—	—	Not Occupied	29	—	—	—	—	—
30	2.5	WH/ BN	4138	III	—	Fuel Pump Supply Voltage Phase 3	30	2.5	WH/ BN	4138	V	—
31 - 42	—	—	—	—	—	Not Occupied	31 - 42	—	—	—	—	—
43	2.5	BK	1750	I	—	Ground	43	2.5	BK	1750	V	—
44	0.75	BU/ WH	7446	II	—	Fuel Line Pressure Sensor Signal	44	0.75	BU/ WH	7446	V	—
45	—	—	—	—	—	Not Occupied	45	—	—	—	—	—
46	0.5	BK/ YE	7447	II	—	Fuel Line Pressure Sensor Low Reference	46	0.5	BK/ YE	7447	V	—
47	—	—	—	—	—	Not Occupied	47	—	—	—	—	—
48	0.5	VT/ L-GN	4320	II	—	Powertrain Sensor Bus Enable	48	0.5	VT/ L-GN	4320	V	—
49	—	—	—	—	—	Not Occupied	49	—	—	—	—	—
50	0.5	BU/ BN	4498	II	—	High Speed GMLAN Serial Data (+) 7	50	0.5	BU/ BN	4498	V	—
51	—	—	—	—	—	Not Occupied	51	—	—	—	—	—
52	0.5	WH	4499	II	—	High Speed GMLAN Serial Data (-) 7	52	0.5	WH	4499	V	—
53	—	—	—	—	—	Not Occupied	53	—	—	—	—	—
54	1	BN	7444	II	—	Fuel System Control Module Shield Ground	54	1	BN	7444	V	—
55	—	—	—	—	—	Not Occupied	55	—	—	—	—	—

X370 Body Harness to Rear Seat Harness (KA6)

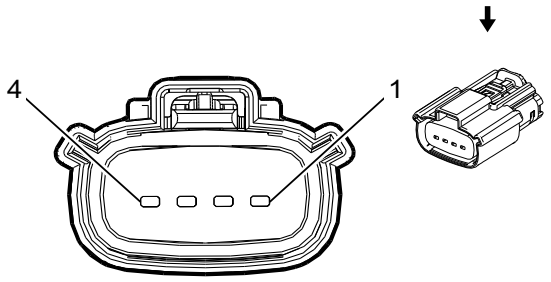

2474747

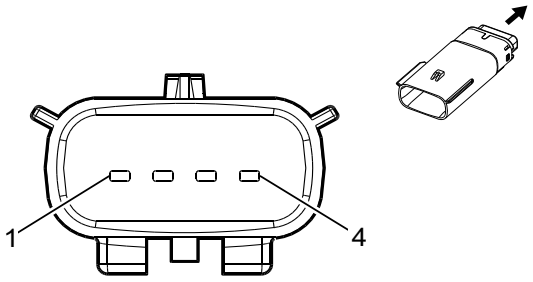

2917338

Connector Part Information

Harness Type: Body
OEM Connector: 13815807
Service Connector: 19371211
Description: 4-Way F 150 MX Series, Sealed (BK)

Connector Part Information

Harness Type: Rear Seat
OEM Connector: 33481-0401
Service Connector: Service by Harness - See Part Catalog
Description: 4-Way M 1.5 Series, Sealed (BK)

Terminal Part Information

Terminal Type ID	Terminated Lead	Diagnostic Test Probe	Terminal Removal Tool	Service Terminal	Tray Name	Core Crimp	Insulation Crimp
I	Not Required	J-35616-2A (GY)	No Tool Required	Not Required	Not Required	Not Required	Not Required
II	Not Required	J-35616-3 (GY)	No Tool Required	Not Required	Not Required	Not Required	Not Required

X370 Body Harness to Rear Seat Harness (KA6)

Pin	Size	Color	Circuit	Terminal Type ID	Option	Function	Pin	Size	Color	Circuit	Terminal Type ID	Option
1	0.5	RD/YE	240	I	—	Battery Positive Voltage	1	0.75	RD/YE	240	II	—
2	0.5	RD/VT	340	I	—	Battery Positive Voltage	2	0.75	RD/VT	340	II	—
3	0.35	L-GN/D-BU	6133	I	—	Local Interconnect Network Serial Data Bus 2	3	0.5	L-GN/L-BU	6133	II	—
4	1	BK	1150	I	—	Ground	4	1	BK	1150	II	—

X380 Center High Mount Stop Lamp Jumper Harness to Headliner Harness

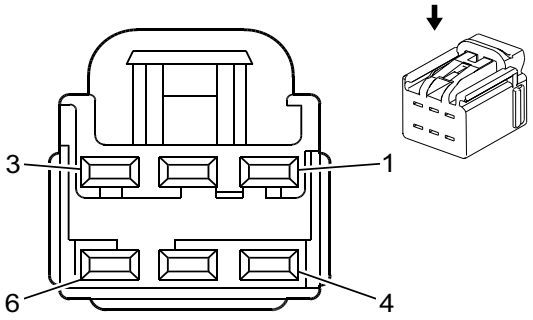

1519696

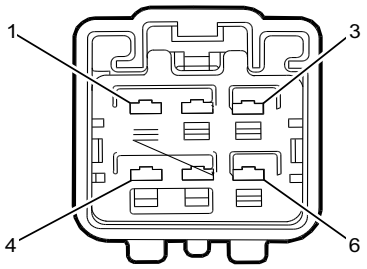

1849802

Connector Part Information

Harness Type: Center High Mount Stop Lamp Jumper
OEM Connector: 10847014
Service Connector: Service by Harness - See Part Catalog
Description: 6-Way F YESC Kaizen Series (L-GY)

Connector Part Information

Harness Type: Headliner
OEM Connector: 10847012
Service Connector: 19153164
Description: 6-Way M YESC Kaizen Series (L-GY)

Terminal Part Information

Terminal Type ID	Terminated Lead	Diagnostic Test Probe	Terminal Removal Tool	Service Terminal	Tray Name	Core Crimp	Insulation Crimp
I	Not Required	J-35616-4A (PU)	No Tool Required	Not Required	Not Required	Not Required	Not Required
II	Not Required	J-35616-5 (PU)	No Tool Required	Not Required	Not Required	Not Required	Not Required

X380 Center High Mount Stop Lamp Jumper Harness to Headliner Harness

Pin	Size	Color	Circuit	Terminal Type ID	Option	Function	Pin	Size	Color	Circuit	Terminal Type ID	Option
1	0.35	WH/VT	1430	I	—	Exterior Courtesy Lamp Control	1	0.35	WH/VT	1430	II	—
2	0.35	VT/WH	5065	I	—	Stop Lamp Relay Coil Control	2	0.5	VT/WH	5065	II	—
3	0.35	BK	1050	I	—	Ground	3	0.35	BK	1050	II	—
4	2.5	L-GN/D-BU	5989	I	—	Emergency Lamp Relay Contact Control	4	2.5	L-GN/D-BU	5989	II	—
5	2.5	BK	1050	I	—	Ground	5	2.5	BK	1050	II	—
6	—	—	—	—	—	Not Occupied	6	—	—	—	—	—

X401 Rear Bumper Harness to Chassis Harness

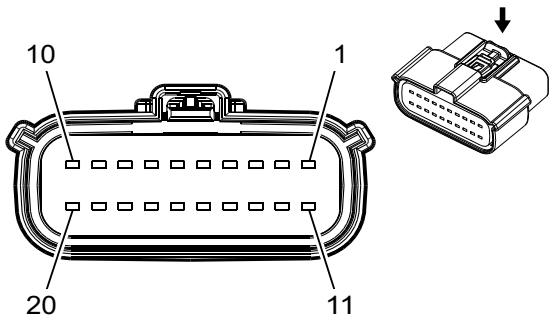

2871898

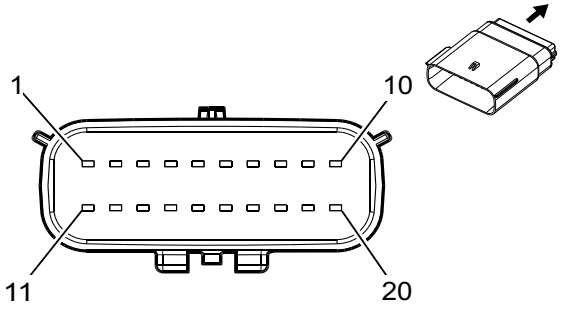

2871861

Connector Part Information

Harness Type: Rear Bumper
OEM Connector: Not Available
Service Connector: Service by Harness - See Part Catalog
Description: 20-Way F

Connector Part Information

Harness Type: Chassis
OEM Connector: 33181044
Service Connector: 19351705
Description: 20-Way M 1.5 Series, Sealed (BK)

Terminal Part Information

Terminal Type ID	Terminated Lead	Diagnostic Test Probe	Terminal Removal Tool	Service Terminal	Tray Name	Core Crimp	Insulation Crimp
I	Not Required	Not Available	No Tool Required	Not Required	Not Required	Not Required	Not Required
II	19119395	J-35616-3 (GY)	J-38125-217	Not Available	Not Available	Not Available	Not Available
III	19119440	J-35616-3 (GY)	J-38125-217	Not Available	Not Available	Not Available	Not Available
IV	19119780	J-35616-3 (GY)	J-38125-215A	Not Available	Not Available	Not Available	Not Available

X401 Rear Bumper Harness to Chassis Harness

Pin	Size	Color	Circuit	Terminal Type ID	Option	Function	Pin	Size	Color	Circuit	Terminal Type ID	Option
1	0.5	GN/YE	6846	I	—	Rear License Lamp Control	1	0.5	GN/YE	6846	II	—
2 - 3	—	—	—	—	—	Not Occupied	2 - 3	—	—	—	—	—
4	0.75	BK/WH	1751	I	—	Signal Ground Signal Ground	4	0.75 0.75	BK/WH BK/WH	1751 1751	III IV	— —
5	—	—	—	—	—	Not Occupied	5	—	—	—	—	—
6	1	BK	1450	I	—	Ground Ground	6	1 1	BK BK	1450 1450	IV III	— —
7	0.5	GY/YE	1760	I	—	Left Side Object Detection LED Control	7	0.5	GY/YE	1760	II	—
8	0.5	GY	1761	I	—	Right Side Object Detection LED Control	8	0.5	GY	1761	II	—

X401 Rear Bumper Harness to Chassis Harness (cont'd)

Pin	Size	Color	Circuit	Terminal Type ID	Option	Function	Pin	Size	Color	Circuit	Terminal Type ID	Option
9	0.5	BN/WH	2374	I	—	Object Sensor Control	9	0.5	BN/WH	2374	II	—
10	0.5	YE	2375	I	—	Left Rear Corner Object Sensor Signal	10	0.5	YE	2375	II	—
11	0.5	YE/BU	2376	I	—	Left Rear Middle Object Sensor Signal	11	0.5	YE/BU	2376	II	—
12	0.5	YE/WH	2377	I	—	Right Rear Middle Object Sensor Signal	12	0.5	YE/WH	2377	II	—
13	—	—	—	—	—	Not Occupied	13	—	—	—	—	—
14	0.5	RD/GN	1840	I	—	Battery Positive Voltage	14	0.5	RD/GN	1840	II	—
15	0.5	YE/VT	2378	I	—	Right Rear Corner Object Sensor Signal	15	0.5	YE/VT	2378	II	—
16	0.5	BK/GY	2379	I	—	Object Sensor Low Reference	16	0.5	BK/GY	2379	II	—
17	—	—	—	—	—	Not Occupied	17	—	—	—	—	—
18	0.5	GN	5060	I	—	Low Speed GMLAN Serial Data	18	0.5	GN	5060	II	—
19 - 20	—	—	—	—	—	Not Occupied	19 - 20	—	—	—	—	—

X401 Rear Fascia Harness to Chassis Harness

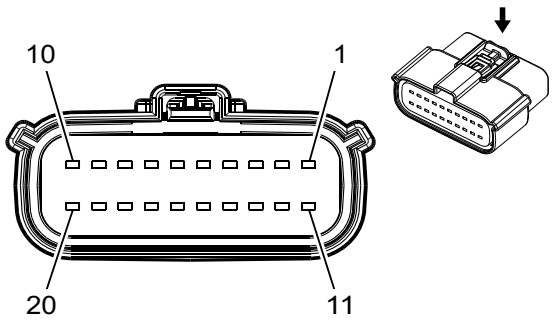

2871898

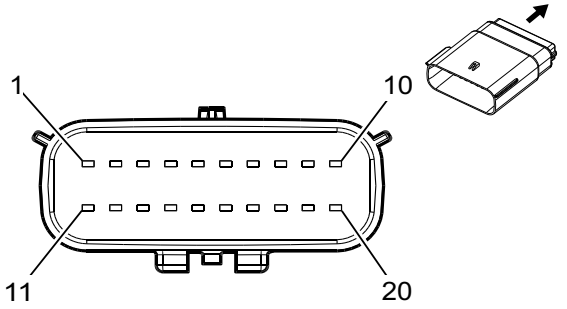

2871861

Connector Part Information

Harness Type: Rear Fascia
OEM Connector: 13650143
Service Connector: Service by Harness - See Part Catalog
Description: 20-Way F 1.5 Series, Sealed (BK)

Connector Part Information

Harness Type: Chassis
OEM Connector: 33181044
Service Connector: 19351705
Description: 20-Way M 1.5 Series, Sealed (BK)

Terminal Part Information

Terminal Type ID	Terminated Lead	Diagnostic Test Probe	Terminal Removal Tool	Service Terminal	Tray Name	Core Crimp	Insulation Crimp
I	Not Required	J-35616-2A (GY)	No Tool Required	Not Required	Not Required	Not Required	Not Required
II	19119395	J-35616-3 (GY)	J-38125-217	Not Available	Not Available	Not Available	Not Available
III	19119440	J-35616-3 (GY)	J-38125-217	Not Available	Not Available	Not Available	Not Available
IV	19119780	J-35616-3 (GY)	J-38125-215A	Not Available	Not Available	Not Available	Not Available

X401 Rear Fascia Harness to Chassis Harness

Pin	Size	Color	Circuit	Terminal Type ID	Option	Function	Pin	Size	Color	Circuit	Terminal Type ID	Option
1	0.5	GN/YE	6846	I	—	Rear License Lamp Control	1	0.5	GN/YE	6846	II	—
2 - 3	—	—	—	—	—	Not Occupied	2 - 3	—	—	—	—	—
4	0.5	BK/WH	1751	I	—	Signal Ground Signal Ground	4	0.75 0.75 0.75	BK/WH BK/WH BK/WH	1751 1751 1751	III IV III	CREW CAB/ EXTEN-DED CAB REGULAR CAB —
5	—	—	—	—	—	Not Occupied	5	—	—	—	—	—
6	0.5	BK	1450	I	—	Ground	6	1	BK	1450	III	—
7	0.35	GY/YE	1760	I	—	Left Side Object Detection LED Control	7	0.5	GY/YE	1760	II	—

X401 Rear Fascia Harness to Chassis Harness (cont'd)

Pin	Size	Color	Circuit	Terminal Type ID	Option	Function	Pin	Size	Color	Circuit	Terminal Type ID	Option
8	0.35	GY	1761	I	—	Right Side Object Detection LED Control	8	0.5	GY	1761	II	—
9	0.5	BN/WH	2374	I	—	Object Sensor Control	9	0.5	BN/WH	2374	II	—
10	0.5	YE	2375	I	—	Left Rear Corner Object Sensor Signal	10	0.5	YE	2375	II	—
11	0.5	YE/BU	2376	I	—	Left Rear Middle Object Sensor Signal	11	0.5	YE/BU	2376	II	—
12	0.5	YE/WH	2377	I	—	Right Rear Middle Object Sensor Signal	12	0.5	YE/WH	2377	II	—
13	—	—	—	—	—	Not Occupied	13	—	—	—	—	—
14	0.5	RD/GN	1840	I	—	Battery Positive Voltage	14	0.5	RD/GN	1840	II	—
15	0.5	YE/VT	2378	I	—	Right Rear Corner Object Sensor Signal	15	0.5	YE/VT	2378	II	—
16	0.5	BK/GY	2379	I	—	Object Sensor Low Reference	16	0.5	BK/GY	2379	II	—
17	—	—	—	—	—	Not Occupied	17	—	—	—	—	—
18	0.5	GN	5060	I	—	Low Speed GMLAN Serial Data	18	0.5	GN	5060	II	—
19 - 20	—	—	—	—	—	Not Occupied	19 - 20	—	—	—	—	—

X406 Chassis Harness to Left Rear Speed Sensor Harness

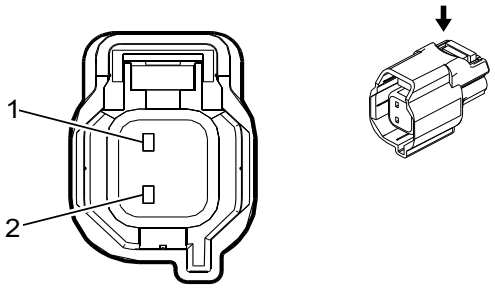

—

2900396

Connector Part Information

Harness Type: Chassis
OEM Connector: 15503634
Service Connector: 19366856
Description: 2-Way F 1.5 Series (L-GY)

Connector Part Information

Harness Type: Left Rear Speed Sensor
OEM Connector: Not Available
Service Connector: Service by Harness - See Part Catalog
Description: 2-Way M

Terminal Part Information

Terminal Type ID	Terminated Lead	Diagnostic Test Probe	Terminal Removal Tool	Service Terminal	Tray Name	Core Crimp	Insulation Crimp
I	Not Required	J-35616-14 (GN)	No Tool Required	Not Required	Not Required	Not Required	Not Required
II	Not Required	Not Available	No Tool Required	Not Required	Not Required	Not Required	Not Required

X406 Chassis Harness to Left Rear Speed Sensor Harness

Pin	Size	Color	Circuit	Terminal Type ID	Option	Function	Pin	Size	Color	Circuit	Terminal Type ID	Option
1	0.5	GY/BK	7127	I	—	Wheel Speed Sensor Control Left Rear	1	0.5	GY/BK	7127	II	—
2	0.5	BU	884	I	—	Wheel Speed Sensor Signal Left Rear	2	0.5	BU	884	II	—

X406 Chassis Harness to Left Rear Speed Sensor Harness (Crew Cab)

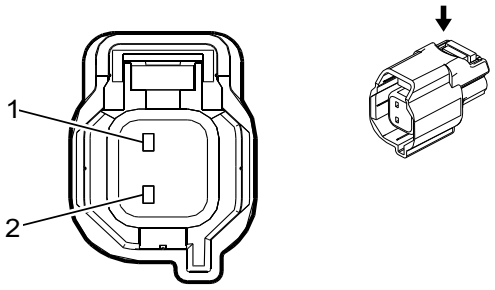

—

2900396

Connector Part Information

Harness Type: Chassis
OEM Connector: 15503634
Service Connector: 19366856
Description: 2-Way F 1.5 Series (L-GY)

Connector Part Information

Harness Type: Left Rear Speed Sensor
OEM Connector: Not Available
Service Connector: Service by Harness - See Part Catalog
Description: 2-Way M

Terminal Part Information

Terminal Type ID	Terminated Lead	Diagnostic Test Probe	Terminal Removal Tool	Service Terminal	Tray Name	Core Crimp	Insulation Crimp
I	Not Required	J-35616-14 (GN)	No Tool Required	Not Required	Not Required	Not Required	Not Required
II	Not Required	Not Available	No Tool Required	Not Required	Not Required	Not Required	Not Required

X406 Chassis Harness to Left Rear Speed Sensor Harness (Crew Cab)

Pin	Size	Color	Circuit	Terminal Type ID	Option	Function	Pin	Size	Color	Circuit	Terminal Type ID	Option
1	0.5	GY/BK	7127	I	—	Wheel Speed Sensor Control Left Rear	1	0.5	GY/BK	7127	II	—
2	0.5	BU	884	I	—	Wheel Speed Sensor Signal Left Rear	2	0.5	BU	884	II	—

X406 Chassis Harness to Left Rear Speed Sensor Harness (Crew Cab+Chassis)

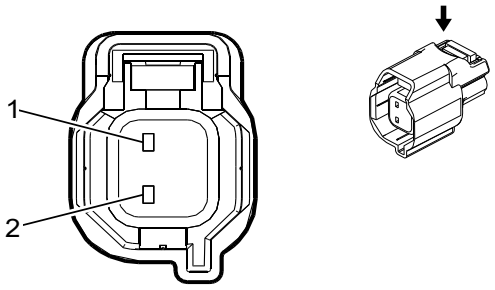

—

2900396

Connector Part Information

Harness Type: Chassis
OEM Connector: 15503634
Service Connector: 19366856
Description: 2-Way F 1.5 Series (L-GY)

Connector Part Information

Harness Type: Left Rear Speed Sensor
OEM Connector: Not Available
Service Connector: Service by Harness - See Part Catalog
Description: 2-Way M

Terminal Part Information

Terminal Type ID	Terminated Lead	Diagnostic Test Probe	Terminal Removal Tool	Service Terminal	Tray Name	Core Crimp	Insulation Crimp
I	Not Required	J-35616-14 (GN)	No Tool Required	Not Required	Not Required	Not Required	Not Required
II	Not Required	Not Available	No Tool Required	Not Required	Not Required	Not Required	Not Required

X406 Chassis Harness to Left Rear Speed Sensor Harness (Crew Cab+Chassis)

Pin	Size	Color	Circuit	Terminal Type ID	Option	Function	Pin	Size	Color	Circuit	Terminal Type ID	Option
1	0.5	GY/BK	7127	I	—	Wheel Speed Sensor Control Left Rear	1	0.5	GY/BK	7127	II	—
2	0.5	BU	884	I	—	Wheel Speed Sensor Signal Left Rear	2	0.5	BU	884	II	—

X406 Rear Axle Harness to Chassis Harness (DZW)

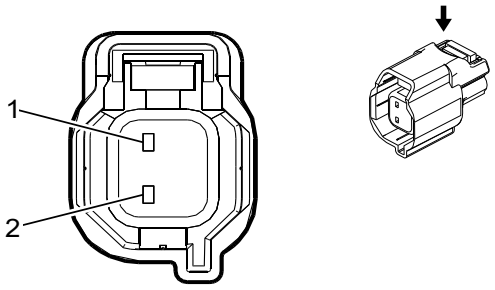

—

2900396

Connector Part Information

Harness Type: Rear Axle
OEM Connector: 13503509
Service Connector: Service by Harness - See Part Catalog
Description: 2-Way F 1.5 Series (L-GY)

Connector Part Information

Harness Type: Chassis
OEM Connector: Not Available
Service Connector: -
Description: 2-Way M

Terminal Part Information

Terminal Type ID	Terminated Lead	Diagnostic Test Probe	Terminal Removal Tool	Service Terminal	Tray Name	Core Crimp	Insulation Crimp
I	Not Required	Not Available	No Tool Required	Not Required	Not Required	Not Required	Not Required
II	Not Required	No Tool Required	No Tool Required	Not Required	Not Required	Not Required	Not Required

X406 Rear Axle Harness to Chassis Harness (DZW)

Pin	Size	Color	Circuit	Terminal Type ID	Option	Function	Pin	Size	Color	Circuit	Terminal Type ID	Option
1	0.75	TN	7127	I	—	Wheel Speed Sensor Control Left Rear	1	0.75	TN	7127	II	—
2	0.75	OG	884	I	—	Wheel Speed Sensor Signal Left Rear	2	0.75	OG	884	II	—

X406 Rear Axle Harness to Chassis Harness (DZW+Chassis Cab)

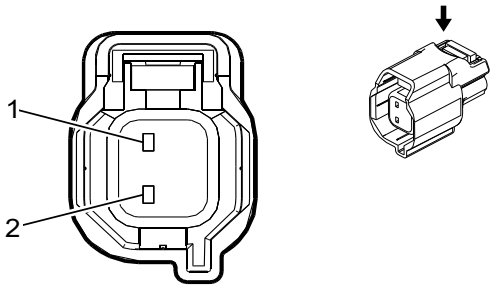

—

2900396

Connector Part Information

Harness Type: Rear Axle
OEM Connector: 13503509
Service Connector: Service by Harness - See Part Catalog
Description: 2-Way F 1.5 Series (L-GY)

Connector Part Information

Harness Type: Chassis
OEM Connector: Not Available
Service Connector: -
Description: 2-Way M

Terminal Part Information

Terminal Type ID	Terminated Lead	Diagnostic Test Probe	Terminal Removal Tool	Service Terminal	Tray Name	Core Crimp	Insulation Crimp
I	Not Required	Not Available	No Tool Required	Not Required	Not Required	Not Required	Not Required
II	Not Required	No Tool Required	No Tool Required	Not Required	Not Required	Not Required	Not Required

X406 Rear Axle Harness to Chassis Harness (DZW+Chassis Cab)

Pin	Size	Color	Circuit	Terminal Type ID	Option	Function	Pin	Size	Color	Circuit	Terminal Type ID	Option
1	0.75	TN	7127	I	—	Wheel Speed Sensor Control Left Rear	1	0.75	TN	7127	II	—
2	0.75	OG	884	I	—	Wheel Speed Sensor Signal Left Rear	2	0.75	OG	884	II	—

X406 Rear Axle Harness to Chassis Harness (DZW-Chassis Cab)

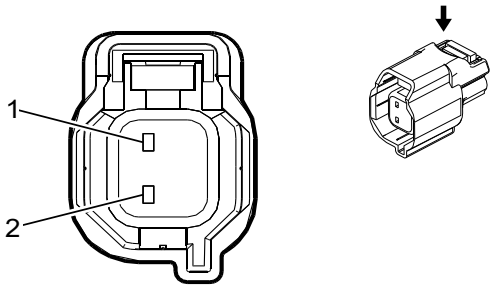

—

2900396

Connector Part Information

Harness Type: Rear Axle
OEM Connector: 13503509
Service Connector: Service by Harness - See Part Catalog
Description: 2-Way F 1.5 Series (L-GY)

Connector Part Information

Harness Type: Chassis
OEM Connector: Not Available
Service Connector: -
Description: 2-Way M

Terminal Part Information

Terminal Type ID	Terminated Lead	Diagnostic Test Probe	Terminal Removal Tool	Service Terminal	Tray Name	Core Crimp	Insulation Crimp
I	Not Required	Not Available	No Tool Required	Not Required	Not Required	Not Required	Not Required
II	Not Required	No Tool Required	No Tool Required	Not Required	Not Required	Not Required	Not Required

X406 Rear Axle Harness to Chassis Harness (DZW-Chassis Cab)

Pin	Size	Color	Circuit	Terminal Type ID	Option	Function	Pin	Size	Color	Circuit	Terminal Type ID	Option
1	0.75	TN	7127	I	—	Wheel Speed Sensor Control Left Rear	1	0.75	TN	7127	II	—
2	0.75	OG	884	I	—	Wheel Speed Sensor Signal Left Rear	2	0.75	OG	884	II	—

X406 Chassis Harness to Left Rear Speed Sensor Harness (Extended Cab)

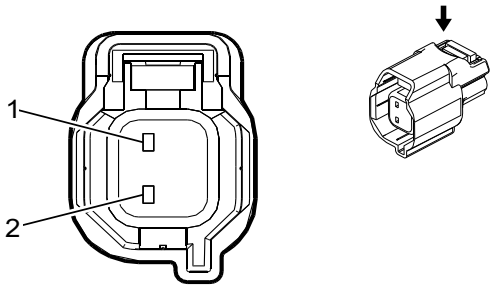

—

2900396

Connector Part Information

Harness Type: Chassis
OEM Connector: 15503634
Service Connector: 19366856
Description: 2-Way F 1.5 Series (L-GY)

Connector Part Information

Harness Type: Left Rear Speed Sensor
OEM Connector: Not Available
Service Connector: Service by Harness - See Part Catalog
Description: 2-Way M

Terminal Part Information

Terminal Type ID	Terminated Lead	Diagnostic Test Probe	Terminal Removal Tool	Service Terminal	Tray Name	Core Crimp	Insulation Crimp
I	Not Required	J-35616-14 (GN)	No Tool Required	Not Required	Not Required	Not Required	Not Required
II	Not Required	Not Available	No Tool Required	Not Required	Not Required	Not Required	Not Required

X406 Chassis Harness to Left Rear Speed Sensor Harness (Extended Cab)

Pin	Size	Color	Circuit	Terminal Type ID	Option	Function	Pin	Size	Color	Circuit	Terminal Type ID	Option
1	0.5	GY/BK	7127	I	—	Wheel Speed Sensor Control Left Rear	1	0.5	GY/BK	7127	II	—
2	0.5	BU	884	I	—	Wheel Speed Sensor Signal Left Rear	2	0.5	BU	884	II	—

X406 Chassis Harness to Left Rear Speed Sensor Harness (Regular Cab)

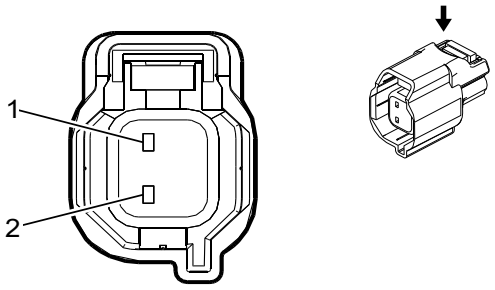

—

2900396

Connector Part Information

Harness Type: Chassis
OEM Connector: 15503634
Service Connector: 19366856
Description: 2-Way F 1.5 Series (L-GY)

Connector Part Information

Harness Type: Left Rear Speed Sensor
OEM Connector: Not Available
Service Connector: Service by Harness - See Part Catalog
Description: 2-Way M

Terminal Part Information

Terminal Type ID	Terminated Lead	Diagnostic Test Probe	Terminal Removal Tool	Service Terminal	Tray Name	Core Crimp	Insulation Crimp
I	Not Required	J-35616-14 (GN)	No Tool Required	Not Required	Not Required	Not Required	Not Required
II	Not Required	Not Available	No Tool Required	Not Required	Not Required	Not Required	Not Required

X406 Chassis Harness to Left Rear Speed Sensor Harness (Regular Cab)

Pin	Size	Color	Circuit	Terminal Type ID	Option	Function	Pin	Size	Color	Circuit	Terminal Type ID	Option
1	0.5	GY/BK	7127	I	—	Wheel Speed Sensor Control Left Rear	1	0.5	GY/BK	7127	II	—
2	0.5	BU	884	I	—	Wheel Speed Sensor Signal Left Rear	2	0.5	BU	884	II	—

X406 Chassis Harness to Left Rear Speed Sensor Harness (Regular Cab+Chassis)

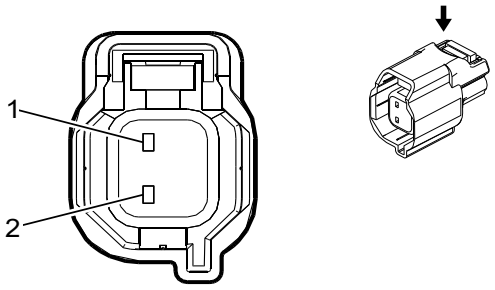

—

2900396

Connector Part Information

Harness Type: Chassis
OEM Connector: 15503634
Service Connector: 19366856
Description: 2-Way F 1.5 Series (L-GY)

Connector Part Information

Harness Type: Left Rear Speed Sensor
OEM Connector: Not Available
Service Connector: Service by Harness - See Part Catalog
Description: 2-Way M

Terminal Part Information

Terminal Type ID	Terminated Lead	Diagnostic Test Probe	Terminal Removal Tool	Service Terminal	Tray Name	Core Crimp	Insulation Crimp
I	Not Required	J-35616-14 (GN)	No Tool Required	Not Required	Not Required	Not Required	Not Required
II	Not Required	Not Available	No Tool Required	Not Required	Not Required	Not Required	Not Required

X406 Chassis Harness to Left Rear Speed Sensor Harness (Regular Cab+Chassis)

Pin	Size	Color	Circuit	Terminal Type ID	Option	Function	Pin	Size	Color	Circuit	Terminal Type ID	Option
1	0.5	GY/BK	7127	I	—	Wheel Speed Sensor Control Left Rear	1	0.5	GY/BK	7127	II	—
2	0.5	BU	884	I	—	Wheel Speed Sensor Signal Left Rear	2	0.5	BU	884	II	—

X406 Rear Axle Harness to Chassis Harness (SRW)

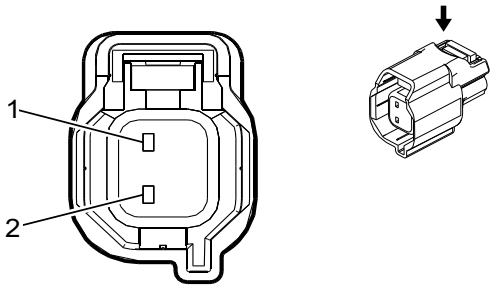

—

2900396

Connector Part Information

Harness Type: Rear Axle
OEM Connector: 13503509
Service Connector: Service by Harness - See Part Catalog
Description: 2-Way F 1.5 Series (L-GY)

Connector Part Information

Harness Type: Chassis
OEM Connector: Not Available
Service Connector: -
Description: 2-Way M

Terminal Part Information

Terminal Type ID	Terminated Lead	Diagnostic Test Probe	Terminal Removal Tool	Service Terminal	Tray Name	Core Crimp	Insulation Crimp
I	Not Required	Not Available	No Tool Required	Not Required	Not Required	Not Required	Not Required
II	Not Required	No Tool Required	No Tool Required	Not Required	Not Required	Not Required	Not Required

X406 Rear Axle Harness to Chassis Harness (SRW)

Pin	Size	Color	Circuit	Terminal Type ID	Option	Function	Pin	Size	Color	Circuit	Terminal Type ID	Option
1	0.75	TN	7127	I	—	Wheel Speed Sensor Control Left Rear	1	0.75	TN	7127	II	—
2	0.75	OG	884	I	—	Wheel Speed Sensor Signal Left Rear	2	0.75	OG	884	II	—

X407 Chassis Harness to Right Rear Speed Sensor Harness

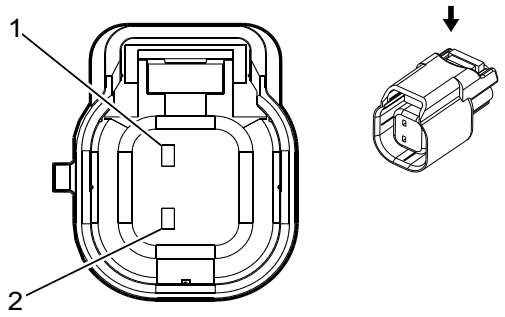

—

4115616

Connector Part Information

Harness Type: Chassis
OEM Connector: 33122852
Service Connector: 19366860
Description: 2-Way F 1.5 Series, Sealed (BK)

Connector Part Information

Harness Type: Right Rear Speed Sensor
OEM Connector: Not Available
Service Connector: Service by Harness - See Part Catalog
Description: 2-Way M

Terminal Part Information

Terminal Type ID	Terminated Lead	Diagnostic Test Probe	Terminal Removal Tool	Service Terminal	Tray Name	Core Crimp	Insulation Crimp
I	Not Required	J-35616-14 (GN)	No Tool Required	Not Required	Not Required	Not Required	Not Required
II	Not Required	Not Available	No Tool Required	Not Required	Not Required	Not Required	Not Required

X407 Chassis Harness to Right Rear Speed Sensor Harness

Pin	Size	Color	Circuit	Terminal Type ID	Option	Function	Pin	Size	Color	Circuit	Terminal Type ID	Option
1	0.5	GY/YE	7128	I	—	Wheel Speed Sensor Control Right Rear	1	0.5	GY/YE	7128	II	—
2	0.5	VT	882	I	—	Wheel Speed Sensor Signal Right Rear	2	0.5	VT	882	II	—

X407 Chassis Harness to Right Rear Speed Sensor Harness (Crew Cab)

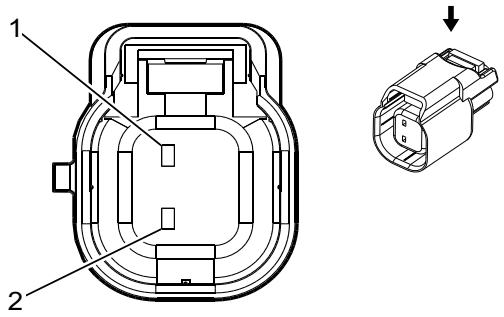

—

4115616

Connector Part Information

Harness Type: Chassis
OEM Connector: 33122852
Service Connector: 19366860
Description: 2-Way F 1.5 Series, Sealed (BK)

Connector Part Information

Harness Type: Right Rear Speed Sensor
OEM Connector: Not Available
Service Connector: Service by Harness - See Part Catalog
Description: 2-Way M

Terminal Part Information

Terminal Type ID	Terminated Lead	Diagnostic Test Probe	Terminal Removal Tool	Service Terminal	Tray Name	Core Crimp	Insulation Crimp
I	Not Required	J-35616-14 (GN)	No Tool Required	Not Required	Not Required	Not Required	Not Required
II	Not Required	Not Available	No Tool Required	Not Required	Not Required	Not Required	Not Required

X407 Chassis Harness to Right Rear Speed Sensor Harness (Crew Cab)

Pin	Size	Color	Circuit	Terminal Type ID	Option	Function	Pin	Size	Color	Circuit	Terminal Type ID	Option
1	0.5	GY/YE	7128	I	—	Wheel Speed Sensor Control Right Rear	1	0.5	GY/YE	7128	II	—
2	0.5	VT	882	I	—	Wheel Speed Sensor Signal Right Rear	2	0.5	VT	882	II	—

X407 Chassis Harness to Right Rear Speed Sensor Harness (Crew Cab+Chassis)

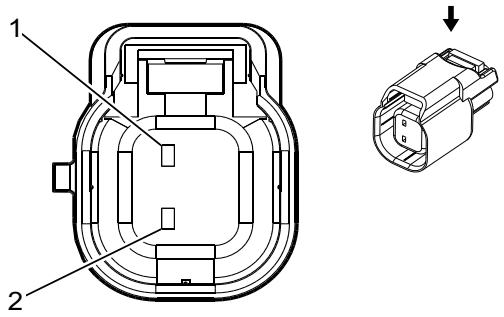

4115616

—

Connector Part Information

Harness Type: Chassis
OEM Connector: 33122852
Service Connector: 19366860
Description: 2-Way F 1.5 Series, Sealed (BK)

Connector Part Information

Harness Type: Right Rear Speed Sensor
OEM Connector: Not Available
Service Connector: Service by Harness - See Part Catalog
Description: 2-Way M

Terminal Part Information

Terminal Type ID	Terminated Lead	Diagnostic Test Probe	Terminal Removal Tool	Service Terminal	Tray Name	Core Crimp	Insulation Crimp
I	Not Required	J-35616-14 (GN)	No Tool Required	Not Required	Not Required	Not Required	Not Required
II	Not Required	Not Available	No Tool Required	Not Required	Not Required	Not Required	Not Required

X407 Chassis Harness to Right Rear Speed Sensor Harness (Crew Cab+Chassis)

Pin	Size	Color	Circuit	Terminal Type ID	Option	Function	Pin	Size	Color	Circuit	Terminal Type ID	Option
1	0.5	GY/YE	7128	I	—	Wheel Speed Sensor Control Right Rear	1	0.5	GY/YE	7128	II	—
2	0.5	VT	882	I	—	Wheel Speed Sensor Signal Right Rear	2	0.5	VT	882	II	—

X407 Rear Axle Harness to Chassis Harness (DZW)

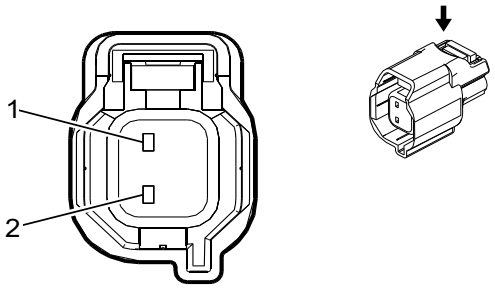

—

2900396

Connector Part Information

Harness Type: Rear Axle
OEM Connector: 13503509
Service Connector: Service by Harness - See Part Catalog
Description: 2-Way F 1.5 Series (L-GY)

Connector Part Information

Harness Type: Chassis
OEM Connector: Not Available
Service Connector: -
Description: 2-Way M

Terminal Part Information

Terminal Type ID	Terminated Lead	Diagnostic Test Probe	Terminal Removal Tool	Service Terminal	Tray Name	Core Crimp	Insulation Crimp
I	Not Required	Not Available	No Tool Required	Not Required	Not Required	Not Required	Not Required
II	Not Required	No Tool Required	No Tool Required	Not Required	Not Required	Not Required	Not Required

X407 Rear Axle Harness to Chassis Harness (DZW)

Pin	Size	Color	Circuit	Terminal Type ID	Option	Function	Pin	Size	Color	Circuit	Terminal Type ID	Option
1	0.75	TN	7128	I	—	Wheel Speed Sensor Control Right Rear	1	0.75	TN	7128	II	—
2	0.75	OG	882	I	—	Wheel Speed Sensor Signal Right Rear	2	0.75	OG	882	II	—

X407 Rear Axle Harness to Chassis Harness (DZW+Chassis Cab)

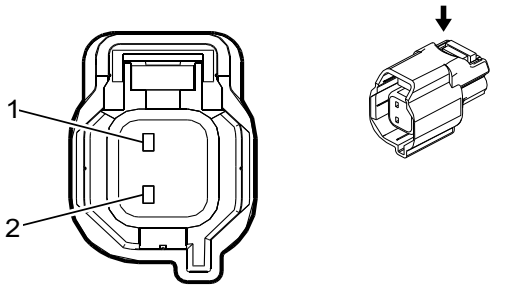

—

2900396

Connector Part Information

Harness Type: Rear Axle
OEM Connector: 13503509
Service Connector: Service by Harness - See Part Catalog
Description: 2-Way F 1.5 Series (L-GY)

Connector Part Information

Harness Type: Chassis
OEM Connector: Not Available
Service Connector: -
Description: 2-Way M

Terminal Part Information

Terminal Type ID	Terminated Lead	Diagnostic Test Probe	Terminal Removal Tool	Service Terminal	Tray Name	Core Crimp	Insulation Crimp
I	Not Required	Not Available	No Tool Required	Not Required	Not Required	Not Required	Not Required
II	Not Required	No Tool Required	No Tool Required	Not Required	Not Required	Not Required	Not Required

X407 Rear Axle Harness to Chassis Harness (DZW+Chassis Cab)

Pin	Size	Color	Circuit	Terminal Type ID	Option	Function	Pin	Size	Color	Circuit	Terminal Type ID	Option
1	0.75	TN	7128	I	—	Wheel Speed Sensor Control Right Rear	1	0.75	TN	7128	II	—
2	0.75	OG	882	I	—	Wheel Speed Sensor Signal Right Rear	2	0.75	OG	882	II	—

X407 Rear Axle Harness to Chassis Harness (DZW-Chassis Cab)

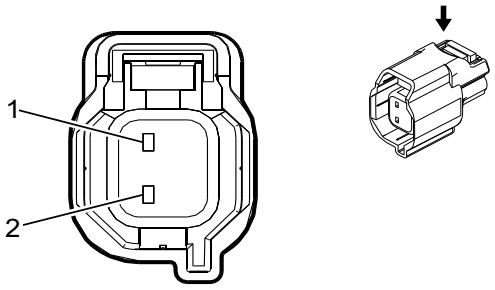

—

2900396

Connector Part Information

Harness Type: Rear Axle
OEM Connector: 13503509
Service Connector: Service by Harness - See Part Catalog
Description: 2-Way F 1.5 Series (L-GY)

Connector Part Information

Harness Type: Chassis
OEM Connector: Not Available
Service Connector: -
Description: 2-Way M

Terminal Part Information

Terminal Type ID	Terminated Lead	Diagnostic Test Probe	Terminal Removal Tool	Service Terminal	Tray Name	Core Crimp	Insulation Crimp
I	Not Required	Not Available	No Tool Required	Not Required	Not Required	Not Required	Not Required
II	Not Required	No Tool Required	No Tool Required	Not Required	Not Required	Not Required	Not Required

X407 Rear Axle Harness to Chassis Harness (DZW-Chassis Cab)

Pin	Size	Color	Circuit	Terminal Type ID	Option	Function	Pin	Size	Color	Circuit	Terminal Type ID	Option
1	0.75	TN	7128	I	—	Wheel Speed Sensor Control Right Rear	1	0.75	TN	7128	II	—
2	0.75	OG	882	I	—	Wheel Speed Sensor Signal Right Rear	2	0.75	OG	882	II	—

X407 Chassis Harness to Right Rear Speed Sensor Harness (Extended Cab)

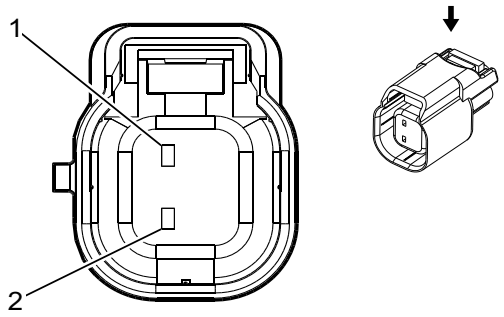

—

4115616

Connector Part Information

Harness Type: Chassis
OEM Connector: 33122852
Service Connector: 19366860
Description: 2-Way F 1.5 Series, Sealed (BK)

Connector Part Information

Harness Type: Right Rear Speed Sensor
OEM Connector: Not Available
Service Connector: Service by Harness - See Part Catalog
Description: 2-Way M

Terminal Part Information

Terminal Type ID	Terminated Lead	Diagnostic Test Probe	Terminal Removal Tool	Service Terminal	Tray Name	Core Crimp	Insulation Crimp
I	Not Required	J-35616-14 (GN)	No Tool Required	Not Required	Not Required	Not Required	Not Required
II	Not Required	Not Available	No Tool Required	Not Required	Not Required	Not Required	Not Required

X407 Chassis Harness to Right Rear Speed Sensor Harness (Extended Cab)

Pin	Size	Color	Circuit	Terminal Type ID	Option	Function	Pin	Size	Color	Circuit	Terminal Type ID	Option
1	0.5	GY/YE	7128	I	—	Wheel Speed Sensor Control Right Rear	1	0.5	GY/YE	7128	II	—
2	0.5	VT	882	I	—	Wheel Speed Sensor Signal Right Rear	2	0.5	VT	882	II	—

X407 Chassis Harness to Right Rear Speed Sensor Harness (Regular Cab)

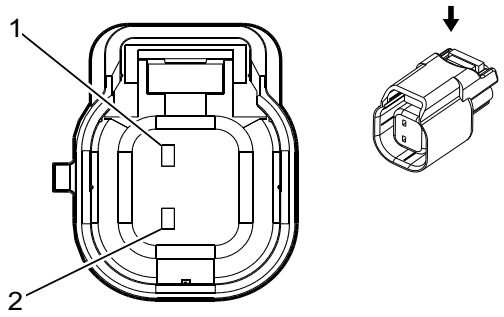

—

4115616

Connector Part Information

Harness Type: Chassis
OEM Connector: 33122852
Service Connector: 19366860
Description: 2-Way F 1.5 Series, Sealed (BK)

Connector Part Information

Harness Type: Right Rear Speed Sensor
OEM Connector: Not Available
Service Connector: Service by Harness - See Part Catalog
Description: 2-Way M

Terminal Part Information

Terminal Type ID	Terminated Lead	Diagnostic Test Probe	Terminal Removal Tool	Service Terminal	Tray Name	Core Crimp	Insulation Crimp
I	Not Required	J-35616-14 (GN)	No Tool Required	Not Required	Not Required	Not Required	Not Required
II	Not Required	Not Available	No Tool Required	Not Required	Not Required	Not Required	Not Required

X407 Chassis Harness to Right Rear Speed Sensor Harness (Regular Cab)

Pin	Size	Color	Circuit	Terminal Type ID	Option	Function	Pin	Size	Color	Circuit	Terminal Type ID	Option
1	0.5	GY/YE	7128	I	—	Wheel Speed Sensor Control Right Rear	1	0.5	GY/YE	7128	II	—
2	0.5	VT	882	I	—	Wheel Speed Sensor Signal Right Rear	2	0.5	VT	882	II	—

X407 Chassis Harness to Right Rear Speed Sensor Harness (Regular Cab+Chassis)

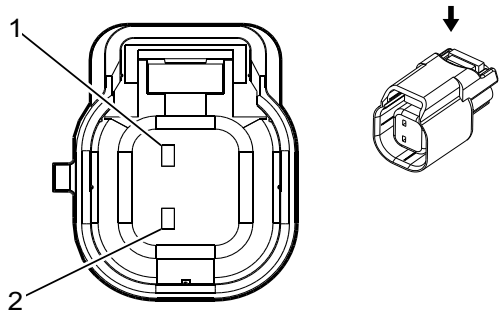

—

4115616

Connector Part Information

Harness Type: Chassis
OEM Connector: 33122852
Service Connector: 19366860
Description: 2-Way F 1.5 Series, Sealed (BK)

Connector Part Information

Harness Type: Right Rear Speed Sensor
OEM Connector: Not Available
Service Connector: Service by Harness - See Part Catalog
Description: 2-Way M

Terminal Part Information

Terminal Type ID	Terminated Lead	Diagnostic Test Probe	Terminal Removal Tool	Service Terminal	Tray Name	Core Crimp	Insulation Crimp
I	Not Required	J-35616-14 (GN)	No Tool Required	Not Required	Not Required	Not Required	Not Required
I	Not Required	J-35616-14 (GN)	No Tool Required	Not Required	Not Required	Not Required	Not Required
II	Not Required	Not Available	No Tool Required	Not Required	Not Required	Not Required	Not Required

X407 Chassis Harness to Right Rear Speed Sensor Harness (Regular Cab+Chassis)

Pin	Size	Color	Circuit	Terminal Type ID	Option	Function	Pin	Size	Color	Circuit	Terminal Type ID	Option
1	0.5	GY/YE	7128	I	—	Wheel Speed Sensor Control Right Rear	1	0.5	GY/YE	7128	II	—
2	0.5	VT	882	I	—	Wheel Speed Sensor Signal Right Rear	2	0.5	VT	882	II	—

X407 Rear Axle Harness to Chassis Harness (SRW)

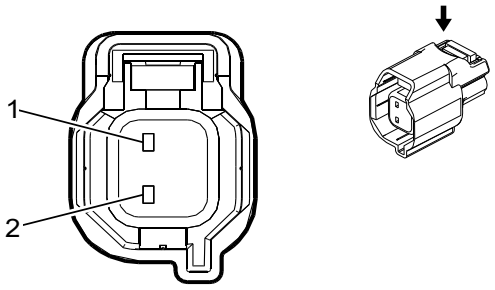

—

2900396

Connector Part Information

Harness Type: Rear Axle
OEM Connector: 13503509
Service Connector: Service by Harness - See Part Catalog
Description: 2-Way F 1.5 Series (L-GY)

Connector Part Information

Harness Type: Chassis
OEM Connector: Not Available
Service Connector: -
Description: 2-Way M

Terminal Part Information

Terminal Type ID	Terminated Lead	Diagnostic Test Probe	Terminal Removal Tool	Service Terminal	Tray Name	Core Crimp	Insulation Crimp
I	Not Required	Not Available	No Tool Required	Not Required	Not Required	Not Required	Not Required
II	Not Required	No Tool Required	No Tool Required	Not Required	Not Required	Not Required	Not Required

X407 Rear Axle Harness to Chassis Harness (SRW)

Pin	Size	Color	Circuit	Terminal Type ID	Option	Function	Pin	Size	Color	Circuit	Terminal Type ID	Option
1	0.75	TN	7128	I	—	Wheel Speed Sensor Control Right Rear	1	0.75	TN	7128	II	—
2	0.75	OG	882	I	—	Wheel Speed Sensor Signal Right Rear	2	0.75	OG	882	II	—

X410 Left Tail Lamp Assembly Harness to Chassis Harness

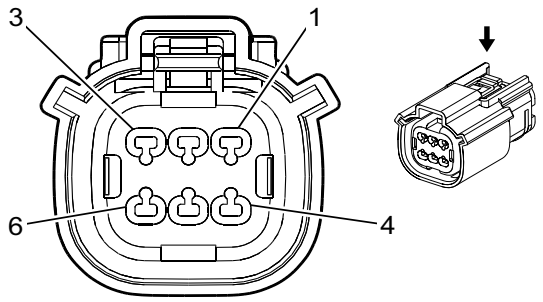

1986157

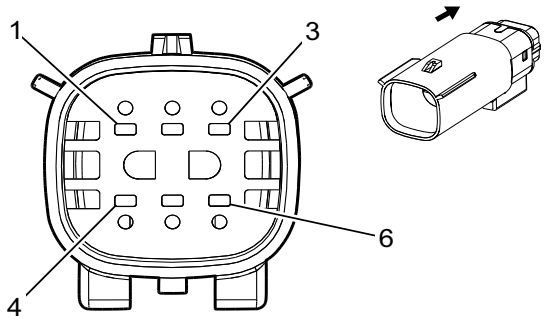

1986159

Connector Part Information

Harness Type: Left Tail Lamp Assembly
OEM Connector: Not Available
Service Connector: Service by Harness - See Part Catalog
Description: 6-Way F

Connector Part Information

Harness Type: Chassis
OEM Connector: 35014074
Service Connector: 19367742
Description: 6-Way M 150 MX Series, Sealed (BK)

Terminal Part Information

Terminal Type ID	Terminated Lead	Diagnostic Test Probe	Terminal Removal Tool	Service Terminal	Tray Name	Core Crimp	Insulation Crimp
I	Not Required	Not Available	No Tool Required	Not Required	Not Required	Not Required	Not Required
II	Not Required	J-35616-3 (GY)	No Tool Required	Not Required	Not Required	Not Required	Not Required

X410 Left Tail Lamp Assembly Harness to Chassis Harness

Pin	Size	Color	Circuit	Terminal Type ID	Option	Function	Pin	Size	Color	Circuit	Terminal Type ID	Option
1	0.75	VT/GY	709	I	—	Left Park Lamp Control	1	0.75	VT/GY	709	II	—
2	0.5	YE/BK	5356	I	—	Left Tail Lamp Outage Detection Signal	2	0.5	YE/BK	5356	II	—
3	0.5	GY/D-BU	7762	I	—	Cargo Bed Lamp Control	3	0.5	GY/D-BU	7762	II	—
4	0.5	L-GN/WH	24	I	—	Backup Lamp Control	4	0.5	L-GN/WH	24	II	—
5	1	YE/D-BU	18	I	—	Left Rear Stop/Turn Lamp Control	5	1	YE/D-BU	18	II	—
6	1	BK	1450	I	—	Ground	6	1	BK	1450	II	—

X411 Chassis Harness to Rear Fuel Tank Harness (L8T+N2N)

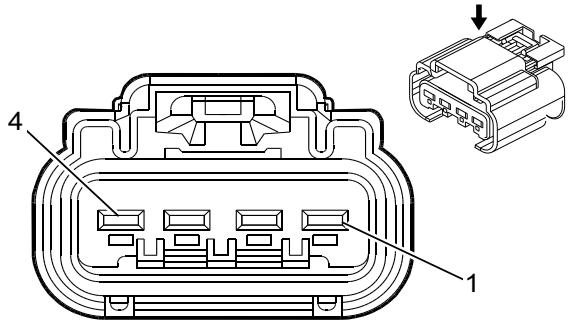

—

5199377

Connector Part Information

Harness Type: Chassis
OEM Connector: 13843236
Service Connector: -
Description: 4-Way F 280 GT Series, Sealed (NA)

Connector Part Information

Harness Type: Rear Fuel Tank
OEM Connector: Not Available
Service Connector: Service by Harness - See Part Catalog
Description: 4-Way M

Terminal Part Information

Terminal Type ID	Terminated Lead	Diagnostic Test Probe	Terminal Removal Tool	Service Terminal	Tray Name	Core Crimp	Insulation Crimp
I	Not Required	J-35616-4A (PU)	No Tool Required	Not Required	Not Required	Not Required	Not Required
II	Not Required	Not Available	No Tool Required	Not Required	Not Required	Not Required	Not Required

X411 Chassis Harness to Rear Fuel Tank Harness (L8T+N2N)

Pin	Size	Color	Circuit	Terminal Type ID	Option	Function	Pin	Size	Color	Circuit	Terminal Type ID	Option
1	2.5	BU/ L-GN	2120	I	—	Secondary Fuel Pump Supply Voltage	1	2.5	BU/ L-GN	2120	II	—
2	2.5	BK/ L-GN	1580	I	—	Fuel Pump Low Reference	2	2.5	BK/ L-GN	1580	II	—
3	0.5	BU/ WH	1937	I	—	Secondary Fuel Level Sensor Signal	3	0.5	BU/ WH	1937	II	—
4	0.5	BK/ D-BU	6282	I	—	Fuel Level Sensor 2 Low Reference	4	0.5	BK/ D-BU	6282	II	—

X412 Rear Fuel Tank Harness to Chassis Harness

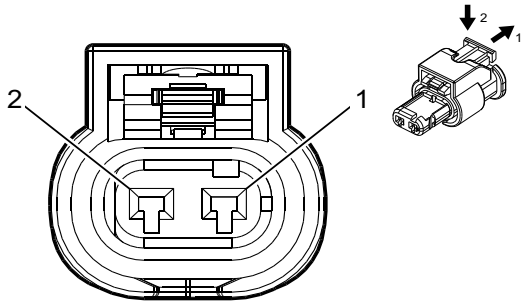

2698576

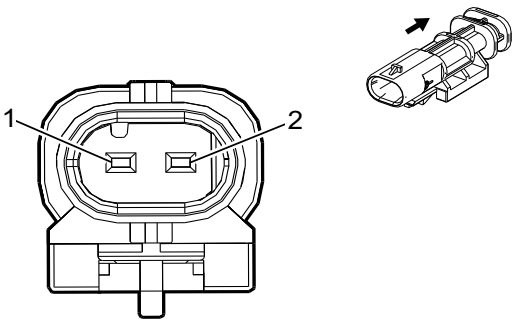

2474755

Connector Part Information

Harness Type: Rear Fuel Tank
OEM Connector: Not Available
Service Connector: Service by Harness - See Part Catalog
Description: 2-Way F

Connector Part Information

Harness Type: Chassis
OEM Connector: 33207247
Service Connector: 19332631
Description: 2-Way M 1.2 Multilock Series, Sealed (BK)

Terminal Part Information

Terminal Type ID	Terminated Lead	Diagnostic Test Probe	Terminal Removal Tool	Service Terminal	Tray Name	Core Crimp	Insulation Crimp
I	Not Required	Not Available	No Tool Required	Not Required	Not Required	Not Required	Not Required
II	Not Required	J-35616-17 (LT GN)	No Tool Required	Not Required	Not Required	Not Required	Not Required

X412 Rear Fuel Tank Harness to Chassis Harness

Pin	Size	Color	Circuit	Terminal Type ID	Option	Function	Pin	Size	Color	Circuit	Terminal Type ID	Option
1	1	BU/ L-GN	2120	I	—	Secondary Fuel Pump Supply Voltage	1	1	BU/ L-GN	2120	II	—
2	1	BK/ L-GN	1580	I	—	Fuel Pump Low Reference	2	1	BK/ L-GN	1580	II	—

X414 Chassis Harness to Rear Fuel Tank Harness (L5P+N2N)

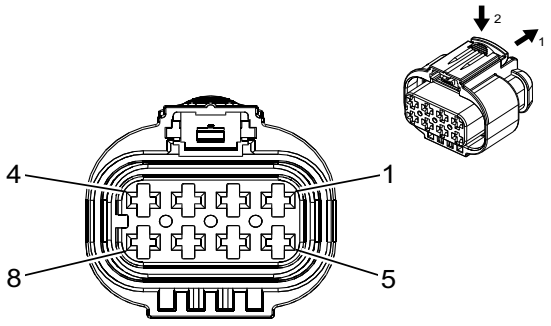

—

3749581

Connector Part Information

Harness Type: Chassis
OEM Connector: 33180017
Service Connector: 19355165
Description: 8-Way F 2.8 Series, Sealed (BK)

Connector Part Information

Harness Type: Rear Fuel Tank
OEM Connector: Not Available
Service Connector: Service by Harness - See Part Catalog
Description: 8-Way M

Terminal Part Information

Terminal Type ID	Terminated Lead	Diagnostic Test Probe	Terminal Removal Tool	Service Terminal	Tray Name	Core Crimp	Insulation Crimp
I	Not Required	J-35616-4A (PU)	No Tool Required	Not Required	Not Required	Not Required	Not Required
II	Not Required	Not Available	No Tool Required	Not Required	Not Required	Not Required	Not Required

X414 Chassis Harness to Rear Fuel Tank Harness (L5P+N2N)

Pin	Size	Color	Circuit	Terminal Type ID	Option	Function	Pin	Size	Color	Circuit	Terminal Type ID	Option
1 - 4	—	—	—	—	—	Not Occupied	1 - 4	—	—	—	—	—
5	0.5	BU/WH	1937	I	—	Secondary Fuel Level Sensor Signal	5	0.5	BU/WH	1937	II	—
6	0.5	BK/D-BU	6282	I	—	Fuel Level Sensor 2 Low Reference	6	0.5	BK/D-BU	6282	II	—
7 - 8	—	—	—	—	—	Not Occupied	7 - 8	—	—	—	—	—

X416 Left Rear Park Brake Harness to Chassis Harness (Regular Cab)

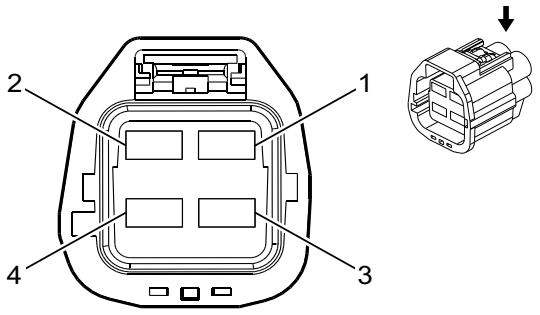

2852121

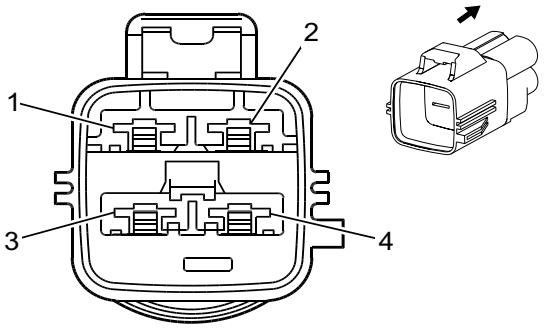

1853524

Connector Part Information

Harness Type: Chassis
OEM Connector: Not Available
Service Connector: -
Description: 4-Way F

Connector Part Information

Harness Type: Chassis
OEM Connector: 33360098
Service Connector: 19371198
Description: 4-Way M 6.3 Series, Sealed (GY)

Terminal Part Information

Terminal Type ID	Terminated Lead	Diagnostic Test Probe	Terminal Removal Tool	Service Terminal	Tray Name	Core Crimp	Insulation Crimp
I	Not Required	No Tool Required	No Tool Required	Not Required	Not Required	Not Required	Not Required
II	Not Required	J-35616-43 (RD)	No Tool Required	Not Required	Not Required	Not Required	Not Required

X416 Left Rear Park Brake Harness to Chassis Harness (Regular Cab)

Pin	Size	Color	Circuit	Terminal Type ID	Option	Function	Pin	Size	Color	Circuit	Terminal Type ID	Option
1	4	WH	2001	I	—	Park Brake Motor Apply Left Rear Control	1	4	WH	2001	II	—
2	4	GY/BK	4369	I	—	Park Brake Motor Low Reference Left Rear	2	4	GY/BK	4369	II	—
3 - 4	—	—	—	—	—	Not Occupied	3 - 4	—	—	—	—	—

X417 Rear Axle Harness to Chassis Harness

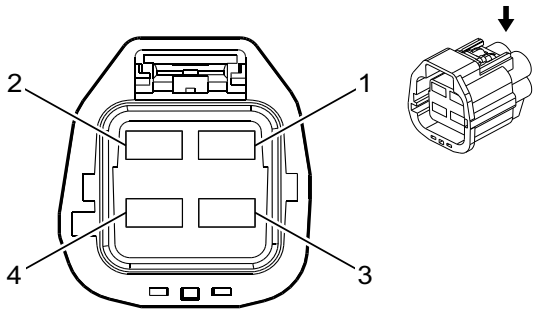

2852121

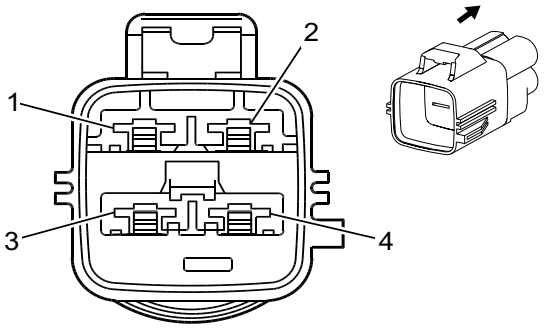

1853524

Connector Part Information

Harness Type: Rear Axle
OEM Connector: 7283-3601-10
Service Connector: Service by Harness - See Part Catalog
Description: 4-Way F 6.3 Series, Sealed (GY)

Connector Part Information

Harness Type: Chassis
OEM Connector: 33360098
Service Connector: 19371198
Description: 4-Way M 6.3 Series, Sealed (GY)

Terminal Part Information

Terminal Type ID	Terminated Lead	Diagnostic Test Probe	Terminal Removal Tool	Service Terminal	Tray Name	Core Crimp	Insulation Crimp
I	Not Required	J-35616-42 (RD)	No Tool Required	Not Required	Not Required	Not Required	Not Required
II	Not Required	J-35616-43 (RD)	No Tool Required	Not Required	Not Required	Not Required	Not Required

X417 Rear Axle Harness to Chassis Harness

Pin	Size	Color	Circuit	Terminal Type ID	Option	Function	Pin	Size	Color	Circuit	Terminal Type ID	Option
1	2.5	WH	2001	I	—	Park Brake Motor Apply Left Rear Control	1	4	WH	2001	II	—
2	2.5	GN/BK	4369	I	—	Park Brake Motor Low Reference Left Rear	2	4	GY/BK	4369	II	—
3	2.5	GN/VT	1988	I	—	Park Brake Motor Apply Right Rear Control	3	4	L-GN/VT	1988	II	—
4	2.5	GY	4368	I	—	Park Brake Motor Low Reference Right Rear	4	4	GY	4368	II	—

X420 Right Tail Lamp Assembly Harness to Chassis Harness

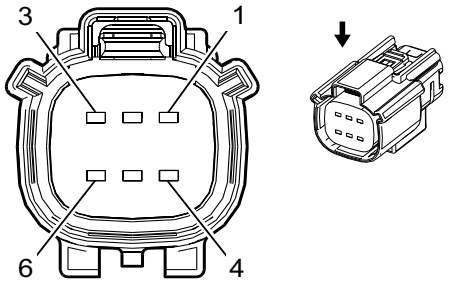

2425071

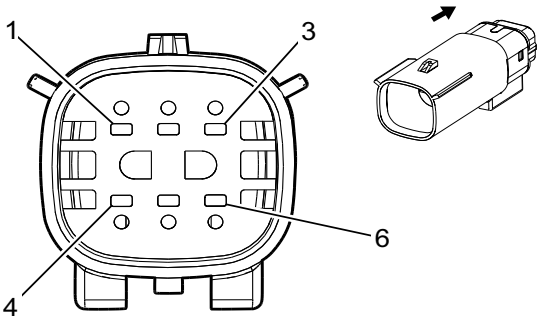

1986159

Connector Part Information

Harness Type: Right Tail Lamp Assembly
OEM Connector: Not Available
Service Connector: Service by Harness - See Part Catalog
Description: 6-Way F

Connector Part Information

Harness Type: Chassis
OEM Connector: 35014074
Service Connector: 19367742
Description: 6-Way M 150 MX Series, Sealed (BK)

Terminal Part Information

Terminal Type ID	Terminated Lead	Diagnostic Test Probe	Terminal Removal Tool	Service Terminal	Tray Name	Core Crimp	Insulation Crimp
I	Not Required	Not Available	No Tool Required	Not Required	Not Required	Not Required	Not Required
II	Not Required	J-35616-3 (GY)	No Tool Required	Not Required	Not Required	Not Required	Not Required

X420 Right Tail Lamp Assembly Harness to Chassis Harness

Pin	Size	Color	Circuit	Terminal Type ID	Option	Function	Pin	Size	Color	Circuit	Terminal Type ID	Option
1	0.75	GY/BN	309	I	—	Right Park Lamp Control	1	0.75	GY/BN	309	II	—
2	0.5	VT/YE	5357	I	—	Right Tail Lamp Outage Detection Signal	2	0.5	VT/YE	5357	II	—
3	0.5	GY/D-BU	7762	I	—	Cargo Bed Lamp Control	3	0.5	GY/D-BU	7762	II	—
4	0.5	L-GN/WH	24	I	—	Backup Lamp Control	4	0.5	L-GN/WH	24	II	—
5	1	BN/L-GN	19	I	—	Right Rear Stop/Turn Lamp Control	5	1	BN/L-GN	19	II	—
6	0.75	BK	1750	I	—	Ground	6	0.75	BK	1750	II	—

X440 Rear Axle Harness to Chassis Harness

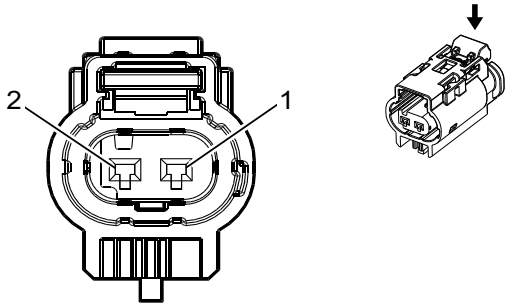

5207726

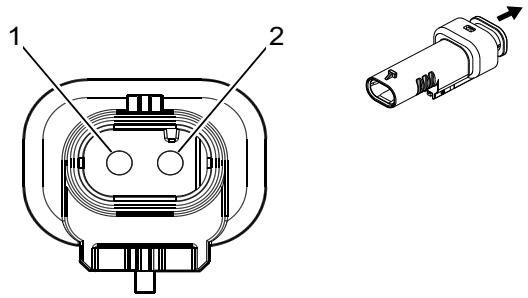

4992757

Connector Part Information

Harness Type: Rear Axle
OEM Connector: 10094237
Service Connector: Service by Harness - See Part Catalog
Description: 2-Way F 1.2 Multilock Series, Sealed (GY)

Connector Part Information

Harness Type: Chassis
OEM Connector: 33356666
Service Connector: 19371200
Description: 2-Way M 1.2 MLK Series, Sealed (GY)

Terminal Part Information

Terminal Type ID	Terminated Lead	Diagnostic Test Probe	Terminal Removal Tool	Service Terminal	Tray Name	Core Crimp	Insulation Crimp
I	Not Required	J-35616-16 (LT GN)	No Tool Required	Not Required	Not Required	Not Required	Not Required
II	Not Required	J-35616-17 (LT GN)	No Tool Required	Not Required	Not Required	Not Required	Not Required

X440 Rear Axle Harness to Chassis Harness

Pin	Size	Color	Circuit	Terminal Type ID	Option	Function	Pin	Size	Color	Circuit	Terminal Type ID	Option
1	0.75	GN/ YE	1616	I	—	Brake Lining Wear Sensor Signal Rear	1	0.5	L-GN/ YE	1616	II	—
2	0.75	BK/ WH	1751	I	—	Signal Ground	2	0.75	BK/ WH	1751	II	—

X450 Left Tail Lamp Assembly Harness to Left Tail Lamp Assembly Jumper Harness (DZW)

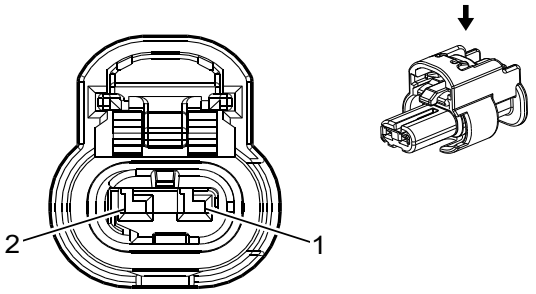

—

4335931

Connector Part Information

Harness Type: Left Tail Lamp Assembly
OEM Connector: 33371691
Service Connector: Service by Harness - See Part Catalog
Description: 2-Way F 1.2 MCON Series, Sealed (BK)

Connector Part Information

Harness Type: Left Tail Lamp Assembly Jumper
OEM Connector: Not Available
Service Connector: Service by Harness - See Part Catalog
Description: 2-Way M

Terminal Part Information

Terminal Type ID	Terminated Lead	Diagnostic Test Probe	Terminal Removal Tool	Service Terminal	Tray Name	Core Crimp	Insulation Crimp
I	Not Required	J-35616-16 (LT GN)	No Tool Required	Not Required	Not Required	Not Required	Not Required
II	Not Required	Not Available	No Tool Required	Not Required	Not Required	Not Required	Not Required

X450 Left Tail Lamp Assembly Harness to Left Tail Lamp Assembly Jumper Harness (DZW)

Pin	Size	Color	Circuit	Terminal Type ID	Option	Function	Pin	Size	Color	Circuit	Terminal Type ID	Option
1	0.5	BK	1450	I	—	Ground	1	0.5	BK	1450	II	—
2	0.5	VT/ GY	709	I	—	Left Park Lamp Control	2	0.5	VT/ GY	709	II	—

X460 Right Tail Lamp Assembly Harness to Right Tail Lamp Assembly Jumper Harness (DZW)

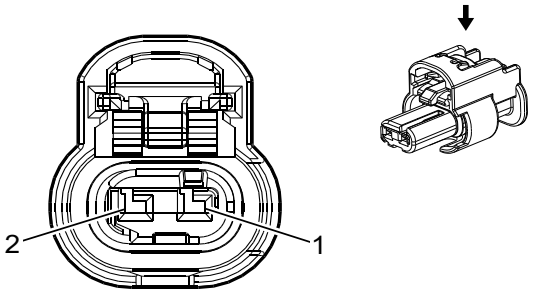

—

4649903

Connector Part Information

Harness Type: Right Tail Lamp Assembly
OEM Connector: 33327048
Service Connector: Service by Harness - See Part Catalog
Description: 2-Way F 1.2 MCON Series, Sealed (BK)

Connector Part Information

Harness Type: Right Tail Lamp Assembly Jumper
OEM Connector: Not Available
Service Connector: Service by Harness - See Part Catalog
Description: 2-Way M

Terminal Part Information

Terminal Type ID	Terminated Lead	Diagnostic Test Probe	Terminal Removal Tool	Service Terminal	Tray Name	Core Crimp	Insulation Crimp
I	Not Required	J-35616-16 (LT GN)	No Tool Required	Not Required	Not Required	Not Required	Not Required
II	Not Required	Not Available	No Tool Required	Not Required	Not Required	Not Required	Not Required

X460 Right Tail Lamp Assembly Harness to Right Tail Lamp Assembly Jumper Harness (DZW)

Pin	Size	Color	Circuit	Terminal Type ID	Option	Function	Pin	Size	Color	Circuit	Terminal Type ID	Option
1	0.5	GY/BN	309	I	—	Right Park Lamp Control	1	0.5	GY/BN	309	II	—
2	0.5	BK	1750	I	—	Ground	2	0.5	BK	1750	II	—

X470 Power Outlet Jumper Harness to Chassis Harness (K9C/KCA)

—

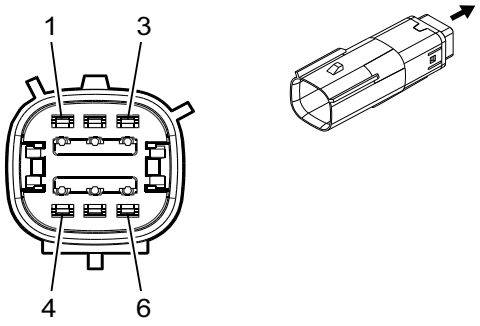

4992963

Connector Part Information

Harness Type: Power Outlet Jumper
OEM Connector: Not Available
Service Connector: Service by Harness - See Part Catalog
Description: 6-Way F

Connector Part Information

Harness Type: Chassis
OEM Connector: 15513475
Service Connector: 19371205
Description: 6-Way M 1.5 OCS Series, Sealed (GY)

Terminal Part Information

Terminal Type ID	Terminated Lead	Diagnostic Test Probe	Terminal Removal Tool	Service Terminal	Tray Name	Core Crimp	Insulation Crimp
I	Not Required	J-35616-2A (GY)	No Tool Required	Not Required	Not Required	Not Required	Not Required
II	Not Required	J-35616-3 (GY)	No Tool Required	Not Required	Not Required	Not Required	Not Required

X470 Power Outlet Jumper Harness to Chassis Harness (K9C/KCA)

Pin	Size	Color	Circuit	Terminal Type ID	Option	Function	Pin	Size	Color	Circuit	Terminal Type ID	Option
1	0.75	BK/WH	2264	I	—	120 VAC Phase A 2	1	0.75	BK/WH	2264	II	—
2	0.75	RD/WH	2265	I	—	120 VAC Phase B 2	2	0.75	RD/WH	2265	II	—
3	0.5	BN	2257	I	—	Drain Wire	3	0.5	BN	2257	II	—
4	0.75	GN/BN	2266	I	—	DC To AC Inverter Control 2	4	0.75	GN/BN	2266	II	—
5	0.5	BN	7754	I	—	AC Power Outlet Enable AC Power Outlet Enable	5	0.5	BN	7754	II	—
5	0.5	BN	7754	I	—	AC Power Outlet Enable AC Power Outlet Enable	5	0.5	BN	7754	II	—
6	1	BK	6650	I	—	Ground (66) Propulsion System	6	1	BK	6650	II	—

X470 Power Outlet Jumper Harness to Chassis Harness (KC9/KCA)

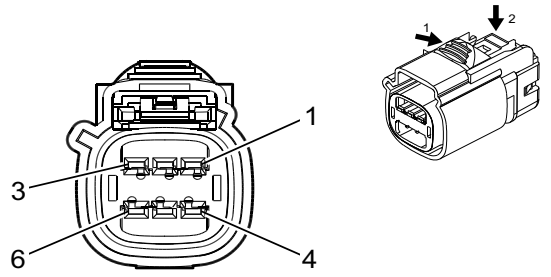

—

4996962

Connector Part Information

Harness Type: Power Outlet Jumper
OEM Connector: 15513505
Service Connector: Service by Harness - See Part Catalog
Description: 6-Way F 1.5 OCS Series, Sealed (GY)

Connector Part Information

Harness Type: Chassis
OEM Connector: Not Available
Service Connector: -
Description: 6-Way M

Terminal Part Information

Terminal Type ID	Terminated Lead	Diagnostic Test Probe	Terminal Removal Tool	Service Terminal	Tray Name	Core Crimp	Insulation Crimp
I	Not Required	J-35616-2A (GY)	No Tool Required	Not Required	Not Required	Not Required	Not Required
II	Not Required	No Tool Required	No Tool Required	Not Required	Not Required	Not Required	Not Required

X470 Power Outlet Jumper Harness to Chassis Harness (KC9/KCA)

Pin	Size	Color	Circuit	Terminal Type ID	Option	Function	Pin	Size	Color	Circuit	Terminal Type ID	Option
1	0.75	BK/WH	2264	I	—	120 VAC Phase A 2	1	0.75	BK/WH	2264	II	—
2	0.75	RD/WH	2265	I	—	120 VAC Phase B 2	2	0.75	RD/WH	2265	II	—
3	0.5	L-GN	2257	I	—	Drain Wire	3	0.5	L-GN	2257	II	—
4	0.75	L-GN/BN	2266	I	—	DC To AC Inverter Control 2	4	0.75	L-GN/BN	2266	II	—
5	0.5	BN	7754	I	—	AC Power Outlet Enable	5	0.5	BN	7754	II	—
6	1	BK	6650	I	—	Ground (66) Propulsion System	6	1	BK	6650	II	—

X480 Trailer Harness to Trailer Harness (UY2/Z6A)

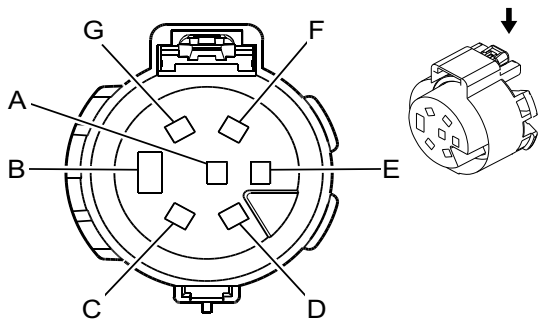

525095

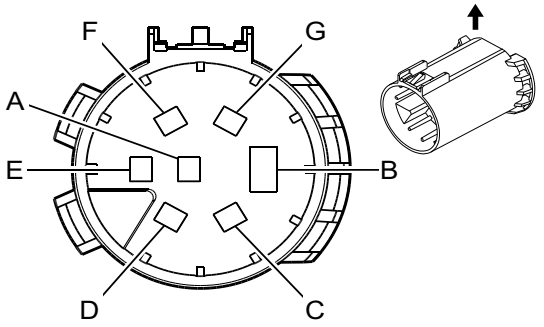

366087

Connector Part Information

Harness Type: Trailer
OEM Connector: Not Available
Service Connector: Service by Harness - See Part Catalog
Description: 7-Way F

Connector Part Information

Harness Type: Trailer
OEM Connector: 15317327
Service Connector: Service by Harness - See Part Catalog
Description: 7-Way M 280 Metri-Pack Series (BK)

Terminal Part Information

Terminal Type ID	Terminated Lead	Diagnostic Test Probe	Terminal Removal Tool	Service Terminal	Tray Name	Core Crimp	Insulation Crimp
I	Not Required	J-35616-4A (PU)	No Tool Required	Not Required	Not Required	Not Required	Not Required
II	Not Required	J-35616-43 (RD)	No Tool Required	Not Required	Not Required	Not Required	Not Required
III	Not Required	J-35616-5 (PU)	No Tool Required	Not Required	Not Required	Not Required	Not Required

X480 Trailer Harness to Trailer Harness (UY2/Z6A)

Pin	Size	Color	Circuit	Terminal Type ID	Option	Function	Pin	Size	Color	Circuit	Terminal Type ID	Option
A	0.75	WH/GN	1624	I	—	Trailer Backup Lamp Control	A	0.75	WH/GN	1624	III	—
B	5	WH	22	I	—	Trailer Ground	B	5	WH	22	II	—
C	4	BU	47	I	—	Trailer Auxiliary Control	C	4	BU	47	III	—
D	0.75	GN/VT	1619	I	—	Right Rear Trailer Stop/ Turn Lamp Control	D	0.75	GN/VT	1619	III	—
E	4	RD/GN	742	I	—	Battery Positive Voltage	E	4	RD/GN	742	III	—
F	2	GY/BN	2109	I	—	Trailer Park Lamp Control	F	2	GY/BN	2109	III	—
G	0.75	YE/BU	318	I	—	Left Rear Trailer Stop/ Turn Lamp Control	G	0.75	YE/BU	318	III	—

X481 Trailer Harness to Trailer Harness (UY2/Z6A)

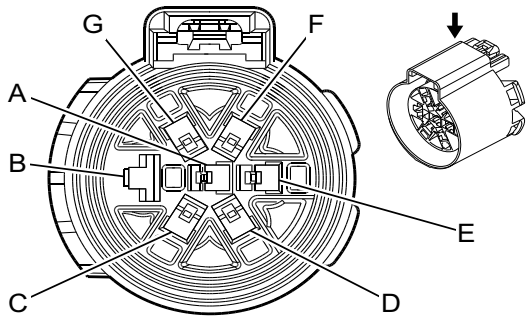

2056936

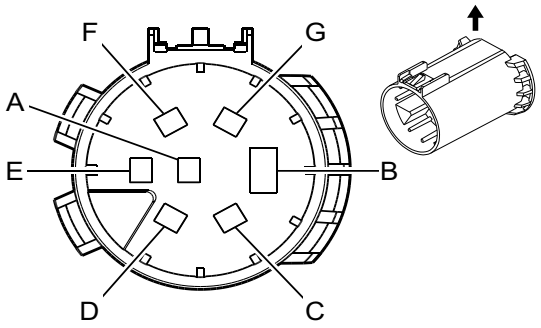

366087

Connector Part Information

Harness Type: Trailer

OEM Connector: 13857223

Service Connector: Service by Harness - See Part Catalog

Description: 7-Way F 280, 630 Metri-Pack Series, Sealed (BK)

Connector Part Information

Harness Type: Trailer

OEM Connector: 15317327

Service Connector: Service by Harness - See Part Catalog

Description: 7-Way M 280 Metri-Pack Series (BK)

Terminal Part Information

Terminal Type ID	Terminated Lead	Diagnostic Test Probe	Terminal Removal Tool	Service Terminal	Tray Name	Core Crimp	Insulation Crimp
I	Not Required	J-35616-42 (RD)	No Tool Required	Not Required	Not Required	Not Required	Not Required
II	Not Required	J-35616-4A (PU)	No Tool Required	Not Required	Not Required	Not Required	Not Required
III	Not Required	J-35616-43 (RD)	No Tool Required	Not Required	Not Required	Not Required	Not Required
IV	Not Required	J-35616-5 (PU)	No Tool Required	Not Required	Not Required	Not Required	Not Required

X481 Trailer Harness to Trailer Harness (UY2/Z6A)

Pin	Size	Color	Circuit	Terminal Type ID	Option	Function	Pin	Size	Color	Circuit	Terminal Type ID	Option
A	0.75	WH/GN	1624	II	—	Trailer Backup Lamp Control	A	0.75	WH/GN	1624	IV	—
B	5	WH	22	I	—	Trailer Ground	B	5	WH	22	III	—
C	4	BU	47	II	—	Trailer Auxiliary Control	C	4	BU	47	IV	—
D	0.75	GN/VT	1619	II	—	Right Rear Trailer Stop/Turn Lamp Control	D	0.75	GN/VT	1619	IV	—
E	4	RD/GN	742	II	—	Battery Positive Voltage	E	4	RD/GN	742	IV	—
F	1.5	GY/BN	2109	II	—	Trailer Park Lamp Control	F	2	GY/BN	2109	IV	—

X481 Trailer Harness to Trailer Harness (UY2/Z6A) (cont'd)

Pin	Size	Color	Circuit	Terminal Type ID	Option	Function	Pin	Size	Color	Circuit	Terminal Type ID	Option
G	0.75	YE/ BU	318	II	—	Left Rear Trailer Stop/ Turn Lamp Control	G	0.75	YE/ BU	318	IV	—

X500 Driver Door Harness to Body Harness

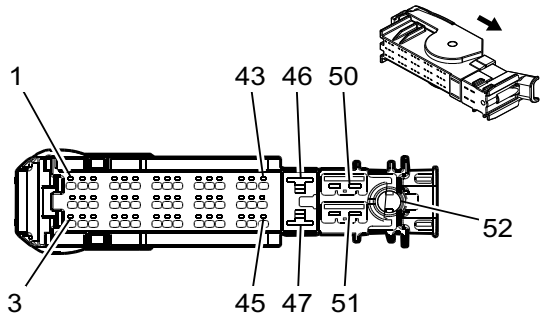

4992530

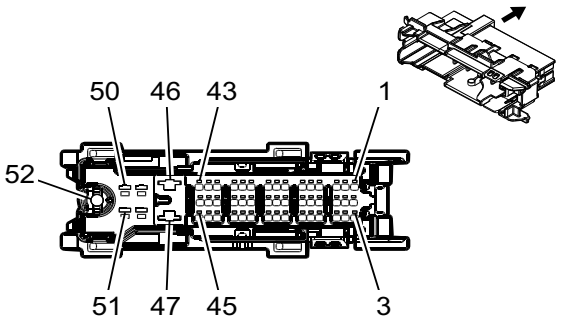

4993484

Connector Part Information

Harness Type: Driver Door

OEM Connector: 35077349

Service Connector: Service by Cable Assembly — See Part Catalog

Description: 52-Way F 1.2, 2.8, 6.3, Coaxial Series, Sealed (BK)

Connector Part Information

Harness Type: Body

OEM Connector: 35072682

Service Connector: Service by Cable Assembly — See Part Catalog

Description: 52-Way M 1.2, 2.8, 6.3, Coaxial Series, Sealed (BK)

Terminal Part Information

Terminal Type ID	Terminated Lead	Diagnostic Test Probe	Terminal Removal Tool	Service Terminal	Tray Name	Core Crimp	Insulation Crimp
I	Not Required	No Tool Required	No Tool Required	Not Required	Not Required	Not Required	Not Required

X500 Driver Door Harness to Body Harness

Pin	Size	Color	Circuit	Terminal Type ID	Option	Function	Pin	Size	Color	Circuit	Terminal Type ID	Option
1	—	—	—	—	—	Not Occupied	1	—	—	—	—	—
2	0.5	GY/ YE	1760	I	—	Left Side Object Detection LED Control	2	0.35	GY/ YE	1760	II	—
3	—	—	—	—	—	Not Occupied	3	—	—	—	—	—
4	0.5	WH/ VT	968	I	—	—	4	0.35	WH/ VT	968	II	—
5	—	—	—	—	—	Not Occupied	5	—	—	—	—	—
6	0.5	YE/ VT	3397	I	—	Passenger Mirror Motor Up (+) Down (-) Control	6	0.5	YE/ VT	3397	II	—
7	0.5	WH	3398	I	—	Passenger Mirror Motor Common Control	7	0.5	WH	3398	II	—
8	0.5	L-GN/ BK	3396	I	—	Passenger Mirror Motor Right (+) Left (-) Control	8	0.5	L-GN/ BK	3396	II	—

X500 Driver Door Harness to Body Harness (cont'd)

Pin	Size	Color	Circuit	Terminal Type ID	Option	Function	Pin	Size	Color	Circuit	Terminal Type ID	Option
9	0.5	BU	2082	I	—	Puddle Lamp Control	9	0.35	BU	2082	II	—
10	0.5	BK/ D-BU	5978	I	—	Memory Switch Low Reference	10	0.35	BK/ D-BU	5978	II	—
11	0.75	WH/ BN	3410	I	—	Mirror Motor Fold In Control	11	0.5	WH/ BN	3410	II	—
12	0.5	WH	615	I	—	Memory Seat Switch Signal 1	12	0.35	WH	615	II	—
13	0.5	BN/ WH	781	I	—	Driver Door Lock Switch Unlock Signal	13	0.35	BN/ WH	781	II	—
14	0.5	BN/ YE	2267	I	—	Mirror Heating Element Control	14	0.5	BN/ YE	2267	II	—
15	0.75	VT/ YE	3409	I	—	Mirror Motor Fold Out Control	15	0.5	VT/ YE	3409	II	—
16	0.5	BU/ L-GN	614	I	—	Memory Seat Switch Set Signal	16	0.35	BU/ L-GN	614	II	—
17 - 18	—	—	—	—	—	Not Occupied	17 - 18	—	—	—	—	—
19	0.35	WH/ YE	7557	I	—	LED Ambient Lighting Control 1	19	0.35	WH/ YE	7557	II	—
20	0.5	L-GN/ WH	3570	I	—	Driver Door Handle Switch Signal	20	0.35	L-GN/ WH	3570	II	—
21	0.5	WH/ YE	3574	I	—	Driver Door Open Switch Signal	21	0.35	WH/ YE	3574	II	—
22	0.5	BU/ WH	1314	I	—	Left Front Turn Signal Lamp Control	22	0.35	BU/ WH	1314	II	—
23	0.5	PK	745	I	—	Left Front Door Ajar Switch Signal	23	0.35	PK	745	II	—
24	—	—	—	—	—	Not Occupied	24	—	—	—	—	—
25	0.75	OG/ L-GN	2132	I	—	Left Front Side Impact Sensing Module Signal	25	0.35	OG/ L-GN	2132	II	—
26	0.5	YE/ WH	1690	I	—	Automatic Day/Night Mirror Signal	26	0.35	YE/ WH	1690	II	—
27	0.5	GY/ L-GN	5996	I	—	Driver Outside Rear View Mirror Puddle Lamp Control	27	0.35	GY/ L-GN	5996	II	—

X500 Driver Door Harness to Body Harness (cont'd)

Pin	Size	Color	Circuit	Terminal Type ID	Option	Function	Pin	Size	Color	Circuit	Terminal Type ID	Option
28	0.75	BK/ OG	6628	I	—	Left Front Side Impact Sensing Module Low Reference	28	0.35	BK/ OG	6628	II	—
29	0.35	BN/ YE	780	I	—	Driver Door Lock Switch Lock Signal	29	0.35	BN/ YE	780	II	—
30	0.5	RD/ VT	1940	I	—	Battery Positive Voltage	30	0.35	RD/ VT	1940	II	—
31	0.5	VT/ GY	3561	I	—	Passive Entry Driver Door Antenna Signal Lo	31	0.5	VT/ GY	3561	II	—
32	0.5	VT	3560	I	—	Passive Entry Driver Door Antenna Signal Hi	32	0.5	VT	3560	II	—
33	0.5	BU/ VT	1124	I	—	Door Lock Key Switch Unlock Signal	33	0.35	BU/ VT	1124	II	—
34	—	—	—	—	—	Not Occupied	34	—	—	—	—	—
35	0.5	L-GN/ YE	6134	I	—	Local Interconnect Network Serial Data Bus 3	35	0.35	L-GN/ YE	6134	II	—
36 - 41	—	—	—	—	—	Not Occupied	36 - 41	—	—	—	—	—
42	0.5	VT/ GY	709	I	—	Left Park Lamp Control	42	0.5	VT/ GY	709	II	—
43	0.5	YE	6817	I	—	LED Backlight Dimming Control	43	0.35	YE	6817	II	—
44	0.5	L-GN/ WH	7530	I	—	Local Interconnect Network Serial Data Bus 8	44	0.35	L-GN/ WH	7530	II	—
45	0.5	BK/ YE	1691	I	—	Automatic Day/Night Mirror Low Reference	45	0.35	BK/ YE	1691	II	—
46	3	BK	1150	I	—	Ground	46	3	BK	1150	II	—
47	2.5	RD/ D-BU	1842	I	—	Battery Positive Voltage	47	2.5	RD/ D-BU	1842	II	—
48	0.75	BN/ YE	294	I	—	Door Lock Actuator Unlock Control	48	0.75	BN/ YE	294	II	—

X500 Driver Door Harness to Body Harness (cont'd)

Pin	Size	Color	Circuit	Terminal Type ID	Option	Function	Pin	Size	Color	Circuit	Terminal Type ID	Option
49	0.75	GY	5911	I	—	Door Lock Actuator Lock Control 2	49	0.75	GY	5911	II	—
50	0.75	BN/ D-BU	118	I	—	Left Front Speaker Signal (-) 1	50	0.75	BN/ D-BU	118	II	—
51	0.75	BU	201	I	—	Left Front Speaker Control (+) 1	51	0.75	BU	201	II	—
52	—	—	2628	I	—	Left Side Vision Camera Video Signal (+)	52	—	—	—	—	—

X505 Driver Door Harness to Driver Door Trim Harness

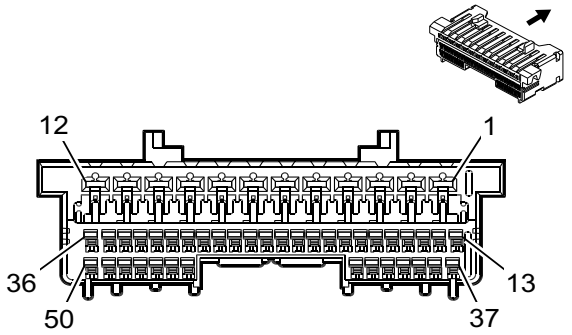

4997556

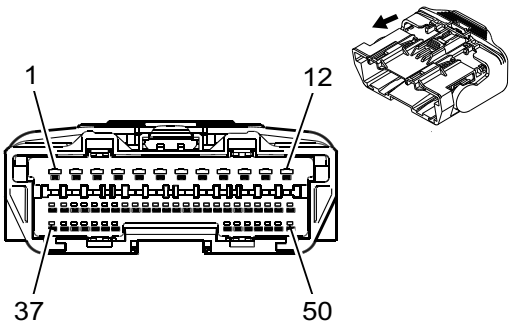

5022037

Connector Part Information

Harness Type: Driver Door
OEM Connector: 33390107
Service Connector: Service by Harness - See Part Catalog
Description: 50-Way F 1.2, 2.8 OCS Series (BK)

Connector Part Information

Harness Type: Driver Door Trim
OEM Connector: 33390111
Service Connector: Service by Harness - See Part Catalog
Description: 50-Way M 1.2, 2.8 OCS Series (BK)

Terminal Part Information

Terminal Type ID	Terminated Lead	Diagnostic Test Probe	Terminal Removal Tool	Service Terminal	Tray Name	Core Crimp	Insulation Crimp
I	Not Required	J-35616-16 (LT GN)	No Tool Required	Not Required	Not Required	Not Required	Not Required
II	Not Required	J-35616-35 (VT)	No Tool Required	Not Required	Not Required	Not Required	Not Required
III	Not Required	J-35616-4A (PU)	No Tool Required	Not Required	Not Required	Not Required	Not Required
IV	Not Required	J-35616-17 (LT GN)	No Tool Required	Not Required	Not Required	Not Required	Not Required
V	Not Required	J-35616-5 (PU)	No Tool Required	Not Required	Not Required	Not Required	Not Required

X505 Driver Door Harness to Driver Door Trim Harness

Pin	Size	Color	Circuit	Terminal Type ID	Option	Function	Pin	Size	Color	Circuit	Terminal Type ID	Option
1	0.35	YE/GY	190	III	—	Left Folding Mirror Motor Extend Control	1	0.35	YE/GY	190	V	—
2	0.35	BU/VT	191	III	—	Left Folding Mirror Motor Retract Control	2	0.35	BU/VT	191	V	—
3	0.75 0.75	VT/YE VT/YE	3409 3409	III II	— —	Mirror Motor Fold Out Control Mirror Motor Fold Out Control	3	0.35	VT/YE	3409	V	—

X505 Driver Door Harness to Driver Door Trim Harness (cont'd)

Pin	Size	Color	Circuit	Terminal Type ID	Option	Function	Pin	Size	Color	Circuit	Terminal Type ID	Option
4	0.75 0.75	WH/BN WH/BN	3410 3410	III II	— —	Mirror Motor Fold In Control Mirror Motor Fold In Control	4	0.35	WH/BN	3410	V	—
5 - 12	—	—	—	—	—	Not Occupied	5 - 12	—	—	—	—	—
13	0.5	GN/WH	7530	I	—	Local Interconnect Network Serial Data Bus 8	13	0.5	GN/WH	7530	IV	—
14	0.35	BK/BN	3393	I	—	Driver Mirror Position Sensor Low Reference	14	0.35	BK/BN	3393	IV	—
15	0.5	BU/VT	1124	I	—	Door Lock Key Switch Unlock Signal	15	0.35	BU/VT	1124	IV	—
16	0.35	GN/WH	3379	I	—	Power Window Switch Driver Up Signal	16	0.5	GN/WH	3379	IV	—
17	0.5	RD/VT	1940	I	—	Battery Positive Voltage	17	0.35	RD/VT	1940	IV	—
18	0.35	GN	3381	I	—	Power Window Switch Driver Express Signal	18	0.35	GN	3381	IV	—
19	0.5	WH	3398	I	—	Passenger Mirror Motor Common Control	19	0.35	WH	3398	IV	—
20	0.35	WH/YE	7557	I	—	LED Ambient Lighting Control 1	20	0.35	WH/YE	7557	IV	—
21	0.5	BN/BK	3389	I	—	Driver Mirror Motor Right (+) Left (-) Control	21	0.35	BN/BK	3389	IV	—
22	0.35	WH/YE	3395	I	—	Driver Mirror Position Sensor Left (-) Right (+) Signal	22	0.35	WH/YE	3395	IV	—
23	—	—	—	—	—	Not Occupied	23	—	—	—	—	—
24	0.35	WH/GN	3412	I	—	Driver Mirror Motor Fold In Control	24	0.35	WH/GN	3412	IV	—
25	0.35	WH/VT	3270	I	—	Driver Door Lock Motor Status Signal	25	0.35	WH/VT	3270	IV	—

X505 Driver Door Harness to Driver Door Trim Harness (cont'd)

Pin	Size	Color	Circuit	Terminal Type ID	Option	Function	Pin	Size	Color	Circuit	Terminal Type ID	Option
26	0.35	GY/ BN	3394	I	—	Driver Mirror Position Sensor Up (+) Down (-) Signal	26	0.35	GY/ BN	3394	IV	—
27	0.5	GN/ YE	6134	I	—	Local Interconnect Network Serial Data Bus 3	27	0.35	GN/ YE	6134	IV	—
28	0.35	YE/ BN	3391	I	—	Driver Mirror Motor Common Control	28	0.35	YE/ BN	3391	IV	—
29	—	—	—	—	—	Not Occupied	29	—	—	—	—	—
30	0.75	BK	1150	I	—	Ground	30	0.5	BK	1150	IV	—
31	0.35	GY/ WH	3411	I	—	Driver Mirror Motor Fold Out Control	31	0.35	GY/ WH	3411	IV	—
32	—	—	—	—	—	Not Occupied	32	—	—	—	—	—
33	0.35	VT/ BU	3390	I	—	Driver Mirror Motor Up (+) Down (-) Control	33	0.35	VT/ BU	3390	IV	—
34	0.5	WH	615	I	—	Memory Seat Switch Signal 1	34	0.35	WH	615	IV	—
35	—	—	—	—	—	Not Occupied	35	—	—	—	—	—
36	0.5	YE	6817	I	—	LED Backlight Dimming Control	36	0.35	YE	6817	IV	—
37	—	—	—	—	—	Not Occupied	37	—	—	—	—	—
38	0.35	VT/ RD	3392	I	—	Driver Mirror Position Sensor 5V Reference	38	0.35	VT/ RD	3392	IV	—
39	0.5	BN/ WH	781	I	—	Driver Door Lock Switch Unlock Signal	39	0.35	BN/ WH	781	IV	—
40	0.5	GN/ BK	3396	I	—	Passenger Mirror Motor Right (+) Left (-) Control	40	0.35	GN/ BK	3396	IV	—
41	0.5	YE/ VT	3397	I	—	Passenger Mirror Motor Up (+) Down (-) Control	41	0.35	YE/ VT	3397	IV	—
42	0.5	GY	3380	I	—	Power Window Switch Driver Down Signal	42	0.5	GY	3380	IV	—
43	0.5	BU/ GN	614	I	—	Memory Seat Switch Set Signal	43	0.35	BU/ GN	614	IV	—

X505 Driver Door Harness to Driver Door Trim Harness (cont'd)

Pin	Size	Color	Circuit	Terminal Type ID	Option	Function	Pin	Size	Color	Circuit	Terminal Type ID	Option
44	—	—	—	—	—	Not Occupied	44	—	—	—	—	—
45	0.5	BK/ BU	5978	I	—	Memory Switch Low Reference	45	0.35	BK/ BU	5978	IV	—
46	—	—	—	—	—	Not Occupied	46	—	—	—	—	—
47	0.35	BN/ YE	780	I	—	Driver Door Lock Switch Lock Signal	47	0.5	BN/ YE	780	IV	—
48 - 50	—	—	—	—	—	Not Occupied	48 - 50	—	—	—	—	—

X510 Driver Door Harness to Outside Rearview Mirror Harness

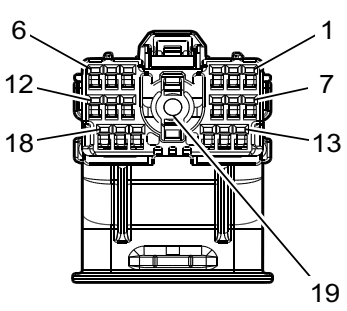

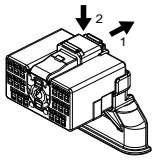

—

4991775

Connector Part Information

Harness Type: Driver Door
OEM Connector: 35077331
Service Connector: Service by Harness - See Part Catalog
Description: 19-Way F 1.2 MCON, Coaxial Series, Sealed (BK)

Connector Part Information

Harness Type: Outside Rearview Mirror
OEM Connector: Not Available
Service Connector: Service by Harness - See Part Catalog
Description: 19-Way M

Terminal Part Information

Terminal Type ID	Terminated Lead	Diagnostic Test Probe	Terminal Removal Tool	Service Terminal	Tray Name	Core Crimp	Insulation Crimp
I	Not Required	J-35616-16 (LT GN)	No Tool Required	Not Required	Not Required	Not Required	Not Required
II	Not Required	Not Available	No Tool Required	Not Required	Not Required	Not Required	Not Required
III	Not Required	Not Available	No Tool Required	Not Required	Not Required	Not Required	Not Required
III	Not Required	Not Available	No Tool Required	Not Required	Not Required	Not Required	Not Required

X510 Driver Door Harness to Outside Rearview Mirror Harness

Pin	Size	Color	Circuit	Terminal Type ID	Option	Function	Pin	Size	Color	Circuit	Terminal Type ID	Option
1	0.5	BN/BK	3389	I	—	Driver Mirror Motor Right (+) Left (-) Control	1	0.5	BN/BK	3389	III	—
2	0.35	VT/D-BU	3390	I	—	Driver Mirror Motor Up (+) Down (-) Control	2	0.35	VT/D-BU	3390	III	—
3	0.35 0.75	WH/L-GN WH/BN	3412 3410	I I	— —	Driver Mirror Motor Fold In Control Mirror Motor Fold In Control	3	0.35 0.75	WH/L-GN WH/BN	3412 3410	III III	— —
4	0.5	GY/YE	1760	I	—	Left Side Object Detection LED Control	4	0.5	GY/YE	1760	III	—

X510 Driver Door Harness to Outside Rearview Mirror Harness (cont'd)

Pin	Size	Color	Circuit	Terminal Type ID	Option	Function	Pin	Size	Color	Circuit	Terminal Type ID	Option
5	0.5	GY/ L-GN	5996	I	—	Driver Outside Rear View Mirror Puddle Lamp Control	5	0.5	GY/ L-GN	5996	III	—
6	0.5	VT/ GY	709	I	—	Left Park Lamp Control	6	0.5	VT/ GY	709	III	—
7	0.5	BN/ YE	2267	I	—	Mirror Heating Element Control	7	0.5	BN/ YE	2267	III	—
8	0.5	BU/ WH	1314	I	—	Left Front Turn Signal Lamp Control	8	0.5	BU/ WH	1314	III	—
9	0.75	BK	1150	I	—	Ground	9	0.75	BK	1150	III	—
10	—	—	—	—	—	Not Occupied	10	—	—	—	—	—
11	0.5	BU	2082	I	—	Puddle Lamp Control	11	0.5	BU	2082	III	—
12	0.5	BK/ YE	1691	I	—	Automatic Day/Night Mirror Low Reference	12	0.5	BK/ YE	1691	III	—
13	0.5	WH/ VT	968	I	—	—	13	0.5	WH/ VT	968	III	—
14	0.35	YE/ BN	3391	I	—	Driver Mirror Motor Common Control	14	0.35	YE/ BN	3391	III	—
15	0.35 0.75	GY/ WH VT/ YE	3411 3409	I I	— —	Driver Mirror Motor Fold Out Control Mirror Motor Fold Out Control	15	0.35 0.75	GY/ WH VT/ YE	3411 3409	III III	— —
16	—	—	—	—	—	Not Occupied	16	—	—	—	—	—
17	0.5	YE/ WH	1690	I	—	Automatic Day/Night Mirror Signal	17	0.5	YE/ WH	1690	III	—
18	—	—	—	—	—	Not Occupied	18	—	—	—	—	—
19	0	—	2628	II	—	Left Side Vision Camera Video Signal (+)	19	0	—	2628	III	—

X511 Driver Door Harness to Outside Rearview Mirror Harness (DZC)

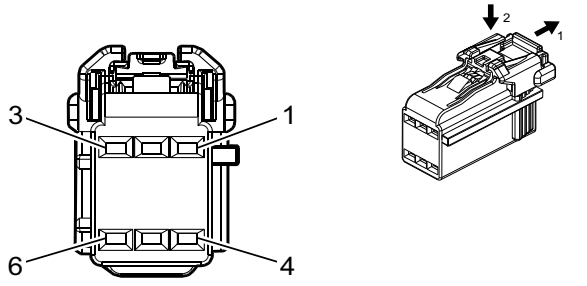

4862126

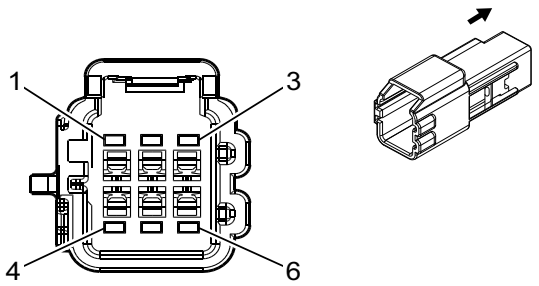

4446774

Connector Part Information

Harness Type: Driver Door
OEM Connector: 35048641
Service Connector: Service by Harness - See Part Catalog
Description: 6-Way F 1.2 Series (BK)

Connector Part Information

Harness Type: Outside Rearview Mirror
OEM Connector: Not Available
Service Connector: Service by Harness - See Part Catalog
Description: 6-Way M

Terminal Part Information

Terminal Type ID	Terminated Lead	Diagnostic Test Probe	Terminal Removal Tool	Service Terminal	Tray Name	Core Crimp	Insulation Crimp
I	Not Required	J-35616-16 (LT GN)	No Tool Required	Not Required	Not Required	Not Required	Not Required
II	Not Required	Not Available	No Tool Required	Not Required	Not Required	Not Required	Not Required

X511 Driver Door Harness to Outside Rearview Mirror Harness (DZC)

Pin	Size	Color	Circuit	Terminal Type ID	Option	Function	Pin	Size	Color	Circuit	Terminal Type ID	Option
1	0.35	WH/YE	3395	I	—	Driver Mirror Position Sensor Left (-) Right (+) Signal	1	0.35	WH/YE	3395	II	—
2	0.35	VT/RD	3392	I	—	Driver Mirror Position Sensor 5V Reference	2	0.35	VT/RD	3392	II	—
3	0.35	GY/BN	3394	I	—	Driver Mirror Position Sensor Up (+) Down (-) Signal	3	0.35	GY/BN	3394	II	—
4	0.35	BK/BN	3393	I	—	Driver Mirror Position Sensor Low Reference	4	0.35	BK/BN	3393	II	—
5	0.35	YE/GY	190	I	—	Left Folding Mirror Motor Extend Control	5	0.35	YE/GY	190	II	—
6	0.35	BU/VT	191	I	—	Left Folding Mirror Motor Retract Control	6	0.35	BU/VT	191	II	—

X600 Passenger Door Harness to Body Harness

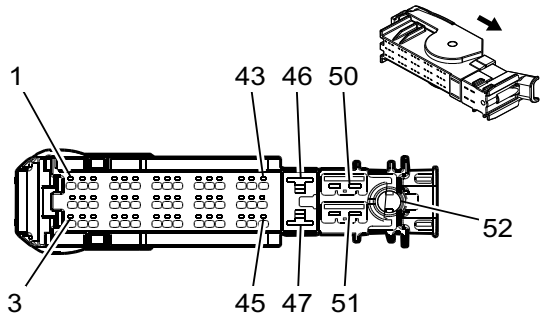

4992530

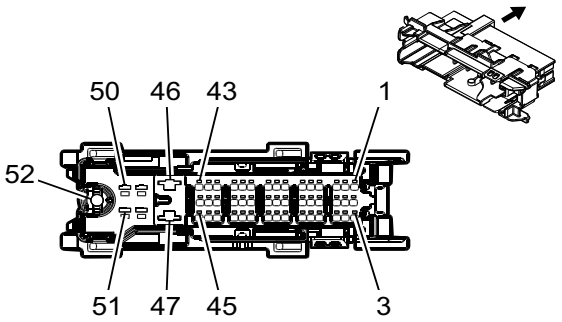

4993484

Connector Part Information

Harness Type: Passenger Door COAX

OEM Connector: 35077349

Service Connector: Service by Cable Assembly — See Part Catalog

Description: 52-Way F 1.2, 2.8, 6.3, Coaxial Series, Sealed (BK)

Connector Part Information

Harness Type: Body COAX

OEM Connector: 35072682

Service Connector: Service by Cable Assembly — See Part Catalog

Description: 52-Way M 1.2, 2.8, 6.3, Coaxial Series, Sealed (BK)

Terminal Part Information

Terminal Type ID	Terminated Lead	Diagnostic Test Probe	Terminal Removal Tool	Service Terminal	Tray Name	Core Crimp	Insulation Crimp
I	Not Required	No Tool Required	No Tool Required	Not Required	Not Required	Not Required	Not Required

X600 Passenger Door Harness to Body Harness

Pin	Size	Color	Circuit	Terminal Type ID	Option	Function	Pin	Size	Color	Circuit	Terminal Type ID	Option
1 - 3	—	—	—	—	—	Not Occupied	1 - 3	—	—	—	—	—
4	0.5	WH/VT	968	I	—	—	4	0.35	WH/VT	968	II	—
5	0.5	GY	746	I	—	Right Front Door Ajar Switch Signal	5	0.35	GY	746	II	—
6	0.5	YE/VT	3397	I	—	Passenger Mirror Motor Up (+) Down (-) Control	6	0.5	YE/VT	3397	II	—
7	0.5	WH	3398	I	—	Passenger Mirror Motor Common Control	7	0.5	WH	3398	II	—
8	0.5	L-GN/BK	3396	I	—	Passenger Mirror Motor Right (+) Left (-) Control	8	0.5	L-GN/BK	3396	II	—
9	0.5	BU	2082	I	—	Puddle Lamp Control	9	0.35	BU	2082	II	—
10	—	—	—	—	—	Not Occupied	10	—	—	—	—	—

X600 Passenger Door Harness to Body Harness (cont'd)

Pin	Size	Color	Circuit	Terminal Type ID	Option	Function	Pin	Size	Color	Circuit	Terminal Type ID	Option
11	0.5	WH/ BN	3410	I	—	Mirror Motor Fold In Control	11	0.5	WH/ BN	3410	II	—
12	—	—	—	—	—	Not Occupied	12	—	—	—	—	—
13	0.5	BN/ VT	245	I	—	Passenger Door Lock Switch Unlock Control	13	0.35	BN/ VT	245	II	—
14	—	—	—	—	—	Not Occupied	14	—	—	—	—	—
15	0.5	VT/ YE	3409	I	—	Mirror Motor Fold Out Control	15	0.5	VT/ YE	3409	II	—
16 - 18	—	—	—	—	—	Not Occupied	16 - 18	—	—	—	—	—
19	0.35	WH/ YE	7557	I	—	LED Ambient Lighting Control 1	19	0.35	WH/ YE	7557	II	—
20	0.5	VT/ WH	3571	I	—	Passenger Door Handle Switch Signal	20	0.35	VT/ WH	3571	II	—
21	0.5	GY	1761	I	—	Right Side Object Detection LED Control	21	0.35	GY	1761	II	—
22	0.5	L-GN/ VT	1315	I	—	Right Front Turn Signal Lamp Control	22	0.35	L-GN/ VT	1315	II	—
23	—	—	—	—	—	Not Occupied	23	—	—	—	—	—
24	0.35	BK	1150	I	—	Ground	24	0.5	BK	1250	II	—
25	0.75	BN/ OG	2134	I	—	Right Front Side Impact Sensing Module Signal	25	0.35	BN/ OG	2134	II	—
26	0.5	YE/ WH	1690	I	—	Automatic Day/Night Mirror Signal	26	0.35	YE/ WH	1690	II	—
27	0.5	GY/ L-GN	5996	I	—	Driver Outside Rear View Mirror Puddle Lamp Control	27	0.35	GY/ L-GN	5996	II	—
28	0.75	BK/ OG	6629	I	—	Right Front Side Impact Sensing Module Low Reference	28	0.35	BK/ OG	6629	II	—
29	0.5	YE/ VT	244	I	—	Passenger Door Lock Switch Lock Control	29	0.35	YE/ VT	244	II	—
30	—	—	—	—	—	Not Occupied	30	—	—	—	—	—

X600 Passenger Door Harness to Body Harness (cont'd)

Pin	Size	Color	Circuit	Terminal Type ID	Option	Function	Pin	Size	Color	Circuit	Terminal Type ID	Option
31	0.5	L-GN/BK	3563	I	—	Passive Entry Passenger Door Antenna Signal Lo	31	0.5	L-GN/BK	3563	II	—
32	0.5	L-GN/YE	3562	I	—	Passive Entry Passenger Door Antenna Signal Hi	32	0.5	L-GN/YE	3562	II	—
33	—	—	—	—	—	Not Occupied	33	—	—	—	—	—
34	0.35	BK/L-GN	580	I	—	Engine Control Sensors Low Reference (2)	34	0.35	BK/L-GN	580	II	—
35	0.5 0.35	L-GN/YE L-GN/YE	6134 6134	I I	AED AED/AEF	Local Interconnect Network Serial Data Bus 3 Local Interconnect Network Serial Data Bus 3	35	0.35	L-GN/YE	6134	II	—
36	0.35	BU/GY	636	I	—	Outside Ambient Air Temperature Sensor Signal	36	0.35	BU/GY	636	II	—
37	—	—	—	—	—	Not Occupied	37	—	—	—	—	—
38	0.5	BN/YE	2267	I	—	Mirror Heating Element Control	38	0.5	BN/YE	2267	II	—
39	0.5	GY/BN	309	I	—	Right Park Lamp Control	39	0.5	GY/BN	309	II	—
40 - 42	—	—	—	—	—	Not Occupied	40 - 42	—	—	—	—	—
43	0.5	YE	6817	I	—	LED Backlight Dimming Control	43	0.35	YE	6817	II	—
44	0.5	L-GN/WH	7530	I	—	Local Interconnect Network Serial Data Bus 8	44	0.35	L-GN/WH	7530	II	—
45	0.5	BK/YE	1691	I	—	Automatic Day/Night Mirror Low Reference	45	0.35	BK/YE	1691	II	—
46	3	BK	1250	I	—	Ground	46	3	BK	1250	II	—
47	2.5	RD/WH	1340	I	—	Battery Positive Voltage	47	2.5	RD/WH	1340	II	—

X600 Passenger Door Harness to Body Harness (cont'd)

Pin	Size	Color	Circuit	Terminal Type ID	Option	Function	Pin	Size	Color	Circuit	Terminal Type ID	Option
48	0.75	BN/ YE	294	I	—	Door Lock Actuator Unlock Control	48	0.75	BN/ YE	294	II	—
49	0.75	GY	295	I	—	Door Lock Actuator Lock Control	49	0.75	GY	295	II	—
50	0.75	YE/ BK	117	I	—	Right Front Speaker Signal (-) 1	50	0.75	YE/ BK	117	II	—
51	0.75	YE	200	I	—	Right Front Speaker Control (+) 1	51	0.75	YE	200	II	—
52	—	—	2627	I	—	Right Side Vision Camera Video Signal (+)	52	—	—	—	—	—

X605 Passenger Door Harness to Passenger Door Trim Harness

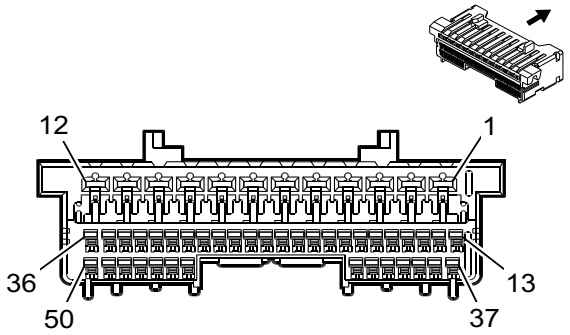

4997556

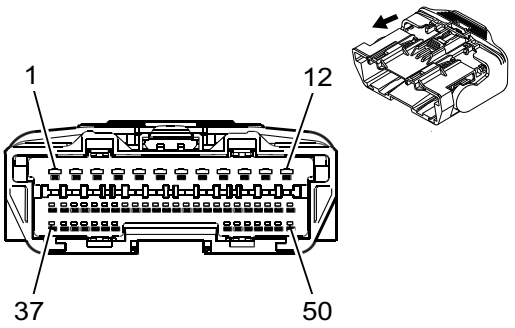

5022037

Connector Part Information

Harness Type: Passenger Door
OEM Connector: 33390107
Service Connector: Service by Harness - See Part Catalog
Description: 50-Way F 1.2, 2.8 OCS Series (BK)

Connector Part Information

Harness Type: Passenger Door Trim
OEM Connector: 33390111
Service Connector: Service by Harness - See Part Catalog
Description: 50-Way M 1.2, 2.8 OCS Series (BK)

Terminal Part Information

Terminal Type ID	Terminated Lead	Diagnostic Test Probe	Terminal Removal Tool	Service Terminal	Tray Name	Core Crimp	Insulation Crimp
I	Not Required	J-35616-16 (LT GN)	No Tool Required	Not Required	Not Required	Not Required	Not Required
II	Not Required	J-35616-4A (PU)	No Tool Required	Not Required	Not Required	Not Required	Not Required
III	Not Required	J-35616-17 (LT GN)	No Tool Required	Not Required	Not Required	Not Required	Not Required
IV	Not Required	J-35616-5 (PU)	No Tool Required	Not Required	Not Required	Not Required	Not Required

X605 Passenger Door Harness to Passenger Door Trim Harness

Pin	Size	Color	Circuit	Terminal Type ID	Option	Function	Pin	Size	Color	Circuit	Terminal Type ID	Option
1	0.5	YE/WH	5004	II	—	Right Folding Mirror Motor Extend Control	1	0.5	YE/WH	5004	IV	—
2	0.5	BU/GY	5023	II	—	Right Folding Mirror Motor Retract Control	2	0.5	BU/GY	5023	IV	—
3	2.5	RD/WH	1340	II	—	Battery Positive Voltage	3	2.5	RD/WH	1340	IV	—
4 - 6	—	—	—	—	—	Not Occupied	4 - 6	—	—	—	—	—
7	2	L-GN/GY	3387	II	—	Power Window Motor Passenger Up Control	7	2.5	L-GN/GY	3387	IV	—

X605 Passenger Door Harness to Passenger Door Trim Harness (cont'd)

Pin	Size	Color	Circuit	Terminal Type ID	Option	Function	Pin	Size	Color	Circuit	Terminal Type ID	Option
8	2	YE/ D-BU	3388	II	—	Power Window Motor Passenger Down Control	8	2.5	YE/ D-BU	3388	IV	—
9	—	—	—	—	—	Not Occupied	9	—	—	—	—	—
10	3	BK	1250	II	—	Ground	10	3	BK	1250	IV	—
11 - 12	—	—	—	—	—	Not Occupied	11 - 12	—	—	—	—	—
13	0.5	WH	3398	I	—	Passenger Mirror Motor Common Control	13	0.35	WH	3398	III	—
14	0.5	VT/ WH	3403	I	—	Passenger Mirror Position Sensor Left (-) Right (+) Signal	14	0.35	VT/ WH	3403	III	—
15	0.35	YE/ VT	3397	I	—	Passenger Mirror Motor Up (+) Down (-) Control	15	0.35	YE/ VT	3397	III	—
16	0.5	L-GN/ BK	3396	I	—	Passenger Mirror Motor Right (+) Left (-) Control	16	0.35	L-GN/ BK	3396	III	—
17	0.5	YE	6817	I	—	LED Backlight Dimming Control LED Backlight Dimming Control	17	0.35	YE	6817	III	—
18	0.5	BK/ L-GN	3400	I	—	Passenger Mirror Position Sensor Low Reference	18	0.35	BK/ L-GN	3400	III	—
19	0.5	L-GN/ WH	7530	I	—	Local Interconnect Network Serial Data Bus 8	19	0.35	L-GN/ WH	7530	III	—
20	0.5	BN/ VT	245	I	—	Passenger Door Lock Switch Unlock Control	20	0.35	BN/ VT	245	III	—
21	0.35	YE/ RD	3399	I	—	Passenger Mirror Position Sensor 5V Reference	21	0.35	YE/ RD	3399	III	—
22	0.35	BK	1150	I	—	Ground	22	0.35	BK	1250	III	—

X605 Passenger Door Harness to Passenger Door Trim Harness (cont'd)

Pin	Size	Color	Circuit	Terminal Type ID	Option	Function	Pin	Size	Color	Circuit	Terminal Type ID	Option
23	0.5	YE/ VT	244	I	—	Passenger Door Lock Switch Lock Control	23	0.35	YE/ VT	244	III	—
24	0.35	WH/ YE	7557	I	—	LED Ambient Lighting Control 1	24	0.35	WH/ YE	7557	III	—
25	0.35	YE/ BK	3384	I	—	Power Window Switch Passenger Up Signal	25	0.35	YE/ BK	3384	III	—
26	0.5	YE/ WH	3413	I	—	Passenger Mirror Motor Fold Out Control	26	0.5	YE/ WH	3413	III	—
27	0.5	BU/ GY	3414	I	—	Passenger Mirror Motor Fold In Control	27	0.5	BU/ GY	3414	III	—
28	0.5	BN/ YE	3385	I	—	Power Window Switch Passenger Down Signal	28	0.35	BN/ YE	3385	III	—
29	0.5	GY	746	I	—	Right Front Door Ajar Switch Signal	29	0.35	GY	746	III	—
30	0.35	BU/ YE	3401	I	—	Passenger Mirror Position Sensor Up (+) Down (-) Signal	30	0.35	BU/ YE	3401	III	—
31 - 33	—	—	—	—	—	Not Occupied	31 - 33	—	—	—	—	—
34	0.35	VT/ GY	3386	I	—	Power Window Switch Passenger Express Signal	34	0.35	VT/ GY	3386	III	—
35	0.5	L-GN/ YE	6134	I	—	Local Interconnect Network Serial Data Bus 3	35	0.35	L-GN/ YE	6134	III	—
36 - 50	—	—	—	—	—	Not Occupied	36 - 50	—	—	—	—	—

X610 Passenger Door Harness to Outside Rearview Mirror Harness

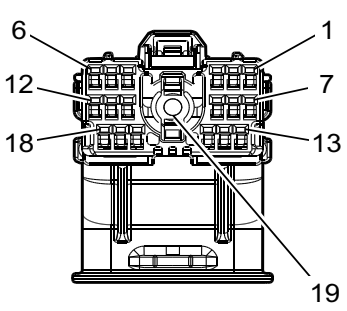

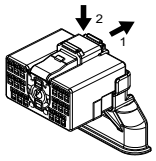

—

4991775

Connector Part Information

Harness Type: Passenger Door
OEM Connector: 35077331
Service Connector: Service by Harness - See Part Catalog
Description: 19-Way F 1.2 MCON, Coaxial Series, Sealed (BK)

Connector Part Information

Harness Type: Outside Rearview Mirror
OEM Connector: Not Available
Service Connector: Service by Harness - See Part Catalog
Description: 19-Way M

Terminal Part Information

Terminal Type ID	Terminated Lead	Diagnostic Test Probe	Terminal Removal Tool	Service Terminal	Tray Name	Core Crimp	Insulation Crimp
I	Not Required	J-35616-16 (LT GN)	No Tool Required	Not Required	Not Required	Not Required	Not Required
II	Not Required	Not Available	No Tool Required	Not Required	Not Required	Not Required	Not Required
III	Not Required	Not Available	No Tool Required	Not Required	Not Required	Not Required	Not Required
III	Not Required	Not Available	No Tool Required	Not Required	Not Required	Not Required	Not Required

X610 Passenger Door Harness to Outside Rearview Mirror Harness

Pin	Size	Color	Circuit	Terminal Type ID	Option	Function	Pin	Size	Color	Circuit	Terminal Type ID	Option
1	0.5	L-GN/BK	3396	I	—	Passenger Mirror Motor Right (+) Left (-) Control	1	0.5	L-GN/BK	3396	III	—
2	0.35 0.5	YE/VT YE/VT	3397 3397	I I	A45 -A45	Passenger Mirror Motor Up (+) Down (-) Control Passenger Mirror Motor Up (+) Down (-) Control	2	0.35 0.5	YE/VT YE/VT	3397 3397	III III	A45 -A45
3	0.5 0.5	BU/GY WH/BN	3414 3410	I I	A45 DWI	Passenger Mirror Motor Fold In Control Mirror Motor Fold In Control	3	0.5 0.5	BU/GY WH/BN	3414 3410	III III	A45 DWI

X610 Passenger Door Harness to Outside Rearview Mirror Harness (cont'd)

Pin	Size	Color	Circuit	Terminal Type ID	Option	Function	Pin	Size	Color	Circuit	Terminal Type ID	Option
4	0.5	GY	1761	I	—	Right Side Object Detection LED Control	4	0.5	GY	1761	III	—
5	0.5	GY/ L-GN	5996	I	—	Driver Outside Rear View Mirror Puddle Lamp Control	5	0.5	GY/ L-GN	5996	III	—
6	0.5	GY/ BN	309	I	—	Right Park Lamp Control	6	0.5	GY/ BN	309	III	—
7	0.5	BN/ YE	2267	I	—	Mirror Heating Element Control	7	0.5	BN/ YE	2267	III	—
8	0.5	L-GN/ VT	1315	I	—	Right Front Turn Signal Lamp Control	8	0.5	L-GN/ VT	1315	III	—
9	0.75	BK	1250	I	—	Ground	9	0.75	BK	1250	III	—
10	0.35	BU/ GY	636	I	—	Outside Ambient Air Temperature Sensor Signal	10	0.35	BU/ GY	636	III	—
11	0.5	BU	2082	I	—	Puddle Lamp Control	11	0.5	BU	2082	III	—
12	0.5	BK/ YE	1691	I	—	Automatic Day/Night Mirror Low Reference	12	0.5	BK/ YE	1691	III	—
13	0.5	WH/ VT	968	I	—	—	13	0.5	WH/ VT	968	III	—
14	0.5	WH	3398	I	—	Passenger Mirror Motor Common Control	14	0.5	WH	3398	III	—
15	0.5 0.5	YE/ WH VT/ YE	3413 3409	I I	A45 DWI	Passenger Mirror Motor Fold Out Control Mirror Motor Fold Out Control	15	0.5 0.5	YE/ WH VT/ YE	3413 3409	III III	A45 DWI
16	—	—	—	—	—	Not Occupied	16	—	—	—	—	—
17	0.5	YE/ WH	1690	I	—	Automatic Day/Night Mirror Signal	17	0.5	YE/ WH	1690	III	—
18	0.35	BK/ L-GN	580	I	—	Engine Control Sensors Low Reference (2)	18	0.35	BK/ L-GN	580	III	—
19	0	—	2627	II	—	Right Side Vision Camera Video Signal (+)	19	0	—	2627	III	—

X611 Passenger Door Harness to Outside Rearview Mirror Harness (DZC)

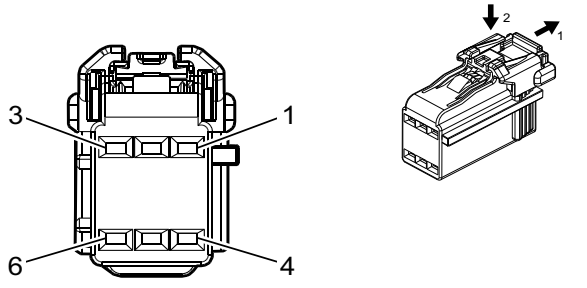

4862126

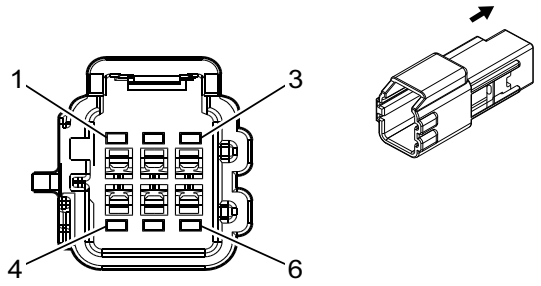

4446774

Connector Part Information

Harness Type: Passenger Door
OEM Connector: 35048641
Service Connector: Service by Harness - See Part Catalog
Description: 6-Way F 1.2 Series (BK)

Connector Part Information

Harness Type: Outside Rearview Mirror
OEM Connector: Not Available
Service Connector: Service by Harness - See Part Catalog
Description: 6-Way M

Terminal Part Information

Terminal Type ID	Terminated Lead	Diagnostic Test Probe	Terminal Removal Tool	Service Terminal	Tray Name	Core Crimp	Insulation Crimp
I	Not Required	J-35616-16 (LT GN)	No Tool Required	Not Required	Not Required	Not Required	Not Required
II	Not Required	Not Available	No Tool Required	Not Required	Not Required	Not Required	Not Required

X611 Passenger Door Harness to Outside Rearview Mirror Harness (DZC)

Pin	Size	Color	Circuit	Terminal Type ID	Option	Function	Pin	Size	Color	Circuit	Terminal Type ID	Option
1	0.5	VT/ WH	3403	I	—	Passenger Mirror Position Sensor Left (-) Right (+) Signal	1	0.5	VT/ WH	3403	II	—
2	0.35	YE/ RD	3399	I	—	Passenger Mirror Position Sensor 5V Reference	2	0.35	YE/ RD	3399	II	—
3	0.35	BU/ YE	3401	I	—	Passenger Mirror Position Sensor Up (+) Down (-) Signal	3	0.35	BU/ YE	3401	II	—
4	0.5	BK/ L-GN	3400	I	—	Passenger Mirror Position Sensor Low Reference	4	0.5	BK/ L-GN	3400	II	—
5	0.5	YE/ WH	5004	I	—	Right Folding Mirror Motor Extend Control	5	0.5	YE/ WH	5004	II	—

X611 Passenger Door Harness to Outside Rearview Mirror Harness (DZC) (cont'd)

Pin	Size	Color	Circuit	Terminal Type ID	Option	Function	Pin	Size	Color	Circuit	Terminal Type ID	Option
6	0.5	BU/ GY	5023	I	—	Right Folding Mirror Motor Retract Control	6	0.5	BU/ GY	5023	II	—

X700 Left Rear Door Harness to Body Harness

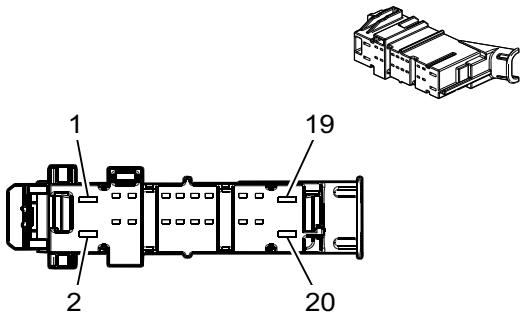

4650257

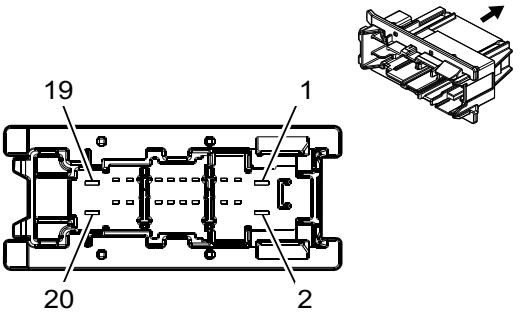

4663657

Connector Part Information

Harness Type: Left Rear Door
OEM Connector: 33303652
Service Connector: Service by Harness - See Part Catalog
Description: 20-Way F 1.2 MCON, 2.8 MCP Series (BK)

Connector Part Information

Harness Type: Body
OEM Connector: 33303657
Service Connector: 13509580
Description: 20-Way M 1.2 MCON, 2.8 MCP Series (BK)

Terminal Part Information

Terminal Type ID	Terminated Lead	Diagnostic Test Probe	Terminal Removal Tool	Service Terminal	Tray Name	Core Crimp	Insulation Crimp
I	Not Required	J-35616-16 (LT GN)	No Tool Required	Not Required	Not Required	Not Required	Not Required
II	Not Required	J-35616-35 (VT)	No Tool Required	Not Required	Not Required	Not Required	Not Required
III	13586064	J-35616-5 (PU)	J-38125-215A	Not Available	Not Available	Not Available	Not Available
IV	19370818	J-35616-17 (LT GN)	J-38125-215A	Not Available	Not Available	Not Available	Not Available
V	Not Available	J-35616-17 (LT GN)	Not Available	Not Available	Not Available	Not Available	Not Available

X700 Left Rear Door Harness to Body Harness

Pin	Size	Color	Circuit	Terminal Type ID	Option	Function	Pin	Size	Color	Circuit	Terminal Type ID	Option
1	2.5	RD/ D-BU	1842	II	—	Battery Positive Voltage	1	2.5	RD/ D-BU	1842	III	—
2	—	—	—	—	—	Not Occupied	2	—	—	—	—	—
3	0.75	BN/ YE	294	I	—	Door Lock Actuator Unlock Control	3	0.75	BN/ YE	294	IV	—
4 - 5	—	—	—	—	—	Not Occupied	4 - 5	—	—	—	—	—
6	0.5	PK	6157	I	—	Left Rear Door Handle Switch Signal	6	0.35	BN/ YE	6157	V	—
7 - 8	—	—	—	—	—	Not Occupied	7 - 8	—	—	—	—	—

X700 Left Rear Door Harness to Body Harness (cont'd)

Pin	Size	Color	Circuit	Terminal Type ID	Option	Function	Pin	Size	Color	Circuit	Terminal Type ID	Option
9	0.5	OG/ D-BU	6622	I	—	Left Rear Side Impact Sensing Module Signal	9	0.35	OG/ D-BU	6622	V	—
10	0.5	BK/ OG	6623	I	—	Left Rear Side Impact Sensing Module Low Reference	10	0.35	BK/ OG	6623	V	—
11	—	—	—	—	—	Not Occupied	11	—	—	—	—	—
12	0.5	L-GN/ GY	6135	I	—	Local Interconnect Network Serial Data Bus 4	12	0.35	L-GN/ GY	6135	V	—
13	0.5	L-GN/ BK	116	I	—	Left Rear Speaker Signal (-)	13	0.5	L-GN/ BK	116	V	—
14	0.5	L-GN	199	I	—	Left Rear Speaker Control (+)	14	0.5	L-GN	199	V	—
15 - 16	—	—	—	—	—	Not Occupied	15 - 16	—	—	—	—	—
17	0.75	GY	295	I	—	Door Lock Actuator Lock Control	17	0.75	GY	295	IV	—
18 - 19	—	—	—	—	—	Not Occupied	18 - 19	—	—	—	—	—
20	2.5	BK	1150	II	—	Ground	20	2.5	BK	1150	III	—

X800 Right Rear Door Harness to Body Harness

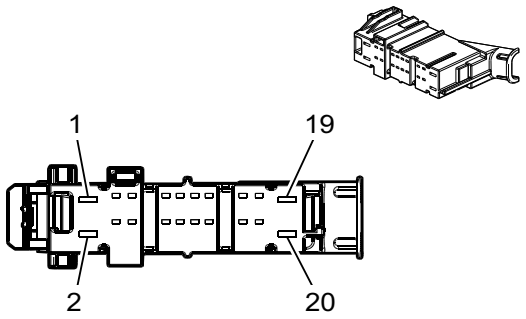

4650257

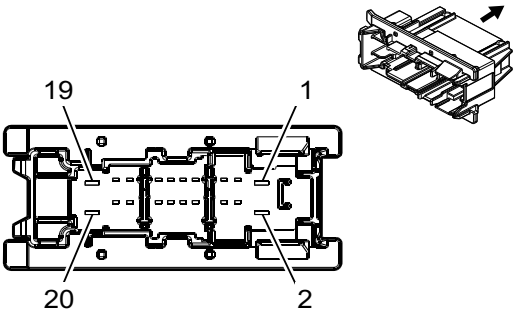

4663657

Connector Part Information

Harness Type: Right Rear Door
OEM Connector: 33303652
Service Connector: Service by Harness - See Part Catalog
Description: 20-Way F 1.2 MCON, 2.8 MCP Series (BK)

Connector Part Information

Harness Type: Body
OEM Connector: 33303657
Service Connector: 13509580
Description: 20-Way M 1.2 MCON, 2.8 MCP Series (BK)

Terminal Part Information

Terminal Type ID	Terminated Lead	Diagnostic Test Probe	Terminal Removal Tool	Service Terminal	Tray Name	Core Crimp	Insulation Crimp
I	Not Required	J-35616-16 (LT GN)	No Tool Required	Not Required	Not Required	Not Required	Not Required
II	Not Required	J-35616-35 (VT)	No Tool Required	Not Required	Not Required	Not Required	Not Required
III	13586064	J-35616-5 (PU)	J-38125-215A	Not Available	Not Available	Not Available	Not Available
IV	19370818	J-35616-17 (LT GN)	J-38125-215A	Not Available	Not Available	Not Available	Not Available
V	Not Available	J-35616-17 (LT GN)	Not Available	Not Available	Not Available	Not Available	Not Available

X800 Right Rear Door Harness to Body Harness

Pin	Size	Color	Circuit	Terminal Type ID	Option	Function	Pin	Size	Color	Circuit	Terminal Type ID	Option
1	2.5	RD/WH	1340	II	—	Battery Positive Voltage	1	2.5	RD/WH	1340	III	—
2	—	—	—	—	—	Not Occupied	2	—	—	—	—	—
3	0.75	BN/YE	294	I	—	Door Lock Actuator Unlock Control	3	0.75	BN/YE	294	IV	—
4 - 5	—	—	—	—	—	Not Occupied	4 - 5	—	—	—	—	—
6	0.5	YE/GY	6158	I	—	Right Rear Door Handle Switch Signal	6	0.35	YE/GY	6158	V	—
7 - 8	—	—	—	—	—	Not Occupied	7 - 8	—	—	—	—	—

X800 Right Rear Door Harness to Body Harness (cont'd)

Pin	Size	Color	Circuit	Terminal Type ID	Option	Function	Pin	Size	Color	Circuit	Terminal Type ID	Option
9	0.5	OG/ VT	6624	I	—	Right Middle Side Impact Sensing Module Signal	9	0.35	OG/ WH	6626	V	—
10	0.5	BK/ OG	6625	I	—	Right Middle Side Impact Sensing Module Low Reference	10	0.35	BK/ OG	6627	V	—
11	—	—	—	—	—	Not Occupied	11	—	—	—	—	—
12	0.5	L-GN/ GY	6135	I	—	Local Interconnect Network Serial Data Bus 4	12	0.35	L-GN/ GY	6135	V	—
13	0.5	BU/ BK	115	I	—	Right Rear Speaker Signal (-)	13	0.5	BU/ BK	115	V	—
14	0.5	WH	46	I	—	Right Rear Speaker Control (+)	14	0.5	WH	46	V	—
15 - 16	—	—	—	—	—	Not Occupied	15 - 16	—	—	—	—	—
17	0.75	GY	295	I	—	Door Lock Actuator Lock Control	17	0.75	GY	295	IV	—
18 - 19	—	—	—	—	—	Not Occupied	18 - 19	—	—	—	—	—
20	2.5	BK	1250	II	—	Ground	20	2.5	BK	1250	III	—

X926 Rearview Camera Harness to Chassis Harness (QT6/QK2/QT5)

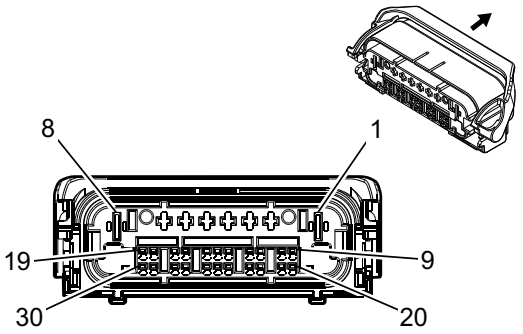

4650150

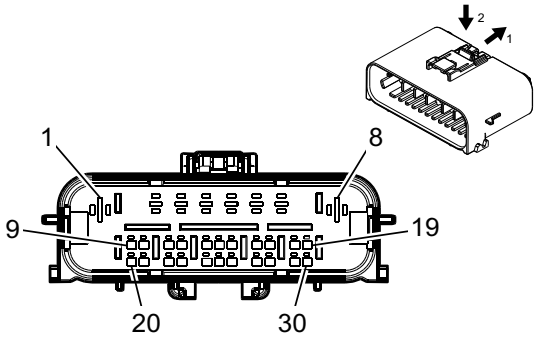

4817393

Connector Part Information

Harness Type: Rearview Camera
OEM Connector: 35211571
Service Connector: Service by Harness - See Part Catalog
Description: 30-Way F 1.2 MCON, 2.8, 6.3 MCP Series (BK)

Connector Part Information

Harness Type: Chassis
OEM Connector: 33363373
Service Connector: 19371177
Description: 30-Way M 1.2 MCON, 2.8, 6.3 MCP Series (BK)

Terminal Part Information

Terminal Type ID	Terminated Lead	Diagnostic Test Probe	Terminal Removal Tool	Service Terminal	Tray Name	Core Crimp	Insulation Crimp
I	Not Required	J-35616-16 (LT GN)	No Tool Required	Not Required	Not Required	Not Required	Not Required
II	19300650	J-35616-43 (RD)	J-38125-557	Not Available	Not Available	Not Available	Not Available
III	19330704	J-35616-17 (LT GN)	J-38125-215A	Not Available	Not Available	Not Available	Not Available
IV	19368304	J-35616-43 (RD)	J-38125-557	Not Available	Not Available	Not Available	Not Available

X926 Rearview Camera Harness to Chassis Harness (QT6/QK2/QT5)

Pin	Size	Color	Circuit	Terminal Type ID	Option	Function	Pin	Size	Color	Circuit	Terminal Type ID	Option
1	—	—	—	—	—	Battery Positive Voltage	1	2.5	RD/GY	7040	II	—
2 - 7	—	—	—	—	—	Not Occupied	2 - 7	—	—	—	—	—
8	—	—	—	—	—	Ground	8	4	BK	1450	IV	—
9	0.5	BK/WH	1751	I	—	Signal Ground	9	0.75	BK/WH	1751	III	—
10	—	—	—	—	—	Left Minor Endgate Ajar Signal	10	0.5	YE/D-BU	7295	III	—
11	—	—	—	—	—	Right Minor Endgate Ajar Signal	11	0.5	WH/BN	7296	III	—
12	0.5	WH/D-BU	6973	I	—	Camera Signal 2	12	0.5	BU	6974	III	—

X926 Rearview Camera Harness to Chassis Harness (QT6/QK2/QT5) (cont'd)

Pin	Size	Color	Circuit	Terminal Type ID	Option	Function	Pin	Size	Color	Circuit	Terminal Type ID	Option
13	—	—	—	—	—	Endgate Release Switch Analog Signal Interior	13	0.5	GY	1198	III	—
14	0.5	GY/ YE	6972	I	—	Camera Signal 2 +	14	0.5	WH/ D-BU	6973	III	—
15	—	—	—	—	—	Not Occupied	15	—	—	—	—	—
16	—	—	—	—	—	Minor Endgate Motor Supply Voltage	16	0.5	VT	7725	III	—
17	—	—	—	—	—	Major Endgate Motor Return	17	0.5	YE/ BK	7730	III	—
18	—	—	—	—	—	Minor Endgate Motor Return	18	0.5	BN/ BK	7726	III	—
19	—	—	—	—	—	Not Occupied	19	—	—	—	—	—
20	—	—	—	—	—	Low Speed GMLAN Serial Data	20	0.5	L-GN	5060	III	—
21 - 23	—	—	—	—	—	Not Occupied	21 - 23	—	—	—	—	—
24	0.5	VT/ L-GN	1739	I	—	Run/Crank Ignition 1 Voltage	24	0.5	VT/ L-GN	1739	III	—
25	—	—	—	—	—	Exterior Courtesy Lamp Control	25	0.5	WH/ VT	1430	III	—
26	0.35	BU	6974	I	—	Camera Low Reference	26	0.5	GY/ YE	6972	III	—
27	—	—	—	—	—	Major Endgate Release Switch Signal Exterior	27	0.5	GY	7292	III	—
28	—	—	—	—	—	Minor Endgate Release Switch Discrete Signal Exterior	28	0.5	YE	7294	III	—
29	—	—	—	—	—	Not Occupied	29	—	—	—	—	—
30	—	—	—	—	—	Major Endgate Motor Supply Voltage	30	0.5	L-GN	1299	III	—

X927 Rearview Camera Harness to Chassis Harness (Chassis Cab)

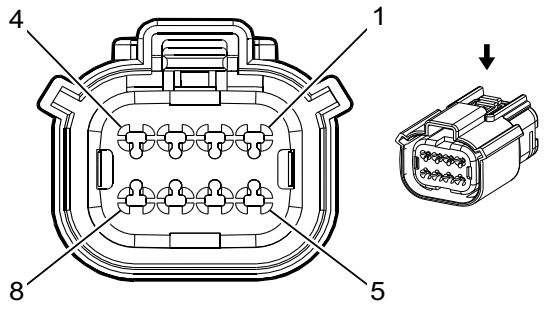

2268728

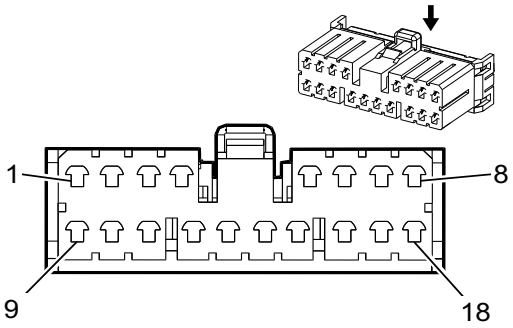

2268733

Connector Part Information

Harness Type: Rearview Camera
OEM Connector: 13654393
Service Connector: Service by Harness - See Part Catalog
Description: 8-Way F 1.5 Series, Sealed (BK)

Connector Part Information

Harness Type: Chassis
OEM Connector: Not Available
Service Connector: Service by Harness - See Part Catalog
Description: 8-Way M

Terminal Part Information

Terminal Type ID	Terminated Lead	Diagnostic Test Probe	Terminal Removal Tool	Service Terminal	Tray Name	Core Crimp	Insulation Crimp
I	Not Required	J-35616-2A (GY)	No Tool Required	Not Required	Not Required	Not Required	Not Required
II	Not Required	Not Available	No Tool Required	Not Required	Not Required	Not Required	Not Required

X927 Rearview Camera Harness to Chassis Harness (Chassis Cab)

Pin	Size	Color	Circuit	Terminal Type ID	Option	Function	Pin	Size	Color	Circuit	Terminal Type ID	Option
1	0.5	GY/YE	6972	I	—	Camera Signal 2 +	1	0.5	GY/YE	6972	II	—
2	0.35	BU	6974	I	—	Camera Low Reference	2	0.35	BU	6974	II	—
3	—	—	—	—	—	Not Occupied	3	—	—	—	—	—
4	0.5	WH/D-BU	6973	I	—	Camera Signal 2	4	0.5	WH/D-BU	6973	II	—
5 - 8	—	—	—	—	—	Not Occupied	5 - 8	—	—	—	—	—

X927 Rearview Camera Harness to Chassis Harness (Crew Chassis Cab)

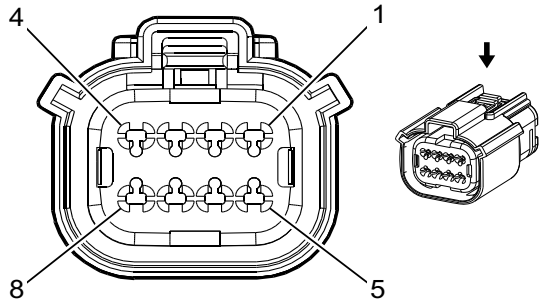

2268728

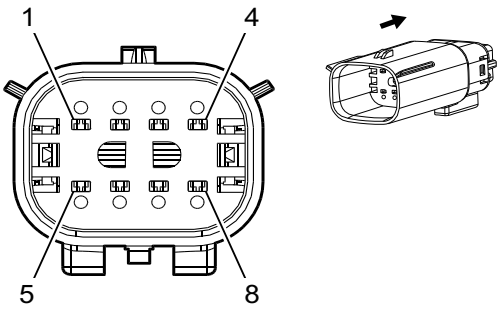

2667653

Connector Part Information

Harness Type: Rearview Camera
OEM Connector: Not Available
Service Connector: Service by Harness - See Part Catalog
Description: 8-Way F

Connector Part Information

Harness Type: Chassis
OEM Connector: 35043130
Service Connector: 19370460
Description: 8-Way M 150 MX Series, Sealed (BK)

Terminal Part Information

Terminal Type ID	Terminated Lead	Diagnostic Test Probe	Terminal Removal Tool	Service Terminal	Tray Name	Core Crimp	Insulation Crimp
I	Not Required	J-35616-2A (GY)	No Tool Required	Not Required	Not Required	Not Required	Not Required
II	Not Required	J-35616-3 (GY)	No Tool Required	Not Required	Not Required	Not Required	Not Required

X927 Rearview Camera Harness to Chassis Harness (Crew Chassis Cab)

Pin	Size	Color	Circuit	Terminal Type ID	Option	Function	Pin	Size	Color	Circuit	Terminal Type ID	Option
1	0.5	GY/YE	6972	I	—	Camera Signal 2 +	1	0.5	GY/YE	6972	II	—
2	0.5	BU	6974	I	—	Camera Low Reference	2	0.5	BU	6974	II	—
3	—	—	—	—	—	Not Occupied	3	—	—	—	—	—
4	0.5	WH/BU	6973	I	—	Camera Signal 2	4	0.5	WH/BU	6973	II	—
5	0.5	BK/WH	1751	I	—	Signal Ground	5	0.5	BK/WH	1751	II	—
6	0.5	VT/GN	1739	I	—	Run/Crank Ignition 1 Voltage	6	0.5	VT/GN	1739	II	—
7 - 8	—	—	—	—	—	Not Occupied	7 - 8	—	—	—	—	—

X927 Rearview Camera Harness to Chassis Harness (Regular Cab Chassis)

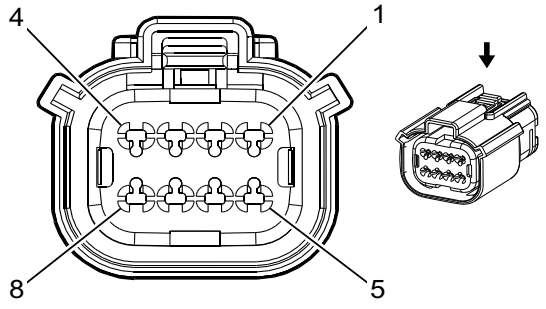

2268728

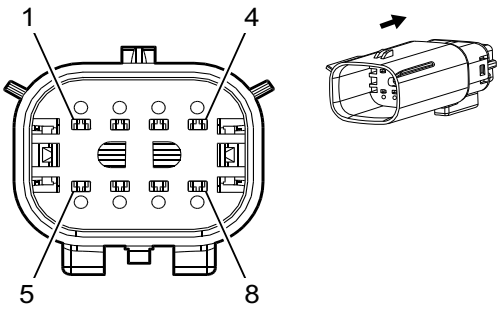

2667653

Connector Part Information

Harness Type: Rearview Camera
OEM Connector: 13654393
Service Connector: Service by Harness - See Part Catalog
Description: 8-Way F 1.5 Series, Sealed (BK)

Connector Part Information

Harness Type: Chassis
OEM Connector: 35043130
Service Connector: 19370460
Description: 8-Way M 150 MX Series, Sealed (BK)

Terminal Part Information

Terminal Type ID	Terminated Lead	Diagnostic Test Probe	Terminal Removal Tool	Service Terminal	Tray Name	Core Crimp	Insulation Crimp
I	Not Required	J-35616-2A (GY)	No Tool Required	Not Required	Not Required	Not Required	Not Required
II	Not Required	J-35616-3 (GY)	No Tool Required	Not Required	Not Required	Not Required	Not Required

X927 Rearview Camera Harness to Chassis Harness (Regular Cab Chassis)

Pin	Size	Color	Circuit	Terminal Type ID	Option	Function	Pin	Size	Color	Circuit	Terminal Type ID	Option
1	0.5	GY/YE	6972	I	—	Camera Signal 2 +	1	0.5	GY/YE	6972	II	—
2	0.35	BU	6974	I	—	Camera Low Reference	2	0.5	BU	6974	II	—
3	—	—	—	—	—	Not Occupied	3	—	—	—	—	—
4	0.5	WH/BU	6973	I	—	Camera Signal 2	4	0.5	WH/BU	6973	II	—
5	—	—	—	—	—	Not Occupied	5	—	—	—	—	—
6	—	—	—	—	—	Run/Crank Ignition 1 Voltage	6	0.5	VT/GN	1739	II	—
7 - 8	—	—	—	—	—	Not Occupied	7 - 8	—	—	—	—	—

Power Outlets

Schematic and Routing Diagrams

Cigar Lighter/Power Outlet Schematics (12V DC Power Outlets and USB Receptacles)

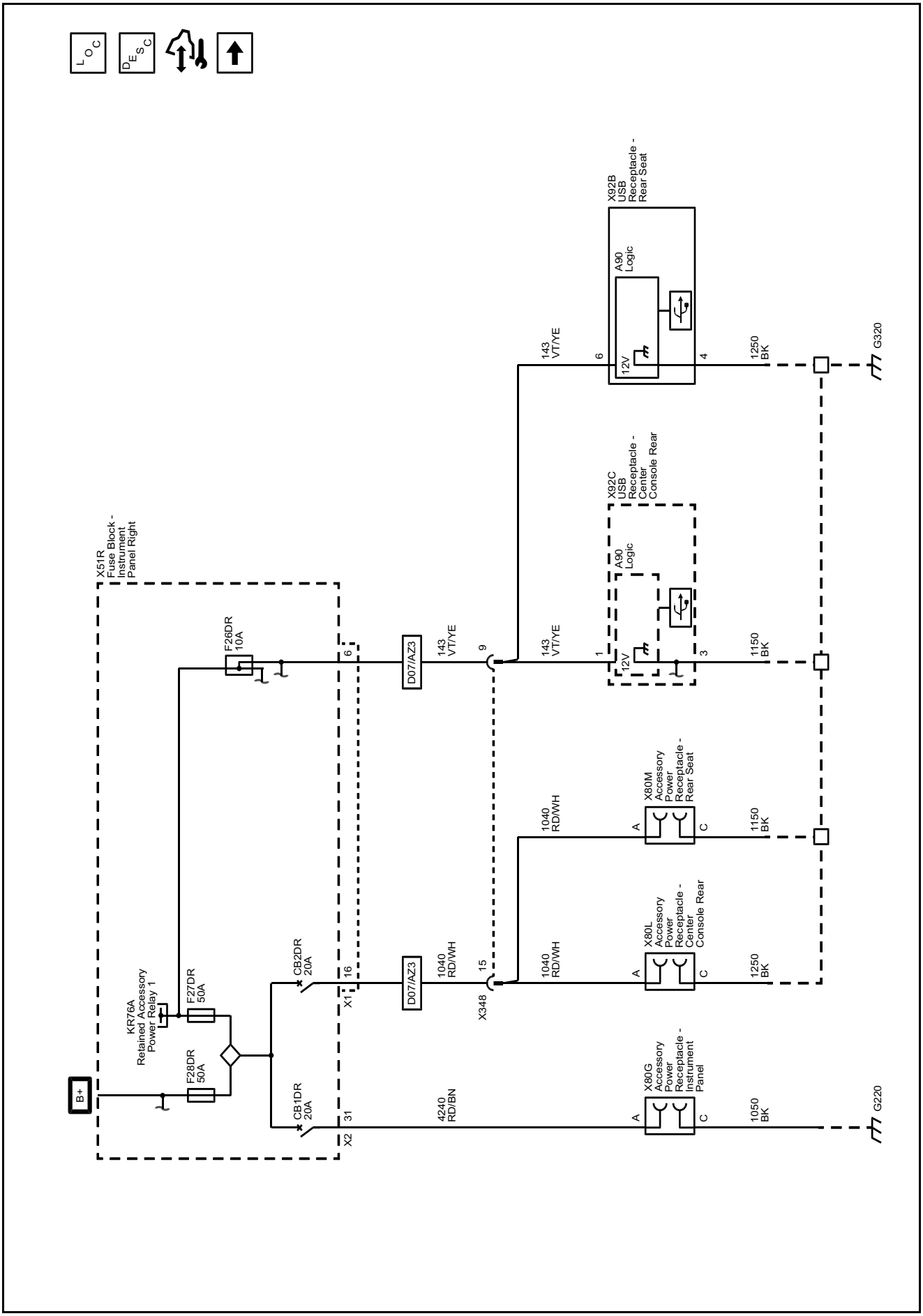

Cigar Lighter/Power Outlet Schematics (Inverter Module and Instrument Panel Power Receptacle - 110V AC (KI4))

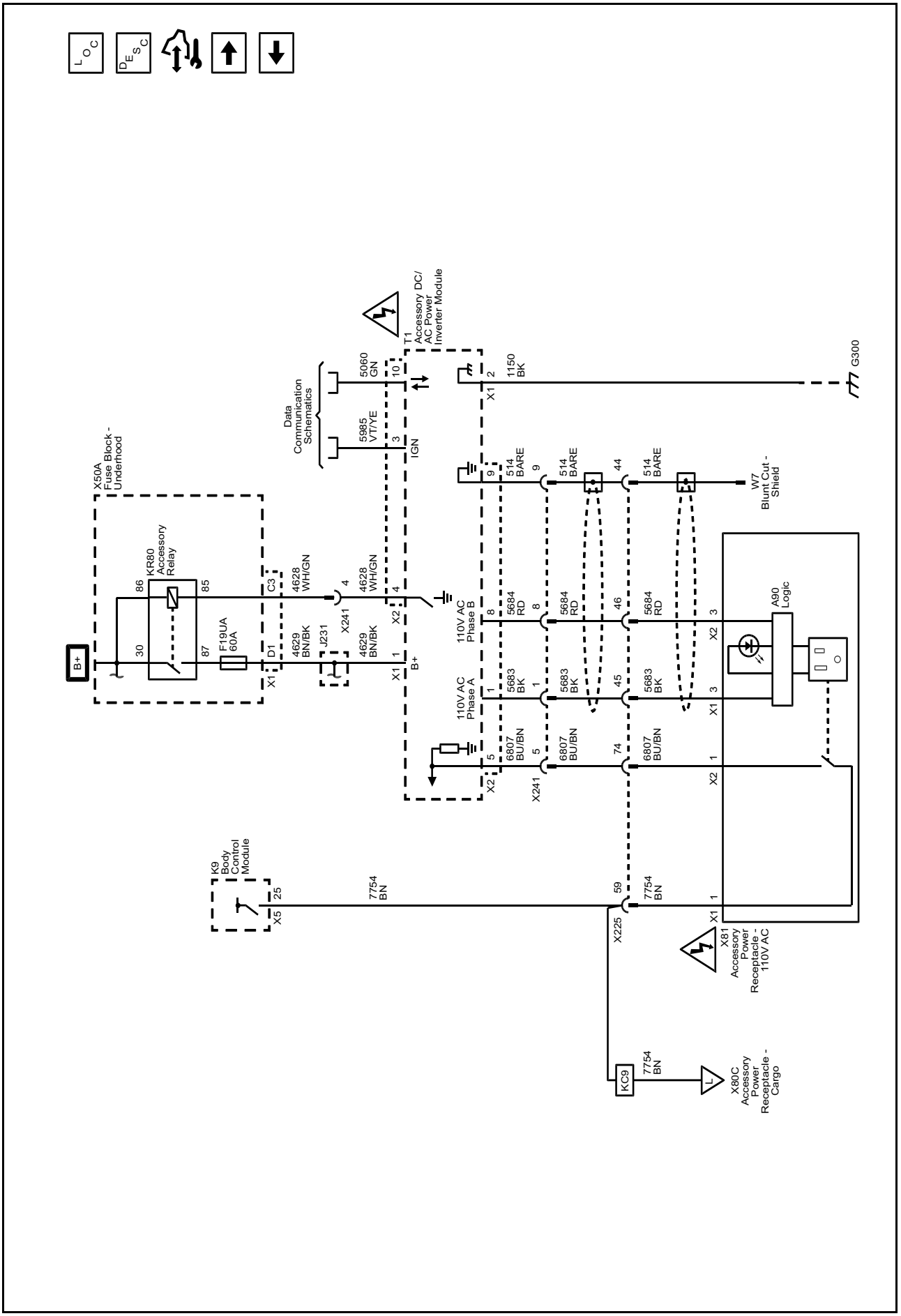

Cigar Lighter/Power Outlet Schematics (Inverter Module and Instrument Panel Power Receptacle - 230V AC (KI5))

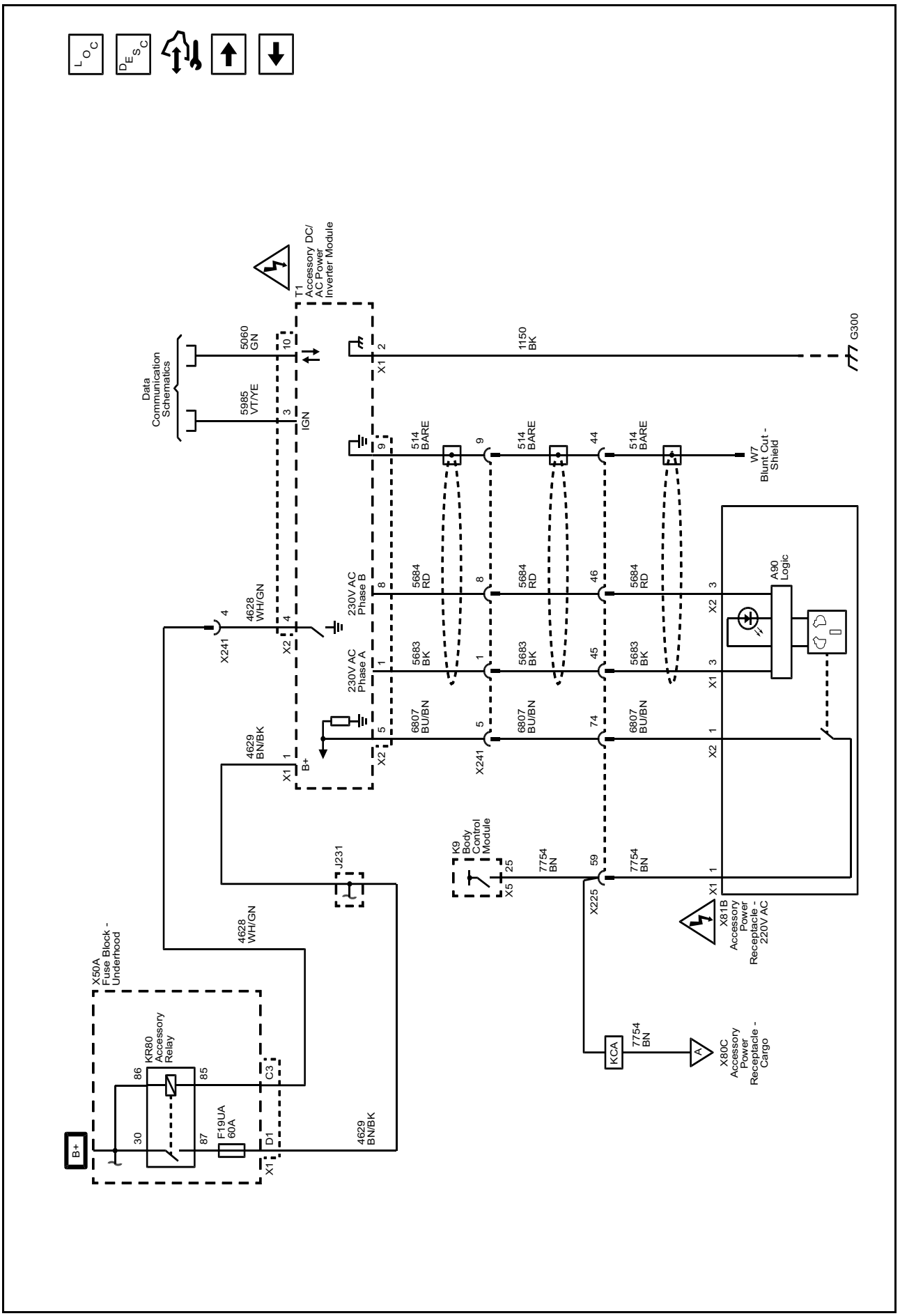

Cigar Lighter/Power Outlet Schematics (Cargo Power Receptacle Controls and Indicators (KC9/KCA))

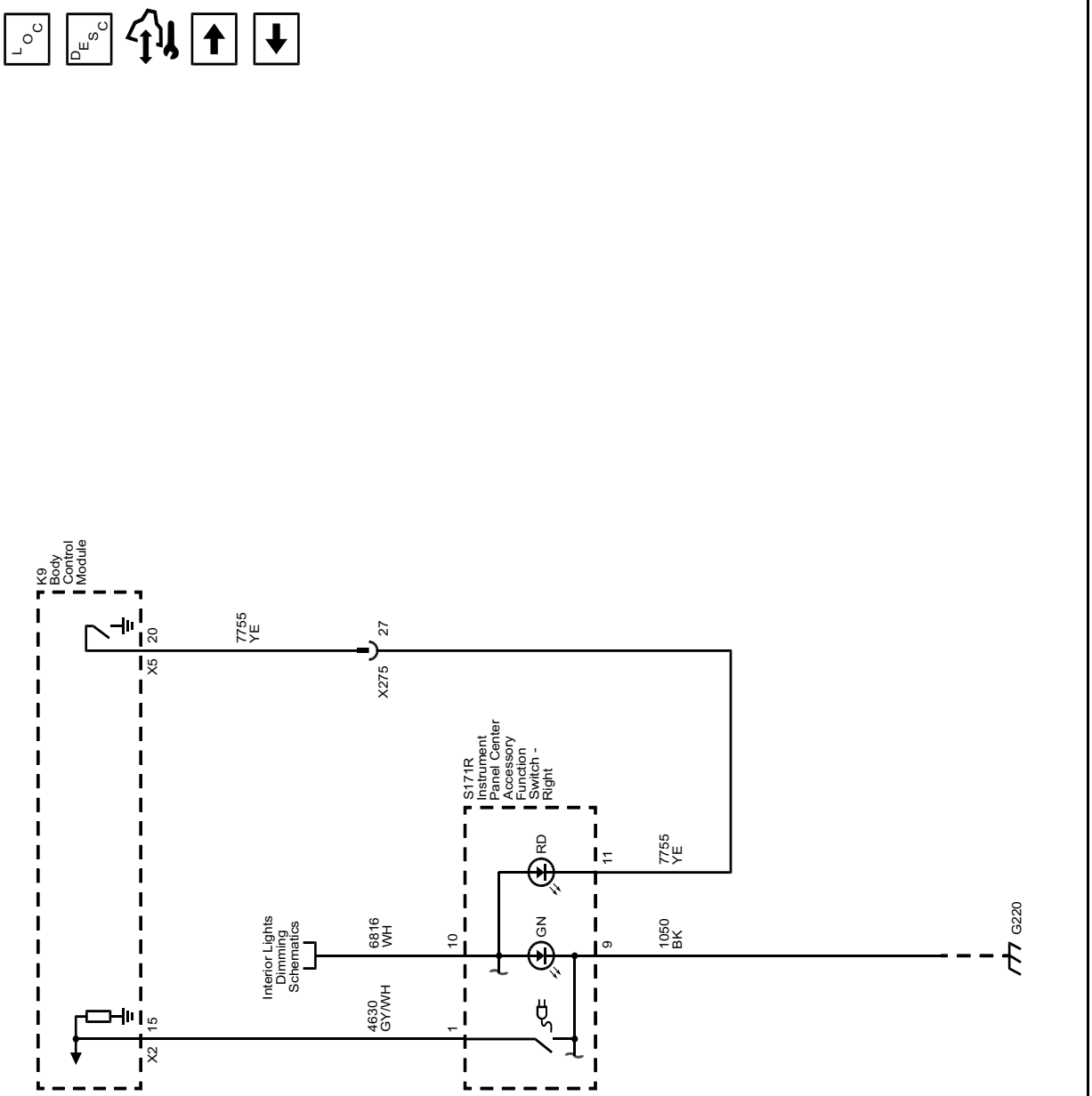

Cigar Lighter/Power Outlet Schematics (Cargo Power Receptacle - 110V AC (KC9))

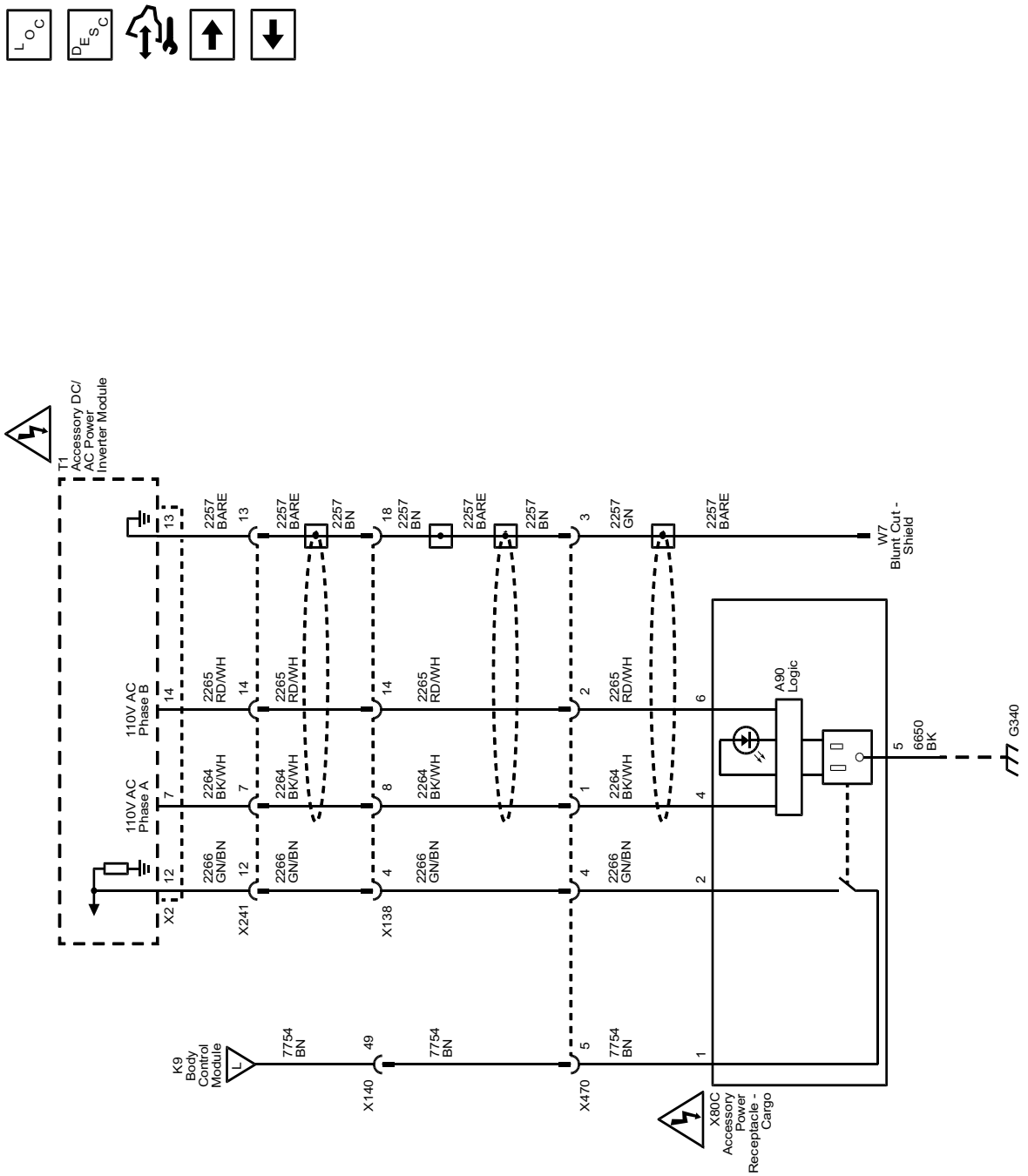

Cigar Lighter/Power Outlet Schematics (Cargo Power Receptacle - 230V AC (KCA))

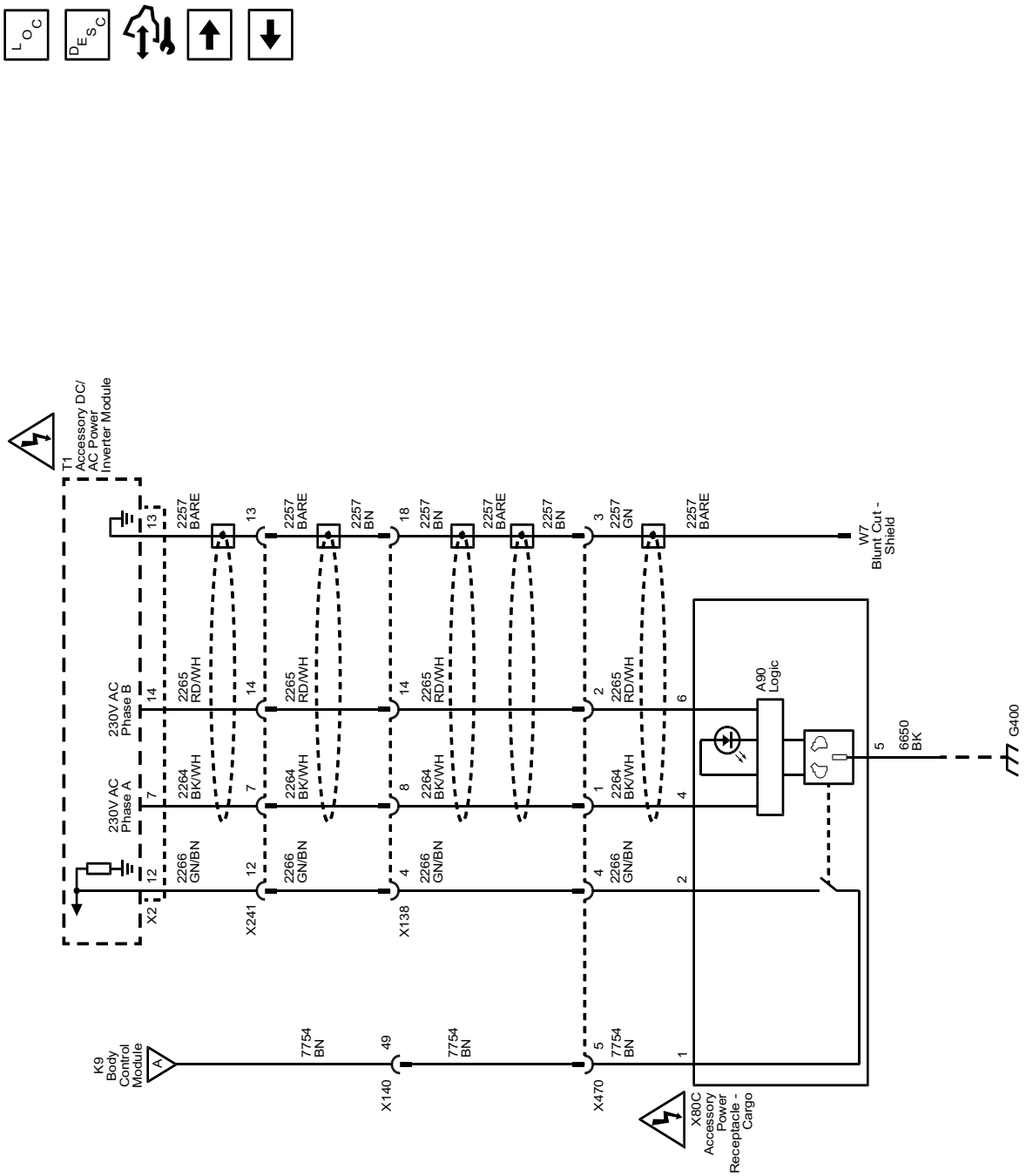

Cigar Lighter/Power Outlet Schematics (Wireless Charging (K4C))

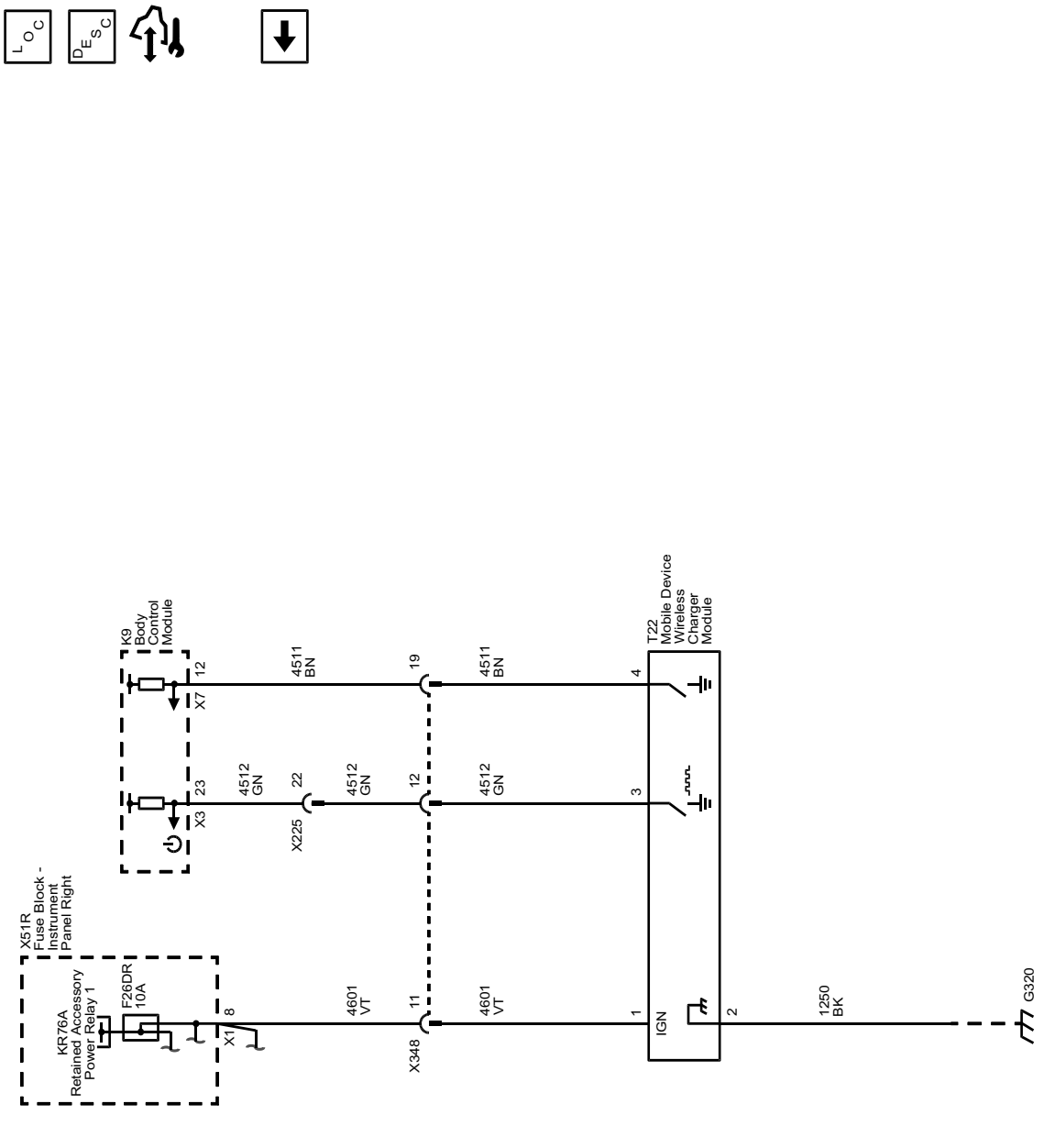

5217151

Description and Operation

Power Outlets Description and Operation

12 Volt Power Outlet Receptacle Description and Operation

The vehicle is fitted with a 12 V accessory power receptacle. The accessory power receptacles are controlled by an ignition operated relay. The accessory power receptacles are operational when the ignition is turned to either the On or the Accessories positions. The X80J and X80K accessory power receptacles may be configured to be operational when the ignition is Off by changing the position of the 50A fuse from the F10DL position to the F11DL position in the left instrument panel fuse block.

110 Volt Power Outlet Receptacle System Description

Power Outlets Block Diagram

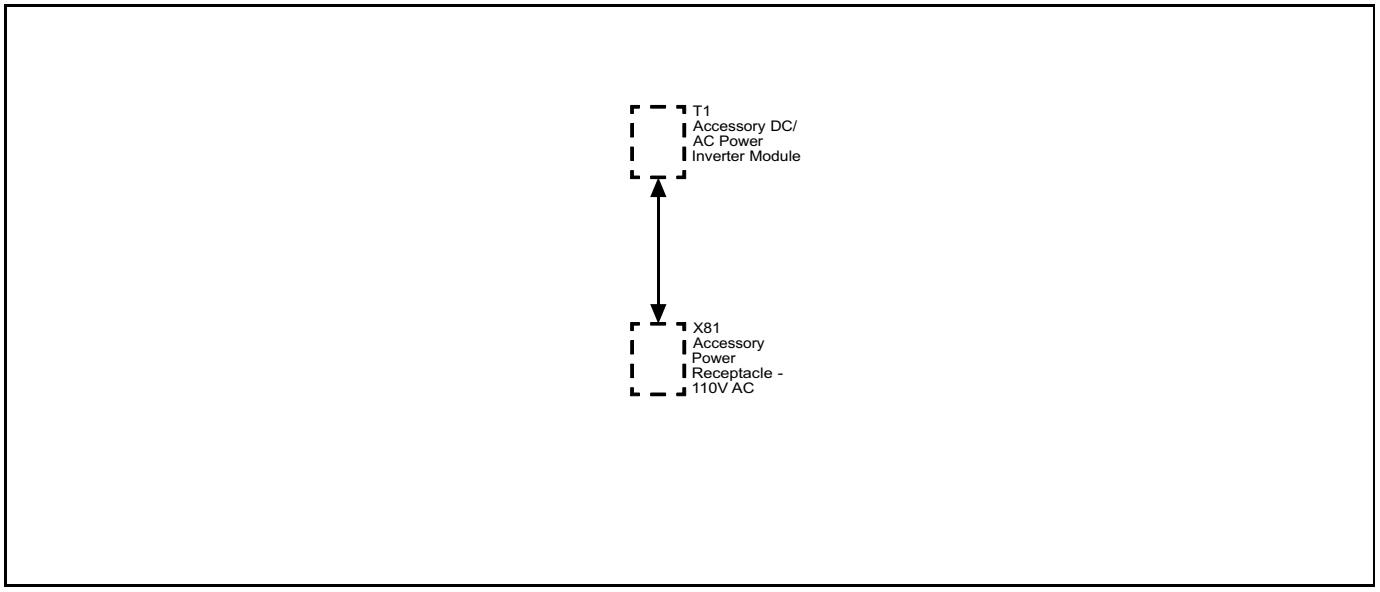

3403851

The alternating current (AC) accessory power outlet system consists of the accessory DC/AC power inverter module and the accessory power receptacle – 110 V AC. The accessory DC/AC power inverter module converts 12 V direct current (DC) battery power to 110 V at 60 Hertz (Hz) AC power to operate AC powered devices. The accessory DC/AC power inverter module provides up to 150 watts of power. The accessory power receptacle – 110 V AC provides the usual connection for AC powered devices.

110 Volt Power Outlet Receptacle System Operation

The accessory DC/AC power inverter module receives fuse protected battery voltage and is connected to the 12 V electrical system ground. The accessory power receptacle – 110 V AC has an internal switch, that detects when an AC powered device is plugged into the outlet. When the ignition is ON, and an AC powered device is plugged into the accessory power receptacle – 110 V AC, the normally open switch in the accessory power receptacle – 110 V AC, closes. When the accessory DC/AC power inverter module detects the voltage from the accessory power receptacle – 110 V AC switch, the inverter module begins to supply 110 V AC to the accessory power receptacle – 110 V AC after a 1.5 s delay. The accessory AC power system is protected against circuit overload and circuit shorts to ground.

110 Volt Power Outlet Receptacle Isolation Fault Protection

The accessory DC/AC power inverter module contains a ground fault circuit interrupter (GFCI). GFCI monitors the 110 V circuit for a short to vehicle chassis ground. If a 110 V AC short to ground is detected, the accessory DC/AC power inverter module will turn OFF. The module remains OFF, until the AC powered device is unplugged from the outlet, and then plugged into the outlet after a 3 s delay.

110 Volt Power Outlet Receptacle Overload Shutdown

The accessory DC/AC power inverter module will turn OFF if the current in the 110 V circuit is greater than 3.8 A for 1 s , or 2.5 A for 10 s . The module will turn ON again, when the AC powered device is unplugged from the outlet, and then plugged into the outlet after a 3 s delay.

110 Volt Power Outlet Receptacle Internal Shutdown

The accessory DC/AC power inverter module will turn OFF if the B+ supply voltage is greater than 16.5 V or less than 11 V. The module will also turn OFF if the device temperature is greater than 85°C (185°F). The module will turn ON again, after the shutdown condition is corrected, and the AC powered device is unplugged from the outlet, and then plugged into the outlet.

230 Volt Power Outlet Receptacle System Description

Power Outlets Block Diagram

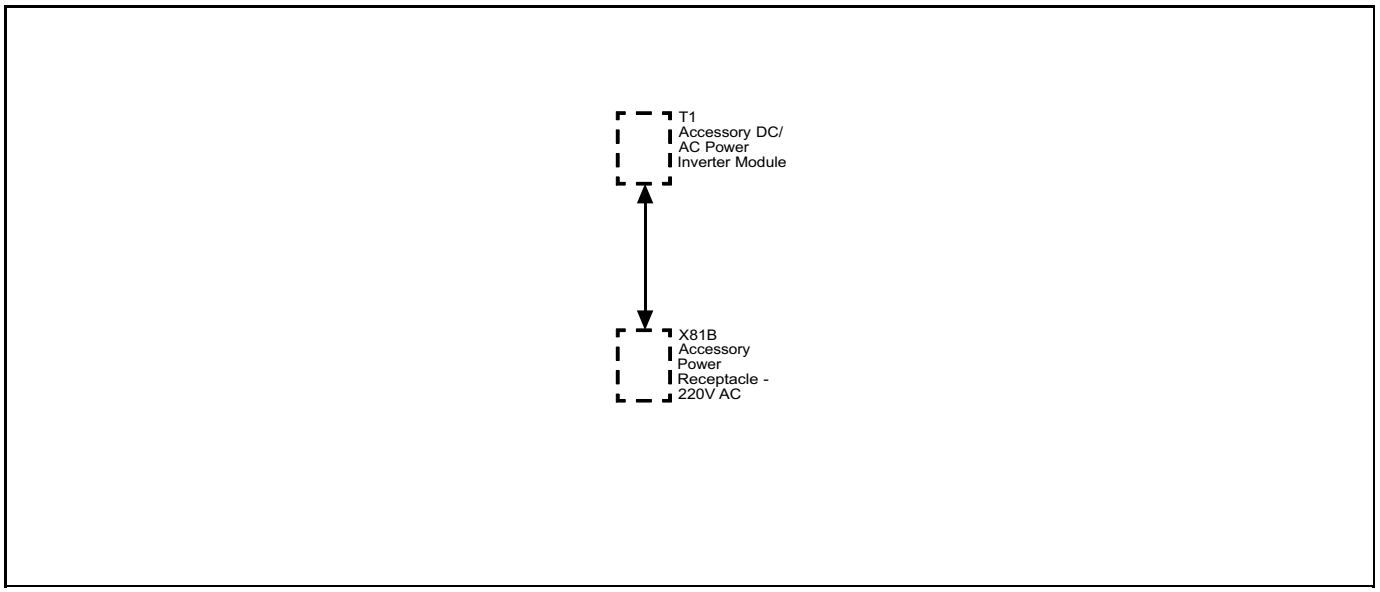

3403853

The alternating current (AC) accessory power outlet system consists of the accessory DC/AC power inverter module and the accessory power receptacle – 220V AC. The accessory DC/AC power inverter module converts 12 V direct current (DC) battery power to 220–230 V at 50 Hertz (Hz) AC power to operate AC powered devices. The accessory DC/AC power inverter module provides up to 150 watts of power. The accessory power receptacle – 220V AC provides the usual connection for AC powered devices.

230 Volt Power Outlet Receptacle System Operation

The accessory DC/AC power inverter module receives fuse protected battery voltage and is connected to the 12 V electrical system ground. The accessory power receptacle – 220V AC has an internal switch, that detects when an AC powered device is plugged into the outlet. When the ignition is ON, and an AC powered device is plugged into the accessory power receptacle – 220V AC, the normally open switch in the accessory power receptacle – 220V AC, closes. When the accessory DC/AC power inverter module detects the voltage from the accessory power receptacle – 220V AC switch, the inverter module begins to supply 220–230 V AC to the accessory power receptacle – 220V AC after a 1.5 second delay. The accessory AC power system is protected against circuit overload and circuit shorts to ground.

230 Volt Power Outlet Receptacle Isolation Fault Protection

The accessory DC/AC power inverter module contains a ground fault circuit interrupter (GFCI). GFCI monitors the 230 V circuit for a short to vehicle chassis ground. If a 230 V AC short to ground is detected, the accessory DC/AC power inverter module will turn OFF. The

module remains OFF, until the AC powered device is unplugged from the outlet, and then plugged into the outlet after a 3 s delay.

230 Volt Power Outlet Receptacle Overload Shutdown

The accessory AC/DC power control module will turn OFF if the current in the 230 V circuit is greater than 3.8 A for 1 second, or 2.5 A for 10 seconds. The module will turn ON again, when the AC powered device is unplugged from the outlet, and then plugged into the outlet after a 3 second delay.

230 Volt Power Outlet Receptacle Internal Shutdown

The accessory DC/AC power inverter module will turn OFF if the B+ supply voltage is greater than 16.5 V or less than 11 V. The module will also turn OFF if the device temperature is greater than 85°C (185°F). The module will turn ON again, after the shutdown condition is corrected, and the AC powered device is unplugged from the accessory power receptacle – 220V AC, and then plugged into the accessory power receptacle – 220V AC.

Wiring Systems and Power Management

Schematic and Routing Diagrams

Power Distribution Schematics (X50D Battery Fuse Block)

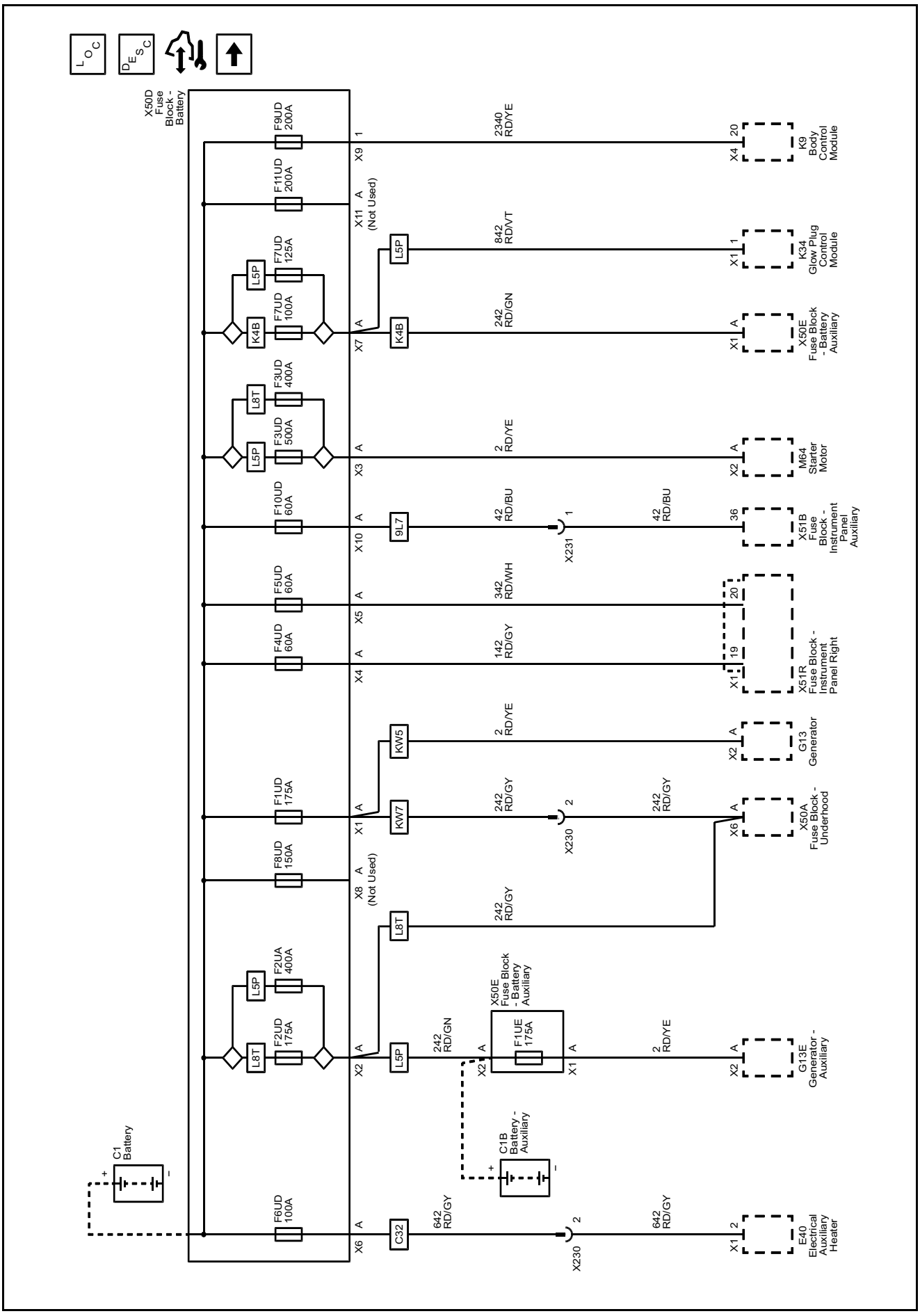

Power Distribution Schematics (X50E Fuse Block - Battery Auxiliary (K4B))

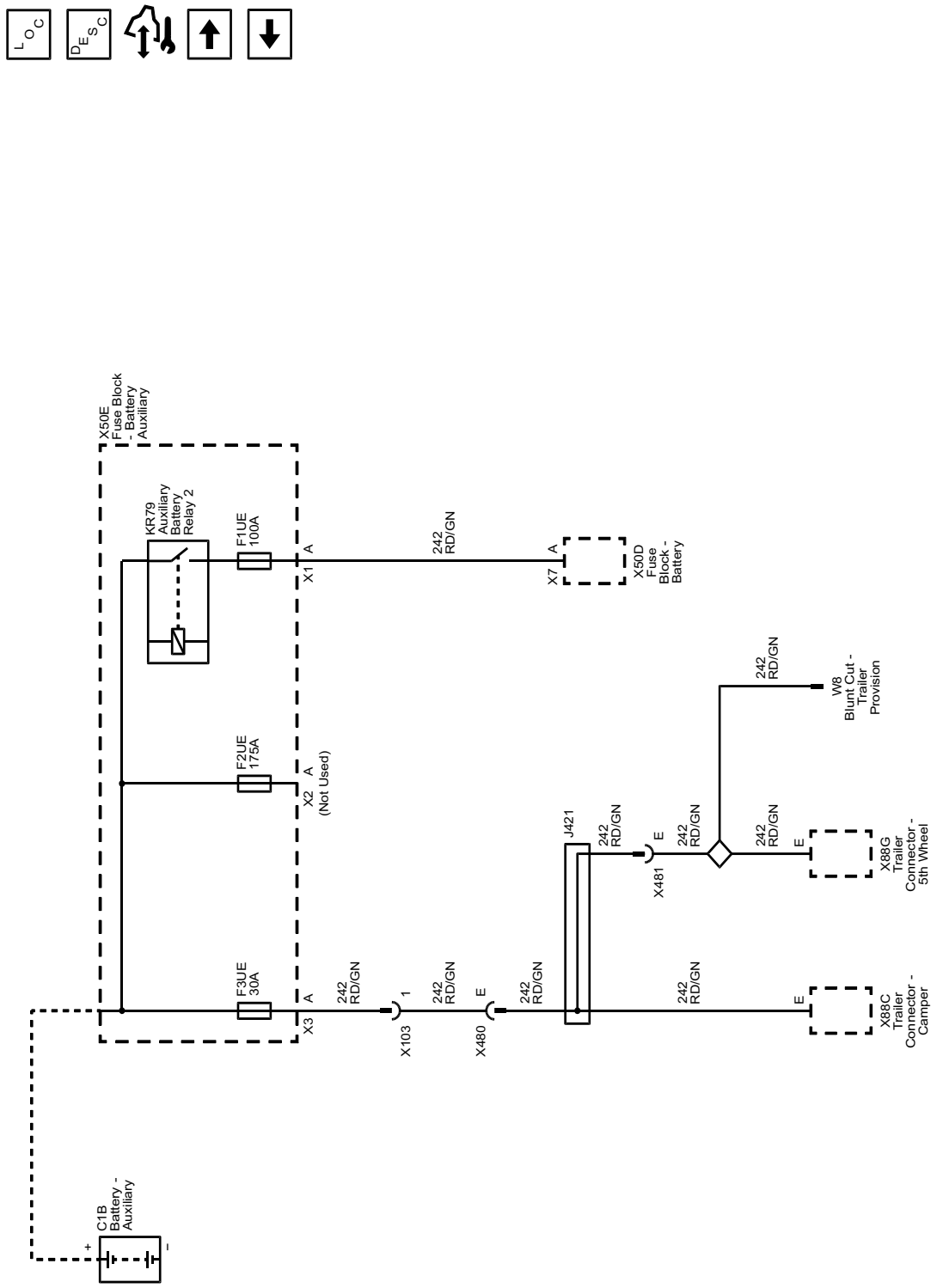

Power Distribution Schematics (X50E Fuse Block - Battery Auxiliary (L5P))

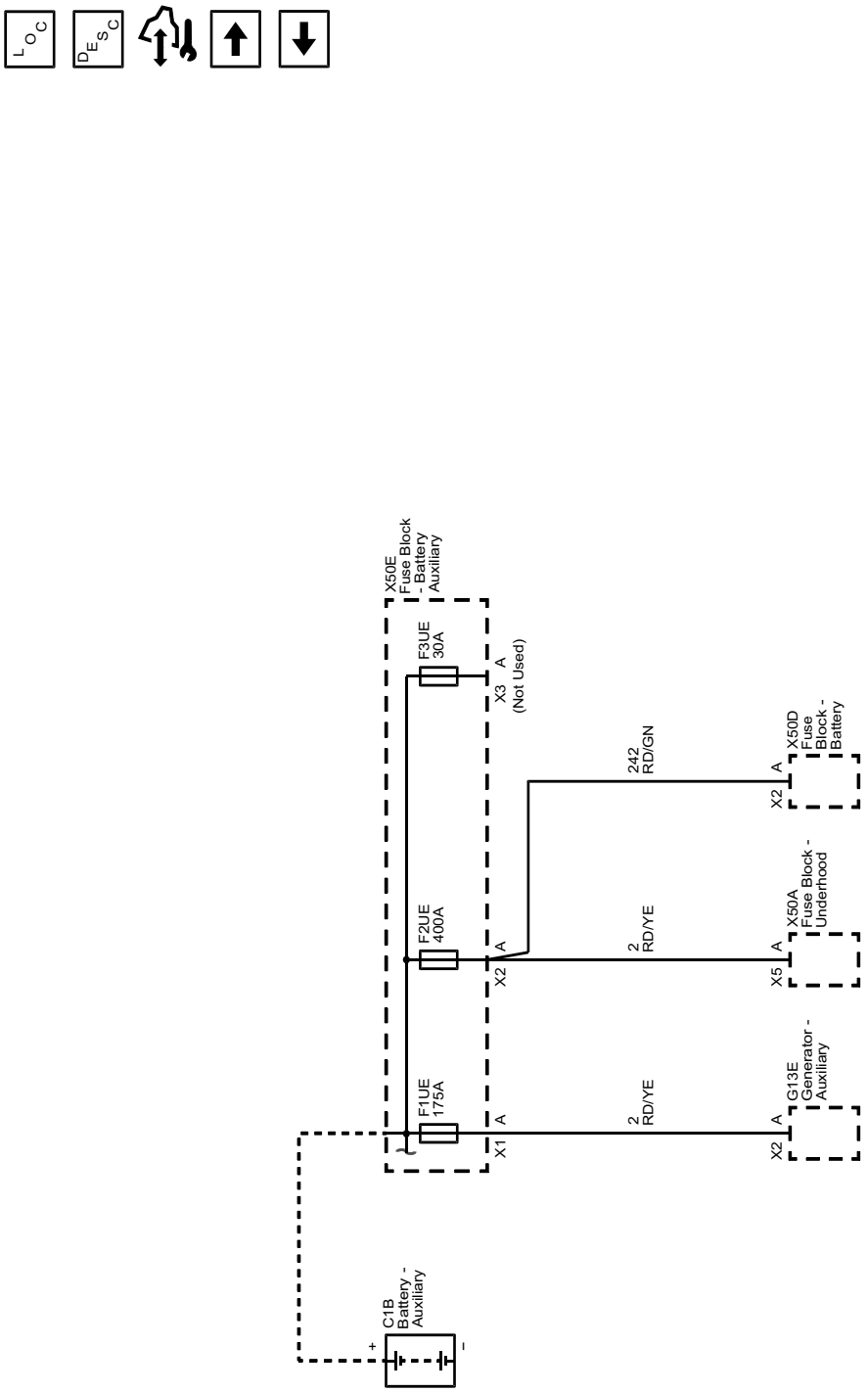

5338354

Power Distribution Schematics (X50A Underhood Fuse Block Bussing (1 of 2))

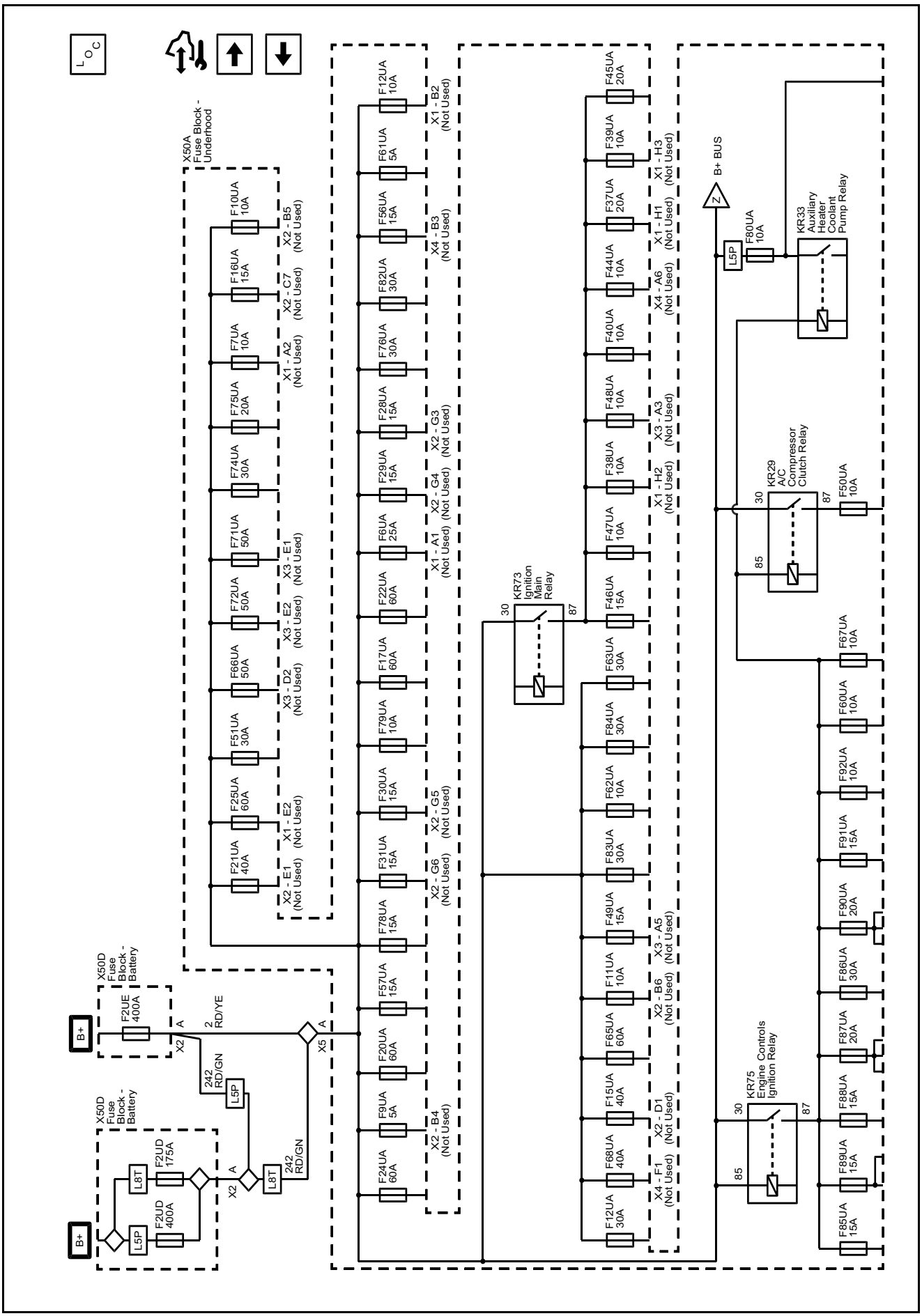

Power Distribution Schematics (X50A Underhood Fuse Block Bussing (2 of 2))

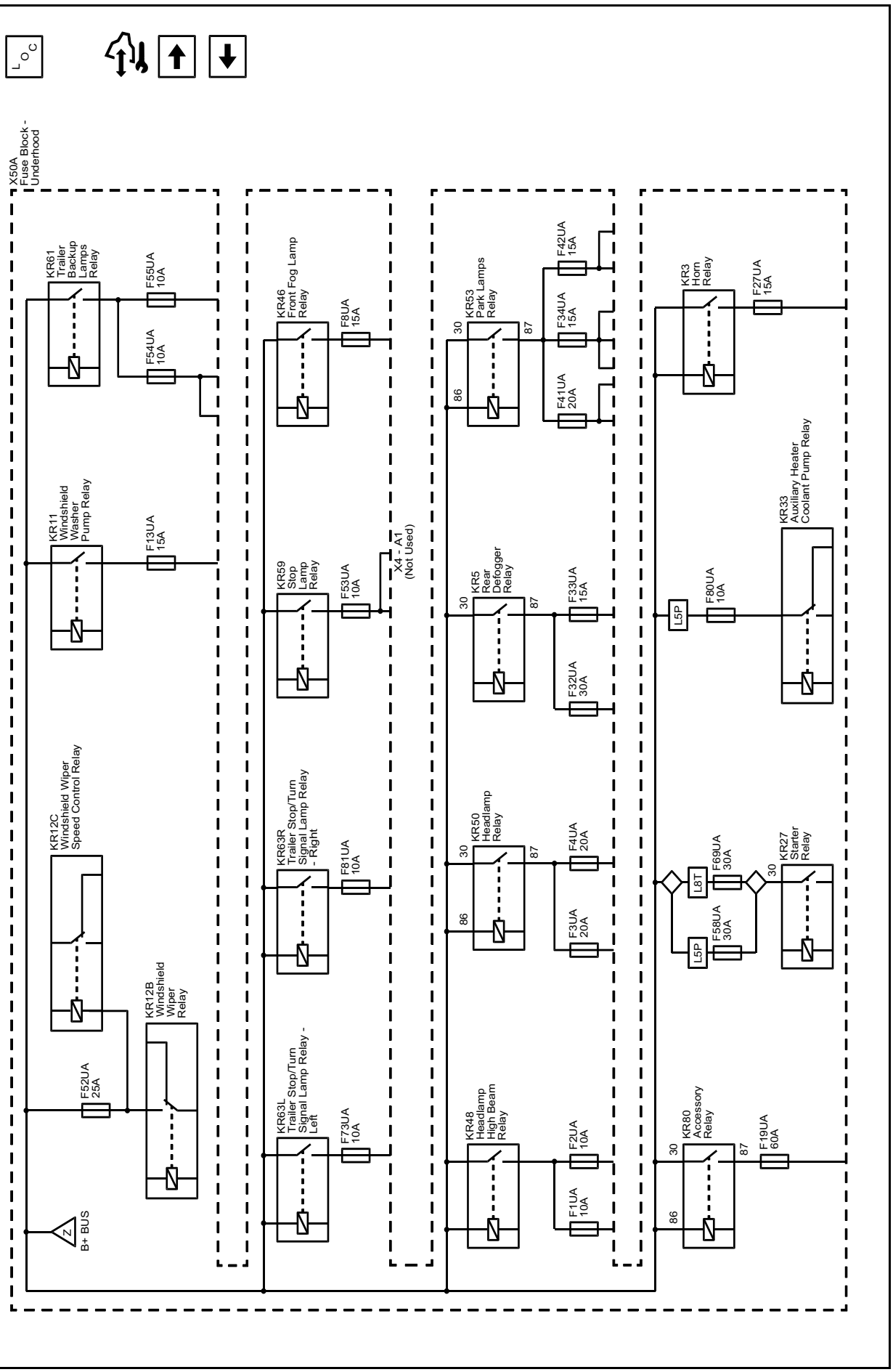

Power Distribution Schematics (F1UA, F2UA, F3UA, F4UA, F27UA, F32UA, and F33UA Fuses (X88))

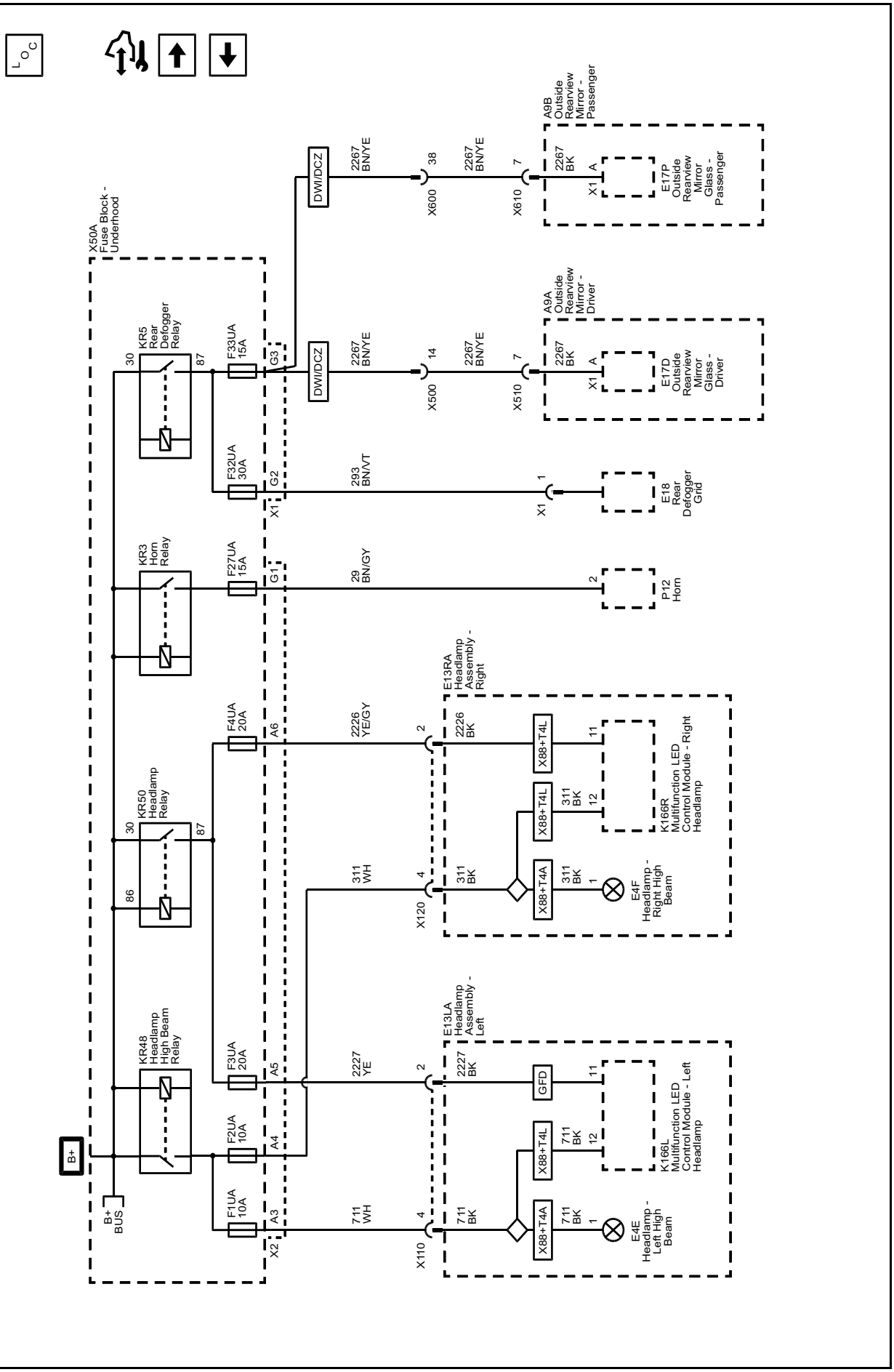

Power Distribution Schematics (F1UA, F2UA, F3UA, F4UA, F27UA, F32UA, and F33UA Fuses (Z88))

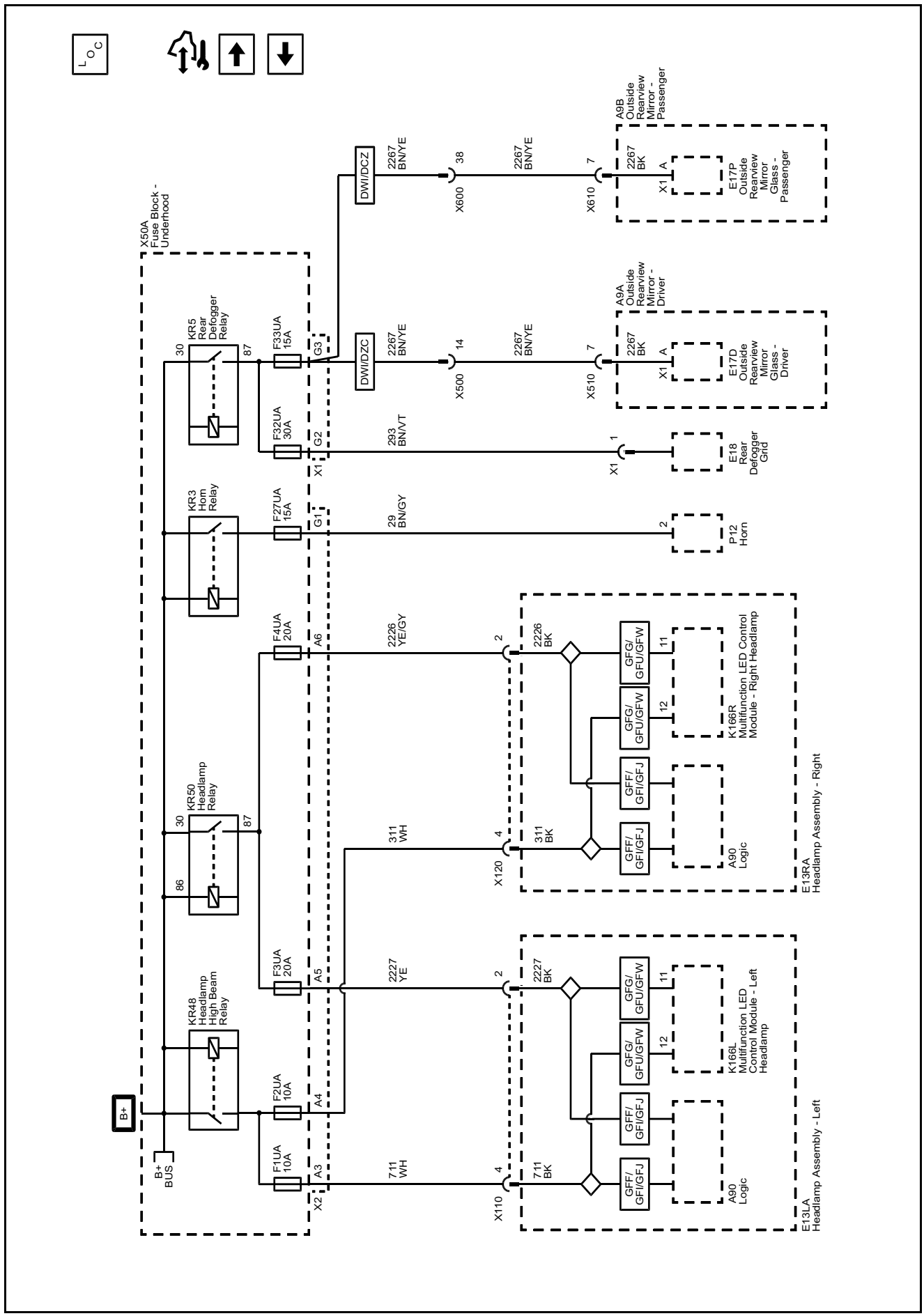

Power Distribution Schematics (F8UA, F13UA, F53UA, F73UA, and F81UA Fuses)

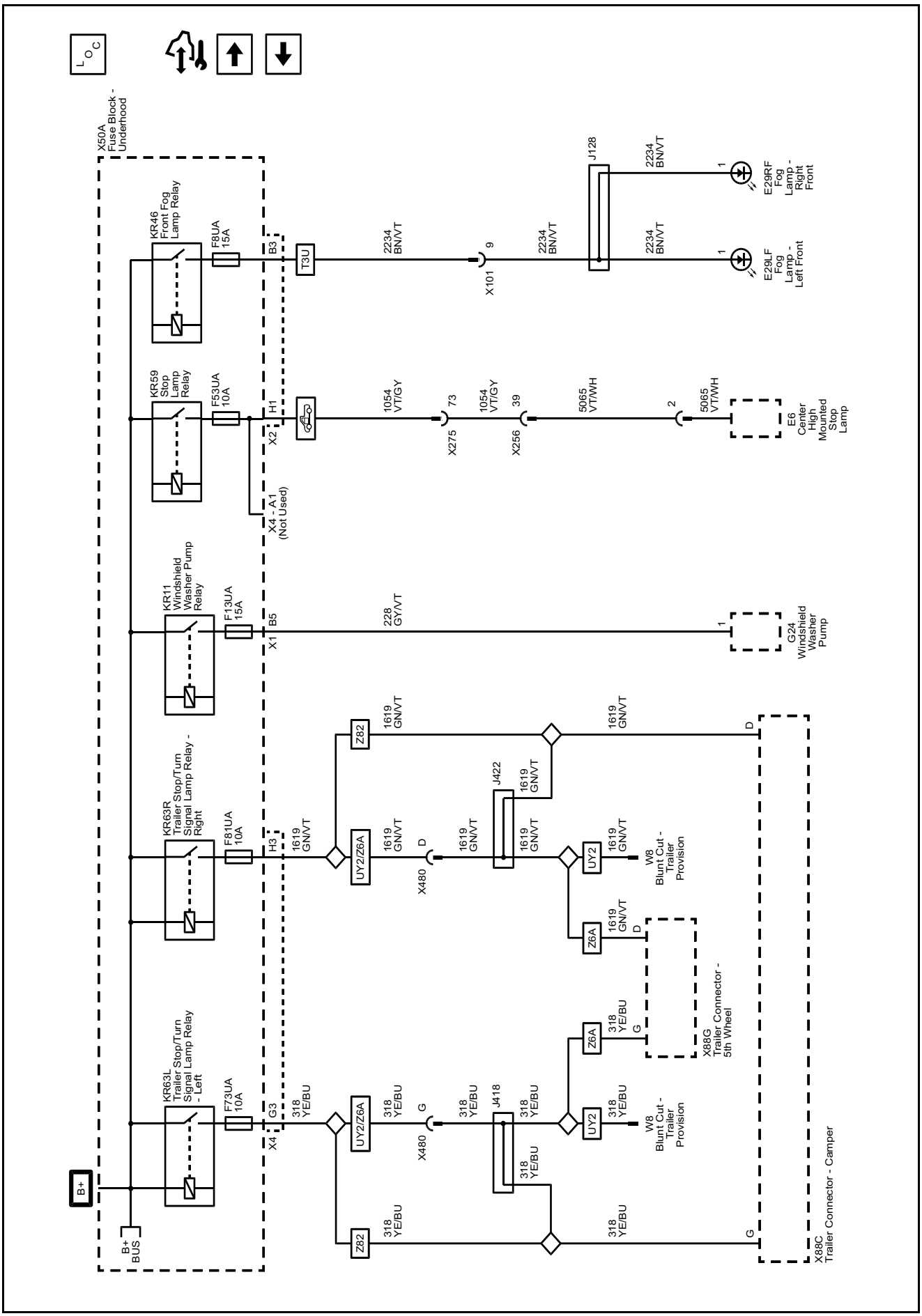

Power Distribution Schematics (F17UA, F19UA, F22UA, F62UA, F63UA, F65UA, F76UA, F82UA, F83UA and F84UA Fuses)

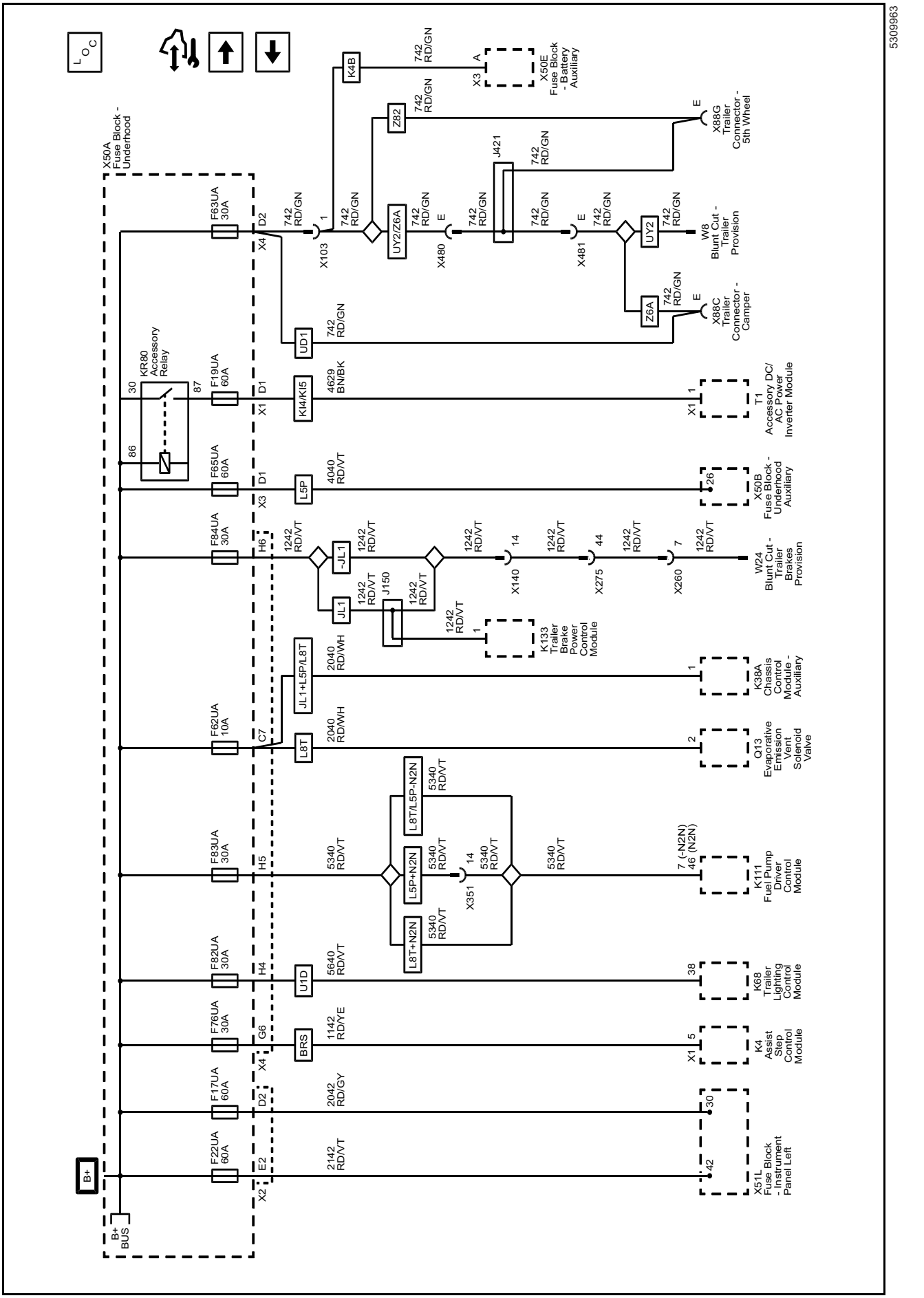

Power Distribution Schematics (F20UA, F24UA, F51UA, F57UA, F61UA, F74Ua, F75UA, F78UA and F79UA Fuses)

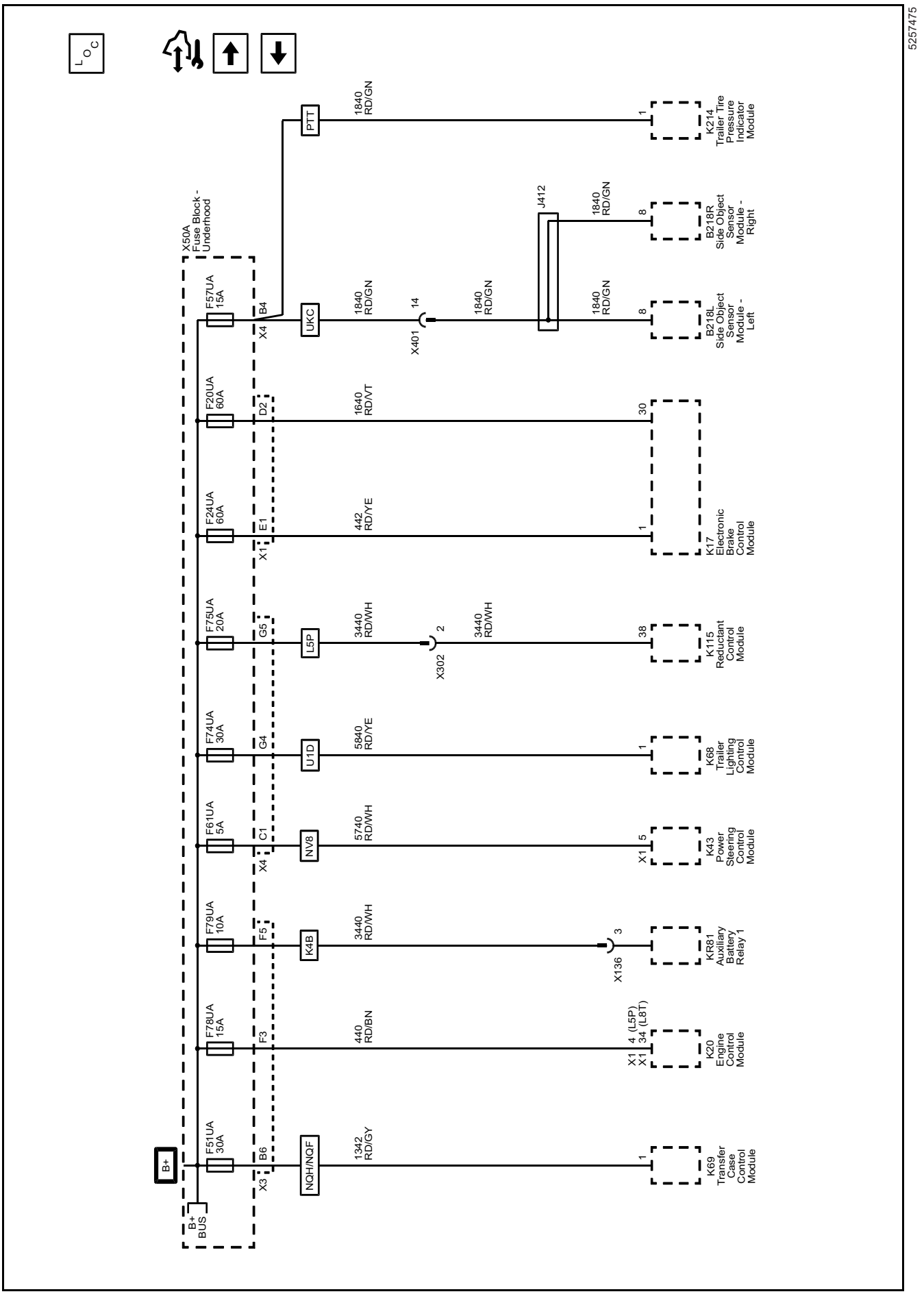

Power Distribution Schematics (F34UA, F41UA and F52UA Fuses (X88) (1 of 2))

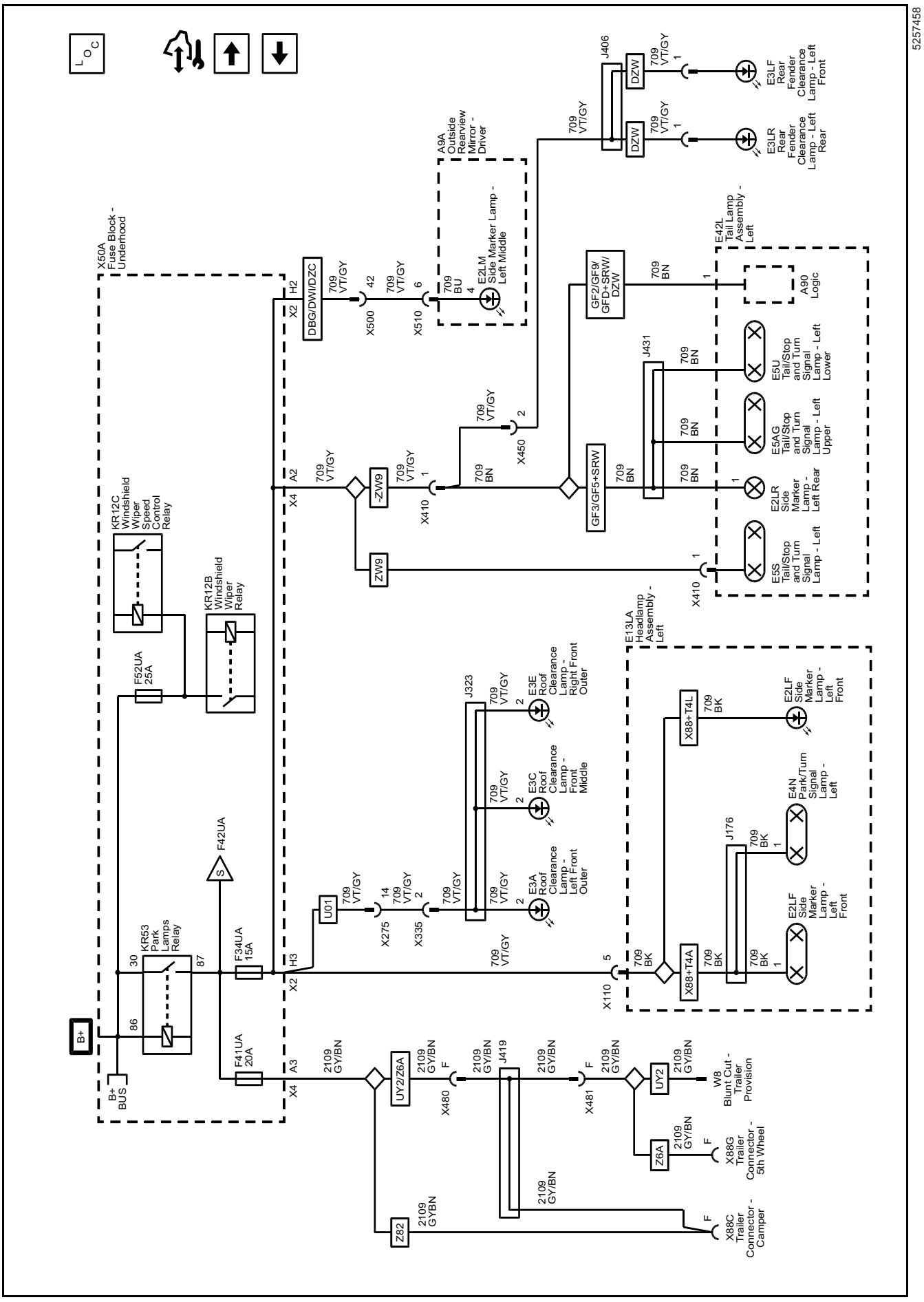

Power Distribution Schematics (F42UA Fuses (X88) (2 of 2))

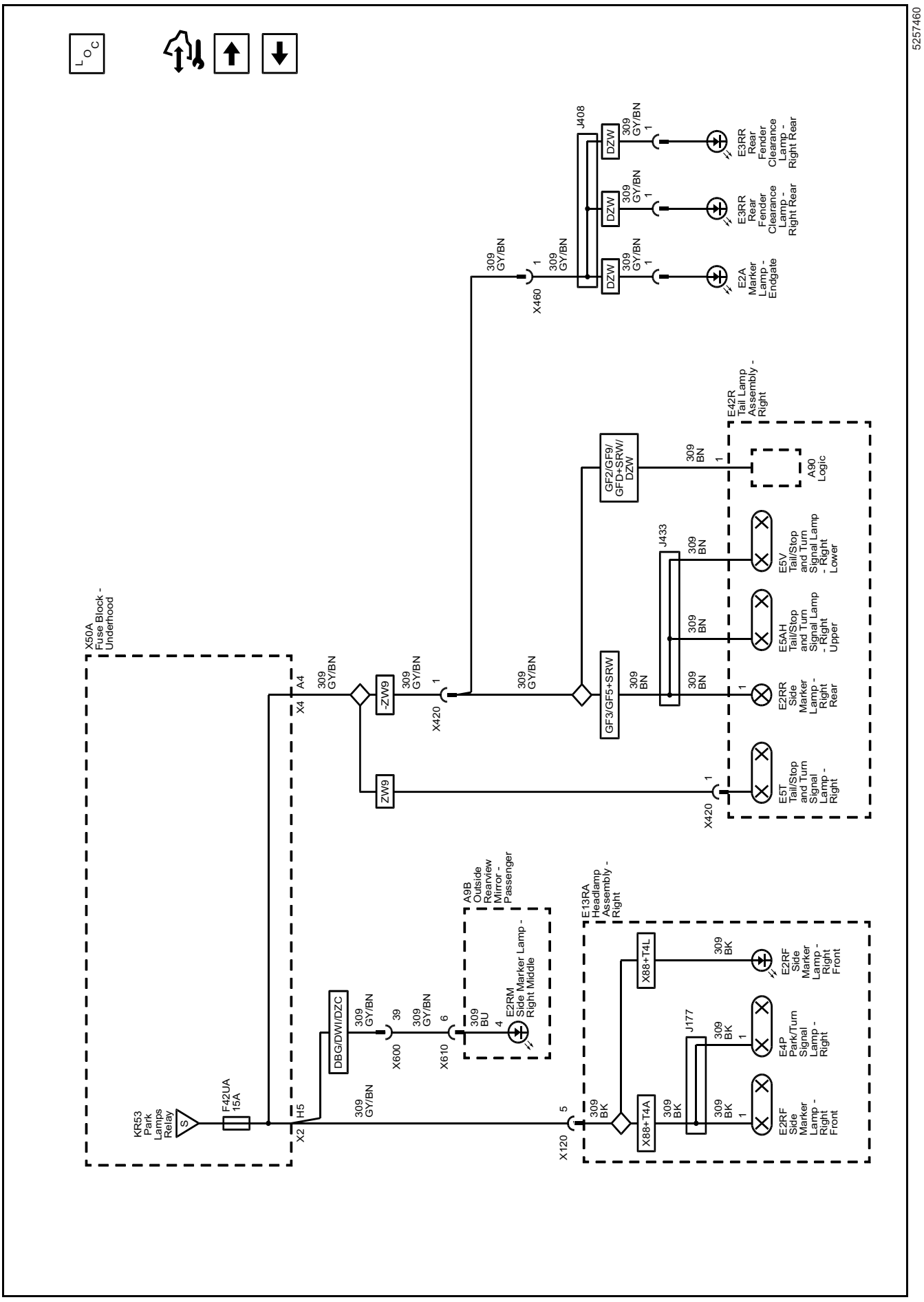

Power Distribution Schematics (F34UA, F41UA and F52UA Fuses (Z88) (1 of 2))

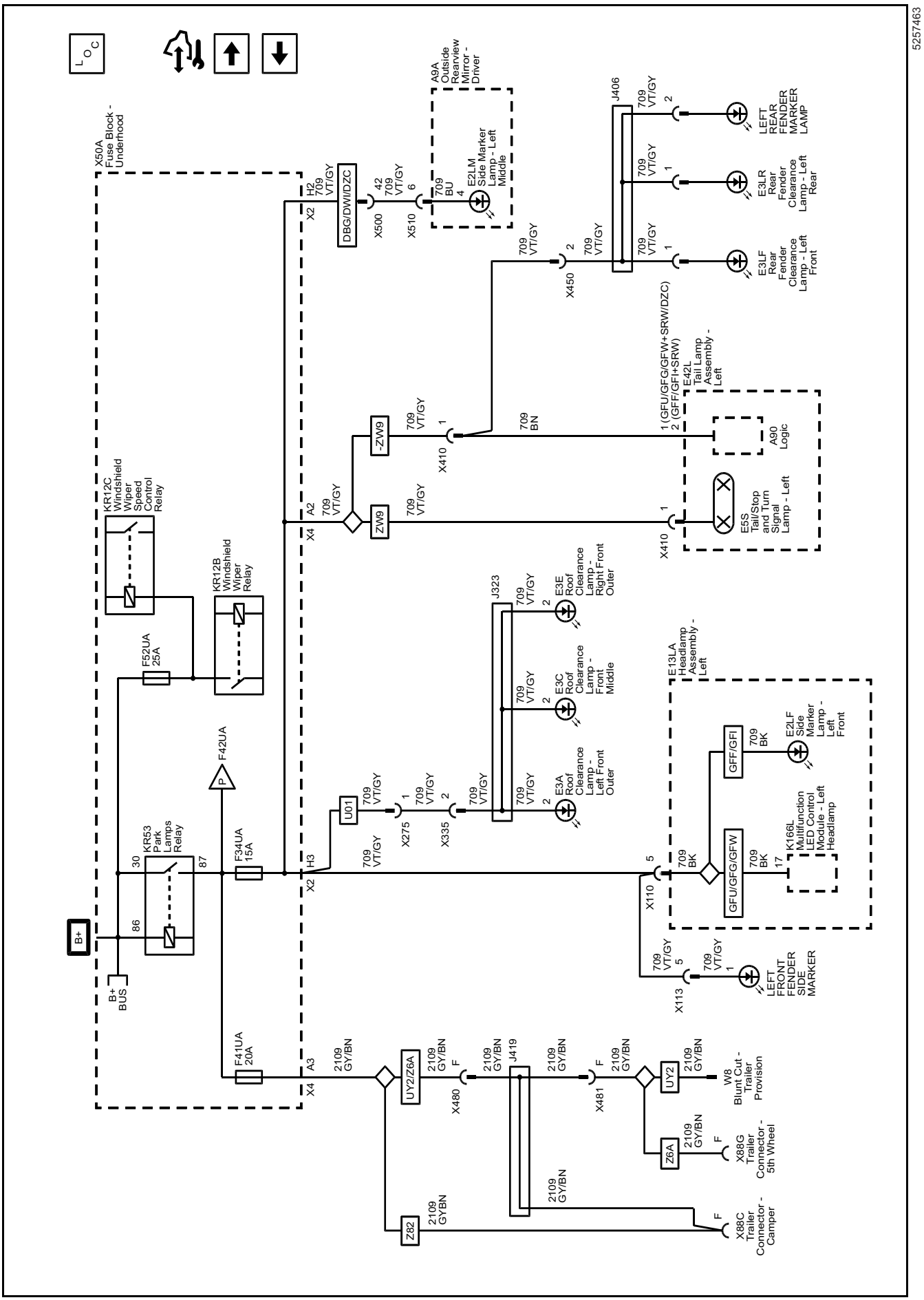

Power Distribution Schematics (F42UA Fuses (Z88) (2 of 2))

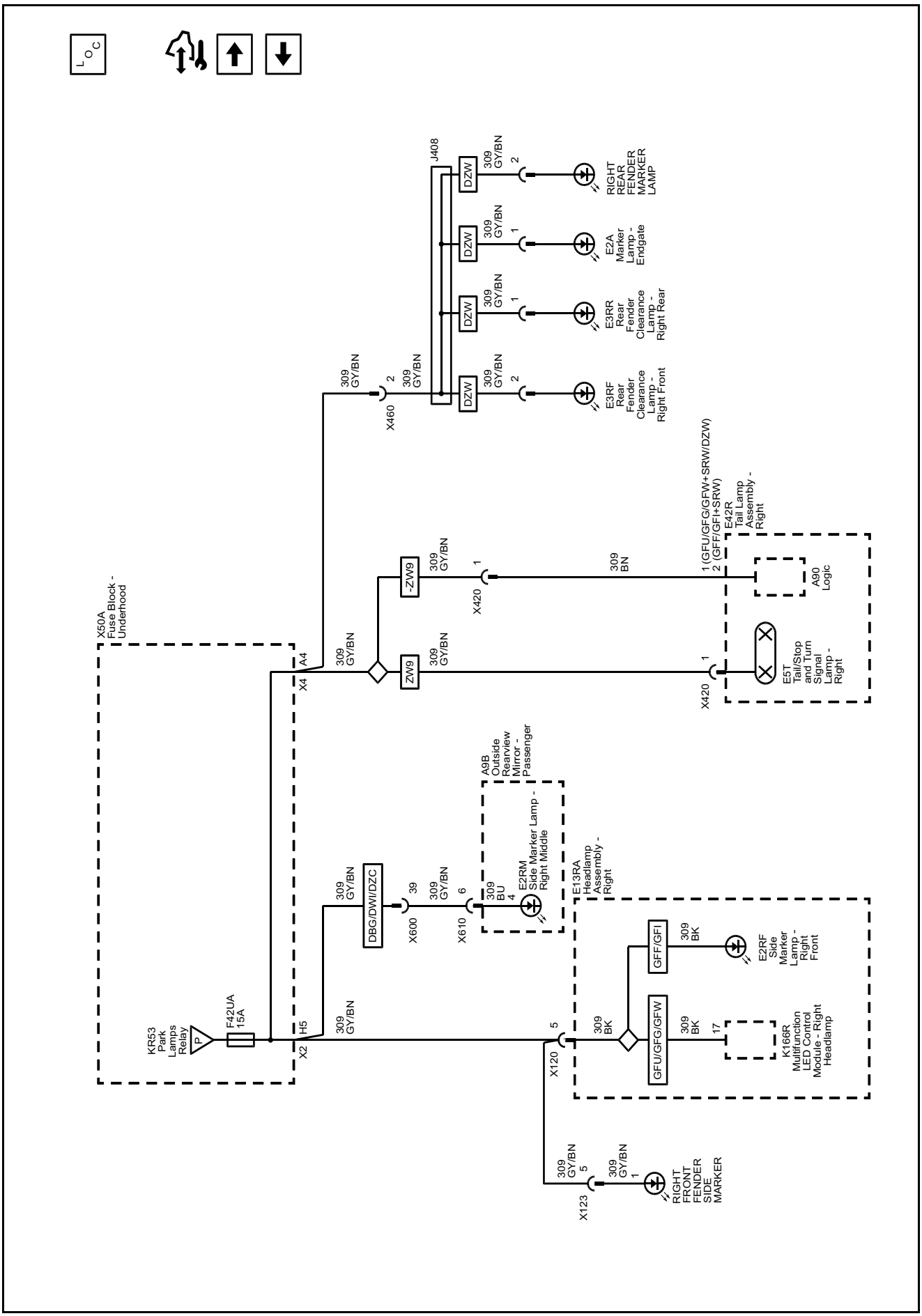

Power Distribution Schematics (F37UA, F38UA, F39UA, F40UA, F44UA, F46UA, F47UA and F48UA Fuses)

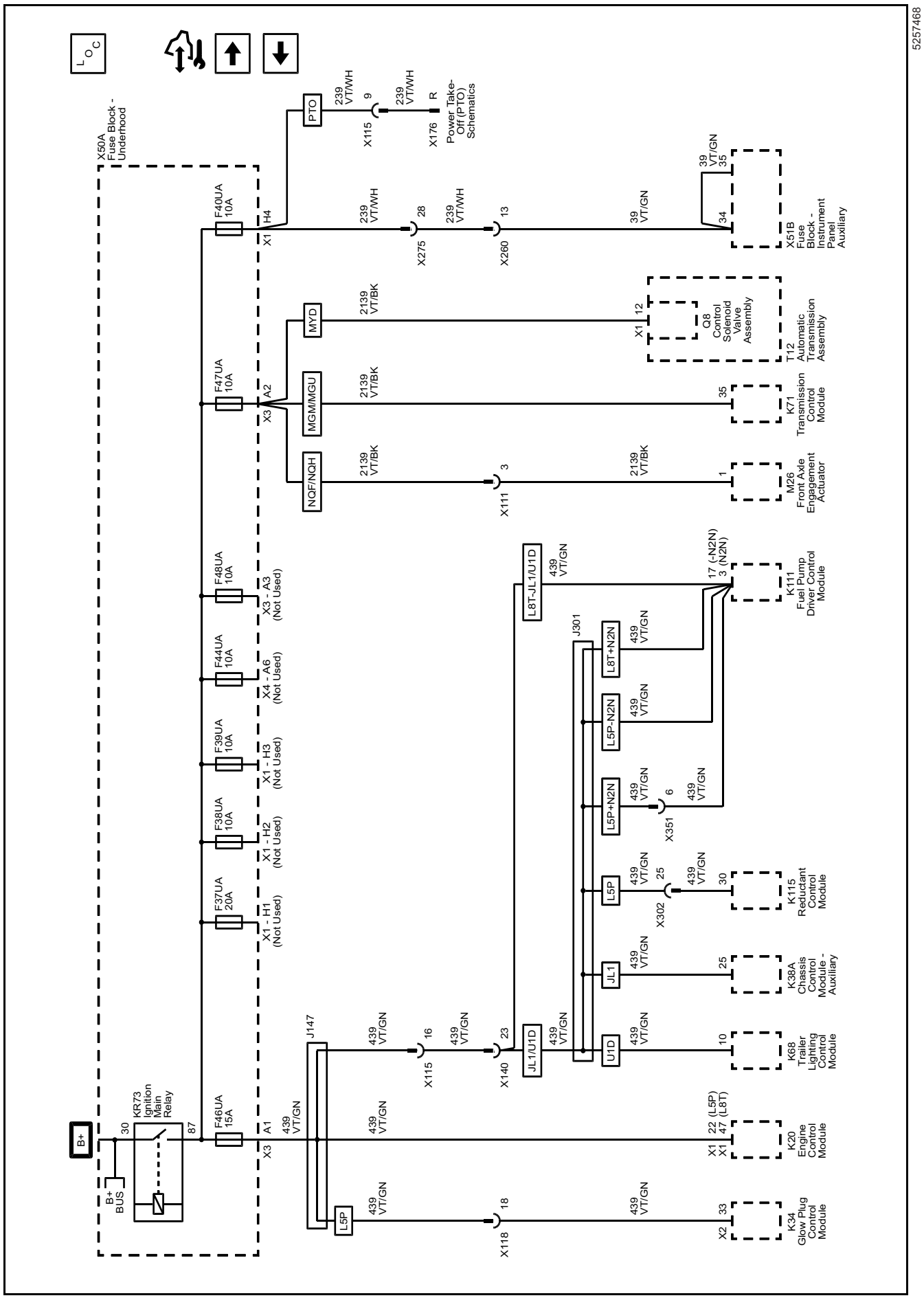

Power Distribution Schematics (F50UA, F54UA, F55UA, F58UA, F69UA, and F80UA Fuses)

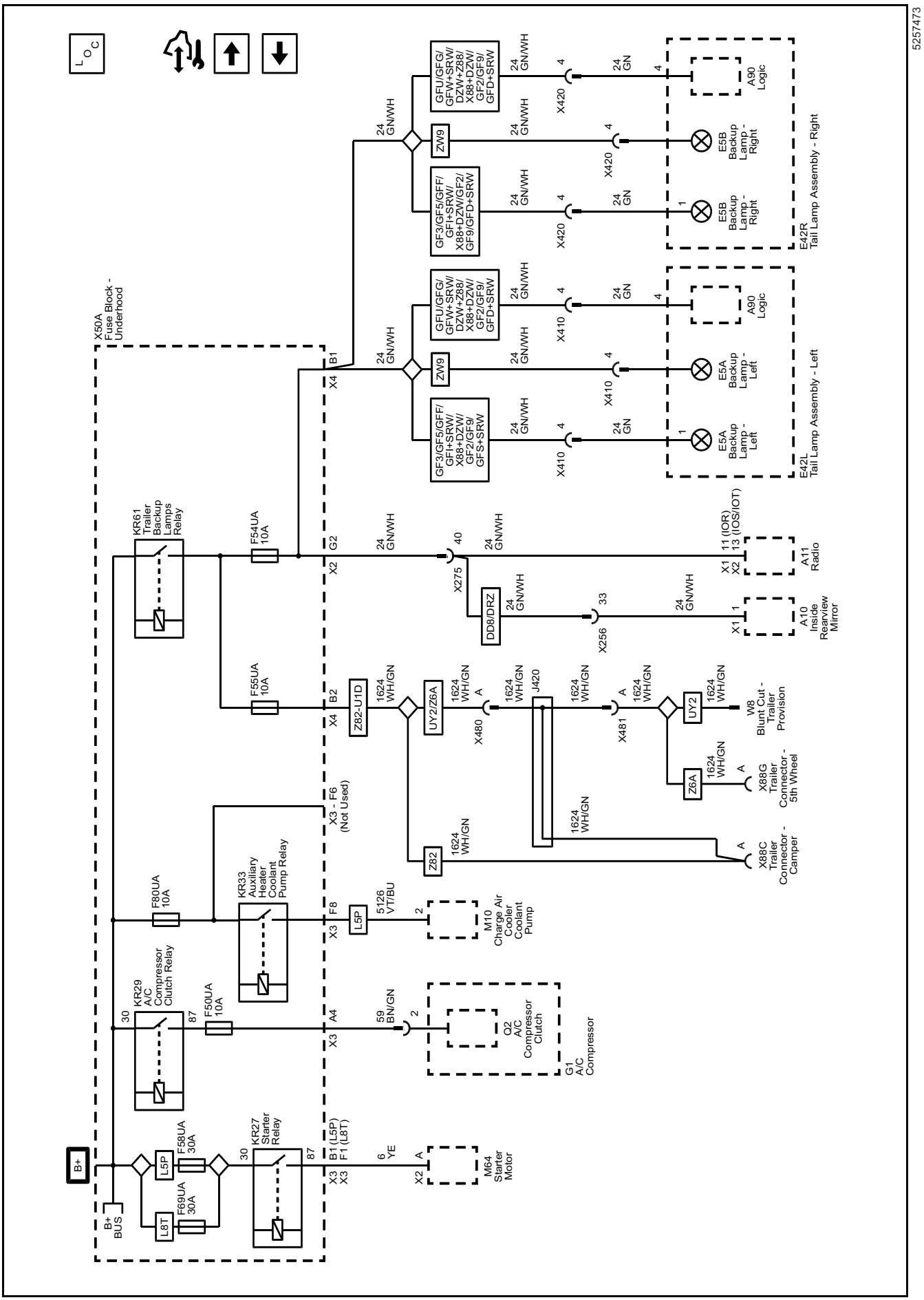

Power Distribution Schematics (F60UA, F67UA, F85Ua, F86UA, F88UA, F89Ua and F92UA Fuses)

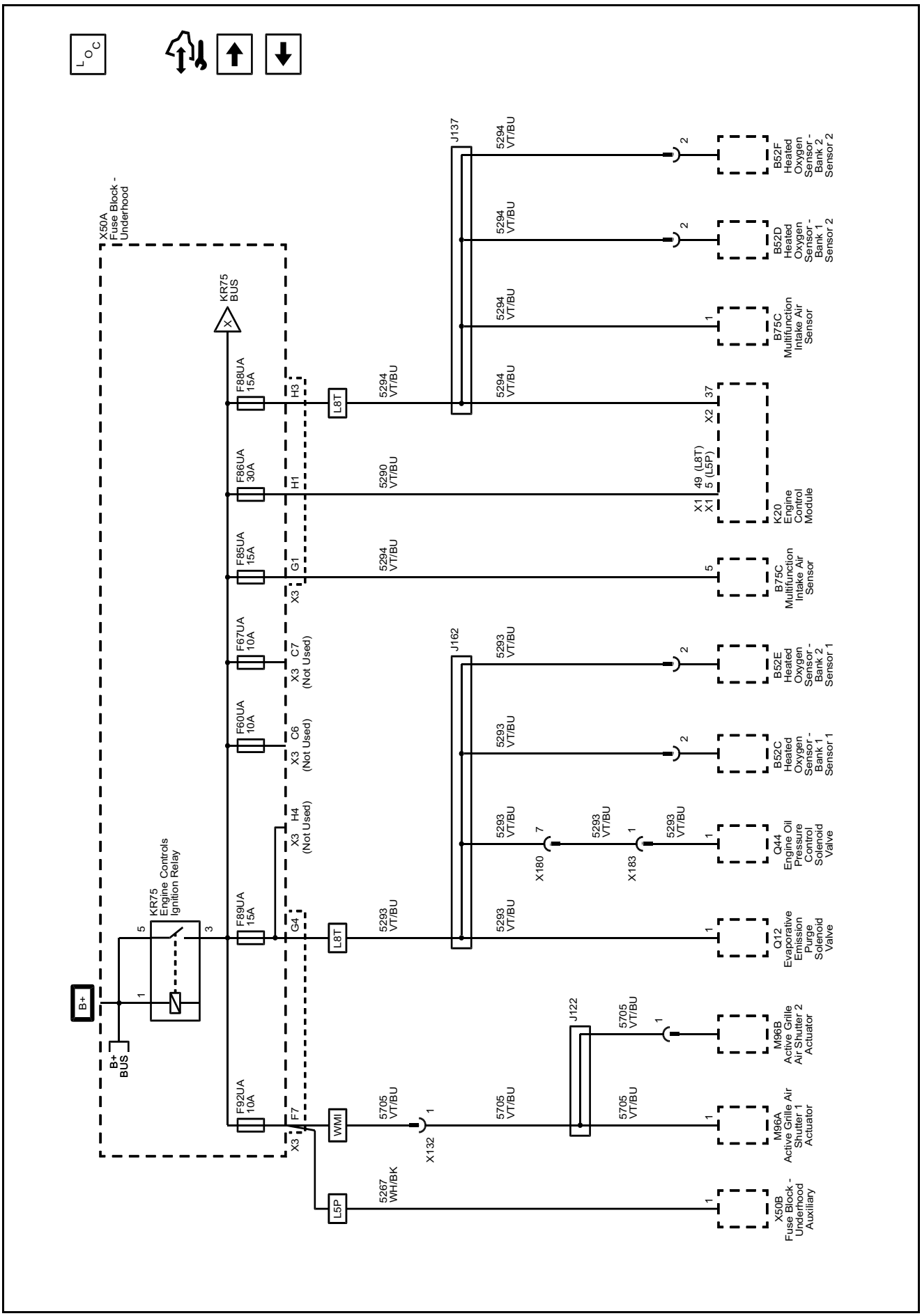

Power Distribution Schematics (F87UA, F90Ua and F91UA Fuses)

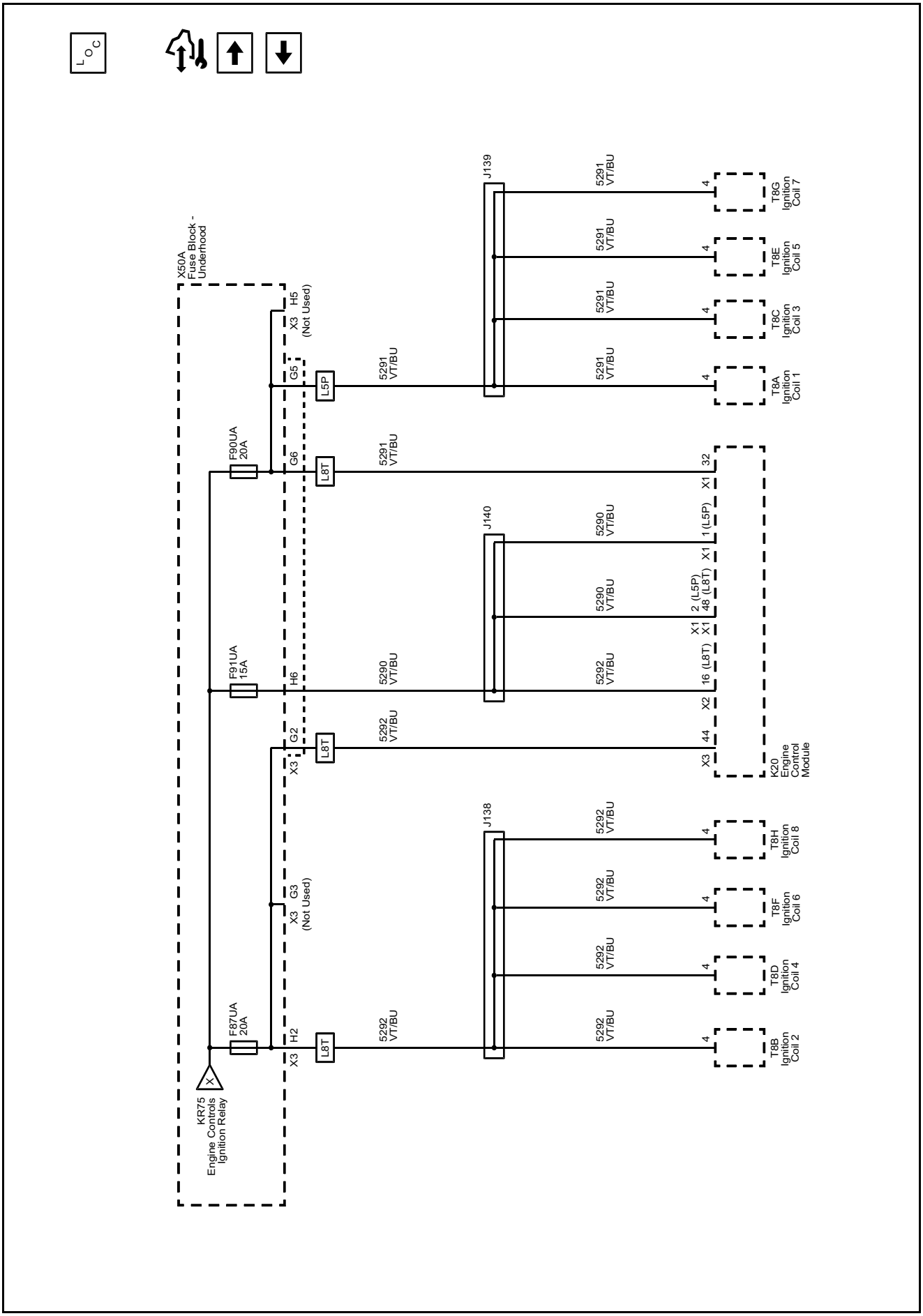

Power Distribution Schematics (Auxiliary Underhood Fuse Block (L5P) (1 of 2))

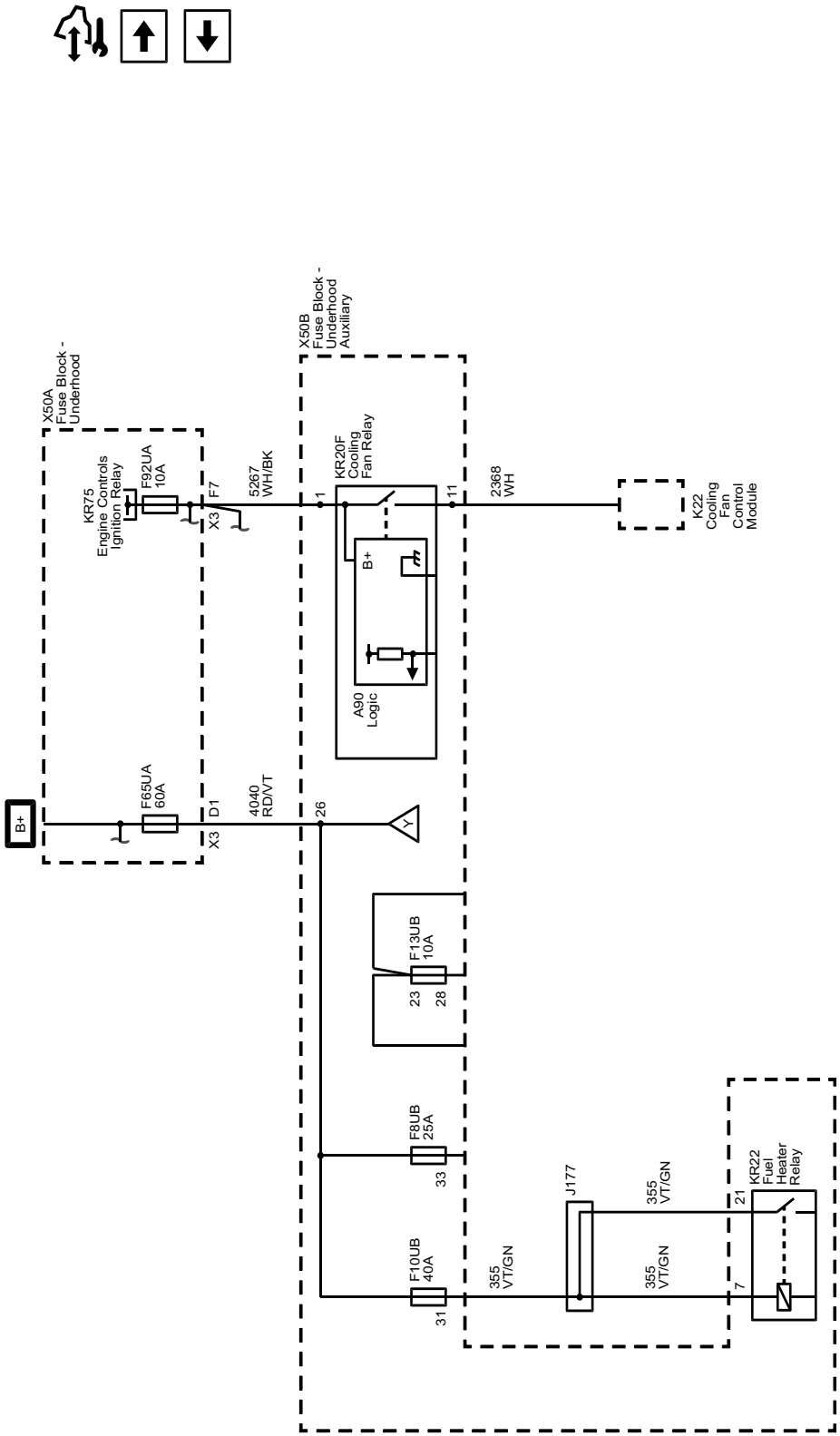

Power Distribution Schematics (Auxiliary Underhood Fuse Block (L5P) (2 of 2))

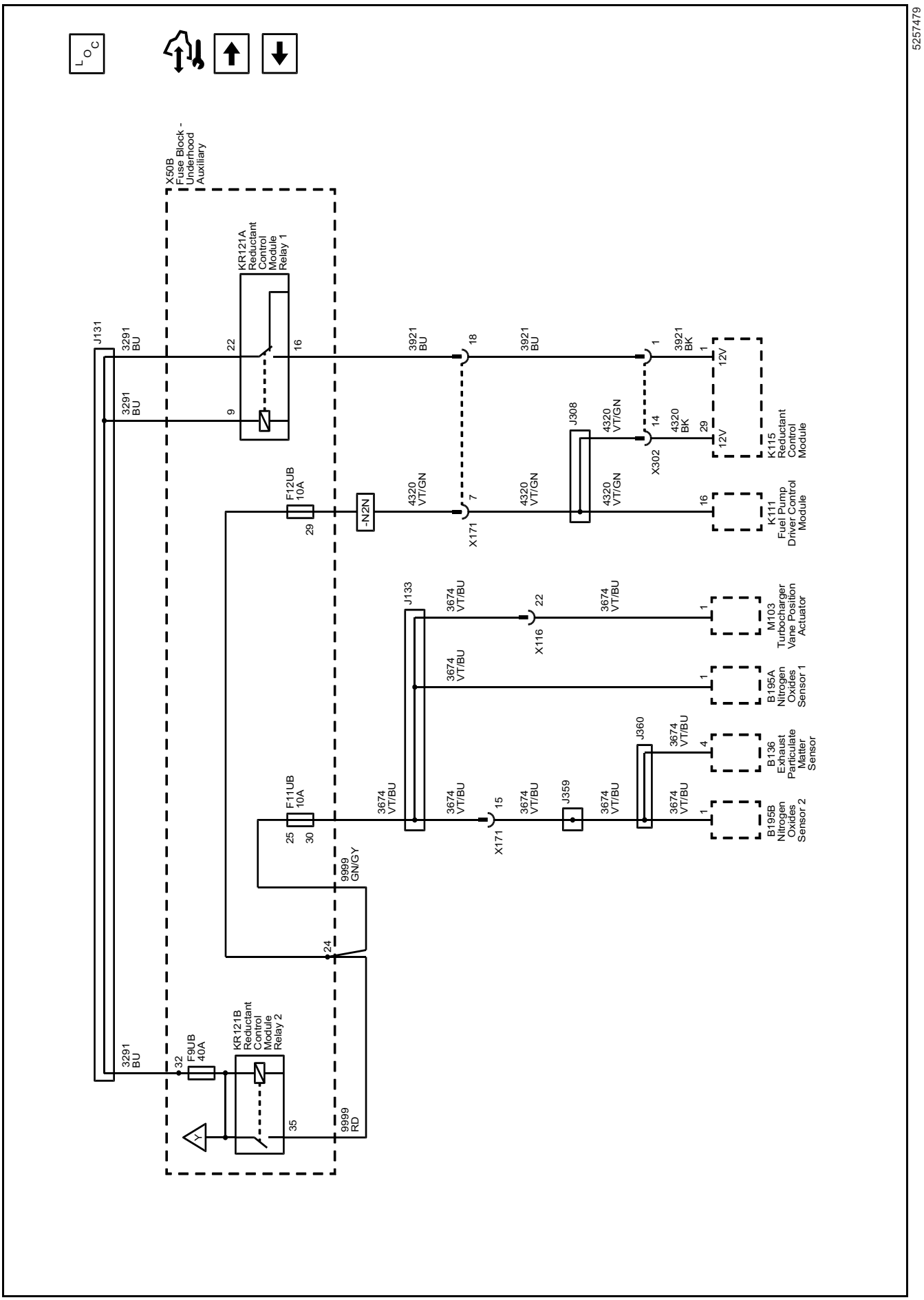

Power Distribution Schematics (Instrument Panel Fuse Block Bussing – Left)

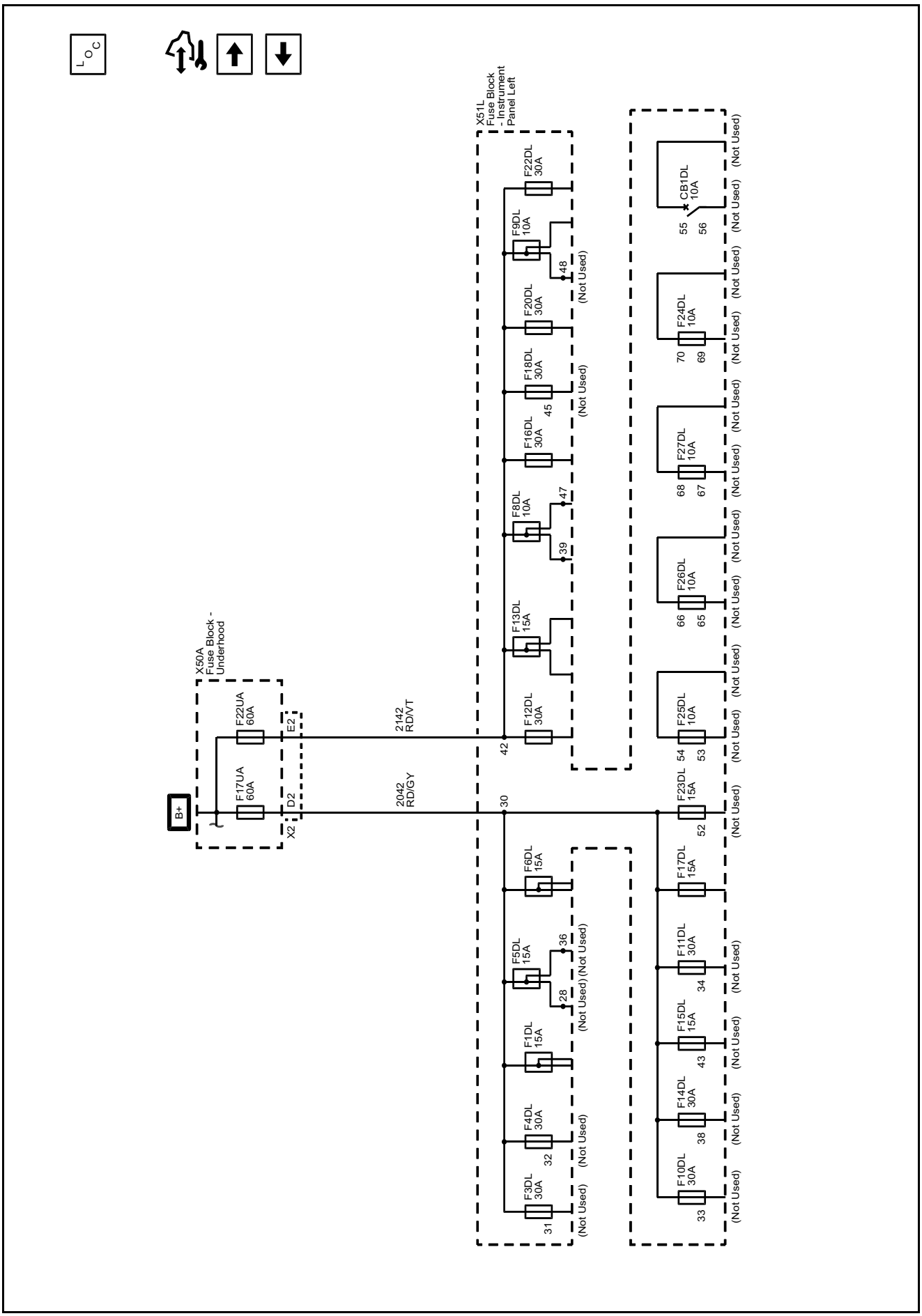
5257481
X50A
Fuse Block -
Underhood
F22UA
60A
F17UA
60A
E2
D2
X2
B+
2142
RD/VT
2042
RD/GY
X51L
Fuse Block
- Instrument
Panel Left
30
42
F12DL
30A
F13DL
15A
F8DL
10A
F9DL
10A
F22DL
30A
F16DL
30A
F20DL
30A
F18DL
30A
F6DL
15A
F5DL
15A
F1DL
15A
F4DL
30A
F3DL
30A
F25DL
10A
F26DL
10A
F27DL
10A
F24DL
10A
CB1DL
10A
F23DL
15A
F17DL
15A
F11DL
30A
F15DL
15A
F14DL
30A
F10DL
30A
(Not Used)
(Not Used)
(Not Used)

Power Distribution Schematics (F1DL, F8DL, F9DL, F12DL, F16DI, F17DL, F20DL and F22DL Fuses)

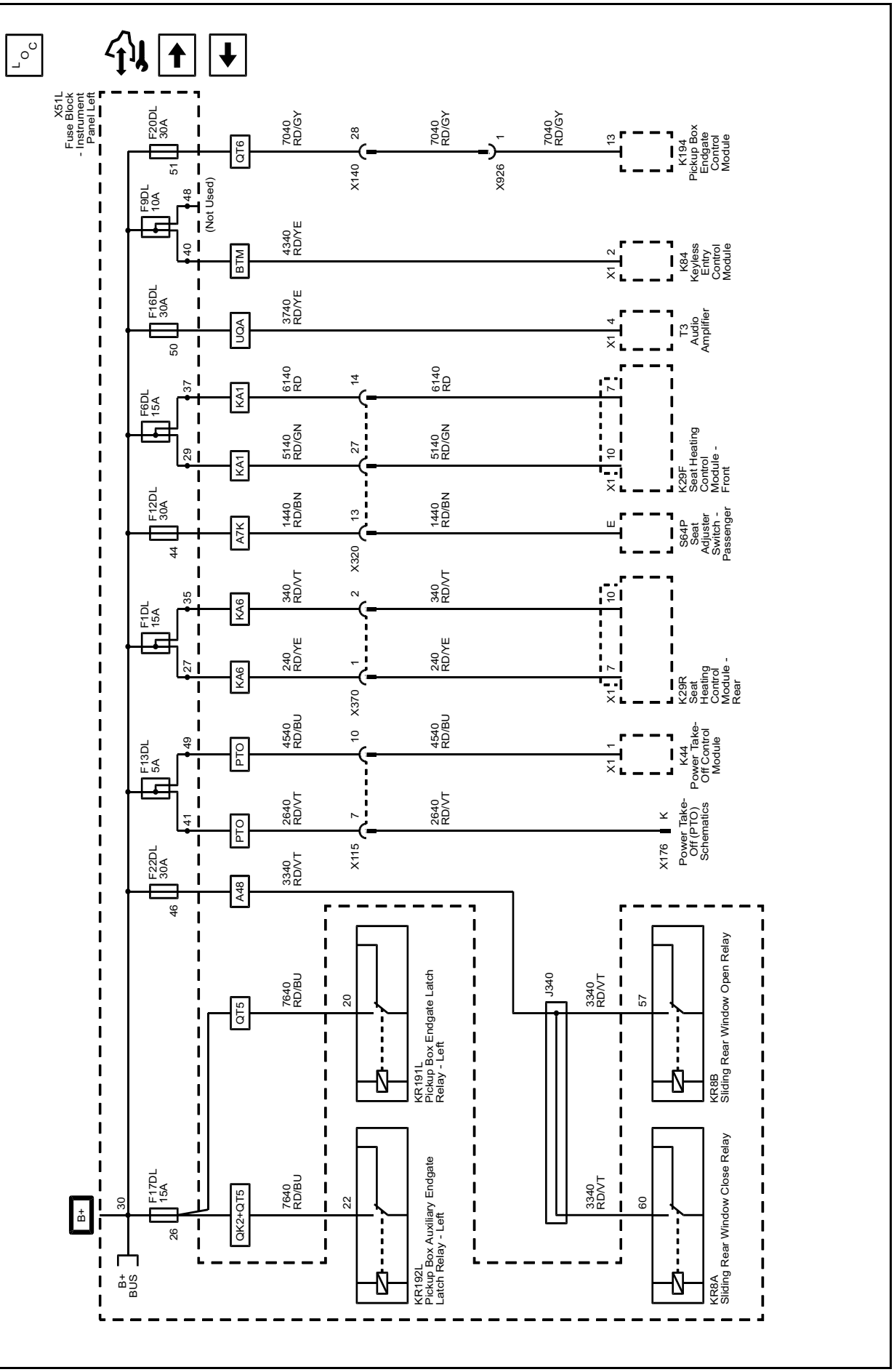

Power Distribution Schematics (Auxiliary Instrument Panel Fuse Block (9L7))

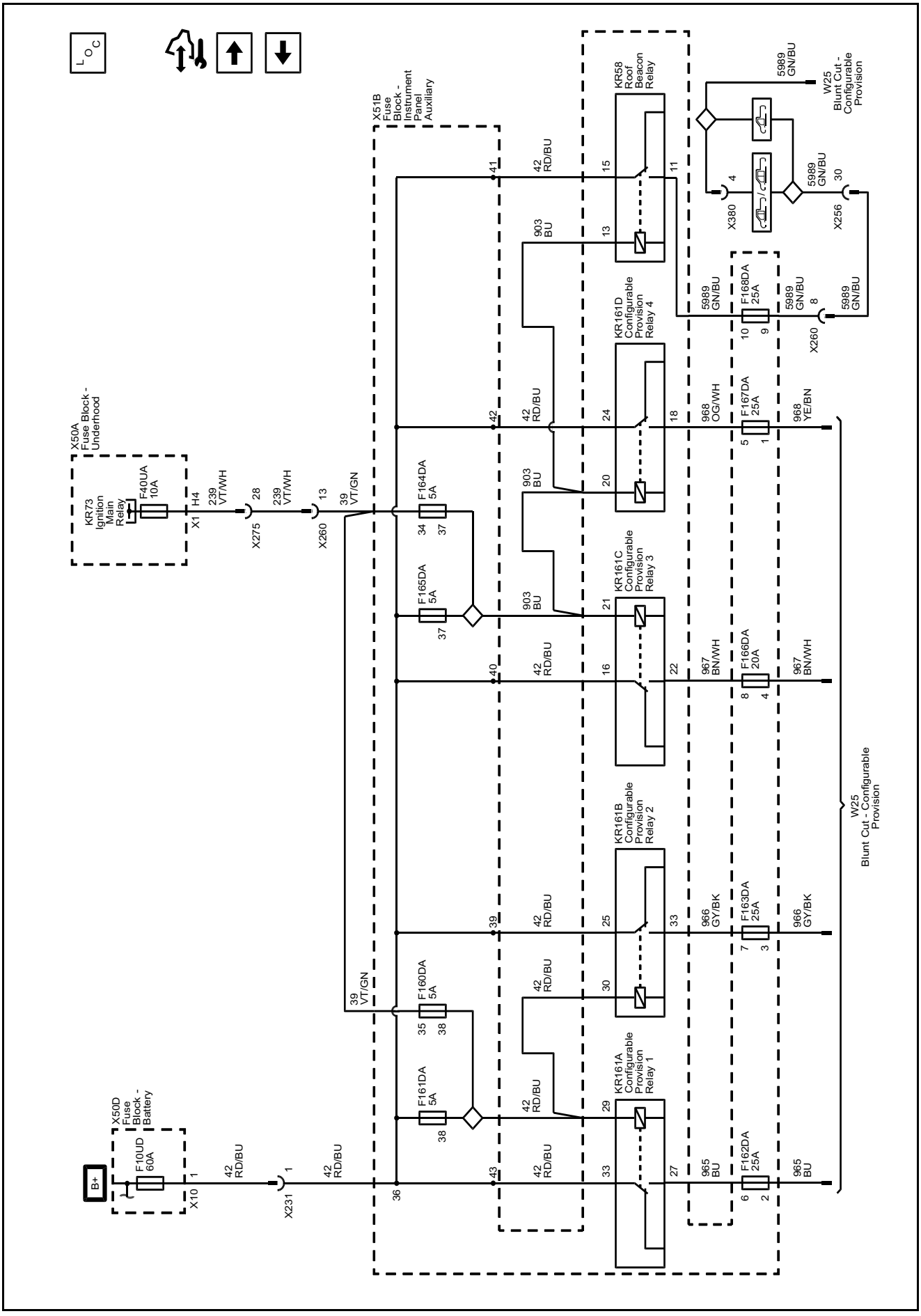

Power Distribution Schematics (Instrument Panel Fuse Block Bussing – Right (1 of 2))

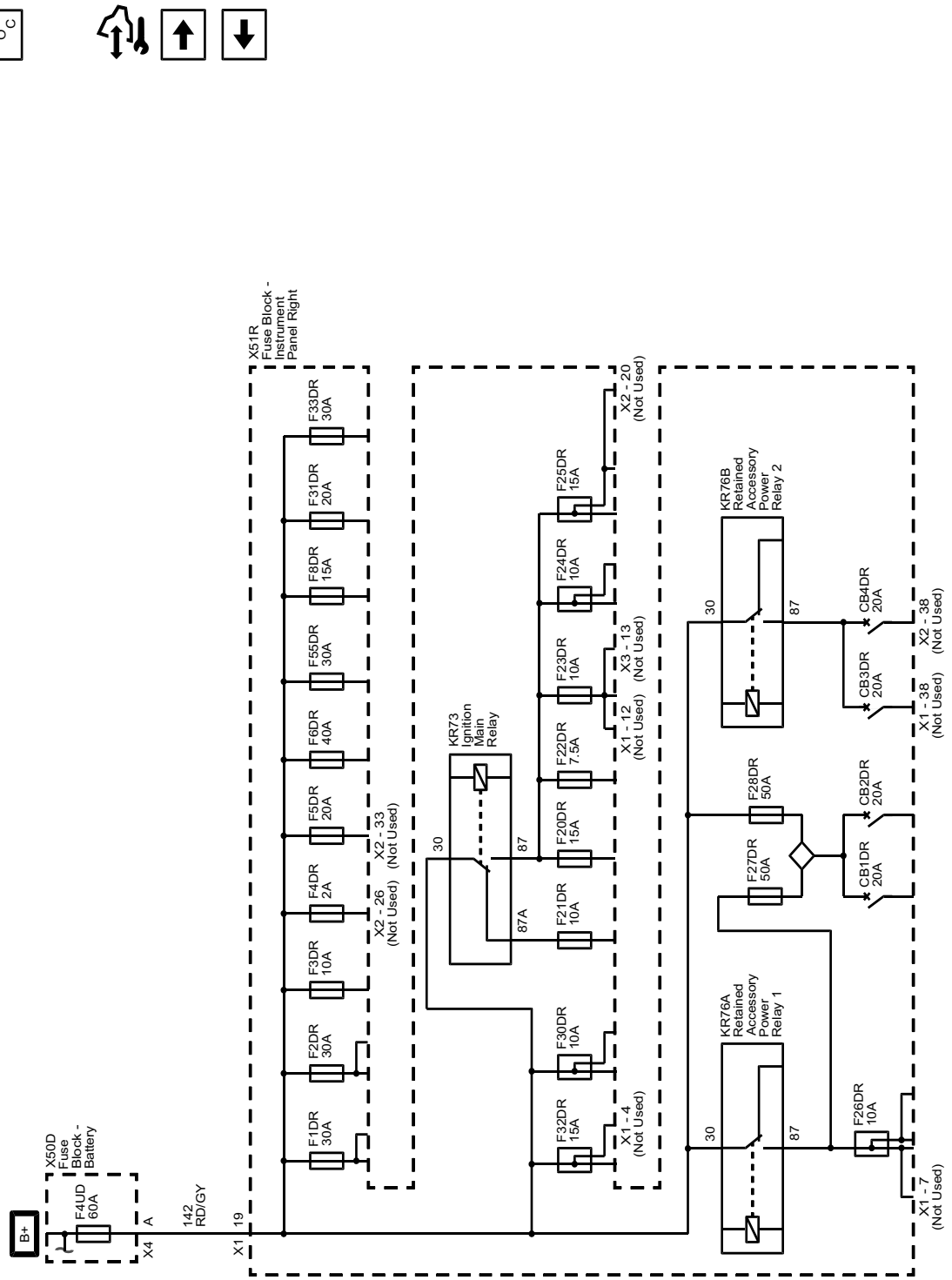

Power Distribution Schematics (Instrument Panel Fuse Block Bussing – Right (2 of 2))

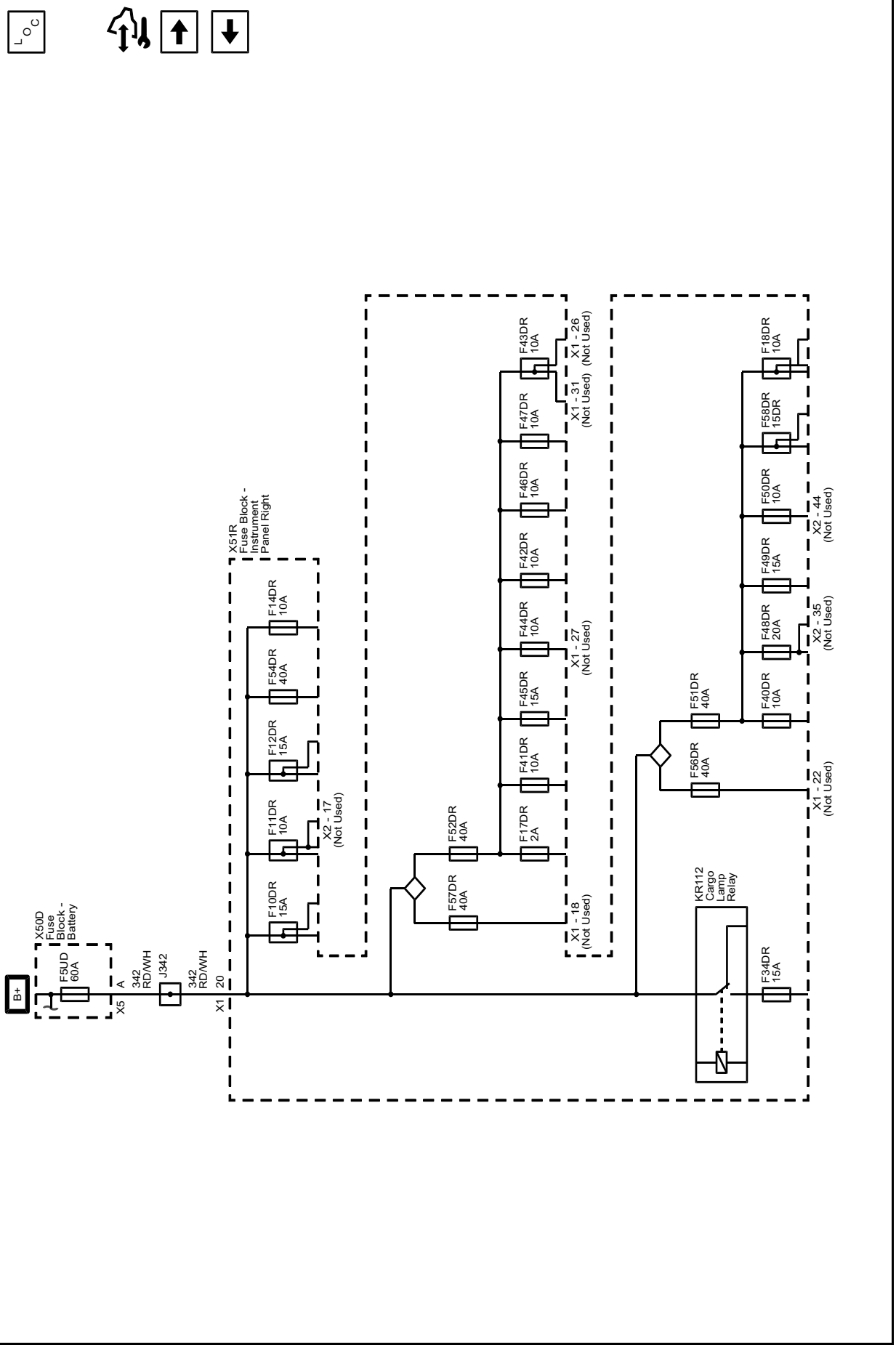

Power Distribution Schematics (F1DR, F2DR, F3DR, F6DR, F8DR, F31DR, F33DR, and F55DR Fuses)

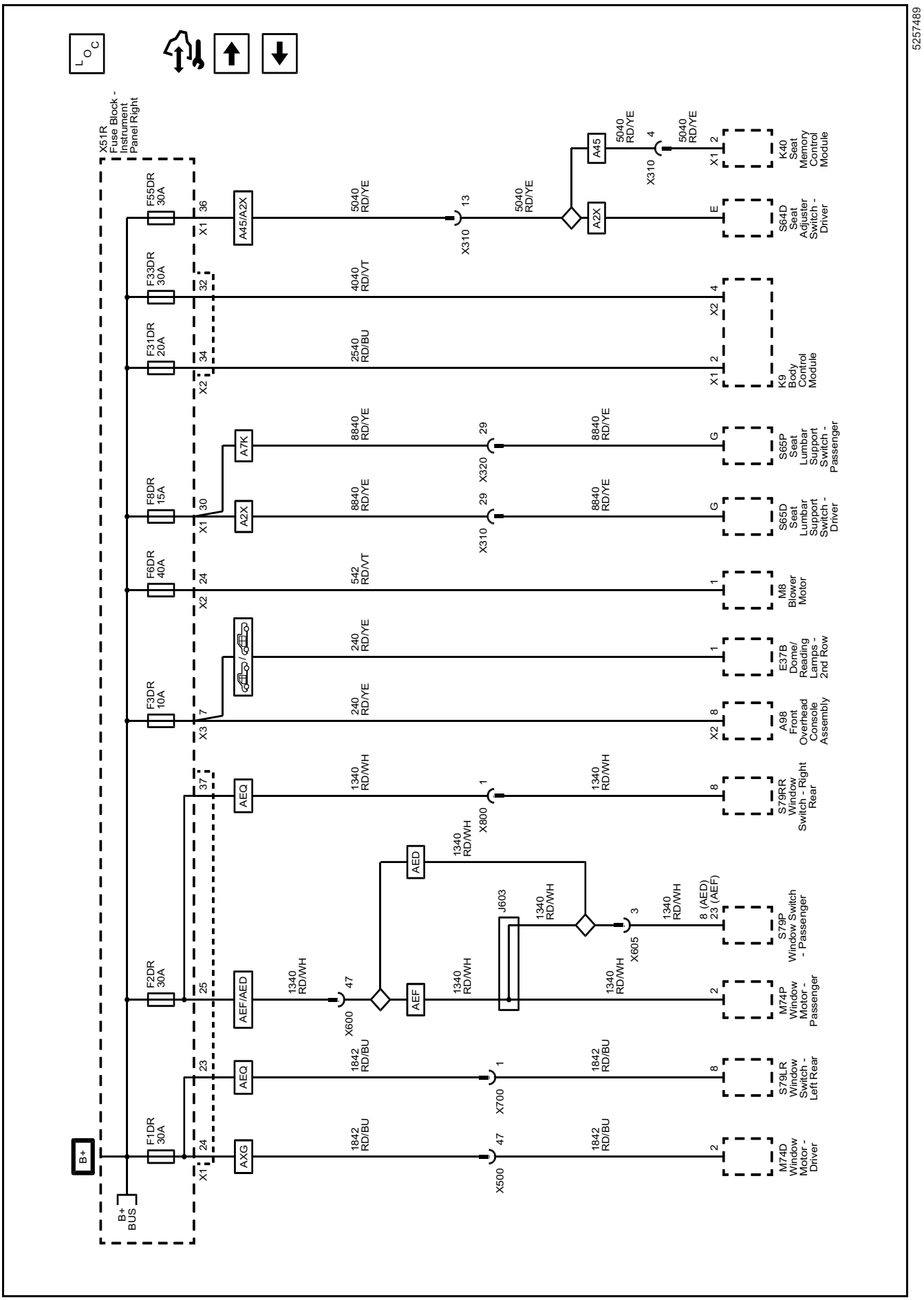

Power Distribution Schematics (CB1DR and CB2DR Circuit Breakers, F26DR, F27DR, F28DR, F30DR, and F32DR Fuses)

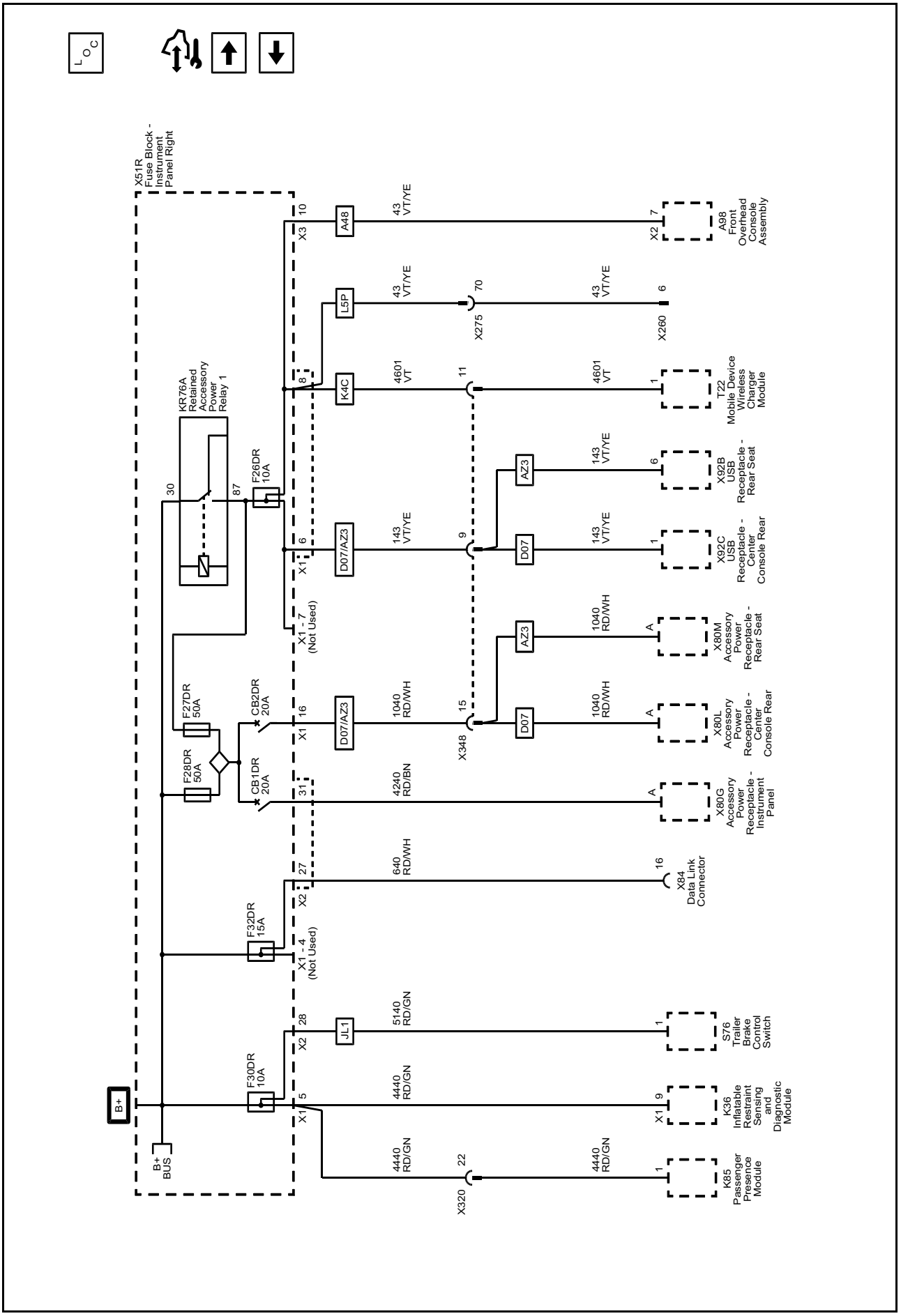

Power Distribution Schematics (F20DR, F21DR, F22DR, F23DR, F24DR and F25DR Fuses)

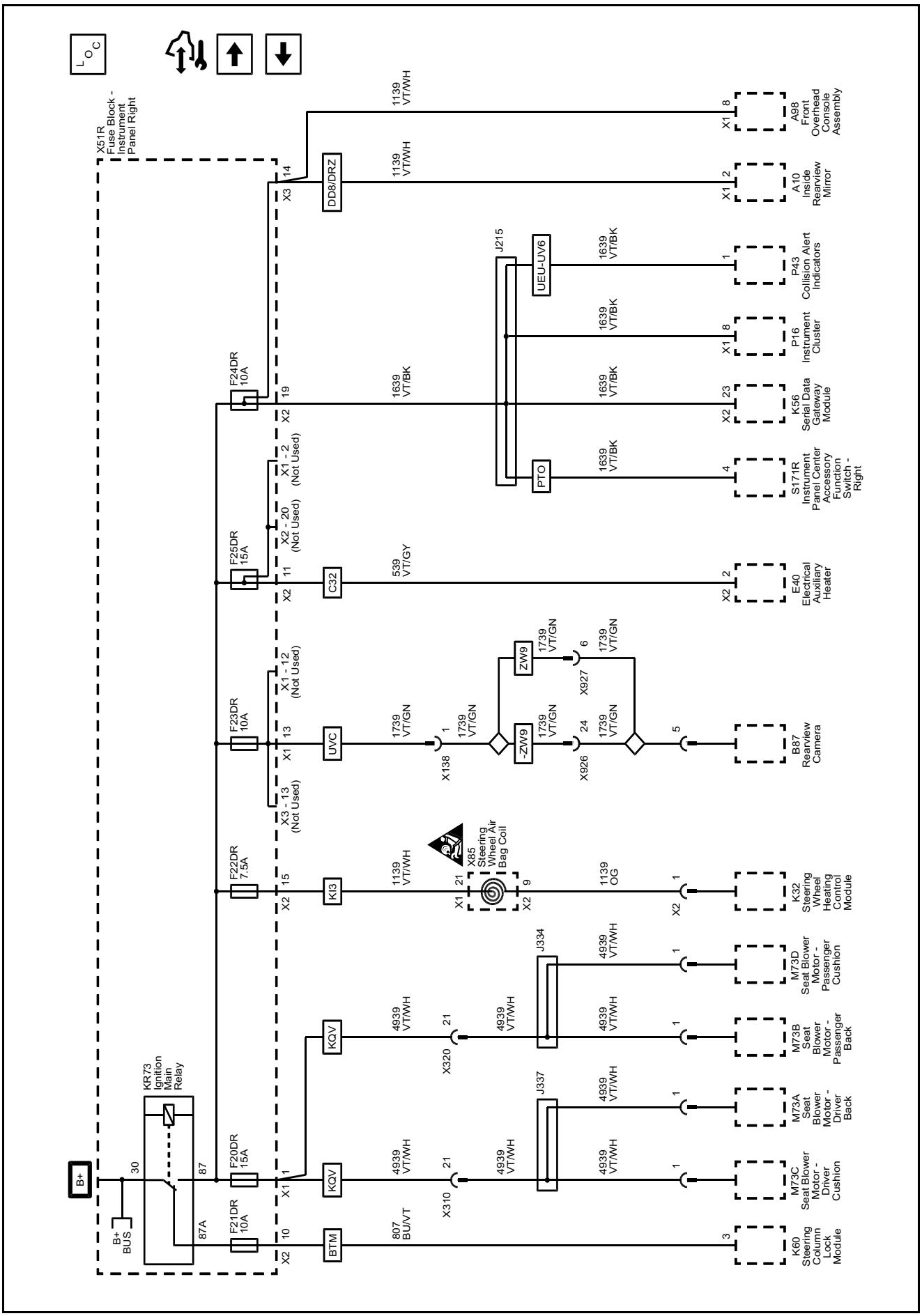

Power Distribution Schematics (F18DR, F34DR, F40DR, F48DR, F49DR, F51DR and F58DR Fuses)

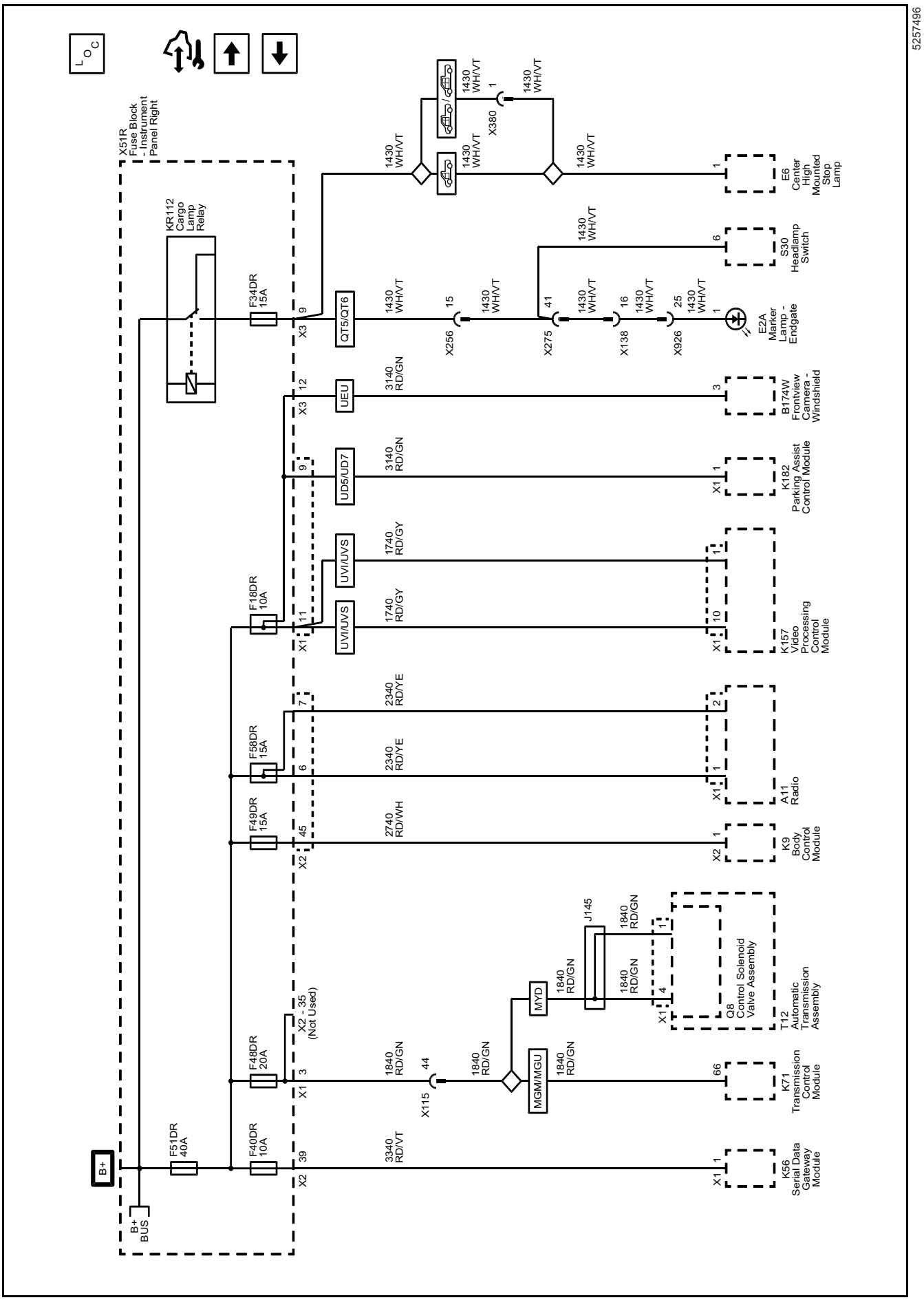

Power Distribution Schematics (F17DR, F41DR, F42DR, F45DR, F46DR, F47DR and F52DR Fuses)

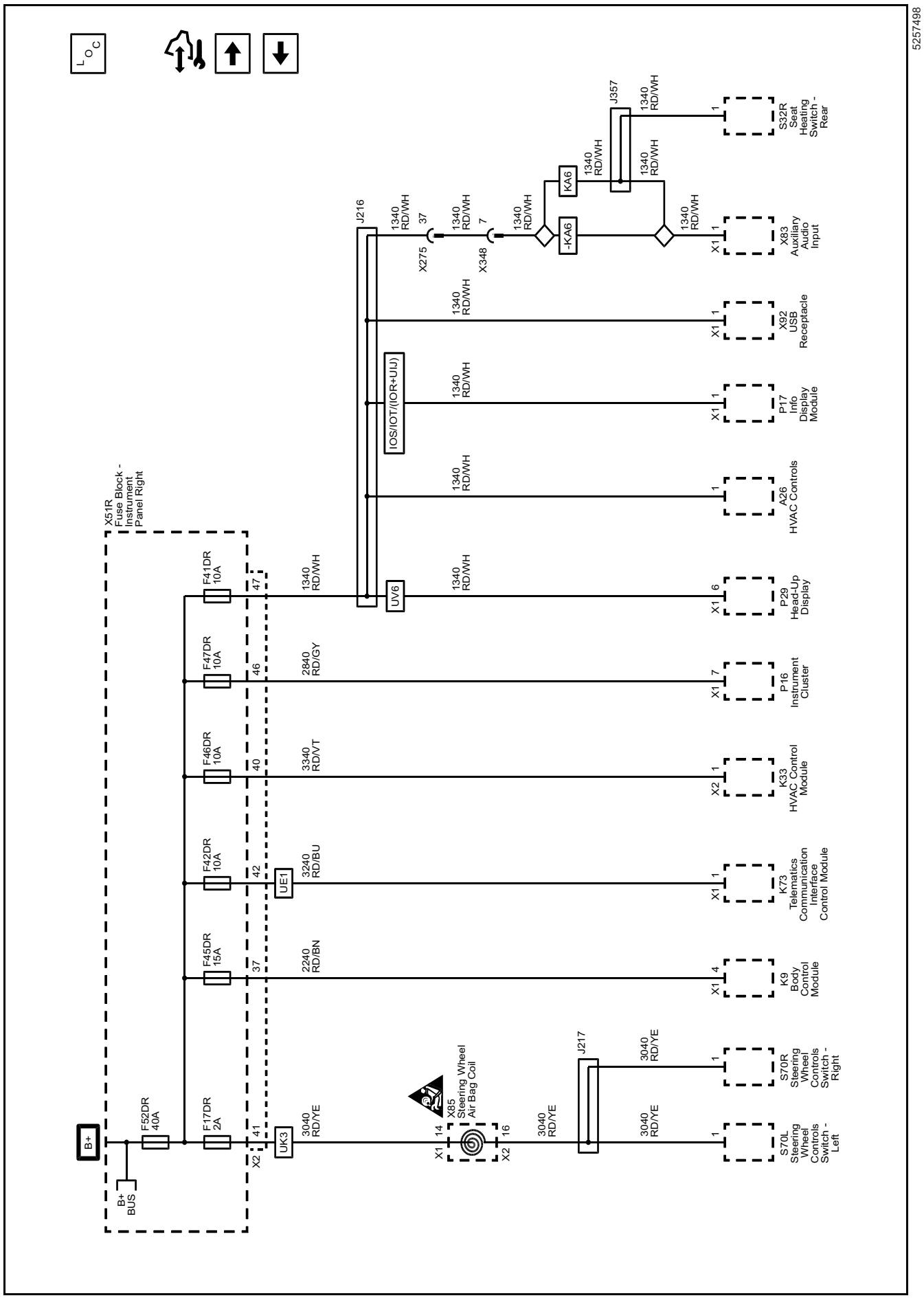

Power Distribution Schematics (F10DR, F11DR, F12DR, F14DR, F19DR and F54DR Fuses)

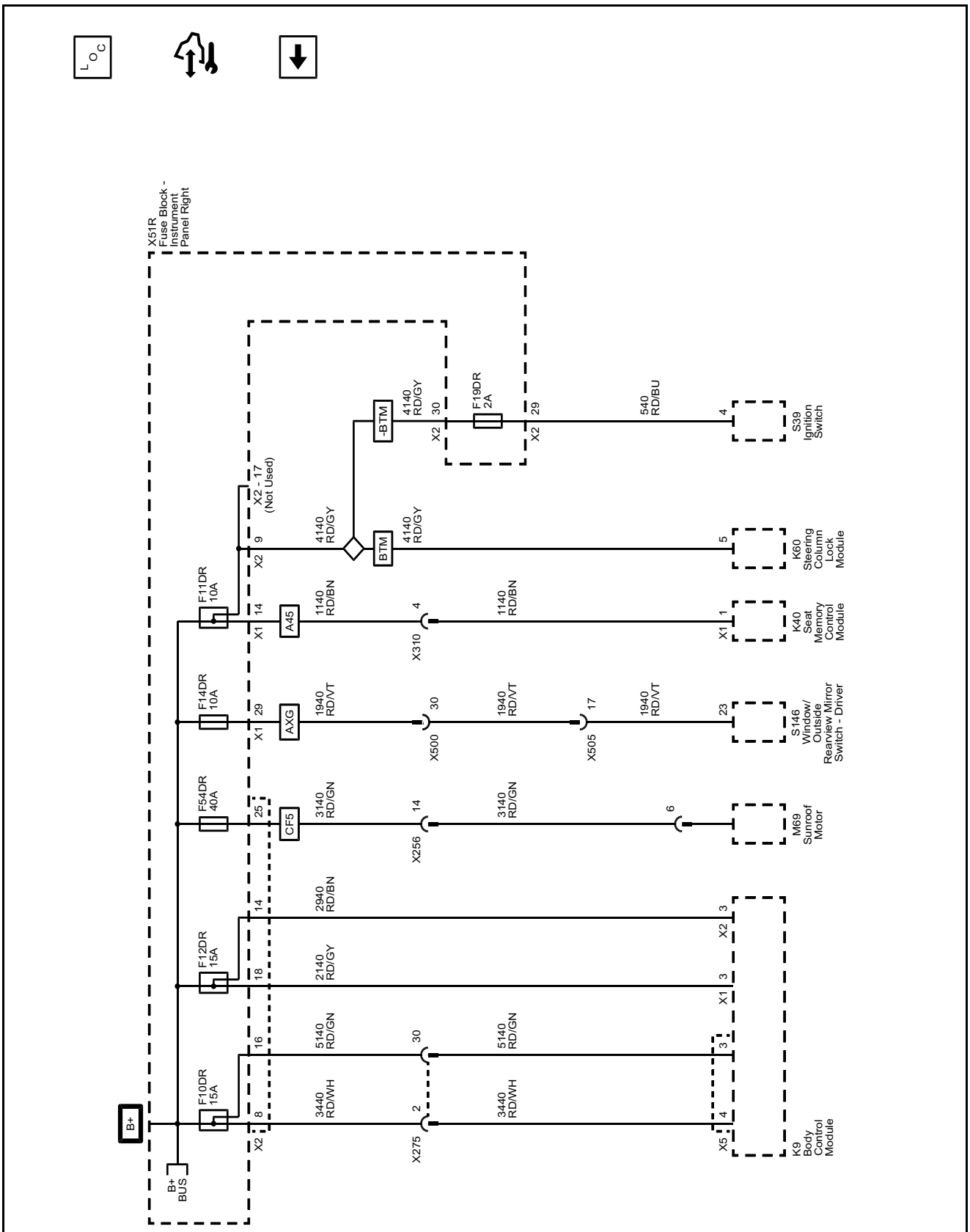

Power Moding Schematics (Ignition Mode Switch (BTM))

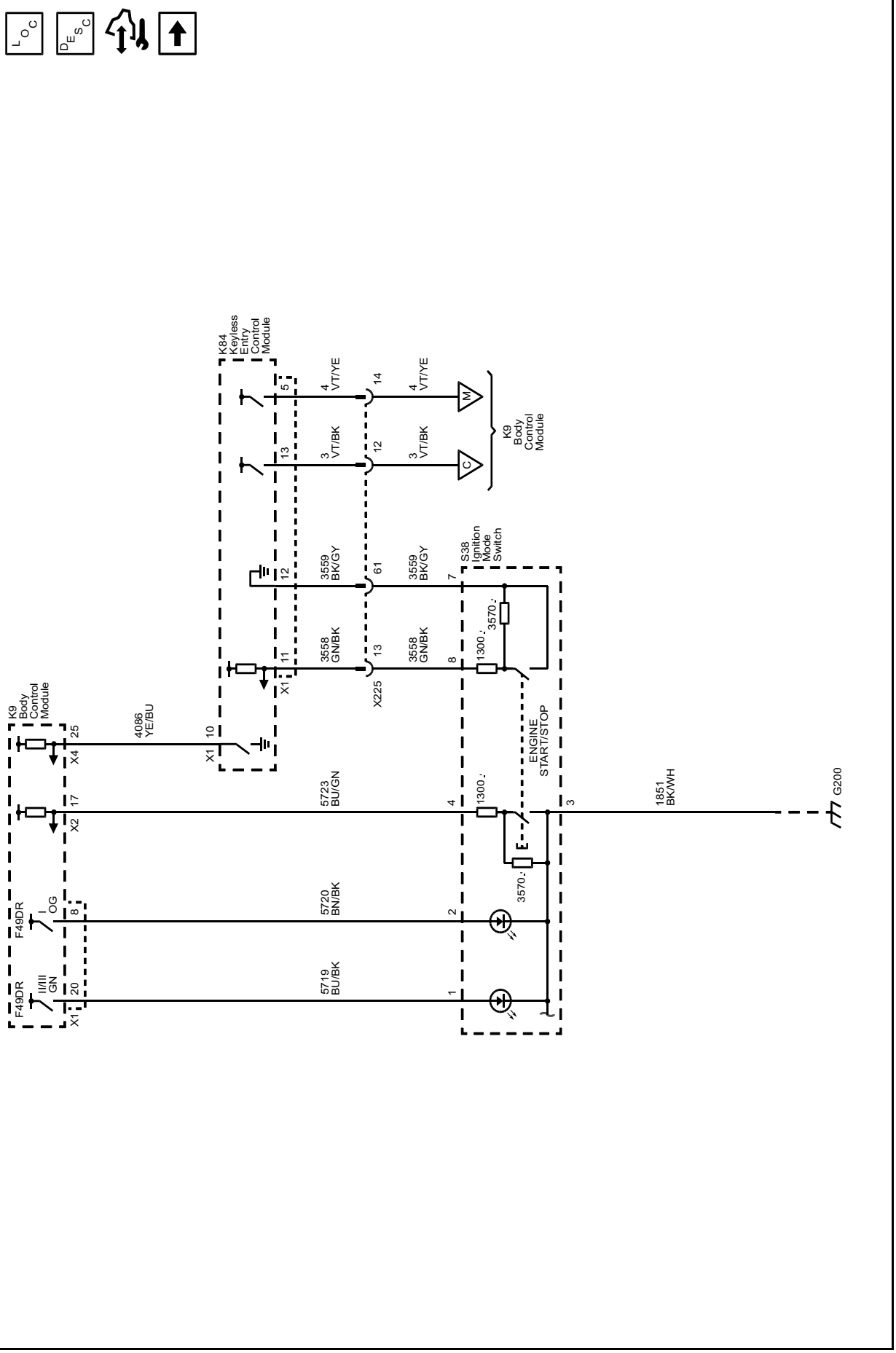

Power Moding Schematics (Ignition switch (-BTM))

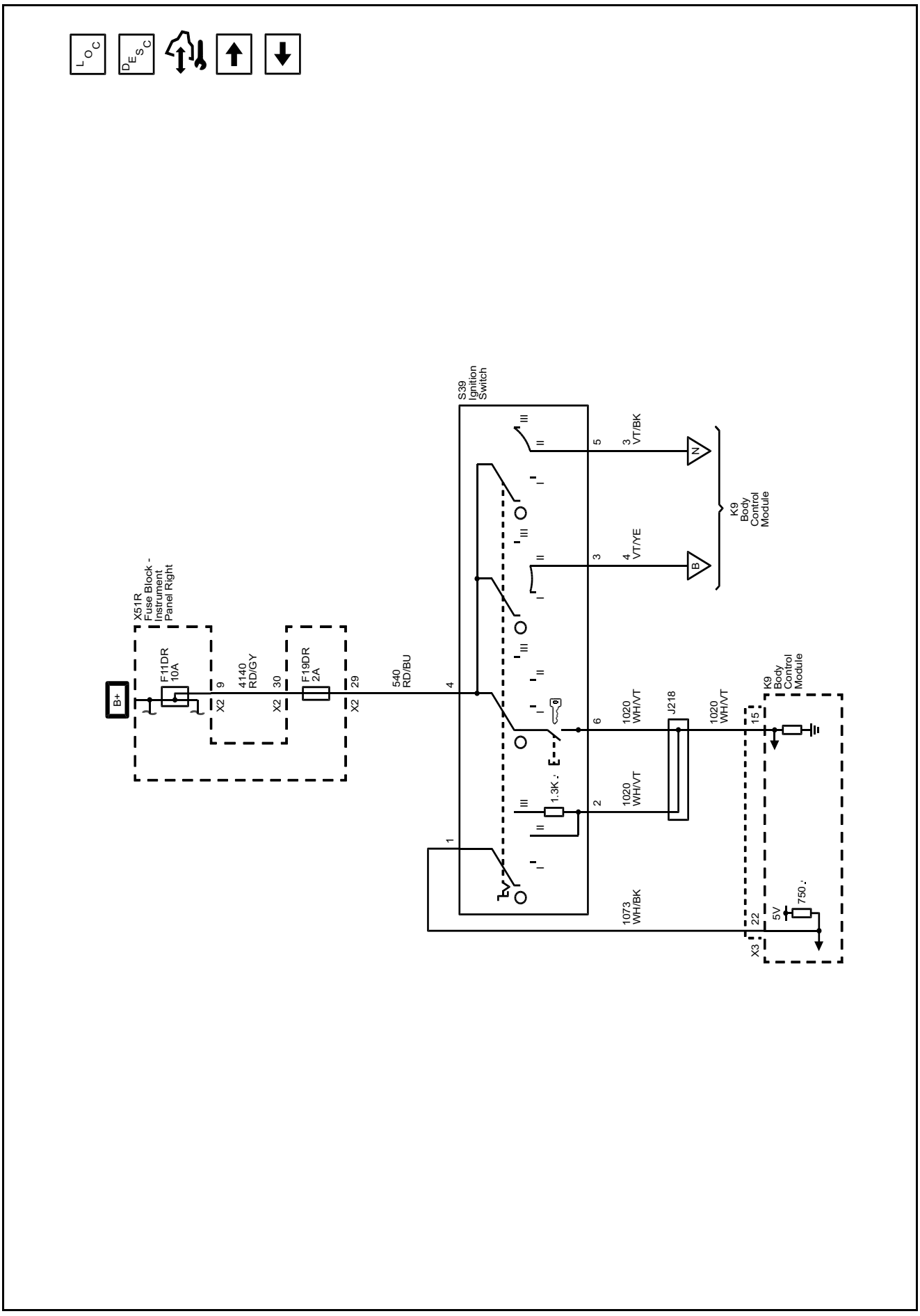

Power Moding Schematics (Accessory Wakeup)

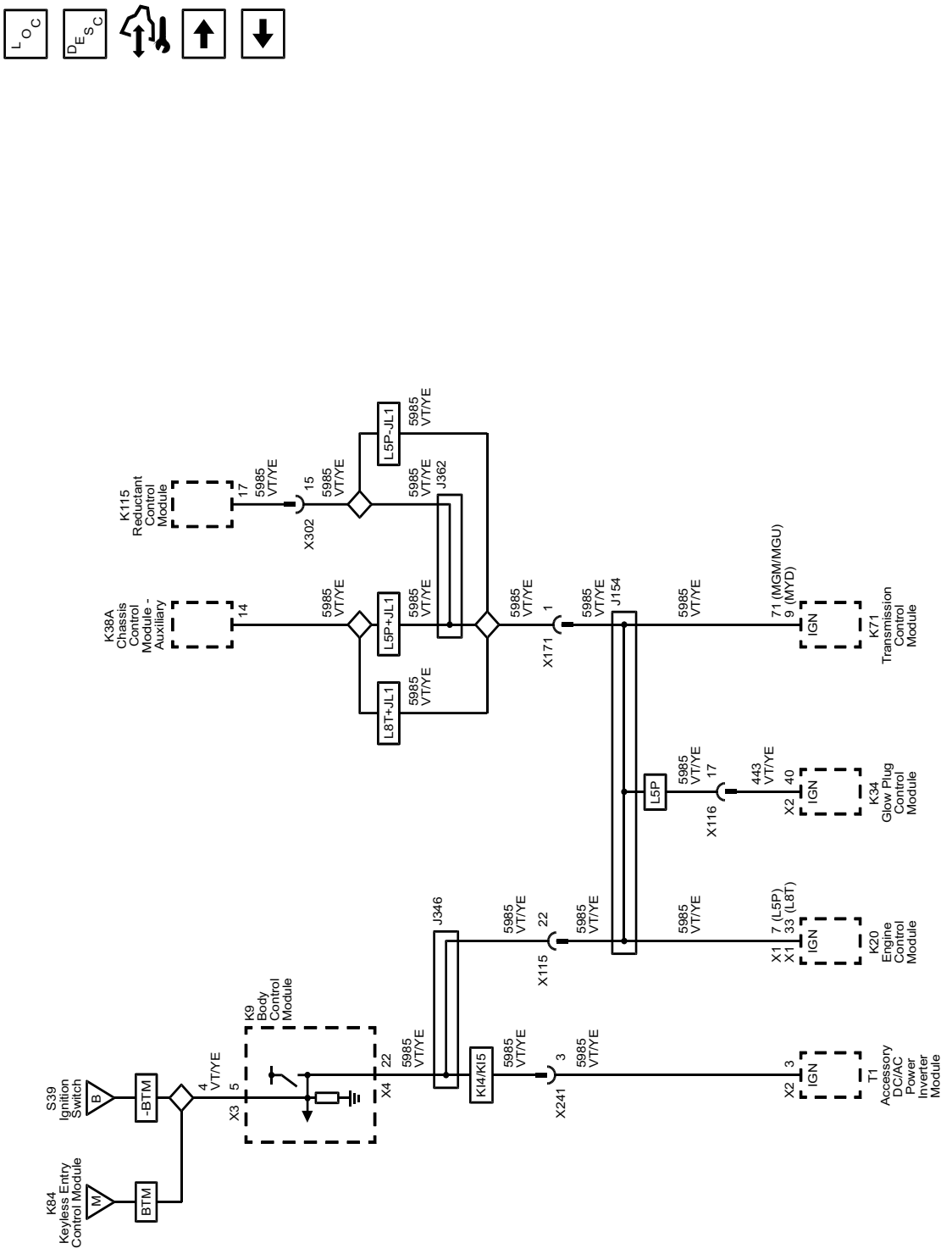

Power Moding Schematics (Ignition Main Relay)

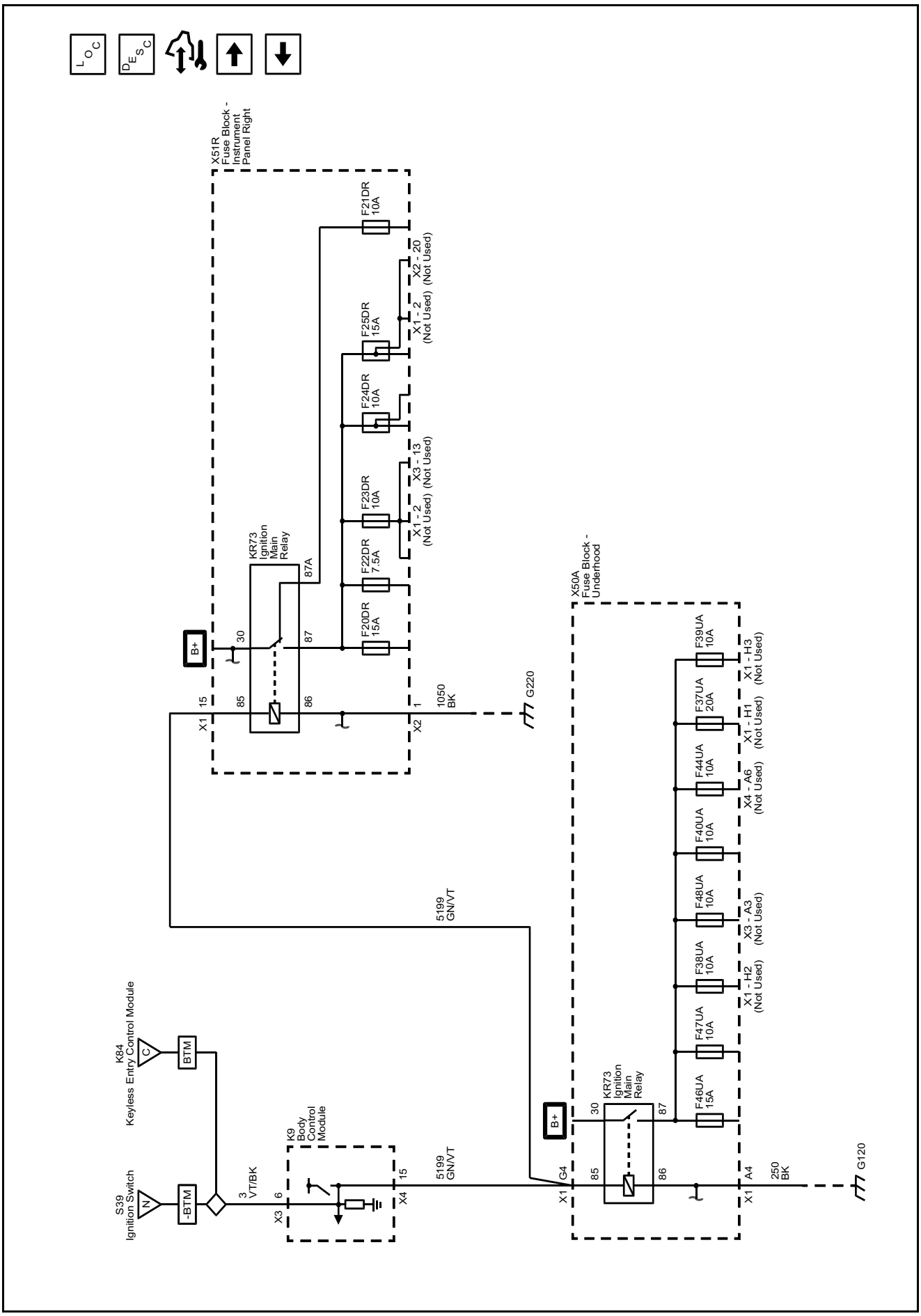

Power Moding Schematics (Retained Accessory Power Relays)

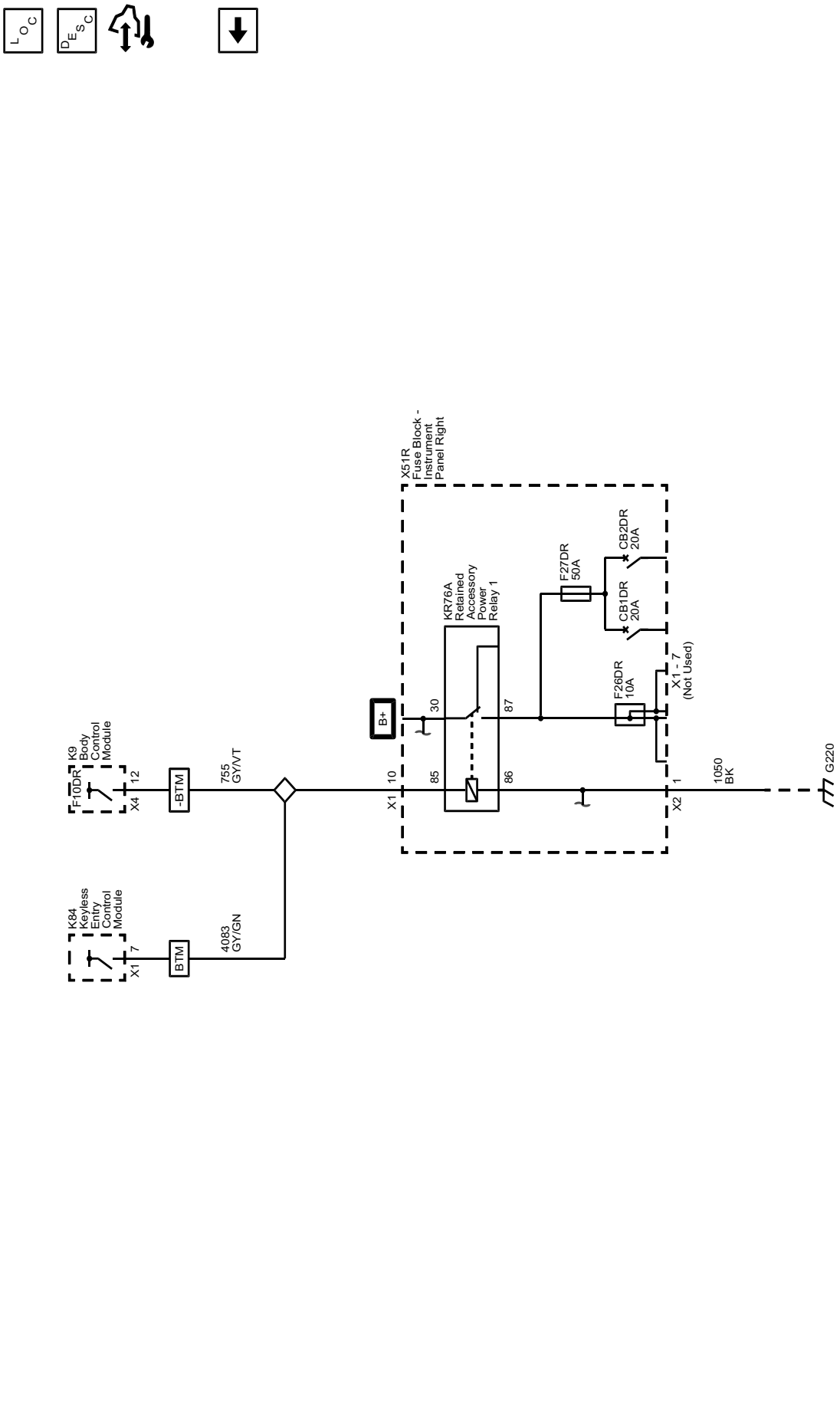

Ignition Lock Schematics (Ignition Lock)

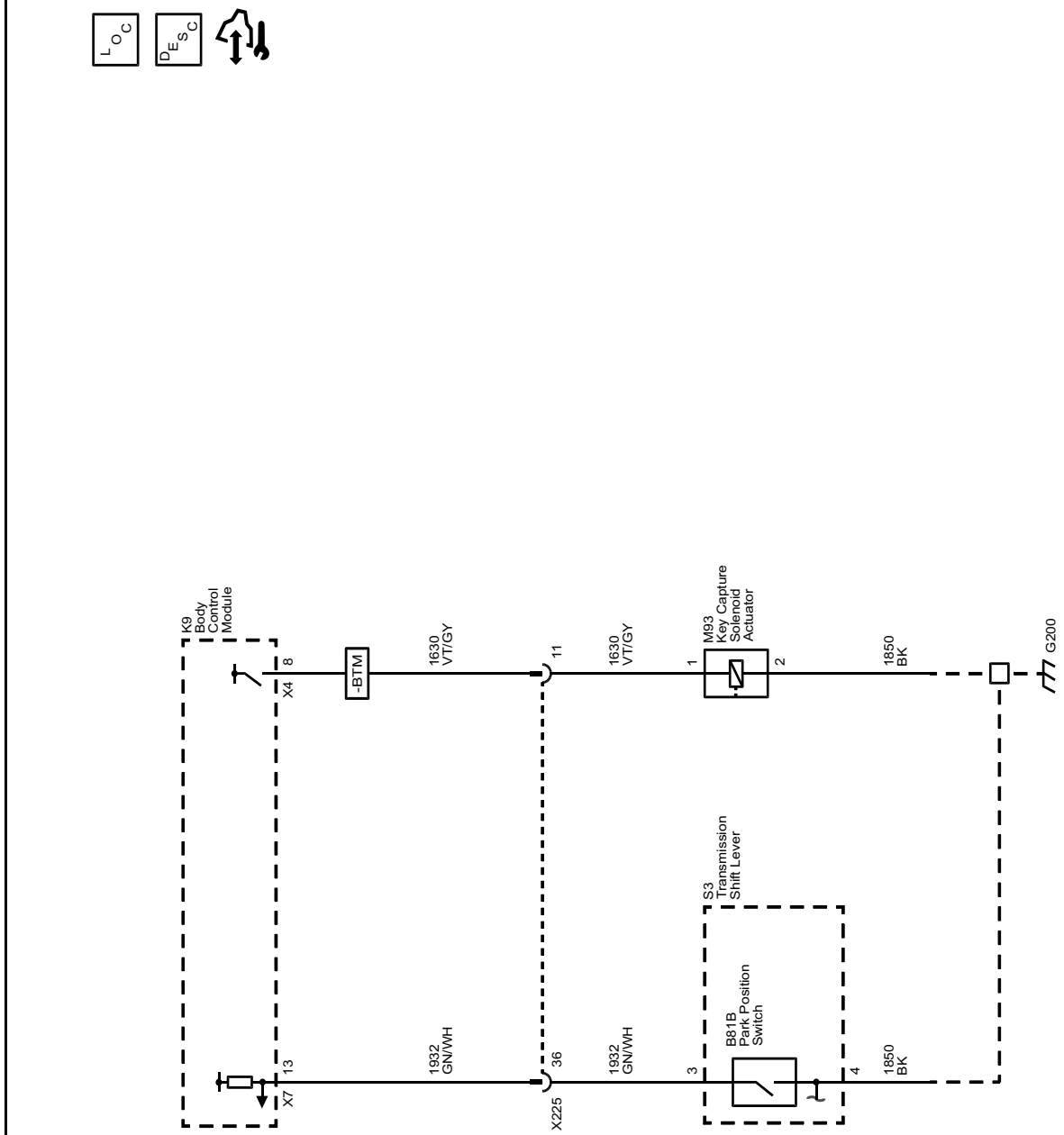

Ground Distribution Schematics (G100, G102, G112 and G114)

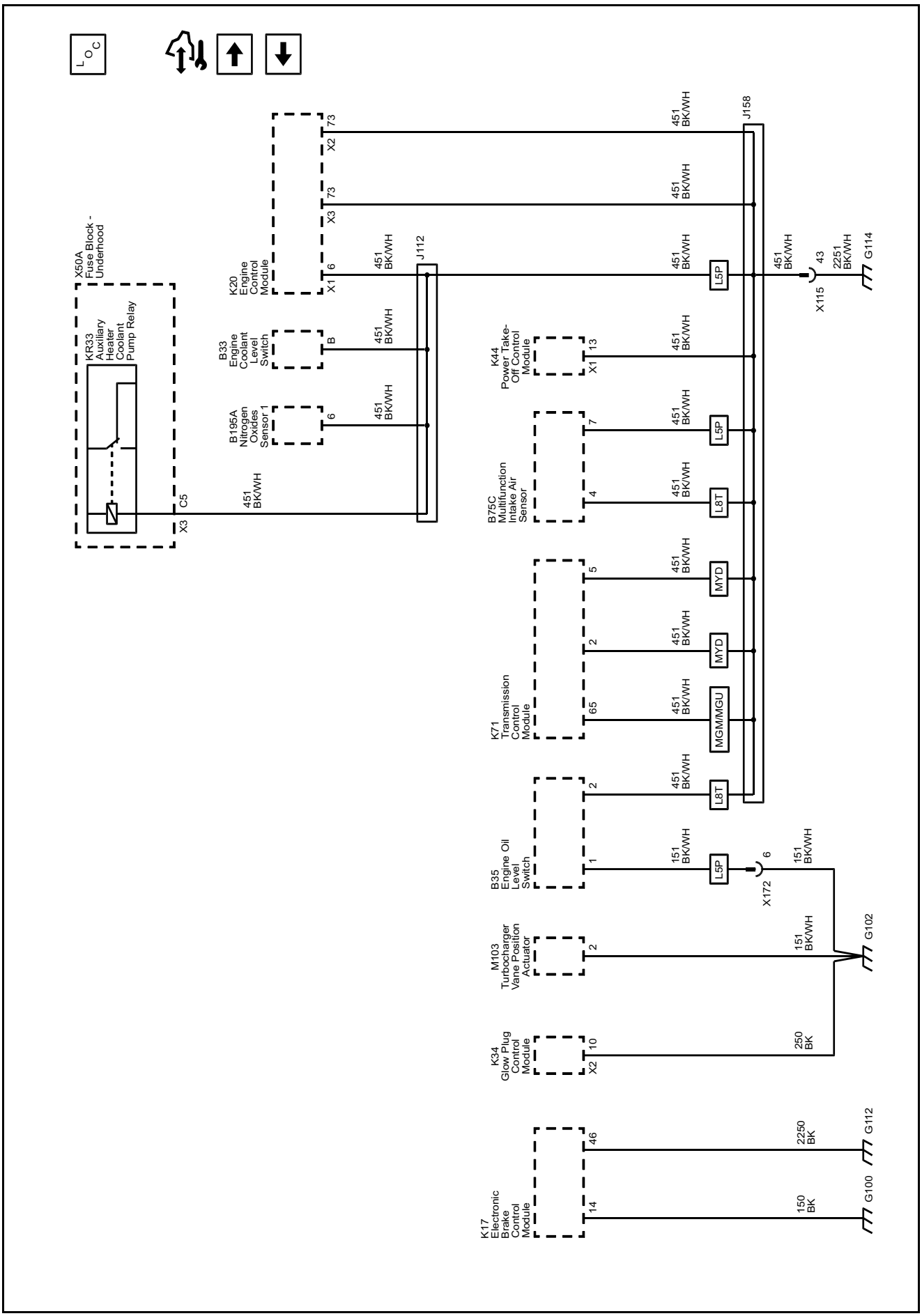

Ground Distribution Schematics (G110)

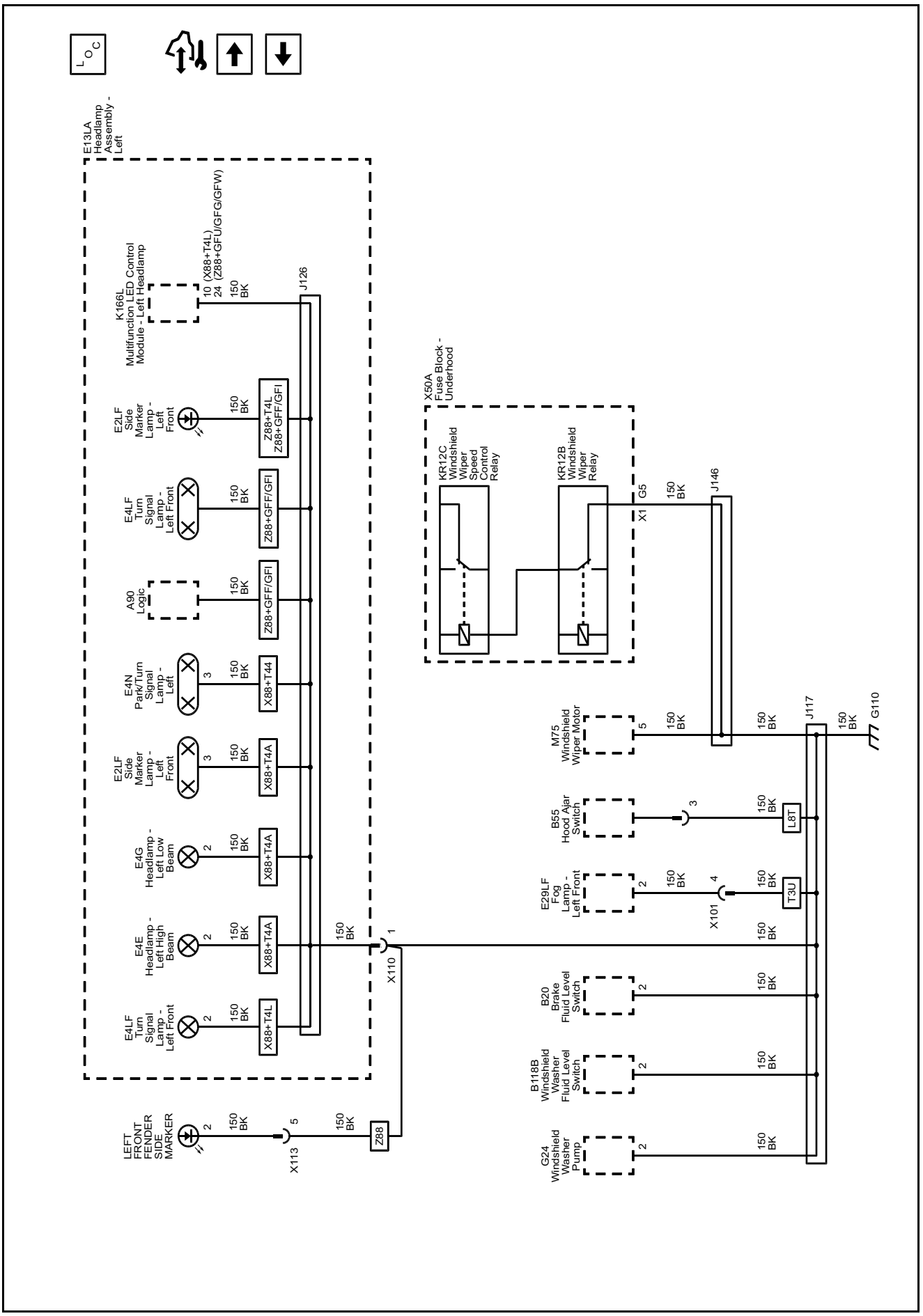

Ground Distribution Schematics (G120)

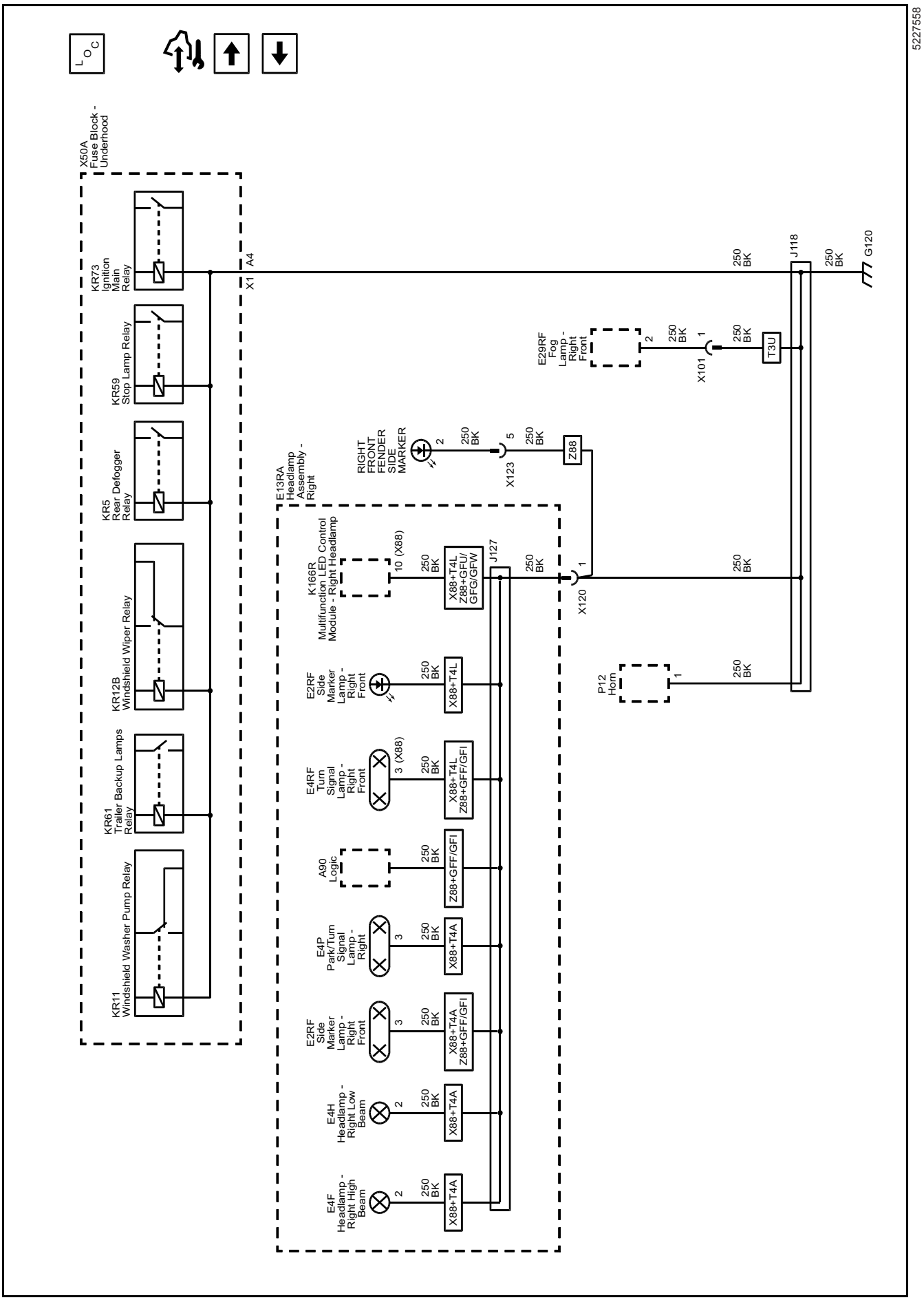

Ground Distribution Schematics (G128, G129, G130, G131, G132 and G133)

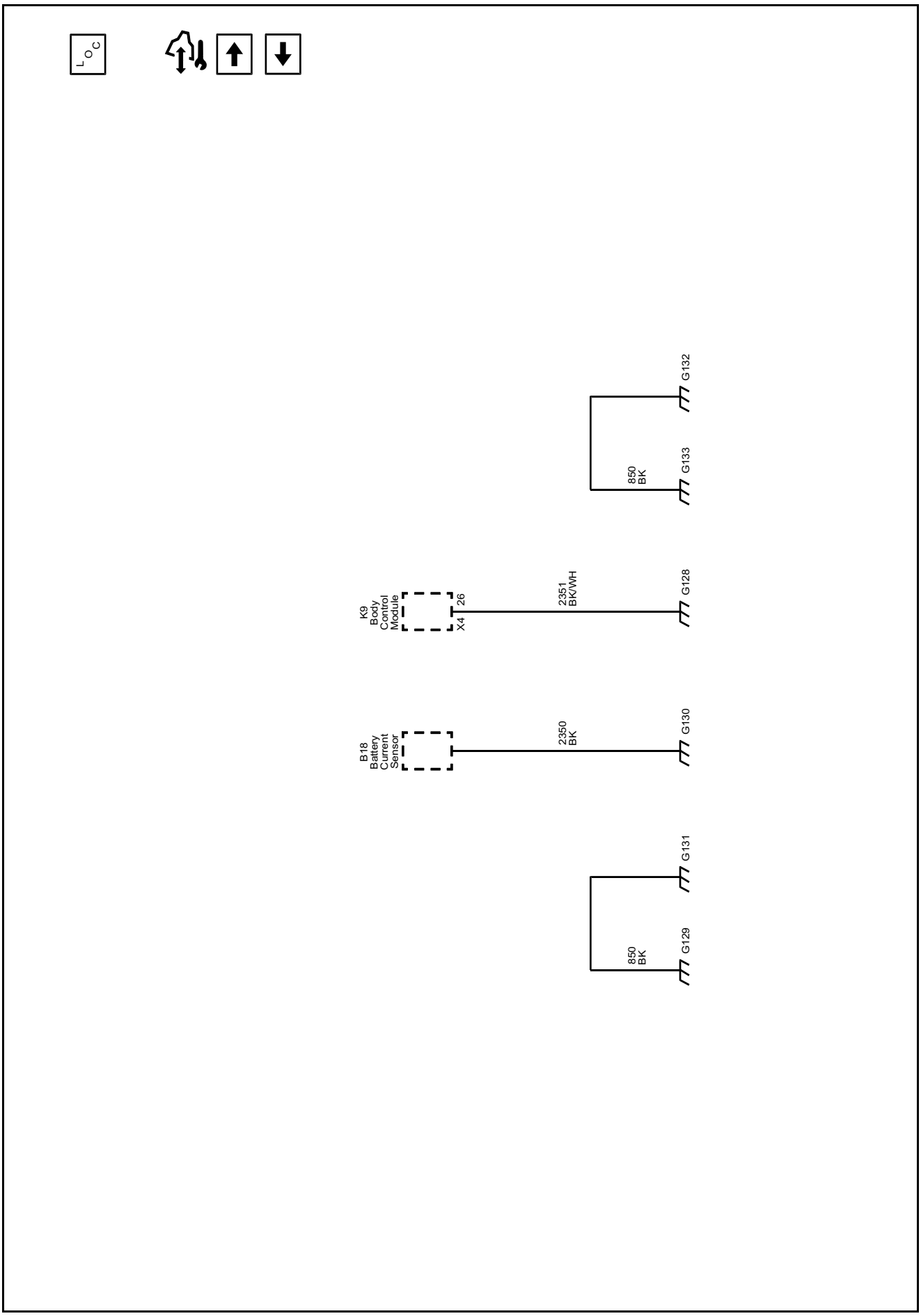

Ground Distribution Schematics (G140)

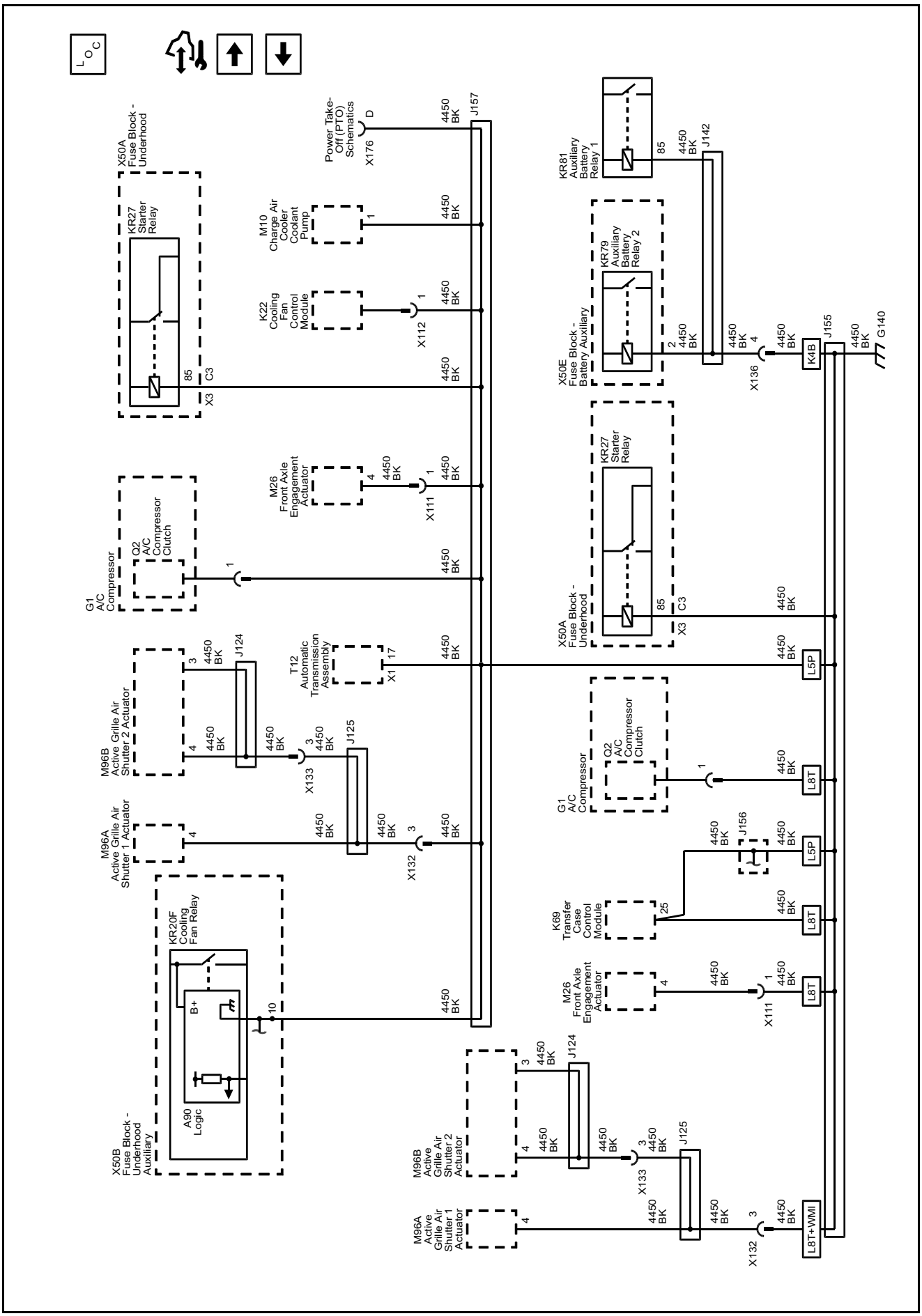

Ground Distribution Schematics (G141 and G142)

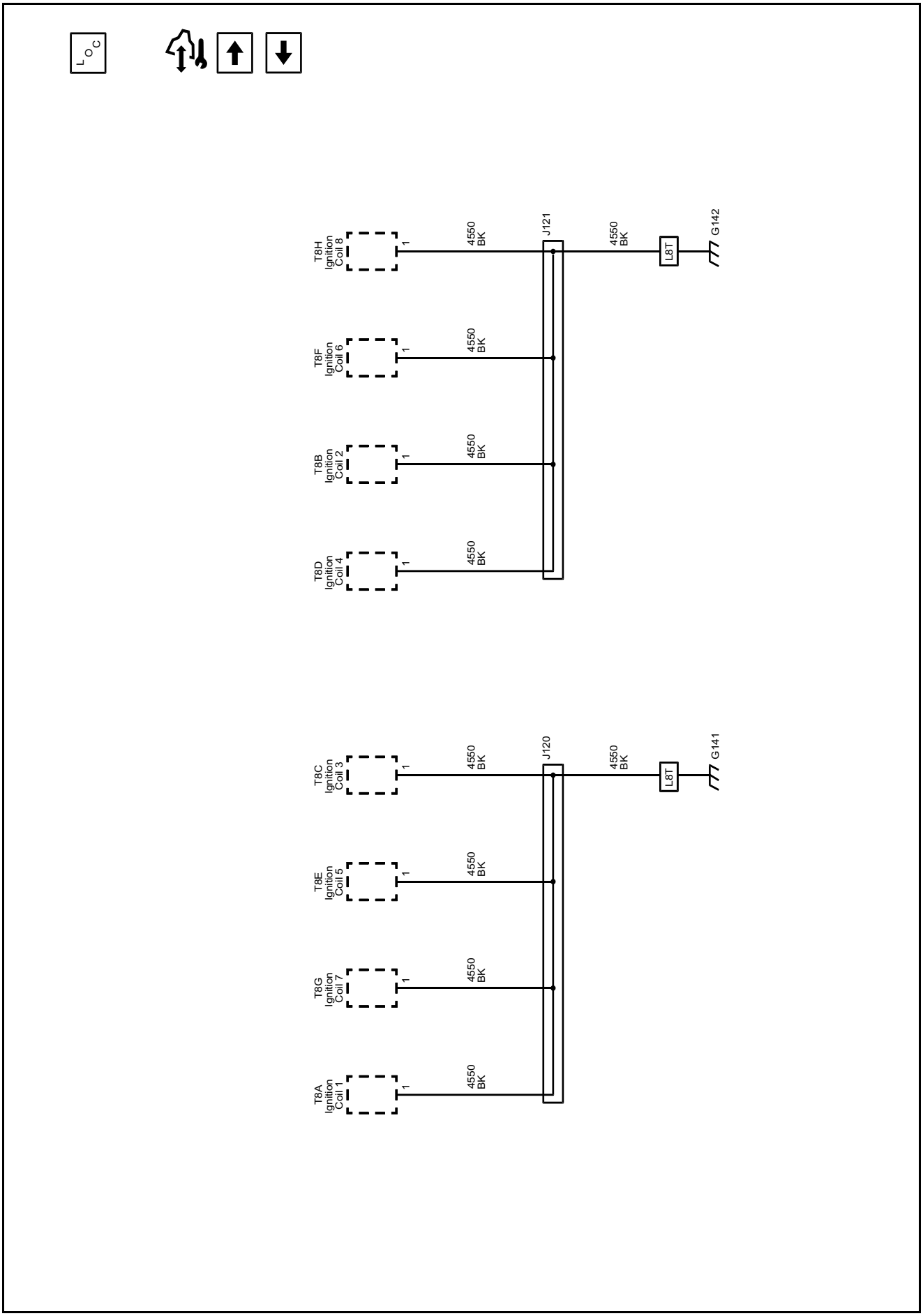

Ground Distribution Schematics (G200)

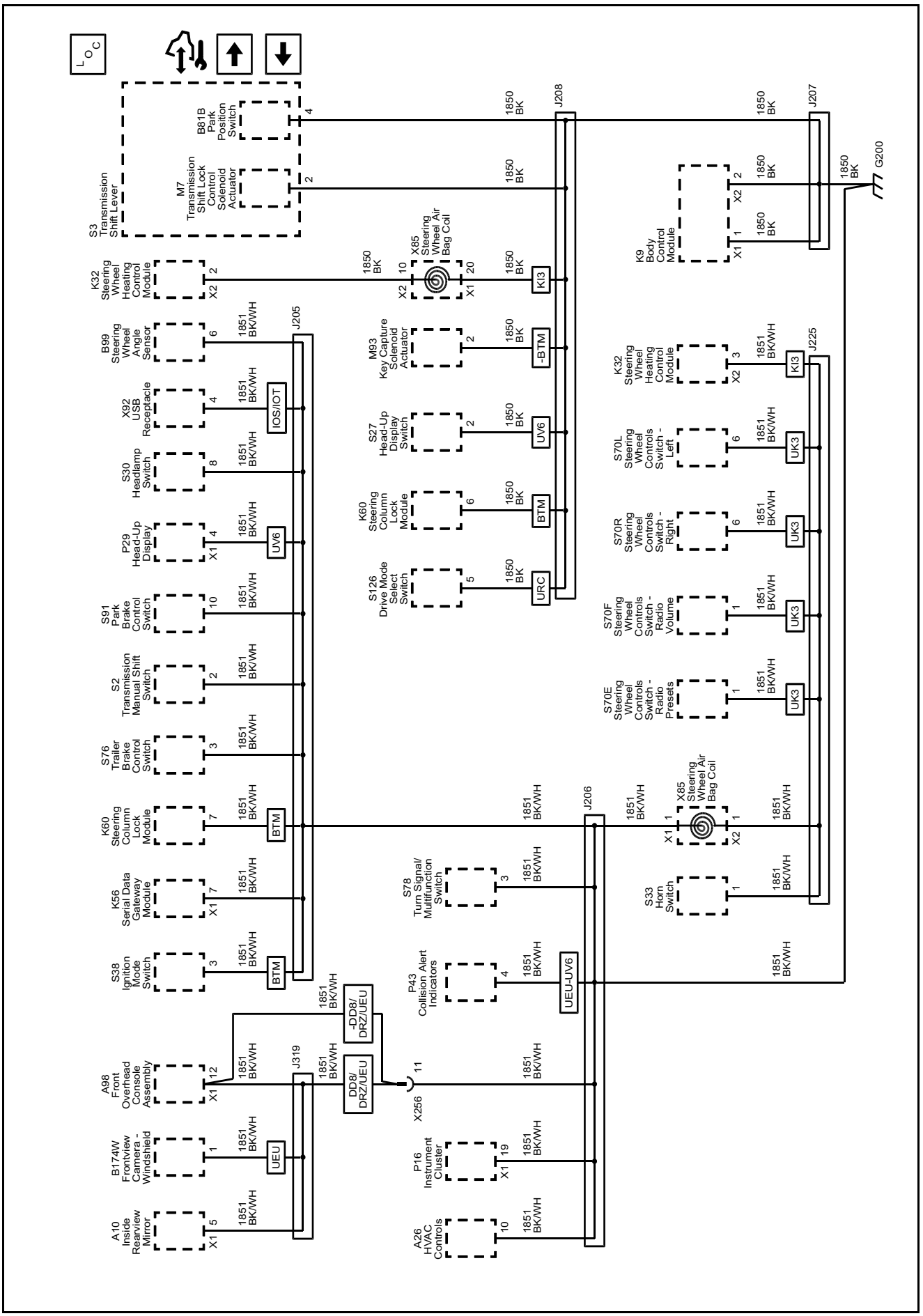

Ground Distribution Schematics (G215 and G220 (1 of 2))

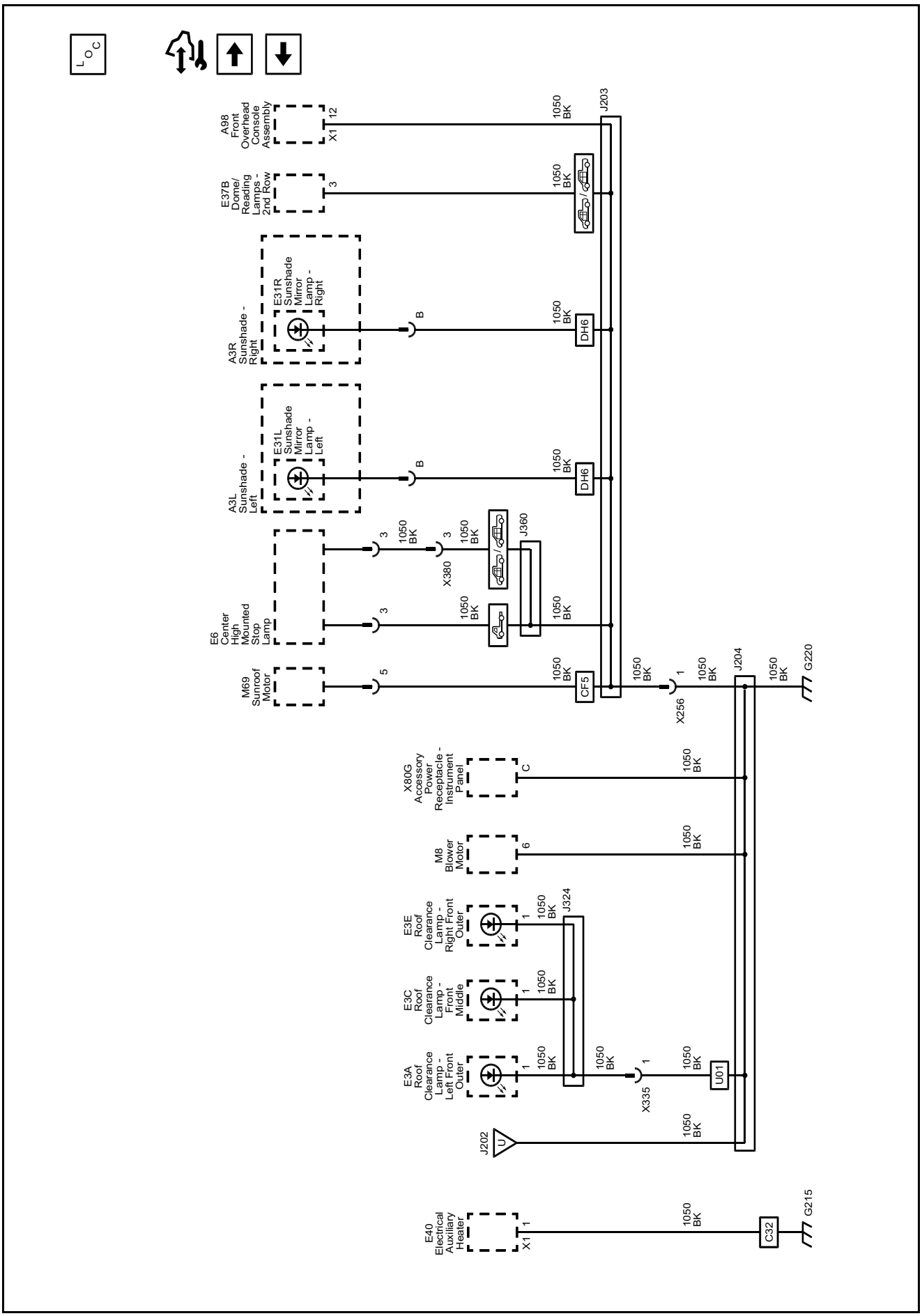

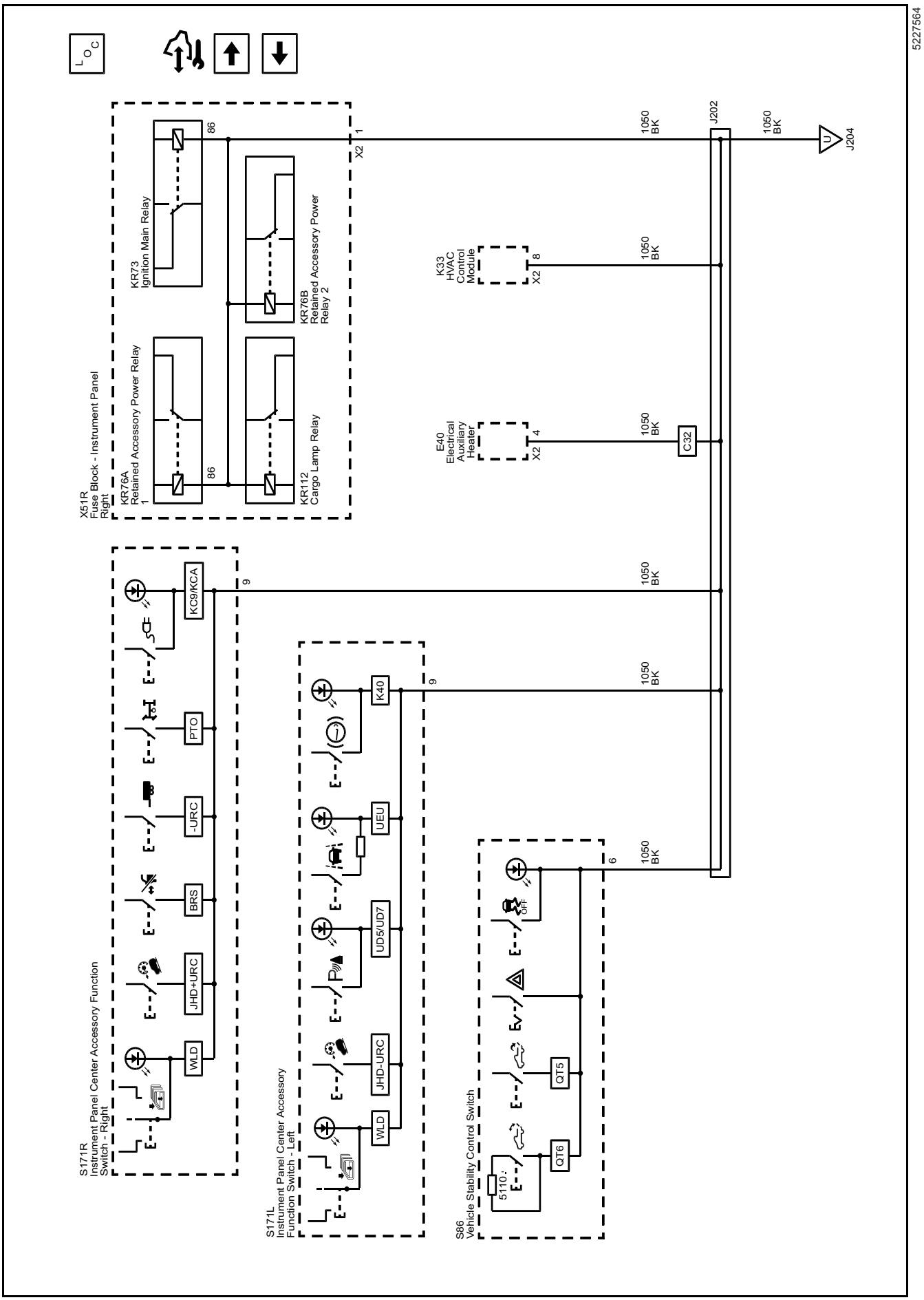
Ground Distribution Schematics (G215 and G220 (2 of 2))
5227564
X51R
Fuse Block - Instrument Panel
Right
KR76A
Retained Accessory Power Relay
1
KR73
Ignition Main Relay
KR76B
Retained Accessory Power
Relay 2
KR112
Cargo Lamp Relay
86
X2
1
J202
J204
1050
BK
K33
HVAC
Control
Module
8
E40
Electrical
Auxiliary
Heater
4
C32
S171R
Instrument Panel Center Accessory Function
Switch - Right
WLD
JHD+URC
BRS
-URC
PTO
KC9/KCA
9
S171L
Instrument Panel Center Accessory
Function Switch - Left
JHD-URC
UD5/UD7
UEU
K40
S86
Vehicle Stability Control Switch
QT6
QT5
OFF
6

Ground Distribution Schematics (G300, G302 and G308 (1 of 2))

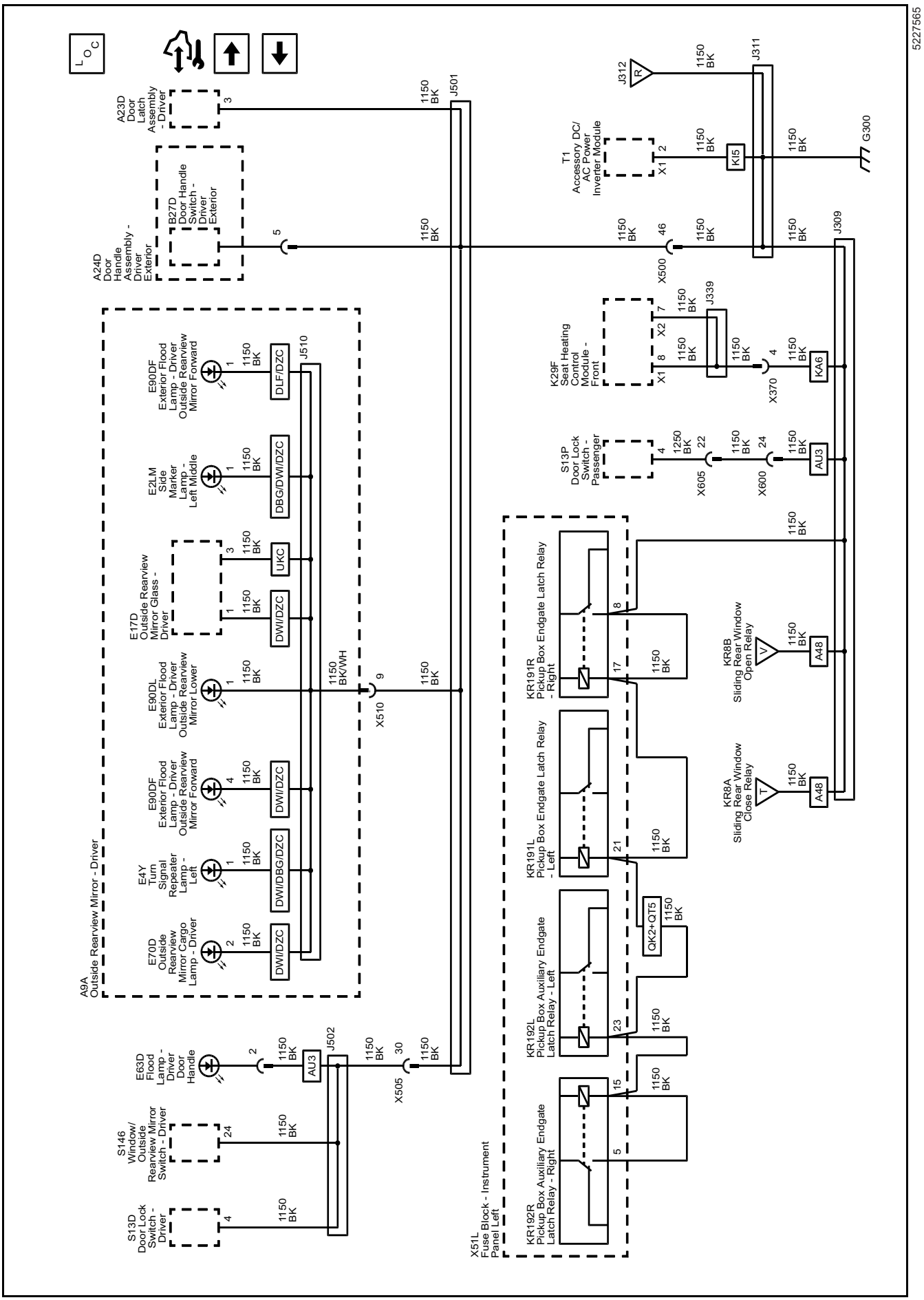

Ground Distribution Schematics (G300, G302 and G308 (2 of 2))

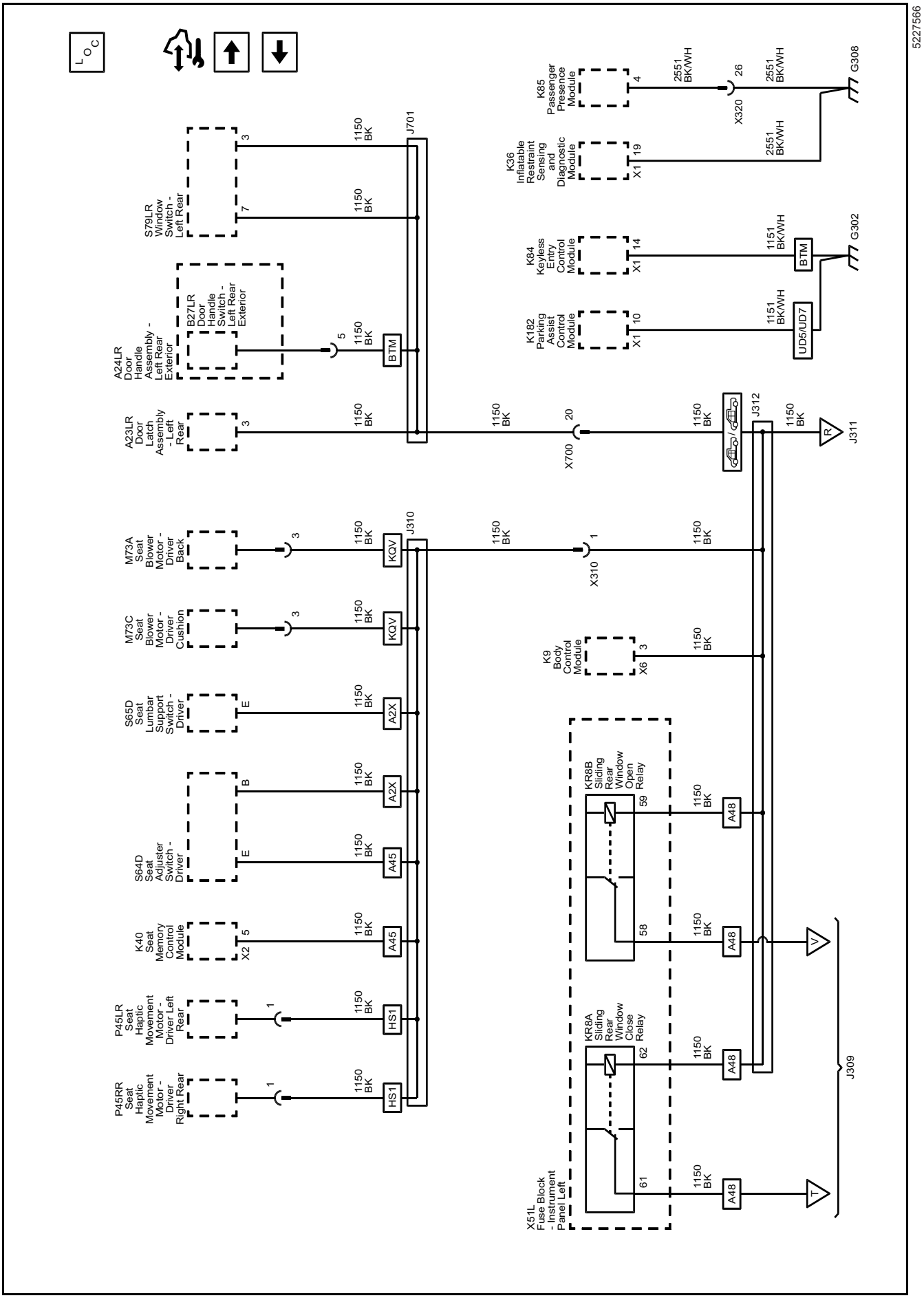

Ground Distribution Schematics (G312 and G322)

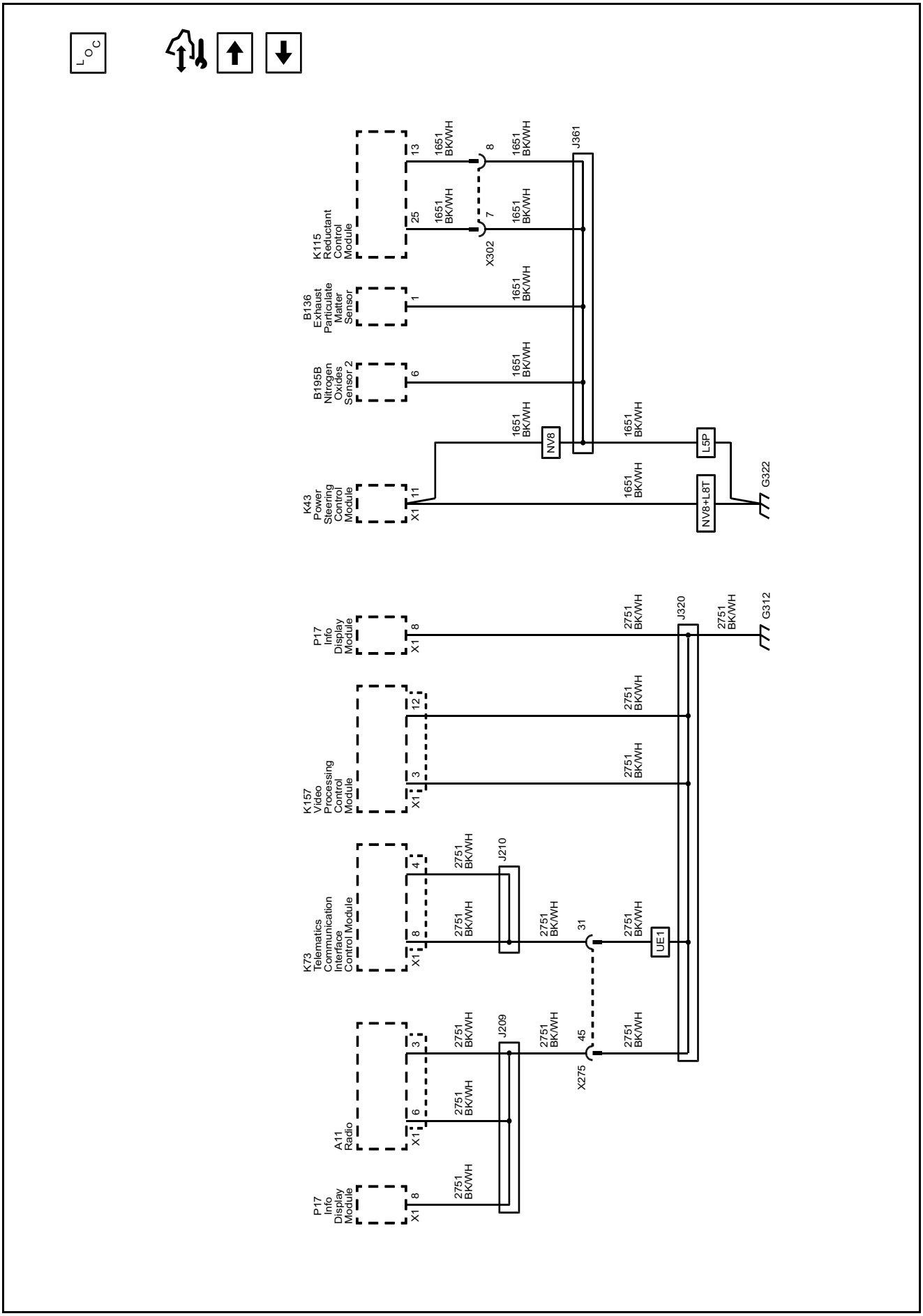

Ground Distribution Schematics (G318 and G320)

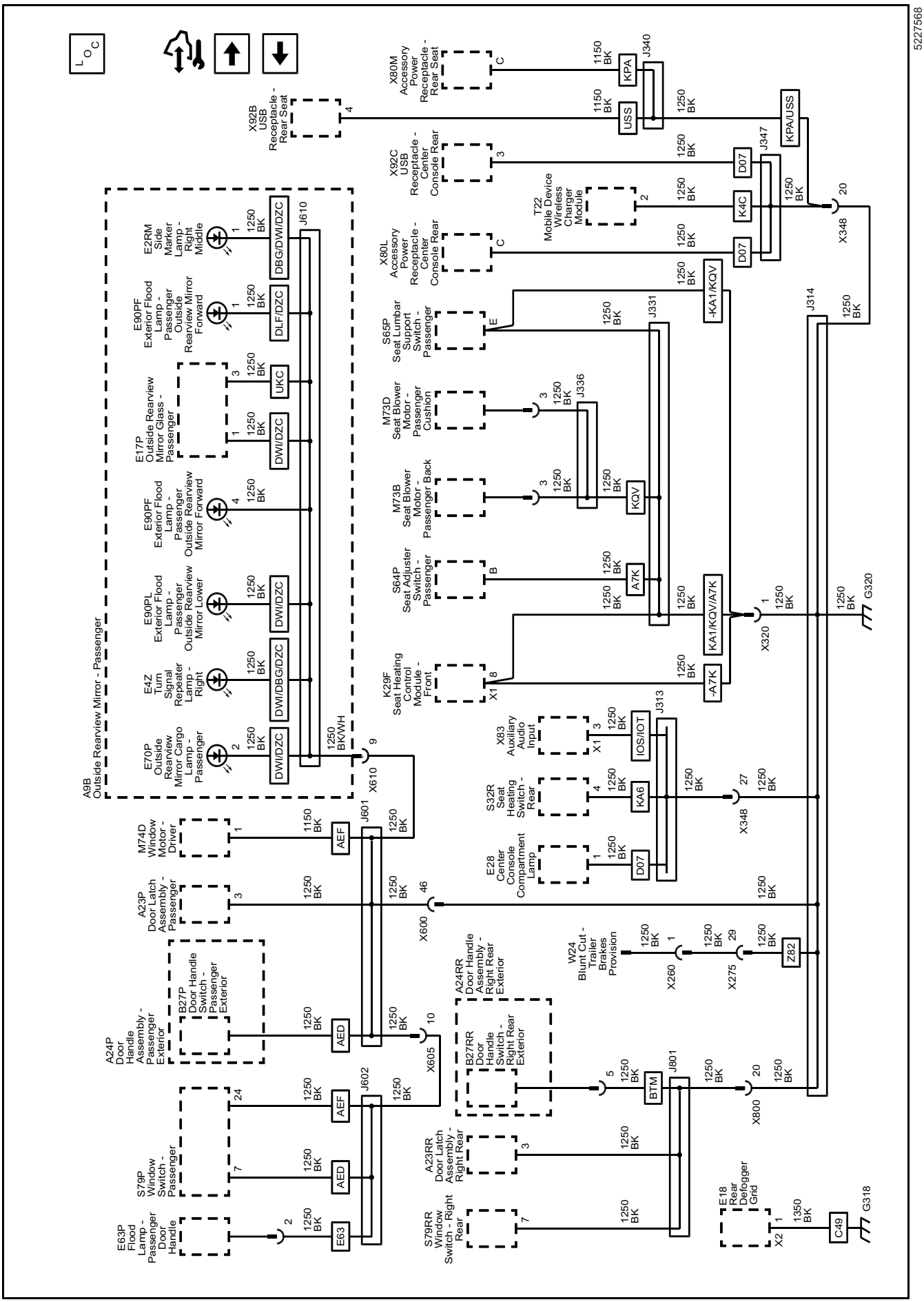

Ground Distribution Schematics (G400 and G405)

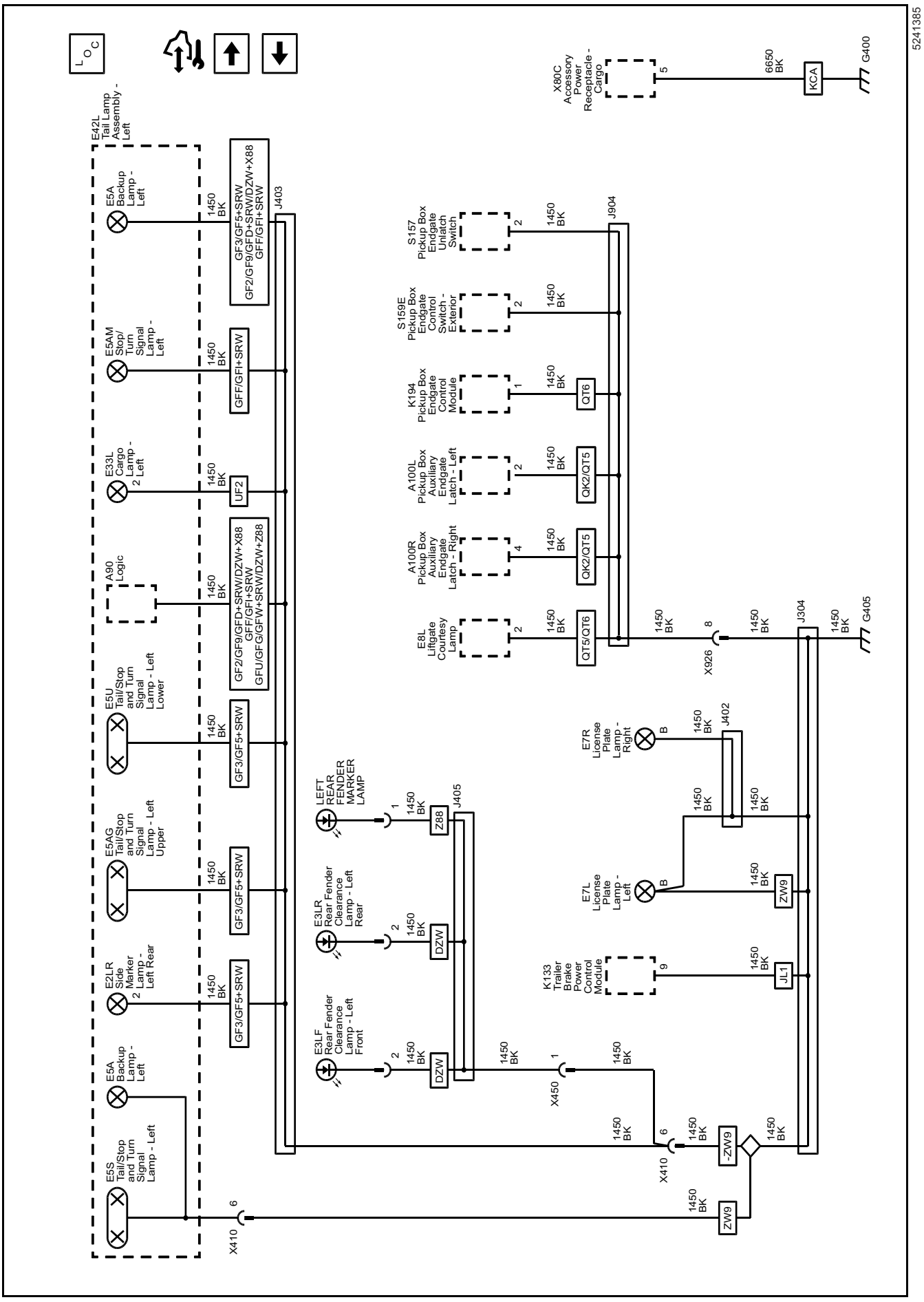

Ground Distribution Schematics (G415, G416 and G420)

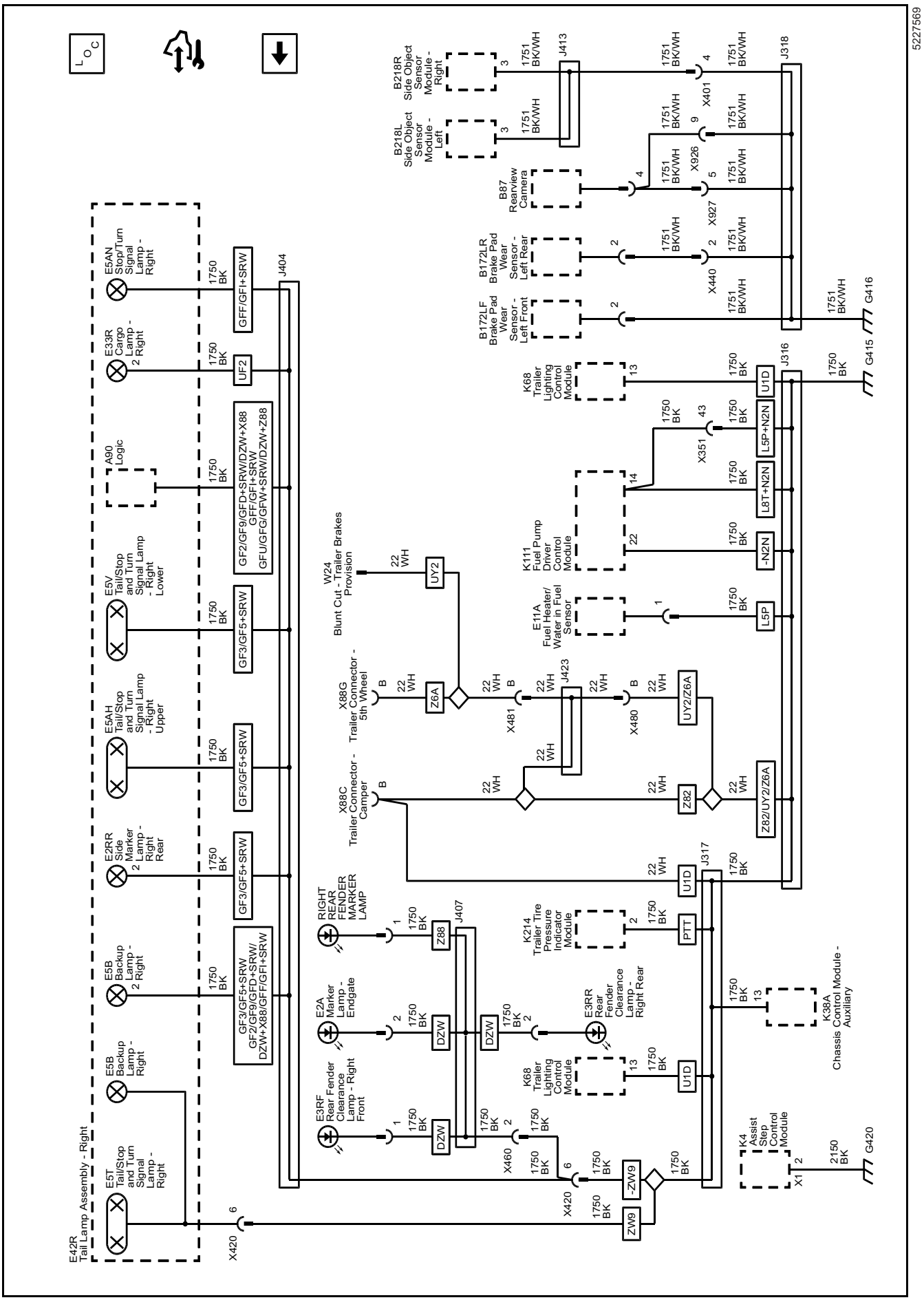

Upfitter Provision Schematics (Upfitter Provisions - Signals)

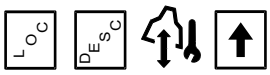

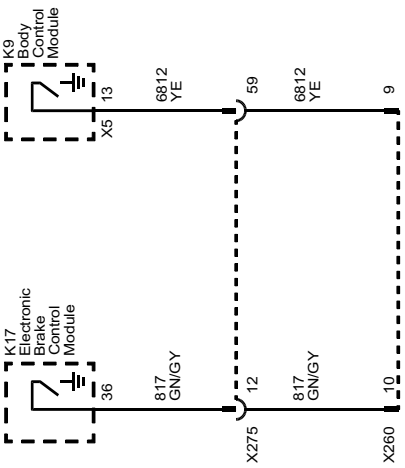

5217154

Upfitter Provision Schematics (Upfitter Provisions - 1 of 2 (9L7))

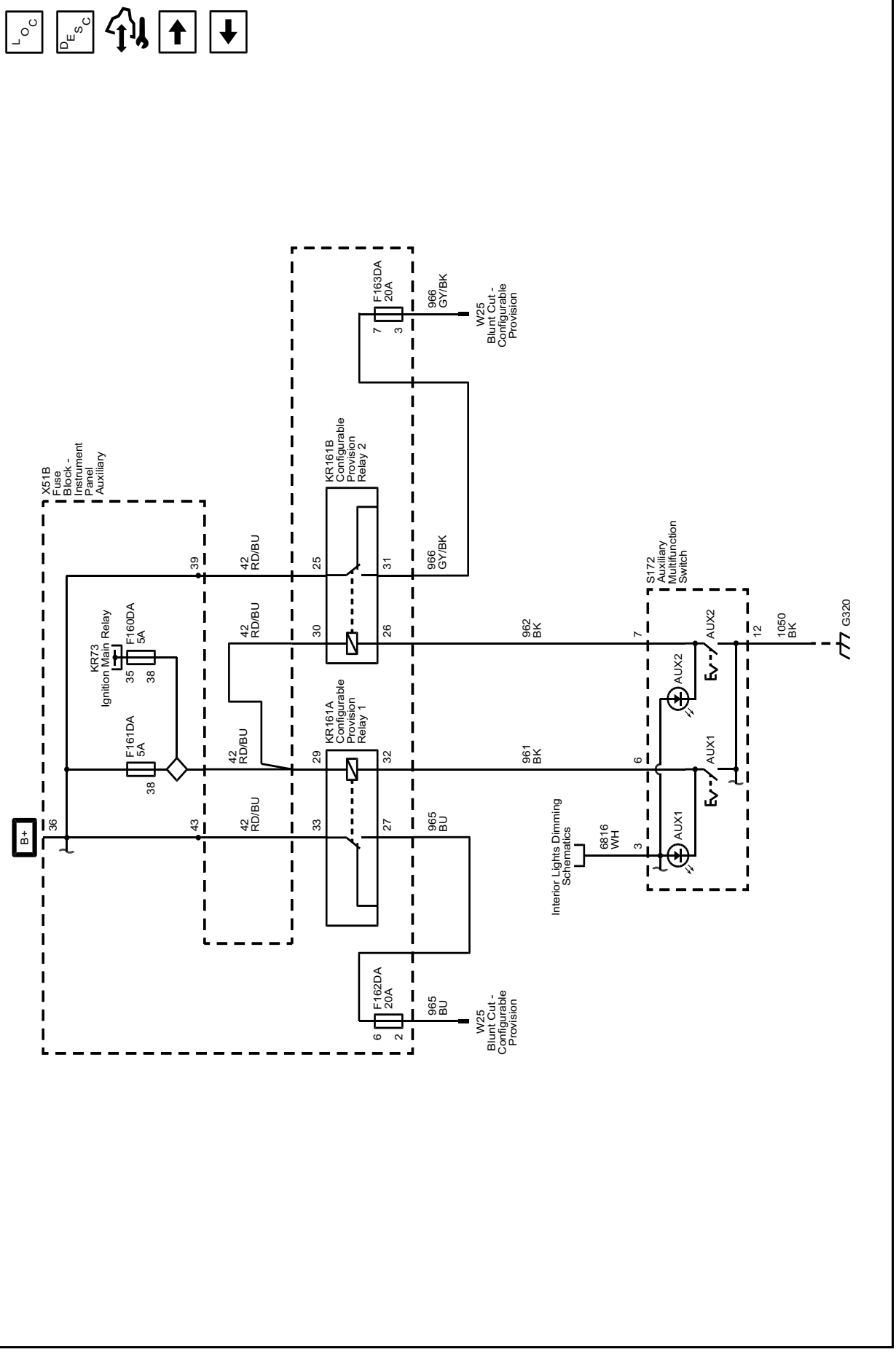

Upfitter Provision Schematics (Upfitter Provisions - 2 of 2 (9L7))

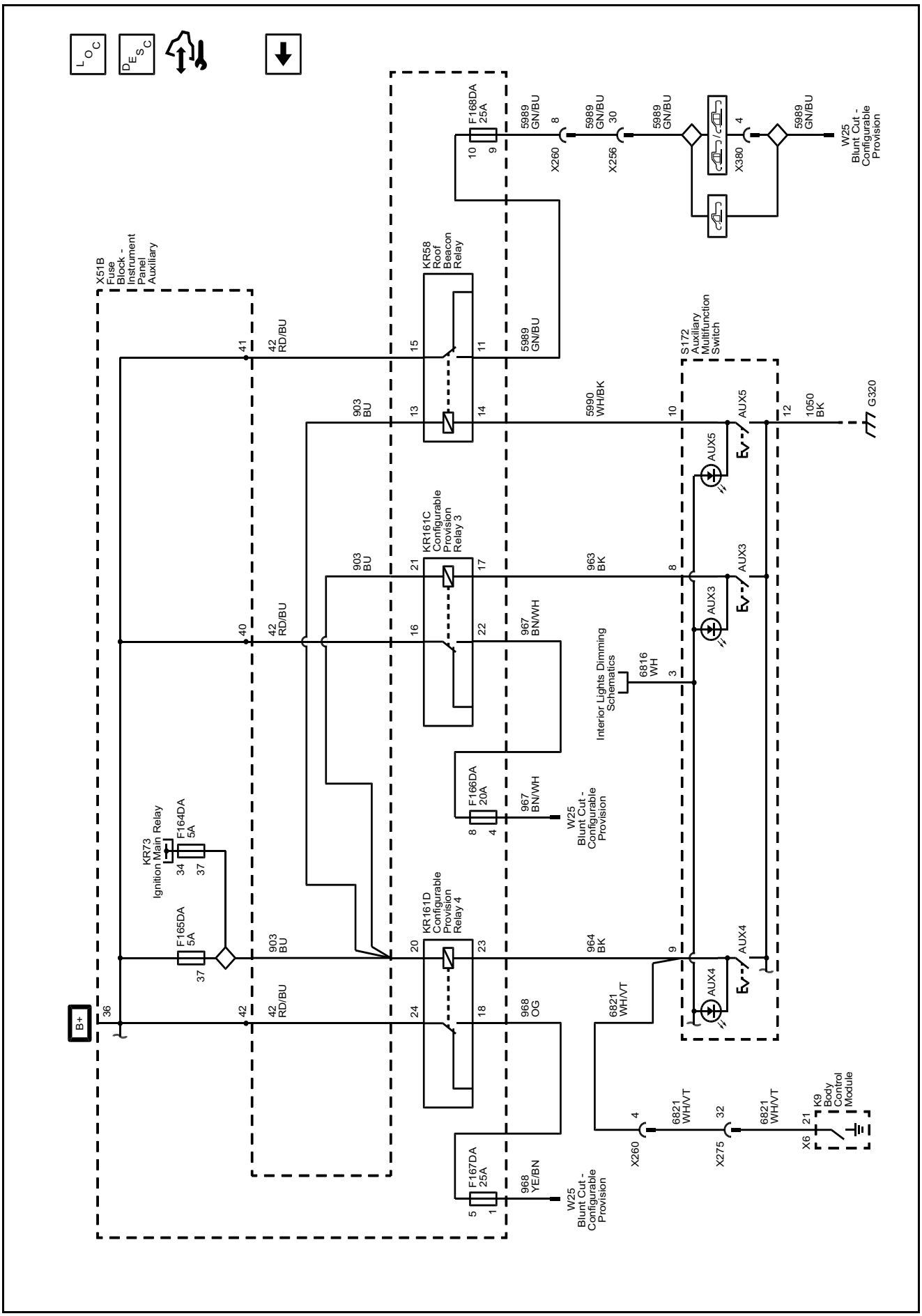

Trailer Connector/Provision Schematics (Trailer Connector Pins: A, B, D, E, F, G (Z82-U1D))

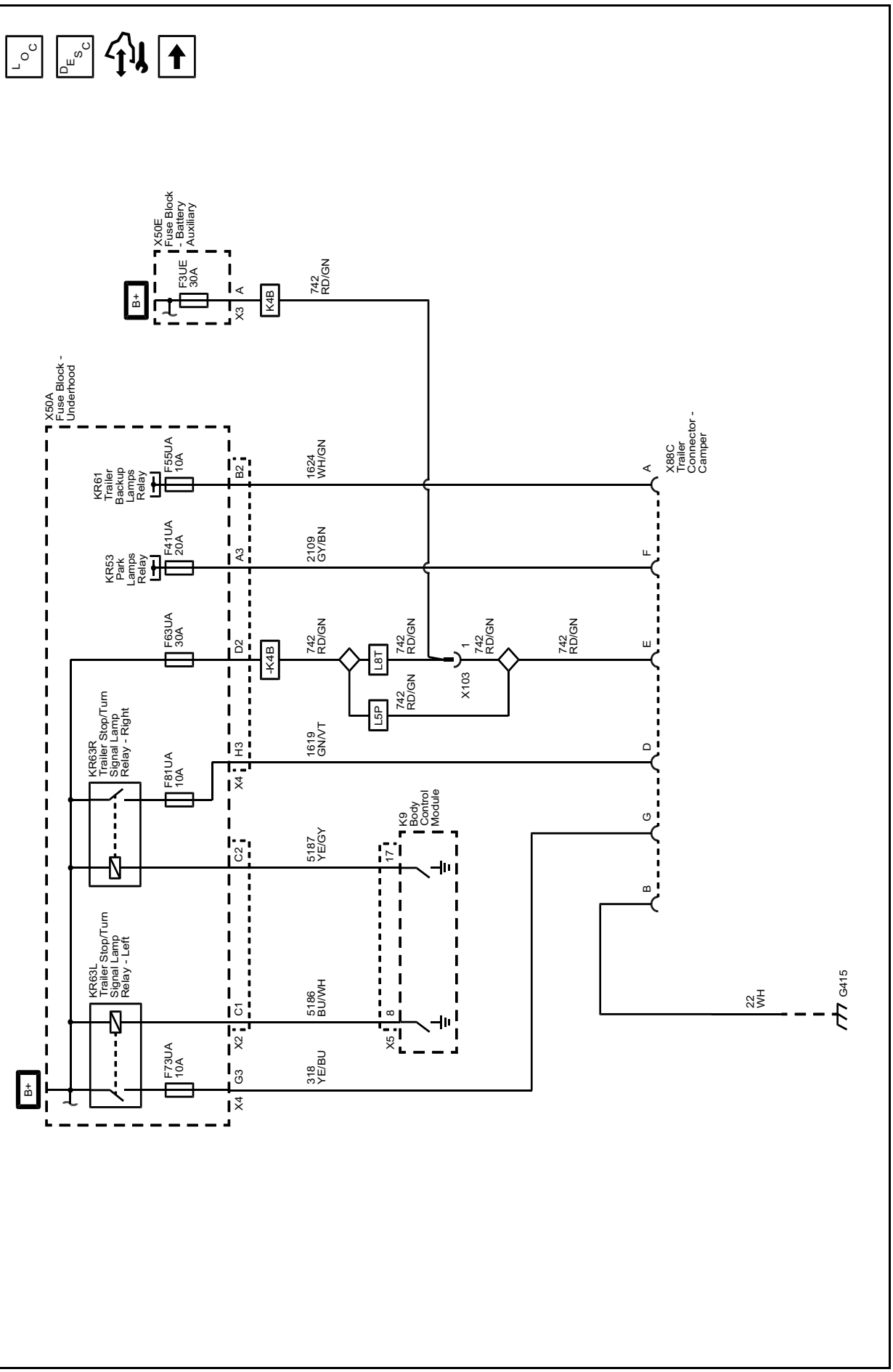

Trailer Connector/Provision Schematics (Trailer Connector Pins: A, B, D, E, F, G (U1D))

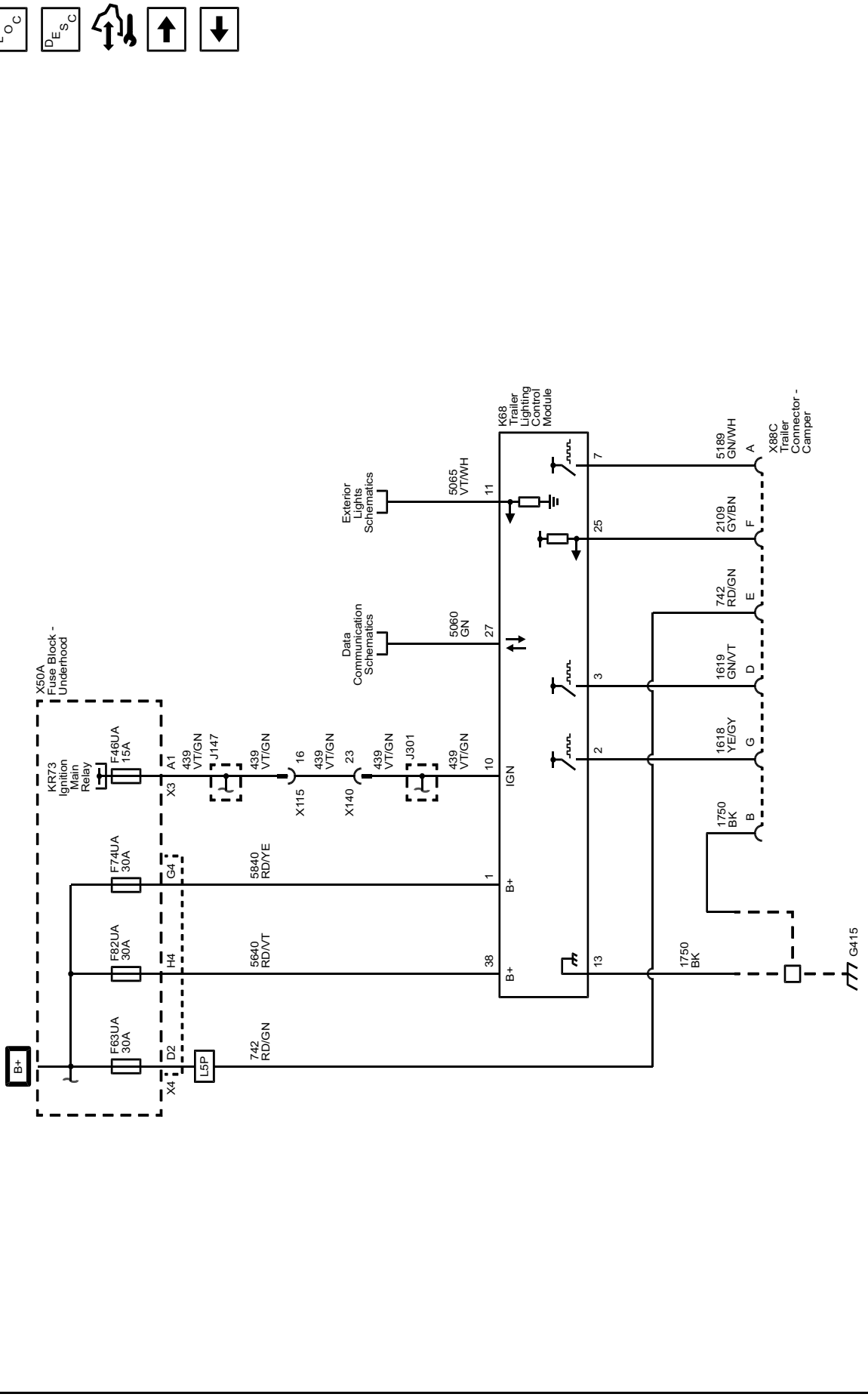

Trailer Connector/Provision Schematics (Trailer Connector Pins: A, B, D, E, F, G (U1D+Z6A))

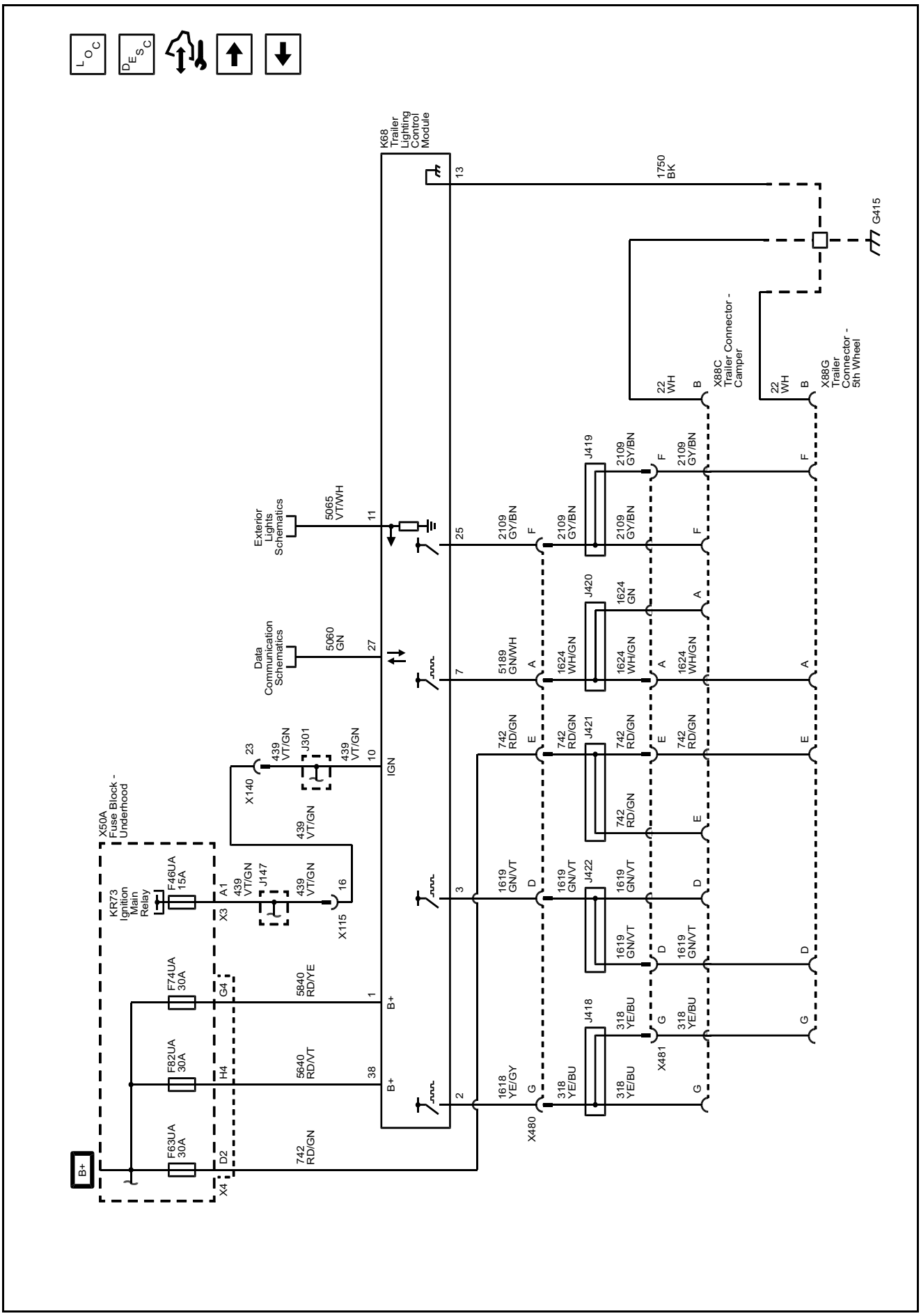

Trailer Connector/Provision Schematics (Trailer Connector Pins: A, B, D, E, F, G (Z6A-U1D))

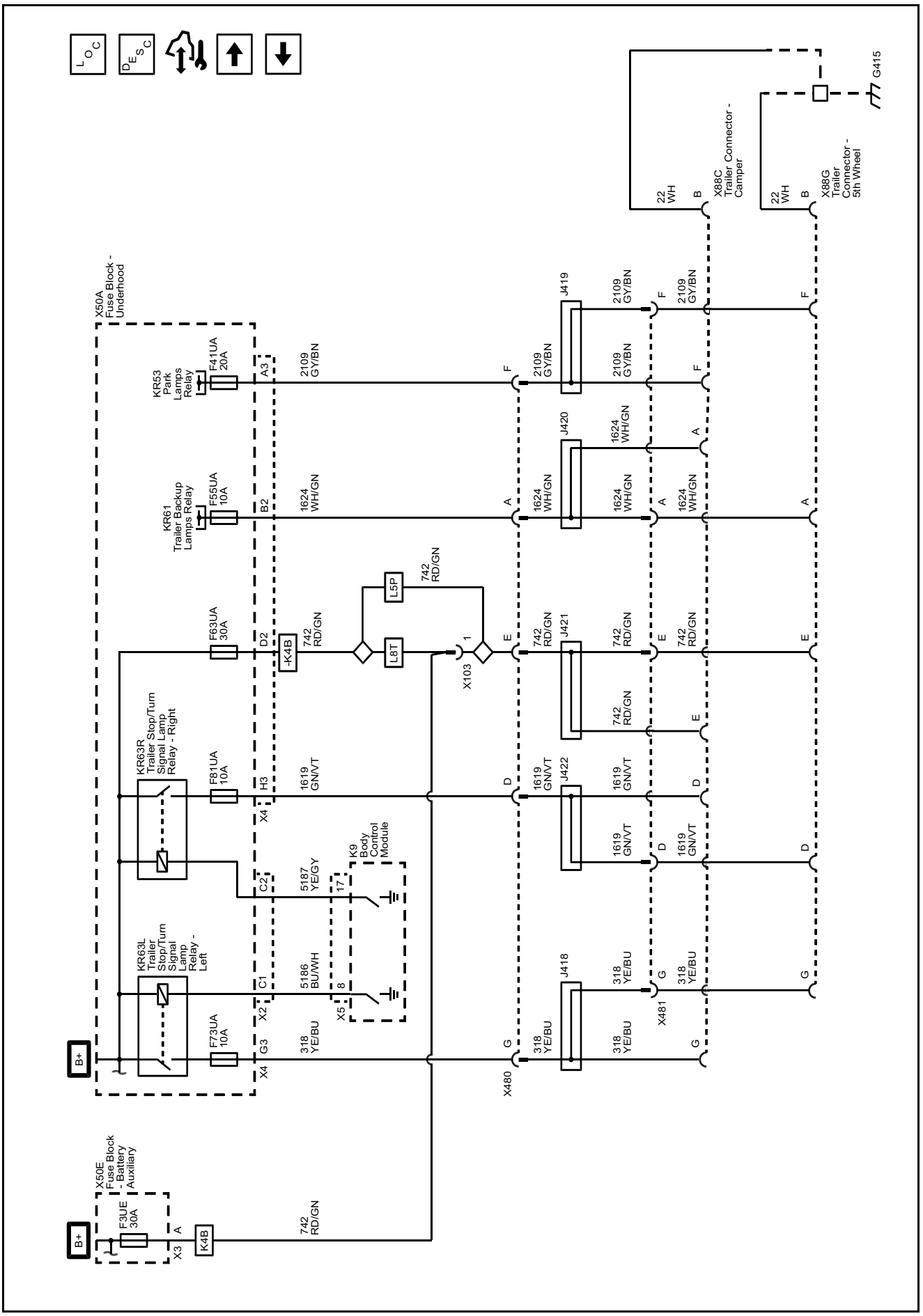

Trailer Connector/Provision Schematics (Trailer Connector Pins: A, B, D, E, F, G (UY2))

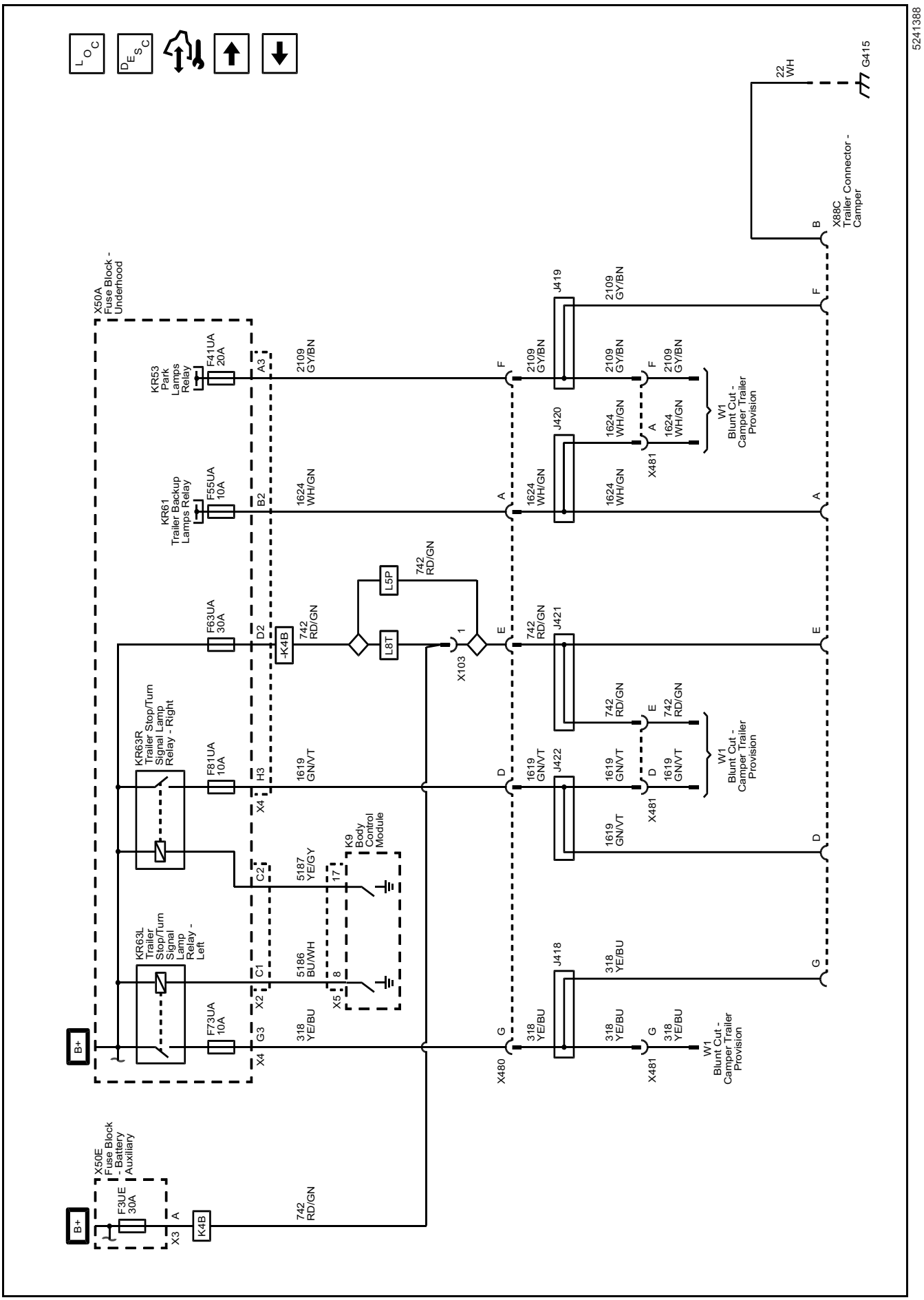

Trailer Connector/Provision Schematics (Trailer Connector Pin: C (Z82+UY2/Z6A))

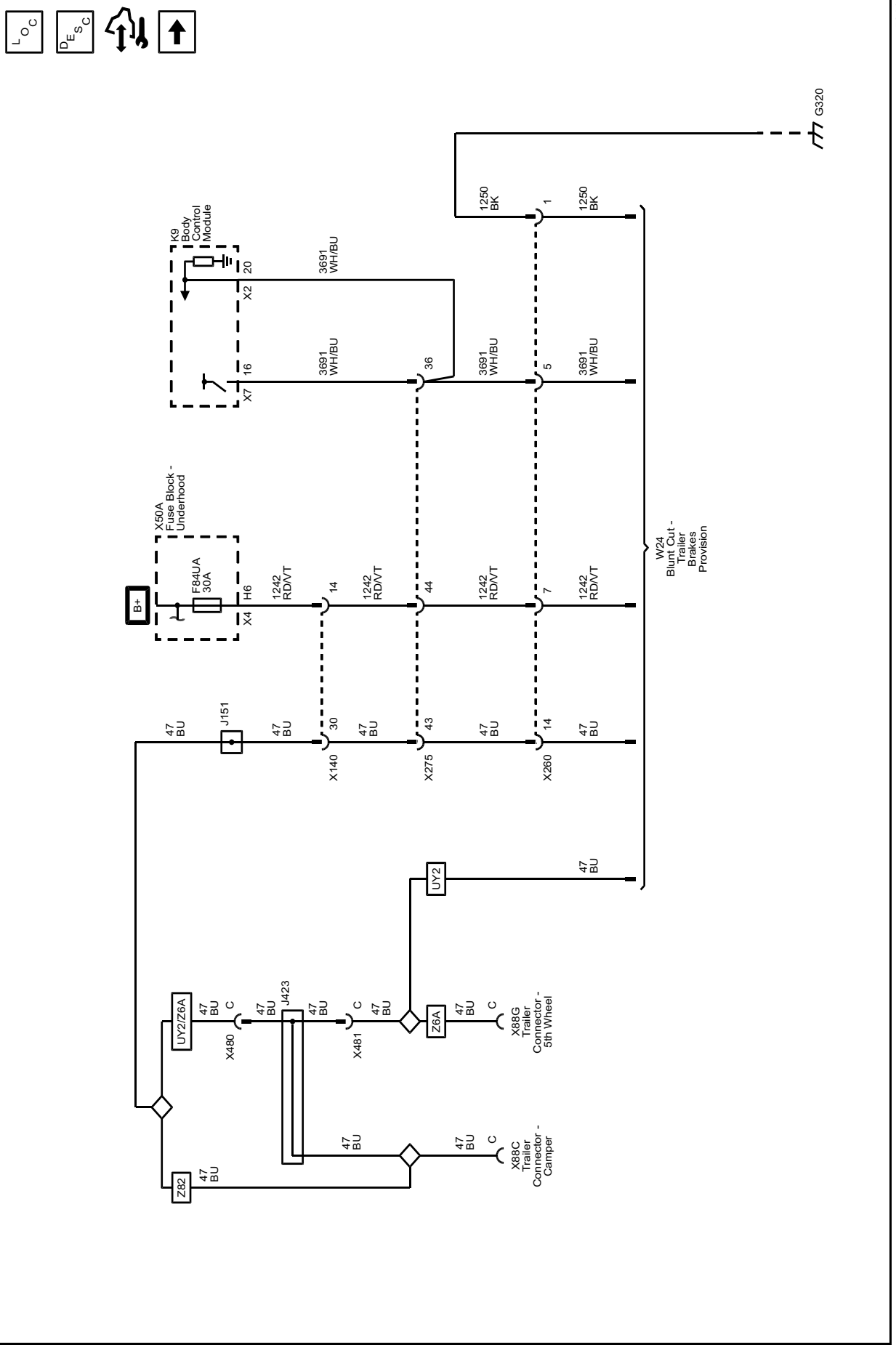

Trailer Connector/Provision Schematics (Trailer Connector Pin: C (JL1-Z82))



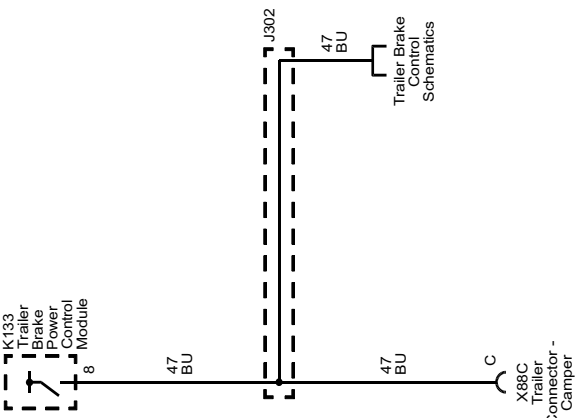

5241395

Description and Operation

Power Mode Description and Operation

Serial Data Power Mode Master

Power Moding Description and Operation Block Diagram

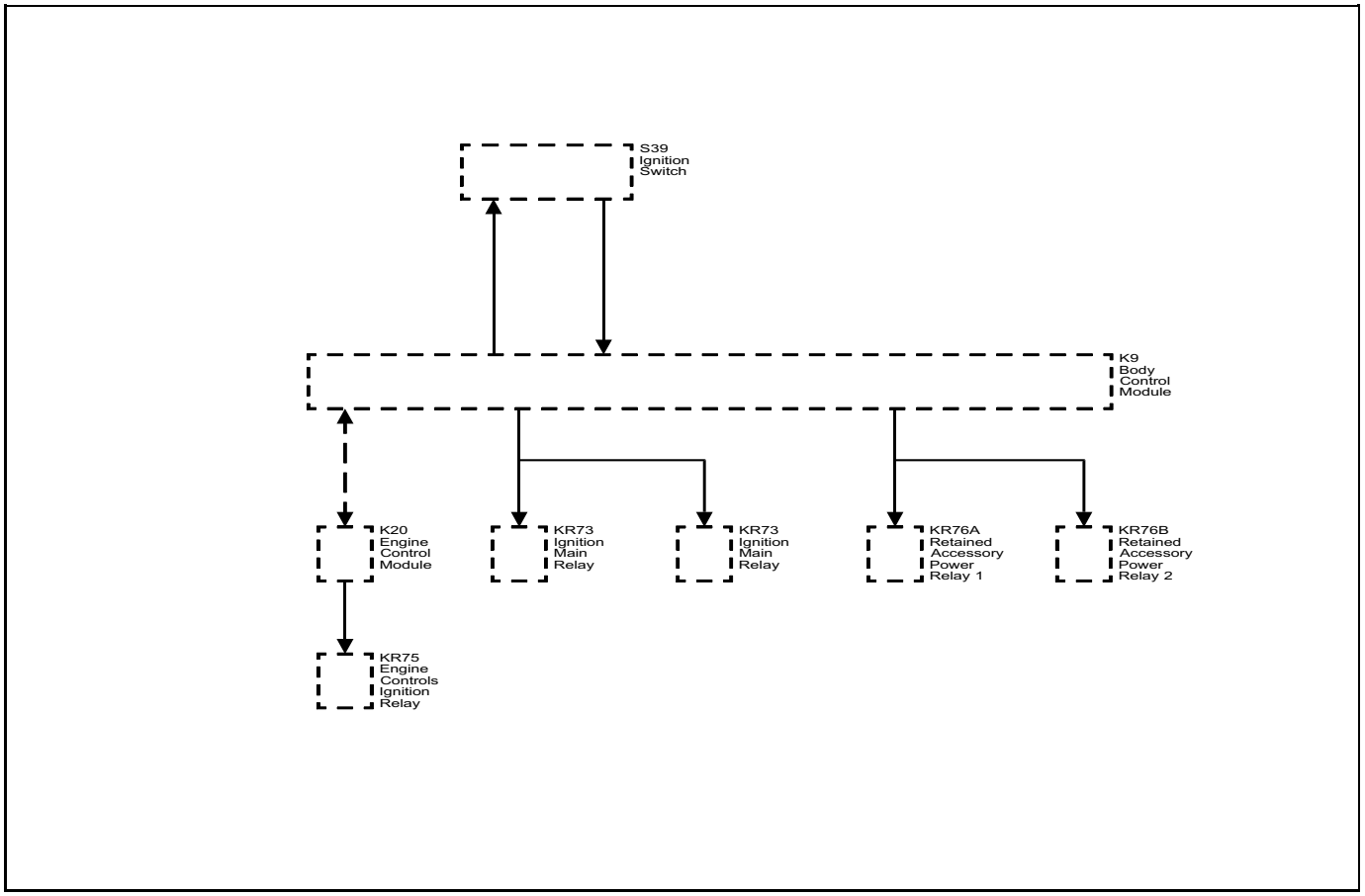

3282831

Power to many of this vehicles circuits is controlled by the module that is designated the power mode master. This vehicles power mode master is the body control module (BCM). The BCM has multiple B+ circuits that feed into it. Each of those circuits are partitioned within the controller to drive certain outputs of the vehicle's body functions. An open or short in any one of the B+ circuits may induce multiple codes/or a section of non-functionality within the BCM with the rest of the BCM functioning normally. In this case it is useful to refer to the power distribution schematics to determine if the non-functional partition of the controller shares a common B+ circuit. The ignition switch is a low current switch with multiple discrete ignition switch signals to the power mode master for determination of the power mode that will be sent over the serial data circuits to the other modules that need this information. The power mode master will also activate relays and other direct outputs of the power mode master as needed. The power mode master determines which power mode (Off, Accessory, Run, Crank Request) is required, and reports this information to other modules via serial data. Modules which have switched voltage inputs may operate in a default mode if the power mode serial data message does not match what the individual module can see from its own connections.

The power mode master receives ignition switch signals to identify the operators desired power mode. The Power Mode Parameter tables below illustrate the correct state of these input parameters (circuits) in correspondence to the ignition switch position:

Power Mode Parameters

Ignition Switch Position	Power Mode Transmitted	Ign. Off/Run/Crank (Off/Run Crank Voltage Circuit)	Ignition Accessory/Run (Accessory Voltage Circuit)	Ignition Run/Crank (Ignition 1 Voltage Circuit)
Off Key Out	Off	Key Out / ACC	Inactive	Inactive
Off Key IN	Off	Key In / Off	Inactive	Inactive
Accessory	Accessory	Key Out / ACC	Active	Inactive
Run	Run	Run	Active	Active
Start	Crank Request	Crank	Inactive	Active

Relay Controlled Power Mode

The BCM uses the discrete ignition switch inputs Off/Run/Crank Voltage, Accessory Voltage, and Ignition 1 Voltage, to distinguish the correct power mode. The BCM, after determining the desired power mode, will activate the appropriate relays for that power mode.

The retained accessory power relay 1 and retained accessory power relay 2 remain on for a timed period after the Ignition key is removed. Refer to *Retained Accessory Power Description and Operation on page 7-680* for more information on the retained accessory power function.

Battery Saver Mode (Transport Mode)

Battery saver mode (transport mode) reduces the parasitic load of some modules during overseas shipment or during vehicle storage conditions. This improves the drain time on the battery (up to 70 days without the battery going dead). When a vehicle is in transport/storage, some features may have reduced functionality while in the battery saver mode, such as disabling keyless entry, afterblow, and content theft features. Battery saver mode is initiated by turning on the hazard flashers, applying the brake pedal, and then turning the ignition key to the start position or pushing the ignition mode switch with the foot on the brake for greater than 15 seconds. The mode is disengaged by repeating the previous process. The driver information center (if equipped) will display Transport Mode is On when battery saver mode is enabled and Transport Mode is Off when battery saver mode is disabled. For vehicles not equipped with a driver information center, the battery indicator light will constantly flash on the Instrument Cluster when battery saver mode is enabled. This feature can be used as many times as necessary if the vehicle is to be stored for an extended period of time.

BCM Awake/Sleep States

The BCM is able to control or perform all of the BCM functions in the awake state. The BCM enters the sleep state when active control or normal monitoring of system functions has stopped and a time limit has passed. The BCM must detect certain wake-up inputs before entering the awake state. The BCM monitors for these inputs during the sleep state.

The BCM will enter the awake state if any of the following wake-up inputs are detected:

- Activity on the serial data line
- Detection of a battery reconnect
- Any door open signal
- Headlamps ON
- Key-in-ignition
- Ignition ON
- Park lamps ON
- Keyless entry or remote start message

The BCM will enter a sleep state when all of the following conditions exist:

- The ignition switch is OFF, key out.
- Ignition OFF, transmitter is out of range
- No activity exists on the serial data line.
- No outputs are commanded.
- No delay timers are actively counting.
- No wake-up inputs are present.

If all these conditions are met, the BCM will enter a low power or sleep condition.

Retained Accessory Power Description and Operation

Retained Accessory Power

RAP Description and Operation Block Diagram

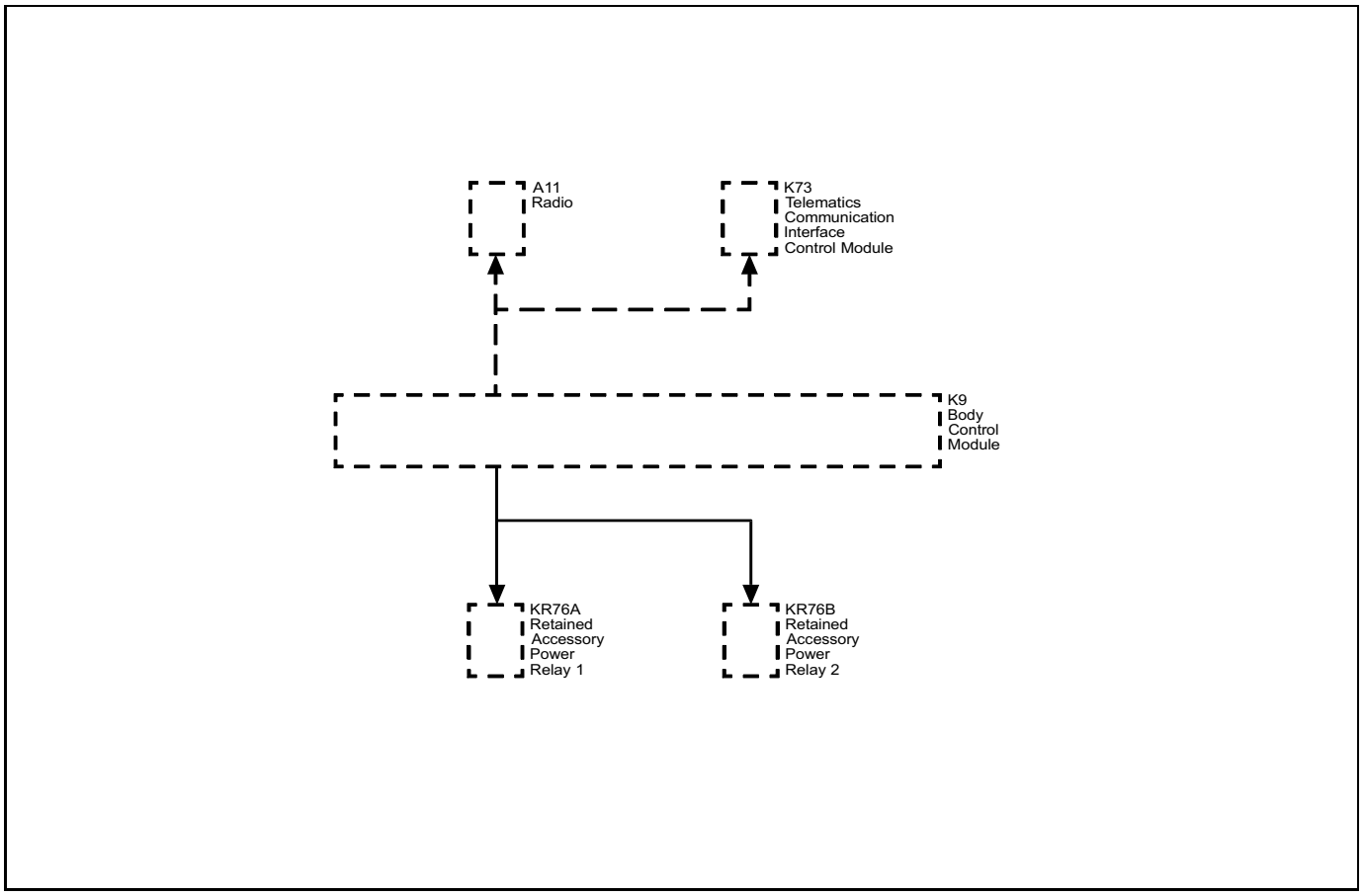

3282830

The body control module (BCM) monitors the ignition switch position, battery condition, and each door ajar/ open switch status to determine whether the retained accessory power should be initiated or terminated. Retained accessory power is controlled by two different methods; relay control and serial data. Some modules receive a retained accessory power message from the BCM over the serial data circuits. Serial data controlled retained accessory power is deactivated as required by their modules retained accessory power mode operation. Other subsystems are activated directly by the BCM through a relay. Components and systems that are active in retained accessory power are also activated anytime the ignition is any position other than OFF regardless of the door switch signals.

Relay Controlled Retained Accessory Power

The BCM keeps the retained accessory power relay 1 and retained accessory power relay 2 energized during all power modes, except Off-Awake and Crank. The retained accessory power relay 1 and retained accessory power relay 2 are also energized for approximately 10 minutes after shutting the ignition OFF and removing the key, providing no door is opened.

Relay controlled retained accessory power will end when one of the following conditions is met:

- The BCM receives an input from any door ajar or open switch indicating the opening of any door after the ignition key is out of the ignition.

  Note: If the BCM is receiving any door ajar or open signal from those switches when the ignition key is turned OFF, retained accessory power will not initiate.

- The BCM internal timer for the retained accessory power expires after approximately 10 minutes.
- The BCM detects a decrease in battery capacity below a prescribed limit.

Systems powered by the retained accessory power relay 1 and retained accessory power relay 2 during the retained accessory power mode are as follows:

Note: The vehicle may not be equipped with all components as listed below.

- Accessory Power Receptacle
- Cigarette Lighter Receptacle
- Sunroof Control Module
- Sunroof Switch

- Sliding Rear Window Switch
- Mobile Device Wireless Charger Module

Serial Data Controlled Retained Accessory Power

Retained accessory power systems controlled by serial data are as follows:

Radio

Radio retained accessory power activation / termination is the same as relay operation with one exception; the only door switch that will turn off the radio during retained accessory power is the driver door open switch.

Vehicle Communication Interface Module (VCIM) (Onstar®) (If Equipped)

VCIM RAP activation/termination is the same as radio operation with 1 exception; if there is an active call when the ignition key is turned off the VCIM will remain in RAP mode, and keep the radio in RAP mode until the call is terminated.

Trailering Description and Operation

Trailering System Overview

Begin the trailering system diagnosis with Diagnostic System Check - Trailering. The Diagnostic System Check - Trailering will provide a complete strategy to locate and repair a vehicle trailering electrical fault. Not following this strategy may cause additional diagnostic time and/or misdiagnosis.

The trailering system consists of the following:

- Trailer Battery Charging System, refer toTrailer Battery Charging Malfunction for additional diagnostic information.
- Trailer Brakes, refer to *Trailer Brake Controls Description and Operation on page 3-6* for additional information.
- Trailer Detection, refer to Trailer Detection Malfunction for additional diagnostic information.
- Trailer Lighting, refer to *Exterior Lighting Systems Description and Operation on page 2-48* for additional information.
- Trailer Tire Pressure Monitoring System (TTPMS), refer to Trailer Tire Pressure Monitor Description and Operation for additional information.
- Trailer Theft Detection.

When a trailer is connected to the X88 Trailer Connector on a vehicle equipped with side blind zone detection, rear park assist, and/or rear cross traffic alert, the vehicle will automatically turn these features off. These features are turned off to prevent false detections due to the trailer obstructing the view of the sensors.

Connecting Aftermarket Accessories

- Some aftermarket accessories that connect to the X88 Trailer Connector will be recognized by the vehicle as a trailer connected, even if the accessory is not a trailer. As a result, side blind zone detection, rear park assist, and/or rear cross traffic alert will be turned off anytime the vehicle detects a trailer/accessory is connected.
- Vehicles equipped with U1D have trailer theft detection that constantly monitors trailer connected status when enabled. This is done by periodically pulsing the lighting circuits of the trailer when the vehicle is parked. As a result, some aftermarket accessories may be turned ON/OFF when connected to the vehicle with theft detection enabled.
- Vehicles equipped with U1D use pulse width modulation voltage (PWM) for trailer lighting functions. Some aftermarket accessories are incompatible with PWM and may not function correctly when connected to the trailer lighting circuits of the vehicle.

Trailer Battery Charging System

Trailer battery charging is accomplished through constant battery voltage from the X50A Fuse Block – Underhood to the X88 Trailer Connector. Battery voltage is supplied to terminal E at the X88 Trailer Connector at all times. If equipped, the trailer battery will constantly be charged by the vehicle's electrical system anytime the trailer is connected. Some trailers require the B+ circuit to the X88 Trailer Connector for the trailer brakes to function.

Trailer Detection

With U1D

The K68 Trailer Lighting Control Module is supplied with battery voltage as well as ignition voltage and is permanently grounded. The trailer lighting control module constantly monitors for trailer connection status, this is accomplished through the lighting circuits of the trailer to determine if a trailer is connected. With the key OFF, the K68 Trailer Lighting Control Module will periodically pulse the lighting circuits of the trailer to verify it is still connected. Depending on the configuration of the trailer lights, the trailer lights may periodically flash as part of the trailer theft deterrent function. These flashes correspond to when the K68 Trailer Lighting Control Module pulses the lighting circuits to ensure the trailer is still connected and is considered normal. When a trailer is connected, the K68 Trailer Lighting Control Module senses the trailer connection and alerts the driver by requesting a trailer profile setup through the Trailering App, which is displayed on infotainment screen (P17 Info Display Module). If a trailer is disconnected with the ignition ON, the vehicle will display multiple trailer lighting message faults until a trailer is reconnected or the ignition is cycled.

With JL1, without U1D

Vehicles without U1D are not equipped with a K68 Trailer Lighting Control Module. Vehicles without U1D monitor trailer connection status through the trailer brake system. The K133 Trailer Brake Power Control

Module constantly monitors the trailer auxiliary control circuit from Terminal C at the X88 Trailer connector. When a trailer is connected with trailer brakes, the K133 Trailer Brake Power Control Module senses the connection and alerts the driver with a Trailer Connected message. If the K133 Trailer Brake Power Control Module senses a fault, or the trailer becomes disconnected, the vehicle will alert the driver with a Check Trailer Wiring message.

Trailer Lighting (With U1D)

The K68 Trailer Lighting Control Module is supplied with battery voltage as well as ignition voltage and is permanently grounded. For lighting operation, the K68 Trailer Lighting Control Module receives serial data messages from the K9 Body Control Module (BCM) indicating what lamps have been activated on the vehicle. The K68 Trailer Lighting Control Module responds by applying pulse width modulated voltage (PWM) to the appropriate control circuits for the requested lamps illuminating the lamps on the attached trailer. The K68 Trailer Lighting Control Module constantly monitors for trailer connection status, trailer lighting faults, and trailer theft deterrent purposes. This is accomplished through the lighting circuits of the trailer to determine if a trailer is connected. With the key OFF, the K68 Trailer Lighting Control Module will periodically pulse the lighting circuits of the trailer to verify it is still connected. The lights on the trailer may flash at different intervals with the key OFF depending on which type of lights the trailer is built with. If a trailer is disconnected with the key ON, the vehicle will display a trailer disconnected message until a trailer is reconnected or the ignition is cycled.

Backup Lamps

With the engine running and the transmission in the reverse position, the transmission control module (TCM) sends a serial data message that indicates the gear selector is in the reverse position. The K68 Trailer Lighting Control Module responds by applying PWM voltage to the X88 Trailer Connector on the trailer backup lamps control circuit when a trailer is connected. Once the driver moves the gear selector out of the reverse position, a message is sent by the TCM via serial data requesting the K68 Trailer Lighting Control Module to remove battery voltage from the backup lamp control circuit.

Park Lamps

When the headlamp switch is placed in the HEAD or PARK position, ground is applied to the park lamp switch ON signal circuit to the K9 Body Control Module (BCM). The BCM responds by sending a serial data message to the K68 Trailer Lighting Control Module. The K68 Trailer Lighting Control Module responds by applying PWM voltage to the X88 Trailer Connector on the trailer park lamp control circuit when a trailer is connected.

Stop Lamps

The brake pedal position sensor is used to sense the action of the driver application of the brake pedal. The brake pedal position sensor provides an analog voltage signal that will increase as the brake pedal is applied. The K9 Body Control Module (BCM) provides a low reference signal and a 5 V reference voltage to the brake pedal position sensor. When the variable signal reaches a voltage threshold indicating the brakes have been applied, the BCM energizes the stop lamp relay circuit by applying voltage to the stop lamp relay control circuit. The K68 Trailer Lighting Control Module senses the voltage on the stop lamp relay circuit and responds by applying PWM voltage to the X88 Trailer Connector on the left and right trailer stop/turn signal lamp control circuits when a trailer is connected.

Turn Signal Lamps

Ground is applied at all times to the turn signal/ multifunction switch. The turn signal lamps may only be activated with the ignition switch in the ON or START positions. When the turn signal/multifunction switch is placed in either the turn right or turn left position, ground is applied to the K9 Body Control Module (BCM) through either the right turn or left turn signal switch signal circuit. The BCM responds by sending a serial data message to the K68 Trailer Lighting Control Module. The K68 Trailer Lighting Control Module responds by applying PWM voltage to the X88 Trailer Connector on either the left or right trailer stop/turn signal lamp control circuits when a trailer is connected.

Trailer Lighting (Without U1D)

Backup Lamps

For backup lamp operation, the backup lamp relay is supplied with battery voltage at all times. With the engine running and the transmission in the reverse position, the transmission control module (TCM) sends a serial data message to the K9 Body Control Module (BCM). The message indicates that the gear selector is in the reverse position. The BCM energizes the backup lamp relay by applying battery voltage to the backup lamp relay control circuit. When the backup lamp relay is energized, the relay switch contacts close and battery voltage is applied through the backup lamp fuses to the backup lamp control circuits which illuminates the backup lamps. Once the driver moves the gear selector out of the reverse position, a message is sent by the TCM via serial data requesting the BCM to remove battery voltage from the backup lamp relay control circuit.

Park Lamps

When the headlamp switch is placed in the HEAD or PARK position, ground is applied to the park lamp switch ON signal circuit to the K9 Body Control Module (BCM). The BCM responds by applying voltage to the park lamps, tail lamps, license lamps, and trailer park lamps control circuits illuminating the park, tail, license, and trailer park lamps.

Stop Lamps

For stop lamp operation, the left and right trailer stop/ turn signal lamp relay's are supplied with battery voltage at all times. The brake pedal position sensor is used to sense the action of the driver application of the brake pedal. The brake pedal position sensor provides an analog voltage signal that will increase as the brake pedal is applied. The K9 Body Control Module (BCM) provides a low reference signal and a 5 V reference voltage to the brake pedal position sensor. When the variable signal reaches a voltage threshold indicating the brakes have been applied, the BCM energizes the

left and right trailer stop/turn signal lamp relay's by applying voltage to the left and right stop lamp relay control circuits. With the left and right trailer stop/turn signal lamp relay's energized, the relay switch contacts close and battery voltage is applied through the left and right trailer stop/turn signal fuse's to the trailer stop lamp control circuits which illuminates the trailer stop lamps.

Turn Signal Lamps

For turn signal lamp operation, the left and right trailer stop/turn signal lamp relay's are supplied with battery voltage at all times. Ground is applied at all times to the turn signal/multifunction switch. The turn signal lamps may only be activated with the ignition switch in the ON or START positions. When the turn signal/multifunction switch is placed in either the turn right or turn left position, ground is applied to the K9 Body Control Module (BCM) through either the right turn or left turn signal switch signal circuit. The BCM responds to the turn signal switch input by applying a pulsating voltage to the left and right trailer stop/turn signal lamp relay control circuits energizing the relay's in an ON and OFF cycle. With the left and right trailer stop/turn signal lamp relay's energized, the relay switch contacts cycle ON and OFF applying battery voltage through the left and right trailer stop/turn signal fuse's to the trailer turn signal lamp control circuits which illuminates the trailer turn signal lamps in an ON and OFF cycle.

Trailer Messages

The driver information center (P16 Instrument Cluster) or infotainment screen (P17 Info Display Module) may display one or more of the following messages to the user related to trailering.

Trailering Message	Description
Check Left Trailer Turn Signal Lamp	The K68 Trailer Lighting Control Module detects a fault on the left trailer stop/turn lamp control circuit
Check Right Trailer Turn Signal Lamp	The K68 Trailer Lighting Control Module detects a fault on the right trailer stop/turn lamp control circuit
Check Trailer Rear Lamp	The K68 Trailer Lighting Control Module detects a fault on the trailer park lamp control circuit.
Check Trailer Reversing Lamp	The K68 Trailer Lighting Control Module detects a fault on the trailer backup lamp control circuit.
Check Trailer Wiring	The K133 Trailer Brake Power Control Module detects a fault on the trailer brake control circuit or the trailer was disconnected.
Lane Change Alert Off	Reminder to the user that lane change alerts are turned off anytime a trailer is detected.
Rear Cross Traffic Alert Off	Reminder to the user that rear cross traffic alerts are turned off anytime a trailer is detected.
Rear Park Assist Off	Reminder to the user that rear park assist is turned off anytime a trailer is detected.
Remember to turn On Tow/Haul Mode	Reminder to the user to turn ON Tow/Haul Mode when towing.
Service Trailer Brake System	The K133 Trailer Brake Power Control Module detects a fault on the trailer brake control circuit.
Service Trailer Tire Monitor System	The K214 Trailer Tire Pressure Indicator Module detects one or more issues with the trailer tire pressure monitoring system.
Trailer Connected	The K68 Trailer Lighting Control Module detects that a trailer has been connected to the X88 Trailer Connector.
Trailer Detected (With U1D)	The K68 Trailer Lighting Control Module detects a trailer has been connected to the X88 Trailer Connector.

Trailering Message	Description
Trailer Detected (Without U1D)	The K133 Trailer Brake Power Control Module detects a trailer with trailer brakes has been connected to the X88 Trailer Connector.
Trailer Disconnected Check Connection	The K68 Trailer Lighting Control Module detects a trailer has been disconnected from the X88 Trailer Connector.
Trailer Tire Pressure High	The K214 Trailer Tire Pressure Indicator Module detects one or more of the trailer tire pressures is high.
Trailer Tire Pressure Low	The K214 Trailer Tire Pressure Indicator Module detects one or more of the trailer tire pressures is low.
Trailer Tire Sensor Fault	The K214 Trailer Tire Pressure Indicator Module detects one or more of the trailer tire pressure sensors has a fault.
Trailer Tire Temperature High	The K214 Trailer Tire Pressure Indicator Module detects one or more of the trailer tire temperatures is too high.

Trailer Theft Detection (With U1D Only)

Trailer theft monitoring can be turned ON and OFF through the vehicle Trailer App. Anytime the vehicle theft deterrent system is armed, the trailer lighting circuits are constantly monitored to determine if a trailer is connected for trailer theft deterrent purposes. With the key OFF, the K68 Trailer Lighting Control Module will periodically pulse the lighting circuits of the trailer to verify it is still connected by monitoring the voltage drop of the circuit. Depending on the configuration of the trailer lights, the trailer lights may periodically flash as part of the trailer theft deterrent function. These flashes correspond to when the K68 Trailer Lighting Control Module pulses the lighting circuits to ensure the trailer is still connected and is considered normal. If the trailer is disconnected while the vehicle theft deterrent system is armed, the vehicle will flash the exterior lights and cycle the horn to alert of a trailer theft event. Refer to Theft Systems Description and Operation for more information on the vehicle theft deterrent system.

Trailering Diagnostic Tools

In some situations when diagnosing trailer tire pressure monitoring, trailer lighting, or integrated trailer brakes, it may be necessary to connect the vehicle to a trailer to confirm proper operation. Performing this activity may prove difficult in the service environment since trailers are not often available for diagnostic use, may have existing electrical issues outside of the issues a technician is attempting to diagnose, or simply may be too unwieldily to connect for diagnosis.

With all this in mind, it may be helpful to build or create a tool that can be plugged into the vehicle's 7-way trailer connector and simulate a connected trailer. This tool would include park lamps, stop lamps, and a reverse lamp for lighting and trailer tire pressure monitoring diagnosis. It can be expanded to include trailer brake magnets to diagnose integrated trailer brake concerns. Also, an additional lamp can be included to diagnose the B+ circuit to the trailer.

Trailer issues are NOT covered under warranty, but these tools may be used to verify the vehicle is functioning properly and to help the customer understand and correct any trailer related issues if they so choose.

Available Trailer Presence Simulator Tool

Illustration	Tool Number/Description
 5166189	*EL-52641* Trailer Presence Simulator Tool

Simulated Trailer Lighting

Creating a tool to simulate a connected trailer can be used to diagnose issues with trailer lighting, trailer brake (if equipped), the Trailering App (if equipped), and trailer tire pressure monitoring system (if equipped).

If the vehicle is equipped with a K68 Trailer Lighting Control Module, the K68 Trailer Lighting Control Module monitors the current on the lighting circuits to determine a trailer has been connected. The K68 Trailer Lighting Control Module pulses current on the trailer lighting circuits every 10–15 s to monitor for a connected trailer. If a greater than 15mA draw is detected, the K68 Trailer Lighting Control Module recognizes this as a connected trailer. This will enable any trailer lighting controlled by the K68 Trailer Lighting Control Module. If the vehicle is also equipped with trailer tire pressure monitoring, the K68 Trailer Lighting Control Module will also use this trailer detection as a cue to enable the Trailering App and trailer tire pressure monitoring functions.

If the vehicle is not equipped with a K68 Trailer Lighting Control Module, the K9 Body Control Module controls the trailer lighting. The K9 Body Control Module does not actively monitor for a connected trailer. Instead, the K9 Body Control Module controls the trailer lights much like a parallel circuit with the vehicle lights.

Creating a Simulated Trailer Lighting Tool

Parts needed:

- 7-way RV trailer connector Qty: 1

  Note: The combination trailer park/stop/turn lamp must draw at least 15mA of current to be detected as a trailer. Some LED combination lamps will not draw enough current. If an LED combination lamp is used, make sure it draws at least 15mA. A load resistor can be added in series if necessary to obtain the correct load.

- Combination trailer park/stop/turn lamp (greater than 15mA drawn when on) Qty: 2
- Reverse lamp Qty: 1
- 12 gauge wire and terminals/connectors Qty: As needed
- 18 gauge wire and terminals/connectors Qty: As needed
- Mounting board Qty: 1

1. Connect a 12 gauge wire to the ground terminal of the 7-way trailer connector and the ground circuit of each combination trailer park/stop/turn lamp and the reverse lamp in parallel.
2. Connect an 18 gauge wire between the park lamp terminal of the 7-way trailer connector and the park lamp circuit of each combination trailer park/stop/turn lamp in parallel.
3. Connect an 18 gauge wire between the left turn/stop lamp terminal of the 7-way trailer connector and the turn/stop lamp circuit of left trailer park/stop/turn lamp.
4. Connect an 18 gauge wire between the right turn/stop lamp terminal of the 7-way trailer connector and the turn/stop lamp circuit of right trailer park/stop/turn lamp.
5. Connect an 18 gauge wire between the reverse lamp terminal of the 7-way trailer connector and the reverse lamp.

   Note: A combination trailer lighting and trailer brake tool can be created on the same mounting board.

6. Mount the left combination trailer park/stop/turn lamp, right combination trailer park/stop/turn lamp, and reverse lamp to the mounting board.
7. Plug the 7-way RV trailer connector to the vehicle and verify functionality.

Simulated Trailer Brakes

Creating a tool to simulate trailer brakes can be used to diagnose trailer brake issues.

The trailer brake control system is compatible with two types of trailer brake systems: electromagnetic or electro-over hydraulic trailer brakes. The Brake System Control Module must determine which type of brakes the trailer is equipped with so the system can output correctly for the trailer's brake system. Because the Brake System Control Module has to determine the type of trailer brake system that is being used, it can be sensitive to a variety of trailer wiring issues.

The Trailer Brake Power Control Module continuously sends a test pulse out on the trailer brake control circuit (circuit 47) to determine if a trailer with trailer brakes has been connected. How the pulse reacts when a trailer is connected is how the Trailer Brake Power Control Module determines which type of braking system the trailer is equipped with.

Even after the system detects the trailer, Trailer Brake Power Control Module will continue to send this test pulse on the trailer brake control circuit, which now is monitoring both the truck and trailer circuitry. The trailer brake control circuit continues to be monitored for any faults so the driver can be notified of any issues that may occur within the truck or trailer, as well as, to determine when the trailer is disconnected from the truck.

Creating a Simulated Trailer Brake Tool

Parts needed:

- 7-way RV trailer connector Qty: 1
- Electric trailer brake magnets Qty: 2, 4, 6, or 8
- Reverse lamp Qty: 1
- Mounting board Qty: 1
- 12 gauge wire and terminals/connectors Qty: As needed

1. Connect a 12 gauge wire to the ground terminal of the 7-way trailer connector.
2. Connect a 12 gauge wire to the brake controller output terminal of the 7-way trailer connector.

   Note: The trailer brake magnets must be connected in parallel. Connecting in series will create an excessive current draw and disable the trailer brake system.

3. Connect the trailer brake magnets to the 12 gauge wires from the 7-way trailer connector in parallel.

   Note: A combination trailer lighting and trailer brake tool can be created on the same mounting board.

4. Mount the trailer brake magnets to the mounting board.
5. Plug the 7-way RV trailer connector to the vehicle and verify functionality.

BLANK

Section 8

Safety and Security

Immobilizer 8-3
Schematic and Routing Diagrams 8-3
Immobilizer Schematics 8-4
Description and Operation 8-5
Immobilizer Description and Operation 8-5
Parking Assistance Systems 8-7
Schematic and Routing Diagrams 8-7
Parking Assistance Systems Schematics 8-8
Description and Operation 8-11
Parking Assist Description and Operation (UD7) 8-11
Parking Assist Description and Operation (UD5) 8-12
Seat Belts 8-14
Schematic and Routing Diagrams 8-14
Seat Belt Schematics 8-15
Description and Operation 8-16
Seat Belt System Description and Operation . . . 8-16

BLANK

Immobilizer

Schematic and Routing Diagrams

Immobilizer Schematics (Immobilizer)

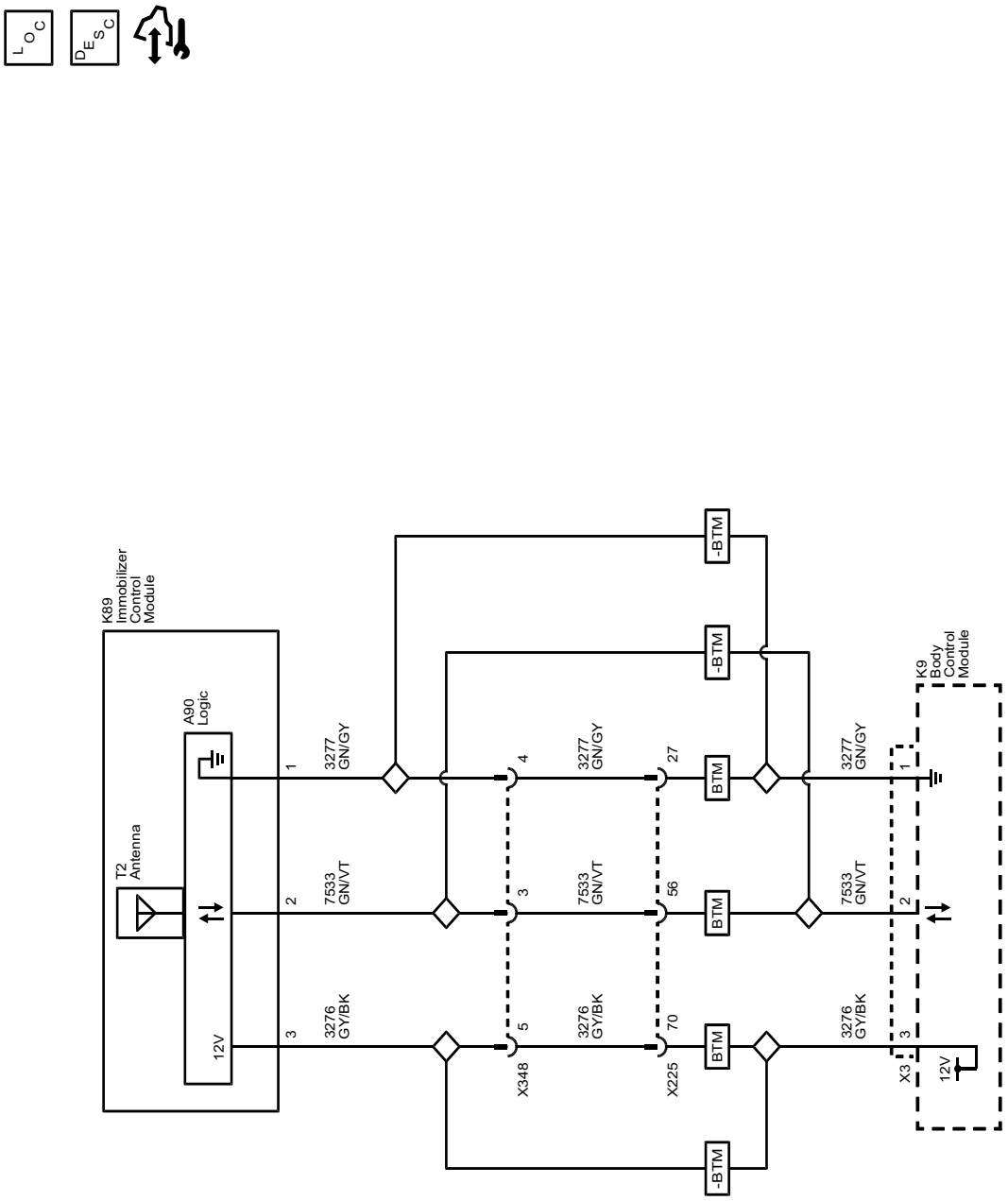

5217178

Description and Operation

Immobilizer Description and Operation

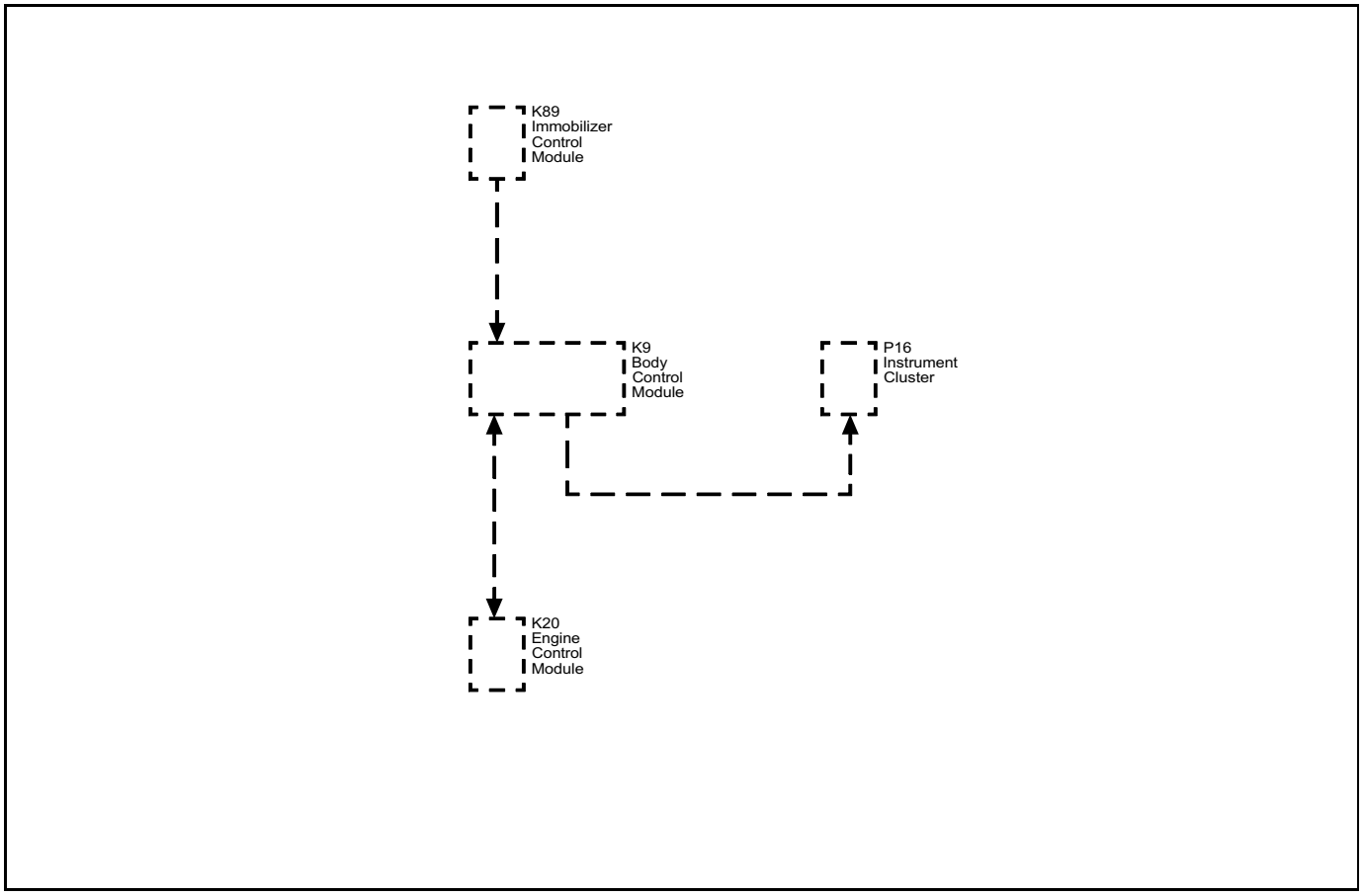

3510923

The immobilizer system functions are provided by the body control module (BCM) and the engine control module (ECM), as well as any control modules which store and report the environment identifier.

When an ignition key is inserted into the ignition lock cylinder and the ignition is switched ON, the transponder in the key is energized by the immobilizer coil surrounding the ignition lock cylinder. This immobilizer coil is part of the immobilizer control module. The transponder transmits a signal that contains its unique value, which is received by the BCM through the immobilizer coil. The BCM then compares this value to a value stored in memory. The BCM also monitors various control modules to determine if the stored environment identifiers match.

If both the environment identifier and the value received from the transponder match, the BCM will send the prerelease password via serial data to the ECM. If the encrypted code's unique value is incorrect or the environment identifier does not match, the BCM will send the start disable message to the ECM which will prevent the vehicle starter and fuel pump from operating.

When the ECM receives the BCM prerelease password, the ECM will challenge the password. The ECM sends this challenge to the BCM via serial data. Both the ECM and BCM perform a calculation on this challenge. If the BCM calculated response to the challenge equals the calculation performed by the ECM, the ECM will allow vehicle starting.

The components of the theft system are as follows:

- BCM
- ECM
- Immobilizer control module
- Ignition key
- Security indicator
- Various control modules which store and report the environment identifier

Body Control Module (BCM)

The immobilizer system is an integral part of the BCM and is controlled internally within the BCM. The BCM can learn up to 8 keys (transponder values).

The BCM uses the following inputs:

- Environment identifier exchange with various modules
- Encrypted code from the vehicle key, received by the immobilizer control module

The BCM uses the following outputs:

- Prerelease password communication with ECM
- Challenge/response with ECM

When an ignition key is inserted into the ignition lock cylinder and the ignition is switched ON, the encrypted code in the key is energized by the immobilizer control module surrounding the ignition lock cylinder. The energized transponder transmits a signal that contains its unique value, which is received by the BCM. The BCM then compares this value to the learned key code stored in memory. The BCM then performs one of the following functions:

- If the encrypted code value matches the values stored in the BCM memory, the BCM will send the prerelease password to the ECM via serial data.
- If the encrypted code unique value does not match the value stored in the BCM, the BCM will send the start disable message to the ECM via serial data.
- If the BCM is unable to measure the ignition key encrypted code value, the BCM will not send any messages to the ECM.

Engine Control Module (ECM)

When the ECM receives the BCM prerelease password, the ECM will challenge the password. The ECM sends this challenge to the BCM via the serial data circuit. Both the ECM and BCM perform a calculation on this challenge. If the calculated response from the BCM equals the calculation performed by the ECM, the ECM will allow vehicle starting.

The ECM will disable vehicle starting if any of the following immobilization conditions occur:

- The prerelease password is invalid.
- The start disable password is sent by the BCM.
- No passwords are received. There is no communication with the BCM.
- The BCM calculated response to the challenge does not equal the calculation performed by the ECM.

Immobilizer Control Module

The immobilizer control module contains an immobilizer coil which surrounds the ignition cylinder. The coil passively powers the transponder located in the ignition key when the key is in the ignition. When powered, the key transmits its unique value to the immobilizer control module, which is then relayed to the BCM via a discrete serial data circuit. The immobilizer control module also receives B+ and ground from the BCM.

The immobilizer control module is used to:

1. Learn keys
2. To start the vehicle

Ignition Key

Each ignition key contains a transponder with a unique encrypted value. The transponder's encrypted value is fixed and unable to be changed. The immobilizer system uses the ignition key transponder value to determine if a valid ignition key is being used to start the vehicle.

Environment Identifier

Various modules throughout the vehicle learn a specific environment identifier during the module programming process. The environment identifier is learned by each individual module and matches the environment identifier stored in the BCM. Prior to starting after a battery disconnect, each of the modules which store a environment identifier will compare their identifier to that of the identifier stored in the BCM. If all the identifiers match, the engine starting process will continue. If the environment identifiers do not match, engine starting will be disabled.

Security Indicator

The BCM will command the instrument cluster to illuminate the security indicator when the ignition is in the ON position to indicate a fault has occurred within the immobilizer system and when the engine starting is disabled.

Parking Assistance Systems

Schematic and Routing Diagrams

Parking Assistance Systems Schematics (Park Assist - Power, Ground, Serial Data, and Control (UD5/UD7))

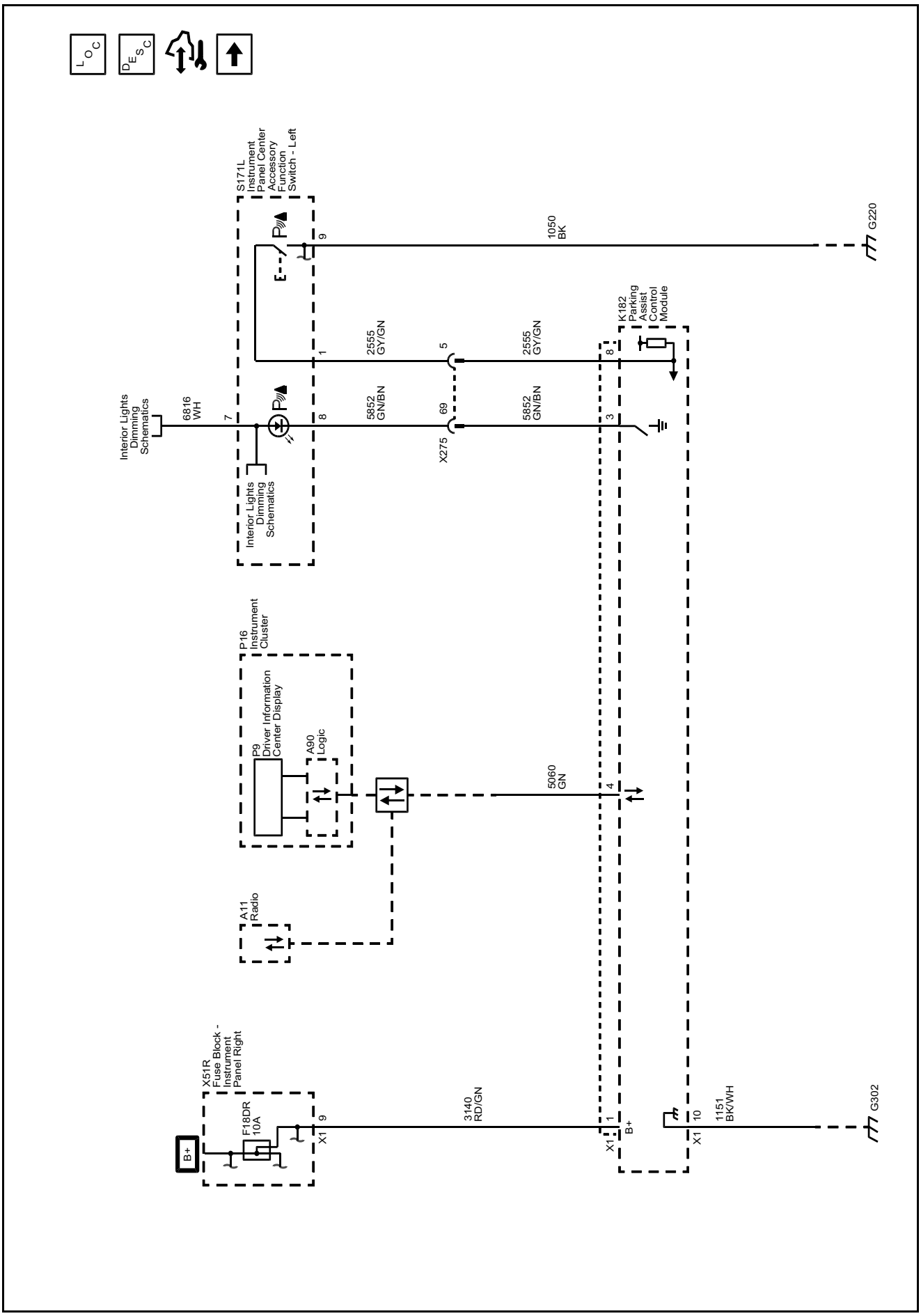

Parking Assistance Systems Schematics (Park Assist - Front Sensors (UD5))

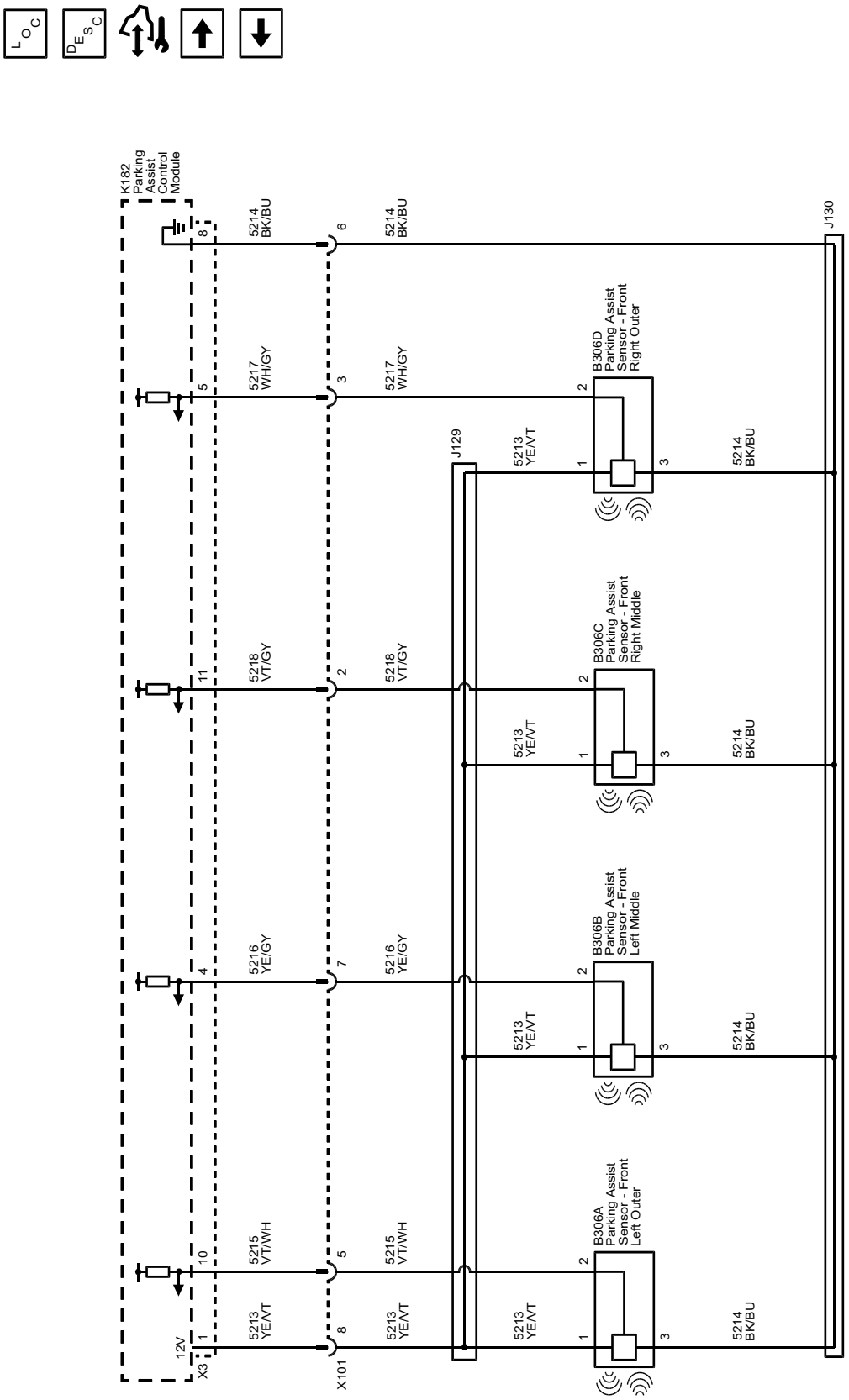

Parking Assistance Systems Schematics (Park Assist - Rear Sensors (UD5/UD7))

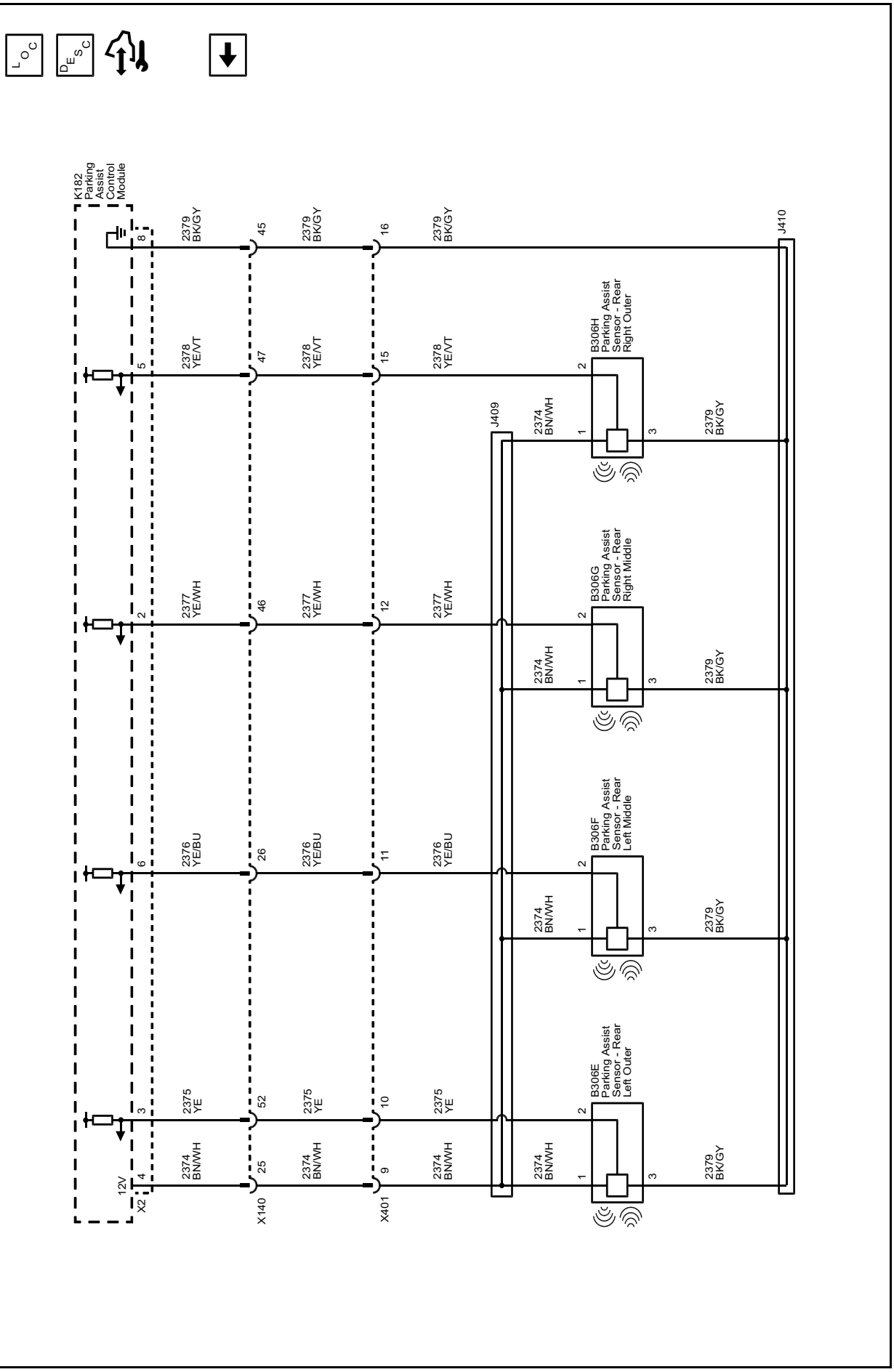

Description and Operation

Parking Assist Description and Operation (UD7)

The parking assist system is designed to identify and notify the driver of an object in the vehicle path when reversing at speeds of less than 8 km/h (5 mph). The distance and location of the object is determined by four object sensors located in the rear fascia The parking assist system will notify the driver using audible beeps through the infotainment system. Some vehicles may also have a parking assist display on the infotainment screen or driver information center to graphically display the distance to an object.

The parking assist system is made up of the following components:

- K182 Parking Assist Control Module
- B306 Parking Assist Sensors
- Parking Assist Switch
- Parking Assist Switch Indicator
- Infotainment system

K182 Parking Assist Control Module

The K182 Parking Assist Control Module provides a reference voltage and a low reference to the B306 Parking Assist Sensors. The K182 Parking Assist Control Module receives individual signals from each of the four B306 Parking Assist Sensors and determines the location and distance of an object based on these inputs. When an object is detected, the K182 Parking Assist Control Module will send a serial data message to the infotainment system requesting an audible alert.

B306 Parking Assist Sensors

The B306 Parking Assist Sensors are located in the rear fascia of the vehicle. The sensors are used to determine the distance between an object and the bumper. Each sensor emits an ultrasonic frequency which is reflected off any object located behind the vehicle. These reflections are received by the sensors. The time difference between the emission of the frequency and when the reflection is received is known as sensor echo time; it is used to determine the distance to the object. The sensors report this information to the K182 Parking Assist Control Module.

Parking Assist Switch

The parking assist system can be activated and deactivated by pressing the parking assist switch. The K182 Parking Assist Control Module applies voltage and monitors the parking assist switch signal circuit. The parking assist switch is a normally open switch. With the switch open, voltage seen at the K182 Parking Assist Control Module is high. When the parking assist switch is pressed, the switch is closed and the signal circuit is pulled to ground. With the switch closed, voltage seen at the K182 Parking Assist Control Module is low. The K182 Parking Assist Control Module will respond to this by activating or deactivating the parking assist function.

Parking Assist Switch Indicator

When the parking assist system is enabled, the K182 Parking Assist Control Module will illuminate the indicator on the switch. The indicator receives voltage through a high control circuit from the K9 Body Control Module and is controlled through a low control circuit by the K182 Parking Assist Control Module.

Infotainment System

The infotainment system controls the audible alert for the parking assist system. If the an object is detected the infotainment system will command beeps as an audible alert to the driver.

Parking Assist Operation

When an object is within the measuring range of the B306 Parking Assist Sensors, the ultrasonic pulse is reflected and is received by the sending or a neighboring sensor. The sensor converts this signal into a voltage signal and sends this signal to the K182 Parking Assist Control Module. The K182 Parking Assist Control Module evaluates the received sensor signals. As soon as an object is within the measuring range, the K182 Parking Assist Control Module sends a message via serial data to the infotainment system to provide an audible alert signal.

The parking assist system can detect objects greater than 7.6 cm (3 in) wide and 25.4 cm (10 in) tall. The system cannot detect objects below the bumper or underneath the vehicle.

When the transmission is in R, parking assist is automatically activated, unless disable through vehicle personalization.

The K182 Parking Assist Control Module carries out a self test and monitors the sensors for electrical and mechanical faults. Monitored is the power supply of each sensor and the sensor signals. Mud, ice and snow may cause obstruction of the function of the sensors. The K182 Parking Assist Control Module also determines if the correct type of sensor is installed. If any of these tests fails, a DTC with corresponding symptom is set and the parking assist system is deactivated.

Parking Assist System Messages

SERVICE PARK ASSIST

The driver information center displays SERVICE PARK ASSIST when the K182 Parking Assist Control Module detects a malfunction in the parking assist system and the system is disabled. The driver information center also displays SERVICE PARK ASSIST when a loss of communication occurs with the K182 Parking Assist Control Module.

PARK ASSIST OFF

The PARK ASSIST OFF message is displayed in the driver information center when the parking assist system is disabled due to conditions that disable or inhibit the system. The K182 Parking Assist Control Module requests the driver information center display PARK ASSIST OFF when it detects that one of the following conditions:

- The parking assist system is manually disabled.
- An object is attached to the rear of the vehicle, such as a trailer, bicycle rack, trailer hitch receiver, or tow bar. Also, an object extending beyond a lowered tailgate will disable the system.

- The parking assist sensors are covered by snow, mud, dirt, slush, or ice.
- The vehicle rear fascia is damaged.
- Excessive paint thickness on a replacement B306 Parking Assist Sensor.
- The B306 Parking Assist Sensors are disrupted by vibrations, like those caused by a large nearby vehicle or from heavy equipment such as a jackhammer.

Parking Assist Description and Operation (UD5)

The parking assist system can help drivers avoid certain objects in their path during low-speed parking. The distance and location of the object is determined by 4 object sensors located in the rear fascia and 4 object sensors located in the front fascia. The parking assist system may not detect all children, pedestrians, bicyclists, animals or objects below the bumper. Drivers should remember to always check the area around the vehicle before moving forward or backing up. The parking assist system will not stop or slow down a vehicle. It does not engage a vehicle's throttle or braking. No safety system can take the place of an alert and engaged driver.

The parking assist system is made up of the following components:

- K182 Parking Assist Control Module
- B306 Parking Assist Sensors
- Parking Assist Switch
- Parking Assist Switch Indicator
- Safety Alert Seat (HS1)
- Infotainment system

K182 Parking Assist Control Module

The K182 Parking Assist Control Module provides a reference voltage and a low reference to the B306 Parking Assist Sensors. The K182 Parking Assist Control Module receives individual signals from each of the four B306 Parking Assist Sensors and determines the location and distance of an object based on these inputs. When an object is detected, the K182 Parking Assist Control Module will send a serial data message to the infotainment system requesting an audible alert.

B306 Parking Assist Sensors

The B306 Parking Assist Sensors are located in the front and rear fascia of the vehicle. The sensors are used to determine the distance between an object and the bumper. Each sensor emits an ultrasonic frequency which is reflected off any object located behind the vehicle. These reflections are received by the sensors. The time difference between the emission of the frequency and when the reflection is received is known as sensor echo time; it is used to determine the distance to the object. The sensors report this information to the K182 Parking Assist Control Module.

Parking Assist Switch

The parking assist system can be activated and deactivated by pressing the parking assist switch. The K182 Parking Assist Control Module applies voltage and monitors the parking assist switch signal circuit. The parking assist switch is a normally open switch. With the switch open, voltage seen at the K182 Parking Assist Control Module is high. When the parking assist switch is pressed, the switch is closed and the signal circuit is pulled to ground. With the switch closed, voltage seen at the K182 Parking Assist Control Module is low. The K182 Parking Assist Control Module will respond to this by activating or deactivating the parking assist function.

Parking Assist Switch Indicator

When the parking assist system is enabled, the K182 Parking Assist Control Module will illuminate the indicator on the switch. The indicator receives voltage through a high control circuit from the K9 Body Control Module and is controlled through a low control circuit by the K182 Parking Assist Control Module.

Safety Alert Seat (HS1)

The K40 Seat Memory Control Module controls the P45 Seat Haptic Movement Motors. The P45 Seat Haptic Movement Motors provide haptic alert to the driver. If an object is detected, the K40 Seat Memory Control Module will command pulses to the P45 Seat Haptic Movement Motors as an alert to the driver.

Infotainment System

The infotainment system controls the audible alert for the parking assist system. If the an object is detected the infotainment system will command beeps as an audible alert to the driver.

Front and Rear Parking Assist Operation

The rear parking assist system uses 4 B306 Parking Assist Sensors located on the rear fascia and functions when the transmission is in REVERSE. When a driver is backing up at a low speed, below 8 km/h (5 mph), the B306 Parking Assist Sensors may detect objects up to 8 feet (2.4 m) behind the vehicle. When an object is within the measuring range of the B306 Parking Assist Sensors, the ultrasonic pulse is reflected and is received by the sending or a neighboring sensor. The sensor converts this signal into a voltage signal and sends this signal to the K182 Parking Assist Control Module. The K182 Parking Assist Control Module evaluates the received sensor signals.

When an object is first detected while backing up, the parking assist system emits low-pitched beeps from the rear speakers, or, if the vehicle is equipped with the Safety Alert Seat (HS1), the seat pulses 2 times on both sides of the seat. On some vehicles, the time between beeps may get shorter as the vehicle approaches the detected object . When an object is within 0.6 m (2 ft) of the bumper, 5 repeating low-pitched beeps are played from the rear speakers, or, if the vehicle is equipped with the Safety Alert Seat (HS1), it pulses 5 times on both sides. When an object is within 0.3 m (1 ft) of the bumper, repeating low-pitched beeps or a continuous low-pitched tone is played from the rear speakers, or, if the vehicle is equipped with the Safety Alert Seat (HS1), the seat pulses 5 times on both sides

The front parking assist system uses 4 B306 Parking Assist Sensors located on the front fascia and functions when the vehicle is moving forward at low speeds.

When a driver is driving forward at a low speed, below 8 km/h (5 mph), the B306 Parking Assist Sensors may detect objects up to 8 feet (2.4 m) in front og the vehicle. When an object is within the measuring range of the B306 Parking Assist Sensors, the ultrasonic pulse is reflected and is received by the sending or a neighboring sensor. The sensor converts this signal into a voltage signal and sends this signal to the K182 Parking Assist Control Module. The K182 Parking Assist Control Module evaluates the received sensor signals.

The front parking assist system uses a parking assist display with bars that show "distance to object," driving direction, and object location information for the parking assist system. As the vehicle gets closer to the detected object, distance-to-object information and caution triangles may be displayed that changes from yellow to amber to red.

When an object is within 0.3 m (1 ft) of the bumper, repeating low-pitched beeps or a continuous low-pitched tone is played from the rear speakers, or, if the vehicle is equipped with the Safety Alert Seat (HS1), the seat pulses 5 times on both sides

The parking assist system can be turned ON and OFF using the parking assist switch control or through driver information center.

The K182 Parking Assist Control Module carries out a self test and monitors the sensors for electrical and mechanical faults. Monitored is the power supply of each sensor and the sensor signals. Mud, ice and snow may cause obstruction of the function of the sensors. The K182 Parking Assist Control Module also determines if the correct type of sensor is installed. If any of these tests fails, a DTC with corresponding symptom is set and the parking assist system is deactivated.

Parking Assist System Messages

SERVICE PARK ASSIST

The driver information center displays SERVICE PARK ASSIST when the K182 Parking Assist Control Module detects a malfunction in the parking assist system and the system is disabled. The driver information center also displays SERVICE PARK ASSIST when a loss of communication occurs with the K182 Parking Assist Control Module.

PARK ASSIST OFF

The PARK ASSIST OFF message is displayed in the driver information center when the parking assist system is disabled due to conditions that disable or inhibit the system. The K182 Parking Assist Control Module requests the driver information center display PARK ASSIST OFF when it detects that one of the following conditions:

- The parking assist system is manually disabled.
- An object is attached to the rear of the vehicle, such as a trailer, bicycle rack, trailer hitch receiver, or tow bar. Also, an object extending beyond a lowered tailgate will disable the system.
- The B306 Parking Assist Sensors are covered by snow, mud, dirt, slush, or ice.
- The vehicle front or rear fascia is damaged.
- Excessive paint thickness on a replacement B306 Parking Assist Sensor.
- The B306 Parking Assist Sensors are disrupted by vibrations, like those caused by a large nearby vehicle or from heavy equipment such as a jackhammer.

Seat Belts

Schematic and Routing Diagrams

Seat Belt Schematics (Seat Belts)

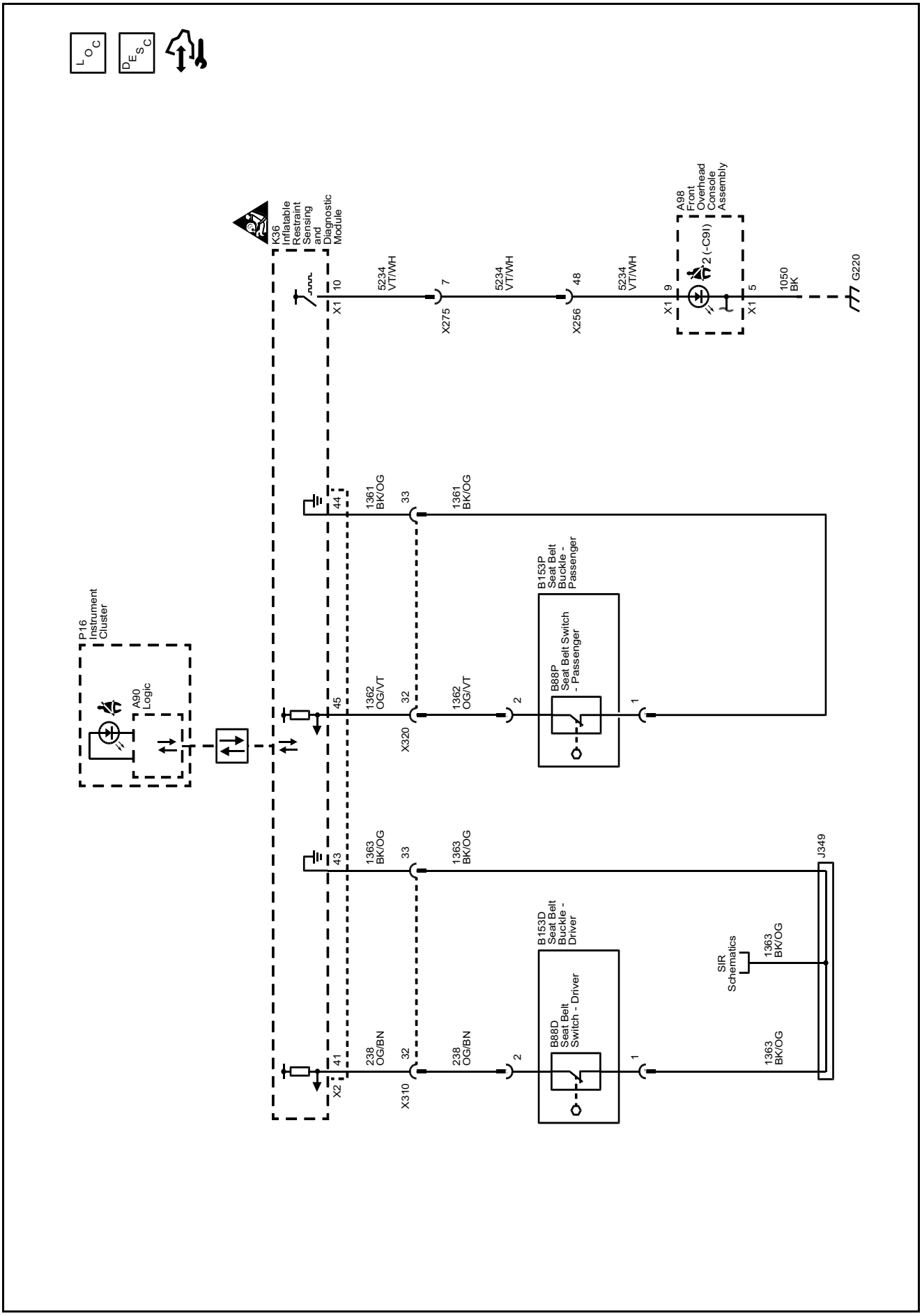

Description and Operation

Seat Belt System Description and Operation

Seat Belt with P14 Block Diagram

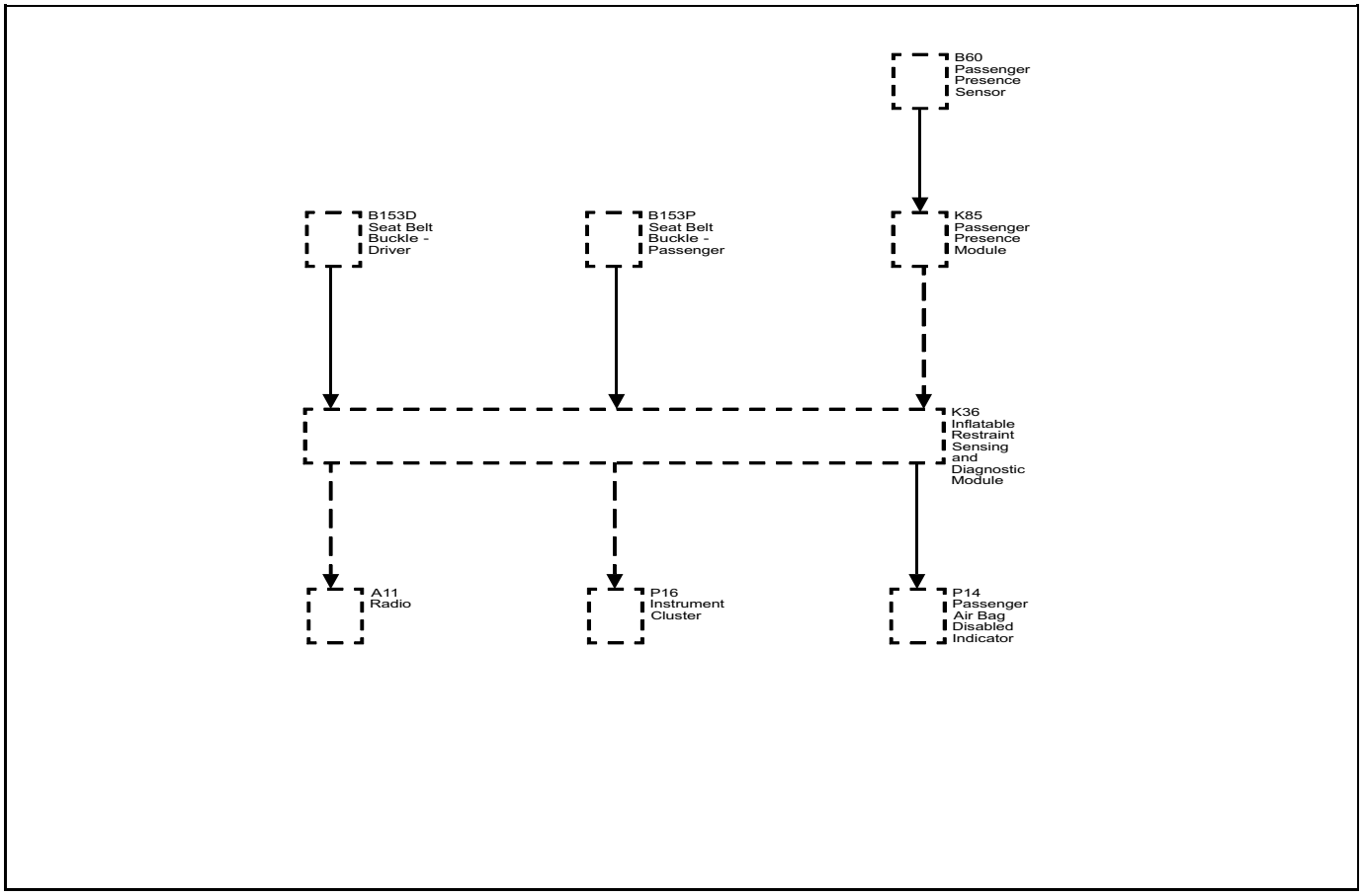

3513718

Note: Not all items shown in block diagram are available in this publication

Restraint System

Note: If the vehicle has been in a collision, refer to Repairs and Inspections Required After a Collision.

The vehicle has front and rear seat belts that are the primary means of occupant restraint. Seat belts help to keep the occupants inside the passenger compartment and to gradually reduce the impact forces during the following events:

- Frontal impact type crashes
- Rear impact type crashes
- Side impact type crashes
- Roll-over type crashes

All seat belt retractors have emergency locks. The retractors remain unlocked during normal operation and under normal driving conditions. The retractors remain unlocked during normal conditions in order to allow free movement of the upper body of each occupant.
A pendulum locks the seat belt webbing into position. The pendulum causes a locking bar to engage a cog on the spool of the retractor mechanism when the following conditions occur:

- A rapid extraction of the seat belt webbing from the retractor
- An abrupt change in vehicle speed
- An abrupt change in vehicle direction
- Operation of the vehicle on a steep upgrade
- Operation of the vehicle on a downgrade

The seat belts have an automatic locking (cinch) feature. The cinch feature is activated when the seat belt webbing is completely extended from the retractor. The cinch feature prevents the webbing from extending beyond the position from which it is allowed to retract. Use of the cinch feature is recommended for securing a child seat. The cinch feature may be cancelled by allowing the webbing to wind back completely into the retractor. After the cinch feature is cancelled, the webbing is unlocked. After the cinch feature is cancelled, the webbing will extend from the retractor. This vehicle is also equipped with a supplemental inflatable restraint (SIR) system. Refer to Supplemental Inflatable Restraint System Description and Operation.

Motorized Seat Belts

A motorized seat belt is a seat belt with a motor coupled to the shoulder belt retractor. The motorized seat belt provides the driver and passenger a sense of safety and, in the case of severe braking or a crash, more quickly couples the occupant to the vehicle, enhancing the safety to the occupant.

Motorized seat belts monitor vehicle information to determine when to perform each of the following retractions

- Full retraction for such situations but not limited to: panic braking and or skidding
- Dynamic support for lateral and longitudinal dynamics

Preconditions for motorized seat belt retractions

- Seat belt buckle is latched
- Vehicle speed greater than or equal to 25 kph (16 mph)
- All messages on serial data are received as valid

Triggers that may cause motorized seat belt retractions

- Emergency Braking
- Sudden Emergency / Panic Braking
- High Vehicle Deceleration Detection
- Ice Braking Detection
- Oversteer and Understeer

Motorized seat belt inputs

- Vehicle Power Mode
- Transmission Gear
- Wheel Speeds
- Vehicle Acceleration
- Accelerator Pedal Position
- Steering Wheel Angle and Gradient
- Yaw Rate and Lat/Long Acceleration
- Brake Pedal Position, Gradient, Pressure, Initial Travel
- Vehicle Stability

Motorized seat belt output signals

- Driver information center message – motorized seat belt Failed “Service Automatic Seatbelt Tightening”
- Driver information center message – motorized seat belt Unavailable “Automatic Seatbelt Tightening Unavailable”

Motorized seat belt retractions are inhibited when seat belt unbuckled

Driver and passenger motorized seat belts operate independently

Front Seat Belt System

The front seat belt system includes a driver and passenger seat belt pretensioner retractor. Both front seat belt pretensioners includes a seat belt switch in the seat buckle which controls a reminder lamp and a tone alarm.

Note: The front passenger seat is equipped with a passenger presence detection sensor, which detects an occupant. If the passenger presence detection sensor detects an empty front passenger seat, then the passenger fasten safety belt indicator will be disabled.

- When the driver seat belt is buckled and the ignition switch is turned ON, the following events will occur:
  - The tone alarm will not operate.
  - The reminder lamp will not operate.
- When the driver seat belt is not buckled and the ignition switch is in the ON position, the following events will occur:
  - The tone alarm will operate for 4–8 seconds and then go OFF.
  - The fasten safety belt indicator will turn ON for 20 seconds, until the driver seat belt is buckled.

Rear Seat Belt System

The Rear Seat Belt System includes the following components:

- The rear seat belt retractor is located at the wheelhouse panel and attached to the floor panel by the rear seat shoulder belt retractor bracket.
- The rear seat belt buckles and the center seat belt buckle are attached to each seat.

Child Seat Restraint System

Warning: A child in a rear-facing child restraint can be seriously injured if the front passenger air bag inflates, because the back of a rear-facing child restraint would be very close to the inflating air bag. NEVER use a rear-facing child restraint in this vehicle. If a forward-facing child restraint is suitable for your child, ALWAYS move the front passenger seat as far back as it will go and then install the child restraint. Be sure the child restraint position does not conflict with any additional requirements provided by the manufacturer. For more information, refer to the vehicle owner’s manual and the instructions that came with the child restraint.

A child in a rear-facing child restraint can be seriously injured if the right-front passengers air bag inflates. This is because the back of a rear-facing child restraint would be very close to the inflating air bag. NEVER use a rear-facing child restraint in this vehicle. If a forward-facing child restraint is suitable for your child, ALWAYS move the front passenger seat as far back as it will go and then install the child restraint. Be sure the child restraint position does not conflict with any additional requirements provided by the manufacturer. For more information, refer to the vehicle owners manual and the instruction that came with the child restraint.

The child seat may only be used in a forward facing seating location. The child seat should be installed and secured according to the manufacturer's directions. If the child seat has a top strap, the seat will need to be anchored. Passengers should not be allowed to sit at locations where the seat belts are being used to secure the child seat.

All vehicles are equipped with a dual-mode type retractor with emergency and automatic locking features. The automatic locking feature is for restraint of a child seat. The child seat can be secured by pulling the seat belt all the way out to lock it. Then tighten the seat belt around the child seat.

If a child seat is to be used in the second seat position, a special dealer-installed anchor must be used in order to anchor the child seat top strap. This only applies to the seats designed with the top strap provision and for the vehicles sold in Canada. In order to ensure the correct top strap angle, the child seat is only to be used at the seating position for which the top strap anchor is installed.

Fasten Safety Belt Indicators

There is a fasten safety belt indicator for this vehicle. The driver fasten safety belt reminder is displayed in the instrument cluster. The fasten safety belt indicator may only be ON during RUN. The fasten safety belt indicator illuminates under the following conditions:

- During the bulb check
- The inflatable restraint sensing and diagnostic module (SDM) sends the status of the driver seat belt to the instrument cluster via serial data. If any of the seat belts are unfastened, the instrument cluster will send a message requesting a chime sound to be turned ON after a bulb check.

Section 9

Transmission

Power Take-Off 9-3
Schematic and Routing Diagrams 9-3
Power Take-Off (PTO) Schematics 9-4
Description and Operation 9-6
Power Take-Off (PTO) Description and Operation 9-6
Shift Lock Control 9-12
Schematic and Routing Diagrams 9-12
Shift Lock Control Schematics 9-13
Description and Operation 9-14
Automatic Transmission Shift Lock Control Description and Operation 9-14

BLANK

Power Take-Off

Schematic and Routing Diagrams

Power Take-Off (PTO) Schematics (Power, Ground, Serial Data and Enable (PTO))

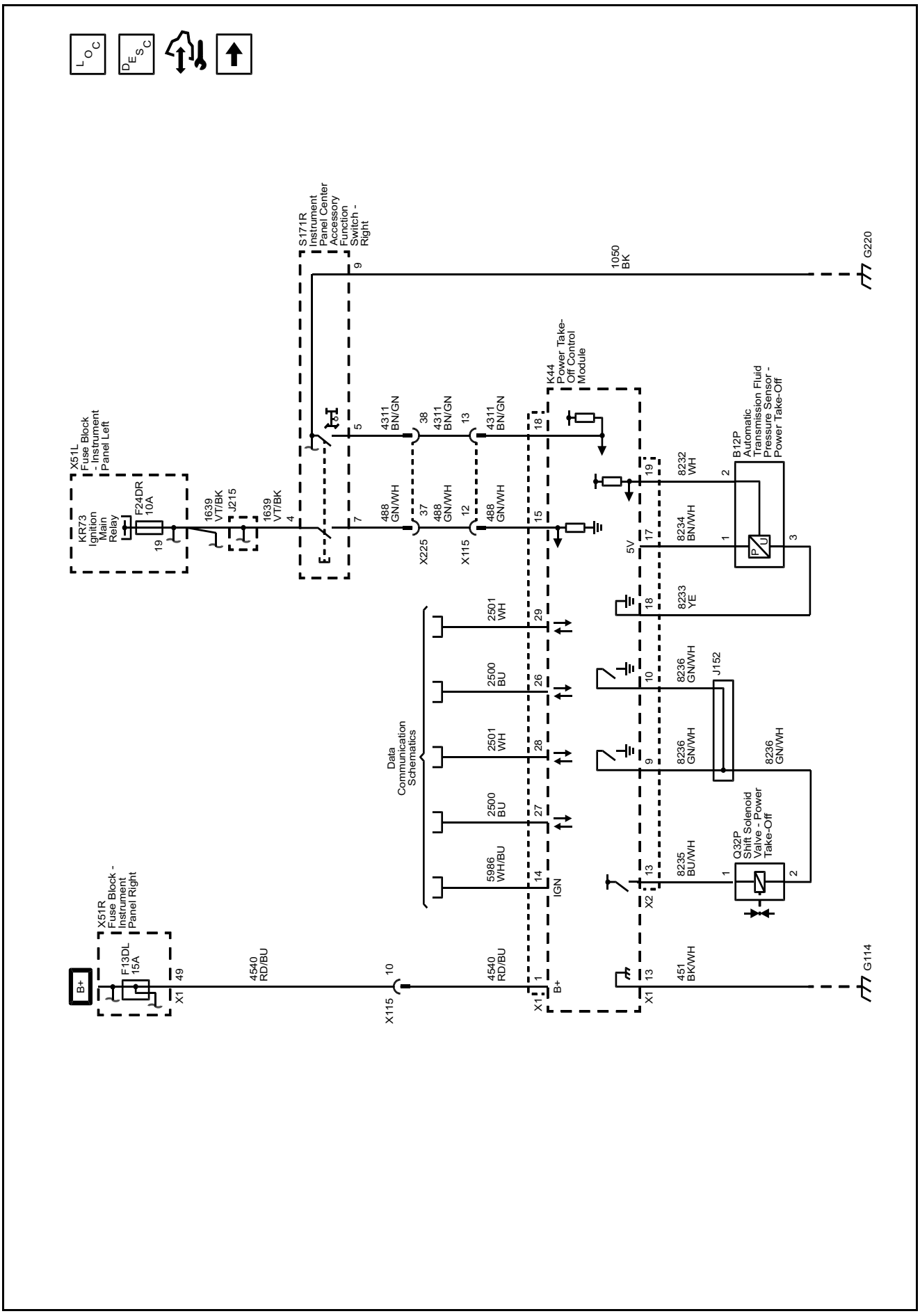

Power Take-Off (PTO) Schematics (Provisional Connector (PTO))

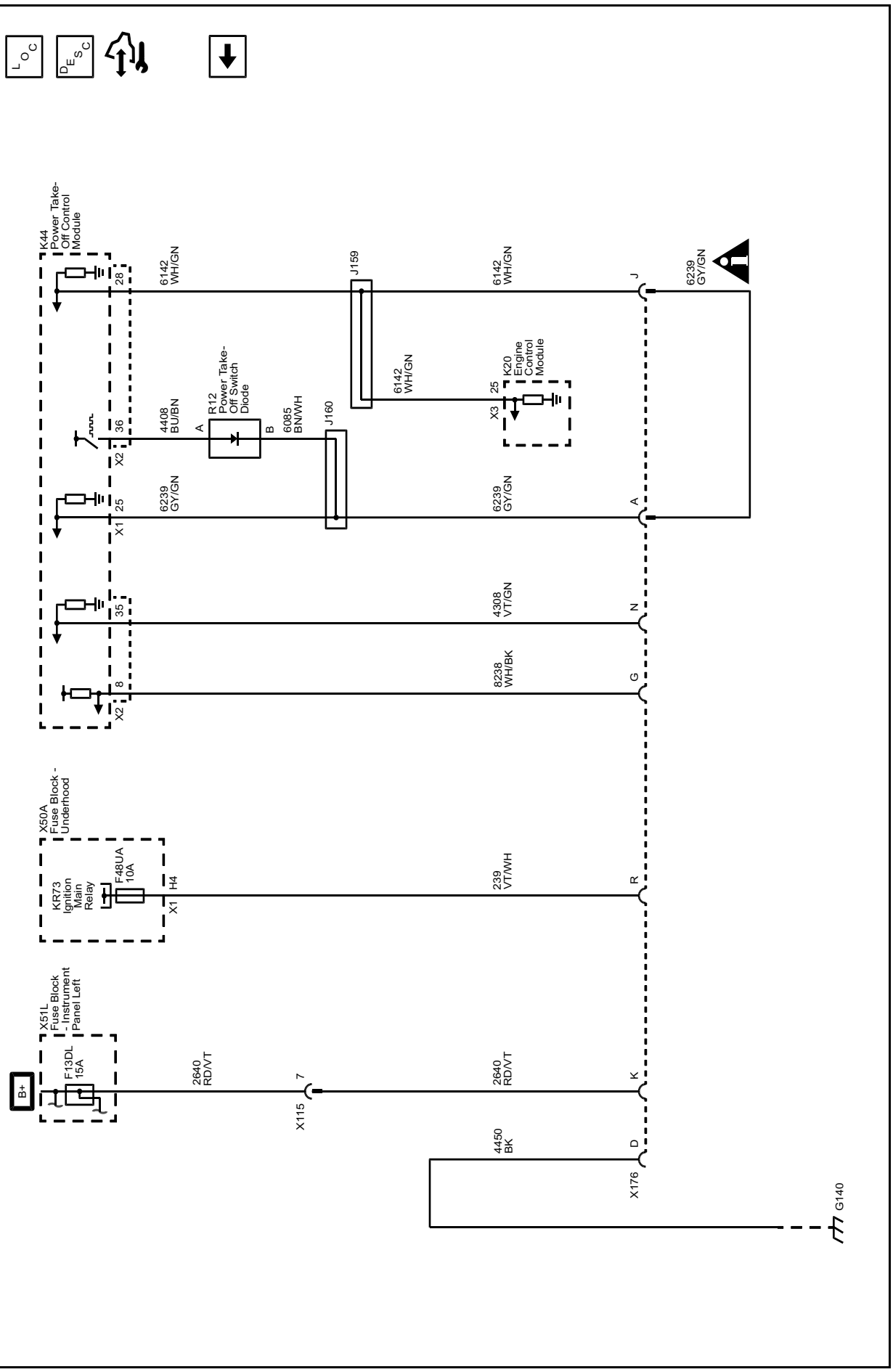

Description and Operation

Power Take-Off (PTO) Description and Operation

The power take-off (PTO) is an upfitter integrated system that allows the user to create an auxiliary power source. The PTO system specifically controls engine speed to values higher than normal base idle, PTO load relay engagement, and remote starting and shutdown of the engine. When the operator requests PTO, the PTO switch will be turned ON and the engine RPM will go to a default standby speed.

The PTO system utilizes the following:

- The transmission driven PTO gear
- The in-cab PTO switch and cruise control SET – and RES + switches
- The PTO telltale indicator
- The power take off module (PTOM)
- The remote PTO upfitter connector

Note: For specific information on how to set up and operate the Power Take Off system refer to the vehicle Duramax Diesel supplement manual and the GM Upfitter website.

Factory Installed PTO Components

The in-cab PTO switch and cruise control SET – and RES + switches

The PTO switch is a part of the switch bank and is mounted in the right side of the center instrument panel. The PTO switch is a two position momentary switch with two states: ON/OFF. When the PTO switch is pressed and released to the ON position, the PTO relay will be energized by the PTOM. The cruise control SET – and RES + switches are used to control PTO desired speed. Note that the cruise control ON/OFF switch shall be set to OFF for PTO to operate.

PTO Telltale Indicator

The PTO telltale indicator is a part of the DIC message center. The PTOM shall command the state of the PTO telltale via instrument panel displays based on the following criteria:

- The telltale will illuminate, flashing at a 0.5 second interval rate when the PTO relay is energized. The indicator illuminates solid once the PTO load feedback signal confirms the load has been engaged or after 2 seconds if load feedback is not utilized by the PTO system.
- The telltale will flash at a 1 second interval rate when PTO memory speed is retained. Depressing the in-cab PTO switch to the OFF position turns the PTO system off. The PTO telltale will turn off once engine speed reaches base engine idle, at which time the PTO relay is de-energized.

Power Take-Off Module (PTOM)

- Processes PTO operator switch inputs and translates these inputs into an engine speed request to the ECM
- Controls the engagement of the PTO load relay
- Process requests to the BCM and ECM to start and shutdown the engine
- Requests the IPC to display on the DIC the actions the driver must take to enable PTO
- Requests the ECM to command an engine shutdown and engine shutdown horn warning for critical engine and transition conditions (stationary remote PTO only).

The PTOM constantly looks at the information from various sensors and other inputs, and controls the systems that affect vehicle performance. If any of the PTO engage conditions for the specific operating mode are no longer valid, the engine controller will exit out of PTO mode.

Remote PTO Upfitter Connector

The PTO upfitter connector provides access to all remote PTO functions. The connector is located on the right-hand outside frame rail, underneath the passenger side door. Electrical connections to the following components are provided by this connector. The upfitter connector pin circuits (other than battery, ignition and ground) are disabled as the vehicle is received from the factory. The PTO module must be reprogrammed by the upfitter or dealer to enable the following circuits:

- PTO remote engine arm
- PTO remote engine shutdown/start
- PTO remote set/variable speed potentiometer
- PTO lead feedback

Other Vehicle Modules

The PTO system also utilizes the following vehicle modules, which communicate over the serial data system:

- The body control module (BCM)
- The engine control module (ECM)
- The instrument panel cluster (IPC)
- The transmission control module (TCM)
- The electronic brake control module (EBCM)

Body Control Module (BCM)

The BCM maintains the PTO factory default mode, unless it is reprogrammed with a scan tool to change the PTO configuration mode. The BCM also controls the remote start/shutdown function.

Engine Control Module (ECM)

The ECM controls the engine speed and the engine starting based on messages from the PTOM through serial data. The ECM also provides PTO specific engine information to the PTOM through serial data messages.

Electronic Brake Control Module

The EBCM monitors the vehicle speed. The PTOM receives the status of the vehicle speed from the EBCM via serial data messages.

Instrument Panel Cluster (IPC)

The driver information center (DIC) of the IPC displays actions the driver must take in order to engage PTO. If the PTO will not engage, one or more of the following DIC messages may appear on the instrument panel cluster (IPC):

Stationary PTO	Mobile PTO
PTO: REDUCE VEHICLE SPEED	PTO: DISENGAGE CRUISE CONTROL
PTO: RELEASE BRAKE	PTO: REDUCE ENGINE SPEED
PTO: SET PARK BRAKE	PTO: RELEASE BRAKE
PTO: REDUCE ENGINE SPEED	PTO: PRESS and RELEASE BRAKE
PTO: SHIFT TO P OR N	PTO: REDUCE VEHICLE SPEED
PTO: DISENGAGE CRUISE CONTROL	—

Transmission Control Module (TCM)

The TCM adjusts shift patterns to minimize shifting during PTO operation. The TCM also provides transmission gear states and temperature conditions to the PTOM via serial data messages.

Electronic Brake Control Module (EBCM)

The EBCM disables the PTO if wheel speed pulses are larger than calibratable values. The EBCM also disengages the PTO during a traction control event.

PTO Enable Conditions

Stationary PTO

The following conditions must be met in order to engage stationary PTO:

- The engine must be running.
- The vehicle cannot be moving and the parking brake must be set.
- The shift lever must be in PARK (P) or NEUTRAL (N).
- The brake pedal must not be pressed.
- Cruise control must be OFF.

In-cab PTO operation: Press and release the in–cab PTO switch to the ON position. The PTO telltale indicator will flash fast until the PTO load becomes engaged. When the load becomes engaged, the telltale indicator will stop flashing and stay illuminated. The cruise control SET – and RES + switch positions can then be used to establish the desired PTO operating speed.

Remote PTO operation: Press and release the PTO remote arm switch, then within five seconds, press and release the PTO remote engine start/shutdown switch. The remote PTO indicator light will illuminate when the PTO load is engaged. The PTO remote SET or PTO remote variable speed switches can then be used to establish the desired PTO operating speed. These switches are accessed through the PTO upfitter connector, located under the passenger side door.

Mobile PTO

The following conditions must be met prior to engaging mobile PTO:

- The engine must be running.
- The vehicle speed must be less than the PTO top vehicle speed limit. The default setting is 94 km/h (58 mph). This limit can be adjusted.
- The shift lever must be in M1, M2 or M3.
- The brake must be pressed and then released. The brake must then remain released.
- Cruise control must be OFF.
- Engine speed must be less than the maximum allowed PTO engage speed of 1500 RPM.

Press and release the PTO in-cab switch to the ON position. The PTO telltale will flash fast until the PTO load becomes engaged. When the load becomes engaged, the telltale will stop flashing and stay illuminated. The SET – and RES + switches can then be used to establish the desired PTO operating speed.

PTO Disengage Conditions

Stationary PTO

The stationary PTO mode will disengage if any of the following conditions are detected by the vehicle modules:

- Vehicle movement
- The park brake is released
- The transmission is shifted from PARK (P) to DRIVE (D) or REVERSE (R).
- The PTO load becomes disengaged
- A press and release of the PTO in–cab switch to the OFF position.
- A press and release of the PTO remote engine start/shutdown switch (stationary remote PTO only).
- A press and release of the PTO E-STOP switch (stationary remote PTO only).

Mobile PTO

The mobile PTO mode will also disengage if the following conditions are detected by the vehicle modules:

- A press of the brake pedal
- Vehicle speed exceeds 94 km/h (58 mph)
- Engine speed exceeds the maximum allowed PTO operating speed of 2100 RPM
- The PTO load becomes disengaged
- A press and release of the PTO in–cab switch to the OFF position

The PTO control system will attempt to limit accelerator pedal and PTO switch input as the vehicle approaches the above operational limits. There are some vehicle conditions, such as down hill acceleration, which may cause vehicle speed or engine speed limits to be exceeded. Under those conditions, PTO is disengaged.

Modes of Operation

Preset PTO Mode

Preset PTO can only be used when the vehicle is not moving. The engine speed is initially set to a standby engine speed of 900 RPM. This provides an initial start-up engine speed to match the engagement of the PTO load. The PTO standby engine speed can be reprogrammed to higher speeds.

Choose one of two presets by pressing and releasing the cruise control SET – /RES + or PTO remote set switches:

- Speed 1: Pressing the cruise control SET — or PTO Remote Set 1 switch results in a preset speed of 1200 RPM.
- Speed 2: Pressing the cruise control RES + or PTO Remote Set 2 switch results in a preset speed of 1900 RPM

Pressing and releasing the PTO in-cab switch or PTO remote engine start/shutdown switch to the OFF position results in the return of the engine speed back to normal idle. The PTO load relay is also disengaged.

Maximum PTO Operating Speed: To protect the PTO from overspeed, the PTO system will disengage when the engine speed exceeds 3100 RPM.

The Stationary PTO Mode provides both in-cab and remote controls. The in-cab controls are enabled as the factory preset. The remote controls are disabled. This factory preset configuration can be reprogrammed to enable the remote controls, and disable the in-cab PTO controls.

Note: DO NOT enable/activate PTO during service (hoist) conditions at any time

Variable PTO Mode

In this mode, the vehicle can be programmed for stationary or mobile operation.

The variable PTO mode controls engine speed and PTO load engagement and is selected by either the PTO in-cab or remote switches. Engine speed selection is variable between base engine idle speed and a maximum of 3100 RPM.

In the mobile PTO mode, the vehicle will operate at a vehicle speed resulting from the current PTO engine speed request and current transmission gear range selected.

Vehicle speed stability is greatly improved by shifting into the transmission manual mode because upshifts are limited. This reduces the maximum vehicle speed while allowing high engine speed operation. Therefore, low vehicle speed operation, 16–40 km/h (10–25 mph) and high PTO engine speed 1500–2000 RPM can be achieved in the manual mode 1 and 2 transmission ranges.

In-cab PTO Switch Operation:

- ON: Press and release the PTO in-cab switch to the ON position to engage PTO. The PTOM will increase the engine speed to the factory preset engine speed. The initial standby speed can be adjusted by holding the accelerator to the desired engine speed, then pressing and releasing the ON switch. The current engine speed will become the new standby speed. This adjustment can only be done once at the initial engagement of the PTO, and the initial standby speed adjustment must be between the engine base idle speed and the maximum PTO engine speed.
- OFF: Press and release the PTO in-cab switch to the OFF position to disengage PTO. The engine speed will return to the base idle speed and the PTO load relay will be disengaged.

Cruise Control SET– and RES+ Switch Operation:

- SET —: Press and hold the accelerator to obtain the desired engine speed, then press and release the SET – switch. The current engine speed will be maintained. This action can be repeated as desired to a higher RPM value. The PTO set speed cannot exceed 3100 RPM.
  - – Tap Down: Press and release the SET – switch to reduce the engine speed by increments of 100 RPM.
  - – Coast: Press and hold the SET – switch to reduce the RPM by 150 RPM per second until the desired engine speed is reached or until the initial PTO standby speed is reached.
- RES +: When a PTO set speed has been achieved, press and release the brake pedal. Engine speed will return to normal idle speed. The PTO telltale will flash slowly indicating the previous PTO set speed has been retained in memory. Press and release the RES + to resume the previous PTO set speed. The PTO set speed cannot exceed 3100 RPM.
  - – Tap Up: Press and release the RES + to increase the engine speed by increments of 100 RPM.
  - – Accelerate: Press and hold the RES + to increase the RPM by 150 RPM per second until the desired engine speed is reached or until the maximum allowable PTO set speed is reached.

PTO State	Applied Switch	Short Apply	Long Apply
PTO STANDBY ENABLED	RES +	Tap Up (Engaged)	Accelerate (Engaged)
PTO STANDBY ENABLED	SET −	Engaged	Engaged
PTO ENGAGED (RPM already higher than standby)	SET –	Tap Down	Coast
PTO ENGAGED (RPM already lower than maximum speed)	RES +	Tap Up	Accelerate
STANDBY DISABLED with no memory speed	RES +	No Action	No Action
STANDBY DISABLED with a memory speed	RES +	Resume	Resume
STANDBY ENABLED with no memory speed	RES +	Tap Up (Engaged)	Resume
STANDBY ENABLED with a memory speed	RES +	Resume	Resume

Remote Engine Start Control

The PTO system allows the engine to be remotely started while operating in the stationary PTO mode. The wiring system provides for connections to a remote engine start arming switch and remote start/shutdownn switch. These connections are accessed through the upfitter connector.

The remote start function is initiated by a sequence of switch actions, in addition to several vehicle conditions. The following conditions must be met before attempting to remote start the engine. The vehicle ignition key can be in any position or removed from the ignition:

- The vehicle must be configured for stationary PTO operation.
- The parking brake must be set.
- The transmission must be in PARK (P).
- The hood must be closed.

Once the above conditions are met, to continue with the remote start, use the remote PTO controls to do the following:

1. Press and release the PTO remote arm switch.
2. Within five seconds of releasing the PTO remote arm switch, press and release the PTO remote engine start/shutdown switch until the engine starts.

The PTO system will then elevate engine RPM to standby speed and engage the PTO load. Use the PTO remote set or PTO remote variable speed switches (based on configuration) to elevate PTO speed to the desired engine operating speed.

Remote Engine Shutdown Control

The PTO system allows for remote engine shutdown while operating in the stationary PTO mode. This feature has the following functions:

- Engine shutdown using the operator remote switch: The vehicle wiring system provides remote engine shutdown switch connections, which can be accessed through the PTO upfitter connector.
- Timed auto-engine shutdown: The timed auto-engine shutdown feature provides the means to shut down the engine automatically after a predefined time. PTO must be operational for this function to be active.
- Engine shutdown based on critical engine conditions: The engine can be shutdown when PTO is operating if a critical engine condition is detected by the vehicle system (i.e., low oil, low oil pressure, hot engine, hot transmission, low fuel).
- Emergency engine shutdown: The vehicle wiring system supports remote Emergency engine shutdown via application of the E-STOP switch located at the external (upfitter’s) panel accessible through the PTO upfitter connector. (e.g. when PTO relay is stuck closed in Stationary Remote mode, operator shall activate E—STOP switch to shutdown engine and allow engine to be restarted at the next ignition cycle without PTO system activation.

PTO Factory Default Settings

Power Take-Off (PTO) Description and Operation

Function	Value/Default Setting	Scan Tool/HMI Customization Menu
PTO Option	None Preset (Default) Variable Mobile	Scan Tool
PTO In-Cab Control	Enabled Disabled	Scan Tool
PTO Remote Control Status	Enabled Disabled (Default)	Scan Tool
PTO Ramp Rate	4 – 150 RPM/sec	Scan Tool
PTO Set 1 Speed	500 – 3100 RPM 1200 RPM (default)	HMI Customization Display/Scan Tool
PTO Set 2 Speed	500 – 3100 RPM 1900 RPM (default)	HMI Customization Display/Scan Tool
PTO Relay	Yes (default) No	Scan Tool
PTO Feedback	Yes (default) No	Scan Tool
Fuel Level for Engine Shutdown	0 – 25% fuel level 15% fuel level	Scan Tool
PTO to Set 1 Speed	Yes No (default)	Scan Tool
PTO Remote Engine Start	Yes No (default)	Scan Tool
PTO Remote Set Switch	Yes No (default)	Scan Tool
PTO Remote Set Switch Type	Momentary (default) Latching	Scan Tool
PTO Remote Engine Shutdown	Yes No (default)	Scan Tool
Remote Set Switch Low = (less than 33% of Ignition voltage)	PTO Standby Set 1 (default) Set 2	Scan Tool
Remote Set Switch High + (33% to 66% of Ignition voltage)	PTO Standby Set 1 Set 2 (default)	Scan Tool
Remote Set Switch Open = (greater than 66% ignition voltage)	PTO Standby Set 1 (default) Set 2	Scan Tool
PTO Maximum Engage Speed	0 – 1500 RPM 1500 RPM (default)	Scan Tool
PTO Maximum Engine Speed	500 — 3100 RPM 2100 RPM (default)	Scan Tool
PTO Standby Speed	500 — 1500 RPM 900 RPM (default)	HMI Customization Display/Scan Tool
Engine Run Timer	0 — 1320 minutes	HMI Customization Display/Scan Tool
Chirp Before Start	Enabled (default) Disabled	Scan Tool

Power Take-Off (PTO) Description and Operation (cont'd)

Function	Value/Default Setting	Scan Tool/HMI Customization Menu
PTO Tap Step	4 – 500 RPM/Step 100 RPM/Step (default)	HMI Customization Display/Scan Tool
Brake Release Action	Standby Idle Speed (default)	Scan Tool
Remote PTO Variable Speed Switch	Yes No (default)	Scan Tool
PTO ON During Braking	Yes (default) No	Scan Tool
Maximum Vehicle Speed	30 kph (19 mph) to 94 kph (58 mph) 94 kph ((58 mph) (default)	Scan Tool
PTO Minimum Remote Variable Speed	0 – 50% 2% (default)	Scan Tool
PTO Maximum Remote Variable Speed	50 – 100% 95% (default)	Scan Tool
Engine Shutdown Enable	Yes No (default)	Scan Tool
PTO Accelerator Lockout	Enabled Disabled (default)	Scan Tool

Reprogramming the PTOM for Fast Idle/ PTO Using the Scan Tool

A scan tool must be used to enable certain PTO options and also to adjust the factory preset parameters to the desired settings.

For additional scan tool information, refer to Control Module References.

Shift Lock Control

Schematic and Routing Diagrams

Shift Lock Control Schematics (Shift Lock Control)

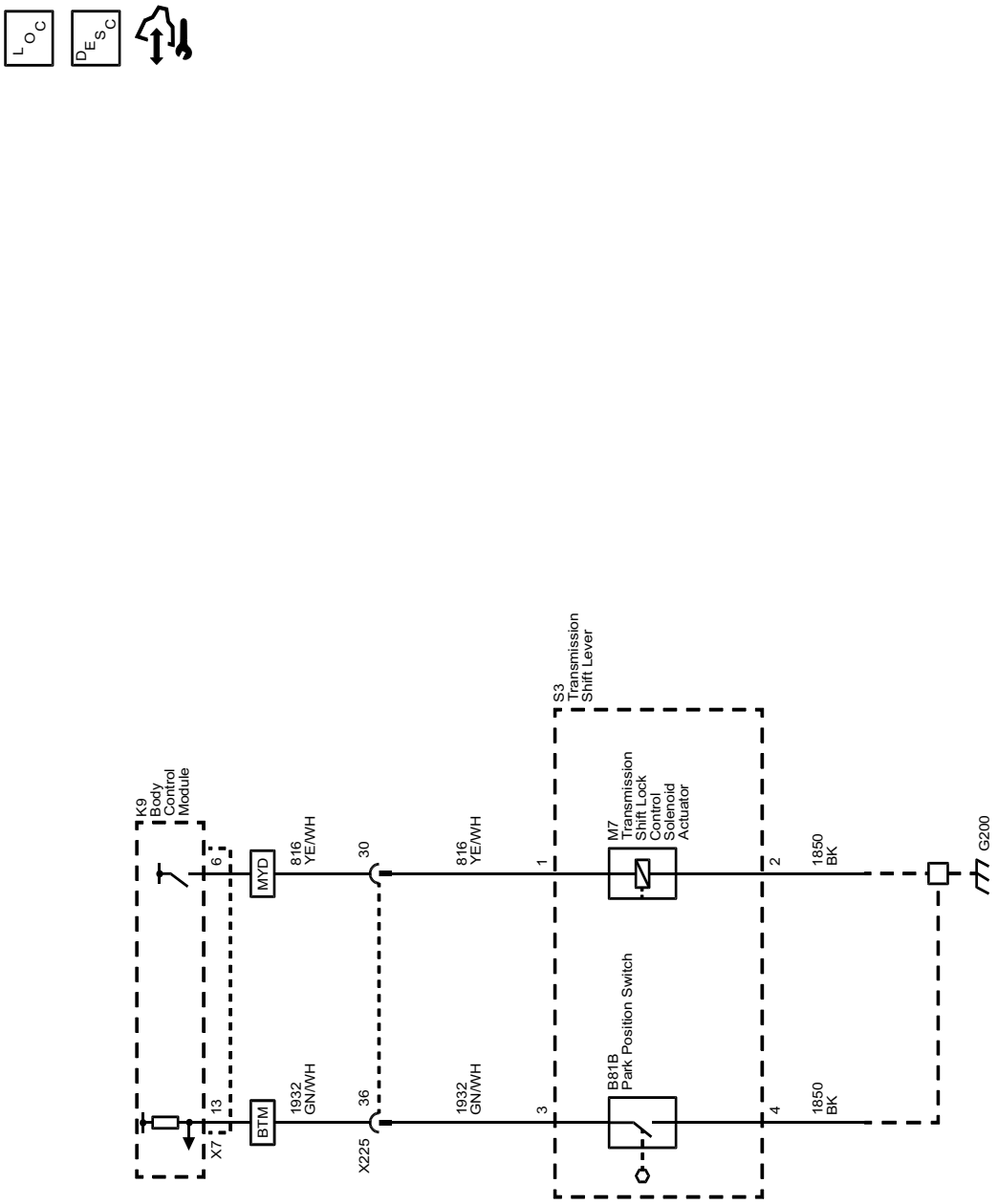

5217401

Description and Operation

Automatic Transmission Shift Lock Control Description and Operation

The Automatic Transmission Shift Lock Control System is a safety device that prevents an inadvertent shift out of PARK when the engine is running. The driver must press the brake pedal before moving the shift lever out of the PARK position. The system consists of the following components:

- The Automatic Transmission Shift Lock Solenoid (serviced as the Automatic Transmission Shift Lock Actuator)
- The Body Control Module (BCM)
- The Engine Control Module (ECM)

The BCM controls the voltage to the shift lock control solenoid though the shift lock control solenoid controlled voltage circuit. The following conditions must be met before the BCM will supply voltage to the shift lock control solenoid:

- The ignition is in the ON position.
- The ECM sends an input via GMLAN serial data to the BCM when the Transmission Control Module (TCM) indicates the transmission is in the PARK position.
- The BCM receives a brake applied input from the stop lamp switch.

Since the shift lock control solenoid is permanently grounded, the BCM supplies voltage to the automatic transmission shift lock control solenoid, releasing the mechanical lock on the shift lever as the solenoid energizes. The energized solenoid allows the driver to move the shift lever out of the PARK position. When the brake pedal is not applied, the BCM turns the control voltage output of the shift lock control solenoid OFF, de-energizing the shift lock control solenoid. When the transmission is in the PARK position, the de-energized shift lock control solenoid will prevent shifting as the lever is mechanically locked in the PARK position.

During remote start operation the BCM will de-energize the automatic transmission shift lock control circuit, locking the shift lever in the PARK position

A

Automatic Day-Night Mirror
Description and Operation 2-63
Automatic HVAC Description and
Operation 6-10

B

Battery
Description and Operation 5-12

C

Charging System
Description and Operation 5-12
Component Connector End Views 7-67

D

Data Link Communications
Description and Operation 7-22
Door Ajar Indicator
Description and Operation 2-77

E

Electrical Center Identification Views 7-27
Electrical Power Management Description and
Operation 5-16
Endgate
Description and Operation 2-78, 2-79
Exterior Lighting Systems
Description and Operation 2-48

H

Heater and Air Conditioning
System Description and Operation 6-3
Horn
System Description and Operation 2-16

I

Immobilizer
Description and Operation 8-5
Inline Harness Connector End Views 7-399
Interior Lighting System
Description and Operation 2-52

L

Load Shed System
Description and Operation 5-18

M

Manual HVAC Description and Operation 6-20

O

Outside Mirror
Description and Operation 2-63, 2-64

P

Parking Assist
Description and Operation 8-11, 8-12
Power Door Locks
Description and Operation 2-80
Power Mode Description and Operation 7-678
Power Outlets
Description and Operation 7-612
Power Take-Off (PTO)
Description and Operation 9-6
Power Windows
Description and Operation 2-11

R

Rear Vision Camera
Description and Operation 4-10
Rear Window Defogger
Description and Operation 2-12
Rearview Camera
Camera Full Display Mirror Description and
Operation 4-10
Retained Accessory Power
Description and Operation 7-680
RPO Code List 1-7

S

Schematics
Auxiliary Battery 5-11
Body Control Systems 7-18
Cigar Lighter/Power Outlet 7-605
Data Communications 7-4
Defogger 2-10
Door Lock/Indicator 2-68
Endgate 2-73
Exterior Lamps 2-19
Fog Lamps 2-18
Ground Distribution 7-653
Horns 2-15
HVAC Systems - Automatic 6-5
HVAC Systems - Manual 6-15
Ignition Lock 7-652
Image Display Cameras 4-4
Immobilizer 8-4
Inside Rearview Mirror 2-55
Interior Lamps 2-42
Interior Lamps Dimming 2-44
Moveable Window 2-4
Outside Rearview Mirror 2-56
Parking Assistance Systems 8-8
Power Distribution 7-616
Power Moding 7-647
Power Take-Off (PTO) 9-4
Release Systems 2-72
Seat Belts 8-15
Shift Lock Control 9-13
Starting and Charging 5-4
Trailer Brake Control 3-4
Trailer Connector/Provision 7-671
Upfitter Provision 7-668
Seat Belt
System Description and Operation 8-16

Shift Lock Control
Description and Operation 9-14
Starting System
Description and Operation 5-20
Surround Vision Camera
Description and Operation 4-10, 4-12

T

Trailer Brake
Controls Description and Operation 3-6
Trailering
Description and Operation 7-681

V

Vehicle Certification, Tire Placard, and Anti-Theft
Label 1-5
Vehicle, Engine and Transmission ID and VIN
Location, Derivative and Usage 1-3