BODY BUILDER MANUAL

FOR

2016 CHEVROLET EXPRESS/GMC SAVANA

ELECTRICAL SECTION

Note to User:
As part of our mission to provide an up-to-date website that includes detailed Body Builder Manuals, Technical Bulletins, and Best Practice Manuals, we are now using sectional excerpts directly from the General Motors Service Information publications for our Electrical Body Builder Manuals.

You will note that the section numbers are non-sequential as we have provided only those that are believed to be the most pertinent to the Upfitter community and best suited to their needs.*

This new usage of the Service Information provides the opportunity for us to remain consistent with the changes that take place throughout the model year and to provide you updated information in a more timely fashion.

**** If you would like to have access to all of the electrical Service Information, please apply for a subscription from ACDelco at http://acdelcotechconnect.com/html/tss_tech_esi.jsp***

General Information

General Information

Introduction

RPO Code List

The production/process codes provide the description of the regular production options (RPOs). The RPO list is printed on the Service Parts Identification Label.

RPO Code List

RPO	Description
01U	PRIMARY COLOR-EXTERIOR, SPECIAL (02)
25U	PRIMARY COLOR-EXTERIOR, DARK MING BLUE (02) 722J
40P	WHEEL COLOR-WHITE (91)
52G	TRIM COMBINATION-CLOTH, MED NEUTRAL II (G) (00)
52I	INTERIOR TRIM-MED NEUTRAL II (I) (96)
52W	TRIM COMBINATION-VINYL, MED NEUTRAL II (W) (00)
5AZ	ACCESSORY-SAFETY KIT - UNIVERSAL
5C6	HOOK-CARGO TIE-DN
5Y3	ACCESSORY-TOW BALL - TRAILER HITCH
86U	PRIMARY COLOR-EXTERIOR, WHEATLAND YELLOW (02) 253A
93G	TRIM COMBINATION-CLOTH, MED DK PEWTER II (G) (03) (GMT610 - "G" VAN)
93I	INTERIOR TRIM-MED DK PEWTER II (03) (GMT610 - "G" VAN)
93W	TRIM COMBINATION-VINYL, MED DK PEWTER II (W) (03) (GMT610 - "G" VAN)
9N2	GVW RATING-10,050 LBS
A07	WINDOW-BODY (DO NOT USE AFTER M.Y. 2011)
A08	WINDOW-BODY, RH (DO NOT USE AFTER M.Y. 2011)
A12	WINDOW RR-DR, STA
A13	WINDOW SIDE DR-RR, STA
A17	WINDOW SIDE BODY-SWING OUT, LH
A18	WINDOW RR-DR, SWING OUT
A19	WINDOW SIDE DR-RR, SWING OUT

A31	WINDOW-POWER OPERATED, ALL DOORS (DO NOT USE ON NEW/MAJOR PROGRAMS)
ACO	IDENTIFICATION-ACCESSORY CATALOG OFFERING
AG1	ADJUSTER FRT ST-POWER, MULTI-DIRECTIONAL, DRIVER
AG2	ADJUSTER PASS ST-POWER, MULTI-DIRECTIONAL
AJ1	WINDOW TINTED-DEEP, ALL EXCEPT W/S AND DRS (DO NOT USE AFTER M.Y. 2011)
AJ3	RESTRAINT SYSTEM-SEAT, INFLATABLE, DRIVER, FRT
AK5	RESTRAINT SYSTEM-SEAT, INFLATABLE, DRIVER & PASS FRT
ANC	SALES PACKAGE-SHUTTLE BUS
AR7	SEAT-FRT BKT, STANDARD
AS5	SEAT-FRT BKT, DELUXE,
ASF	RESTRAINT-ROOF SIDE (LH & RH), SEAT SIDE (FRONT 1ST ROW), INFLATABLE
AT8	RESTRAINT PROVISIONS-CHILD, RR SEAT, RR FACING
ATG	LOCK CONTROL, ENTRY-REMOTE ENTRY, STANDARD RANGE
AU3	LOCK CONTROL-SIDE DR, ELEC
AXK	VEHICLE TYPE-TRUCK
AXW	VEHICLE TYPE-BUS- (NOT SCHOOL BUS)
B30	COVERING FLOOR-CARPET
B31	COVERING FLOOR-VINYL, FRT, FULL WIDTH
B32	COVERING FRT-FLOOR MATS, AUX
B33	COVERING REAR-FLOOR MATS, AUX
B38	COVERING FLOOR-VINYL, FRT & RR, FULL WIDTH
B3D	SALES PACKAGE-SCHOOL BUS
B46	TRIM EQUIPMENT-SPECIAL ORDER
BA0	ORNAMENTATION-EXTR, DOOR, NAMEPLATE
BA3	COMPARTMENT-STOWAGE, I/P LOWER EXTENSION DELUXE

BAG	PARTS PKG-EXPORT
BG5	COVERING FLOOR-(NONE)
BNC	PARTS PKG-BODY MOUNT CUSHIONS
BTV	REMOTE START-ENGINE
BUE	KIT-EXHAUST DIESEL
C36	HEATER-AUXILIARY
C42	HVAC SYSTEM-HEATER, OUTSIDE AIR, DELUXE
C49	DEFOGGER-RR WINDOW, ELECTRIC
C4K	GVW RATING-9,925 LBS
C4M	GVW RATING-9,900 LBS/4,500 KG
C60	HVAC SYSTEM-AIR CONDITIONER FRT, MAN CONTROLS
C69	HVAC SYSTEM RR-AIR CONDITIONER
C6P	GVW RATING-8,600 LBS/3,900 KG
C6Y	GVW RATING-9,600 LBS
C7I	GVW RATING-14,200 LBS.
C7N	GVW RATING-12,300 LBS
C7Q	GVW RATING-8,800 LBS/4,000 KG
C8V	GVW RATING-13,980 LBS
C99	SWITCH-INFL RST I/P MDL MAN SUPPRESSION
CEI	CERTIFICATION-EMISSION, GEOGRAPHICALLY RESTRICTED REGION FOR VEHICLES OVER 14,000 LBS GVW
CEJ	CERTIFICATION-EMISSION, FEDERAL FOR VEHICLES OVER 14,000 LBS GVW
CEK	EMISSION OVERRIDE-EMISSION OVERRIDE CALIFORNIA SYSTEM FOR VEHICLES OVER 14,000 LBS GVW
CEM	EMISSION OVERRIDE-EMISSION OVERRIDE FEDERAL SYSTEM FOR VEHICLES OVER 14,000 LBS GVW
CU7	COUNTRY-KUWAIT
CU8	COUNTRY-SAUDI ARABIA
CV3	COUNTRY-MEXICO
CV4	COUNTRY-ISRAEL

CW2	COUNTRY-GULF AREAS (BAHRAIN, KUWAIT, OMAN, QATAR, SAUDI ARABIA, UAE)
CW9	COUNTRY-MISCELLANEOUS
D28	MIRROR O/S-(-NONE)
D2O	COUNTRY-CURACAO
D31	MIRROR I/S R/V-TILT
D3J	COUNTRY-CAYMAN ISLANDS
D3K	COUNTRY-DOMINICAN REPUBLIC
D3L	COUNTRY-EL SALVADOR
D3M	COUNTRY-GUATEMALA
D3P	COUNTRY-HAITI
D3Q	COUNTRY-HONDURAS
D3U	COUNTRY-ST MAARTEN
D4G	COUNTRY-BAHAMAS
D4N	COUNTRY-COSTA RICA
D4X	COUNTRY-ARUBA
D5D	COUNTRY-NICARAGUA
DAA	SUNSHADE-VINYL
DE2	MIRROR O/S-LH & RH, MANUAL CONTROL, FOLDING, COLOR
DE5	MIRROR O/S-LH & RH, REMOTE CONTROL, ELECTRIC, HEATED, FOLDING, COLOR.
DEB	MIRROR O/S-LH & RH, REMOTE CONTROL, ELECTRIC, HEATED, FOLDING, COLOR. SINGLE PANE
DH6	MIRROR I/S FRT VAN-LH & RH, SUNSHADE, ILLUM
DHC	MIRROR O/S-LH & RH, MANUAL CONTROL, AUX WFOV, COLOR
DNS	EQUIPMENT-SUPPLIER INSTALLED
DPU	COUNTRY-BONAIRE
DPX	COUNTRY-TURKS AND CAICOS ISLANDS
DRJ	MIRROR I/S R/V-TILT, PARTIAL VIDEO DISPLAY
DT4	ASHTRAY-CIGARETTE LIGHTER

E24	DOOR SIDE-REAR, HINGED
E3T	HANDLE-I/S, DOOR RELEASE
E48	COVER-RADIATOR GRILLE OPG - COLD CLIMATE
EF5	COUNTRY-PANAMA
EF7	COUNTRY-UNITED STATES OF AMERICA (USA)
ENC	HVAC PROVISIONS-AUXILLIARY HEATER PLUMBING & WIRING
EVA	TEST-DVT, EVAP EMISSION REQUIREMENT
EXP	EXPORT-
FE9	CERTIFICATION-EMISSION, FEDERAL
FHO	VEHICLE FUEL-GASOLINE E10
FHS	VEHICLE FUEL-GASOLINE E85
FHX	VEHICLE FUEL-DIESEL B20
FHZ	VEHICLE FUEL-DEDICATED CNG
G7C	PRIMARY COLOR-EXTERIOR, PULL ME OVER RED SOLID (130X)
G7J	PRIMARY COLOR-EXTERIOR, UNRIPENED GREEN MET (136X)
G7K	EQUIPMENT-ANTENNA, CABLE AND GROUNDPLATE
G80	AXLE POSITRACTION-LIMITED SLIP
GAN	PRIMARY COLOR-EXTERIOR, SWITCHBLADE SILVER MET (G) 636R
GAZ	PRIMARY COLOR-EXTERIOR, SUMMIT WHITE (G) 8624
GBA	PRIMARY COLOR-EXTERIOR, BLACK (G) 8555
GBV	PRIMARY COLOR-EXTERIOR, CYBER GRAY MET (G) 637R
GH0	AXLE REAR-3.54 RATIO
GT4	AXLE REAR-3.73 RATIO
GT5	AXLE REAR-4.10 RATIO
GU6	AXLE REAR-3.42 RATIO
GWX	PRIMARY COLOR-EXTERIOR, SUBTERRANEAN MET (105V)

I16	ENGINEERING YEAR-2016
JFF	GVW RATING-10,100 LBS
JH6	BRAKE-HYD POWER, 4 WHL DISC.
JH9	BRAKE-HYD POWER, 4 WHL DISC, 14,200 LBS
JL4	CONTROL,-ACTIVE BRAKE
K05	HEATER ENG-BLOCK
K08	HEATER-AUXILIARY, FUEL FIRED
K34	CRUISE CONTROL-AUTOMATIC, ELECTRONIC
K50	FUEL-FITTING, LINE TAKE-OFF
K68	GENERATOR-105 AMP
KC4	COOLING SYSTEM-ENG OIL
KD1	COOLING SYSTEM-TRANS, OIL
KD9	GENERATOR-145 AMP, DUAL
KG3	GENERATOR-145 AMP
KI4	RECEPTACLE-ELECTRICAL, ACCESSORY 110 VOLT
KO7	VEHICLE FUEL-DEDICATED LIQUEFIED PETROLEUM GAS, LIQUID
KUP	THROTTLE CONTROL-ELECTRONIC
KW5	GENERATOR-220 AMP
L20	ENGINE-GAS, 8 CYL, 4.8L, SFI, E85 MAX, IRON, GM
L96	ENGINE-GAS, 8 CYL, 6.0L, SFI, E85 MAX, IRON, GM
LC8	ENGINE-LPG/CNG, 8 CYL, V8, 6.0L, SFI, GEN 1, GMNA
LGH	ENGINE-DIESEL, 8 CYL, 6.6L, DI, V8, TURBO, DURAMAX
MTF	PROVISIONS-FIRE EXTINGUISHER MOUNTING
MYD	TRANSMISSION-AUTO 6 SPD, HMD, 6L90
N12	EXHAUST SYSTEM-REAR EXIT
N33	STEERING COLUMN-TILT TYPE
NB8	EMISSION OVERRIDE-CALIFORNIA SYSTEM

NC7	EMISSION OVERRIDE-FEDERAL SYSTEM
NC8	EMISSION SYSTEM-CALIFORNIA, ULEV (NOTE: NOT TO BE USED AFTER 2007MDL YR FOR DOMESTIC NAO PASS CAR & LT DUTY TRUCKS)
NCF	LOCK-CHILD SECURITY FEATURE - NONE
NE1	CERTIFICATION-EMISSION, GEOGRAPHICALLY RESTRICTED REGISTRATION FOR VEHICLES UP TO 14,000 LBS GVW (USE 2003 MDL YR
NE7	FUEL TANK-216L, 57 GAL
NP5	STEERING WHEEL-LEATHER WRAPPED
NPL	PLATE-NAME - NONE
NT7	EMISSION SYSTEM-FEDERAL, TIER 2
NTB	EMISSION SYSTEM-FEDERAL, TIER 3
NUK	EMISSION SYSTEM-CALIFORNIA, ULEV250
NUM	EMISSION SYSTEM-CALIFORNIA, LEV3 MDV 10-14K GVW
P03	COVER, WHEEL-VAR 3
PNC	PANEL-TRIM, FRT DOORS & SI RR DOOR(S) & RR DOORS
PPC	PANEL-TRIM, RR DOORS
PRP	SALES PACKAGE-COMMERCIAL TRADESMAN
QB5	WHEEL-16 X 6.5, J, STEEL (DO NOT USE AFTER M.Y. 2011)
QT4	WHEEL-16 X 6.5, STEEL H.D. (DO NOT USE AFTER M.Y. 2011)
R04	WHEEL CONFIGURATION-RR, SINGLE (DO NOT USE AFTER M.Y. 2011)
R05	WHEEL CONFIGURATION-RR, DUAL (DO NOT USE AFTER M.Y. 2011)
R25	APPEARANCE PACKAGE-EXTERIOR, CHROME GRILLE & PAINTED BUMPER
R26	APPEARANCE PACKAGE-EXTERIOR, CHROME GRILLE & FRONT BUMPER
RVG	ACCESSORY-ADAPTER - TRAILER HARNESS
RVX	ACCESSORY-BALL MOUNT - TRAILER HITCH
RYS	ACCESSORY-FIRE EXTINGUISHER

RYT	ACCESSORY-FIRST AID KIT
RYY	ACCESSORY-FLOOR MATS - MOLDED VINYL
RZW	ACCESSORY-HARNESS - TRAILER HITCH
S08	ACCESSORY-HIGHWAY SAFETY KIT
S44	ACCESSORY-LOCKING PIN - TRAILER HITCH
S52	ACCESSORY-MOLDED HOOD PROTECTOR - SMOKED
S6N	ACCESSORY-RECEIVER COVER - TRAILER HITCH
S6Q	ACCESSORY-ROADSIDE ASSISTANCE PACKAGE
SAO	ACCESSORY-SMOKERS PACKAGE
SDD	ACCESSORY-TRAILER HITCH - FIXED
SDI	ACCESSORY-TRIANGLE - REFLECTIVE
SDS	ACCESSORY-WEATHER DEFLECTORS - SIDE WINDOW - SMOKED
SFE	ACCESSORY-WHEEL LOCKS
SFV	ACCESSORY-WIRELESS NETWORK INTERFACE MODULE
T74	CONTROL, HEADLAMPS-AUTOMATIC, DELAY
TGA	LANGUAGE CONTROL-ENGLISH, FRENCH, SPANISH
TGG	LANGUAGE CONTROL-ENGLISH, ARABIC, FRENCH
TP2	BATTERY-AUXILIARY (DO NOT USE AFTER 2011 ON NEW/MAJOR PROGS, USE K4B)
TR9	LAMP GROUP-
U05	HORN-DUAL
U0F	RADIO-AM/FM STEREO, CAF, RSA, MUSIC NAVIGATOR, GRAPHICS
U0H	RADIO-AM/FM STEREO, USB, GMNA
U19	SPEEDOMETER-INST, KILO & MILES, KILO ODOMETER
U2J	DIGITAL AUDIO SYSTEM-S-BAND - NONE
U2K	DIGITAL AUDIO SYSTEM-S-BAND
U73	ANTENNA-FIXED, RADIO

U80	DISPLAY-COMPASS
UA1	BATTERY-HIGH CAPACITY, WET (DO NOT USE AFTER 2011 ON NEW/MAJOR PROGS)
UA7	THEFT DETERENT SYS-EXPORT SPECIFIC, VAR #02 (DO NOT USE AFTER 2009 GLOBAL/NEW MAJOR PROGRAMS)
UBS	DIGITAL AUDIO SYSTEM-S-BAND AND TRAFFIC
UC2	SPEEDOMETER-INST, KILO & MILES, KILO ODOMETER, POSITIVE BIAS (DO NOT USE AFTER MY 2009 ON NEW/MAJOR PRGMS)
UD4	ALARM-VEHICLE SPEED, 120 K/H (DON'T USE AFTER 2010 ON NEW MAJORS - USE CTY COD &/OR VCS FAM COD INSTEAD)
UD7	PARK ASSIST-REAR
UE0	COMMUNICATION SYSTEM-VEHICLE - NONE
UE1	COMMUNICATION SYSTEM-VEHICLE, ONSTAR
UF2	LAMP-CARGO
UF3	SWITCH-HIGH IDLE
UFA	DISPLAY-OUTSIDE TEMPERATURE
UFM	PARTS PKG-COMPLETE VEHICLE KIT, 3 TANK
UFP	PARTS PKG-COMPLETE VEHICLE KIT, 4 TANK
UI8	RADIO-AM/FM, TOUCHSCREEN, NAVIGATION, CONNECTED, CD, AUX JACK, USB PORT
UJ1	INDICATOR-SYSTEM, BRAKE WARNING
UJM	TIRE PRESS INDICATOR-MANUAL LEARN
UL2	FREQUENCIES-EUROPEAN
UL8	FREQUENCIES-SAUDI ARABIAN
UPF	WIRELESS INTERFACE-SHORT RANGE, VOICE REC
US8	RADIO-AM/FM STEREO, SEEK/SCAN, CD, AUTO TONE, CLOCK, ETR, MP3, RDS
USR	RECEPTACLE-USB
UVC	VISION-REAR VIEW, MONO, ANALOG
UXZ	RADIO-PROVISIONS FOR

UY7	WIRING HARNESS-TRUCK TRAILER, HD
V10	PROVISION OPTIONS-COLD WEATHER
V14	COOLER-OIL, TRANSMISSION, AUX
V22	GRILLE-RADIATOR, CHROME
V37	BUMPER-FRT & RR, CHROME
V46	BUMPER FRT-CHROME
V4D	CALIBRATION-SEPARATED STOP/TURN SIGNAL CIRCUITS
V87	VEHICLE STATEMENT-GULF STATES ORGANIZATION
V8D	VEHICLE STATEMENT-US
V8I	VEHICLE STATEMENT-ISRAEL
VBX	LANGUAGE LABEL-ARABIC
VC5	LABEL-SHIPPING, EXCEPT US, US POSSESSIONS, OR JAPAN (DO NOT USE MY18 AND BEYOND)
VG8	VEHICLE-LABEL, NOTICE TO BUYER
VH6	BUMPER FRT-BLACK
VJG	BUMPER RR-BLACK
VK3	LICENSE PLATE FRONT-FRT MOUNTING PKG
VK5	SEAT-TEMPORARY, FOR SHIPPING
VLL	ACCESSORY-CROSS RAILS - ROOF RACK - REMOVABLE
VLP	ACCESSORY-BULKHEAD DIVIDER
VLU	ACCESSORY-SECURITY SCREEN PACKAGE - REAR WINDOW W/O POP - OUT
VLV	ACCESSORY-LADDER RACK - ROOF MOUNTED - SWING OUT
VLW	ACCESSORY-BULKHEAD DIVIDER WITH DOOR
VP6	NOISE CONTROL-
VPH	VEHICLE PREPARATION-OVERSEAS DELIVERY
VQK	ACCESSORY-SPLASH GUARDS - CUSTOM MOLDED
VR4	TRAILER HITCH-WEIGHT DISTRIBUTING PLATFORM

VR6	HOOK-TIE-DN SHPG
VT7	OWNERS MANUAL-ENGLISH LANGUAGE
VXT	VEHICLE TYPE-INCOMPLETE
VXW	ACCESSORY-ASSIST STEPS - MOLDED
W1Y	CONTROL-STEERING WHEEL, RADIO, REDUNDANT CONTROLS
WEN	PLANT CODE-WENTZVILLE, MO, USA
WMG	VIN MODEL YEAR-2016
X88	MARKET BRAND-CHEVROLET
XHF	TIRE FRONT-LT225/75R16 E 115/112 S BL ALS
XIW	TIRE FRONT-LT245/75R16 E 120/116R BW OOR
XL7	FREQUENCIES RATING-315 MHZ, LONG DISTANCE
XL8	FREQUENCIES RATING-433 MHZ
XLP	TIRE FRONT-LT245/75R16 E 120/116 S BW ALS
Y3H	SALES PACKAGE-HANDICAPPED, MOBILITY, PARATRANSIT
YA2	DOOR SIDE-REAR, SLIDING
YB9	PAINT PROCESS-INTERIOR - NONE
YC6	PACKAGE, CONVENIENCE-DECOR LEVEL #6
YF1	SALES PACKAGE-CUTAWAY UPFITTER
YF2	SALES PACKAGE-AMBULANCE UPFITTER
YF5	CERTIFICATION-EMISSION, CALIFORNIA
YF7	SALES PACKAGE-RECREATIONAL VEHICLE, UPFITTER
YHF	TIRE REAR-LT225/75R16 E 115/112 S BL ALS
YIW	TIRE REAR-LT245/75R16 E 120/116R BW OOR
YLP	TIRE REAR-LT245/75R16 E 120/116 S BW ALS
YM8	IDENTIFICATION-LIMITED PERSONALIZATION OPTION (LPO)
Z49	COUNTRY-CANADA

Z82	TRAILER PROVISIONS-SPECIAL EQUIPMENT, H.D.
Z88	MARKET BRAND-GMC
ZHF	TIRE SPARE-LT225/75R16 E 115/112 S BL ALS
ZIW	TIRE SPARE-LT245/75R16 E 120/116R BW OOR
ZLP	TIRE SPARE-LT245/75R16 E 120/116 S BW ALS
ZP0	SEATING ARRANGEMENT-TEMPORARY DRIVER
ZP3	SEATING ARRANGEMENT-15 PASS
ZP6	SEATING ARRANGEMENT-5 PASS CARGO
ZQ2	SALES PACKAGE-DRIVER CONVENIENCE
ZQ3	SALES PACKAGE-DRIVER CONVENIENCE II
ZR7	APPEARANCE PACKAGE-GRILLE & BUMPER CHROME
ZW2	WINDOW PKG-RR DRS
ZW3	WINDOW PKG-RR DRS, SIDE RR DR
ZW4	WINDOW PKG-RH SIDE, RR DRS
ZW6	WINDOW PKG-COMPLETE BODY
ZW9	BODY EQUIPMENT-BASE BODY OR CHASSIS
ZX1	SEATING ARRANGEMENT-DRIVER ONLY, HIGH BACK
ZX2	SEATING ARRANGEMENT-DRIVER & PASS, HIGH BACK
ZX5	SEATING ARRANGEMENT-12 PASS
ZX9	TIRE SPARE-W/WHEEL - NONE
ZY1	COLOR COMBINATION-SOLID

Body Systems

Fixed and Moveable Windows

Schematic and Routing Diagrams

Moveable Window Schematics

Moveable Windows (A31)

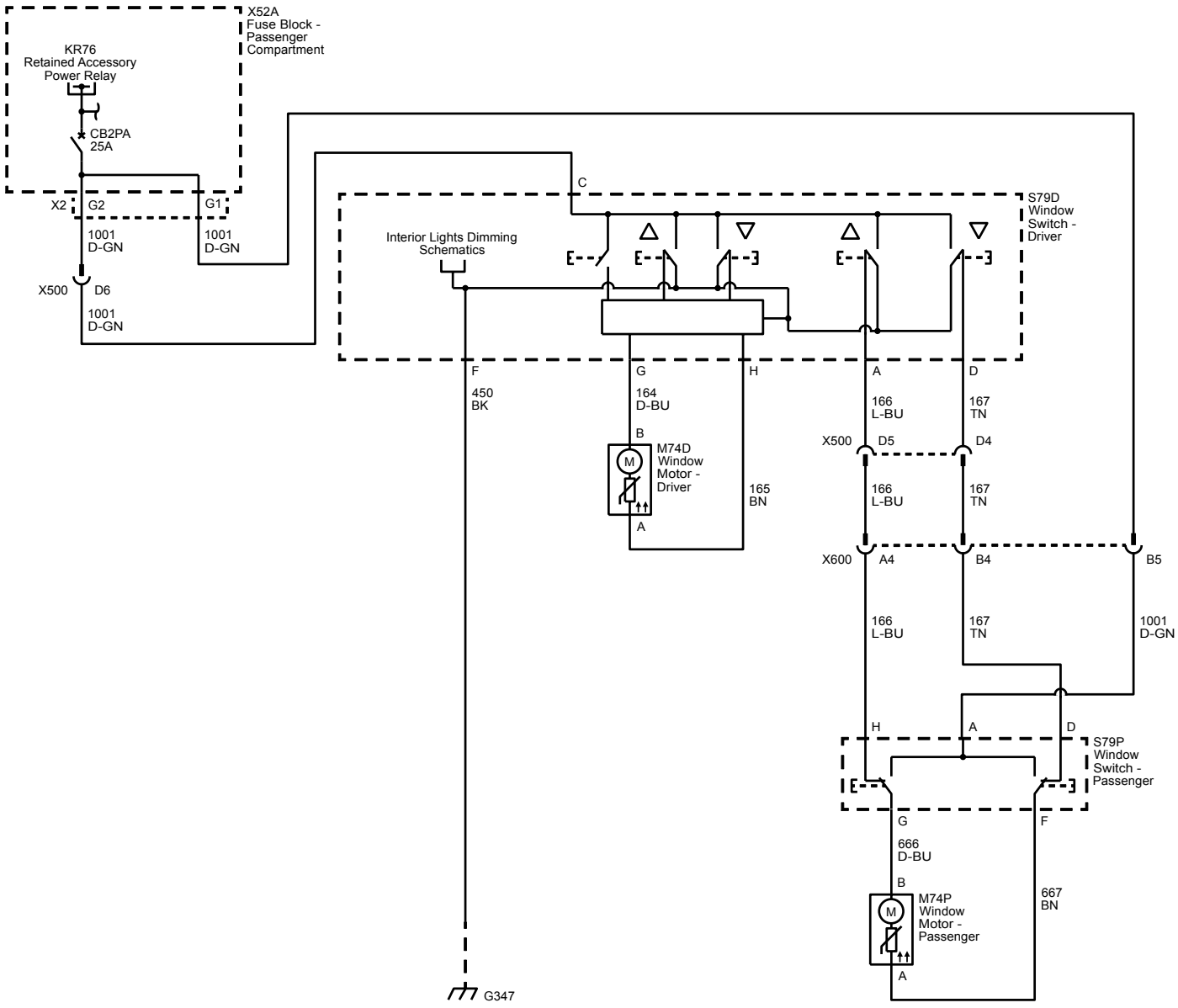

Defogger Schematics

Defogger (C49)

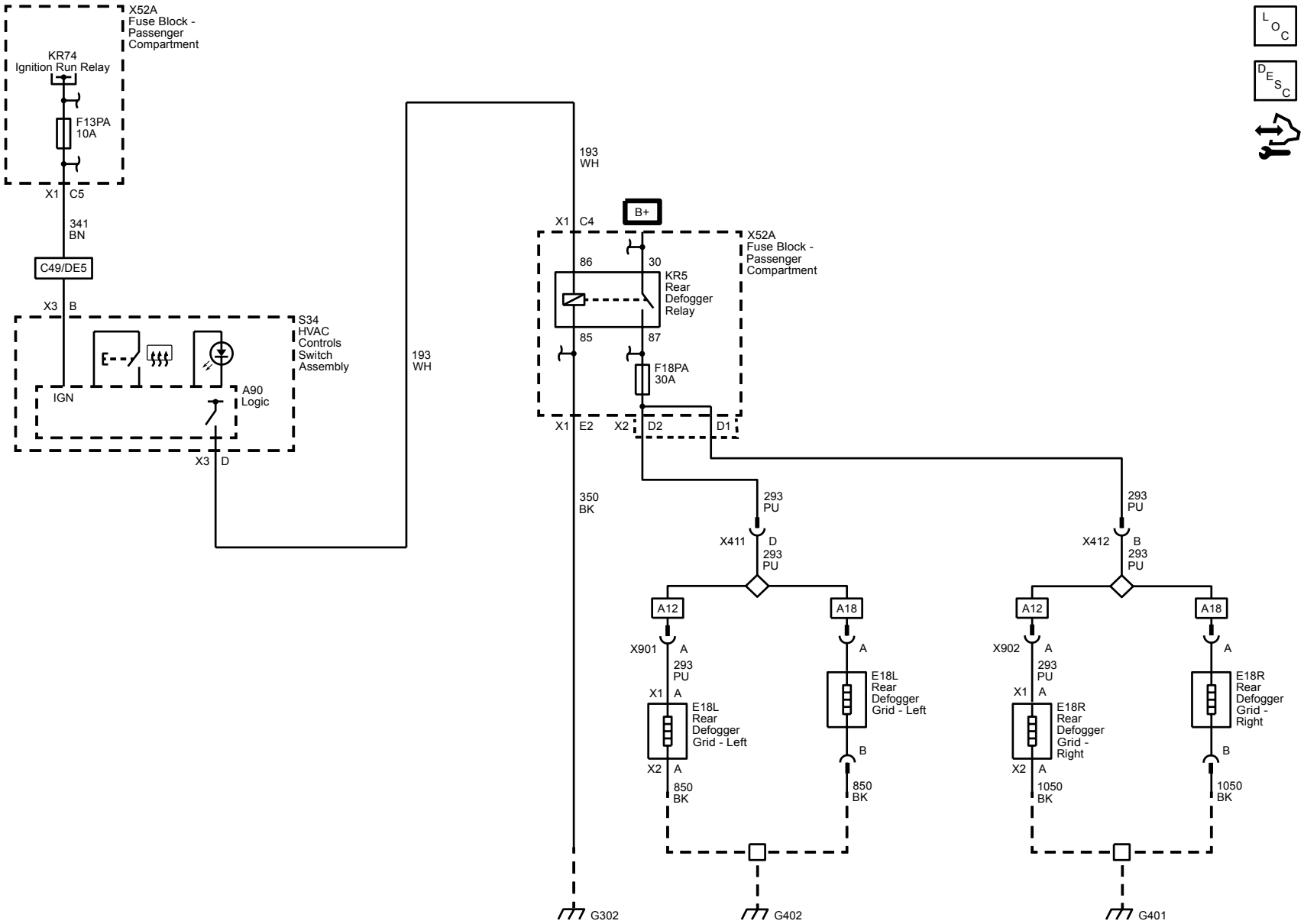

Description and Operation

Power Windows Description and Operation

Power Window System Components

The power window system consists of the following components:

- LF power window master switch
- RF power window switch
- Reversible power window motors in each of the doors (circuit breaker protected)
- PWR WNDW 25A circuit breaker

Power Window System Controls

The power window system will operate anytime the ignition switch is in the ACCY or ON position or when RAP is activated.

The LF power window master switch can control the up and down functions of both the windows in the vehicle. The passenger door power window switch can only control the up and down functions of the passenger window.

Power Window Motor Operation

A permanent magnet motor operates each of the power side windows. Each motor raises or lowers the glass when the motor receives voltage. The direction the motor turns depends on the polarity of the supply voltage. The power window switches control the polarity of the supply voltage. A built-in circuit breaker protects each motor. The circuit breaker opens when the switch is depressed for a extended period of time under the following conditions:

- The window has an obstruction.
- The window is fully open or fully closed.

The circuit breaker will reset automatically as the circuit breaker cools.

Power Window Operation

The normally closed contacts of the switch are connected to ground and the center pole is connected to the accessory voltage circuit. By placing the left power window switch in the down position, voltage is applied to the power window motor left front down circuit and to the power window motor. The other side of the power window motor is connected to ground through the normally closed contacts of the left power window switch through the power window motor left front up circuit and drives the window down.

By placing the power window switch in the up position the polarity of the motor is reversed and the motor drives the window up.

Rear Window Defogger Description and Operation

Rear Window Defogger System Components

The rear window defogger system consists of the following components:

- HVAC control assembly
- Rear window defogger relay
- Rear window defogger grid

Rear Window Defogger Operation

When you turn the ignition to the ON position, battery positive voltage is supplied through the HTD MIR DEFOG fuse to the rear window defogger relay switched input. Ground is for the rear window defogger relay coil is provided by G302. Battery positive voltage and ignition voltage is supplied to the HVAC control assembly for rear window defogger operation. When the rear window defogger switch is depressed, the HVAC control assembly energizes the rear window defogger relay by supplying battery positive voltage to the rear window defogger relay coil. This allows battery positive voltage from the relay switched input through the switch contacts and out the relay switched output to the rear window defogger grids. The HVAC control assembly also illuminates the rear window defogger indicator upon this request. Ground for the left rear window defogger grid is provided by G401. Ground for the right rear window defogger grid is provided by G402.

When you turn ON the ignition and press the rear window defogger switch for the first time, the defogger cycle lasts 10 minutes. Further operation results in 5 minute defogger cycles. The defogger cycle resets to 10 minutes when you cycle the ignition to the OFF position and then back to the ON position.

Body Systems

Horns

Schematic and Routing Diagrams

Horn Schematics

Horn Schematics

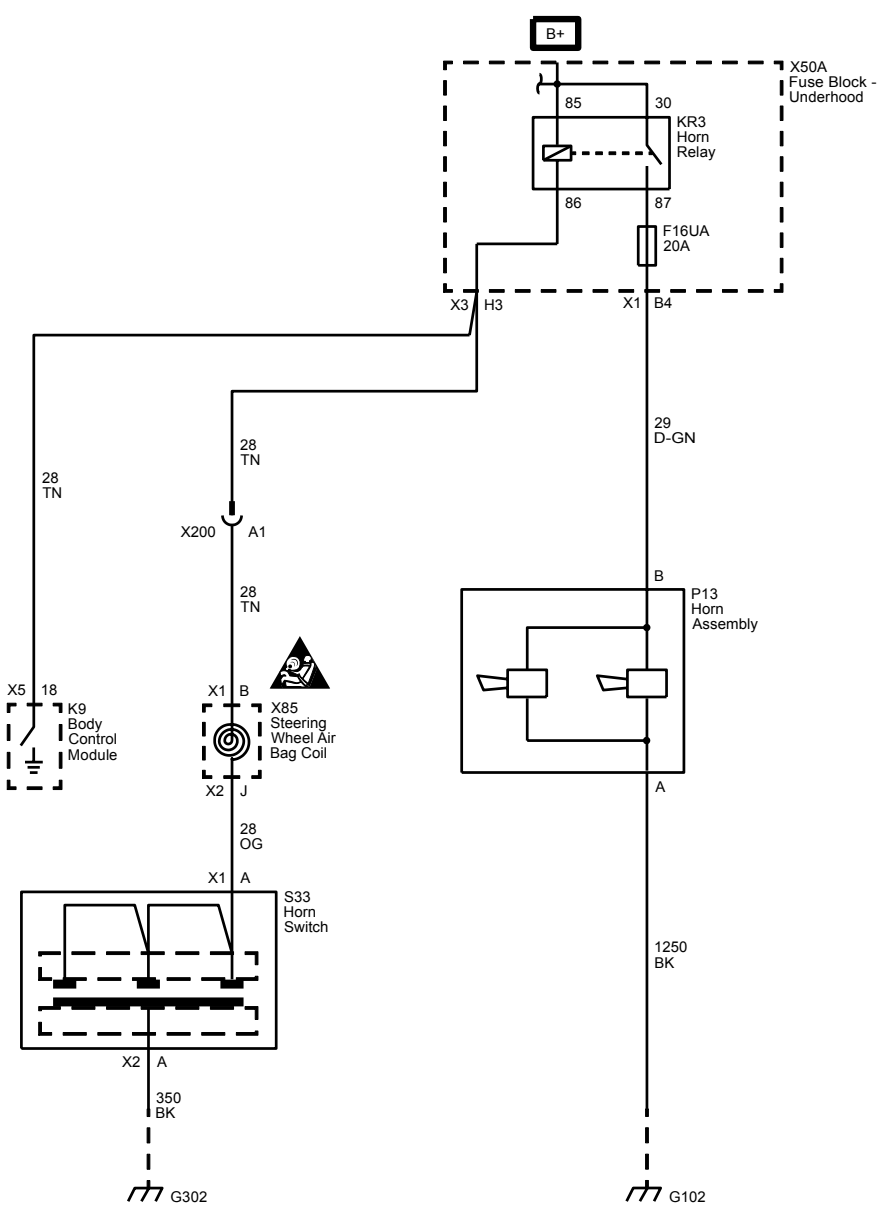

Description and Operation

Horns System Description and Operation

System Description

The horn system consists of the following components:

- The HORN fuse
- The Horn relay
- The Horn Contact
- The Horn Assembly
- Body Control Module (BCM)

System Operation

- The vehicle horns are activated whenever the horn switch is depressed.
- The BCM commands the horns ON under any of the following conditions:
  - When the panic button is depressed on the remote control door lock transmitter. For further information refer to Keyless Entry System Description and Operation.
  - When the keyless entry system is used to lock the vehicle, a horn chirp may sound to notify the driver that the vehicle has been locked. The notification feature may be enabled or disabled through personalization. For further information refer to Keyless Entry System Description and Operation.

Circuit Operation

Battery positive voltage is applied at all times to the horn relay coil and the horn relay switch. Pressing the horn switch applies ground to the horn relay control circuit. When the horn relay control circuit is grounded, the horn relay is energized and battery positive voltage is applied to the horns through the horn control circuit. The horns sound as long as ground is applied to the horn relay control circuit.

Body Systems

Lighting

Schematic and Routing Diagrams

Headlights/Daytime Running Lights (DRL) Schematics

Headlamp and Daytime Running Lamp Controls

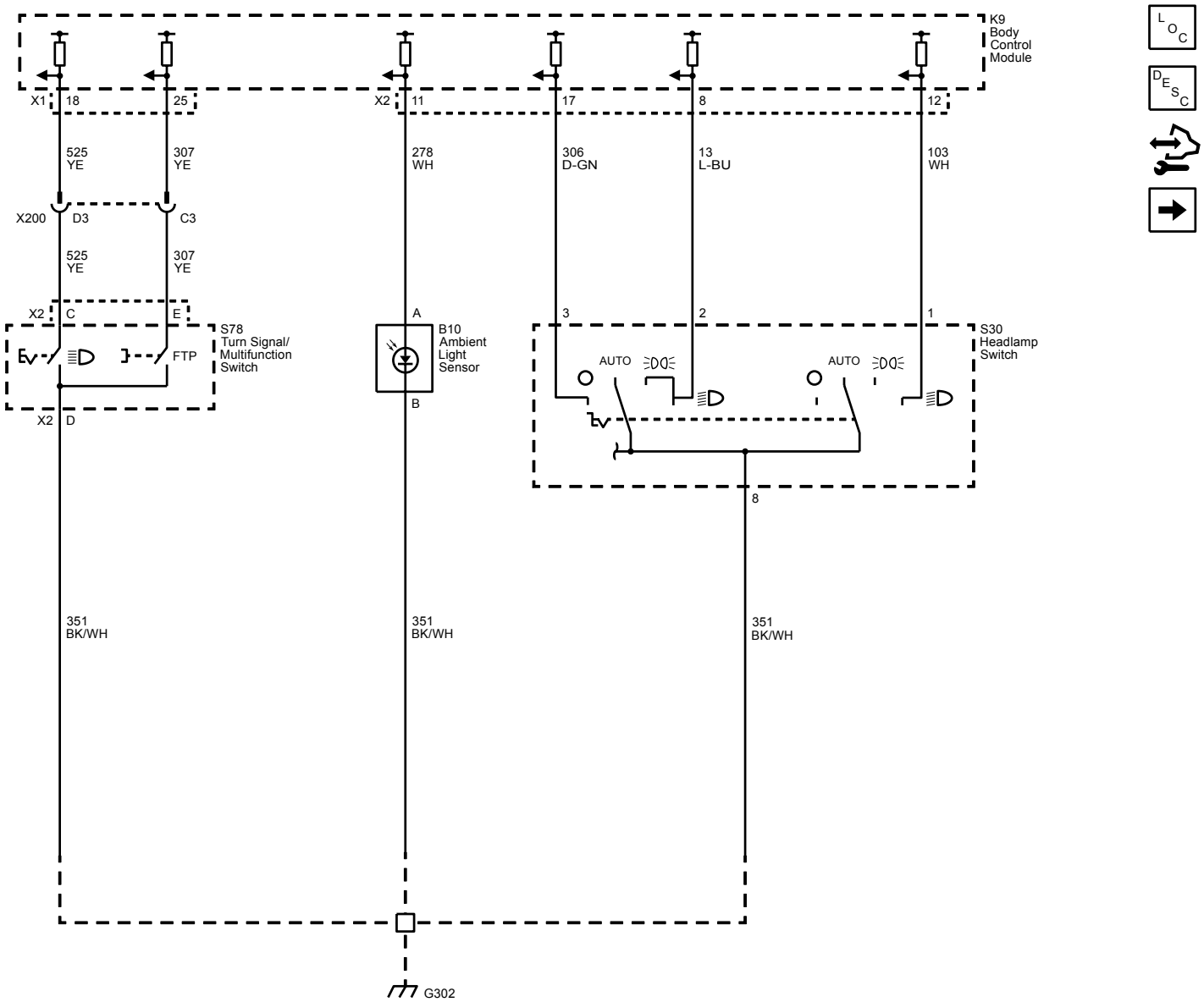

Low Beam and Daytime Running Lights (DRL)

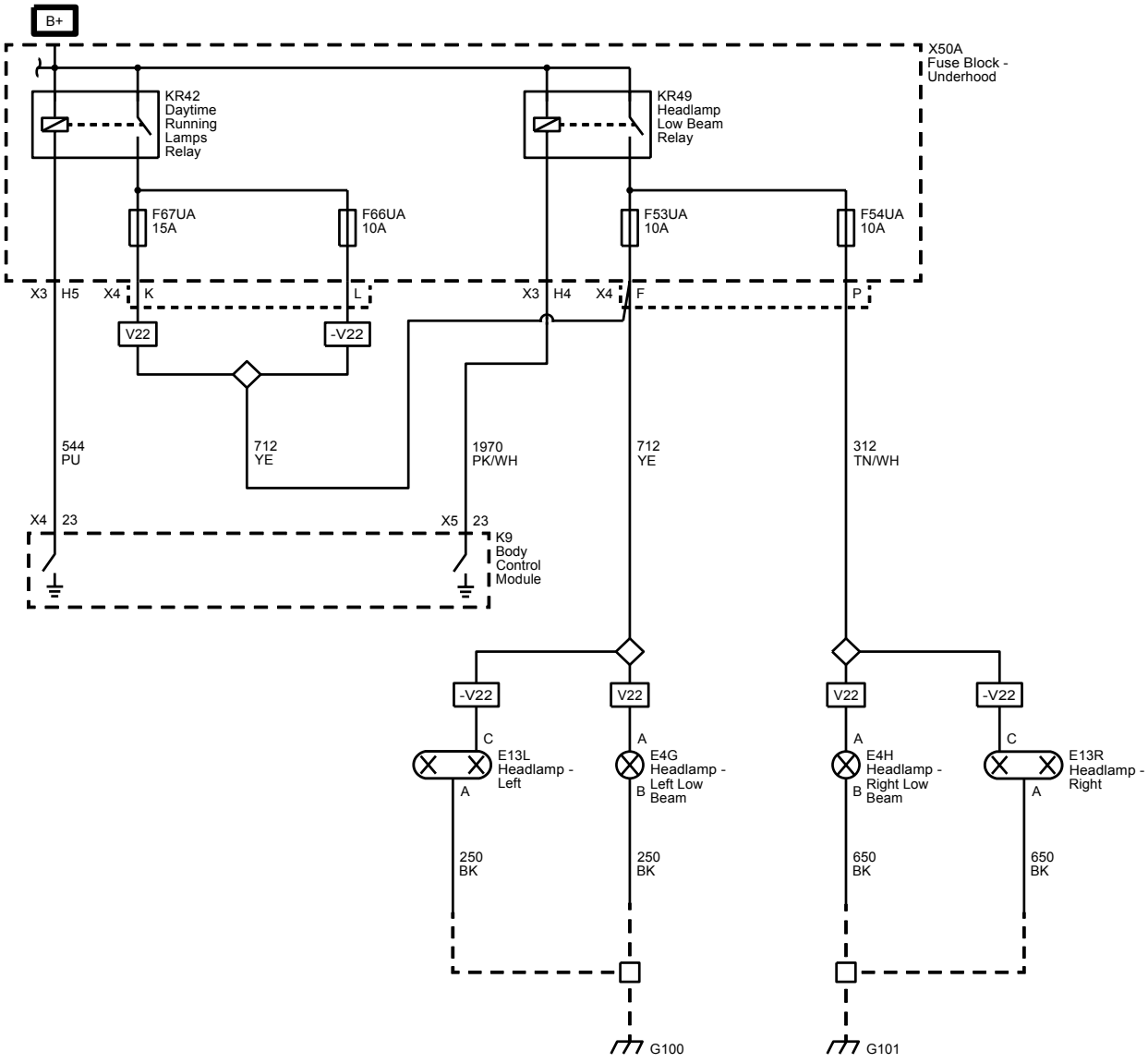

High Beams

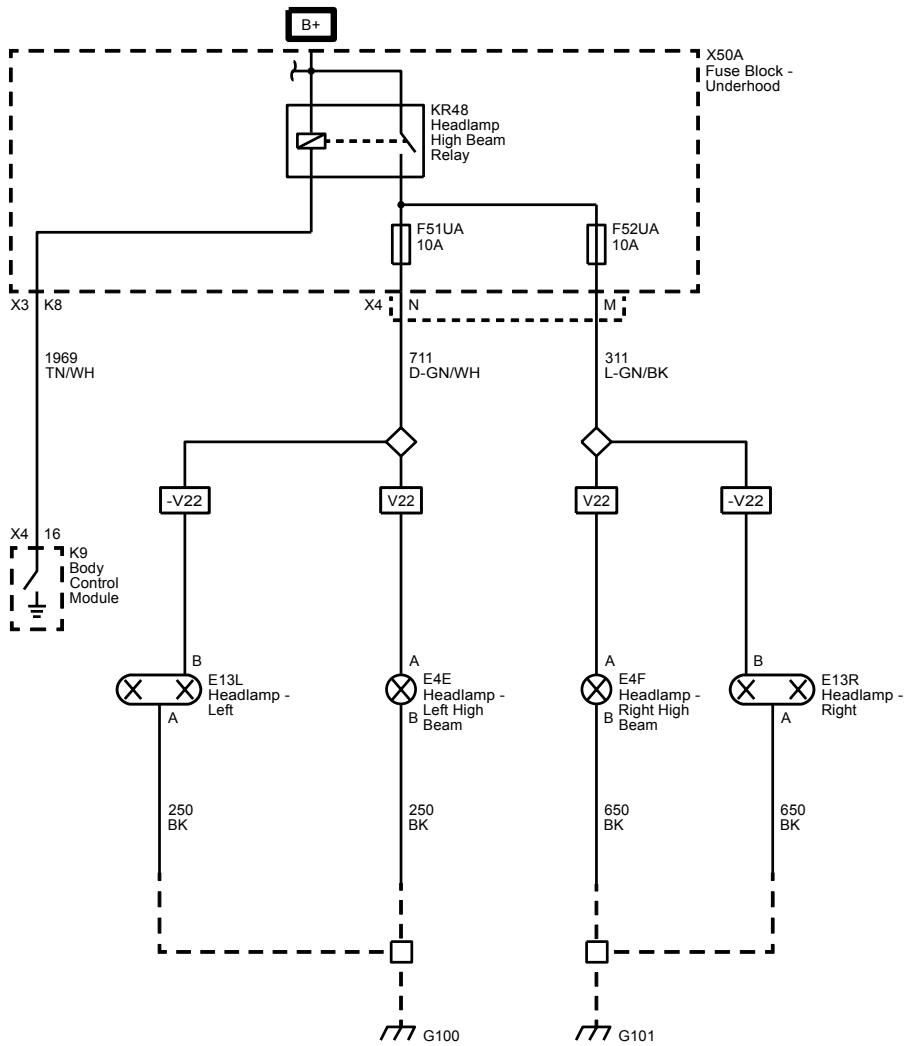
B+
X50A
Fuse Block -
Underhood
KR48
Headlamp
High Beam
Relay
F51UA
10A
F52UA
10A
X3 K8
X4 N
M
1969
TN/WH
711
D-GN/WH
311
L-GN/BK
-V22
V22
V22
-V22
X4 16
K9
Body
Control
Module
B
E13L
Headlamp -
Left
A
A
E4E
Headlamp -
Left High
Beam
B
A
E4F
Headlamp -
Right High
Beam
B
B
E13R
Headlamp -
Right
A
250
BK
250
BK
650
BK
650
BK
G100
G101

Park Lamp Controls and Park Lamps

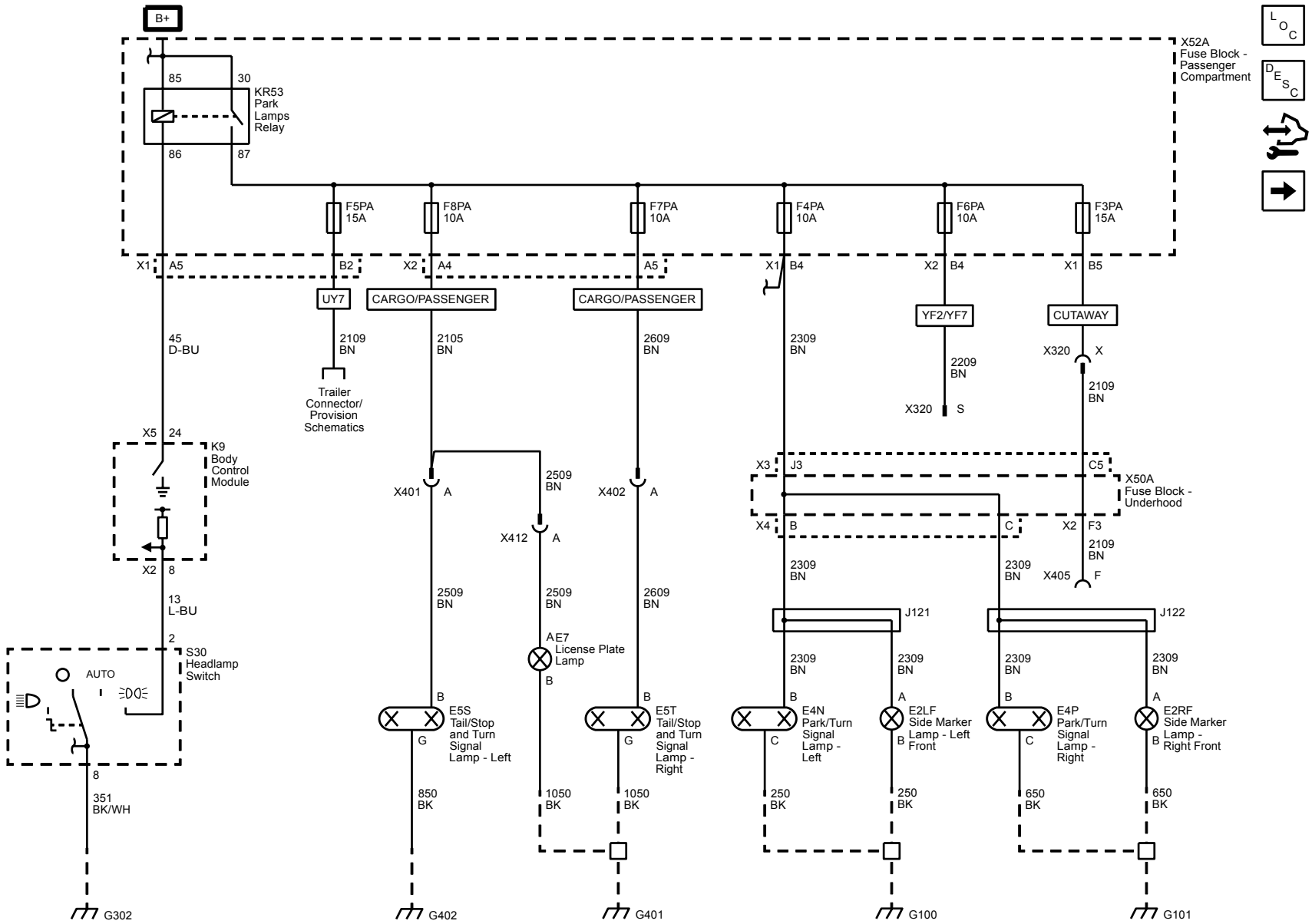

Turn Signal Controls and Front Turn Signal Lamps

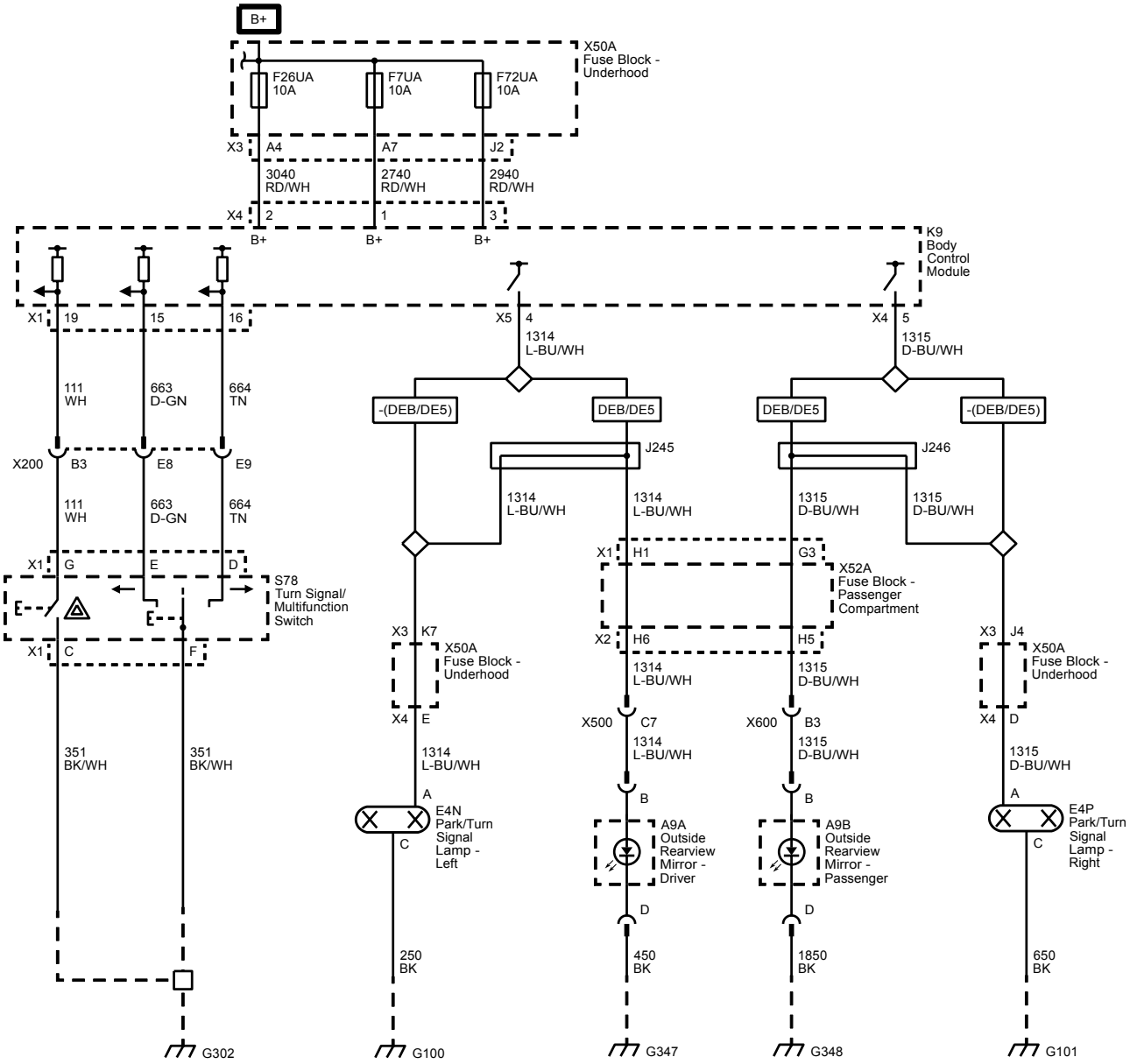

Rear Turn Signal Lamps

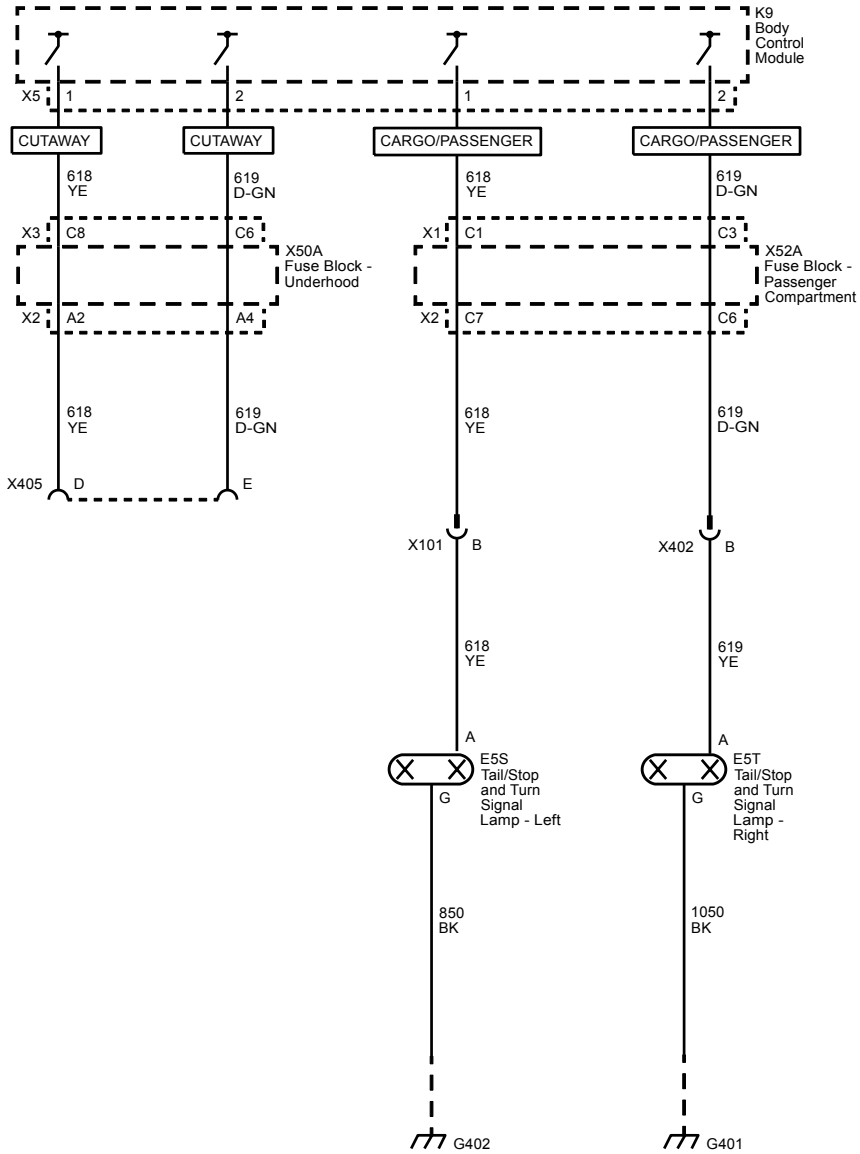

Stop Lamp Controls and CHMSL

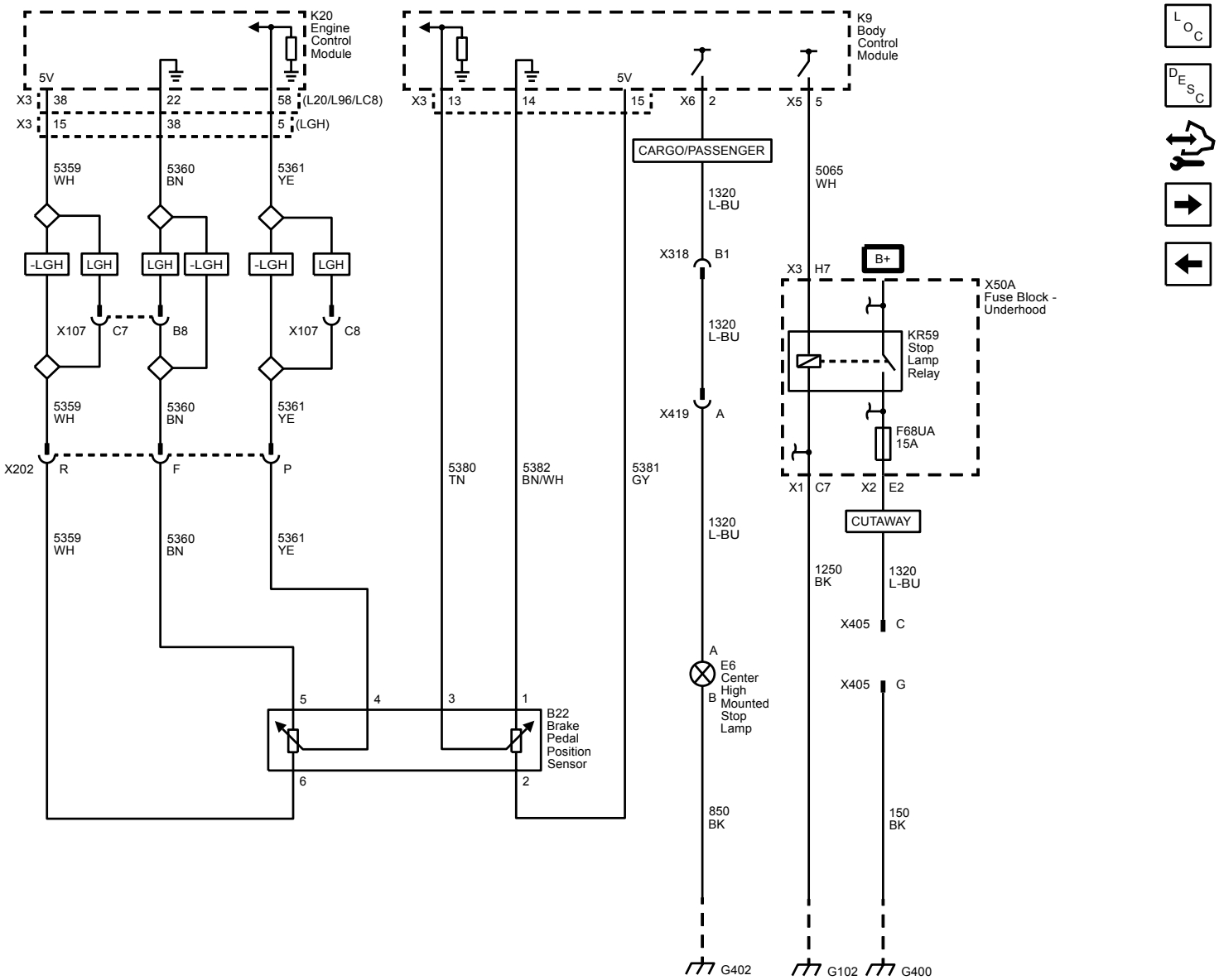

Backup Lamps and Backup Alarm

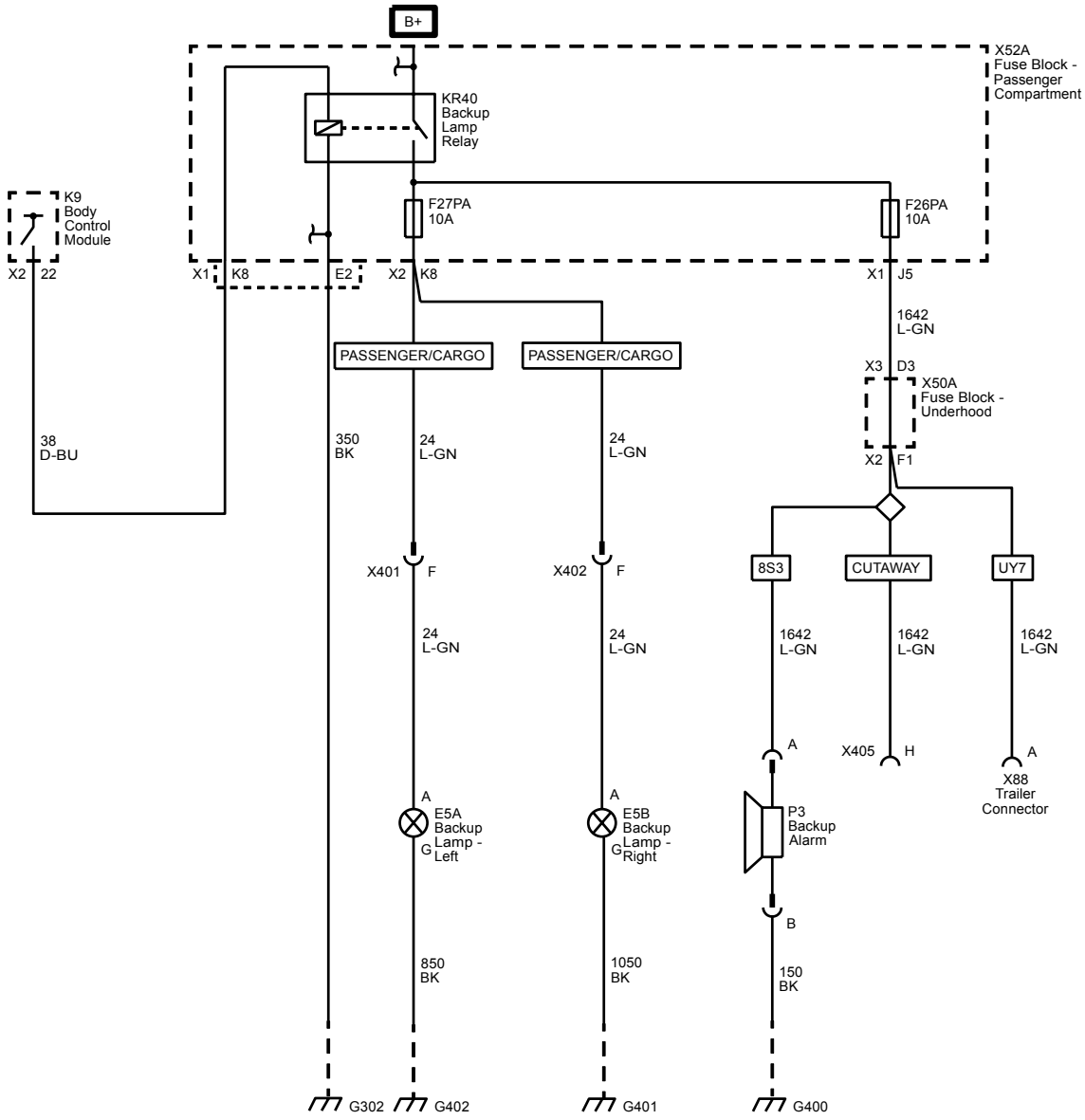

Inadvertent Lamp Control

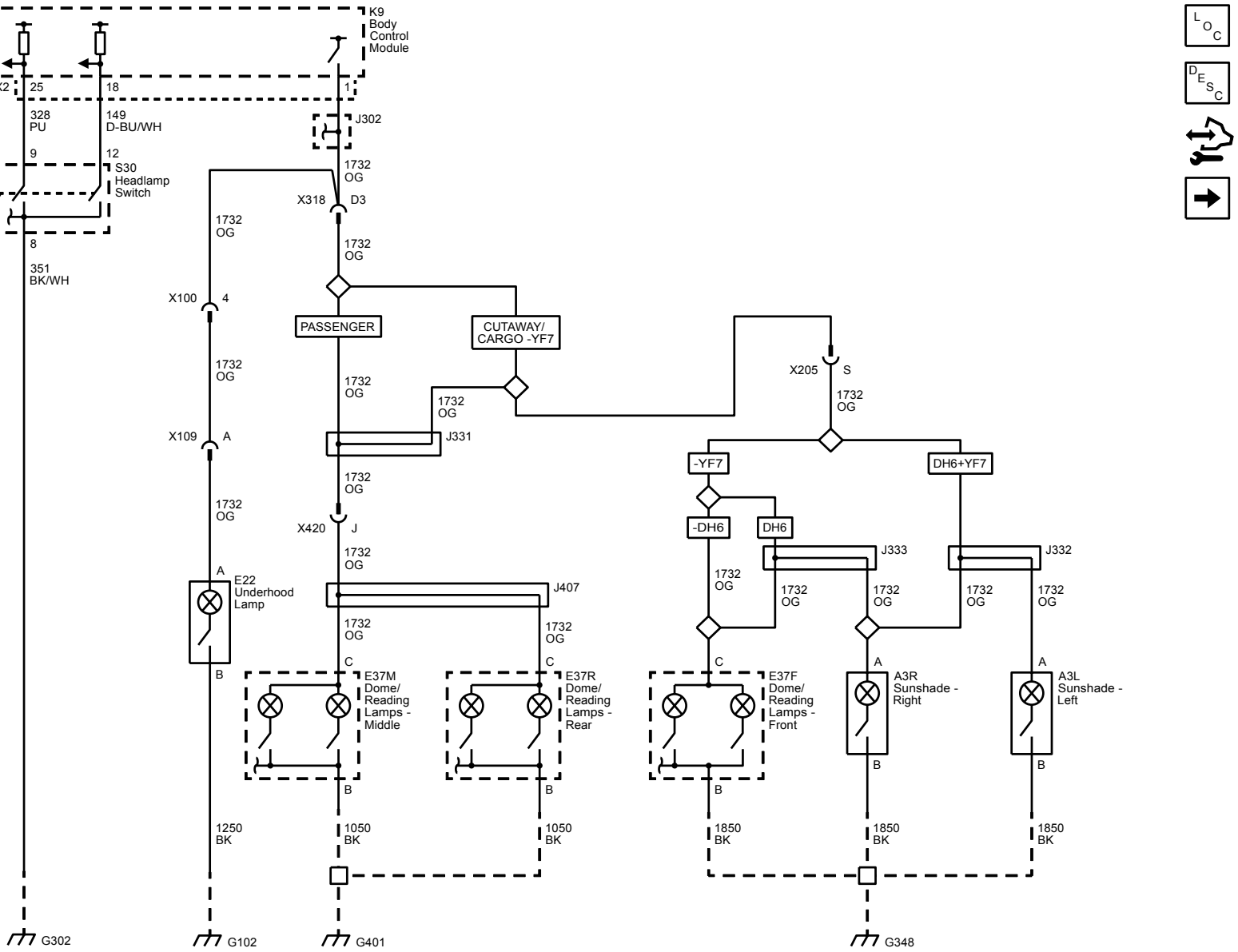

Courtesy Lamp Control

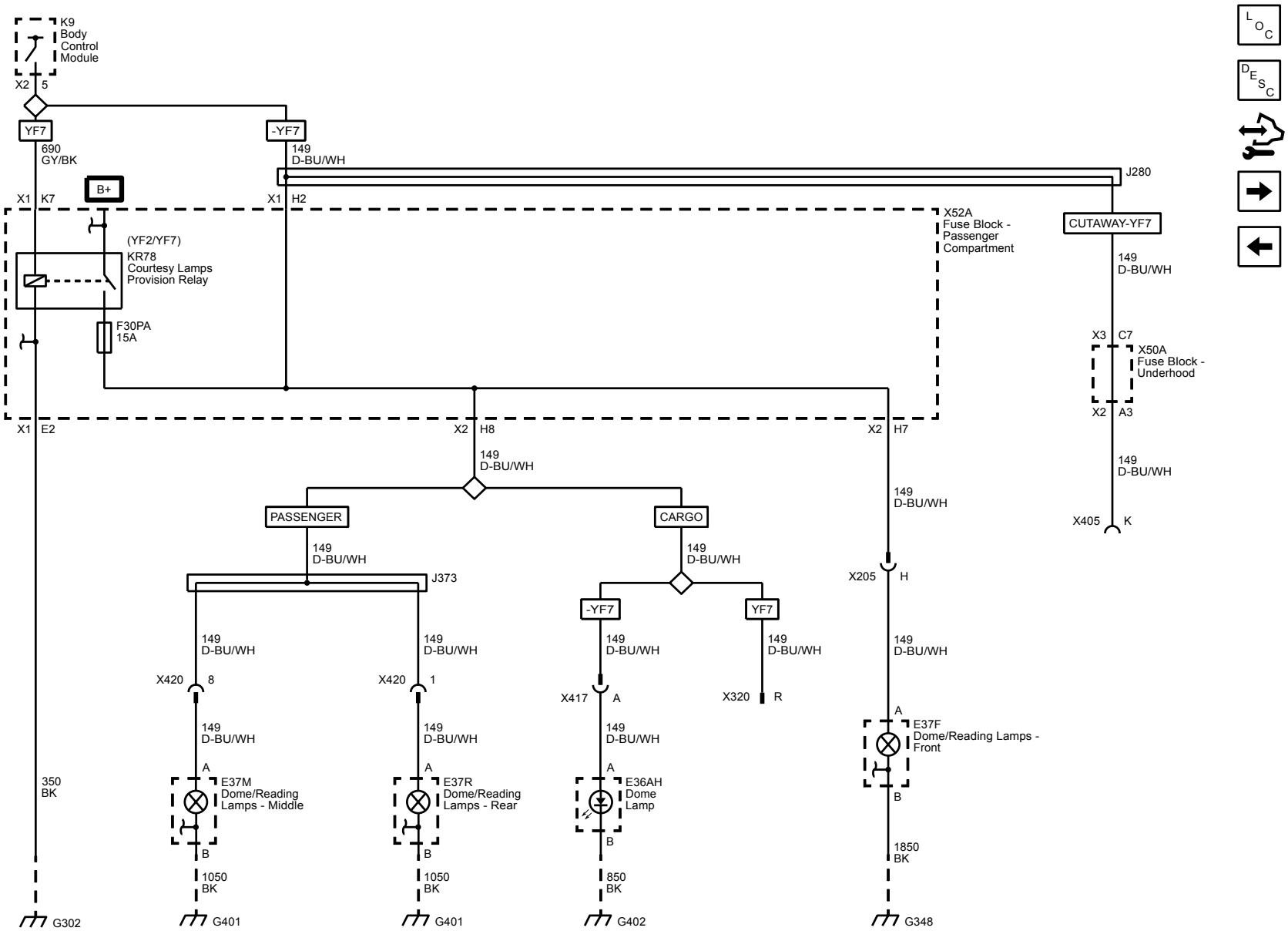

Side Access Panel and Cargo Work Lamps (PRP with UF2)

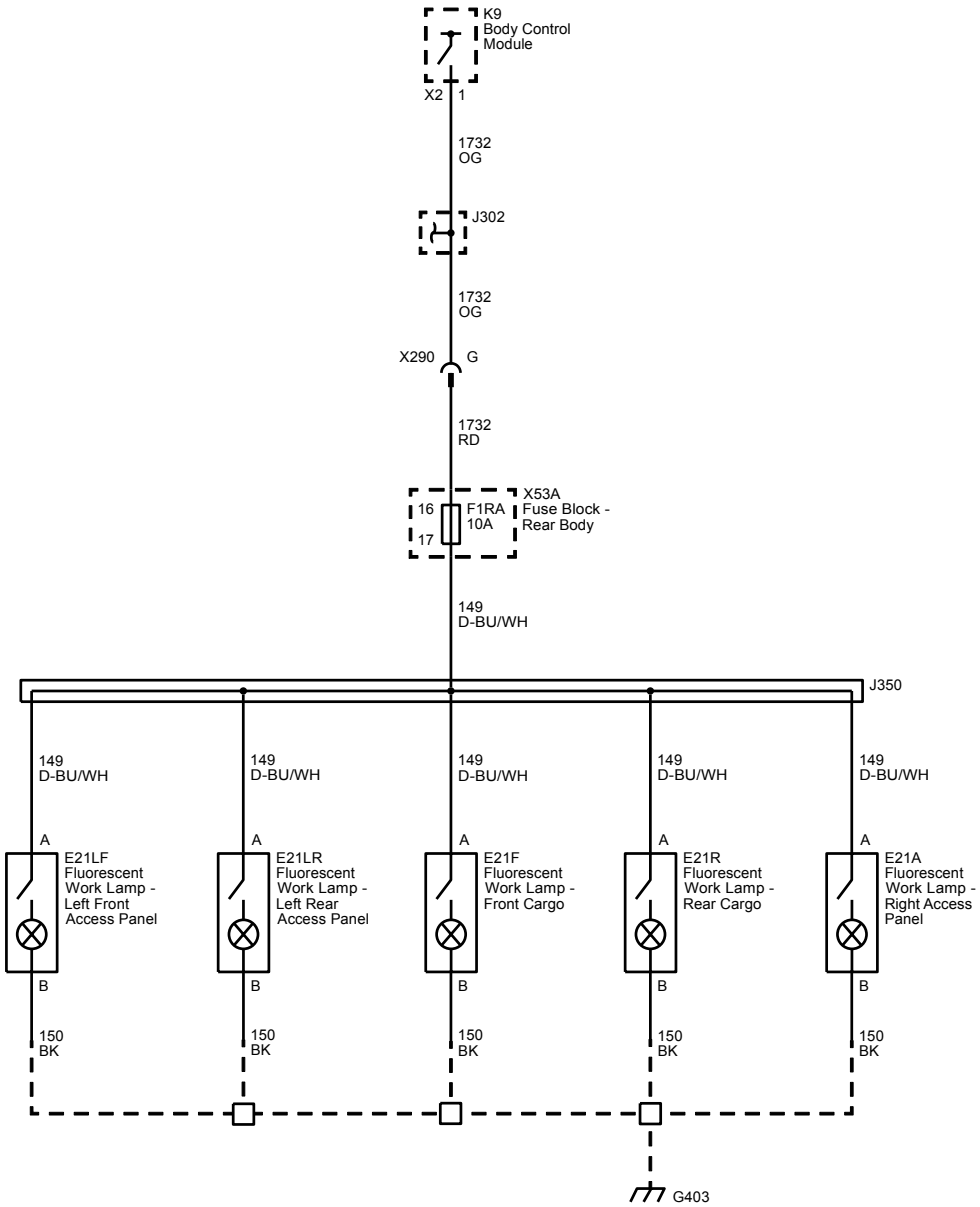

Dimming Controls and LED Dimming

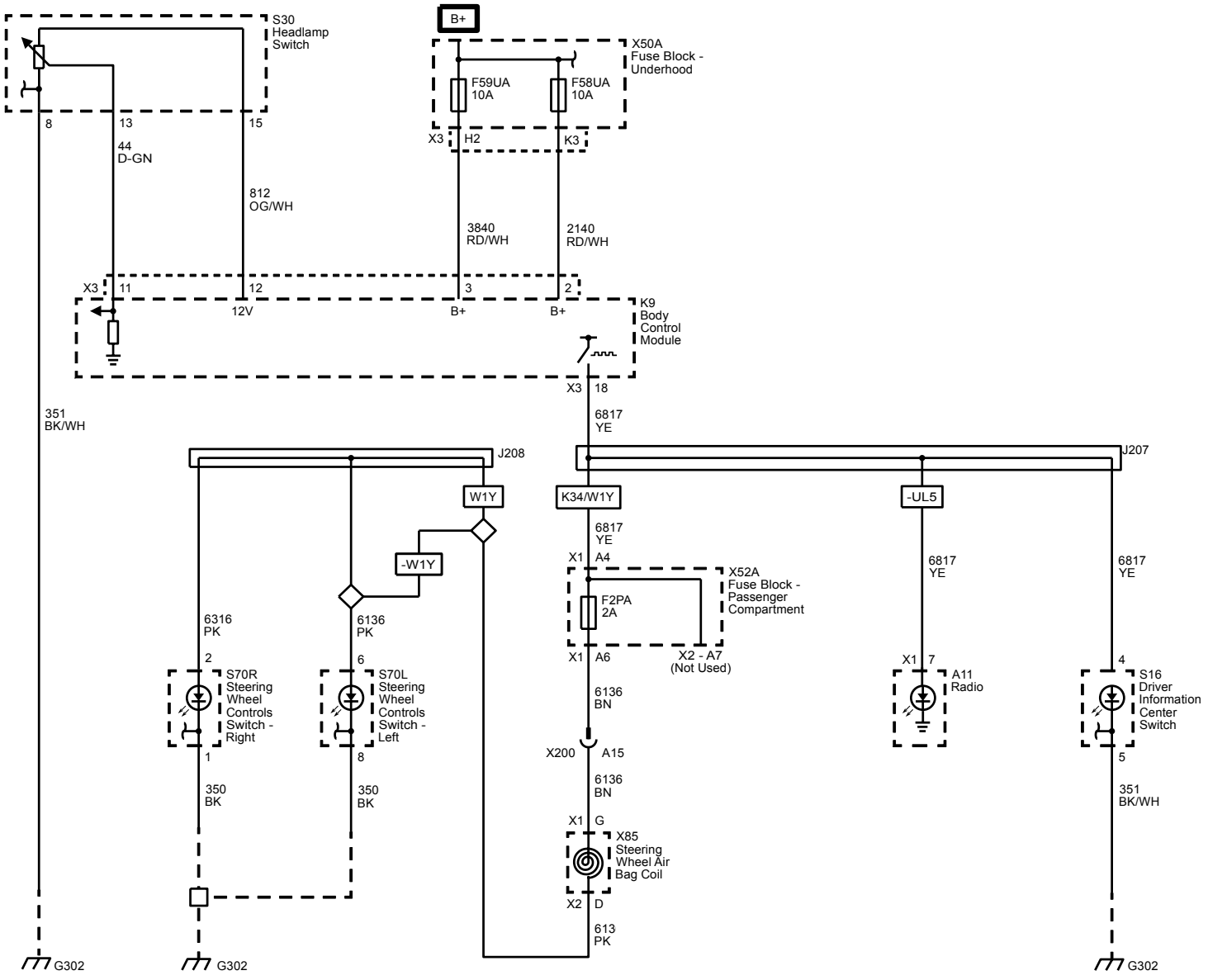

I/P Bulb Dimming (1 of 2)

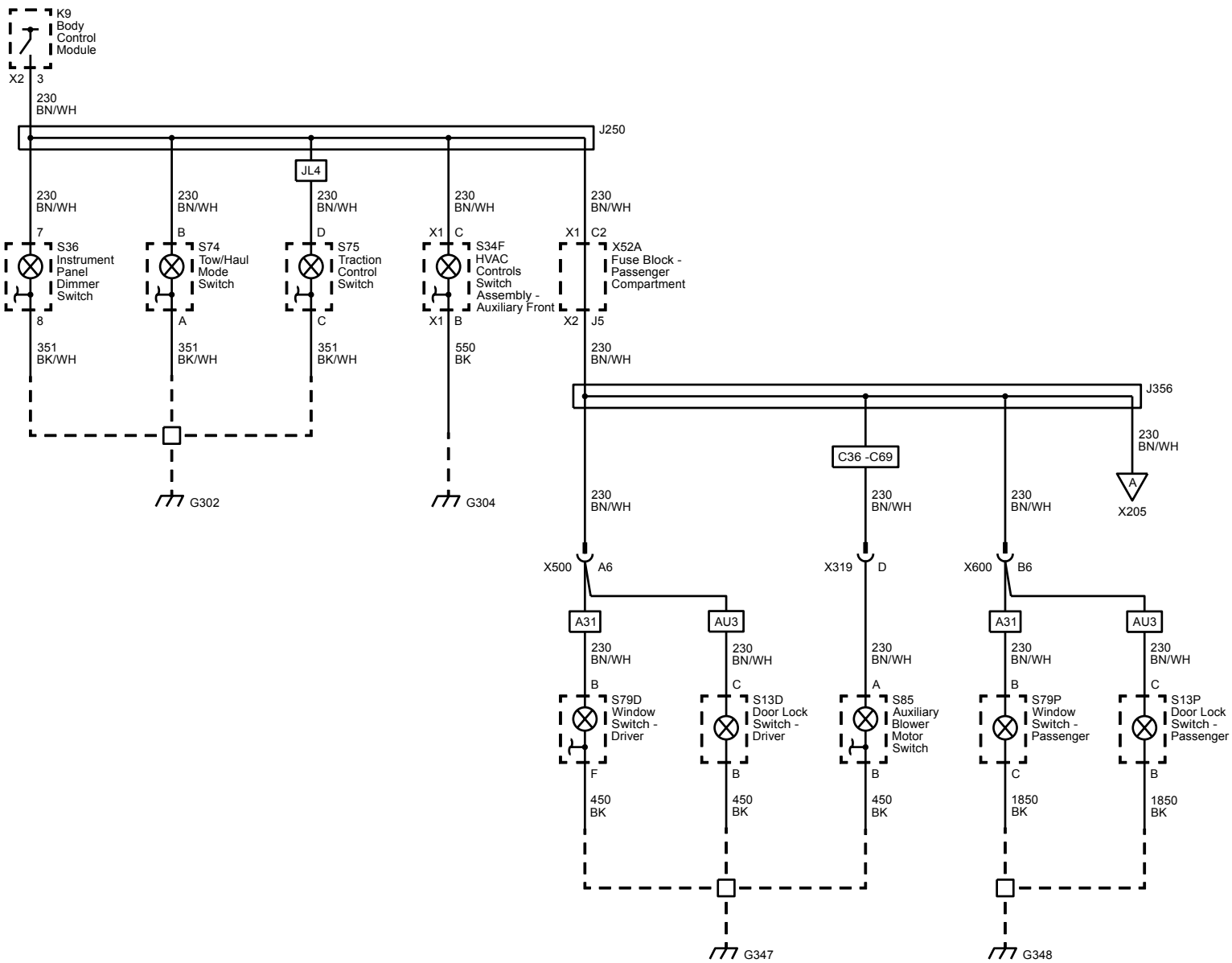

I/P Bulb Dimming (2 of 2)

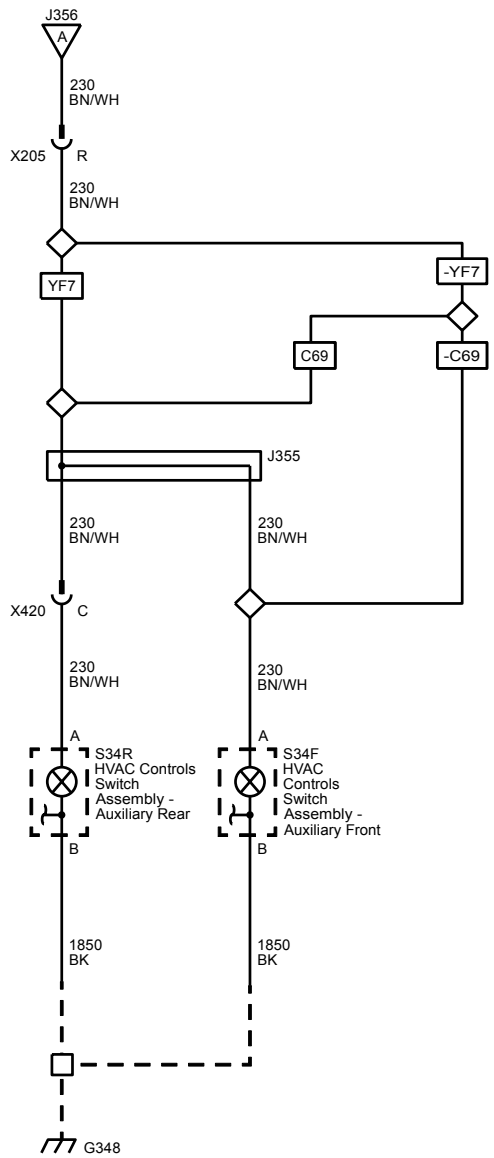

Body Systems

Mirrors

Schematic and Routing Diagrams

Outside Rearview Mirror Schematics

Pan and Tilt (DEB or DE5)

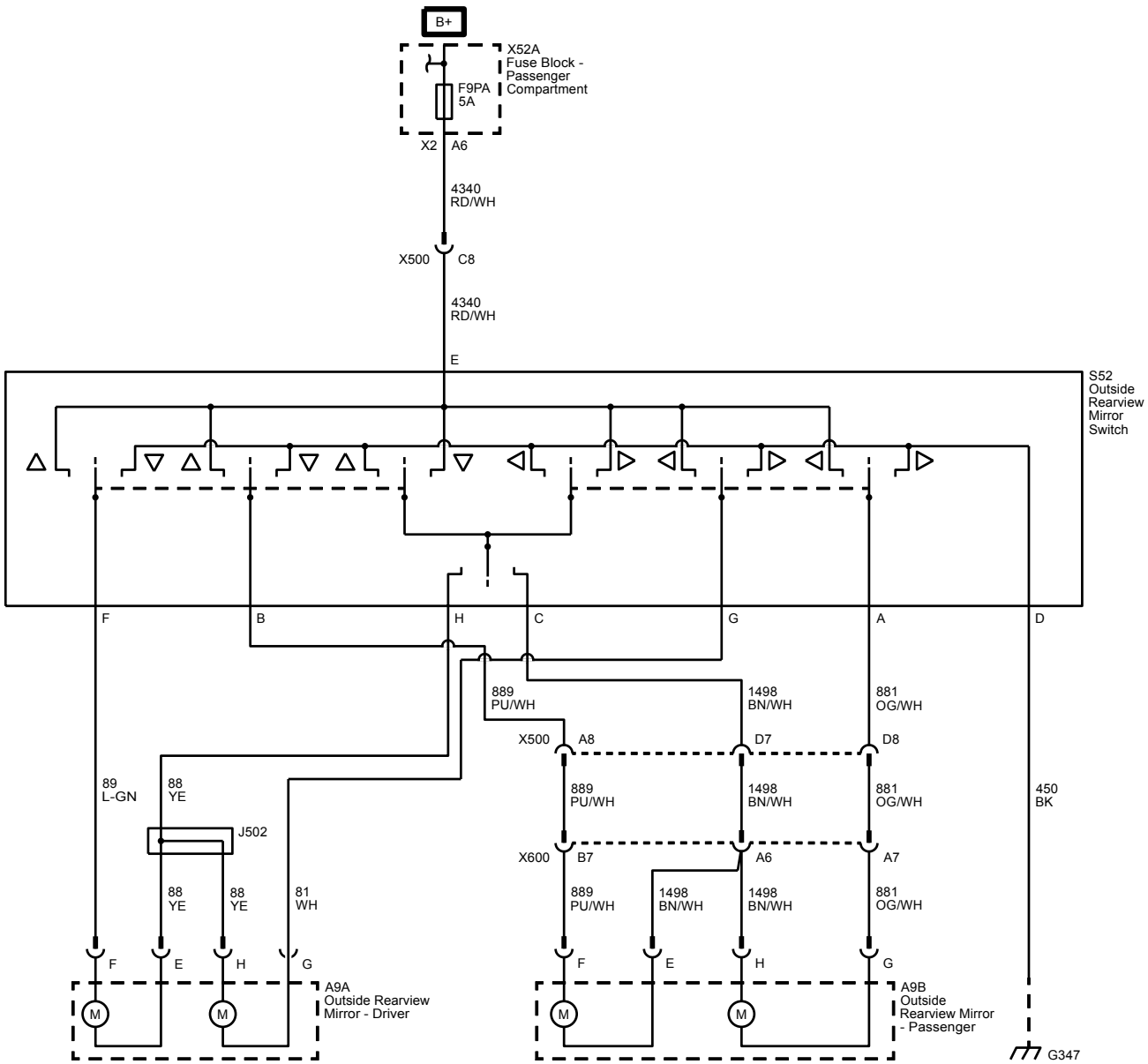

Heated Mirrors (DEB or DE5)

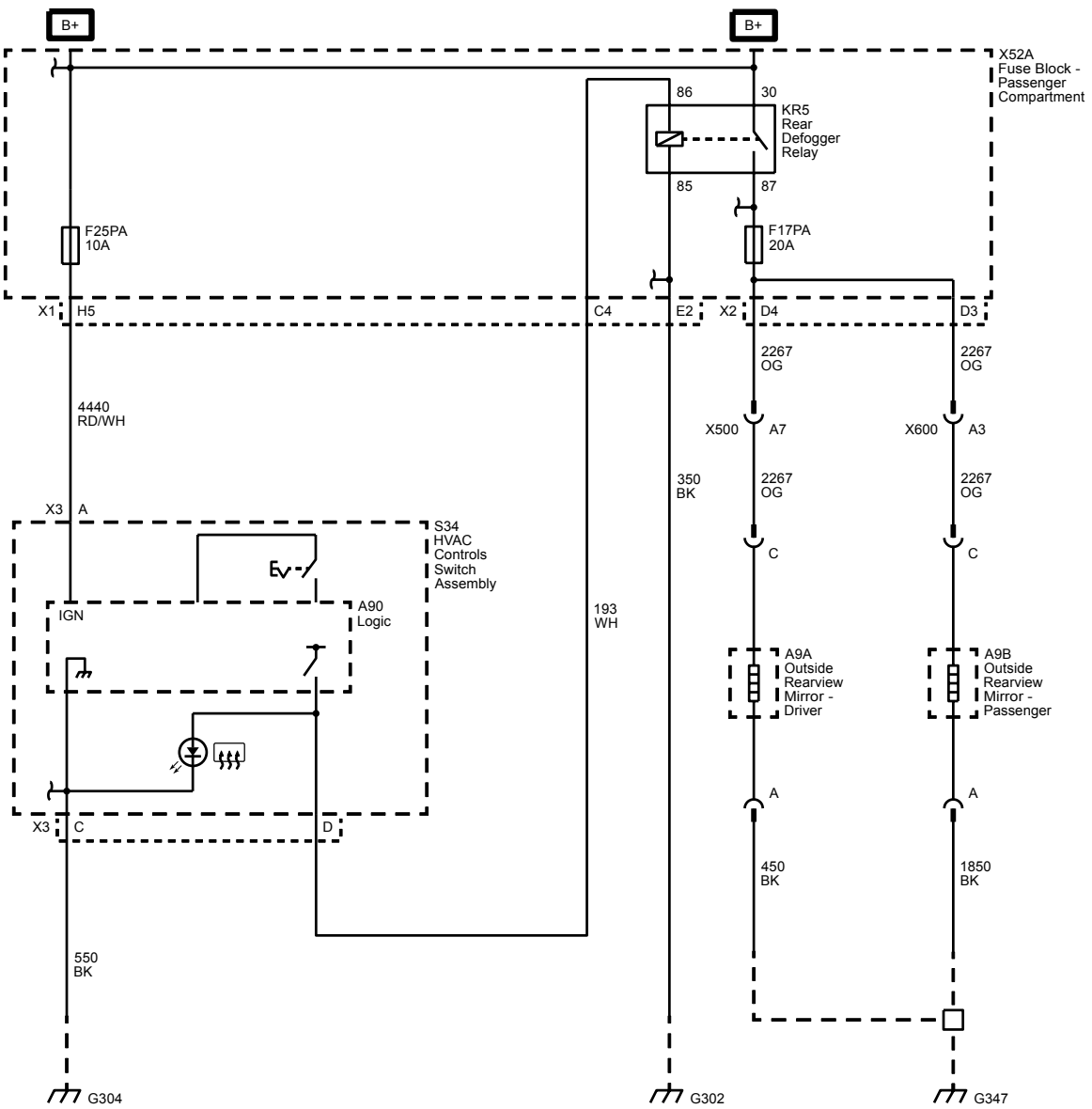

Body Systems

Vehicle Access

Schematic and Routing Diagrams

Door Lock/Indicator Schematics

Lock/Unlock Control

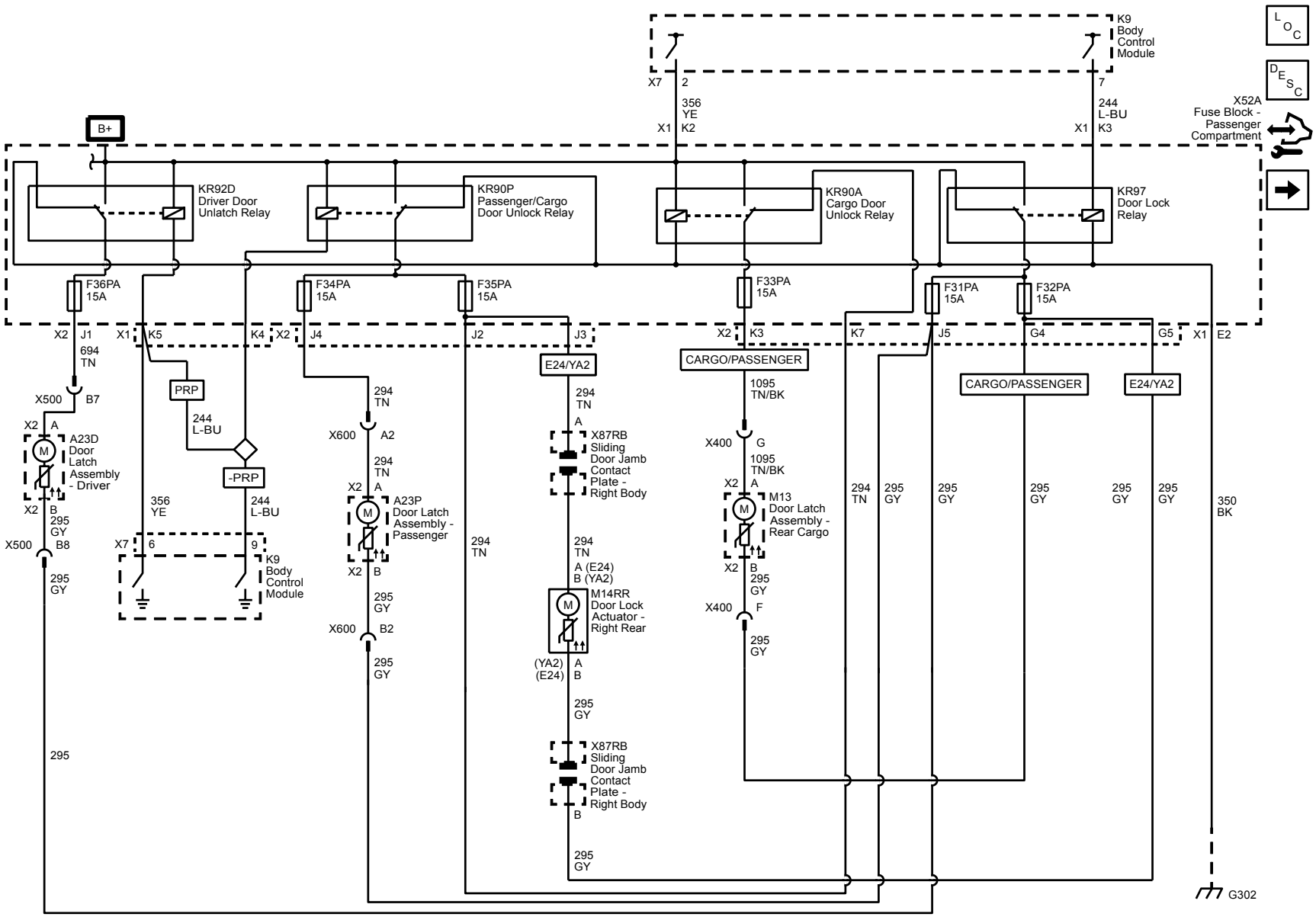

Door Lock Switches (AU3)

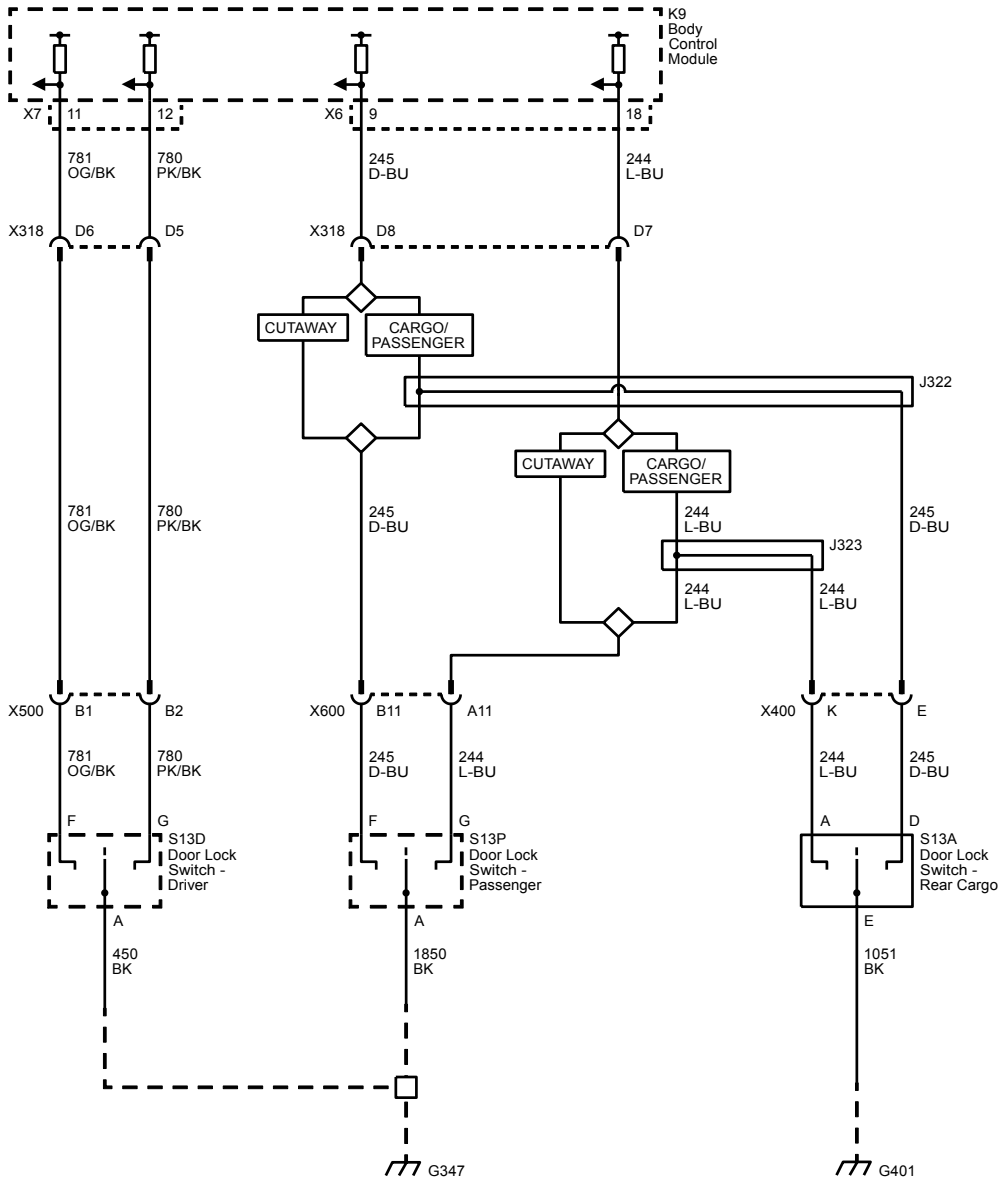

Door Ajar Switches

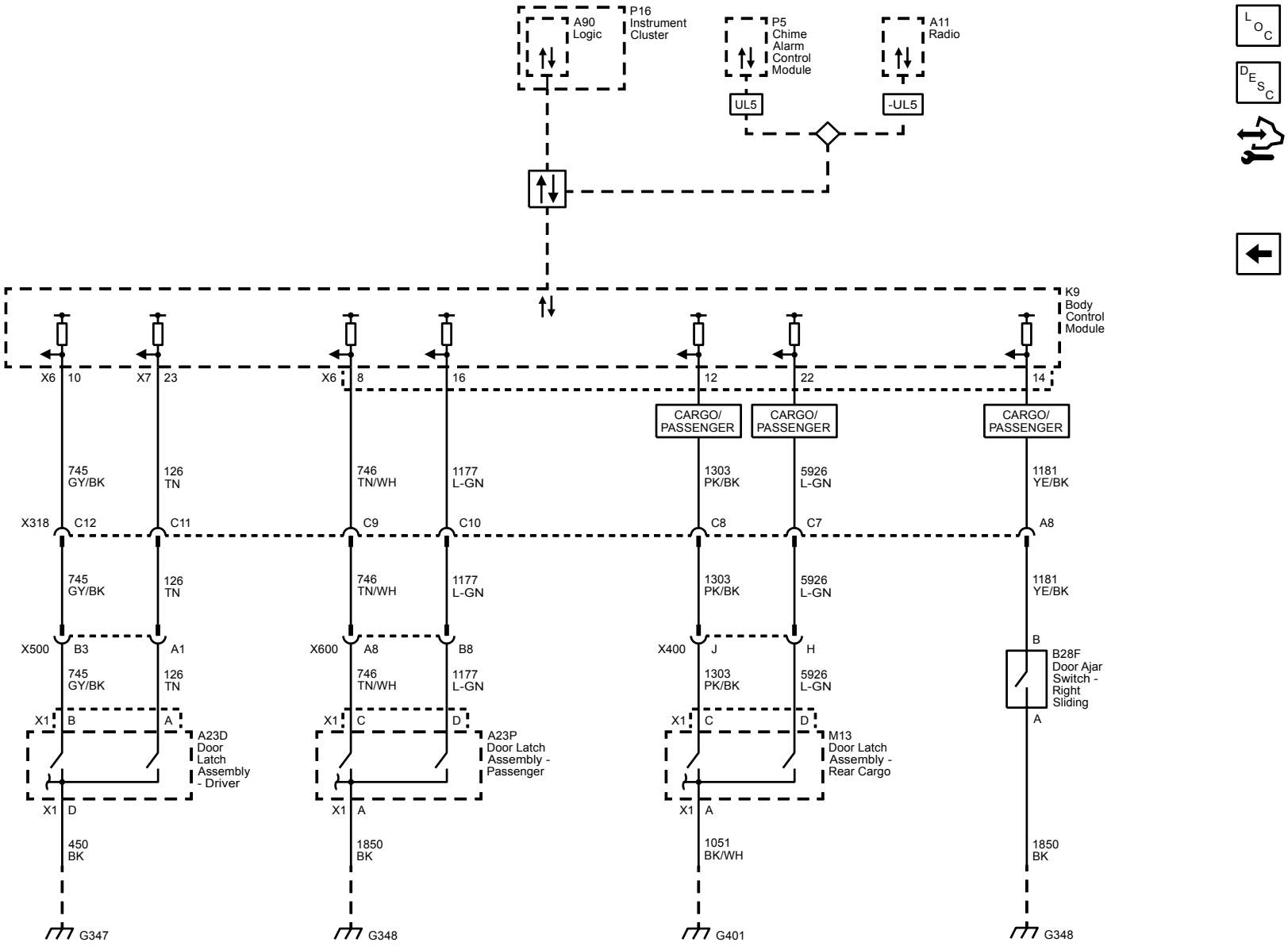

Side Access Panel Relay Controls (PRP)

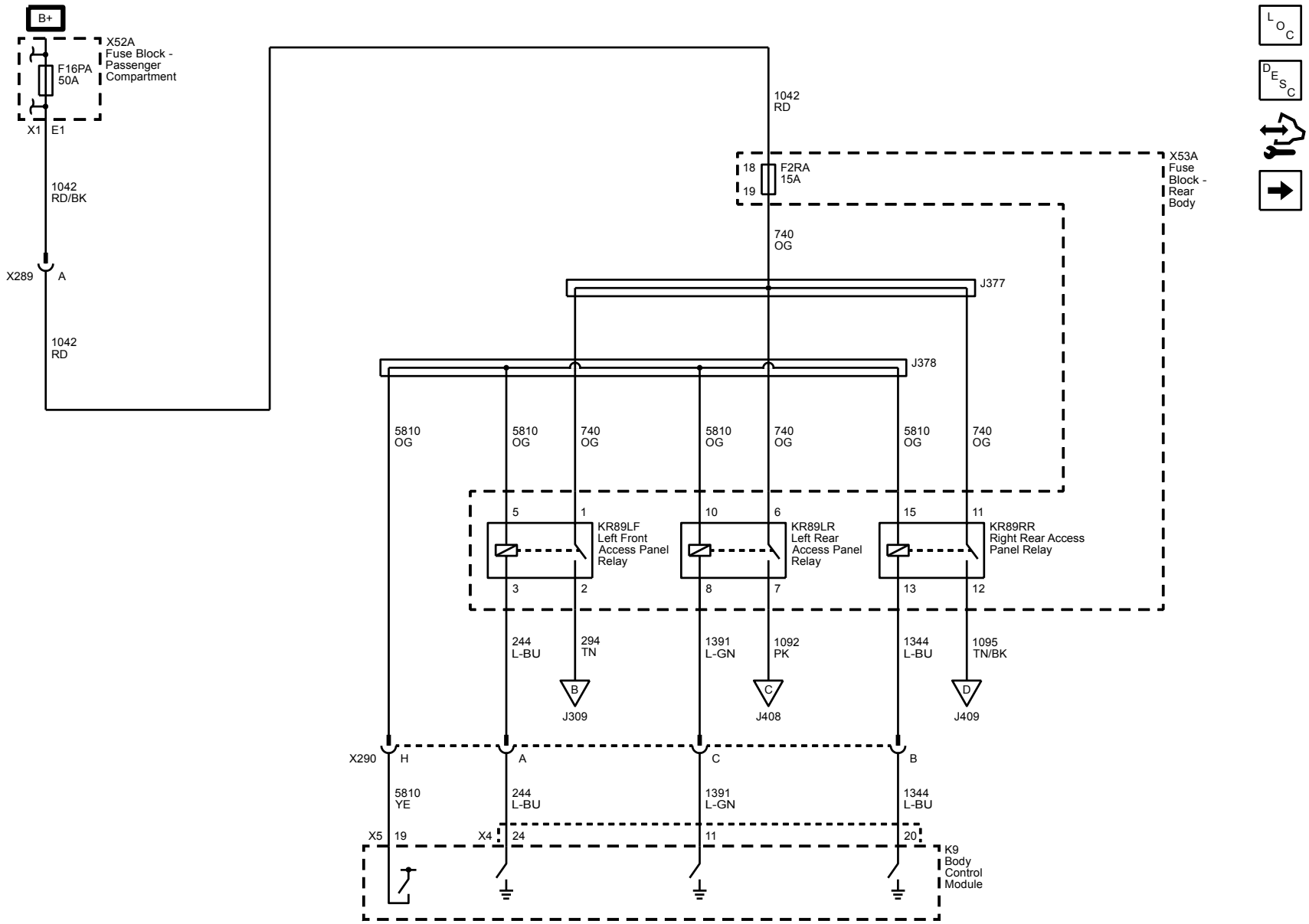

Side Access Panel Actuators (PRP)

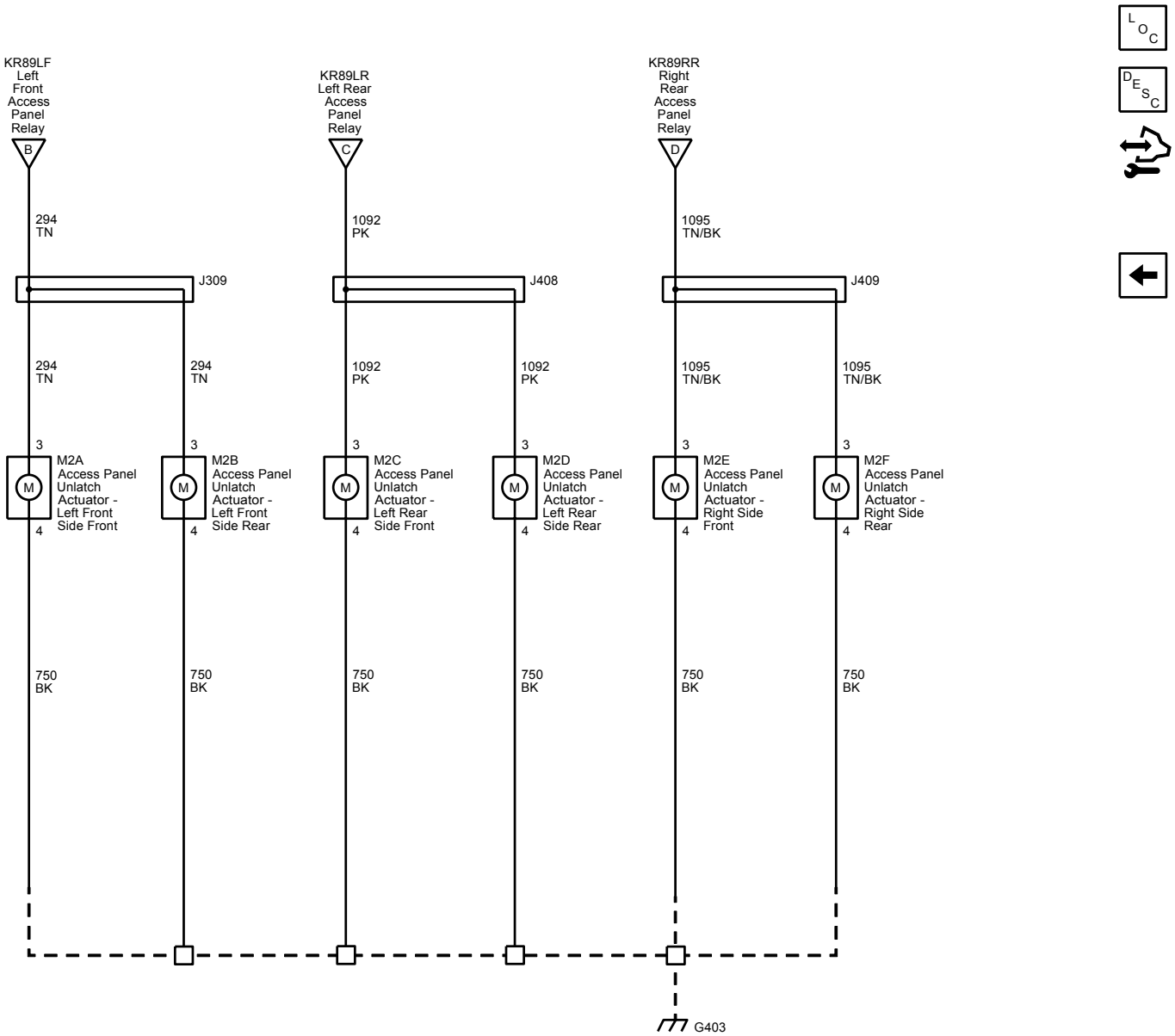

Body Systems

Wipers and Washers

Schematic and Routing Diagrams

Wiper/Washer Schematics

Wiper Controls

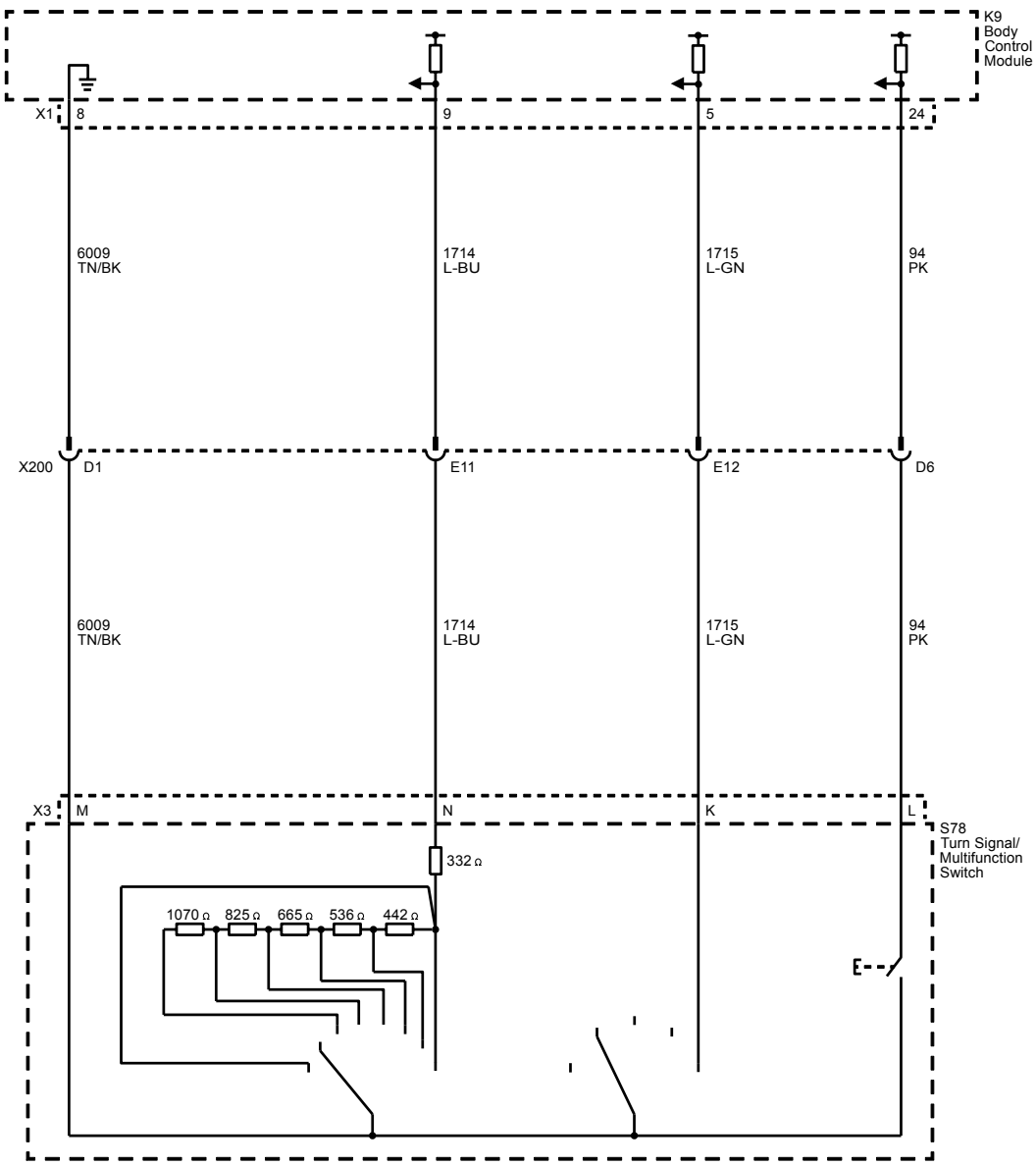

Wiper and Washer Motor Control

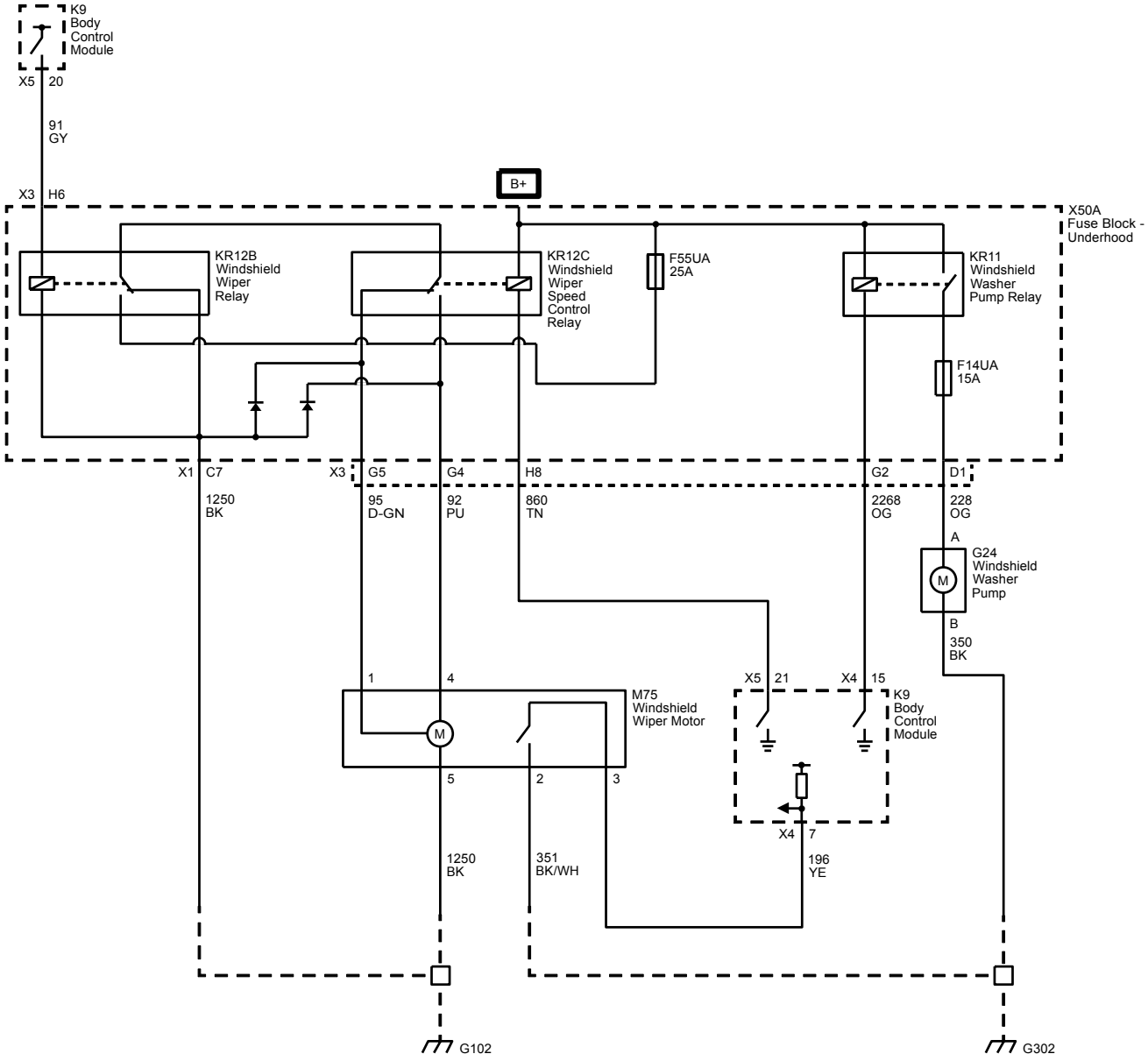

Brakes

Antilock Brake System

Schematic and Routing Diagrams

Antilock Brake System Schematics

Power, Ground, Serial Data, Speed Signals and Indicators (without JL4)

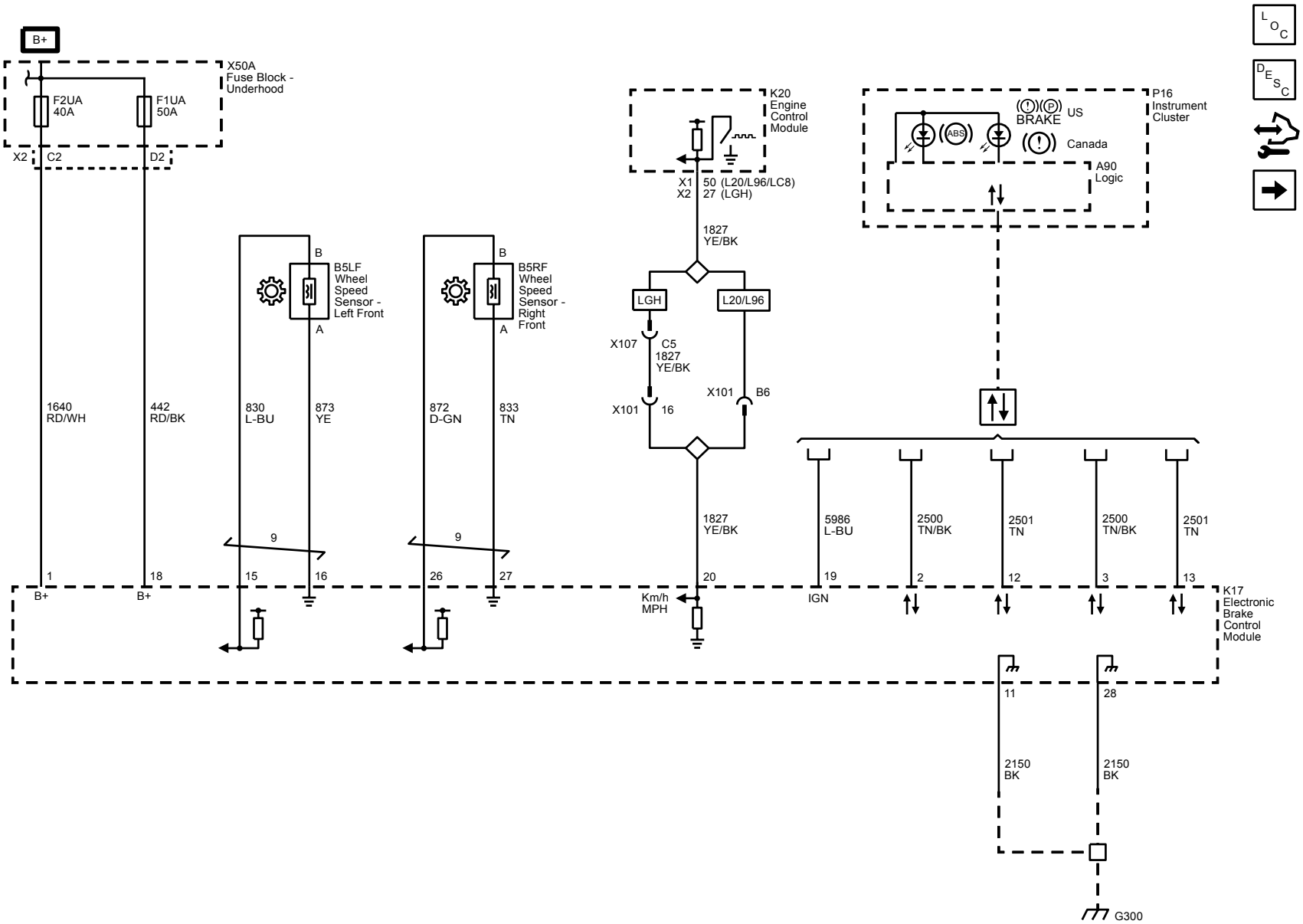

Power, Ground, Serial Data, Indicators and Traction Control Switch (JL4)

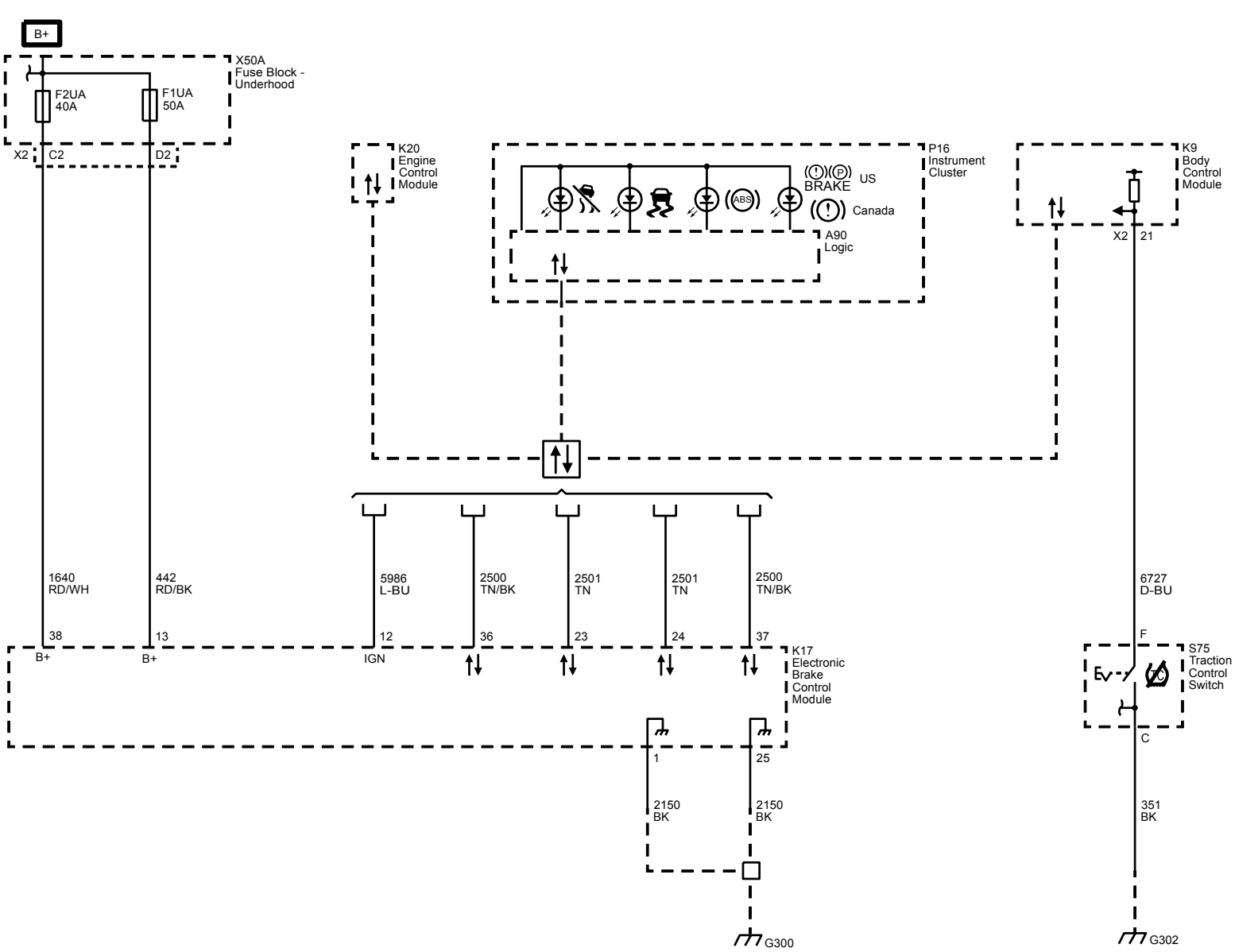

Speed Signals (JL4)

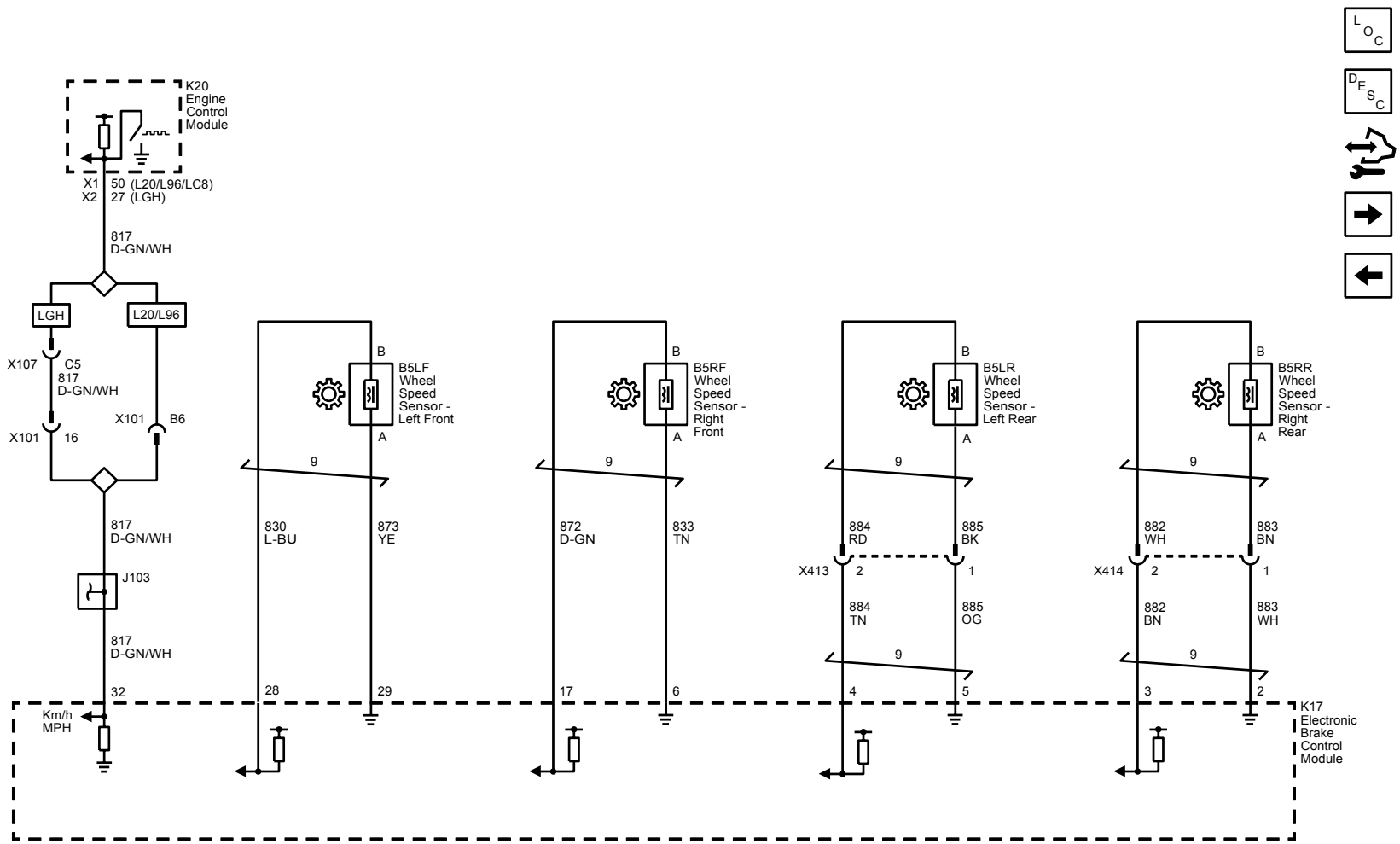

StabiliTrak Steering Wheel Position Inputs and Yaw and Lateral Accelerometer Sensor (JL4)

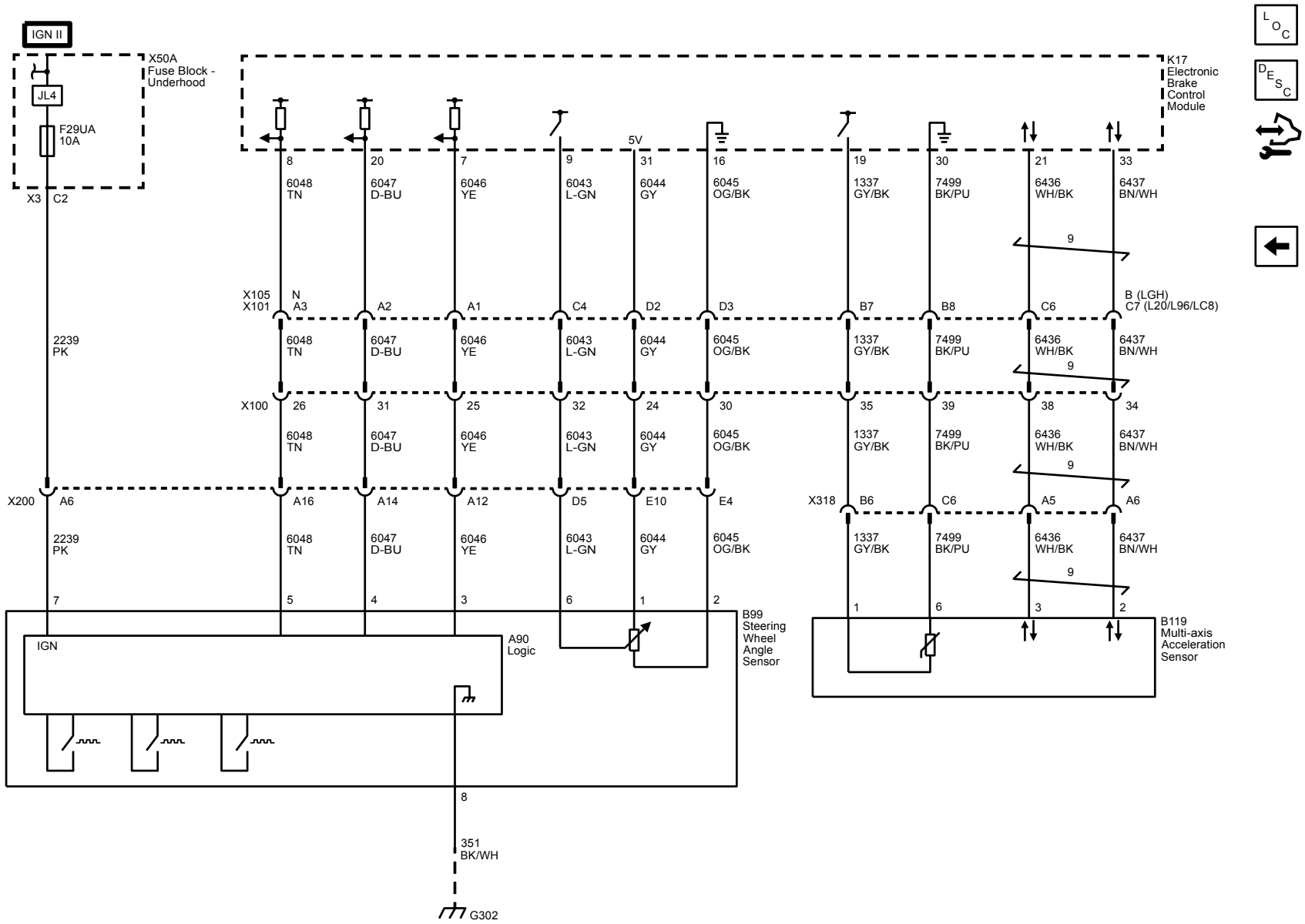

Brakes

Hydraulic Brakes

Schematic and Routing Diagrams

Hydraulic Brake Schematics

Hydraulic Brake

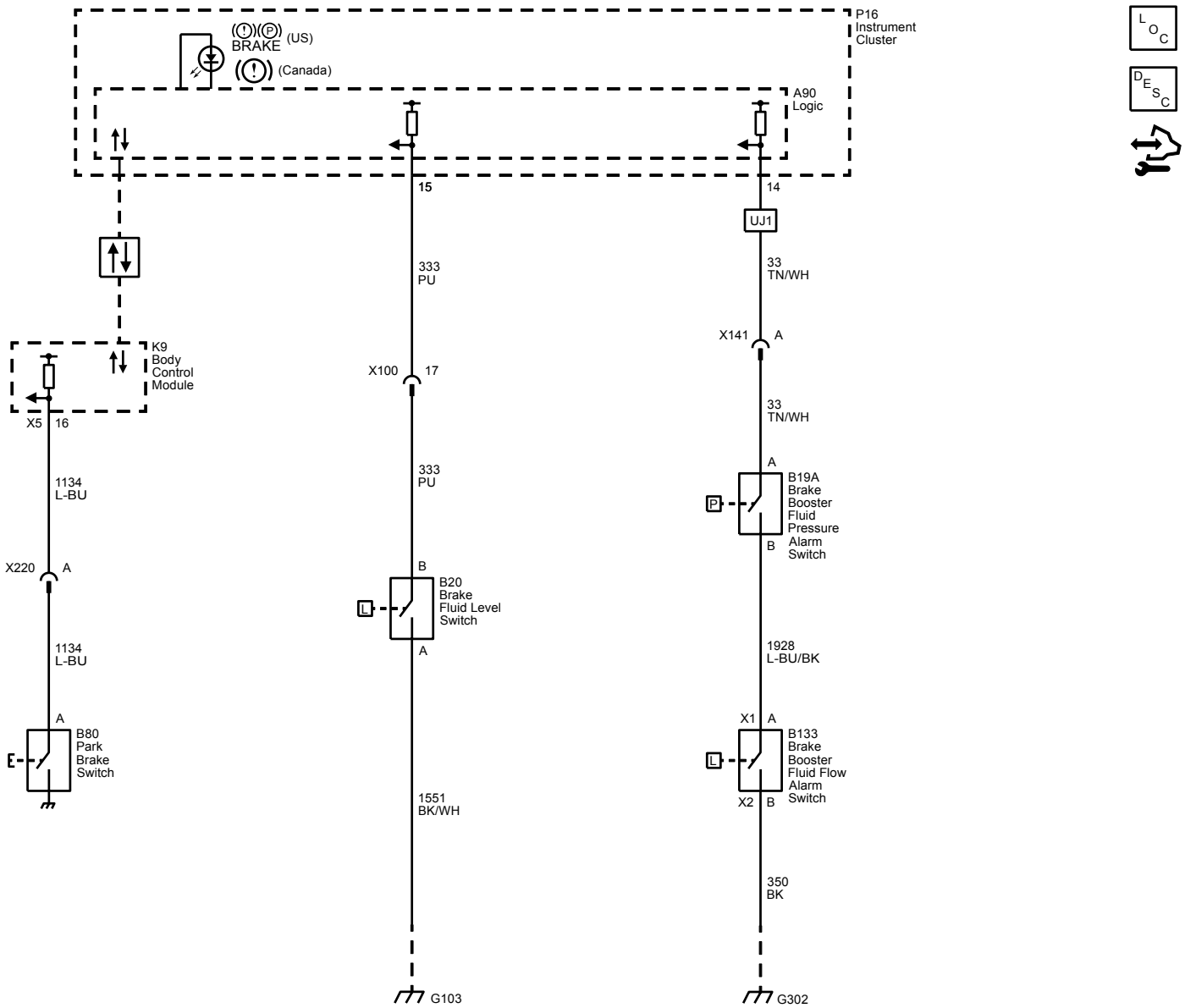

Driver Information and Entertainment

Cellular, Entertainment, and Navigation

Schematic and Routing Diagrams

Radio/Navigation System Schematics

Power, Ground, Serial Data, Microphone, and Front Speakers

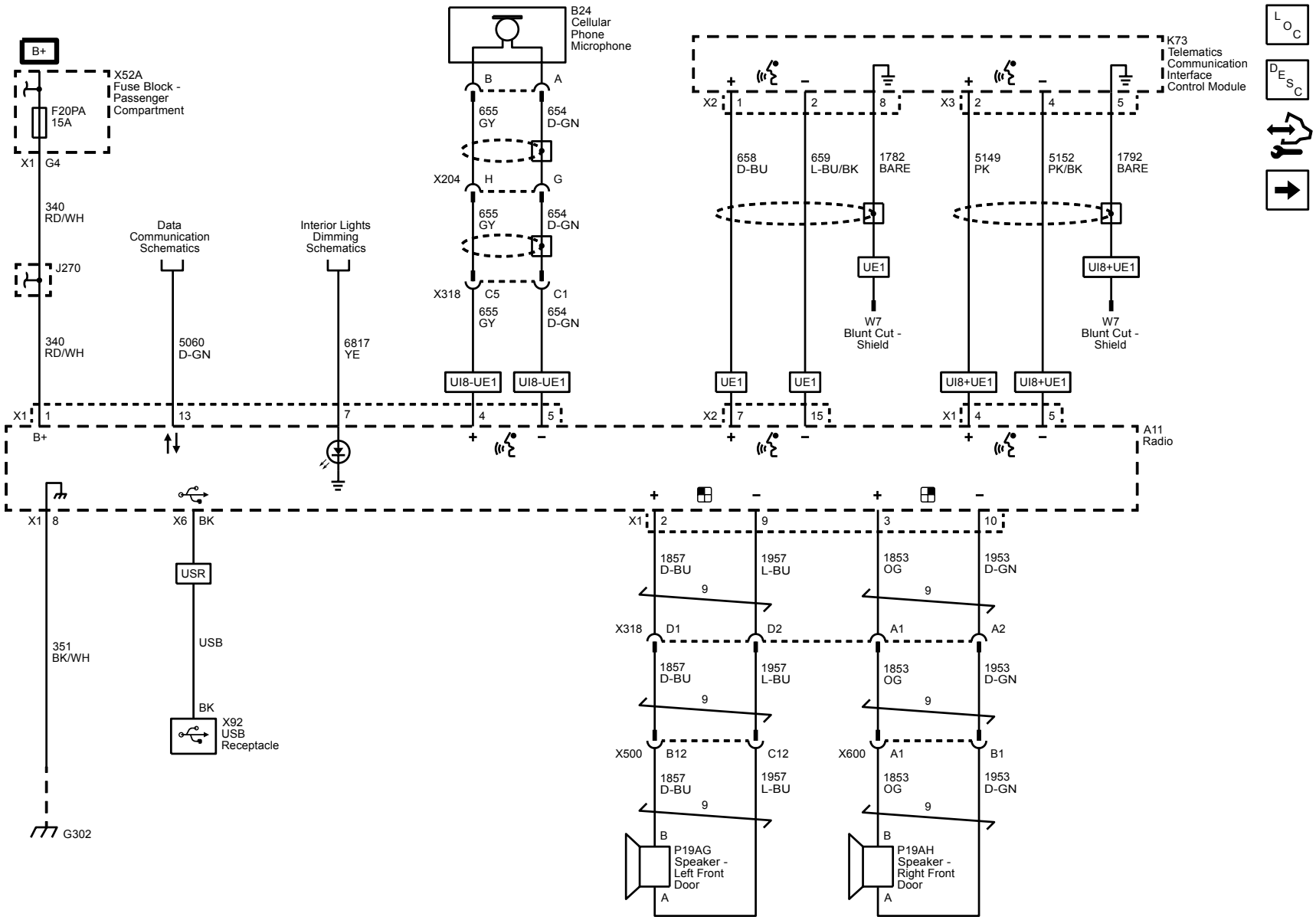

Antennas

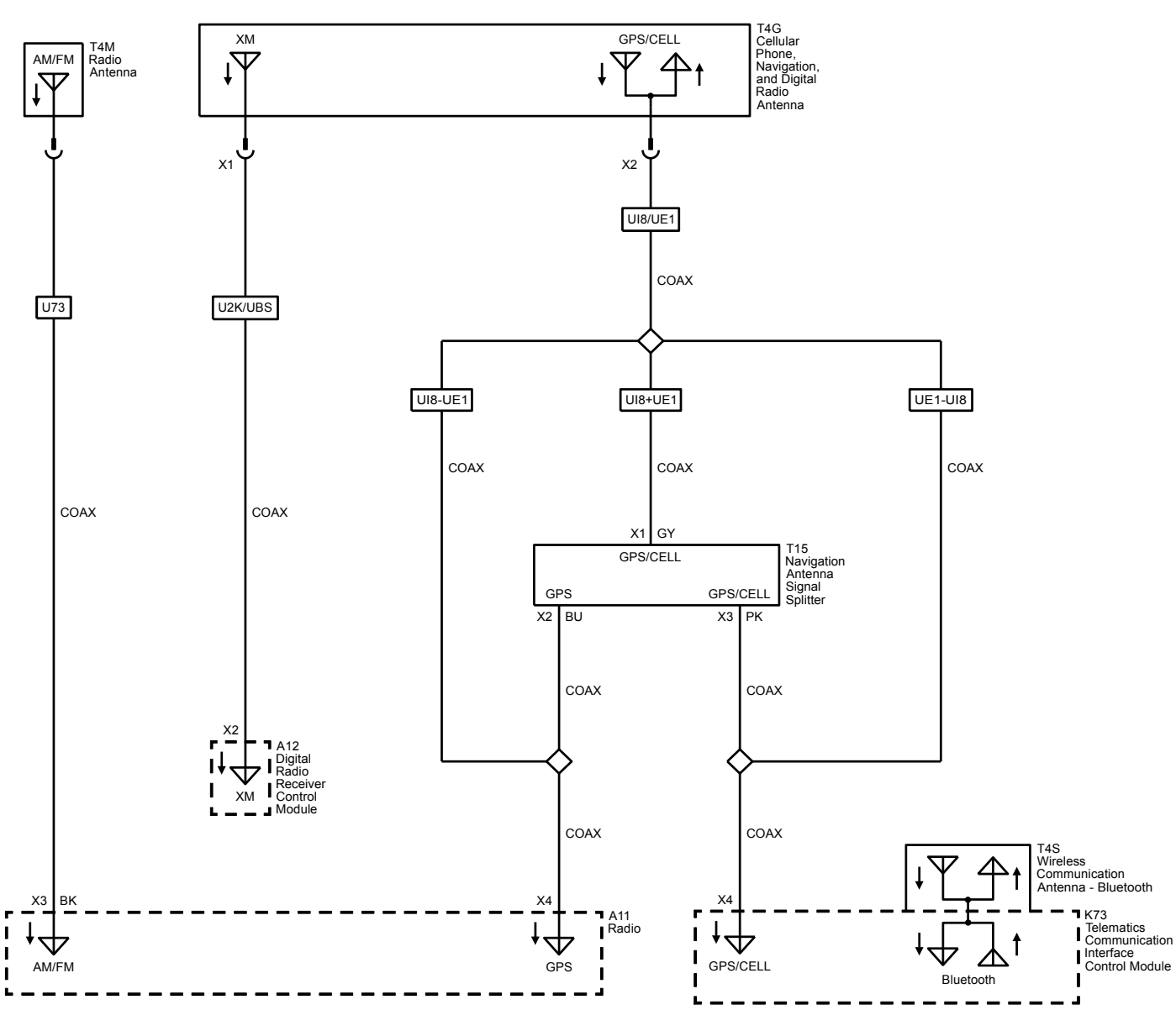
T4M
Radio
Antenna
AM/FM
XM
GPS/CELL
T4G
Cellular
Phone,
Navigation,
and Digital
Radio
Antenna
X1
X2
UI8/UE1
COAX
U73
U2K/UBS
UI8-UE1
UI8+UE1
UE1-UI8
COAX
COAX
COAX
COAX
X1
GY
GPS/CELL
T15
Navigation
Antenna
Signal
Splitter
GPS
GPS/CELL
X2
BU
X3
PK
COAX
COAX
X2
A12
Digital
Radio
Receiver
Control
Module
XM
COAX
COAX
T4S
Wireless
Communication
Antenna - Bluetooth
X3
BK
X4
X4
A11
Radio
K73
Telematics
Communication
Interface
Control Module
AM/FM
GPS
GPS/CELL
Bluetooth

Rear Speaker Outputs

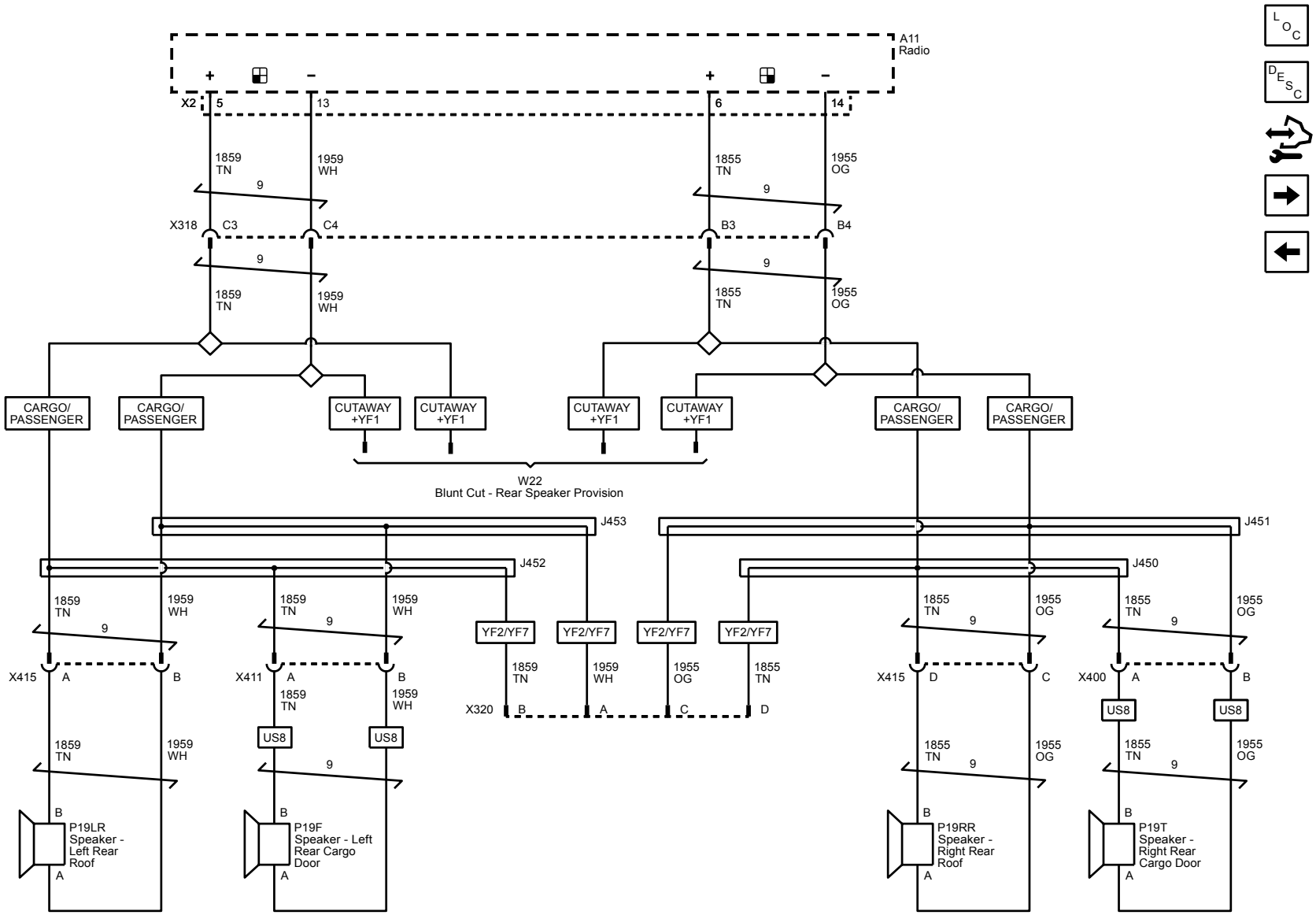

Digital Radio Receiver (U2K or UBS)

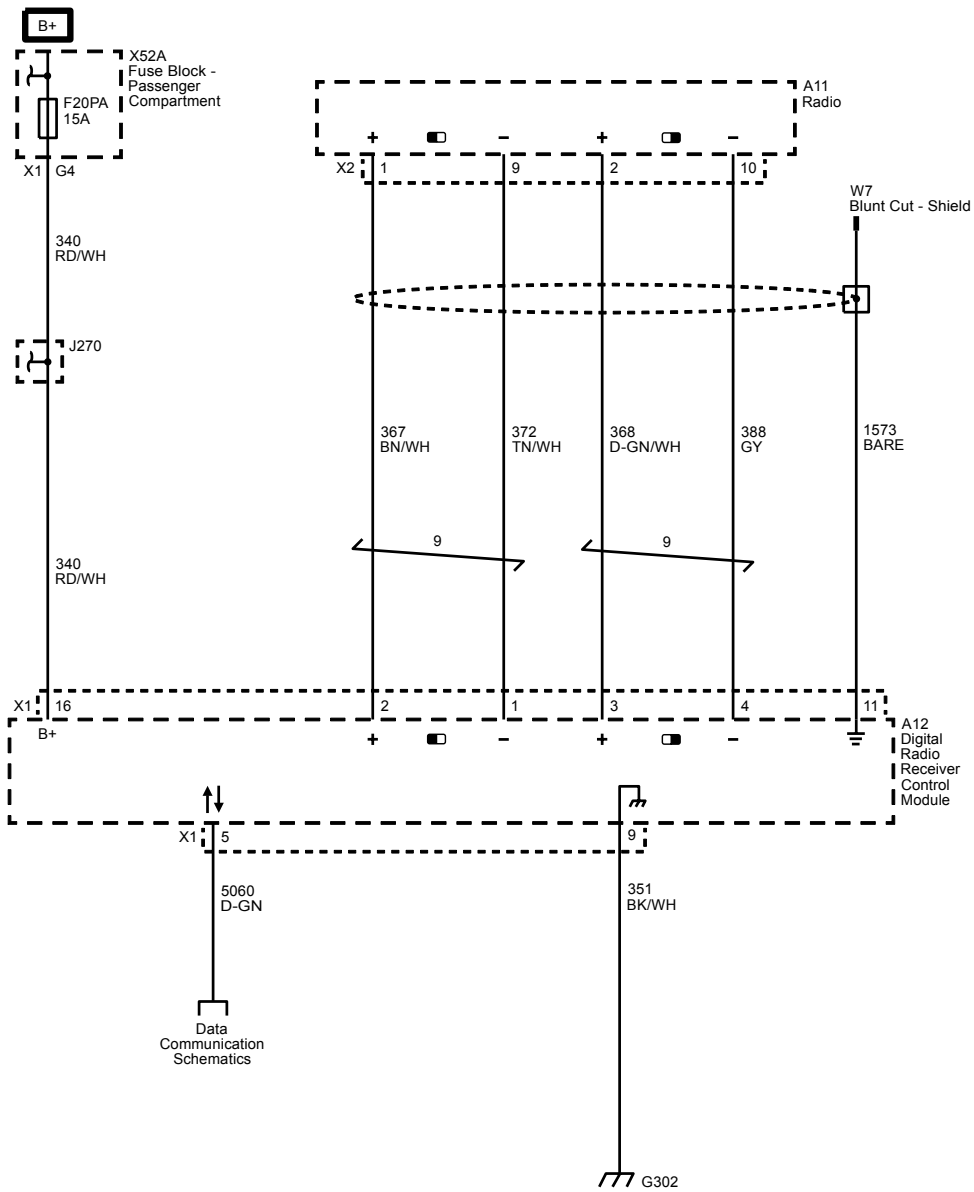

Steering Wheel Radio Redundant Controls

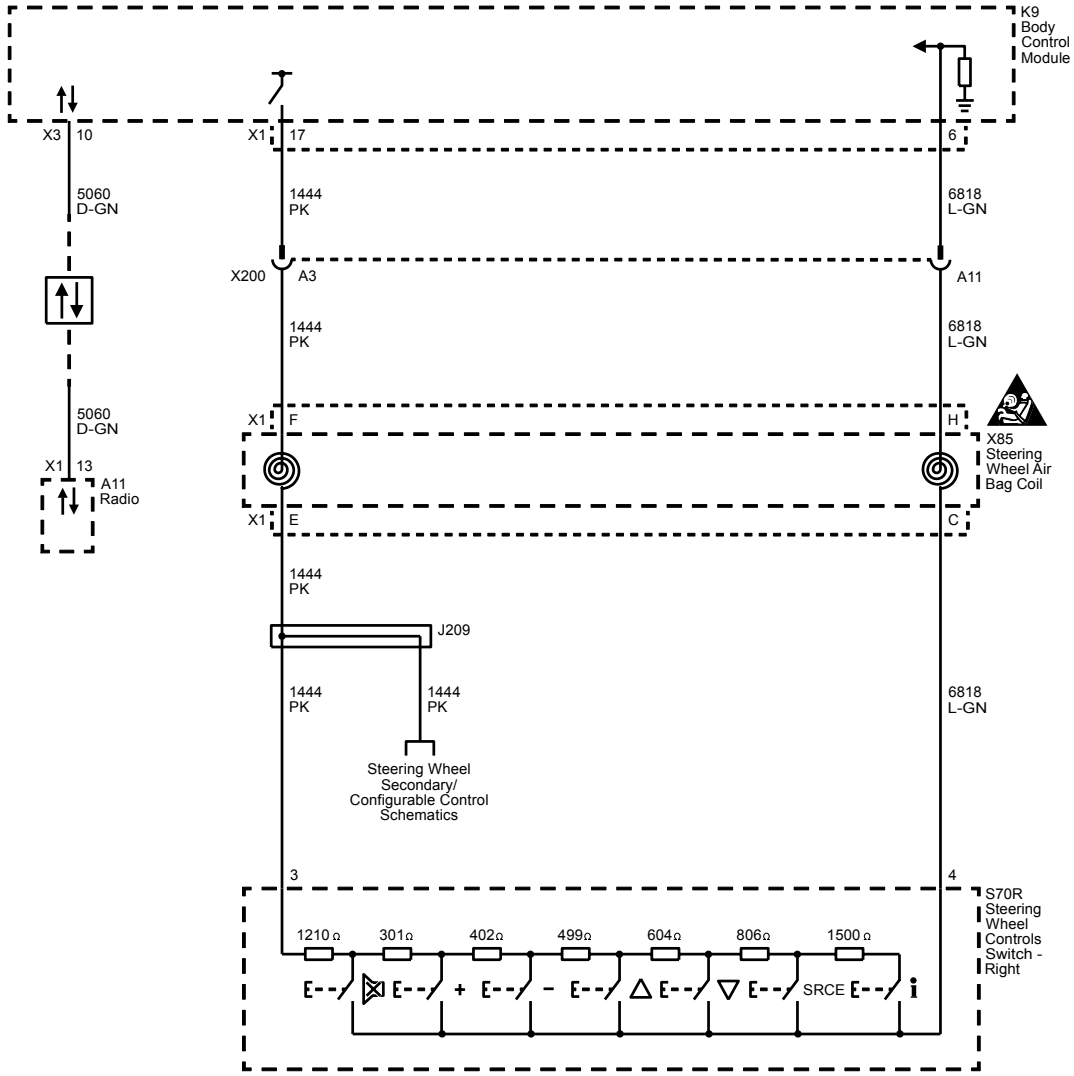

OnStar Module (UE1)

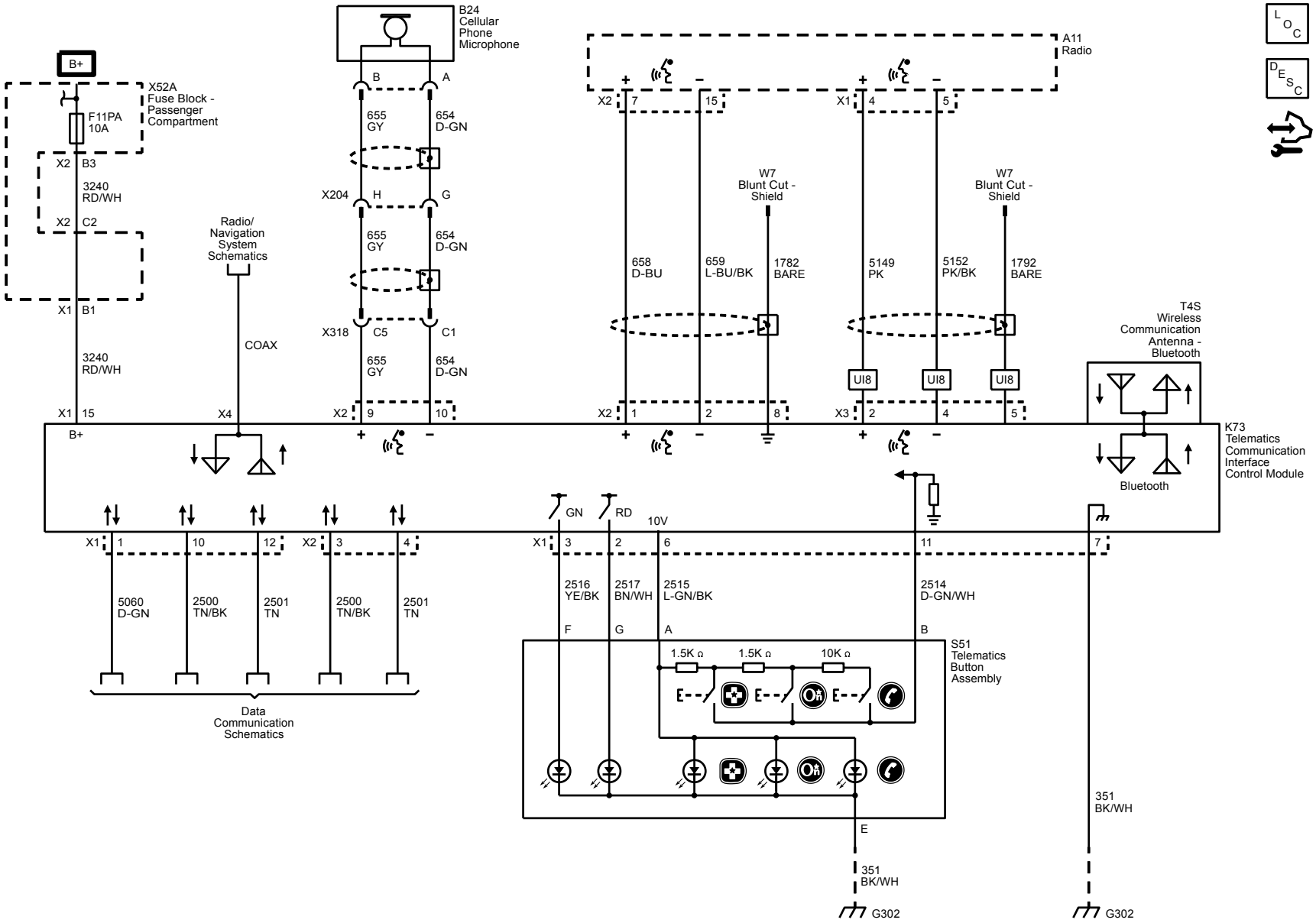

Driver Information and Entertainment

Displays and Gauges

Schematic and Routing Diagrams

Instrument Cluster Schematics

Power, Ground and Driver Information Center (DIC) Switch

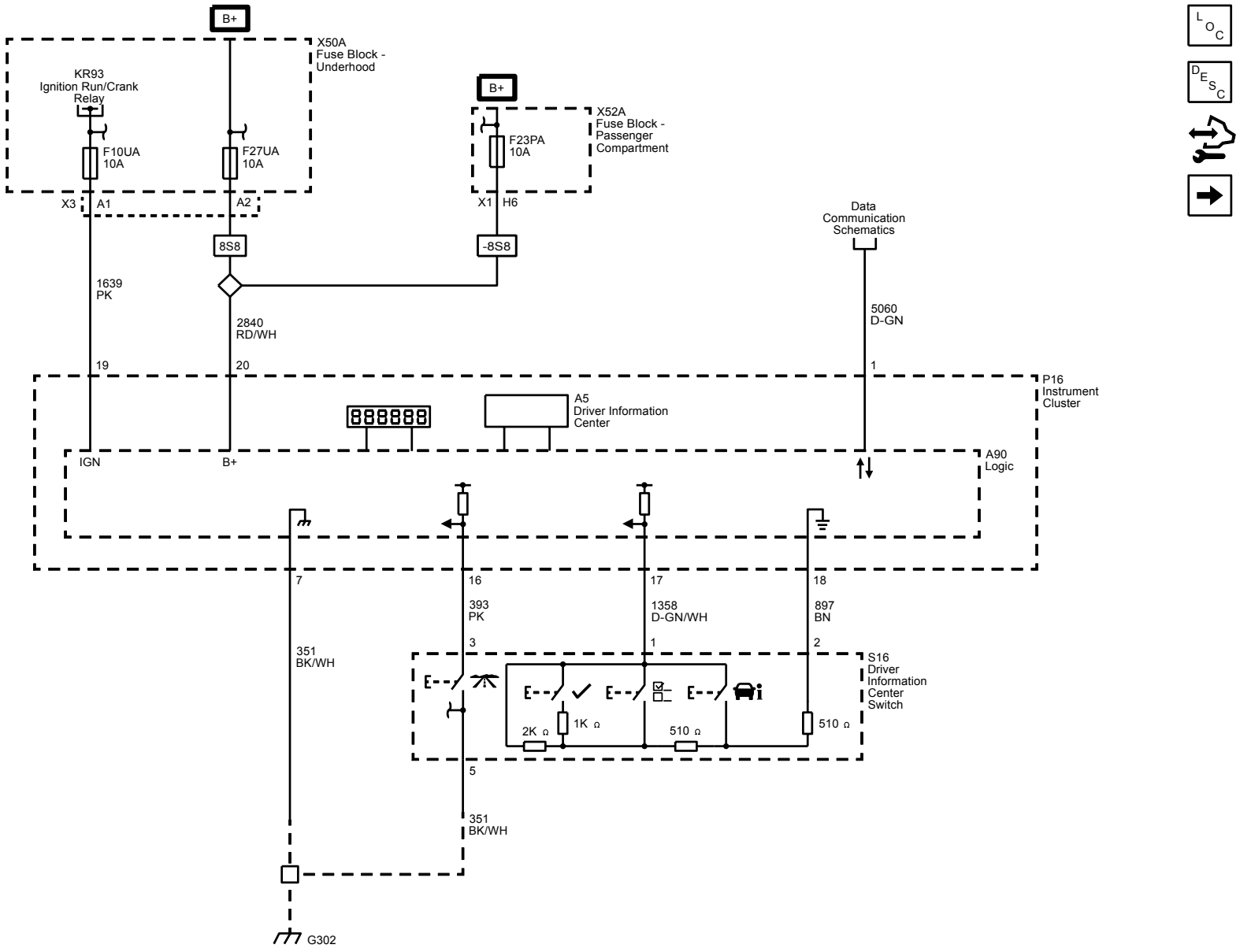

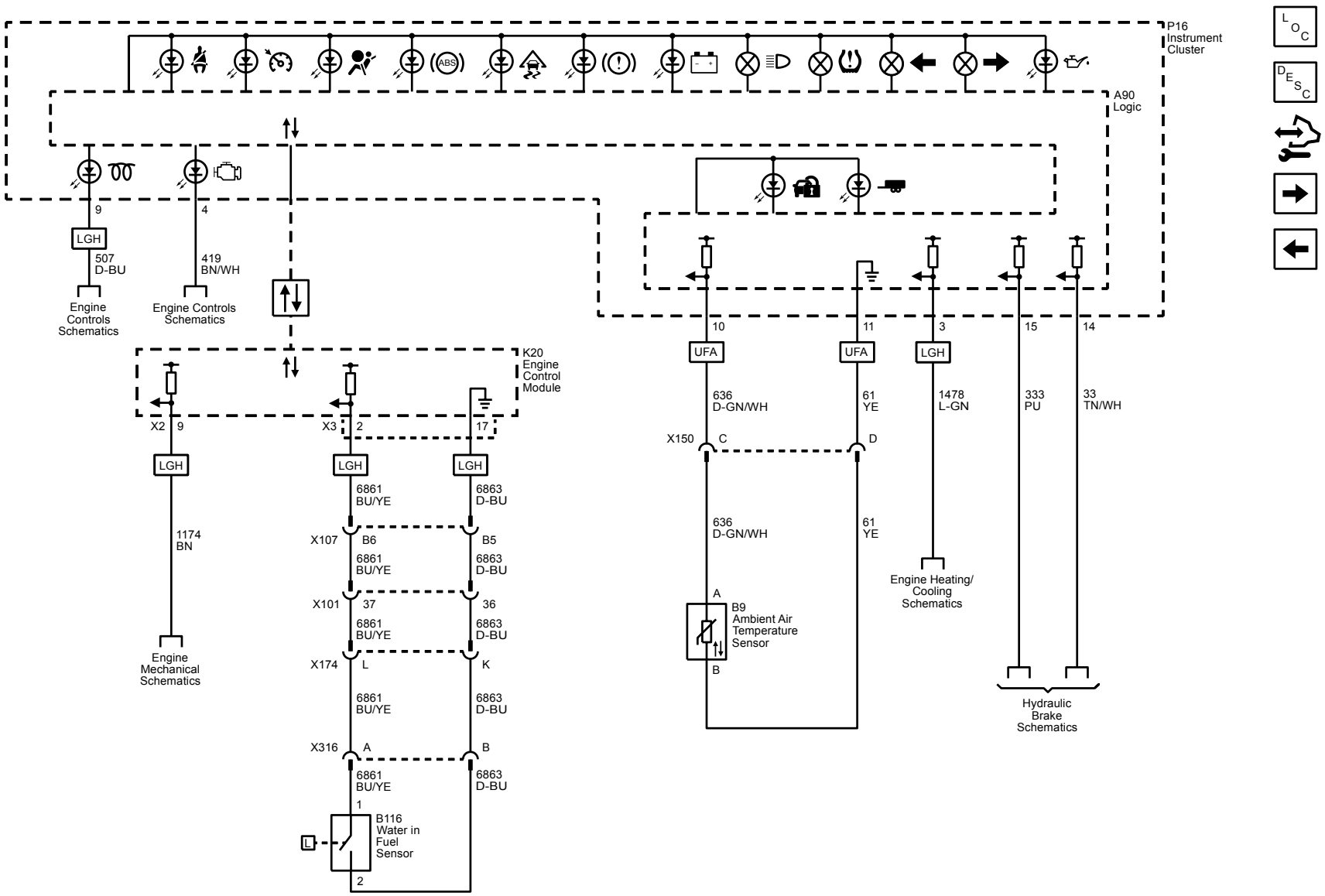
P16
Instrument
Cluster
A90
Logic
9
4
LGH
507
D-BU
419
BN/WH
Engine
Controls
Schematics
Engine Controls
Schematics
K20
Engine
Control
Module
X2
9
X3
2
17
LGH
LGH
LGH
1174
BN
6861
BU/YE
6863
D-BU
X107
B6
B5
6861
BU/YE
6863
D-BU
X101
37
36
6861
BU/YE
6863
D-BU
X174
L
K
6861
BU/YE
6863
D-BU
X316
A
B
6861
BU/YE
6863
D-BU
1
B116
Water in
Fuel
Sensor
2
Engine
Mechanical
Schematics
10
11
3
15
14
UFA
UFA
LGH
636
D-GN/WH
61
YE
1478
L-GN
333
PU
33
TN/WH
X150
C
D
636
D-GN/WH
61
YE
A
B9
Ambient Air
Temperature
Sensor
B
Engine Heating/
Cooling
Schematics
Hydraulic
Brake
Schematics

Gauges (L20 or L96)

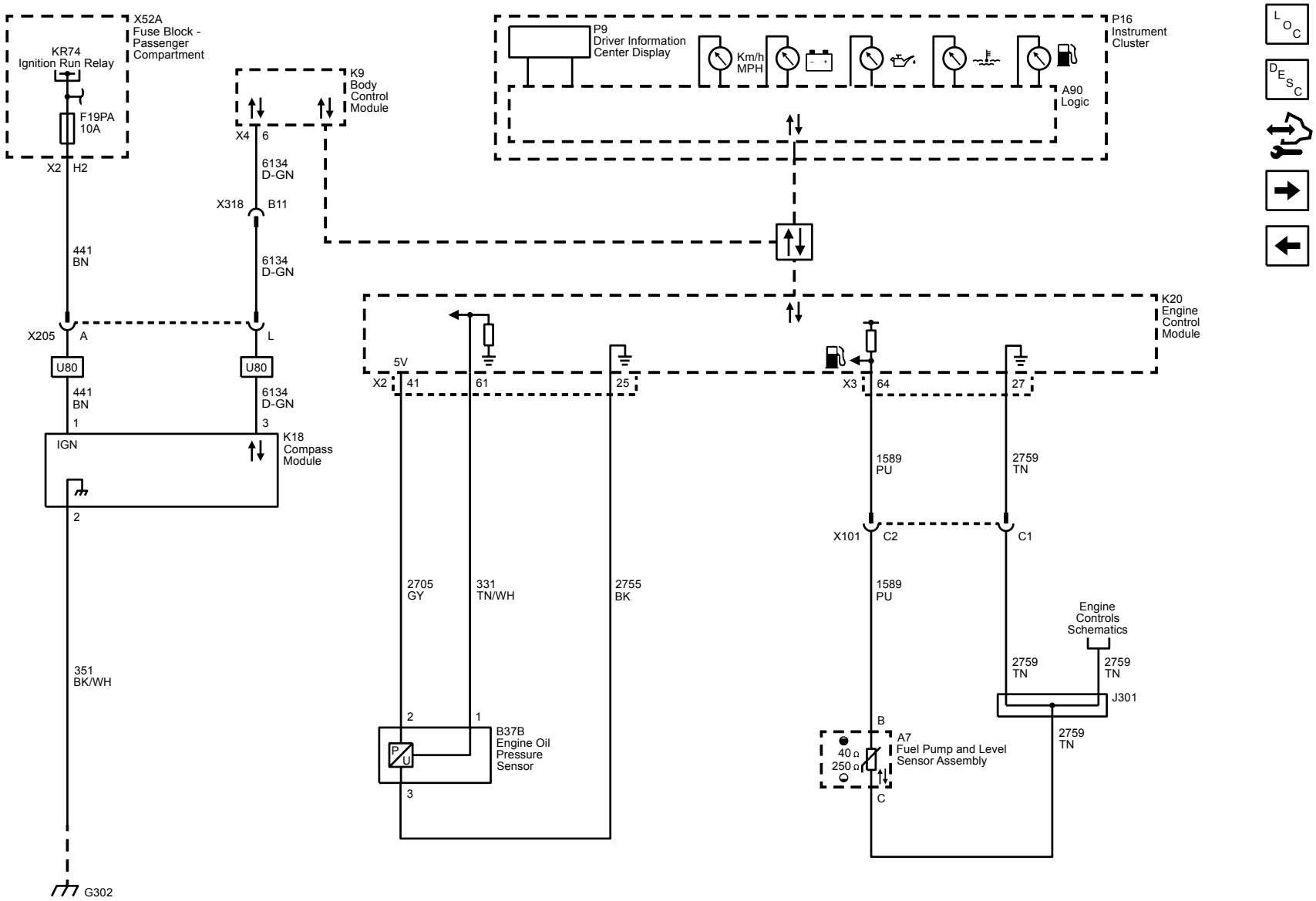

Fuel Gauge (LC8)

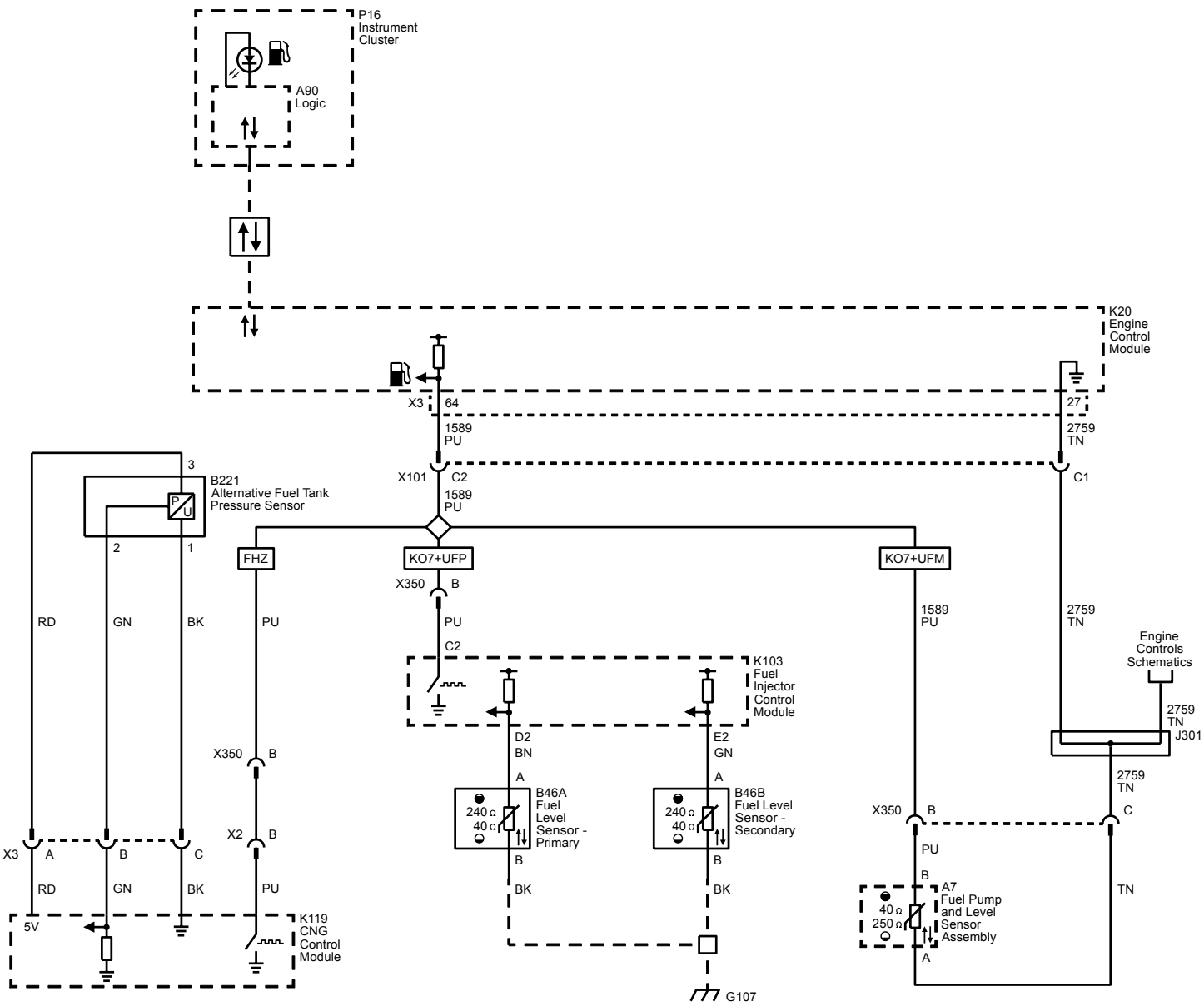

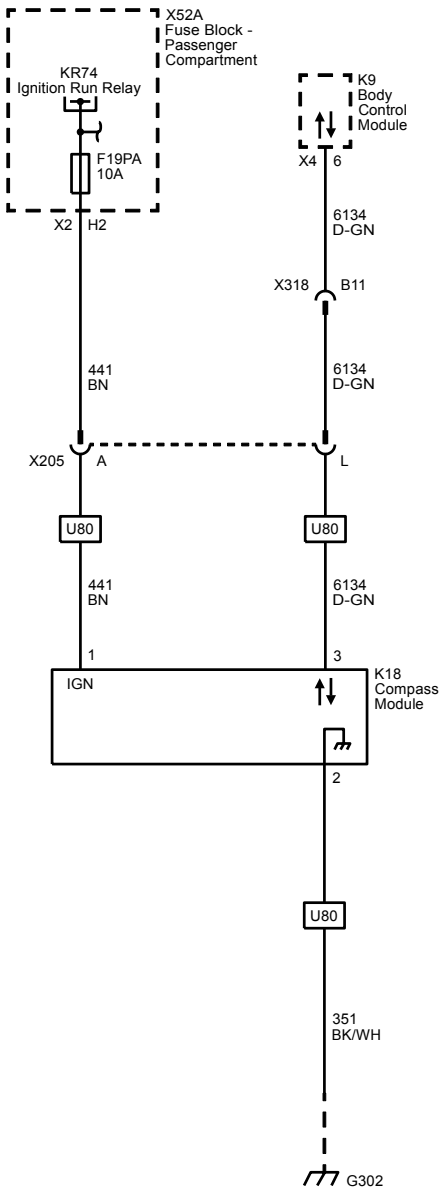
X52A
Fuse Block - Passenger Compartment
KR74
Ignition Run Relay
F19PA
10A
X2
H2
K9
Body Control Module
X4
6
6134
D-GN
X318
B11
441
BN
6134
D-GN
X205
A
L
U80
U80
441
BN
6134
D-GN
1
3
IGN
K18
Compass Module
2
U80
351
BK/WH
G302

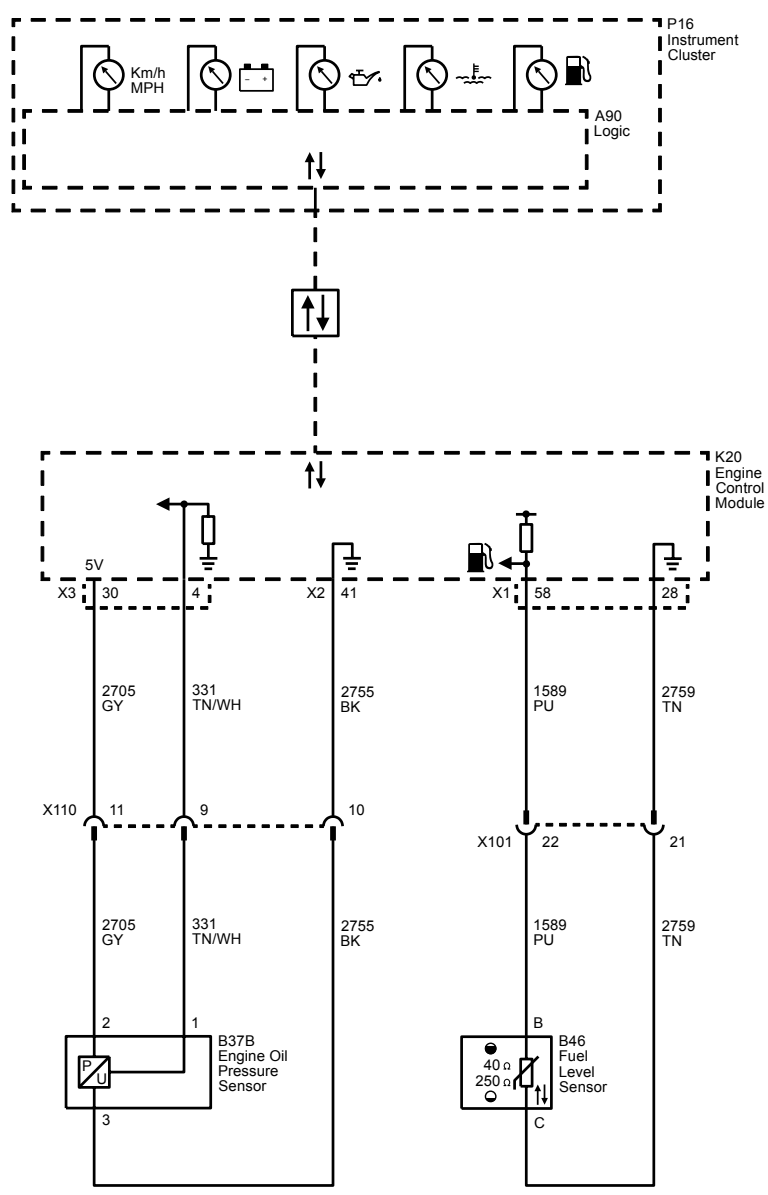
P16
Instrument Cluster
Km/h
MPH
A90
Logic
K20
Engine Control Module
5V
X3
30
4
X2
41
X1
58
28
2705
GY
331
TN/WH
2755
BK
1589
PU
2759
TN
X110
11
9
10
X101
22
21
2705
GY
331
TN/WH
2755
BK
1589
PU
2759
TN
2
1
B37B
Engine Oil Pressure Sensor
P
U
3
B
40 Ω
250 Ω
B46
Fuel Level Sensor
C

Audible Warnings Schematics

Audible Warnings

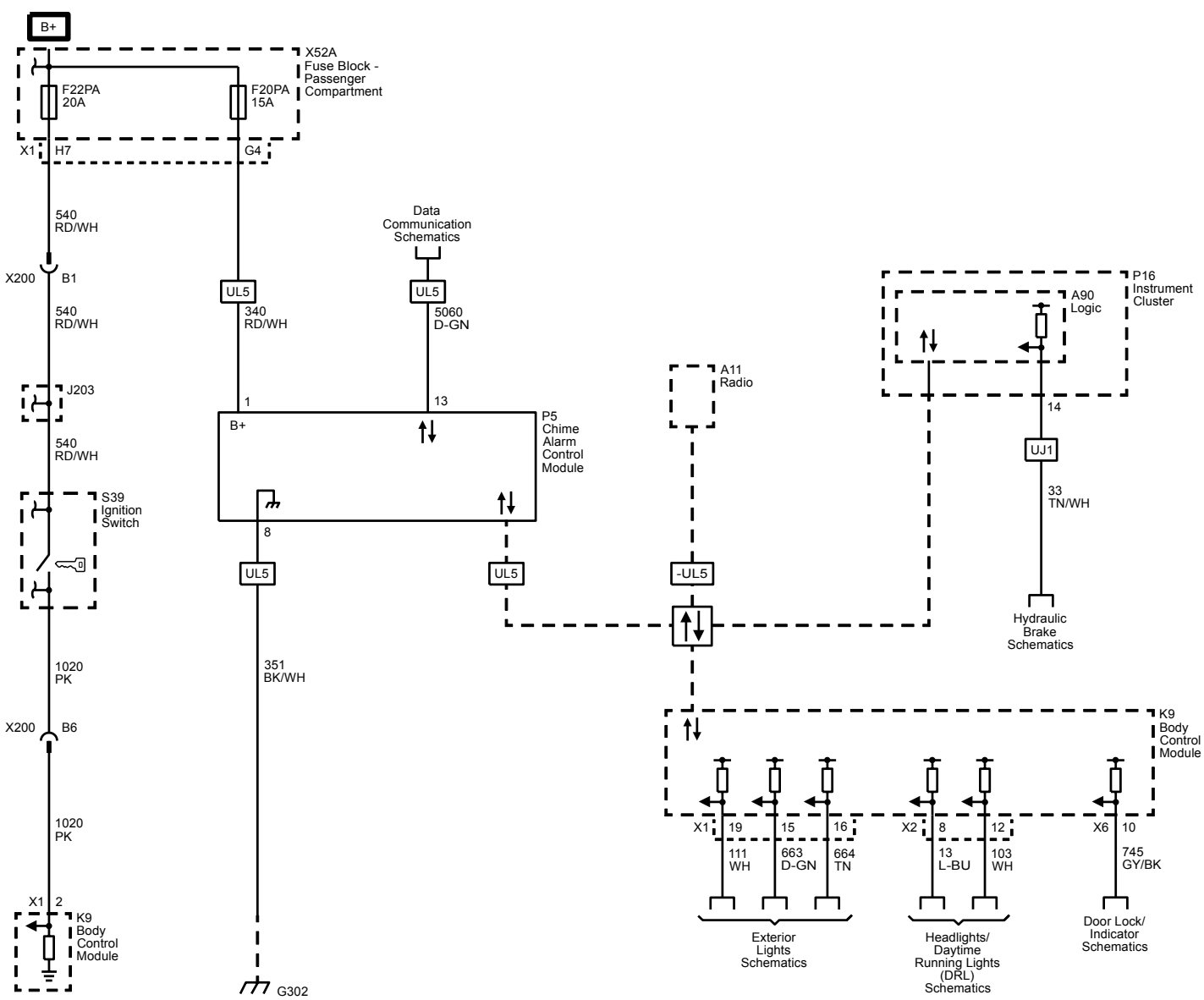

Driver Information and Entertainment

Secondary and Configurable Customer Controls

Schematic and Routing Diagrams

Steering Wheel Secondary/Configurable Control Schematics

Steering Wheel Secondary/Configurable Controls

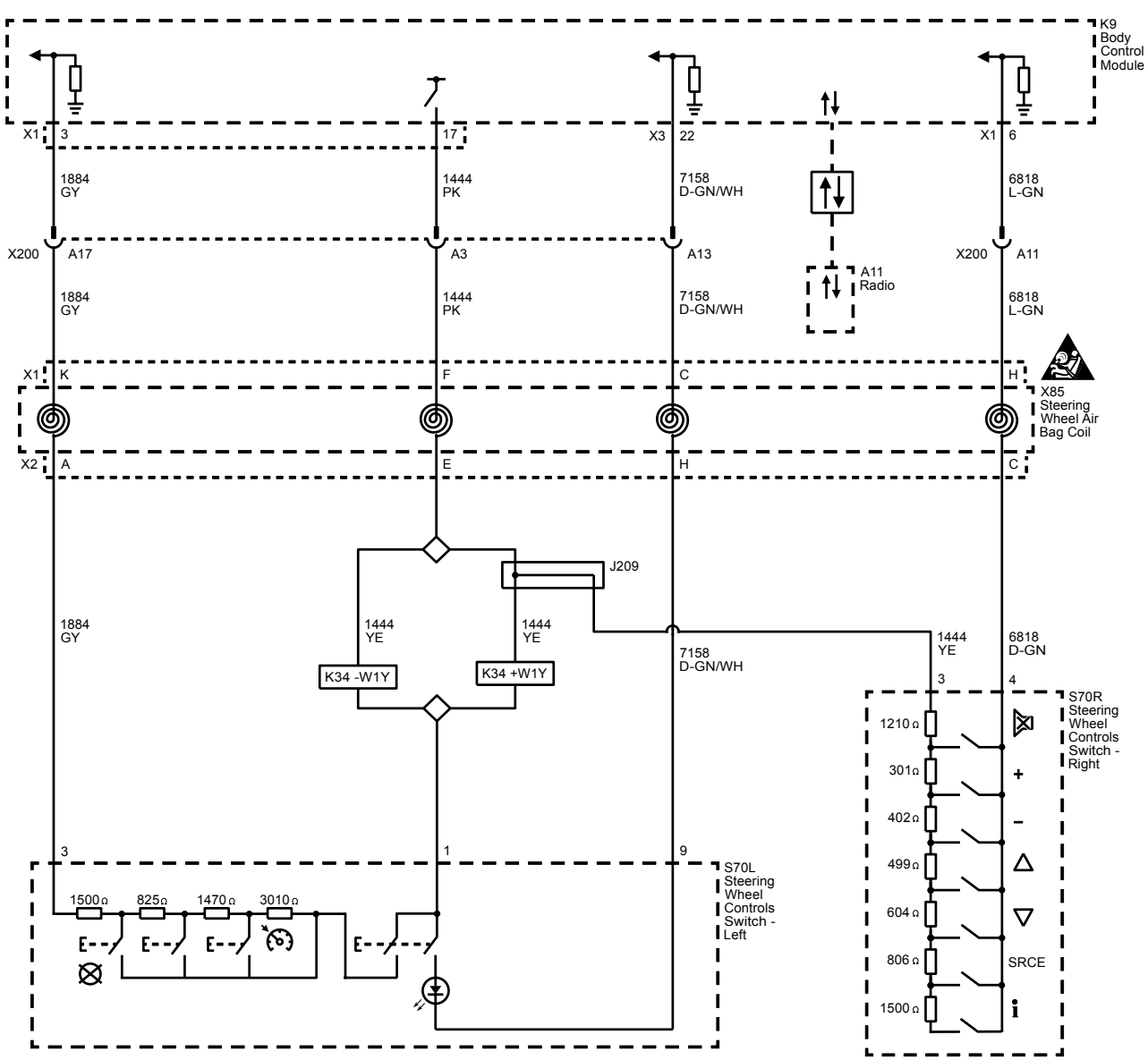

Engine/Propulsion

12 V Starting and Charging

Schematic and Routing Diagrams

Starting and Charging Schematics

Starting System (Gas with One Battery)

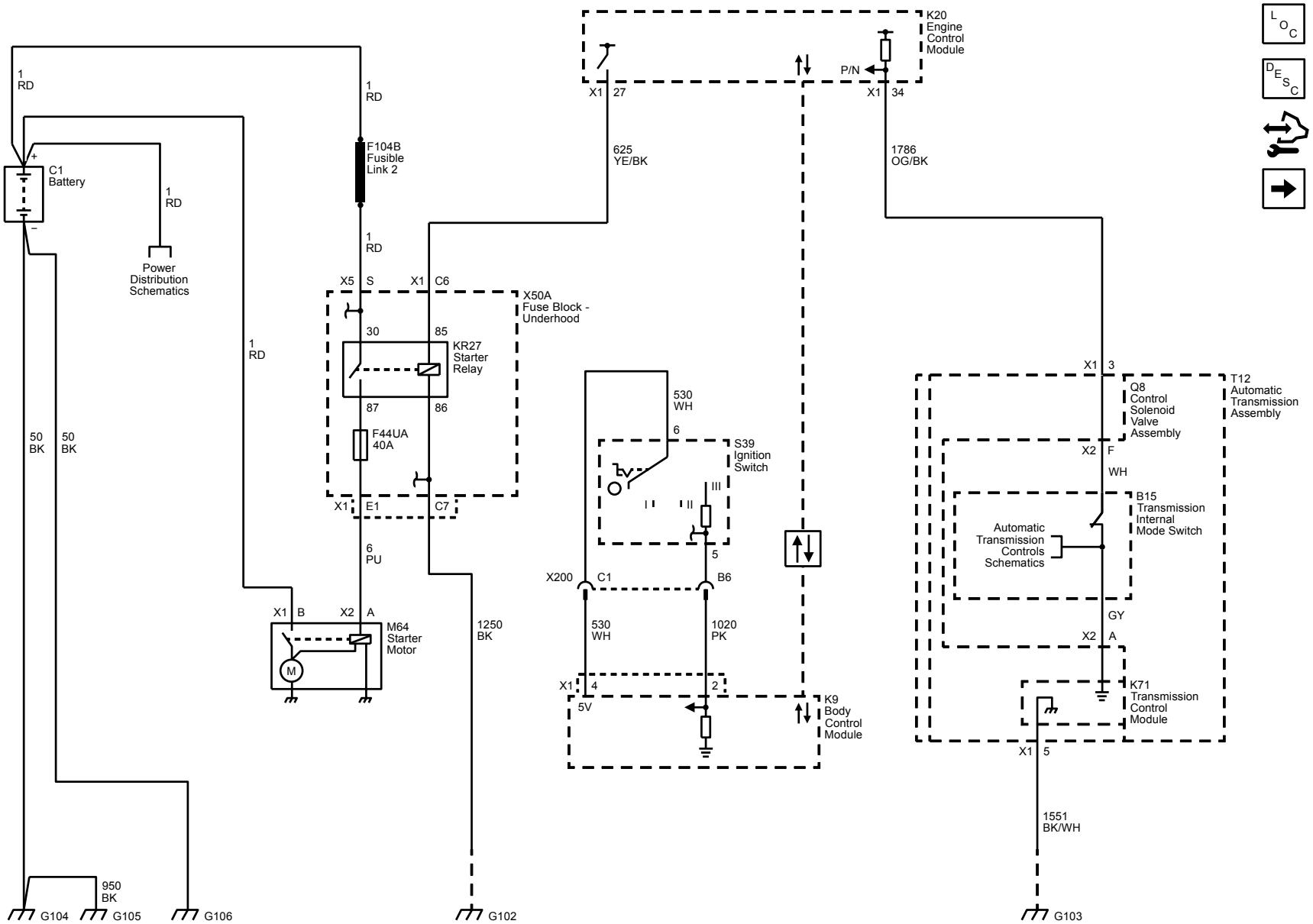

Charging System (Gas with One Battery)

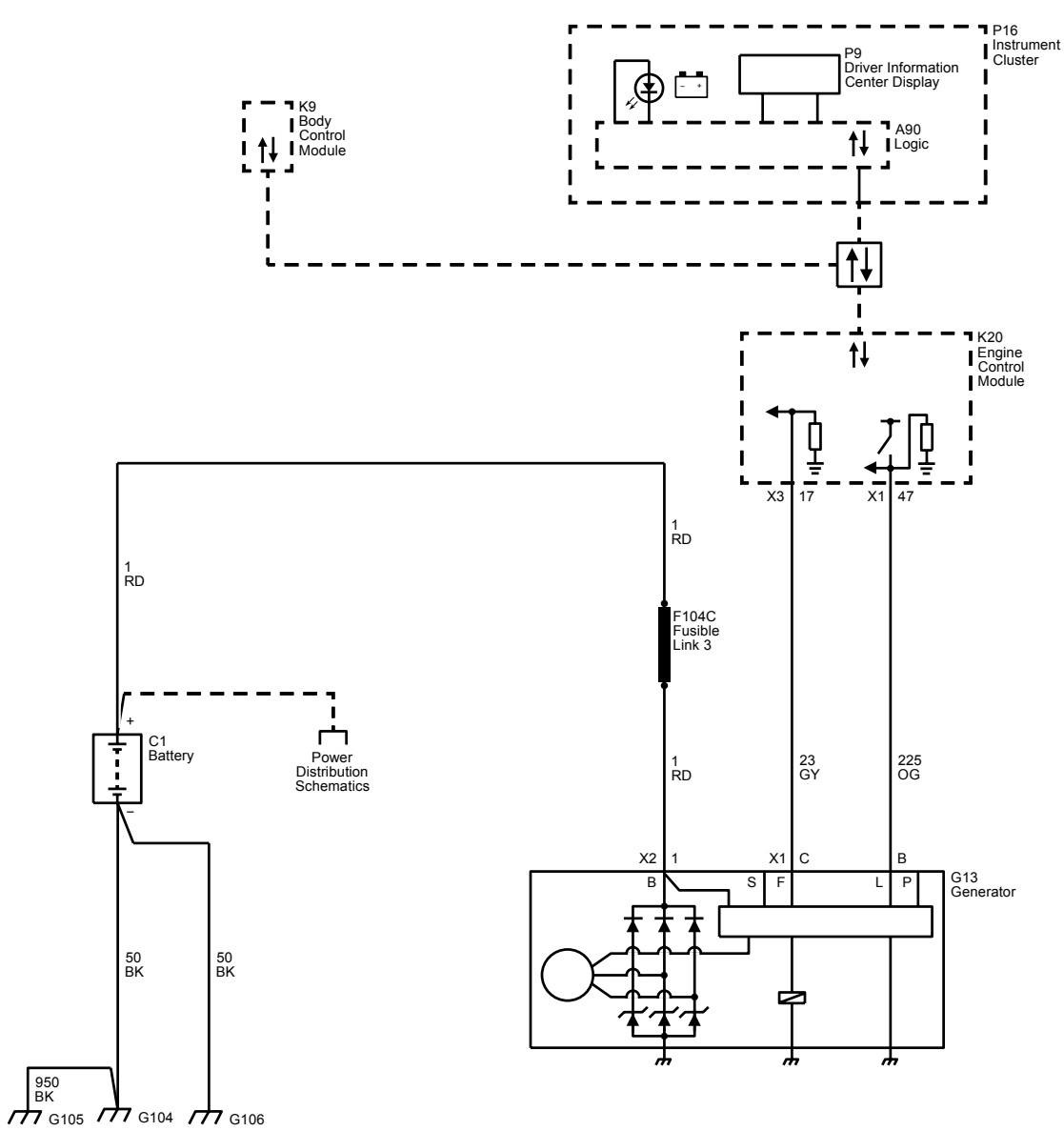

Starting System (Gas with Two Batteries)

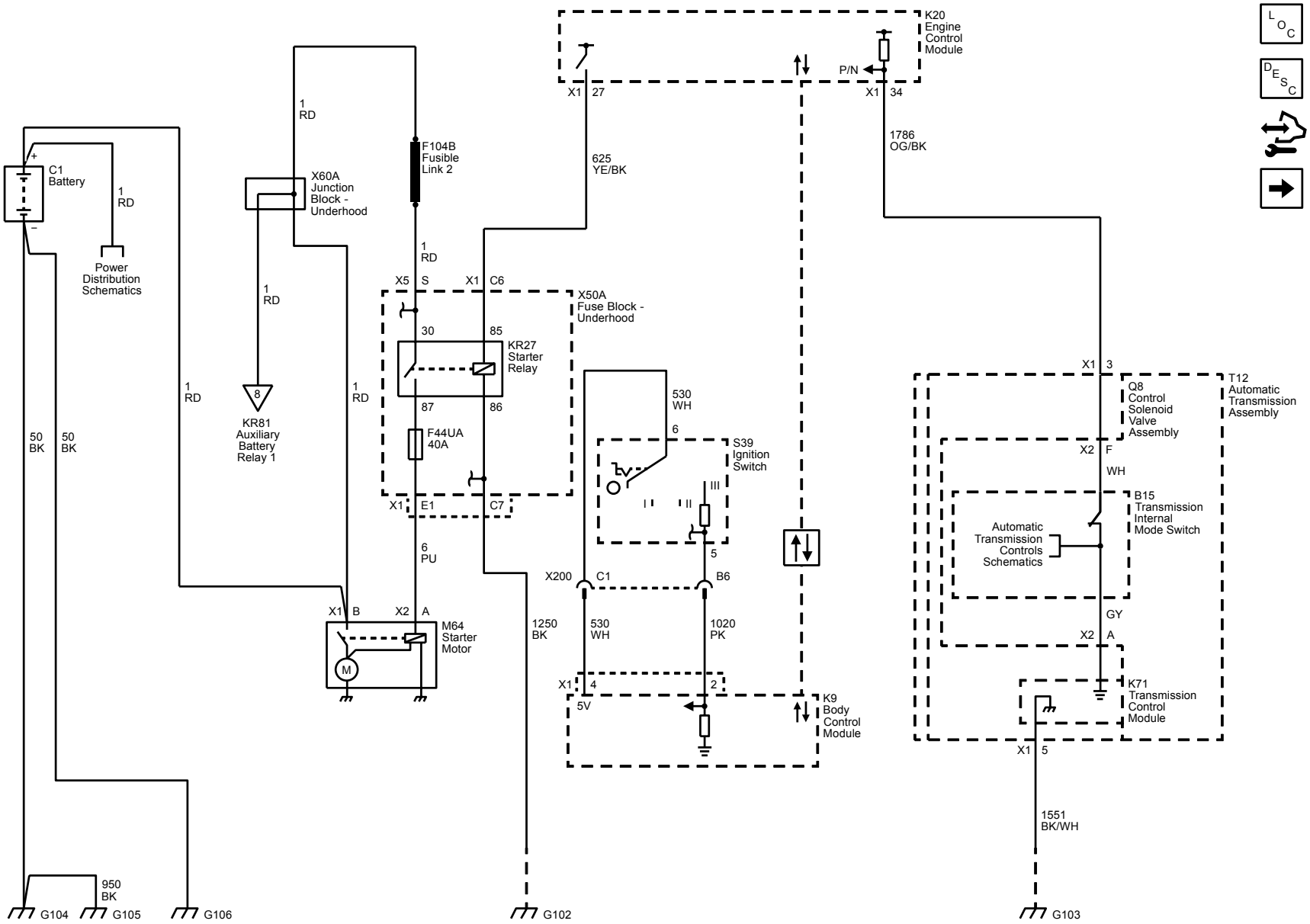

Charging System (Gas with Two Batteries)

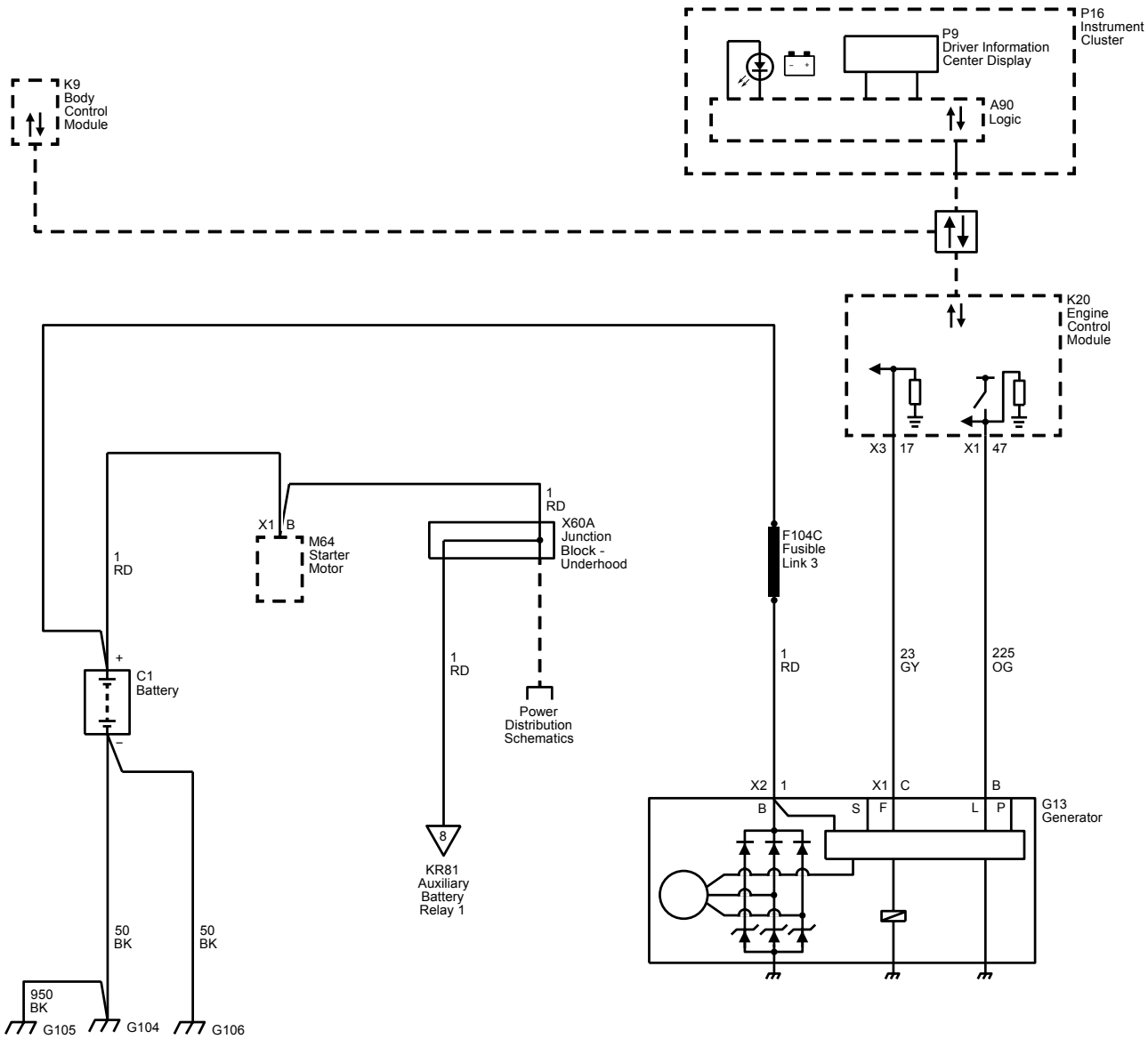

Auxiliary Battery Relay and Auxiliary Battery (Gas with Two Batteries)

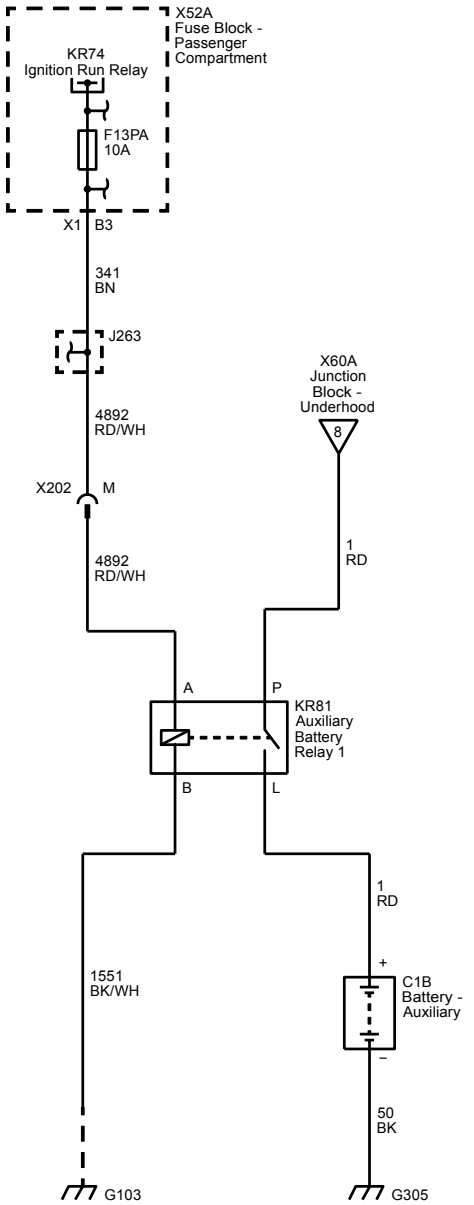

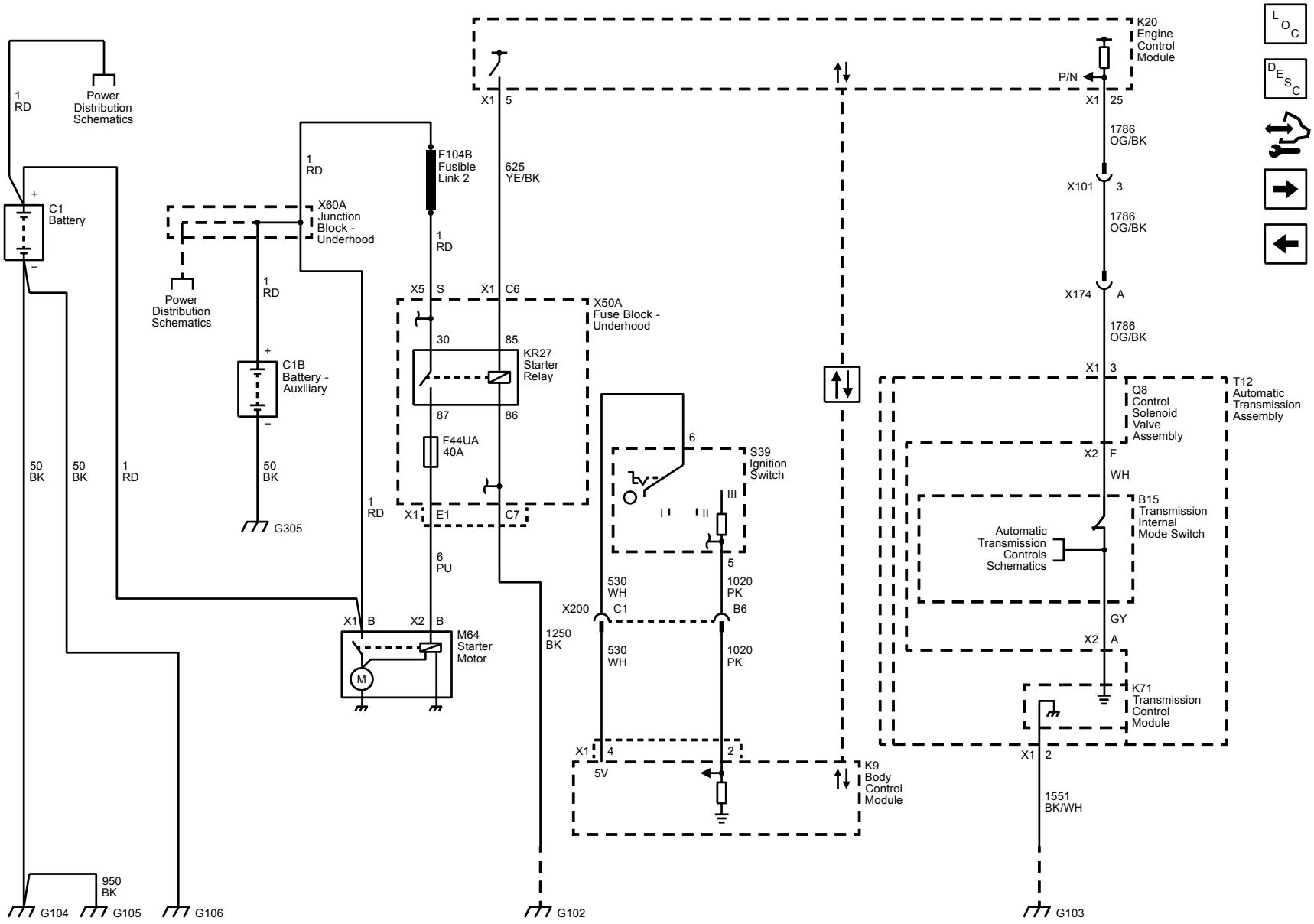
1
RD
Power
Distribution
Schematics
C1
Battery
X60A
Junction
Block -
Underhood
F104B
Fusible
Link 2
625
YE/BK
X5 S
X1 C6
X50A
Fuse Block -
Underhood
30
85
KR27
Starter
Relay
87
86
F44UA
40A
C1B
Battery -
Auxiliary
50
BK
G305
X1 E1
C7
6
PU
M64
Starter
Motor
X1 B
X2 B
M
S39
Ignition
Switch
530
WH
1020
PK
X200 C1
B6
1250
BK
X1 4
2
5V
K9
Body
Control
Module
K20
Engine
Control
Module
P/N
X1 5
X1 25
1786
OG/BK
X101 3
X174 A
X1 3
T12
Automatic
Transmission
Assembly
Q8
Control
Solenoid
Valve
Assembly
X2 F
WH
B15
Transmission
Internal
Mode Switch
Automatic
Transmission
Controls
Schematics
GY
X2 A
K71
Transmission
Control
Module
X1 2
1551
BK/WH
950
BK
G104
G105
G106
G102
G103

Charging System (Diesel)

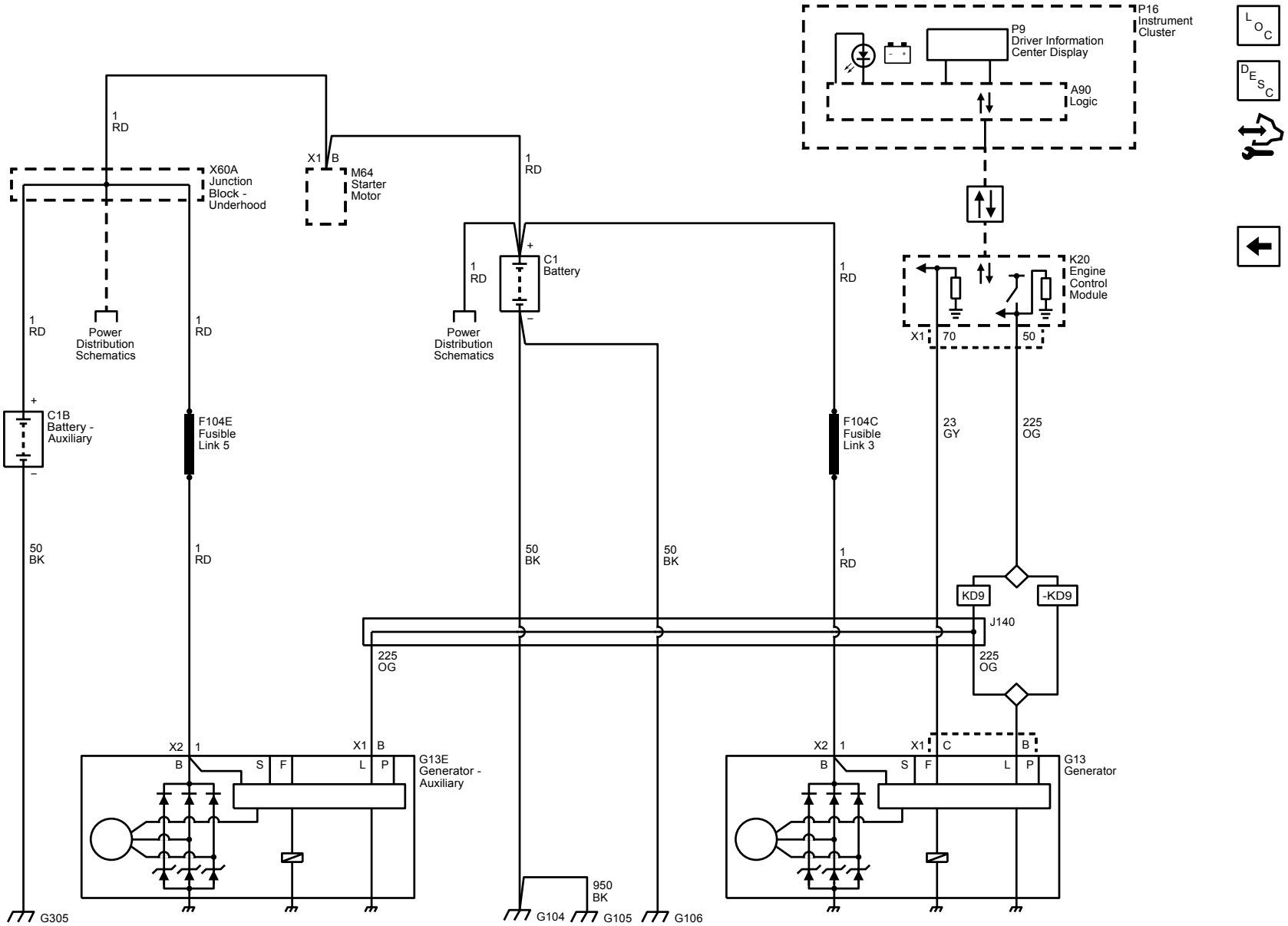

Engine/Propulsion

Cruise Control

Schematic and Routing Diagrams

Cruise Control Schematics

Cruise Control (K34)

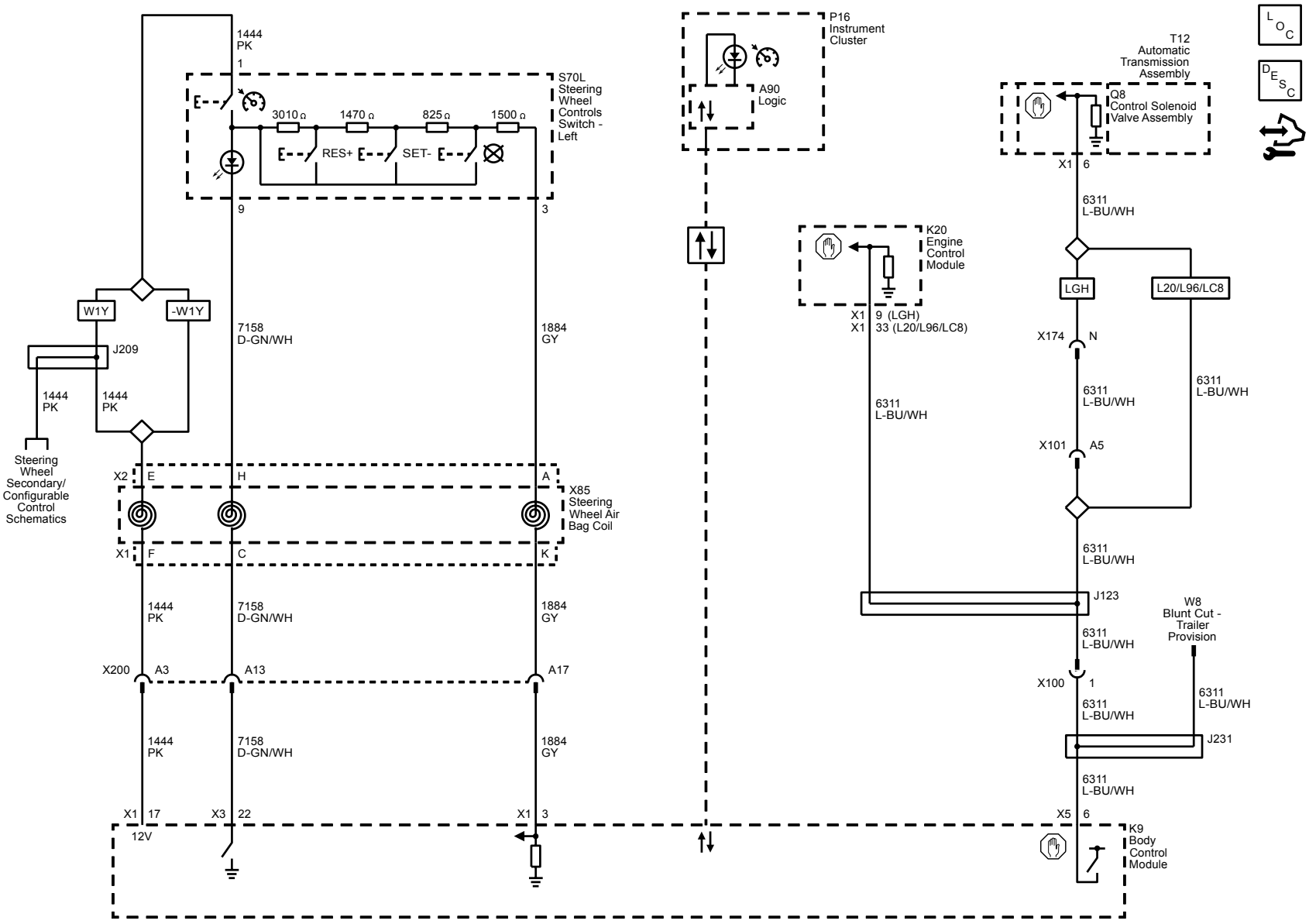

Description and Operation

Cruise Control Description and Operation

Cruise Control System Block Diagram

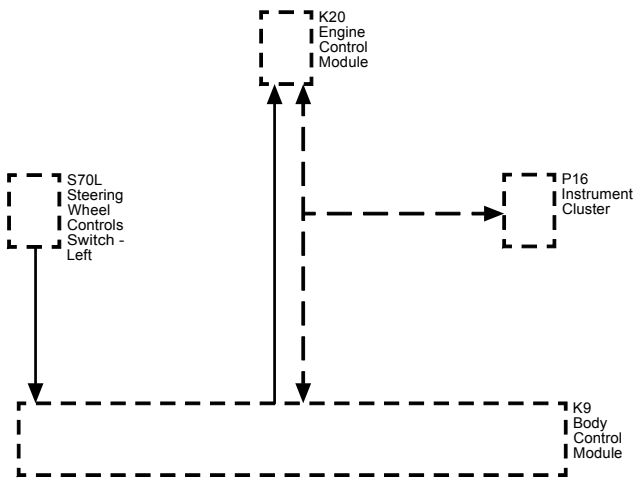

Cruise control is a speed control system that maintains a desired vehicle speed under normal driving conditions at speeds above 40 km/h (25 mph). Steep grades may cause variations in the selected vehicle speeds.

The following are the main components of the Cruise Control System:

- The accelerator pedal
- The brake pedal position (BPP) sensor
- The body control module (BCM)
- The cruise on/off switch
- The cruise control cancel switch
- The + RES switch (equivalent to resume/accel switch)
- The − SET switch (equivalent to set/coast switch)
- The engine control module (ECM)
- The throttle actuator control (TAC) motor (gasoline engines only)
- The vehicle speed sensor

The body control module (BCM) monitors the signal circuit of the cruise control switches, which are located on the steering wheel. The BCM relays the cruise control switch status to the engine control module (ECM) via the serial data circuit. The ECM uses the status of the cruise control switch to determine when to capture and maintain the vehicle speed. The ECM monitors the vehicle speed signal circuit in order to determine the desired vehicle speed.

Voltage is supplied to the cruise control switch via the steering wheel control switch reference voltage circuit supplied by the BCM. The cruise control function switches are arranged in a resistive ladder design, with each cruise control function switch having a different resistance value. The BCM detects a specific voltage value that is associated with the cruise control function switch being activated. The BCM sends a serial data message to the ECM indicating that the on/off switch is active. Similarly, when the normally open + RES switch or the normally open − SET switch are pressed, the switch closes and the BCM detects the predetermined voltage signal on the cruise control resume/accel and set/coast switch signal circuit. The BCM sends a serial data message to the ECM indicating that the + RES switch or the − SET switch is active.

Cruise Control Engaged

The Cruise Control System will engage and adjust vehicle speeds, based on the activation of the following cruise control switches, which are located on the steering wheel:

- On/Off

- + RES
- − SET

To engage the Cruise Control System, ensure that the vehicle speed is above 40.2 km/h (25 mph), turn the cruise On/Off switch ON and momentarily press the − SET switch. The ECM will engage the Cruise Control System and record the vehicle speed. The ECM sends a serial data message to the instrument panel cluster (IPC) in order to illuminate the Cruise Engaged indicator in the IPC. Refer to the vehicle owner's manual for the location and operation of the cruise control On/Off indicators and driver information center (DIC) messages.

Pressing the accelerator pedal while the Cruise Control System is engaged, allows the driver to override the Cruise Control System in order to accelerate the vehicle beyond the current set vehicle speed. When the accelerator pedal is released, the vehicle will decelerate and resume the current set vehicle speed.

The driver can also override the current set vehicle speed via the − SET switch and the + RES switch. When the Cruise Control System is engaged, pressing and holding the − SET switch will allow the vehicle to decelerate from the current set vehicle speed without deactivating the Cruise Control System. When the − SET switch is released, the ECM will record the vehicle speed and maintain the vehicle speed as the new set vehicle speed. When the Cruise Control System is engaged, momentarily pressing the − SET switch will allow the vehicle to decelerate at a vehicle specific calibratable increment, commonly 1.6 km/h (1 mph), each time that the − SET is momentarily pressed, with a minimum vehicle speed of 38 km/h (24 mph). Refer to the vehicle Owner's Manual for more information.

Pressing and holding the + RES switch, when the Cruise Control System is engaged, will allow the vehicle to accelerate to a greater vehicle speed than the current set vehicle speed. When the + RES switch is released, the ECM will record the vehicle speed and maintain the vehicle speed as the new set vehicle speed. When the Cruise Control System is engaged, momentarily pressing the + RES switch will allow the vehicle to accelerate at a vehicle specific calibratable increment, commonly 1.6 km/h (1 mph), each time that the + RES switch is momentarily pressed. Momentarily activating the + RES switch will recall the previous vehicle speed, after the cruise control system has been disengaged by pressing the brake pedal, or CANCEL switch. Refer to the vehicle Owner's Manual for more information.

Cruise Control Disengaged

The engine control module (ECM) disengages the cruise control operation based on the signals from the following switches:

- The brake pedal position (BPP) sensor
- The On/Off switch
- The cruise control cancel switch

The Cruise Control System will disengage when the brake pedal is applied. The body control module (BCM) monitors the BPP sensor via the BPP sensor signal circuit as the voltage signal increases while the pedal is further applied. The ECM monitors the BPP signal through a discrete input and a serial data message signal from the BCM indicating the brake status. When either signal indicates the brake pedal is applied, the ECM will disengage the cruise control system.

The Cruise Control System will also disengage when the cruise control on/off switch is switched OFF, or the cruise control cancel switch is activated. The body control module (BCM) determines when the cruise control cancel switch is activated. When the normally open cancel switch is closed, the BCM detects the predetermined voltage signal on the cruise control function switch circuit. The vehicle speed stored in the memory of the engine control module will be erased when the cruise control On/Off switch is turned OFF, or the ignition switch is turned OFF. The BCM sends a serial data message to the ECM in order to disengage the cruise control system. When the Cruise Control System has been disengaged, the ECM sends a serial message to the instrument panel cluster (IPC) in order to turn OFF the Cruise Engaged indicator.

Every time the Cruise Control System is disengaged, the ECM will keep track of the reason for system disengagement. The last 8 disengagement reasons will be recorded within the ECM memory. The scan tool will display the last 8 Cruise Disengage History parameters, in which one out of approximately 50 possible reasons will be displayed in each of these 8 parameters. For the disengagement reason to be displayed within the scan tool parameter the Cruise Control System is active and disengagement is requested.

When engagement of the system is requested but an engagement inhibit is present, the most recent inhibit reason is recorded in the ECM history. The scan tool will display the most recent inhibit reason, in which one out of approximately 50 possible reasons will be displayed.

Cruise Control Inhibited

The engine control module (ECM) inhibits the cruise control operation when any of the following conditions exist:

- The ECM has not detected a brake pedal activation from the body control module (BCM) this ignition cycle.
- A Cruise Control System DTC has been set.
- The vehicle speed is less than 38.6 km/h (24 mph).
- The vehicle speed is too high.
- The vehicle is in PARK, REVERSE, NEUTRAL, or 1st gear.
- The engine RPM is low.
- The engine RPM is high.
- The system voltage is not between 9 volts and 16 volts.
- The Antilock Brake System (ABS)/Traction Control System (TCS) is active for more than a calibratable time (typically 0.3 to 0.7 seconds).

Cruise Control Inhibit Reasons

This is a general list of inhibit reasons. Not every inhibit reason is applicable to all vehicles. Refer to the scan tool inhibit reason list for the last 8 reasons that have been recorded during the current ignition cycle.

Scan Tool Name	Description	Long Description
ACC BRAKE INOP	Adaptive Cruise Control Automatic Braking Failed	Adaptive Cruise Control Automatic Braking Inoperative

ACC DATA	Serial data fault for Adaptive Cruise Control Throttle Control and Brake Control signals sent by Adaptive Cruise Control module	Adaptive Cruise Control Module serial data fault is active or communication has been lost between ACC module and ECM.
ACC INHIBIT	Adaptive Cruise Control Inhibited	Adaptive Cruise Control Inhibited
ACC OPTION	Adaptive Cruise Control option mismatch	Cruise control type (adaptive cruise or conventional cruise) mismatched between ECM and BCM.
ACCEL RATE	High acceleration	Vehicle acceleration rate is too high.
Accel Time	Rate Limiting Fault	Cruise torque request rate limiting active too long
APP OVERRIDE	Pedal greater than cruise (override)	Driver has overridden cruise control set speed with accelerator pedal for greater than an allowable time.
Auto Brk Data	Automatic Braking Engine Torque Request Signal Communication Malfunction	ECM to EBCM serial data fault is active or communication has been lost between ECM and EBCM.
AXLE RANGE	Rear Axle Low	Rear axle in low range
BPP DATA	DTC P0703 active or maximum time elapsed without receiving valid Brake Pedal Position signal.	Serial data fault is active or communication has been lost with module sending brake pedal apply state
BPP DTC	Brake Pedal Position signal invalid	Brake Pedal Apply Circuit fault has been detected.
BPP Not Learned	Brake Apply Sensor Home Position Not Learned	Brake Pedal Position Sensor Released Position Not Learned.
BRAKE	Brake pedal apply	Brake Pedal was applied.
Brk Ped Press	Brake Pedal Driver Applied Pressure Detected	A Brake Pedal Apply has been detected based on brake pedal pressure as measured by the EBCM.
Calc Eng Torque	Calculated Torque	Engine torque calculation is incorrect.
CANCEL	Cancel switch active	Cancel Switch was depressed.
CLUTCH	Clutch switch active	Clutch Pedal was applied.
COAST DISENGAGE	Coast disengage	Cruise control is in coast mode with the Set/Coast switch depressed and is requesting no throttle
COAST SPEED LOW	Coast below low speed inhibit	Set / Coast switch was depressed. Vehicle slowed below minimum cruise operating speed.
Cruise Brk Inop	Brake System Malfunction	EBCM has detected a failure that does not allow automatic braking to be performed.
CRUISE S/W	Sequence of completion checks	Cruise control software execution error has occurred.
CRUISE SW DATA	Serial data fault (Cruise switch serial communication fault)	Cruise switch serial data fault is active or communication has been lost with module sending cruise switch states
CRUISE SW. OFF	On/Off switch in Off state	Cruise On/Off switch turned Off
DECEL RATE	High deceleration	Vehicle deceleration rate is too high.
DLC OVERRIDE	ALDL	Scan Tool plugged into ALDL connector

DTC SET	Malfunction in PCM/ECM (DTC active)	DTC is active or in history that inhibits cruise control operation.
D WHL SPD HI	Driven Whl Spd Greater (wheel slip detection)	Driven wheel speed greater than Non Driven wheel speed (slip detection)
D WHL SPD LOW	Un-driven Whl speed Greater	Non Driven wheel speed greater than driven wheel speed
ECM INHIBIT	PCM/ECM inhibit (RAM corruption)	ECM internal communication error
ECM RESET	ECM Running Reset	ECM Running Reset occurred
ECT OVERTEMP	Engine metal overtemp active	Engine over temperature. Overheated.
ENG RUN TIME	Engine run time not elapsed	Engine has not been running long enough, typically five seconds.
ENGINE SPEED	Engine speed too low or too high	Engine RPM too low (near stall) or too high (near engine RPM fuel shutoff).
FIRST GEAR	1st Gear	Transmission is engaged in 1st gear
HIGH SPEED	Vehicle speed exceeds high speed threshold	Vehicle speed has exceeded maximum cruise operating speed
HIGH VOLTAGE	Voltage above high voltage threshold	Ignition Voltage High at ECM (typically 18 volts)
ILLEGAL MODE	Illegal cruise mode	Cruise control mode is incorrect based on switch states.
LOST FWD GEAR	Transmission in neutral. Reverse or park	Gear selector not in forward gear
LOW SPEED	Vehicle speed drops below low speed threshold	Vehicle speed dropped below the cruise control minimum operating speed. May be due to hilly terrain and low vehicle speed. Manual transmission gear selection and engine torque may contribute to this disengagement reason.
LOW VOLTAGE	Voltage below low voltage threshold	Ignition Voltage Low at ECM (typically 9 volts)
MEMORY DTC	Memory Failure	Control module memory failure detected.
MPH LIMIT	MPH Limited Fuel (Vehicle overspeed fuel cut-off active)	Vehicle overspeed protection active with fuel cut off active
M/T Gear Changed	Manual transmission out of gear with no clutch pedal apply	Manual transmission shifted to Neutral without clutch pedal being applied.
NONE	None	This disengagement reason may be displayed after a dead battery repair or module replacement.
OVER SET SPEED	Over schedule	Vehicle speed has exceeded driver selected set speed by more than an allowable amount. This may occur while driving down a significant grade or driver overriding cruise while performing a passing maneuver.
PARK BRAKE	Park Brake Switch signal Active	Parking Brake Applied

PEDAL INITIALIZE	Brake before cruise	The brake pedal has not been seen as applied prior to driver request to engage cruise with set switch. A brake pedal apply must be seen before allowing cruise engagement during each key cycle. On a vehicle equipped with a manual transmission, a clutch pedal apply may satisfy the brake pedal apply criteria.
PTO ACTIVE	Power Take Off Active	Power Take Off is active.
Ram DTC	Processor Integrity Fault (Ram corruption)	ECM software error has occurred
RPM LIMIT	Injectors Disabled (Engine overspeed fuel cut-off active)	Engine RPM limiter active with fuel cut off active.
S/C ON SPEED HI	Over schedule tap-down	Set/Coast switch selected, vehicle speed is above set speed and does not decrease. May be due to traveling down hill
SIMUL S/C-R/A	SET and RESUME switches simultaneously active	Set/Coast and Resume Accelerate switches pressed simultaneously
SL/W Sys On	Speed Limiter / Warning On/Off switch turned on	Driver has turned on the Speed Limiter/Warning on/off switch. Cruise is disabled / inhibited and cruise on/off switch will be set to OFF.
SW. INVALID	Analog cruise switch input out of range	Cruise switch voltage signal in invalid range
TAC INHIBIT	ETC prevents cruise operation	Electronic Throttle Control has detected a failure in the throttle control hardware
TCS	Traction control active	Traction Control was Active
TRANS DTC	Trans Gear Fault	Transmission DTC is active or in history that inhibits cruise control operation
UNDER SET SPEED	Under schedule	Vehicle speed is below cruise control set speed by more than an allowable amount
VSES	Vehicle stability active	Vehicle Stability Control was active
4WD Low	4WD Low	Transfer case in low range

Engine/Propulsion

Engine Controls and Fuel - 4.8L (L20) or 6.0L (L96 LC8)

Schematic and Routing Diagrams

Engine Controls Schematics (L20, L96, or LC8)

Module Power, Ground, Serial Data and MIL

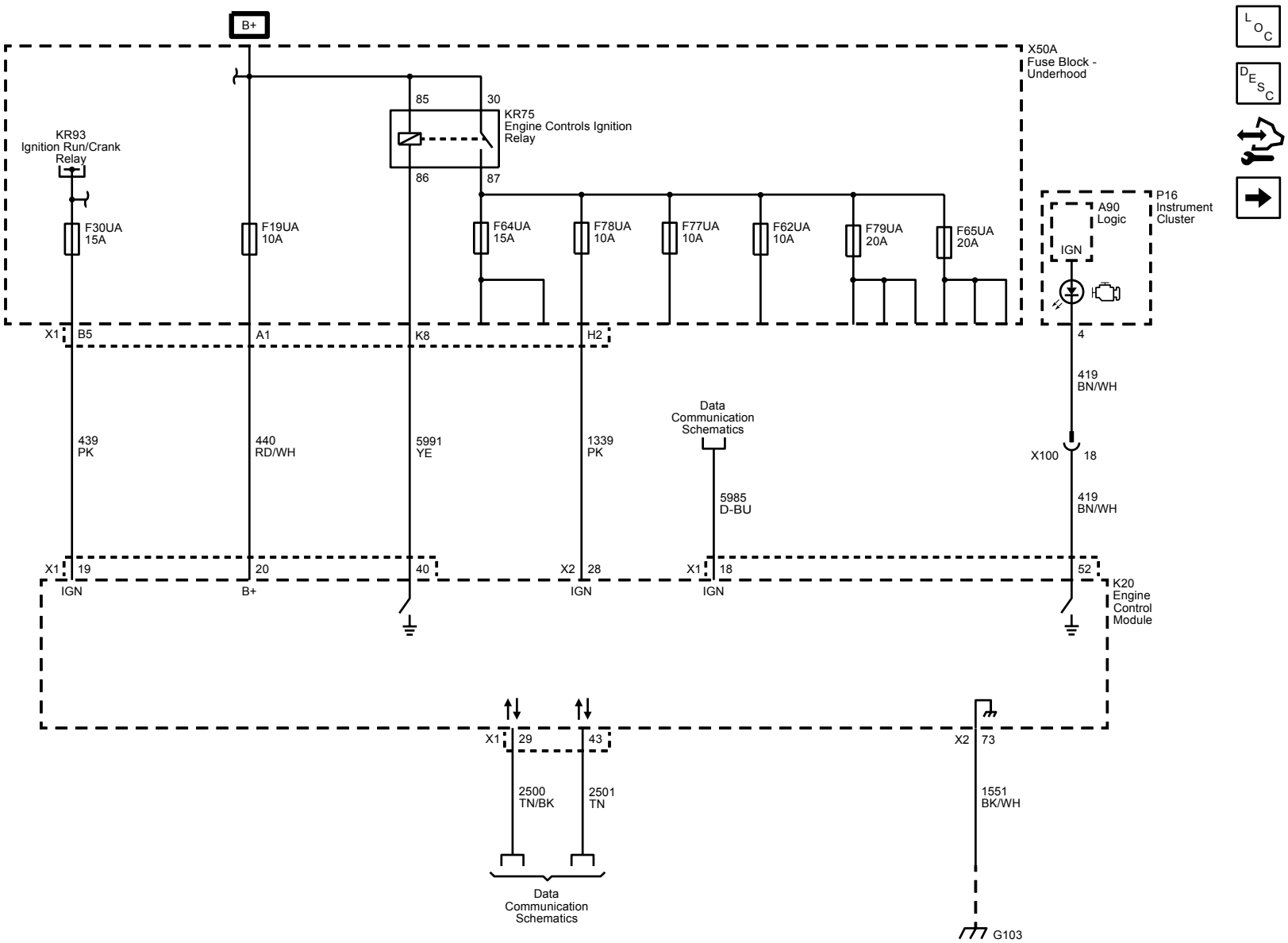

5V1, 5V2, and Low Reference Bus (1 of 2)

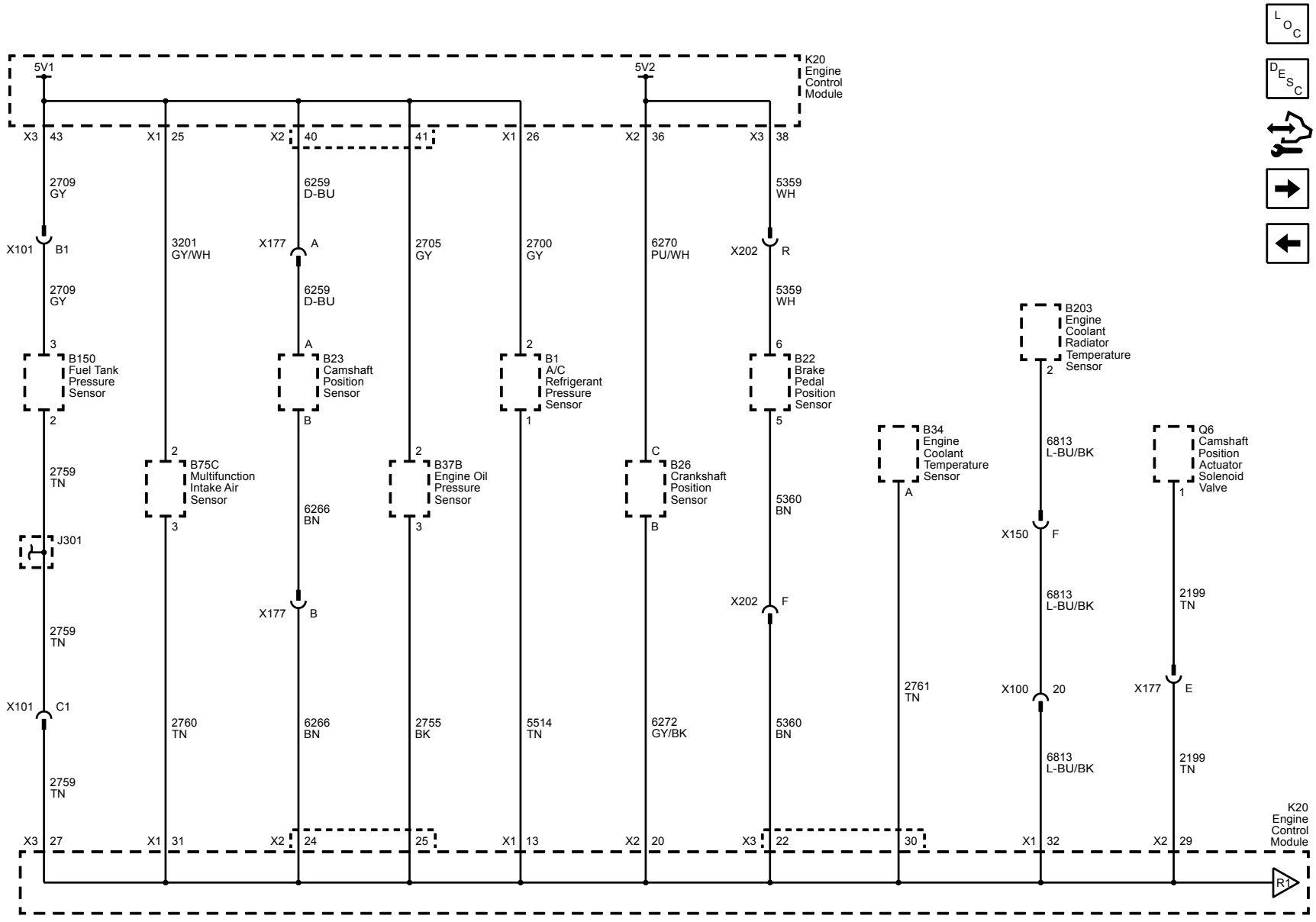

5V3, 5V4, and Low Reference Bus (2 of 2)

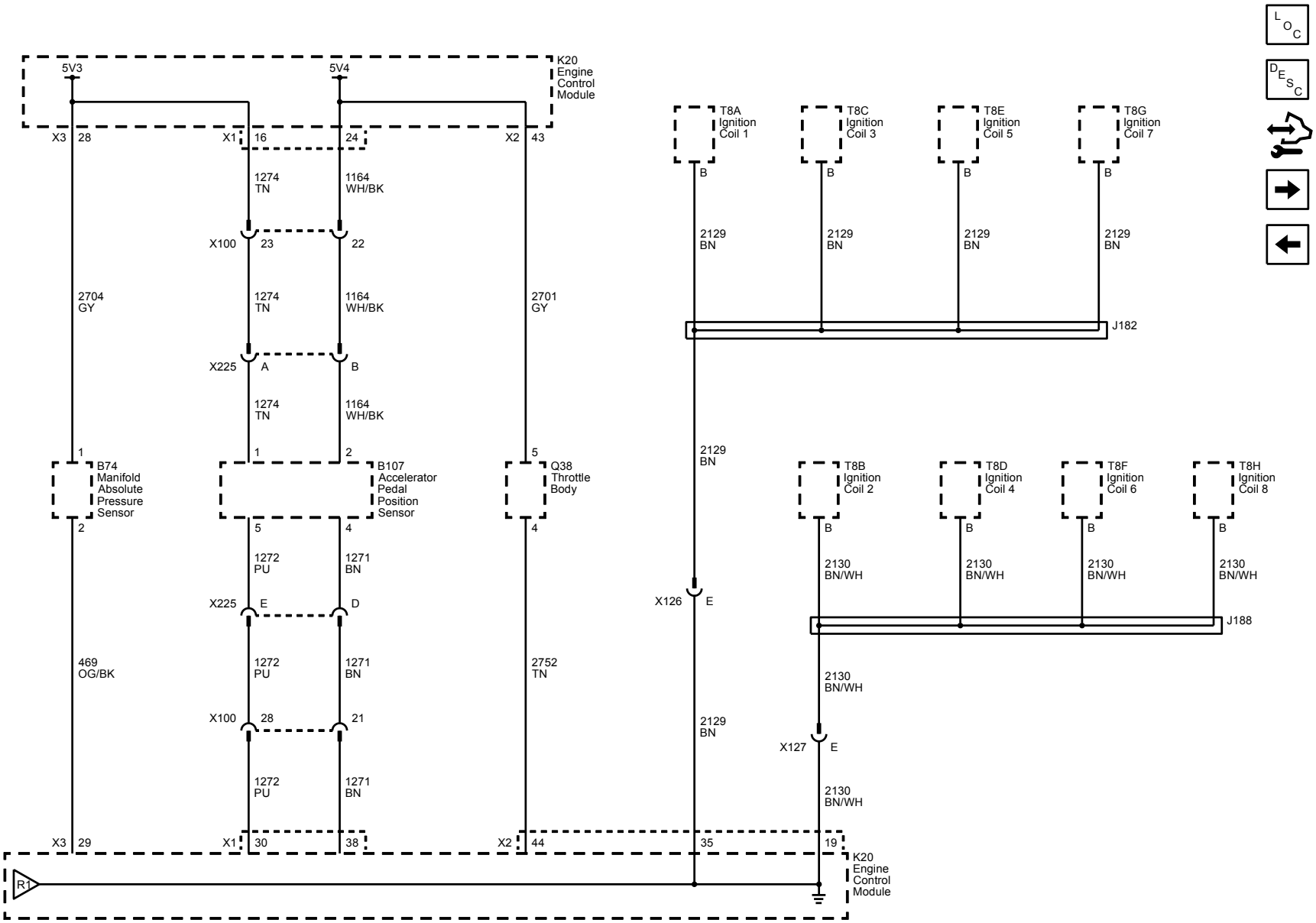

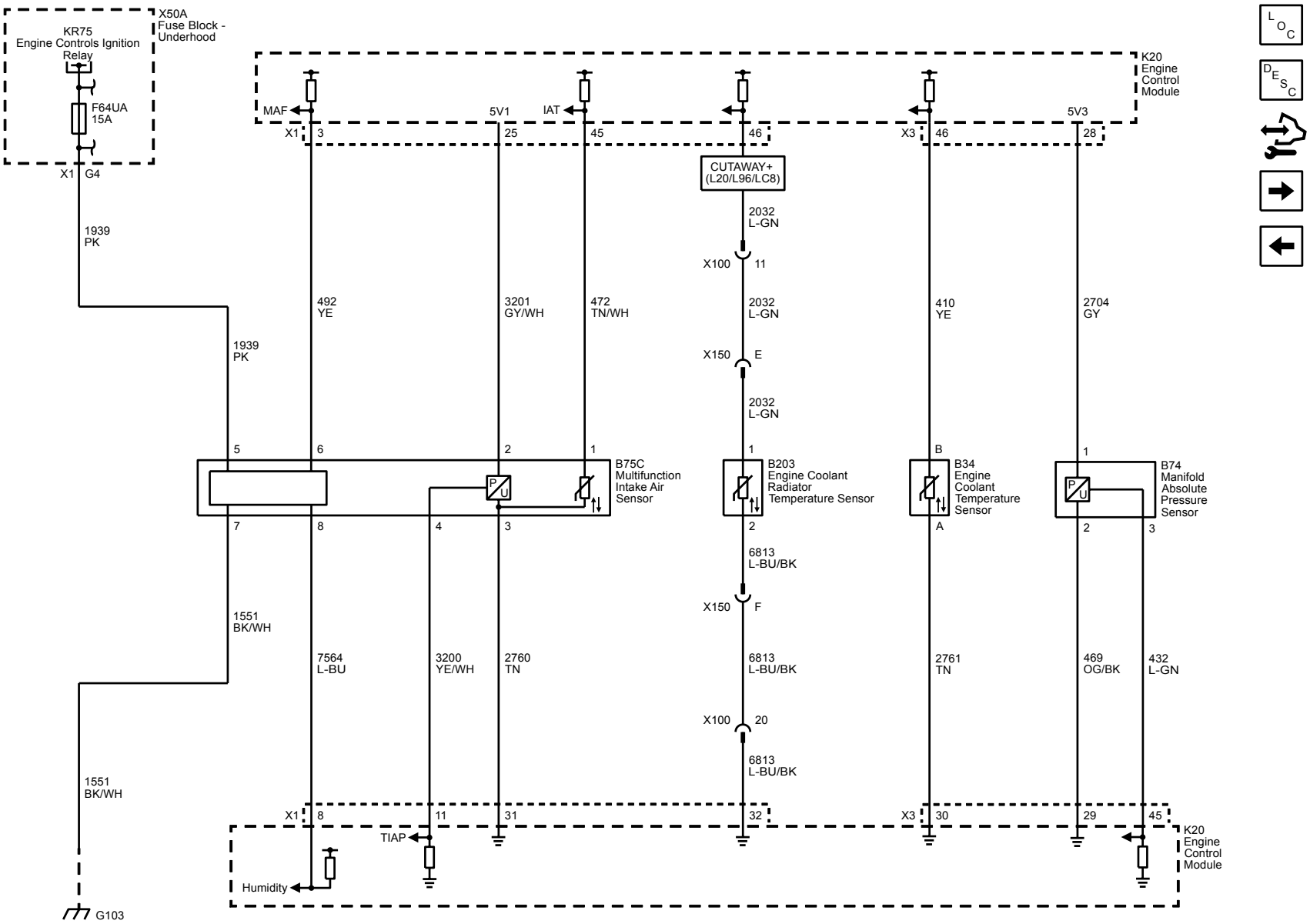
X50A
Fuse Block - Underhood
KR75
Engine Controls Ignition Relay
F64UA
15A
X1 G4
1939
PK
K20
Engine Control Module
MAF
IAT
5V1
5V3
X1 3 25 45 46
X3 46 28
CUTAWAY+
(L20/L96/LC8)
2032
L-GN
X100 11
X150 E
492
YE
3201
GY/WH
472
TN/WH
410
YE
2704
GY
5 6 2 1
B75C
Multifunction
Intake Air
Sensor
B203
Engine Coolant
Radiator
Temperature Sensor
B34
Engine
Coolant
Temperature
Sensor
B74
Manifold
Absolute
Pressure
Sensor
7 8 4 3
1551
BK/WH
7564
L-BU
3200
YE/WH
2760
TN
6813
L-BU/BK
X150 F
2761
TN
469
OG/BK
432
L-GN
X100 20
X1 8 11 31 32
X3 30 29 45
TIAP
Humidity
G103

Engine Data Sensors - Heated Oxygen Sensors (1 of 2)

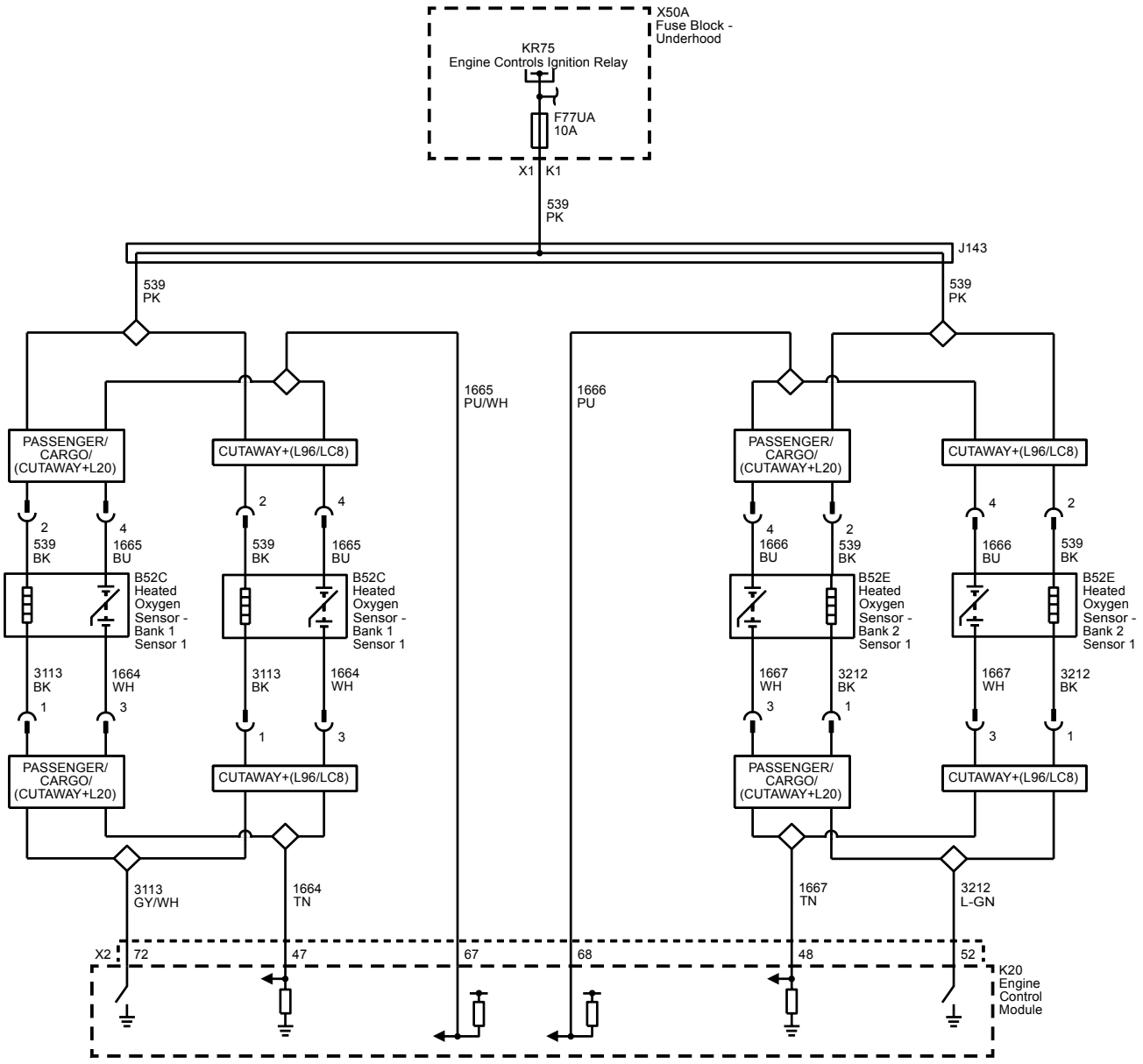

Engine Data Sensors - Heated Oxygen Sensors (2 of 2)

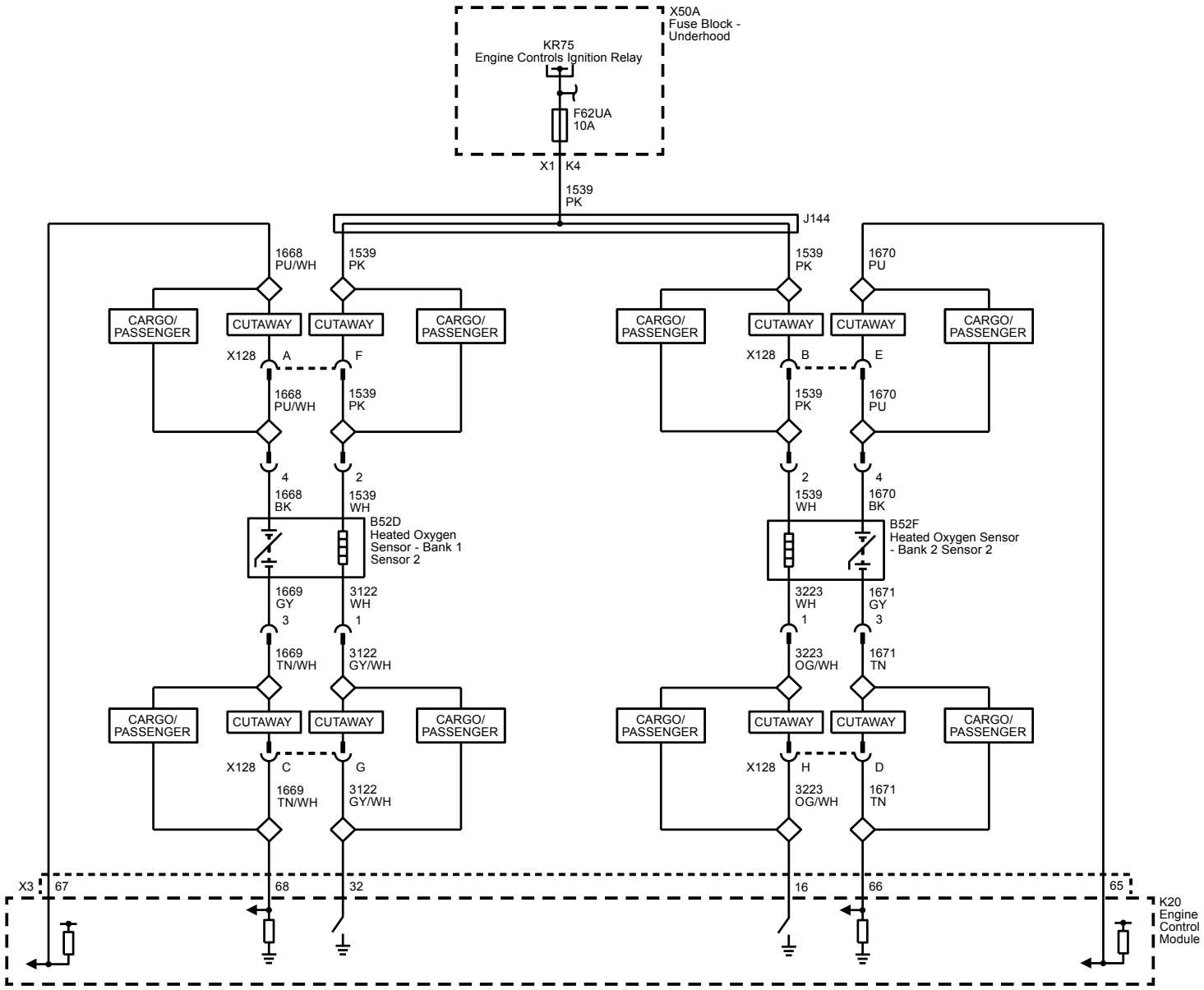

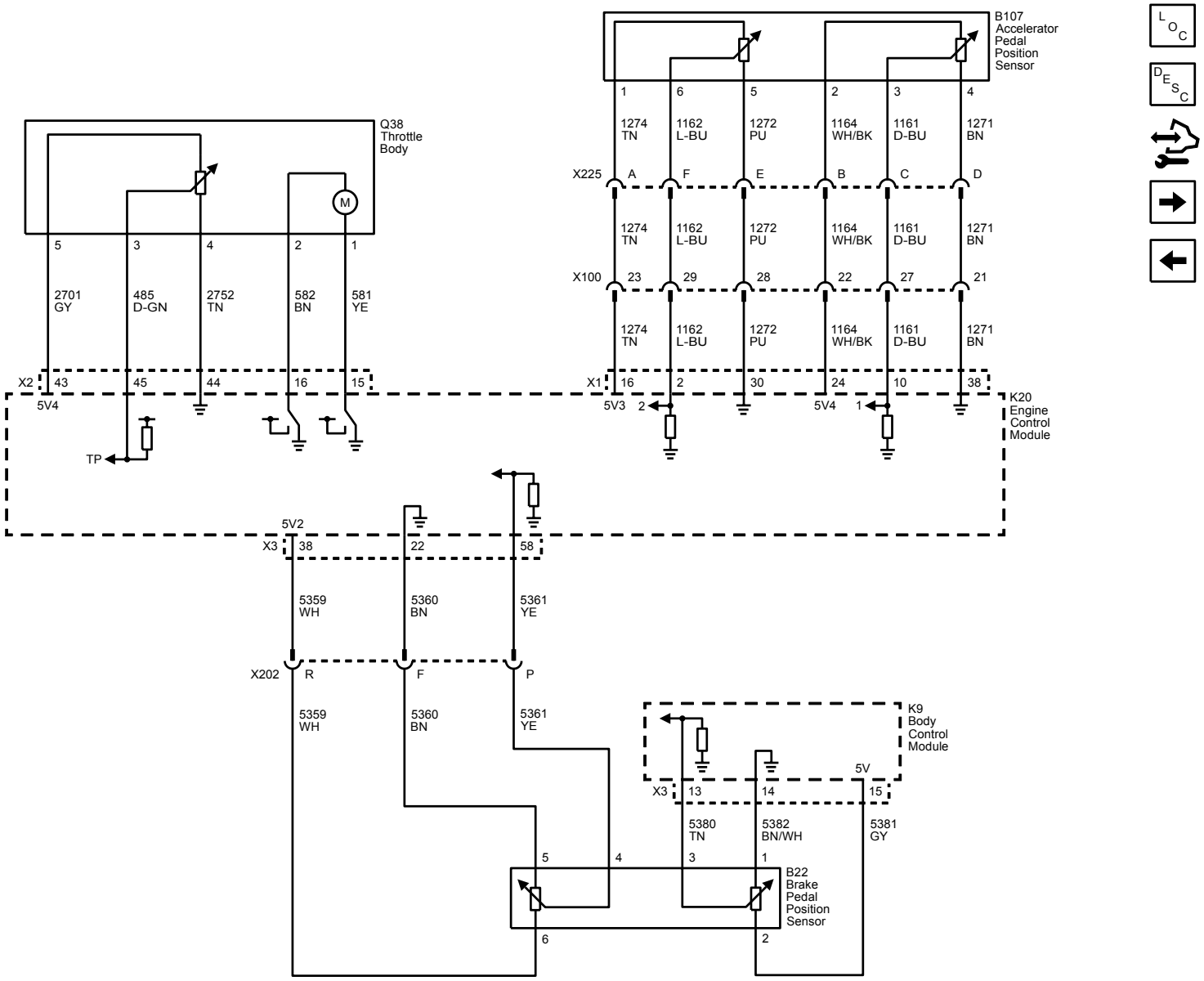
B107
Accelerator
Pedal
Position
Sensor
1
6
5
2
3
4
1274
TN
1162
L-BU
1272
PU
1164
WH/BK
1161
D-BU
1271
BN
X225
A
F
E
B
C
D
X100
23
29
28
22
27
21
X1
16
2
30
24
10
38
5V3
5V4
Q38
Throttle
Body
M
5
3
4
2
1
2701
GY
485
D-GN
2752
TN
582
BN
581
YE
X2
43
45
44
16
15
5V4
TP
K20
Engine
Control
Module
5V2
X3
38
22
58
5359
WH
5360
BN
5361
YE
X202
R
F
P
K9
Body
Control
Module
5V
13
14
15
5380
TN
5382
BN/WH
5381
GY
5
4
3
1
6
2
B22
Brake
Pedal
Position
Sensor

Ignition Controls - Ignition System Coils 1, 3, 5, and 7

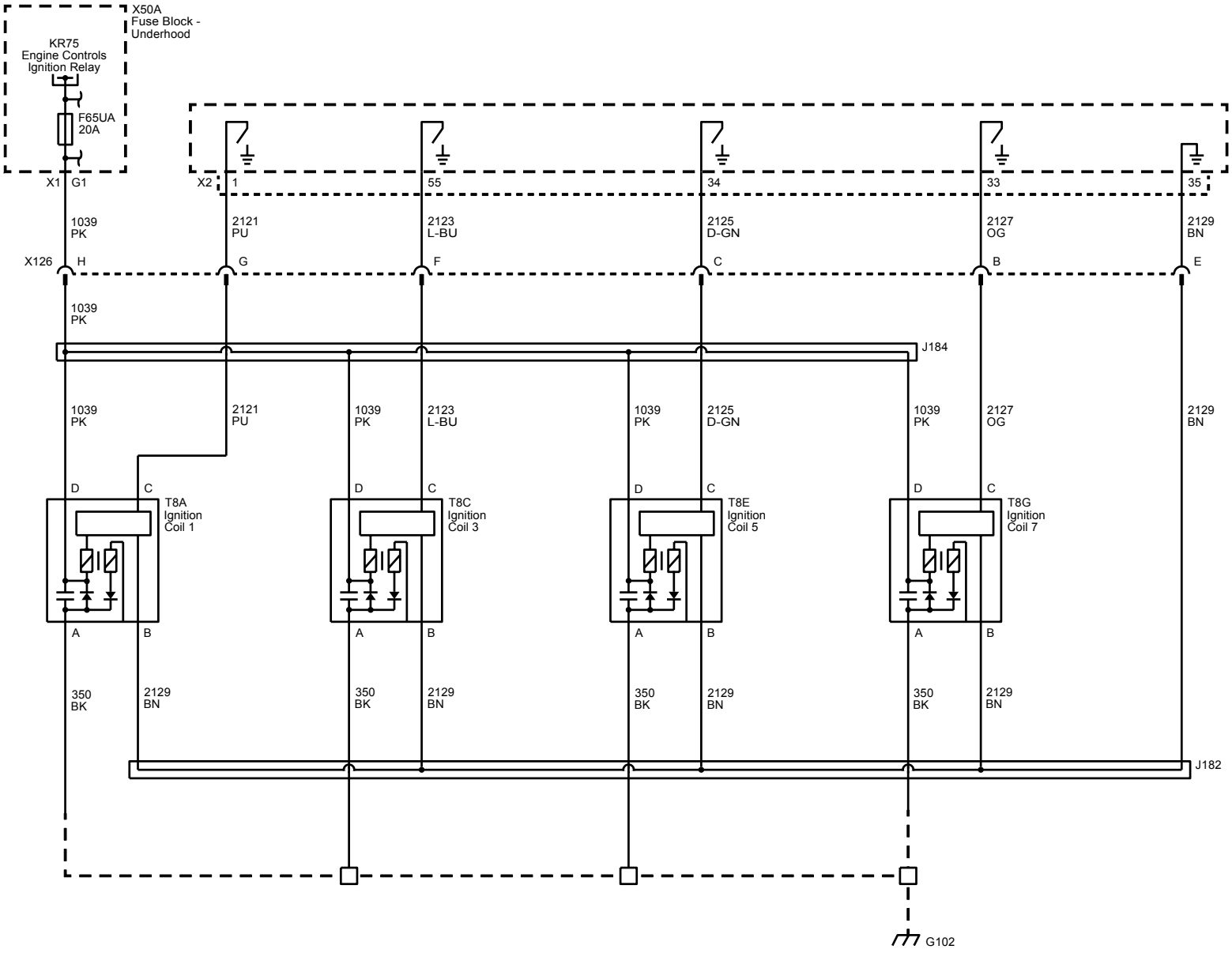

Ignition Controls - Ignition System Coils 2, 4, 6, and 8

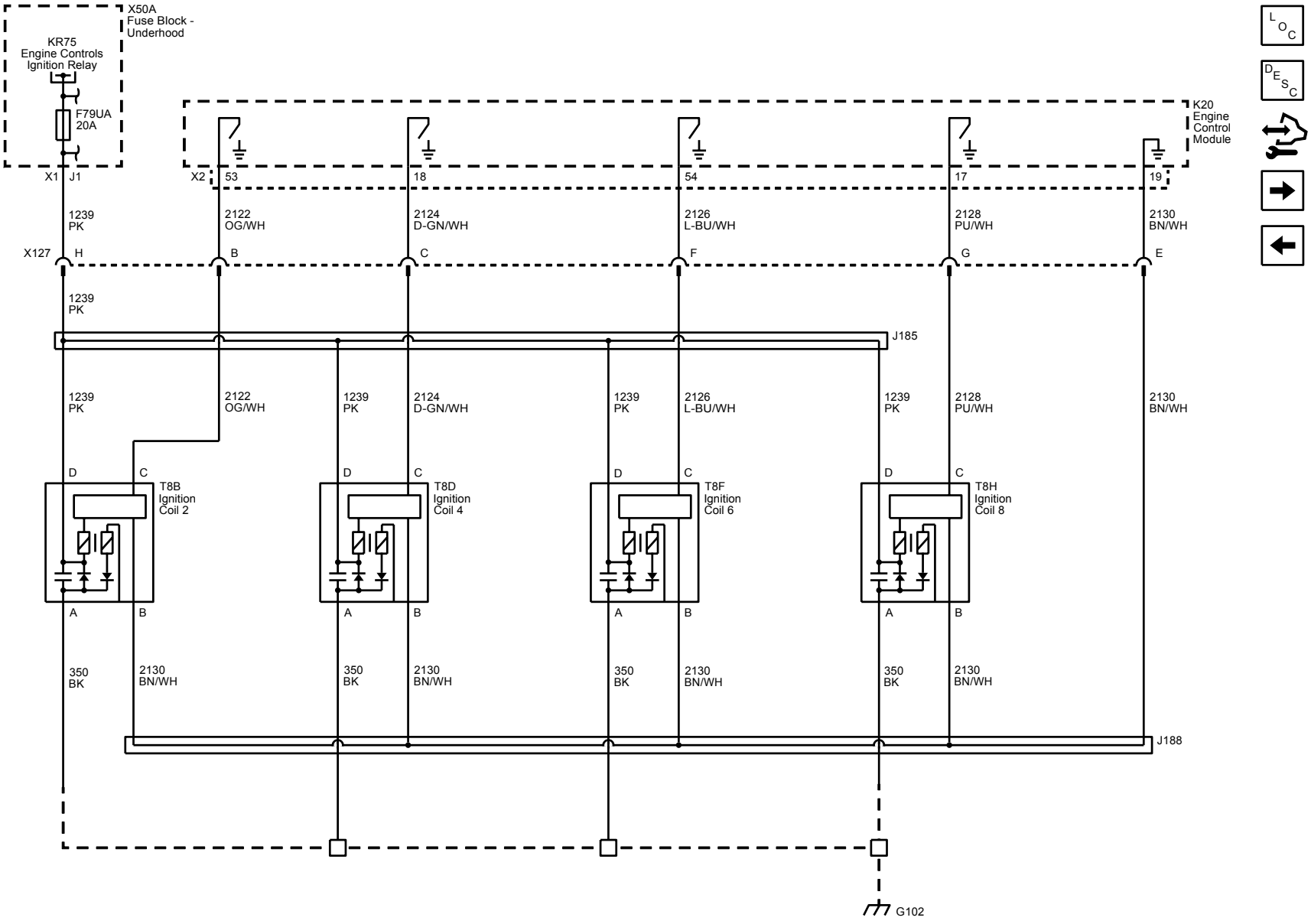

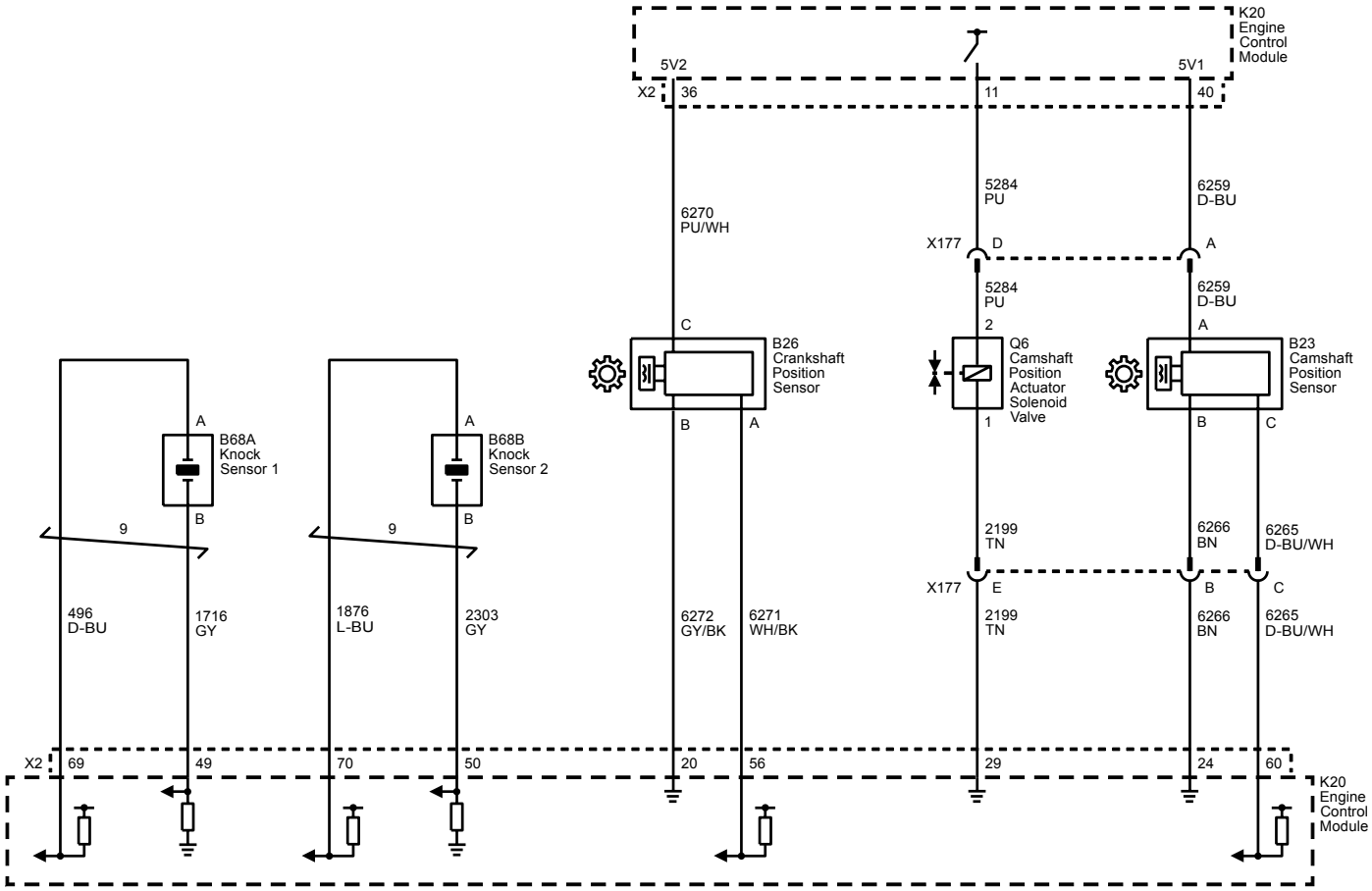
K20
Engine
Control
Module
5V2
X2
36
11
5V1
40
6270
PU/WH
5284
PU
6259
D-BU
X177
D
A
5284
PU
6259
D-BU
C
2
A
B26
Crankshaft
Position
Sensor
Q6
Camshaft
Position
Actuator
Solenoid
Valve
B23
Camshaft
Position
Sensor
B
A
1
B
C
A
B68A
Knock
Sensor 1
A
B68B
Knock
Sensor 2
9
B
9
B
2199
TN
6266
BN
6265
D-BU/WH
X177
E
B
C
496
D-BU
1716
GY
1876
L-BU
2303
GY
6272
GY/BK
6271
WH/BK
2199
TN
6266
BN
6265
D-BU/WH
X2
69
49
70
50
20
56
29
24
60
K20
Engine
Control
Module

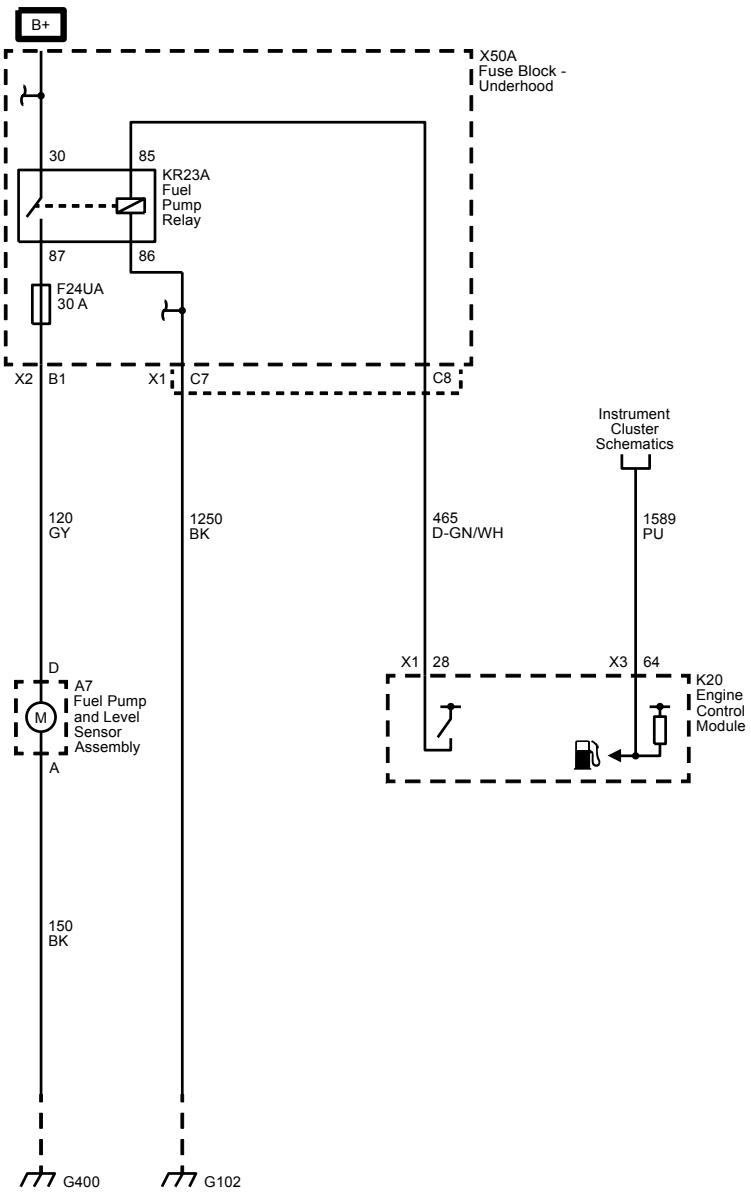
B+
X50A
Fuse Block -
Underhood
30
85
KR23A
Fuel
Pump
Relay
87
86
F24UA
30 A
X2
B1
X1
C7
C8
Instrument
Cluster
Schematics
120
GY
1250
BK
465
D-GN/WH
1589
PU
D
A7
Fuel Pump
and Level
Sensor
Assembly
M
A
X1
28
X3
64
K20
Engine
Control
Module
150
BK
G400
G102

Fuel Controls - Compressed Natural Gas (LC8 with FHZ)

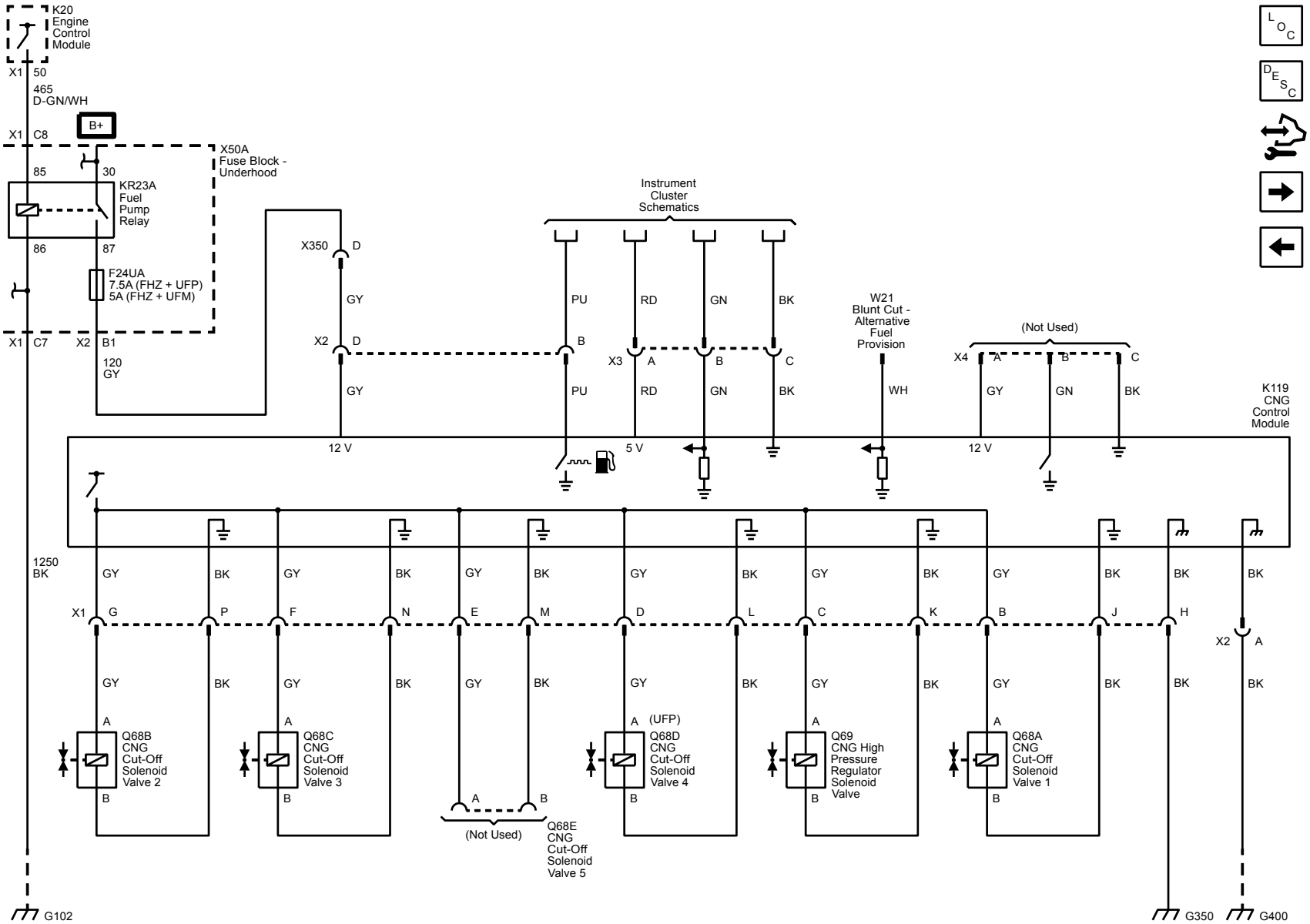

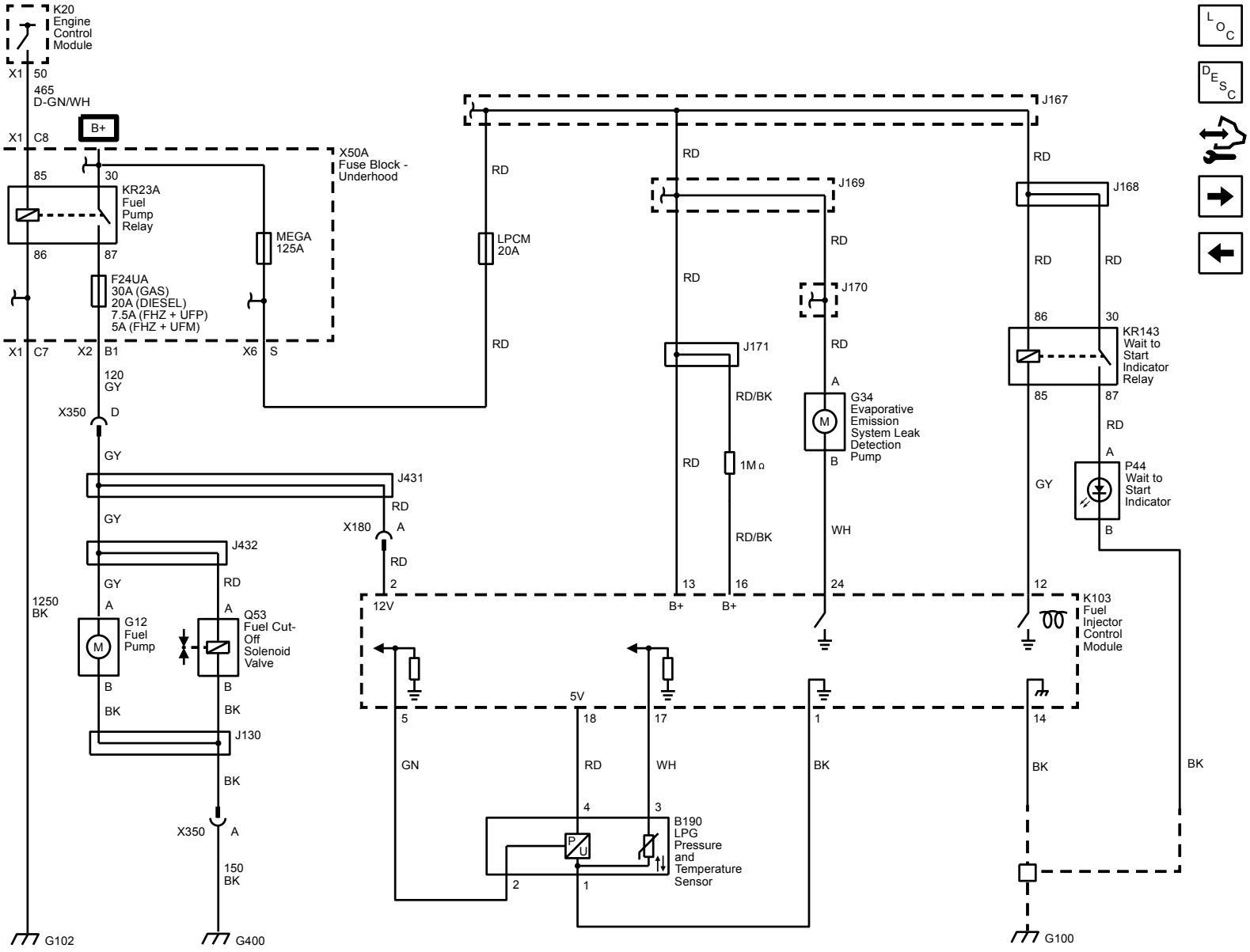
K20
Engine
Control
Module
X1 50
465
D-GN/WH
B+
X1 C8
X50A
Fuse Block -
Underhood
85
30
KR23A
Fuel
Pump
Relay
86
87
MEGA
125A
F24UA
30A (GAS)
20A (DIESEL)
7.5A (FHZ + UFP)
5A (FHZ + UFM)
X1 C7
X2 B1
X6 S
120
GY
X350 D
LPCM
20A
RD
J167
J169
J170
J171
RD/BK
1MΩ
G34
Evaporative
Emission
System Leak
Detection
Pump
A
B
J168
KR143
Wait to
Start
Indicator
Relay
P44
Wait to
Start
Indicator
J431
J432
X180 A
1250
BK
G12
Fuel
Pump
Q53
Fuel Cut-
Off
Solenoid
Valve
J130
X350 A
150
BK
12V
B+
5V
K103
Fuel
Injector
Control
Module
GN
WH
B190
LPG
Pressure
and
Temperature
Sensor
G102
G400
G100

Fuel Controls - LPG Bypass Solenoid (KO7 with UFM)

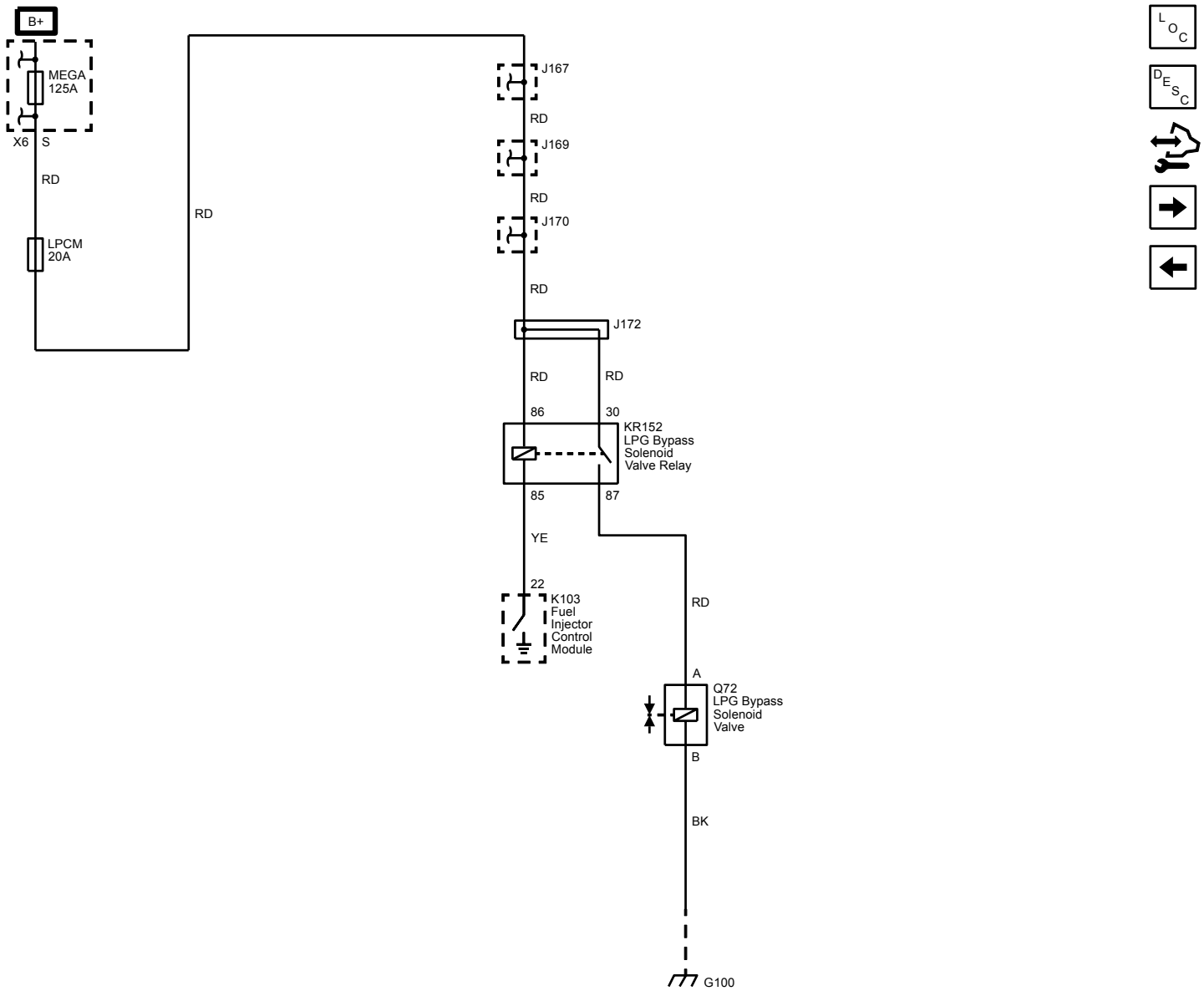

Fuel Controls - Liquefied Petroleum Gas (KO7 with UFP) 1 of 2

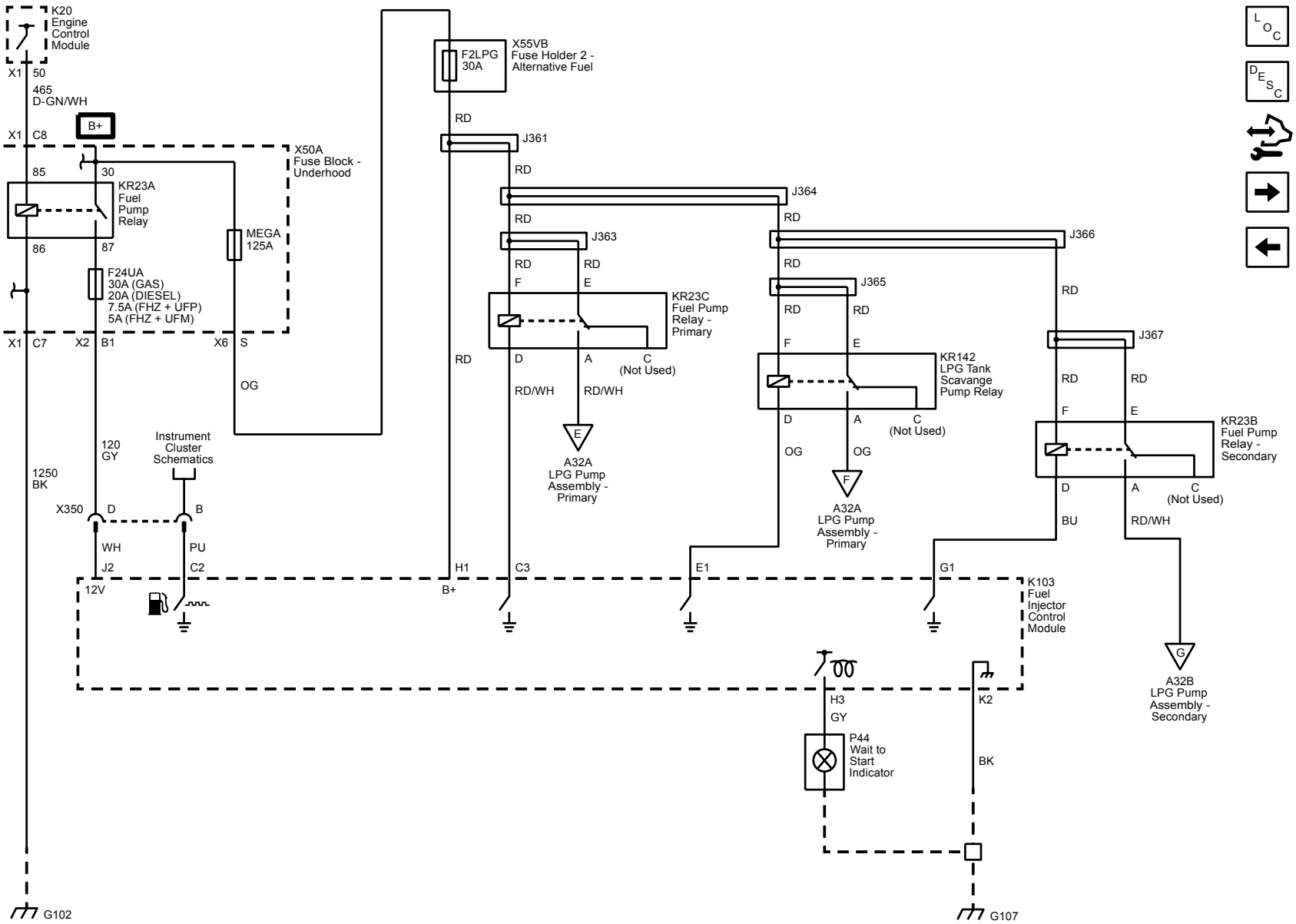

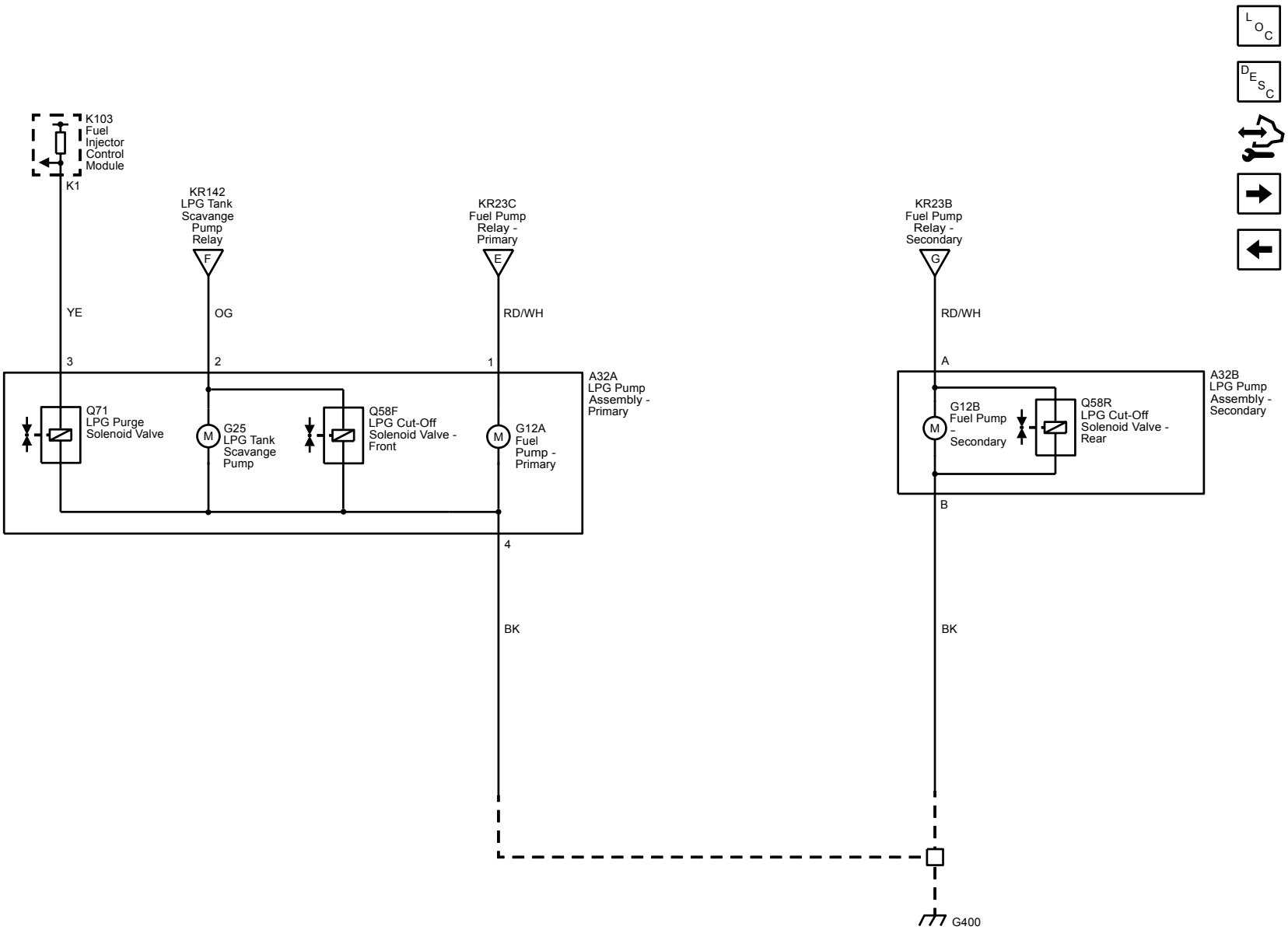
K103
Fuel
Injector
Control
Module
K1
KR142
LPG Tank
Scavange
Pump
Relay
F
KR23C
Fuel Pump
Relay -
Primary
E
KR23B
Fuel Pump
Relay -
Secondary
G
YE
OG
RD/WH
RD/WH
3
2
1
A
A32A
LPG Pump
Assembly -
Primary
A32B
LPG Pump
Assembly -
Secondary
Q71
LPG Purge
Solenoid Valve
G25
LPG Tank
Scavange
Pump
Q58F
LPG Cut-Off
Solenoid Valve -
Front
G12A
Fuel
Pump -
Primary
G12B
Fuel Pump
-
Secondary
Q58R
LPG Cut-Off
Solenoid Valve -
Rear
B
4
BK
BK
G400

Fuel Controls - Fuel Injectors (L20, L96, or LC8 with KO7 and UFP)

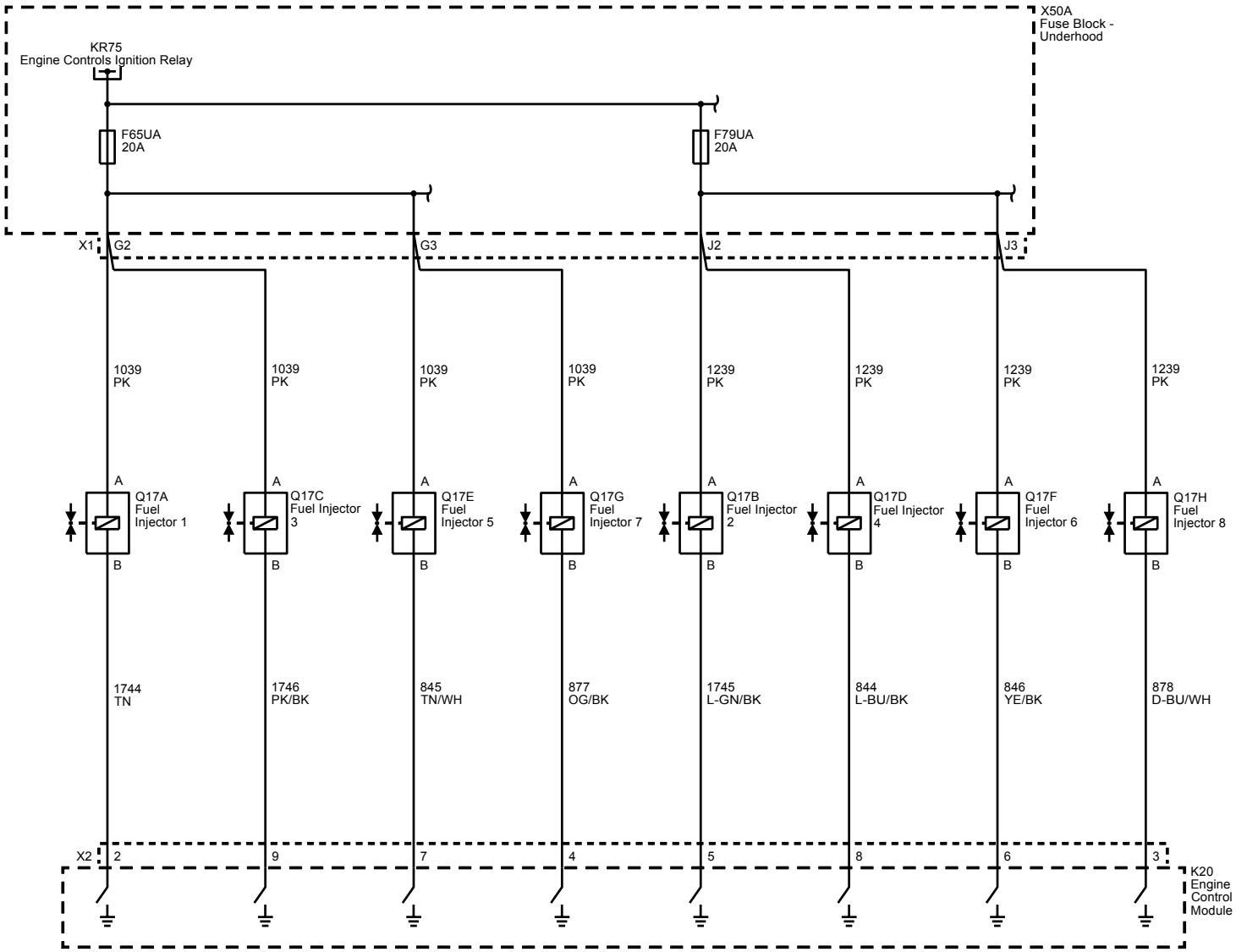

Fuel Controls - Fuel Injectors (FHZ, or KO7 with UFM)

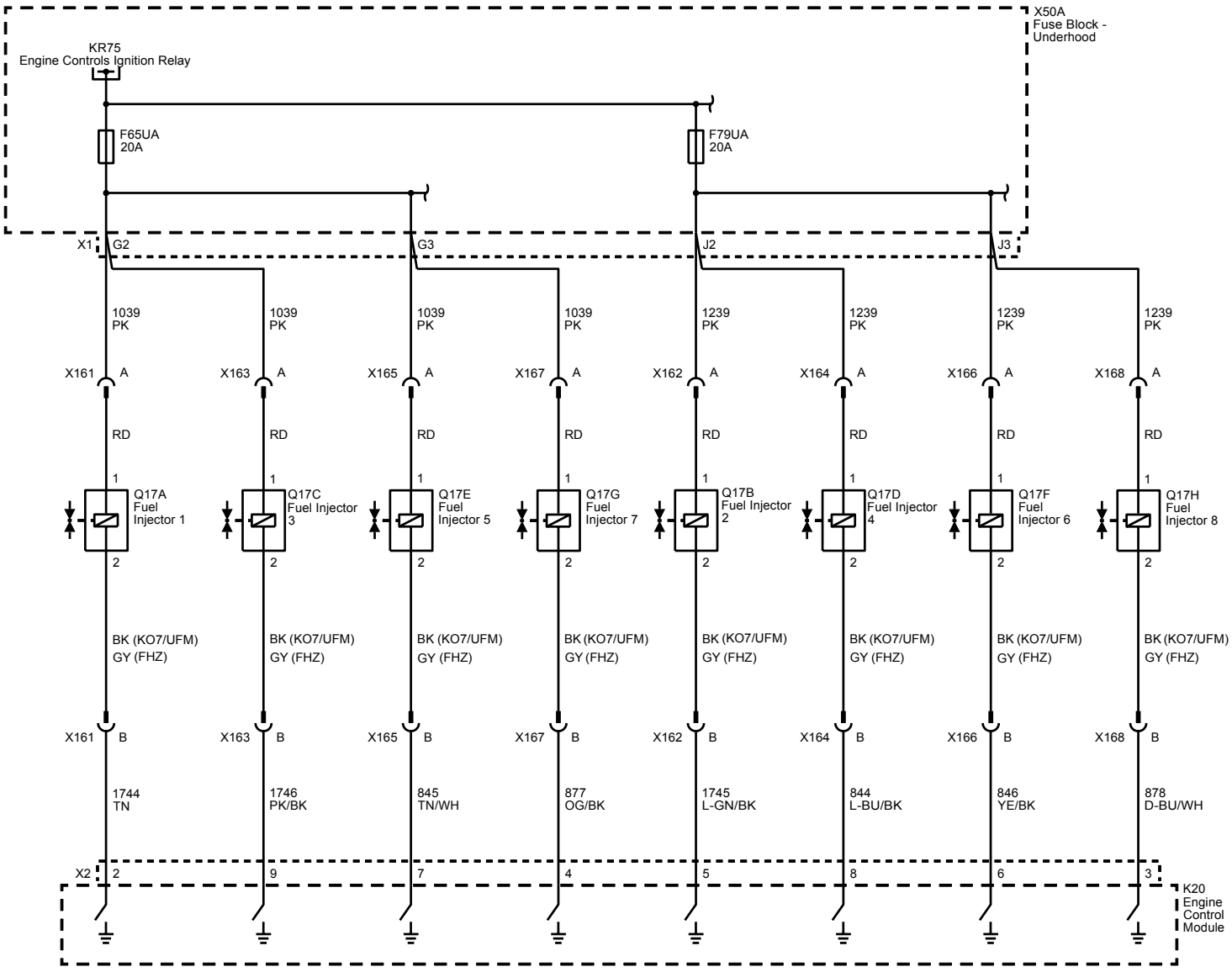

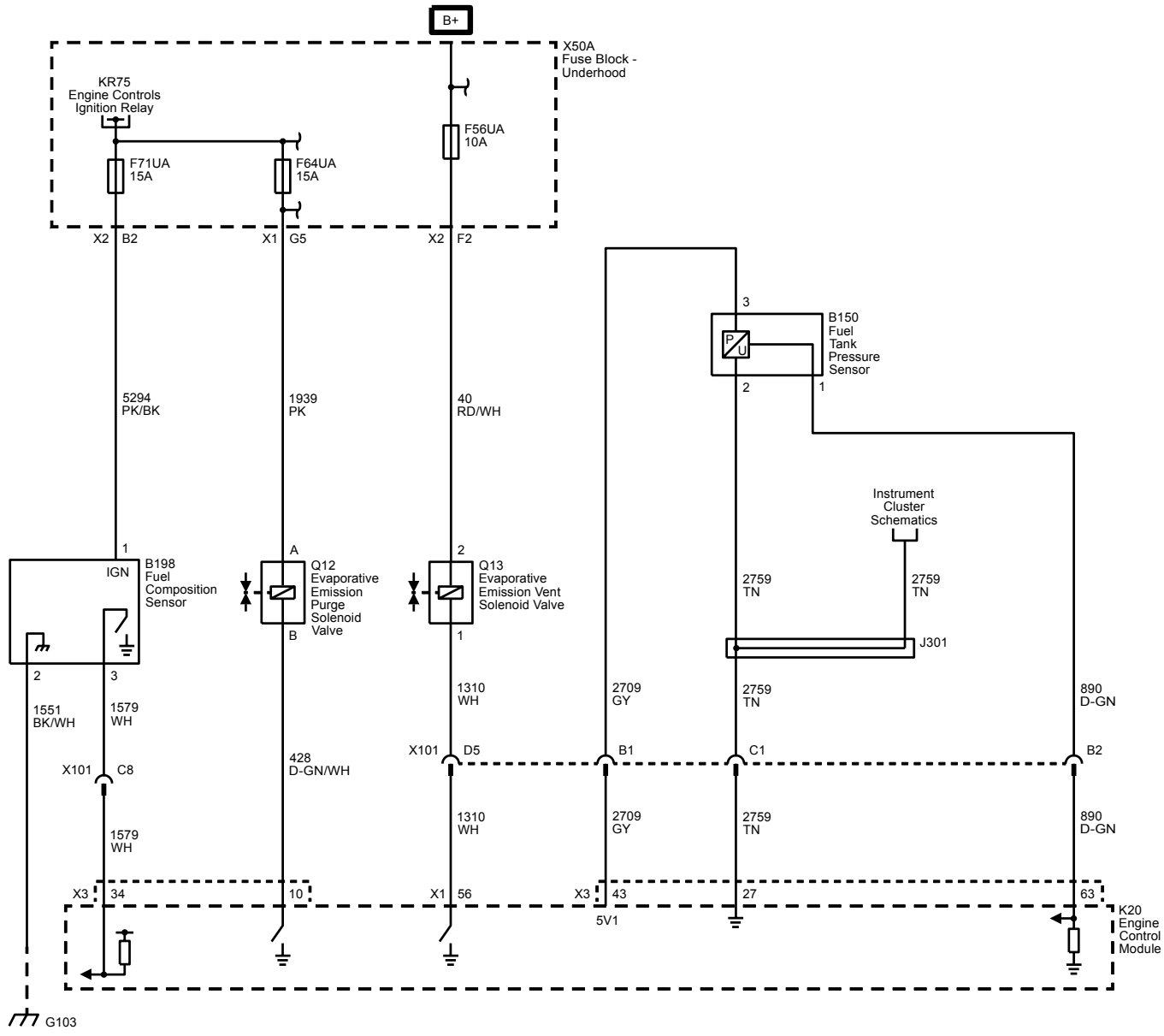
B+
X50A
Fuse Block -
Underhood
KR75
Engine Controls
Ignition Relay
F71UA
15A
F64UA
15A
F56UA
10A
X2 B2
X1 G5
X2 F2
5294
PK/BK
1939
PK
40
RD/WH
1
IGN
B198
Fuel
Composition
Sensor
A
Q12
Evaporative
Emission
Purge
Solenoid
Valve
B
2
Q13
Evaporative
Emission Vent
Solenoid Valve
1
3
B150
Fuel
Tank
Pressure
Sensor
2
1
Instrument
Cluster
Schematics
2759
TN
2759
TN
J301
2
3
1551
BK/WH
1579
WH
1310
WH
2709
GY
2759
TN
890
D-GN
X101 C8
428
D-GN/WH
X101 D5
B1
C1
B2
1579
WH
1310
WH
2709
GY
2759
TN
890
D-GN
X3 34
10
X1 56
X3 43
27
63
5V1
K20
Engine
Control
Module
G103

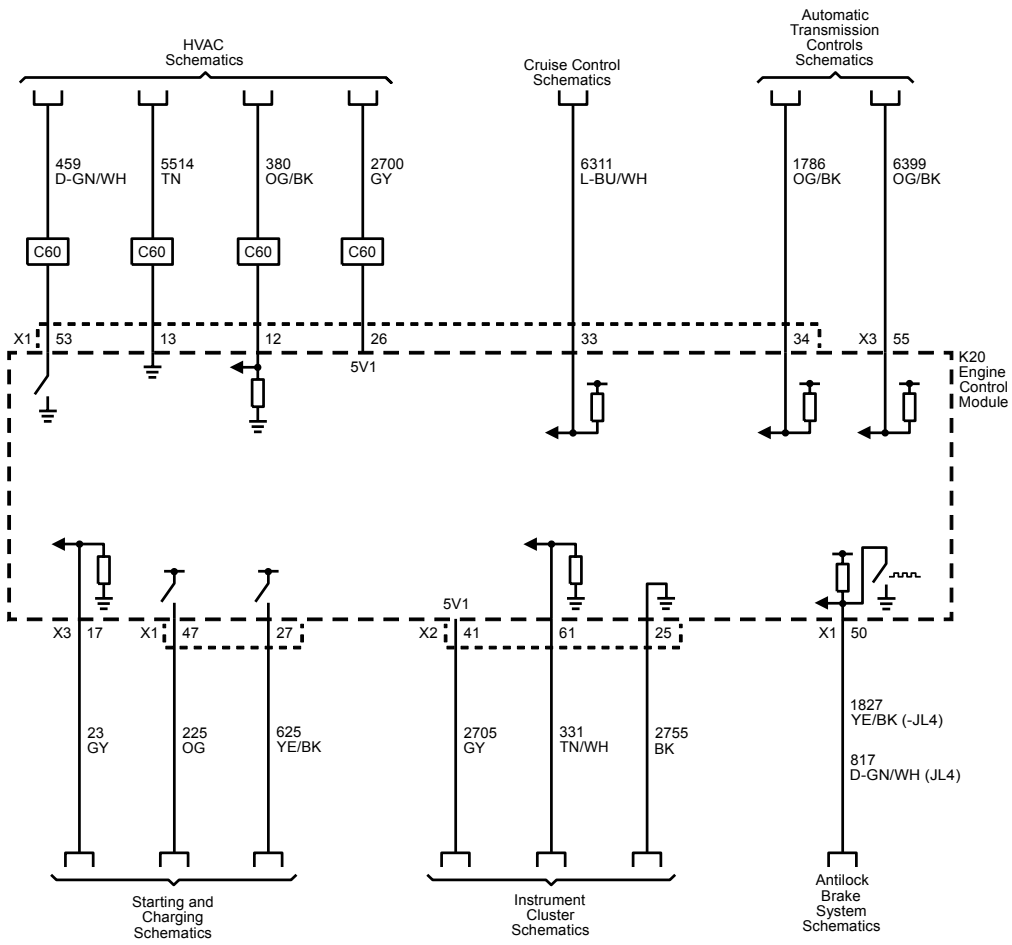
HVAC Schematics
Cruise Control Schematics
Automatic Transmission Controls Schematics
459 D-GN/WH
5514 TN
380 OG/BK
2700 GY
6311 L-BU/WH
1786 OG/BK
6399 OG/BK
C60
X1 53 13 12 26 33 34 X3 55
5V1
K20 Engine Control Module
X3 17 X1 47 27 X2 41 61 25 X1 50
5V1
23 GY
225 OG
625 YE/BK
2705 GY
331 TN/WH
2755 BK
1827 YE/BK (-JL4)
817 D-GN/WH (JL4)
Starting and Charging Schematics
Instrument Cluster Schematics
Antilock Brake System Schematics

Engine/Propulsion

Engine Controls and Fuel - 6.6L (LGH)

Schematic and Routing Diagrams

Engine Controls Schematics (LGH)

Module Power, Ground, Serial Data and MIL

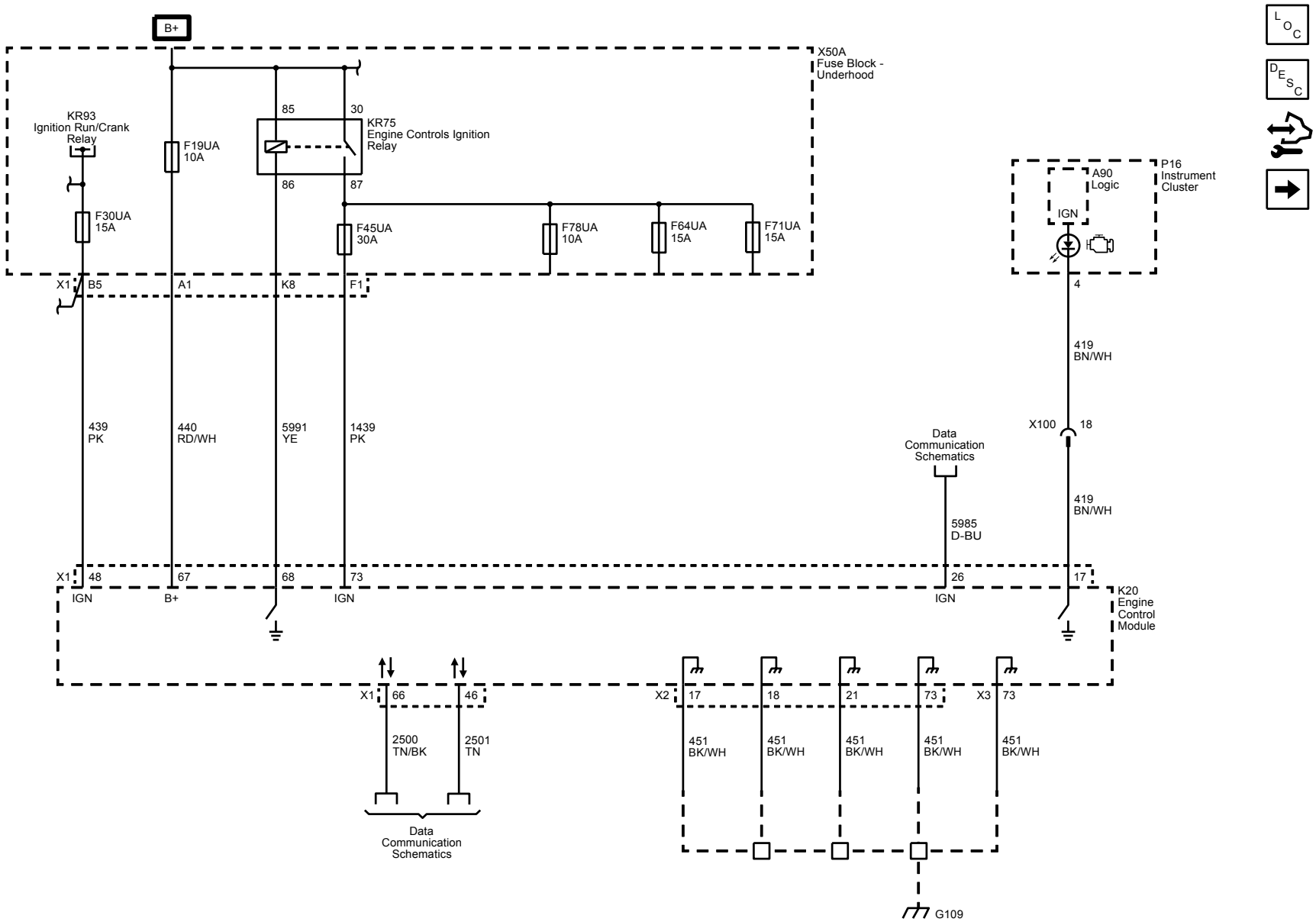

5V1, 5V2, and Low Reference Bus (1 of 3)

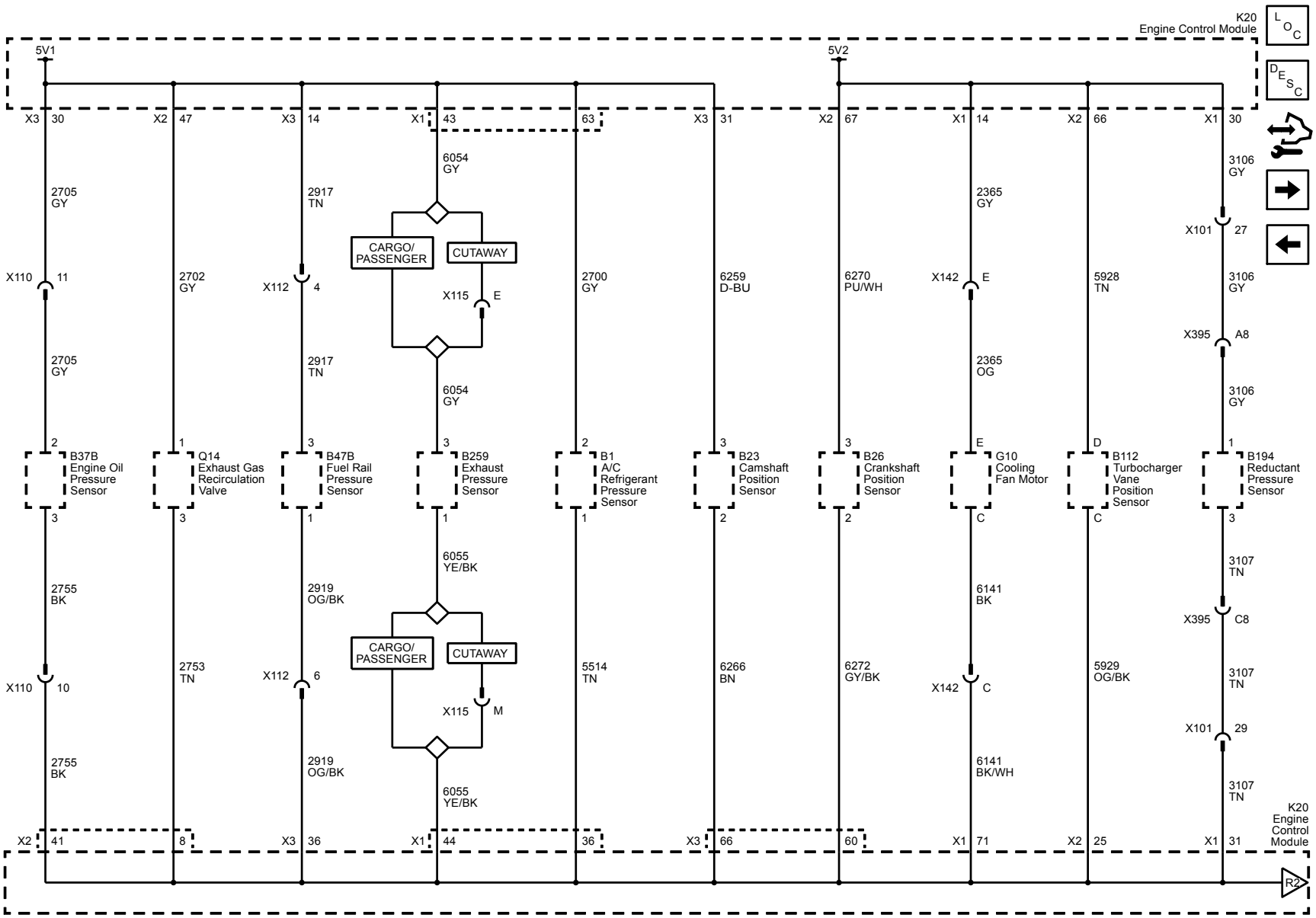

5V3, 5V4, and Low Reference Bus (2 of 3)

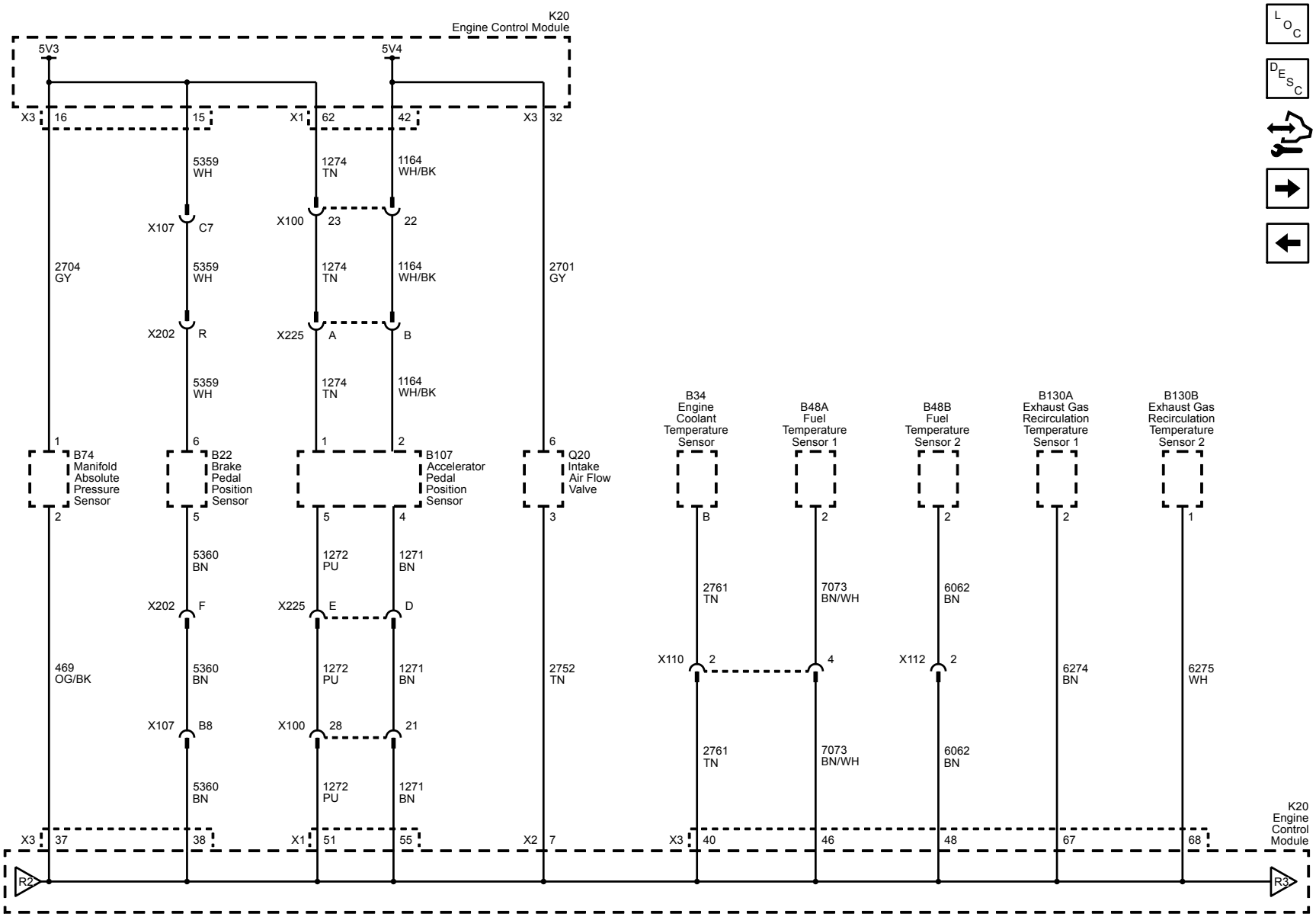

Low Reference Bus (3 of 3)

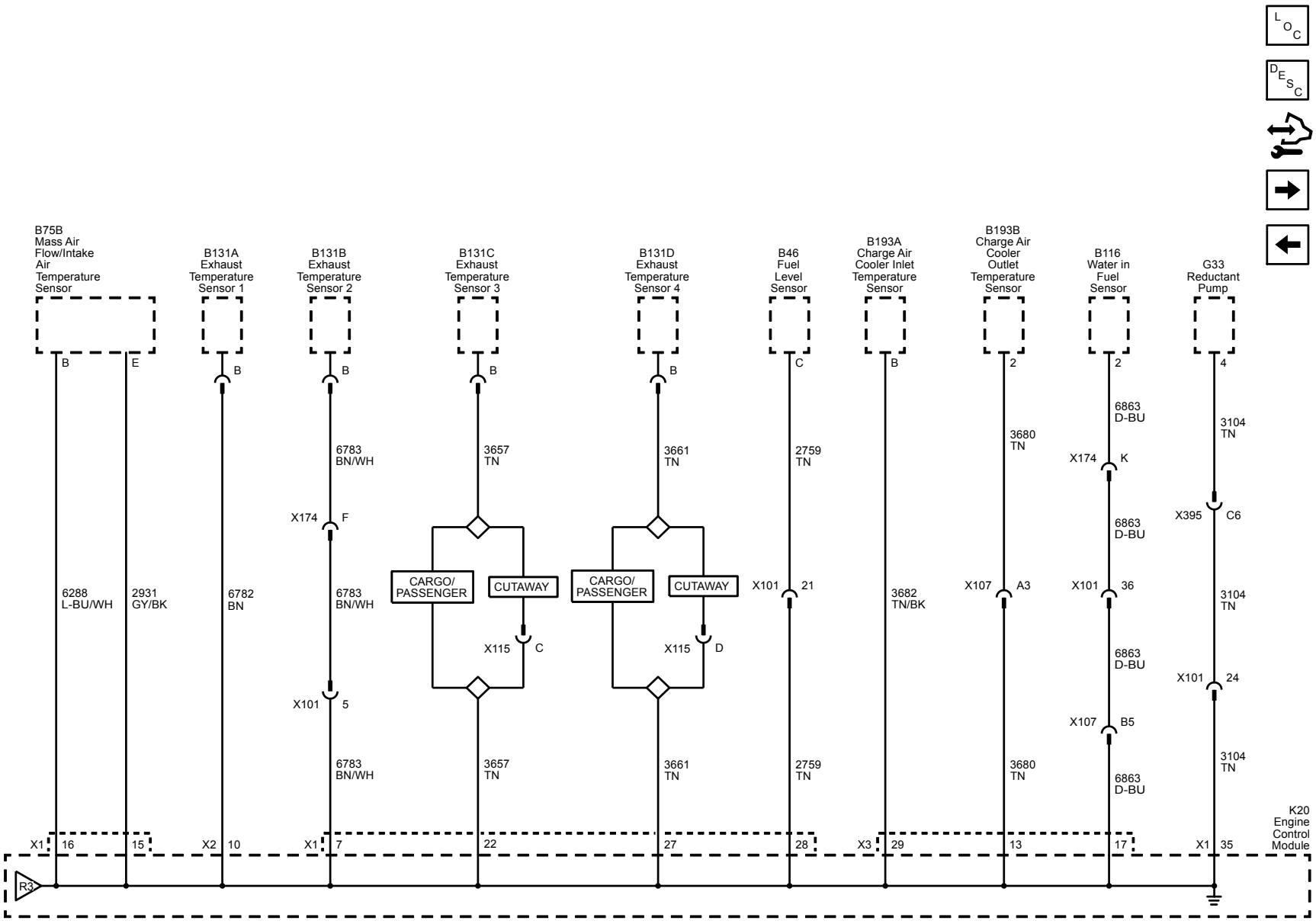

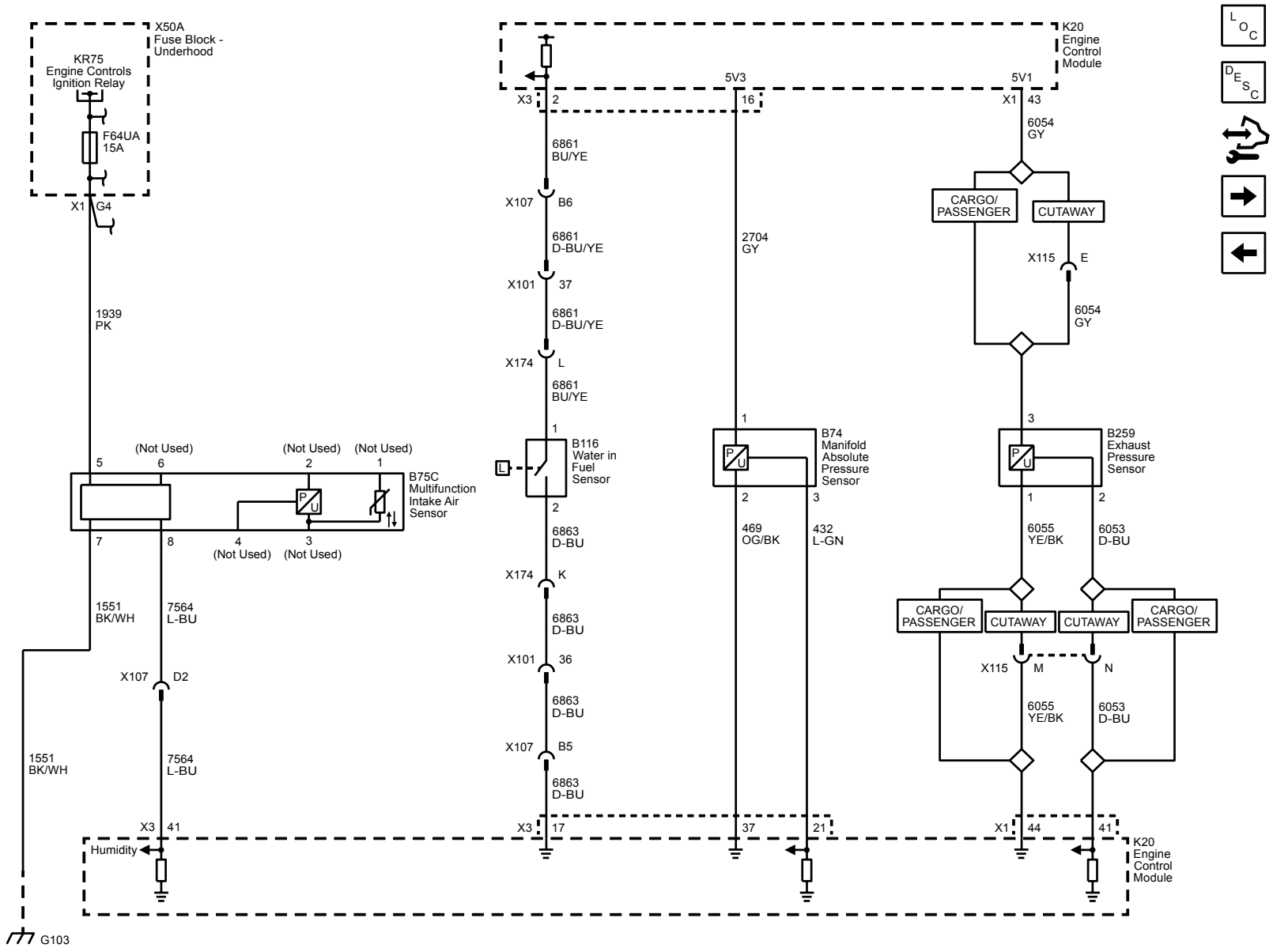
X50A
Fuse Block - Underhood
KR75
Engine Controls Ignition Relay
F64UA
15A
X1 G4
1939
PK
(Not Used)
(Not Used)
(Not Used)
5 6 2 1
B75C
Multifunction Intake Air Sensor
7 8 4 3
(Not Used)
(Not Used)
1551
BK/WH
7564
L-BU
X107 D2
1551
BK/WH
7564
L-BU
X3 41
Humidity
G103
K20
Engine Control Module
5V3
5V1
X3 2
16
X1 43
6054
GY
6861
BU/YE
X107 B6
6861
D-BU/YE
X101 37
6861
D-BU/YE
X174 L
6861
BU/YE
1
B116
Water in Fuel Sensor
2
6863
D-BU
X174 K
6863
D-BU
X101 36
6863
D-BU
X107 B5
6863
D-BU
2704
GY
1
B74
Manifold Absolute Pressure Sensor
2 3
469
OG/BK
432
L-GN
CARGO/ PASSENGER
CUTAWAY
X115 E
6054
GY
3
B259
Exhaust Pressure Sensor
1 2
6055
YE/BK
6053
D-BU
CARGO/ PASSENGER
CUTAWAY
CUTAWAY
CARGO/ PASSENGER
X115 M N
6055
YE/BK
6053
D-BU
X3 17
37
21
X1 44
41
K20
Engine Control Module

Engine Data Sensors - Mass Air Flow, Intake Air, and Temperature

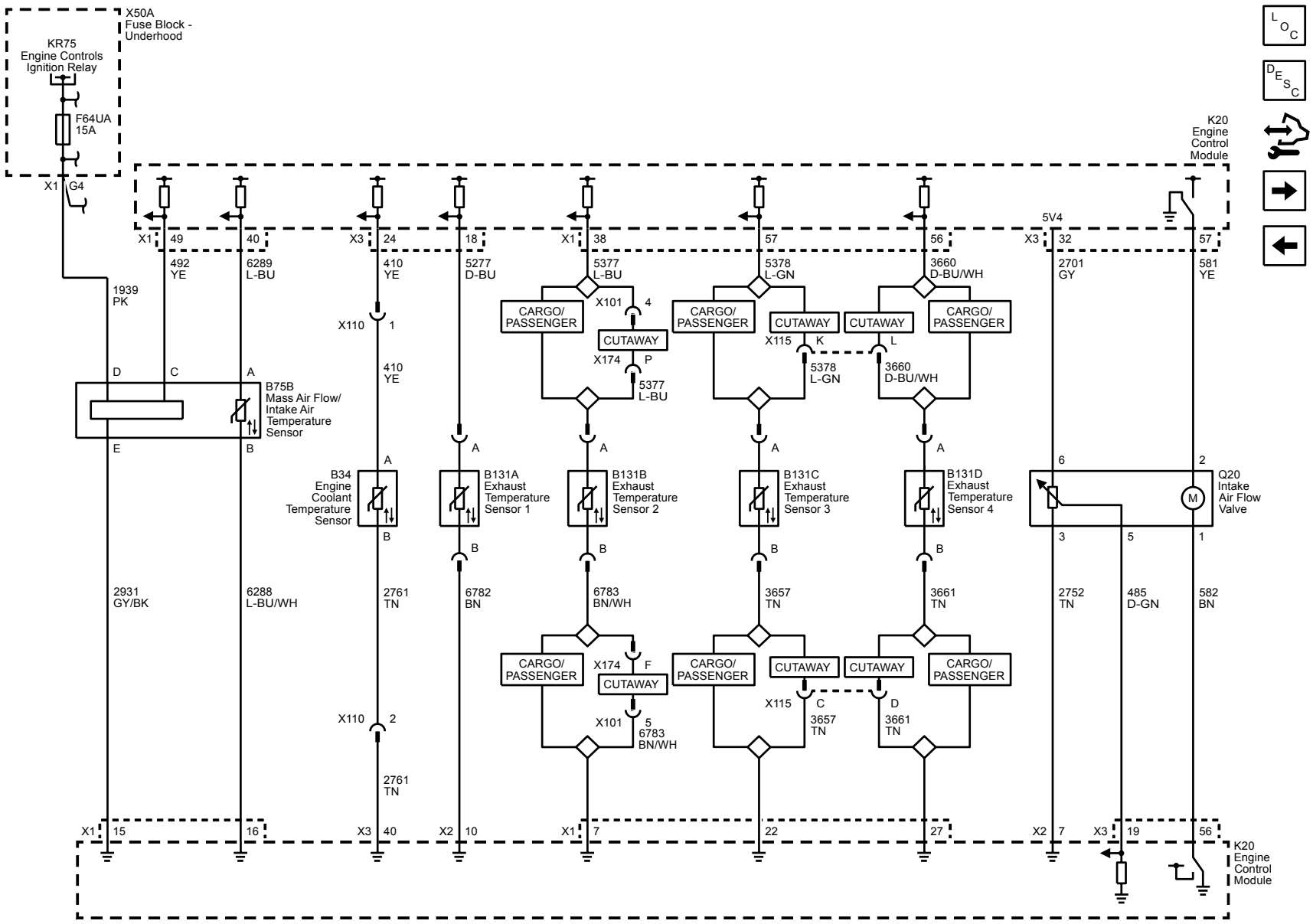

Engine Data Sensors - EGR and Turbocharger Controls

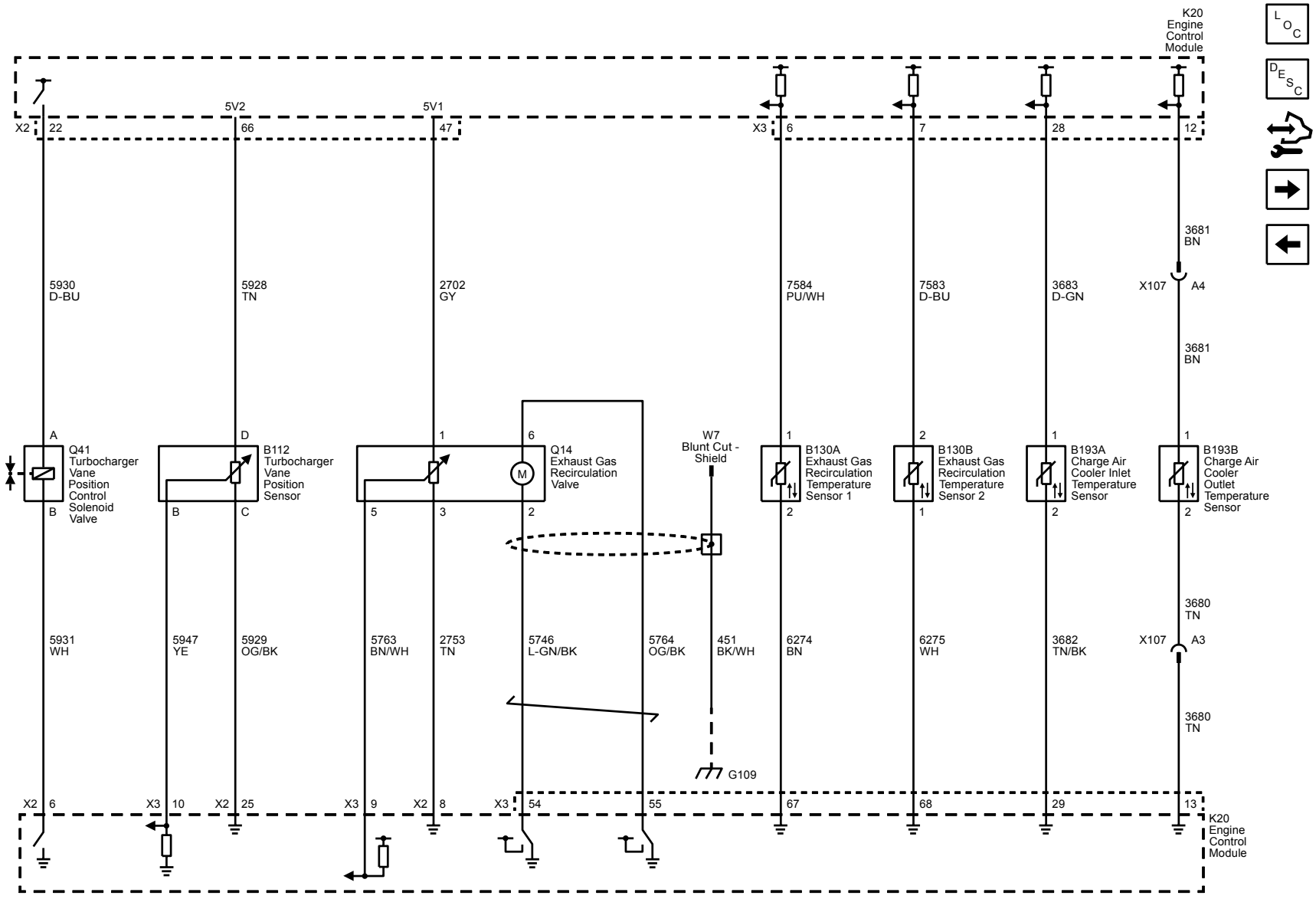

Engine Data Sensors - Pedal Position and Injector Timing

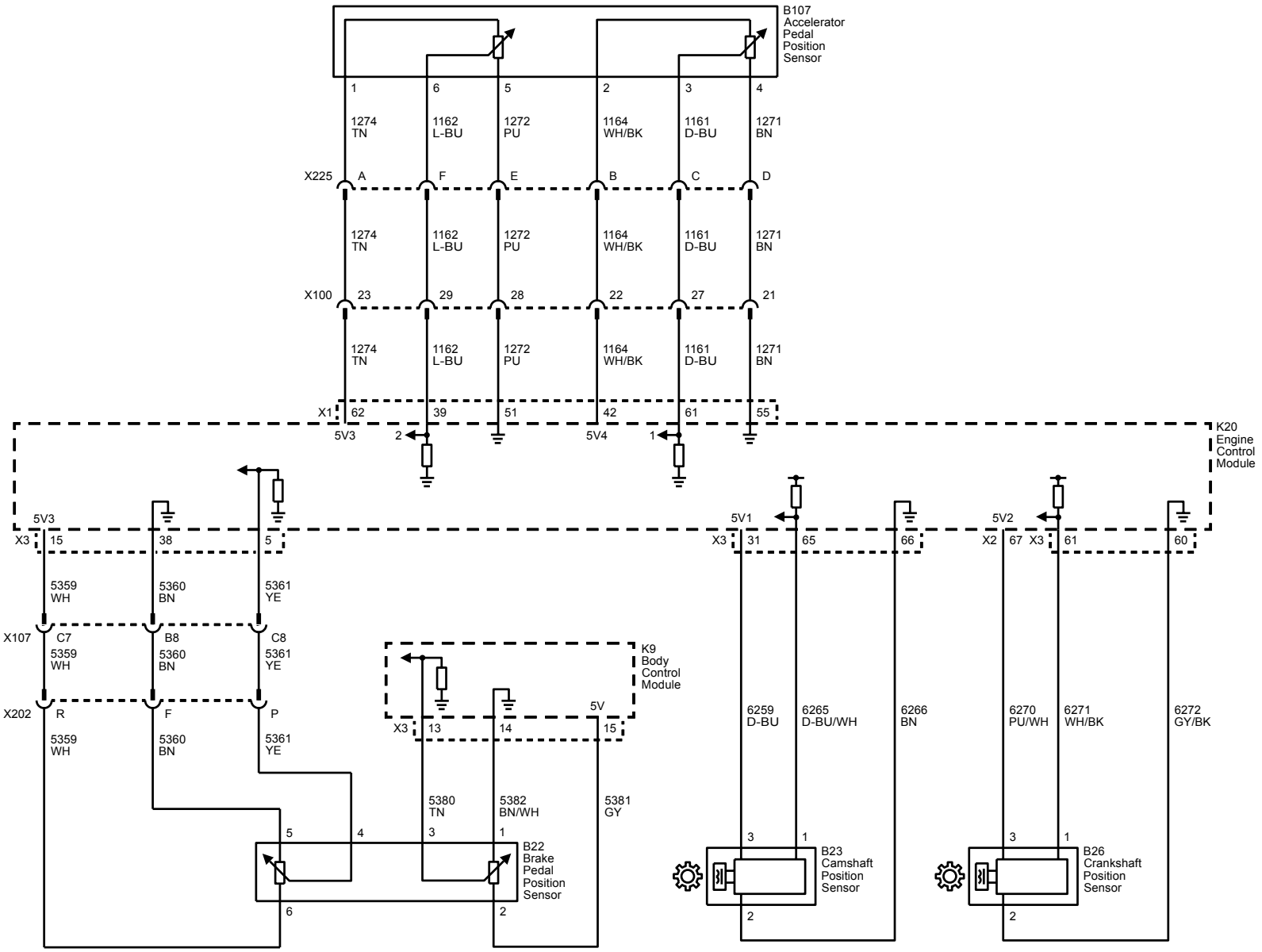

Engine Data Sensors - Glow Plug Controls and Intake Air Heater

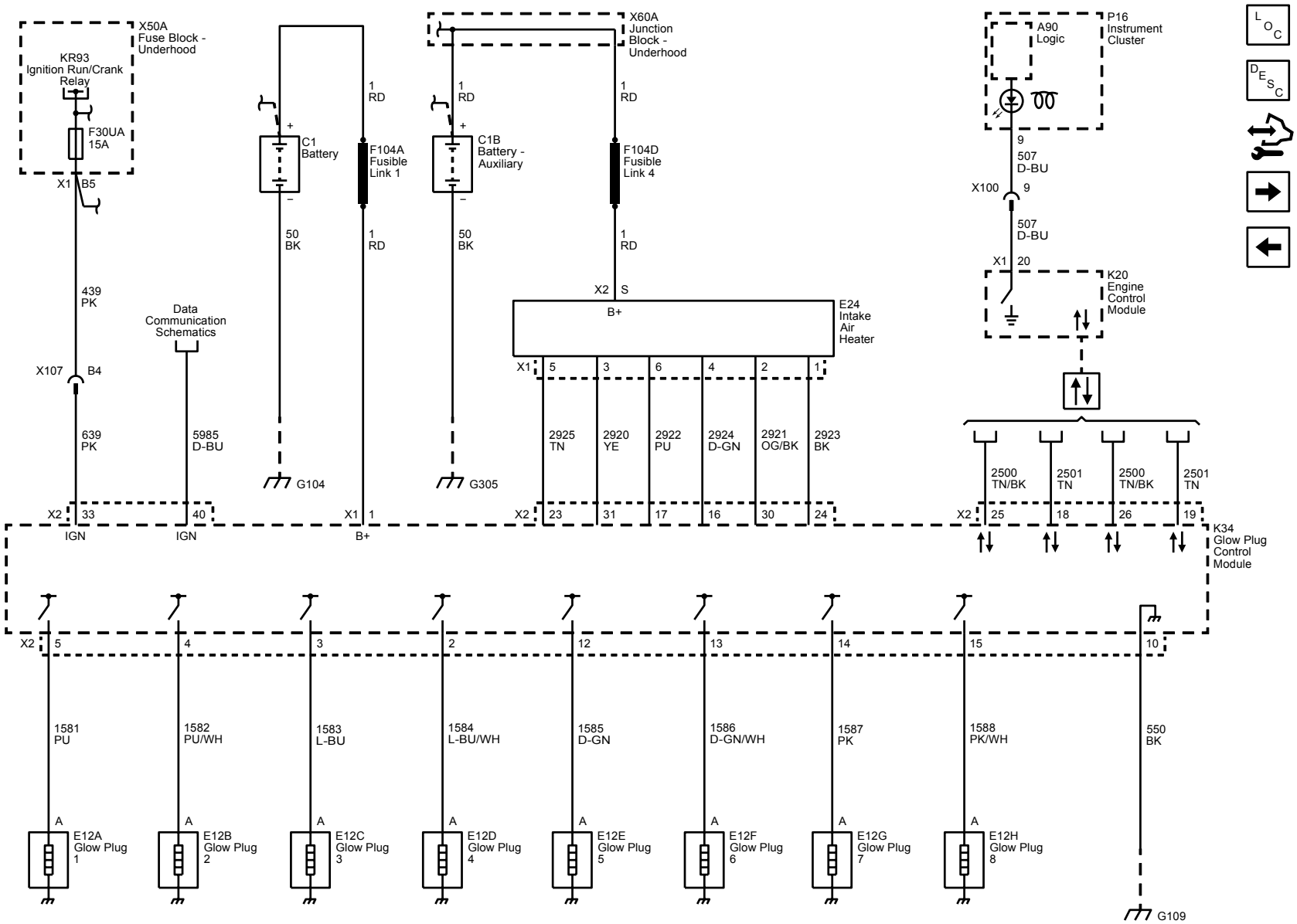

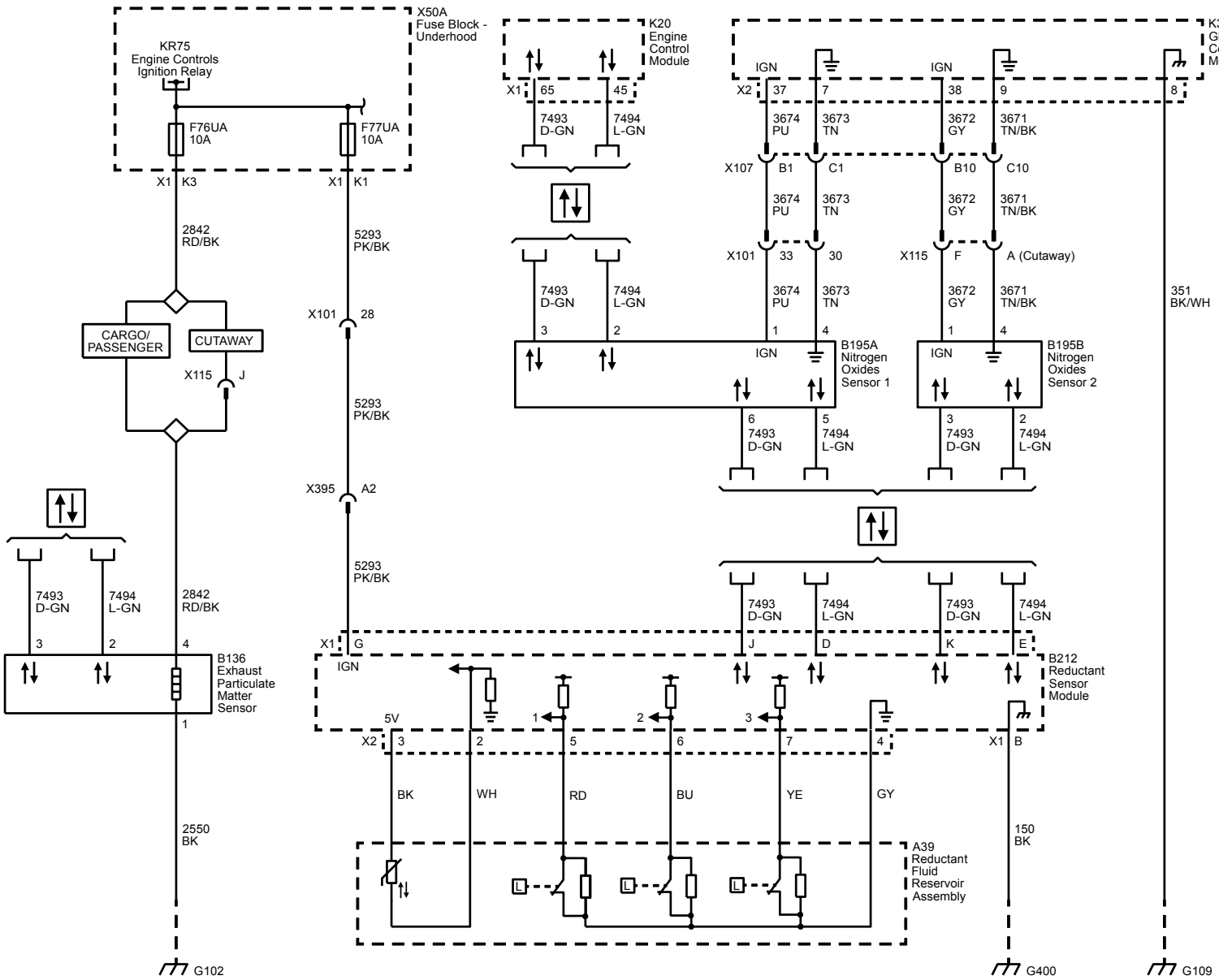
X50A
Fuse Block - Underhood
KR75
Engine Controls
Ignition Relay
F76UA
10A
F77UA
10A
X1 K3
X1 K1
2842
RD/BK
5293
PK/BK
CARGO/
PASSENGER
CUTAWAY
X115 J
X101 28
X395 A2
7493
D-GN
7494
L-GN
3
2
4
B136
Exhaust
Particulate
Matter
Sensor
1
2550
BK
G102
K20
Engine
Control
Module
X1 65
45
7493
D-GN
7494
L-GN
3
2
6
7493
D-GN
5
7494
L-GN
K34
Glow Plug
Control
Module
IGN
X2 37
7
38
9
8
3674
PU
3673
TN
3672
GY
3671
TN/BK
X107 B1
C1
B10
C10
X101 33
30
X115 F
A (Cutaway)
1
4
B195A
Nitrogen
Oxides
Sensor 1
B195B
Nitrogen
Oxides
Sensor 2
351
BK/WH
X1 G
J
D
K
E
B212
Reductant
Sensor
Module
5V
X2 3
2
1
5
2
6
3
7
4
X1 B
BK
WH
RD
BU
YE
GY
150
BK
G400
G109
A39
Reductant
Fluid
Reservoir
Assembly

Fuel Controls - Fuel Pump, Temperature and Pressure Controls

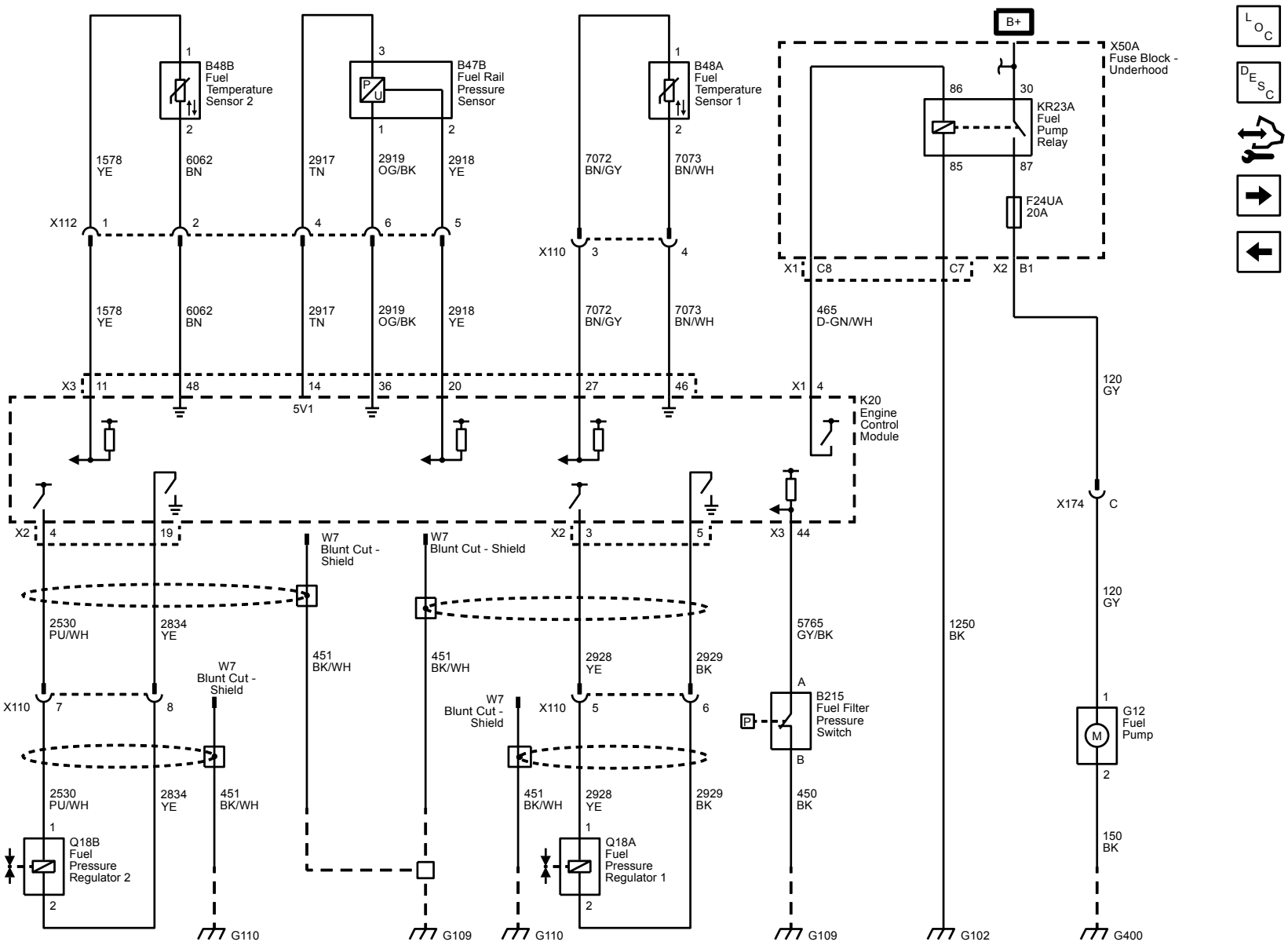

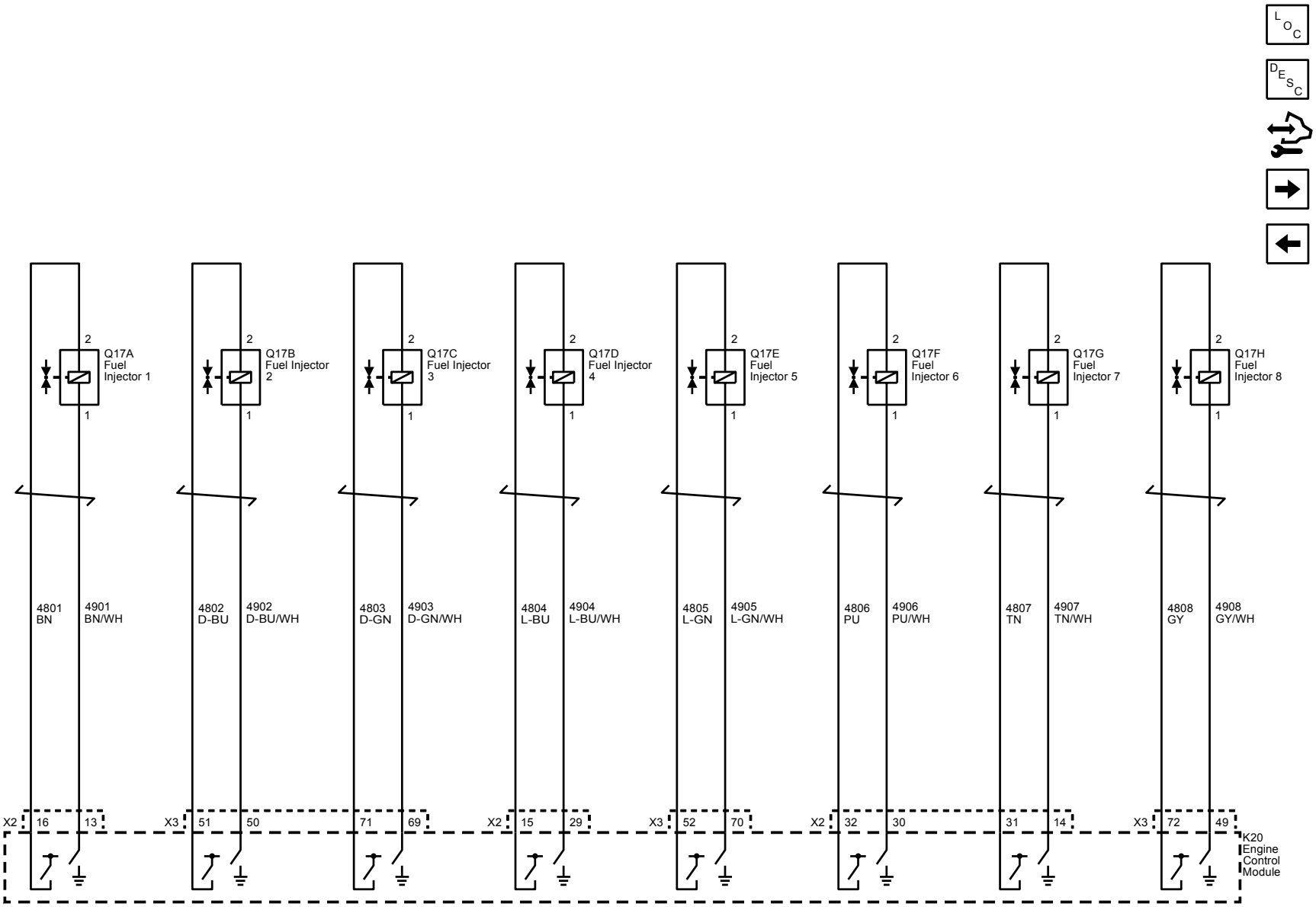
L OC
DES C
Q17A Fuel Injector 1
Q17B Fuel Injector 2
Q17C Fuel Injector 3
Q17D Fuel Injector 4
Q17E Fuel Injector 5
Q17F Fuel Injector 6
Q17G Fuel Injector 7
Q17H Fuel Injector 8
2
1
4801 BN
4901 BN/WH
4802 D-BU
4902 D-BU/WH
4803 D-GN
4903 D-GN/WH
4804 L-BU
4904 L-BU/WH
4805 L-GN
4905 L-GN/WH
4806 PU
4906 PU/WH
4807 TN
4907 TN/WH
4808 GY
4908 GY/WH
X2 16 13
X3 51 50 71 69
X2 15 29
X3 52 70
X2 32 30 31 14
X3 72 49
K20 Engine Control Module

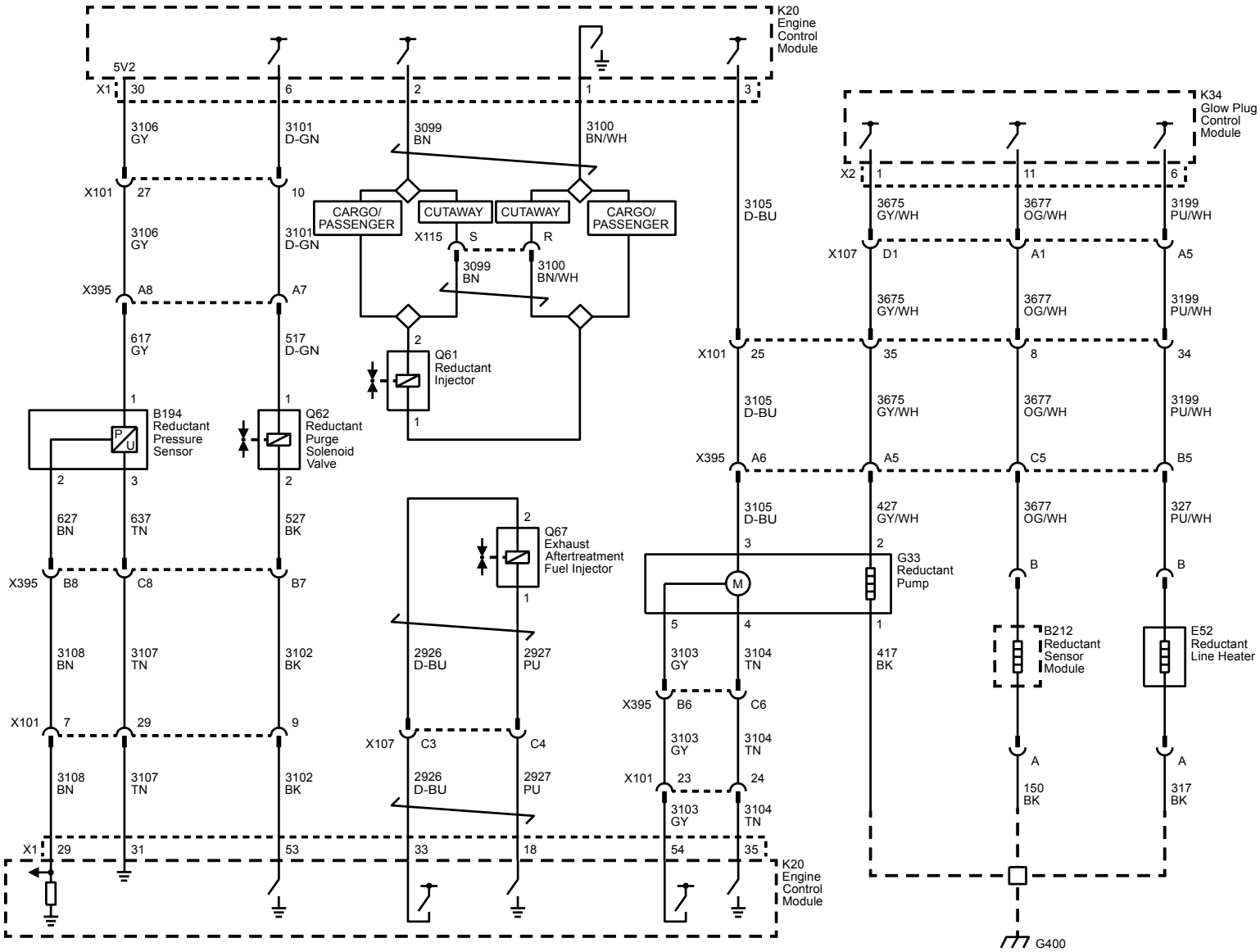
K20
Engine
Control
Module
5V2
X1
30
6
2
1
3
3106
GY
3101
D-GN
3099
BN
3100
BN/WH
X101
27
10
CARGO/
PASSENGER
CUTAWAY
CUTAWAY
CARGO/
PASSENGER
X115
S
R
3106
GY
3101
D-GN
3099
BN
3100
BN/WH
X395
A8
A7
2
617
GY
517
D-GN
Q61
Reductant
Injector
1
1
1
B194
Reductant
Pressure
Sensor
Q62
Reductant
Purge
Solenoid
Valve
2
3
2
627
BN
637
TN
527
BK
X395
B8
C8
B7
3108
BN
3107
TN
3102
BK
X101
7
29
9
2
Q67
Exhaust
Aftertreatment
Fuel Injector
1
2926
D-BU
2927
PU
X107
C3
C4
2926
D-BU
2927
PU
X1
29
31
53
33
18
54
35
K20
Engine
Control
Module
3105
D-BU
X101
25
3105
D-BU
X395
A6
3105
D-BU
3
M
5
4
3103
GY
3104
TN
X395
B6
C6
3103
GY
3104
TN
X101
23
24
3103
GY
3104
TN
K34
Glow Plug
Control
Module
X2
1
11
6
3675
GY/WH
3677
OG/WH
3199
PU/WH
X107
D1
A1
A5
3675
GY/WH
3677
OG/WH
3199
PU/WH
35
8
34
3675
GY/WH
3677
OG/WH
3199
PU/WH
A5
C5
B5
427
GY/WH
3677
OG/WH
327
PU/WH
2
G33
Reductant
Pump
1
417
BK
B
B
B212
Reductant
Sensor
Module
E52
Reductant
Line Heater
A
A
150
BK
317
BK
G400

Controlled/Monitored Subsystem References

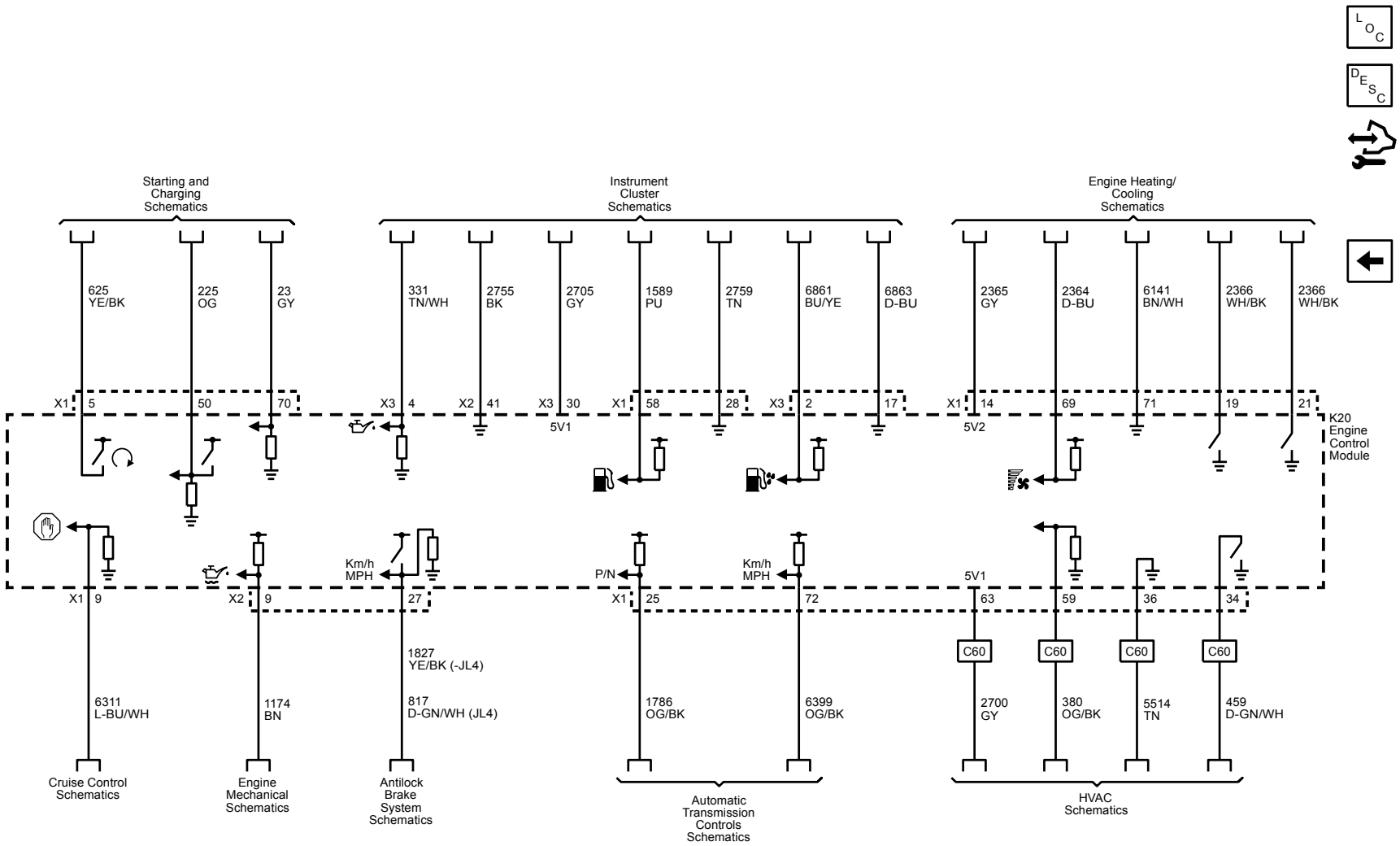

HVAC

HVAC - Manual

Schematic and Routing Diagrams

HVAC Schematics

Front Air Delivery Controls, Front Blower Motor, and EVAP Leak Detection Pump

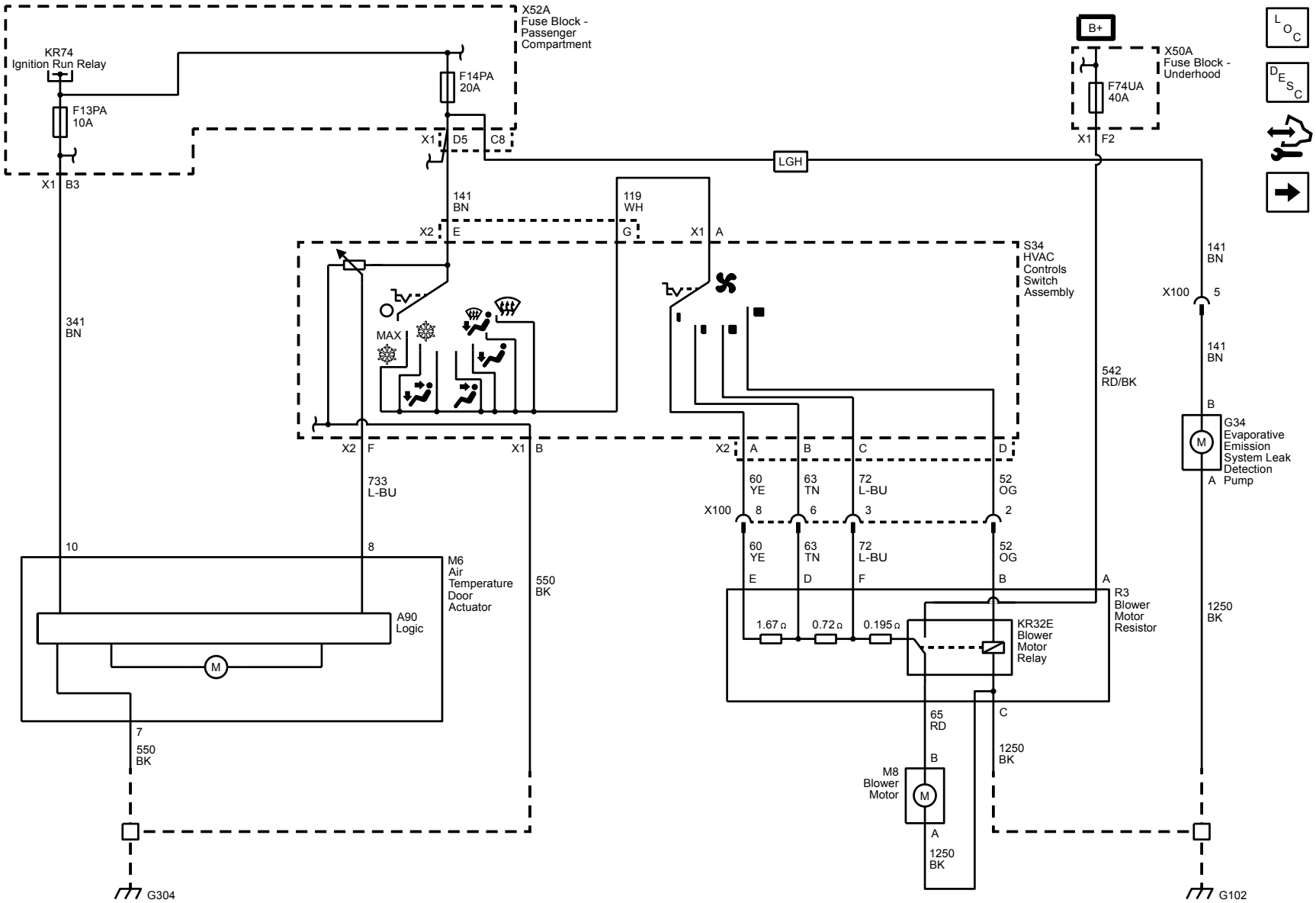

Compressor Controls (C60)

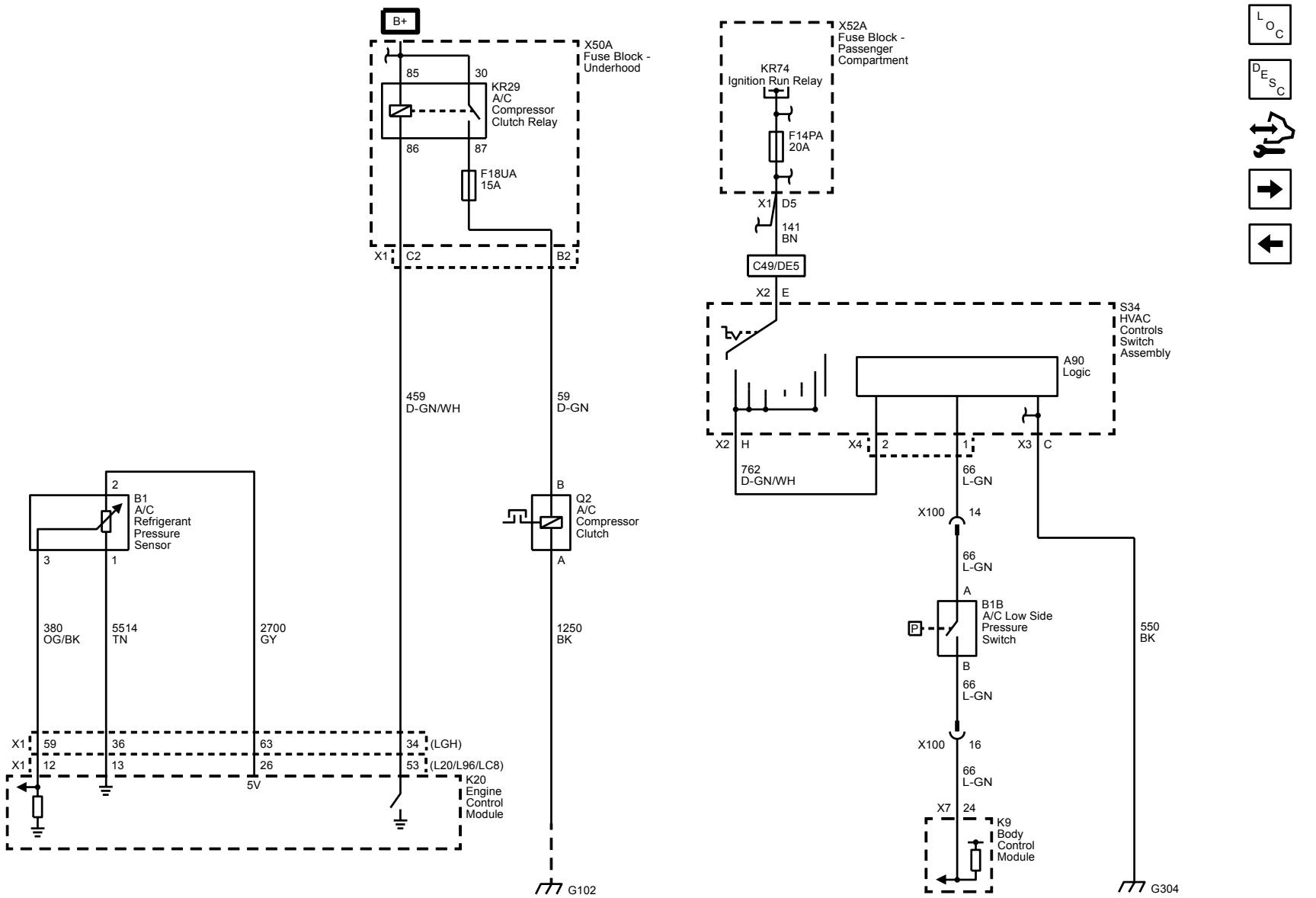

Rear HVAC without Rear Air Conditioning (C36 Without C69)

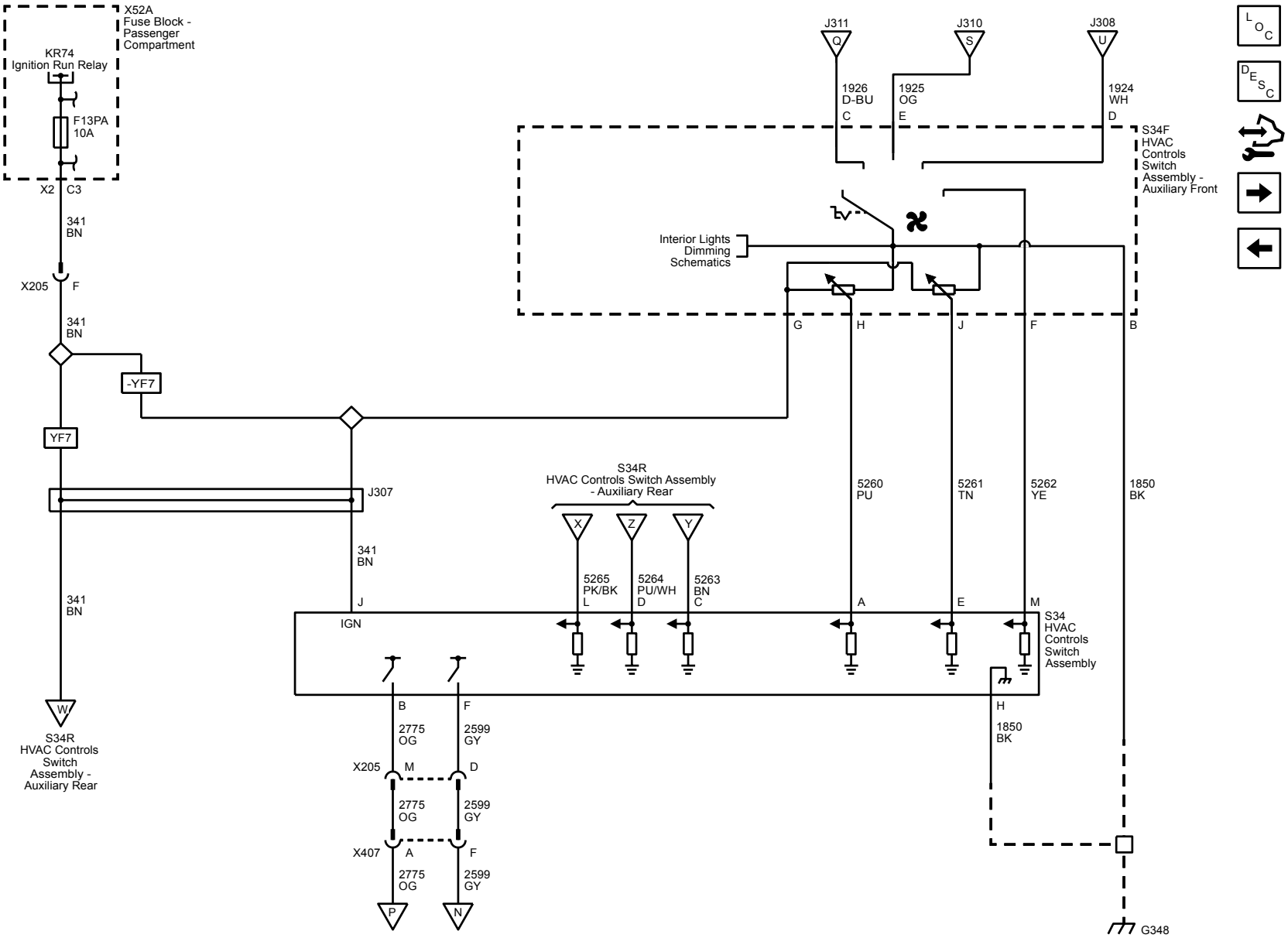

Rear HVAC with Rear Air Conditioning (C69), without Rear HVAC Controls - Air Delievery Controls

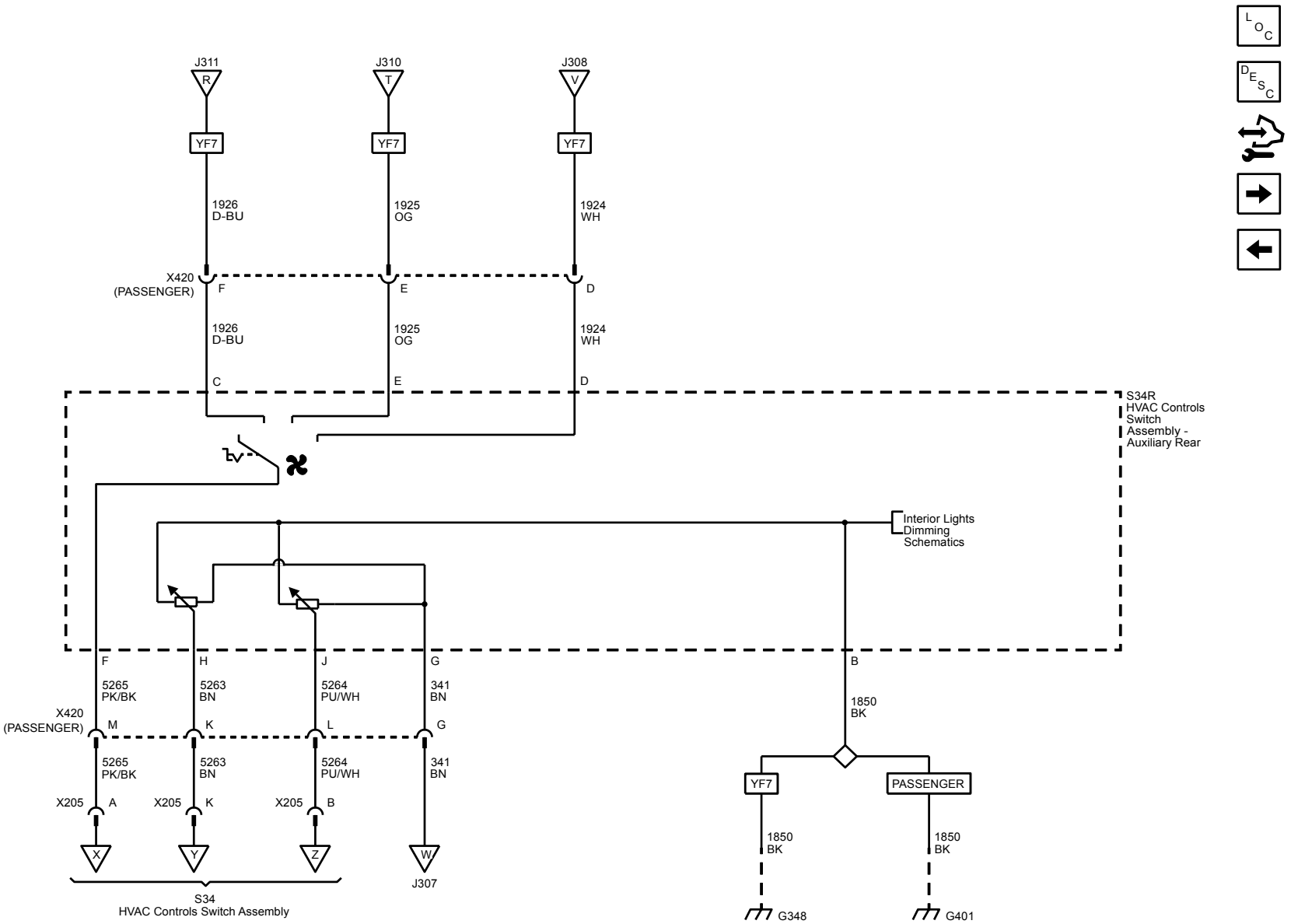

Rear HVAC with Rear Air Conditioning (C69), without Rear HVAC Controls - Front Controls

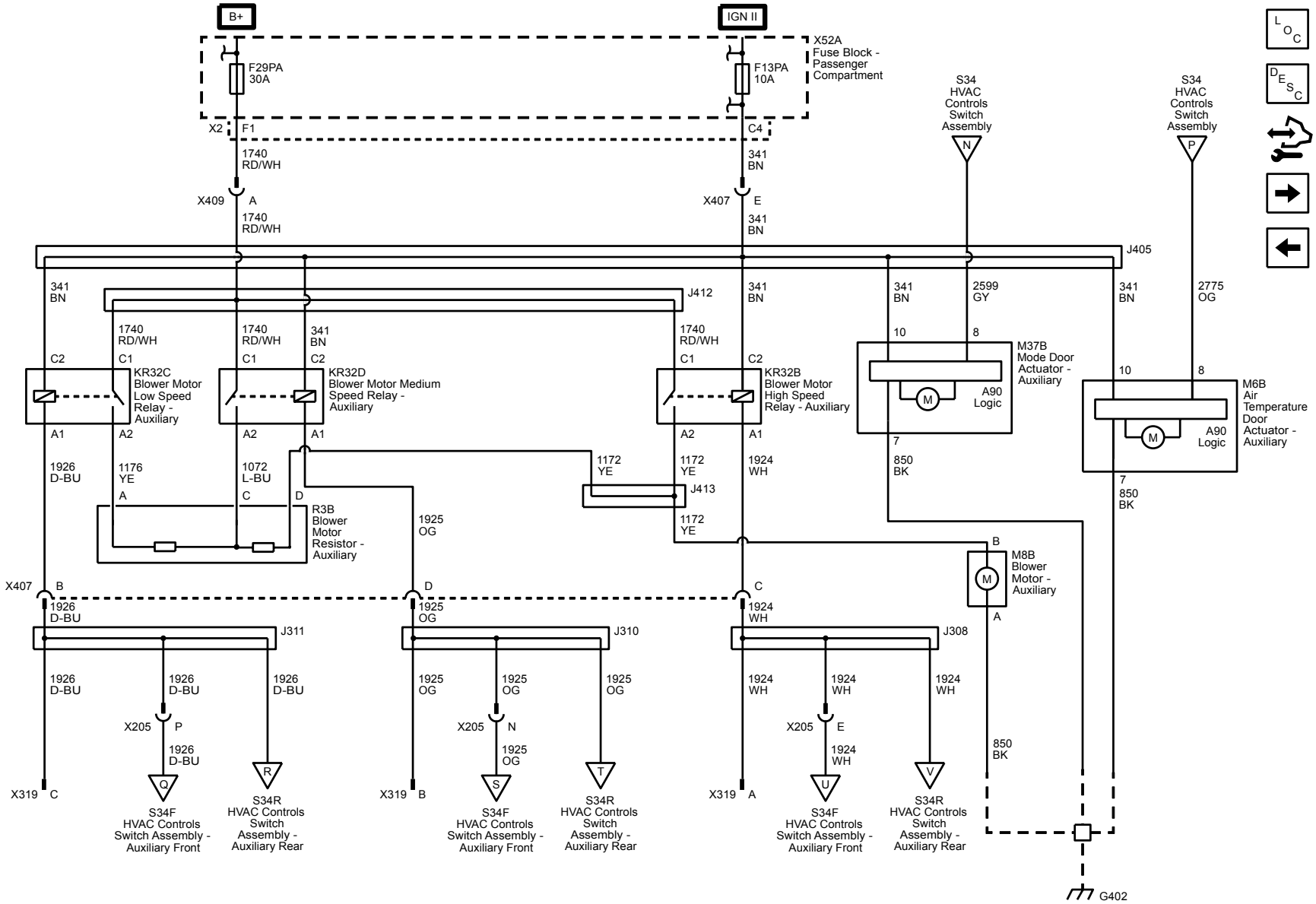

Rear HVAC with Rear Air Conditioning (C69), with Rear HVAC Controls - Air Delievery Controls

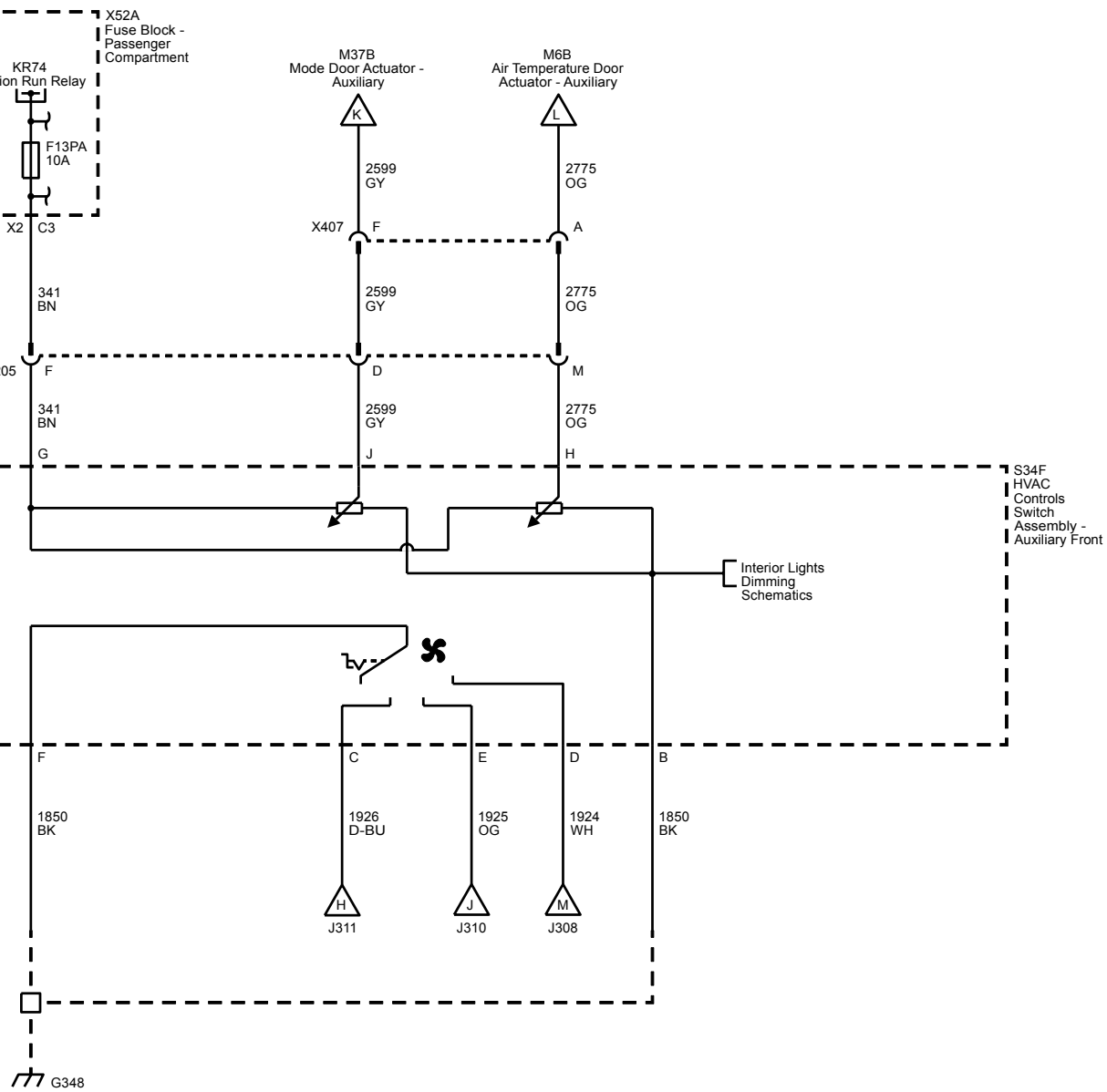

Rear HVAC with Rear Air Conditioning (C69), with Rear HVAC Controls - Front Controls

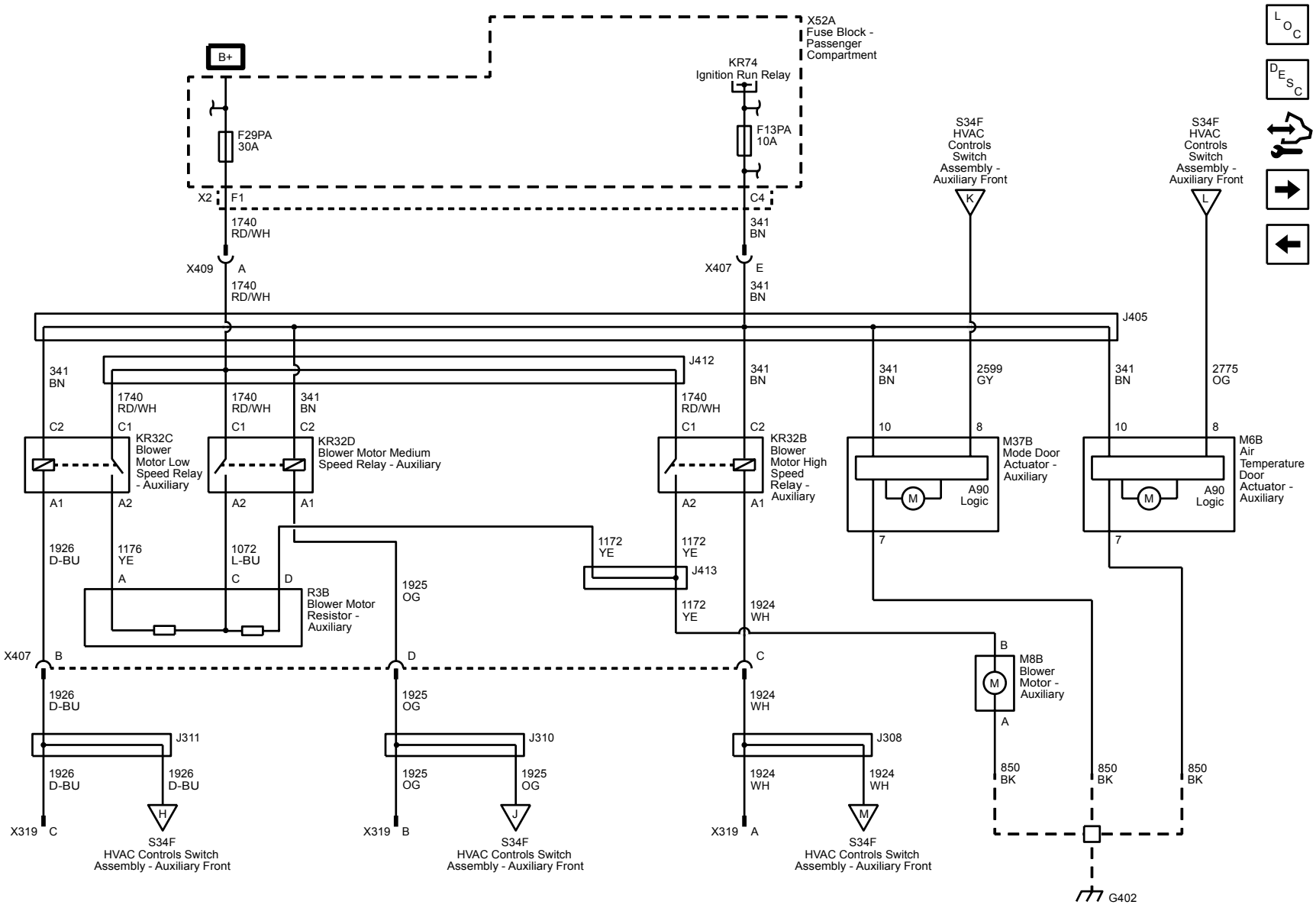

Rear HVAC with Rear Air Conditioning (C69), with Rear HVAC Controls - Rear Controls

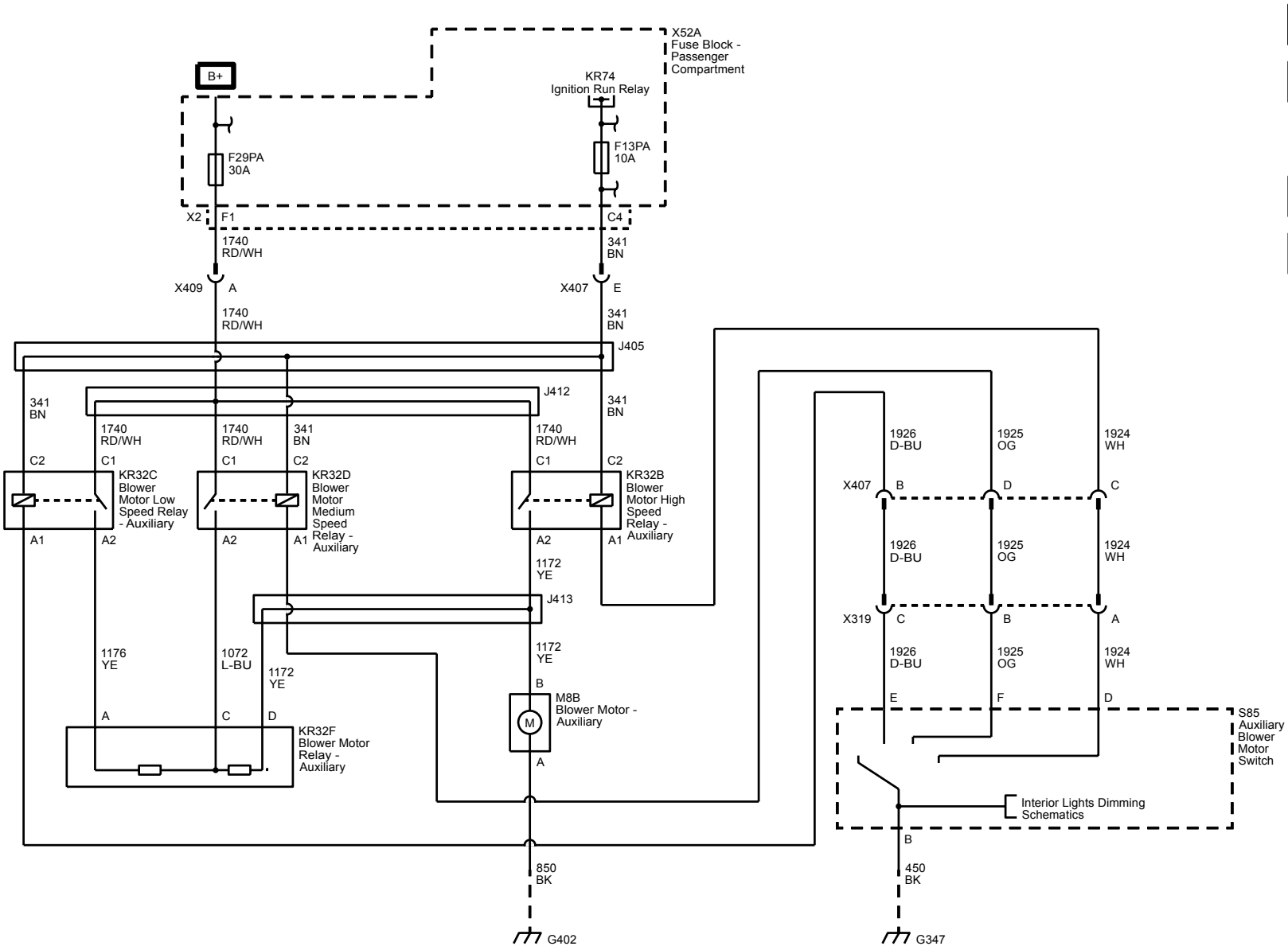

Coolant Heater (K08)

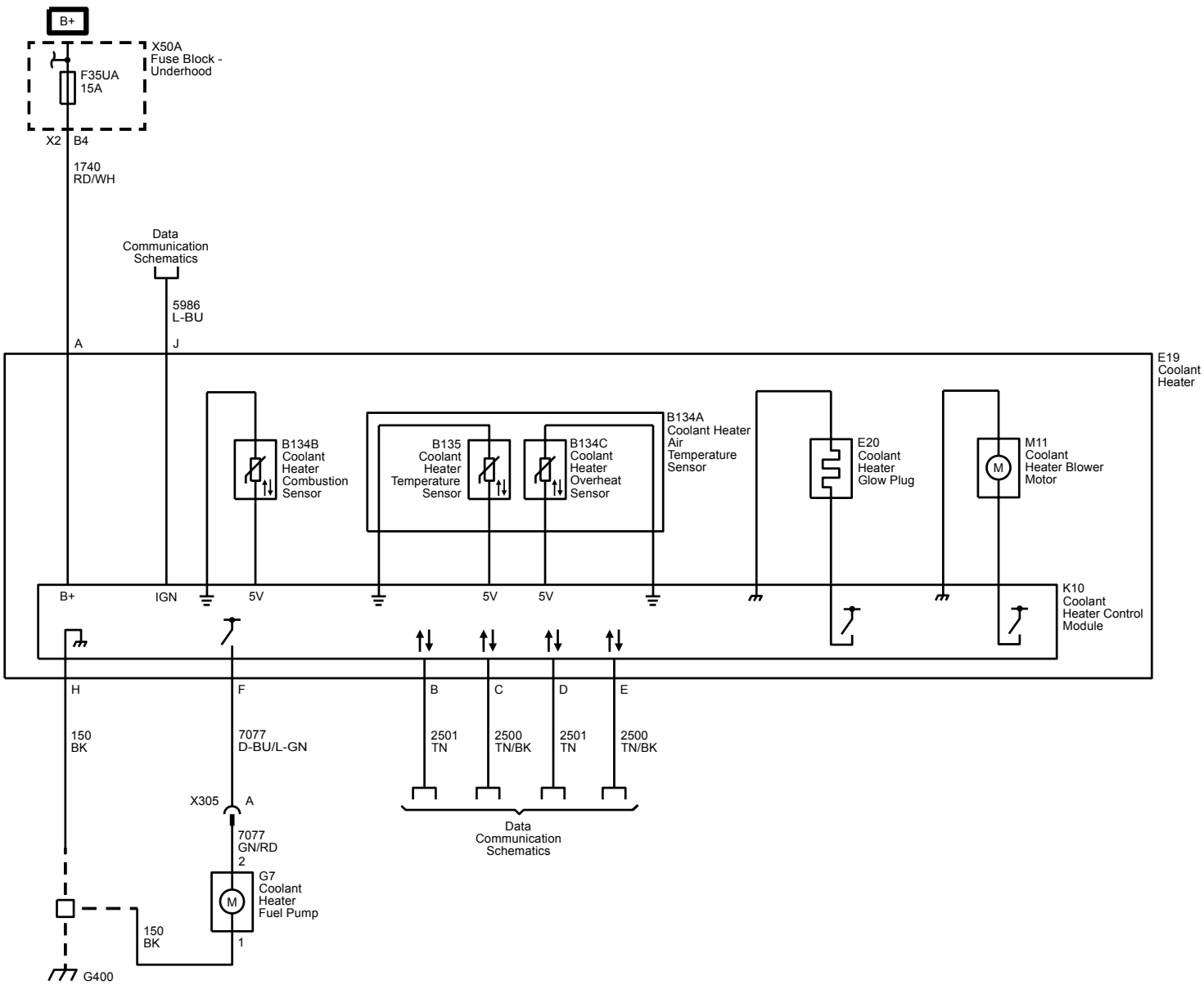

Power and Signal Distribution

Data Communications

Schematic and Routing Diagrams

Data Communication Schematics

Low Speed GMLAN

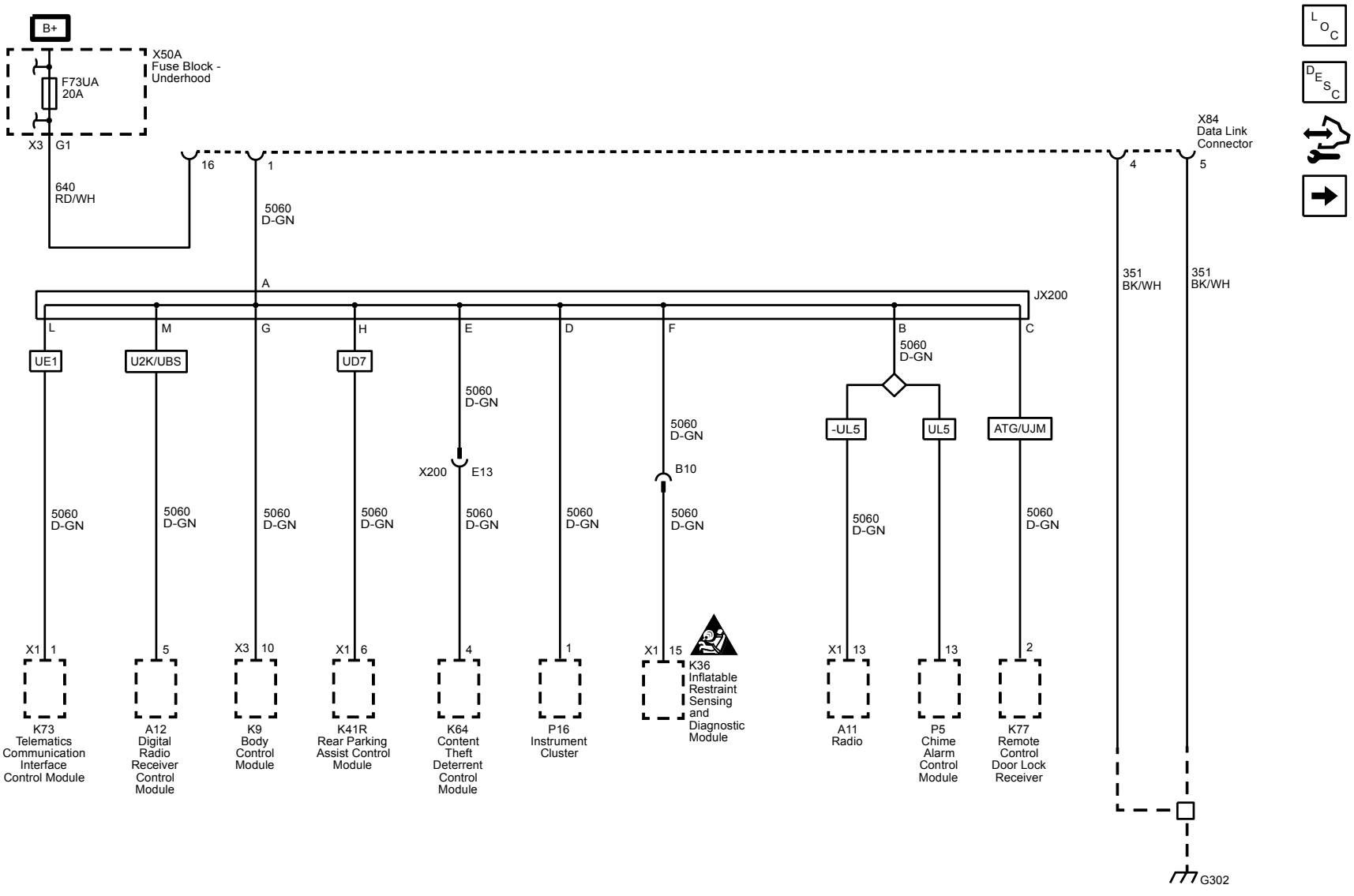

High Speed GMLAN (Gas)

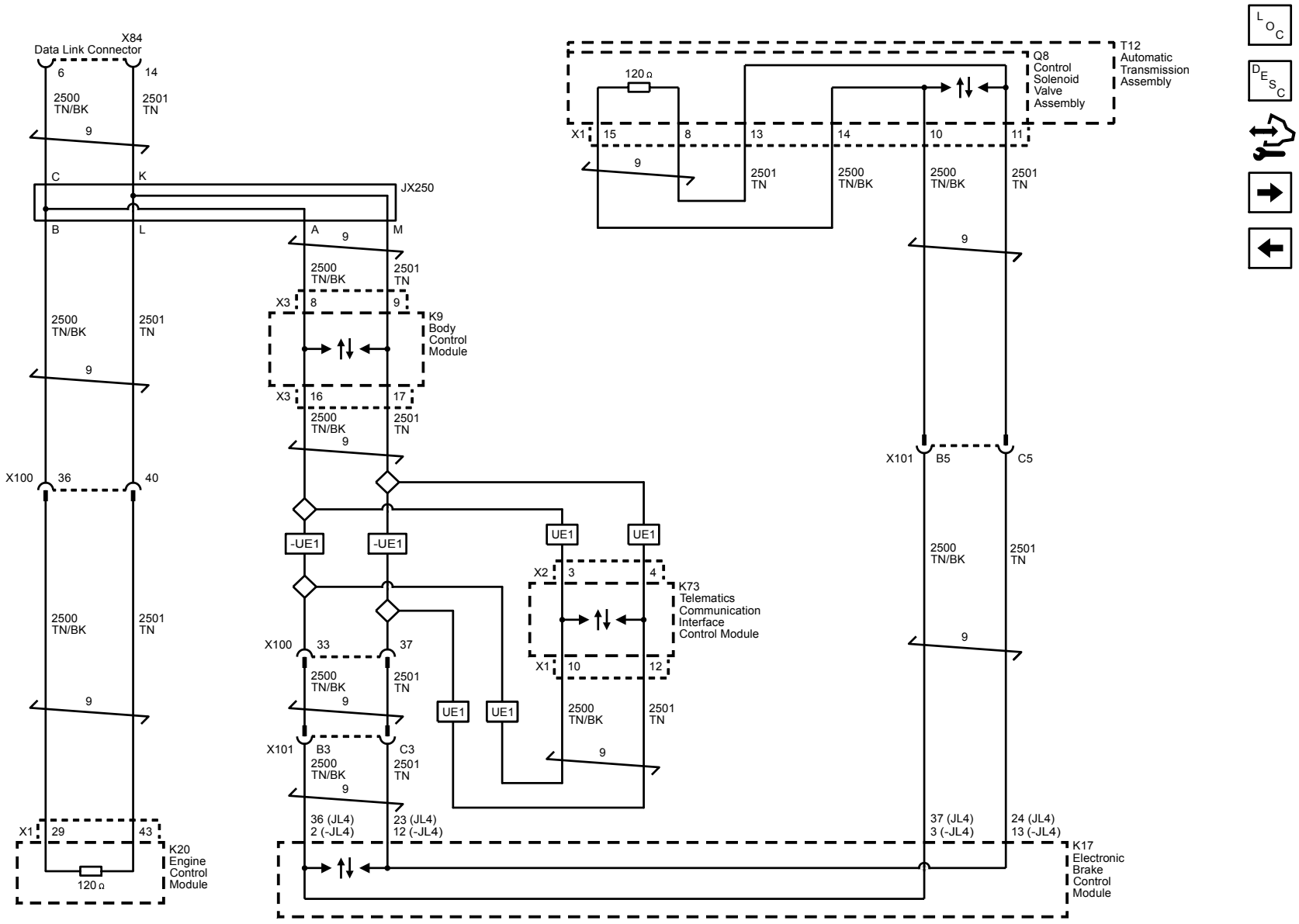

High Speed GMLAN (Diesel)

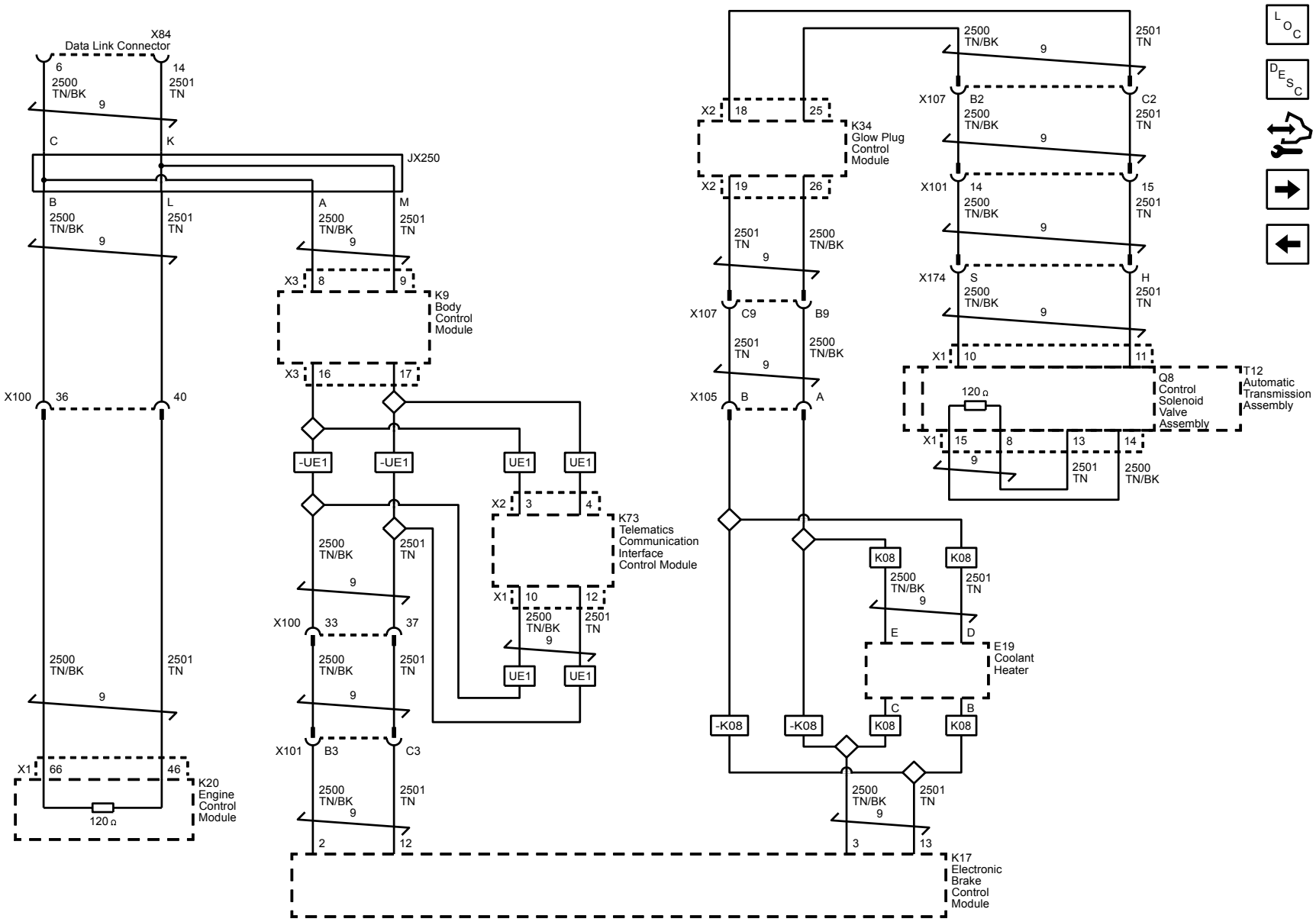

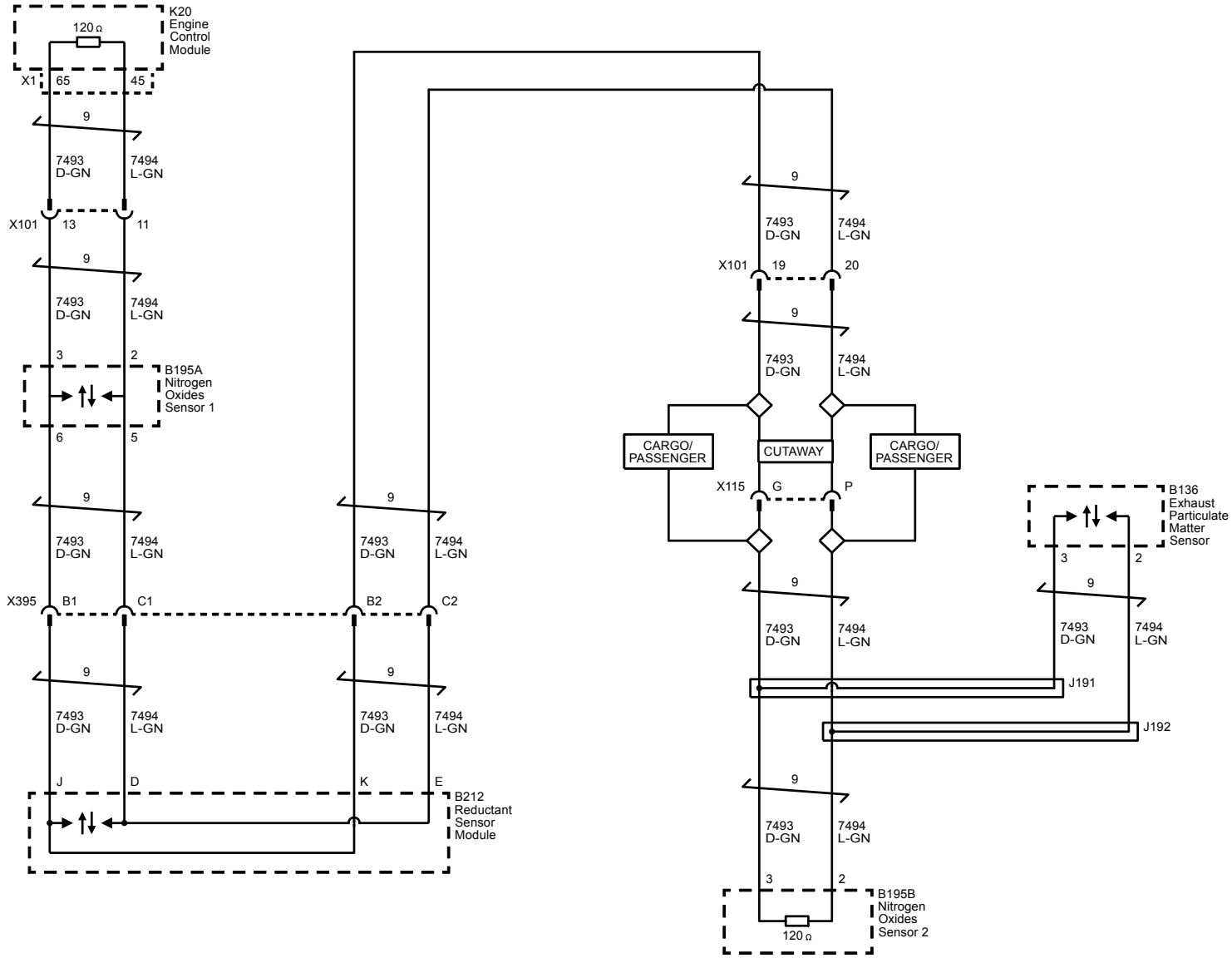
K20
Engine
Control
Module
120 Ω
X1
65
45
9
7493
D-GN
7494
L-GN
X101
13
11
3
2
B195A
Nitrogen
Oxides
Sensor 1
6
5
X395
B1
C1
B2
C2
J
D
K
E
B212
Reductant
Sensor
Module
X101
19
20
CARGO/
PASSENGER
CUTAWAY
CARGO/
PASSENGER
X115
G
P
B136
Exhaust
Particulate
Matter
Sensor
J191
J192
B195B
Nitrogen
Oxides
Sensor 2

Accessory Wakeup

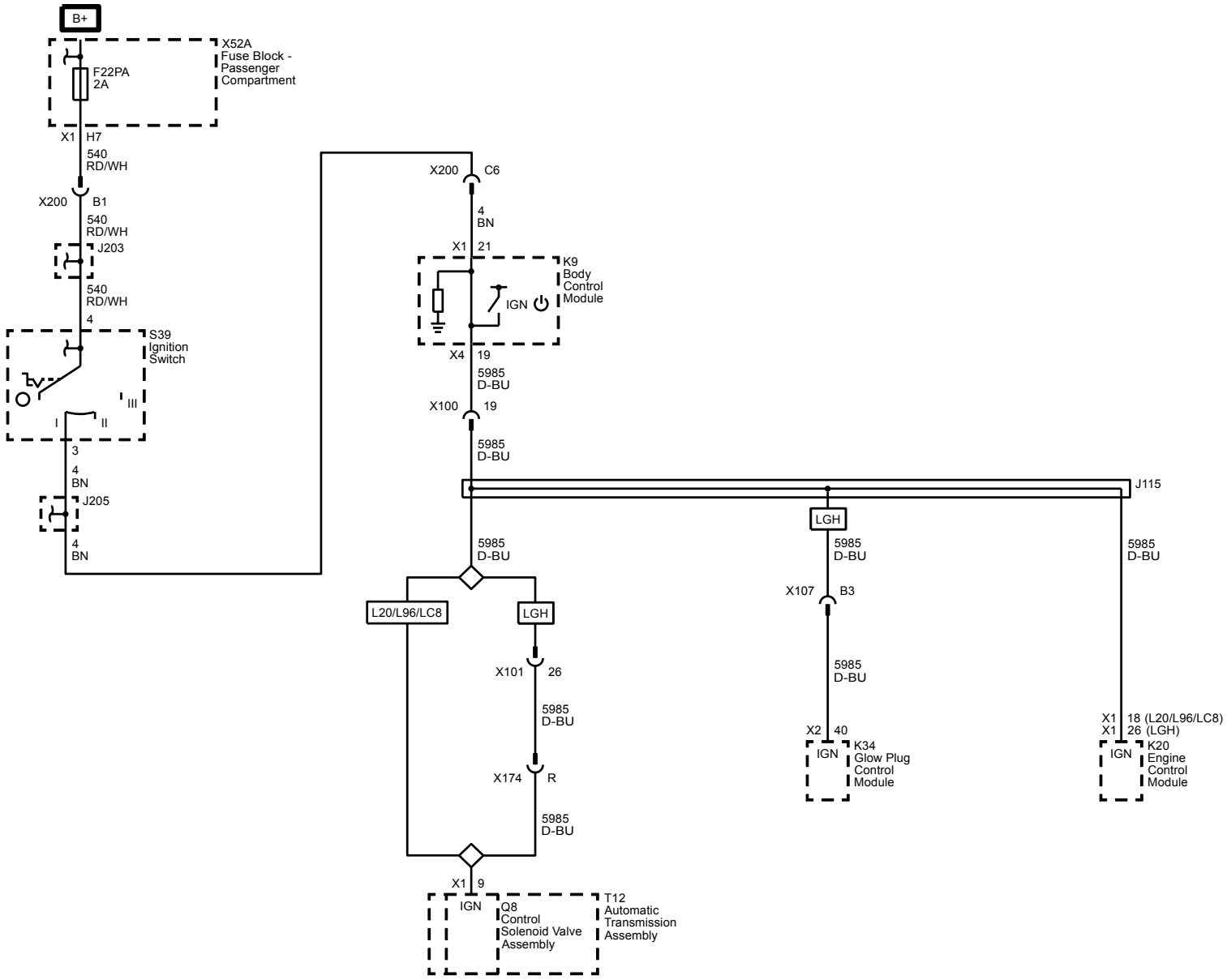

Communications Enable

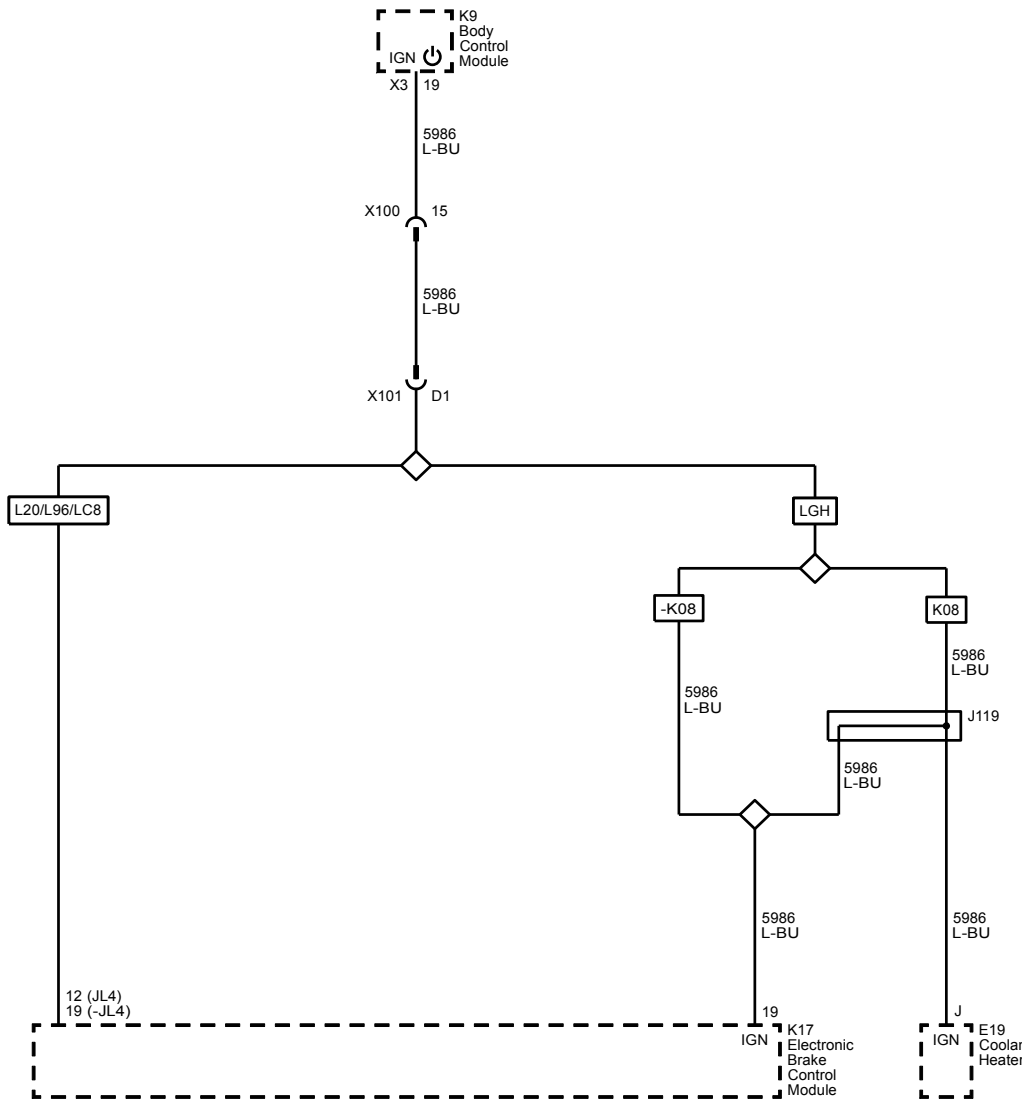

BCM Power, Ground and Serial Data

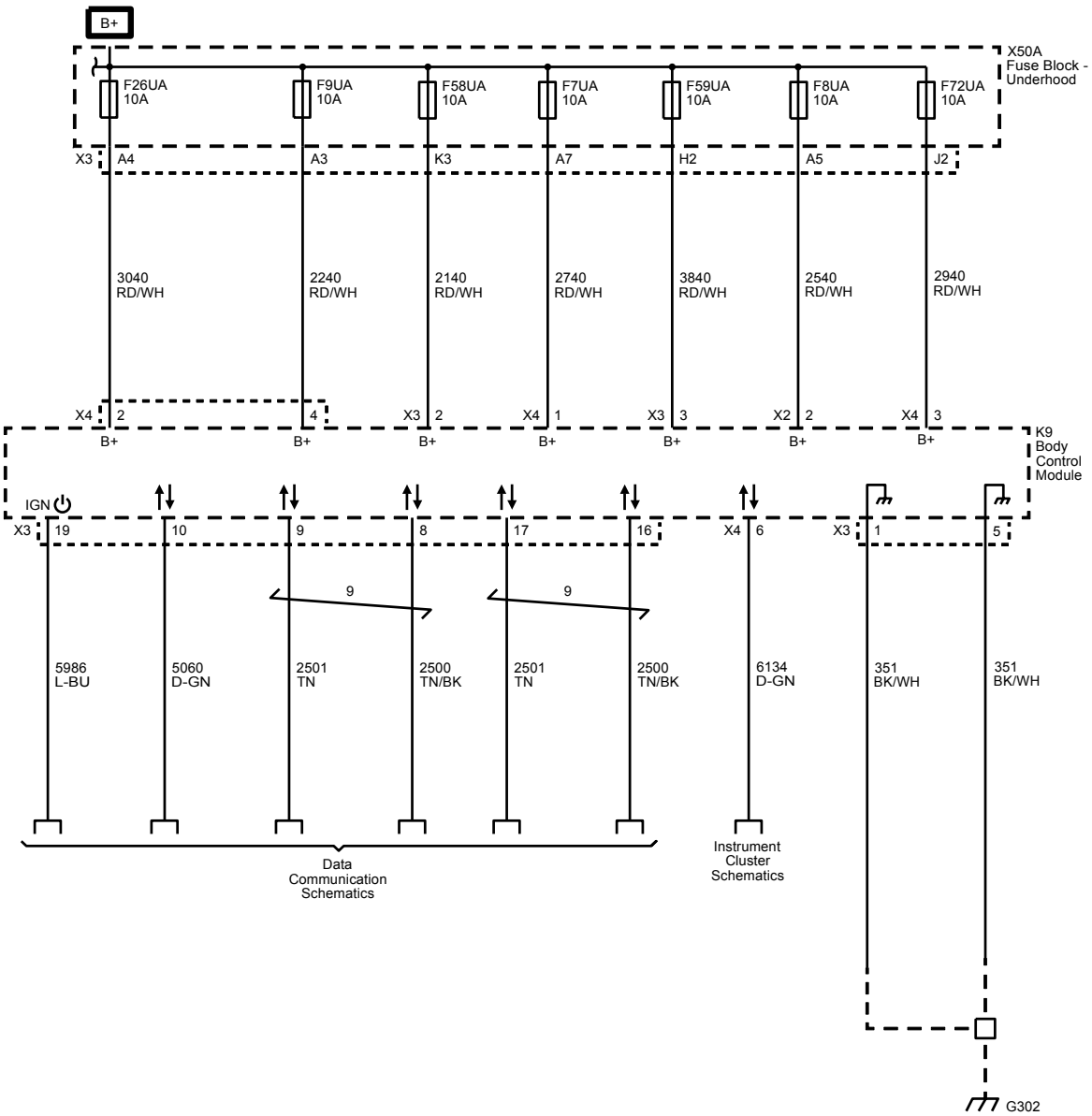

BCM Inputs and Outputs (1 of 3)

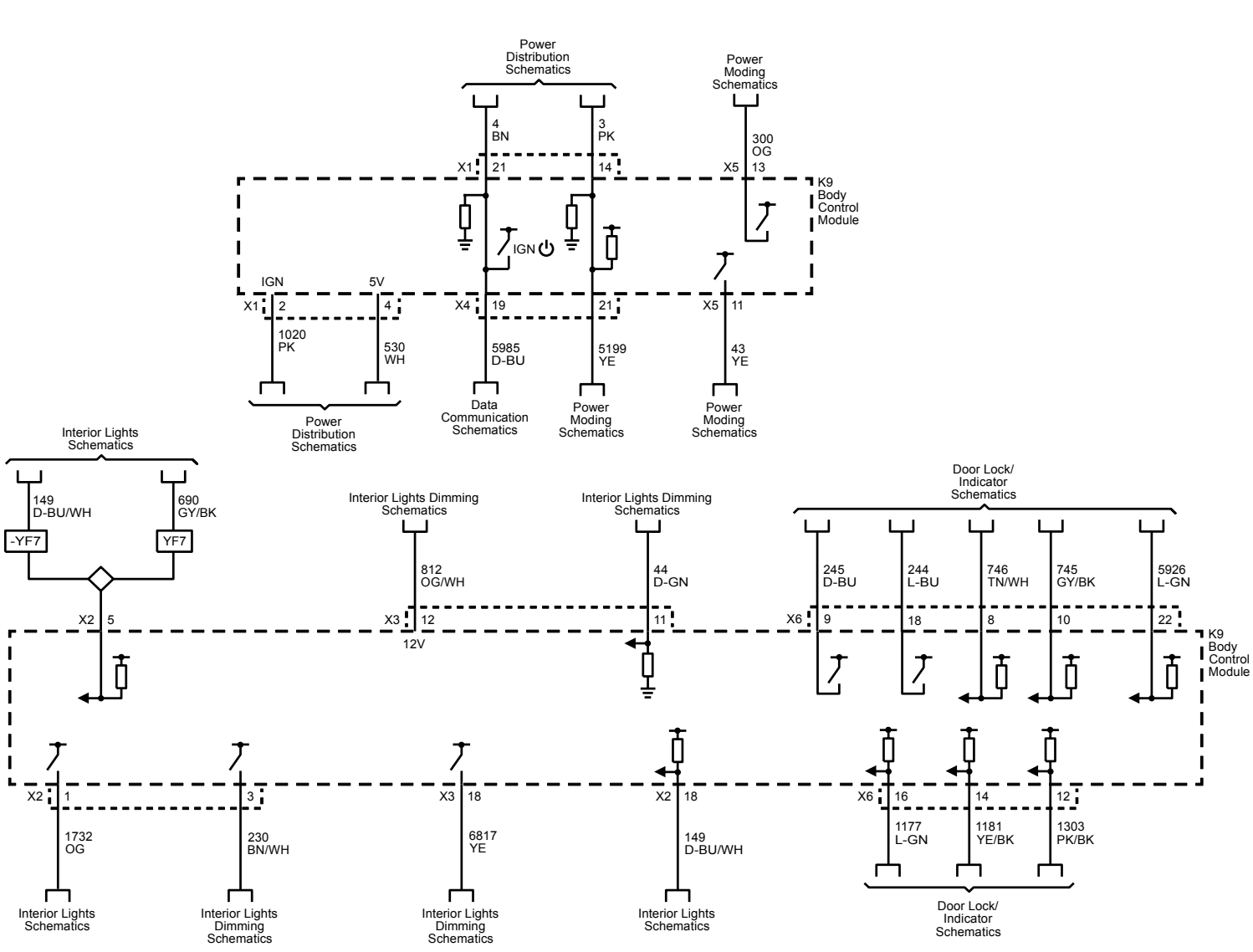

BCM Inputs and Outputs (2 of 3)

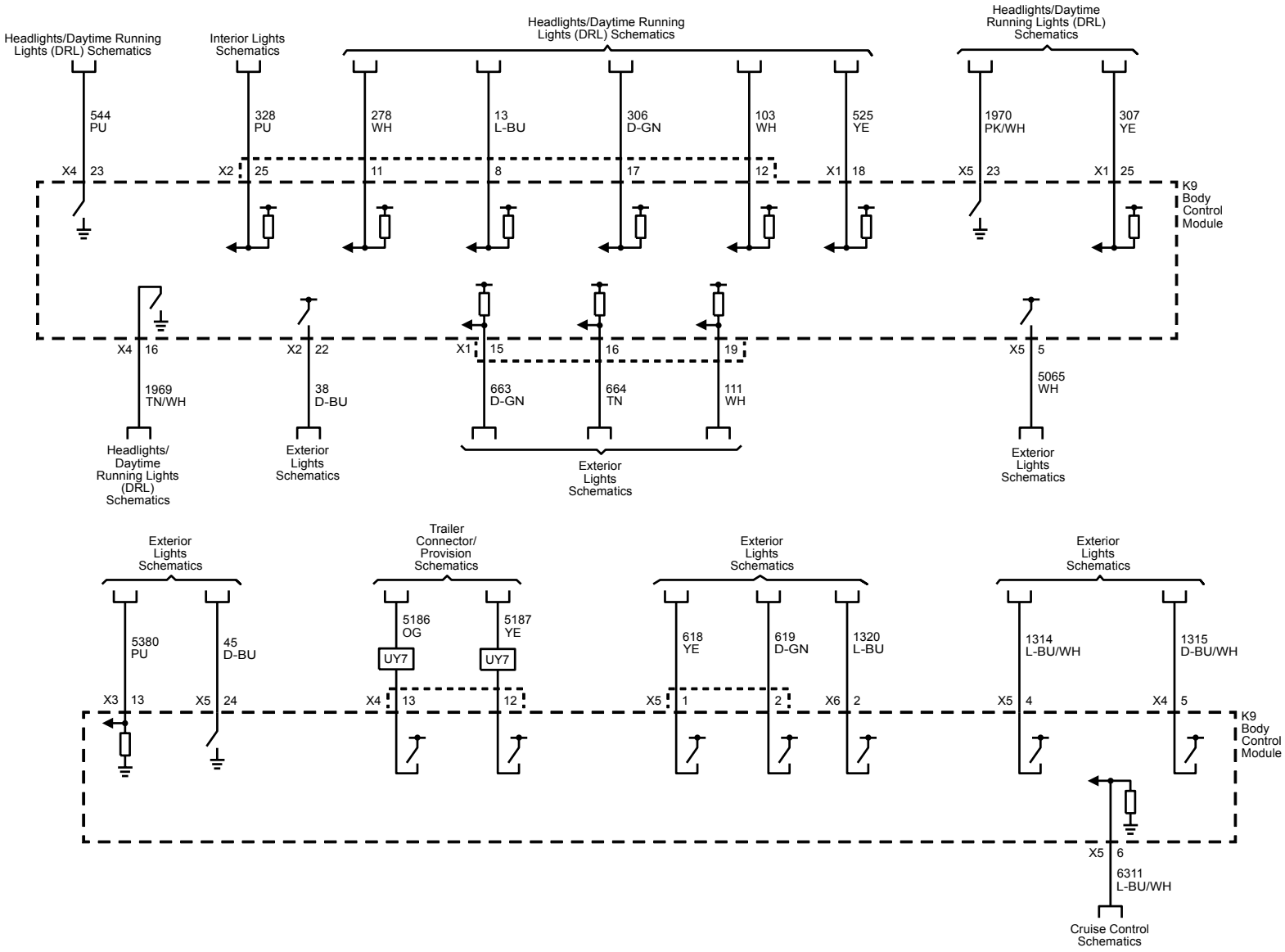

BCM Inputs and Outputs (3 of 3)

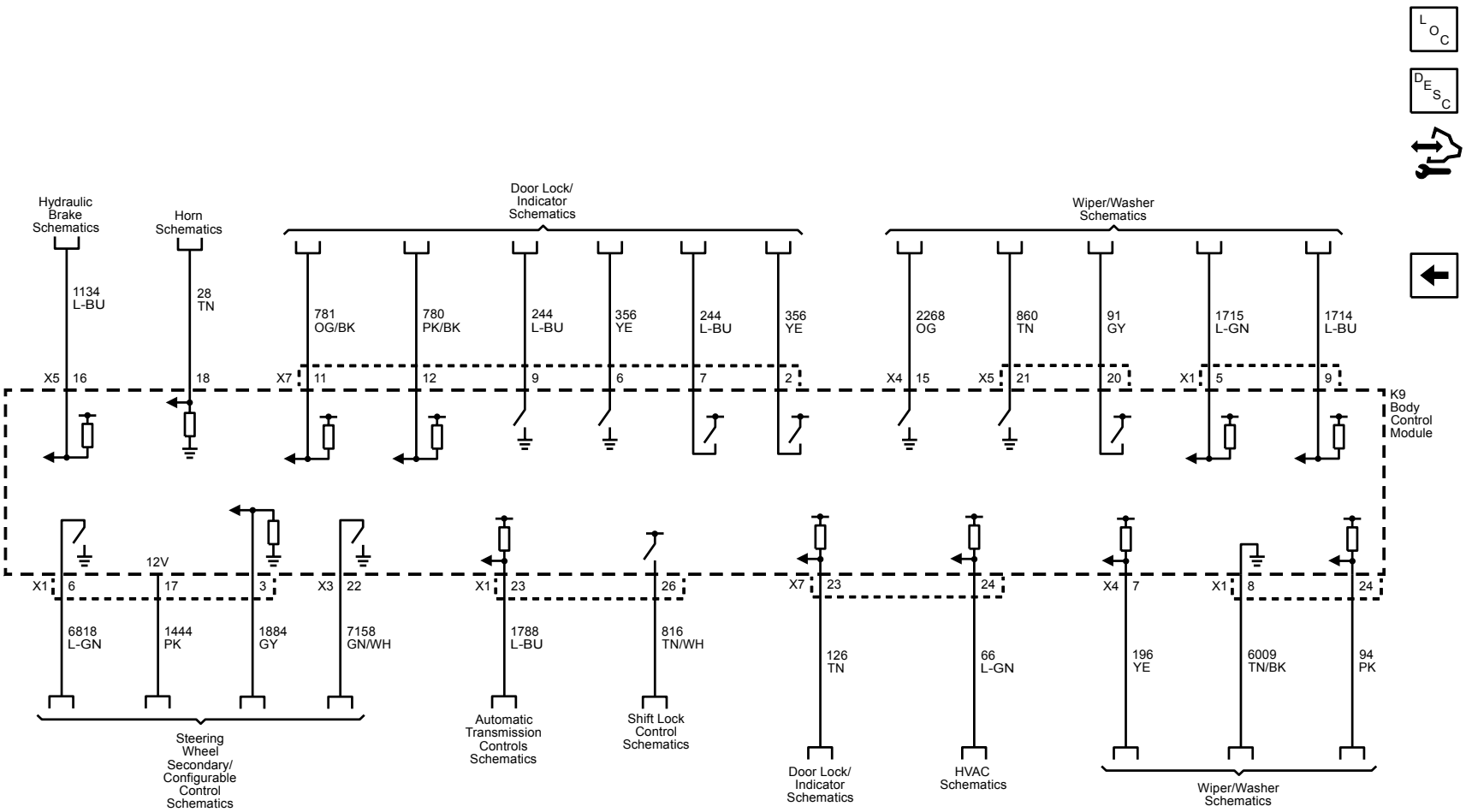

Description and Operation

Body Control System Description and Operation

The body control system consists of the body control module (BCM), communications, and various input and outputs. Some inputs, outputs and messages require other modules to interact with the BCM. The BCM also has discrete input and output terminals to control the vehicle's body functions. The BCM is wired to the GMLAN High speed serial data bus and the GMLAN Low speed serial data bus and acts as a gateway between them. If the BCM does not communicate the vehicle will not start due to the inability of the Engine/Powertrain Control Module (ECM/PCM) and Vehicle Theft Deterrent (VTD) Control Module to communicate without the BCM providing the gateway function.

Power Mode Master

This vehicles BCM functions as the power mode master (PMM). The ignition switch is a low current switch with multiple discrete ignition switch signals to the PMM for determination the power mode that will be sent over the serial data circuits to the other modules that need this information, and so the PMM will activate relays and other direct outputs of the PMM as needed. Refer to CELL Link Error - Link target cell (cell ID 148335) is invalid for this publication. for a complete description of power mode functions.

Serial Data Gateway

The BCM in this vehicle functions as a gateway or translator. The purpose of the gateway is to translate serial data messages between the GMLAN high speed bus and the GMLAN low speed bus for communication between the various modules. The gateway will interact with each network according to that network's transmission protocol.

One example of this necessary communication is the communication between the Engine/Powertrain Control Module (ECM/PCM) which is high speed serial data and Vehicle Theft Deterrent (VTD) Control Module which is low speed serial data. If these modules can not exchange information, the vehicle will not start.

Communication between the BCM and a scan tool can be on the high speed GMLAN network or low speed GMLAN network. If one network is lost, the BCM can still communicate with the scan tool. A lost communication DTC typically is set in modules other than the module with a communication failure.

Body Control Module

The various body control module (BCM) input and output circuits are described in the corresponding functional areas indicated on the BCM electrical schematics. Some BCM functions with the subsystems may be as a gateway only or as an enable for the system. The BCM related systems/subsystems include, but are not limited to the following:

- Antilock brake system (ABS)—Refer to CELL Link Error - Link target cell (cell ID 1615) is invalid for this publication..
- Cruise control system—Refer to Cruise Control Description and Operation.
- Exterior lighting—Refer to CELL Link Error - Link target cell (cell ID 53212) is invalid for this publication..
- Horn system —Refer to Horns System Description and Operation.
- Instrument cluster indicator control—Refer to CELL Link Error - Link target cell (cell ID 51540) is invalid for this publication..
- Interior lighting—Refer to CELL Link Error - Link target cell (cell ID 53213) is invalid for this publication..
- Power door lock system —Refer to CELL Link Error - Link target cell (cell ID 150918) is invalid for this publication..
- Rear window defogger system —Refer to Rear Window Defogger Description and Operation.
- Remote function actuation (RFA) control—Refer to Keyless Entry System Description and Operation.
- Retained accessory power (RAP)—Refer to CELL Link Error - Link target cell (cell ID 148337) is invalid for this publication..
- Shift lock control system —Refer to Automatic Transmission Shift Lock Control Description and Operation.
- Starting system—Refer to CELL Link Error - Link target cell (cell ID 37814) is invalid for this publication..
- Supplemental inflatable restraint (SIR) system —Refer to Supplemental Inflatable Restraint System Description and Operation.
- Theft deterrent—Refer to Immobilizer Description and Operation.
- Wiper/Washer system functions—Refer to CELL Link Error - Link target cell (cell ID 61949) is invalid for this publication..

Power and Signal Distribution

Power Outlets

Schematic and Routing Diagrams

Cigar Lighter/Power Outlet Schematics

Cigar Lighter/Power Outlet

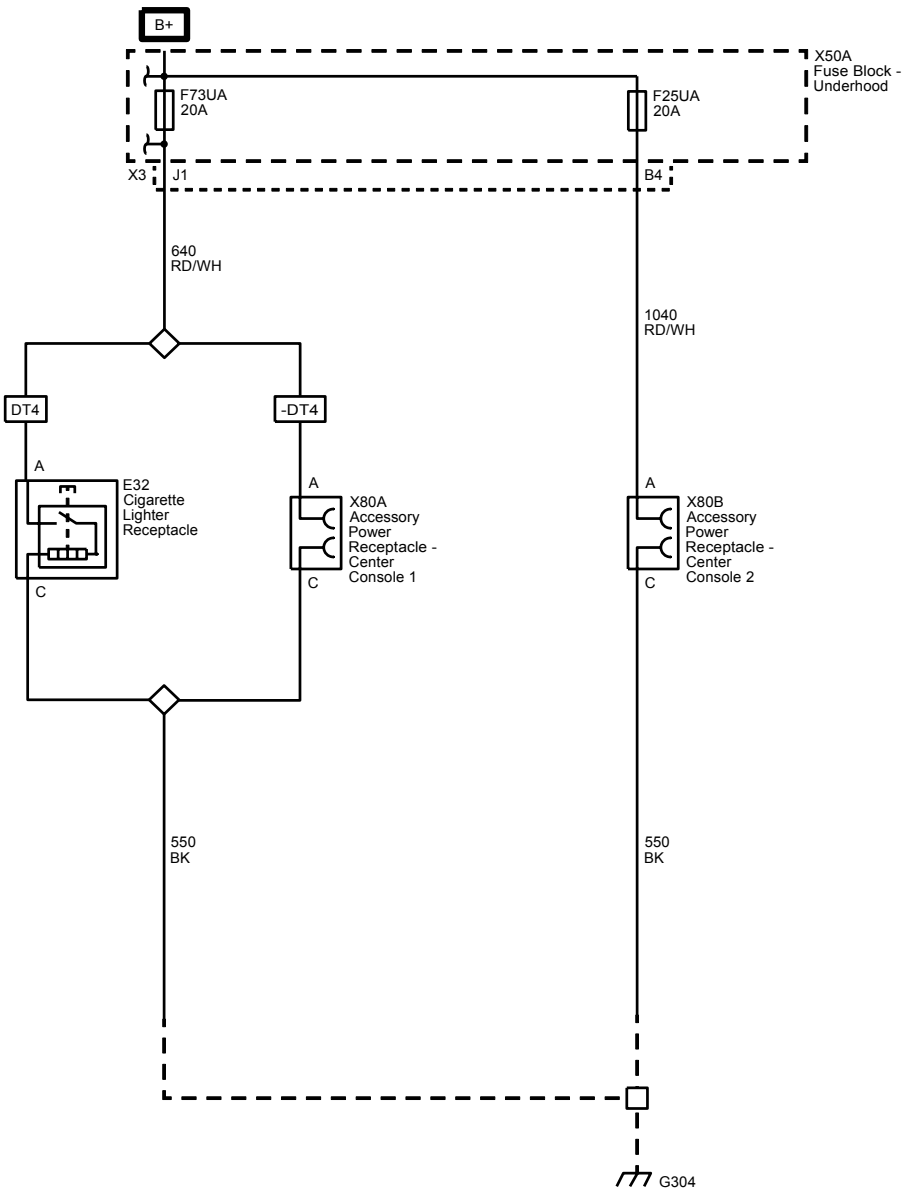

110V AC Outlet (KI4)

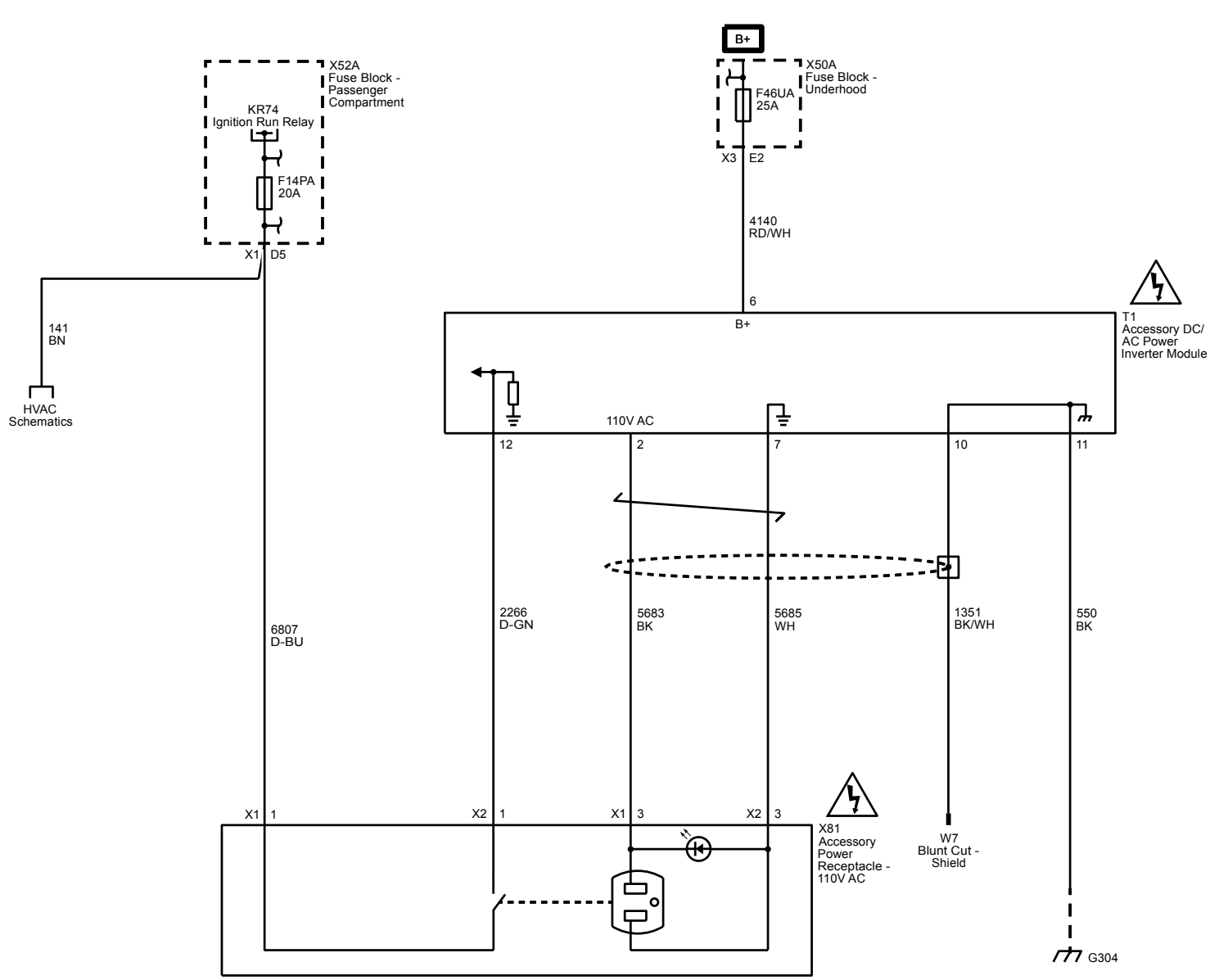

Description and Operation

Power Outlets Description and Operation

12 Volt Power Outlet Receptacle Description and Operation

The 12 V accessory power receptacles are supplied B+ all the time.

110 Volt Power Outlet Receptacle System Description

Power Outlets Block Diagram

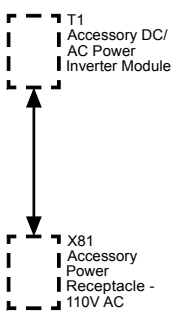

The alternating current (AC) accessory power outlet system consists of the accessory DC/AC power inverter module and the accessory power receptacle – 110 V AC. The accessory DC/AC power inverter module converts 12 V direct current (DC) battery power to 110 V at 60 Hertz (Hz) AC power to operate AC powered devices. The accessory DC/AC power inverter module provides up to 150 watts of power. The accessory power receptacle – 110 V AC provides the usual connection for AC powered devices.

110 Volt Power Outlet Receptacle System Operation

The accessory DC/AC power inverter module receives fuse protected battery voltage and is connected to the 12 V electrical system ground. The accessory power receptacle – 110 V AC has an internal switch, that detects when an AC powered device is plugged into the outlet. When the ignition is ON, and an AC powered device is plugged into the accessory power receptacle – 110 V AC, the normally open switch in the accessory power receptacle – 110 V AC, closes. When the accessory DC/AC power inverter module detects the voltage from the accessory power receptacle – 110 V AC switch, the inverter module begins to supply 110 V AC to the accessory power receptacle – 110 V AC after a 1.5 second delay. The accessory AC power system is protected against circuit overload and circuit shorts to ground.

110 Volt Power Outlet Receptacle Isolation Fault Protection

The accessory DC/AC power inverter module contains a ground fault circuit interrupter (GFCI). GFCI monitors the 110 V circuit for a short to vehicle chassis ground. If a 110 V AC short to ground is detected, the accessory DC/AC power inverter module will turn OFF. The module remains OFF, until the AC powered device is unplugged from the outlet, and then plugged into the outlet after a 3 second delay.

110 Volt Power Outlet Receptacle Overload Shutdown

The accessory DC/AC power inverter module will turn OFF if the current in the 110 V circuit is greater than 3.8 A for 1 second, or 2.5 A for 10 seconds. The module will turn ON again, when the AC powered device is unplugged from the outlet, and then plugged into the outlet after a 3 second delay.

110 Volt Power Outlet Receptacle Internal Shutdown

The accessory DC/AC power inverter module will turn OFF if the B+ supply voltage is greater than 16.5 V or less than 11 V. The module will also turn OFF if the device temperature is greater than 85°C (185°F). The module will turn ON again, after the shutdown condition is corrected, and the AC powered device is unplugged from the outlet, and then plugged into the outlet.

Power and Signal Distribution

Wiring Systems and Power Management

Schematic and Routing Diagrams

Harness Routing Views

Forward Lamp Harness Routing

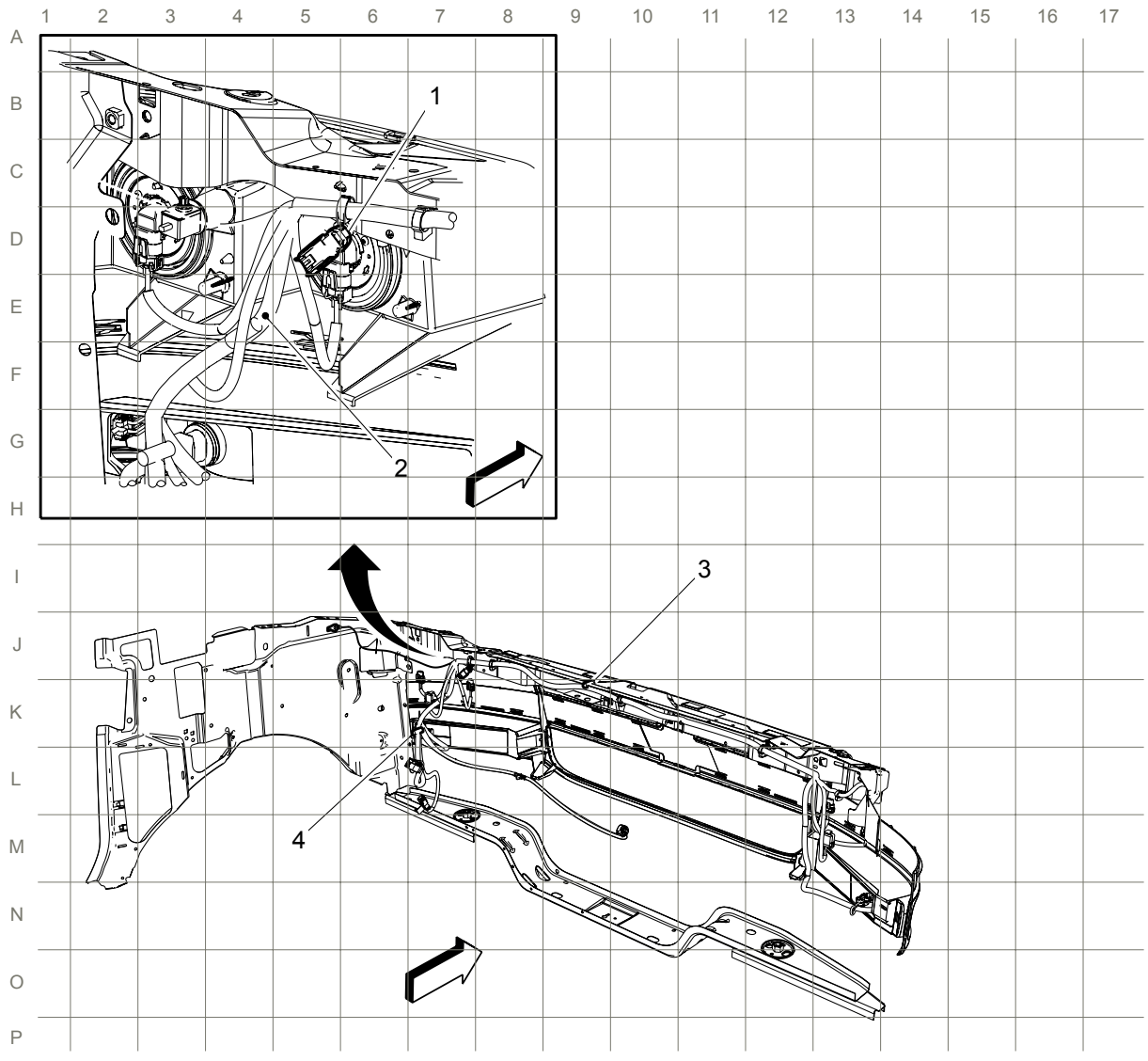

Items

1. X150
2. J110
3. J121
4. J122

Engine Harness Routing - Front (L20, L96, or LC8)

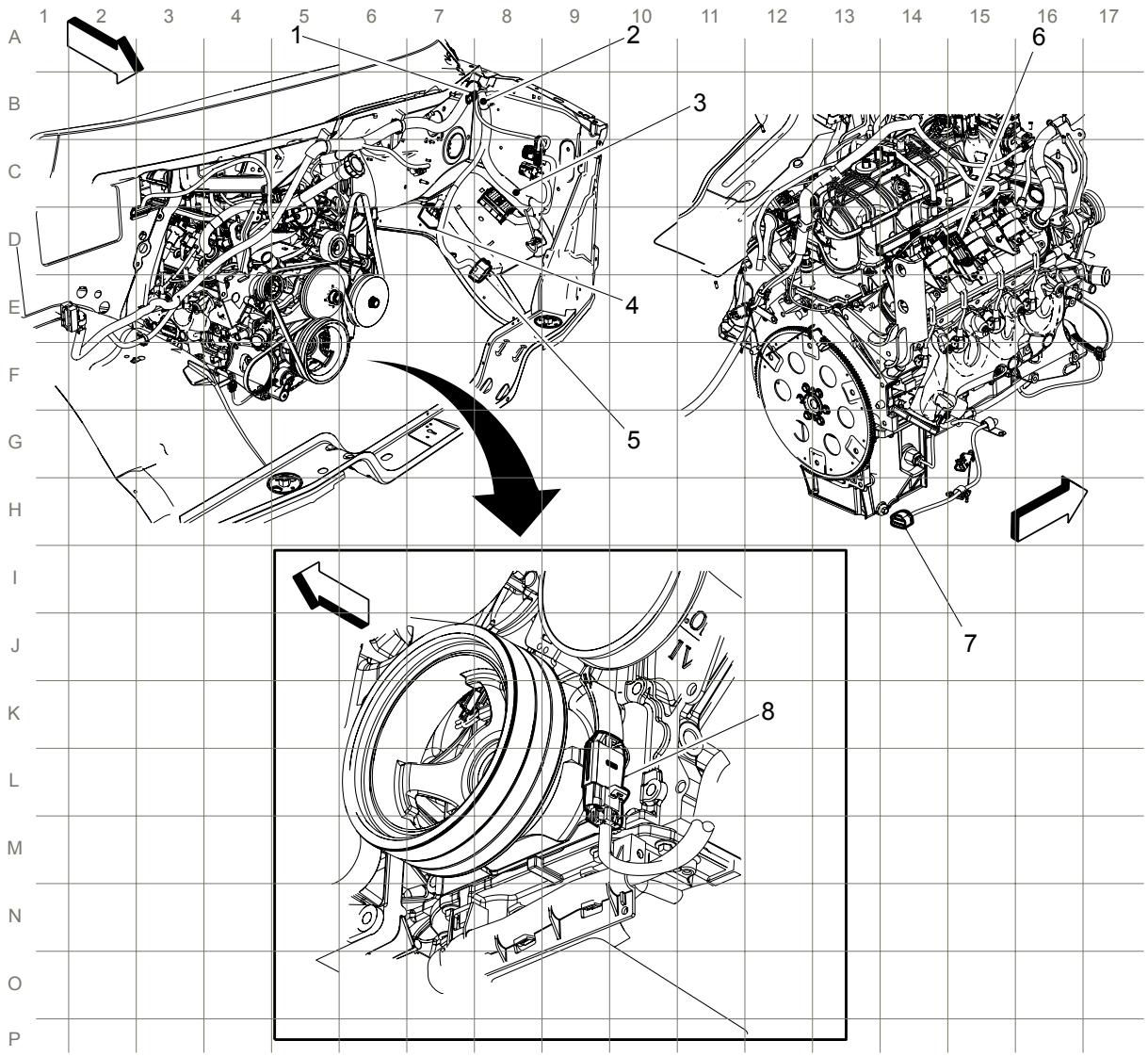

Items

1. X109
2. J115
3. J123
4. X101
5. X100
6. X126 (L20, L96, or LC8)
7. X128 (L20, L96 or LC8)
8. X177 (L20, L96, or LC8)

Engine Harness Routing - Left Rear of Engine (L20, L96, or LC8)

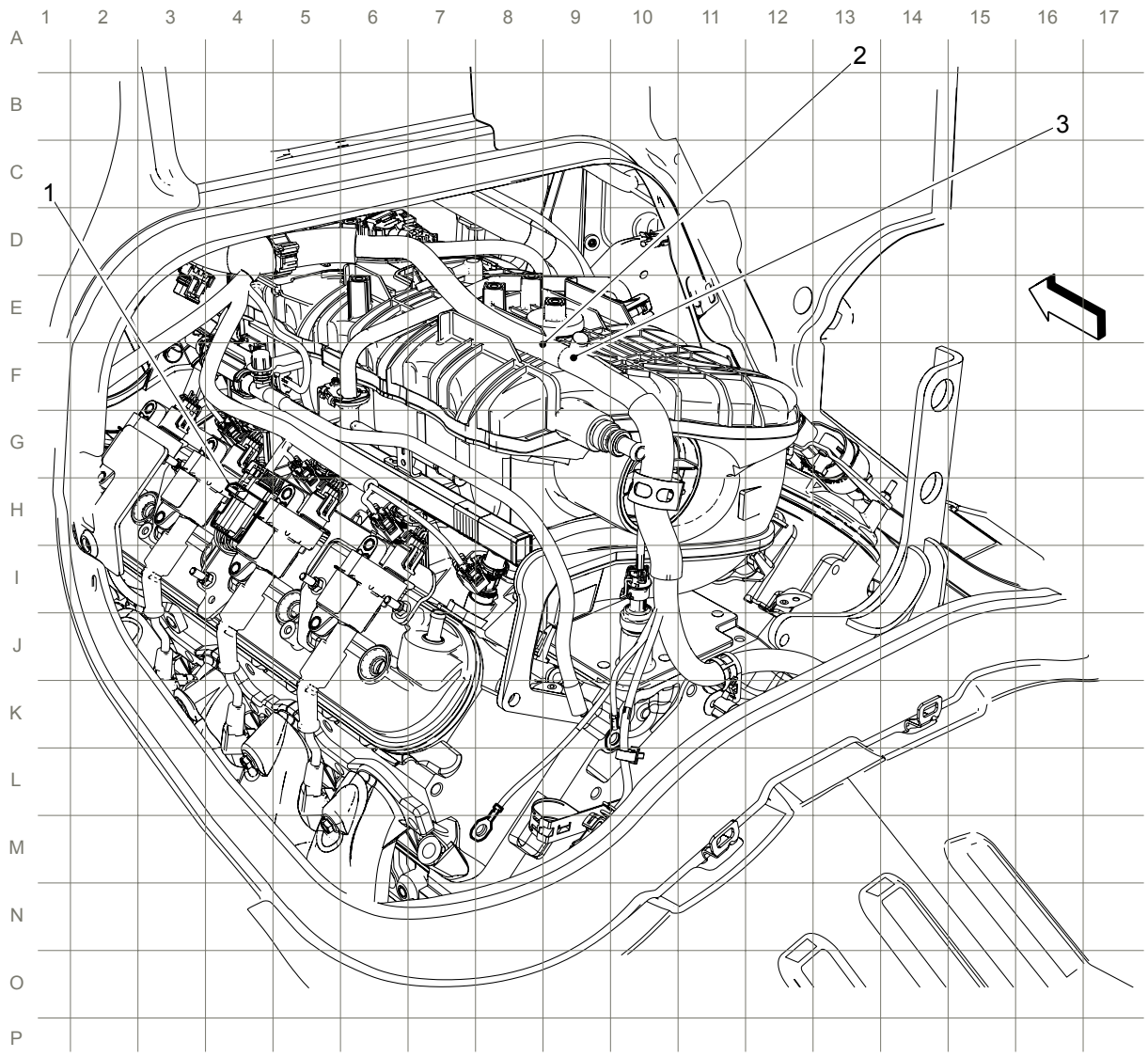

Items

1. X126 (L20, L96, or LC8)
2. J101
3. J102

Engine Harness Routing - Left Side of Engine Compartment (LGH)

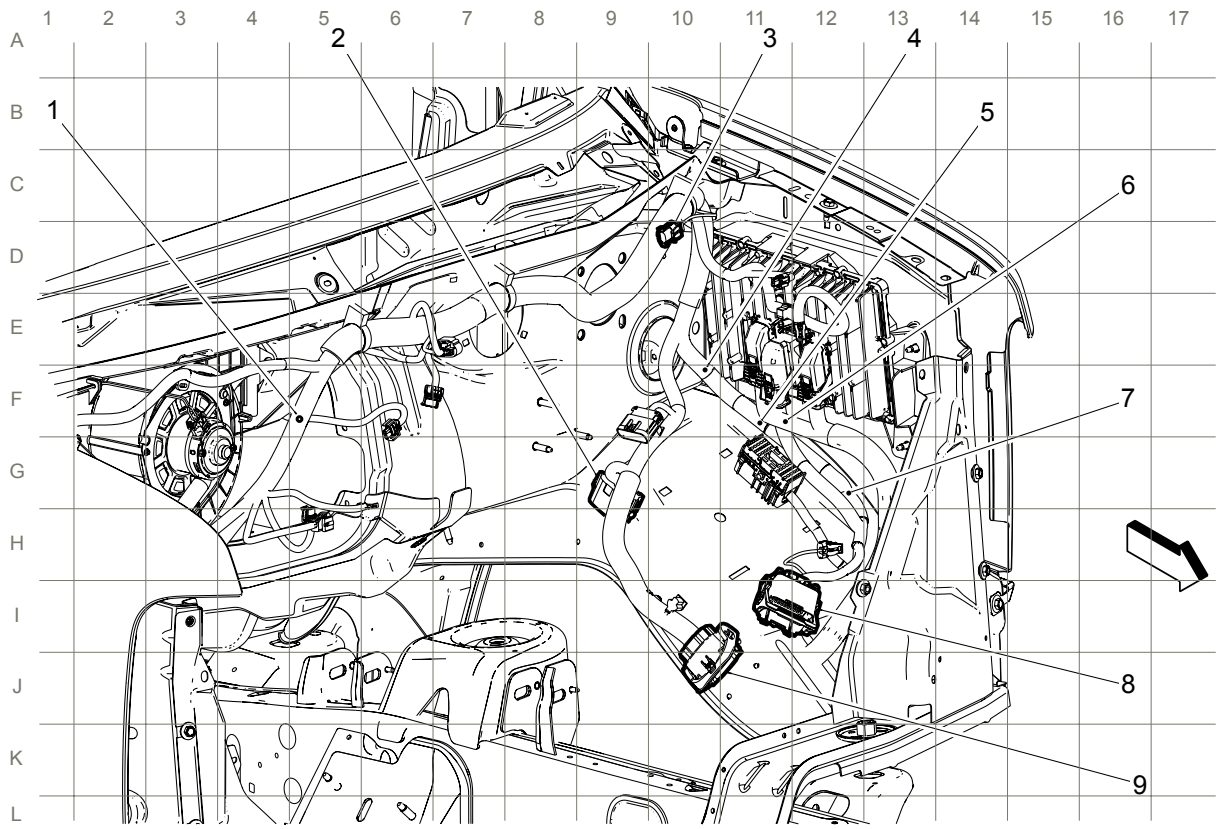

Items

1. J102
2. X101
3. X109
4. J123
5. J115
6. J161 (LGH)
7. J101
8. X107 (LGH)
9. X100

Engine Harness Routing - Left Front of Engine (LGH)

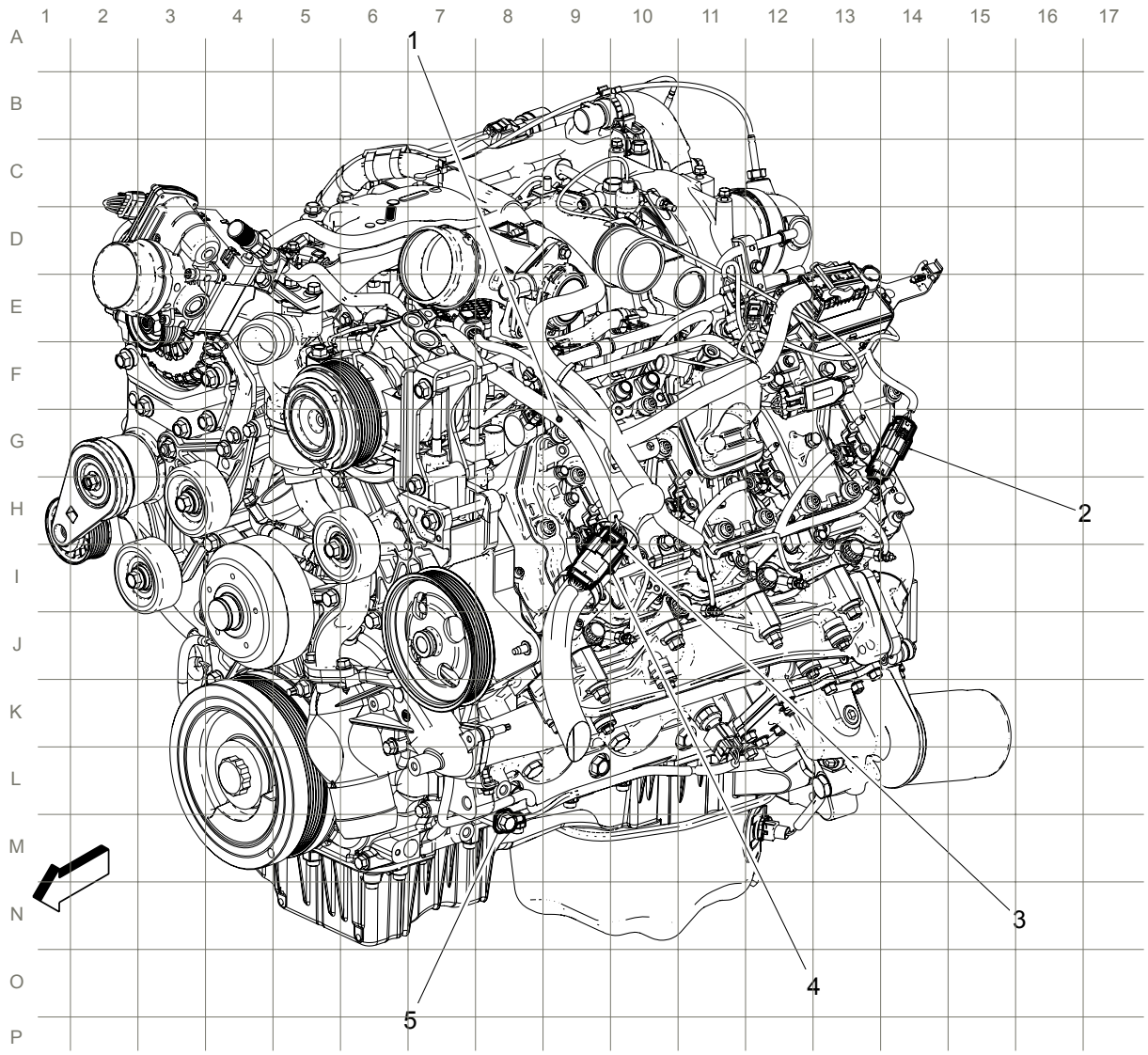

Items

1. J164 (LGH)
2. X112 (LGH)
3. X110 (LGH)
4. J160 (LGH)
5. G110 (LGH)

Engine Harness Routing - Right Front of Engine (LGH)

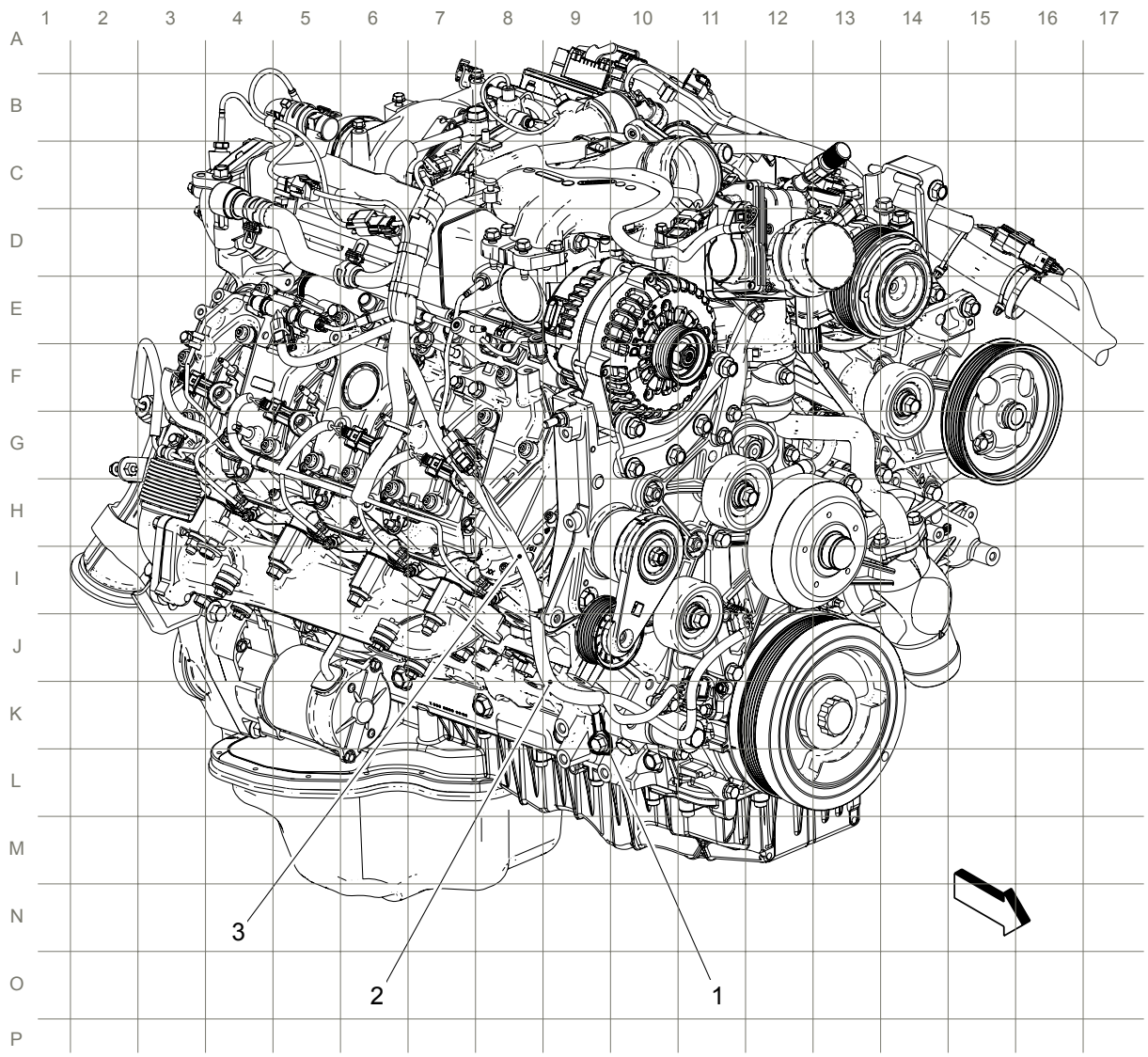

Items

1. G109 (LGH)
2. J163 (LGH)
3. J162 (LGH)

Instrument Panel Harness Routing - Engine Compartment

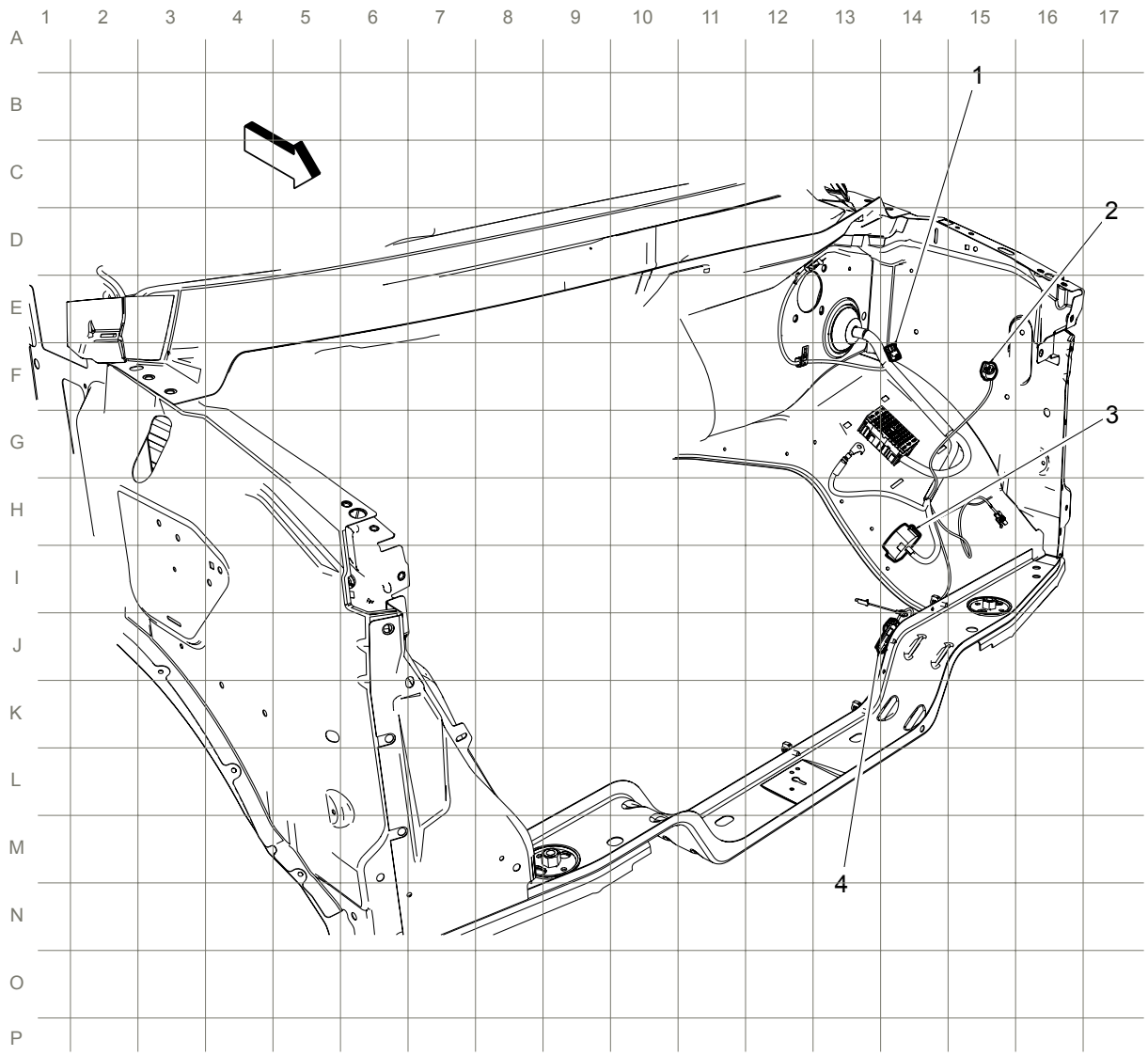

Items

1. X141 (UJ1)
2. X150
3. X100
4. X104

Instrument Panel Harness Routing - Dash Area (1 of 2)

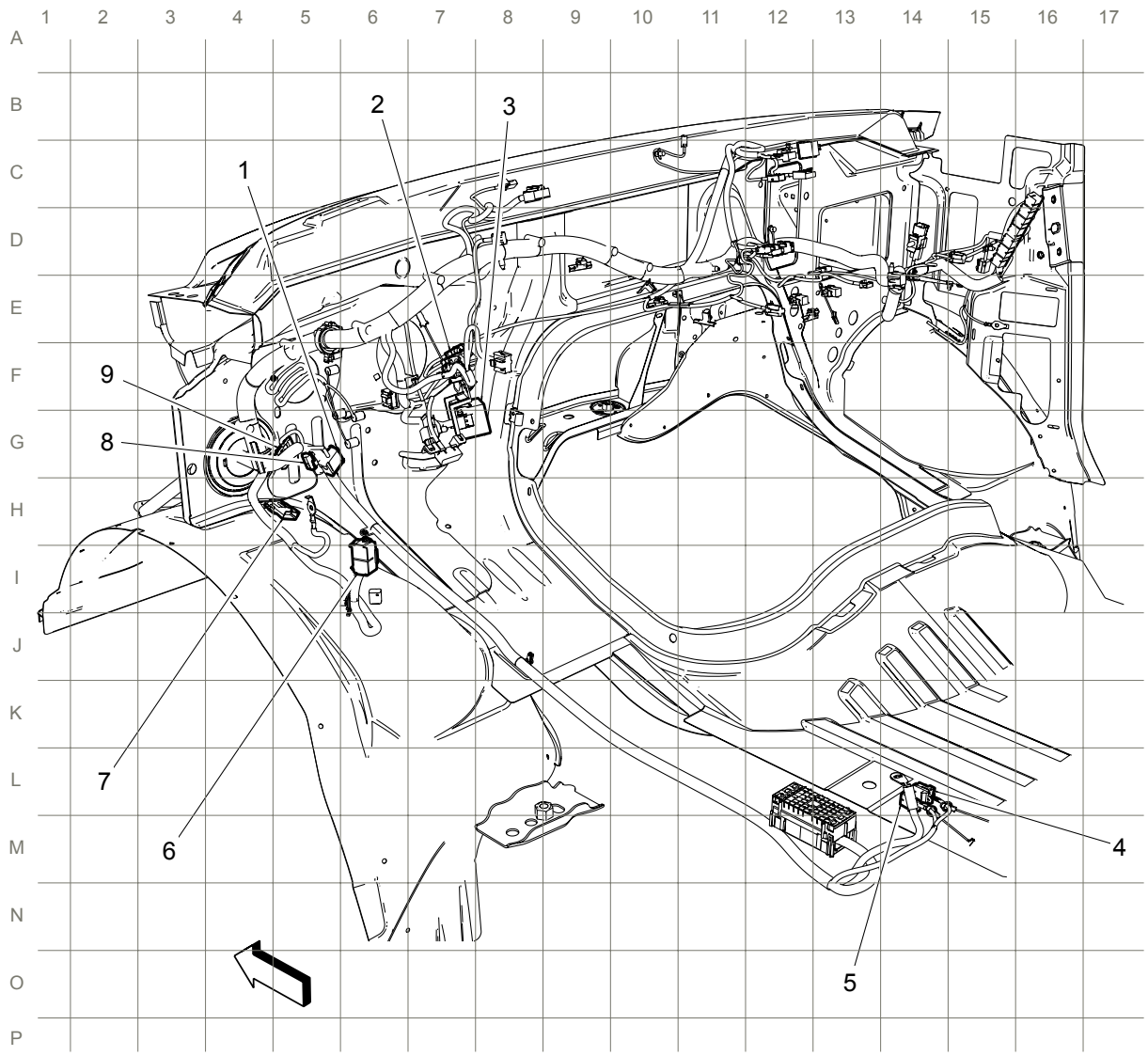

Items

1. JX250
2. X276
3. X200
4. X331
5. X330
6. X318
7. X222 (YF2 or YF7)
8. X220
9. JX200

Instrument Panel Harness Routing - Dash Area (2 of 2)

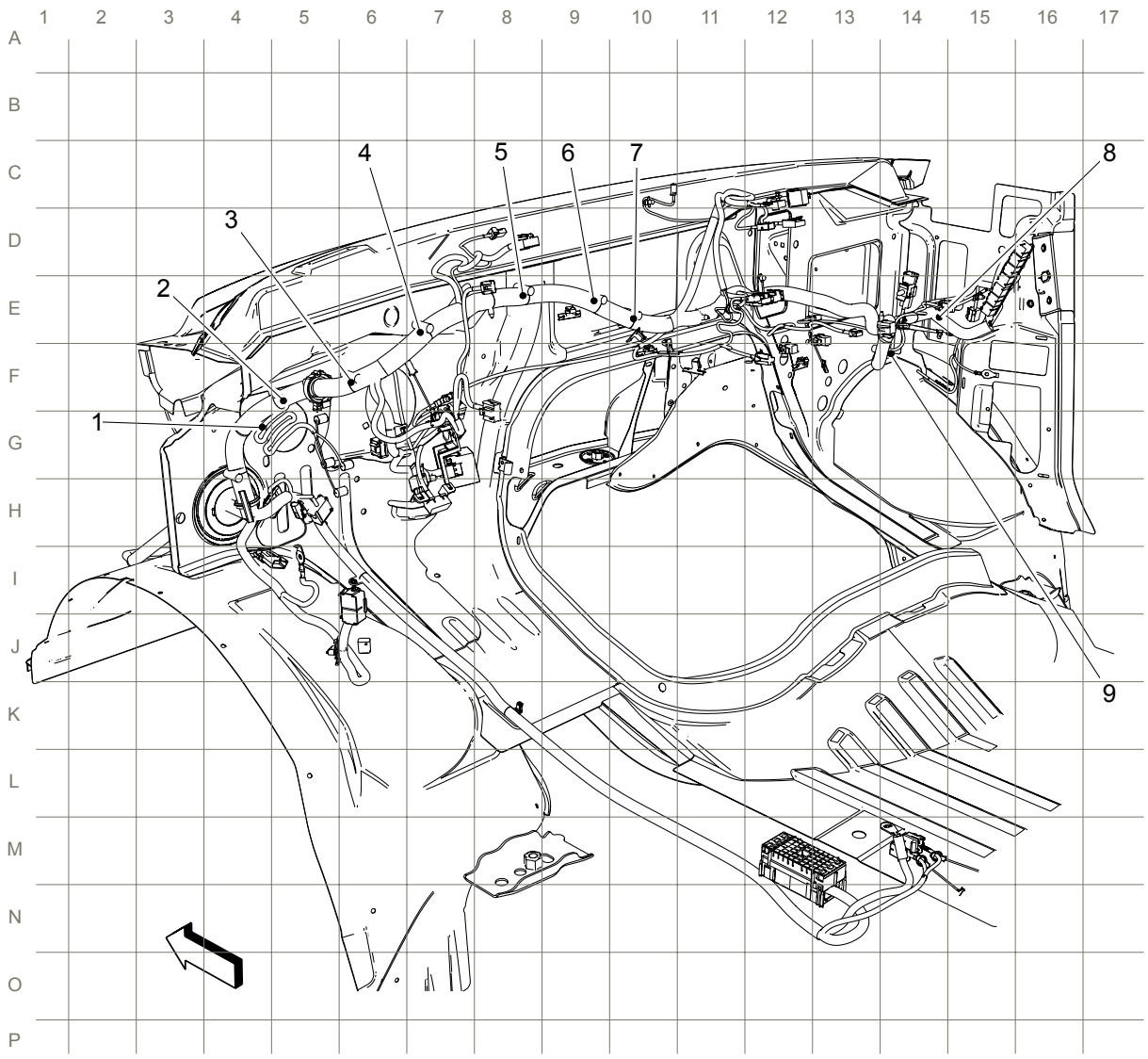

Items

1. J247
2. J244
3. J231
4. J248
5. J207
6. J246 (DEB or DE5)
7. J245 (DEB or DE5)
8. J249
9. J250

Steering Column Harness Routing

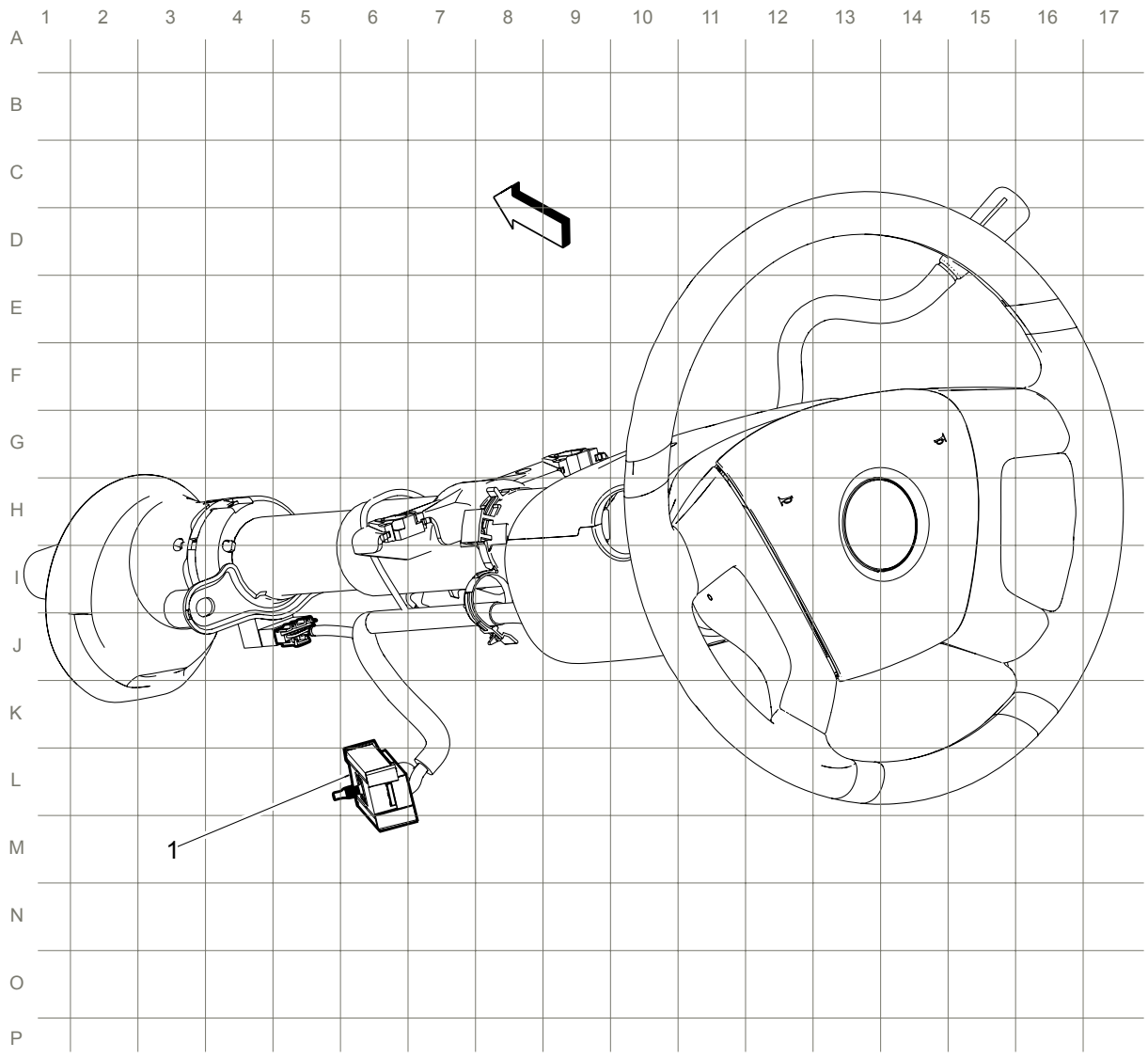

Items

1. X200

Body Harness Routing - Left Front of Passenger Compartment

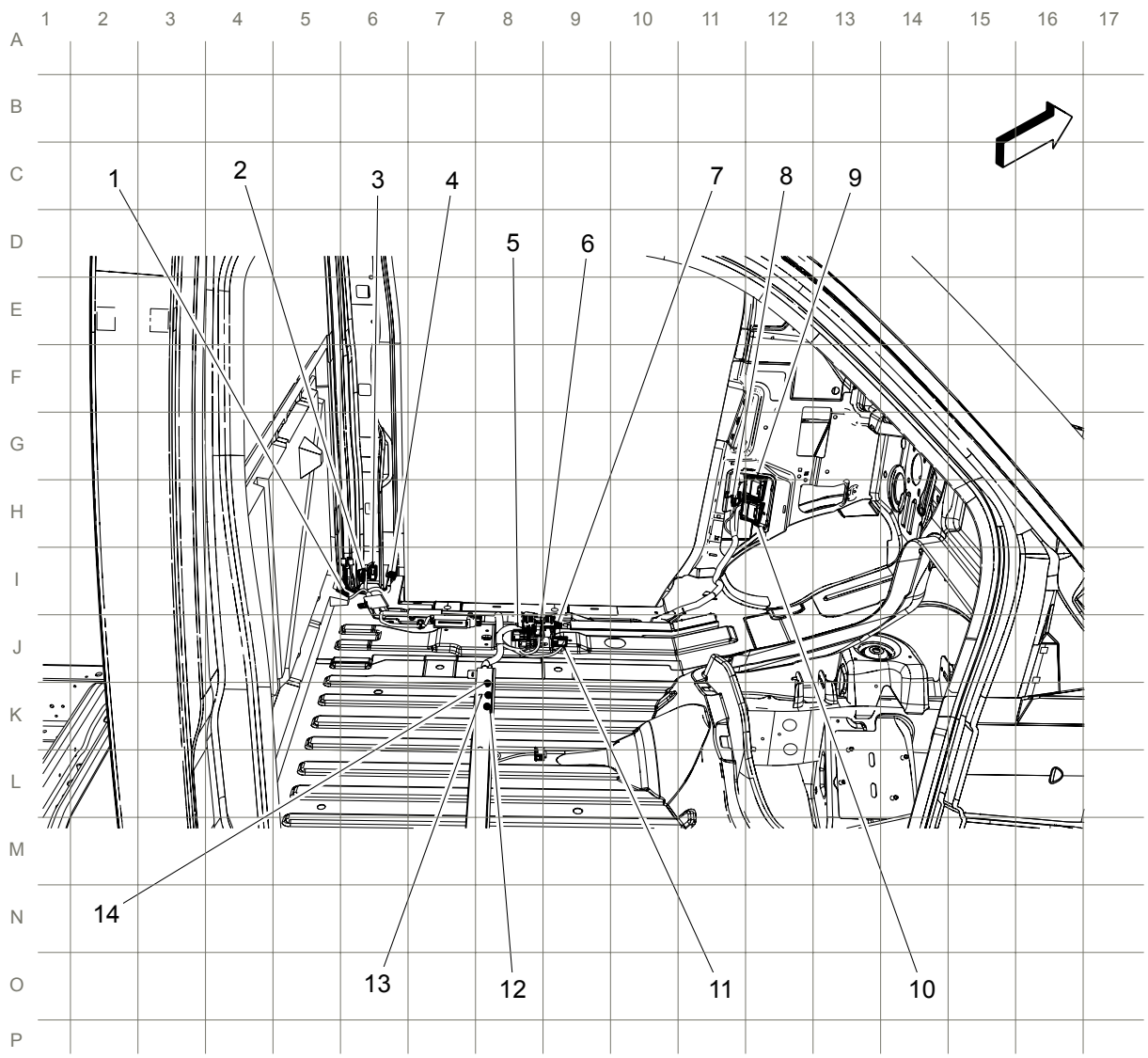

Items

1. X403 (UVC)
2. X409 (C36 or C69)
3. X407 (C36 or C69)
4. JX347
5. X330
6. X331
7. J356
8. X319 (ENC, C69, or C36)
9. X318
10. X500
11. X329 (UVC)

12. J371 (UVC without UI8)

13. J370 (UVC without UI8)

14. J372 (UVC without UI8)

Body Harness Routing - Right Front of Passenger Compartment

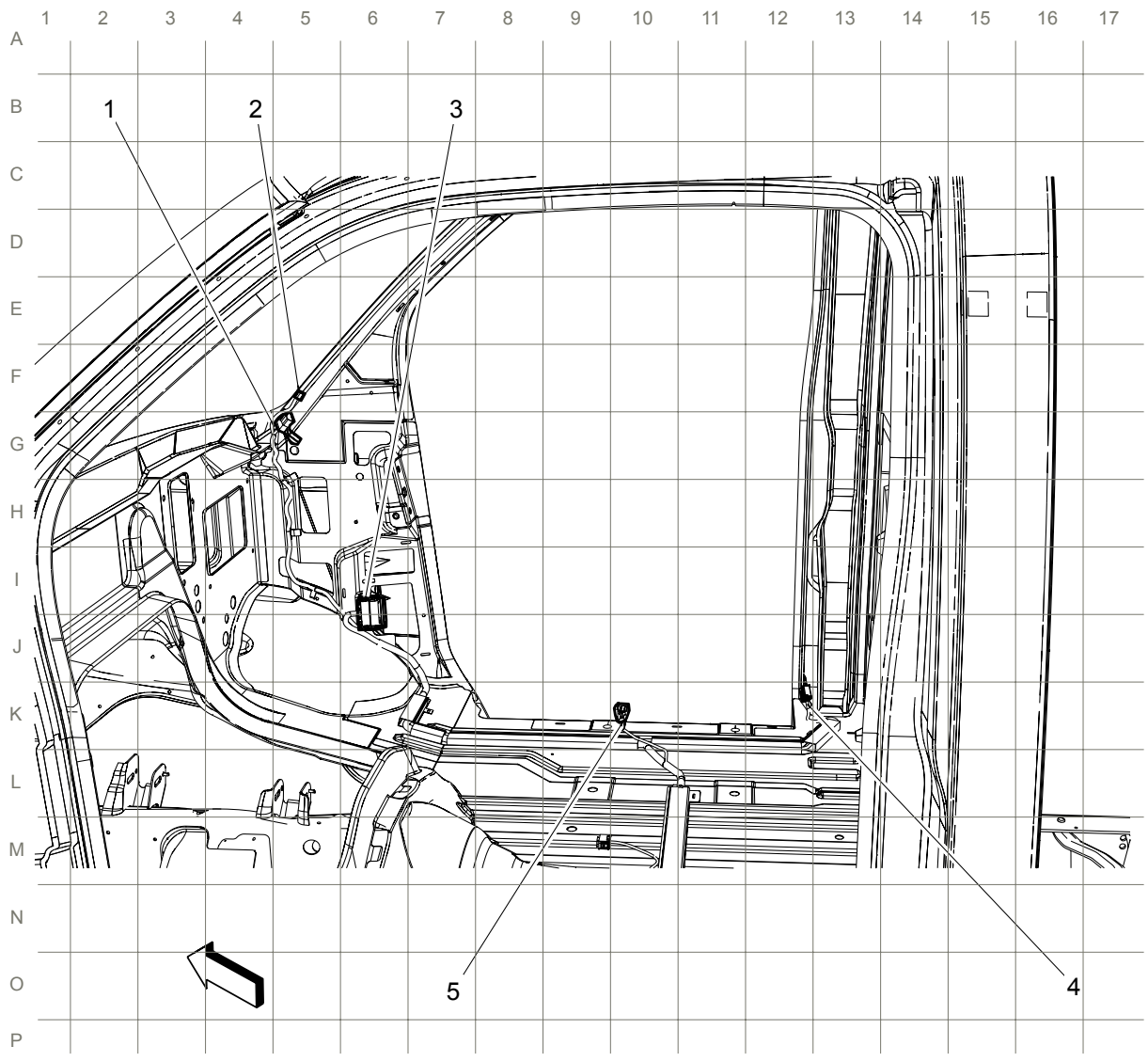

Items

1. X205

2. X204 (UVC)

3. X600

4. JX348

5. X306

Body Harness Routing - Rear Overview (Passenger or Cargo)

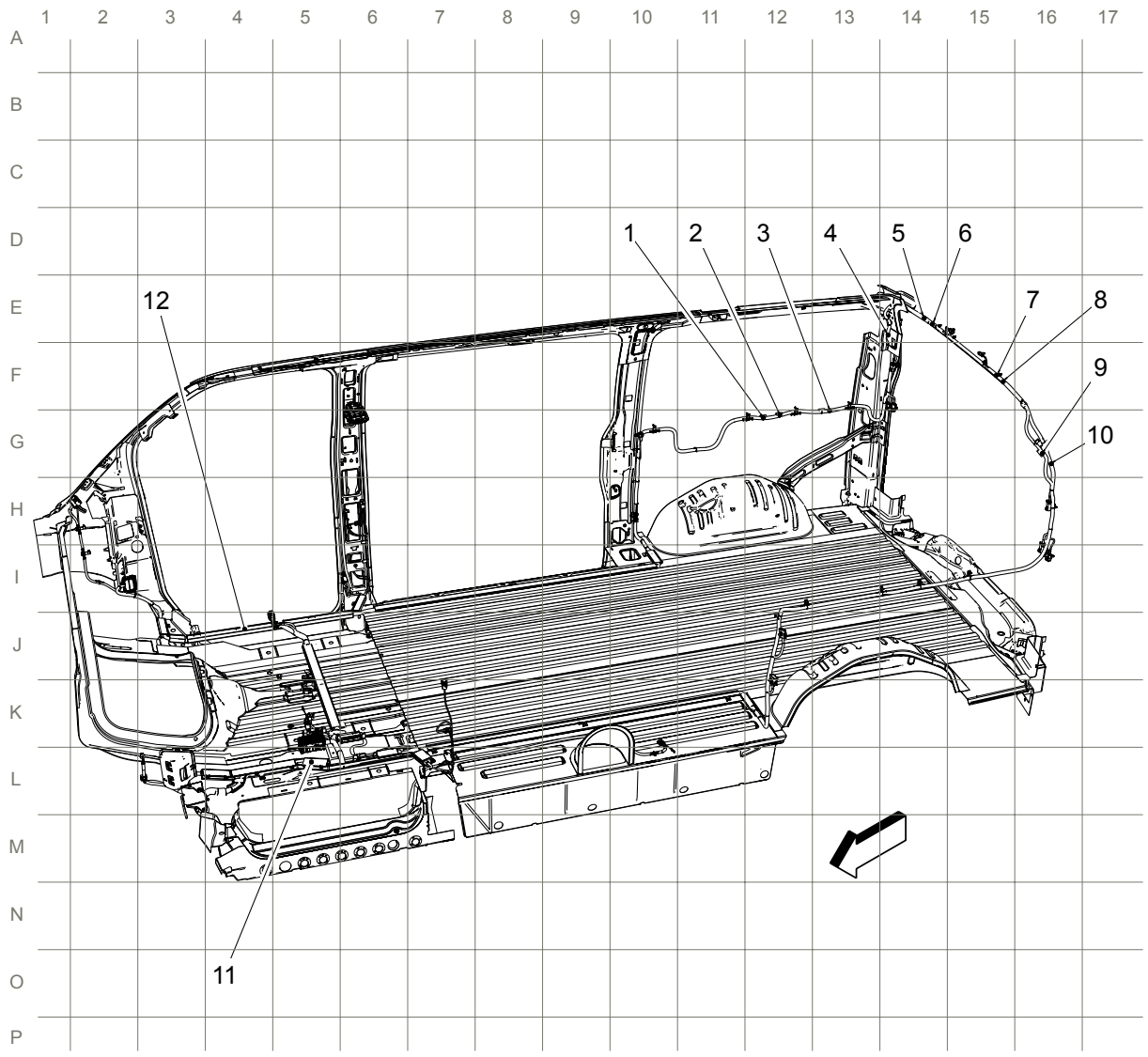

Items

1. J308 (C69)
2. J310 (C69)
3. J311 (C69)
4. J403
5. J451 (YF2 or YF7)
6. J450 (US8, YF2, or YF7)
7. J453 (YF2 or YF7)
8. J452 (US8, YF2, or YF7)
9. J410
10. J401 (C36, C49, or C69)
11. J356

12. J331 (Passenger)

Body Harness Routing - Right C-Pillar

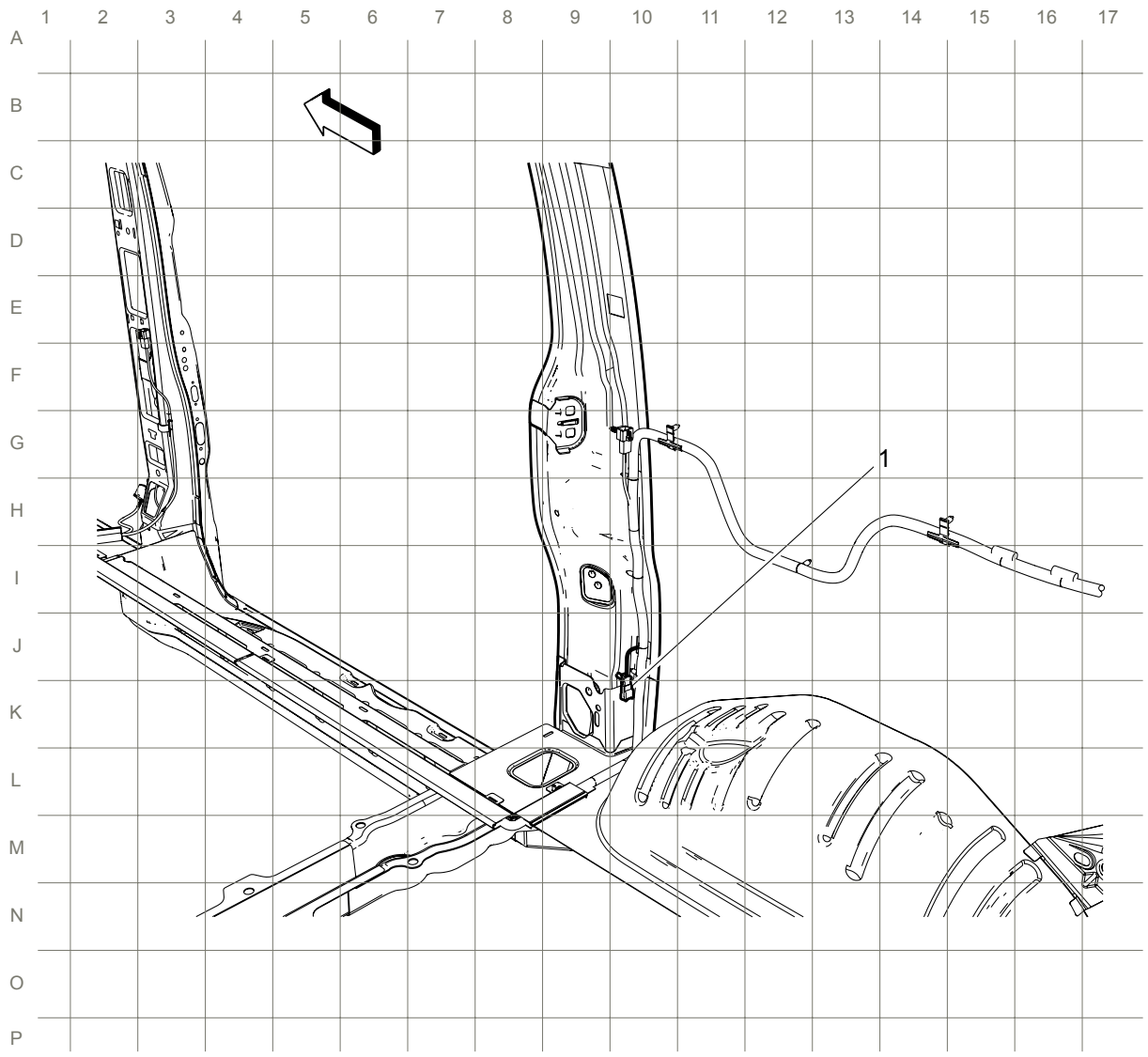

Items

1. X324 (ASF)

Body Harness Routing - Left Rear (Passenger or Cargo)

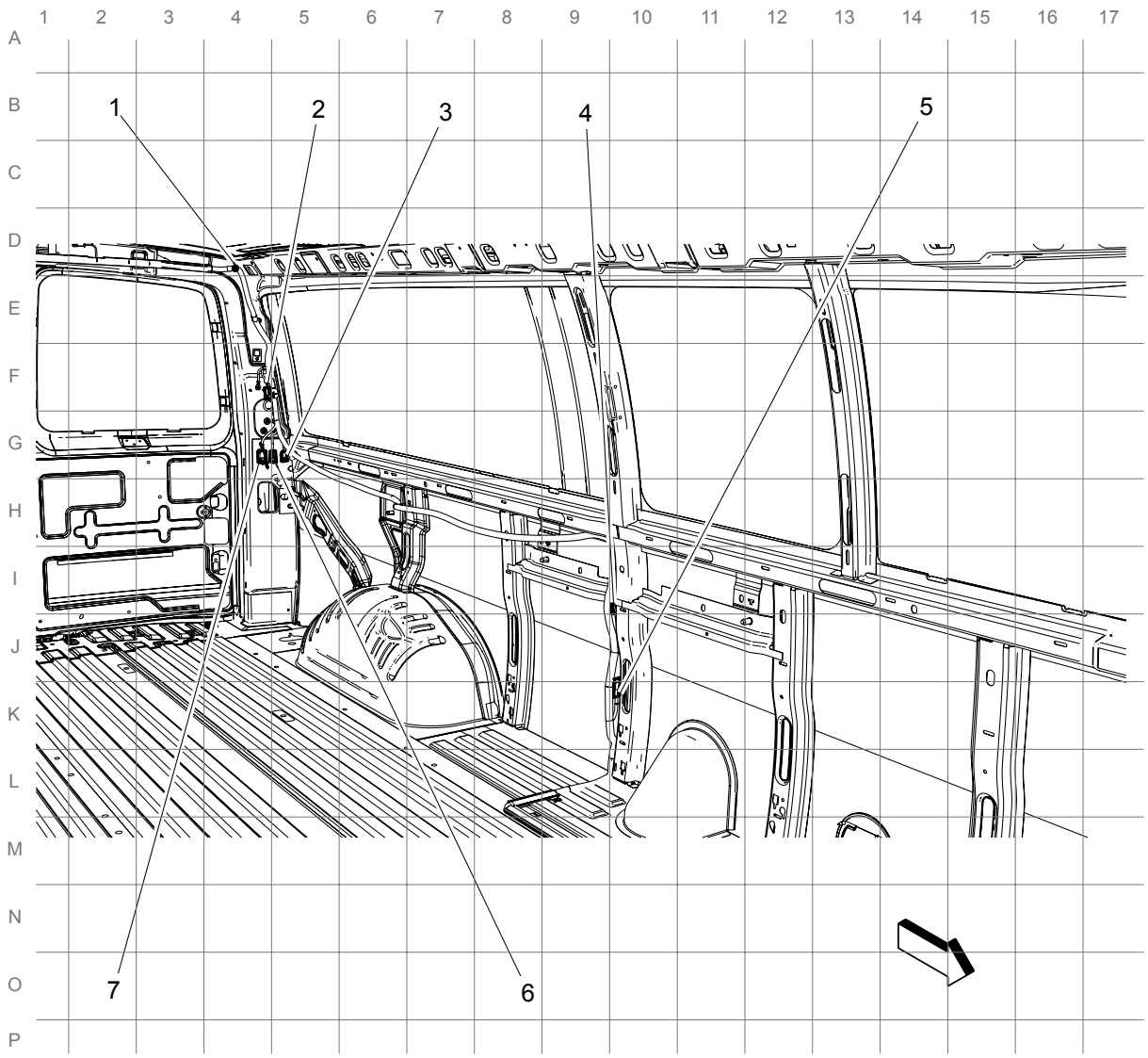

Items

1. J410
2. X401 (Passenger or Cargo)
3. X407 (C36 or C69)
4. X222 (YF2 or YF7)
5. X320 (YF2 or YF7)
6. X409 (C36 or C69)
7. X411 (Passenger or Cargo)

Body Harness Routing - Right Rear (Passenger or Cargo)

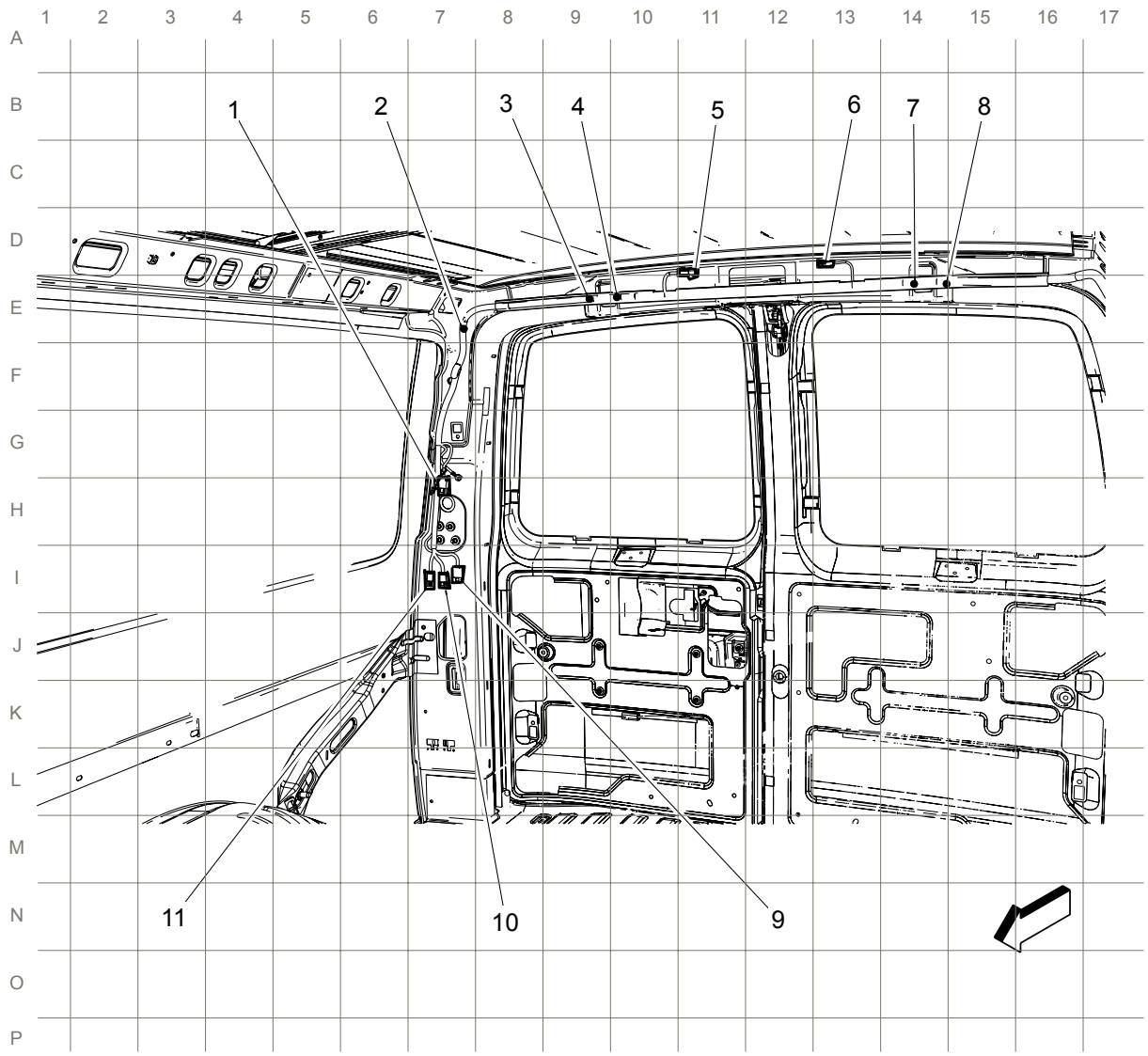

Items

1. X402 (Passenger or Cargo)
2. J403
3. J451 (YF2 or YF7)
4. J450 (US8, YF2, or YF7)
5. X320 (YF2 or YF7)
6. X419 (Passenger or Cargo)
7. J452 (US8, YF2, or YF7)
8. J453 (YF2 or YF7)
9. X412 (Passenger or Cargo)
10. X400 (Passenger or Cargo)
11. X403 (UVC)

Body Harness Routing - Roof Area

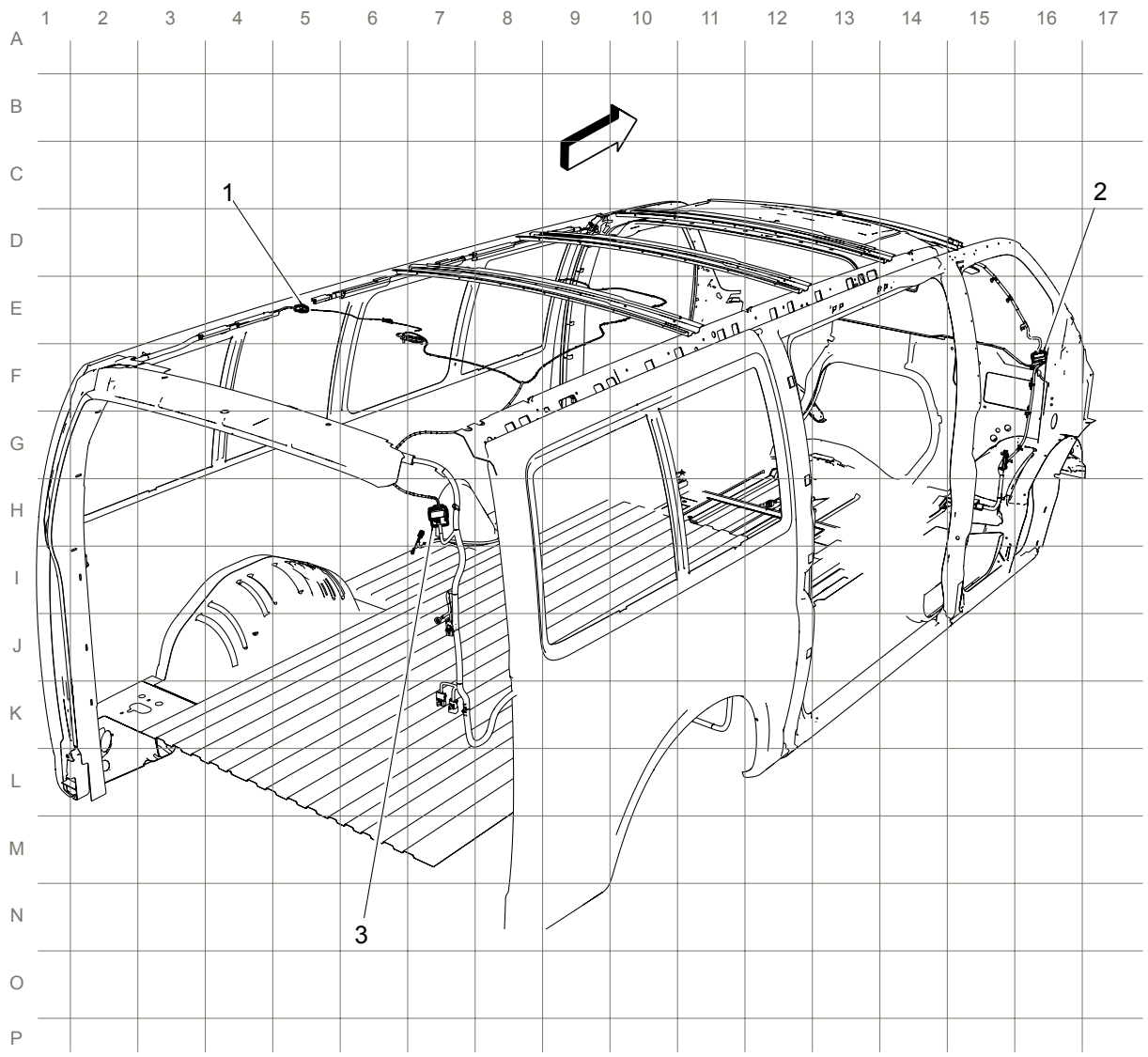

Items

1. X417 (Cargo without YF7)
2. X205
3. X420 (Passenger or Cargo)

Chassis Harness Routing (L20, L96, or LC8)

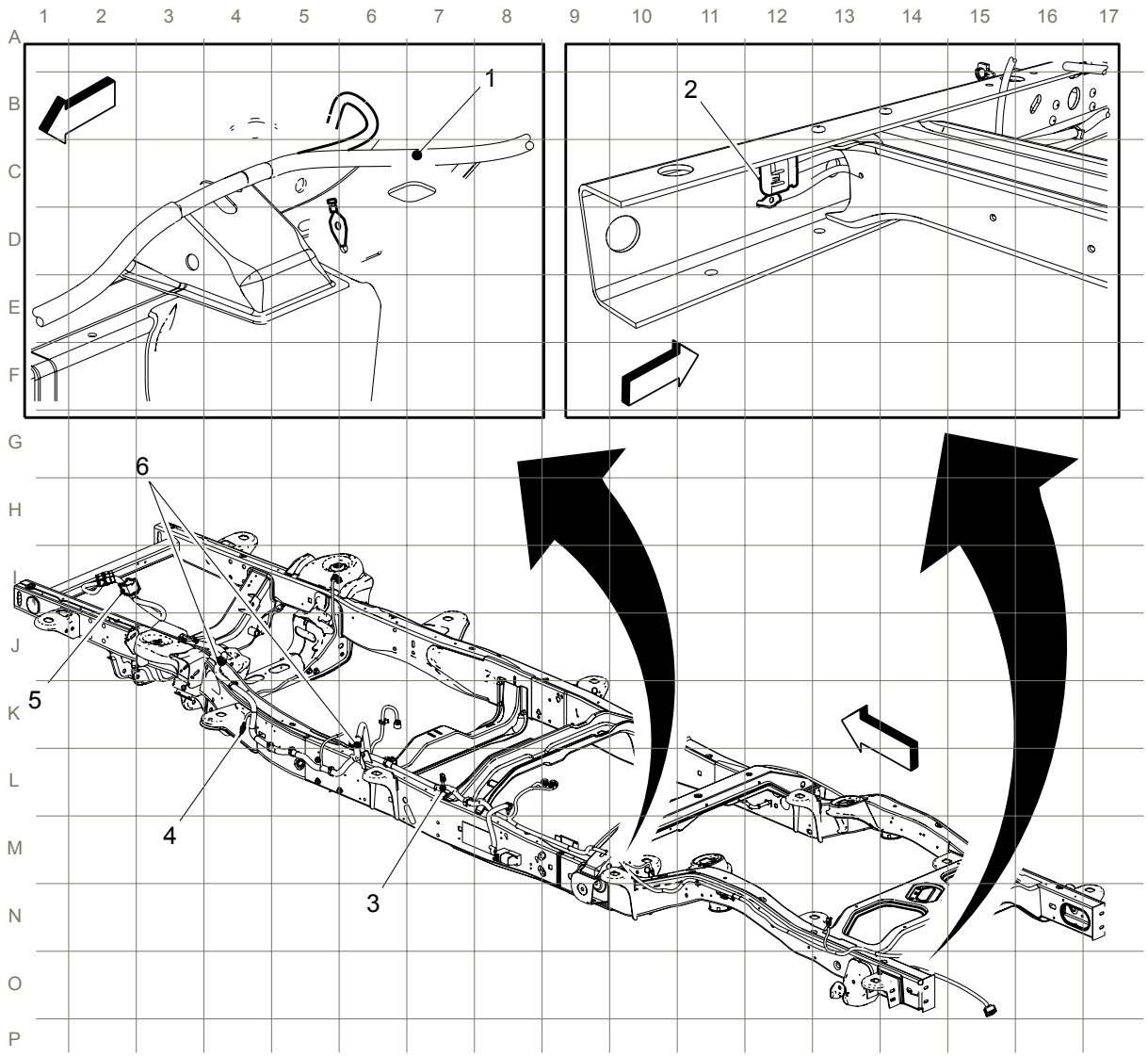

Items

1. J402
2. X405 (Cutaway)
3. J301 (L20, L96, or LC8)
4. G300
5. X101
6. J315

Chassis Harness Routing (LGH)

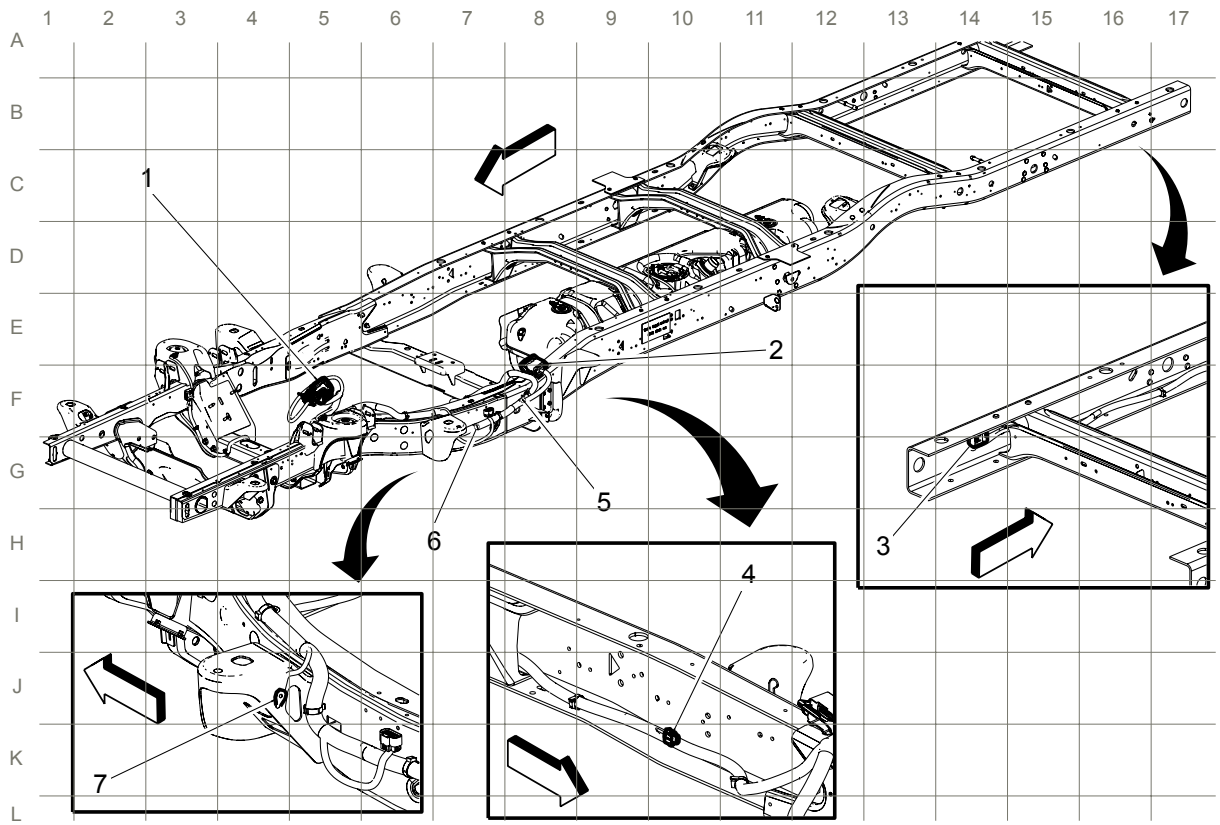

Items

1. X101
2. X395 (LGH)
3. X405 (Cutaway)
4. X305 (K08)
5. J315
6. J119 (K08)
7. G300

Driver Seat Harness Routing and Front Passenger Seat Harness Routing

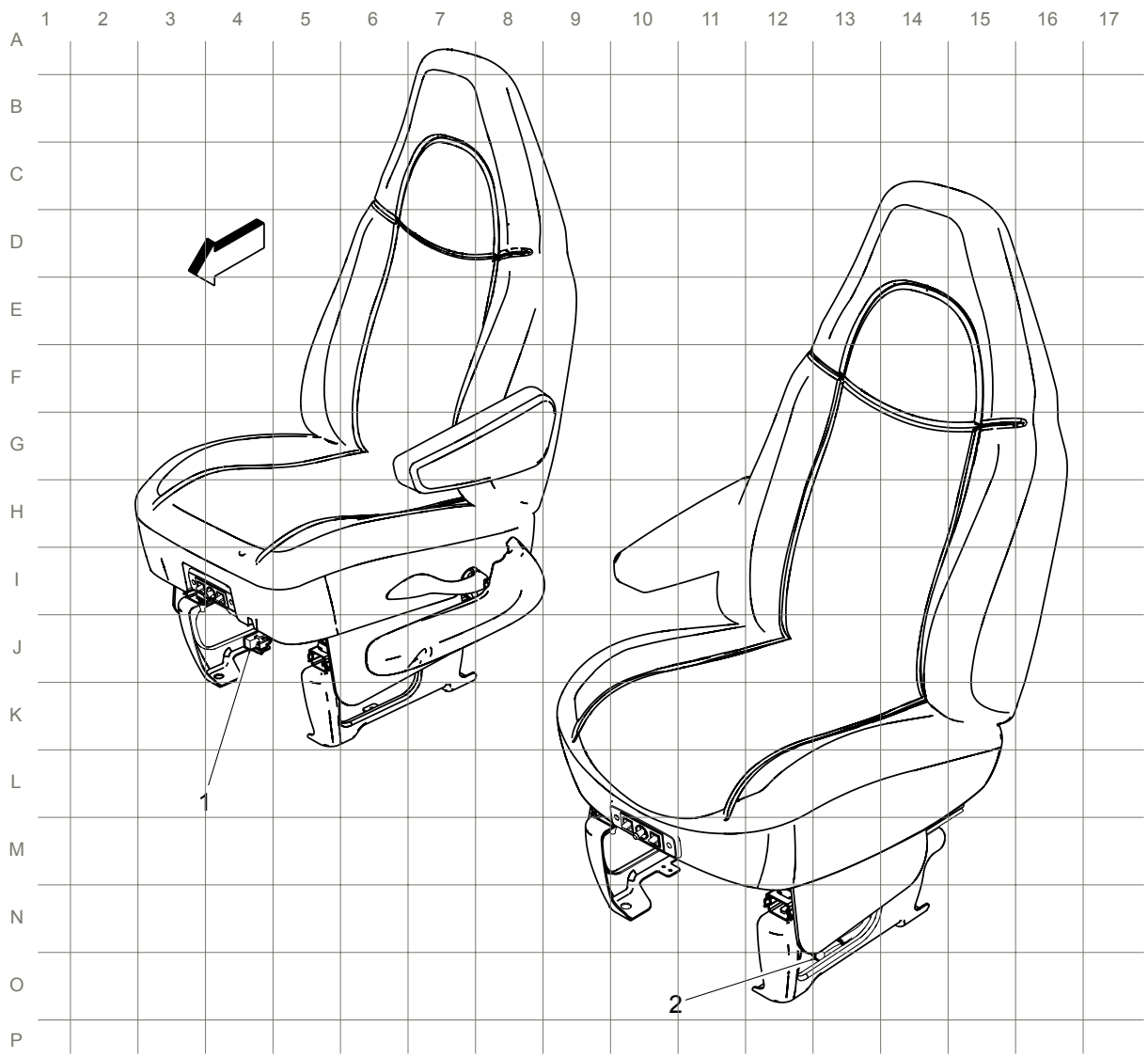

Items

1. X306
2. X307

Rear Cargo Doors Harness Routing (Passenger or Cargo)

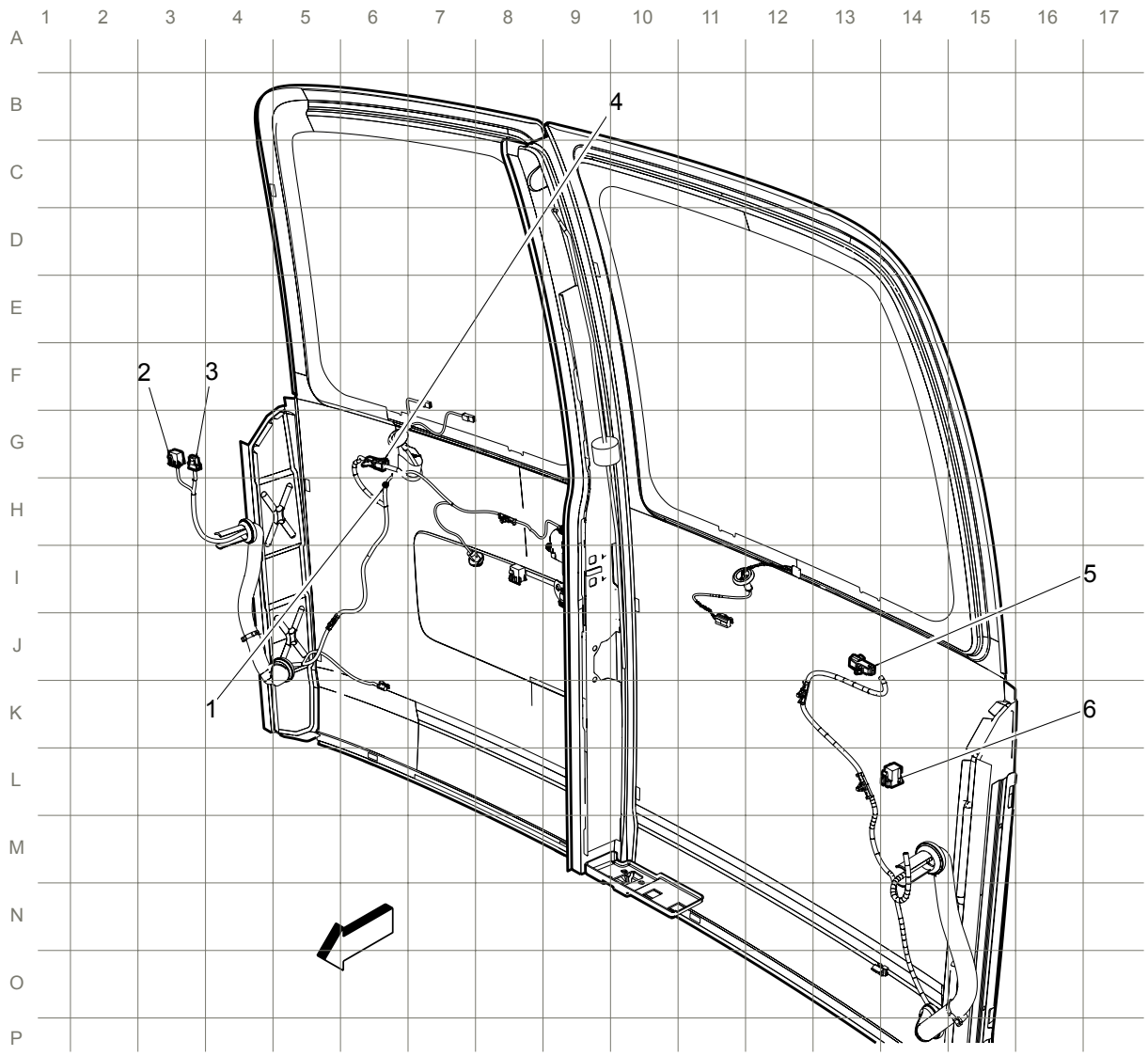

Items

1. J902 (C49)
2. X400 (Passenger or Cargo)
3. X412 (Passenger or Cargo)
4. X902 (C49 with A12)
5. X901 (C49 with A12)
6. X411 (Passenger or Cargo)

Vehicle Zoning Strategy

All grounds, in-line connectors, and splices have identifying numbers that correspond to where they are located in the vehicle. The following table explains the numbering system.

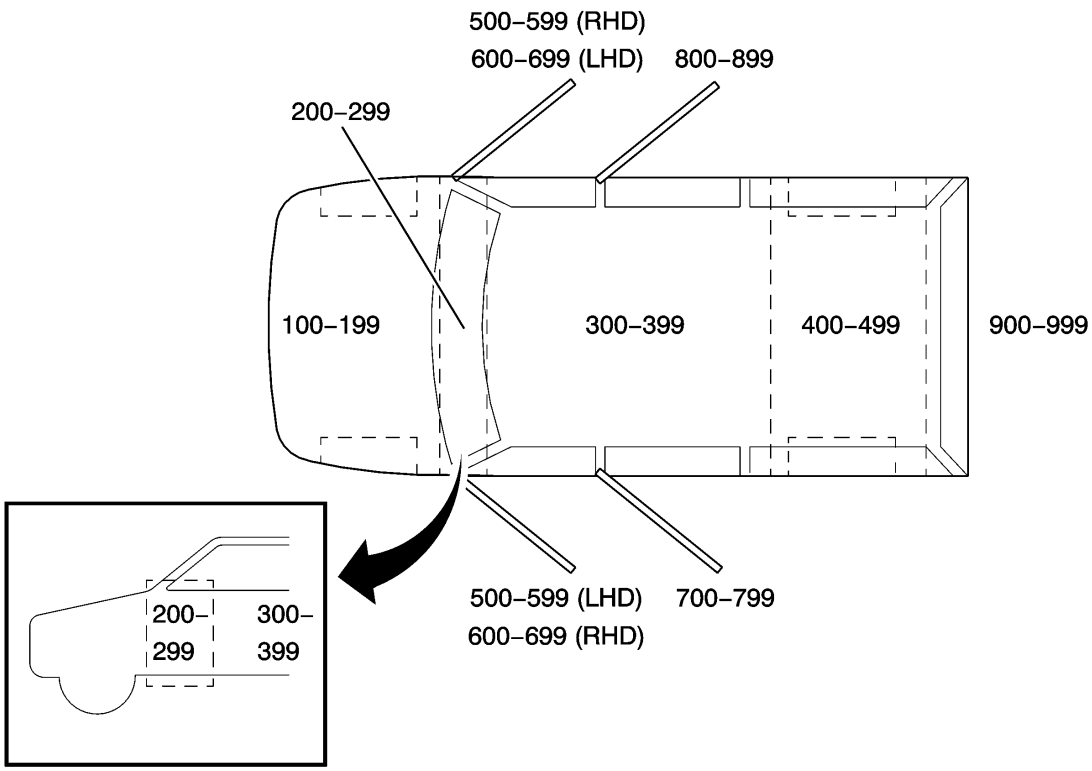

Vehicle Zoning Strategy

Callout Numbers	Zone Description
100-199	Engine compartment (all forward of the instrument panel)
200-299	Within the instrument panel area (between the bulkhead and the front plane of the instrument panel)
300-399	Passenger compartment (from instrument panel to the back of the 2nd row seats)
400-499	Luggage compartment (from the back of the 2nd row seats to the rear of the vehicle, including any additional rows of seating rear of the 2nd row seats)
500-599	Inline harness connectors to or within the driver door
600-699	Inline harness connectors to or within the front passenger door
700-799	Inline harness connectors to or within the left rear door
800-899	Inline harness connectors to or within the right rear door
900-999	Inline harness connectors to or within the liftgate, lift window, endgate, or rear doors

Schematics RPO Code List

RPO	Option Name	Country Group
01U	PRIMARY COLOR-EXTERIOR, SPECIAL (02)	U.S.A., PR and USVI (MAH),Canada (MBC),Mexico (MCX),Africa (MAA),Israel (MBI),Mid-East (MAM)
25U	PRIMARY COLOR-EXTERIOR, DARK MING BLUE (02) 722J	U.S.A., PR and USVI (MAH),Canada (MBC),Mexico (MCX),Africa (MAA),Israel (MBI),Mid-East (MAM)
40P	WHEEL COLOR-WHITE (91)	U.S.A., PR and USVI (MAH),Canada (MBC),Mexico (MCX),Africa (MAA),Israel (MBI),Mid-East (MAM)
52G	TRIM COMBINATION-CLOTH, MED NEUTRAL II (G) (00)	U.S.A., PR and USVI (MAH),Canada (MBC),Mexico (MCX),Africa (MAA),Israel (MBI),Mid-East (MAM)
52I	INTERIOR TRIM-MED NEUTRAL II (I) (96)	U.S.A., PR and USVI (MAH),Canada (MBC),Mexico (MCX),Africa (MAA),Israel (MBI),Mid-East (MAM)
52W	TRIM COMBINATION-VINYL, MED NEUTRAL II (W) (00)	U.S.A., PR and USVI (MAH),Canada (MBC),Mexico (MCX),Africa (MAA),Israel (MBI),Mid-East (MAM)
5AZ	ACCESSORY-SAFETY KIT - UNIVERSAL	U.S.A., PR and USVI (MAH),Canada (MBC),Mexico (MCX),Africa (MAA),Israel (MBI),Mid-East (MAM)
5C6	HOOK-CARGO TIE-DN	U.S.A., PR and USVI (MAH),Canada (MBC),Mexico (MCX),Africa (MAA),Israel (MBI),Mid-East (MAM)
5Y3	ACCESSORY-TOW BALL - TRAILER HITCH	U.S.A., PR and USVI (MAH),Canada (MBC),Mexico (MCX),Africa (MAA),Israel (MBI),Mid-East (MAM)
8S3	Back-up Alarm, Electrical, 97 Decibels	U.S.A., PR and USVI (MAH),Canada (MBC),Mexico (MCX),Africa (MAA),Israel (MBI),Mid-East (MAM)
8S8	Wiring Provisions - Odometer Security	U.S.A., PR and USVI (MAH),Canada (MBC),Mexico (MCX),Africa (MAA),Israel (MBI),Mid-East (MAM)
86U	PRIMARY COLOR-EXTERIOR, WHEATLAND YELLOW (02) 253A	U.S.A., PR and USVI (MAH),Canada (MBC),Mexico (MCX),Africa (MAA),Israel (MBI),Mid-East (MAM)
93G	TRIM COMBINATION-CLOTH, MED DK PEWTER II (G) (03) (GMT610 - "G" VAN)	U.S.A., PR and USVI (MAH),Canada (MBC),Mexico (MCX),Africa (MAA),Israel (MBI),Mid-East (MAM)
93I	INTERIOR TRIM-MED DK PEWTER II (03) (GMT610 - "G" VAN)	U.S.A., PR and USVI (MAH),Canada (MBC),Mexico (MCX),Africa (MAA),Israel (MBI),Mid-East (MAM)
93W	TRIM COMBINATION-VINYL, MED DK PEWTER II (W) (03) (GMT610 - "G" VAN)	U.S.A., PR and USVI (MAH),Canada (MBC),Mexico (MCX),Africa (MAA),Israel (MBI),Mid-East (MAM)
9N2	GVW RATING-10,050 LBS	U.S.A., PR and USVI (MAH),Canada (MBC),Mexico (MCX),Africa (MAA),Israel (MBI),Mid-East (MAM)
A07	WINDOW-BODY (DO NOT USE AFTER M.Y. 2011)	U.S.A., PR and USVI (MAH),Canada (MBC),Mexico (MCX),Africa (MAA),Israel (MBI),Mid-East (MAM)
A08	WINDOW-BODY, RH (DO NOT USE AFTER M.Y. 2011)	U.S.A., PR and USVI (MAH),Canada (MBC),Mexico (MCX),Africa (MAA),Israel (MBI),Mid-East (MAM)
A12	WINDOW RR-DR, STA	U.S.A., PR and USVI (MAH),Canada (MBC),Mexico (MCX),Africa (MAA),Israel (MBI),Mid-East (MAM)
A13	WINDOW SIDE DR-RR, STA	U.S.A., PR and USVI (MAH),Canada (MBC),Mexico (MCX),Africa (MAA),Israel (MBI),Mid-East (MAM)

A17	WINDOW SIDE BODY-SWING OUT, LH	U.S.A., PR and USVI (MAH),Canada (MBC),Mexico (MCX),Africa (MAA),Israel (MBI),Mid-East (MAM)
A18	WINDOW RR-DR, SWING OUT	U.S.A., PR and USVI (MAH),Canada (MBC),Mexico (MCX),Africa (MAA),Israel (MBI),Mid-East (MAM)
A19	WINDOW SIDE DR-RR, SWING OUT	U.S.A., PR and USVI (MAH),Canada (MBC),Mexico (MCX),Africa (MAA),Israel (MBI),Mid-East (MAM)
A31	WINDOW-POWER OPERATED, ALL DOORS (DO NOT USE ON NEW/MAJOR PROGRAMS)	U.S.A., PR and USVI (MAH),Canada (MBC),Mexico (MCX),Africa (MAA),Israel (MBI),Mid-East (MAM)
ACO	IDENTIFICATION-ACCESSORY CATALOG OFFERING	U.S.A., PR and USVI (MAH),Canada (MBC),Mexico (MCX),Africa (MAA),Israel (MBI),Mid-East (MAM)
AG1	ADJUSTER FRT ST-POWER, MULTI-DIRECTIONAL, DRIVER	U.S.A., PR and USVI (MAH),Canada (MBC),Mexico (MCX),Africa (MAA),Israel (MBI),Mid-East (MAM)
AG2	ADJUSTER PASS ST-POWER, MULTI-DIRECTIONAL	U.S.A., PR and USVI (MAH),Canada (MBC),Mexico (MCX),Africa (MAA),Israel (MBI),Mid-East (MAM)
AJ1	WINDOW TINTED-DEEP, ALL EXCEPT W/S AND DRS (DO NOT USE AFTER M.Y. 2011)	U.S.A., PR and USVI (MAH),Canada (MBC),Mexico (MCX),Africa (MAA),Israel (MBI),Mid-East (MAM)
AJ3	RESTRAINT SYSTEM-SEAT, INFLATABLE, DRIVER, FRT	U.S.A., PR and USVI (MAH),Canada (MBC),Mexico (MCX),Africa (MAA),Israel (MBI),Mid-East (MAM)
AK5	RESTRAINT SYSTEM-SEAT, INFLATABLE, DRIVER & PASS FRT	U.S.A., PR and USVI (MAH),Canada (MBC),Mexico (MCX),Africa (MAA),Israel (MBI),Mid-East (MAM)
AL0	SENSOR INDICATOR-INFLATABLE RESTRAINT, FRT PASS/CHILD PRESENCE DETECTOR	U.S.A., PR and USVI (MAH),Canada (MBC),Mexico (MCX),Africa (MAA),Israel (MBI),Mid-East (MAM)
ANC	SALES PACKAGE-SHUTTLE BUS	U.S.A., PR and USVI (MAH),Canada (MBC),Mexico (MCX),Africa (MAA),Israel (MBI),Mid-East (MAM)
AR7	SEAT-FRT BKT, STANDARD	U.S.A., PR and USVI (MAH),Canada (MBC),Mexico (MCX),Africa (MAA),Israel (MBI),Mid-East (MAM)
AS5	SEAT-FRT BKT, DELUXE,	U.S.A., PR and USVI (MAH),Canada (MBC),Mexico (MCX),Africa (MAA),Israel (MBI),Mid-East (MAM)
ASF	RESTRAINT-ROOF SIDE, LH & RH, INFLATABLE	U.S.A., PR and USVI (MAH),Canada (MBC),Mexico (MCX),Africa (MAA),Israel (MBI),Mid-East (MAM)
AT8	RESTRAINT PROVISIONS-CHILD, RR SEAT, RR FACING	U.S.A., PR and USVI (MAH),Canada (MBC),Mexico (MCX),Africa (MAA),Israel (MBI),Mid-East (MAM)
ATG	LOCK CONTROL, ENTRY-REMOTE ENTRY, STANDARD RANGE	U.S.A., PR and USVI (MAH),Canada (MBC),Mexico (MCX),Africa (MAA),Israel (MBI),Mid-East (MAM)
AU3	LOCK CONTROL-SIDE DR, ELEC	U.S.A., PR and USVI (MAH),Canada (MBC),Mexico (MCX),Africa (MAA),Israel (MBI),Mid-East (MAM)
AXK	VEHICLE TYPE-TRUCK	U.S.A., PR and USVI (MAH),Canada (MBC),Mexico (MCX),Africa (MAA),Israel (MBI),Mid-East (MAM)
AXW	VEHICLE TYPE-BUS- (NOT SCHOOL BUS)	U.S.A., PR and USVI (MAH),Canada (MBC),Mexico (MCX),Africa (MAA),Israel (MBI),Mid-East (MAM)
B30	COVERING FLOOR-CARPET	U.S.A., PR and USVI (MAH),Canada (MBC),Mexico (MCX),Africa (MAA),Israel (MBI),Mid-East (MAM)

B31	COVERING FLOOR-VINYL, FRT, FULL WIDTH	U.S.A., PR and USVI (MAH),Canada (MBC),Mexico (MCX),Africa (MAA),Israel (MBI),Mid-East (MAM)
B32	COVERING FRT-FLOOR MATS, AUX	U.S.A., PR and USVI (MAH),Canada (MBC),Mexico (MCX),Africa (MAA),Israel (MBI),Mid-East (MAM)
B33	COVERING REAR-FLOOR MATS, AUX	U.S.A., PR and USVI (MAH),Canada (MBC),Mexico (MCX),Africa (MAA),Israel (MBI),Mid-East (MAM)
B38	COVERING FLOOR-VINYL, FRT & RR, FULL WIDTH	U.S.A., PR and USVI (MAH),Canada (MBC),Mexico (MCX),Africa (MAA),Israel (MBI),Mid-East (MAM)
B3D	SALES PACKAGE-SCHOOL BUS	U.S.A., PR and USVI (MAH),Canada (MBC),Mexico (MCX),Africa (MAA),Israel (MBI),Mid-East (MAM)
B46	TRIM EQUIPMENT-SPECIAL ORDER	U.S.A., PR and USVI (MAH),Canada (MBC),Mexico (MCX),Africa (MAA),Israel (MBI),Mid-East (MAM)
BA0	ORNAMENTATION-EXTR, DOOR, NAMEPLATE	U.S.A., PR and USVI (MAH),Canada (MBC),Mexico (MCX),Africa (MAA),Israel (MBI),Mid-East (MAM)
BA3	COMPARTMENT-STOWAGE, I/P LOWER EXTENSION DELUXE	U.S.A., PR and USVI (MAH),Canada (MBC),Mexico (MCX),Africa (MAA),Israel (MBI),Mid-East (MAM)
BAG	PARTS PKG-EXPORT	U.S.A., PR and USVI (MAH),Canada (MBC),Mexico (MCX),Africa (MAA),Israel (MBI),Mid-East (MAM)
BG5	COVERING FLOOR-(NONE)	U.S.A., PR and USVI (MAH),Canada (MBC),Mexico (MCX),Africa (MAA),Israel (MBI),Mid-East (MAM)
BNC	PARTS PKG-BODY MOUNT CUSHIONS	U.S.A., PR and USVI (MAH),Canada (MBC),Mexico (MCX),Africa (MAA),Israel (MBI),Mid-East (MAM)
BTV	REMOTE START-ENGINE	U.S.A., PR and USVI (MAH),Canada (MBC),Mexico (MCX),Africa (MAA),Israel (MBI),Mid-East (MAM)
BUE	KIT-EXHAUST DIESEL	U.S.A., PR and USVI (MAH),Canada (MBC),Mexico (MCX),Africa (MAA),Israel (MBI),Mid-East (MAM)
C36	HEATER-AUXILIARY	U.S.A., PR and USVI (MAH),Canada (MBC),Mexico (MCX),Africa (MAA),Israel (MBI),Mid-East (MAM)
C42	HVAC SYSTEM-HEATER, OUTSIDE AIR, DELUXE	U.S.A., PR and USVI (MAH),Canada (MBC),Mexico (MCX),Africa (MAA),Israel (MBI),Mid-East (MAM)
C49	DEFOGGER-RR WINDOW, ELECTRIC	U.S.A., PR and USVI (MAH),Canada (MBC),Mexico (MCX),Africa (MAA),Israel (MBI),Mid-East (MAM)
C4K	GVW RATING-9,925 LBS	U.S.A., PR and USVI (MAH),Canada (MBC),Mexico (MCX),Africa (MAA),Israel (MBI),Mid-East (MAM)
C4M	GVW RATING-9,900 LBS/4,500 KG	U.S.A., PR and USVI (MAH),Canada (MBC),Mexico (MCX),Africa (MAA),Israel (MBI),Mid-East (MAM)
C60	HVAC SYSTEM-AIR CONDITIONER FRT, MAN CONTROLS	U.S.A., PR and USVI (MAH),Canada (MBC),Mexico (MCX),Africa (MAA),Israel (MBI),Mid-East (MAM)
C69	HVAC SYSTEM RR-AIR CONDITIONER	U.S.A., PR and USVI (MAH),Canada (MBC),Mexico (MCX),Africa (MAA),Israel (MBI),Mid-East (MAM)
C6P	GVW RATING-8,600 LBS/3,900 KG	U.S.A., PR and USVI (MAH),Canada (MBC),Mexico (MCX),Africa (MAA),Israel (MBI),Mid-East (MAM)

C6Y	GVW RATING-9,600 LBS	U.S.A., PR and USVI (MAH),Canada (MBC),Mexico (MCX),Africa (MAA),Israel (MBI),Mid-East (MAM)
C7I	GVW RATING-14,200 LBS.	U.S.A., PR and USVI (MAH),Canada (MBC),Mexico (MCX),Africa (MAA),Israel (MBI),Mid-East (MAM)
C7N	GVW RATING-12,300 LBS	U.S.A., PR and USVI (MAH),Canada (MBC),Mexico (MCX),Africa (MAA),Israel (MBI),Mid-East (MAM)
C7Q	GVW RATING-8,800 LBS/4,000 KG	U.S.A., PR and USVI (MAH),Canada (MBC),Mexico (MCX),Africa (MAA),Israel (MBI),Mid-East (MAM)
C8V	GVW RATING-13,980 LBS	U.S.A., PR and USVI (MAH),Canada (MBC),Mexico (MCX),Africa (MAA),Israel (MBI),Mid-East (MAM)
C99	SWITCH-INFL RST I/P MDL MAN SUPPRESSION	U.S.A., PR and USVI (MAH),Canada (MBC),Mexico (MCX),Africa (MAA),Israel (MBI),Mid-East (MAM)
CEI	CERTIFICATION-EMISSION, GEOGRAPHICALLY RESTRICTED REGION FOR VEHICLES OVER 14,000 LBS GVW	U.S.A., PR and USVI (MAH),Canada (MBC),Mexico (MCX),Africa (MAA),Israel (MBI),Mid-East (MAM)
CEJ	CERTIFICATION-EMISSION, FEDERAL FOR VEHICLES OVER 14,000 LBS GVW	U.S.A., PR and USVI (MAH),Canada (MBC),Mexico (MCX),Africa (MAA),Israel (MBI),Mid-East (MAM)
CEK	EMISSION OVERRIDE-EMISSION OVERRIDE CALIFORNIA SYSTEM FOR VEHICLES OVER 14,000 LBS GVW	U.S.A., PR and USVI (MAH),Canada (MBC),Mexico (MCX),Africa (MAA),Israel (MBI),Mid-East (MAM)
CEM	EMISSION OVERRIDE-EMISSION OVERRIDE FEDERAL SYSTEM FOR VEHICLES OVER 14,000 LBS GVW	U.S.A., PR and USVI (MAH),Canada (MBC),Mexico (MCX),Africa (MAA),Israel (MBI),Mid-East (MAM)
CU7	COUNTRY-KUWAIT	U.S.A., PR and USVI (MAH),Canada (MBC),Mexico (MCX),Africa (MAA),Israel (MBI),Mid-East (MAM)
CU8	COUNTRY-SAUDI ARABIA	U.S.A., PR and USVI (MAH),Canada (MBC),Mexico (MCX),Africa (MAA),Israel (MBI),Mid-East (MAM)
CV3	COUNTRY-MEXICO	U.S.A., PR and USVI (MAH),Canada (MBC),Mexico (MCX),Africa (MAA),Israel (MBI),Mid-East (MAM)
CV4	COUNTRY-ISRAEL	U.S.A., PR and USVI (MAH),Canada (MBC),Mexico (MCX),Africa (MAA),Israel (MBI),Mid-East (MAM)
CW2	COUNTRY-GULF AREAS (BAHRAIN, KUWAIT, OMAN, QATAR, SAUDI ARABIA, UAE)	U.S.A., PR and USVI (MAH),Canada (MBC),Mexico (MCX),Africa (MAA),Israel (MBI),Mid-East (MAM)
CW9	COUNTRY-MISCELLANEOUS	U.S.A., PR and USVI (MAH),Canada (MBC),Mexico (MCX),Africa (MAA),Israel (MBI),Mid-East (MAM)
D28	MIRROR O/S-(-NONE)	U.S.A., PR and USVI (MAH),Canada (MBC),Mexico (MCX),Africa (MAA),Israel (MBI),Mid-East (MAM)
D31	MIRROR I/S R/V-TILT	U.S.A., PR and USVI (MAH),Canada (MBC),Mexico (MCX),Africa (MAA),Israel (MBI),Mid-East (MAM)
DAA	SUNSHADE-VINYL	U.S.A., PR and USVI (MAH),Canada (MBC),Mexico (MCX),Africa (MAA),Israel (MBI),Mid-East (MAM)
DE2	MIRROR O/S-LH & RH, MANUAL CONTROL, FOLDING, COLOR	U.S.A., PR and USVI (MAH),Canada (MBC),Mexico (MCX),Africa (MAA),Israel (MBI),Mid-East (MAM)
DE5	MIRROR O/S-LH & RH, REMOTE CONTROL, ELECTRIC, HEATED, FOLDING, COLOR.	U.S.A., PR and USVI (MAH),Canada (MBC),Mexico (MCX),Africa (MAA),Israel (MBI),Mid-East (MAM)

DEB	MIRROR O/S-LH & RH, REMOTE CONTROL, ELECTRIC, HEATED, FOLDING, COLOR. SINGLE PANE	U.S.A., PR and USVI (MAH),Canada (MBC),Mexico (MCX),Africa (MAA),Israel (MBI),Mid-East (MAM)
DH6	MIRROR I/S FRT VAN-LH & RH, SUNSHADE, ILLUM	U.S.A., PR and USVI (MAH),Canada (MBC),Mexico (MCX),Africa (MAA),Israel (MBI),Mid-East (MAM)
DHC	MIRROR O/S-LH & RH, MANUAL CONTROL, AUX WFOV, COLOR	U.S.A., PR and USVI (MAH),Canada (MBC),Mexico (MCX),Africa (MAA),Israel (MBI),Mid-East (MAM)
DNS	EQUIPMENT-SUPPLIER INSTALLED	U.S.A., PR and USVI (MAH),Canada (MBC),Mexico (MCX),Africa (MAA),Israel (MBI),Mid-East (MAM)
DRJ	MIRROR I/S R/V-TILT, PARTIAL VIDEO DISPLAY	U.S.A., PR and USVI (MAH),Canada (MBC),Mexico (MCX),Africa (MAA),Israel (MBI),Mid-East (MAM)
DT4	ASHTRAY-CIGARETTE LIGHTER	U.S.A., PR and USVI (MAH),Canada (MBC),Mexico (MCX),Africa (MAA),Israel (MBI),Mid-East (MAM)
E24	DOOR SIDE-REAR, HINGED	U.S.A., PR and USVI (MAH),Canada (MBC),Mexico (MCX),Africa (MAA),Israel (MBI),Mid-East (MAM)
E3T	HANDLE-I/S, DOOR RELEASE	U.S.A., PR and USVI (MAH),Canada (MBC),Mexico (MCX),Africa (MAA),Israel (MBI),Mid-East (MAM)
E48	COVER-RADIATOR GRILLE OPG - COLD CLIMATE	U.S.A., PR and USVI (MAH),Canada (MBC),Mexico (MCX),Africa (MAA),Israel (MBI),Mid-East (MAM)
EF7	COUNTRY-UNITED STATES OF AMERICA (USA)	U.S.A., PR and USVI (MAH),Canada (MBC),Mexico (MCX),Africa (MAA),Israel (MBI),Mid-East (MAM)
ENC	HVAC PROVISIONS-AUXILLIARY HEATER PLUMBING & WIRING	U.S.A., PR and USVI (MAH),Canada (MBC),Mexico (MCX),Africa (MAA),Israel (MBI),Mid-East (MAM)
EVA	TEST-DVT, EVAP EMISSION REQUIREMENT	U.S.A., PR and USVI (MAH),Canada (MBC),Mexico (MCX),Africa (MAA),Israel (MBI),Mid-East (MAM)
EXP	EXPORT-	U.S.A., PR and USVI (MAH),Canada (MBC),Mexico (MCX),Africa (MAA),Israel (MBI),Mid-East (MAM)
FE9	CERTIFICATION-EMISSION, FEDERAL	U.S.A., PR and USVI (MAH),Canada (MBC),Mexico (MCX),Africa (MAA),Israel (MBI),Mid-East (MAM)
FHO	VEHICLE FUEL-GASOLINE E10	U.S.A., PR and USVI (MAH),Canada (MBC),Mexico (MCX),Africa (MAA),Israel (MBI),Mid-East (MAM)
FHS	VEHICLE FUEL-GASOLINE E85	U.S.A., PR and USVI (MAH),Canada (MBC),Mexico (MCX),Africa (MAA),Israel (MBI),Mid-East (MAM)
FHX	VEHICLE FUEL-DIESEL B20	U.S.A., PR and USVI (MAH),Canada (MBC),Mexico (MCX),Africa (MAA),Israel (MBI),Mid-East (MAM)
FHZ	VEHICLE FUEL-DEDICATED CNG	U.S.A., PR and USVI (MAH),Canada (MBC),Mexico (MCX),Africa (MAA),Israel (MBI),Mid-East (MAM)
G7C	PRIMARY COLOR-EXTERIOR, PULL ME OVER RED SOLID (130X)	U.S.A., PR and USVI (MAH),Canada (MBC),Mexico (MCX),Africa (MAA),Israel (MBI),Mid-East (MAM)
G7J	PRIMARY COLOR-EXTERIOR, UNRIPENED GREEN MET (136X)	U.S.A., PR and USVI (MAH),Canada (MBC),Mexico (MCX),Africa (MAA),Israel (MBI),Mid-East (MAM)
G7K	EQUIPMENT-ANTENNA, CABLE AND GROUNDPLATE	U.S.A., PR and USVI (MAH),Canada (MBC),Mexico (MCX),Africa (MAA),Israel (MBI),Mid-East (MAM)

G80	AXLE POSITRACTION-LIMITED SLIP	U.S.A., PR and USVI (MAH),Canada (MBC),Mexico (MCX),Africa (MAA),Israel (MBI),Mid-East (MAM)
GAN	PRIMARY COLOR-EXTERIOR, SWITCHBLADE SILVER MET (G) 636R	U.S.A., PR and USVI (MAH),Canada (MBC),Mexico (MCX),Africa (MAA),Israel (MBI),Mid-East (MAM)
GAZ	PRIMARY COLOR-EXTERIOR, SUMMIT WHITE (G) 8624	U.S.A., PR and USVI (MAH),Canada (MBC),Mexico (MCX),Africa (MAA),Israel (MBI),Mid-East (MAM)
GBA	PRIMARY COLOR-EXTERIOR, BLACK (G) 8555	U.S.A., PR and USVI (MAH),Canada (MBC),Mexico (MCX),Africa (MAA),Israel (MBI),Mid-East (MAM)
GBV	PRIMARY COLOR-EXTERIOR, CYBER GRAY MET (G) 637R	U.S.A., PR and USVI (MAH),Canada (MBC),Mexico (MCX),Africa (MAA),Israel (MBI),Mid-East (MAM)
GH0	AXLE REAR-3.54 RATIO	U.S.A., PR and USVI (MAH),Canada (MBC),Mexico (MCX),Africa (MAA),Israel (MBI),Mid-East (MAM)
GT4	AXLE REAR-3.73 RATIO	U.S.A., PR and USVI (MAH),Canada (MBC),Mexico (MCX),Africa (MAA),Israel (MBI),Mid-East (MAM)
GT5	AXLE REAR-4.10 RATIO	U.S.A., PR and USVI (MAH),Canada (MBC),Mexico (MCX),Africa (MAA),Israel (MBI),Mid-East (MAM)
GU6	AXLE REAR-3.42 RATIO	U.S.A., PR and USVI (MAH),Canada (MBC),Mexico (MCX),Africa (MAA),Israel (MBI),Mid-East (MAM)
GWX	PRIMARY COLOR-EXTERIOR, SUBTERRANEAN MET (105V)	U.S.A., PR and USVI (MAH),Canada (MBC),Mexico (MCX),Africa (MAA),Israel (MBI),Mid-East (MAM)
I16	ENGINEERING YEAR-2016	U.S.A., PR and USVI (MAH),Canada (MBC),Mexico (MCX),Africa (MAA),Israel (MBI),Mid-East (MAM)
JFF	GVW RATING-10,100 LBS	U.S.A., PR and USVI (MAH),Canada (MBC),Mexico (MCX),Africa (MAA),Israel (MBI),Mid-East (MAM)
JH6	BRAKE-HYD POWER, 4 WHL DISC.	U.S.A., PR and USVI (MAH),Canada (MBC),Mexico (MCX),Africa (MAA),Israel (MBI),Mid-East (MAM)
JH9	BRAKE-HYD POWER, 4 WHL DISC, 14,200 LBS	U.S.A., PR and USVI (MAH),Canada (MBC),Mexico (MCX),Africa (MAA),Israel (MBI),Mid-East (MAM)
JL4	CONTROL,-ACTIVE BRAKE	U.S.A., PR and USVI (MAH),Canada (MBC),Mexico (MCX),Africa (MAA),Israel (MBI),Mid-East (MAM)
K05	HEATER ENG-BLOCK	U.S.A., PR and USVI (MAH),Canada (MBC),Mexico (MCX),Africa (MAA),Israel (MBI),Mid-East (MAM)
K08	HEATER-AUXILIARY, FUEL FIRED	U.S.A., PR and USVI (MAH),Canada (MBC),Mexico (MCX),Africa (MAA),Israel (MBI),Mid-East (MAM)
K34	CRUISE CONTROL-AUTOMATIC, ELECTRONIC	U.S.A., PR and USVI (MAH),Canada (MBC),Mexico (MCX),Africa (MAA),Israel (MBI),Mid-East (MAM)
K50	FUEL-FITTING, LINE TAKE-OFF	U.S.A., PR and USVI (MAH),Canada (MBC),Mexico (MCX),Africa (MAA),Israel (MBI),Mid-East (MAM)
K68	GENERATOR-105 AMP	U.S.A., PR and USVI (MAH),Canada (MBC),Mexico (MCX),Africa (MAA),Israel (MBI),Mid-East (MAM)
KC4	COOLING SYSTEM-ENG OIL	U.S.A., PR and USVI (MAH),Canada (MBC),Mexico (MCX),Africa (MAA),Israel (MBI),Mid-East (MAM)

KD1	COOLING SYSTEM-TRANS, OIL	U.S.A., PR and USVI (MAH),Canada (MBC),Mexico (MCX),Africa (MAA),Israel (MBI),Mid-East (MAM)
KD9	GENERATOR-145 AMP, DUAL	U.S.A., PR and USVI (MAH),Canada (MBC),Mexico (MCX),Africa (MAA),Israel (MBI),Mid-East (MAM)
KG3	GENERATOR-145 AMP	U.S.A., PR and USVI (MAH),Canada (MBC),Mexico (MCX),Africa (MAA),Israel (MBI),Mid-East (MAM)
KI4	RECEPTACLE-ELECTRICAL, ACCESSORY 110 VOLT	U.S.A., PR and USVI (MAH),Canada (MBC),Mexico (MCX),Africa (MAA),Israel (MBI),Mid-East (MAM)
KO7	VEHICLE FUEL-DEDICATED LIQUEFIED PETROLEUM GAS, LIQUID	U.S.A., PR and USVI (MAH),Canada (MBC),Mexico (MCX),Africa (MAA),Israel (MBI),Mid-East (MAM)
KUP	THROTTLE CONTROL-ELECTRONIC	U.S.A., PR and USVI (MAH),Canada (MBC),Mexico (MCX),Africa (MAA),Israel (MBI),Mid-East (MAM)
KW5	GENERATOR-220 AMP	U.S.A., PR and USVI (MAH),Canada (MBC),Mexico (MCX),Africa (MAA),Israel (MBI),Mid-East (MAM)
L20	ENGINE-GAS, 8 CYL, 4.8L, SFI, E85 MAX, IRON, GM	U.S.A., PR and USVI (MAH),Canada (MBC),Mexico (MCX),Africa (MAA),Israel (MBI),Mid-East (MAM)
L96	ENGINE-GAS, 8 CYL, 6.0L, SFI, E85 MAX, IRON, GM	U.S.A., PR and USVI (MAH),Canada (MBC),Mexico (MCX),Africa (MAA),Israel (MBI),Mid-East (MAM)
LC8	ENGINE-LPG/CNG, 8 CYL, V8, 6.0L, SFI, GEN 1, GMNA	U.S.A., PR and USVI (MAH),Canada (MBC),Mexico (MCX),Africa (MAA),Israel (MBI),Mid-East (MAM)
LGH	ENGINE-DIESEL, 8 CYL, 6.6L, DI, V8, TURBO, DURAMAX	U.S.A., PR and USVI (MAH),Canada (MBC),Mexico (MCX),Africa (MAA),Israel (MBI),Mid-East (MAM)
MTF	PROVISIONS-FIRE EXTINGUISHER MOUNTING	U.S.A., PR and USVI (MAH),Canada (MBC),Mexico (MCX),Africa (MAA),Israel (MBI),Mid-East (MAM)
MYD	TRANSMISSION-AUTO 6 SPD, HMD, 6L90	U.S.A., PR and USVI (MAH),Canada (MBC),Mexico (MCX),Africa (MAA),Israel (MBI),Mid-East (MAM)
N12	EXHAUST SYSTEM-REAR EXIT	U.S.A., PR and USVI (MAH),Canada (MBC),Mexico (MCX),Africa (MAA),Israel (MBI),Mid-East (MAM)
N33	STEERING COLUMN-TILT TYPE	U.S.A., PR and USVI (MAH),Canada (MBC),Mexico (MCX),Africa (MAA),Israel (MBI),Mid-East (MAM)
NB8	EMISSION OVERRIDE-CALIFORNIA SYSTEM	U.S.A., PR and USVI (MAH),Canada (MBC),Mexico (MCX),Africa (MAA),Israel (MBI),Mid-East (MAM)
NC7	EMISSION OVERRIDE-FEDERAL SYSTEM	U.S.A., PR and USVI (MAH),Canada (MBC),Mexico (MCX),Africa (MAA),Israel (MBI),Mid-East (MAM)
NC8	EMISSION SYSTEM-CALIFORNIA, ULEV (NOTE: NOT TO BE USED AFTER 2007MDL YR FOR DOMESTIC NAO PASS CAR & LT DUTY TRUCKS)	U.S.A., PR and USVI (MAH),Canada (MBC),Mexico (MCX),Africa (MAA),Israel (MBI),Mid-East (MAM)
NCF	LOCK-CHILD SECURITY FEATURE - NONE	U.S.A., PR and USVI (MAH),Canada (MBC),Mexico (MCX),Africa (MAA),Israel (MBI),Mid-East (MAM)
NE1	CERTIFICATION-EMISSION, GEOGRAPHICALLY RESTRICTED REGISTRATION FOR VEHICLES UP TO 14,000 LBS GVW (USE 2003 MDL YR	U.S.A., PR and USVI (MAH),Canada (MBC),Mexico (MCX),Africa (MAA),Israel (MBI),Mid-East (MAM)
NE7	FUEL TANK-216L, 57 GAL	U.S.A., PR and USVI (MAH),Canada (MBC),Mexico (MCX),Africa (MAA),Israel (MBI),Mid-East (MAM)

NP5	STEERING WHEEL-LEATHER WRAPPED	U.S.A., PR and USVI (MAH),Canada (MBC),Mexico (MCX),Africa (MAA),Israel (MBI),Mid-East (MAM)
NPL	PLATE-NAME - NONE	U.S.A., PR and USVI (MAH),Canada (MBC),Mexico (MCX),Africa (MAA),Israel (MBI),Mid-East (MAM)
NT7	EMISSION SYSTEM-FEDERAL, TIER 2	U.S.A., PR and USVI (MAH),Canada (MBC),Mexico (MCX),Africa (MAA),Israel (MBI),Mid-East (MAM)
NTB	EMISSION SYSTEM-FEDERAL, TIER 3	U.S.A., PR and USVI (MAH),Canada (MBC),Mexico (MCX),Africa (MAA),Israel (MBI),Mid-East (MAM)
NUK	EMISSION SYSTEM-CALIFORNIA, ULEV250	U.S.A., PR and USVI (MAH),Canada (MBC),Mexico (MCX),Africa (MAA),Israel (MBI),Mid-East (MAM)
NUM	EMISSION SYSTEM-CALIFORNIA, LEV3 MDV 10-14K GVW	U.S.A., PR and USVI (MAH),Canada (MBC),Mexico (MCX),Africa (MAA),Israel (MBI),Mid-East (MAM)
P03	COVER, WHEEL-VAR 3	U.S.A., PR and USVI (MAH),Canada (MBC),Mexico (MCX),Africa (MAA),Israel (MBI),Mid-East (MAM)
PNC	PANEL-TRIM, FRT DOORS & SI RR DOOR(S) & RR DOORS	U.S.A., PR and USVI (MAH),Canada (MBC),Mexico (MCX),Africa (MAA),Israel (MBI),Mid-East (MAM)
PPC	PANEL-TRIM, RR DOORS	U.S.A., PR and USVI (MAH),Canada (MBC),Mexico (MCX),Africa (MAA),Israel (MBI),Mid-East (MAM)
PRP	SALES PACKAGE-COMMERCIAL TRADESMAN	U.S.A., PR and USVI (MAH),Canada (MBC),Mexico (MCX),Africa (MAA),Israel (MBI),Mid-East (MAM)
QB5	WHEEL-16 X 6.5, J, STEEL (DO NOT USE AFTER M.Y. 2011)	U.S.A., PR and USVI (MAH),Canada (MBC),Mexico (MCX),Africa (MAA),Israel (MBI),Mid-East (MAM)
QT4	WHEEL-16 X 6.5, STEEL H.D. (DO NOT USE AFTER M.Y. 2011)	U.S.A., PR and USVI (MAH),Canada (MBC),Mexico (MCX),Africa (MAA),Israel (MBI),Mid-East (MAM)
R04	WHEEL CONFIGURATION-RR, SINGLE (DO NOT USE AFTER M.Y. 2011)	U.S.A., PR and USVI (MAH),Canada (MBC),Mexico (MCX),Africa (MAA),Israel (MBI),Mid-East (MAM)
R05	WHEEL CONFIGURATION-RR, DUAL (DO NOT USE AFTER M.Y. 2011)	U.S.A., PR and USVI (MAH),Canada (MBC),Mexico (MCX),Africa (MAA),Israel (MBI),Mid-East (MAM)
R25	APPEARANCE PACKAGE-EXTERIOR, CHROME GRILLE & PAINTED BUMPER	U.S.A., PR and USVI (MAH),Canada (MBC),Mexico (MCX),Africa (MAA),Israel (MBI),Mid-East (MAM)
R26	APPEARANCE PACKAGE-EXTERIOR, CHROME GRILLE & FRONT BUMPER	U.S.A., PR and USVI (MAH),Canada (MBC),Mexico (MCX),Africa (MAA),Israel (MBI),Mid-East (MAM)
RVG	ACCESSORY-ADAPTER - TRAILER HARNESS	U.S.A., PR and USVI (MAH),Canada (MBC),Mexico (MCX),Africa (MAA),Israel (MBI),Mid-East (MAM)
RVX	ACCESSORY-BALL MOUNT - TRAILER HITCH	U.S.A., PR and USVI (MAH),Canada (MBC),Mexico (MCX),Africa (MAA),Israel (MBI),Mid-East (MAM)
RYS	ACCESSORY-FIRE EXTINGUISHER	U.S.A., PR and USVI (MAH),Canada (MBC),Mexico (MCX),Africa (MAA),Israel (MBI),Mid-East (MAM)
RYT	ACCESSORY-FIRST AID KIT	U.S.A., PR and USVI (MAH),Canada (MBC),Mexico (MCX),Africa (MAA),Israel (MBI),Mid-East (MAM)
RYY	ACCESSORY-FLOOR MATS - MOLDED VINYL	U.S.A., PR and USVI (MAH),Canada (MBC),Mexico (MCX),Africa (MAA),Israel (MBI),Mid-East (MAM)

RZW	ACCESSORY-HARNESS - TRAILER HITCH	U.S.A., PR and USVI (MAH),Canada (MBC),Mexico (MCX),Africa (MAA),Israel (MBI),Mid-East (MAM)
S08	ACCESSORY-HIGHWAY SAFETY KIT	U.S.A., PR and USVI (MAH),Canada (MBC),Mexico (MCX),Africa (MAA),Israel (MBI),Mid-East (MAM)
S09	ACCESSORY-HITCH MOUNT ASSEMBLY	U.S.A., PR and USVI (MAH),Canada (MBC),Mexico (MCX),Africa (MAA),Israel (MBI),Mid-East (MAM)
S40	ACCESSORY-LINER - TRUNK/CARGO AREA	U.S.A., PR and USVI (MAH),Canada (MBC),Mexico (MCX),Africa (MAA),Israel (MBI),Mid-East (MAM)
S44	ACCESSORY-LOCKING PIN - TRAILER HITCH	U.S.A., PR and USVI (MAH),Canada (MBC),Mexico (MCX),Africa (MAA),Israel (MBI),Mid-East (MAM)
S52	ACCESSORY-MOLDED HOOD PROTECTOR - SMOKED	U.S.A., PR and USVI (MAH),Canada (MBC),Mexico (MCX),Africa (MAA),Israel (MBI),Mid-East (MAM)
S6N	ACCESSORY-RECEIVER COVER - TRAILER HITCH	U.S.A., PR and USVI (MAH),Canada (MBC),Mexico (MCX),Africa (MAA),Israel (MBI),Mid-East (MAM)
S6Q	ACCESSORY-ROADSIDE ASSISTANCE PACKAGE	U.S.A., PR and USVI (MAH),Canada (MBC),Mexico (MCX),Africa (MAA),Israel (MBI),Mid-East (MAM)
SAO	ACCESSORY-SMOKERS PACKAGE	U.S.A., PR and USVI (MAH),Canada (MBC),Mexico (MCX),Africa (MAA),Israel (MBI),Mid-East (MAM)
SDD	ACCESSORY-TRAILER HITCH - FIXED	U.S.A., PR and USVI (MAH),Canada (MBC),Mexico (MCX),Africa (MAA),Israel (MBI),Mid-East (MAM)
SDI	ACCESSORY-TRIANGLE - REFLECTIVE	U.S.A., PR and USVI (MAH),Canada (MBC),Mexico (MCX),Africa (MAA),Israel (MBI),Mid-East (MAM)
SDS	ACCESSORY-WEATHER DEFLECTORS - SIDE WINDOW - SMOKED	U.S.A., PR and USVI (MAH),Canada (MBC),Mexico (MCX),Africa (MAA),Israel (MBI),Mid-East (MAM)
SFE	ACCESSORY-WHEEL LOCKS	U.S.A., PR and USVI (MAH),Canada (MBC),Mexico (MCX),Africa (MAA),Israel (MBI),Mid-East (MAM)
SFV	ACCESSORY-WIRELESS NETWORK INTERFACE MODULE	U.S.A., PR and USVI (MAH),Canada (MBC),Mexico (MCX),Africa (MAA),Israel (MBI),Mid-East (MAM)
T74	CONTROL, HEADLAMPS-AUTOMATIC, DELAY	U.S.A., PR and USVI (MAH),Canada (MBC),Mexico (MCX),Africa (MAA),Israel (MBI),Mid-East (MAM)
TGA	LANGUAGE CONTROL-ENGLISH, FRENCH, SPANISH	U.S.A., PR and USVI (MAH),Canada (MBC),Mexico (MCX),Africa (MAA),Israel (MBI),Mid-East (MAM)
TGG	LANGUAGE CONTROL-ENGLISH, ARABIC, FRENCH	U.S.A., PR and USVI (MAH),Canada (MBC),Mexico (MCX),Africa (MAA),Israel (MBI),Mid-East (MAM)
TP2	BATTERY-AUXILIARY (DO NOT USE AFTER 2011 ON NEW/MAJOR PROGS, USE K4B)	U.S.A., PR and USVI (MAH),Canada (MBC),Mexico (MCX),Africa (MAA),Israel (MBI),Mid-East (MAM)
TR9	LAMP GROUP-	U.S.A., PR and USVI (MAH),Canada (MBC),Mexico (MCX),Africa (MAA),Israel (MBI),Mid-East (MAM)
U05	HORN-DUAL	U.S.A., PR and USVI (MAH),Canada (MBC),Mexico (MCX),Africa (MAA),Israel (MBI),Mid-East (MAM)
U0F	RADIO-AM/FM STEREO, CAF, RSA, MUSIC NAVIGATOR, GRAPHICS	U.S.A., PR and USVI (MAH),Canada (MBC),Mexico (MCX),Africa (MAA),Israel (MBI),Mid-East (MAM)

U0H	RADIO-AM/FM STEREO, USB, GMNA	U.S.A., PR and USVI (MAH),Canada (MBC),Mexico (MCX),Africa (MAA),Israel (MBI),Mid-East (MAM)
U19	SPEEDOMETER-INST, KILO & MILES, KILO ODOMETER	U.S.A., PR and USVI (MAH),Canada (MBC),Mexico (MCX),Africa (MAA),Israel (MBI),Mid-East (MAM)
U2J	DIGITAL AUDIO SYSTEM-S-BAND - NONE	U.S.A., PR and USVI (MAH),Canada (MBC),Mexico (MCX),Africa (MAA),Israel (MBI),Mid-East (MAM)
U2K	DIGITAL AUDIO SYSTEM-S-BAND	U.S.A., PR and USVI (MAH),Canada (MBC),Mexico (MCX),Africa (MAA),Israel (MBI),Mid-East (MAM)
U73	ANTENNA-FIXED, RADIO	U.S.A., PR and USVI (MAH),Canada (MBC),Mexico (MCX),Africa (MAA),Israel (MBI),Mid-East (MAM)
U74	ANTENNA-RADIO - NONE	U.S.A., PR and USVI (MAH),Canada (MBC),Mexico (MCX),Africa (MAA),Israel (MBI),Mid-East (MAM)
U80	DISPLAY-COMPASS	U.S.A., PR and USVI (MAH),Canada (MBC),Mexico (MCX),Africa (MAA),Israel (MBI),Mid-East (MAM)
UA1	BATTERY-HIGH CAPACITY, WET (DO NOT USE AFTER 2011 ON NEW/MAJOR PROGS)	U.S.A., PR and USVI (MAH),Canada (MBC),Mexico (MCX),Africa (MAA),Israel (MBI),Mid-East (MAM)
UA7	THEFT DETERENT SYS-EXPORT SPECIFIC, VAR #02 (DO NOT USE AFTER 2009 GLOBAL/NEW MAJOR PROGRAMS)	U.S.A., PR and USVI (MAH),Canada (MBC),Mexico (MCX),Africa (MAA),Israel (MBI),Mid-East (MAM)
UBS	DIGITAL AUDIO SYSTEM-S-BAND AND TRAFFIC	U.S.A., PR and USVI (MAH),Canada (MBC),Mexico (MCX),Africa (MAA),Israel (MBI),Mid-East (MAM)
UC2	SPEEDOMETER-INST, KILO & MILES, KILO ODOMETER, POSITIVE BIAS (DO NOT USE AFTER MY 2009 ON NEW/MAJOR PRGMS)	U.S.A., PR and USVI (MAH),Canada (MBC),Mexico (MCX),Africa (MAA),Israel (MBI),Mid-East (MAM)
UD4	ALARM-VEHICLE SPEED, 120 K/H (DON'T USE AFTER 2010 ON NEW MAJORS - USE CTY COD &/OR VCS FAM COD INSTEAD)	U.S.A., PR and USVI (MAH),Canada (MBC),Mexico (MCX),Africa (MAA),Israel (MBI),Mid-East (MAM)
UD7	PARK ASSIST-REAR	U.S.A., PR and USVI (MAH),Canada (MBC),Mexico (MCX),Africa (MAA),Israel (MBI),Mid-East (MAM)
UE0	COMMUNICATION SYSTEM-VEHICLE - NONE	U.S.A., PR and USVI (MAH),Canada (MBC),Mexico (MCX),Africa (MAA),Israel (MBI),Mid-East (MAM)
UE1	COMMUNICATION SYSTEM-VEHICLE, ONSTAR	U.S.A., PR and USVI (MAH),Canada (MBC),Mexico (MCX),Africa (MAA),Israel (MBI),Mid-East (MAM)
UF2	LAMP-CARGO	U.S.A., PR and USVI (MAH),Canada (MBC),Mexico (MCX),Africa (MAA),Israel (MBI),Mid-East (MAM)
UF3	SWITCH-HIGH IDLE	U.S.A., PR and USVI (MAH),Canada (MBC),Mexico (MCX),Africa (MAA),Israel (MBI),Mid-East (MAM)
UFA	DISPLAY-OUTSIDE TEMPERATURE	U.S.A., PR and USVI (MAH),Canada (MBC),Mexico (MCX),Africa (MAA),Israel (MBI),Mid-East (MAM)
UFM	PARTS PKG-COMPLETE VEHICLE KIT, 3 TANK	U.S.A., PR and USVI (MAH),Canada (MBC),Mexico (MCX),Africa (MAA),Israel (MBI),Mid-East (MAM)
UFP	PARTS PKG-COMPLETE VEHICLE KIT, 4 TANK	U.S.A., PR and USVI (MAH),Canada (MBC),Mexico (MCX),Africa (MAA),Israel (MBI),Mid-East (MAM)
UI8	RADIO-AM/FM, TOUCHSCREEN, NAVIGATION, CONNECTED, CD, AUX JACK, USB PORT	U.S.A., PR and USVI (MAH),Canada (MBC),Mexico (MCX),Africa (MAA),Israel (MBI),Mid-East (MAM)

UJ1	INDICATOR-SYSTEM, BRAKE WARNING	U.S.A., PR and USVI (MAH),Canada (MBC),Mexico (MCX),Africa (MAA),Israel (MBI),Mid-East (MAM)
UJM	TIRE PRESS INDICATOR-MANUAL LEARN	U.S.A., PR and USVI (MAH),Canada (MBC),Mexico (MCX),Africa (MAA),Israel (MBI),Mid-East (MAM)
UL2	FREQUENCIES-EUROPEAN	U.S.A., PR and USVI (MAH),Canada (MBC),Mexico (MCX),Africa (MAA),Israel (MBI),Mid-East (MAM)
UL5	RADIO-(NONE)	U.S.A., PR and USVI (MAH),Canada (MBC),Mexico (MCX),Africa (MAA),Israel (MBI),Mid-East (MAM)
UL8	FREQUENCIES-SAUDI ARABIAN	U.S.A., PR and USVI (MAH),Canada (MBC),Mexico (MCX),Africa (MAA),Israel (MBI),Mid-East (MAM)
UPF	WIRELESS INTERFACE-SHORT RANGE, VOICE REC	U.S.A., PR and USVI (MAH),Canada (MBC),Mexico (MCX),Africa (MAA),Israel (MBI),Mid-East (MAM)
US8	RADIO-AM/FM STEREO, SEEK/SCAN, CD, AUTO TONE, CLOCK, ETR, MP3, RDS	U.S.A., PR and USVI (MAH),Canada (MBC),Mexico (MCX),Africa (MAA),Israel (MBI),Mid-East (MAM)
USR	RECEPTACLE-USB	U.S.A., PR and USVI (MAH),Canada (MBC),Mexico (MCX),Africa (MAA),Israel (MBI),Mid-East (MAM)
UVC	VISION-REAR VIEW, MONO, ANALOG	U.S.A., PR and USVI (MAH),Canada (MBC),Mexico (MCX),Africa (MAA),Israel (MBI),Mid-East (MAM)
UXZ	RADIO-PROVISIONS FOR	U.S.A., PR and USVI (MAH),Canada (MBC),Mexico (MCX),Africa (MAA),Israel (MBI),Mid-East (MAM)
UY7	WIRING HARNESS-TRUCK TRAILER, HD	U.S.A., PR and USVI (MAH),Canada (MBC),Mexico (MCX),Africa (MAA),Israel (MBI),Mid-East (MAM)
V10	PROVISION OPTIONS-COLD WEATHER	U.S.A., PR and USVI (MAH),Canada (MBC),Mexico (MCX),Africa (MAA),Israel (MBI),Mid-East (MAM)
V14	COOLER-OIL, TRANSMISSION, AUX	U.S.A., PR and USVI (MAH),Canada (MBC),Mexico (MCX),Africa (MAA),Israel (MBI),Mid-East (MAM)
V22	GRILLE-RADIATOR, CHROME	U.S.A., PR and USVI (MAH),Canada (MBC),Mexico (MCX),Africa (MAA),Israel (MBI),Mid-East (MAM)
V37	BUMPER-FRT & RR, CHROME	U.S.A., PR and USVI (MAH),Canada (MBC),Mexico (MCX),Africa (MAA),Israel (MBI),Mid-East (MAM)
V46	BUMPER FRT-CHROME	U.S.A., PR and USVI (MAH),Canada (MBC),Mexico (MCX),Africa (MAA),Israel (MBI),Mid-East (MAM)
V4D	CALIBRATION-SEPARATED STOP/TURN SIGNAL CIRCUITS	U.S.A., PR and USVI (MAH),Canada (MBC),Mexico (MCX),Africa (MAA),Israel (MBI),Mid-East (MAM)
V8D	VEHICLE STATEMENT-US	U.S.A., PR and USVI (MAH),Canada (MBC),Mexico (MCX),Africa (MAA),Israel (MBI),Mid-East (MAM)
V8I	VEHICLE STATEMENT-ISRAEL	U.S.A., PR and USVI (MAH),Canada (MBC),Mexico (MCX),Africa (MAA),Israel (MBI),Mid-East (MAM)
VBX	LANGUAGE LABEL-ARABIC	U.S.A., PR and USVI (MAH),Canada (MBC),Mexico (MCX),Africa (MAA),Israel (MBI),Mid-East (MAM)
VC5	LABEL-SHIPPING, EXCEPT US, US POSSESSIONS, OR JAPAN	U.S.A., PR and USVI (MAH),Canada (MBC),Mexico (MCX),Africa (MAA),Israel (MBI),Mid-East (MAM)

VG8	VEHICLE-LABEL, NOTICE TO BUYER	U.S.A., PR and USVI (MAH),Canada (MBC),Mexico (MCX),Africa (MAA),Israel (MBI),Mid-East (MAM)
VH6	BUMPER FRT-BLACK	U.S.A., PR and USVI (MAH),Canada (MBC),Mexico (MCX),Africa (MAA),Israel (MBI),Mid-East (MAM)
VJG	BUMPER RR-BLACK	U.S.A., PR and USVI (MAH),Canada (MBC),Mexico (MCX),Africa (MAA),Israel (MBI),Mid-East (MAM)
VK3	LICENSE PLATE FRONT-FRT MOUNTING PKG	U.S.A., PR and USVI (MAH),Canada (MBC),Mexico (MCX),Africa (MAA),Israel (MBI),Mid-East (MAM)
VK5	SEAT-TEMPORARY, FOR SHIPPING	U.S.A., PR and USVI (MAH),Canada (MBC),Mexico (MCX),Africa (MAA),Israel (MBI),Mid-East (MAM)
VLL	ACCESSORY-CROSS RAILS - ROOF RACK - REMOVABLE	U.S.A., PR and USVI (MAH),Canada (MBC),Mexico (MCX),Africa (MAA),Israel (MBI),Mid-East (MAM)
VLP	ACCESSORY-BULKHEAD DIVIDER	U.S.A., PR and USVI (MAH),Canada (MBC),Mexico (MCX),Africa (MAA),Israel (MBI),Mid-East (MAM)
VLU	ACCESSORY-SECURITY SCREEN PACKAGE - REAR WINDOW W/O POP - OUT	U.S.A., PR and USVI (MAH),Canada (MBC),Mexico (MCX),Africa (MAA),Israel (MBI),Mid-East (MAM)
VLV	ACCESSORY-LADDER RACK - ROOF MOUNTED - SWING OUT	U.S.A., PR and USVI (MAH),Canada (MBC),Mexico (MCX),Africa (MAA),Israel (MBI),Mid-East (MAM)
VLW	ACCESSORY-BULKHEAD DIVIDER WITH DOOR	U.S.A., PR and USVI (MAH),Canada (MBC),Mexico (MCX),Africa (MAA),Israel (MBI),Mid-East (MAM)
VP6	NOISE CONTROL-	U.S.A., PR and USVI (MAH),Canada (MBC),Mexico (MCX),Africa (MAA),Israel (MBI),Mid-East (MAM)
VPH	VEHICLE PREPARATION-OVERSEAS DELIVERY	U.S.A., PR and USVI (MAH),Canada (MBC),Mexico (MCX),Africa (MAA),Israel (MBI),Mid-East (MAM)
VQK	ACCESSORY-SPLASH GUARDS - CUSTOM MOLDED	U.S.A., PR and USVI (MAH),Canada (MBC),Mexico (MCX),Africa (MAA),Israel (MBI),Mid-East (MAM)
VR4	TRAILER HITCH-WEIGHT DISTRIBUTING PLATFORM	U.S.A., PR and USVI (MAH),Canada (MBC),Mexico (MCX),Africa (MAA),Israel (MBI),Mid-East (MAM)
VR6	HOOK-TIE-DN SHPG	U.S.A., PR and USVI (MAH),Canada (MBC),Mexico (MCX),Africa (MAA),Israel (MBI),Mid-East (MAM)
VT7	OWNERS MANUAL-ENGLISH LANGUAGE	U.S.A., PR and USVI (MAH),Canada (MBC),Mexico (MCX),Africa (MAA),Israel (MBI),Mid-East (MAM)
VXT	VEHICLE TYPE-INCOMPLETE	U.S.A., PR and USVI (MAH),Canada (MBC),Mexico (MCX),Africa (MAA),Israel (MBI),Mid-East (MAM)
VXW	ACCESSORY-ASSIST STEPS - MOLDED	U.S.A., PR and USVI (MAH),Canada (MBC),Mexico (MCX),Africa (MAA),Israel (MBI),Mid-East (MAM)
W1Y	CONTROL-STEERING WHEEL, RADIO, REDUNDANT CONTROLS	U.S.A., PR and USVI (MAH),Canada (MBC),Mexico (MCX),Africa (MAA),Israel (MBI),Mid-East (MAM)
WEN	PLANT CODE-WENTZVILLE, MO, USA	U.S.A., PR and USVI (MAH),Canada (MBC),Mexico (MCX),Africa (MAA),Israel (MBI),Mid-East (MAM)
WMG	VIN MODEL YEAR-2016	U.S.A., PR and USVI (MAH),Canada (MBC),Mexico (MCX),Africa (MAA),Israel (MBI),Mid-East (MAM)

X88	MARKET BRAND-CHEVROLET	U.S.A., PR and USVI (MAH),Canada (MBC),Mexico (MCX),Africa (MAA),Israel (MBI),Mid-East (MAM)
XHF	TIRE FRONT-LT225/75R16 E 115/112 S BL ALS	U.S.A., PR and USVI (MAH),Canada (MBC),Mexico (MCX),Africa (MAA),Israel (MBI),Mid-East (MAM)
XIW	TIRE FRONT-LT245/75R16 E 120/116R BW OOR	U.S.A., PR and USVI (MAH),Canada (MBC),Mexico (MCX),Africa (MAA),Israel (MBI),Mid-East (MAM)
XL7	FREQUENCIES RATING-315 MHZ, LONG DISTANCE	U.S.A., PR and USVI (MAH),Canada (MBC),Mexico (MCX),Africa (MAA),Israel (MBI),Mid-East (MAM)
XL8	FREQUENCIES RATING-433 MHZ	U.S.A., PR and USVI (MAH),Canada (MBC),Mexico (MCX),Africa (MAA),Israel (MBI),Mid-East (MAM)
XLP	TIRE FRONT-LT245/75R16 E 120/116 S BW ALS	U.S.A., PR and USVI (MAH),Canada (MBC),Mexico (MCX),Africa (MAA),Israel (MBI),Mid-East (MAM)
Y3H	SALES PACKAGE-HANDICAPPED, MOBILITY, PARATRANSIT	U.S.A., PR and USVI (MAH),Canada (MBC),Mexico (MCX),Africa (MAA),Israel (MBI),Mid-East (MAM)
YA2	DOOR SIDE-REAR, SLIDING	U.S.A., PR and USVI (MAH),Canada (MBC),Mexico (MCX),Africa (MAA),Israel (MBI),Mid-East (MAM)
YB9	PAINT PROCESS-INTERIOR - NONE	U.S.A., PR and USVI (MAH),Canada (MBC),Mexico (MCX),Africa (MAA),Israel (MBI),Mid-East (MAM)
YC6	PACKAGE, CONVENIENCE-DECOR LEVEL #6	U.S.A., PR and USVI (MAH),Canada (MBC),Mexico (MCX),Africa (MAA),Israel (MBI),Mid-East (MAM)
YF1	SALES PACKAGE-CUTAWAY UPFITTER	U.S.A., PR and USVI (MAH),Canada (MBC),Mexico (MCX),Africa (MAA),Israel (MBI),Mid-East (MAM)
YF2	SALES PACKAGE-AMBULANCE UPFITTER	U.S.A., PR and USVI (MAH),Canada (MBC),Mexico (MCX),Africa (MAA),Israel (MBI),Mid-East (MAM)
YF5	CERTIFICATION-EMISSION, CALIFORNIA	U.S.A., PR and USVI (MAH),Canada (MBC),Mexico (MCX),Africa (MAA),Israel (MBI),Mid-East (MAM)
YF7	SALES PACKAGE-RECREATIONAL VEHICLE, UPFITTER	U.S.A., PR and USVI (MAH),Canada (MBC),Mexico (MCX),Africa (MAA),Israel (MBI),Mid-East (MAM)
YHF	TIRE REAR-LT225/75R16 E 115/112 S BL ALS	U.S.A., PR and USVI (MAH),Canada (MBC),Mexico (MCX),Africa (MAA),Israel (MBI),Mid-East (MAM)
YIW	TIRE REAR-LT245/75R16 E 120/116R BW OOR	U.S.A., PR and USVI (MAH),Canada (MBC),Mexico (MCX),Africa (MAA),Israel (MBI),Mid-East (MAM)
YLP	TIRE REAR-LT245/75R16 E 120/116 S BW ALS	U.S.A., PR and USVI (MAH),Canada (MBC),Mexico (MCX),Africa (MAA),Israel (MBI),Mid-East (MAM)
YM8	IDENTIFICATION-LIMITED PERSONALIZATION OPTION (LPO)	U.S.A., PR and USVI (MAH),Canada (MBC),Mexico (MCX),Africa (MAA),Israel (MBI),Mid-East (MAM)
Z49	COUNTRY-CANADA	U.S.A., PR and USVI (MAH),Canada (MBC),Mexico (MCX),Africa (MAA),Israel (MBI),Mid-East (MAM)
Z82	TRAILER PROVISIONS-SPECIAL EQUIPMENT, H.D.	U.S.A., PR and USVI (MAH),Canada (MBC),Mexico (MCX),Africa (MAA),Israel (MBI),Mid-East (MAM)
Z88	MARKET BRAND-GMC	U.S.A., PR and USVI (MAH),Canada (MBC),Mexico (MCX),Africa (MAA),Israel (MBI),Mid-East (MAM)

ZHF	TIRE SPARE-LT225/75R16 E 115/112 S BL ALS	U.S.A., PR and USVI (MAH),Canada (MBC),Mexico (MCX),Africa (MAA),Israel (MBI),Mid-East (MAM)
ZIW	TIRE SPARE-LT245/75R16 E 120/116R BW OOR	U.S.A., PR and USVI (MAH),Canada (MBC),Mexico (MCX),Africa (MAA),Israel (MBI),Mid-East (MAM)
ZLP	TIRE SPARE-LT245/75R16 E 120/116 S BW ALS	U.S.A., PR and USVI (MAH),Canada (MBC),Mexico (MCX),Africa (MAA),Israel (MBI),Mid-East (MAM)
ZP0	SEATING ARRANGEMENT-TEMPORARY DRIVER	U.S.A., PR and USVI (MAH),Canada (MBC),Mexico (MCX),Africa (MAA),Israel (MBI),Mid-East (MAM)
ZP3	SEATING ARRANGEMENT-15 PASS	U.S.A., PR and USVI (MAH),Canada (MBC),Mexico (MCX),Africa (MAA),Israel (MBI),Mid-East (MAM)
ZP6	SEATING ARRANGEMENT-5 PASS CARGO	U.S.A., PR and USVI (MAH),Canada (MBC),Mexico (MCX),Africa (MAA),Israel (MBI),Mid-East (MAM)
ZQ2	SALES PACKAGE-DRIVER CONVENIENCE	U.S.A., PR and USVI (MAH),Canada (MBC),Mexico (MCX),Africa (MAA),Israel (MBI),Mid-East (MAM)
ZQ3	SALES PACKAGE-DRIVER CONVENIENCE II	U.S.A., PR and USVI (MAH),Canada (MBC),Mexico (MCX),Africa (MAA),Israel (MBI),Mid-East (MAM)
ZR7	APPEARANCE PACKAGE-GRILLE & BUMPER CHROME	U.S.A., PR and USVI (MAH),Canada (MBC),Mexico (MCX),Africa (MAA),Israel (MBI),Mid-East (MAM)
ZW2	WINDOW PKG-RR DRS	U.S.A., PR and USVI (MAH),Canada (MBC),Mexico (MCX),Africa (MAA),Israel (MBI),Mid-East (MAM)
ZW3	WINDOW PKG-RR DRS, SIDE RR DR	U.S.A., PR and USVI (MAH),Canada (MBC),Mexico (MCX),Africa (MAA),Israel (MBI),Mid-East (MAM)
ZW4	WINDOW PKG-RH SIDE, RR DRS	U.S.A., PR and USVI (MAH),Canada (MBC),Mexico (MCX),Africa (MAA),Israel (MBI),Mid-East (MAM)
ZW6	WINDOW PKG-COMPLETE BODY	U.S.A., PR and USVI (MAH),Canada (MBC),Mexico (MCX),Africa (MAA),Israel (MBI),Mid-East (MAM)
ZW9	BODY EQUIPMENT-BASE BODY OR CHASSIS	U.S.A., PR and USVI (MAH),Canada (MBC),Mexico (MCX),Africa (MAA),Israel (MBI),Mid-East (MAM)
ZX1	SEATING ARRANGEMENT-DRIVER ONLY, HIGH BACK	U.S.A., PR and USVI (MAH),Canada (MBC),Mexico (MCX),Africa (MAA),Israel (MBI),Mid-East (MAM)
ZX2	SEATING ARRANGEMENT-DRIVER & PASS, HIGH BACK	U.S.A., PR and USVI (MAH),Canada (MBC),Mexico (MCX),Africa (MAA),Israel (MBI),Mid-East (MAM)
ZX5	SEATING ARRANGEMENT-12 PASS	U.S.A., PR and USVI (MAH),Canada (MBC),Mexico (MCX),Africa (MAA),Israel (MBI),Mid-East (MAM)
ZX9	TIRE SPARE-W/WHEEL - NONE	U.S.A., PR and USVI (MAH),Canada (MBC),Mexico (MCX),Africa (MAA),Israel (MBI),Mid-East (MAM)
ZY1	COLOR COMBINATION-SOLID	U.S.A., PR and USVI (MAH),Canada (MBC),Mexico (MCX),Africa (MAA),Israel (MBI),Mid-East (MAM)

Fusible Links and B+ Bus - Underhood Fuse Block (Gas with One Battery, 1 of 3)

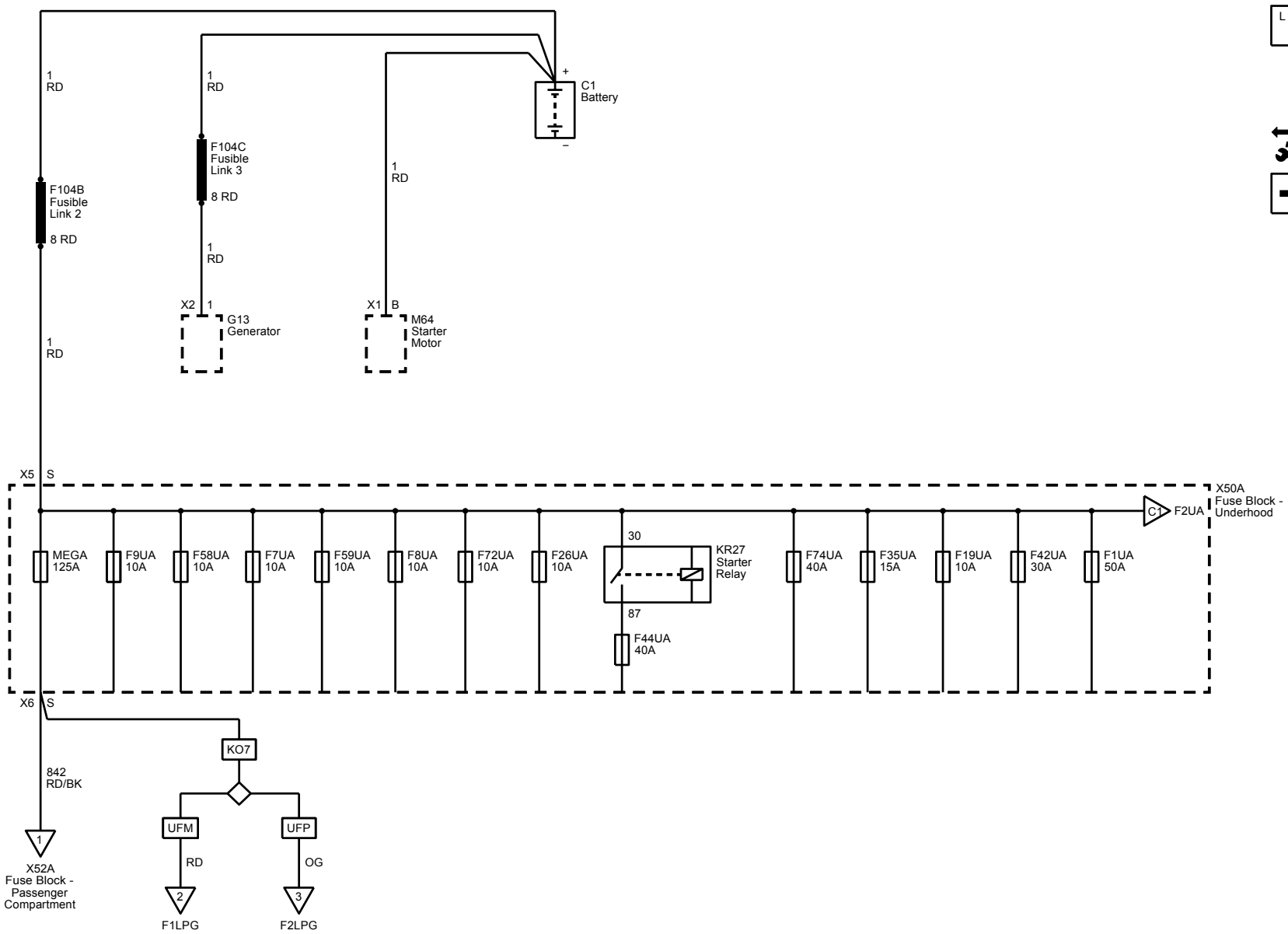

Fusible Links and B+ Bus - Underhood Fuse Block (Gas with Two Batteries, 1 of 3)

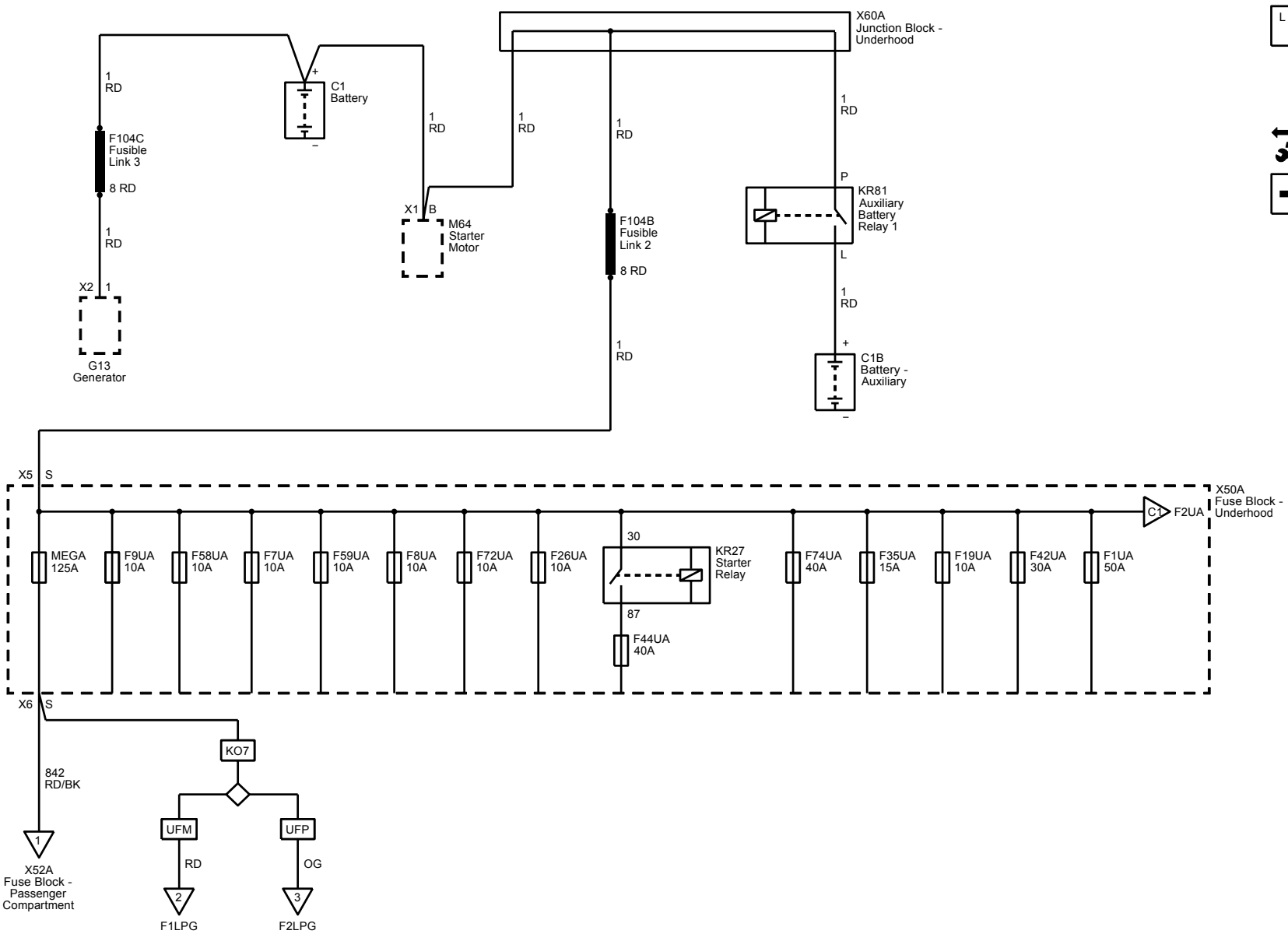

Fusible Links and B+ Bus - Underhood Fuse Block (Diesel, 1 of 3)

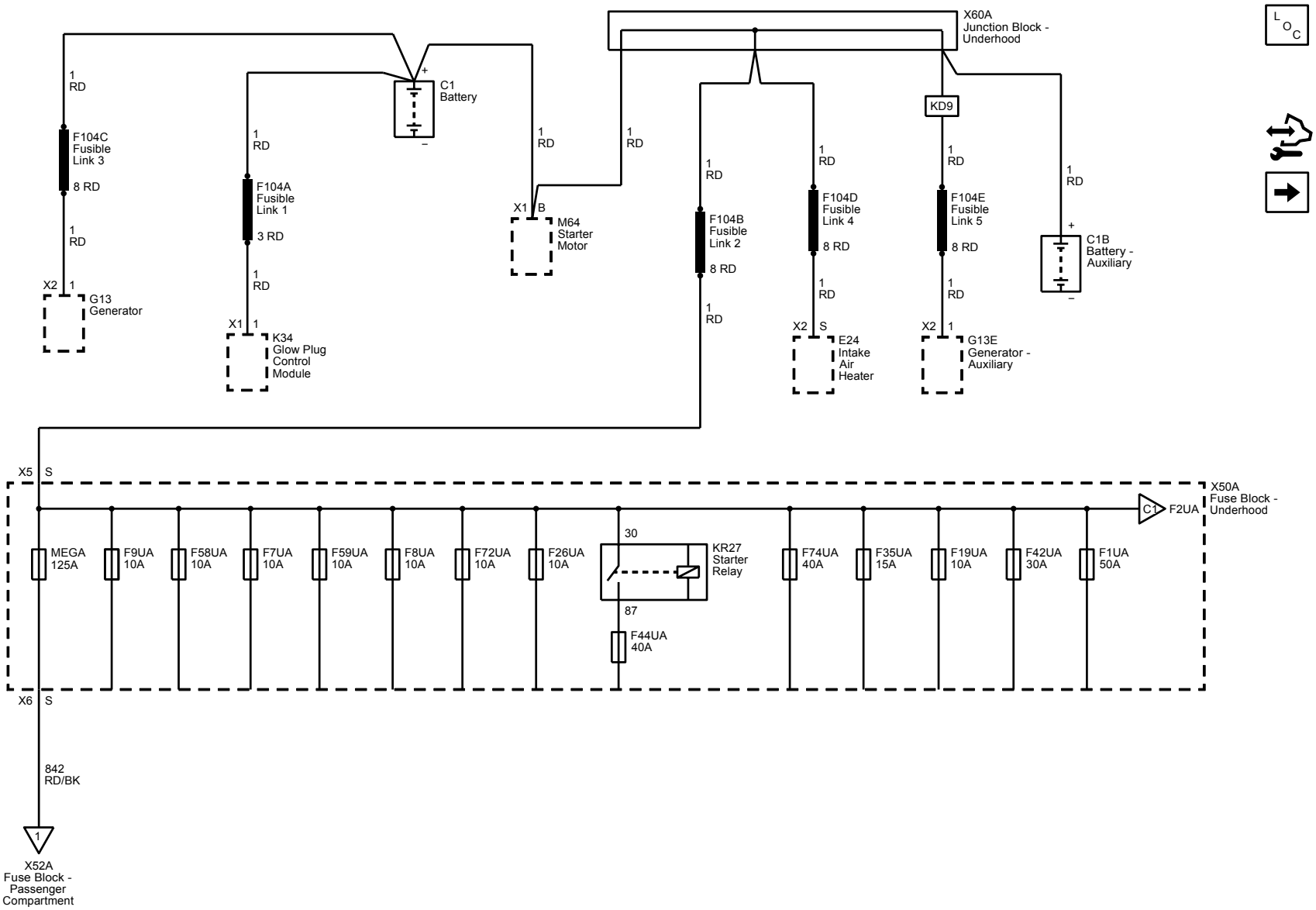

B+ Bus - Underhood Fuse Block (2 of 3)

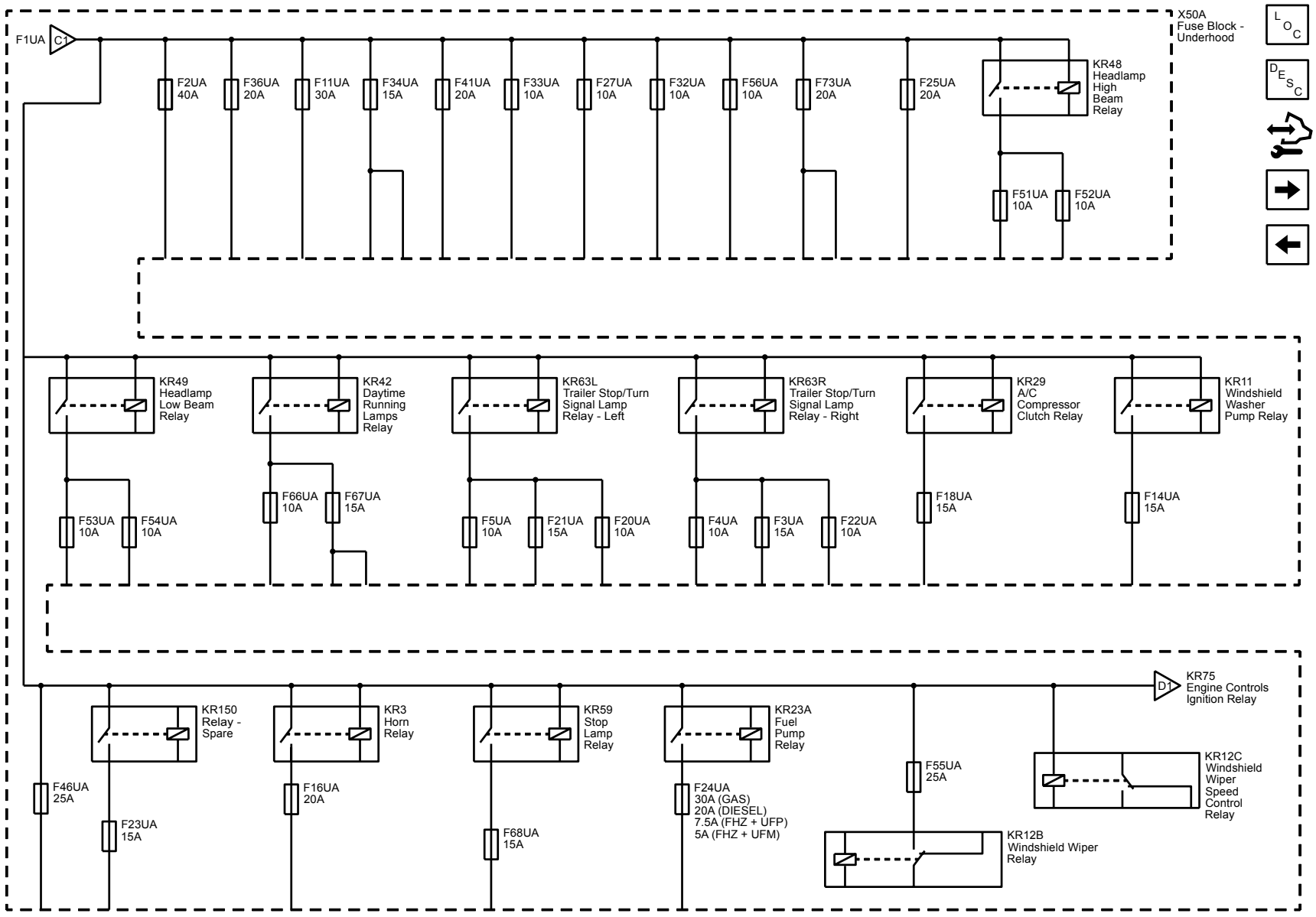

B+ Bus - Underhood Fuse Block (3 of 3)

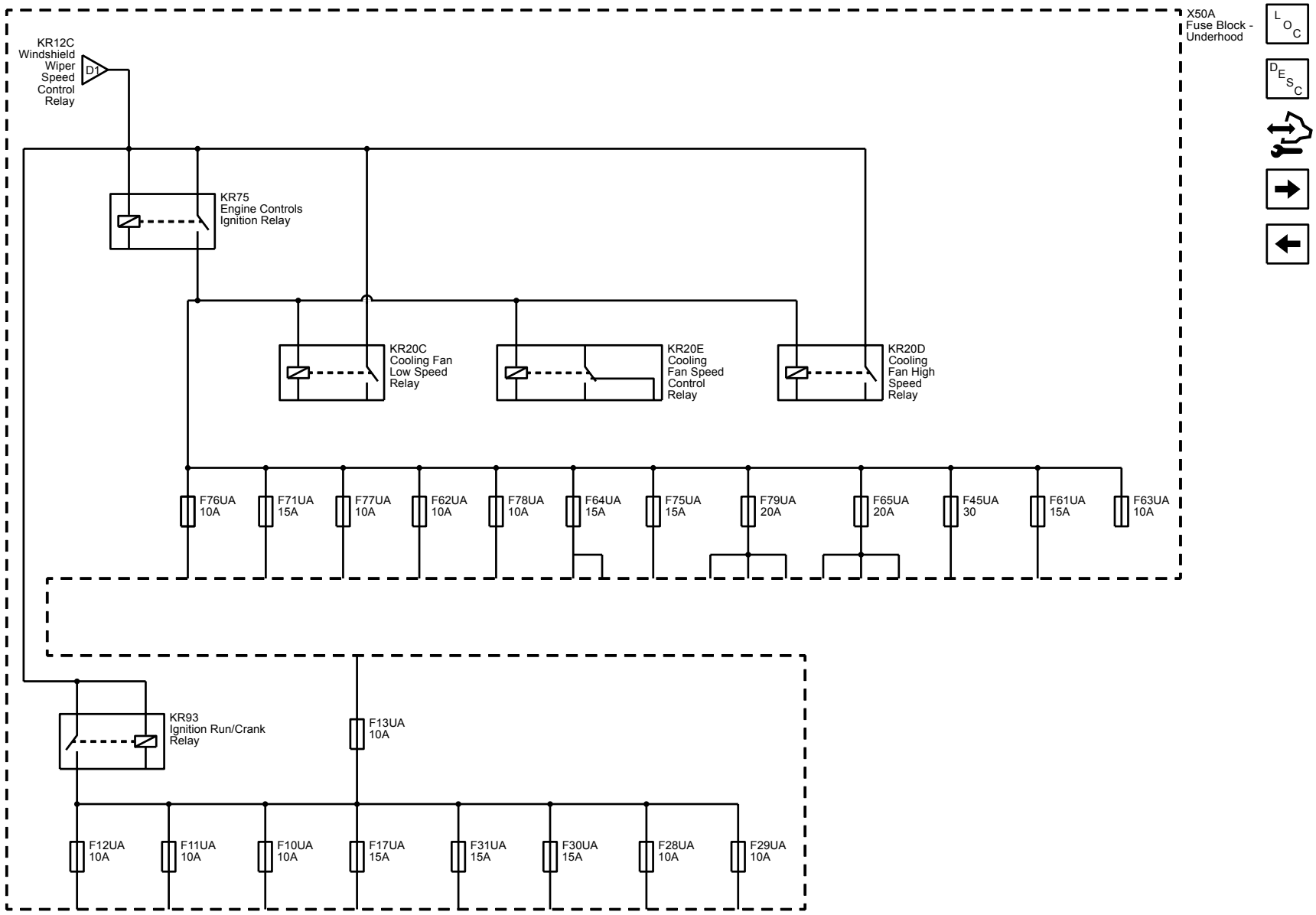

B+ Bus - Passenger Compartment Fuse Block (1 of 2)

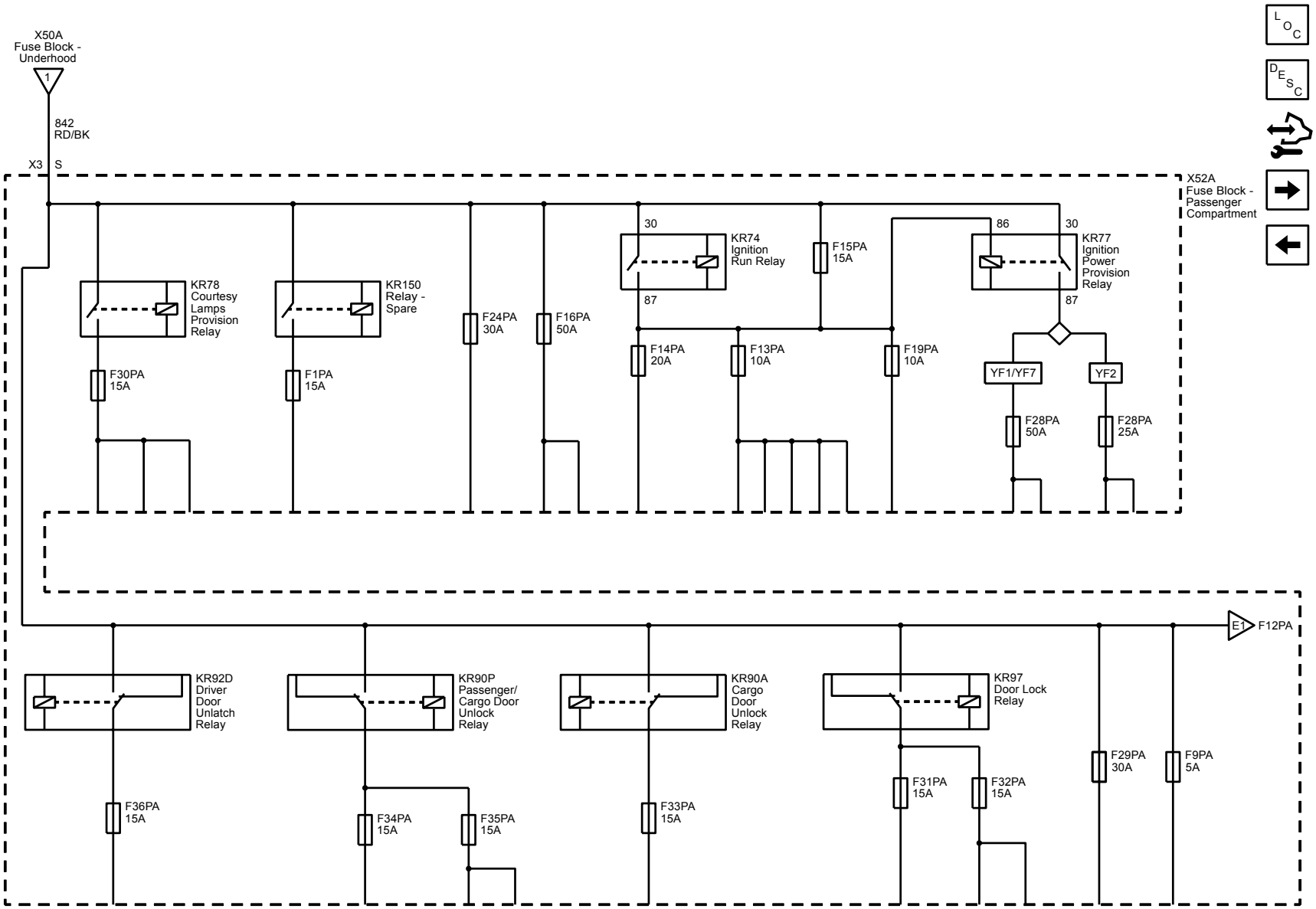

B+ Bus - Passenger Compartment Fuse Block (2 of 2)

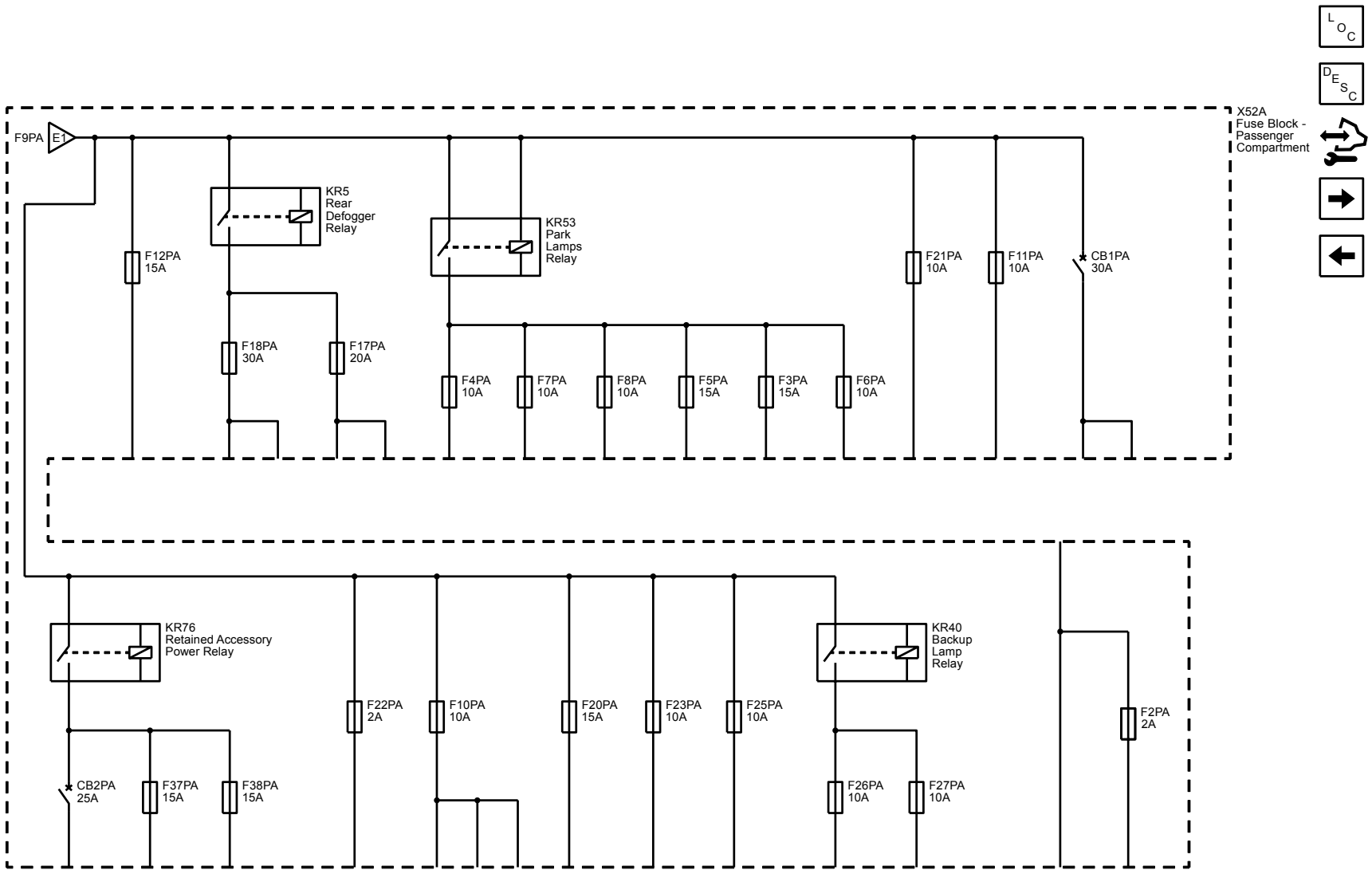

Fuses F7UA, F8UA, F9UA, F25UA, F26A, F58UA, F59UA, F72UA, and F73UA

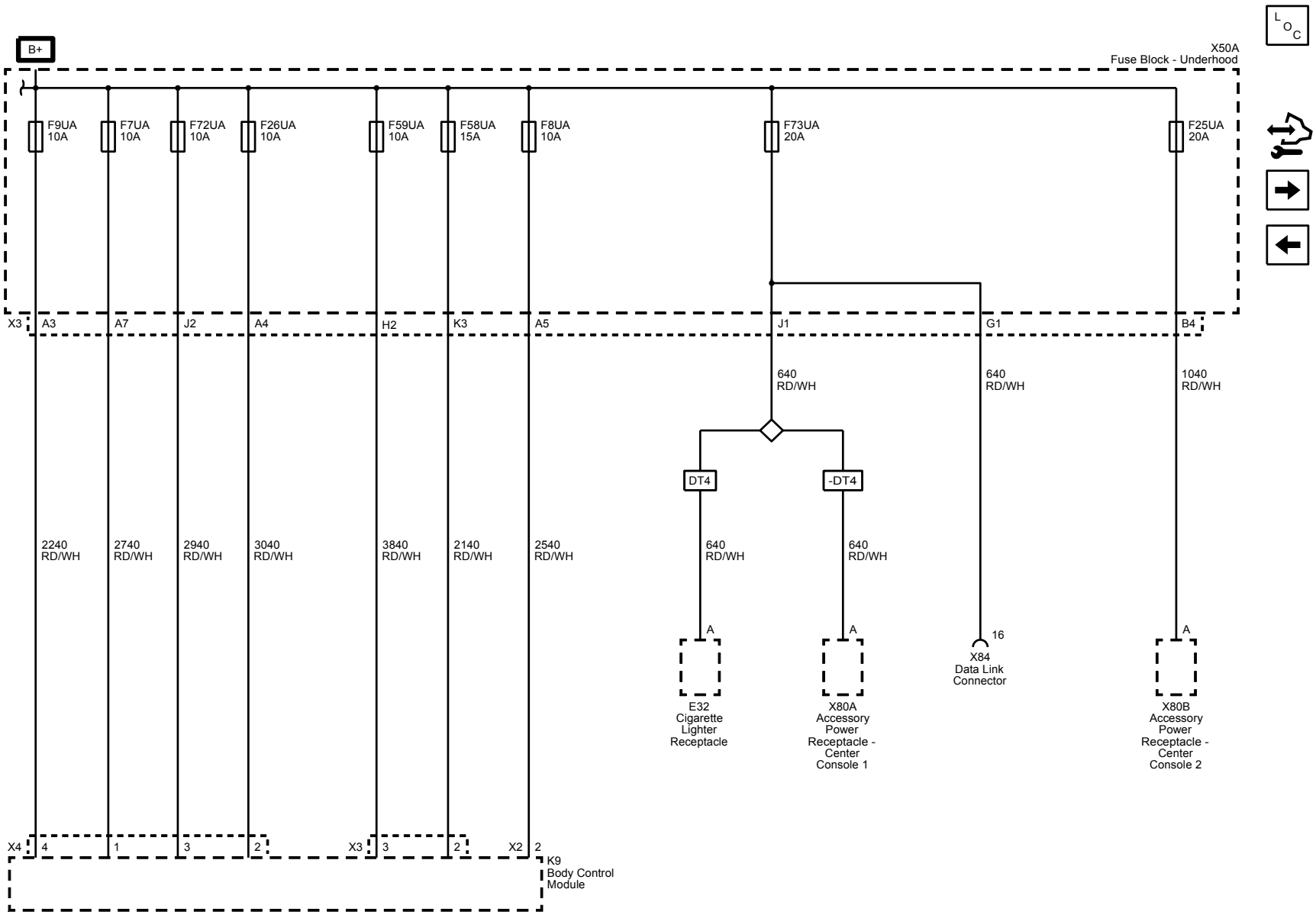

Fuses F1UA, F2UA, F11UA, F33UA, F35UA, F42UA, and F74UA

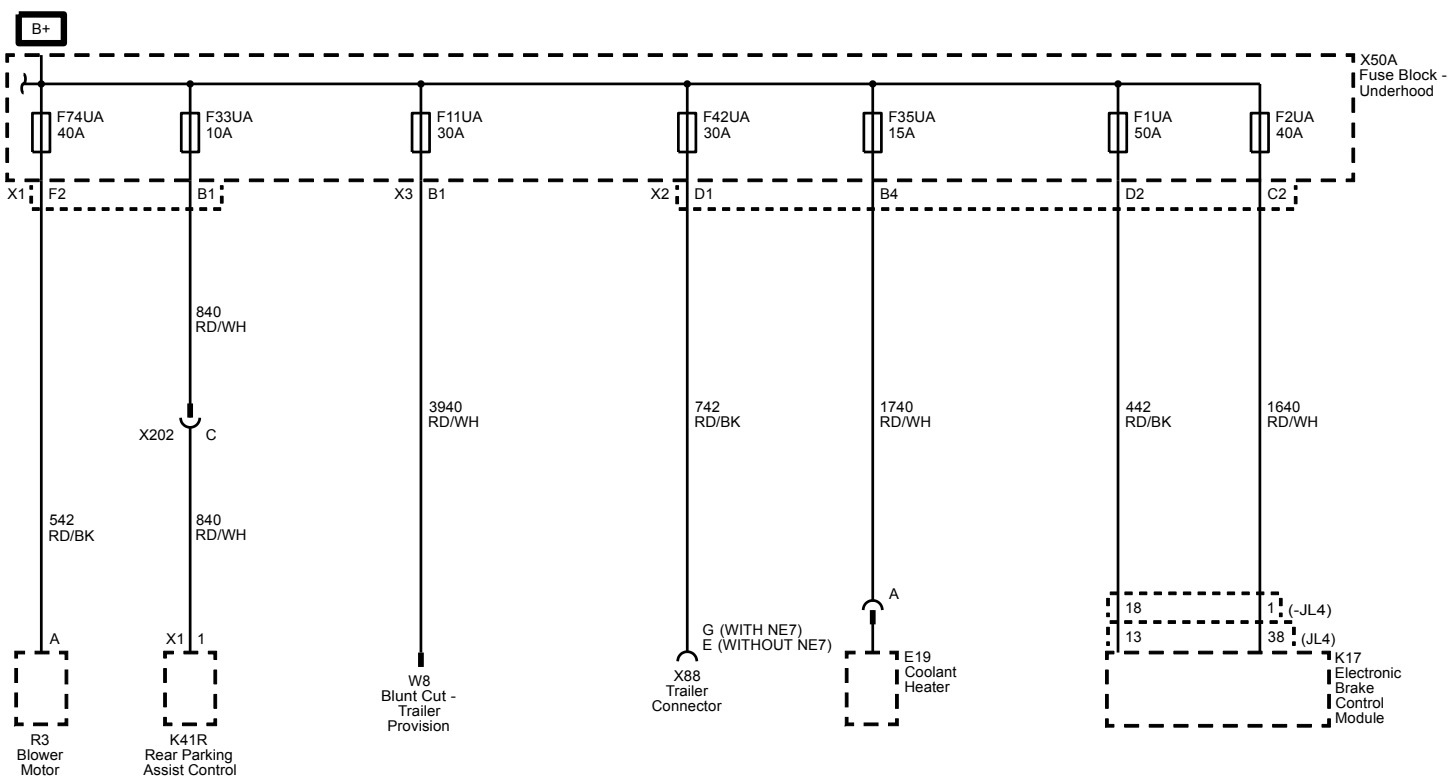

Fuses F14UA, F16UA, F18UA, and F24UA

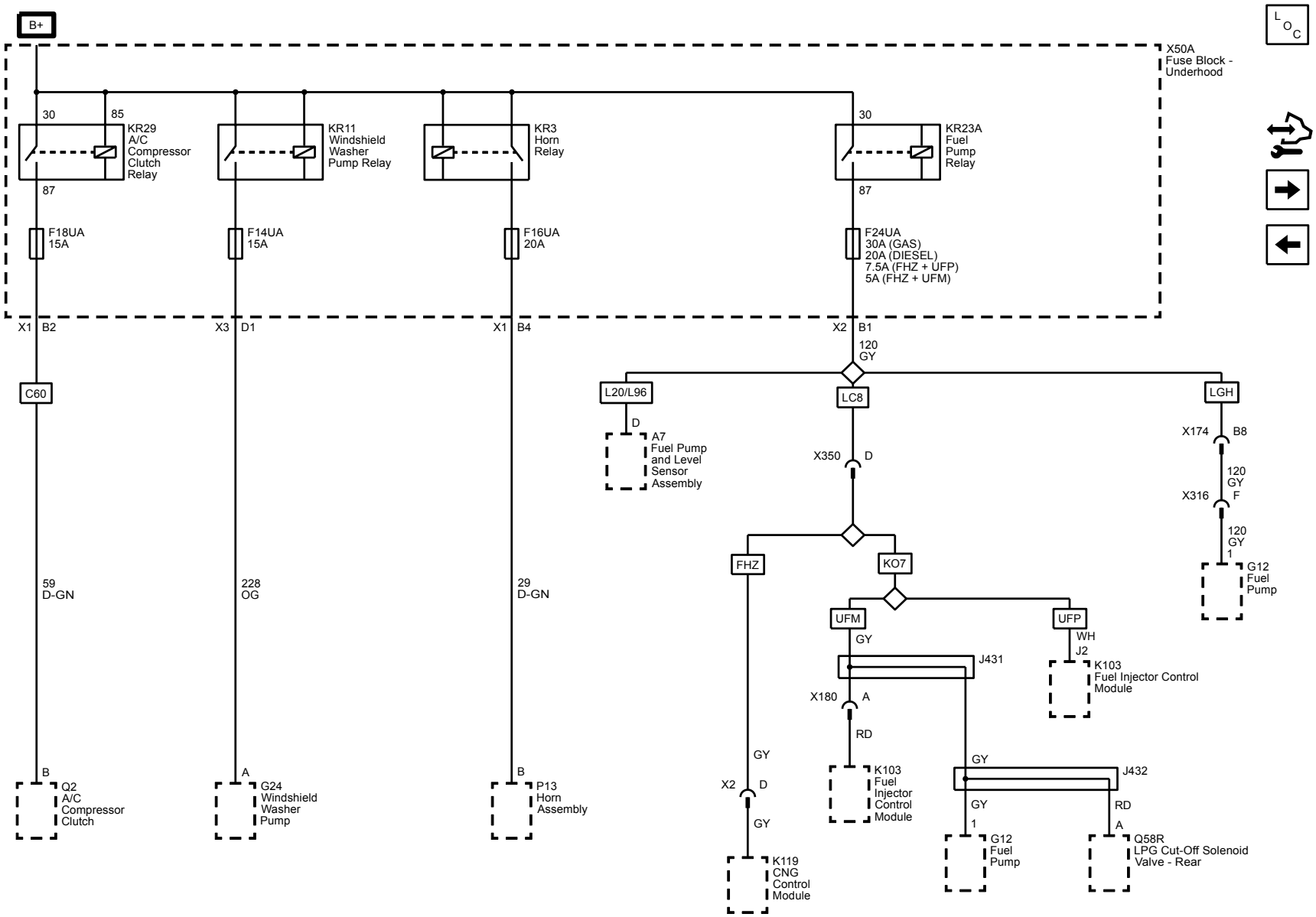

Fuses F3UA, F21UA, F44UA, F51UA, F52UA, and F68UA

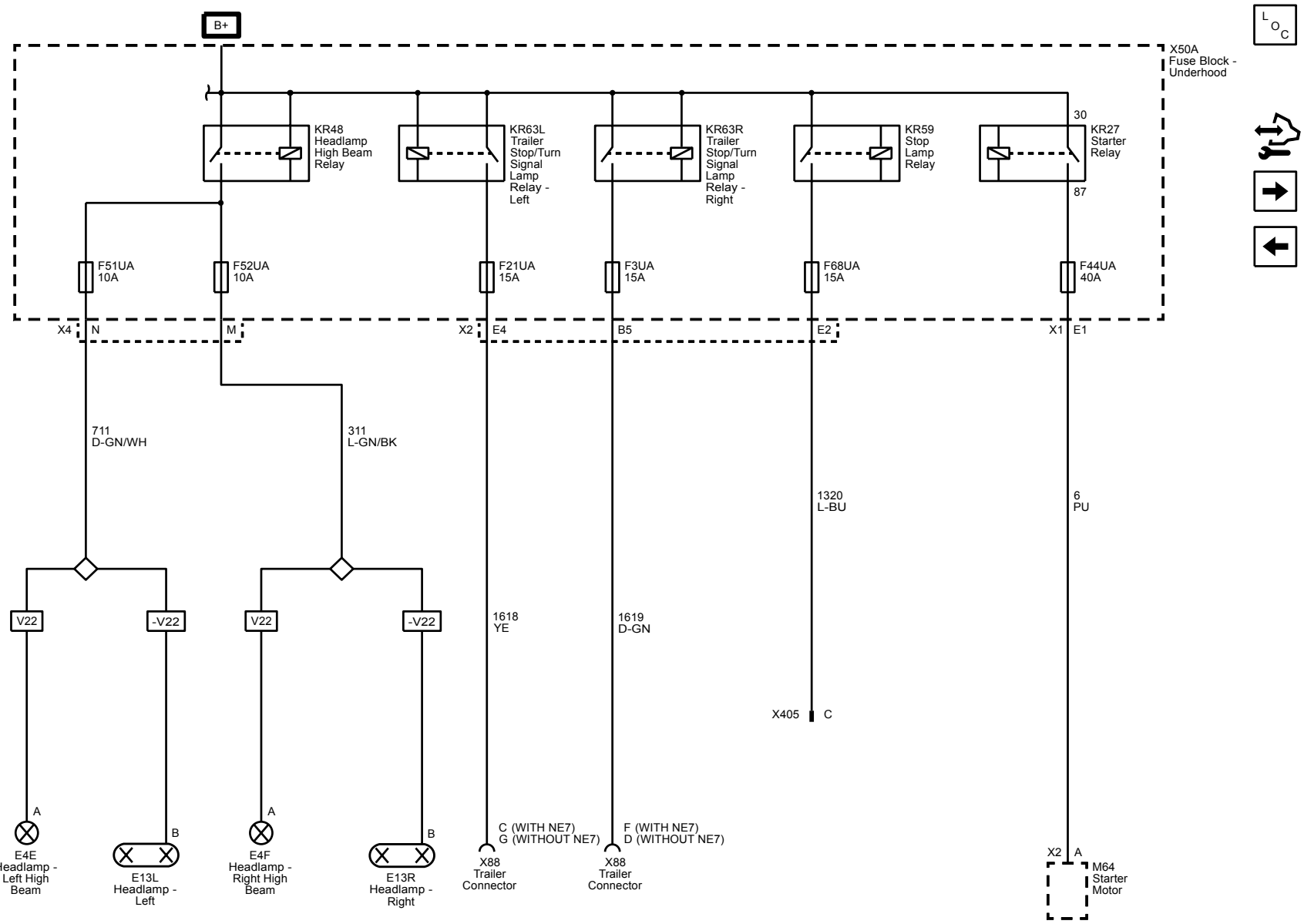

Fuses F27UA, F32UA, F53UA, F54UA, F66UA, and F67UA

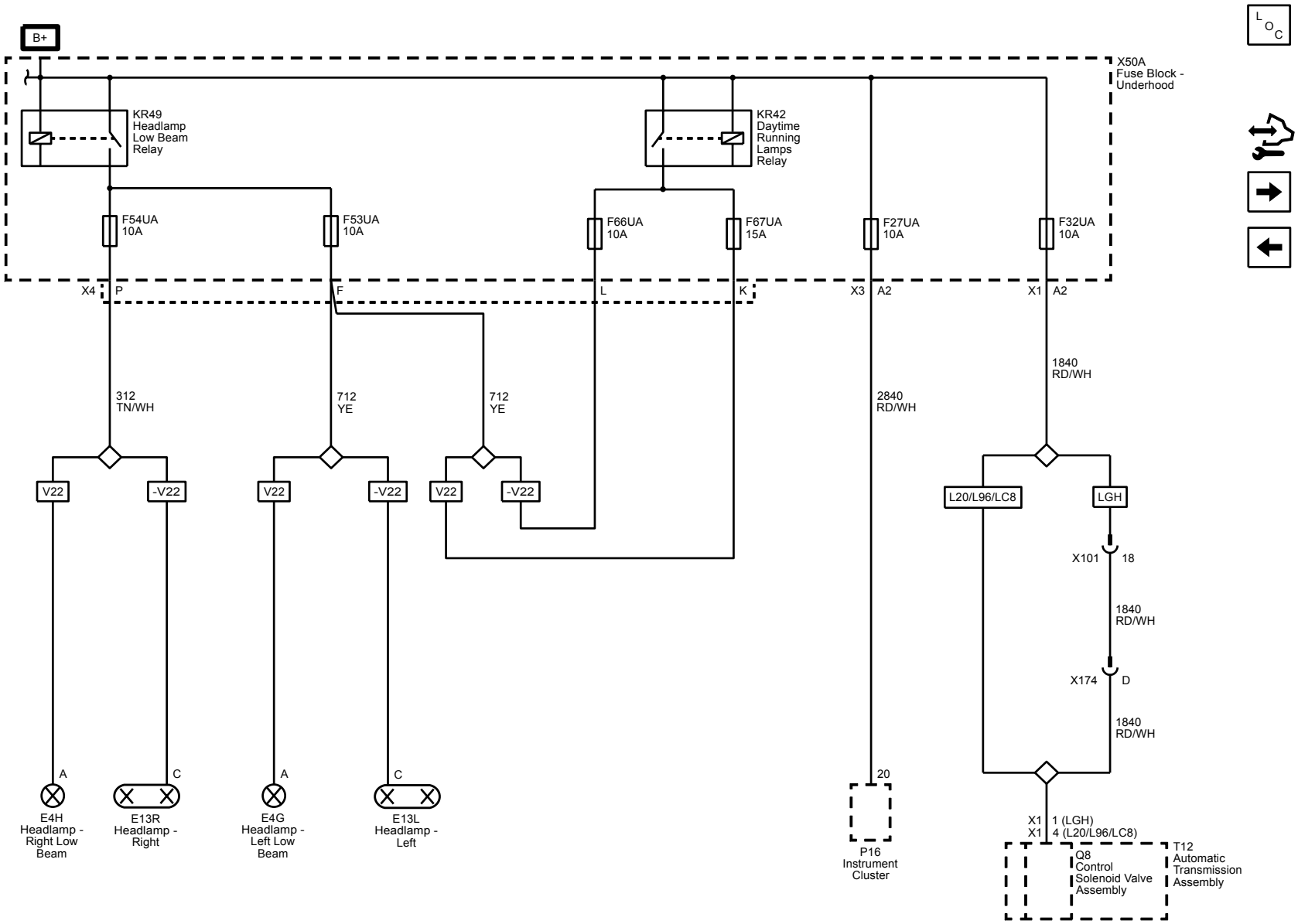

Fuses F19UA, F36UA, F46UA, and F56UA

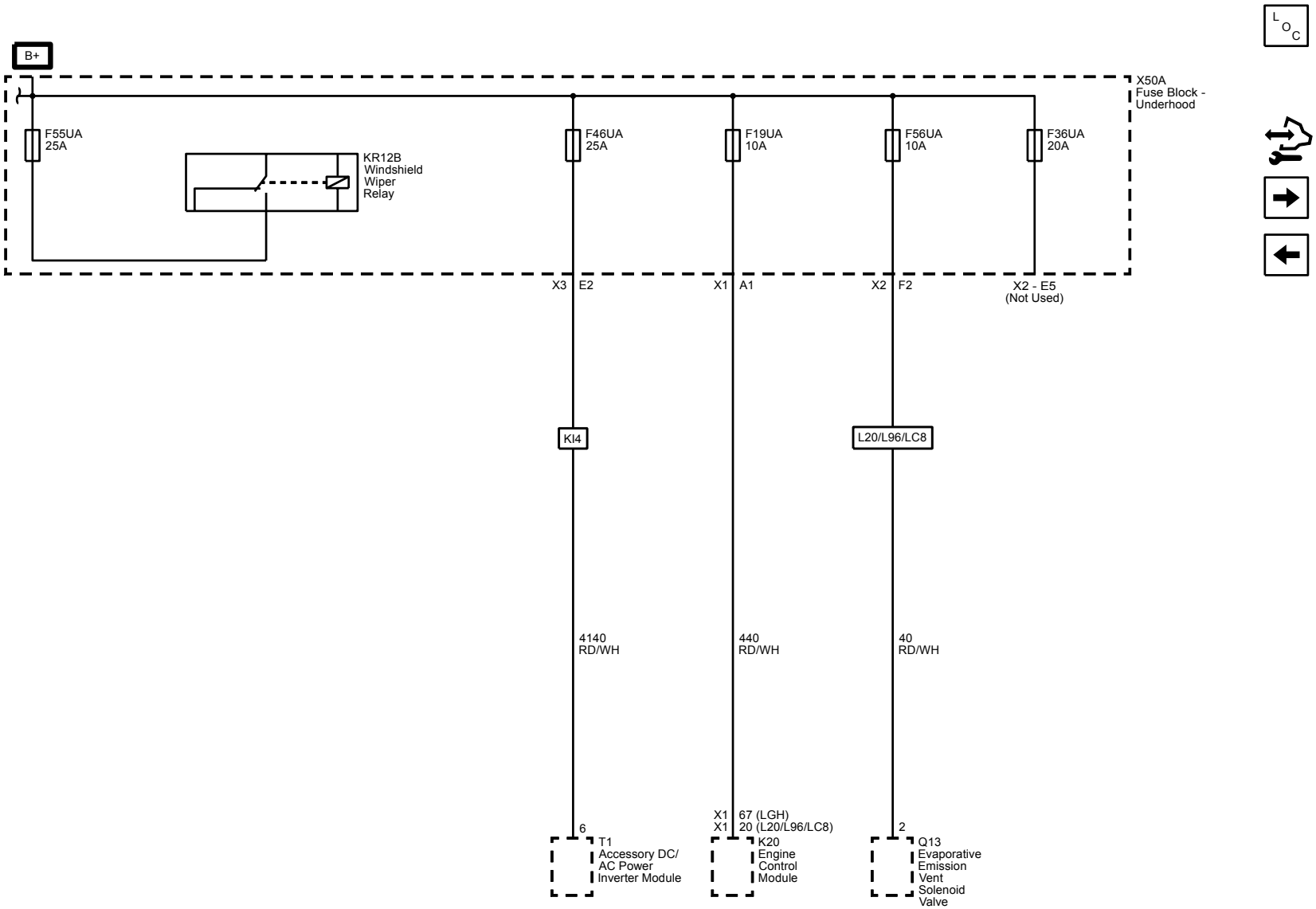

Fuses F10UA, F11UA, F12UA, F17UA, F28UA, F29UA, F30UA, and F31UA

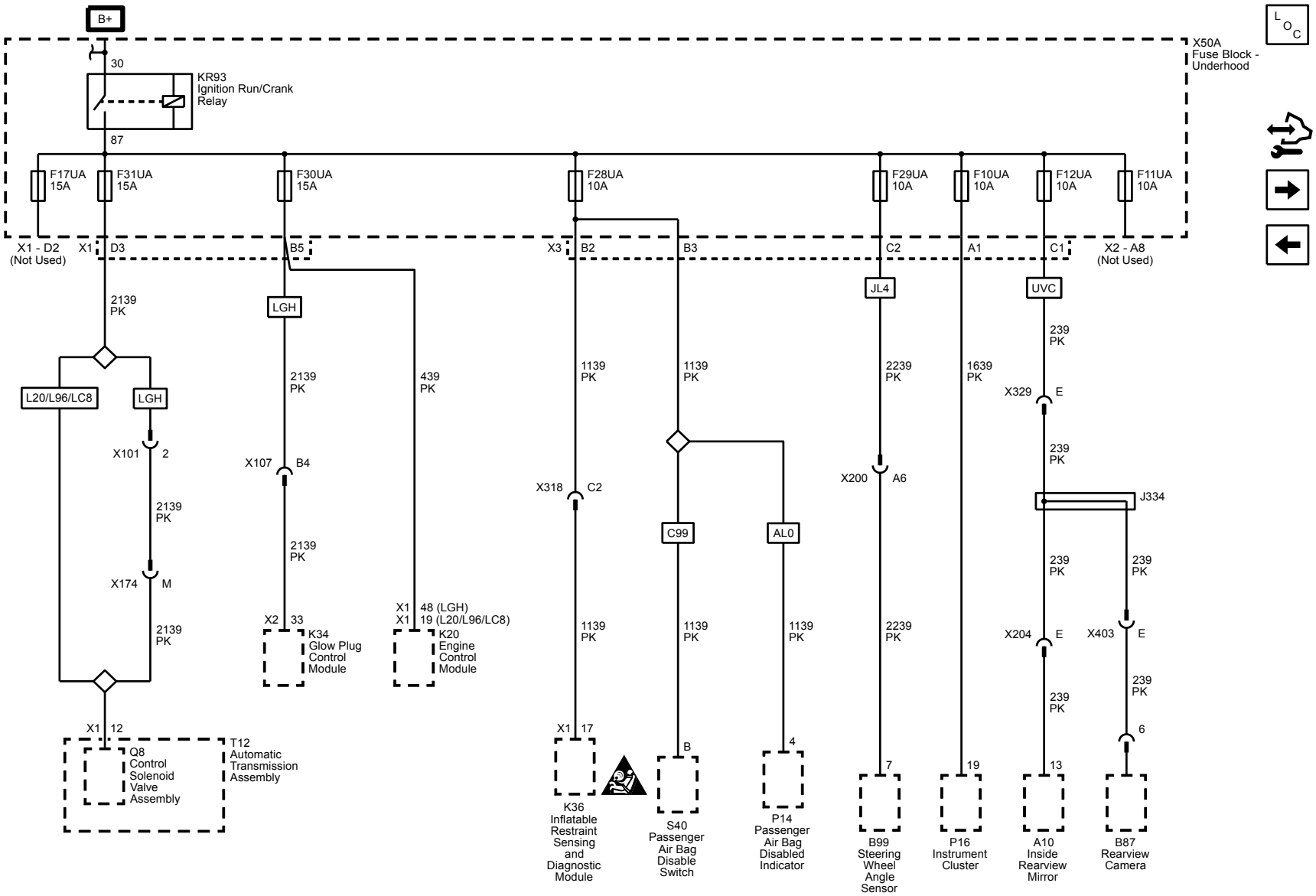

Fuses F62UA, F64UA, F76UA, F77UA, and F78UA

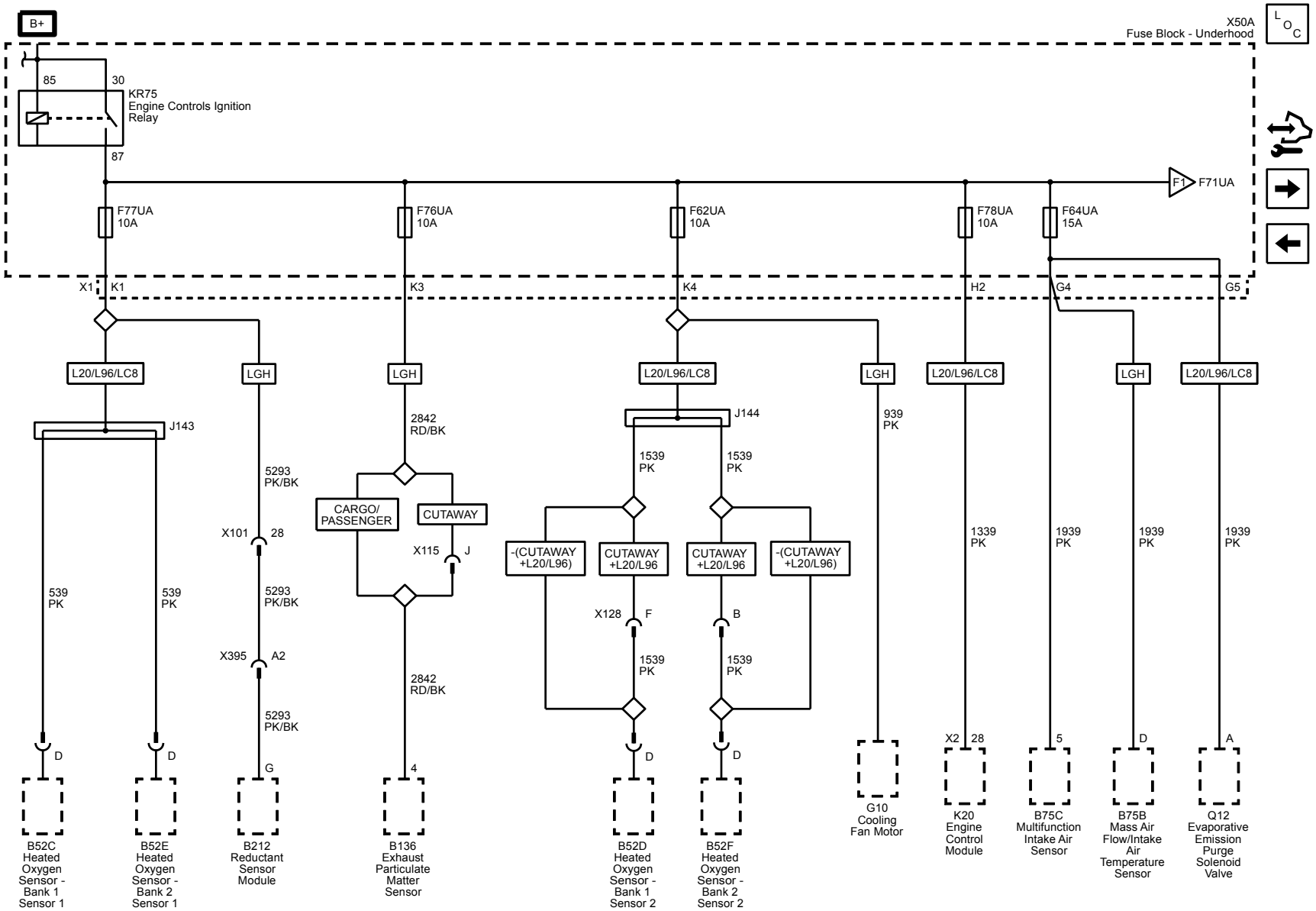

Fuses F45UA, F71UA, and F79UA

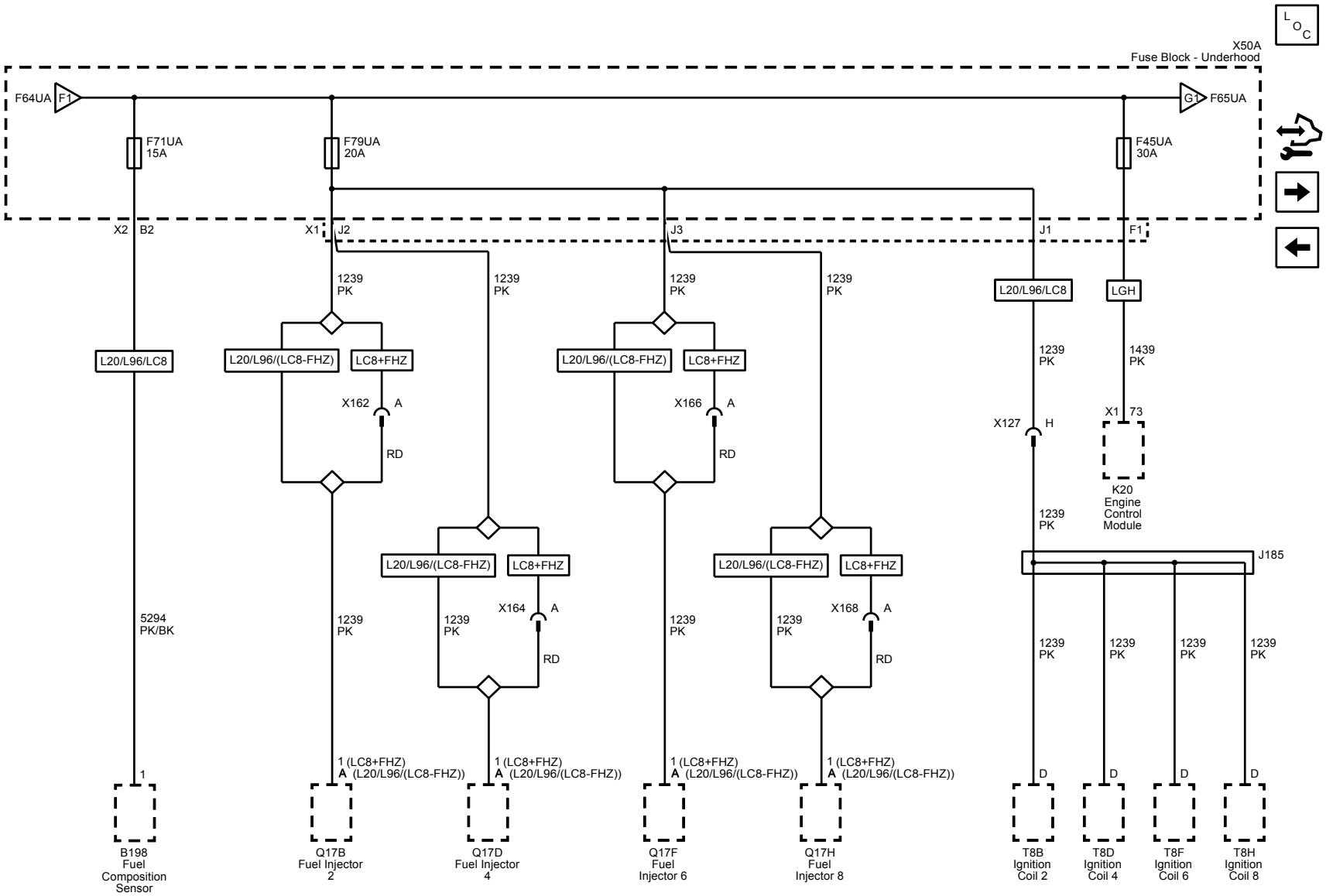

Fuse F65UA

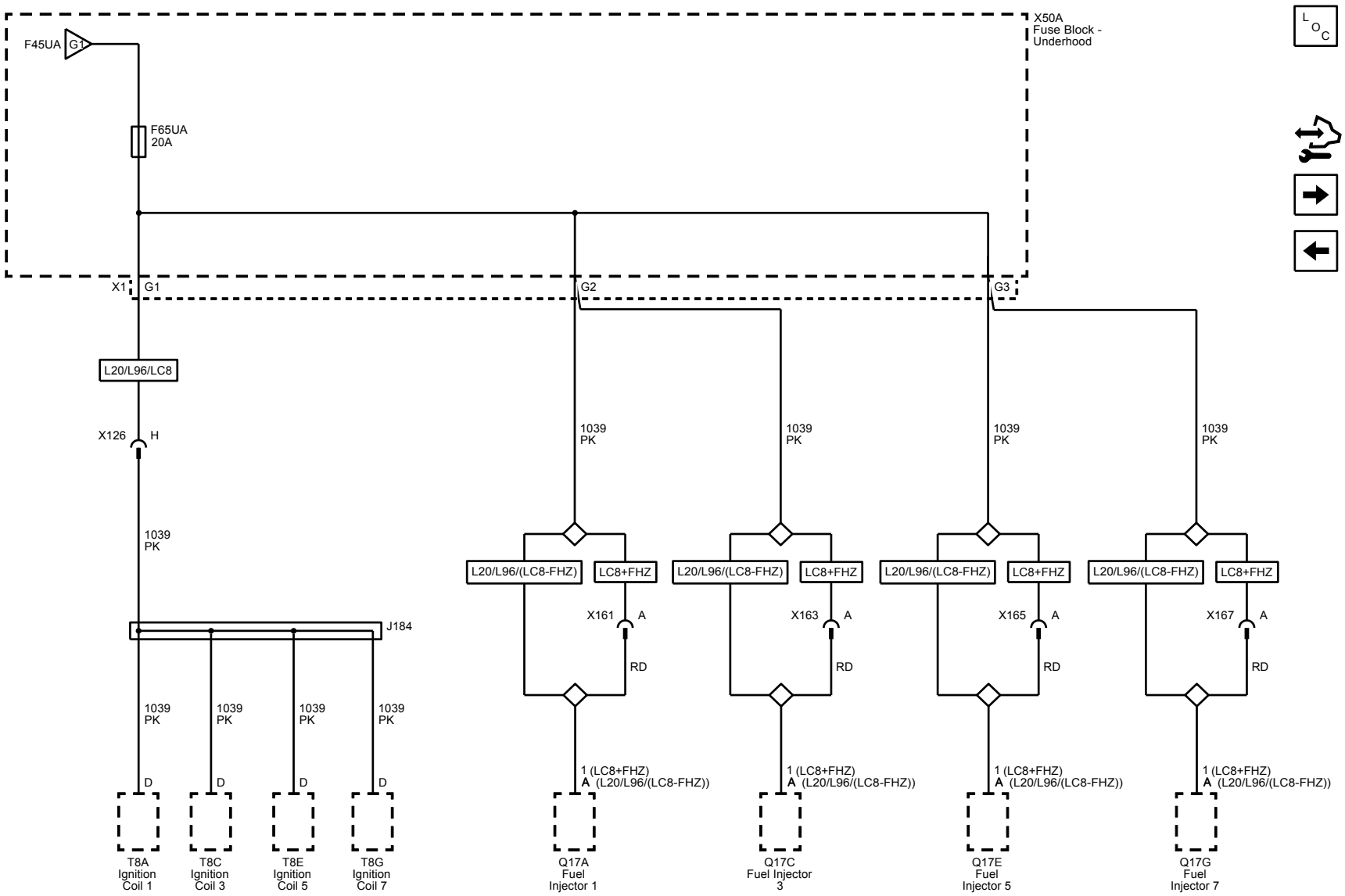
F45UA
G1
F65UA
20A
X50A
Fuse Block -
Underhood
X1
G1
G2
G3
L20/L96/LC8
X126
H
1039
PK
J184
D
T8A
Ignition
Coil 1
T8C
Ignition
Coil 3
T8E
Ignition
Coil 5
T8G
Ignition
Coil 7
L20/L96/(LC8-FHZ)
LC8+FHZ
X161
X163
X165
X167
A
RD
1 (LC8+FHZ)
A (L20/L96/(LC8-FHZ))
Q17A
Fuel
Injector 1
Q17C
Fuel Injector
3
Q17E
Fuel
Injector 5
Q17G
Fuel
Injector 7

Fuses F9PA, F11PA, F20PA, F21PA, F23PA, F25PA, F29PA, and Circuit Breaker CB1PA

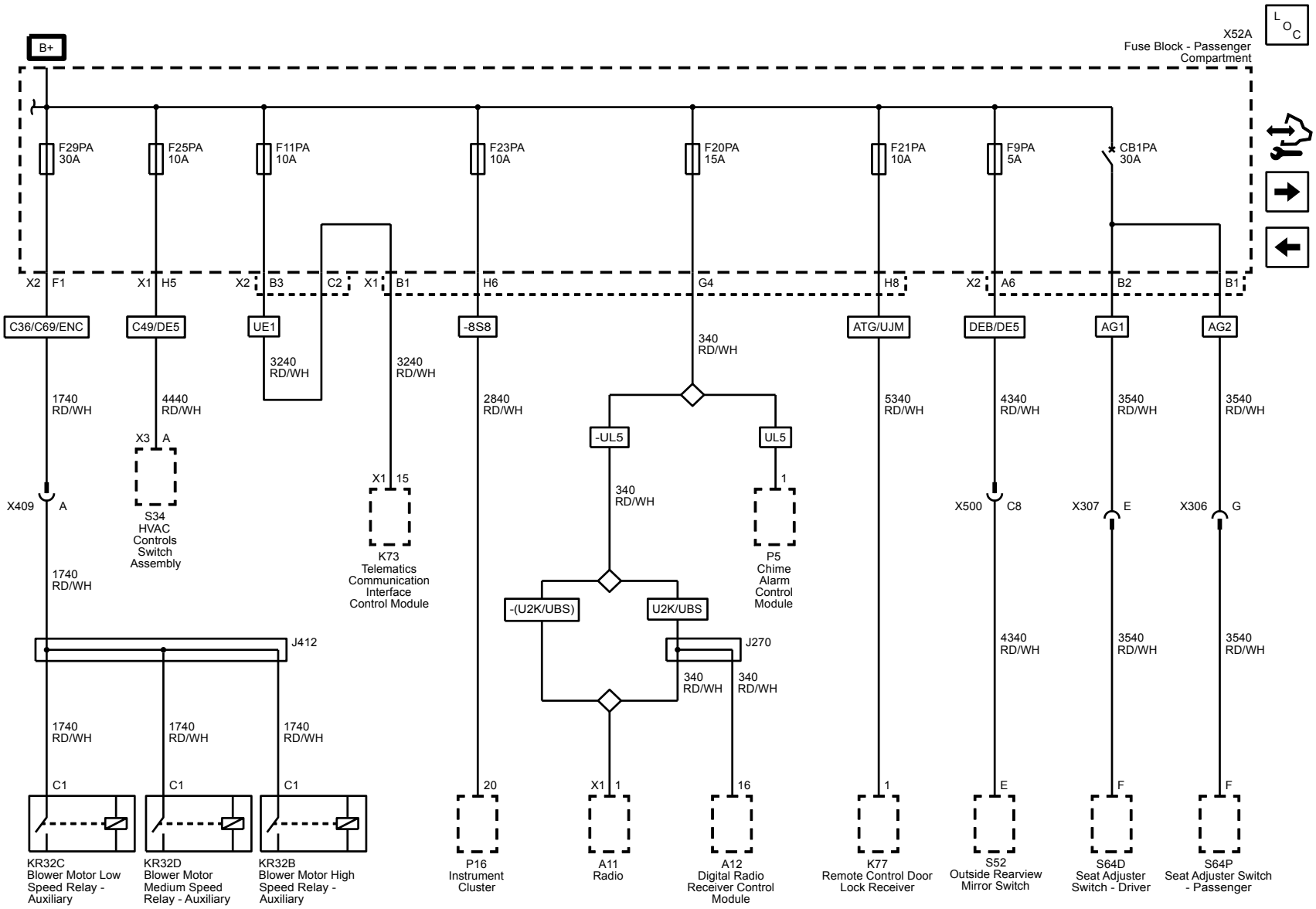

Ignition Switch and Fuse F22PA

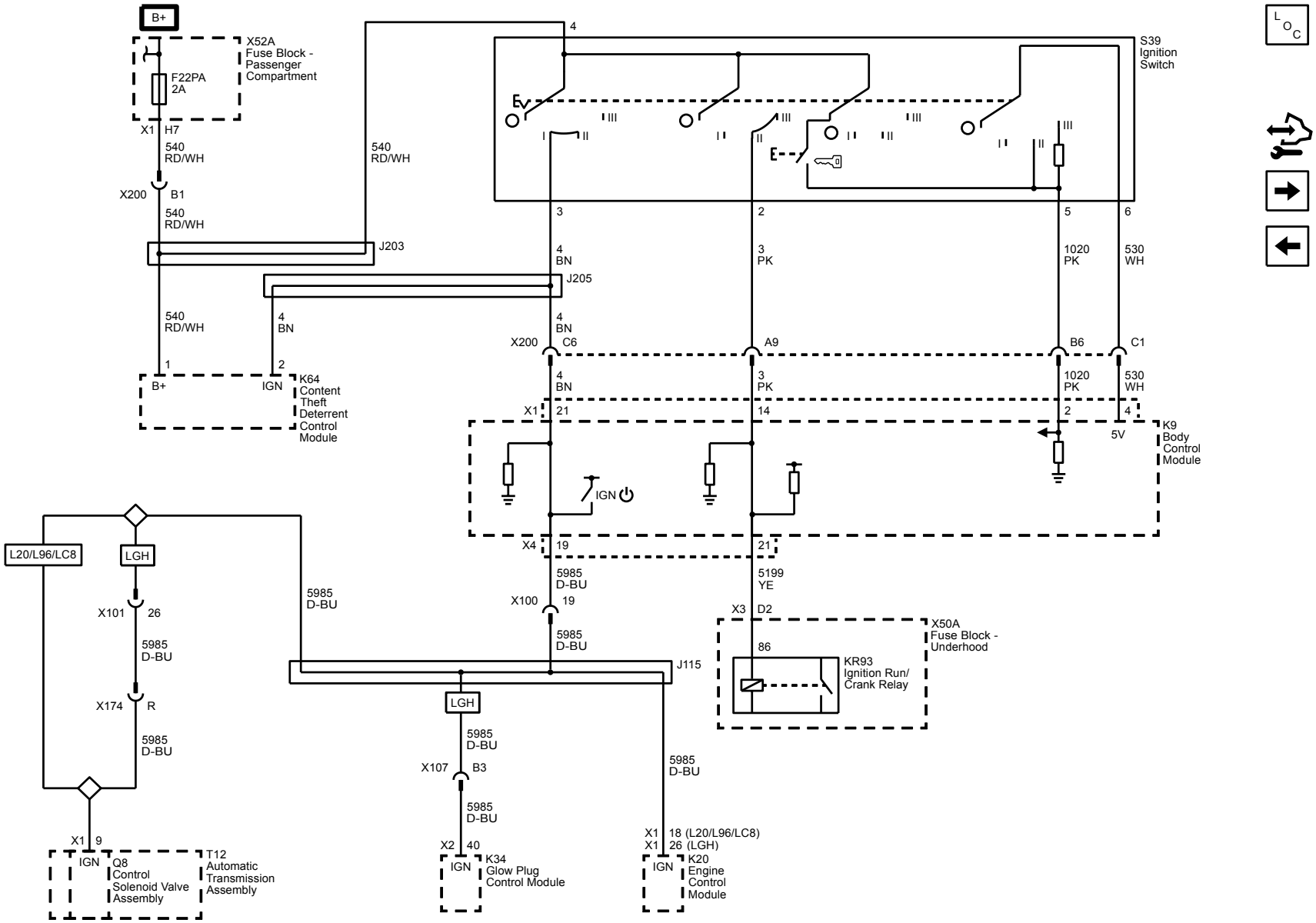

Fuses F10PA, F17PA, F18PA, F37PA, F38PA, and Circuit Breaker CB2PA

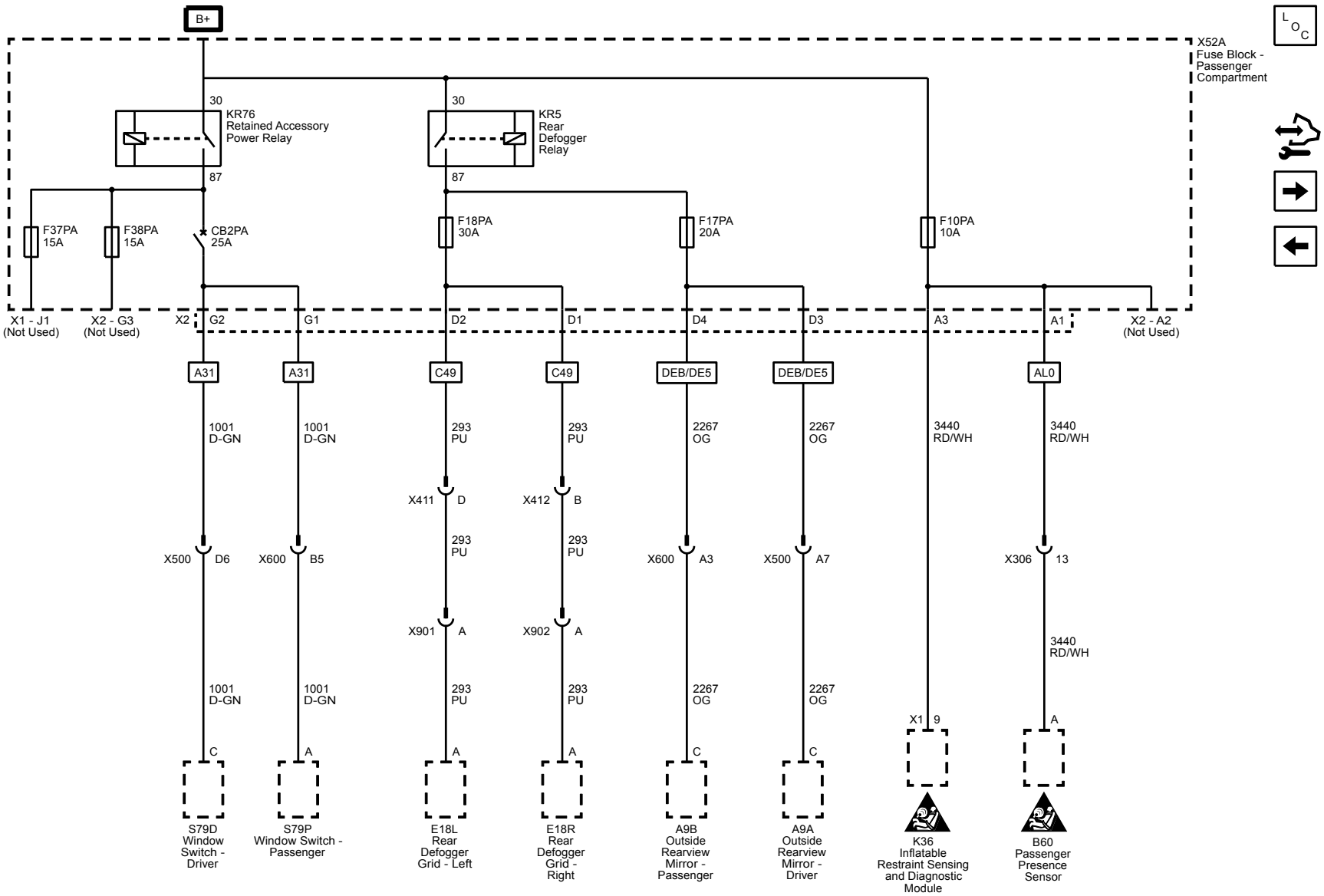

Fuses F33PA, F34PA, F35PA, and F36PA

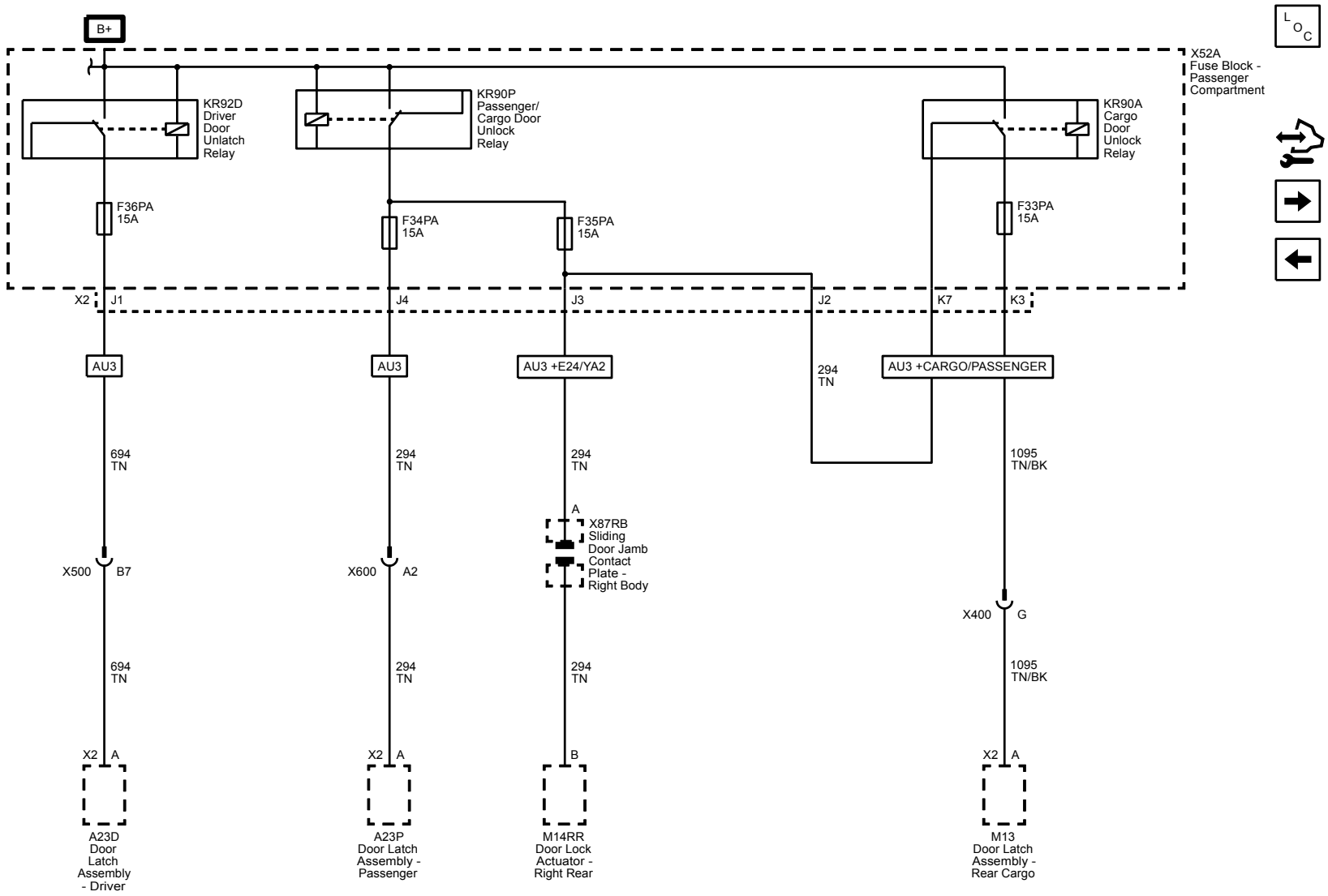

Fuses F16PA, F31PA, F32PA, and F2RA

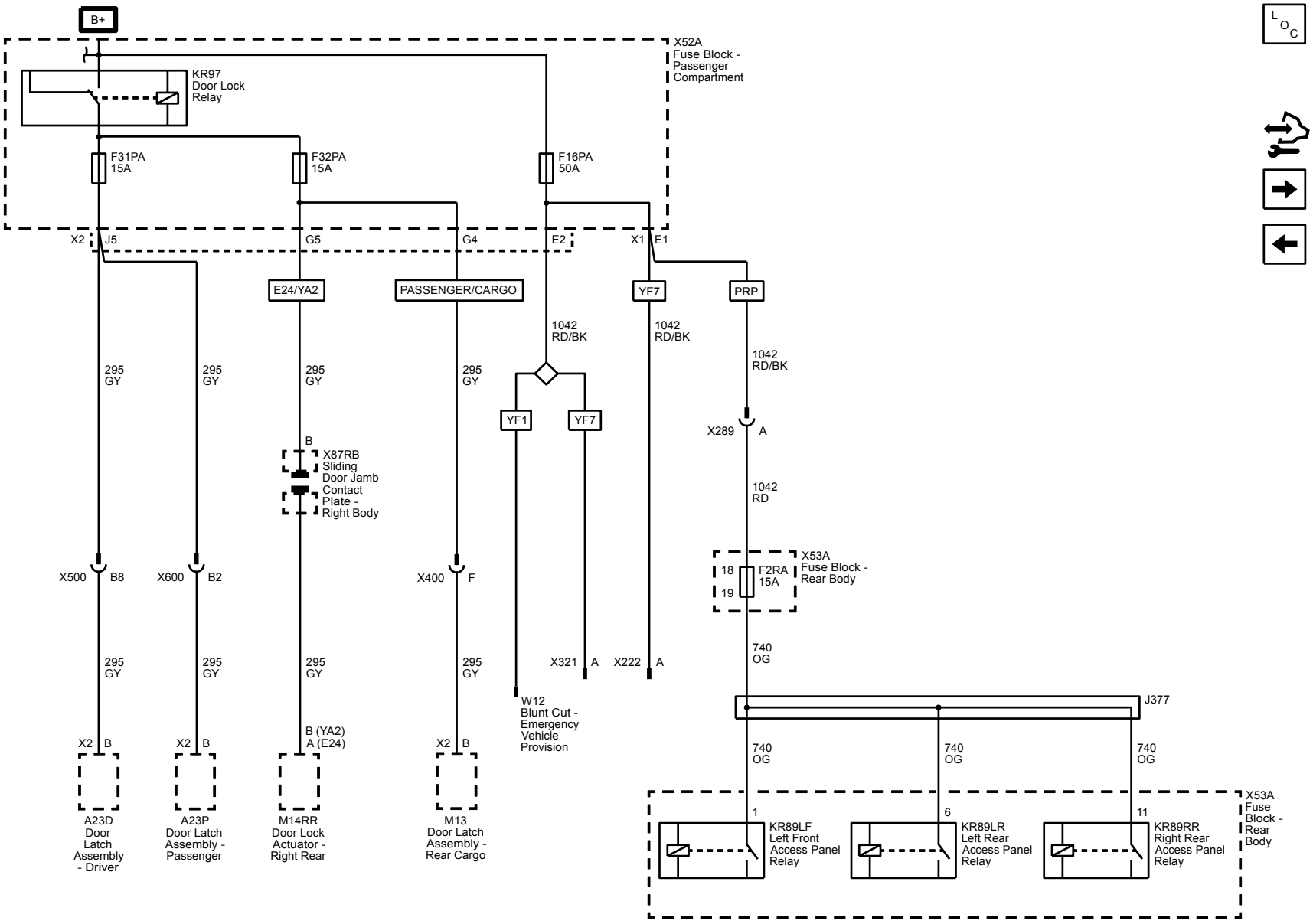

Fuses F13PA and F14PA

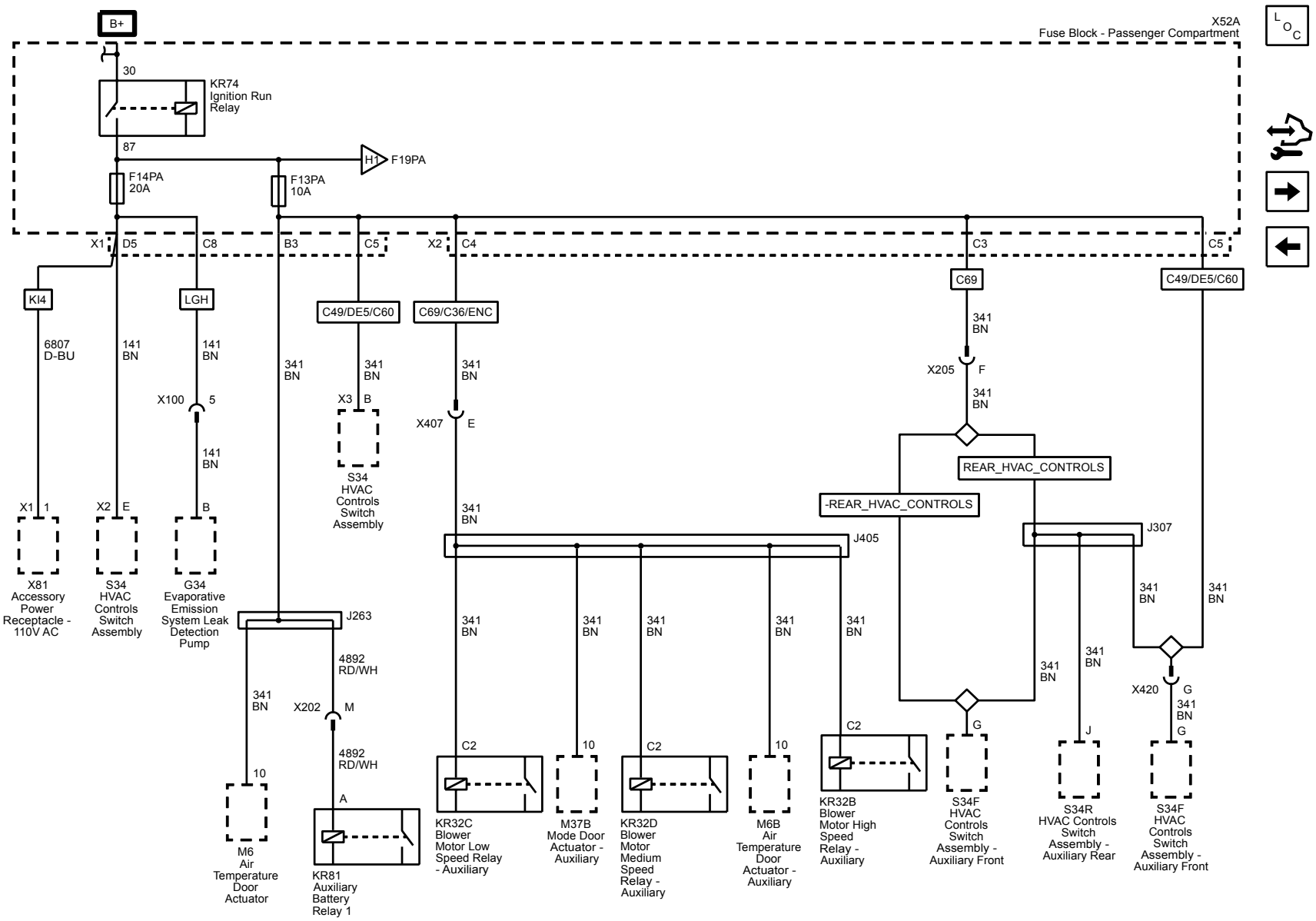

Fuses F19PA, F26PA, F27PA, and F28PA

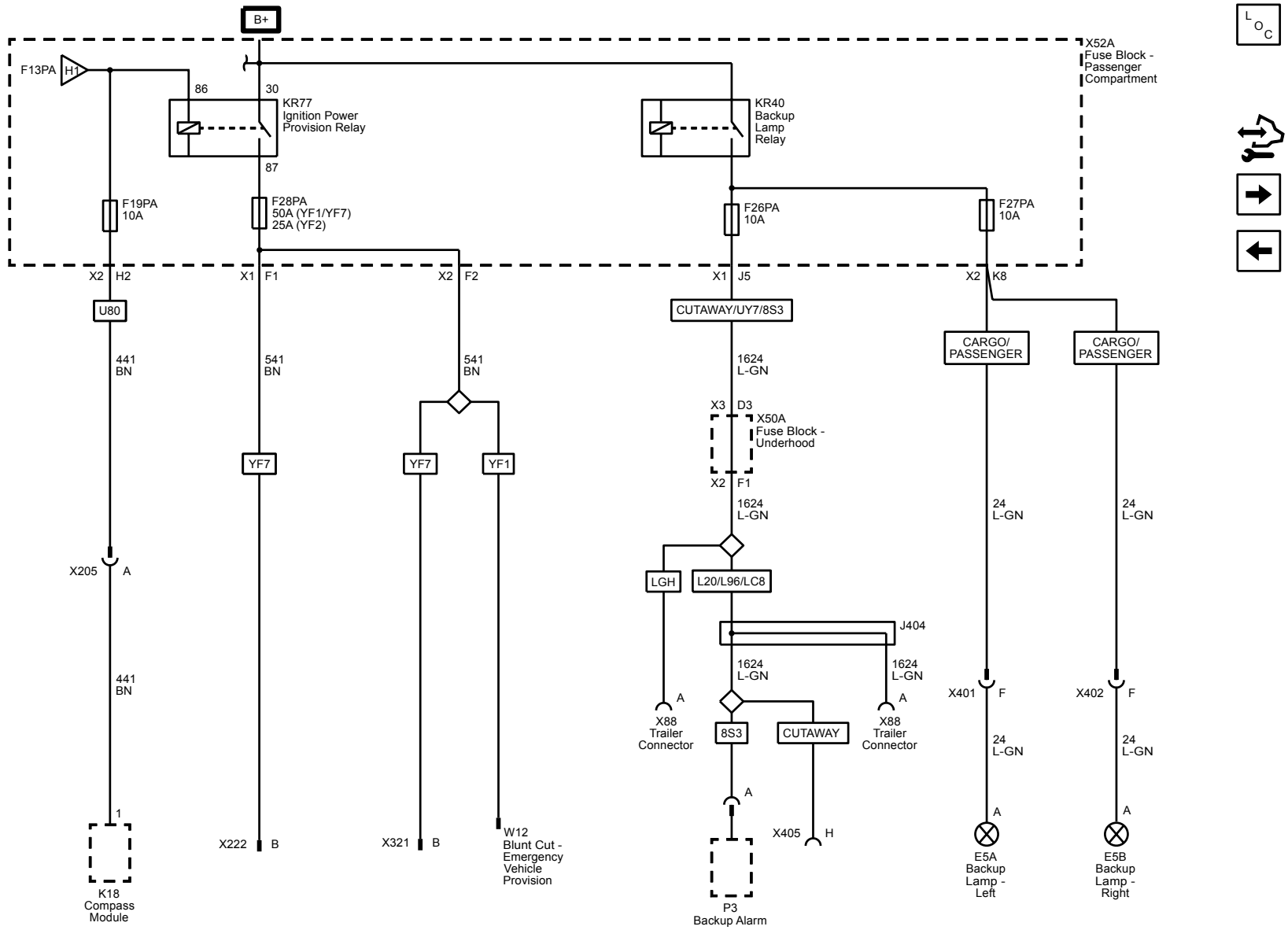

Fuses F3PA, F4PA, F5PA, F6PA, F7PA, and F8PA

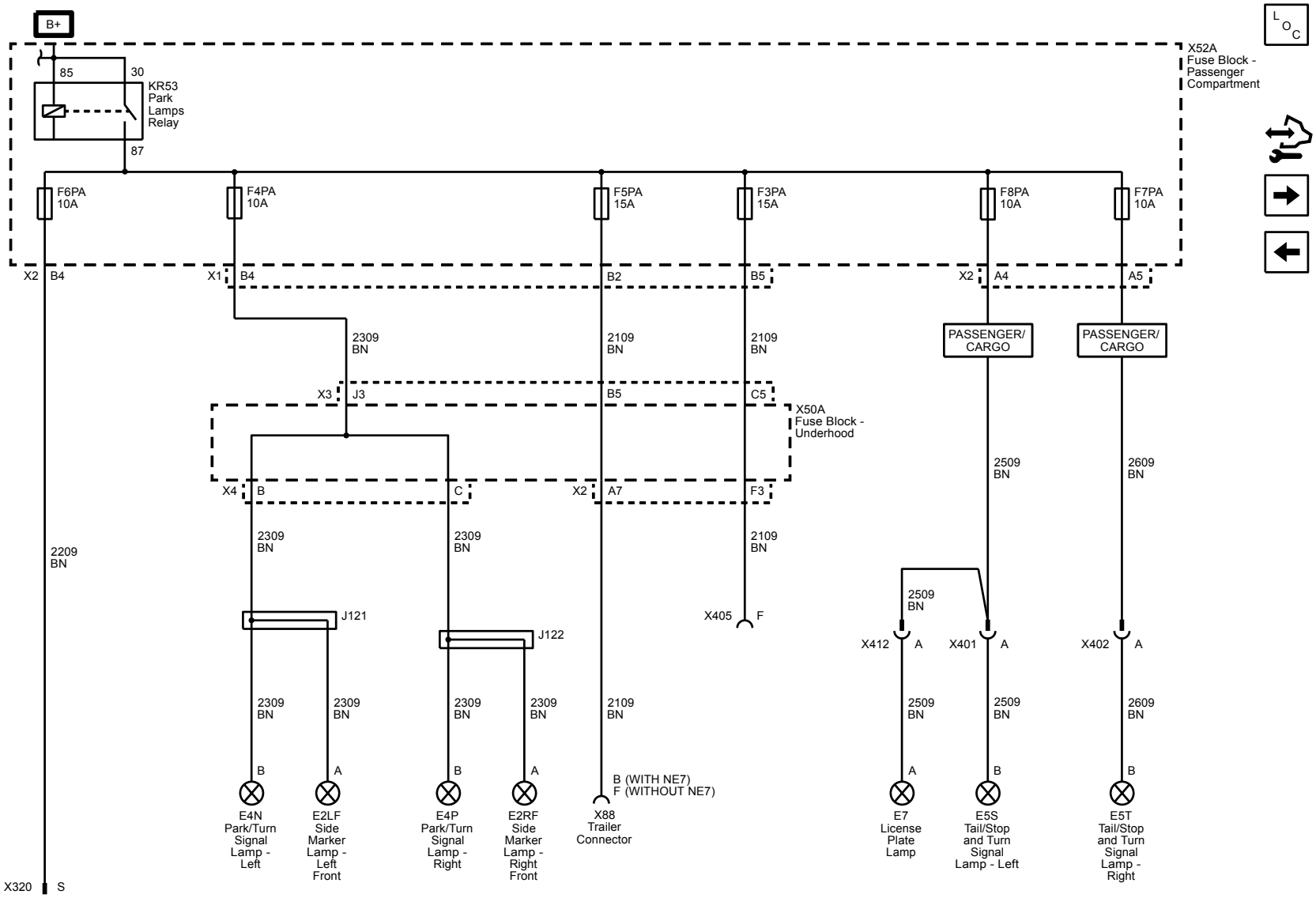

Fuse F30PA

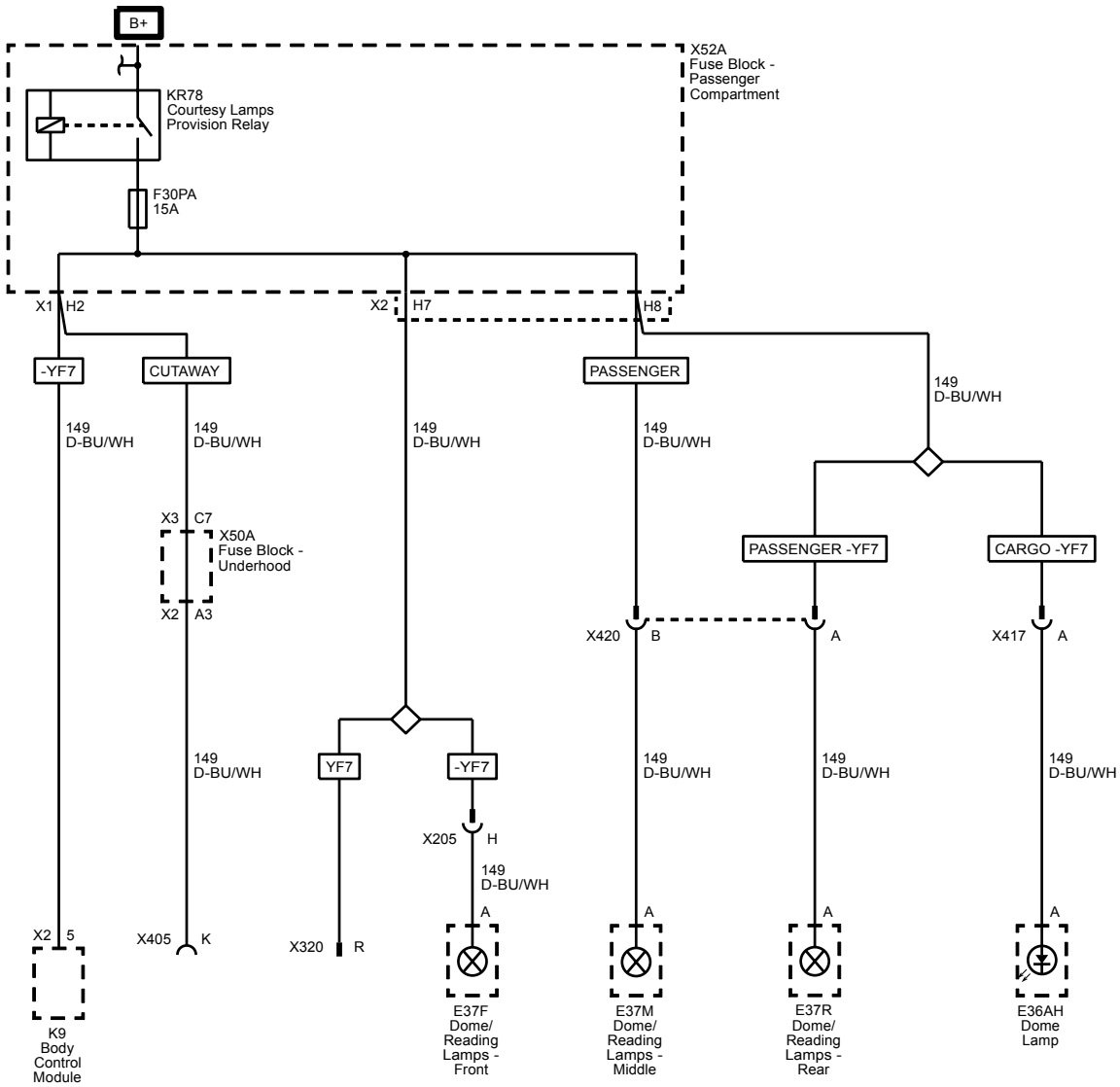
B+
KR78
Courtesy Lamps
Provision Relay
F30PA
15A
X52A
Fuse Block -
Passenger
Compartment
X1 H2
X2 H7
H8
-YF7
CUTAWAY
PASSENGER
149
D-BU/WH
X3 C7
X50A
Fuse Block -
Underhood
X2 A3
PASSENGER -YF7
CARGO -YF7
X420 B
A
X417 A
YF7
-YF7
X205 H
X2 5
X405 K
X320 R
E37F
Dome/
Reading
Lamps -
Front
E37M
Dome/
Reading
Lamps -
Middle
E37R
Dome/
Reading
Lamps -
Rear
E36AH
Dome
Lamp
K9
Body
Control
Module

F1LPG and F2LPG (KO7)

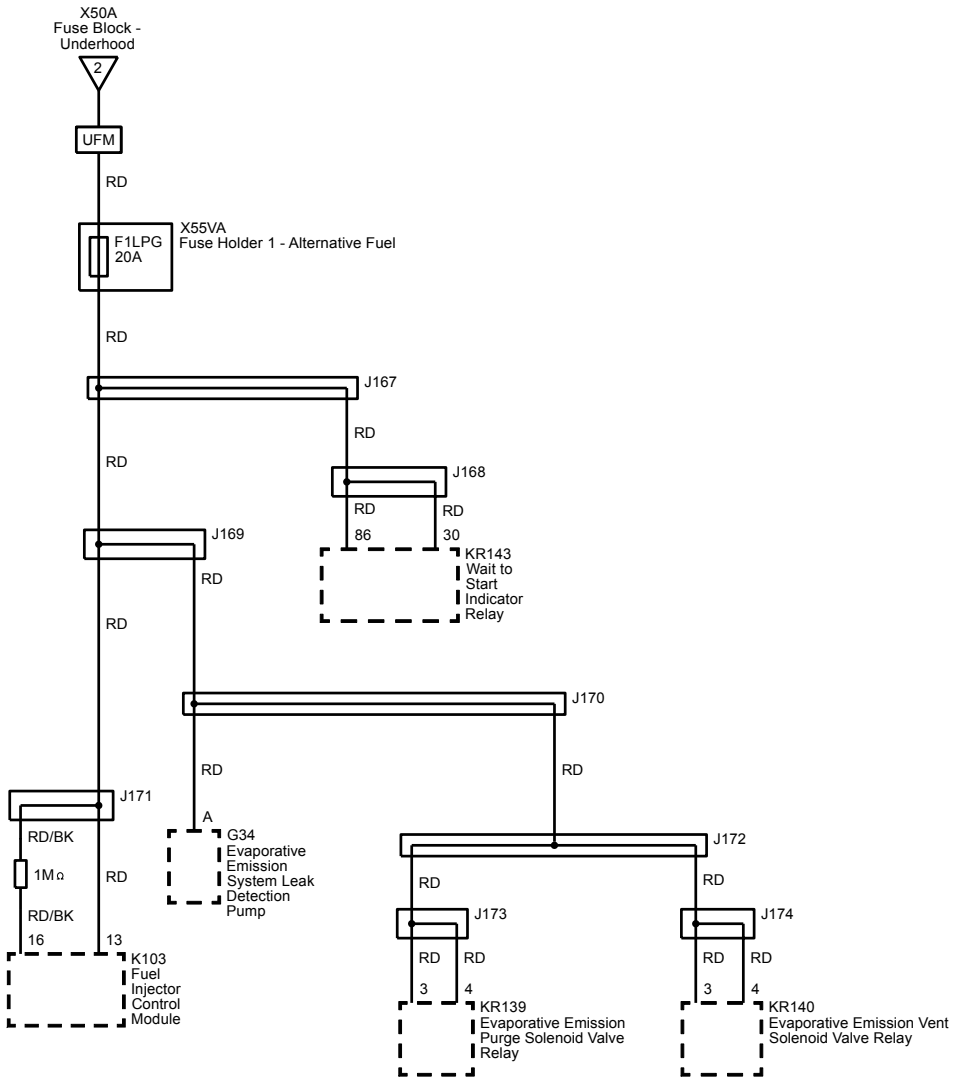

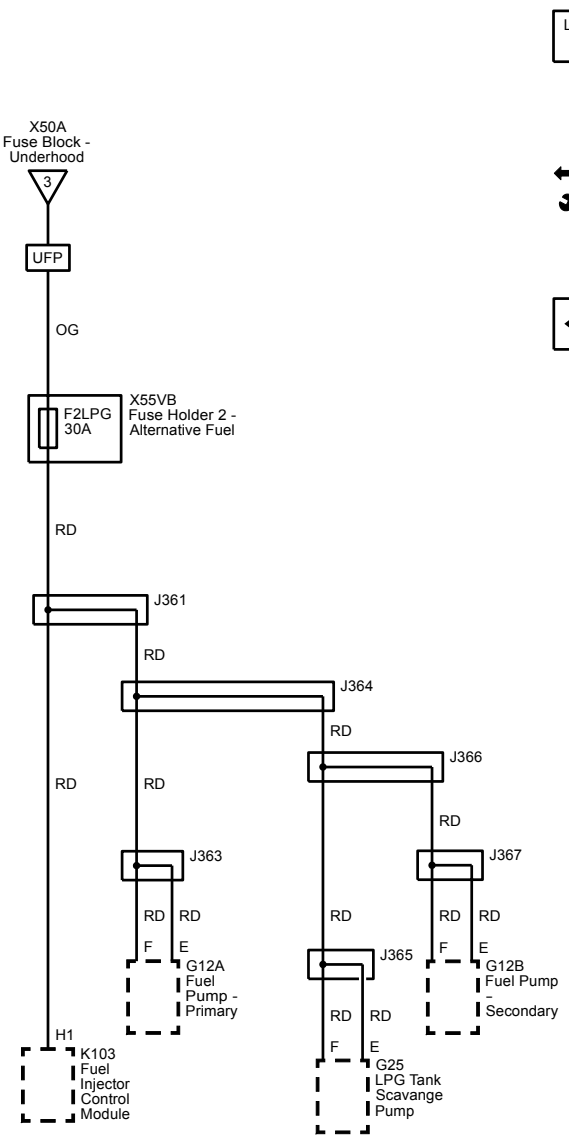

Ignition Run/Crank Relay

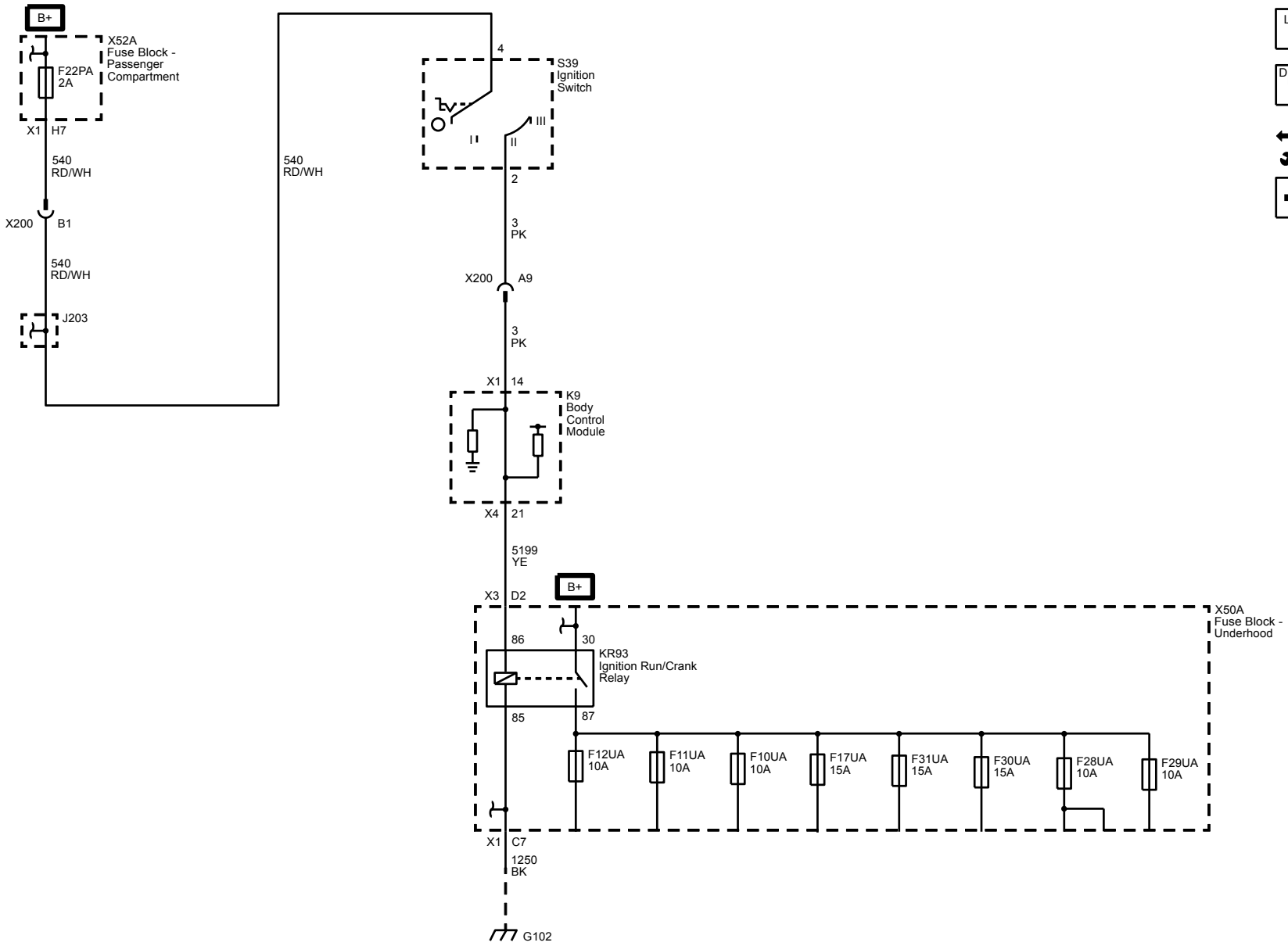

Retained Accessory Power Relay and Ignition Run Relay

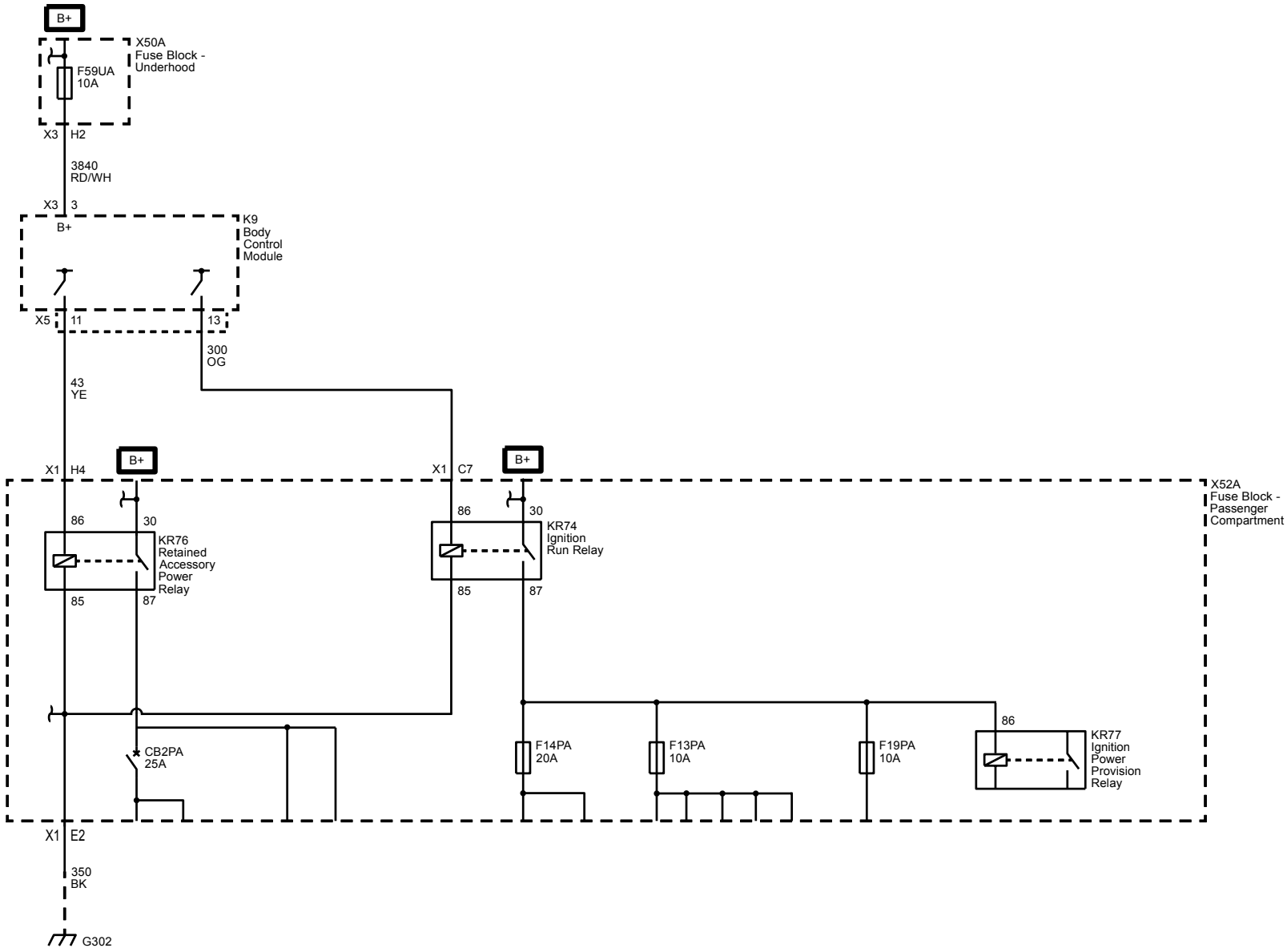

Ground Distribution Schematics

G100 and G101

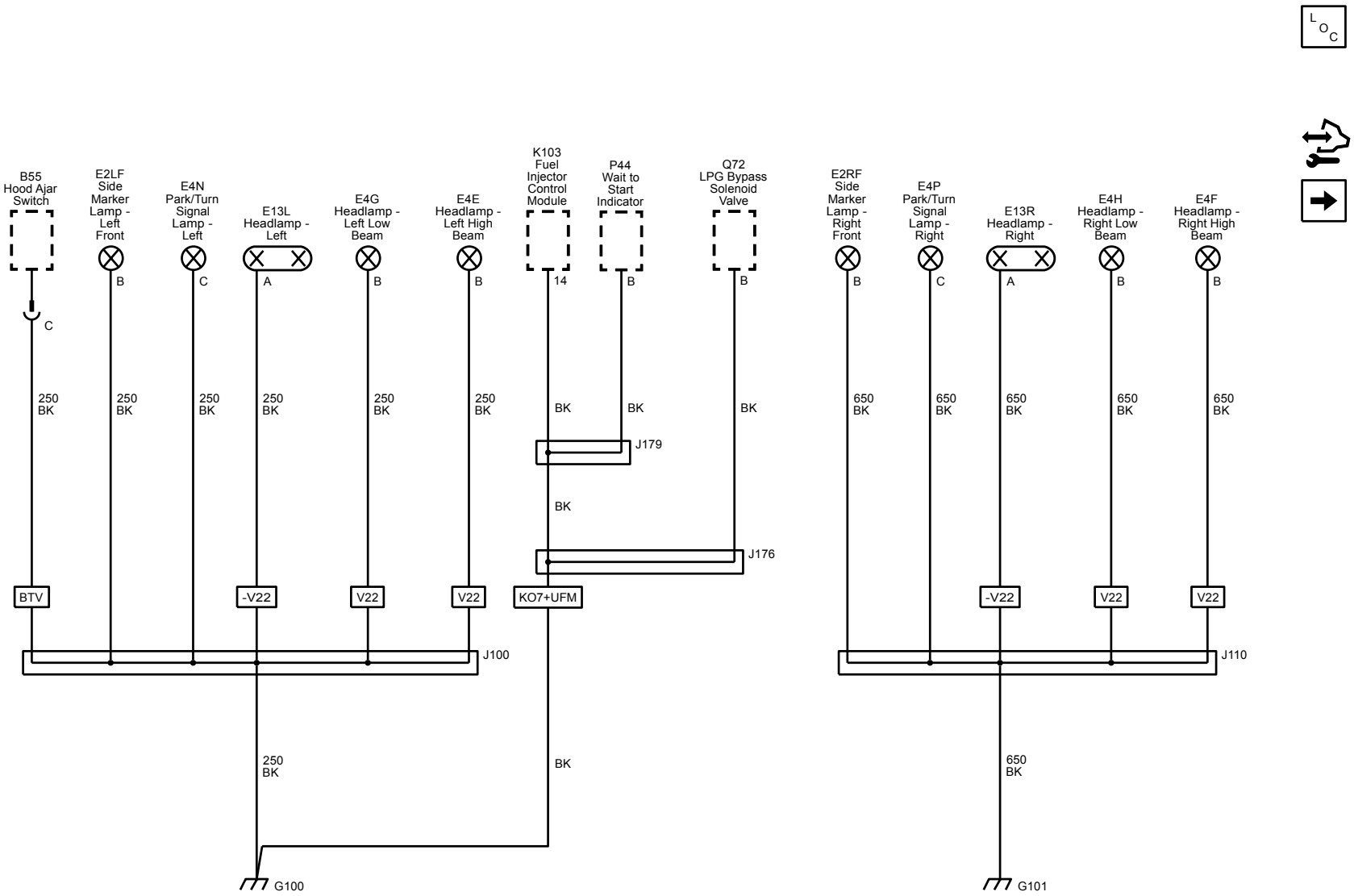

G102, G107 and G108

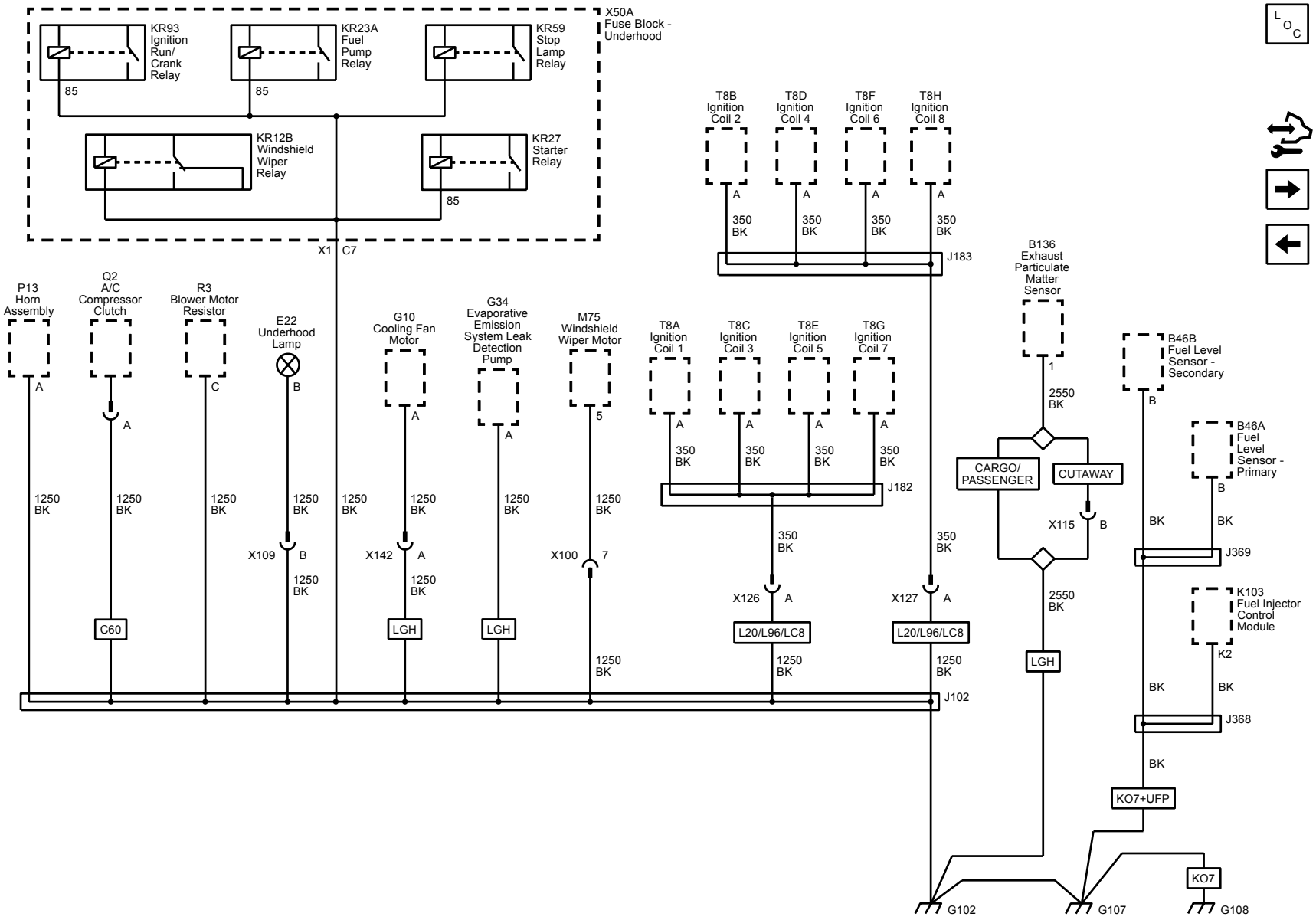

G103, G104, G105 and G106

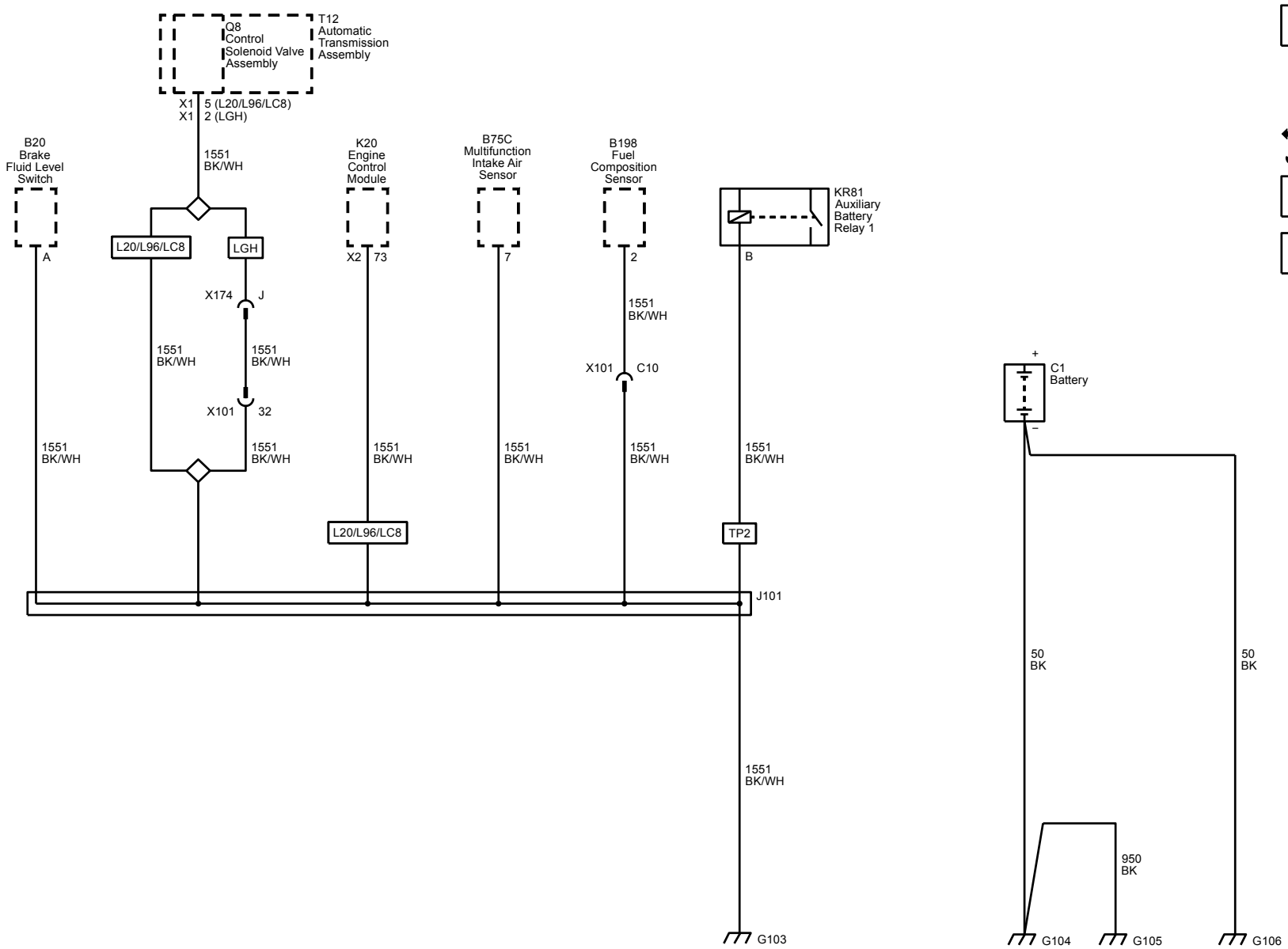

G109 (LGH) and G110 (LGH)

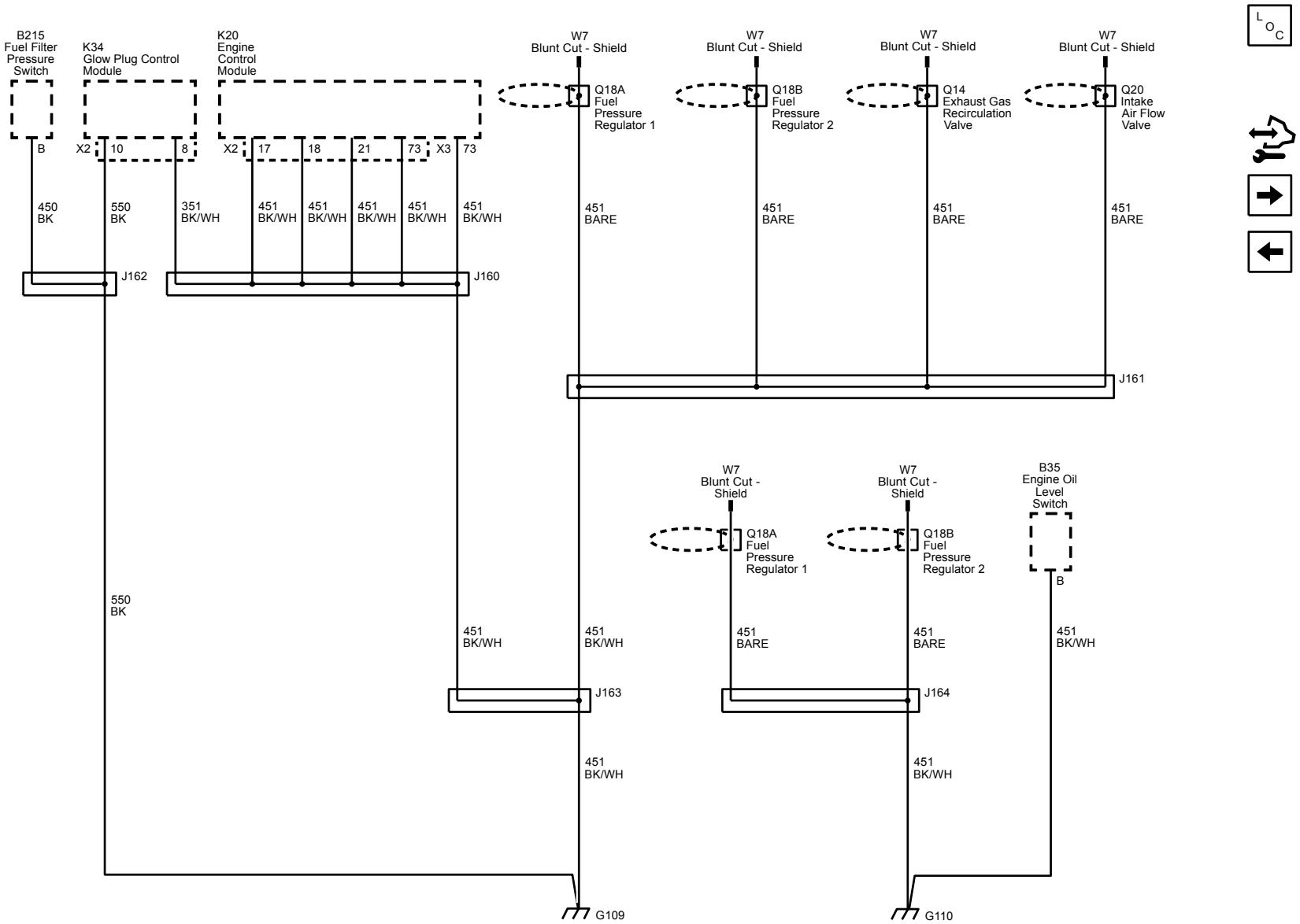

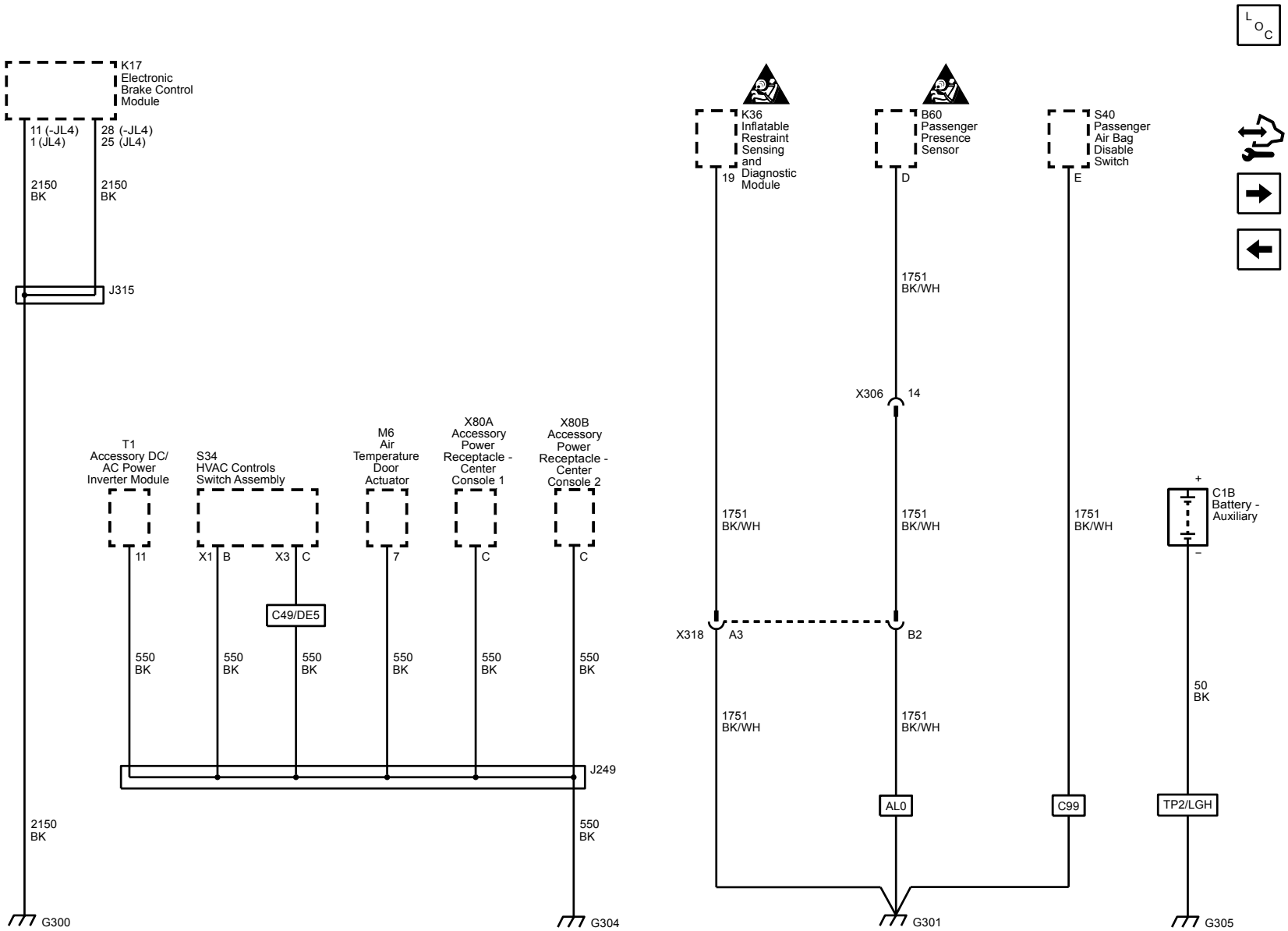
K17
Electronic
Brake Control
Module
11 (-JL4)
1 (JL4)
28 (-JL4)
25 (JL4)
2150
BK
2150
BK
J315
T1
Accessory DC/
AC Power
Inverter Module
S34
HVAC Controls
Switch Assembly
M6
Air
Temperature
Door
Actuator
X80A
Accessory
Power
Receptacle -
Center
Console 1
X80B
Accessory
Power
Receptacle -
Center
Console 2
11
X1
B
X3
C
7
C
C
C49/DE5
550
BK
J249
2150
BK
550
BK
G300
G304
K36
Inflatable
Restraint
Sensing
and
Diagnostic
Module
19
B60
Passenger
Presence
Sensor
D
S40
Passenger
Air Bag
Disable
Switch
E
1751
BK/WH
X306
14
X318
A3
B2
AL0
C99
G301
C1B
Battery -
Auxiliary
+
–
50
BK
TP2/LGH
G305
L
O
C

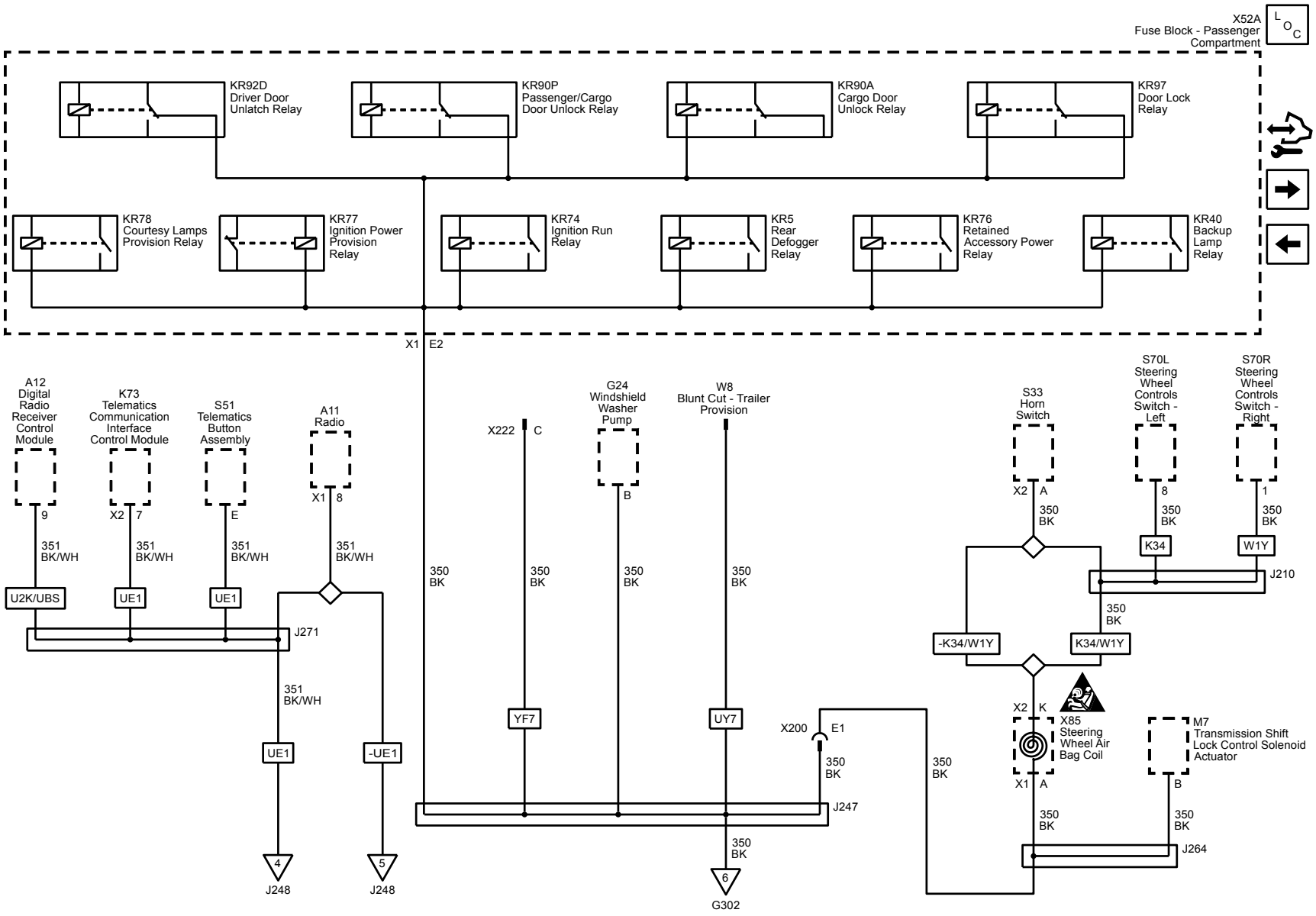
X52A
Fuse Block - Passenger Compartment
KR92D
Driver Door Unlatch Relay
KR90P
Passenger/Cargo Door Unlock Relay
KR90A
Cargo Door Unlock Relay
KR97
Door Lock Relay
KR78
Courtesy Lamps Provision Relay
KR77
Ignition Power Provision Relay
KR74
Ignition Run Relay
KR5
Rear Defogger Relay
KR76
Retained Accessory Power Relay
KR40
Backup Lamp Relay
X1 E2
A12
Digital Radio Receiver Control Module
K73
Telematics Communication Interface Control Module
S51
Telematics Button Assembly
A11
Radio
9
X2 7
E
X1 8
351 BK/WH
U2K/UBS
UE1
J271
351 BK/WH
UE1
-UE1
4
J248
5
J248
X222 C
G24
Windshield Washer Pump
B
W8
Blunt Cut - Trailer Provision
350 BK
YF7
UY7
X200 E1
J247
6
G302
S33
Horn Switch
S70L
Steering Wheel Controls Switch - Left
S70R
Steering Wheel Controls Switch - Right
X2 A
8
1
K34
W1Y
J210
-K34/W1Y
K34/W1Y
X2 K
X85
Steering Wheel Air Bag Coil
X1 A
M7
Transmission Shift Lock Control Solenoid Actuator
B
J264

G302 (2 of 2)

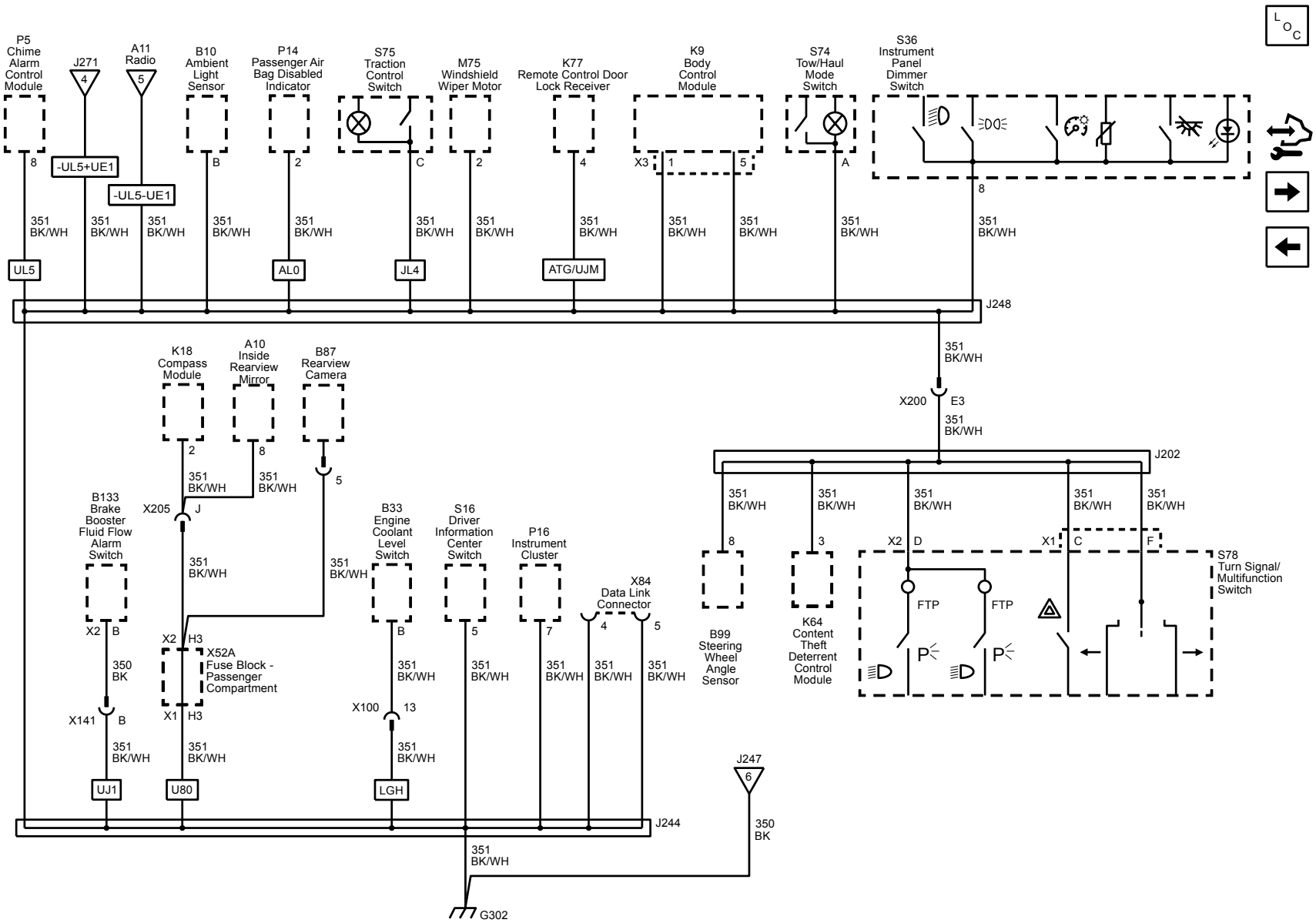
P5 Chime Alarm Control Module
J271
A11 Radio
B10 Ambient Light Sensor
P14 Passenger Air Bag Disabled Indicator
S75 Traction Control Switch
M75 Windshield Wiper Motor
K77 Remote Control Door Lock Receiver
K9 Body Control Module
S74 Tow/Haul Mode Switch
S36 Instrument Panel Dimmer Switch
-UL5+UE1
-UL5-UE1
UL5
AL0
JL4
ATG/UJM
J248
K18 Compass Module
A10 Inside Rearview Mirror
B87 Rearview Camera
X205
B133 Brake Booster Fluid Flow Alarm Switch
X52A Fuse Block - Passenger Compartment
X141
B33 Engine Coolant Level Switch
S16 Driver Information Center Switch
P16 Instrument Cluster
X84 Data Link Connector
X100
UJ1
U80
LGH
J244
X200
J202
B99 Steering Wheel Angle Sensor
K64 Content Theft Deterrent Control Module
S78 Turn Signal/ Multifunction Switch
FTP
J247
G302
351 BK/WH
350 BK

G347

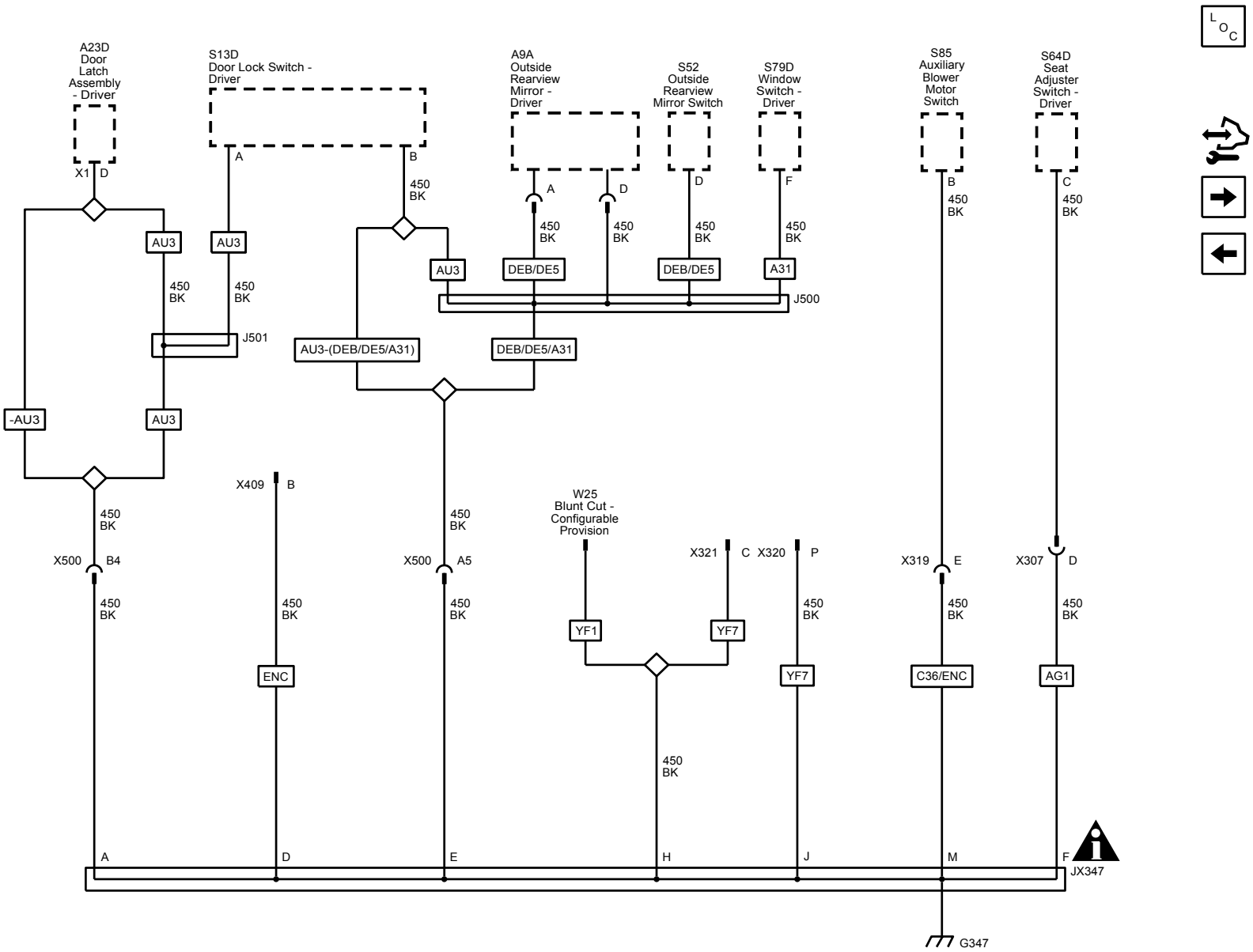
A23D
Door
Latch
Assembly
- Driver
X1 D
S13D
Door Lock Switch -
Driver
A
B
450
BK
A9A
Outside
Rearview
Mirror -
Driver
S52
Outside
Rearview
Mirror Switch
S79D
Window
Switch -
Driver
S85
Auxiliary
Blower
Motor
Switch
S64D
Seat
Adjuster
Switch -
Driver
AU3
DEB/DE5
A31
J500
J501
AU3-(DEB/DE5/A31)
DEB/DE5/A31
-AU3
X500 B4
X500 A5
X409 B
ENC
W25
Blunt Cut -
Configurable
Provision
YF1
YF7
X321 C
X320 P
X319 E
C36/ENC
X307 D
AG1
A
D
E
H
J
M
F
JX347
G347

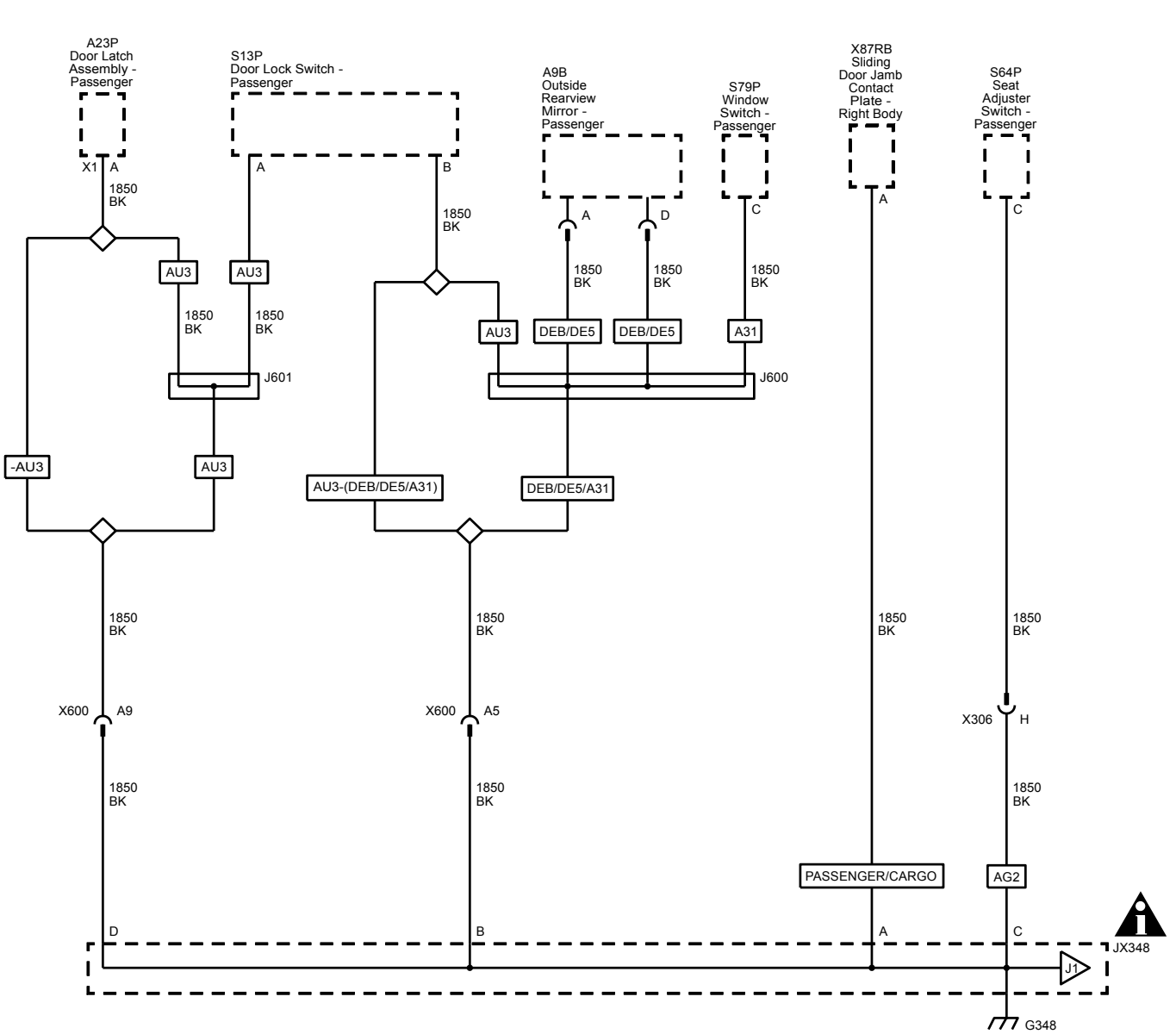
A23P
Door Latch Assembly - Passenger
X1
A
1850 BK
AU3
1850 BK
-AU3
X600
A9
S13P
Door Lock Switch - Passenger
A
B
AU3
J601
AU3-(DEB/DE5/A31)
X600
A5
A9B
Outside Rearview Mirror - Passenger
A
D
S79P
Window Switch - Passenger
C
AU3
DEB/DE5
DEB/DE5
A31
J600
DEB/DE5/A31
X87RB
Sliding Door Jamb Contact Plate - Right Body
A
PASSENGER/CARGO
S64P
Seat Adjuster Switch - Passenger
C
X306
H
AG2
D
B
A
C
JX348
J1
G348

G348 (2 of 2)

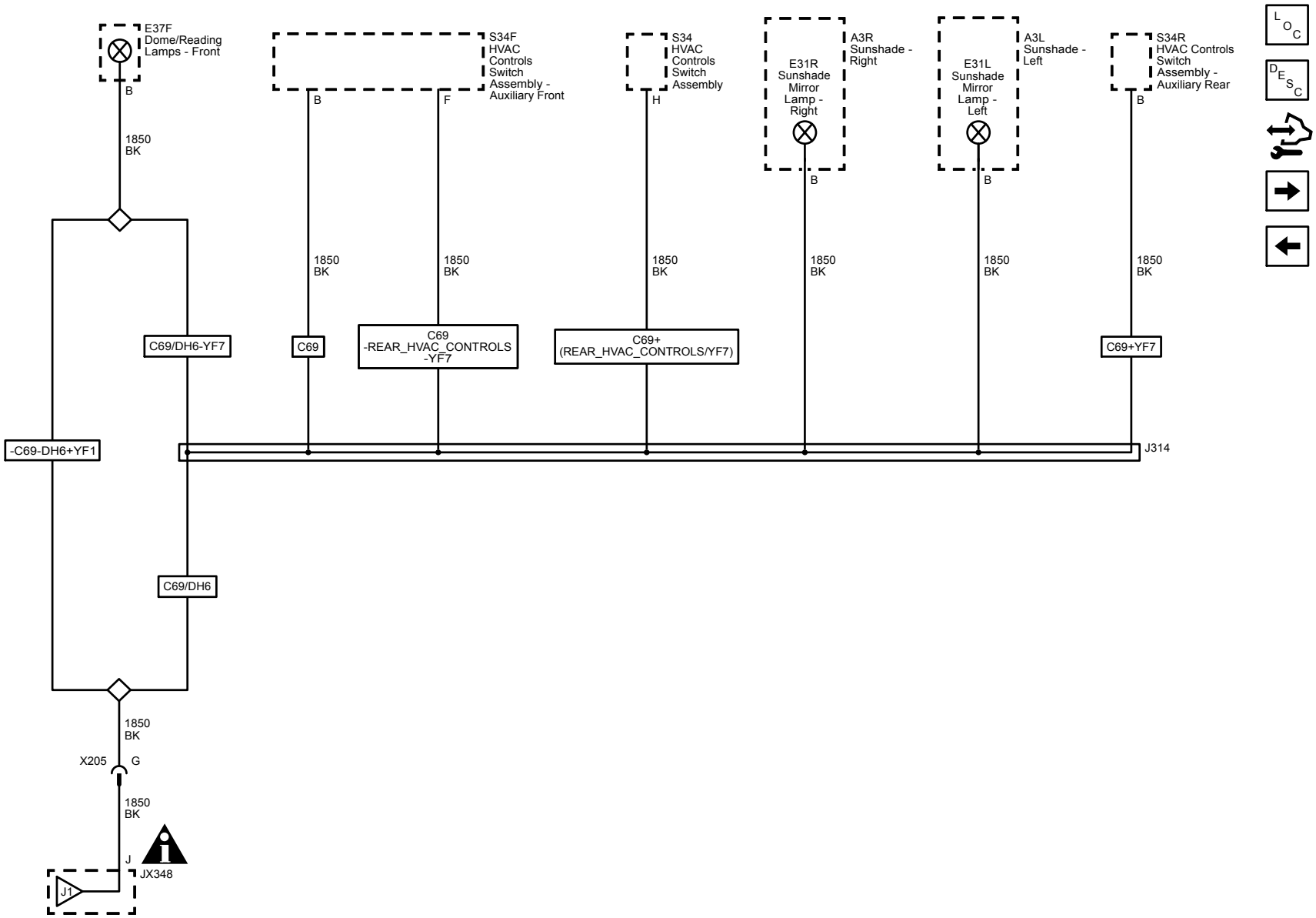
E37F
Dome/Reading Lamps - Front
B
1850
BK
S34F
HVAC Controls Switch Assembly - Auxiliary Front
B
F
S34
HVAC Controls Switch Assembly
H
E31R
Sunshade Mirror Lamp - Right
A3R
Sunshade - Right
B
E31L
Sunshade Mirror Lamp - Left
A3L
Sunshade - Left
B
S34R
HVAC Controls Switch Assembly - Auxiliary Rear
B
1850
BK
C69/DH6-YF7
C69
C69
-REAR_HVAC_CONTROLS
-YF7
C69+
(REAR_HVAC_CONTROLS/YF7)
C69+YF7
-C69-DH6+YF1
J314
C69/DH6
1850
BK
X205
G
1850
BK
J
JX348
J1
L
O
C
D
E
S
C

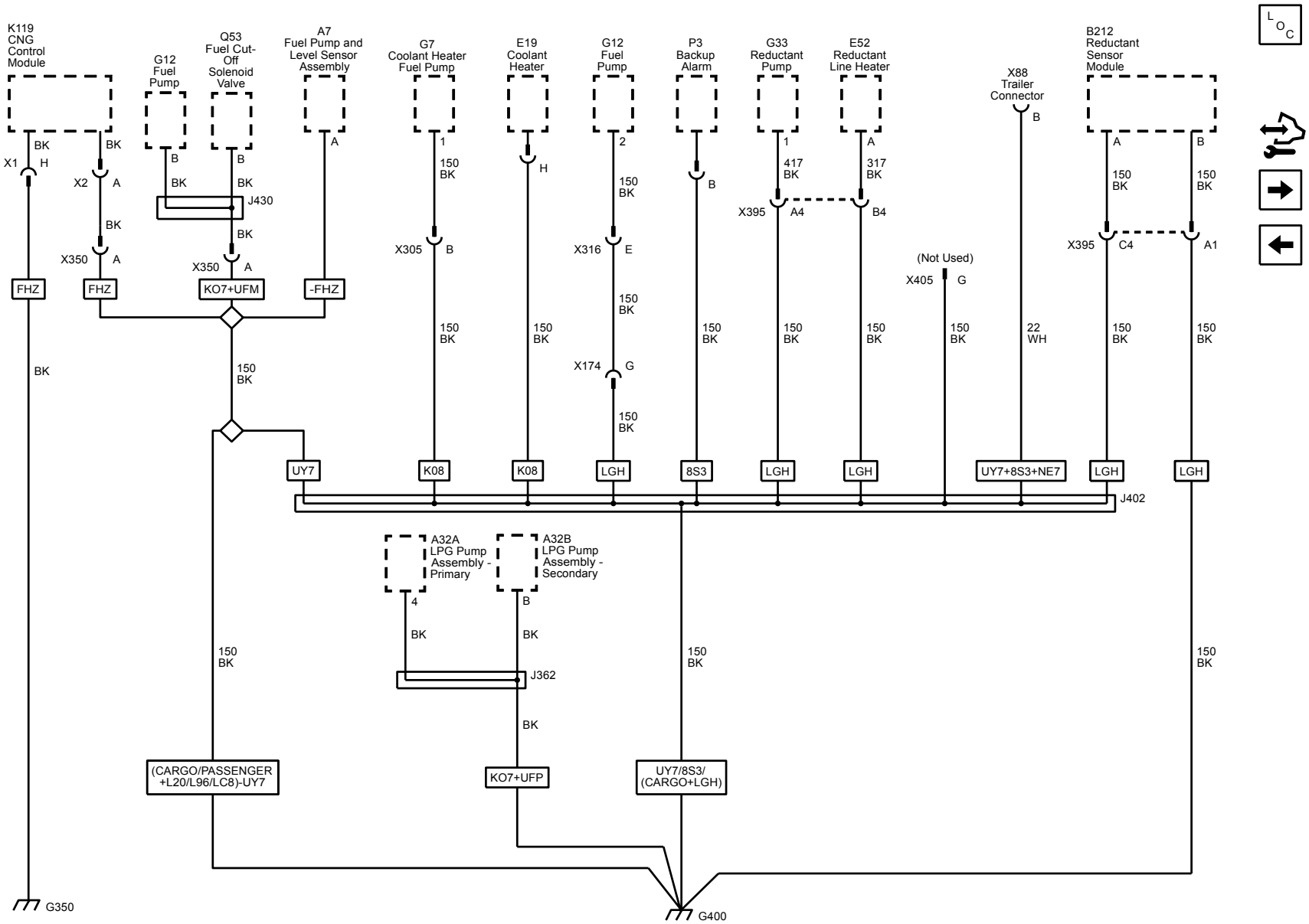
K119
CNG
Control
Module
G12
Fuel
Pump
Q53
Fuel Cut-
Off
Solenoid
Valve
A7
Fuel Pump and
Level Sensor
Assembly
G7
Coolant Heater
Fuel Pump
E19
Coolant
Heater
G12
Fuel
Pump
P3
Backup
Alarm
G33
Reductant
Pump
E52
Reductant
Line Heater
X88
Trailer
Connector
B212
Reductant
Sensor
Module
X1
X2
X350
J430
X305
X316
X174
X395
X405
(Not Used)
FHZ
KO7+UFM
-FHZ
UY7
K08
LGH
8S3
UY7+8S3+NE7
J402
A32A
LPG Pump
Assembly -
Primary
A32B
LPG Pump
Assembly -
Secondary
J362
(CARGO/PASSENGER
+L20/L96/LC8)-UY7
KO7+UFP
UY7/8S3/
(CARGO+LGH)
G350
G400

G401 (Passenger or Cargo)

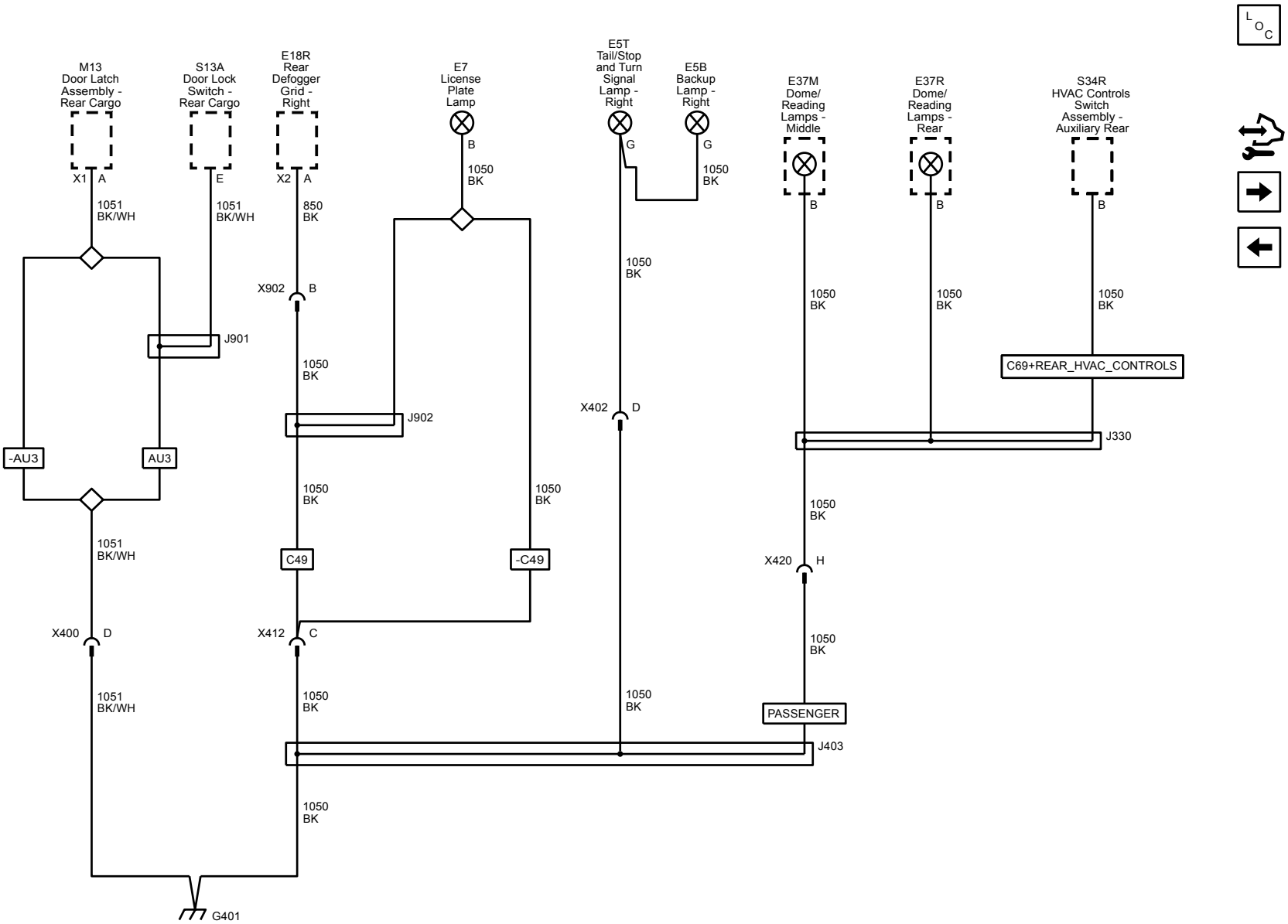

G402 (Passenger or Cargo)

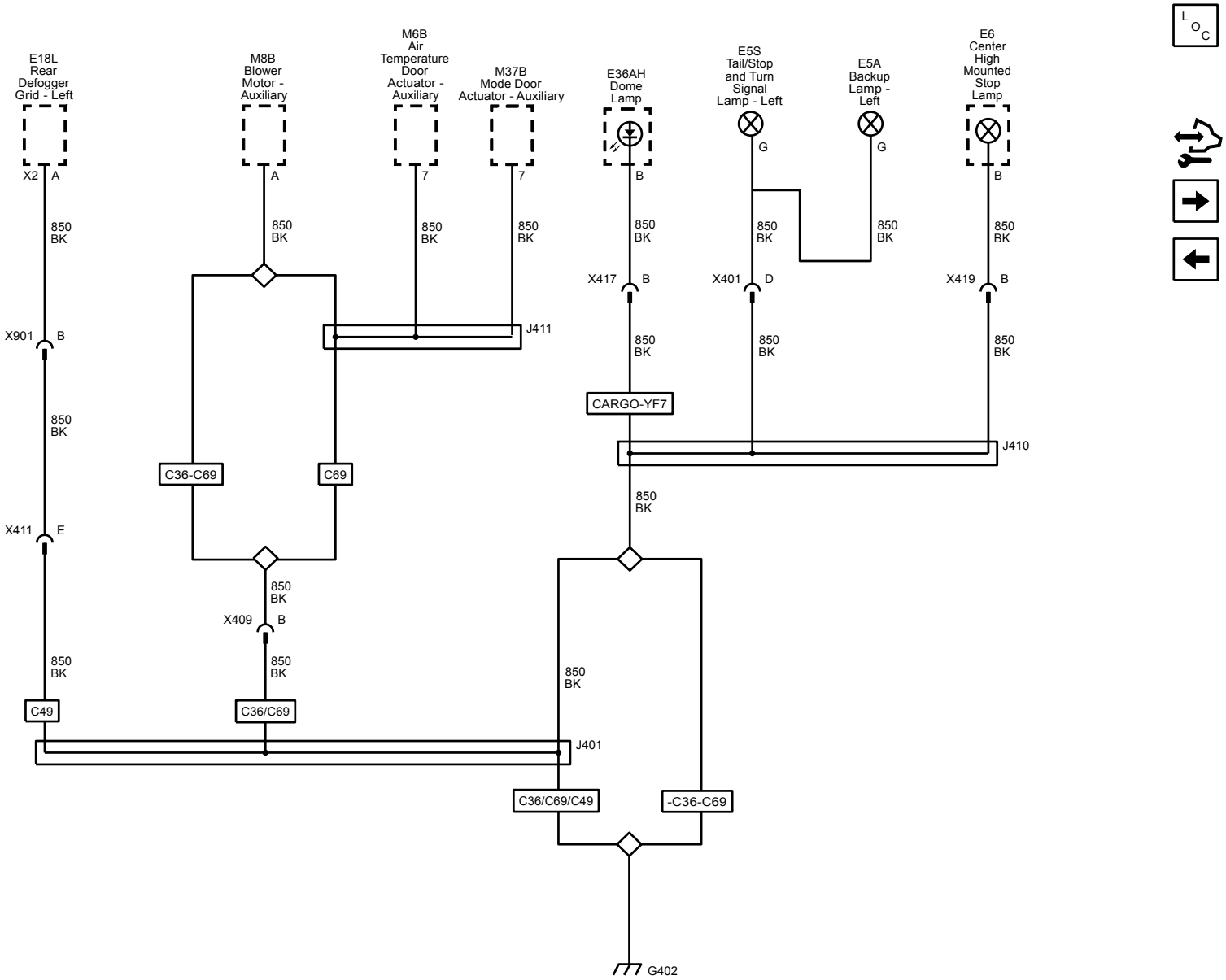

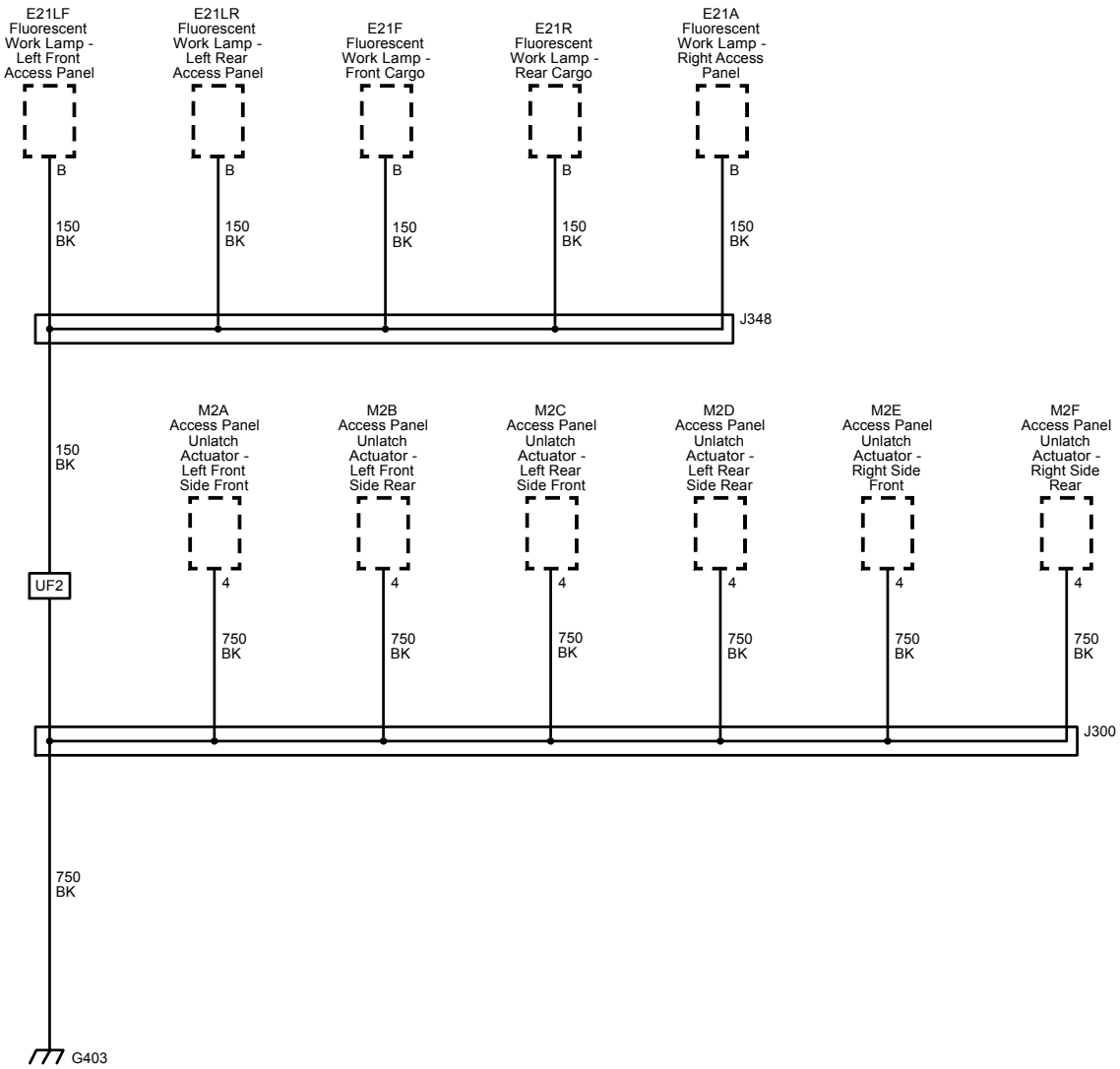
E21LF
Fluorescent
Work Lamp -
Left Front
Access Panel
E21LR
Fluorescent
Work Lamp -
Left Rear
Access Panel
E21F
Fluorescent
Work Lamp -
Front Cargo
E21R
Fluorescent
Work Lamp -
Rear Cargo
E21A
Fluorescent
Work Lamp -
Right Access
Panel
B
150
BK
J348
M2A
Access Panel
Unlatch
Actuator -
Left Front
Side Front
M2B
Access Panel
Unlatch
Actuator -
Left Front
Side Rear
M2C
Access Panel
Unlatch
Actuator -
Left Rear
Side Front
M2D
Access Panel
Unlatch
Actuator -
Left Rear
Side Rear
M2E
Access Panel
Unlatch
Actuator -
Right Side
Front
M2F
Access Panel
Unlatch
Actuator -
Right Side
Rear
4
750
BK
J300
UF2
G403

Power, Ground and Relay Controls

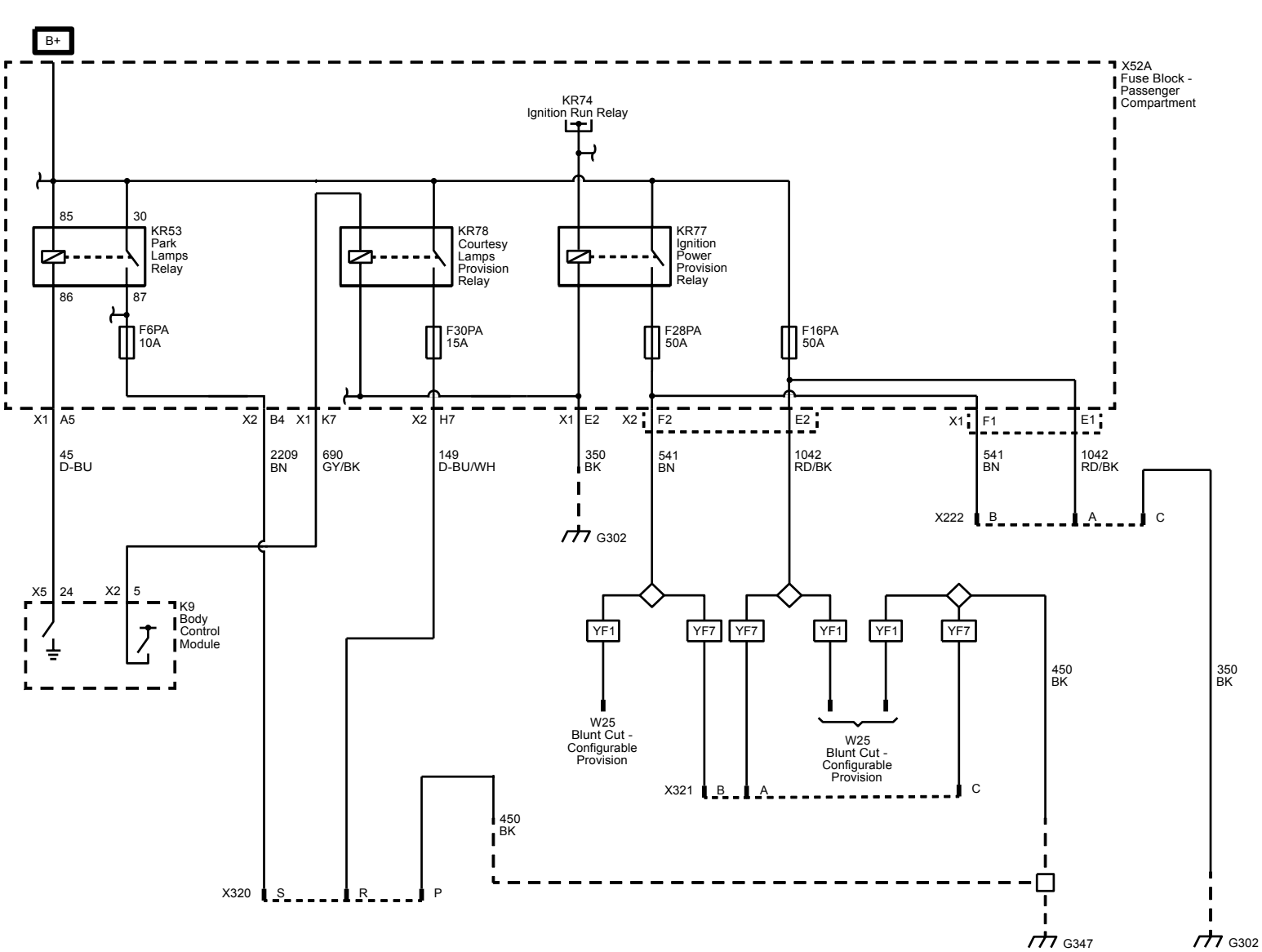

Rear Heat Auxiliary (ENC)

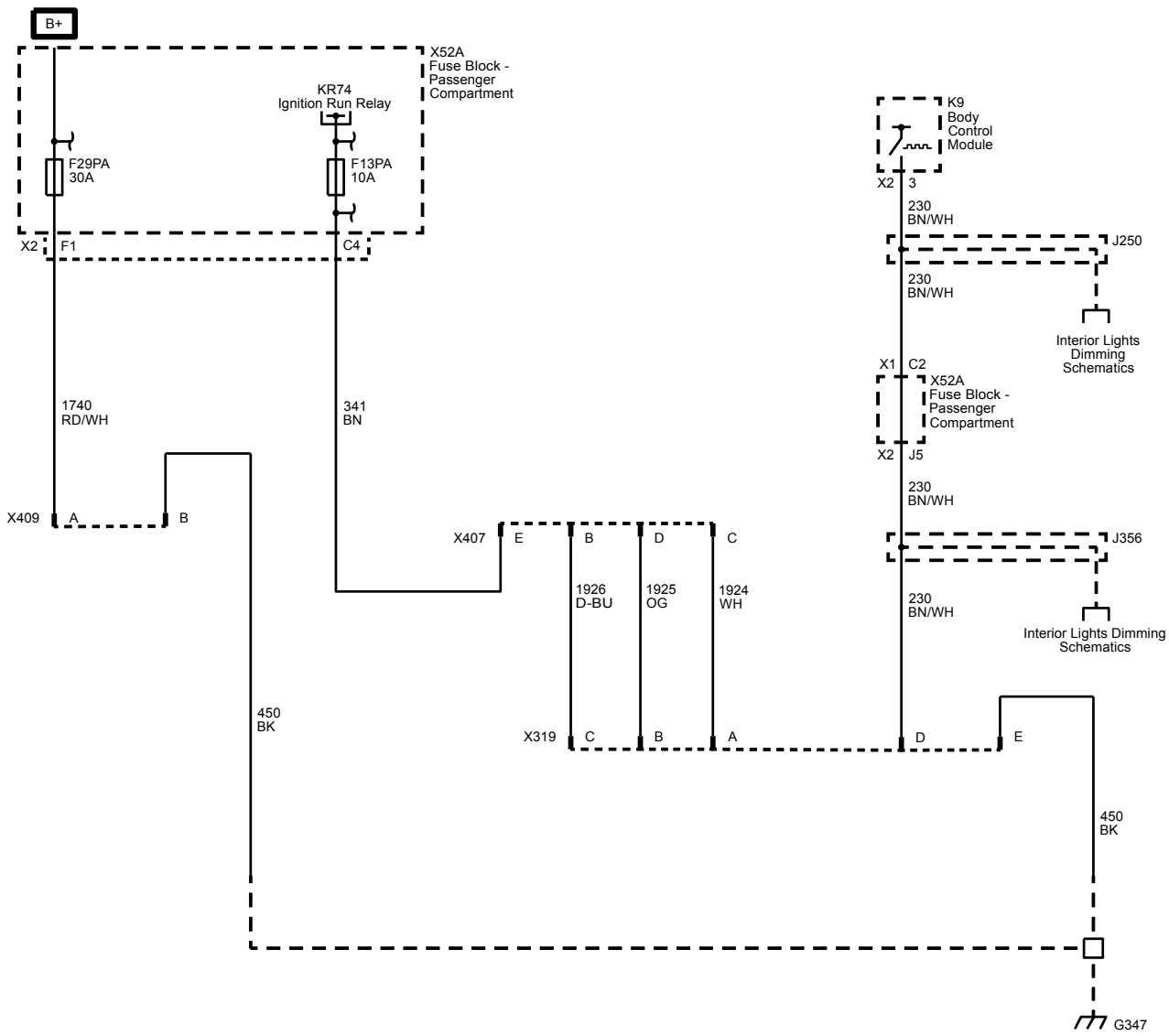

Trailer Connector/Provision

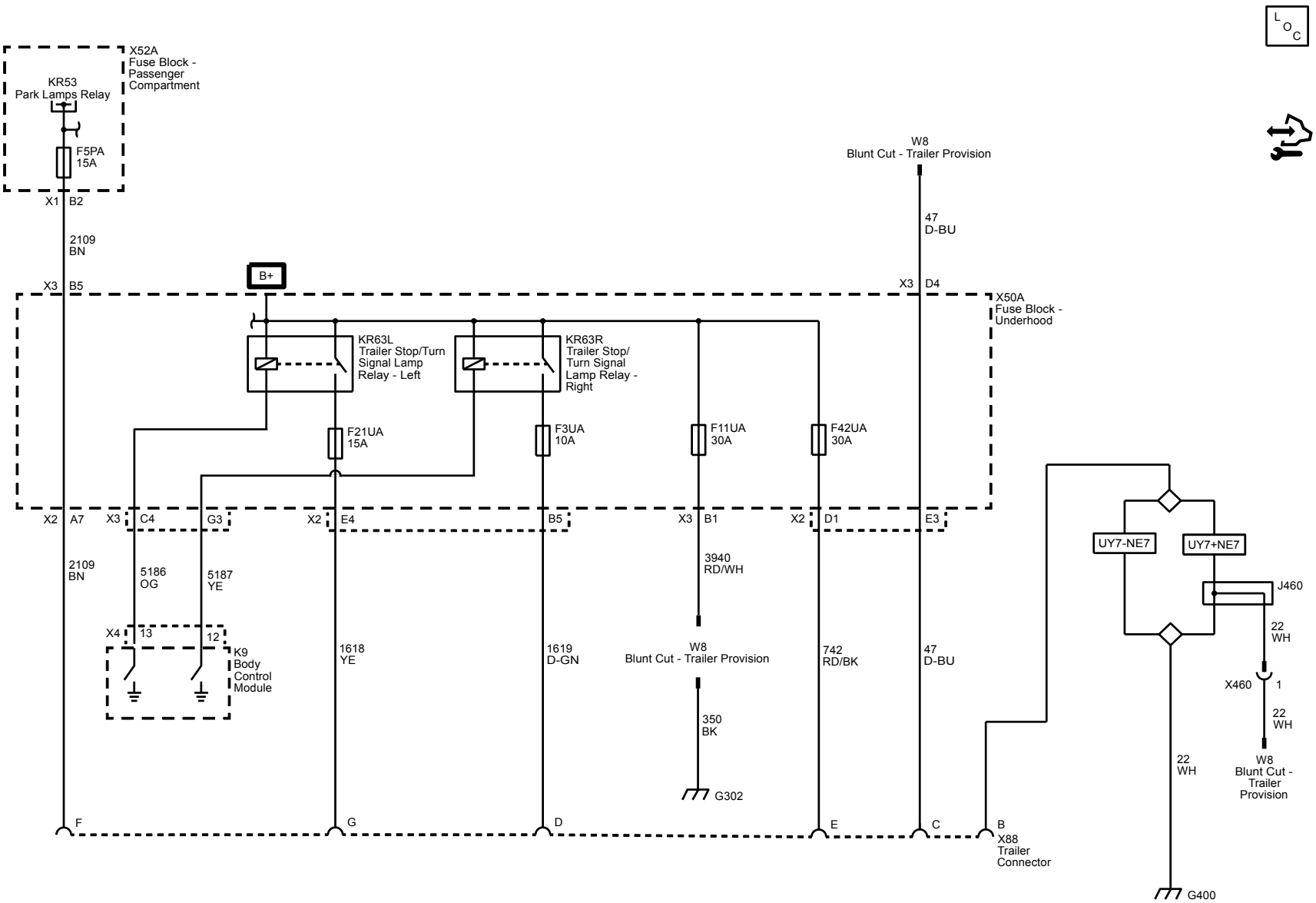

Trailer Connector/Provision (UY7 with NE7)

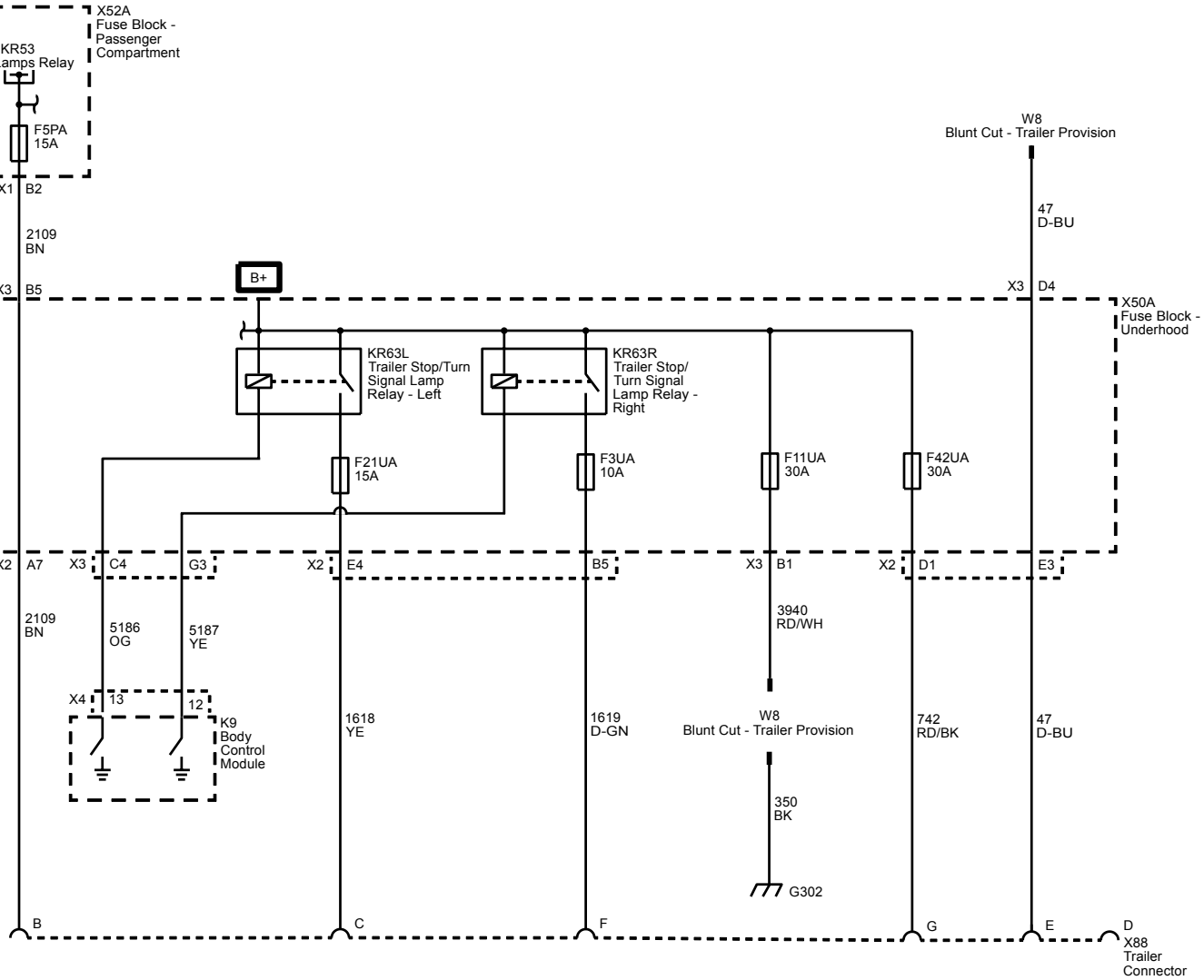

Component Locator

Master Electrical Component List

Master Electrical Component List

Code	Name	Option	Location	Locator View	Connector End View
A3L	Sunshade - Left	DH6 with YF7	On the upper left of the headliner	—	*A3L Sunshade - Left (DH6 with YF7)*
A3R	Sunshade - Right	DH6	On the upper right of the headliner	—	*A3R Sunshade - Right (DH6)*
A5	Driver Information Center	—	Integral to P16 Instrument Cluster	—	*A5 Driver Information Center*
A7	Fuel Pump and Level Sensor Assembly	L20, L96, or LC8	In the vehicle underbody, in the fuel tank	• *Fuel Tank Components (Without NE7)* • *Fuel Tank Components (NE7)*	*A7 Fuel Pump and Level Sensor Assembly (L20 or L96)*
A9A	Outside Rearview Mirror - Driver	DEB or DE5	Attached to the exterior of the left front door	*Driver Door Components*	*A9A Outside Rearview Mirror - Driver (DEB or DE5)*
A9B	Outside Rearview Mirror - Passenger	DEB or DE5	Attached to the exterior of the right front door	*Front Passenger Door Components*	*A9B Outside Rearview Mirror - Passenger (DEB or DE5)*
A10	Inside Rearview Mirror	UVC	In the passenger compartment, mounted at the top center of the windshield	—	*A10 Inside Rearview Mirror (UVC)*
A11	Radio	Without UL5	In the center of the instrument panel	*Instrument Panel Components (1 of 2)*	• *A11 Radio X1 (UI8)* • *A11 Radio X1 (Without UI8)* • *A11 Radio X2 (Without UI8)* • *A11 Radio X4 (UI8)*
A12	Digital Radio Receiver Control Module	U2K or UBS	In the passenger compartment, mounted on a bracket under driver knee bolster panel	*Underside of Instrument Panel Components*	*A12 Digital Radio Receiver Control Module (U2K or UBS)*
A23D	Door Latch Assembly - Driver	—	Towards the rear of the driver door	*Driver Door Components*	• *A23D Door Latch Assembly - Driver X1* • *A23D Door Latch Assembly - Driver X2*
A23P	Door Latch Assembly - Passenger	—	Towards the rear of the passenger door	*Front Passenger Door Components*	*A23P Door Latch Assembly - Passenger X1*
A32A	LPG Pump Assembly - Primary	KO7 with UFP	Underneath vehicle, attached to front of primary fuel tank	—	*A32A LPG Pump Assembly - Primary (KO7 with UFP)*
A32B	LPG Pump Assembly - Secondary	KO7 with UFP	Underneath vehicle, attached to front of secondary fuel tank	—	*A32B LPG Pump Assembly - Secondary (KO7 with UFP)*
A39	Reductant Fluid Reservoir Assembly	LGH	Under the vehicle, above the reductant tank	—	—
A91	Mirror Display	UVC without UI8	Internal to A10 Inside Rearview Mirror	—	—
B1	A/C Refrigerant Pressure Sensor	C60	On the engine harness in the left rear side of the engine compartment	*Front of Engine Compartment Components (1 of 2)*	• *B1 A/C Refrigerant Pressure Sensor (C60 with L20, L96, or LC8)* • *B1 A/C Refrigerant Pressure Sensor (C60 with LGH)*

B1B	A/C Low Side Pressure Switch	C60	Right rear side of the engine compartment, on the side of the accumulator	*Front of Engine Compartment Components (1 of 2)*	• *B1B A/C Low Side Pressure Switch (C60 with L20, L96, or LC8)* • *B1B A/C Low Pressure Switch (C60 with LGH)*
B5LF	Wheel Speed Sensor - Left Front	—	At the left front wheel	*Front Wheel Speed Sensor Components*	*B5LF Wheel Speed Sensor - Left Front*
B5RF	Wheel Speed Sensor - Right Front	—	At the right front wheel	*Front Wheel Speed Sensor Components*	*B5RF Wheel Speed Sensor - Right Front*
B5LR	Wheel Speed Sensor - Left Rear	JL4	At the left rear wheel, attached to the backing plate	*Frame and Underbody Components (1 of 2)*	*B5LR Wheel Speed Sensor - Left Rear (JL4)*
B5RR	Wheel Speed Sensor - Right Rear	JL4	At the right rear wheel, attached to the backing plate	*Frame and Underbody Components (1 of 2)*	*B5RR Wheel Speed Sensor - Right Rear (JL4)*
B9	Ambient Air Temperature Sensor	UFA	Attached to the front center of the radiator support	*Ambient Air Temperature Sensor (UFA)*	*B9 Ambient Air Temperature Sensor (UFA)*
B10	Ambient Light Sensor	—	On the top of the instrument panel	*Instrument Panel Components (2 of 2)*	*B10 Ambient Light Sensor*
B12A	Transmission Fluid Pressure Switch	—	Internal to T12 Automatic Transmission Assembly	—	—
B13	Transmission Fluid Temperature Sensor	—	Internal to T12 Automatic Transmission Assembly	—	—
B14A	Transmission Output Shaft Speed Sensor	—	Internal to T12 Automatic Transmission Assembly	*Automatic Transmission Internal Electrical Components*	*B14A Transmission Output Shaft Speed Sensor*
B14C	Transmission Input Shaft Speed Sensor	—	Internal to T12 Automatic Transmission Assembly	—	—
B15	Transmission Internal Mode Switch	—	Internal to T12 Automatic Transmission Assembly	*Automatic Transmission Internal Electrical Components*	—
B19A	Brake Booster Fluid Pressure Alarm Switch	UJ1	In the power steering inlet hose, near the power steering pump	*Brake Booster Fluid Alarm Switches (UJ1)*	*B19A Brake Booster Fluid Pressure Alarm Switch (UJ1)*
B20	Brake Fluid Level Switch	—	Left rear of the engine compartment, attached to the left lower side of the brake fluid reservoir	*Engine Compartment Components (1 of 2)*	*B20 Brake Fluid Level Switch*
B22	Brake Pedal Position Sensor	—	Attached to brake pedal assembly	*Instrument Panel Components (2 of 2)*	*B22 Brake Pedal Position Sensor*
B23	Camshaft Position Sensor	L20, L96, or LC8	Front of the engine between the water pump and the crank pulley	*Left Front Side of the Engine Components (1 of 2, L20, L96, or LC8)*	*B23 Camshaft Position Sensor (L20, L96, or LC8)*
B23	Camshaft Position Sensor	LGH	In the engine compartment, mounted to front engine cover above and to the right of the crankshaft	*Right front of the Engine Components (LGH)*	*B23 Camshaft Position Sensor (LGH)*
B24	Cellular Phone Microphone	UE1 or UI8	In the passenger compartment, in the overhead console	—	*B24 Cellular Phone Microphone (UE1 or UI8)*
B26	Crankshaft Position Sensor	L20, L96 or LC8	Attached to the lower right rear side of the engine, behind the starter	*Right Front Side of the Engine Components (1 of 2, L20, L96, or LC8)*	*B26 Crankshaft Position Sensor (L20, L96, or LC8)*
B26	Crankshaft Position Sensor	LGH	Mounted to the front engine cover to the right of the crankshaft	*Right front of the Engine Components (LGH)*	*B26 Crankshaft Position Sensor (LGH)*

B28F	Door Ajar Switch - Right Sliding	E24 or YA2	Mounted towards the bottom of the right rear door	• *Right Side Hinged Door Components (E24)* • *Right Sliding Door Components (YA2)*	—
B33	Engine Coolant Level Switch	LGH	Right front of the engine compartment, attached to the bottom of the coolant surge tank	*Front of Engine Compartment Components (2 of 2, LGH)*	*B33 Engine Coolant Level Switch (LGH)*
B34	Engine Coolant Temperature Sensor	L20, L96 or LC8	On the left cylinder head at exhaust port 1	*Left Front Side of the Engine Components (2 of 2, L20, L96, or LC8)*	*B34 Engine Coolant Temperature Sensor (L20, L96, or LC8)*
B34	Engine Coolant Temperature Sensor	LGH	In the engine compartment, on the top left side of the engine	*Top of the Engine Compoents (2 of 3, LGH)*	*B34 Engine Coolant Temperature Sensor (LGH)*
B35	Engine Oil Level Switch	LGH	Attached to the left side of the oil pan	*Left Front of the Engine Components (LGH)*	*B35 Engine Oil Level Switch (LGH)*
B37B	Engine Oil Pressure Sensor	L20, L96, or LC8	In engine compartment, on the rear lower left side of the engine	*Right Front Side of the Engine Components (1 of 2, L20, L96, or LC8)*	*B37B Engine Oil Pressure Sensor (L20, L96, or LC8)*
B37B	Engine Oil Pressure Sensor	LGH	On the rear center of the engine	*Left Front of the Engine Components (LGH)*	*B37B Engine Oil Pressure Sensor (LGH)*
B46	Fuel Level Sensor	LGH	Under the vehicle, in the fuel tank	*Inside of Fuel Tank Components (LGH)*	*B46 Fuel Level Sensor (LGH)*
B46	Fuel Level Sensor	KO7 with UFM	Under the vehicle, mounted to fuel tank	—	*B46 Fuel Level Sensor (KO7 with UFM)*
B46A	Fuel Level Sensor - Primary	KO7 with UFP	Under the vehicle, in front of primary fuel tank	—	*B46A Fuel Level Sensor - Primary (KO7 with UFP)*
B46B	Fuel Level Sensor - Secondary	KO7 with UFP	Under the vehicle, in front of secondary fuel tank	—	*B46B Fuel Level Sensor - Secondary (KO7 with UFP)*
B47B	Fuel Rail Pressure Sensor	LGH	In the engine compartment, on top of the engine, mounted to the rear of the right fuel rail	*Top of the Engine Components (3 of 3, LGH)*	*B47B Fuel Rail Pressure Sensor (LGH)*
B48A	Fuel Temperature Sensor 1	LGH	In the engine compartment, on top of the engine, mounted to the left side of the fuel injection pump	*Top of the Engine Compoents (2 of 3, LGH)*	*B48A Fuel Temperature Sensor 1 (LGH)*
B48B	Fuel Temperature Sensor 2	LGH	In the engine compartment, on top of the engine, mounted to the rear of the left fuel rail	*Left Front of the Engine Components (LGH)*	*B48B Fuel Temperature Sensor 2 (LGH)*
B52C	Heated Oxygen Sensor - Bank 1 Sensor 1	L20, L96, or LC8	Attached to the left front exhaust pipe, front of the catalytic converter	*Exhaust Components (L20, L96, or LC8)*	• *B52C Heated Oxygen Sensor - Bank 1 Sensor 1 (Cutaway with L96 or LC8)* • *B52C Heated Oxygen Sensor - Bank 1 Sensor 1 (Gas except Cutaway with L96 or LC8)*
B52D	Heated Oxygen Sensor - Bank 1 Sensor 2	L20, L96, or LC8	Attached to the left front exhaust pipe, back of the catalytic converter	*Exhaust Components (L20, L96, or LC8)*	• *B52D Heated Oxygen Sensor - Bank 1 Sensor 2 (Gas except Cutaway with L96 or LC8)* • *B52D Heated Oxygen Sensor - Bank 1 Sensor 2 (Cutaway with L20 or L96)*

B52E	Heated Oxygen Sensor - Bank 2 Sensor 1	L20, L96, or LC8	Attached to the right front exhaust pipe, front of the catalytic converter	*Exhaust Components (L20, L96, or LC8)*	• *B52E Heated Oxygen Sensor - Bank 2 Sensor 1 (Cutaway with L96 or LC8)* • *B52E Heated Oxygen Sensor - Bank 2 Sensor 1 (Gas except Cutaway with L96 or LC8)*
B52F	Heated Oxygen Sensor - Bank 2 Sensor 2	L20, L96, or LC8	Attached to the right front exhaust pipe, rear of the catalytic converter	*Exhaust Components (L20, L96, or LC8)*	• *B52F Heated Oxygen Sensor - Bank 2 Sensor 2 (Gas except Cutaway with L96 or LC8)* • *B52F Heated Oxygen Sensor - Bank 2 Sensor 2 (Cutaway with L20 or L96)*
B55	Hood Ajar Switch	BTV	In the center front of the engine compartment, attached to the hood latch assembly	—	*B55 Hood Ajar Switch (BTV)*
B59	Front Impact Sensor	—	On the lower center of the radiator support	*Front of Engine Compartment Components (1 of 2)*	*B59 Front Impact Sensor*
B60	Passenger Presence Detection Sensor	AL0	On the passenger seat harness near the take out for the seat adjuster switch	*Passenger Seat Components*	*B60 Passenger Presence Sensor (AL0)*
B63LF	Side Impact Sensor - Left Front	ASF	In the left front side door	*Driver Door Components*	*B63LF Side Impact Sensor - Left Front (ASF)*
B63RF	Side Impact Sensor - Right Front	ASF	In the right front side door	*Front Passenger Door Components*	*B63RF Side Impact Sensor - Right Front (ASF)*
B63LR	Side Impact Sensor - Left Rear	ASF	In the left center of the vehicle behind the body panel trim	*Left Rear Cargo Area Components (Passenger or Cargo)*	*B63LR Side Impact Sensor - Left Rear (Passenger with ASF)*
B63RR	Side Impact Sensor - Right Rear	ASF	In the lower right side of the vehicle near the rear side door	• *Right Rear Frame Rail Components (Passenger with E24)* • *Right Rear Frame Rail Components (Passenger with YA2)*	• *B63RR Side Impact Sensor - Right Rear (Passenger with ASF with E24)* • *B63RR Side Impact Sensor - Right Rear (Passenger with ASF with YA2)*
B68A	Knock Sensor 1	L20, L96, or LC8	Mounted to the lower right side of the engine in-between the engine oil pan and the right bank exhaust manifold	*Right Front Side of the Engine Components (1 of 2, L20, L96, or LC8)*	*B68A Knock Sensor 1 (L20, L96, or LC8)*
B68B	Knock Sensor 2	L20, L96, or LC8	Mounted to the lower left of the engine, in-between the engine oil filter and the left bank exhaust manifold	*Left Front Side of the Engine Components (2 of 2, L20, L96, or LC8)*	*B68B Knock Sensor 2 (L20, L96, or LC8)*
B74	Manifold Absolute Pressure Sensor	L20, L96, or LC8	In the engine compartment, attached to the intake manifold, on top of the engine	*Top of the Engine Components (L20, L96, or LC8)*	*B74 Manifold Absolute Pressure Sensor (L20, L96, or LC8)*
B74	Manifold Absolute Pressure Sensor	LGH	In the engine compartment, attached to the intake manifold tube, between the engine and the air cooler outlet duct	*Top of the Engine Components (1 of 3, LGH)*	*B74 Manifold Absolute Pressure Sensor (LGH)*
B75B	Mass Air Flow/Intake Air Temperature Sensor	L20, L96, or LC8	Attached to the air intake duct, front of the engine compartment	—	*B75B Mass Air Flow/Intake Air Temperature Sensor (L20, L96, or LC8)*
B75B	Mass Air Flow/Intake Air Temperature Sensor	LGH	In the engine compartment, attached to the air intake duct	*Top of the Engine Components (1 of 3, LGH)*	*B75B Mass Air Flow/Intake Air Temperature Sensor (LGH)*
B75C	Multifunction Intake Air Sensor	LGH	Right front of the engine compartment, mounted in the air cleaner duct	—	*B75C Multifunction Intake Air Sensor (LGH)*
B78E	Rear Object Sensor - Left Middle	UD7	Left side of the bumper cover	*Rear Exterior Lights (Passenger or Cargo)*	*B78E Rear Object Sensor - Left Middle (UD7)*

B78F	Rear Object Sensor - Right Middle	UD7	Right side of the bumper cover	*Rear Exterior Lights (Passenger or Cargo)*	*B78F Rear Object Sensor - Right Middle (UD7)*
B78G	Rear Object Sensor - Left Outer	UD7	Left rear corner of the bumper cover	*Rear Exterior Lights (Passenger or Cargo)*	*B78G Rear Object Sensor - Left Outer (UD7)*
B78H	Rear Object Sensor - Right Outer	UD7	Right rear corner of the bumper cover	*Rear Exterior Lights (Passenger or Cargo)*	*B78H Rear Object Sensor - Right Outer (UD7)*
B80	Park Brake Switch	—	Left lower side of the instrument panel on the brake pedal assembly	*Instrument Panel Components (2 of 2)*	*B80 Park Brake Switch*
B87	Rearview Camera	UVC	On the right rear cargo door, in license plate trim	*Rear Exterior Lights (Passenger or Cargo)*	*B87 Rearview Camera (UVC)*
B88D	Seat Belt Switch - Driver	—	Right side of the driver seat, inside Seat Belt Buckle — Driver	—	—
B88P	Seat Belt Switch - Passenger	AK5	Left side of the front passenger seat, inside Seat Belt Buckle — Passenger	—	—
B99	Steering Wheel Angle Sensor	JL4	Attached the lower steering column jacket assembly	*Steering Column Components (2 of 2)*	*B99 Steering Wheel Angle Sensor (JL4)*
B107	Accelerator Pedal Position Sensor	—	Left lower side of the instrument panel, above the accelerator pedal	*Instrument Panel Components (2 of 2)*	*B107 Accelerator Pedal Position Sensor*
B112	Turbocharger Vane Position Sensor	LGH	In the engine compartment, mounted on the top of the turbocharger, between the front and rear turbocharger housings	*Top of the Engine Components (1 of 3, LGH)*	*B112 Turbocharger Vane Position Sensor (LGH)*
B116	Water in Fuel Sensor	LGH	Under the vehicle, internally attached to the top of the fuel pump assembly	—	*B116 Water in Fuel Sensor (LGH)*
B119	Multi-axis Acceleration Sensor	JL4	In the passenger compartment, on the front center on the floor board between the front seats	*Left Front of Passenger Compartment Components*	*B119 Multi-axis Acceleration Sensor (JL4)*
B130A	Exhaust Gas Recirculation Temperature Sensor 1	LGH	In the engine compartment, on the top left rear side of the engine	*Left Front of the Engine Components (LGH)*	*B130A Exhaust Gas Recirculation Temperature Sensor 1 (LGH)*
B130B	Exhaust Gas Recirculation Temperature Sensor 2	LGH	In the engine compartment, on the top right front side of the engine	*Right front of the Engine Components (LGH)*	*B130B Exhaust Gas Recirculation Temperature Sensor 2 (LGH)*
B131A	Exhaust Temperature Sensor 1	LGH	In the engine compartment, attached to the exhaust pipe, on the top left rear side of the engine	*Right front of the Engine Components (LGH)*	*B131A Exhaust Temperature Sensor 1 (LGH)*
B131B	Exhaust Temperature Sensor 2	LGH	Under the vehicle, attached to the exhaust pipe, near the rear of the catalytic converter	—	*B131B Exhaust Temperature Sensor 2 (LGH)*
B131C	Exhaust Temperature Sensor 3	LGH	Under the vehicle, attached to the exhaust pipe, at the middle of the diesel particulate filter	*Exhaust Components (LGH)*	*B131C Exhaust Temperature Sensor 3 (LGH)*
B131D	Exhaust Temperature Sensor 4	LGH	Under the vehicle, attached to the exhaust pipe, near the rear of the diesel particulate filter	*Exhaust Components (LGH)*	*B131D Exhaust Temperature Sensor 4 (LGH)*
B133	Brake Booster Fluid Flow Alarm Switch	UJ1	In the power steering outlet hose, near the power steering pump	*Brake Booster Fluid Alarm Switches (UJ1)*	• *B133 Brake Booster Fluid Flow Alarm Switch X1 (UJ1)* • *B133 Brake Booster Fluid Flow Alarm Switch X2 (UJ1)*
B134A	Coolant Heater Air Temperature Sensor	K08	Internal to E19 Coolant Heater	*Coolant Heater Components (K08)*	—

B134B	Coolant Heater Combustion Sensor	K08	Internal to E19 Coolant Heater	*Coolant Heater Components (K08)*	—
B134C	Coolant Heater Overheat Sensor	K08	Internal to E19 Coolant Heater	*Coolant Heater Components (K08)*	—
B135	Coolant Heater Temperature Sensor	K08	Internal to E19 Coolant Heater	—	—
B136	Exhaust Particulate Matter Sensor	LGH	Mounted to the exhaust, towards the rear of the engine harness	—	*B136 Exhaust Particulate Matter Sensor (LGH)*
B150	Fuel Tank Pressure Sensor	L20 or L96	Attached to the top of the fuel sender assembly	• *Fuel Tank Components (Without NE7)* • *Fuel Tank Components (NE7)*	*B150 Fuel Tank Pressure Sensor (L20, L96, or LC8)*
B150	Fuel Tank Pressure Sensor	LC8	In the vehicle underbody, left side middle	• *Fuel Tank Components (Without NE7)* • *Fuel Tank Components (NE7)*	*B150 Fuel Tank Pressure Sensor (L20, L96, or LC8)*
B153D	Seat Belt Buckle - Driver	—	Right side of the driver seat	*Driver Seat Components*	*B153D Seat Belt Buckle - Driver*
B153P	Seat Belt Buckle - Passenger	AK5	Left side of the front passenger seat	*Passenger Seat Components*	*B153P Seat Belt Buckle - Passenger (AK5)*
B190	LPG Pressure and Temperature Sensor	KO7 with UFM	Attached to the LPG Harness	—	—
B193A	Charge Air Cooler Inlet Temperature Sensor	LGH	In the engine compartment, attached to the intake manifold, front of the turbocharger	*Left Front of the Engine Components (LGH)*	*B193A Charge Air Cooler Inlet Temperature Sensor (LGH)*
B193B	Charge Air Cooler Outlet Temperature Sensor	LGH	On the top right front of the engine compartment, near the coolant surge tank	*Front of Engine Compartment Components (2 of 2, LGH)*	*B193B Charge Air Cooler Outlet Temperature Sensor (LGH)*
B194	Reductant Pressure Sensor	LGH	Under the vehicle, above the reductant tank	*Reductant Tank Components*	*B194 Reductant Pressue Sensor (LGH)*
B195A	Nitrogen Oxides Sensor 1	LGH	Under the vehicle	*Left Front of the Engine Components (LGH)*	*B195A Nitrogen Oxides Sensor 1 (LGH)*
B195B	Nitrogen Oxides Sensor 2	LGH	Under the vehicle	*Exhaust Components (LGH)*	*B195B Nitrogen Oxides Sensor 2 (LGH)*
B198	Fuel Composition Sensor	L20, L96, or LC8	Under the vehicle	—	—
B203	Engine Coolant Radiator Temperature Sensor	L20, L96, or LC8	Mounted to the radiator	—	—
B212	Reductant Sensor Module	LGH	Under the vehicle, above the reductant tank	*Reductant Tank Components*	• *B212 Reductant Sensor Module X1 (LGH)* • *B212 Reductant Sensor Module X2 (LGH)*
B215	Fuel Filter Pressure Switch	LGH	In the engine compartment, on the top left rear side of the engine	*Left Front of the Engine Components (LGH)*	*B215 Fuel Filter Pressure Switch (LGH)*
B221	Alternative Fuel Tank Pressure Sensor	LC8	Attached to the CNG Harness	—	—
B259	Exhaust Pressure Sensor	LGH	Mounted to the exhaust	*Exhaust Components (LGH)*	—

C1	Battery	—	At the right front side of the engine compartment	*Engine Compartment Components (1 of 2)*	*C1 Battery*
C1B	Battery - Auxiliary	LGH or TP2	Left frame rail, center of the vehicle	*Frame and Underbody Components (2 of 2, LGH)*	*C1B Battery - Auxiliary (LGH or TP2)*
E2LF	Side Marker Lamp - Left Front	—	In the left front corner of the vehicle	• *Front Exterior Lighting (Base)* • *Front Exterior Lighting (Uplevel)*	*E2LF Side Marker Lamp - Left Front*
E2RF	Side Marker Lamp - Right Front	—	In the right front corner of the vehicle	• *Front Exterior Lighting (Base)* • *Front Exterior Lighting (Uplevel)*	*E2RF Side Marker Lamp - Right Front*
E4E	Headlamp - Left High Beam	V22	At the left front of the vehicle	*Front Exterior Lighting (Uplevel)*	*E4E Headlamp - Left High Beam (V22)*
E4F	Headlamp - Right High Beam	V22	At the right front of the vehicle	*Front Exterior Lighting (Uplevel)*	*E4F Headlamp - Right High Beam (V22)*
E4G	Headlamp - Left Low Beam	V22	At the left front of the vehicle	*Front Exterior Lighting (Uplevel)*	*E4G Headlamp - Left Low Beam (V22)*
E4H	Headlamp - Right Low Beam	V22	At the right front of the vehicle	*Front Exterior Lighting (Uplevel)*	*E4H Headlamp - Right Low Beam (V22)*
E4N	Park/Turn Signal Lamp - Left	—	In the left front corner of the vehicle	• *Front Exterior Lighting (Base)* • *Front Exterior Lighting (Uplevel)*	*E4N Park/Turn Signal Lamp - Left*
E4P	Park/Turn Signal Lamp - Right	—	In the right front corner of the vehicle	• *Front Exterior Lighting (Base)* • *Front Exterior Lighting (Uplevel)*	*E4P Park/Turn Signal Lamp - Right*
E5A	Backup Lamp - Left	—	Attached to the left tail lamp assembly	*Rear Exterior Lights (Passenger or Cargo)*	*E5A Backup Lamp - Left*
E5B	Backup Lamp - Right	—	Attached to the right tail lamp assembly	*Rear Exterior Lights (Passenger or Cargo)*	*E5B Backup Lamp - Right*
E5S	Tail/Brake and Turn Signal Lamp - Left	Passenger or Cargo	Attached to the left tail lamp assembly, upper bulb	*Rear Exterior Lights (Passenger or Cargo)*	*E5S Tail/Stop and Turn Signal Lamp - Left (Passenger or Cargo)*
E5T	Tail/Brake and Turn Signal Lamp - Right	Passenger or Cargo	Attached to the right tail lamp assembly, upper bulb	*Rear Exterior Lights (Passenger or Cargo)*	*E5T Tail/Stop and Turn Signal Lamp - Right (Passenger or Cargo)*
E6	Center High Mounted Stop Lamp	Passenger or Cargo	At the top rear center of the vehicle	*Rear Exterior Lights (Passenger or Cargo)*	*E6 Center High Mounted Stop Lamp (Passenger or Cargo)*
E7	License Plate Lamp	Passenger or Cargo	Attached to the outer right cargo door, above the license plate mount	*Rear Exterior Lights (Passenger or Cargo)*	*E7 License Plate Lamp (Passenger or Cargo)*
E12A	Glow Plug 1	LGH	Attached to the side of the right cylinder head, above the #1 cylinder	*Right front of the Engine Components (LGH)*	*E12A Glow Plug 1 (LGH)*
E12B	Glow Plug 2	LGH	Attached to the side of the left cylinder head, above the #2 cylinder	*Left Front of the Engine Components (LGH)*	*E12B Glow Plug 2 (LGH)*
E12C	Glow Plug 3	LGH	Attached to the side of the right cylinder head, above the #3 cylinder	*Right front of the Engine Components (LGH)*	*E12C Glow Plug 3 (LGH)*
E12D	Glow Plug 4	LGH	Attached to the side of the left cylinder head, above the #4 cylinder	*Left Front of the Engine Components (LGH)*	*E12D Glow Plug 4 (LGH)*
E12E	Glow Plug 5	LGH	Attached to the side of the right cylinder head, above the #5 cylinder	*Right front of the Engine Components (LGH)*	*E12E Glow Plug 5 (LGH)*

E12F	Glow Plug 6	LGH	Attached to the side of the left cylinder head, above the #6 cylinder	*Left Front of the Engine Components (LGH)*	*E12F Glow Plug 6 (LGH)*
E12G	Glow Plug 7	LGH	Attached to the side of the right cylinder head, above #7 cylinder	*Right front of the Engine Components (LGH)*	*E12G Glow Plug 7 (LGH)*
E12H	Glow Plug 8	LGH	Attached to the side of the left cylinder head, above the #8 cylinder	*Left Front of the Engine Components (LGH)*	*E12H Glow Plug 8 (LGH)*
E13L	Headlamp - Left	Without V22	At the left front of the vehicle	*Front Exterior Lighting (Base)*	*E13L Headlamp - Left (Without V22)*
E13R	Headlamp - Right	Without V22	At the right front of the vehicle	*Front Exterior Lighting (Base)*	*E13R Headlamp - Right (Without V22)*
E18L	Rear Defogger Grid - Left	C49	Attached to the left cargo door window	*Rear Door Components (Passenger or Cargo)*	• *E18L Rear Defogger Grid - Left (C49 with A18)* • *E18L Rear Defogger Grid - Left X1 (C49 with A12)* • *E18L Rear Defogger Grid - Left X2 (C49 with A12)*
E18R	Rear Defogger Grid - Right	C49	Attached to the right cargo door window	*Rear Door Components (Passenger or Cargo)*	• *E18R Rear Defogger Grid - Right (C49 with A18)* • *E18R Rear Defogger Grid - Right X1 (C49 with A12)* • *E18R Rear Defogger Grid - Right X2 (C49 with A12)*
E19	Coolant Heater	K08	Attached to the left front inner frame rail	*Undercar Components (LGH)*	*E19 Coolant Heater (K08)*
E20	Coolant Heater Glow Plug	K08	Internal to E19 Coolant Heater	*Coolant Heater Components (K08)*	—
E21A	Fluorescent Work Lamp - Right Access Panel	PRP	Mounted towards the right of the top access panel	—	—
E21F	Fluorescent Work Lamp - Front Cargo	PRP	Mounted towards the top front of the cargo area	—	—
E21R	Fluorescent Work Lamp - Rear Cargo	PRP	Mounted towards the top rear of the cargo area	—	—
E21LF	Fluorescent Work Lamp - Left Front Access Panel	PRP	At the front and towards the top of the left access panel	—	—
E21LR	Fluorescent Work Lamp - Left Rear Access Panel	PRP	Mounted towards the top of the right access panel	—	—
E22	Underhood Lamp	—	In the engine compartment, attached to the left inner hood panel	*Underside of Hood Components*	*E22 Underhood Lamp*
E24	Intake Air Heater	LGH	In the engine compartment, between the intake manifold tube and the air cooler outlet duct	*Top of the Engine Components (1 of 3, LGH)*	• *E24 Intake Air Heater X1 (LGH)* • *E24 Intake Air Heater X2 (LGH)*
E31L	Sunshade Mirror Lamp - Left	C69 or DH6	On the upper left of the headliner, inside the Sunshade — Left	*Headliner Components*	—
E31R	Sunshade Mirror Lamp - Right	C69 or DH6	On the upper right of the headliner, in the Sunshade — Right	*Headliner Components*	—
E32	Cigarette Lighter Receptacle	DT4	Slightly below and to the left of the radio	*Instrument Panel Components (1 of 2)*	*E32 Cigarette Lighter Receptacle (DT4)*

E36AH	Dome Lamp	Cargo	In the rear of the roof panel	—	*E36AH Dome Lamp (Cargo)*
E37F	Dome/Reading Lamps - Front	Without YF7	In the front of the roof panel	*Headliner Components*	*E37F Dome/Reading Lamps - Front (Without YF7)*
E37M	Dome/Reading Lamps - Middle	Passenger	In the center of the roof panel	*Headliner Components*	*E37M Dome/Reading Lamps - Middle (Passenger)*
E37R	Dome/Reading Lamps - Rear	Passenger	In the rear of the roof panel	*Headliner Components*	*E37R Dome/Reading Lamps - Rear (Passenger)*
E52	Reductant Line Heater	LGH	Under the vehicle, above the reductant tank	*Reductant Tank Components*	*E52 Reductant Line Heater (LGH)*
E53	Reductant Tank Heater	LGH	Under the vehicle, inside the reductant tank	*Reductant Tank Components*	*E53 Reductant Tank Heater (LGH)*
F101	Passenger Instrument Panel Air Bag	—	Right side of the instrument panel	*Instrument Panel Components (1 of 2)*	*F101 Passenger Instrument Panel Air Bag*
F104A	Fusible Link 1	LGH	In-between C1 Battery and K34 Glow Plug Control Module	—	—
F104B	Fusible Link 2	—	Adjacent to X50A Fuse Block - Underhood	—	—
F104C	Fusible Link 3	—	In-between C1 Battery and G13 Generator	—	—
F104D	Fusible Link 4	LGH	In-between X60A Junction Block - Underhood and E24 Intake Air Heater	—	—
F104E	Fusible Link 5	LGH with KD9	In-between X60A Junction Block - Underhood and G13E Generator - Auxiliary	—	—
F105LF	Roof Rail Air Bag - Left Front	ASF	Behind the left side of the headliner trim	*Left Front of Passenger Compartment Components*	*F105LF Roof Rail Air Bag - Left Front (ASF)*
F105RF	Roof Rail Air Bag - Right Front	ASF	Behind the right side of the headliner trim	*Left Front of Passenger Compartment Components*	*F105RF Roof Rail Air Bag - Right Front (ASF)*
F105RR	Roof Rail Air Bag - Right Rear	ASF with YA2	Behind the right rear side of the headliner trim	*Left Front of Passenger Compartment Components*	*F105RR Roof Rail Air Bag - Right Rear (ASF with YA2)*
F106D	Seat Side Air Bag - Driver	AK5	Within the driver seat back, towards the outside	—	—
F106P	Seat Side Air Bag - Passenger	AK5	Within the passenger seat back, towards the outside	—	—
F107	Steering Wheel Air Bag	—	Attached to the center of the steering wheel	*Steering Column Components (1 of 2)*	*F107 Steering Wheel Air Bag*
F109D	Seat Belt Buckle Pretensioner - Driver	—	Part of the seat belt buckle	*Driver Seat Components*	*F109D Seat Belt Buckle Pretensioner - Driver*
F109P	Seat Belt Buckle Pretensioner - Passenger	AK5	Part of the seat belt buckle	*Passenger Seat Components*	*F109P Seat Belt Buckle Pretensioner - Passenger (AK5)*
G7	Coolant Heater Fuel Pump	K08	Attached to the left inner frame rail, near the fuel pump assembly	*Coolant Heater Components (K08)*	—
G10	Cooling Fan Motor	LGH	In the engine compartment, attached to the water pump pulley	*Front of Engine Compartment Components (1 of 2)*	*G10 Cooling Fan Motor (LGH)*
G12	Fuel Pump	LGH	Under the vehicle, internally attached to the middle of the fuel pump assembly	*Undercar Components (LGH)*	*G12 Fuel Pump (LGH)*
G12	Fuel Pump	KO7 with UFM	Under the vehicle, mounted to fuel tank	—	*G12 Fuel Pump (KO7 with UFM)*

G12A	Fuel Pump - Primary	KO7 with UFP	Underneath vehicle, attached to front of primary fuel tank	—	—
G12B	Fuel Pump - Secondary	KO7 with UFP	Underneath vehicle, attached to front of primary fuel tank	—	—
G13	Generator	—	Attached to the right front of the engine	• *Left Front Side of the Engine Components (2 of 2, L20, L96, or LC8)* • *Left Front of the Engine Components (LGH)*	• *G13 Generator X1* • *G13 Generator X2*
G13E	Generator - Auxiliary	LGH with KD9	Attached to the left front of the engine	—	• *G13E Generator - Auxiliary X1 (LGH with KD9)* • *G13E Generator - Auxiliary X2 (LGH with KD9)*
G24	Windshield Washer Pump	—	Attached to the windshield washer fluid reservoir in the right front of the engine compartment	*Front of Engine Compartment Components (1 of 2)*	*G24 Windshield Washer Pump*
G25	LPG Tank Scavange Pump	KO7 with UFP	Attached to the LPG Harness	—	—
G33	Reductant Pump	LGH	Under the vehicle, above the reductant tank	*Reductant Tank Components*	*G33 Reductant Pump (LGH)*
G34	Evaporative Emission System Leak Detection Pump	LGH	In the right front lower side of the engine compartment, below the battery	*Engine Compartment Components (1 of 2)*	*G34 Evaporative Emission System Leak Detection Pump (LGH)*
G34	Evaporative Emission System Leak Detection Pump	KO7 with UFM	Underneath the vehicle, inside the LPG Evaporative Emissions (EVAP) box	—	*G34 Evaporative Emission System Leak Detection Pump (KO7 with UFM)*
K9	Body Control Module	—	Lower right side of the instrument panel behind the knee bolster	*Instrument Panel Components (2 of 2)*	• *K9 Body Control Module X1* • *K9 Body Control Module X2* • *K9 Body Control Module X3* • *K9 Body Control Module X4* • *K9 Body Control Module X5* • *K9 Body Control Module X6* • *K9 Body Control Module X7*
K10	Coolant Heater Control Module	K08	Internal to the coolant heater assembly	*Coolant Heater Components (K08)*	—
K17	Electronic Brake Control Module	—	Attached to the left frame rail, near the center of the vehicle	*Frame and Underbody Components (1 of 2)*	• *K17 Electronic Brake Control Module (Without JL4)* • *K17 Electronic Brake Control Module (JL4)*
K18	Compass Module	U80	In the front of the headliner	*Headliner Components*	*K18 Compass Module (U80)*

K20	Engine Control Module	—	At the left front side of the engine compartment, near the underhood fuse block on the inner left front fender	*Engine Compartment Components (1 of 2)*	• *K20 Engine Control Module X1 (L20, L96, or LC8)* • *K20 Engine Control Module X1 (LGH)* • *K20 Engine Control Module X2 (L20, L96, or LC8)* • *K20 Engine Control Module X2 (LGH)* • *K20 Engine Control Module X3 (LGH)*
KR23B	Fuel Pump Relay - Secondary	KO7 with UFP	Under the vehicle, mounted in front of the fuel tank, inside the tank control box	—	—
KR23C	Fuel Pump Relay - Primary	KO7 with UFP	Under the vehicle, mounted in front of the fuel tank, inside the tank control box	—	—
KR32B	Blower Motor High Speed Relay - Auxiliary	C36, C69, or ENC	In the left rear of the passenger compartment, attached to the auxiliary HVAC module	*Left Rear Cargo Area Components (Passenger or Cargo)*	—
KR32C	Blower Motor Low Speed Relay - Auxiliary	C36, C69, or ENC	In the left rear of the passenger compartment, attached to the auxiliary HVAC module	*Left Rear Cargo Area Components (Passenger or Cargo)*	—
KR32D	Blower Motor Medium Speed Relay - Auxiliary	C36, C69, or ENC	In the left rear of the passenger compartment, attached to the auxiliary HVAC module	*Left Rear Cargo Area Components (Passenger or Cargo)*	—
K34	Glow Plug Control Module	LGH	Left rear of the engine, above the rocker cover to the left of the turbocharger	*Left Front of the Engine Components (LGH)*	• *K34 Glow Plug Control Module X1 (LGH)* • *K34 Glow Plug Control Module X2 (LGH)*
K36	Inflatable Restraint Sensing and Diagnostic Module	—	Below the driver seat under the carpet on the floor board	*Left Front of Passenger Compartment Components*	*K36 Inflatable Restraint Sensing and Diagnostic Module*
K41R	Rear Parking Assist Control Module	UD7	In the passenger compartment, under instrument panel upper trim panel, center of dash	—	• *K41R Rear Parking Assist Control Module X1 (UD7)* • *K41R Rear Parking Assist Control Module X2 (UD7)*
K64	Content Theft Deterrent Control Module	—	In the steering column around the ignition key cylinder housing	*Steering Column Components (1 of 2)*	*K64 Content Theft Deterrent Control Module*
K71	Transmission Control Module	—	Internal to T12 Automatic Transmission Assembly	*Engine Compartment Components (1 of 2)*	*K71 Transmission Control Module*
K73	Telematics Communication Interface Control Module	UE1	In the passenger compartment, mounted on a bracket under driver knee bolster panel	*Underside of Instrument Panel Components*	• *K73 Telematics Communication Interface Control Module X1 (UE1)* • *K73 Telematics Communication Interface Control Module X2 (UE1)* • *K73 Telematics Communication Interface Control Module X3 (UE1)*
K77	Remote Control Door Lock Receiver	ATG or UJM	Attached to the upper left side of the instrument panel carrier, above the instrument panel cluster (IPC)	*Instrument Panel Components (2 of 2)*	*K77 Remote Control Door Lock Receiver (ATG or UJM)*
K103	Fuel Injector Control Module	KO7 with UFP	Underneath vehicle, attached to tank control box, on driver's side frame rail	—	*K103 LPG Control Module (KO7 with UFP)*

K103	Fuel Injector Control Module	KO7 with UFM	In the passenger compartment, mounted on a bracket under driver knee bolster panel, above interior engine cover	—	*K103 LPG Control Module (KO7 with UFM)*
K119	CNG Control Module	FHZ	In the vehicle underbody, left side, forward of the left rear spring, mounted to inboard side of left frame rail	—	• *K119 CNG Control Module X1 (FHZ)* • *K119 CNG Control Module X2 (FHZ)* • *K119 CNG Control Module X3 (FHZ)* • *K119 CNG Control Module X4 (FHZ)*
KR142	LPG Tank Scavange Pump Relay	KO7 with UFP	Integral to the LPG Harness	—	*KR142 LPG Tank Scavange Pump Relay (KO7 with UFP)*
KR143	Wait to Start Indicator Relay	KO7 with UFM	In the engine compartment, beside brake booster, tied to engine harness	—	*KR143 Wait to Start Indicator Relay (KO7 with UFM)*
KR152	LPG Bypass Solenoid Valve Relay	KO7 with UFM	Underneath the vehicle, mounted to the side of the EVAP vacuum pump housing box, towards the center of the vehicle, facing the driveshaft	—	*KR152 LPG Bypass Solenoid Valve Relay (KO7 with UFM)*
M2A	Access Panel Unlatch Actuator - Left Front Side Front	PRP	Inside the left access panel area	—	—
M2B	Access Panel Unlatch Actuator - Left Front Side Rear	PRP	Inside the left access panel area	—	—
M2C	Access Panel Unlatch Actuator - Left Rear Side Front	PRP	Inside the left access panel area	—	—
M2D	Access Panel Unlatch Actuator - Left Rear Side Rear	PRP	Inside the left access panel area	—	—
M2E	Access Panel Unlatch Actuator - Right Side Front	PRP	Inside the right access panel area	—	—
M2F	Access Panel Unlatch Actuator - Right Side Rear	PRP	Inside the right access panel area	—	—
M6	Air Temperature Door Actuator	—	Lower right side of the instrument panel, attached to the HVAC module	*HVAC Case Components*	*M6 Air Temperature Door Actuator*
M6B	Air Temperature Door Actuator - Auxiliary	C69	In the left rear of the passenger compartment, attached to the auxiliary HVAC module	*Left Rear Cargo Area Components (Passenger or Cargo)*	*M6B Air Temperature Door Actuator - Auxiliary (C69)*
M7	Transmission Shift Lock Control Solenoid Actuator	—	Attached to the right side of the steering column	*Steering Column Components (1 of 2)*	*M7 Transmission Shift Lock Control Solenoid Actuator*
M8	Blower Motor	—	Right rear of the engine compartment, attached to the evaporator case	*Engine Compartment Components (1 of 2)*	• *M8 Blower Motor (L20, L96, or LC8)* • *M8 Blower Motor (LGH)*
M8B	Blower Motor - Auxiliary	C36 or C69	In the left rear of the passenger compartment, attached to the auxiliary HVAC module	*Left Rear Cargo Area Components (Passenger or Cargo)*	*M8B Blower Motor - Auxiliary (C36 or C69)*
M11	Coolant Heater Blower Motor	K08	Internal to the coolant heater assembly	*Coolant Heater Components (K08)*	—
M13	Door Latch Assembly - Rear Cargo	Passenger or Cargo	Attached to the right cargo door latch, in the right cargo door	*Rear Door Components (Passenger or Cargo)*	• *M13 Door Latch Assembly - Rear Cargo X1 (Passenger or Cargo)* • *M13 Door Latch Assembly - Rear Cargo X2 (Passenger or Cargo)*

M14RR	Door Lock Actuator - Right Rear	AU3	Attached to the right rear door latch, in the right rear door	• *Right Side Hinged Door Components (E24)* • *Right Sliding Door Components (YA2)*	• *M14RR Door Lock Actuator - Right Rear (AU3 with E24)* • *M14RR Door Lock Actuator - Right Rear (AU3 with YA2)*
M37B	Mode Door Actuator - Auxiliary	C69	In the left rear of the passenger compartment, attached to the auxiliary HVAC module	*Left Rear Cargo Area Components (Passenger or Cargo)*	*M37B Mode Door Actuator - Auxiliary (C69)*
M49D	Seat Motor Assembly - Driver	AG1	Below the left front seat, attached to the seat frame	*Driver Seat Components*	*M49D Seat Motor Assembly - Driver (AG1)*
M49P	Seat Motor Assembly - Passenger	AG2	Below the right front seat, attached to the seat frame	*Passenger Seat Components*	*M49P Seat Motor Assembly - Passenger (AG2)*
M64	Starter Motor	—	Attached to the lower right rear of the engine	• *Right Front Side of the Engine Components (1 of 2, L20, L96, or LC8)* • *Right front of the Engine Components (LGH)*	• *M64 Starter Motor X1 (L20, L96, or LC8)* • *M64 Starter Motor X1 (LGH)* • *M64 Starter Motor X2 (L20, L96, or LC8)* • *M64 Starter Motor X2 (LGH)*
M74D	Window Motor - Driver	A31	Attached to the interior of the left front door	*Driver Door Components*	*M74D Window Motor - Driver (A31)*
M74P	Window Motor - Passenger	A31	Attached to the interior of the right front door	*Front Passenger Door Components*	*M74P Window Motor - Passenger (A31)*
M75	Windshield Wiper Motor	—	In the left side of the cowl, near the engine compartment	*Front of Engine Compartment Components (1 of 2)*	*M75 Windshield Wiper Motor*
P3	Backup Alarm	8S3	In the rear of the vehicle on the frame	—	*P3 Backup Alarm (8S3)*
P5	Chime Alarm Control Module	UL5	In the center of the instrument panel behind the radio	*Instrument Panel Components (2 of 2)*	*P5 Chime Alarm Control Module (UL5)*
P9	Driver Information Center Display	—	Integral to P16 Instrument Cluster	—	—
P13	Horn Assembly	—	In the left front engine compartment behind the left headlamp	*Front of Engine Compartment Components (1 of 2)*	• *P13 Horn Assembly (L20, L96, or LC8)* • *P13 Horn Assembly (LGH)*
P14	Passenger Air Bag Disabled Indicator	AL0	In the center of the instrument panel	*Instrument Panel Components (1 of 2)*	*P14 Passenger Air Bag Disable Indicator (AL0)*
P16	Instrument Cluster	—	Attached to the left side of the instrument panel	*Instrument Panel Components (1 of 2)*	*P16 Instrument Cluster*
P19AG	Speaker - Left Front Door	—	Attached to the left front door	*Driver Door Components*	*P19AG Speaker - Left Front Door*
P19AH	Speaker - Right Front Door	—	Attached to the right front door	*Front Passenger Door Components*	*P19AH Speaker - Right Front Door*
P19LR	Speaker - Left Rear Roof	Cargo or Passenger	In the left rear headliner of the vehicle	*Rear Door Components (Passenger or Cargo)*	*P19LR Speaker - Left Rear Roof (Passenger or Cargo)*
P19RR	Speaker - Right Rear Roof	Cargo or Passenger	In the right rear upper headliner of the vehicle	*Rear Door Components (Passenger or Cargo)*	*P19RR Speaker - Right Rear Roof (Passenger or Cargo)*
P19F	Speaker - Left Rear Cargo Door	US8	Attached to the left cargo door	*Rear Door Components (Passenger or Cargo)*	*P19F Speaker - Left Rear Cargo Door (US8)*
P19T	Speaker - Right Rear Cargo Door	US8	Attached to the right cargo door	*Rear Door Components (Passenger or Cargo)*	*P19T Speaker - Right Rear Cargo Door (US8)*

P44	Wait to Start Indicator	KO7	In the passenger compartment, attached to the instrument panel, left of steering column, under DIC controls	—	*P44 Wait to Start Indicator (KO7)*
Q1A	1-2 Shift Solenoid Valve	—	Internal T12 Automatic Transmission Assembly	—	*Q1A 1-2 Shift Solenoid Valve*
Q1B	2-3 Shift Solenoid Valve	—	Internal T12 Automatic Transmission Assembly	—	*Q1B 2-3 Shift Solenoid Valve*
Q2	A/C Compressor Clutch	C60	On the front of the A/C compressor lower right front of engine	• *Right Front Side of the Engine Components (2 of 2, L20, L96, or LC8)* • *Left Front of the Engine Components (LGH)*	• *Q2 A/C Compressor Clutch (C60 with L20, L96, or LC8)* • *Q2 A/C Compressor Clutch (C60 with LGH)*
Q6	Camshaft Position Actuator Solenoid Valve	L20, L96, or LC8	Front of the engine behind the center of the water pump	*Left Front Side of the Engine Components (1 of 2, L20, L96, or LC8)*	*Q6 Camshaft Position Actuator Solenoid Valve (L20, L96, or LC8)*
Q8	Control Solenoid Valve Assembly	—	Internal to T12 Automatic Transmission Assembly	*Automatic Transmission Internal Electrical Components*	• *Q8 Control Solenoid Valve Assembly X1 (L20, L96, or LC8)* • *Q8 Control Solenoid Valve Assembly X1 (LGH)* • *Q8 Control Solenoid Valve Assembly X2* • *Q8 Control Solenoid Valve Assembly X3*
Q12	Evaporative Emission Purge Solenoid Valve	L20, L96, or LC8	On the top of the engine, rear of the throttle body	*Left Front Side of the Engine Components (2 of 2, L20, L96, or LC8)*	*Q12 Evaporative Emission Purge Solenoid Valve (L20, L96, or LC8)*
Q13	Evaporative Emission Vent Solenoid Valve	L20 or L96	Attached to the side of the EVAP canister, front of the fuel tank	—	*Q13 Evaporative Emission Vent Solenoid Valve (L20, L96, or LC8)*
Q13	Evaporative Emission Vent Solenoid Valve	LC8	In the vehicle underbody, left side middle	—	*Q13 Evaporative Emission Vent Solenoid Valve (L20, L96, or LC8)*
Q14	Exhaust Gas Recirculation Valve	LGH	In the engine compartment, on the top right of the engine	*Left Front of the Engine Components (LGH)*	*Q14 Exhaust Gas Recirculation Valve (LGH)*
Q17A	Fuel Injector 1	L20, L96, or LC8	On the left side of the intake manifold, at the #1 cylinder intake port	*Upper Left Side of the Engine Components (L20, L96, or LC8)*	• *Q17A Fuel Injector 1 (L20 or L96)* • *Q17A Fuel Injector 1 (LC8 with KO7 and UFM)* • *Q17A Fuel Injector 1 (LC8 with FHZ)*
Q17A	Fuel Injector 1	LGH	Near the right side engine rocker cover above the #1 cylinder	*Right front of the Engine Components (LGH)*	*Q17A Fuel Injector 1 (LGH)*
Q17B	Fuel Injector 2	L20, L96, or LC8	On the right side of the intake manifold, at the #2 cylinder intake port	*Upper Right Side of the Engine Components (L20, L96, or LC8)*	• *Q17B Fuel Injector 2 (L20 or L96)* • *Q17B Fuel Injector 2 (LC8 with KO7 and UFM)* • *Q17B Fuel Injector 2 (LC8 with FHZ)*
Q17B	Fuel Injector 2	LGH	Near the left side engine rocker cover above the #2 cylinder	*Left Front of the Engine Components (LGH)*	*Q17B Fuel Injector 2 (LGH)*
Q17C	Fuel Injector 3	L20, L96, or LC8	On the left side of the intake manifold, at the #3 cylinder intake port	*Upper Left Side of the Engine Components (L20, L96, or LC8)*	• *Q17C Fuel Injector 3 (L20 or L96)* • *Q17C Fuel Injector 3 (LC8 with KO7 and UFM)* • *Q17C Fuel Injector 3 (LC8 with FHZ)*

Q17C	Fuel Injector 3	LGH	Near the right side engine rocker cover above the #3 cylinder	*Right front of the Engine Components (LGH)*	*Q17C Fuel Injector 3 (LGH)*
Q17D	Fuel Injector 4	L20, L96, or LC8	On the right side of the intake manifold, at the #4 cylinder intake port	*Upper Right Side of the Engine Components (L20, L96, or LC8)*	• *Q17D Fuel Injector 4 (L20 or L96)* • *Q17D Fuel Injector 4 (LC8 with KO7 and UFM)* • *Q17D Fuel Injector 4 (LC8 with FHZ)*
Q17D	Fuel Injector 4	LGH	Near the left side engine rocker cover above the #4 cylinder	*Left Front of the Engine Components (LGH)*	*Q17D Fuel Injector 4 (LGH)*
Q17E	Fuel Injector 5	L20, L96, or LC8	On the left side of the intake manifold, at the #5 cylinder intake port	*Upper Left Side of the Engine Components (L20, L96, or LC8)*	• *Q17E Fuel Injector 5 (L20 or L96)* • *Q17E Fuel Injector 5 (LC8 with KO7 and UFM)* • *Q17E Fuel Injector 5 (LC8 with FHZ)*
Q17E	Fuel Injector 5	LGH	Near the right side engine rocker cover above the #5 cylinder	*Right front of the Engine Components (LGH)*	*Q17E Fuel Injector 5 (LGH)*
Q17F	Fuel Injector 6	L20, L96, or LC8	On the right side of the intake manifold, at the #6 cylinder intake port	*Upper Right Side of the Engine Components (L20, L96, or LC8)*	• *Q17F Fuel Injector 6 (L20 or L96)* • *Q17F Fuel Injector 6 (LC8 with KO7 and UFM)* • *Q17F Fuel Injector 6 (LC8 with FHZ)*
Q17F	Fuel Injector 6	LGH	Near the left side engine rocker cover above the #6 cylinder	*Left Front of the Engine Components (LGH)*	*Q17F Fuel Injector 6 (LGH)*
Q17G	Fuel Injector 7	L20, L96, or LC8	On the left side of the intake manifold, at the #7 cylinder intake port	*Upper Left Side of the Engine Components (L20, L96, or LC8)*	• *Q17G Fuel Injector 7 (L20 or L96)* • *Q17G Fuel Injector 7 (LC8 with KO7 and UFM)* • *Q17G Fuel Injector 7 (LC8 with FHZ)*
Q17G	Fuel Injector 7	LGH	Near the right side engine rocker cover above the #7 cylinder	*Right front of the Engine Components (LGH)*	*Q17G Fuel Injector 7 (LGH)*
Q17H	Fuel Injector 8	L20, L96, or LC8	On the right side of the intake manifold, at the #8 cylinder intake port	*Upper Right Side of the Engine Components (L20, L96, or LC8)*	• *Q17H Fuel Injector 8 (L20 or L96)* • *Q17H Fuel Injector 8 (LC8 with KO7 and UFM)* • *Q17H Fuel Injector 8 (LC8 with FHZ)*
Q17H	Fuel Injector 8	LGH	Near the left side engine rocker cover above the #8 cylinder	*Left Front of the Engine Components (LGH)*	*Q17H Fuel Injector 8 (LGH)*
Q18A	Fuel Pressure Regulator 1	LGH	In the engine compartment, mounted on top of the fuel injection pump	*Top of the Engine Compoents (2 of 3, LGH)*	*Q18A Fuel Pressure Regulator 1 (LGH)*
Q18B	Fuel Pressure Regulator 2	LGH	In the engine compartment, mounted to the front of the left fuel rail	*Top of the Engine Compoents (2 of 3, LGH)*	*Q18B Fuel Pressure Regulator 2 (LGH)*
Q20	Intake Air Flow Valve	LGH	At the top front of the engine, adjacent to E24 Intake Air Heater	*Top of the Engine Components (1 of 3, LGH)*	*Q20 Intake Air Flow Valve (LGH)*
Q27A	Pressure Control Solenoid Valve 1	—	Internal to T12 Automatic Transmission Assembly	—	—

Q27B	Pressure Control Solenoid Valve 2	—	Internal to T12 Automatic Transmission Assembly	—	—
Q27C	Pressure Control Solenoid Valve 3	—	Internal to T12 Automatic Transmission Assembly	—	—
Q27D	Pressure Control Solenoid Valve 4	—	Internal to T12 Automatic Transmission Assembly	—	—
Q27E	Pressure Control Solenoid Valve 5	—	Internal to T12 Automatic Transmission Assembly	—	—
Q38	Throttle Body	L20, L96, or LC8	Attached to the center front of the intake manifold	*Left Front Side of the Engine Components (2 of 2, L20, L96, or LC8)*	*Q38 Throttle Body (L20, L96, or LC8)*
Q39A	Torque Converter Clutch Pressure Control Solenoid Valve	—	Internal to T12 Automatic Transmission Assembly	—	—
Q41	Turbocharger Vane Position Control Solenoid Valve	LGH	In the engine compartment, mounted on the right side of the turbocharger, between the front and rear turbocharger housings	*Top of the Engine Components (1 of 3, LGH)*	*Q41 Turbocharger Vane Position Control Solenoid Valve (LGH)*
Q53	Fuel Cut-Off Solenoid Valve	KO7 with UFM	Under the vehicle, attached to fuel tank	—	*Q53 Fuel Cut-Off Solenoid Valve (KO7 with UFM)*
Q58F	LPG Cut-Off Solenoid Valve - Front	KO7 with UFP	Underneath vehicle, attached to front of primary fuel tank, internal to the LPG Pump Assembly — Primary	—	—
Q58R	LPG Cut-Off Solenoid Valve - Rear	KO7	Underneath vehicle, attached to front of primary fuel tank, internal to the LPG Pump Assembly — Secondary	—	—
Q61	Reductant Injector	LGH	Under the vehicle, attached to the exhaust pipe, near the rear of the catalytic converter	*Exhaust Components (LGH)*	*Q61 Reductant Injector (LGH)*
Q62	Reductant Purge Solenoid Valve	LGH	Under the vehicle, above the reductant tank	*Reductant Tank Components*	*Q62 Reductant Purge Solenoid Valve (LGH)*
Q67	Exhaust Aftertreatment Fuel Injector	LGH	In the engine compartment, on the right rear side of the engine	*Right front of the Engine Components (LGH)*	*Q67 Exhaust After treatment Fuel Injector (LGH)*
Q68A	CNG Cut-Off Solenoid Valve 1	FHZ	In the vehicle underbody, on front of CNG tank, inboard side of left frame rail, near EBCM	—	*Q68A CNG Cut-Off Solenoid Valve 1 (FHZ)*
Q68B	CNG Cut-Off Solenoid Valve 2	FHZ	In the vehicle underbody, on left side of CNG tank, rear of axle between frame rails, forward tank	—	*Q68B CNG Cut-Off Solenoid Valve 2 (FHZ)*
Q68C	CNG Cut-Off Solenoid Valve 3	FHZ	In the vehicle underbody, on left side of CNG tank, rear of axle between frame rails, rearmost tank	—	*Q68C CNG Cut-Off Solenoid Valve 3 (FHZ)*
Q68D	CNG Cut-Off Solenoid Valve 4	FHZ with UFP	In the left rear of the cargo compartment, on rear of CNG tank	—	*Q68D CNG Cut-Off Solenoid Valve 4 (FHZ)*
Q68D	CNG Cut-Off Solenoid Valve 4	FHZ without UFP	In the vehicle underbody, near CNG tank, rear of axle between frame rails	—	*Q68D CNG Cut-Off Solenoid Valve 4 (FHZ)*
Q68E	CNG Cut-Off Solenoid Valve 5	FHZ	In the vehicle underbody, left side, forward of left rear spring, above left frame rail	—	*Q68E CNG Cut-Off Solenoid Valve 5 (FHZ)*
Q69	CNG High Pressure Regulator Solenoid Valve	FHZ	In the vehicle underbody, left side, rear of b-pillar, inboard of left frame rail, forward of CNG control module, near EBCM	—	*Q69 CNG High Pressure Regulator Solenoid Valve (FHZ)*

Q71	LPG Purge Solenoid Valve	KO7 with UFP	Underneath vehicle, attached to front of primary fuel tank, internal to the LPG Pump Assembly — Primary	—	—
Q72	LPG Bypass Solenoid Valve	KO7 with UFM	Underneath the vehicle, attached to fuel tank	—	*Q72 LPG Bypass Solenoid Valve (KO7 with UFM)*
R3	Blower Motor Resistor	—	Right rear of the engine compartment, attached to the evaporator case	*Engine Compartment Components (1 of 2)*	• *R3 Blower Motor Resistor (L20, L96, or LC8)* • *R3 Blower Motor Resistor (LGH)*
R3B	Blower Motor Resistor - Auxiliary	C69	In the left rear of the passenger compartment, attached to the auxiliary HVAC module	*Left Rear Cargo Area Components (Passenger or Cargo)*	*R3B Blower Motor Resistor - Auxiliary (C69)*
S2	Transmission Manual Shift Switch	—	Mounted on the shift lever, extending from the right side of the steering column	—	—
S13A	Door Lock Switch - Rear Cargo	Passenger or Cargo with AU3	Attached to the right cargo door accessory mount plate	*Rear Door Components (Passenger or Cargo)*	*S13A Door Lock Switch - Rear Cargo (Passenger or Cargo with AU3)*
S13D	Door Lock Switch - Driver	AU3	Attached to the left front door accessory mount plate	*Driver Door Components*	*S13D Door Lock Switch - Driver (AU3)*
S13P	Door Lock Switch - Passenger	AU3	Attached to the right front door accessory mount plate	*Front Passenger Door Components*	*S13P Door Lock Switch - Passenger (AU3)*
S16	Driver Information Center Switch	—	On the dash, just to the left of P16 Instrument Cluster	*Instrument Panel Components (1 of 2)*	—
S26	Hazard Lamps Switch	—	On top of the steering column	*Steering Column Components (1 of 2)*	—
S30	Headlamp Switch	—	At the left side of the instrument panel	*Instrument Panel Components (1 of 2)*	*S30 Headlamp Switch*
S33	Horn Switch	—	Inside the upper steering column, behind the inflatable restraint steering wheel module	*Steering Column Components (1 of 2)*	• *S33 Horn Switch X1* • *S33 Horn Switch X2*
S34	HVAC Controls Switch Assembly	—	In the center of the instrument panel	*Instrument Panel Components (1 of 2)*	• *S34 HVAC Controls Switch Assembly X1* • *S34 HVAC Controls Switch Assembly X2* • *S34 HVAC Controls Switch Assembly X3* • *S34 HVAC Controls Switch Assembly X4 (C60)*
S34F	HVAC Controls Switch Assembly - Auxiliary Front	C36 or C69	On the front of the overhead console	*Headliner Components*	• *S34F HVAC Controls Switch Assembly - Auxiliary Front (C69 with Rear HVAC Controls)* • *S34F HVAC Controls Switch Assembly - Auxiliary Front (C69 without Rear HVAC Controls)*
S34R	HVAC Controls Switch Assembly - Auxiliary Rear	C36 or C69 with Rear HVAC Controls	In the headliner, near the center of the vehicle	*Headliner Components*	*S34R HVAC Controls Switch Assembly - Auxiliary Rear (C69 with Rear HVAC Controls)*
S36	Instrument Panel Dimmer Switch	—	On the far left side of the dash, adjacent to the headlight switch	—	—

S39	Ignition Switch	—	On the right side of the steering column	*Steering Column Components (1 of 2)*	*S39 Ignition Switch*
S40	Passenger Air Bag Disable Switch	C99	In the center of the instrument panel	*Instrument Panel Components (1 of 2)*	*S40 Passenger Air Bag Disable Switch (C99)*
S51	Telematics Button Assembly	UE1	In the center of the instrument panel, just below the radio	—	*S51 Telematics Button Assembly (UE1)*
S52	Outside Rearview Mirror Switch	DEB or DE5	Attached to the left front door accessory mount plate	*Driver Door Components*	*S52 Outside Rearview Mirror Switch (DEB or DE5)*
S64D	Seat Adjuster Switch - Driver	AG1	Attached to the front panel of the driver seat	*Driver Seat Components*	*S64D Seat Adjuster Switch - Driver (AG1)*
S64P	Seat Adjuster Switch - Passenger	AG2	Attached to the front panel of the front passenger seat	*Passenger Seat Components*	*S64P Seat Adjuster Switch - Passenger (AG2)*
S70L	Steering Wheel Controls Switch - Left	K34	On the left steering wheel spoke	*Instrument Panel Components (1 of 2)*	*S70L Steering Wheel Controls Switch - Left (K34)*
S70R	Steering Wheel Controls Switch - Right	W1Y	On the right steering wheel spoke	*Instrument Panel Components (1 of 2)*	*S70R Steering Wheel Controls Switch - Right (W1Y)*
S74	Tow/Haul Mode Switch	—	In the center of the instrument panel	*Instrument Panel Components (1 of 2)*	*S74 Tow/Haul Mode Switch*
S75	Traction Control Switch	JL4	In the center of the instrument panel	*Instrument Panel Components (1 of 2)*	*S75 Traction Control Switch (JL4)*
S78	Turn Signal/Multi-Function Switch	—	On the left side of the steering column	*Steering Column Components (1 of 2)*	• *S78 Turn Signal/Multifunction Switch X1* • *S78 Turn Signal/Multifunction Switch X2* • *S78 Turn Signal/Multifunction Switch X3*
S79D	Window Switch - Driver	A31	Attached to the left front door accessory mount plate	*Driver Door Components*	*S79D Window Switch - Driver (A31)*
S79P	Window Switch - Passenger	A31	Attached to the right front door accessory mount plate	*Front Passenger Door Components*	*S79P Window Switch - Passenger (A31)*
S85	Auxiliary Blower Motor Switch	C36 or C69	In the center of the instrument panel	*Instrument Panel Components (1 of 2)*	*S85 Auxiliary Blower Motor Switch (C36 or C69)*
T1	Accessory DC/AC Power Inverter Module	KI4	Attached to the Instrument Panel Harness	—	—
T4G	Cellular Phone, Navigation, and Digital Radio Antenna	U2K, UBS, UI8, or UE1	Mounted towards the left front of the roof	—	—
T4M	Radio Antenna	U73	Mounted on top of the right front fender, adjacent to the hood	*Right Rear of the Engine Compartment Components*	—
T4S	Wireless Communication Antenna - Bluetooth	UE1	Internal to K73 Telematics Communication Interface Control Module	—	—
T8A	Ignition Coil 1	L20, L96, or LC8	On the left rocker cover center at cylinder 1	*Upper Left Side of the Engine Components (L20, L96, or LC8)*	*T8A Ignition Coil 1 (L20, L96, or LC8)*
T8B	Ignition Coil 2	L20, L96, or LC8	On the right rocker cover center at cylinder 2	*Upper Right Side of the Engine Components (L20, L96, or LC8)*	*T8B Ignition Coil 2 (L20, L96, or LC8)*
T8C	Ignition Coil 3	L20, L96, or LC8	On the left rocker cover center at cylinder 3	*Upper Left Side of the Engine Components (L20, L96, or LC8)*	*T8C Ignition Coil 3 (L20, L96, or LC8)*

T8D	Ignition Coil 4	L20, L96, or LC8	On the right rocker cover center at cylinder 4	*Upper Right Side of the Engine Components (L20, L96, or LC8)*	*T8D Ignition Coil 4 (L20, L96, or LC8)*
T8E	Ignition Coil 5	L20, L96, or LC8	On the left rocker cover center at cylinder 5	*Upper Left Side of the Engine Components (L20, L96, or LC8)*	*T8E Ignition Coil 5 (L20, L96, or LC8)*
T8F	Ignition Coil 6	L20, L96, or LC8	On the right rocker cover center at cylinder 6	*Upper Right Side of the Engine Components (L20, L96, or LC8)*	*T8F Ignition Coil 6 (LC8, LMF, L20 or L96)*
T8G	Ignition Coil 7	L20, L96, or LC8	On the left rocker cover rear at cylinder 7	*Upper Left Side of the Engine Components (L20, L96, or LC8)*	*T8G Ignition Coil 7 (L20, L96, or LC8)*
T8H	Ignition Coil 8	L20, L96, or LC8	On the right rocker cover rear at cylinder 8	*Upper Right Side of the Engine Components (L20, L96, or LC8)*	*T8H Ignition Coil 8 (L20, L96, or LC8)*
T12	Automatic Transmission Assembly	—	Under the vehicle attached to the rear of the engine	—	—
T15	Navigation Antenna Signal Splitter	UI8 with UE1	Behind the dash on the left side, adjacent to K73 Telematics Communication Interface Control Module	—	—
X50A	Fuse Block - Underhood	—	In the engine compartment, attached to the left front fender	*Engine Compartment Components (1 of 2)*	• *X50A Fuse Block - Underhood Label (with KI4)* • *X50A Fuse Block - Underhood Top View* • *X50A Fuse Block - Underhood Bottom View* • *X50A Fuse Block - Underhood X1* • *X50A Fuse Block - Underhood X2* • *X50A Fuse Block - Underhood X3* • *X50A Fuse Block - Underhood X4* • *X50A Fuse Block - Underhood X5* • *X50A Fuse Block - Underhood X6*
X52A	Fuse Block - Passenger Compartment	—	Below the driver seat	*Left Front of Passenger Compartment Components*	• *X52A Fuse Block - Passenger Compartment Label* • *X52A Fuse Block - Passenger Compartment Top View* • *X52A Fuse Block - Passenger Compartment Bottom View* • *X52A Fuse Block - Passenger Compartment X1* • *X52A Fuse Block - Passenger Compartment X2* • *X52A Fuse Block - Passenger Compartment X3*
X53A	Fuse Block - Rear Body	PRP	Within the cargo area	—	• *X53A Fuse Block - Rear Body Top View (PRP)* • *X53A Fuse Block - Rear Body Bottom View (PRP)*
X55VA	Fuse Holder 1 - Alternative Fuel	KO7 with UFM	Attached to the LPG Harness	—	—
X55VB	Fuse Holder 2 - Alternative Fuel	KO7 with UFP	Attached to the LPG Harness	—	—

X60A	Junction Block - Underhood	LGH or TP2	In the engine compartment, in-between M64 Starter Motor and X50A Fuse Block - Underhood	—	—
X80A	Accessory Power Receptacle - Center Console 1	Without DT4	In the center of the instrument panel	*Instrument Panel Components (1 of 2)*	—
X80B	Accessory Power Receptacle - Center Console 2	—	In the right center of the instrument panel	*Instrument Panel Components (1 of 2)*	*X80B Accessory Power Receptacle - Center Console 2*
X81	Accessory Power Receptacle - 110V AC	KI4	Within the passenger compartment	—	—
X84	Data Link Connector	—	Left lower side of the instrument panel, near the park brake pedal assembly	*Instrument Panel Components (1 of 2)*	*X84 Data Link Connector*
X85	Steering Wheel Air Bag Coil	—	Inside the upper steering column	—	• *X85 Steering Wheel Air Bag Coil X1* • *X85 Steering Wheel Air Bag Coil X2*
X87RB	Sliding Door Jamb Contact Plate - Right Body	AU3 and E24 or YA2	Attached to the right B-pillar	• *Right Side Hinged Door Components (E24)* • *Right Sliding Door Components (YA2)*	*X87RB Sliding Door Jamb Contact Plate - Right Body (AU3 with E24 or YA2)*
X88	Trailer Connector	UY7 without NE7	Below the rear bumper, near the center	—	*X88 Trailer Connector (UY7 without NE7)*
X88	Trailer Connector	UY7 with NE7	Below the rear bumper, near the center	—	*X88 Trailer Connector (UY7 with NE7)*
X92	USB Receptacle	USR	Slightly below and to the right of A11 Radio	—	—
X100	Instrument Panel Harness to Engine Harness	L20, L96, or LC8	Left rear of the engine compartment near the underhood fuse block and the horn	*Engine Harness Routing - Front (L20, L96, or LC8)*	*X100 Instrument Panel Harness to Engine Harness (L20, L96, or LC8)*
X100	Instrument Panel Harness to Engine Chassis Harness	LGH	Left rear of the engine compartment near the underhood fuse block and the horn	*Engine Harness Routing - Left Side of Engine Compartment (LGH)*	*X100 Instrument Panel Harness to Engine Chassis Harness (LGH)*
X101	Chassis Harness to Engine Harness	L20, L96, or LC8	Left rear of the engine compartment behind the underhood fuse block	*Engine Harness Routing - Front (L20, L96, or LC8)*	*X101 Chassis Harness to Engine Harness (L20, L96, or LC8)*
X101	Engine Chassis Harness to Chassis Harness	LGH	Left rear of the engine compartment behind the underhood fuse block	*Engine Harness Routing - Left Side of Engine Compartment (LGH)*	*X101 Engine Chassis Harness to Chassis Harness (LGH)*
X103	Instrument Panel Harness to Engine Harness	—	Instrument panel harness to engine harness, about 8.8 inches (225 mm) from I/P underhood break out after pass through grommet	—	*X103 Instrument Panel Harness to Engine Harness*
X104	Instrument Panel Harness to Front Impact Sensor Jumper	—	Instrument panel harness to the inflatable restraint front end sensor jumper harness, bottom left side of the radiator support	*Instrument Panel Harness Routing - Engine Compartment*	*X104 Instrument Panel Harness to Front Impact Sensor Jumper*
X105	Engine Harness to Chassis Harness	LGH	Engine chassis harness to the chassis harness, right front inner frame rail	—	*X105 Engine Harness to Chassis Harness (LGH)*
X107	Engine Chassis Harness to Engine Harness	LGH	Engine chassis harness to the engine harness, in the engine compartment, left front upper corner of the engine assembly	*Engine Harness Routing - Left Side of Engine Compartment (LGH)*	*X107 Engine Chassis Harness to Engine Harness (LGH)*
X109	Engine Harness to Underhood Lamp Harness	L20, L96, or LC8	Engine harness to the underhood lamp jumper harness, left rear of the engine compartment	*Engine Harness Routing - Front (L20, L96, or LC8)*	*X109 Engine Harness to Underhood Lamp Harness (L20, L96, or LC8)*
X109	Engine Chassis Harness to Underhood Lamp Harness	LGH	Engine harness to the underhood lamp jumper harness, left rear of the engine compartment	*Engine Harness Routing - Left Side of Engine Compartment (LGH)*	*X109 Engine Chassis Harness to Underhood Lamp Harness (LGH)*

X110	Engine Jumper Harness to Engine Harness	LGH	Engine jumper harness to the engine harness, in the engine compartment, near the upper front corner of the left valve cover	*Engine Harness Routing - Left Front of Engine (LGH)*	*X110 Engine Jumper Harness to Engine Harness (LGH)*
X112	Fuel Rail Jumper Harness to Engine Harness	LGH	Fuel rail jumper harness to the engine harness, in the engine compartment, near the upper rear corner of the left valve cover	*Engine Harness Routing - Left Front of Engine (LGH)*	*X112 Fuel Rail Jumper Harness to Engine Harness (LGH)*
X115	Engine Chassis Harness to Catalytic Converter Jumper Harness	Cutaway with LGH	Engine chassis harness to the catalytic converter jumper harness, in the lower right rear side of the engine compartment	—	*X115 Engine Chassis Harness to Catalytic Converter Jumper Harness (Cutaway with LGH)*
X126	Engine Harness to Left Ignition Coil Harness	L20, L96, or LC8	Engine harness to the left ignition coils jumper harness, top center of the left valve cover	*Engine Harness Routing - Left Rear of Engine (L20, L96, or LC8)*	*X126 Engine Harness to Left Ignition Coil Harness (L20, L96, or LC8)*
X127	Engine Harness to Right Ignition Coil Harness	L20, L96, or LC8	Engine harness to the right ignition coils jumper harness, top center of the right valve cover	*Upper Right Side of the Engine Components (L20, L96, or LC8)*	*X127 Engine Harness to Right Ignition Coil Harness (L20, L96, or LC8)*
X128	Engine Harness to Heated Oxygen Sensor Jumper Harness	L20, L96 or LC8	Engine harness to the rear oxygen sensors jumper harness, right frame rail	*Engine Harness Routing - Front (L20, L96, or LC8)*	*X128 Engine Harness to Heated Oxygen Sensor Jumper Harness (L20, L96, or LC8)*
X141	Instrument Panel Harness to Brake Fluid Level Jumper Harness	UJ1	Instrument panel harness to the brake fluid alarm switch jumper harness, left rear of the engine compartment near the cowl	*Instrument Panel Harness Routing - Engine Compartment*	*X141 Instrument Panel Harness to Brake Fluid Level Jumper Harness (UJ1)*
X142	Engine Chassis Harness to Fan Jumper Harness	LGH	Engine chassis harness to the fan jumper harness, near the front of the engine	*Front of Engine Compartment Components (2 of 2, LGH)*	*X142 Engine Chassis Harness to Fan Jumper Harness (LGH)*
X150	Instrument Panel Harness to Forward Lamp Harness	—	Instrument panel harness to the forward lamp harness, near the upper radiator hose at the radiator entry point	*Forward Lamp Harness Routing*	*X150 Instrument Panel Harness to Forward Lamp Harness*
X161	Engine Harness to Fuel Injector 1 Harness	FHZ, or KO7 with UFM	On the left side of the intake manifold, above fuel injector 1	—	• *X161 Engine Harness to Fuel Injector 1 Harness (KO7 and UFM)* • *X161 Engine Harness to Fuel Injector 1 Harness (LC8 with FHZ)*
X162	Engine Harness to Fuel Injector 2 Harness	FHZ, or KO7 with UFM	On the right side of the intake manifold, above fuel injector 2	—	• *X162 Engine Harness to Fuel Injector 2 Harness (KO7 and UFM)* • *X162 Engine Harness to Fuel Injector 2 Harness (LC8 with FHZ)*
X163	Engine Harness to Fuel Injector 3 Harness	FHZ, or KO7 with UFM	On the left side of the intake manifold, above fuel injector 3	—	• *X163 Engine Harness to Fuel Injector 3 Harness (KO7 and UFM)* • *X163 Engine Harness to Fuel Injector 3 Harness (LC8 with FHZ)*
X164	Engine Harness to Fuel Injector 4 Harness	FHZ, or KO7 with UFM	On the right side of the intake manifold, above fuel injector 4	—	• *X164 Engine Harness to Fuel Injector 4 Harness (KO7 and UFM)* • *X164 Engine Harness to Fuel Injector 4 Harness (LC8 with FHZ)*
X165	Engine Harness to Fuel Injector 5 Harness	FHZ, or KO7 with UFM	On the left side of the intake manifold, above fuel injector 5	—	• *X165 Engine Harness to Fuel Injector 5 Harness (KO7 and UFM)* • *X165 Engine Harness to Fuel Injector 5 Harness (LC8 with FHZ)*

X166	Engine Harness to Fuel Injector 6 Harness	FHZ, or KO7 with UFM	On the right side of the intake manifold, above fuel injector 6	—	• *X166 Engine Harness to Fuel Injector 6 Harness (KO7 and UFM)* • *X166 Engine Harness to Fuel Injector 6 Harness (LC8 with FHZ)*
X167	Engine Harness to Fuel Injector 7 Harness	FHZ, or KO7 with UFM	On the left side of the intake manifold, above fuel injector 7	—	• *X167 Engine Harness to Fuel Injector 7 Harness (KO7 and UFM)* • *X167 Engine Harness to Fuel Injector 7 Harness (LC8 with FHZ)*
X168	Engine Harness to Fuel Injector 8 Harness	FHZ, or KO7 with UFM	On the right side of the intake manifold, above fuel injector 8	—	• *X168 Engine Harness to Fuel Injector 8 Harness (KO7 and UFM)* • *X168 Engine Harness to Fuel Injector 8 Harness (LC8 with FHZ)*
X174	Transmission Harness to Chassis Harness	LGH	Chassis harness to the transmission jumper harness, left center upper frame rail near the fuel pump assembly	—	*X174 Transmission Harness to Chassis Harness (LGH)*
X177	Engine Harness to Camshaft Position Sensor Jumper Harness	L20, L96, or LC8	Engine harness to the camshaft harness, left front of the engine near the crank pulley	*Engine Harness Routing - Front (L20, L96, or LC8)*	• *X177 Engine Harness to Camshaft Position Sensor Jumper Harness (L20)* • *X177 Engine Harness to Camshaft Position Sensor Jumper Harness (L96 or LC8)*
X180	LPG Tank Harness to LPG Main Harness	KO7 with UFM	LPG tank harness to LPG main harness, about 254 mm (10.07 inches) from X350	—	*X180 LPG Tank Harness to LPG Main Harness (KO7 with UFM)*
X200	Steering Column Harness to Instrument Panel Harness	—	Steering column harness to the instrument panel harness, at the base of the steering column	*Steering Column Harness Routing*	*X200 Steering Column Harness to Instrument Panel Harness*
X202	Instrument Panel Harness to Engine Harness	UD7	Instrument panel harness to engine harness, about 8.8 inches (225 mm) from I/P underhood break out after pass through grommet	—	*X202 Instrument Panel Harness to Engine Harness (UD7)*
X204	Body Harness to Headliner Harness	UVC	Body harness to headliner harness,	*Body Harness Routing - Right Front of Passenger Compartment*	*X204 Body Harness to Headliner Harness (UVC)*
X205	Front Headliner Harness to Body Harness	—	Front headliner harness to the body harness, behind the A-pillar	*Body Harness Routing - Roof Area*	*X205 Front Headliner Harness to Body Harness*
X220	Instrument Panel Harness to Park Brake Jumper Harness	—	Instrument panel harness to the parking brake jumper harness, left side of the instrument panel, center of the parking brake pedal assembly	*Instrument Panel Harness Routing - Dash Area (1 of 2)*	*X220 Instrument Panel Harness to Park Brake Jumper Harness*
X222	Upfitter Provision Harness to Instrument Panel Harness	YF2 or YF7	Upfitter harness to the instrument panel harness, left side of the instrument panel near the parking brake lever assembly	*Instrument Panel Harness Routing - Dash Area (1 of 2)*	*X222 Upfitter Provision Harness to Instrument Panel Harness (YF2 or YF7)*
X225	Accelerator Pedal Position (APP) Sensor Jumper Harness to Instrument Panel Harness	—	Accelerator Pedal Position (APP) Jumper Harness to Instrument Panel Harness, located between Accelerator Pedal Position (APP) sensor and Instrument Panel Harness	—	*X225 Accelerator Pedal Position (APP) Sensor Jumper Harness to Instrument Panel Harness*
X276	Steering Wheel Harness to Instrument Panel Harness	—	Steering wheel harness to the instrument panel harness, in the back of the left instrument panel knee bolster above X200	*Instrument Panel Harness Routing - Dash Area (1 of 2)*	*X276 Steering Wheel Harness to Instrument Panel Harness*
X289	Side Access Panel Harness to Instrument Panel Harness	PRP	Inside the vehicle, towards the left front	—	*X289 Side Access Panel Harness to Instrument Panel Harness (PRP)*

X290	Instrument Panel Harness to Side Access Panel Harness	PRP	Inside the vehicle, towards the left front	—	*X290 Instrument Panel Harness to Side Access Panel Harness (PRP)*
X305	Chassis Harness to Fuel Pump Jumper Harness	K08	Chassis harness to the coolant heater fuel pump jumper harness, left center inner frame rail near the fuel pump assembly	*Chassis Harness Routing (LGH)*	*X305 Chassis Harness to Fuel Pump Jumper Harness (K08)*
X306	Body Harness to Passenger Seat Harness	—	Body harness to the front passenger seat harness, right side of the passenger compartment below the passenger seat	*Driver Seat Harness Routing and Front Passenger Seat Harness Routing*	*X306 Body Harness to Passenger Seat Harness*
X307	Body Harness to Driver Seat Harness	—	Body harness to the driver seat harness, left side of the passenger compartment below the driver seat	*Driver Seat Harness Routing and Front Passenger Seat Harness Routing*	*X307 Body Harness to Driver Seat Harness*
X316	Transmission Harness to Fuel Pump Harness	LGH	Transmission jumper harness to the fuel pump harness,	—	*X316 Transmission Harness to Fuel Pump Harness (LGH)*
X318	Instrument Panel Harness to Body Harness	—	Instrument panel harness to the body harness, behind the left kick panel	*Body Harness Routing - Left Front of Passenger Compartment*	*X318 Instrument Panel Harness to Body Harness*
X319	Rear Heater Switch Harness to Body Harness	ENC, C69, or C36	Rear heater switch harness to the body harness, behind the left kick panel	*Body Harness Routing - Left Front of Passenger Compartment*	*X319 Rear Heater Switch Harness to Body Harness (ENC, C69, or C36)*
X320	Upfitter Provision Harness to Body Harness	YF2 or YF7	Upfitter harness to the body harness, left side of the passenger compartment lower left C-pillar	*Body Harness Routing - Left Rear (Passenger or Cargo)*	*X320 Upfitter Provision Harness to Body Harness (YF2 or YF7)*
X321	Upfitter Provision Harness to Body Harness	YF2 or YF7	Upfitter harness to the body harness, left side of the passenger compartment center of the left C-pillar	—	*X321 Upfitter Provision Harness to Body Harness (YF2 or YF7)*
X323	Left Rear Side Impact Sensor Jumper to Body Harness	ASF	At the base of the left C-pillar	—	*X323 Left Rear Side Impact Sensor Jumper to Body Harness (ASF)*
X324	Right Rear Side Impact Sensor Jumper to Body Harness	ASF	At the base of the right C-pillar	*Body Harness Routing - Right C-Pillar*	*X324 Right Rear Side Impact Sensor Jumper to Body Harness (ASF)*
X329	Instrument Panel Harness to Body Harness	UVC	Instrument panel harness to the body harness, in the passenger compartment under the driver seat	*Body Harness Routing - Left Front of Passenger Compartment*	*X329 Instrument Panel Harness to Body Harness (UVC)*
X330	Instrument Panel Harness to Body Harness	—	Instrument panel harness to the body harness, under the driver seat	*Instrument Panel Harness Routing - Dash Area (1 of 2)*	*X330 Instrument Panel Harness to Body Harness*
X331	Instrument Panel Harness to Body Harness	—	Instrument panel harness to the body harness, under the driver seat	*Instrument Panel Harness Routing - Dash Area (1 of 2)*	*X331 Instrument Panel Harness to Body Harness*
X350	Chassis Harness to LPG Chassis Harness	KO7	Chassis harness to LPG chassis harness, in the vehicle underbody, left middle of frame rail	—	• *X350 Chassis Harness to LPG Chassis Harness (KO7 with UFM)* • *X350 Chassis Harness to LPG Harness (KO7 with UFP)*
X350	Chassis Harness to CNG Power Harness	FHZ	Chassis harness to CNG power harness, in the vehicle underbody, left middle	—	*X350 Chassis Harness to CNG Power Harness (FHZ)*
X395	Chassis Harness to Reductant Jumper Harness	LGH	Chassis harness to reductant jumper harness, near left side of the frame, above the reductant tank	*Chassis Harness Routing (LGH)*	*X395 Chassis Harness to Reductant Jumper Harness (LGH)*
X400	Right Rear Cargo Door to Body Harness	Passenger or Cargo	Right cargo door harness to the body harness, right rear of the passenger compartment center of the right D-pillar	*Body Harness Routing - Right Rear (Passenger or Cargo)*	*X400 Right Rear Cargo Door to Body Harness (Passenger or Cargo)*

X401	Left Tail Lamp Harness to Body Harness	Passenger or Cargo	Left tail lamp harness to the body harness, left rear of the passenger compartment center of the left D-pillar	*Body Harness Routing - Left Rear (Passenger or Cargo)*	*X401 Left Tail Lamp Harness to Body Harness (Passenger or Cargo)*
X402	Right Tail Lamp Harness to Body Harness	Passenger or Cargo	Right tail lamp harness to the body harness, RR of the passenger compartment center of the right D-pillar	*Body Harness Routing - Right Rear (Passenger or Cargo)*	*X402 Right Tail Lamp Harness to Body Harness (Passenger or Cargo)*
X403	Rear Cargo Door Harness to Body Harness	UVC	Rear cargo door harness to body harness,	*Body Harness Routing - Right Rear (Passenger or Cargo)*	*X403 Rear Cargo Door Harness to Body Harness (UVC)*
X405	Cutaway Rear Lighting Connector to Chassis Harness	Cutaway	Cutaway rear lighting connector to the chassis harness, left rear frame rail	*Chassis Harness Routing (L20, L96, or LC8)*	*X405 Cutaway Rear Lighting Connector to Chassis Harness (Cutaway)*
X407	Rear HVAC Harness to Body Harness	C36 or C69	Rear HVAC harness to the body harness, left rear of the passenger compartment upper back side of the auxiliary HVAC module at the D-pillar	*Body Harness Routing - Left Rear (Passenger or Cargo)*	*X407 Rear HVAC Harness to Body Harness (C36 or C69)*
X408	Rear Bumper Harness to Chassis Harness	UD7	Rear bumper harness to chassis harness,	—	*X408 Rear Bumper Harness to Chassis Harness (UD7)*
X409	Rear HVAC Harness to Body Harness	C36 or C69	Rear HVAC harness to body harness, left rear of the passenger compartment upper back side of the auxiliary HVAC module	*Body Harness Routing - Left Rear (Passenger or Cargo)*	*X409 Rear HVAC Harness to Body Harness (C36 or C69)*
X411	Left Rear Cargo Door Harness to Body Harness	Passenger or Cargo	Left cargo door harness to the body harness, left rear of the passenger compartment center of the left D-pillar	*Body Harness Routing - Left Rear (Passenger or Cargo)*	*X411 Left Rear Cargo Door Harness to Body Harness (Passenger or Cargo)*
X412	Right Rear Cargo Door Harness to Body Harness	Passenger or Cargo	Right cargo door harness to the body harness, right rear of the passenger compartment center of the right D-pillar	*Body Harness Routing - Right Rear (Passenger or Cargo)*	*X412 Right Rear Cargo Door to Body Harness (Passenger or Cargo)*
X413	Chassis Harness to Left Rear Wheel Speed Sensor Jumper Harness	JL4	Chassis harness to the left rear wheel speed sensor jumper harness, left rear frame rail	—	*X413 Chassis Harness to Left Rear Wheel Speed Sensor Jumper Harness (JL4)*
X414	Chassis Harness to Right Rear Wheel Speed Sensor Jumper Harness	JL4	Chassis harness to the right rear wheel speed sensor jumper harness, right rear frame rail	—	*X414 Chassis Harness to Right Rear Wheel Speed Sensor Jumper Harness (JL4)*
X415	Roof Center Speaker Harness to Body Harness	Passenger or Cargo	Rear overhead speakers jumper harness to the body harness, rear of the passenger compartment center of the rear roof rail	—	*X415 Roof Center Speaker Harness to Body Harness (Passenger or Cargo)*
X417	Dome Lamp Harness to Body Harness	Cargo without YF7	Dome lamp to the body harness, left side of the passenger compartment near the upper left C-pillar	*Body Harness Routing - Roof Area*	*X417 Dome Lamp Harness to Body Harness (Cargo without YF7)*
X419	Center High Mounted Stop Lamp Harness to Body Harness	Passenger or Cargo	CHMSL harness to the body harness, rear of the passenger compartment center of the rear roof rail	*Body Harness Routing - Right Rear (Passenger or Cargo)*	*X419 Center High Mounted Stop Lamp Harness to Body Harness (Passenger or Cargo)*
X420	Headliner Harness to Body Harness	Passenger or Cargo	Headliner harness to the body harness, top of the right D-pillar	*Body Harness Routing - Roof Area*	*X420 Headliner Harness to Body Harness (Passenger or Cargo)*
X460	Chassis to Harness Trailer Provision	Cutaway with UY7 and NE7	Trailer Provision to Chassis Harness, in rear near Trailer Harness	—	*X460 Chassis Harness to Trailer Provision (Cutaway with UY7 and NE7)*
X500	Driver Door Harness to Body Harness	—	Driver door harness to the body harness, behind the left kick panel	*Body Harness Routing - Left Front of Passenger Compartment*	*X500 Driver Door Harness to Body Harness*
X501	Driver Side Impact Sensor Jumper Harness to Driver Door Harness	ASF	Driver side impact sensor harness to the driver door harness, in the driver door behind the trim panel	—	*X501 Driver Side Impact Sensor Jumper Harness to Driver Door Harness (ASF)*

X600	Passenger Door Harness to Body Harness	—	Passenger door harness to the body harness, behind the right kick panel	*Body Harness Routing - Right Front of Passenger Compartment*	*X600 Passenger Door Harness to Body Harness*
X601	Passenger Side Impact Sensor Jumper Harness to Passenger Door Harness	ASF	Passenger side impact sensor harness to the passenger door harness, in the passenger door behind the trim panel	—	*X601 Passenger Side Impact Sensor Jumper Harness to Passenger Door Harness (ASF)*
X901	Defogger Jumper Harness to Left Rear Cargo Door Harness	C49 with A12	Rear window defogger jumper harness to the left cargo door harness, in the left cargo door	*Rear Cargo Doors Harness Routing (Passenger or Cargo)*	*X901 Defogger Jumper Harness to Left Rear Cargo Door Harness (C49 with A12)*
X902	Rear Window Defogger Jumper Harness to Right Rear Cargo Door Harness	C49 with A12	Rear window defogger jumper harness to the right cargo door harness, in the right cargo door	*Rear Cargo Doors Harness Routing (Passenger or Cargo)*	*X902 Rear Window Defogger Jumper Harness to Right Rear Cargo Door Harness (C49 with A12)*
G100	Forward Lamp Harness	—	Left front of the engine compartment, attached to the front of the left fender	*G100 and G101*	—
G101	Forward Lamp Harness	—	Right front of the engine compartment, attached near the front of the right fender	*G100 and G101*	—
G102	Engine Harness	L20, L96, or LC8	Rear of the engine compartment, left rear of the engine on the left cylinder head	*G102 and G103 (L20, L96, or LC8)*	—
G102	Engine Harness	LGH	Right side of engine compartment, on inner fender wall, behind right headlight	*G102 and G103 (LGH)*	—
G103	Engine Harness	L20, L96, or LC8	Rear of the engine compartment, left rear of the engine on the left cylinder head	*G102 and G103 (L20, L96, or LC8)*	—
G103	Engine Harness	LGH	Right side of engine compartment, on inner fender wall, behind right headlight	*G102 and G103 (LGH)*	—
G104	Negative Battery Cable	—	Mounted on the engine, extending towards the battery	—	—
G105	Negative Battery Cable	—	Front of the engine compartment, right front of the inner frame rail	—	—
G106	Negative Battery Cable	—	Front of the engine compartment, right front fender	—	—
G107	LPG Harness	KO7 with UFP	Left front lower side of the engine block	—	—
G108	LPG Harness	KO7	Left side inner frame rail	—	—
G109	Engine Harness	LGH	Right front lower side of the engine block	*G109 (LGH)*	—
G110	Engine Harness	LGH	Mounted to the lower left front of the engine	*G110 (LGH)*	—
G300	Chassis Harness	—	Left side outer frame, near the EBCM	*G300 (L20, L96, or LC8)*	—
G301	Instrument Panel	—	Left front of the passenger compartment, behind the kick panel next to G302	—	—
G302	Instrument Panel	—	Left front of the passenger compartment, behind the kick panel next to G301	*G302 and G347*	—
G304	Instrument Panel	—	Right front of the passenger compartment, behind the kick panel	*G304*	—
G305	Auxiliary Battery Negative Cable	TP2 or LGH	Left center outer frame rail, near the auxiliary battery	*G305 (LGH or TP2)*	—

G347	Body Harness	—	Left side of the passenger compartment, lower left B-pillar part of JX347	*G302 and G347*	—
G348	Body Harness	—	Right side of the passenger compartment, lower right B-pillar part of JX348	—	—
G350	CNG Harness	FHZ	In vehicle underbody, near center, at rear of transmission case	—	—
G400	Chassis Harness	—	Left rear inner side frame rail	*G400 (1 of 2)*	—
G401	Body Harness	Passenger or Cargo	Right rear of the passenger compartment, upper right D-pillar	*G401 (Passenger or Cargo)*	—
G402	Body Harness	Passenger or Cargo	Left rear of the passenger compartment, center left D-pillar	*G402 (Passenger or Cargo)*	—
G403	Side Access Panel Harness	PRP	Left rear of the passenger compartment, center left D-pillar	—	—
J100	Forward Lamp Harness	—	At the left front of the engine compartment, just behind the left front headlamp assembly	—	—
J101	Engine Harness	—	In the engine harness, on the right side of the engine, approximately 5 cm (2 in) from the MAP sensor breakout	• *Engine Harness Routing - Left Rear of Engine (L20, L96, or LC8)* • *Engine Harness Routing - Left Side of Engine Compartment (LGH)*	—
J102	Engine Harness	—	In the engine harness, on the right side of the engine, approximately 6 cm (2 in) from the MAP sensor breakout	• *Engine Harness Routing - Left Rear of Engine (L20, L96, or LC8)* • *Engine Harness Routing - Left Side of Engine Compartment (LGH)*	—
J103	Chassis Harness	JL4	On the Chassis Harness, adjacent to K17 Electronic Brake Control Module	—	—
J110	Forward Lamp Harness	—	In the forward lamp harness, Left front of the vehicle, approximately 12 cm (5 in) from the left headlamp connector breakout	*Forward Lamp Harness Routing*	—
J115	Engine Harness	—	In the engine harness, in the right front of the engine compartment, approximately 15 cm (6 in) from the X101 breakout	• *Engine Harness Routing - Front (L20, L96, or LC8)* • *Engine Harness Routing - Left Side of Engine Compartment (LGH)*	—
J119	Chassis Harness	K08	In the chassis harness, near the left front inner frame rail, approximately 15 cm (6 in) from the coolant heater breakout	*Chassis Harness Routing (LGH)*	—
J121	Forward Lamp Harness	—	In the forward lamp harness, near the front center of the vehicle, approximately 48 cm (19 in) from the left headlamp breakout	*Forward Lamp Harness Routing*	—
J122	Forward Lamp Harness	—	In the forward lamp harness, near the left front of the vehicle, approximately 12 cm (5 in) from the underhood fuse block X4 breakout	*Forward Lamp Harness Routing*	—
J123	Engine Harness	—	In the engine harness, near the left front side of the vehicle, approximately 16 cm (6 in) from the underhood fuse block X1 breakout	• *Engine Harness Routing - Front (L20, L96, or LC8)* • *Engine Harness Routing - Left Side of Engine Compartment (LGH)*	—

J127	Transmission Internal Harness	—	Internal to T12 Automatic Transmission Assembly	—	—
J130	LPG Harness	KO7 with UFM	Integral to the LPG Harness	—	—
J140	Engine Harness	LGH with KD9	In-between G13E Generator - Auxiliary and K20 Engine Control Module	—	—
J143	Engine Harness	L20, L96, or LC8	Adjacent to B52C Heated Oxygen Sensor - Bank 1 Sensor 1 and B52E Heated Oxygen Sensor - Bank 2 Sensor 1	—	—
J144	Engine Harness	L20, L96, or LC8	Adjacent to B52D Heated Oxygen Sensor - Bank 1 Sensor 2 and B52F Heated Oxygen Sensor - Bank 2 Sensor 2	—	—
J145	Engine Harness	LGH	In the engine chassis harness, at the left front side of the engine compartment, approximately 4 cm (1.5 in) from the engine control module (ECM) X1 (LGH) breakout	—	—
J160	Engine Harness	LGH	In the engine harness, in the left front of the engine compartment, approximately 5.5 cm (2.2 in) from the X110 breakout	*Engine Harness Routing - Left Front of Engine (LGH)*	—
J161	Engine Harness	LGH	In the engine harness, in the left front of the engine compartment, approximately 6.5 cm (2.5 in) from the engine control module X2 connector breakout	*Engine Harness Routing - Left Side of Engine Compartment (LGH)*	—
J162	Engine Harness	LGH	In the engine harness, in the right front of the engine compartment, approximately 10 cm (3.9 in) from the G109 breakout	*Engine Harness Routing - Right Front of Engine (LGH)*	—
J163	Engine Harness	LGH	In the engine harness, in the right front of the engine compartment, approximately 23 cm (9 in) from the G109 breakout	*Engine Harness Routing - Right Front of Engine (LGH)*	—
J164	Engine Harness	LGH	In the engine jumper harness, in the left front of the engine compartment, approximately 9 cm (3.5 in) from the X110 connector	*Engine Harness Routing - Left Front of Engine (LGH)*	—
J167	LPG Harness	KO7 with UFM	In the LPG Main harness, first splice from battery positive ring terminal circuit	—	—
J168	LPG Harness	KO7 with UFM	In the LPG Main harness, near “Wait To Start” Lamp Relay	—	—
J169	LPG Harness	KO7 with UFM	In the LPG Main harness, in battery positive circuit closest to bulkhead, in underhood area	—	—
J170	LPG Harness	KO7 with UFM	In the LPG Main harness, dividing battery positive voltage between LPG Bypass Solenoid relay and vacuum pump	—	—
J171	LPG Harness	KO7 with UFM	In the LPG Main harness, inside vehicle, dividing battery positive voltage to LPG Control Module and circuit leading to LPG Control Module with resistor	—	—
J172	LPG Harness	KO7 with UFM	In the LPG Main harness, in battery positive voltage circuit, powering LPG Bypass Solenoid Relay	—	—
J173	LPG Harness	KO7	Integral to the LPG Harness	—	—

J174	LPG Harness	KO7	Integral to the LPG Harness	—	—
J176	LPG Harness	KO7 with UFM	In the LPG Main harness, in underhood area, dividing ground to LPG Bypass Solenoid	—	—
J179	LPG Harness	KO7 with UFM	In the LPG Main harness, inside of vehicle, closest to LPG Control Module dividing ground between module and Wait To Start Lamp	—	—
J182	Left Ignition Coil Harness	L20, L96, or LC8	In the odd ignition/coil module jumper harness, top left of the engine	—	—
J183	Right Ignition Coil Harness	L20, L96, or LC8	In the even ignition/coil module jumper harness, top right of the engine	—	—
J184	Left Ignition Coil Harness	L20, L96, or LC8	In the odd ignition/coil module jumper harness, top left of the engine	—	—
J185	Right Ignition Coil Harness	L20, L96, or LC8	In the even ignition/coil module jumper harness, top right of the engine	—	—
J188	Right Ignition Coil Harness	L20, L96, or LC8	In the even ignition/coil module jumper harness, top right of the engine	—	—
J202	Steering Column Harness	—	In the steering column harness, approximately 25 cm (9 in) from the X200 connector	—	—
J203	Steering Column Harness	—	In the steering column harness, approximately 27 cm (10.5 in) from the X200 connector	—	—
J205	Steering Column Harness	—	In the steering column harness, approximately 30 cm (12 in) from the X200 connector	—	—
J207	Instrument Panel	—	In the instrument panel harness, center of the instrument panel, approximately 70 cm (27 in) from the radio and HVAC control assembly breakout	*Instrument Panel Harness Routing - Dash Area (2 of 2)*	—
J208	Steering Wheel Harness	K34 with W1Y	In the steering wheel harness, near the X200 connector	—	—
J209	Steering Wheel Harness	K34 with W1Y	In the steering wheel harness, near the X200 connector	—	—
J210	Steering Wheel Harness	K34 or W1Y	In the steering wheel harness, near the X200 connector	—	—
J223	Instrument Panel	UVC without UI8	Adjacent to K9 Body Control Module	—	—
J231	Instrument Panel	—	In the instrument panel harness, left side of the instrument panel, approximately 5 cm (2 in) from the X200 breakout towards the instrument panel cluster connector	*Instrument Panel Harness Routing - Dash Area (2 of 2)*	—
J244	Instrument Panel	—	In the instrument panel harness, left side of the instrument panel, approximately 12 cm (5 in) from the X200 breakout towards the instrument panel cluster connector	*Instrument Panel Harness Routing - Dash Area (2 of 2)*	—
J245	Instrument Panel	DEB or DE5	In the instrument panel harness, center of the instrument panel, approximately 30 cm (12 in) from the radio and HVAC control assembly breakout	*Instrument Panel Harness Routing - Dash Area (2 of 2)*	—

J246	Instrument Panel	DEB or DE5	In the instrument panel harness, center of the instrument panel, approximately 43.5 cm (17 in) from the radio and HVAC control assembly breakout	*Instrument Panel Harness Routing - Dash Area (2 of 2)*	—
J247	Instrument Panel	—	In the instrument panel harness, left side of the instrument panel, approximately 36 cm (14.37 in) from the C200 breakout towards the underhood fuse block	*Instrument Panel Harness Routing - Dash Area (2 of 2)*	—
J248	Instrument Panel	—	In the instrument panel harness, left side of the instrument panel, approximately 8 cm (3.14 in) from the C200 breakout towards the instrument panel cluster connector	*Instrument Panel Harness Routing - Dash Area (2 of 2)*	—
J249	Instrument Panel	—	In the instrument panel harness, right side of the instrument panel, approximately 21 cm (8 in) from the G304 breakout	*Instrument Panel Harness Routing - Dash Area (2 of 2)*	—
J250	Instrument Panel	—	In the instrument panel harness, right side of the instrument panel, approximately 5 cm (2.16 in) from the air temperature actuator connector breakout towards the inflatable restraint instrument panel module connector	*Instrument Panel Harness Routing - Dash Area (2 of 2)*	—
J263	Instrument Panel	TP2	In the instrument panel harness, left side of the instrument panel, approximately 36 cm (14.37 in) from the C200 breakout towards the underhood fuse block	—	—
J264	Steering Column Harness	—	In the steering wheel harness, approximately 20 cm (8 in) from the X200 connector	—	—
J270	Instrument Panel	U2K or UBS	In the instrument panel harness, approximately 15 cm (6 in) from the digital radio receiver and cigar lighter connectors breakout	—	—
J271	Instrument Panel	U2K, UBS, or UE1	In the instrument panel harness, approximately 7.5 cm (3 in) from the vehicle communication interface module and cigar lighter connectors breakout	—	—
J280	Instrument Panel	Cutaway without YF7	In the instrument panel harness, approximately 20 cm (7.9 in) from the body fuse block and air bag module connectors breakout	—	—
J300	Side Access Panel Harness	PRP	Slightly forward of X53A Fuse Block - Rear Body	—	—
J301	Chassis Harness	L20, L96, or LC8	In the chassis harness, left side frame, approximately 21 cm (8 in) from the fuel pump connector breakout	*Chassis Harness Routing (L20, L96, or LC8)*	—
J302	Instrument Panel	PRP	Adjacent to K9 Body Control Module	—	—
J307	Front Headliner Harness	C69 or YF7	In the front headliner harness, center of the headliner, approximately 15 cm (6 in) from the X205 breakout towards the left vanity mirror lamp connector	—	—
J308	Body Harness	C69	In the body harness, left side of the passenger compartment, approximately 22 cm (9 in) from the breakout for the door jamb switch LR side	*Body Harness Routing - Rear Overview (Passenger or Cargo)*	—
J309	Side Access Panel Harness	PRP	Adjacent to X53A Fuse Block - Rear Body	—	—

J310	Body Harness	C69	In the body harness, left side of the passenger compartment, approximately 32 cm (12.79 in) from the breakout for the door jamb switch left rear side	*Body Harness Routing - Rear Overview (Passenger or Cargo)*	—
J311	Body Harness	C69	In the body harness, left side of the passenger compartment, approximately 5 cm (2 in) from the door jamb switch LR side breakout	*Body Harness Routing - Rear Overview (Passenger or Cargo)*	—
J314	Front Headliner Harness	—	In the front headliner harness, center of the headliner, approximately 22 cm (8.5 in) from the X205 breakout towards the left vanity mirror lamp connector	—	—
J315	Chassis Harness	—	In the chassis harness, left side frame, approximately 31 cm (12 in) from the G300 breakout	• *Chassis Harness Routing (L20, L96, or LC8)* • *Chassis Harness Routing (LGH)*	—
J322	Body Harness	AU3	In the body harness, near the front passenger seat, approximately 40 cm (16 in) from the X306 breakout	—	—
J323	Body Harness	AU3	In the body harness, near the front passenger seat, approximately 20 cm (8 in) from the X306 breakout	—	—
J330	Rear Headliner Harness	Passenger	In the rear headliner harness, center of the headliner, approximately 30 cm (12 in) to the courtesy reading lamp rear breakout	—	—
J331	Body Harness	Passenger	In the body harness, near the front passenger seat, approximately 15 cm (6 in) from the X306 breakout	*Body Harness Routing - Rear Overview (Passenger or Cargo)*	—
J332	Front Headliner Harness	DH6 with YF7	In the front headliner harness, center of the headliner, approximately 11 cm (4 in) from the front right sunshade breakout	—	—
J333	Front Headliner Harness	DH6 without YF7	In the front headliner harness, center of the headliner, approximately 20 cm (8 in) from the right sunshade breakout	—	—
J334	Body Harness	UVC	Approximately 5” rearward of X53A Fuse Block - Rear Body	—	—
J348	Side Access Panel Harness	PRP	In the cargo area, in-between the headliner and the roof, in-between the left side access panel and the right side access panel	—	—
J350	Side Access Panel Harness	PRP with UF2	In the cargo area, in-between the headliner and the roof, in-between the left side access panel and the right side access panel	—	—
J355	Front Headliner Harness	YF7	In the front headliner harness, center of the headliner, approximately 61 cm (24 in) from the X205 breakout towards the left vanity mirror lamp connector	—	—
J356	Body Harness	—	In the body harness, on the left front side of the vehicle, approximately 20 cm (7.87 in) from the underhood fuse block breakout	*Body Harness Routing - Left Front of Passenger Compartment*	—
J361	LPG Harness	KO7 with UFP	In the LPG chassis harness, about 12.7 cm (5 inches) from LPG Control Module	—	—

J362	LPG Harness	KO7 with UFP	In the LPG chassis harness, about 30.48 cm (12 inches) from Primary Liquid Propane Delivery Module	—	—
J363	LPG Harness	KO7 with UFP	In the LPG chassis harness, about 7.62 cm (3 inches) from Primary Fuel Pump Relay	—	—
J364	LPG Harness	KO7 with UFP	In the LPG chassis harness, about 12.7 cm (5 inches) from Primary Fuel Pump Relay	—	—
J365	LPG Harness	KO7 with UFP	In the LPG chassis harness, about 7.62 cm (3 inches) from Scavenge Fuel Pump Relay	—	—
J366	LPG Harness	KO7 with UFP	In the LPG chassis harness, about 12.7 cm (5 inches) from Scavenge Fuel Pump Relay	—	—
J367	LPG Harness	KO7 with UFP	In the LPG chassis harness, about 7.62 cm (3 inches) from Secondary Fuel Pump Relay	—	—
J368	LPG Harness	KO7 with UFP	In the LPG chassis harness, about 434.4 cm (171 inches) from G105	—	—
J369	LPG Harness	KO7 with UFP	In the LPG chassis harness, about 7.62 cm (3 inches) from Primary Fuel Level Sensor	—	—
J370	Body Harness	UVC without UI8	In the body harness, approximately 27.5 cm (10.8 in) from the Yaw and Lateral Accelerometer Sensor towards Fuse Block - Body	*Body Harness Routing - Left Front of Passenger Compartment*	—
J371	Body Harness	UVC without UI8	In the body harness, approximately 32.5 cm (12.8 in) from the Yaw and Lateral Accelerometer Sensor towards Fuse Block - Body	*Body Harness Routing - Left Front of Passenger Compartment*	—
J372	Body Harness	UVC without UI8	In the body harness, approximately 22.5 cm (8.9 in) from the Yaw and Lateral Accelerometer Sensor towards Fuse Block - Body	*Body Harness Routing - Left Front of Passenger Compartment*	—
J373	Body Harness	Passenger	At the base of the right C-pillar	—	—
J377	Side Access Panel Harness	PRP	Adjacent to X53A	—	—
J378	Side Access Panel Harness	PRP	Adjacent to X53A	—	—
J401	Body Harness	C36, C49, or C69	In the body harness, in the left rear of the vehicle, approximately 21 cm (8 in) from the X401 breakout	*Body Harness Routing - Rear Overview (Passenger or Cargo)*	—
J402	Chassis Harness	—	In the chassis harness, left frame, approximately 20 cm (7.87 in) from the G400 breakout towards the EBCM connector	*Chassis Harness Routing (L20, L96, or LC8)*	—
J403	Body Harness	—	In the body harness, left rear of the passenger compartment, approximately 18.5 cm (7 in) from the X402 breakout	*Body Harness Routing - Right Rear (Passenger or Cargo)*	—
J404	Chassis Harness	L20, L96, or LC8	In the chassis harness, left frame, approximately 10 cm (4 in) from the G400 breakout towards the EBCM connector	*Chassis Harness Routing (LGH)*	—
J405	Rear HVAC Harness	C36 or C69	In the rear HVAC harness, left rear of the passenger compartment, approximately 13 cm (5.31 in) from the auxiliary blower motor relay breakout towards X409	—	—

J407	Rear Headliner Harness	—	In the rear headliner harness, center of the headliner, approximately 6.5 cm (2.5 in) from X304 towards the rear courtesy/reading lamp connector	—	—
J408	Side Access Panel Harness	PRP	In the Left Side Access Panel compartment	—	—
J409	Side Access Panel Harness	PRP	In the Right Side Access Panel compartment	—	—
J410	Body Harness	—	In the body harness, in the left rear of the vehicle, approximately 47 cm (18 in) from the X401 breakout	*Body Harness Routing - Left Rear (Passenger or Cargo)*	—
J411	Rear HVAC Harness	C69	In the rear HVAC harness, left rear of the passenger compartment, approximately 20 cm (8 in) from the blower motor relay breakout, towards X409	—	—
J412	Rear HVAC Harness	C36, C69, or ENC	In the rear HVAC harness, left rear of the passenger compartment, approximately 7 cm (2.8 in) from the blower motor relay breakout towards X409	—	—
J413	Rear HVAC Harness	C69	In the rear HVAC harness, left rear of the passenger compartment, approximately 10 cm (4 in) from the auxiliary blower motor resistor assembly breakout	—	—
J420	Rear Bumper Harness	UD7	In the rear bumper harness, approximately 57 cm (22 in) from the right rear middle object alarm sensor towards the left rear corner object alarm sensor	—	—
J421	Rear Bumper Harness	UD7	In the rear bumper harness, approximately 15 cm (6 in) from the left rear corner object alarm sensor towards the right rear middle object alarm sensor	—	—
J430	LPG Harness	KO7 with UFM	In the LPG Fuel Tank harness, about 1778 mm (70 inches) from X350	—	—
J431	LPG Harness	KO7 with UFM	In the LPG Fuel Tank harness, about 152.4 mm (6 inches) from X180	—	—
J432	LPG Harness	KO7 with UFM	In the LPG Fuel Tank harness, about 279.4 mm (11 inches) from Fuel Supply Solenoid	—	—
J450	Body Harness	US8, YF2, or YF7	In the body harness, in the rear of the vehicle, approximately 10 cm (3.93 in) from the X415 breakout	*Body Harness Routing - Right Rear (Passenger or Cargo)*	—
J451	Body Harness	YF2 or YF7	In the body harness, in the rear of the vehicle, approximately 17 cm (6.5 in) from the X415 breakout	*Body Harness Routing - Right Rear (Passenger or Cargo)*	—
J452	Body Harness	US8, YF2, or YF7	In the body harness, approximately 17 cm (6.5 in) from the X419 breakout	*Body Harness Routing - Right Rear (Passenger or Cargo)*	—
J453	Body Harness	YF2 or YF7	In the body harness, in the left rear of the vehicle, approximately 10 cm (4 in) from the X419 breakout	*Body Harness Routing - Right Rear (Passenger or Cargo)*	—
J460	Chassis Harness	UY7 with NE7	In the chassis harness, in the rear of the vehicle, approximately 15.5 cm (6.1 inches) from trailer harness breakout	—	—

J500	Driver Door Harness	AU3, DEB, DE5, or A31	In the left front door harness, driver door, approximately 7 cm (3 in) from the left front door speaker breakout	—	—
J501	Driver Door Harness	AU3	In the left front door harness, driver door, approximately 6 cm (2.36 in) from the driver outside rearview mirror breakout	—	—
J502	Driver Door Harness	DEB or DE5	In the left front door harness, driver door, approximately 4 cm (2 in) from the left front door speaker breakout	—	—
J600	Passenger Door Harness	AU3, DEB, DE5, or A31	In the right front door harness, front passenger door, approximately 4 cm (2 in) from the passenger outside rearview mirror breakout	—	—
J601	Passenger Door Harness	AU3	In the right front door harness, front passenger door, approximately 5 cm (2 in) from the passenger outside rearview mirror breakout	—	—
J901	Right Rear Cargo Door Harness	AU3	In the rear cargo door harness, approximately 4 cm (1.5 in) from the X902 breakout	—	—
J902	Right Rear Cargo Door Harness	C49	In the right rear door harness, right rear cargo door, approximately 12 cm (4.7 in) from the X902 breakout	*Rear Cargo Doors Harness Routing (Passenger or Cargo)*	—
JX200	Instrument Panel Harness	—	In the instrument panel harness, left front side of the floor, where the carpet ends behind the brake pedal next to JX250	*Instrument Panel Harness Routing - Dash Area (1 of 2)*	*JX200*
JX250	Instrument Panel Harness	—	In the instrument panel harness, left front side of the floor, where the carpet ends behind the brake pedal next to JX200	*Instrument Panel Harness Routing - Dash Area (1 of 2)*	*JX250*
JX347	Body Harness	—	In the body harness, left side of the passenger compartment, attached to the lower left B-pillar part of G347	*Body Harness Routing - Left Front of Passenger Compartment*	*JX347*
JX348	Body Harness	—	In the body harness, right side of the passenger compartment, attached to the lower right B-pillar part of G348	*Body Harness Routing - Right Front of Passenger Compartment*	*JX348*

Front of Vehicle/Engine Compartment Component Views

Front Exterior Lighting (Base)

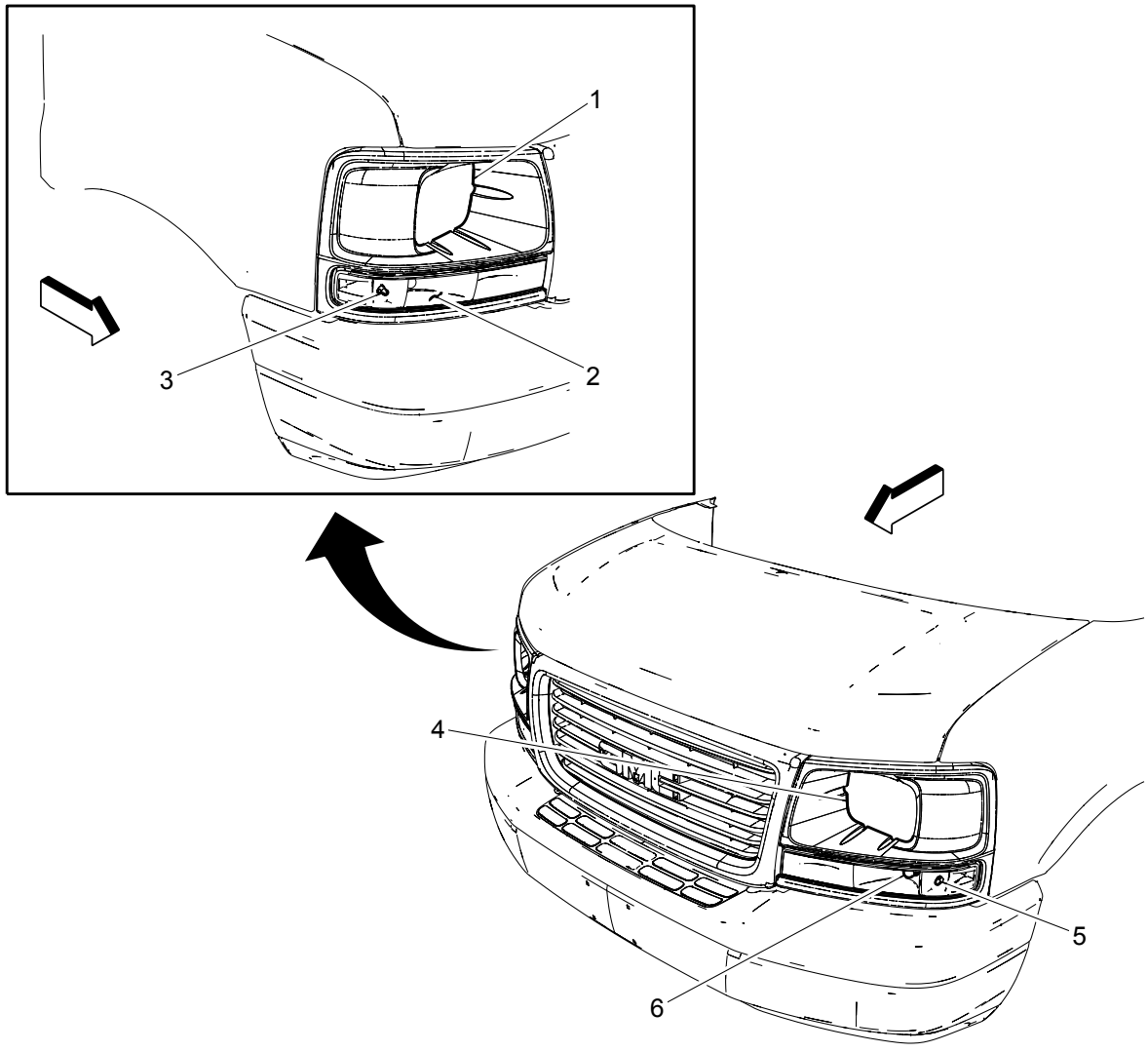

Items

1. E13R Headlamp - Right (Without V22)
2. E4P Park/Turn Signal Lamp - Right
3. E2RF Side Marker Lamp - Right Front
4. E13L Headlamp - Left (Without V22)
5. E2LF Side Marker Lamp - Left Front
6. E4N Park/Turn Signal Lamp - Left

Front Exterior Lighting (Uplevel)

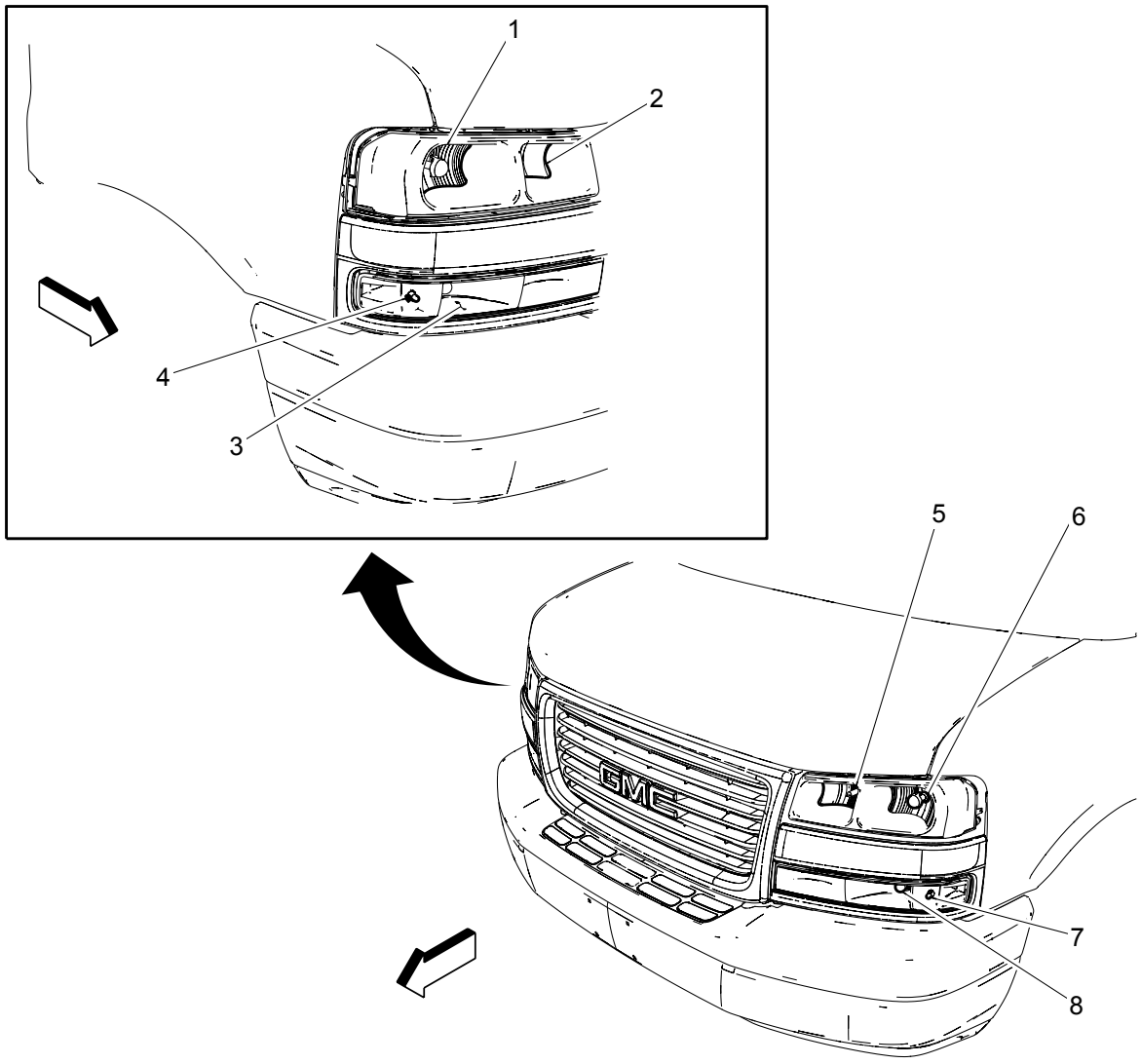

Items

1. E4H Headlamp - Right Low Beam (V22)
2. E4F Headlamp - Right High Beam (V22)
3. E4P Park/Turn Signal Lamp - Right
4. E2RF Side Marker Lamp - Right Front
5. E4E Headlamp - Left High Beam (V22)
6. E4G Headlamp - Left Low Beam (V22)
7. E2LF Side Marker Lamp - Left Front
8. E4N Park/Turn Signal Lamp - Left

Ambient Air Temperature Sensor (UFA)

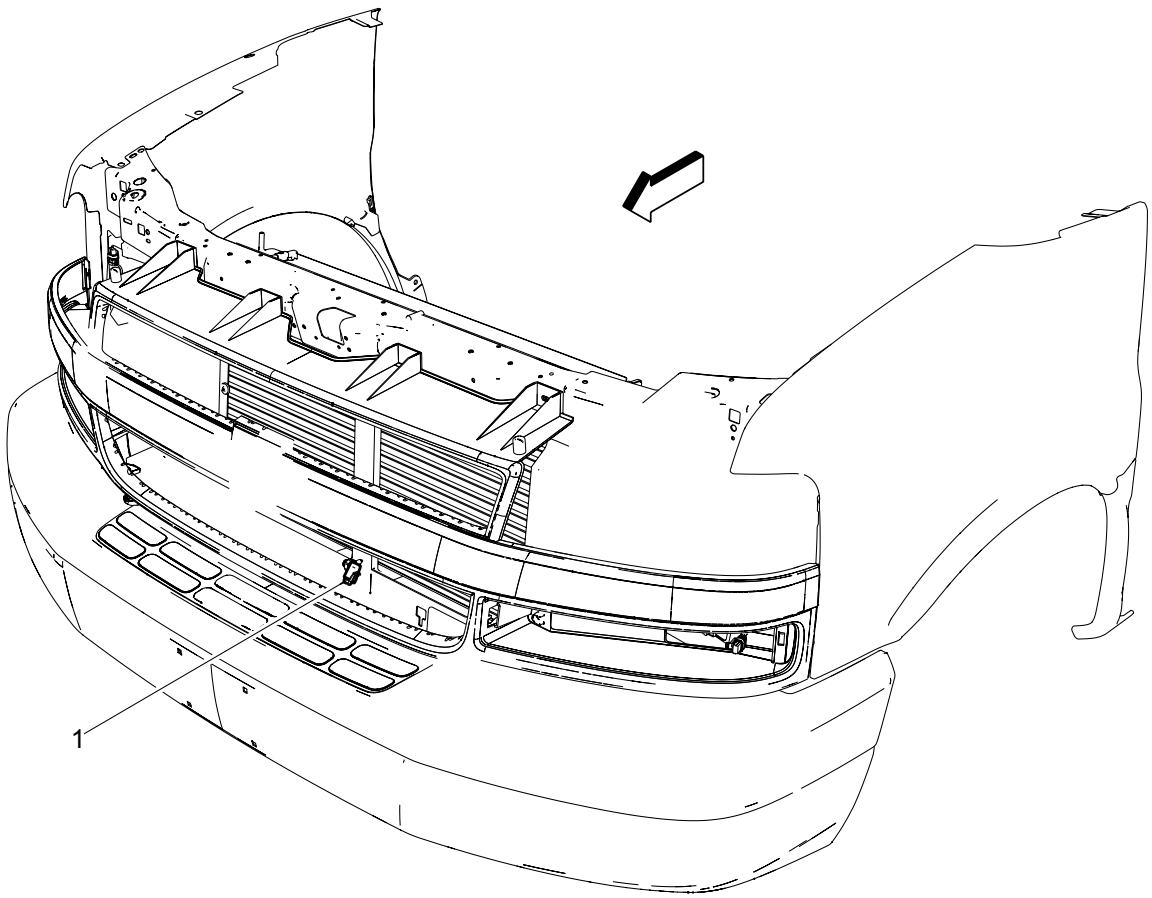

Items

1. B9 Ambient Air Temperature Sensor (UFA)

Front of Engine Compartment Components (1 of 2)

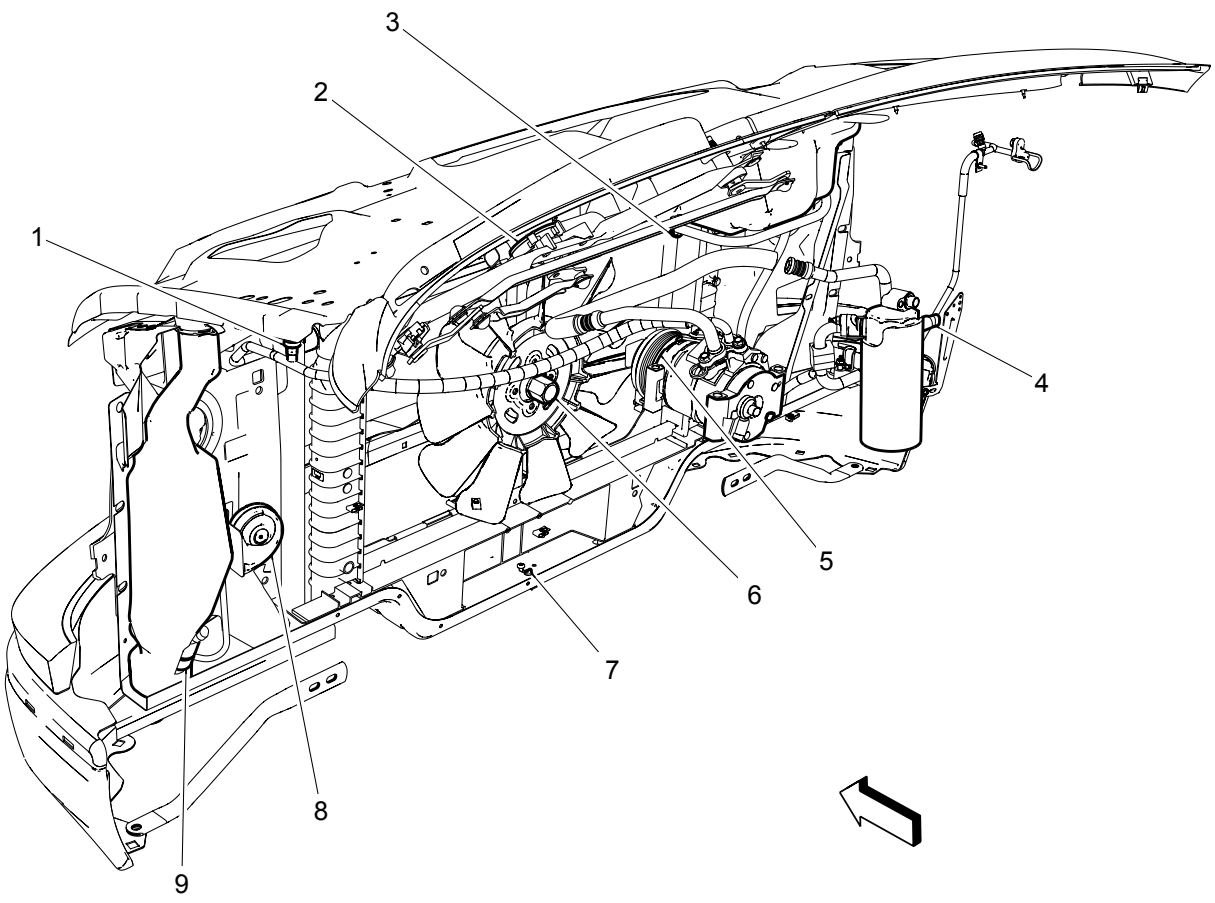

Items

1. B1 A/C Refrigerant Pressure Sensor (C60)
2. M75 Windshield Wiper Motor
3. B33 Engine Coolant Level Switch (LGH)
4. B1B A/C Low Side Pressure Switch (C60)
5. Q2 A/C Compressor Clutch (C60)
6. G10 Cooling Fan Motor (LGH)
7. B59 Front Impact Sensor
8. P13 Horn Assembly
9. G24 Windshield Washer Pump

Front of Engine Compartment Components (2 of 2, LGH)

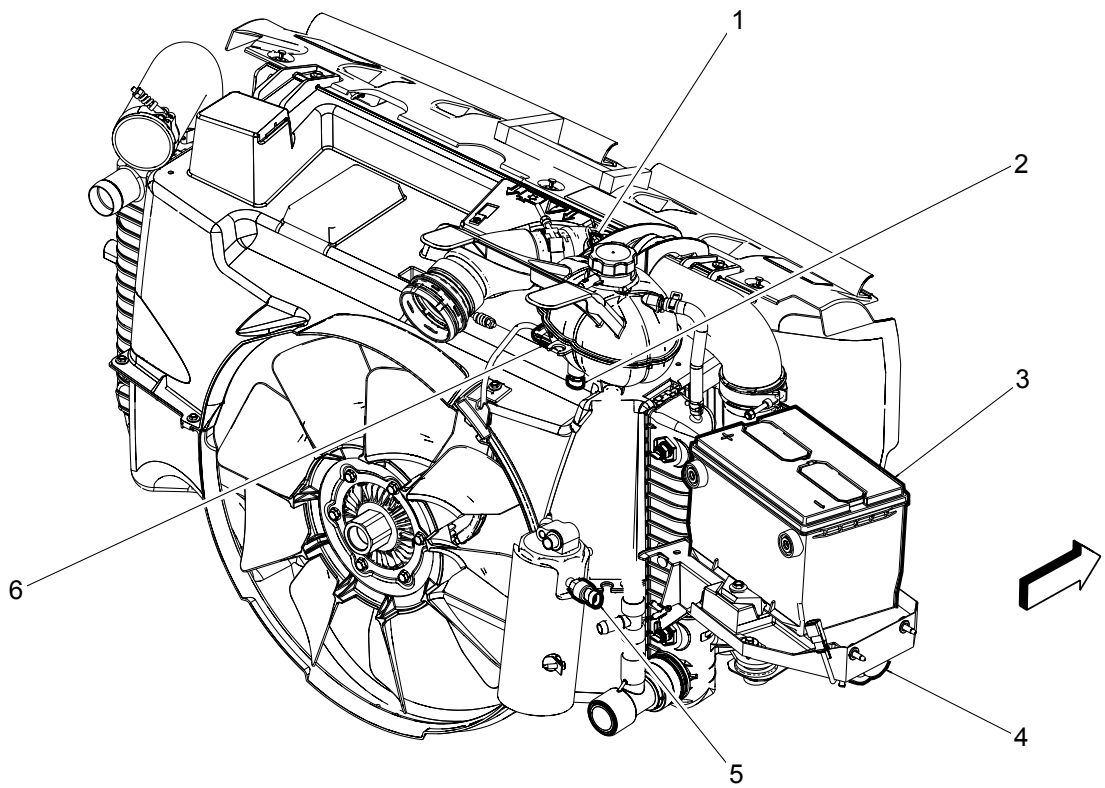

Items

1. B193B Charge Air Cooler Outlet Temperature Sensor (LGH)
2. B33 Engine Coolant Level Switch (LGH)
3. C1 Battery
4. G34 Evaporative Emission System Leak Detection Pump
5. B1B A/C Low Side Pressure Switch (C60)
6. X142 (LGH)

Engine Compartment Components (1 of 2)

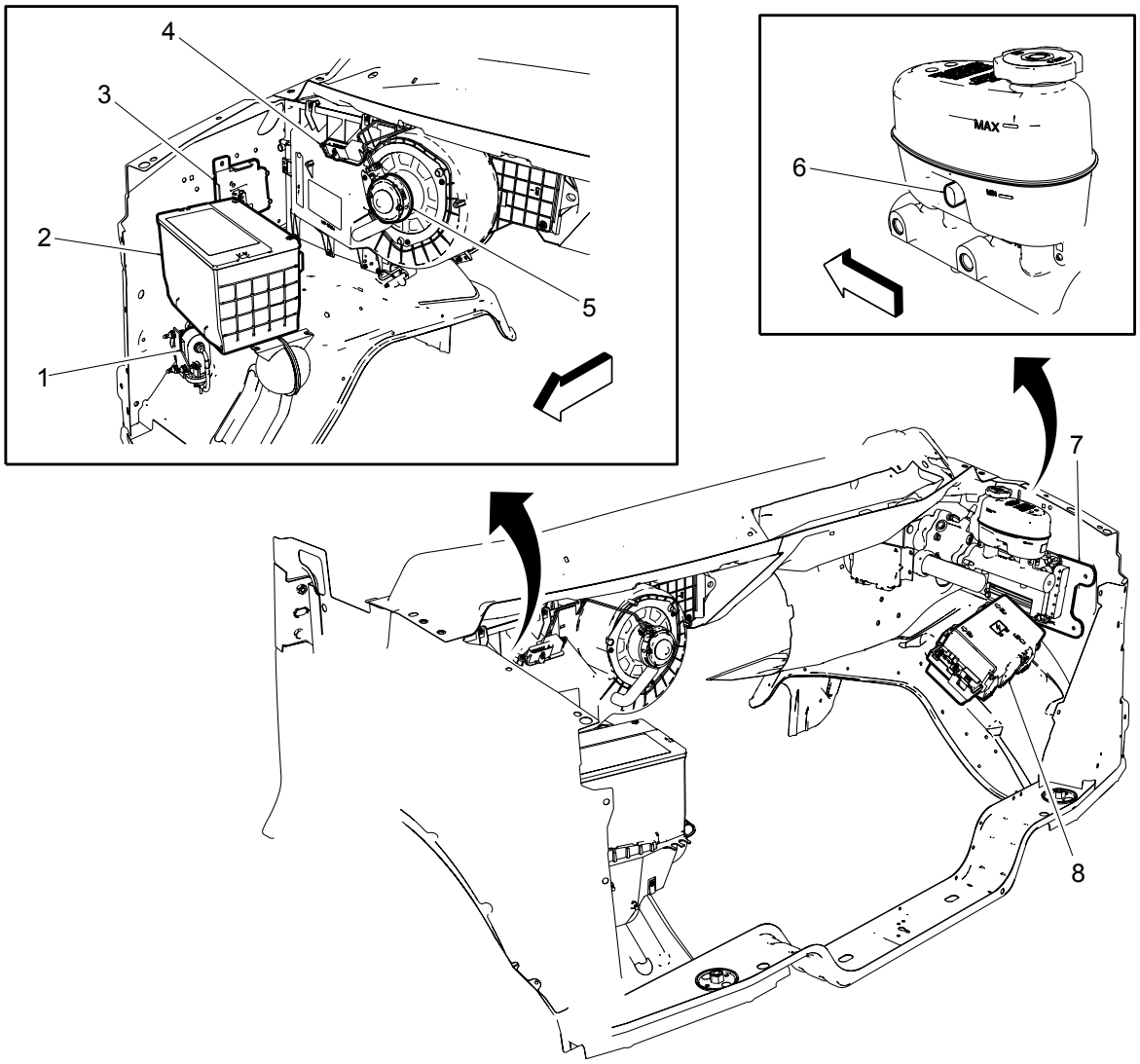

Items

1. G34 Evaporative Emission System Leak Detection Pump
2. C1 Battery
3. K71 Transmission Control Module
4. R3 Blower Motor Resistor
5. M8 Blower Motor
6. B20 Brake Fluid Level Switch
7. K20 Engine Control Module
8. X50A Fuse Block - Underhood

Engine Compartment Components (2 of 2, LGH)

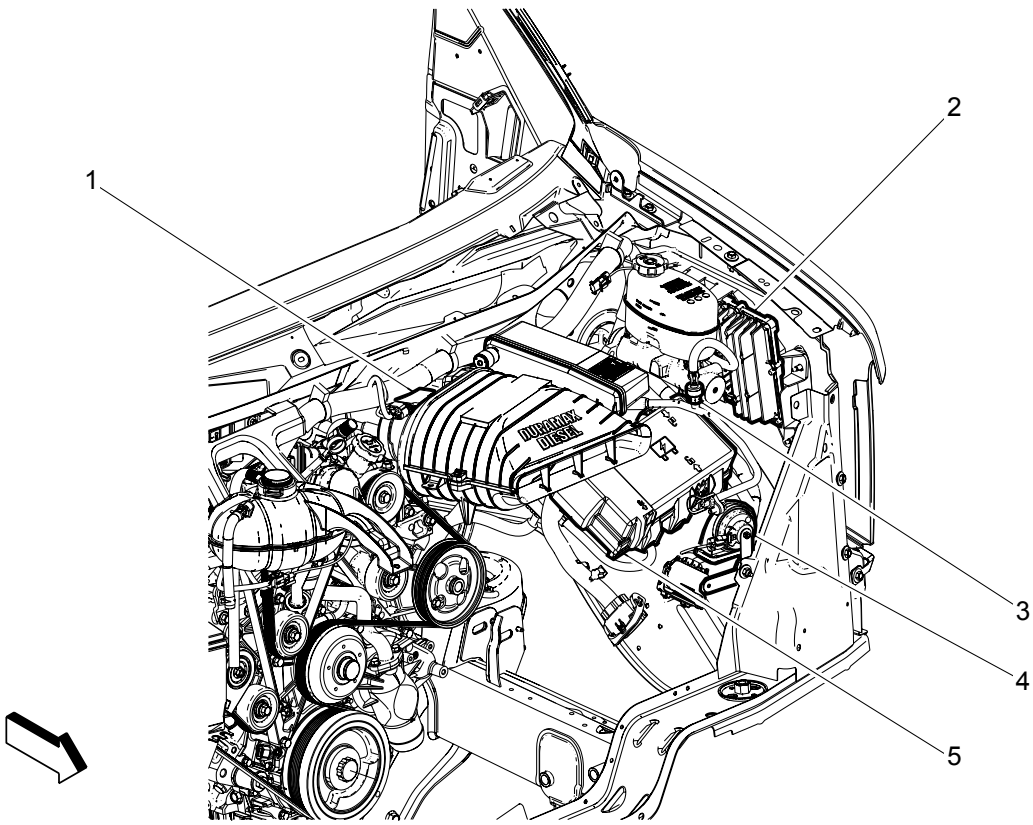

Items

1. B75B Mass Air Flow/Intake Air Temperature Sensor
2. K20 Engine Control Module
3. B1 A/C Refrigerant Pressure Sensor (C60)
4. P13 Horn Assembly
5. X50A Fuse Block - Underhood

Brake Booster Fluid Alarm Switches (UJ1)

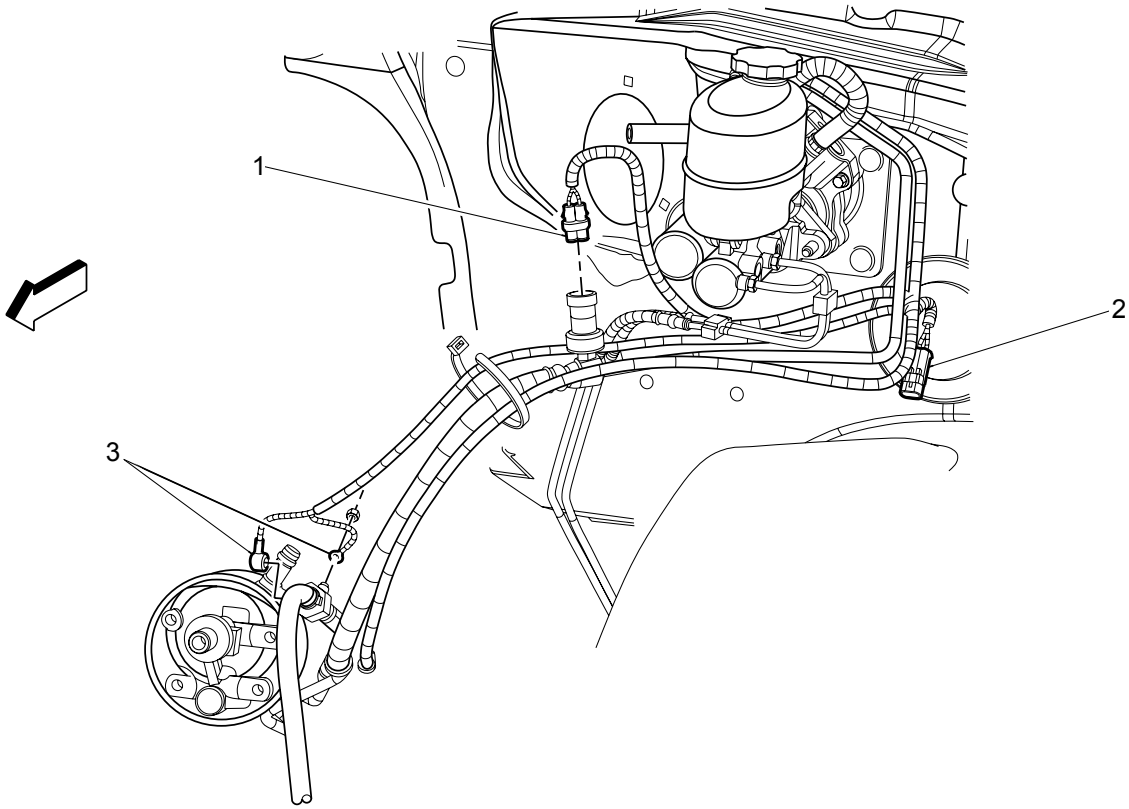

Items

1. B19A Brake Booster Fluid Pressure Alarm Switch (UJ1)
2. X141 (UJ1)
3. B133 Brake Booster Fluid Flow Alarm Switch (UJ1)

Right Rear of the Engine Compartment Components

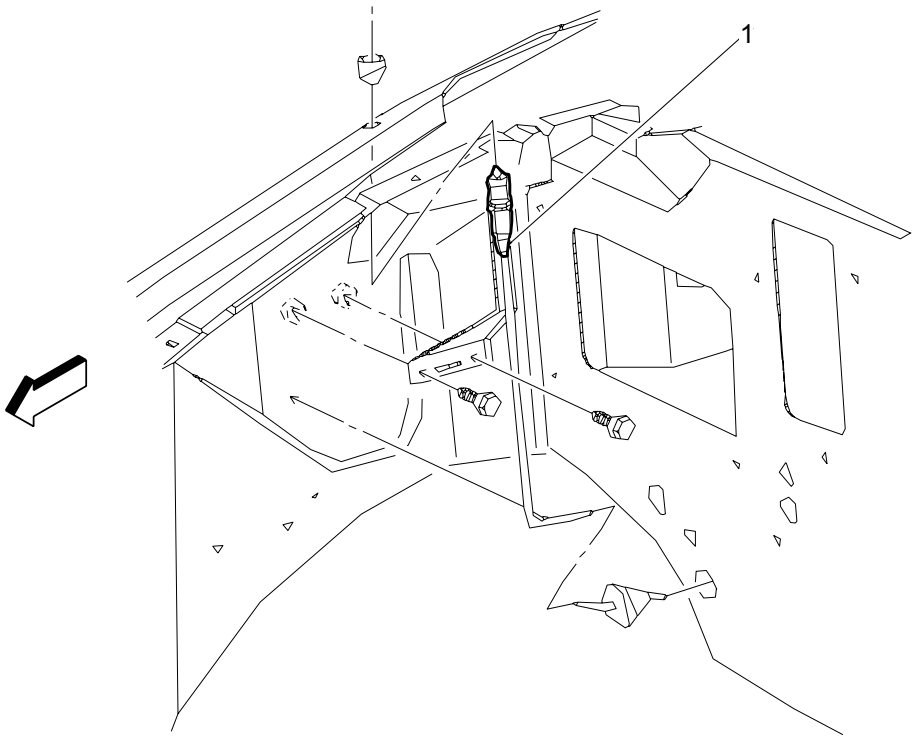

Items

1. T4M Radio Antenna (U73)

Underside of Hood Components

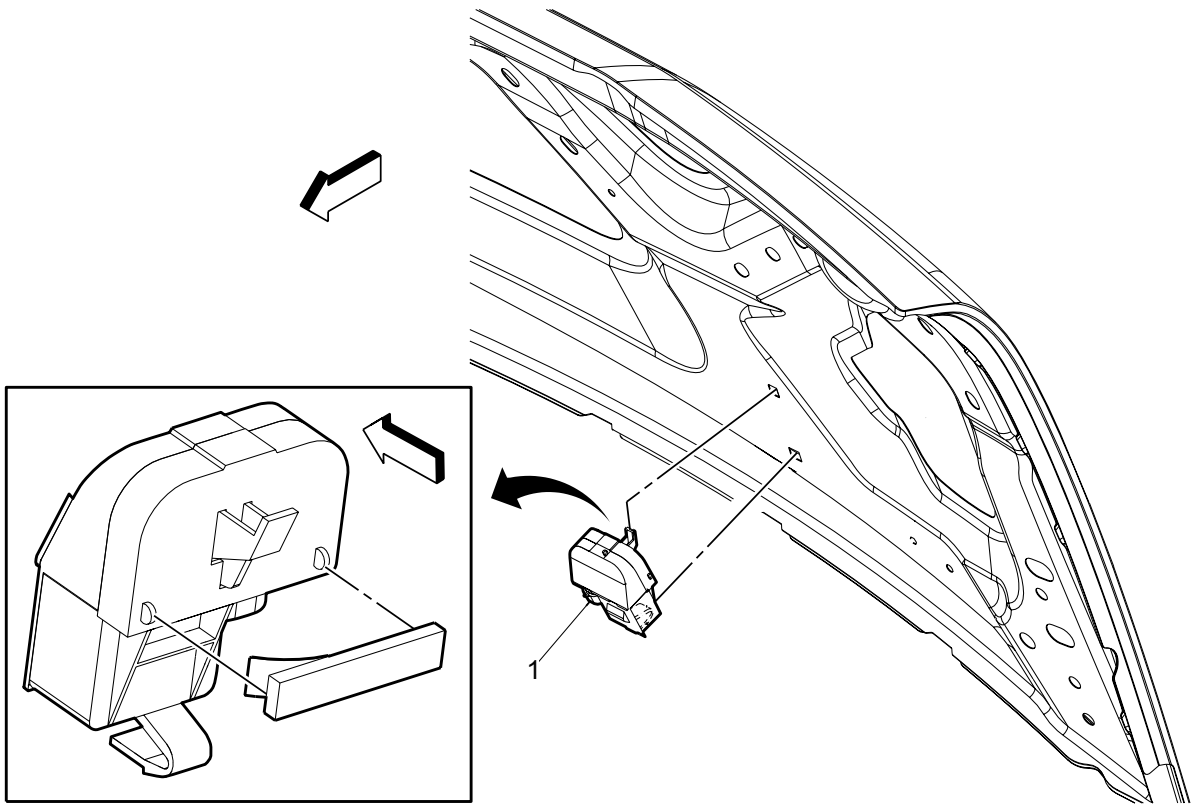

Items

1. E22 Underhood Lamp

Left Front Side of the Engine Components (1 of 2, L20, L96, or LC8)

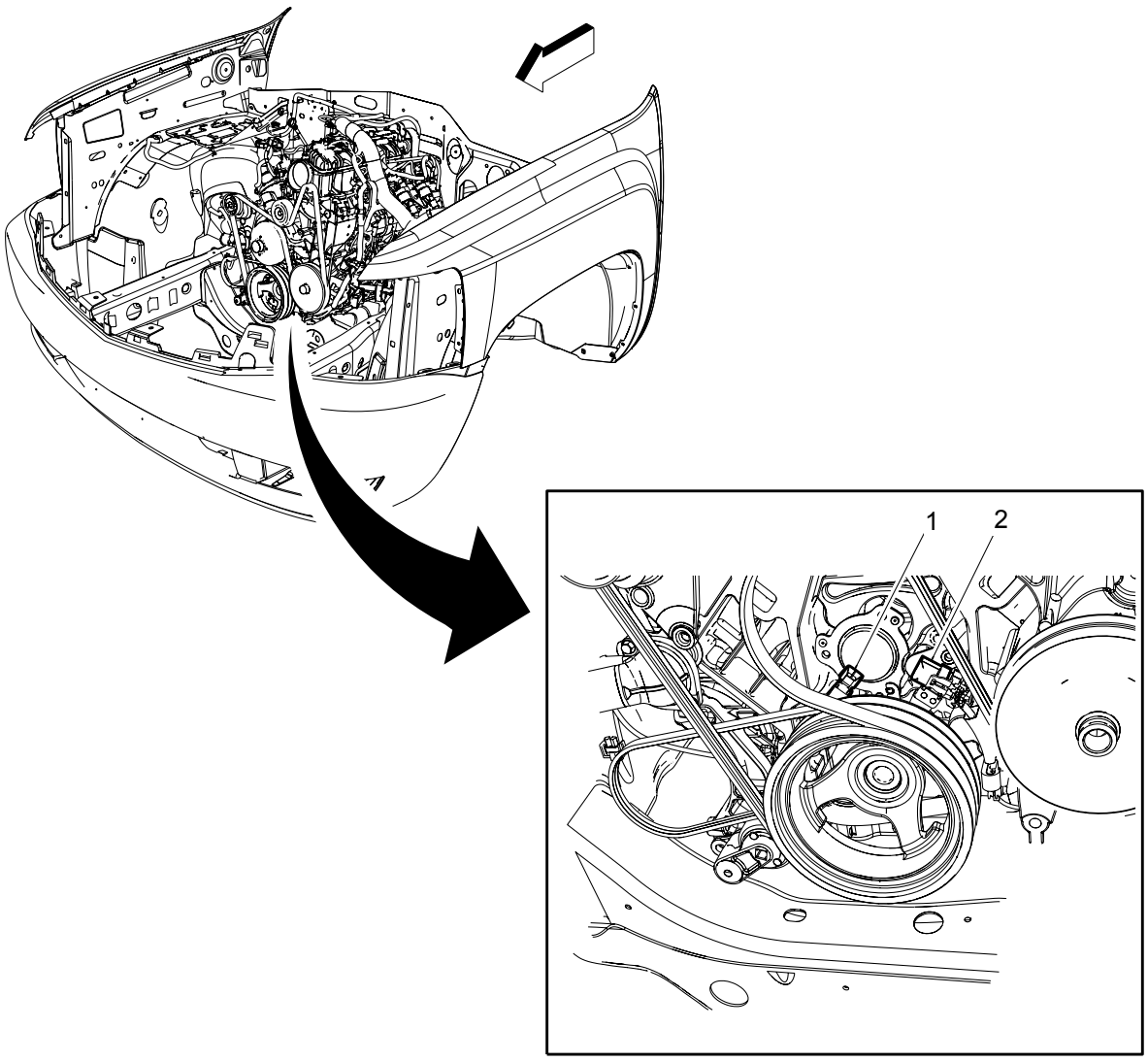

Items

1. Q6 Camshaft Position Actuator Solenoid Valve (L20, L96, or LC8)
2. B23 Camshaft Position Sensor

Left Front Side of the Engine Components (2 of 2, L20, L96, or LC8)

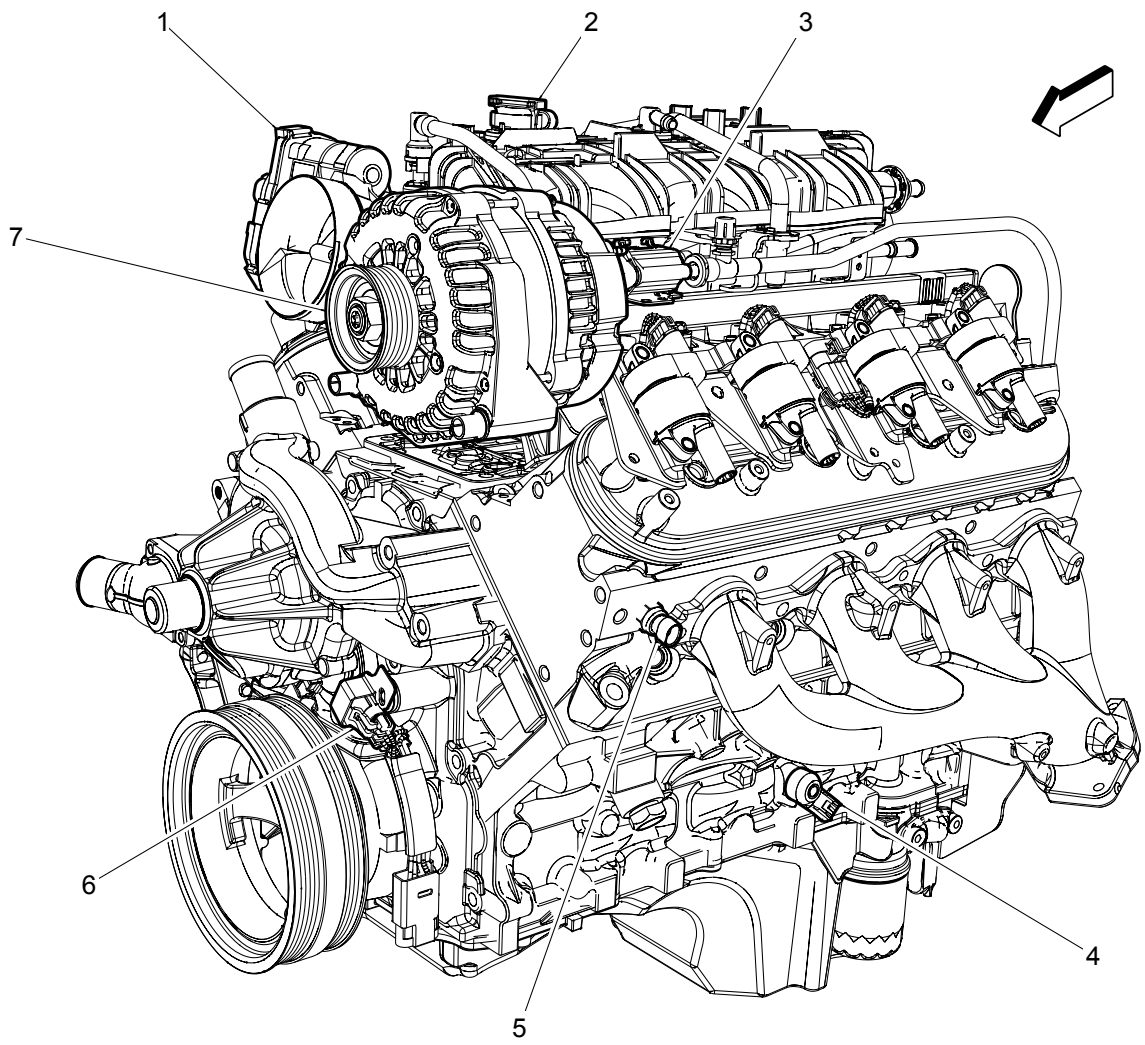

Items

1. Q38 Throttle Body (L20, L96, or LC8)
2. B74 Manifold Absolute Pressure Sensor
3. Q12 Evaporative Emission Purge Solenoid Valve (L20, L96, or LC8)
4. B68B Knock Sensor 2 (L20, L96, or LC8)
5. B34 Engine Coolant Temperature Sensor
6. B23 Camshaft Position Sensor
7. G13 Generator

Right Front Side of the Engine Components (1 of 2, L20, L96, or LC8)

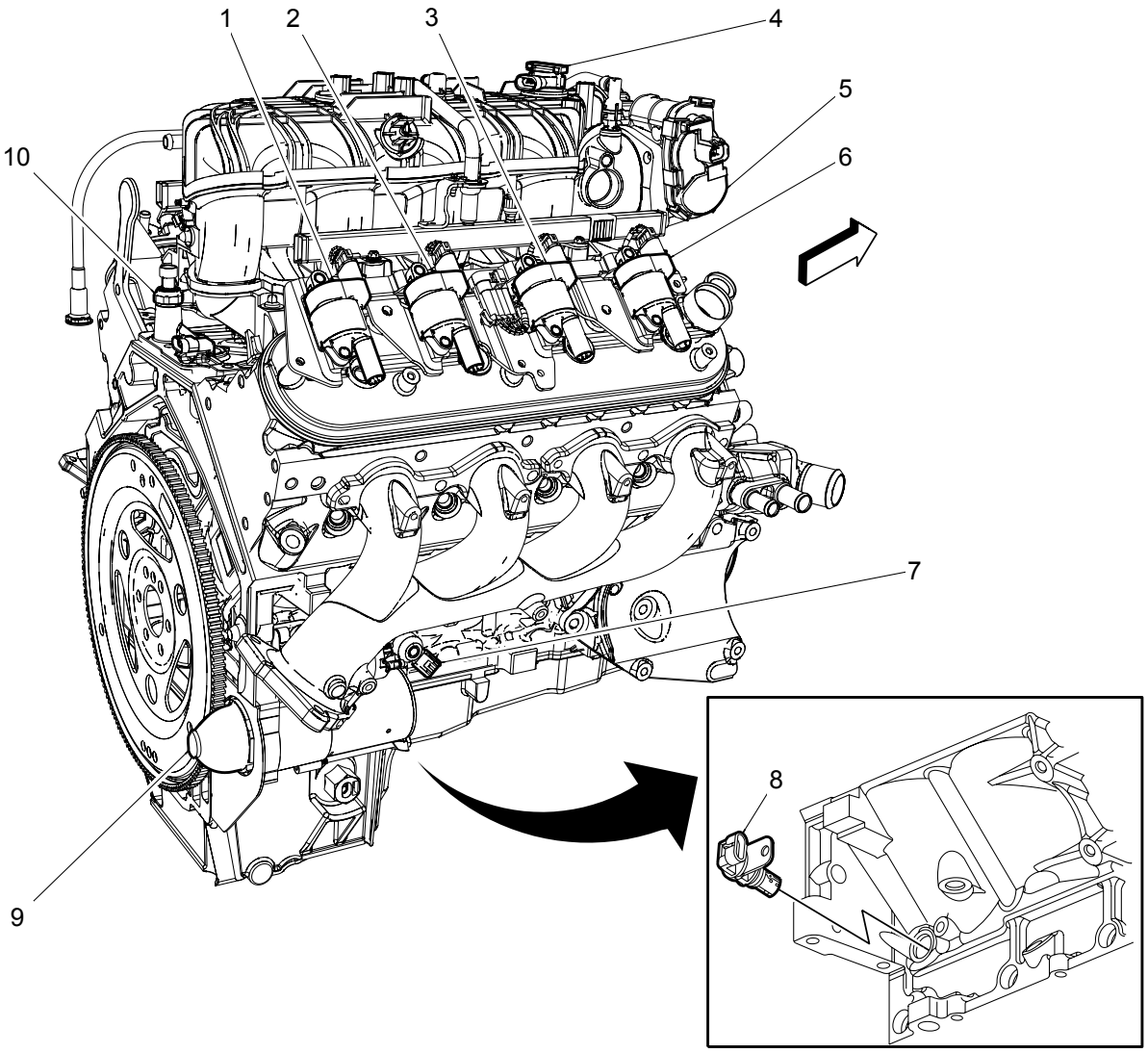

Items

1. T8H Ignition Coil 8 (L20, L96, or LC8)
2. T8F Ignition Coil 6 (L20, L96, or LC8)
3. T8D Ignition Coil 4 (L20, L96, or LC8)
4. B74 Manifold Absolute Pressure Sensor
5. Q38 Throttle Body (L20, L96, or LC8)
6. T8B Ignition Coil 2 (L20, L96, or LC8)
7. B68A Knock Sensor 1 (L20, L96, or LC8)
8. B26 Crankshaft Position Sensor
9. M64 Starter Motor
10. B37B Engine Oil Pressure Sensor

Right Front Side of the Engine Components (2 of 2, L20, L96, or LC8)

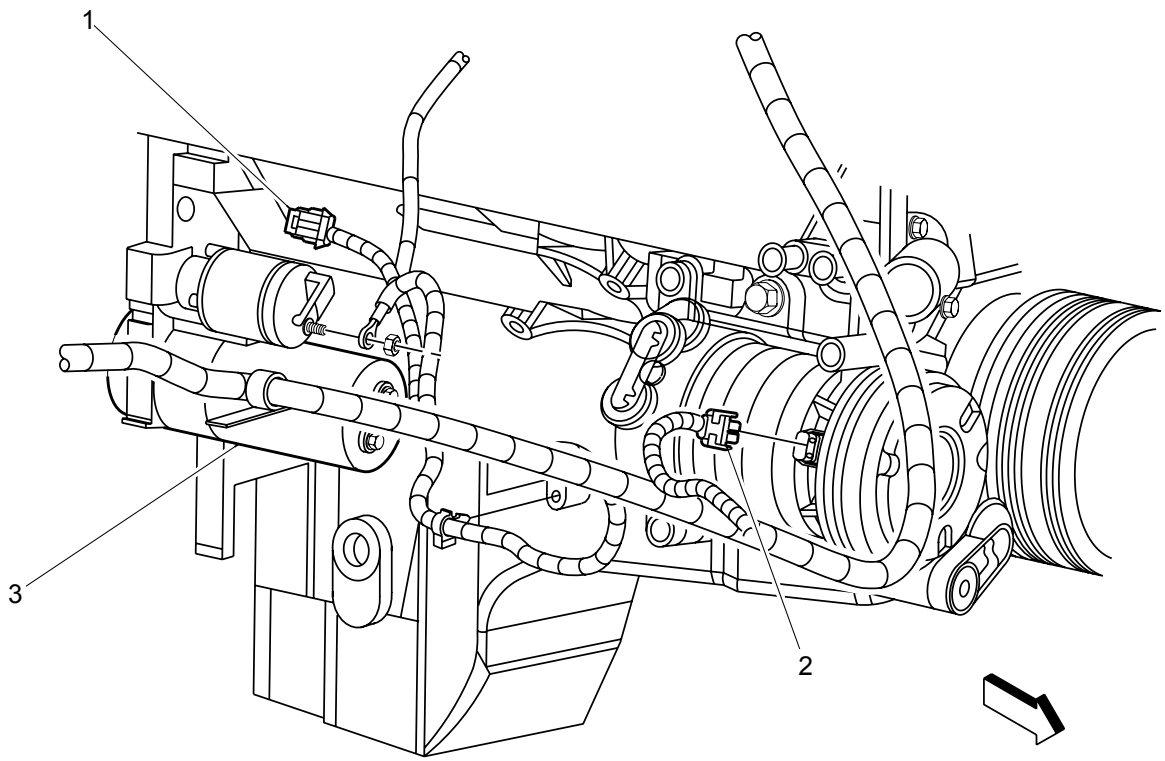

Items

1. B26 Crankshaft Position Sensor
2. Q2 A/C Compressor Clutch (C60)
3. M64 Starter Motor

Top of the Engine Components (L20, L96, or LC8)

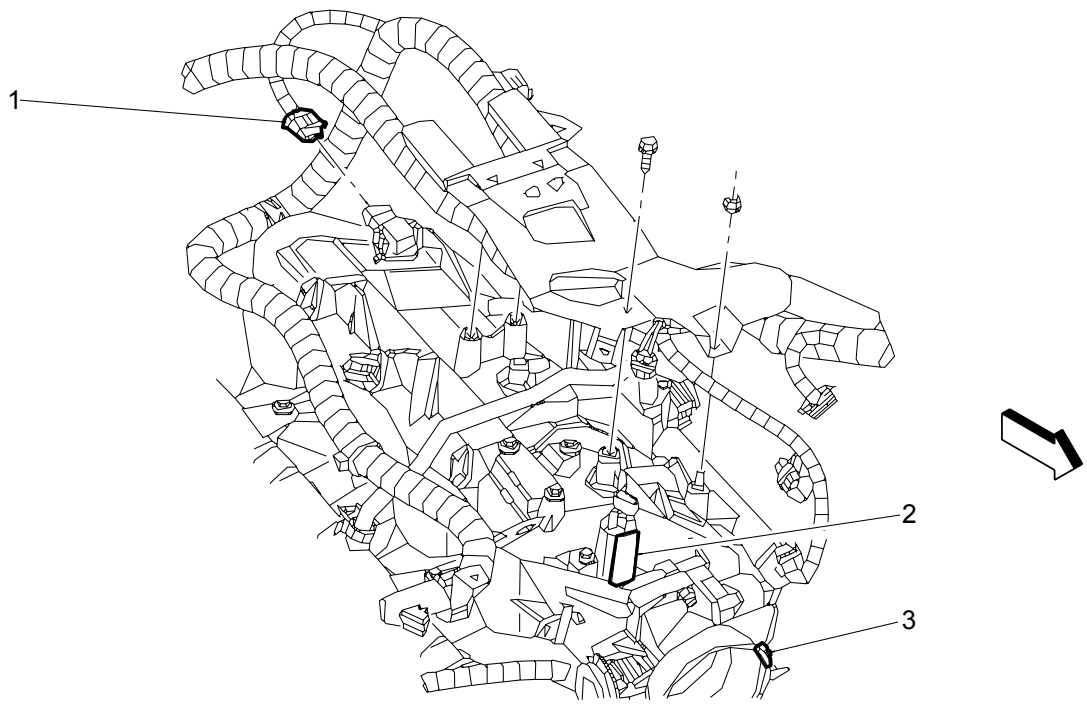

Items

1. B74 Manifold Absolute Pressure Sensor
2. Q12 Evaporative Emission Purge Solenoid Valve (L20, L96, or LC8)
3. Q38 Throttle Body (L20, L96, or LC8)

Upper Left Side of the Engine Components (L20, L96, or LC8)

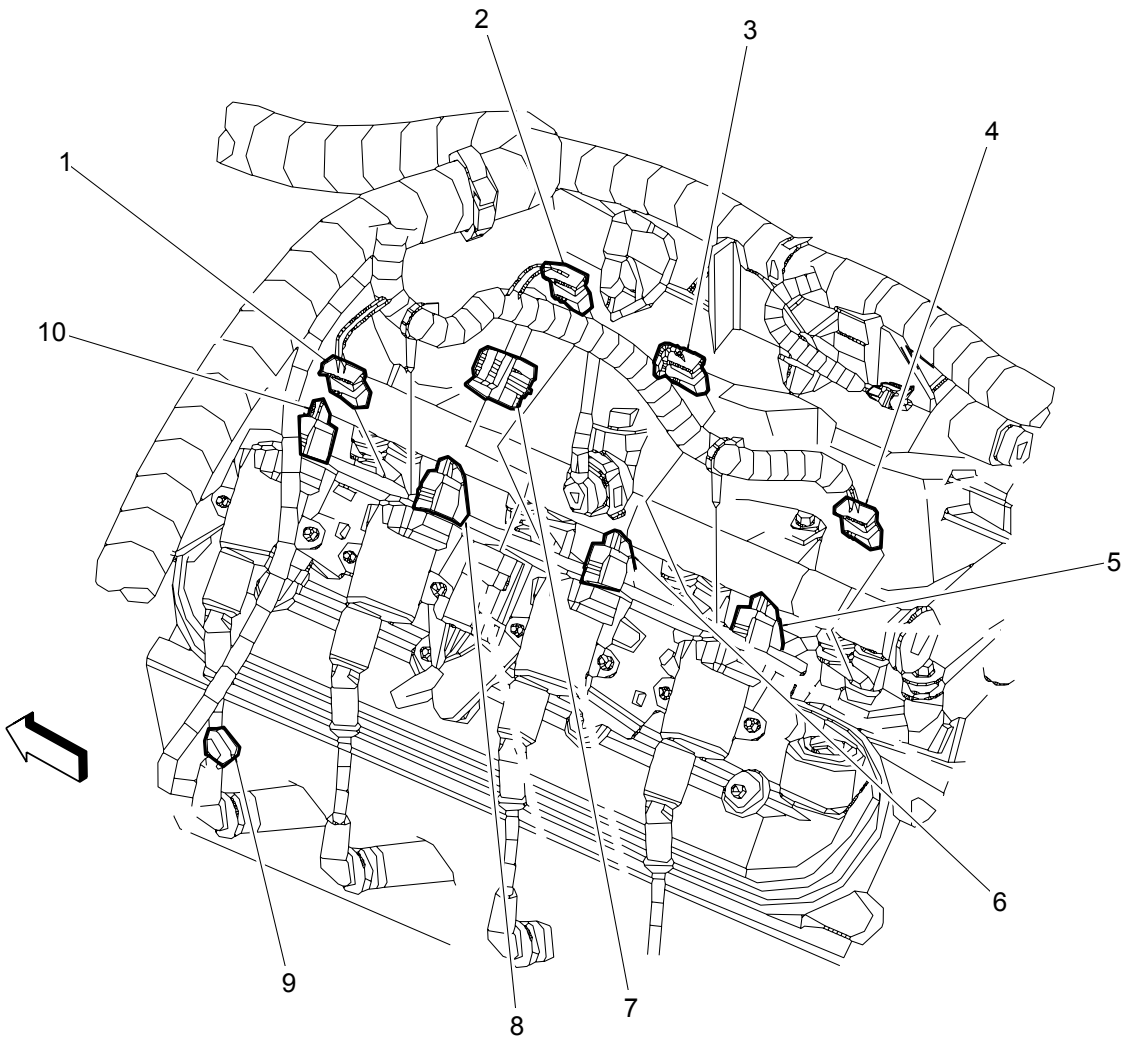

Items

1. Q17A Fuel Injector 1
2. Q17C Fuel Injector 3
3. Q17E Fuel Injector 5
4. Q17G Fuel Injector 7
5. T8G Ignition Coil 7 (L20, L96, or LC8)
6. T8E Ignition Coil 5 (L20, L96, or LC8)
7. X126 (L20, L96, or LC8)
8. T8C Ignition Coil 3 (L20, L96, or LC8)
9. B34 Engine Coolant Temperature Sensor
10. T8A Ignition Coil 1 (L20, L96, or LC8)

Upper Right Side of the Engine Components (L20, L96, or LC8)

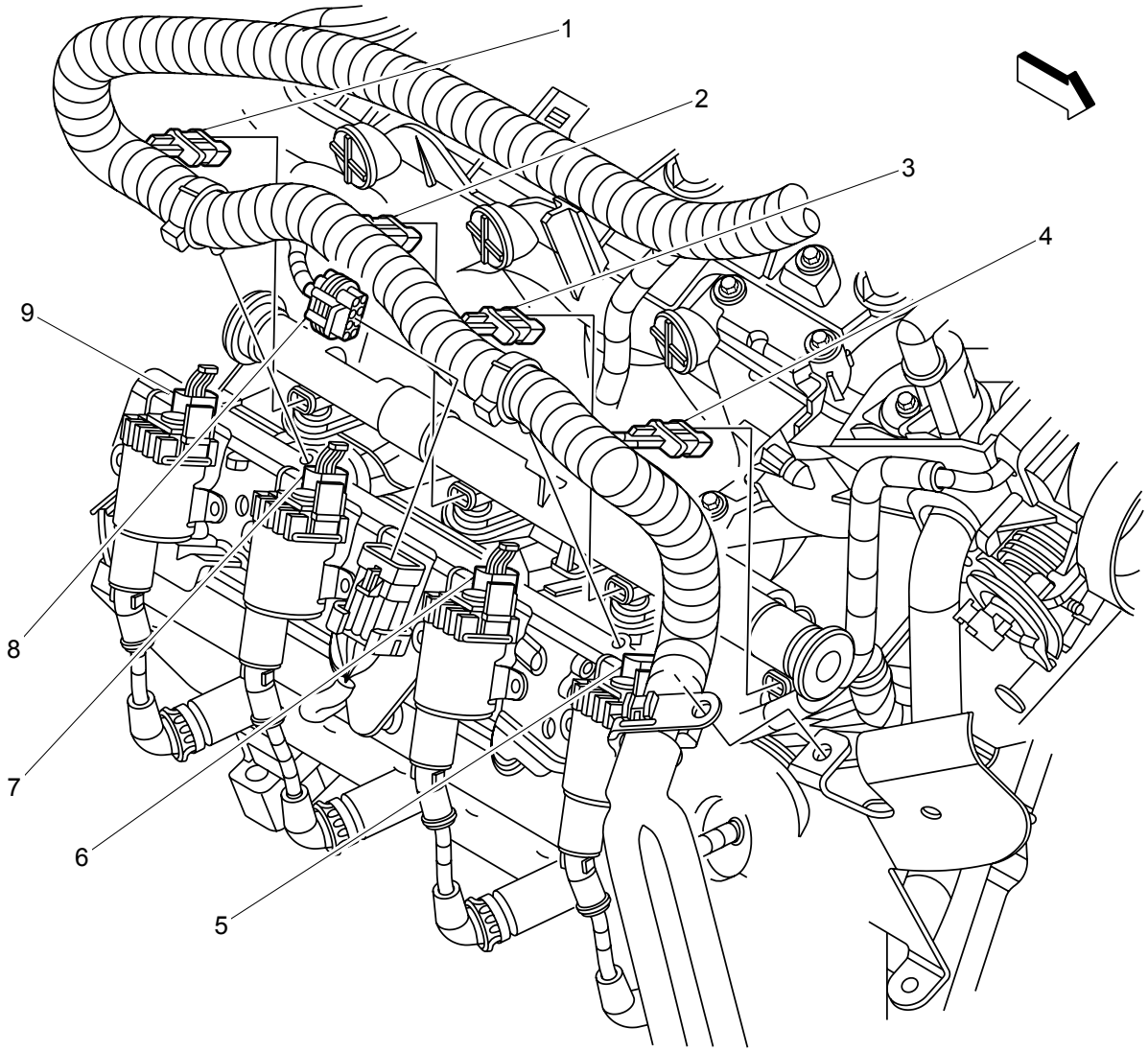

Items

1. Q17H Fuel Injector 8
2. Q17F Fuel Injector 6
3. Q17D Fuel Injector 4
4. Q17B Fuel Injector 2
5. T8B Ignition Coil 2 (L20, L96, or LC8)
6. T8D Ignition Coil 4 (L20, L96, or LC8)
7. T8F Ignition Coil 6 (L20, L96, or LC8)
8. X127 (L20, L96, or LC8)
9. T8H Ignition Coil 8 (L20, L96, or LC8)

Lower Right Side of the Engine Components (L20, L96, or LC8)

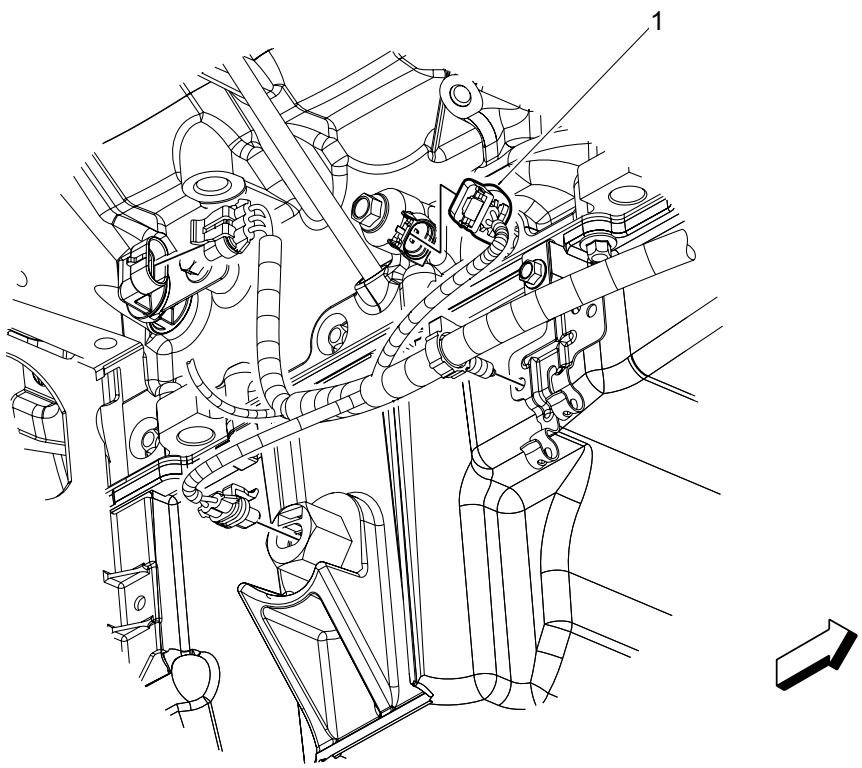

Items

1. B68A Knock Sensor 1 (L20, L96, or LC8)

Exhaust Components (L20, L96, or LC8)

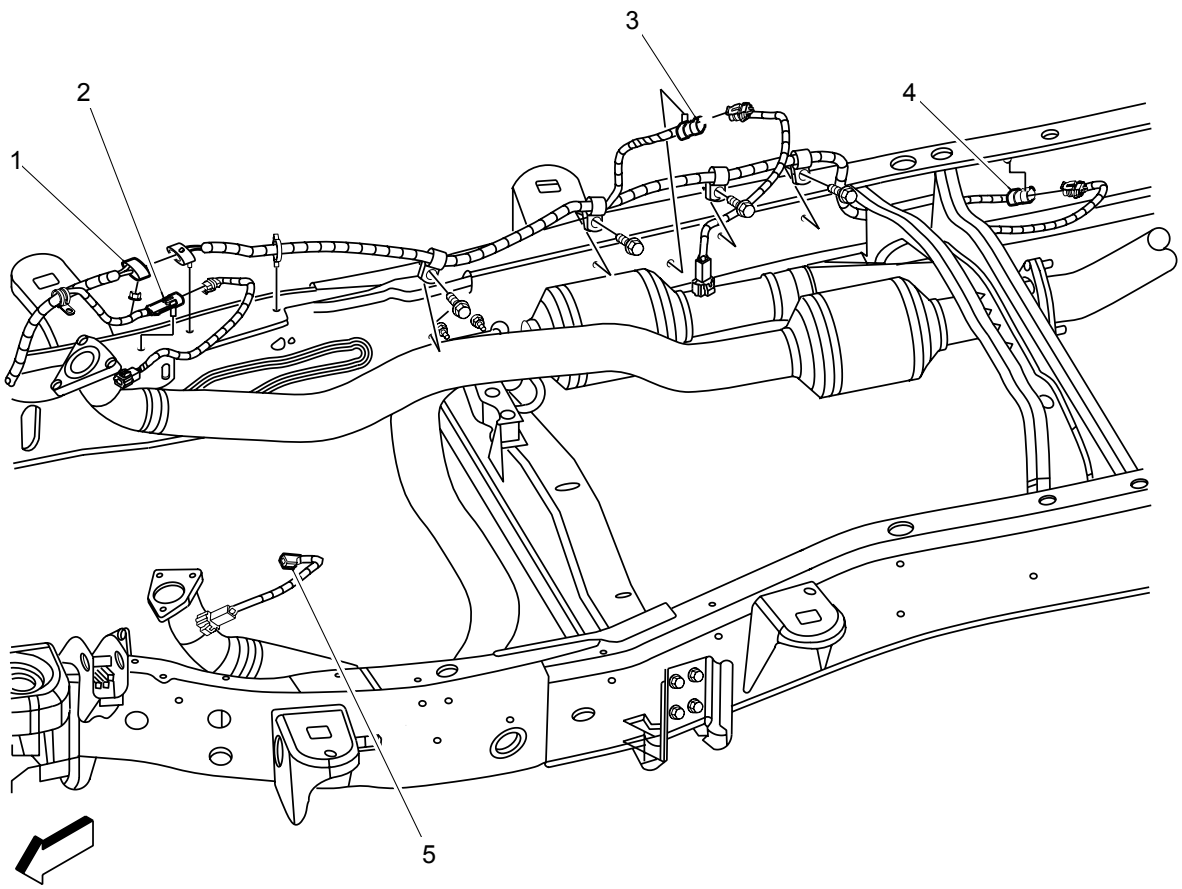

Items

1. X128 (L20, L96 or LC8)
2. B52E Heated Oxygen Sensor - Bank 2 Sensor 1 (L20, L96, or LC8)
3. B52D Heated Oxygen Sensor - Bank 1 Sensor 2 (L20, L96, or LC8)
4. B52F Heated Oxygen Sensor - Bank 2 Sensor 2 (L20, L96, or LC8)
5. B52C Heated Oxygen Sensor - Bank 1 Sensor 1 (L20, L96, or LC8)

Left Front of the Engine Components (LGH)

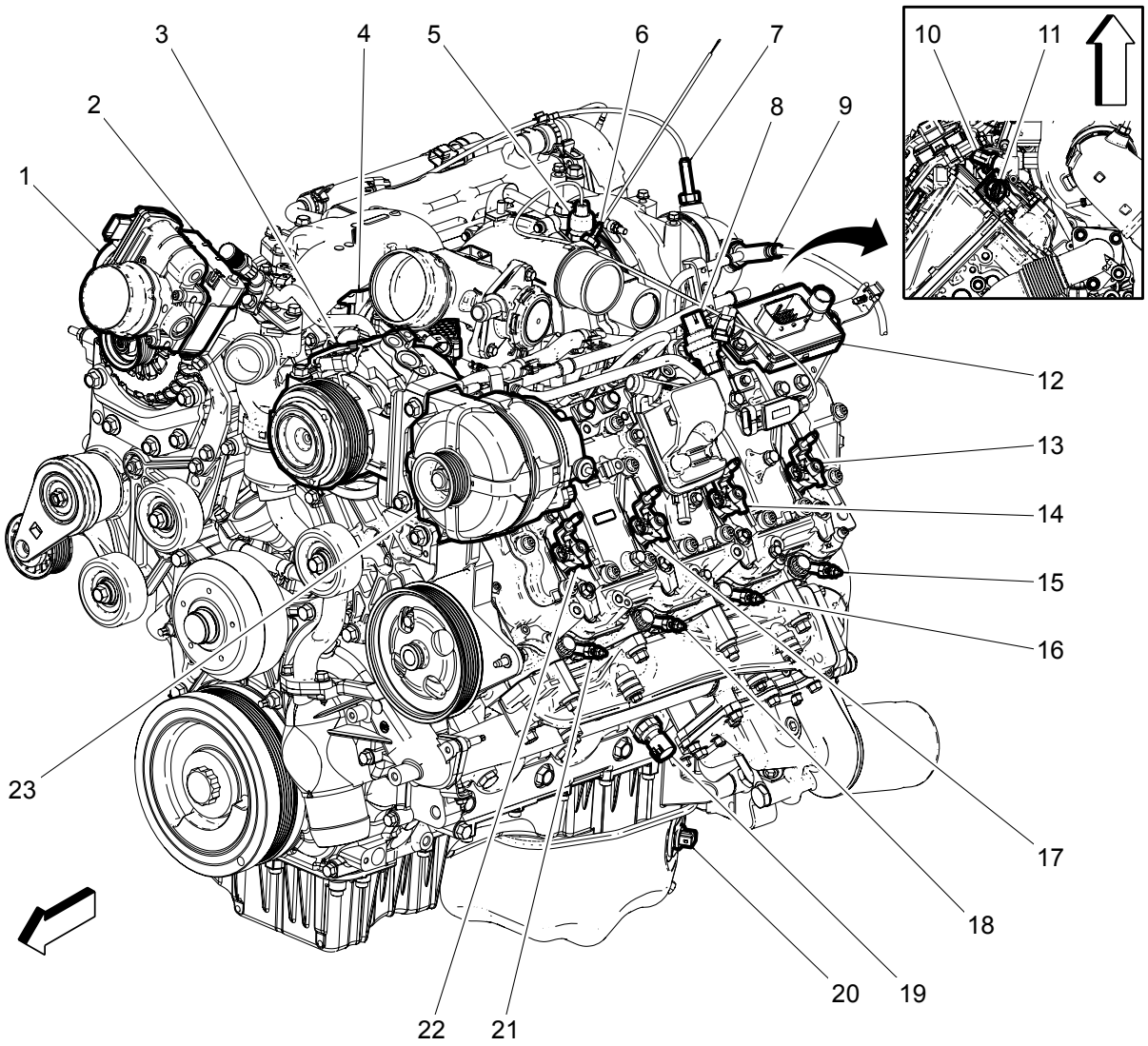

Items

1. Q20 Intake Air Flow Valve (LGH)
2. E24 Intake Air Heater (LGH)
3. Q2 A/C Compressor Clutch (C60)
4. Q14 Exhaust Gas Recirculation Valve (LGH)
5. B112 Turbocharger Vane Position Sensor (LGH)
6. B193A Charge Air Cooler Inlet Temperature Sensor (LGH)
7. B130A Exhaust Gas Recirculation Temperature Sensor 1 (LGH)
8. B215 Fuel Filter Pressure Switch (LGH)
9. B195A Nitrogen Oxides Sensor 1 (LGH)
10. B48B Fuel Temperature Sensor 2 (LGH)
11. B47B Fuel Rail Pressure Sensor (LGH)

11. B47B Fuel Rail Pressure Sensor (LGH)
12. K34 Glow Plug Control Module (LGH)
13. Q17H Fuel Injector 8
14. Q17F Fuel Injector 6
15. E12H Glow Plug 8 (LGH)
16. E12F Glow Plug 6 (LGH)
17. Q17D Fuel Injector 4
18. E12D Glow Plug 4 (LGH)
19. B37B Engine Oil Pressure Sensor
20. B35 Engine Oil Level Switch (LGH)
21. E12B Glow Plug 2 (LGH)
22. Q17B Fuel Injector 2
23. G13 Generator

Right front of the Engine Components (LGH)

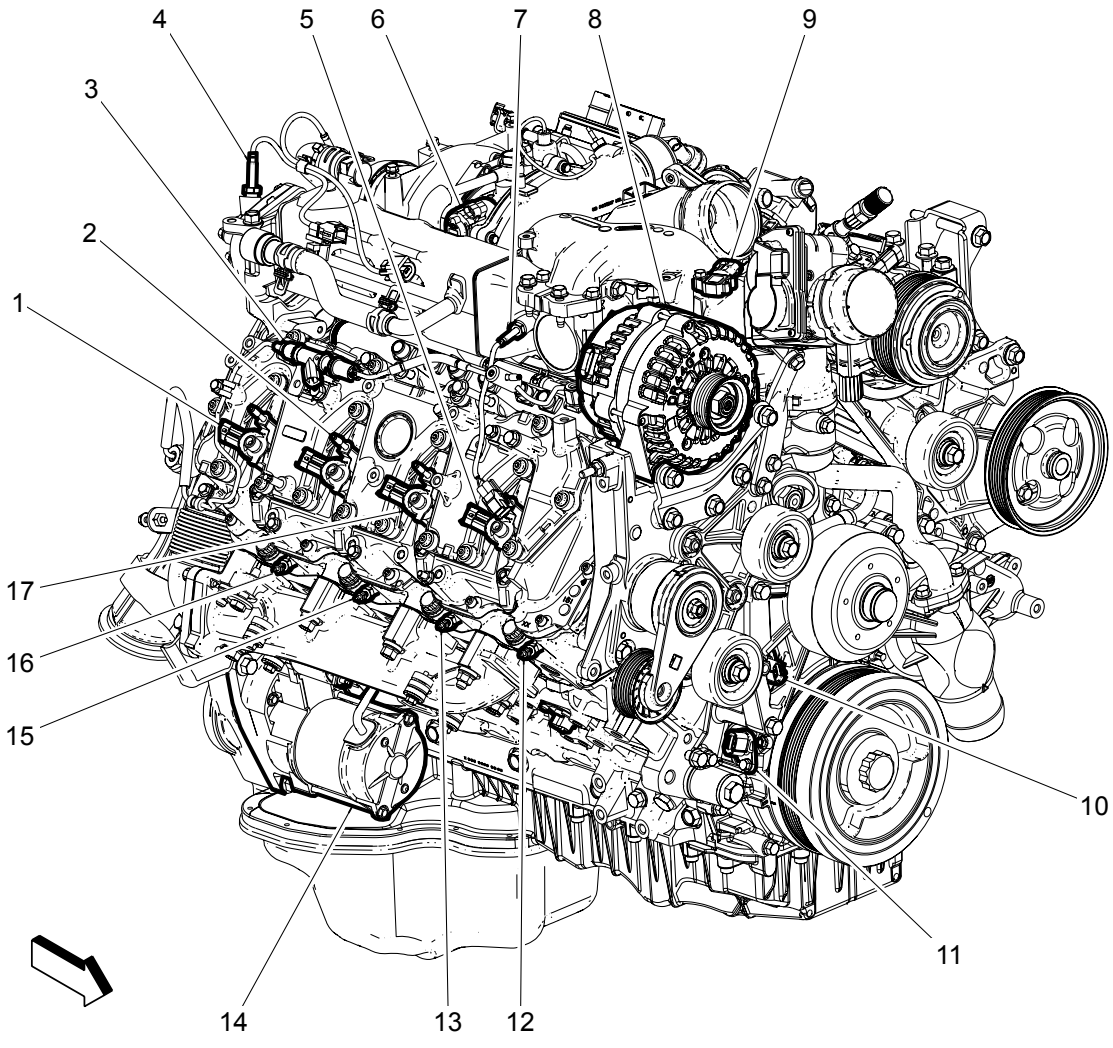

Items

1. Q17G Fuel Injector 7
2. Q17E Fuel Injector 5
3. Q67 Exhaust Aftertreatment Fuel Injector (LGH)
4. B131A Exhaust Temperature Sensor 1 (LGH)
5. Q17A Fuel Injector 1
6. Q41 Turbocharger Vane Position Control Solenoid Valve (LGH)
7. B130B Exhaust Gas Recirculation Temperature Sensor 2 (LGH)
8. G13 Generator
9. B74 Manifold Absolute Pressure Sensor
10. B23 Camshaft Position Sensor
11. B26 Crankshaft Position Sensor

11. B26 Crankshaft Position Sensor

12. E12A Glow Plug 1 (LGH)

13. E12C Glow Plug 3 (LGH)

14. M64 Starter Motor

15. E12E Glow Plug 5 (LGH)

16. E12G Glow Plug 7 (LGH)

17. Q17C Fuel Injector 3

Top of the Engine Components (1 of 3, LGH)

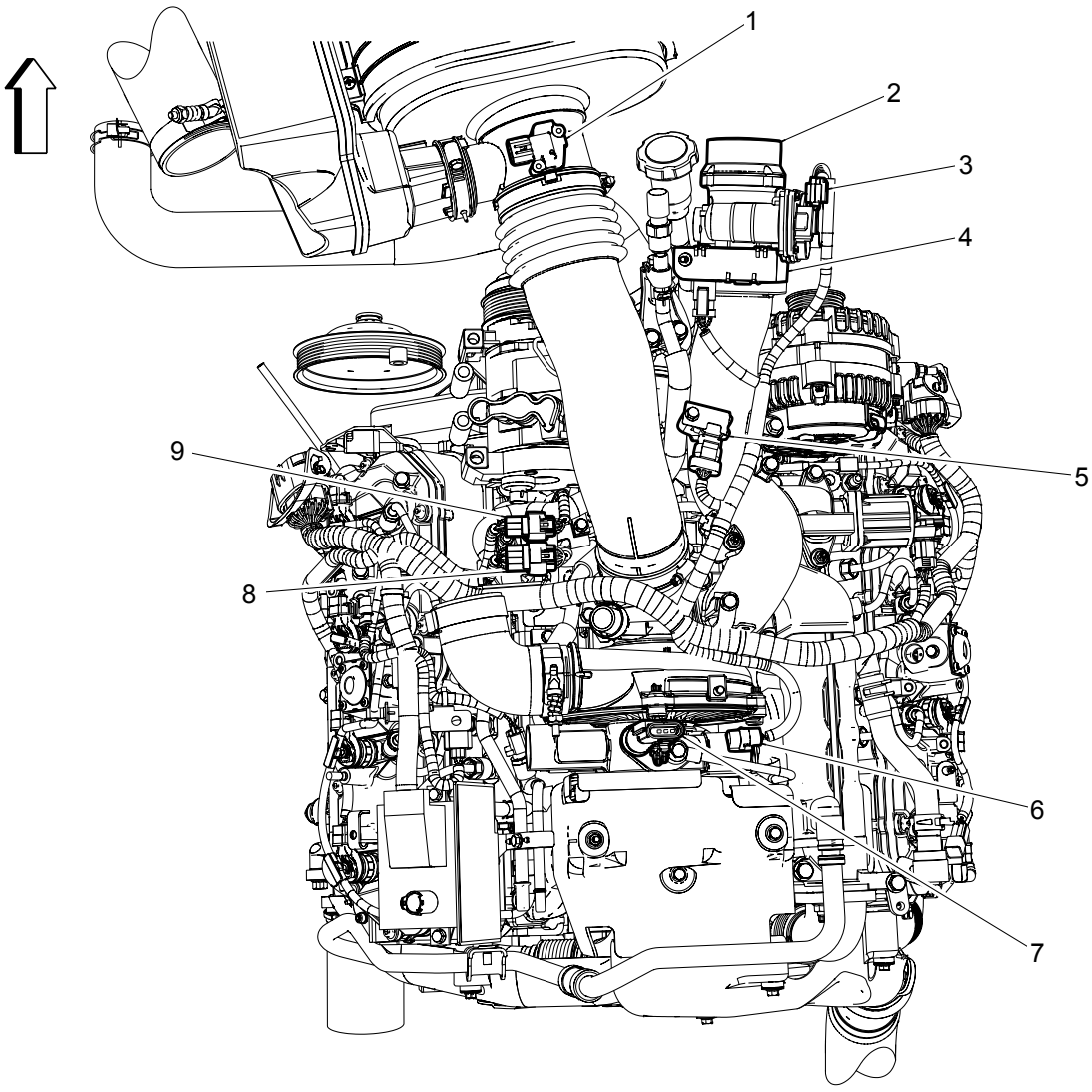

Items

1. B75B Mass Air Flow/Intake Air Temperature Sensor
2. Q38 Throttle Body (L20, L96, or LC8)
3. Q20 Intake Air Flow Valve (LGH)
4. E24 Intake Air Heater (LGH)
5. B74 Manifold Absolute Pressure Sensor
6. Q41 Turbocharger Vane Position Control Solenoid Valve (LGH)
7. B112 Turbocharger Vane Position Sensor (LGH)
8. X110 (LGH)
9. X112 (LGH)

Top of the Engine Compoents (2 of 3, LGH)

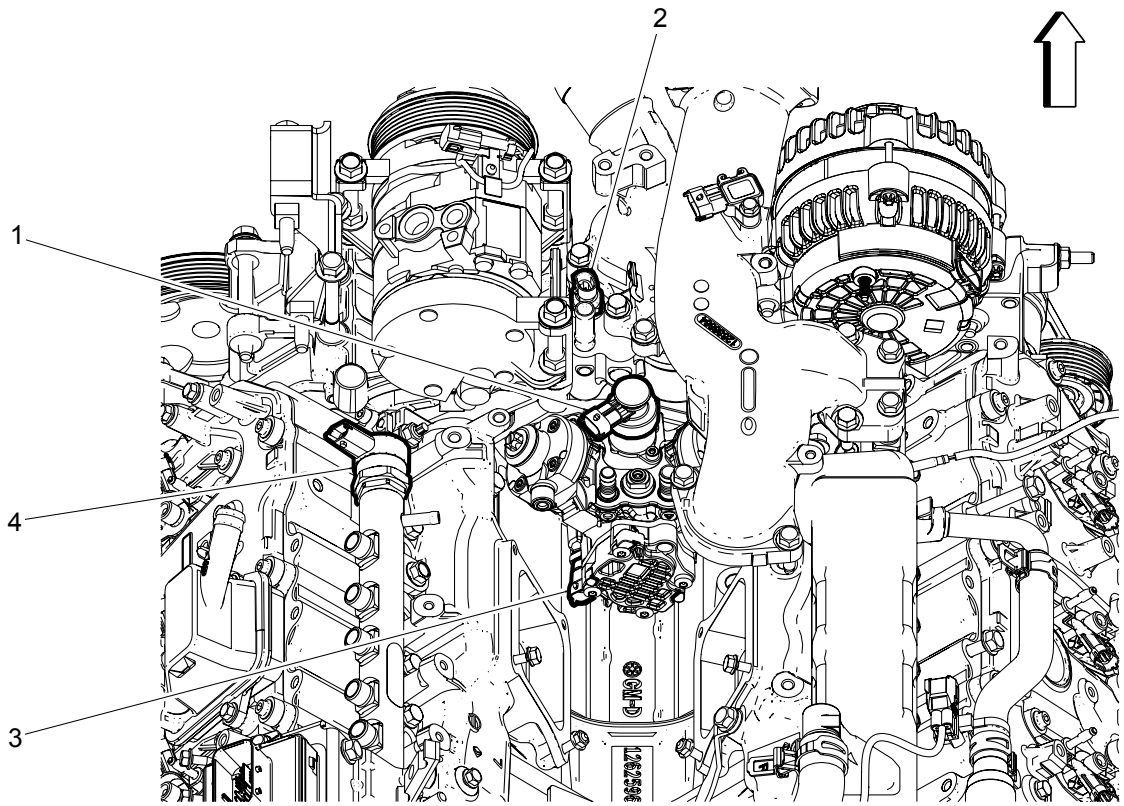

Items

1. Q18A Fuel Pressure Regulator 1 (LGH)
2. B34 Engine Coolant Temperature Sensor
3. B48A Fuel Temperature Sensor 1 (LGH)
4. Q18B Fuel Pressure Regulator 2 (LGH)

Top of the Engine Components (3 of 3, LGH)

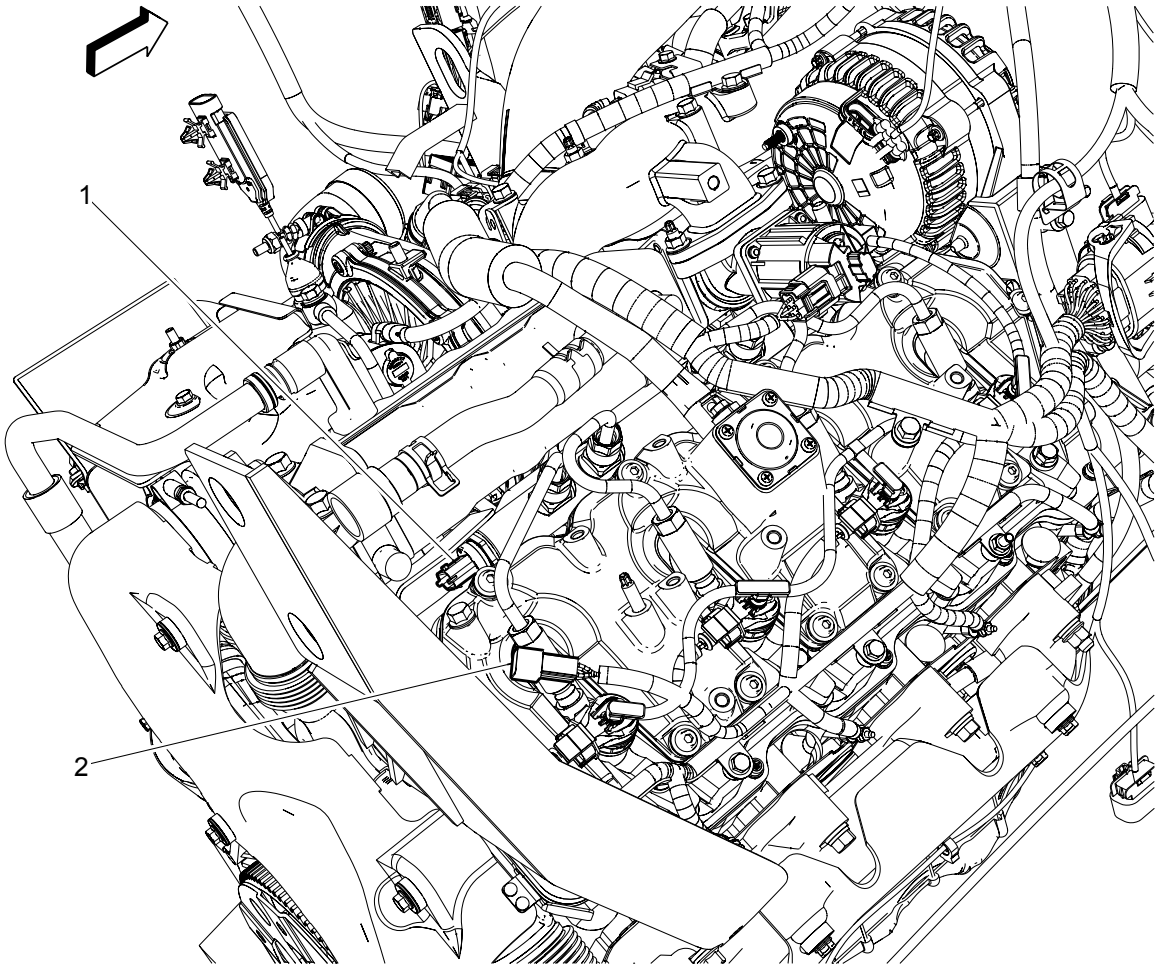

Items

1. B47B Fuel Rail Pressure Sensor (LGH)
2. X112 (LGH)

Exhaust Components (LGH)

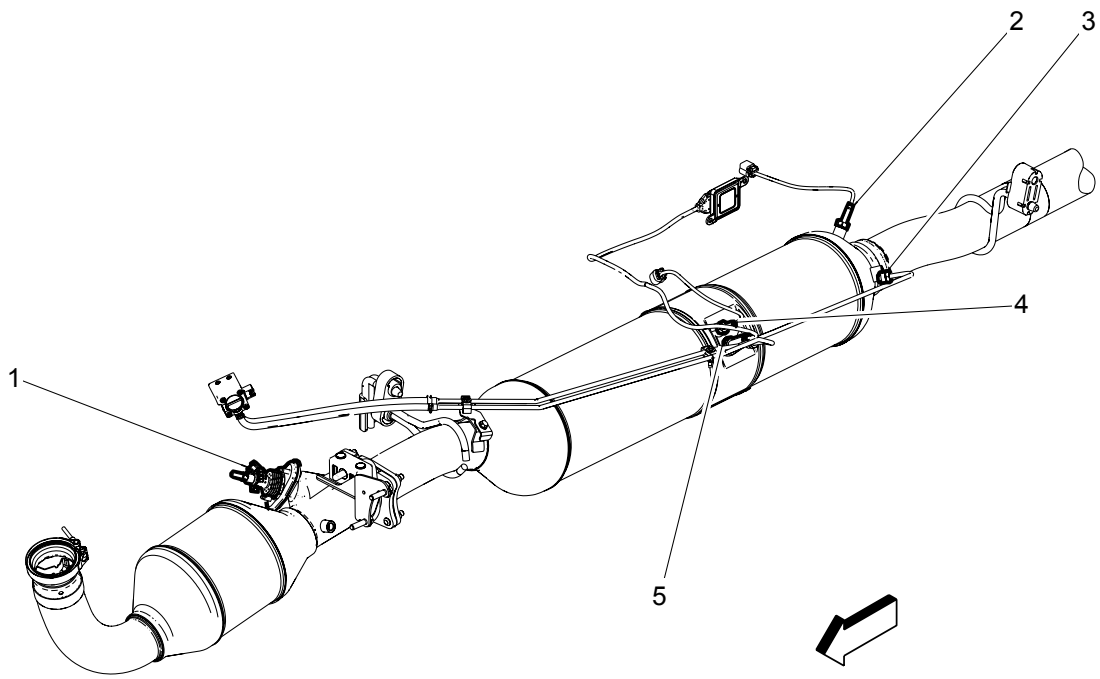

Items

1. Q61 Reductant Injector (LGH)
2. B131D Exhaust Temperature Sensor 4 (LGH)
3. B259 Exhaust Pressure Sensor (LGH)
4. B131C Exhaust Temperature Sensor 3 (LGH)
5. B195B Nitrogen Oxides Sensor 2 (LGH)

Undercar Components (LGH)

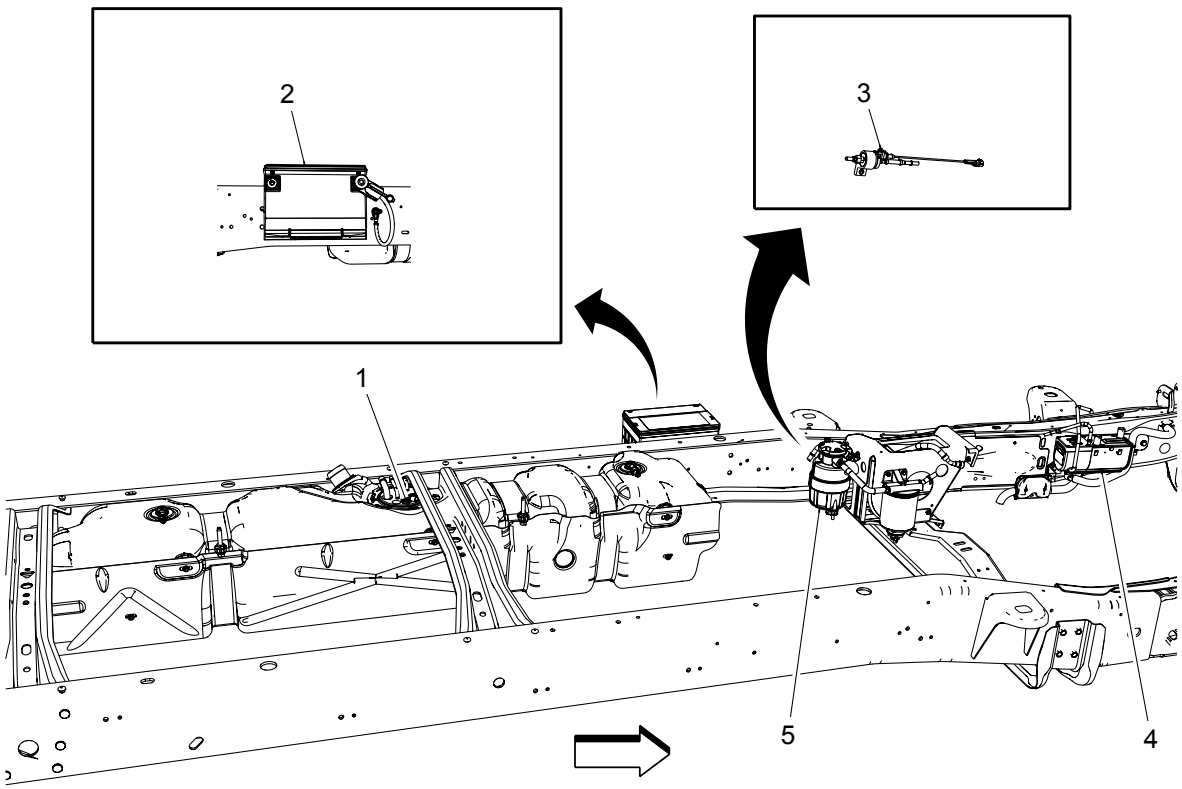

Items

1. B46 Fuel Level Sensor
2. C1B Battery - Auxiliary (LGH or TP2)
3. G7 Coolant Heater Fuel Pump (K08)
4. E19 Coolant Heater (K08)
5. G12 Fuel Pump

Automatic Transmission Internal Electrical Components

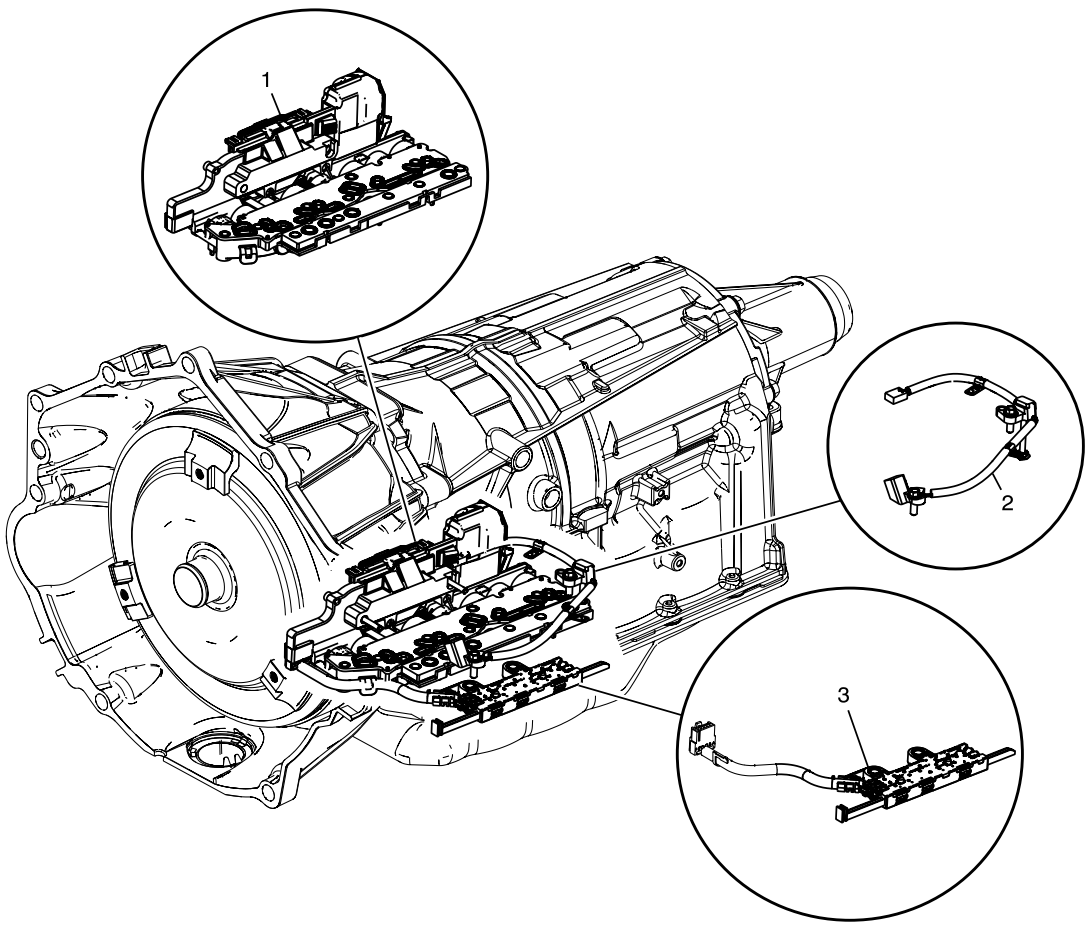

Items

1. Q8 Control Solenoid Valve Assembly
2. B14A Transmission Output Shaft Speed Sensor
3. B15 Transmission Internal Mode Switch

Instrument Panel/Center Console Component Views

Instrument Panel Components (1 of 2)

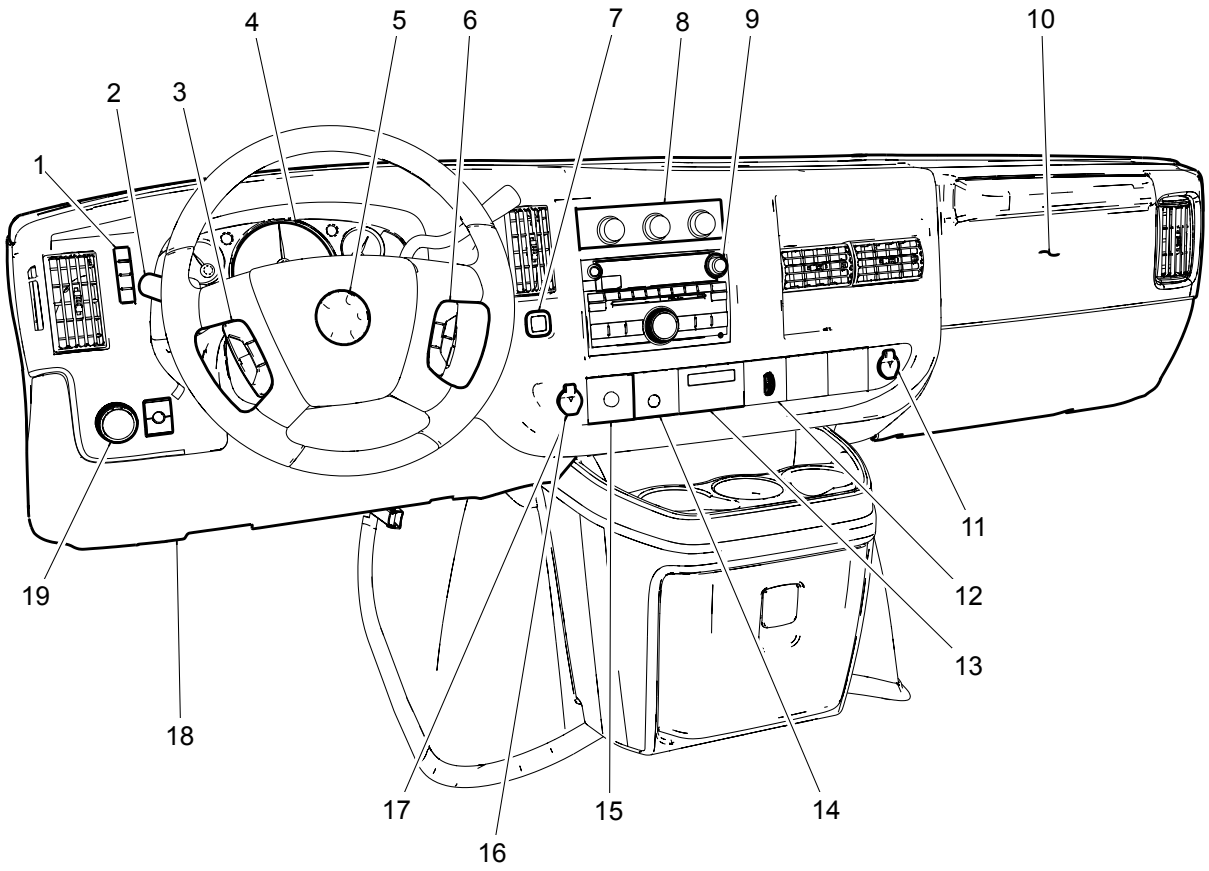

Items

1. S16 Driver Information Center Switch
2. S78 Turn Signal/Multifunction Switch
3. S70L Steering Wheel Controls Switch - Left (K34)
4. P16 Instrument Cluster
5. F107 Steering Wheel Air Bag
6. S70R Steering Wheel Controls Switch - Right (W1Y)
7. S74 Tow/Haul Mode Switch
8. S34 HVAC Controls Switch Assembly
9. A11 Radio (Without UL5)
10. F101 Passenger Instrument Panel Air Bag
11. X80B Accessory Power Receptacle - Center Console 2

11. X80B Accessory Power Receptacle - Center Console 2

12. S85 Auxiliary Blower Motor Switch (C36 or C69)

13. P14 Passenger Air Bag Disabled Indicator (AL0)

14. S40 Passenger Air Bag Disable Switch (C99)

15. S75 Traction Control Switch (JL4)

16. X80A Accessory Power Receptacle - Center Console 1 (Without DT4)

17. E32 Cigarette Lighter Receptacle (DT4)

18. X84 Data Link Connector

19. S30 Headlamp Switch

Instrument Panel Components (2 of 2)

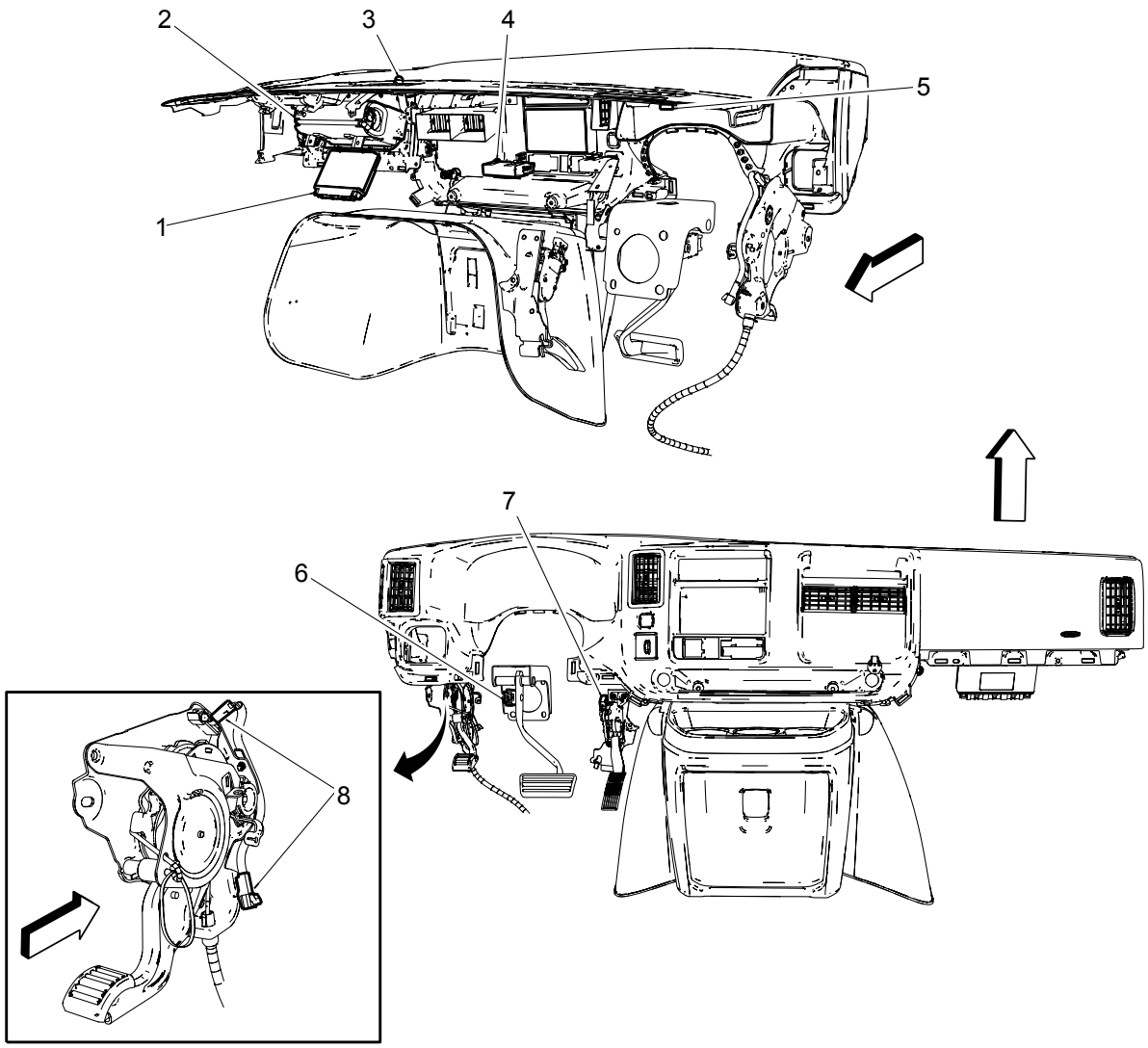

Items

1. K9 Body Control Module
2. F101 Passenger Instrument Panel Air Bag
3. B10 Ambient Light Sensor
4. P5 Chime Alarm Control Module (UL5)
5. K77 Remote Control Door Lock Receiver (ATG or UJM)
6. B22 Brake Pedal Position Sensor
7. B107 Accelerator Pedal Position Sensor
8. B80 Park Brake Switch

Underside of Instrument Panel Components

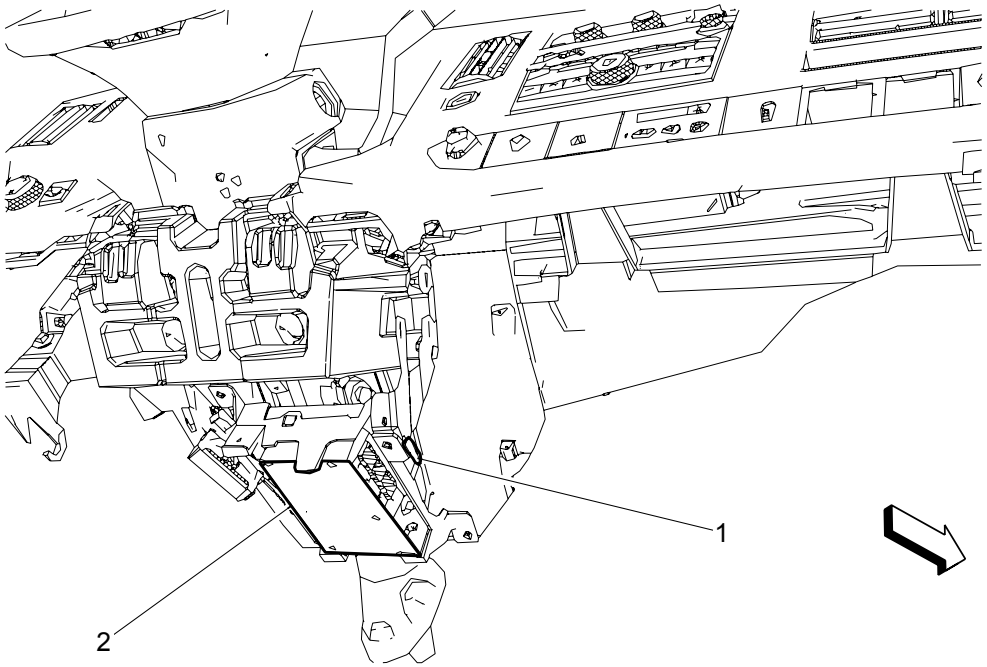

Items

1. A12 Digital Radio Receiver Control Module (U2K or UBS)
2. K73 Telematics Communication Interface Control Module (UE1)

Steering Column Components (1 of 2)

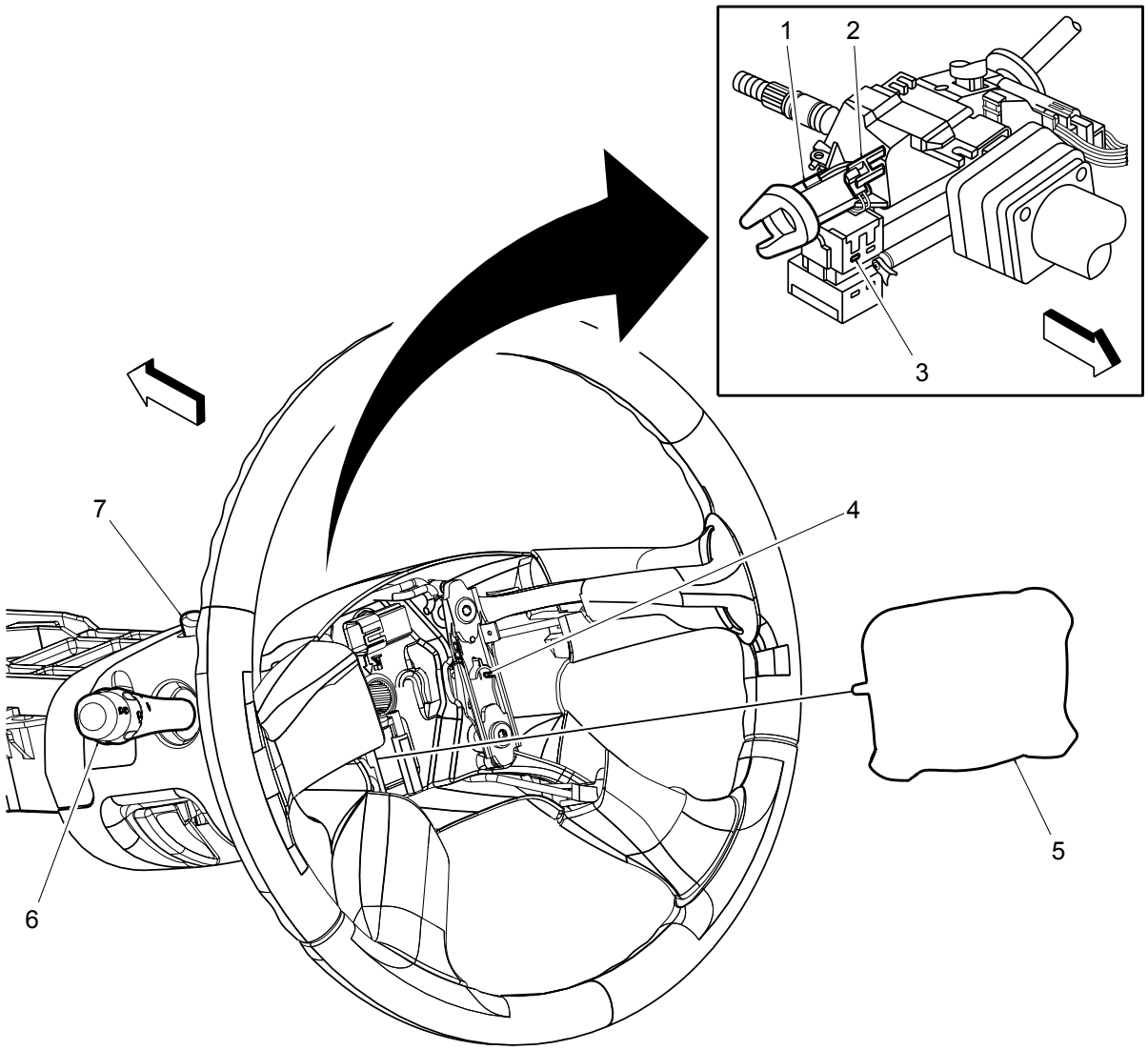

Items

1. K64 Content Theft Deterrent Control Module
2. M7 Transmission Shift Lock Control Solenoid Actuator
3. S39 Ignition Switch
4. S33 Horn Switch
5. F107 Steering Wheel Air Bag
6. S78 Turn Signal/Multifunction Switch
7. S26 Hazard Warning Switch

Steering Column Components (2 of 2)

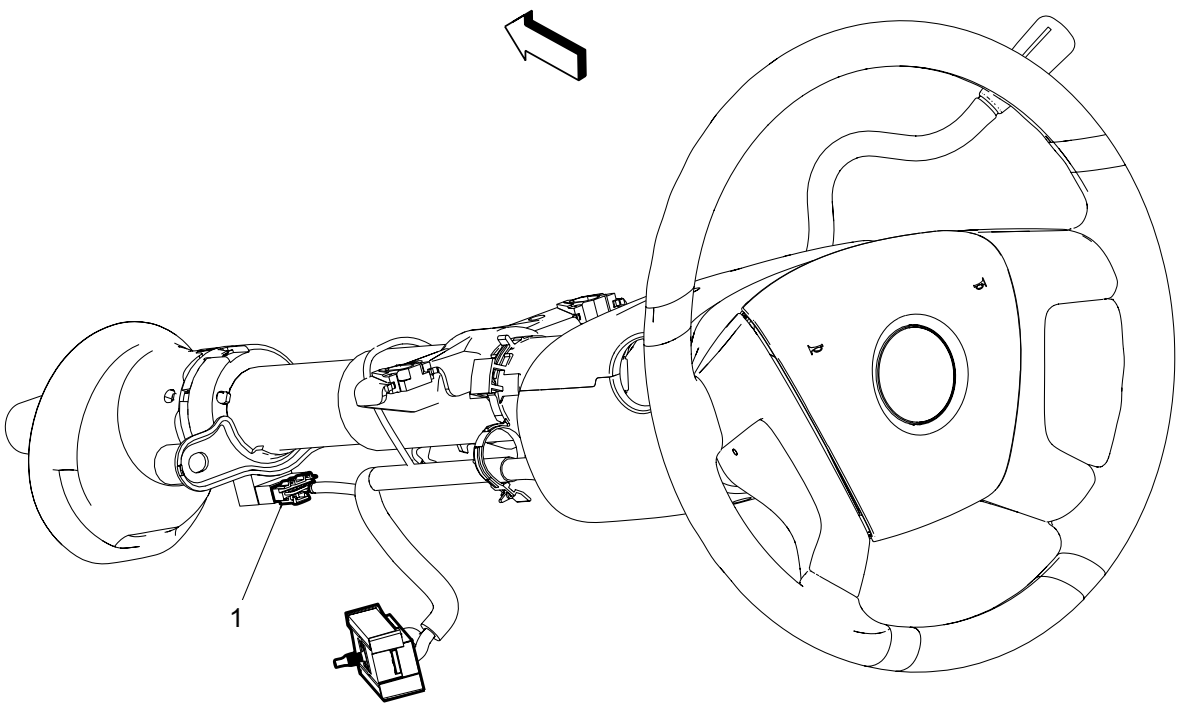

Items

1. B99 Steering Wheel Angle Sensor (JL4)

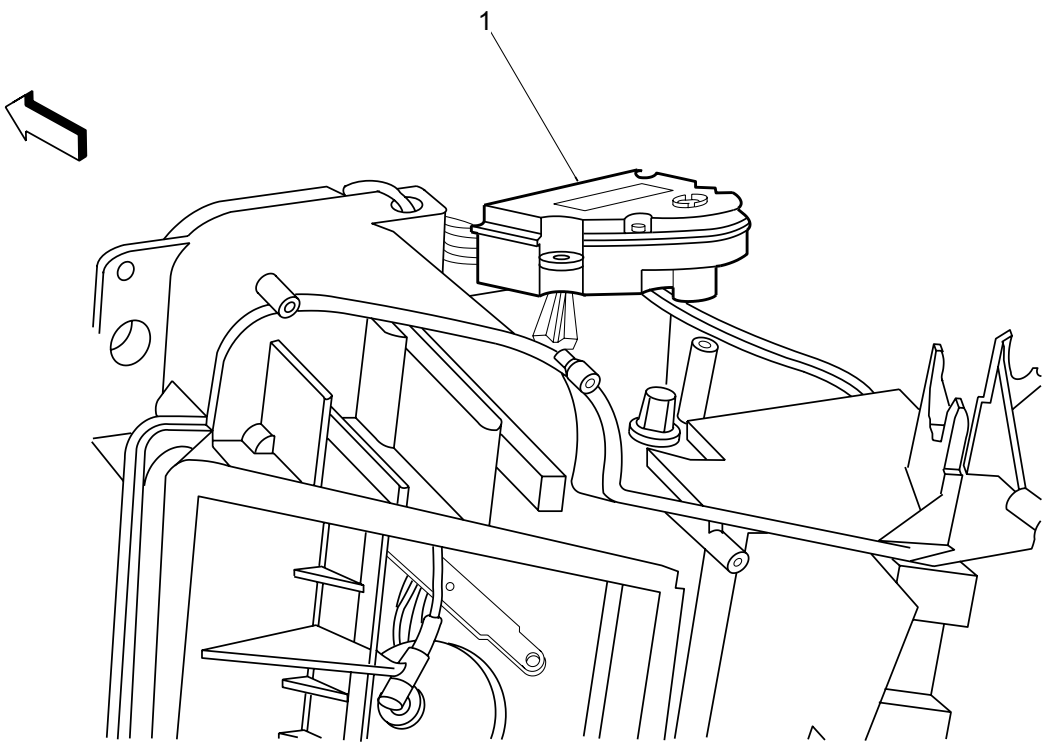

Items

1. M6 Air Temperature Door Actuator

Left Front of Passenger Compartment Components

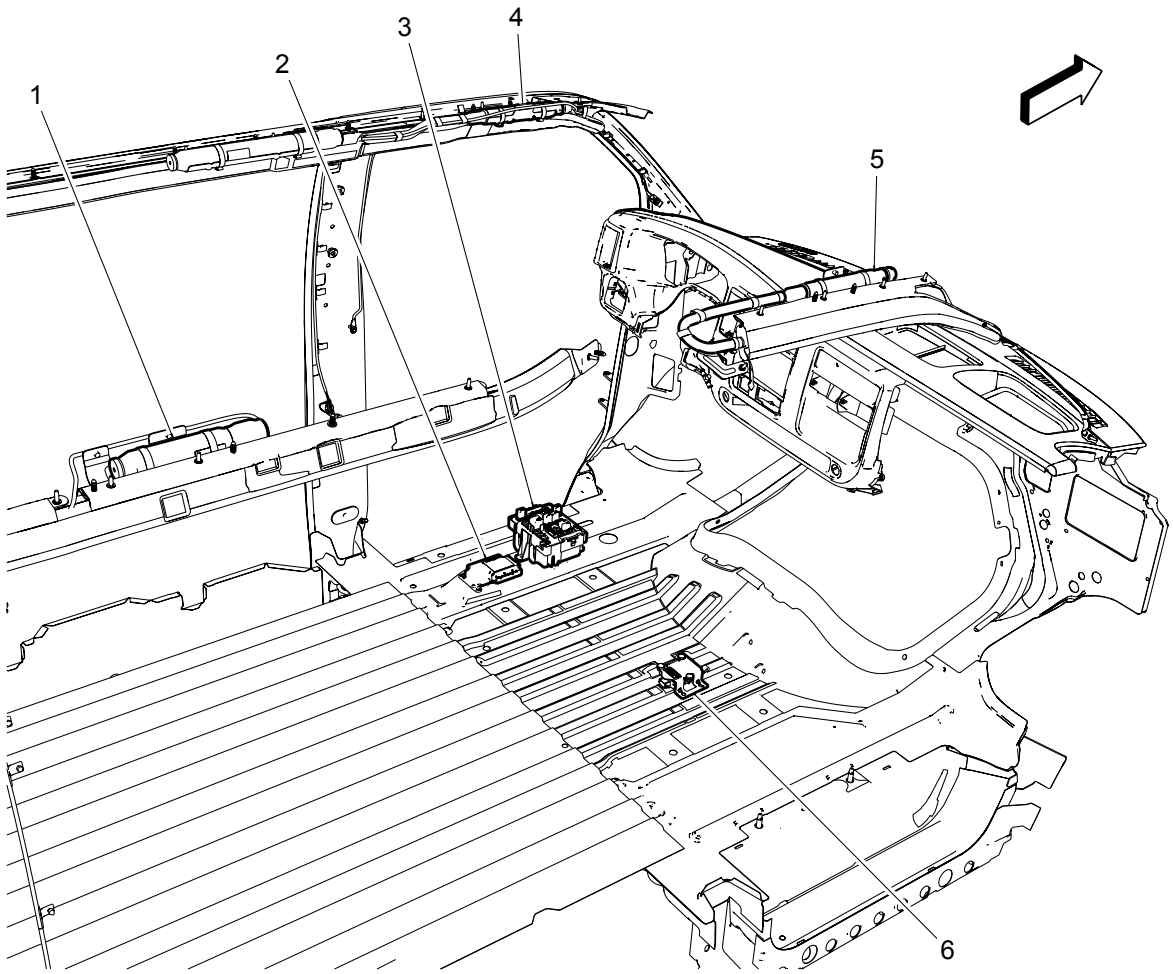

Items

1. F105RR Roof Rail Air Bag - Right Rear (ASF with YA2)
2. K36 Inflatable Restraint Sensing and Diagnostic Module
3. X52A Fuse Block - Passenger Compartment
4. F105LF Roof Rail Air Bag - Left Front (ASF)
5. F105RF Roof Rail Air Bag - Right Front (ASF)
6. B119 Multi-axis Acceleration Sensor (JL4)

Headliner Components

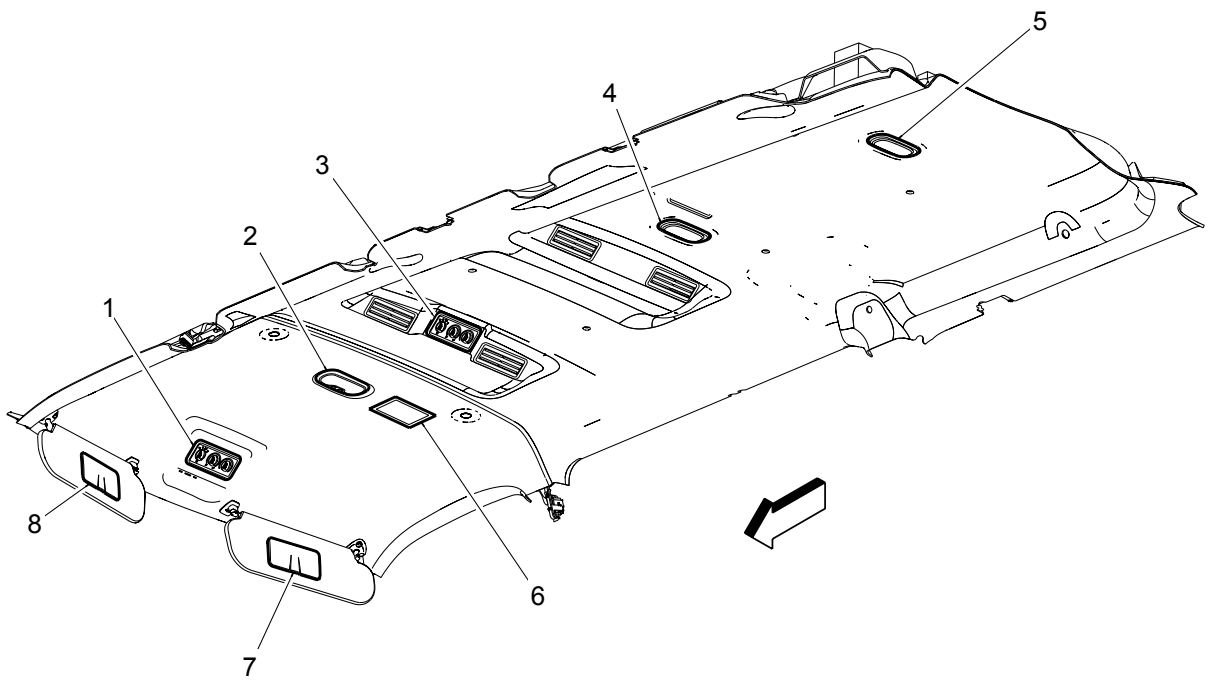

Items

1. S34F HVAC Controls Switch Assembly - Auxiliary Front (C36 or C69)
2. E37F Dome/Reading Lamps - Front (Without YF7)
3. S34R HVAC Controls Switch Assembly - Auxiliary Rear (C36 or C69 with Rear HVAC Controls)
4. E37M Dome/Reading Lamps - Middle (Passenger)
5. E37R Dome/Reading Lamps - Rear (Passenger)
6. K18 Compass Module (U80)
7. E31R Sunshade Mirror Lamp - Right (C69 or DH6)
8. E31L Sunshade Mirror Lamp - Left (C69 or DH6)

Driver Seat Components

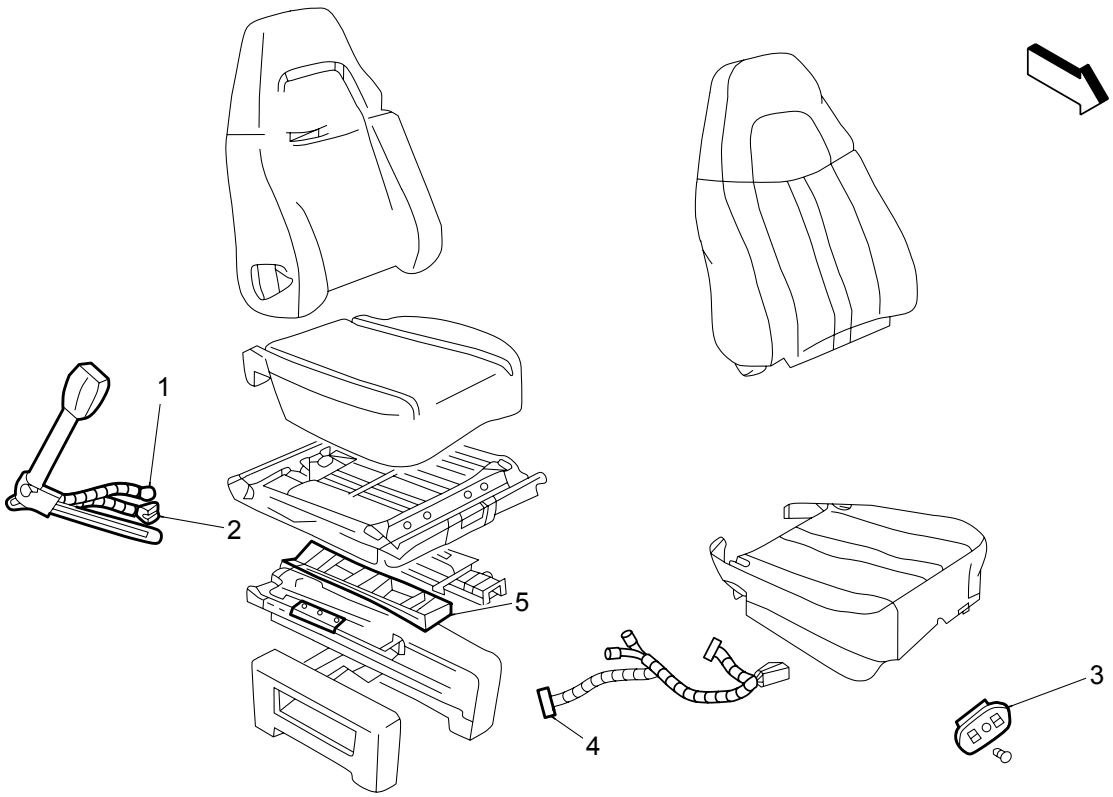

Items

1. B153D Seat Belt Buckle - Driver
2. F109D Seat Belt Buckle Pretensioner - Driver
3. S64D Seat Adjuster Switch - Driver (AG1)
4. X307
5. M49D Seat Motor Assembly - Driver (AG1)

Passenger Seat Components

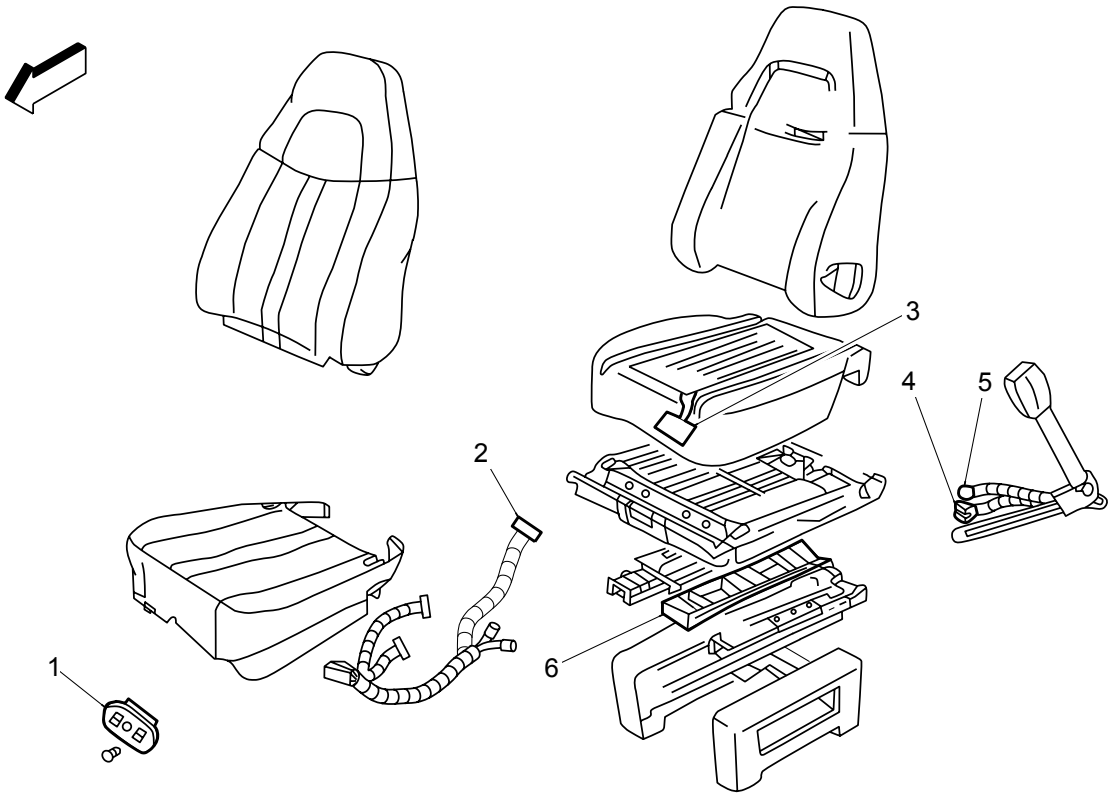

Items

1. S64P Seat Adjuster Switch - Passenger (AG2)
2. X306
3. B60 Passenger Presence Sensor (AL0)
4. F109P Seat Belt Buckle Pretensioner - Passenger (AK5)
5. B153P Seat Belt Buckle - Passenger (AK5)
6. M49P Seat Motor Assembly - Passenger (AG2)

Right Rear Frame Rail Components (Passenger with E24)

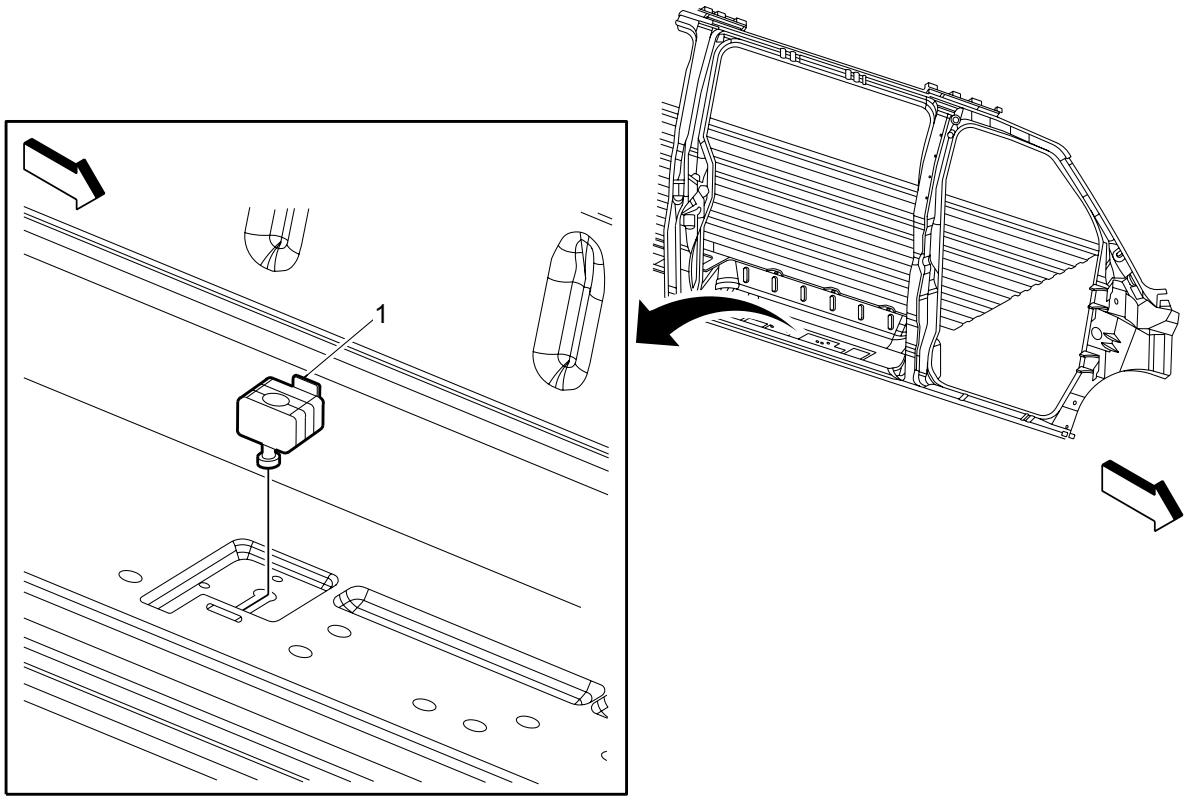

Items

1. B63RR Side Impact Sensor - Right Rear (ASF)

Right Rear Frame Rail Components (Passenger with YA2)

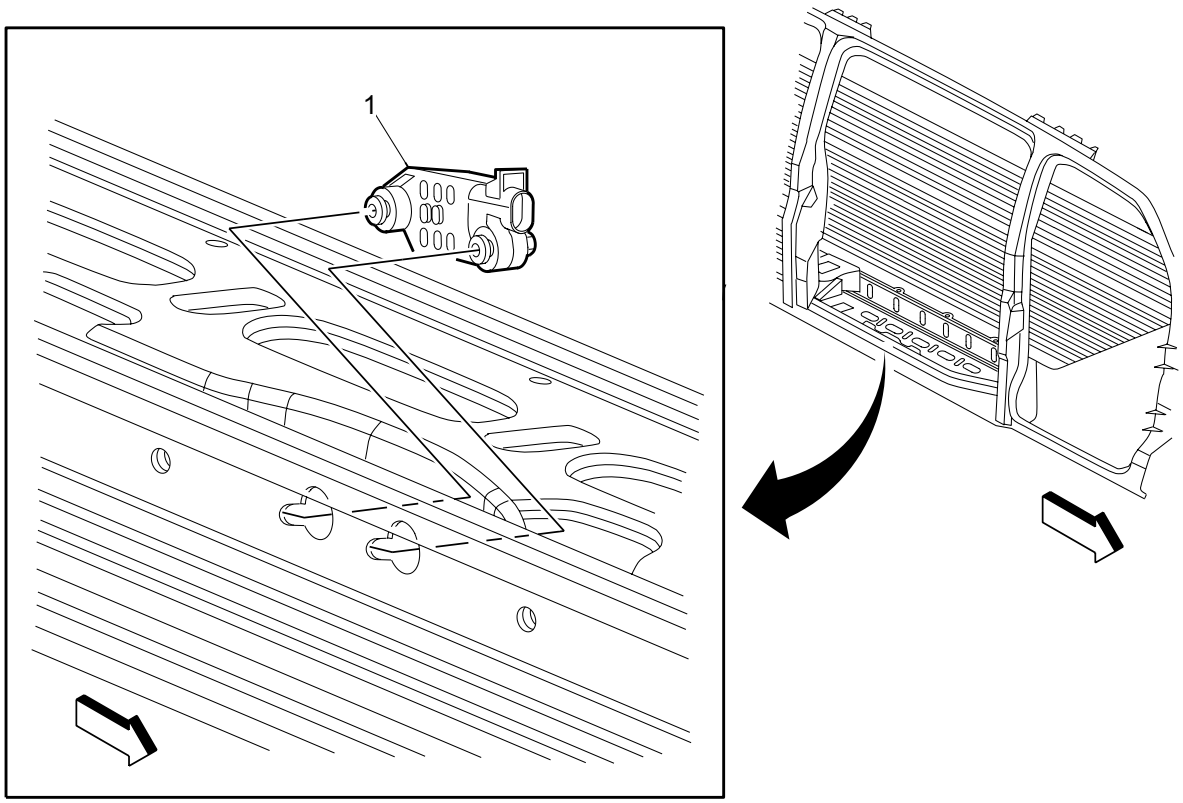

Items

1. B63RR Side Impact Sensor - Right Rear (ASF)

Door Component Views

Driver Door Components

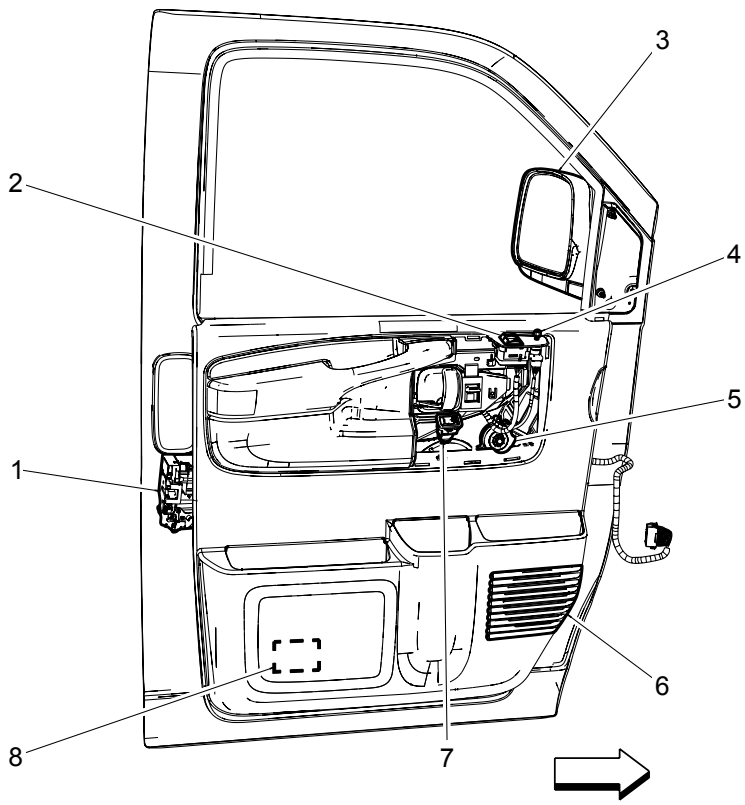

Items

1. A23D Door Latch Assembly - Driver
2. S79D Window Switch - Driver (A31)
3. A9A Outside Rearview Mirror - Driver (DEB or DE5)
4. S52 Outside Rearview Mirror Switch (DEB or DE5)
5. M74D Window Motor - Driver (A31)
6. P19AG Speaker - Left Front Door
7. S13D Door Lock Switch - Driver (AU3)
8. B63LF Side Impact Sensor - Left Front (ASF)

Front Passenger Door Components

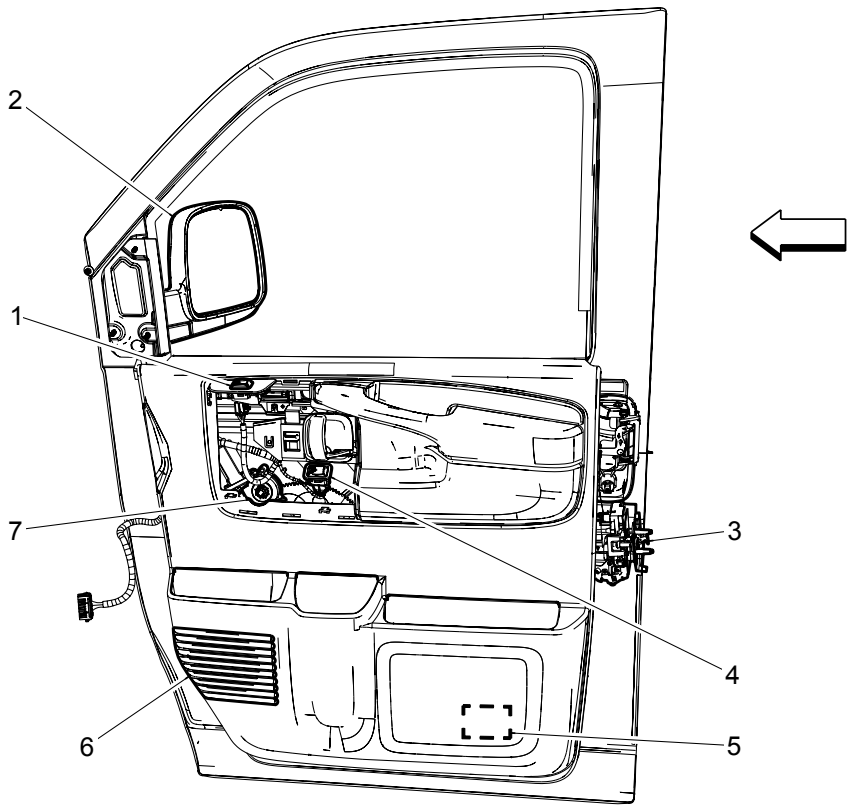

Items

1. S79P Window Switch - Passenger (A31)
2. A9B Outside Rearview Mirror - Passenger (DEB or DE5)
3. A23P Door Latch Assembly - Passenger
4. S13P Door Lock Switch - Passenger (AU3)
5. B63RF Side Impact Sensor - Right Front (ASF)
6. P19AH Speaker - Right Front Door
7. M74P Window Motor - Passenger (A31)

Right Side Hinged Door Components (E24)

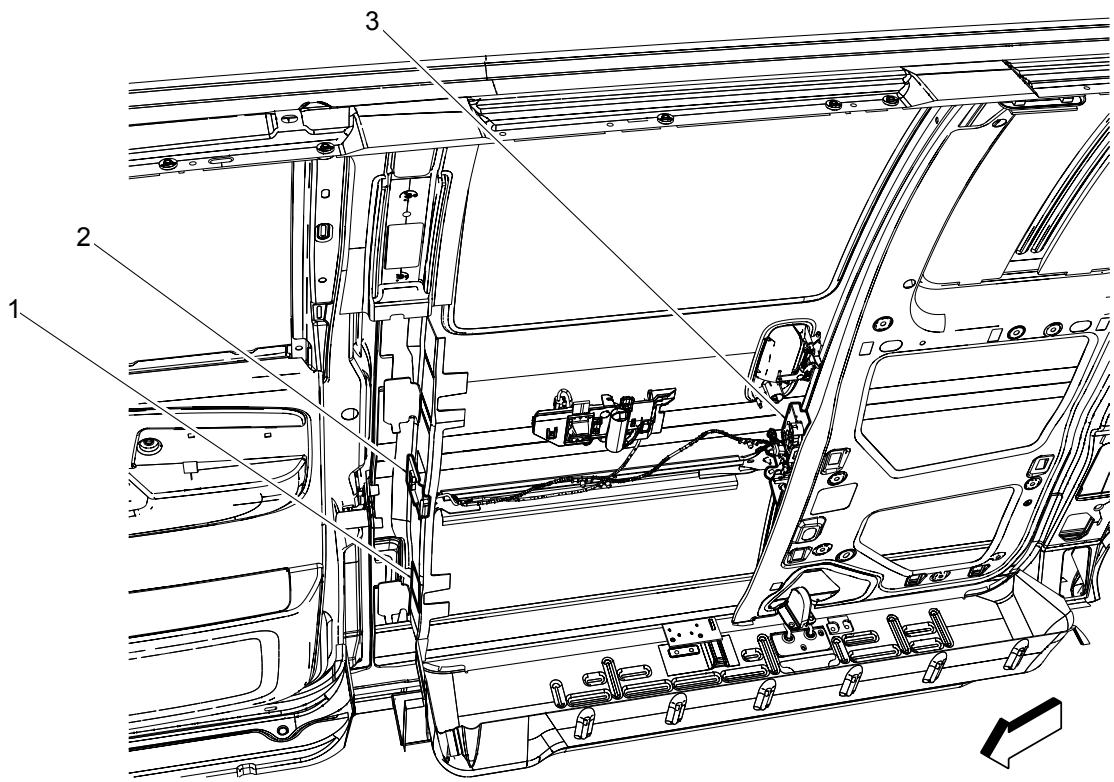

Items

1. B28F Door Ajar Switch - Right Sliding (E24 or YA2)
2. X87RB Sliding Door Jamb Contact Plate - Right Body (AU3 and E24 or YA2)
3. M14RR Door Lock Actuator - Right Rear (AU3)

Right Sliding Door Components (YA2)

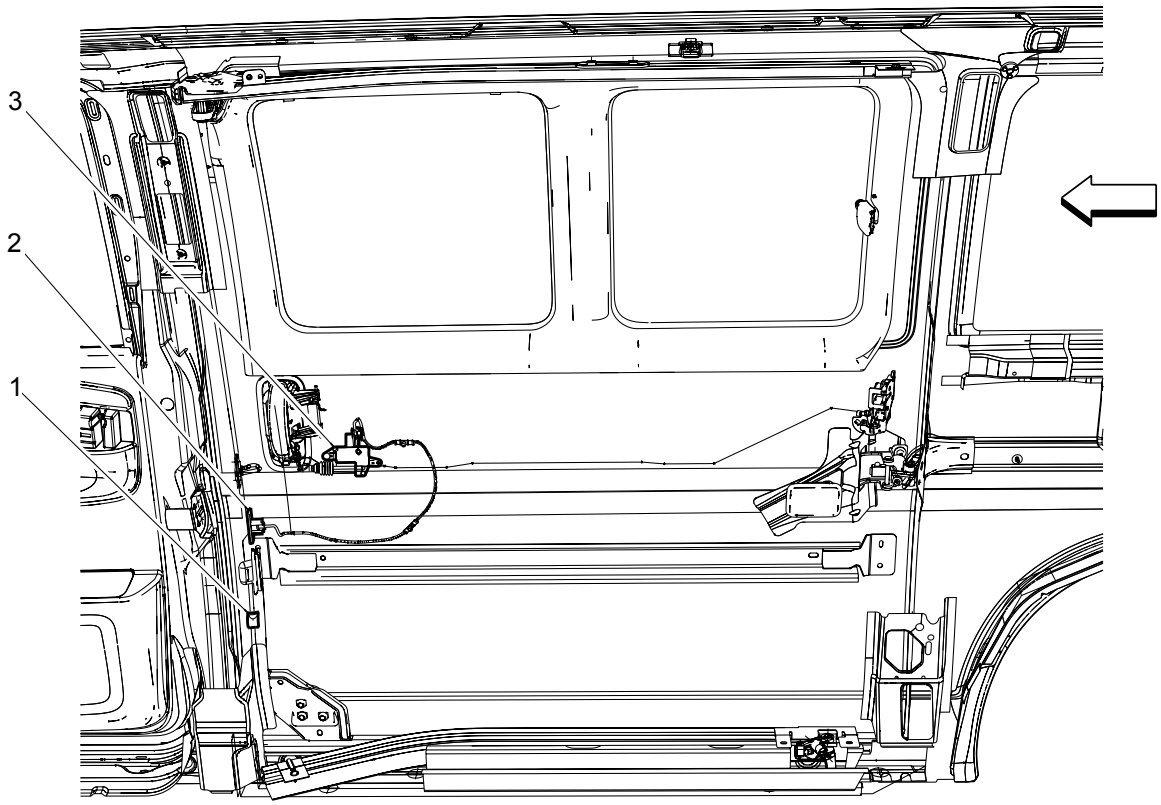

Items

1. B28F Door Ajar Switch - Right Sliding (E24 or YA2)
2. X87RB Sliding Door Jamb Contact Plate - Right Body (AU3 and E24 or YA2)
3. M14RR Door Lock Actuator - Right Rear (AU3)

Rear Door Components (Passenger or Cargo)

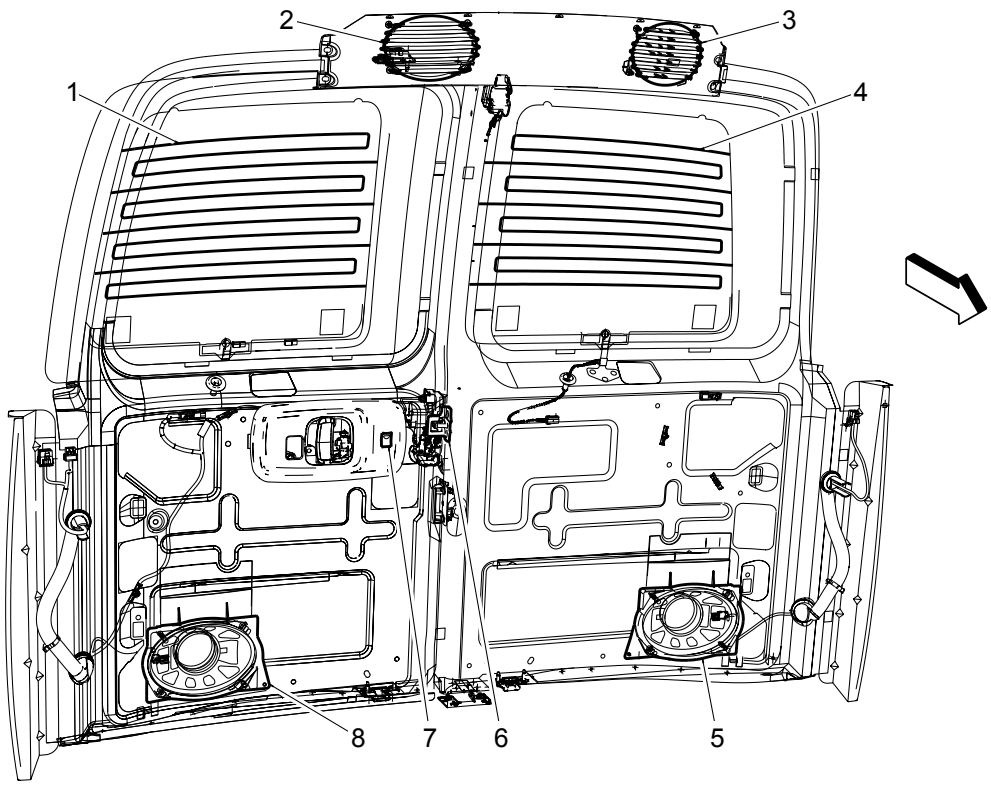

Items

1. E18R Rear Defogger Grid - Right (C49)
2. P19RR Speaker - Right Rear Roof (Cargo or Passenger)
3. P19LR Speaker - Left Rear Roof (Cargo or Passenger)
4. E18L Rear Defogger Grid - Left (C49)
5. P19F Speaker - Left Rear Cargo Door (US8)
6. M13 Door Latch Assembly - Rear Cargo (Passenger or Cargo)
7. S13A Door Lock Switch - Rear Cargo (Passenger or Cargo with AU3)
8. P19T Speaker - Right Rear Cargo Door (US8)

Left Rear Cargo Area Components (Passenger or Cargo)

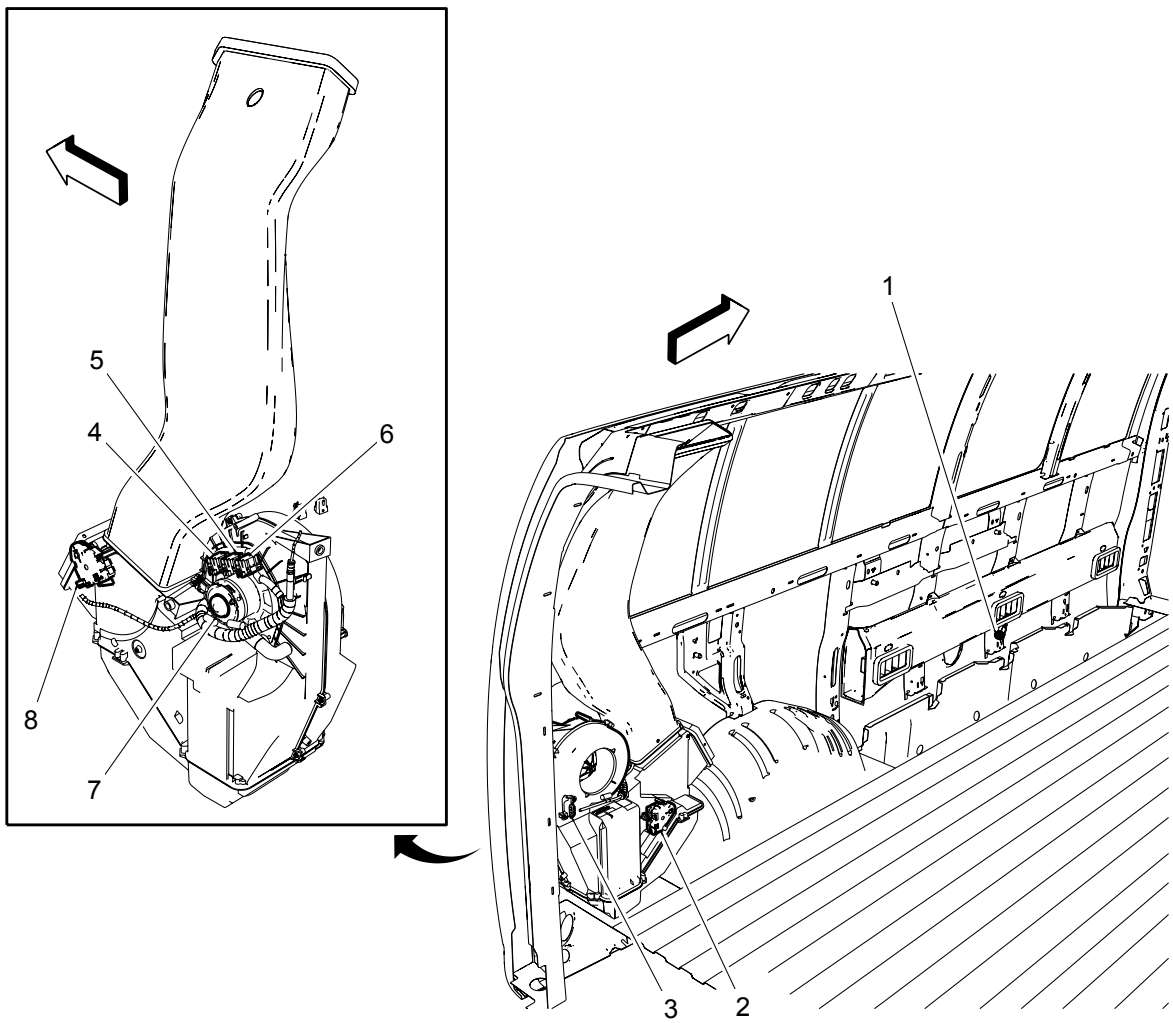

Items

1. B63LR Side Impact Sensor - Left Rear (ASF)
2. M6B Air Temperature Door Actuator - Auxiliary (C69)
3. R3B Blower Motor Resistor - Auxiliary (C69)
4. KR32B Blower Motor High Speed Relay - Auxiliary (C36, C69, or ENC)
5. KR32D Blower Motor Medium Speed Relay - Auxiliary (C36, C69, or ENC)
6. KR32C Blower Motor Low Speed Relay - Auxiliary (C36, C69, or ENC)
7. M8B Blower Motor - Auxiliary (C36 or C69)
8. M37B Mode Door Actuator - Auxiliary (C69)

Rear Exterior Lights (Passenger or Cargo)

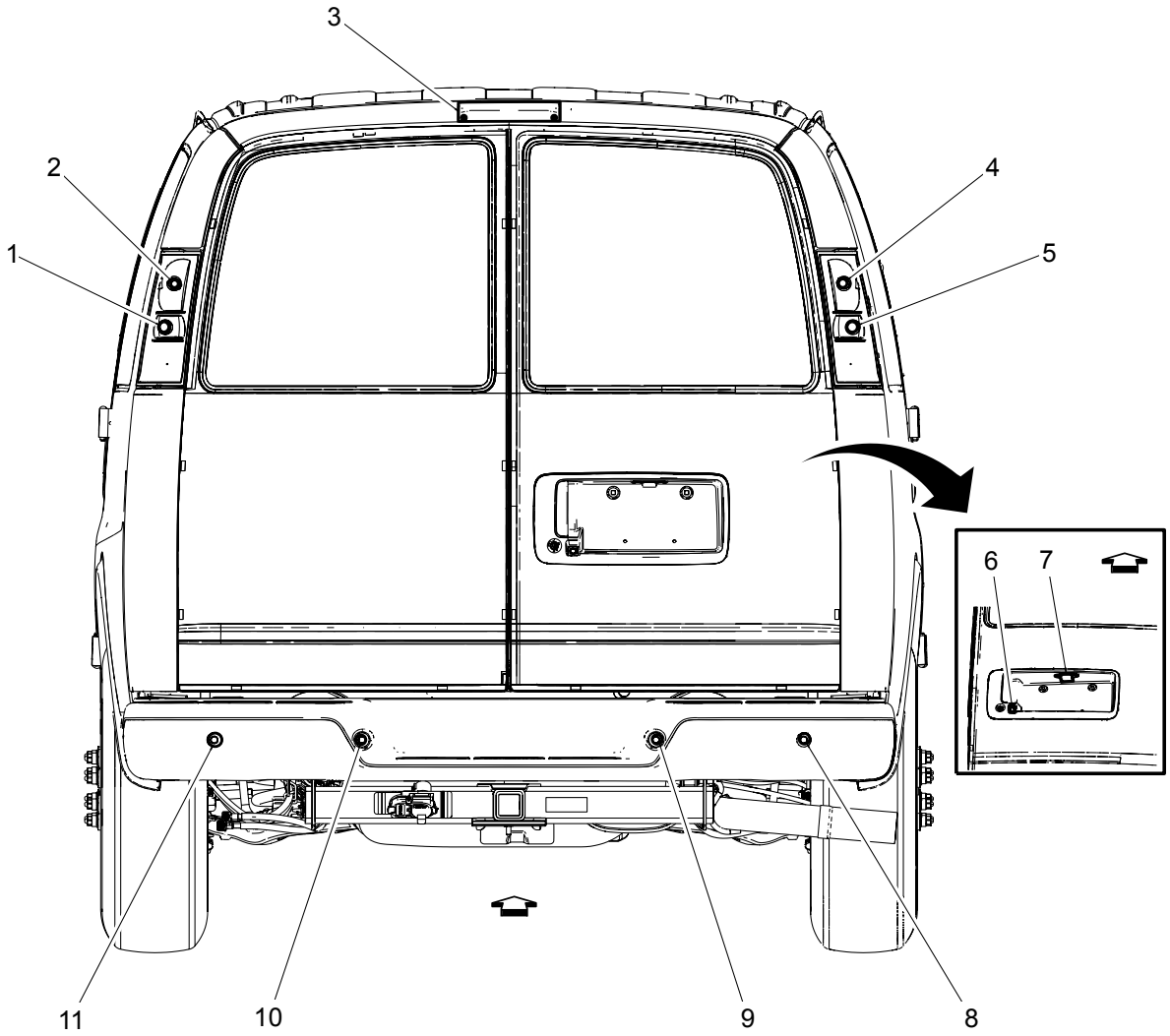

Items

1. E5A Backup Lamp - Left
2. E5S Tail/Stop and Turn Signal Lamp - Left (Passenger or Cargo)
3. E6 Center High Mounted Stop Lamp (Passenger or Cargo)
4. E5T Tail/Stop and Turn Signal Lamp - Right (Passenger or Cargo)
5. E5B Backup Lamp - Right
6. B87 Rearview Camera (UVC)
7. E7 License Plate Lamp (Passenger or Cargo)
8. B78H Rear Object Sensor - Right Outer (UD7)
9. B78F Rear Object Sensor - Right Middle (UD7)
10. B78E Rear Object Sensor - Left Middle (UD7)
11. B78G Rear Object Sensor - Left Outer (UD7)

11. B78G Rear Object Sensor - Left Outer (UD7)

Front Wheel Speed Sensor Components

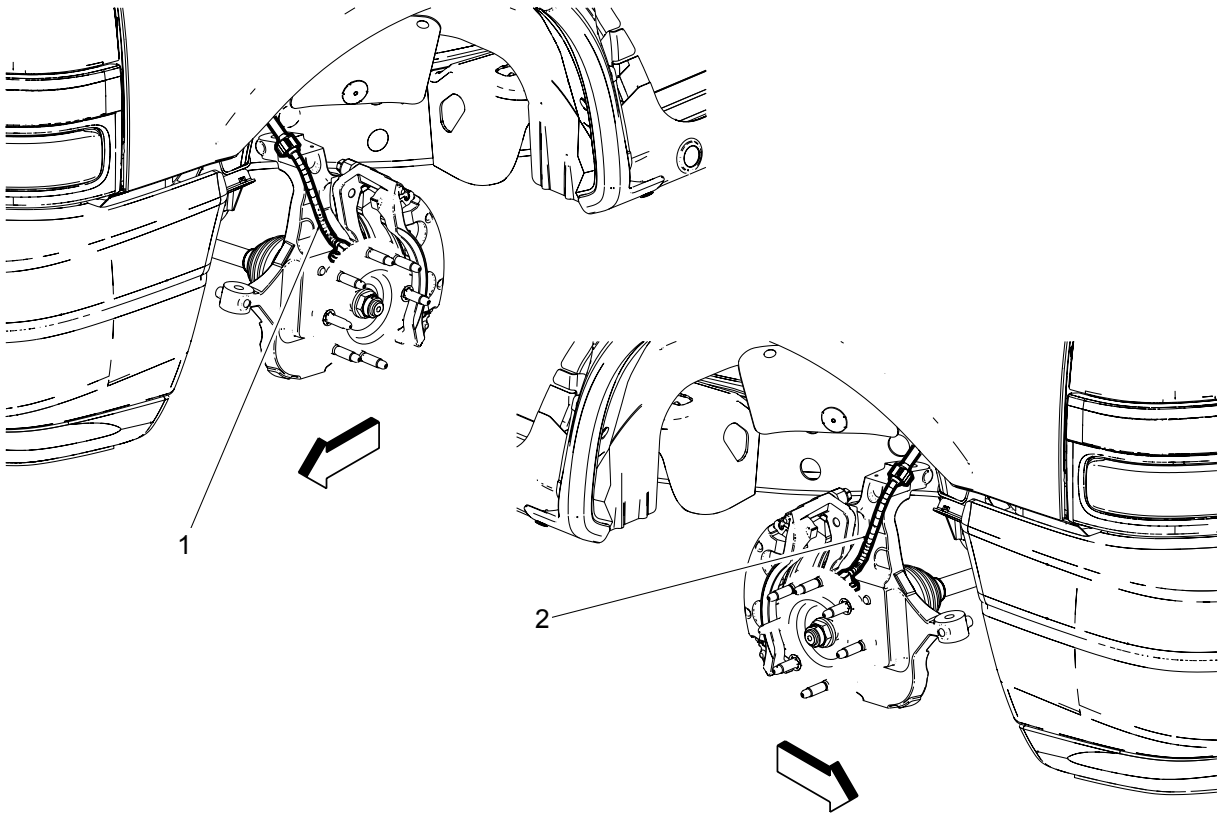

Items

1. B5LF Wheel Speed Sensor - Left Front
2. B5RF Wheel Speed Sensor - Right Front

Frame and Underbody Components (1 of 2)

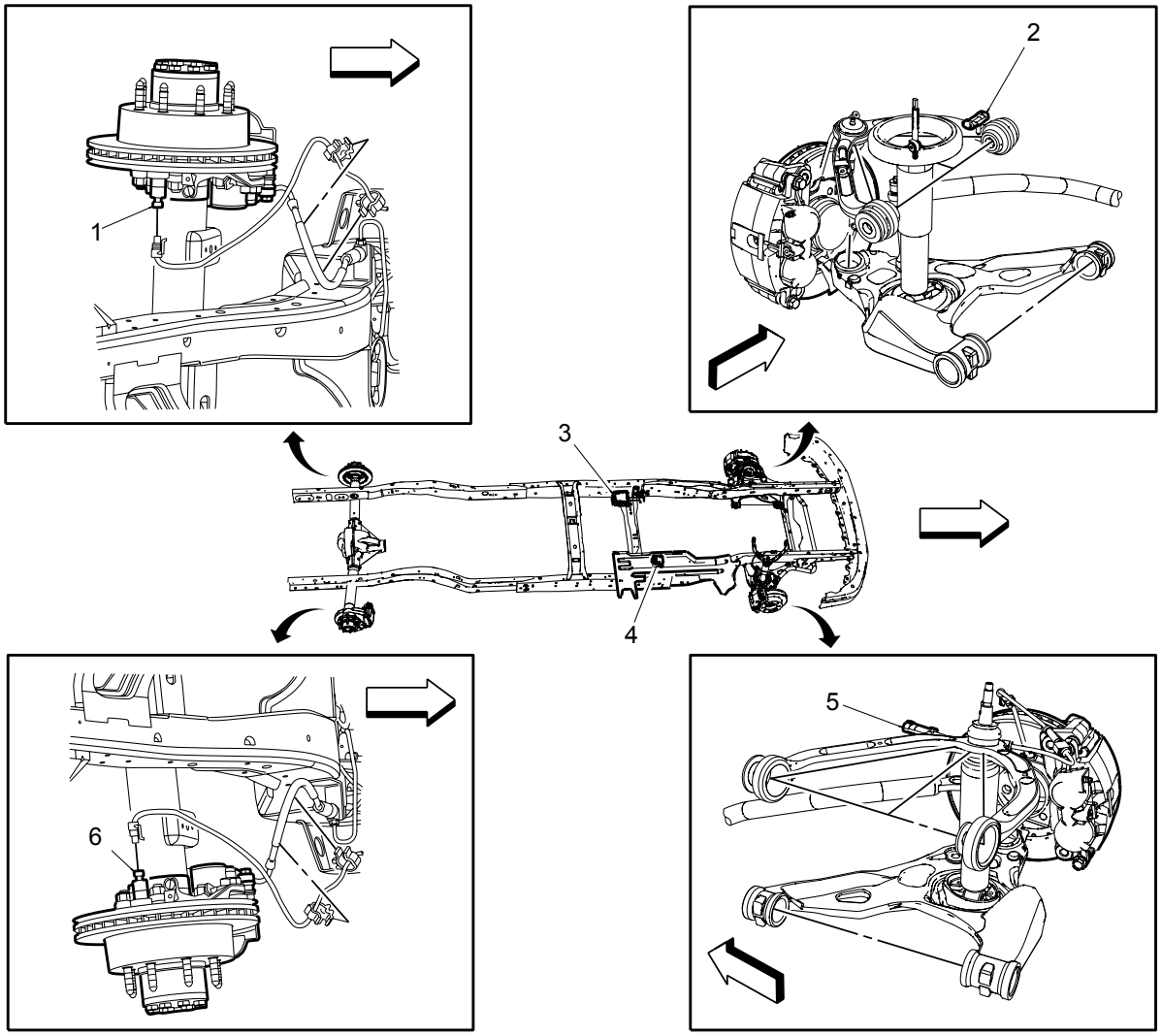

Items

1. B5LR Wheel Speed Sensor - Left Rear (JL4)
2. B5LF Wheel Speed Sensor - Left Front
3. K17 Electronic Brake Control Module
4. B119 Multi-axis Acceleration Sensor (JL4)
5. B5RF Wheel Speed Sensor - Right Front
6. B5RR Wheel Speed Sensor - Right Rear (JL4)

Frame and Underbody Components (2 of 2, LGH)

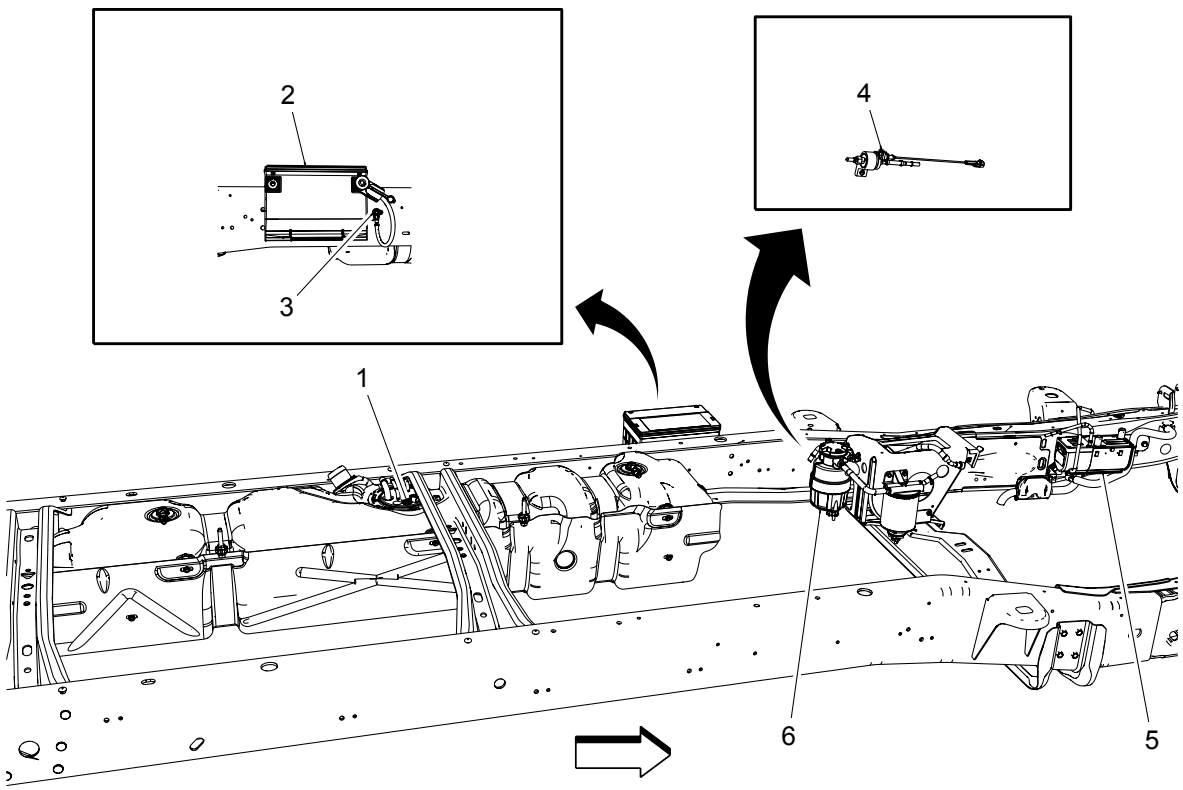

Items

1. B46 Fuel Level Sensor
2. C1B Battery - Auxiliary (LGH or TP2)
3. G305 (TP2 or LGH)
4. G7 Coolant Heater Fuel Pump (K08)
5. E19 Coolant Heater (K08)
6. G12 Fuel Pump

Coolant Heater Components (K08)

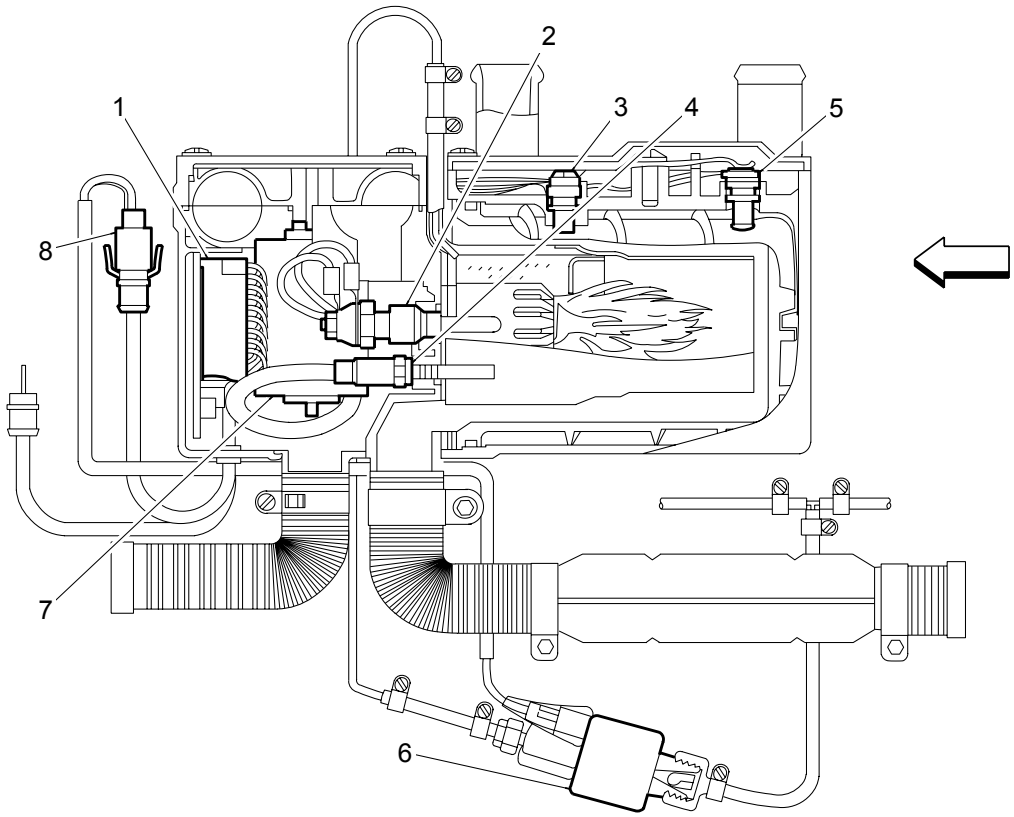

Items

1. K10 Coolant Heater Control Module (K08)
2. E20 Coolant Heater Glow Plug (K08)
3. B134A Coolant Heater Air Temperature Sensor (K08)
4. B134B Coolant Heater Combustion Sensor (K08)
5. B134C Coolant Heater Overheat Sensor (K08)
6. G7 Coolant Heater Fuel Pump (K08)
7. M11 Coolant Heater Blower Motor (K08)
8. E19 Coolant Heater (K08)

Fuel Tank Components (Without NE7)

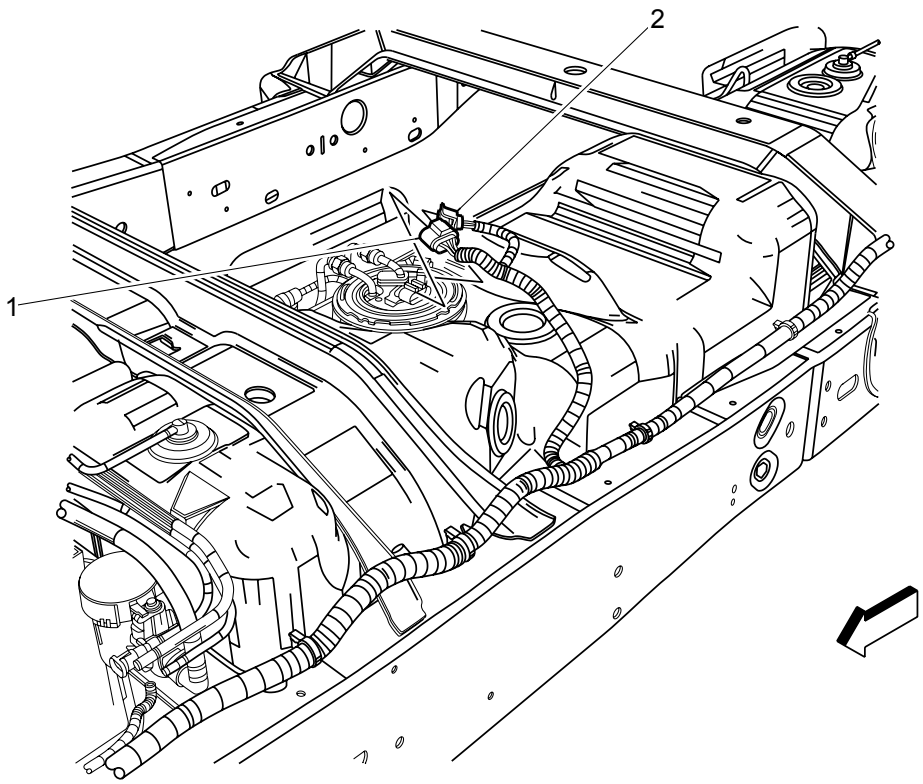

Items

1. A7 Fuel Pump and Level Sensor Assembly (L20, L96, or LC8)
2. B150 Fuel Tank Pressure Sensor

Fuel Tank Components (NE7)

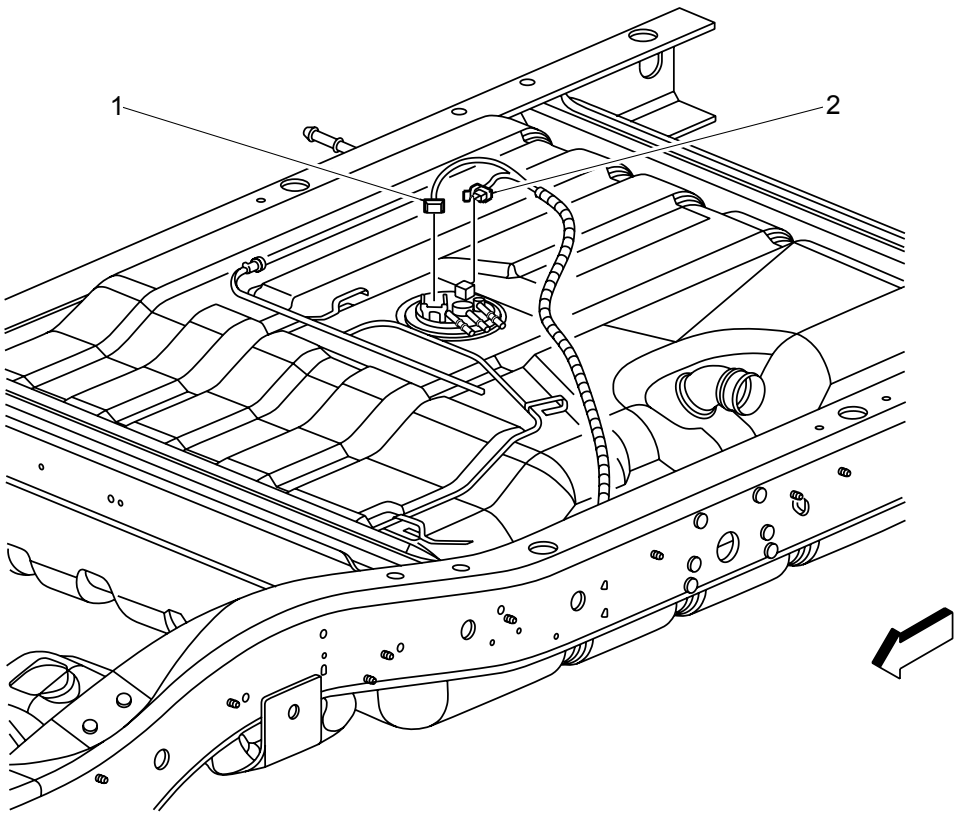

Items

1. B150 Fuel Tank Pressure Sensor
2. A7 Fuel Pump and Level Sensor Assembly (L20, L96, or LC8)

Inside of Fuel Tank Components (LGH)

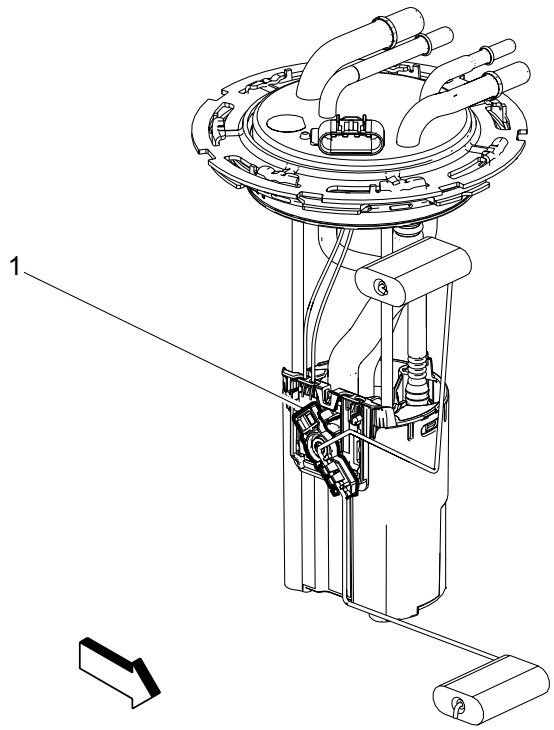

Items

1. B46 Fuel Level Sensor

Reductant Tank Components

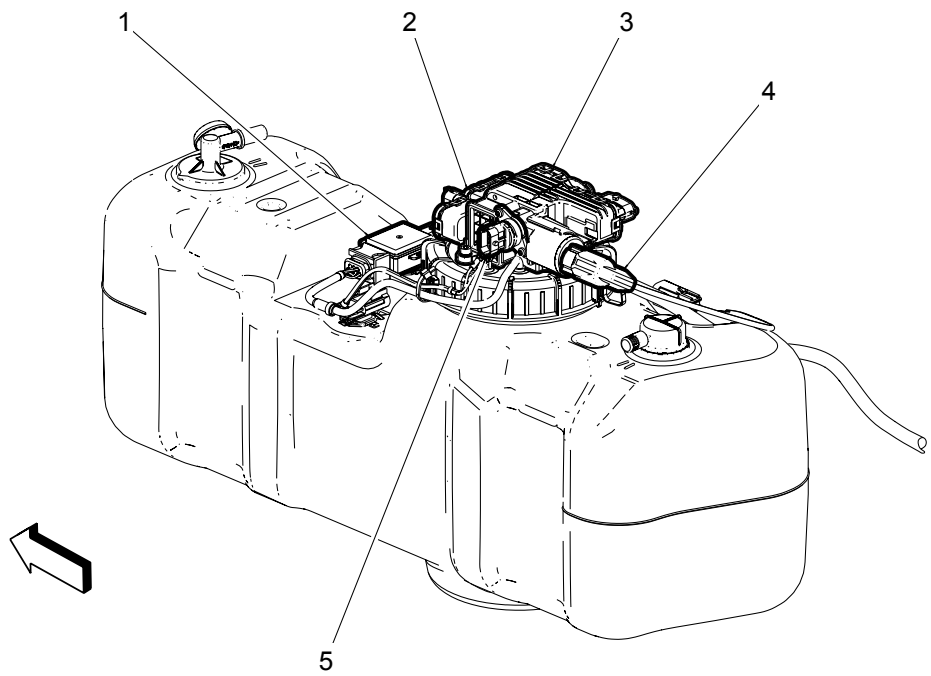

Items

1. B212 Reductant Sensor Module (LGH)
2. Q62 Reductant Purge Solenoid Valve (LGH)
3. G33 Reductant Pump (LGH)
4. E52 Reductant Line Heater (LGH)
5. B194 Reductant Pressure Sensor (LGH)

G100 and G101

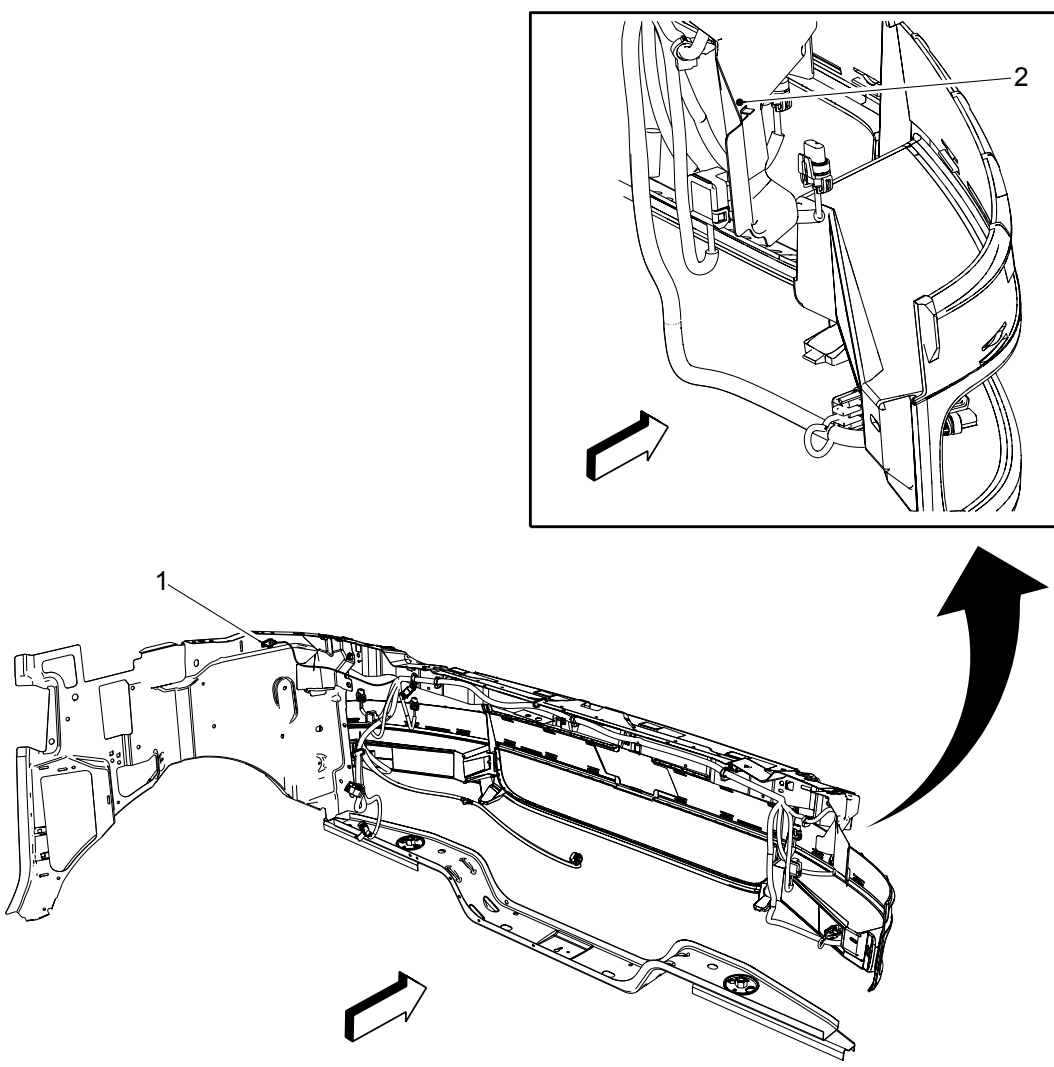

Items

1. G100
2. G101

G102 and G103 (L20, L96, or LC8)

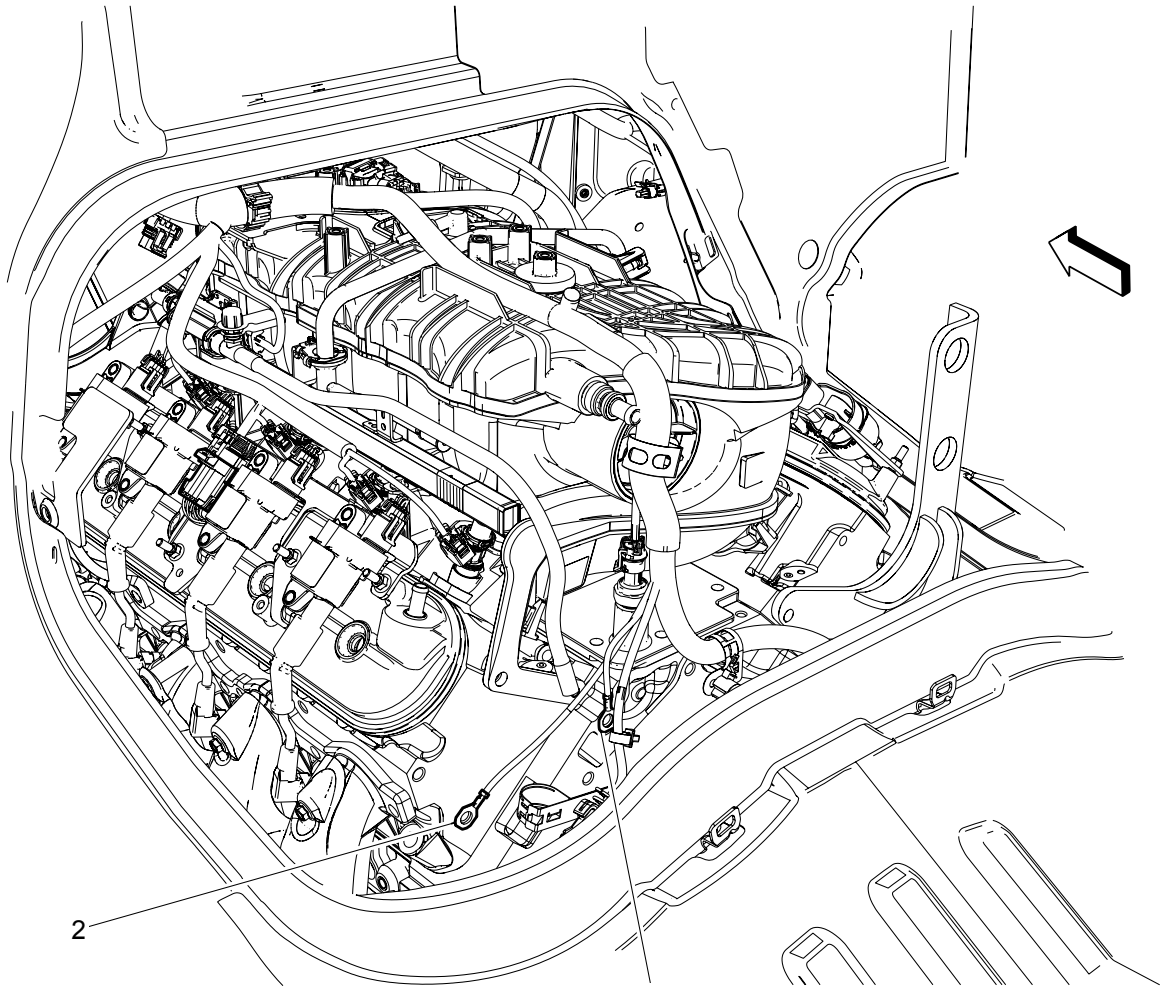

Items

1. G103
2. G102

G102 and G103 (LGH)

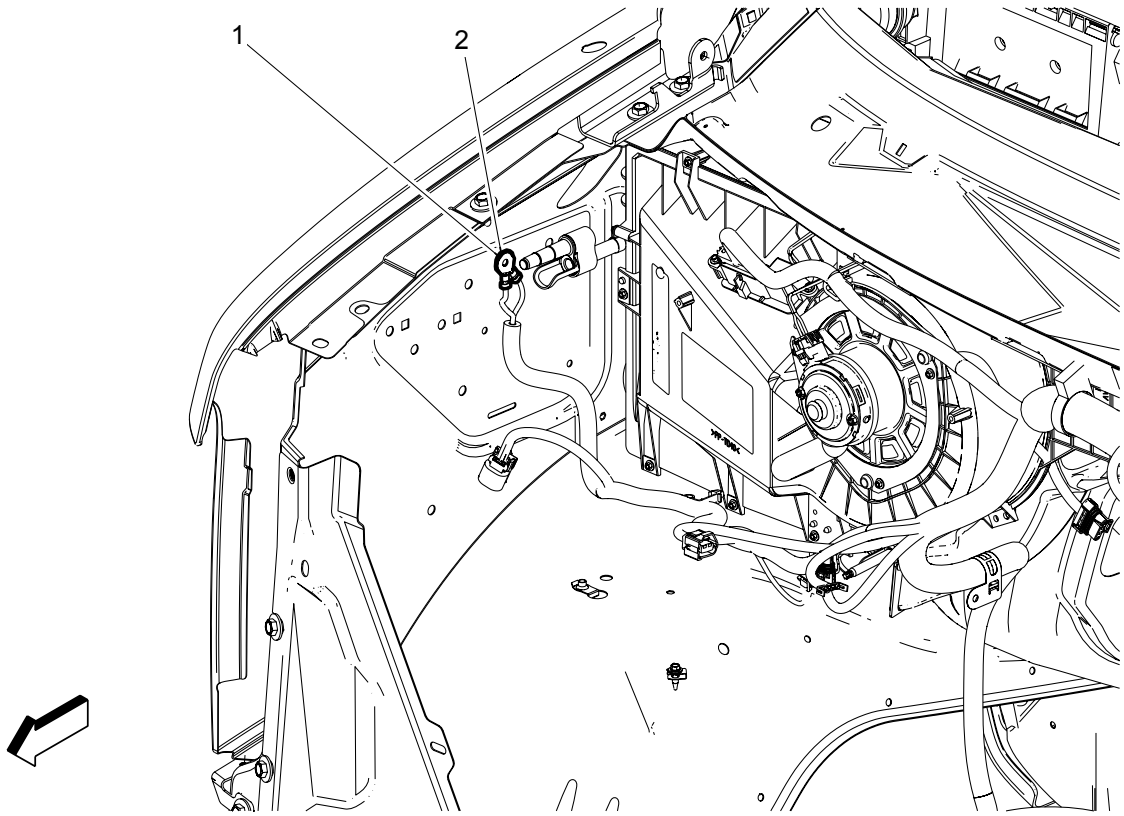

Items

1. G102
2. G103

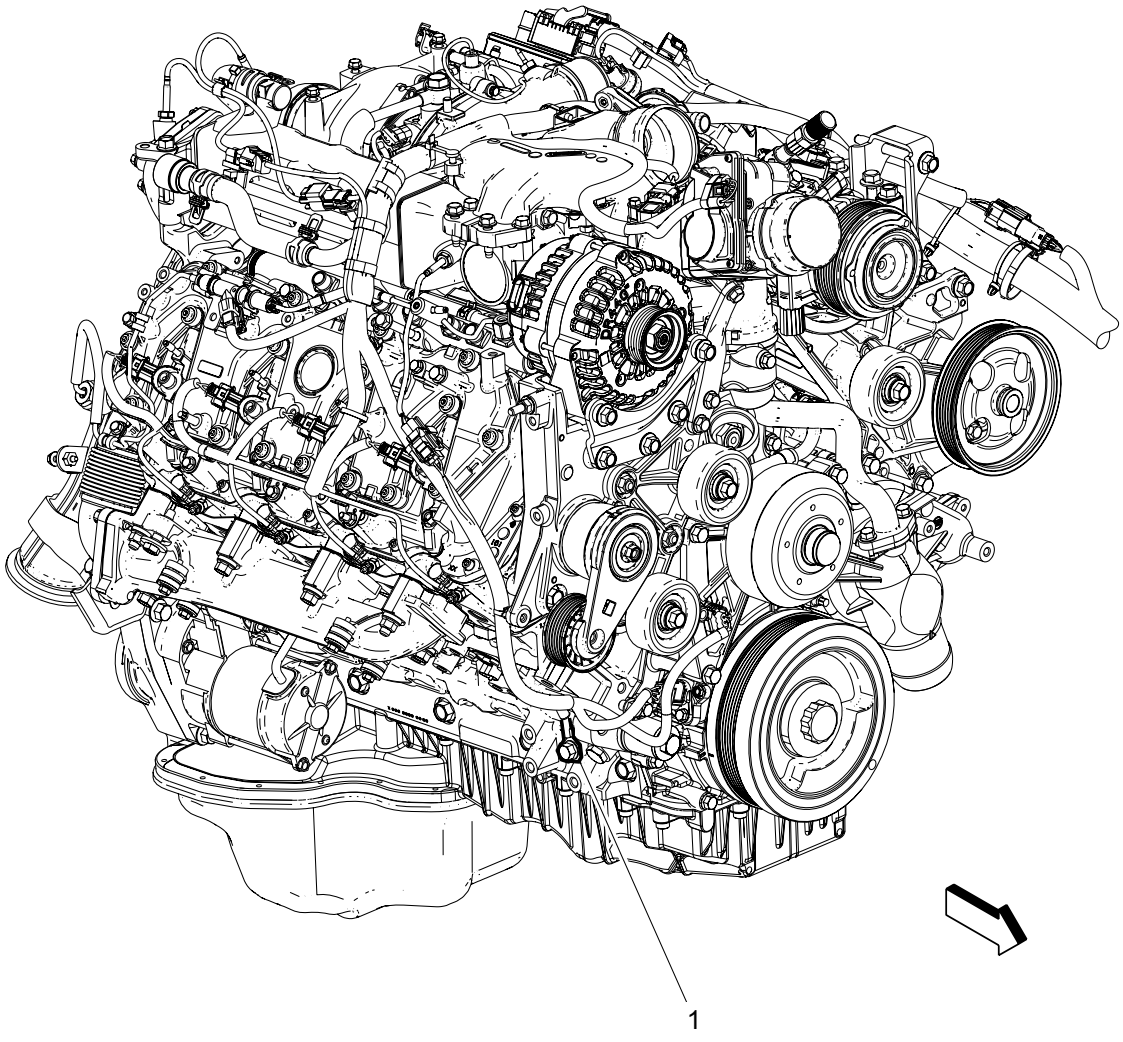

Items

1. G109 (LGH)

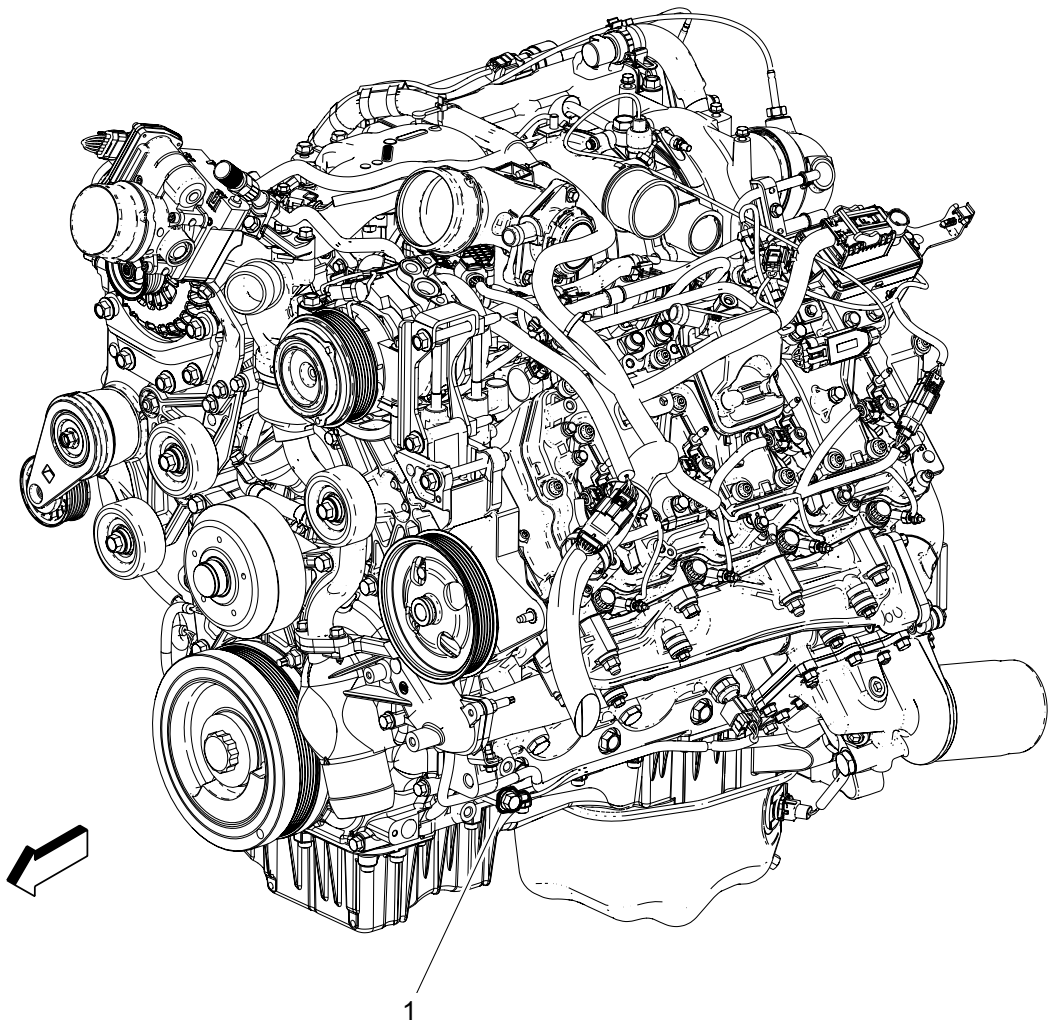

Items

1. G110 (LGH)

G300 (L20, L96, or LC8)

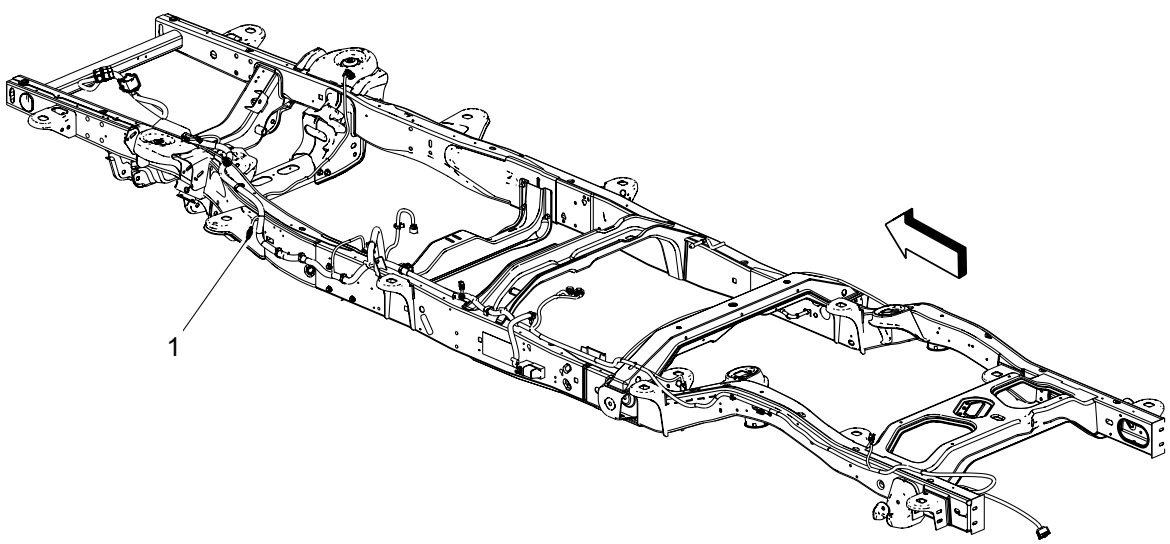

Items

1. G300

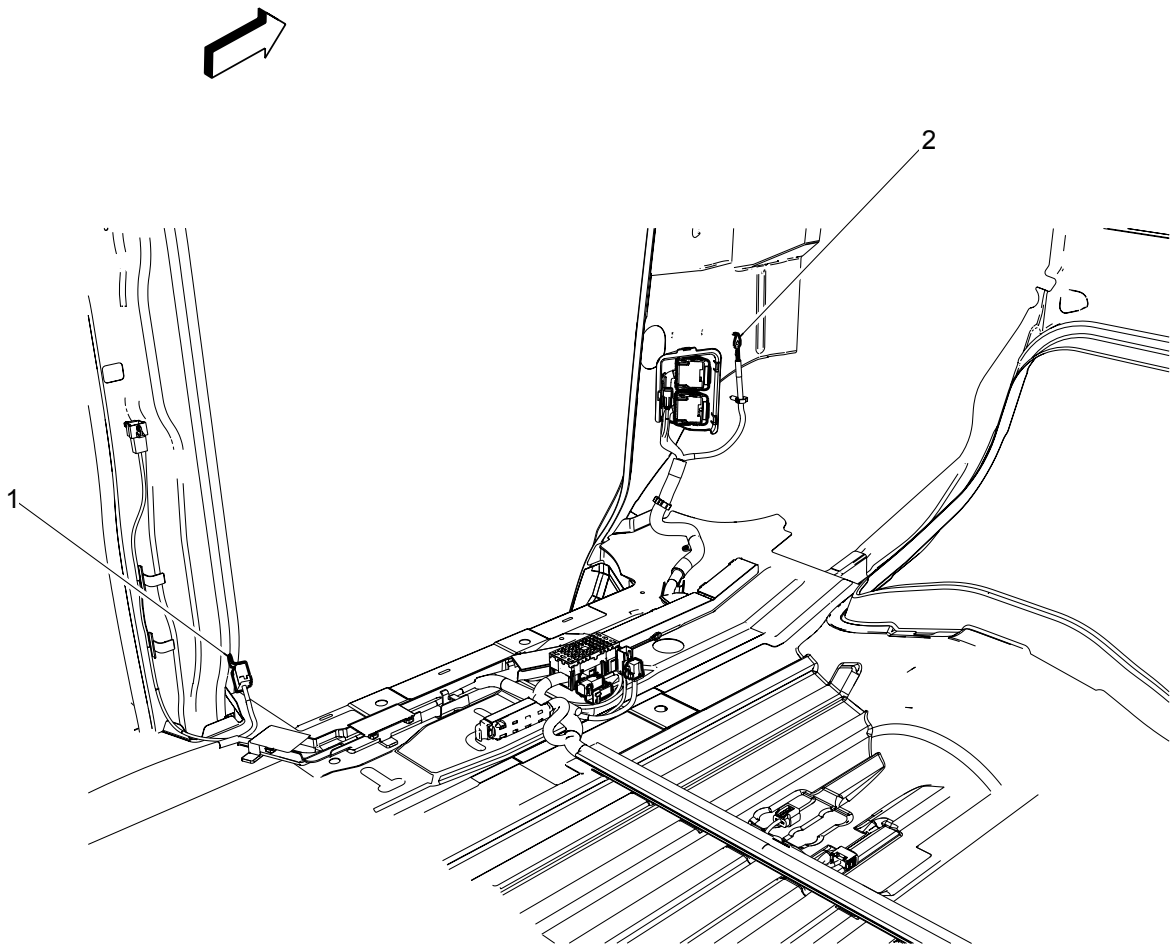

Items

1. G347
2. G302

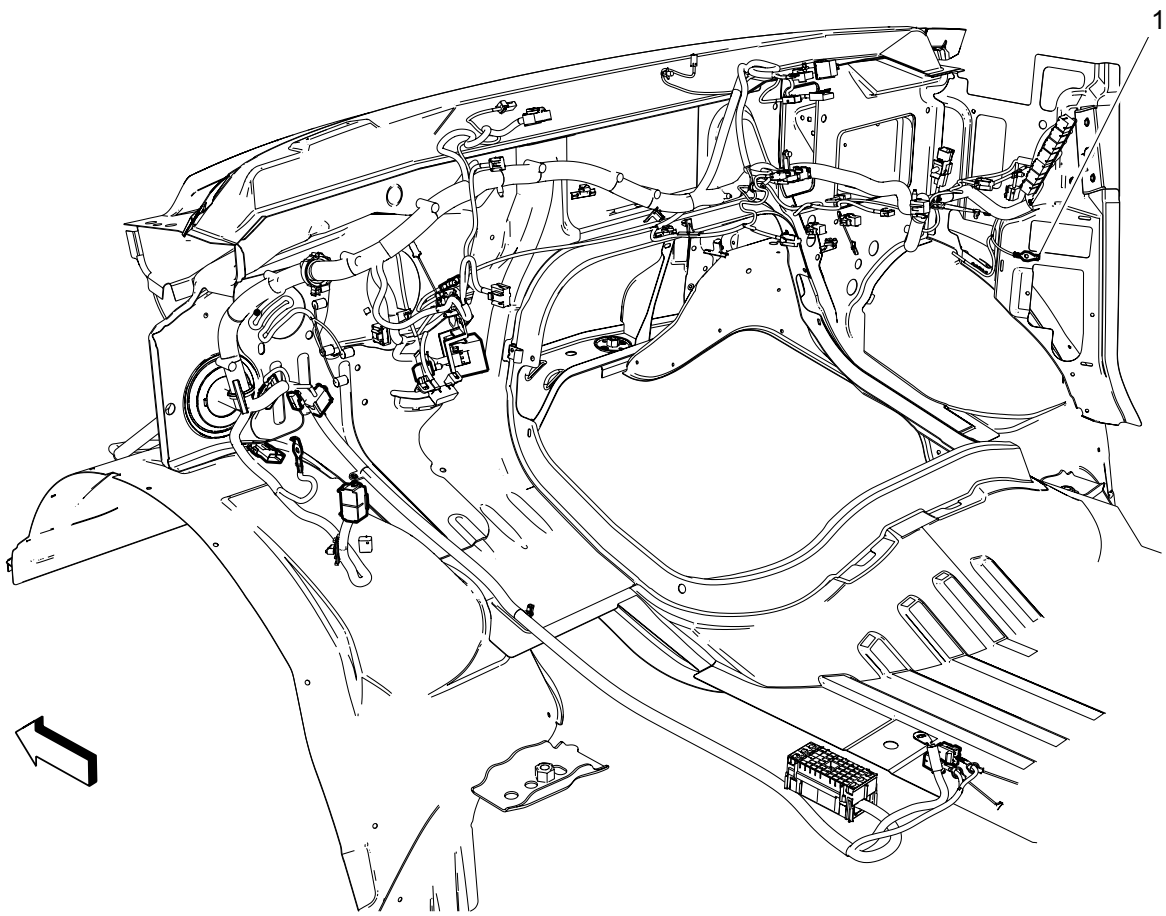

Items

1. G304

G305 (LGH or TP2)

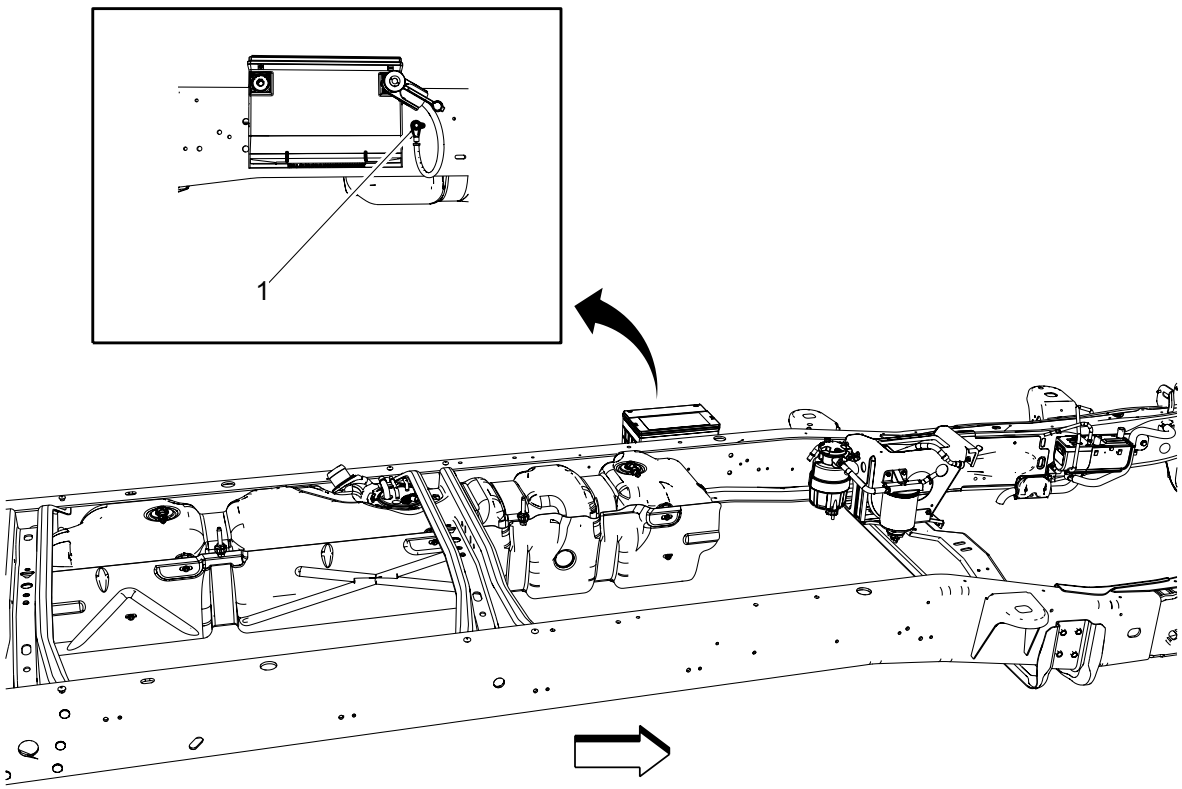

Items

1. G305 (TP2 or LGH)

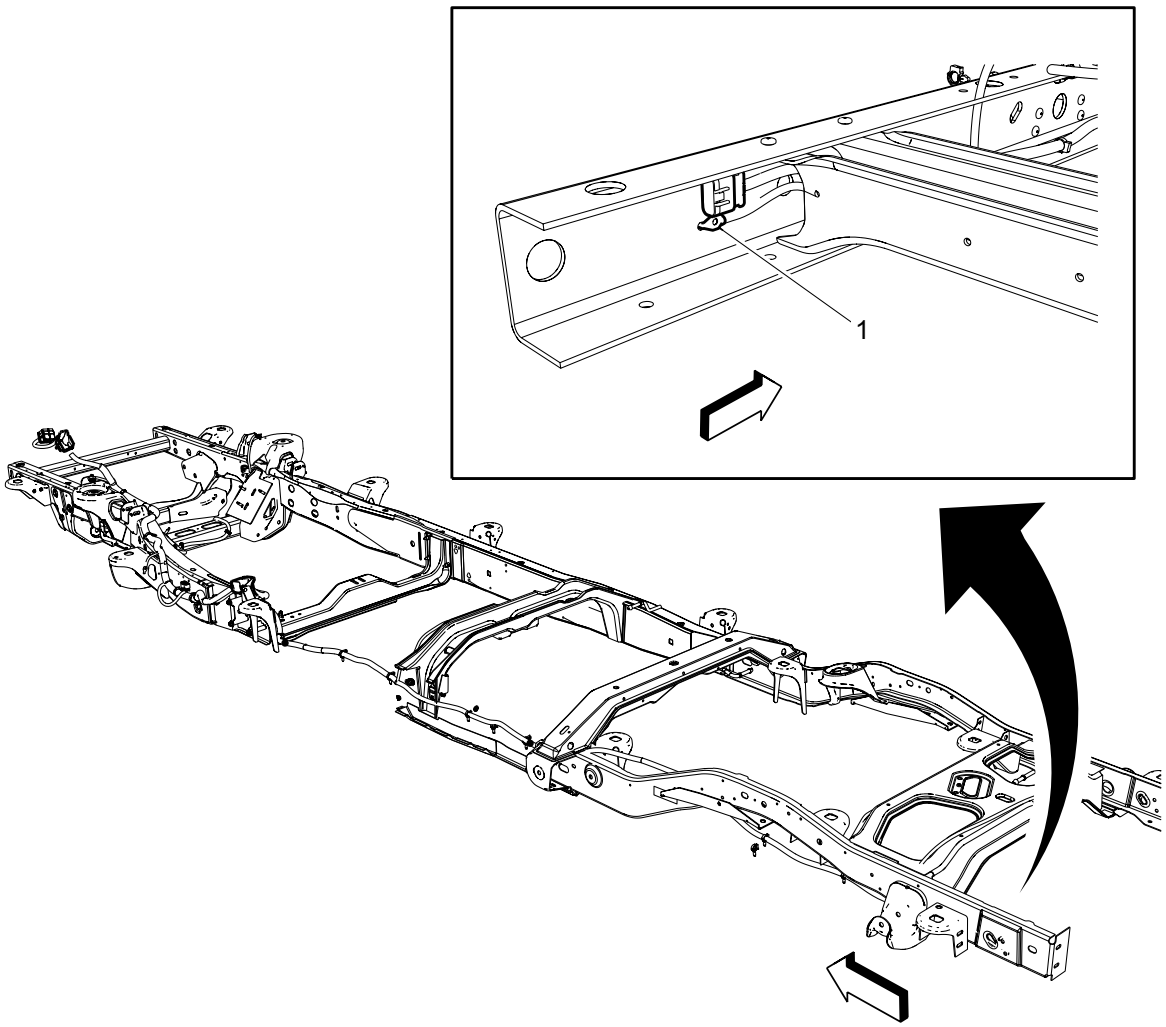

Items

1. G400

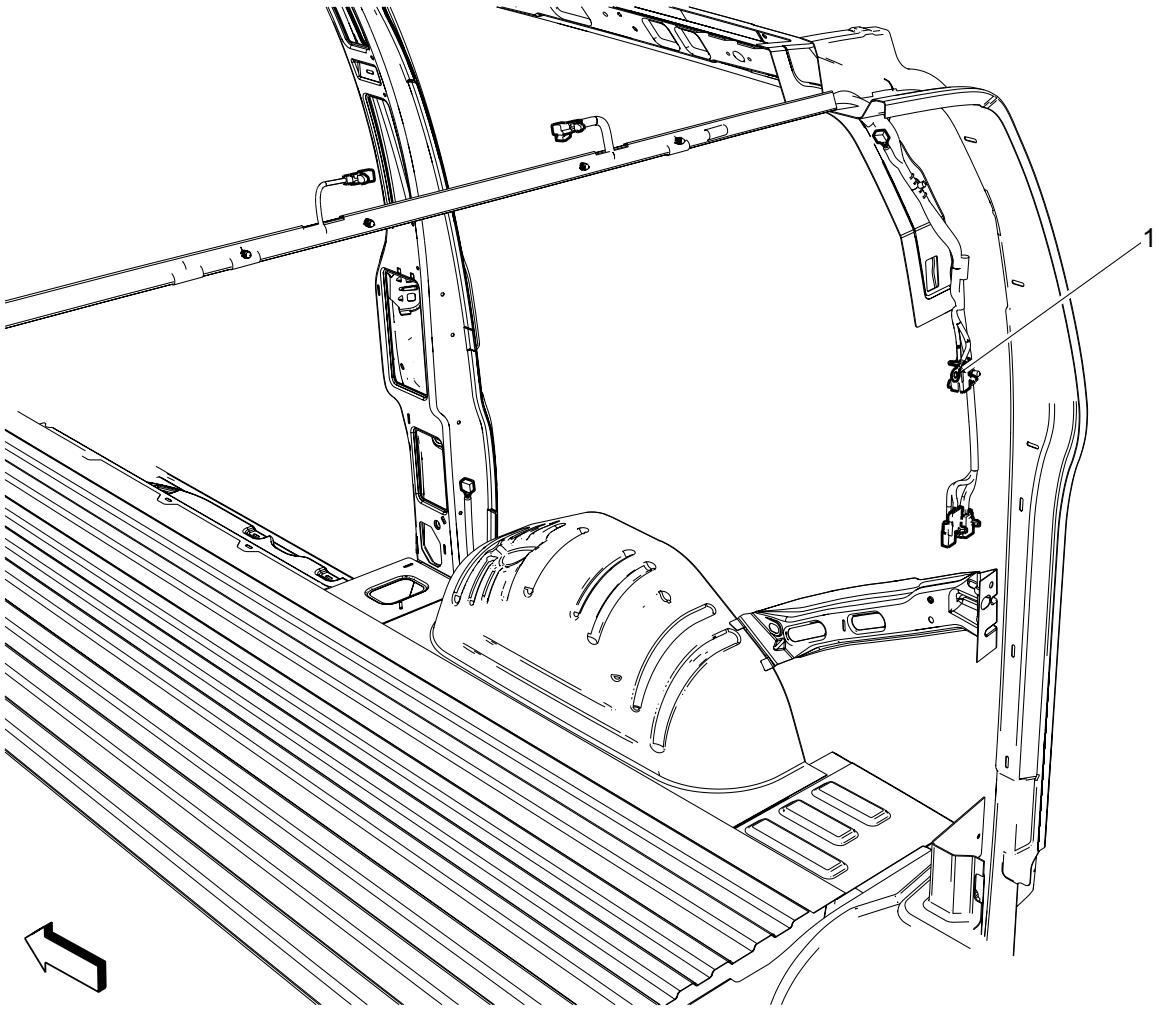

Items

1. G401 (Passenger or Cargo)

G402 (Passenger or Cargo)

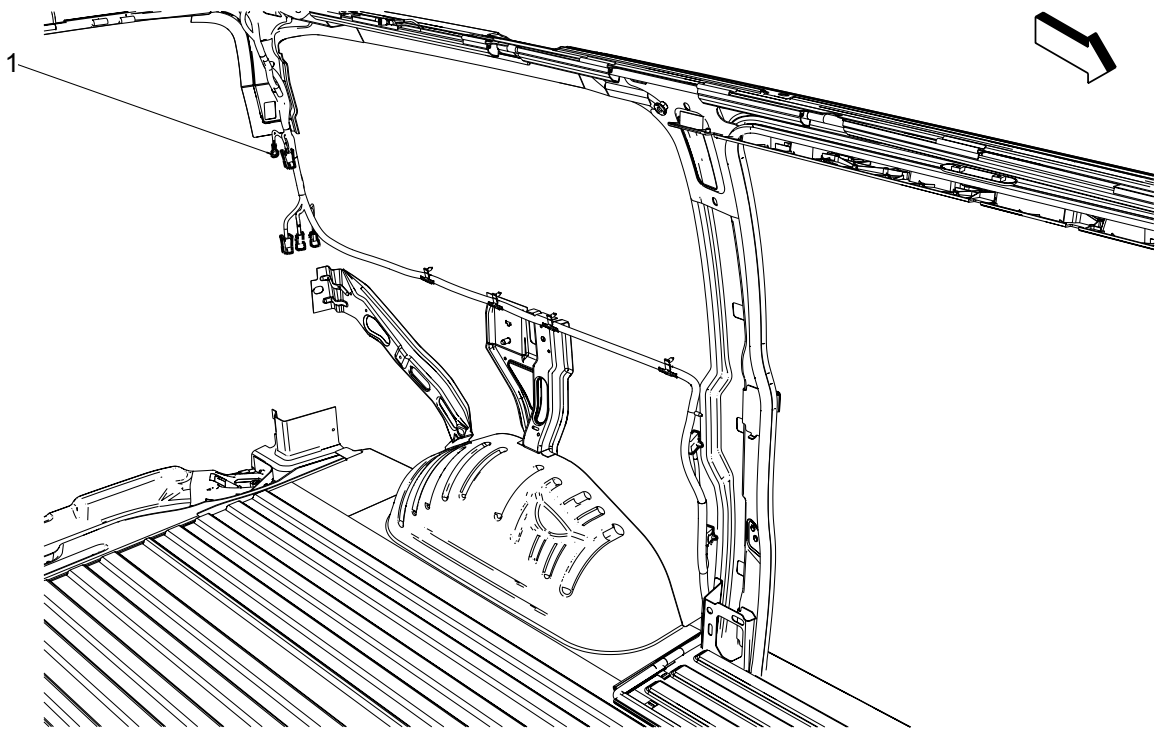

Items

1. G402 (Passenger or Cargo)

X50A Fuse Block - Underhood Label (with KI4)

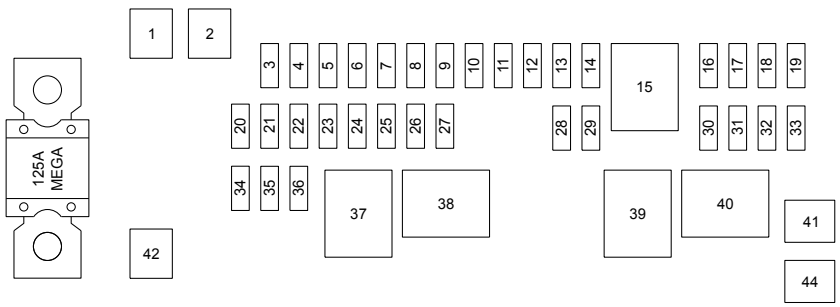

MINI FUSES

3 15A RT STOP/TRN TRLR
4 10A SPARE
5 10A SPARE
6 10A FSCM IGN
7 10A BCM-5
8 10A BCM-7
9 10A BCM-4
10 10A IPC
11 30A TRLR WRG
12 10A SPARE
13 10A DISPLY MIR/REAR B/U CAMERA
14 15A WASH
16 20A HORN
17 15A TRANS
18 15A A/C CMPRSR
19 10A ECM BATT
20 10A SPARE
21 15A LT STOP/TRN TRLR
22 10A SPARE
23 15A SPARE
24 30A GAS FUEL PUMP
24 20A DIESEL FUEL PUMP
24 7.5A CNG CONTROL MODULE (4 TANK)
24 5A CNG CONTROL MODULE (3 TANK)
25 20A AUX PWR OUTLET
26 10A BCM-3
27 10A SEO
28 10A AIRBAG
29 10A STR/WHL/SNSR
30 15A ECM IGN/GLOW PLUG MDL IGN
31 15A TCM IGN
32 10A TCM BATT
33 10A OBSDET
34 15A SPARE
35 15A FOH MDL
36 20A FSCM BATT
51 10A LT HI BEAM
52 10A RT HI BEAM
53 10A LT LO BEAM
54 10A RT LO BEAM
55 25A WPR
56 10A CNSTR VENT SOL
58 10A BCM-2
59 10A BCM-1
61 15A SPARE
62 10A O2 SNSR 2 (POST)/EV FAN
63 10A SPARE
64 15A MAF/CNSTR VENT/HUMIDITY SENSOR
65 20A ODD IGN/INJ
66 10A DRL2 (LOLVL-V22)
67 15A DRL1 (UPLVL+V22)
68 15A AUX STOP LAMP(S)
69 10A PWR EXT TRAILER
70 10A SPARE
71 15A FUEL HTR/FLEX FUEL SNSR
72 10A BCM-6
73 20A LTR/DLC
75 15A V6 FUEL INJ
76 10A SOOT SNSR
77 10A O2 SNSR 1 (PRE)/CLS
78 10A ECM PWR/TRN
79 20A EVEN IGN/INJ

J-CASE FUSE

1 50A ABS MTR
2 40A ABS MDL
41 20A SPARE
42 30A TRLR WRG
43 40A FAN HI
44 40A STRTR SOL
45 30A ECM PWR/TRN
46 25A AC/DC INV
47 40A FAN LO
74 40A FRT BLWR

RELAYS

15	MICRO G8V	RUN/CRNK
37	MICRO G8V	SPARE
38	MICRO G8V	FUEL PUMP
39	MICRO G8V	CRNK
40	MICRO G8V	A/C CMPRSR
48	MICRO G8V	FAN HI
49	MICRO G8V	PWR/TRN
50	SOLID STATE	SPARE
57	MICRO G8V	FAN LO
60	MICRO G8V	FAN CNTRL

CIRCUIT BOARD RELAY (NOT SHOWN)

K3 WPR HI
K5 HORN/WASH
K6 LO BEAM
K7 HI BEAM
K9 TRLR LT STOP/TRN
K11 STOP LAMP(S)
K13 WPR
K18 TRLR RT STOP/TRN
K19 DRL

X50A Fuse Block - Underhood Label (without KI4)

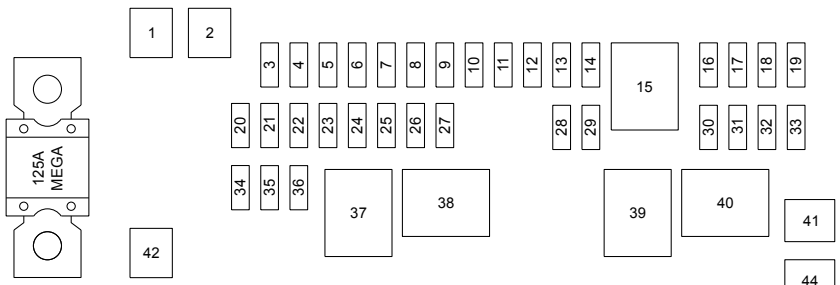

MINI FUSES

3 15A RT
4 10A SPARE
5 10A SPARE
6 10A FSCM IGN
7 10A BCM-5
8 10A BCM-7
9 10A BCM-4
10 10A IPC
11 30A TRLR WRG
12 10A SPARE
13 10A DISPLY MIR/REAR B/U CAMERA
14 15A WASH
16 20A HORN
17 15A TRANS
18 15A A/C CMPRSR
19 10A ECM BATT
20 10A SPARE
21 15A LT STOP/TRN TRLR
22 10A SPARE
23 15A SPARE
24 30A GAS FUEL PUMP
24 20A DIESEL FUEL PUMP
24 7.5A CNG CONTROL MODULE (4 TANK)
24 5A CNG CONTROL MODULE (3 TANK)
25 20A AUX PWR OUTLET
26 10A BCM-3
27 10A SEO
28 10A AIRBAG
29 10A STR/WHL/SNSR
30 15A ECM IGN/GLOW PLUG MDL IGN
31 15A TCM IGN
32 10A TCM BATT
33 10A OBSDET
34 15A SPARE
35 15A FOH MDL
36 20A FSCM BATT
51 10A LT HI BEAM
52 10A RT HI BEAM
53 10A LT LO BEAM
54 10A RT LO BEAM
55 25A WPR
56 10A CNSTR VENT SOL
58 10A BCM-2
59 10A BCM-1
61 15A SPARE
62 10A O2 SNSR 2 (POST)/EV FAN
63 10A SPARE
64 15A MAF/CNSTR VENT/HUMIDITY SENSOR
65 20A ODD IGN/INJ
66 10A DRL2 (LOLVL-V22)
67 15A DRL1 (UPLVL+V22)
68 15A AUX STOP LAMP(S)
69 10A PWR EXT TRAILER
70 10A SPARE
71 15A FUEL HTR/FLEX FUEL SNSR
72 10A BCM-6
73 20A LTR/DLC
75 15A V6 FUEL INJ
76 10A SOOT SNSR
77 10A O2 SNSR 1 (PRE)/CLS
78 10A ECM PWR/TRN
79 20A EVEN IGN/INJ

J-CASE FUSE

1 50A ABS MTR
2 40A ABS MDL
41 20A SPARE
42 30A TRLR WRG
43 40A FAN HI
44 40A STRTR SOL
45 30A ECM PWR/TRN
46 30A SPARE
47 40A FAN LO
74 40A FRT BLWR

RELAYS

15	MICRO G8V	RUN/CRNK
37	MICRO G8V	SPARE
38	MICRO G8V	FUEL PUMP
39	MICRO G8V	CRNK
40	MICRO G8V	A/C CMPRSR
48	MICRO G8V	FAN HI
49	MICRO G8V	PWR/TRN
50	SOLID STATE	SPARE
57	MICRO G8V	FAN LO
60	MICRO G8V	FAN CNTRL

CIRCUIT BOARD RELAY (NOT SHOWN)

K3 WPR HI
K5 HORN/WASH
K6 LO BEAM
K7 HI BEAM
K9 TRLR LT STOP/TRN
K11 STOP LAMP(S)
K13 WPR
K18 TRLR RT STOP/TRN
K19 DRL

X50A Fuse Block - Underhood Top View

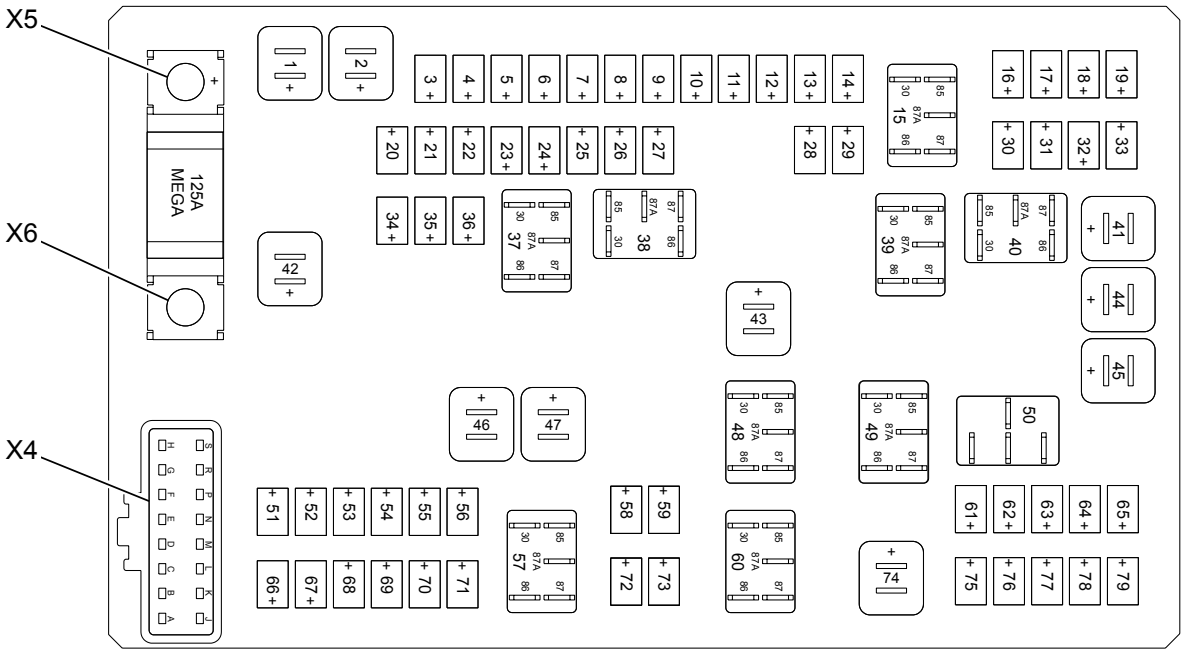

X50A Fuse Block - Underhood Usage

No.	Device Label Name	Device Assigned Name	Rating	Description
Fuses and Replaceable Relays				
MEGA	—	MEGA	125 A	X52A Fuse Block - Passenger Compartment
1	ABS MTR	F1UA	50 A	K17 Electronic Brake Control Module
2	ABS MDL	F2UA	40 A	K17 Electronic Brake Control Module
3	RT STOP/TURN TRLR	F3UA	15 A	X88 Trailer Connector (with KI4)
3	RT	F3UA	15 A	X88 Trailer Connector (without KI4)
4	SPARE	F4UA	10 A	Not Used
5	SPARE	F5UA	10 A	Not Used
6	FSCM IGN	F6UA	10 A	Not Used
7	BCM-5	F7UA	10 A	K9 Body Control Module
8	BCM-7	F8UA	10 A	K9 Body Control Module
9	BCM-4	F9UA	10 A	K9 Body Control Module
10	IPC	F10UA	10 A	P16 Instrument Cluster
11	TRLR WRG	F11UA	30 A	W8 Blunt Cut - Trailer Provision (UY7)
12	SPARE	F12UA	10 A	Not Used

12	SPARE	F12UA	10 A	Not Used
13	DISPLY MIR/REAR B/U CAMERA	F13UA	10 A	A10 Inside Rearview Mirror (UVC), B87 Rearview Camera (UVC)
14	WASH	F14UA	15 A	Windshield Washer Fluid Pump
15	RUN/CRANK	KR93 Ignition Run/Crank Relay	—	A10 Inside Rearview Mirror, B87 Rearview Camera, B99 Steering Wheel Angle Sensor, K20 Engine Control Module, K34 Glow Plug Control Module, K36 Inflatable Restraint Sensing and Diagnostic Module, P14 Passenger Air Bag Disabled Indicator, P16 Instrument Cluster, Q8 Control Solenoid Valve Assembly, S40 Passenger Air Bag Disable Switch
16	HORN	F16UA	20 A	P13 Horn Assembly
17	TRANS	F17UA	15 A	Not Used
18	A/C CMPRSR	F18UA	15 A	Q2 A/C Compressor Clutch (C60)
19	ECM BATT	F19UA	10 A	K20 Engine Control Module
20	SPARE	F20UA	10 A	Not Used
21	LT STOP/TRN TRLR	F21UA	15 A	X88 Trailer Connector
22	SPARE	F22UA	10 A	Not Used
23	SPARE	F23UA	15 A	Not Used
24	GAS FUEL PUMP DIESEL FUEL PUMP CNG CONTROL MODULE (4 TANK) CNG CONTROL MODULE (3 TANK)	F24UA	30 A 20 A 7.5 A 5 A	Fuel Pump and Sender Assembly (L20, L96 or LU3) Fuel Pump (LGH) CNG Control Module (FHZ with UFP) CNG Control Module (FHZ with UFM)
25	AUX PWR OUTLET	F25UA	20 A	X80B Accessory Power Receptacle - Center Console 2
26	BCM-3	F26UA	10 A	K9 Body Control Module
27	SEO	F27UA	10 A	P16 Instrument Cluster
28	AIRBAG	F28UA	10 A	K36 Inflatable Restraint Sensing and Diagnostic Module, P14 Passenger Air Bag Disabled Indicator (AL0), S40 Passenger Air Bag Disable Switch (C99)
29	STR/WHL/SNSR	F29UA	10 A	B99 Steering Wheel Angle Sensor
30	ECM IGN/GLOW PLUG MDL IGN	F30UA	15 A	K20 Engine Control Module, K34 Glow Plug Control Module (LGH)
31	TCM IGN	F31UA	15 A	T12 Automatic Transmission Assembly
32	TCM BATT	F32UA	10 A	T12 Automatic Transmission Assembly
33	OBSDET	F33UA	10 A	K41R Rear Parking Assist Control Module
34	SPARE	F34UA	15 A	Not Used
35	FOH MDL	F35UA	15 A	E19 Coolant Heater (K08)
36	FSCM BATT	F36UA	20 A	Not Used
37	SPARE	KR150 Relay - Spare	—	Not Used

38	FUEL PUMP	KR23A Fuel Pump Relay	—	A7 Fuel Pump and Level Sensor Assembly (L20 or L96), G12 Fuel Pump (LGH, or KO7 with UFM), K103 Fuel Injector Control Module (KO7 with UFP), K119 CNG Control Module (FHZ), Q53 Fuel Cut-Off Solenoid Valve (KO7 with UFM)
39	CRNK	KR27 Starter Relay	—	M64 Starter Motor
40	A/C CMPRSR	KR29 A/C Compressor Clutch Relay	—	Q2 A/C Compressor Clutch
41	SPARE	F41UA	20 A	Not Used
42	TRLR WRG	F42UA	30 A	X88 Trailer Connector (UY7)
43	FAN HI	F43UA	40 A	Not Used
44	STRTR SOL	F44UA	40 A	M64 Starter Motor
45	ECM PWR/TRN	F45UA	30 A	K20 Engine Control Module (LGH)
46	SPARE	F46UA	30 A	Not Used (Without KI4)
46	AC/DC INV	F46UA	25 A	TI Accessory DC/AC Power Iverter Module (KI4)
47	FAN LO	F47UA	40 A	Not Used
48	FAN HI	KR20D Cooling Fan High Speed Relay	—	Not Used
49	PWR/TRN	KR75 Engine Controls Ignition Relay	—	B52C Heated Oxygen Sensor - Bank 1 Sensor 1 (L20, L96, or LC8), B52D Heated Oxygen Sensor - Bank 1 Sensor 2 (L20, L96, or LC8), B52E Heated Oxygen Sensor - Bank 2 Sensor 1 (L20, L96, or LC8), B52F Heated Oxygen Sensor - Bank 2 Sensor 2 (L20, L96, or LC8), B75B Mass Air Flow/Intake Air Temperature Sensor, B136 Exhaust Particulate Matter Sensor (LGH), B198 Fuel Composition Sensor (L20, L96, or LC8), B212 Reductant Sensor Module (LGH), G10 Cooling Fan Motor (LGH), K20 Engine Control Module, Q12 Evaporative Emission Purge Solenoid Valve (L20, L96, or LC8), Q17A Fuel Injector 1, Q17B Fuel Injector 2, Q17C Fuel Injector 3, Q17D Fuel Injector 4, Q17E Fuel Injector 5, Q17F Fuel Injector 6, Q17G Fuel Injector 7, Q17H Fuel Injector 8, T8A Ignition Coil 1 (L20, L96, or LC8), T8B Ignition Coil 2 (L20, L96, or LC8), T8C Ignition Coil 3 (L20, L96, or LC8), T8D Ignition Coil 4, T8E Ignition Coil 5 (L20, L96, or LC8), T8F Ignition Coil 6 (L20, L96, or LC8), T8G Ignition Coil 7 (L20, L96, or LC8), T8H Ignition Coil 8 (L20, L96, or LC8)
50	SPARE	KR150 Relay - Spare	—	Not Used
51	LT HI BEAM	F51UA	10 A	E4E Headlamp - Left High Beam (V22), E13L Headlamp - Left (Without V22)
52	RT HI BEAM	F52UA	10 A	E4F Headlamp - Right High Beam (V22), E13R Headlamp - Right (Without V22)
53	LT LO BEAM	F53UA	10 A	E4G Headlamp - Left Low Beam (V22), E13L Headlamp - Left (Without V22)
54	RT LO BEAM	F54UA	10 A	E4H Headlamp - Right Low Beam (V22), E13R Headlamp - Right (Without V22)
55	WPR	F55UA	25 A	KR12B Windshield Wiper Relay
56	CNSTR VENT SOL	F56UA	10 A	Q13 Evaporative Emission Vent Solenoid Valve (L20, L96, or LC8)
57	FAN LO	KR20C Cooling Fan Low Speed Relay	—	Not Used
58	BCM-2	F58UA	10 A	K9 Body Control Module
59	BCM-1	F59UA	10 A	K9 Body Control Module
60	FAN CNTRL	KR20E Cooling Fan Speed Control	—	Not Used

		Relay		
61	SPARE	F61UA	15 A	Not Used
62	O2 SNSR 2 (POST)/EV FAN	F62UA	10 A	B52D Heated Oxygen Sensor - Bank 1 Sensor 2 (L20, L96, or LC8), B52F Heated Oxygen Sensor - Bank 2 Sensor 2 (L20, L96, or LC8), G10 Cooling Fan Motor (LGH)
63	SPARE	F63UA	10 A	Not Used
64	MAF/CNSTR VENT/HUMIDITY SENSOR	F64UA	15 A	B75B Mass Air Flow/Intake Air Temperature Sensor (LGH), B75C Multifunction Intake Air Sensor, Q12 Evaporative Emission Purge Solenoid Valve (L20, L96, or LC8)
65	ODD IGN/INJ	F65UA	20 A	Q17A Fuel Injector 1, Q17C Fuel Injector 3, Q17E Fuel Injector 5, Q17G Fuel Injector 7, T8A Ignition Coil 1 (L20, L96, or LC8), T8C Ignition Coil 3 (L20, L96, or LC8), T8E Ignition Coil 5 (L20, L96, or LC8), T8G Ignition Coil 7 (L20, L96, or LC8)
66	DRL2 (LOLVL-V22)	F66UA	10 A	E13L Headlamp - Left (Without V22)
67	DRL1 (UPLVL+V22)	F67UA	15 A	E4G Headlamp - Left Low Beam (V22)
68	AUX STOP LAMP(S)	F68UA	15 A	X405 (Cutaway)
69	PWR EXT TRAILER	F69UA	10 A	Not Used
70	SPARE	F70UA	10 A	Not Used
71	FUEL HTR/FLEX FUEL SNSR	F71UA	15 A	B198 Fuel Composition Sensor (L20, L96, or LC8)
72	BCM-6	F72UA	10 A	K9 Body Control Module
73	LTR/DLC	F73UA	20 A	E32 Cigarette Lighter Receptacle (DT4), X80A Accessory Power Receptacle - Center Console 1 (Without DT4), X84 Data Link Connector
74	FRT BLWR	F74UA	40 A	R3 Blower Motor Resistor
75	V6 FUEL INJ	F75UA	15 A	Not Used
76	SOOT SNSR	F76UA	10 A	B136 Exhaust Particulate Matter Sensor (LGH)
77	O2 SNSR 1 (PRE)/CLS	F77UA	10 A	B52C Heated Oxygen Sensor - Bank 1 Sensor 1 (L20, L96, or LC8), B52E Heated Oxygen Sensor - Bank 2 Sensor 1 (L20, L96, or LC8), B212 Reductant Sensor Module (LGH)
78	ECM PWR/TRN	F78UA	10 A	K20 Engine Control Module (L20, L96, or LC8)
79	EVEN IGN/INJ	F79UA	20 A	Q17B Fuel Injector 2 (L20, L96, or LC8), Q17D Fuel Injector 4 (L20, L96, or LC8), Q17F Fuel Injector 6 (L20, L96, or LC8), Q17H Fuel Injector 8 (L20, L96, or LC8), T8B Ignition Coil 2 (L20, L96, or LC8), T8D Ignition Coil 4 (L20, L96, or LC8), T8F Ignition Coil 6 (L20, L96, or LC8), T8H Ignition Coil 8 (L20, L96, or LC8)
K3	WPR HI	KR12C Windshield Wiper Speed Control Relay	—	M75 Windshield Wiper Motor
K5	HORN/WASH	KR3 Horn Relay KR11 Windshield Washer Pump Relay	—	P13 Horn Assembly, G24 Windshield Washer Pump
K6	LO BEAM	KR49 Headlamp Low Beam Relay	—	E4G Headlamp - Left Low Beam (V22), E4H Headlamp - Right Low Beam (V22), E13L Headlamp - Left (Without V22), E13R Headlamp - Right (Without V22)
K7	HI BEAM	KR48 Headlamp High Beam Relay	—	E4E Headlamp - Left High Beam (V22), E4F Headlamp - Right High Beam (V22), E13L Headlamp - Left (Without V22), E13R Headlamp - Right (Without V22)

K9	TRLR LT STOP/TRN	KR63L Trailer Stop/Turn Signal Lamp Relay - Left	—	X88 Trailer Connector
K11	STOP LAMP(S)	KR59 Stop Lamp Relay	—	X405 Cutaway Rear Lighting Connector to Chassis Harness (Cutaway)
K13	WPR	KR12B Windshield Wiper Relay	—	KR12C Windshield Wiper Speed Control Relay, M75 Windshield Wiper Motor
K18	TRLR RT STOP/TRN	KR63R Trailer Stop/Turn Signal Lamp Relay - Right	—	X88 Trailer Connector
K19	DRL	KR42 Daytime Running Lamps Relay	—	F66UA (V22), F67UA (Without V22)

X50A Fuse Block - Underhood Bottom View

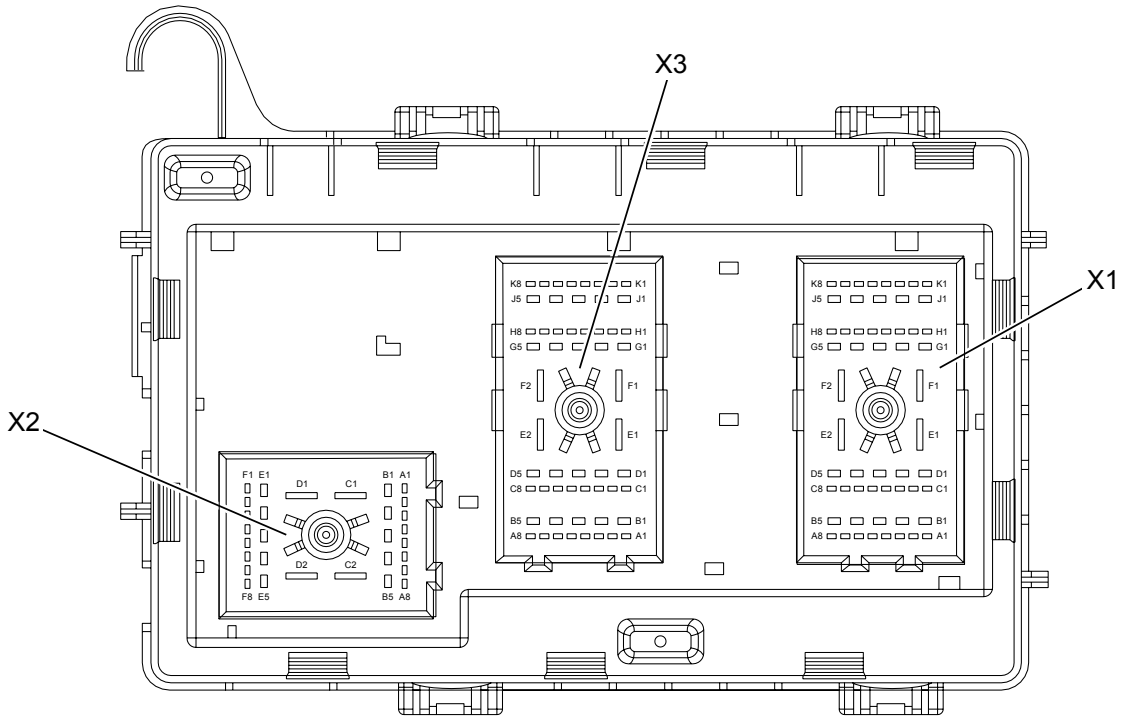

X50A Fuse Block - Underhood X1

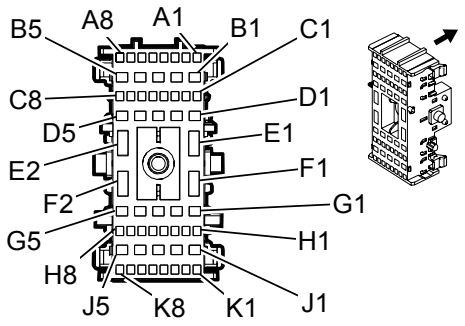

Connector Part Information

Harness Type: Engine

OEM Connector: 15477823

Service Connector: 13574911

Description: 56-Way F 150, 280 GT Metri-Pack Series, (L-GY)

Terminal Part Information

Terminal Type ID	Terminated Lead	Diagnostic Test Probe	Terminal Removal Tool	Service Terminal	Tray Name	Core Crimp	Insulation Crimp
I	13575718	J-35616-44 (YE)	J-38125-558	12110127	Delphi 19	F	G
II	13575735	J-35616-14 (GN)	J-38125-553	12191812	Delphi 19	C	A
III	13575735	J-35616-14 (GN)	J-38125-553	12191812	Delphi 19	E	C
IV	13575753	J-35616-4A (PU)	J-38125-553	15304711	Delphi 8	2	A
V	13575753	J-35616-4A (PU)	J-38125-553	15304711	Delphi 8	E	A

X50A Fuse Block - Underhood X1

Pin	Size	Color	Circuit	Function	Terminal Type ID	Option
A1	0.5	RD/WH	440	Battery Positive Voltage	III	—
A2	0.35	RD/WH	1840	Battery Positive Voltage	III	—
A3 - A8	—	—	—	Not Occupied	—	—
B1	0.5	RD/WH	840	Battery Positive Voltage	V	—
B2	0.5	D-GN	59	A/C Compressor Clutch Control	V	—
B3	—	—	—	Not Occupied	—	—
B4	0.8	D-GN	29	Horn Control	IV	—

B5	0.5	PK	439	Run/Crank Ignition 1 Voltage	V	—
C1	—	—	—	Not Occupied	—	—
C2	0.5	D-GN/WH	459	A/C Compressor Clutch Relay Control	III	—
C3 - C5	—	—	—	Not Occupied	—	—
C6	0.5	YE/BK	625	Starter Enable Relay Control	III	—
C7	1	BK	1250	Ground	II	—
C8	0.5	D-GN/WH	465	Fuel Pump Primary Relay Control	III	—
D1 - D2	—	—	—	Not Occupied	—	—
D3	0.5	PK	2139	Run/Crank Ignition 1 Voltage	V	—
D4 - D5	—	—	—	Not Occupied	—	—
E1	5	PU	6	Starter Solenoid Crank Ignition Voltage	I	—
E2	—	—	—	Not Occupied	—	—
F1	3	PK	1439	Run/Crank Ignition 1 Voltage	I	—
F2	5	RD/BK	542	Battery Positive Voltage	I	—
G1	1	PK	1039	Run/Crank Ignition 1 Voltage	IV	—
G2	0.8	PK	1039	Run/Crank Ignition 1 Voltage	IV	—
G3	0.8	PK	1039	Run/Crank Ignition 1 Voltage	IV	—
G4	0.8	PK	1939	Run/Crank Ignition 1 Voltage	IV	—

G5	0.5	PK	1939	Run/Crank Ignition 1 Voltage	V	—
H1	—	—	—	Not Occupied	—	—
H2	0.8	PK	1339	Run/Crank Ignition 1 Voltage	II	—
H3 - H8	—	—	—	Not Occupied	—	—
J1	1	PK	1239	Run/Crank Ignition 1 Voltage	IV	—
J2	0.8	PK	1239	Run/Crank Ignition 1 Voltage	IV	—
J3	0.8	PK	1239	Run/Crank Ignition 1 Voltage	IV	—
J4 - J5	—	—	—	Not Occupied	—	—
K1	1	PK/BK	5293	Powertrain Main Relay Fused Supply (4)	II	—
	1	PK	539	Run/Crank Ignition 1 Voltage		—
K2	—	—	—	Not Occupied	—	—
K3	1	RD/BK	2842	Battery Positive Voltage	II	—
K4	0.5	PK	939	—	III	—
	1	PK	1539	Run/Crank Ignition 1 Voltage	II	—
K5 - K7	—	—	—	Not Occupied	—	—
K8	0.5	YE	5991	Powertrain Relay Coil Control	III	—

X50A Fuse Block - Underhood X2

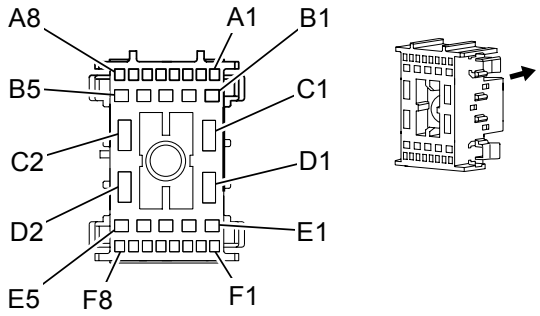

Connector Part Information

Harness Type: Chassis

OEM Connector: 13567518

Service Connector: 19180280

Description: 30-Way F 150, 280 GT Metri-Pack 800 Series (BK)

Terminal Part Information

Terminal Type ID	Terminated Lead	Diagnostic Test Probe	Terminal Removal Tool	Service Terminal	Tray Name	Core Crimp	Insulation Crimp
I	13575718	J-35616-44 (YE)	J-38125-558	12110127	Delphi 19	F	G
II	13575790	J-35616-2A (GY)	J-38125-553	15496302	Delphi 5	2	A
III	13580069	J-35616-2A (GY)	J-38125-553	15496302	Delphi 5	E	A
IV	19303704	J-35616-35 (VT)	J-38125-553	13525970	Delphi 4	2	A
V	19303704	J-35616-4A (PU)	J-38125-553	13525970	Delphi 4	2	A
VI	19303708	J-35616-35 (VT)	J-38125-553	13525969	Delphi 4	4	4
VII	19303708	J-35616-35 (VT)	J-38125-553	13525969	Delphi 4	F	D
VIII	19303708	J-35616-4A (PU)	J-38125-553	13525969	Delphi 4	F	D

X50A Fuse Block - Underhood X2

Pin	Size	Color	Circuit	Function	Terminal Type ID	Option
A1	—	—	—	Not Occupied	—	—
A2	1	YE	618	Left Rear Turn Signal Lamp Control	II	—
A3	0.8	D-BU/WH	149	Courtesy Lamp Control	II	—
A4	1	D-GN	619	Right Rear Turn Signal Lamp Control	II	—
A5 - A6	—	—	—	Not Occupied	—	—

A7	1	BN	2109	Trailer Park Lamp Control	II	—
A8	—	—	—	Not Occupied	—	—
B1	0.8	GY	120	Fuel Pump Control	IV	—
	3	GY	120		VIII	—
B2	0.8	PK/BK	5294	Powertrain Main Relay Fused Supply (5)	V	—
B3	—	—	—	Not Occupied	—	—
B4	2	RD/WH	1740	Battery Positive Voltage	VI	—
B5	1	D-GN	1619	Right Rear Trailer Stop/Turn Lamp Control	IV	—
	1	D-GN	1619		V	—
C1	—	—	—	Not Occupied	—	—
C2	3	RD/WH	1640	Battery Positive Voltage	I	—
D1	3	RD/BK	742	Battery Positive Voltage	I	—
D2	5	RD/BK	442	Battery Positive Voltage	I	—
E1	—	—	—	Not Occupied	—	—
E2	0.8	L-BU	1320	CHMSL Control	V	—
E3	3	D-BU	47	Trailer Auxiliary Control	VII	—
E4	1	YE	1618	Left Rear Trailer Stop/Turn Lamp Control	V	—
E5	—	—	—	Not Occupied	—	—
F1	1	L-GN	1624	Trailer Backup Lamp Control	II	—

F2	0.5	RD/WH	40	Battery Positive Voltage	III	—
F3	1	BN	2109	Trailer Park Lamp Control	II	—
F4 - F8	—	—	—	Not Occupied	—	—

X50A Fuse Block - Underhood X3

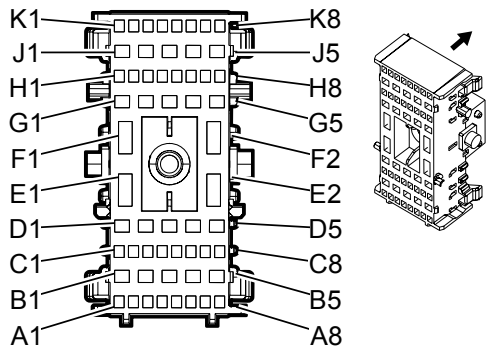

Connector Part Information

Harness Type: Instrument Panel

OEM Connector: 15477822

Service Connector: 19115189

Description: 56-Way F 150, 280 GT Metri-Pack 800 Series (BK)

Terminal Part Information

Terminal Type ID	Terminated Lead	Diagnostic Test Probe	Terminal Removal Tool	Service Terminal	Tray Name	Core Crimp	Insulation Crimp
I	13575718	J-35616-44 (YE)	J-38125-558	12110127	Delphi 19	F	G
II	13575735	J-35616-14 (GN)	J-38125-553	12191812	Delphi 19	C	A
III	13575735	J-35616-14 (GN)	J-38125-553	12191812	Delphi 19	E	C
IV	13575753	J-35616-4A (PU)	J-38125-553	15304711	Delphi 8	2	A
V	13575753	J-35616-4A (PU)	J-38125-553	15304711	Delphi 8	E	A
VI	13575754	J-35616-4A (PU)	J-38125-553	15304713	Delphi 19	4	4
VII	13575754	J-35616-4A (PU)	J-38125-553	15304713	Delphi 19	F	D

X50A Fuse Block - Underhood X3

Pin	Size	Color	Circuit	Function	Terminal Type ID	Option
A1	0.35	PK	1639	Run/Crank Ignition 1 Voltage	III	—
A2	0.35	RD/WH	2840	Battery Positive Voltage	III	—
A3	0.8	RD/WH	2240	Battery Positive Voltage	II	—
A4	0.8	RD/WH	3040	Battery Positive Voltage	II	—
A5	0.5	RD/WH	2540	Battery Positive Voltage	III	—

A6	—	—	—	Not Occupied	—	—
A7	0.8	RD/WH	2740	Battery Positive Voltage	II	—
A8	—	—	—	Not Occupied	—	—
B1	3	RD/WH	3940	Battery Positive Voltage	VII	—
B2	0.35	PK	1139	Run/Crank Ignition 1 Voltage	V	—
B3	0.35	PK	1139	Run/Crank Ignition 1 Voltage	V	—
B4	1	RD/WH	1040	Battery Positive Voltage	IV	—
B5	1	BN	2109	Trailer Park Lamp Control	IV	—
C1	0.5	PK	239	Run/Crank Ignition 1 Voltage	III	—
C2	0.5	PK	2239	Run/Crank Ignition 1 Voltage	III	—
C3	—	—	—	Not Occupied	—	—
C4	0.35	OG	5186	Left Trailer Turn Signal Lamp Control	III	—
C5	1	BN	2109	Trailer Park Lamp Control	II	—
C6	1	D-GN	619	Right Rear Turn Signal Lamp Control	II	—
C7	0.8	D-BU/WH	149	Courtesy Lamp Control	II	—
C8	1	YE	618	Left Rear Turn Signal Lamp Control	II	—
D1	0.5	OG	228	Windshield Washer Pump Control	V	—

D2	0.35	YE	5199	Run/Crank Relay Coil Control	V	—
D3	1	L-GN	1624	Trailer Backup Lamp Control	IV	—
D4	3	D-BU	47	Trailer Auxiliary Control	VII	—
D5 - E1	—	—	—	Not Occupied	—	—
E2	3	RD/WH	4140	Battery Positive Voltage	I	—
F1 - F2	—	—	—	Not Occupied	—	—
G1	0.8	RD/WH	640	Battery Positive Voltage	IV	—
G2	0.35	OG	2268	Windshield Washer Relay Control	V	—
G3	0.35	YE	5187	Right Trailer Turn Signal Lamp Control	V	—
G4	2	PU	92	Windshield Wiper Motor High Speed Control	VI	—
G5	2	D-GN	95	Windshield Wiper Motor Low Speed Control	VI	—
H1	—	—	—	Not Occupied	—	—
H2	0.5	RD/WH	3840	Battery Positive Voltage	III	—
H3	0.35	TN	28	Horn Relay Control	III	—
H4	0.35	PK/WH	1970	Headlamp Low Beam Relay Control	III	—
H5	0.35	PU	544	DRL Relay Control	III	—
H6	0.35	GY	91	Windshield Wiper Motor Relay Coil Control	III	—
H7	0.5	WH	5065	Stop Lamp Relay Coil Control	III	—

H8	0.35	TN	860	Front Windshield Wiper Switch High Signal	III	—
J1	1	RD/WH	640	Battery Positive Voltage	IV	—
J2	0.8	RD/WH	2940	Battery Positive Voltage	IV	—
J3	0.8	BN	2309	Front Park Lamp Control	IV	—
J4	0.8	D-BU/WH	1315	Right Front Turn Signal Lamp Control	IV	—
J5 - K2	—	—	—	Not Occupied	—	—
K3	0.8	RD/WH	2140	Battery Positive Voltage	II	—
K4	—	—	—	Not Occupied	—	—
K5	0.5	L-BU/WH	6311	Cruise/ETC/TCC Brake Signal	III	—
K6	—	—	—	Not Occupied	—	—
K7	0.8	L-BU/WH	1314	Left Front Turn Signal Lamp Control	II	—
K8	0.35	TN/WH	1969	Headlamp High Beam Relay Control	III	—

X50A Fuse Block - Underhood X4

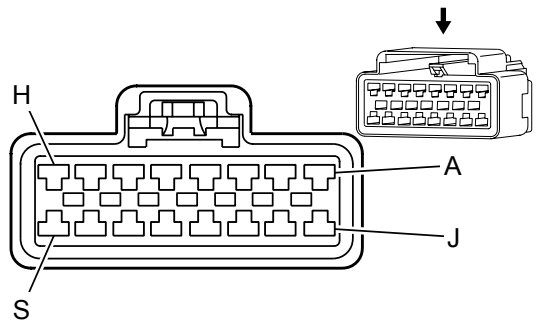

Connector Part Information

Harness Type: Forward Lamp

OEM Connector: 15326952

Service Connector: 15306426

Description: 16-Way F 280 GT Series (BK)

Terminal Part Information

Terminal Type ID	Terminated Lead	Diagnostic Test Probe	Terminal Removal Tool	Service Terminal	Tray Name	Core Crimp	Insulation Crimp
I	13575753	J-35616-4A (PU)	J-38125-553	15304711	Delphi 8	2	A
II	13575753	J-35616-4A (PU)	J-38125-553	15304711	Delphi 8	E	A

X50A Fuse Block - Underhood X4

Pin	Size	Color	Circuit	Function	Terminal Type ID	Option
A	—	—	—	Not Occupied	—	—
B	0.5	BN	2309	Front Park Lamp Control	II	—
C	0.5	BN	2309	Front Park Lamp Control	II	—
D	0.8	D-BU/WH	1315	Right Front Turn Signal Lamp Control	I	—
E	0.8	L-BU/WH	1314	Left Front Turn Signal Lamp Control	I	—
F	0.35	YE	712	Left Headlamp Low Beam Control	II	—
	0.5	YE	712		II	—
	0.8	YE	712		I	—
G - J	—	—	—	Not Occupied	—	—

G - J	—	—	—	Not Occupied	—	—
K	0.5	YE	712	Left Headlamp Low Beam Control	II	—
L	0.35	YE	712	Left Headlamp Low Beam Control	II	—
M	0.8	L-GN/BK	311	Right Headlamp High Beam Control	I	—
N	0.5	D-GN/WH	711	Left Headlamp High Beam Control	II	—
P	0.5	TN/WH	312	Right Headlamp Low Beam Control	II	—
	0.8	TN/WH	312		I	—
R - S	—	—	—	Not Occupied	—	—

X50A Fuse Block - Underhood X5

Connector Part Information

Harness Type: Battery Positive (Gas)

Harness Type: Auxiliary Battery Positive (Diesel)

OEM Connector: 15441775

Service Connector: Service by Harness – See Part Catalog

Description: Ring Terminal

Terminal Part Information

Terminal Type ID	Terminated Lead	Diagnostic Test Probe	Terminal Removal Tool	Service Terminal	Tray	Core Crimp	Insulation Crimp
I	Not Available	No Tool Required	No Tool Required	Not Available	Not Available	Not Available	Not Available

X50A Fuse Block - Underhood X5

Pin	Size	Color	Circuit	Function	Terminal Type ID	Option
S	19	RD	1	Battery Positive Voltage	I	-

X50A Fuse Block - Underhood X6

Connector Part Information

Harness Type: Instrument Panel

Harness Type: LPG (KO7 with UFP)

Harness Type: LPG Front EVAP (KO7 with UFM)

OEM Connector: Not Available

Service Connector: Service by Harness – See Part Catalog

Description: Ring Terminal

Terminal Part Information

Terminal Type ID	Terminated Lead	Diagnostic Test Probe	Terminal Removal Tool	Service Terminal	Tray	Core Crimp	Insulation Crimp
I	Not Available	No Tool Required	No Tool Required	Not Available	Not Available	Not Available	Not Available

X50A Fuse Block - Underhood X6

Pin	Size	Color	Circuit	Function	Terminal Type ID	Option
S	19	RD/BK	842	Battery Positive Voltage	I	-
S	3	OG	-	Battery Positive Voltage	I	KO7 with UFP
S	0.5	RD	-	Battery Positive Voltage	I	KO7 with UFM

X52A Fuse Block - Passenger Compartment Label

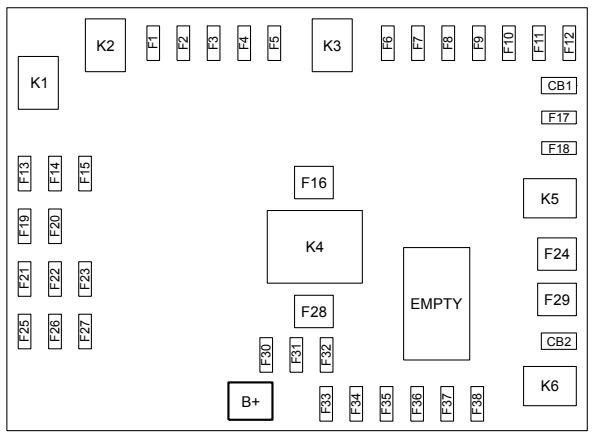

MINIFUSES

F1	15A	EMPTY
F2	2A	STR/WHL/SNSR
F3	15A	AUX PRK LAMP(S) (CUTAWAY)
F4	10A	FTR PRK LAMP(S)
F5	15A	TRLR PRK LAMP(S)
F6	10A	UPFTR PRK LAMP(S)
F7	10A	RT REAR PRK LAMP
F8	10A	LT REAR PARK LAMP
F9	5A	OSRVM SW
F10	10A	AIRBAG/AOS
F11	10A	ONSTAR
F12	15A	EMPTY
F13	10A	HVAC2
F14	20A	HVAC1
F15	15A	EMPTY
F17	20A	OSRVM HTR
F18	30A	REAR DEFOG
F19	10A	CMPS
F20	15A	RDO/CHIME
F21	10A	RFA/TPM
F22	2A	IGN SW (DLIS)/PK3
F23	10A	I/P CLUSTER
F25	10A	HVAC CNTRL
F26	10A	AUX/TRLR BCK/UP
F27	10A	TAIL LAMP(S) BCK/UP
F30	15A	UPFTR CTSY LAMP(S)
F31	15A	FRT DR LCK
F32	15A	REAR DR LCK
F33	15A	CARGO DR UNLCK
F34	15A	FRT PASS DR UNLCK
F35	15A	REAR PASS DR UNLCK
F36	15A	DVR DR UNLCK
F37	15A	EMPTY
F38	15A	EMPTY

J-CASE FUSES

F16	50A		UPFITTER AUX1
F24	30A	CART	EMPTY
F28	50A	CART	UPFITTER AUX2
F28	30A		READING LAMP(S)
F29	30A		REAR BLOWER

CIRCUIT BOARD RELAYS (NOT SHOWN)

K7	BCK/UP
K8	UPFTR CTSY LAMP(S)
K9A	FTR REAR PASS DR UNLCK
K9B	DRVR DR UNLCK
K10A	FTR REAR DR LCK
K10B	CARGO DR UNLCK

CIRCUIT BREAKERS

CB1	30A	PWR SEATS
CB2	25A	PWR WINDOW(S)

PLUG IN RELAYS

K1	(HC MICRO) RUN
K2	(HC MICRO) EMPTY
K3	PRK LAMP(S)
K4	(HC MINI) UPFTR AUX2
K5	(HC MICRO) REAR DEFOG
K6	(HC MICRO) RAP

X52A Fuse Block - Passenger Compartment Top View

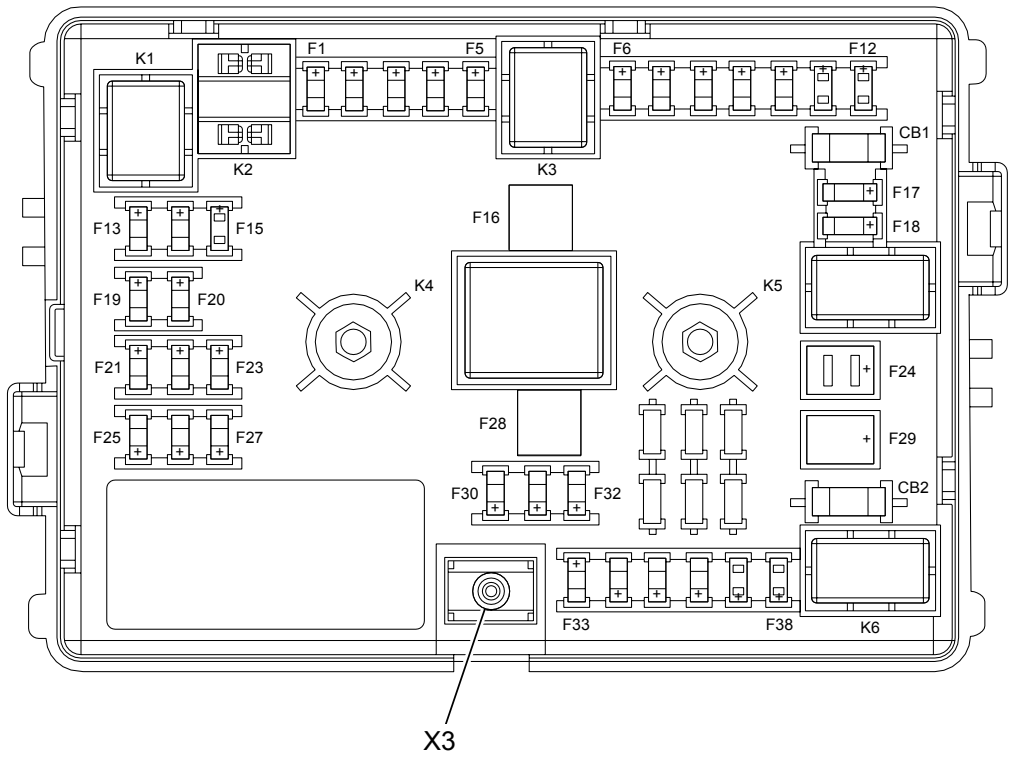

X52A Fuse Block - Passenger Compartment Usage

No.	Device Label Name	Device Assigned Name	Rating	Description
Fuses				
F1	EMPTY	F1PA	15 A	Not Used
F2	STR/WHL/SNSR	F2PA	2 A	X85 Steering Wheel Air Bag Coil (K34 or W1Y)
F3	AUX PRK LAMP(S) (CUTAWAY)	F3PA	15 A	X405 (Cutaway)
F4	FRT PRK LAMP(S)	F4PA	10 A	E2LF Side Marker Lamp - Left Front, E2RF Side Marker Lamp - Right Front, E4N Park/Turn Signal Lamp - Left, E4P Park/Turn Signal Lamp - Right
F5	TRLR PRK LAMP(S)	F5PA	15 A	X88 Trailer Connector
F6	UPFTR PRK LAMP(S)	F6PA	10 A	X320 (YF2 or YF7)
F7	RT REAR PRK LAMP	F7PA	10 A	E5T Tail/Stop and Turn Signal Lamp - Right (Cargo or Passenger)
F8	LT REAR PARK LAMP	F8PA	10 A	E5S Tail/Stop and Turn Signal Lamp - Left (Cargo or Passenger), E7 License Plate Lamp (Cargo or Passenger)
F9	OSRVM SW	F9PA	5 A	S52 Outside Rearview Mirror Switch (DEB or DE5)
F10	AIRBAG/AOS	F10PA	10 A	B60 Passenger Presence Sensor (AL0), K36 Inflatable Restraint Sensing and Diagnostic Module
F11	ONSTAR	F11PA	10 A	K73 Telematics Communication Interface Control Module (UE1)
F12	EMPTY	F12PA	15 A	Not Used
F13	HVAC2	F13PA	10 A	KR32B Blower Motor High Speed Relay - Auxiliary (C69, C36, or ENC), KR32C Blower Motor Low

F13	HVAC2	F13PA	10 A	KR32B Blower Motor High Speed Relay - Auxiliary (C69, C36, or ENC), KR32C Blower Motor Low Speed Relay - Auxiliary (C69, C36, or ENC), KR32D Blower Motor Medium Speed Relay - Auxiliary (C69, C36, or ENC), KR81 Auxiliary Battery Relay 1, M6 Air Temperature Door Actuator, M6B Air Temperature Door Actuator - Auxiliary (C69, C36, or ENC), M37B Mode Door Actuator - Auxiliary (C69, C36, or ENC), S34 HVAC Controls Switch Assembly (C49, DE5, or C60), S34F HVAC Controls Switch Assembly - Auxiliary Front, S34R HVAC Controls Switch Assembly - Auxiliary Rear (Rear HVAC Controls)
F14	HVAC1	F14PA	20 A	G34 Evaporative Emission System Leak Detection Pump (LGH), S34 HVAC Controls Switch Assembly, X81 Accessory Power Receptacle - 110V AC (KI4)
F15	EMPTY	F15PA	15 A	Not Used
F16	UPFITTER AUX1 (YF1/YF7) GAS AMBULANCE (YF2)	F16PA	50 A (YF1/YF7) 25 A (YF2)	W12 Blunt Cut - Emergency Vehicle Provision (YF1), X53A Fuse Block - Rear Body (PRP), X222 (YF7), X321 (FY7)
F17	OSRVM HTR	F17PA	20 A	A9A Outside Rearview Mirror - Driver (DEB or DE5), A9B Outside Rearview Mirror - Passenger (DEB or DE5)
F18	REAR DEFOG	F18PA	30 A	E18L Rear Defogger Grid - Left (C49), E18R Rear Defogger Grid - Right (C49)
F19	CMPS	F19PA	10 A	K18 Compass Module (U80)
F20	RDO/CHIME	F20PA	15 A	A11 Radio (Without UL5), A12 Digital Radio Receiver Control Module (U2K or UBS), P5 Chime Alarm Control Module (UL5)
F21	RFA/TPM	F21PA	10 A	K77 Remote Control Door Lock Receiver (ATG or UJM)
F22	IGN SW (DLIS)/PK3	F22PA	2 A	K64 Content Theft Deterrent Control Module, S39 Ignition Switch
F23	I/P CLUSTER	F23PA	10 A	P16 Instrument Cluster (Without 8S8)
F24	EMPTY	F24PA	30 A	Not Used
F25	HVAC CNTRL	F25PA	10 A	S34 HVAC Controls Switch Assembly (C49 or DE5)
F26	AUX/TRLR BCK/UP	F26PA	10 A	P3 Backup Alarm (8S3), X88 Trailer Connector
F27	TAIL LAMP(S) BCK/UP	F27PA	10 A	E5A Backup Lamp - Left (Cargo or Passenger), E5B Backup Lamp - Right (Cargo or Passenger)
F28	UPFITTER AUX2 (YF1/YF7) READING LAMP(S) (5B3) GAS AMBULANCE (YF2)	F28PA	50 A (YF1/YF7) 30 A (5B3) 25 A (YF2)	W12 Blunt Cut - Emergency Vehicle Provision (YF1), X222 (YF7), X321 (YF7)
F29	REAR BLOWER	F29PA	30 A	KR32B Blower Motor High Speed Relay - Auxiliary (C36, C69, or ENC), KR32C Blower Motor Low Speed Relay - Auxiliary (C36, C69, or ENC), KR32D Blower Motor Medium Speed Relay - Auxiliary (C36, C69, or ENC)
F30	UPFTR CTSY LAMP(S)	F30PA	15 A	E36AH Dome Lamp (Cargo without YF7), E37F Dome/Reading Lamps - Front (Without YF7), E37M Dome/Reading Lamps - Middle (Passenger), E37R Dome/Reading Lamps - Rear (Passenger without YF7), K9 Body Control Module, X320 (YF7), X405 (Cutaway)
F31	FRT DR LCK	F31PA	15 A	A23D Door Latch Assembly - Driver, A23P Door Latch Assembly - Passenger
F32	REAR DR LCK	F32PA	15 A	M13 Door Latch Assembly - Rear Cargo (Passenger or Cargo), M14RR Door Lock Actuator - Right Rear (E24 or YA2), X87RB Sliding Door Jamb Contact Plate - Right Body (E24 or YA2)
F33	CARGO DR UNLCK	F33PA	15 A	M13 Door Latch Assembly - Rear Cargo (Cargo or Passenger with AU3)
F34	FRT PASS DR UNLCK	F34PA	15 A	A23P Door Latch Assembly - Passenger
F35	REAR PASS DR UNLCK	F35PA	15 A	M14RR Door Lock Actuator - Right Rear (AU3), X87RB Sliding Door Jamb Contact Plate - Right Body (AU3)

				Body (AU3)
F36	DVR DR UNLCK	F36PA	15 A	A23D Door Latch Assembly - Driver (AU3)
F37	EMPTY	F37PA	15 A	Not Used
F38	EMPTY	F38PA	15 A	Not Used
CB1	PWR SEATS	CB1PA	30 A	S64D Seat Adjuster Switch - Driver (AG1), S64P Seat Adjuster Switch - Passenger (AG2)
CB2	PWR WINDOW(S)	CB2PA	25 A	S79D Window Switch - Driver (A31), S79P Window Switch - Passenger (A31)
K1	RUN	KR74 Ignition Run Relay	—	F13PA, F14PA, F19PA, KR78
K2	EMPTY	KR150 Relay - Spare	—	Not Used
K3	PRK LAMP(S)	KR53 Park Lamps Relay	—	F3PA, F4PA, F5PA, F6PA, F7PA, F8PA
K4	UPFTR AUX2	KR77 Ignition Power Provision Relay	—	W25 Blunt Cut - Configurable Provision (YF1), X222, X321 (YF7)
K5	REAR DEFOG	KR5 Rear Defogger Relay	—	A9A Outside Rearview Mirror - Driver (DEB/DE5), A9B Outside Rearview Mirror - Passenger (DEB/DE5), E18L Rear Defogger Grid - Left (C49), E18R Rear Defogger Grid - Right (C49)
K6	RAP	KR76 Retained Accessory Power Relay	—	S79D Window Switch - Driver (A31), S79P Window Switch - Passenger (A31)
K7	BCK/UP	KR40 Backup Lamp Relay	—	E5A Backup Lamp - Left, E5B Backup Lamp - Right, P3 Backup Alarm (8S3), X88 Trailer Connector, X405 (Cutaway)
K8	UPFTR CTSY LAMP(S)	KR78 Courtesy Lamps Provision Relay	—	E36AH Dome Lamp (Cargo without YF7), E37F Dome/Reading Lamps - Front (Without YF7), E37M Dome/Reading Lamps - Middle (Passenger), E37R Dome/Reading Lamps - Rear (Passenger without YF7), K9 Body Control Module, X320 (YF7), X405 (Cutaway)
K9A	FTR REAR PASS DR UNLCK	KR90P Passenger/Cargo Door Unlock Relay	—	A23P Door Latch Assembly - Passenger (AU3), M14RR Door Lock Actuator - Right Rear (AU3), KR90A Cargo Door Unlock Relay (AU3)
K9B	DRVR DR UNLCK	KR92D Driver Door Unlatch Relay	—	A23D Door Latch Assembly - Driver (AU3)
K10A	FTR REAR DR LCK	KR97 Door Lock Relay	—	A23D Door Latch Assembly - Driver, A23P Door Latch Assembly - Passenger, M13 Door Latch Assembly - Rear Cargo (Passenger or Cargo), M14RR Door Lock Actuator - Right Rear (E24 or YA2), X87RB Sliding Door Jamb Contact Plate - Right Body (E24 or YA2)
K10B	CARGO DR UNLCK	KR90A Cargo Door Unlock Relay	—	M13 Door Latch Assembly - Rear Cargo (AU3)

X52A Fuse Block - Passenger Compartment Bottom View

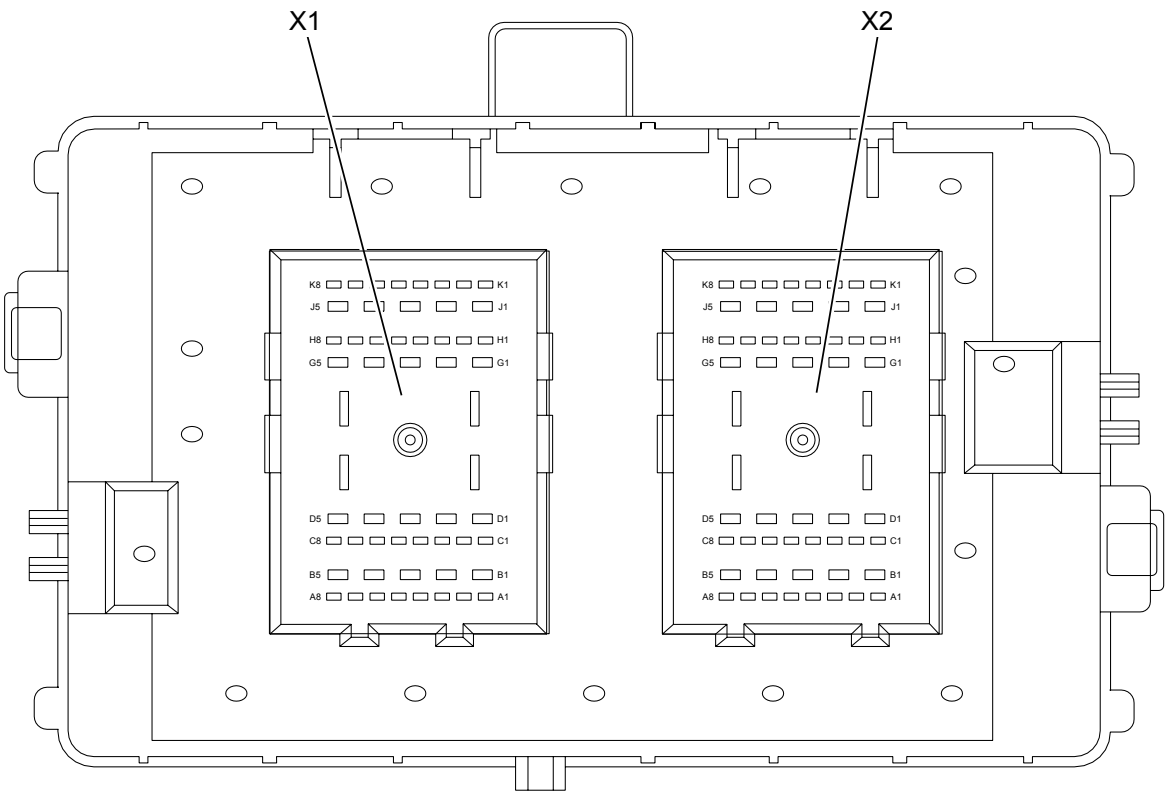

X52A Fuse Block - Passenger Compartment X1

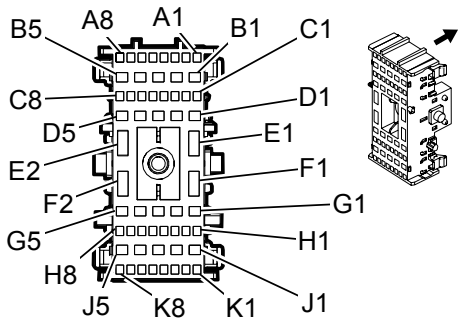

Connector Part Information

Harness Type: Instrument Panel

OEM Connector: 15477823

Service Connector: 13574911

Description: 56-Way F 150, 280 GT Metri-Pack Series, (L-GY)

Terminal Part Information

Terminal Type ID	Terminated Lead	Diagnostic Test Probe	Terminal Removal Tool	Service Terminal	Tray Name	Core Crimp	Insulation Crimp
I	13575465	J-35616-44 (YE)	J-38125-558	12065915	Delphi 5	C	A
II	13575718	J-35616-44 (YE)	J-38125-558	12110127	Delphi 19	F	G
III	13575735	J-35616-14 (GN)	J-38125-553	12191812	Delphi 19	C	A
IV	13575735	J-35616-14 (GN)	J-38125-553	12191812	Delphi 19	E	C
V	13575753	J-35616-4A (PU)	J-38125-553	15304711	Delphi 8	2	A
VI	13575753	J-35616-4A (PU)	J-38125-553	15304711	Delphi 8	E	A

X52A Fuse Block - Passenger Compartment X1

Pin	Size	Color	Circuit	Function	Terminal Type ID	Option
A1 - A3	—	—	—	Not Occupied	—	—
A4	0.5	YE	6817	LED Backlight Dimming Control	IV	—
A5	0.35	D-BU	45	Park Lamp Relay Control	IV	—
A6	0.35	BN	6136	Control	IV	—
A7 - A8	—	—	—	Not Occupied	—	—
B1	0.8	RD/WH	3240	Battery Positive Voltage	V	—

B2	1	BN	2109	Trailer Park Lamp Control	V	—
B3	0.35	BN	341	Run Ignition 3 Voltage	VI	—
B4	0.8	BN	2309	Front Park Lamp Control	V	—
B5	1	BN	2109	Trailer Park Lamp Control	V	—
C1	1	YE	618	Left Rear Turn Signal Lamp Control	III	—
C2	0.35	BN/WH	230	Instrument Panel Lamp Dimming Control	IV	—
C3	1	D-GN	619	Right Rear Turn Signal Lamp Control	III	—
C4	0.35	WH	193	Rear Defog Relay Control	IV	—
C5	0.35	BN	341	Run Ignition 3 Voltage	IV	—
C6	—	—	—	Not Occupied	—	—
C7	0.35	OG	300	Run Ignition 3 Voltage	IV	—
C8	0.8	BN	141	Run Ignition 3 Voltage	III	—
D1 - D4	—	—	—	Not Occupied	—	—
D5	0.5	D-BU	6807	DC To AC Inverter Control	VI	—
	1	BN	141	Run Ignition 3 Voltage	V	—
E1	5	RD/BK	1042	Battery Positive Voltage	II	—
E2	0.8	BK	350	Ground	I	—

F1	5	BN	541	Run Ignition 3 Voltage	II	—
F2 - G2	—	—	—	Not Occupied	—	—
G3	0.8	D-BU/WH	1315	Right Front Turn Signal Lamp Control	V	—
G4	1	RD/WH	340	Battery Positive Voltage	V	—
G5	—	—	—	Not Occupied	—	—
H1	0.8	L-BU/WH	1314	Left Front Turn Signal Lamp Control	III	—
H2	0.8	D-BU/WH	149	Courtesy Lamp Control	III	—
	1	D-BU/WH	149			—
H3	0.35	BK/WH	351	Signal Ground	IV	—
H4	0.35	YE	43	Accessory Ignition Voltage	IV	—
H5	0.8	RD/WH	4440	Battery Positive Voltage	III	—
H6	0.35	RD/WH	2840	Battery Positive Voltage	IV	—
H7	0.35	RD/WH	540	Battery Positive Voltage	IV	—
H8	0.5	RD/WH	5340	Battery Positive Voltage	IV	—
J1 - J4	—	—	—	Not Occupied	—	—
J5	1	L-GN	1624	Trailer Backup Lamp Control	V	—
K1	—	—	—	Not Occupied	—	—
K2	0.5	YE	356	Driver Door Lock Relay Unlock Control	IV	—
K3	0.5	L-BU	244	Passenger Door Lock Switch Lock Control	IV	—

K4	0.35	L-BU	244	Passenger Door Lock Switch Lock Control	IV	—
	0.5	L-BU	244			—
K5	0.35	L-BU	244	Passenger Door Lock Switch Lock Control	IV	—
	0.5	YE	356	Driver Door Lock Relay Unlock Control		—
K6	—	—	—	Not Occupied	—	—
K7	0.5	GY/BK	690	Courtesy Lamp Relay Control	IV	—
K8	0.35	D-BU	38	Backup Lamp Relay Control	IV	—

X52A Fuse Block - Passenger Compartment X2

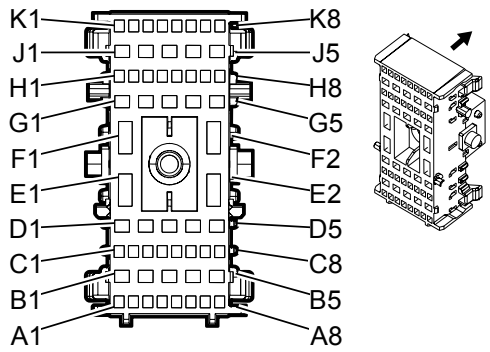

Connector Part Information

Harness Type: Body

OEM Connector: 15477822

Service Connector: 19115189

Description: 56-Way F 150, 280 GT Metri-Pack 800 Series (BK)

Terminal Part Information

Terminal Type ID	Terminated Lead	Diagnostic Test Probe	Terminal Removal Tool	Service Terminal	Tray Name	Core Crimp	Insulation Crimp
I	13575718	J-35616-44 (YE)	J-38125-558	12110127	Delphi 19	F	G
II	13575735	J-35616-14 (GN)	J-38125-553	12191812	Delphi 19	C	A
III	13575735	J-35616-14 (GN)	J-38125-553	12191812	Delphi 19	E	C
IV	13575753	J-35616-4A (PU)	J-38125-553	15304711	Delphi 8	2	A
V	13575753	J-35616-4A (PU)	J-38125-553	15304711	Delphi 8	E	A
VI	13575754	J-35616-4A (PU)	J-38125-553	15304713	Delphi 19	F	D
VII	13575754	J-35616-4A (PU)	J-38125-553	Not Available	Not Available	Not Available	Not Available
VIII	13575754	J-35616-4A (PU)	J-38125-553	15304713	Delphi 19	F	D

X52A Fuse Block - Passenger Compartment X2

Pin	Size	Color	Circuit	Function	Terminal Type ID	Option
A1	0.5	RD/WH	3440	Battery Positive Voltage	III	—
A2	—	—	—	Not Occupied	—	—
A3	0.5	RD/WH	3440	Battery Positive Voltage	III	—
A4	0.5	BN	2509	Left Rear Park Lamp Control	III	—
A5	0.5	BN	2609	Right Rear Park Lamp Control	III	—

A6	0.5	RD/WH	4340	Battery Positive Voltage	III	—
A7 - A8	—	—	—	Not Occupied	—	—
B1	3	RD/WH	3540	Battery Positive Voltage	VI	—
B2	3	RD/WH	3540	Battery Positive Voltage	VI	—
B3	1	RD/WH	3240	Battery Positive Voltage	IV	—
B4	0.5	BN	2209	Rear Park Lamp Control	V	—
B5 - C1	—	—	—	Not Occupied	—	—
C2	1	RD/WH	3240	Battery Positive Voltage	II	—
C3	0.35	BN	341	Run Ignition 3 Voltage	III	—
C4	0.35	BN	341	Run Ignition 3 Voltage	III	—
C5	0.35	BN	341	Run Ignition 3 Voltage	III	—
C6	1	D-GN	619	Right Rear Turn Signal Lamp Control	II	—
C7	1	YE	618	Left Rear Turn Signal Lamp Control	II	—
C8	0.35	BN/WH	230	Instrument Panel Lamp Dimming Control	III	—
D1	5	PU	293	Rear Defog Element Control	VIII	—
D2	5	PU	293	Rear Defog Element Control	VIII	—
D3	0.8	OG	2267	Mirror Heating Element Control	IV	—

D4	0.8	OG	2267	Mirror Heating Element Control	IV	—
D5 - E1	—	—	—	Not Occupied	—	—
E2	5	RD/BK	1042	Battery Positive Voltage	I	—
F1	5	RD/WH	1740	Battery Positive Voltage	I	—
F2	3	BN	541	Run Ignition 3 Voltage	I	—
	5	BN	541			—
G1	3	D-GN	1001	Retained Accessory Power Ignition	VI	—
G2	3	D-GN	1001	Retained Accessory Power Ignition	VI	—
G3	—	—	—	Not Occupied	—	—
G4	1	GY	295	Door Lock Actuator Lock Control	IV	—
G5	0.8	GY	295	Door Lock Actuator Lock Control	VII	—
	1	GY	295		IV	—
H1	—	—	—	Not Occupied	—	—
H2	0.35	BN	441	Run Ignition 3 Voltage	III	—
H3	0.35	BK/WH	351	Signal Ground	III	—
H4	—	—	—	Not Occupied	—	—
H5	0.5	D-BU/WH	1315	Right Front Turn Signal Lamp Control	III	—
H6	0.5	L-BU/WH	1314	Left Front Turn Signal Lamp Control	III	—

H7	0.5	D-BU/WH	149	Courtesy Lamp Control	III	—
H8	0.5	D-BU/WH	149	Courtesy Lamp Control	III	—
	0.8	D-BU/WH	149		II	—
	1	D-BU/WH	149		II	—
J1	0.8	TN	694	Driver Door Lock Actuator Unlock Control	IV	—
J2	1	TN	294	Door Lock Actuator Unlock Control	IV	—
J3	0.8	TN	294	Door Lock Actuator Unlock Control	VII	—
	0.8	TN	294		IV	—
J4	0.8	TN	294	Door Lock Actuator Unlock Control	IV	—
J5	0.8	GY	295	Door Lock Actuator Lock Control	VII	—
K1 - K2	—	—	—	Not Occupied	—	—
K3	1	TN/BK	1095	Right Rear Door Lock Actuator Unlock Control	II	—
K4 - K6	—	—	—	Not Occupied	—	—
K7	1	TN	294	Door Lock Actuator Unlock Control	II	—
K8	1	L-GN	24	Backup Lamp Control	II	—

X52A Fuse Block - Passenger Compartment X3

Connector Part Information

Harness Type: Instrument Panel

OEM Connector: Not Available

Service Connector: Service by Harness – See Part Catalog

Description: Ring Terminal

Terminal Part Information

Terminal Type ID	Terminated Lead	Diagnostic Test Probe	Terminal Removal Tool	Service Terminal	Tray	Core Crimp	Insulation Crimp
I	Not Available	No Tool Required	No Tool Required	Not Available	Not Available	Not Available	Not Available

X52A Fuse Block - Passenger Compartment X3

Pin	Size	Color	Circuit	Function	Terminal Type ID	Option
S	19	RD	842	Battery Positive Voltage	I	-

X53A Fuse Block - Rear Body Top View (PRP)

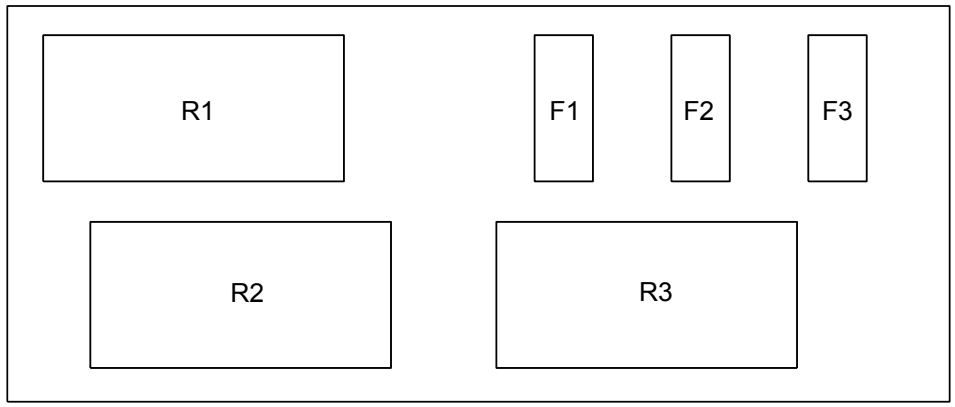

X53A Fuse Block - Rear Body Usage

No.	Device Label Name	Device Assigned Name	Rating	Description
Fuses				
F1	DOME FLUORESCENT WORK LAMPS	F1RA	10 A	E21A Fluorescent Work Lamp - Right Access Panel, E21F Fluorescent Work Lamp - Front Cargo, E21LF Fluorescent Work Lamp - Left Front Access Panel, E21R Fluorescent Work Lamp - Rear Cargo, E21LR Fluorescent Work Lamp - Left Rear Access Panel
F2	PANEL ACTUATOR	F2RA	15 A	KR89LF Left Front Access Panel Relay, KR89LR Left Rear Access Panel Relay, KR89RR Right Rear Access Panel Relay
F3	SPARE	F3RA	—	Not Used
Relays				
R1	LEFT REAR ACCESS PANEL RELAY	KR89LR Left Rear Access Panel Relay	—	M2C Access Panel Unlatch Actuator - Left Rear Side Front, M2D Access Panel Unlatch Actuator - Left Rear Side Rear
R2	LEFT FRONT ACCESS PANEL RELAY	KR89LF Left Front Access Panel Relay	—	M2A Access Panel Unlatch Actuator - Left Front Side Front, M2B Access Panel Unlatch Actuator - Left Front Side Rear
R3	RIGHT REAR ACCESS PANEL RELAY	KR89RR Right Rear Access Panel Relay	—	M2E Access Panel Unlatch Actuator - Right Side Front, M2F Access Panel Unlatch Actuator - Right Side Rear

X53A Fuse Block - Rear Body Bottom View (PRP)

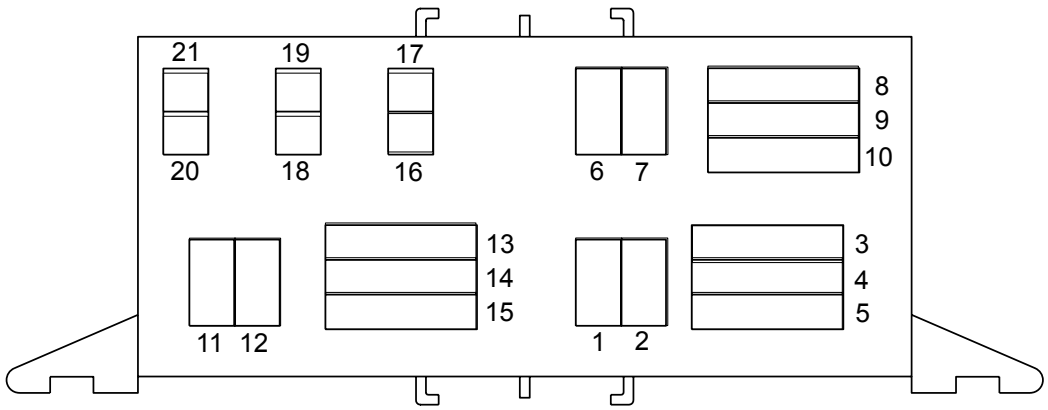

Connector Part Information

Harness Type: Side Access Panel Harness

OEM Connector: Not Available

Service Connector: Not Available

Description: 21-Way F Fuse Block (BK)

Terminal Part Information

Terminal Type ID	Terminated Lead	Diagnostic Test Probe	Terminal Removal Tool	Service Terminal	Tray	Core Crimp	Insulation Crimp
I	Not Available	Not Available	Not Available	Not Available	Not Available	Not Available	Not Available

X53A Fuse Block - Rear Body Bottom View (PRP)

Pin	Size	Color	Circuit	Function	Terminal Type ID	Option
1	0.8	OG	740	Battery Positive Voltage	I	—
2	0.8	TN	294	Door Lock Actuator Unlock Control	I	—
3	0.5	L-BU/WH	244	Passenger Door Lock Switch Lock Control	I	—
4	—	—	—	Not Used	—	—
5	0.5	OG	5810	Park Enable Signal	I	—
6	0.8	OG	740	Battery Positive Voltage	I	—
7	0.8	PK	1092	Left Rear Door Lock Actuator Unlock Control	I	—
8	0.5	L-GN	1391	Left Front Door Lock Relay Control	I	—
9	—	—	—	Not Used	—	—
10	0.5	OG	5810	Park Enable Signal	I	—
11	0.8	OG	740	Battery Positive Voltage	I	—
12	0.8	TN/BK	1095	Right Rear Door Lock Actuator Unlock Control	I	—

13	0.5	L-BU	1344	Trunk Release Relay Control	I	—
14	—	—	—	Not Used	—	—
15	0.5	OG	5810	Park Enable Signal	I	—
16	0.8	RD	1732	Electronic Control Unit 12 Volt Reference (3)	I	UF2
17	0.8	D-BU/WH	149	Courtesy Lamp Supply Voltage	I	UF2
18	5.0	RD	1042	Battery Positive Voltage	I	—
19	1.0	OG	740	Battery Positive Voltage	I	—
20	—	—	—	Not Used	—	—
21	—	—	—	Not Used	—	—

Component Connector End Views

A3L Sunshade - Left (DH6 with YF7)

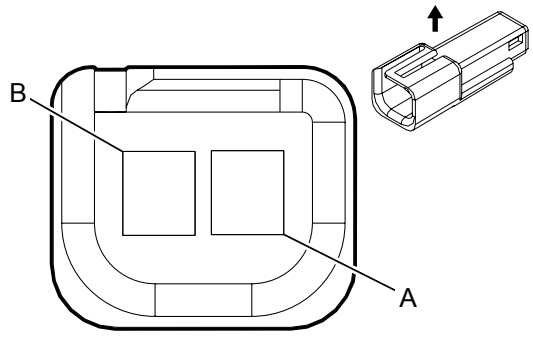

Connector Part Information

Harness Type: Front Headliner

OEM Connector: 12047663

Service Connector: 12085481

Description: 2-Way M Metri-Pack 150 Series (BK)

Terminal Part Information

Terminal Type ID	Terminated Lead	Diagnostic Test Probe	Terminal Removal Tool	Service Terminal	Tray	Core Crimp	Insulation Crimp
I	13575462	J-35616-3 (GY)	J-38125-12A	12047581	2	E	C

A3L Sunshade - Left (DH6 with YF7)

Pin	Size	Color	Circuit	Function	Terminal Type ID	Option
A	0.5	OG	1732	Courtesy Lamp Control	I	-
B	0.5	BK	1850	Ground	I	-

A3R Sunshade - Right (DH6)

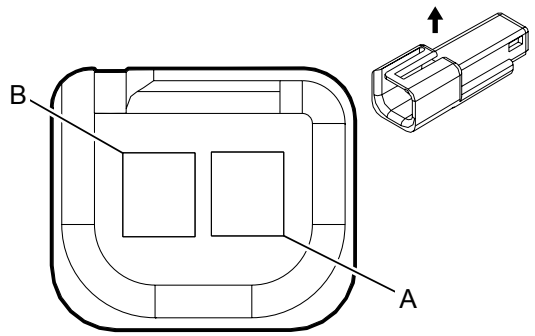

Connector Part Information

Harness Type: Headliner

OEM Connector: 12047663

Service Connector: 13584278

Description: 2-Way M 150 Metri-Pack Series (BK)

Terminal Part Information

Terminal Type ID	Terminated Lead	Diagnostic Test Probe	Terminal Removal Tool	Service Terminal	Tray Name	Core Crimp	Insulation Crimp
I	Not Required	J-35616-3 (GY)	Not Required	Not Required	Not Required	Not Required	Not Required

A3R Sunshade - Right (DH6)

Pin	Size	Color	Circuit	Function	Terminal Type ID	Option
A	0.5	OG	1732	Electronic Control Unit 12 Volt Reference (3)	I	—
	0.8	OG	1732			—
B	0.5	BK	1850	Ground	I	—

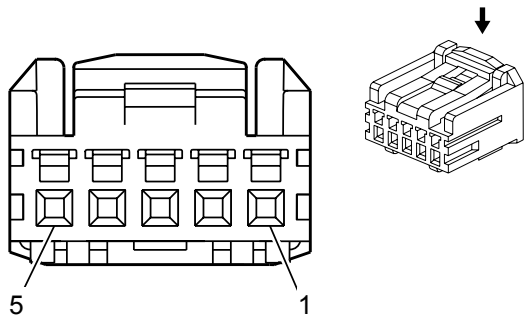

Connector Part Information

Harness Type: Instrument Panel

OEM Connector: 15491277

Service Connector: 88988747

Description: 5-Way F HCM Series (BK)

Terminal Part Information

Terminal Type ID	Terminated Lead	Diagnostic Test Probe	Terminal Removal Tool	Service Terminal	Tray	Core Crimp	Insulation Crimp
I	Pending	J-35616-64B (L-BU)	J-38125-12A	SHCM-A03T-P025	20	J	J

A5 Driver Information Center

Pin	Size	Color	Circuit	Function	Terminal Type ID	Option
1	0.35	D-GN/WH	1358	Driver Information Center (DIC) Switch Signal	I	-
2	0.35	BN	897	Low Reference	I	-
3	0.35	PK	893	Driver Information Center (DIC) Select Menu Switch Signal	I	-
4	0.35	YE	6817	LED Backlight Dimming Control	I	-
5	0.5	BK/WH	351	Ground	I	-

A7 Fuel Pump and Level Sensor Assembly (L20 or L96)

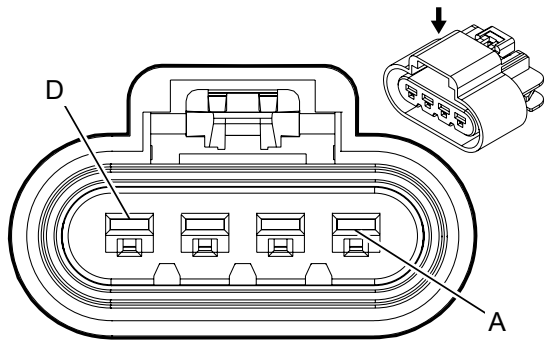

Connector Part Information

Harness Type: Chassis

OEM Connector: 13521459

Service Connector: 19300465

Description: 4-Way F 280 GT 5.8 Series, Sealed (BK)

Terminal Part Information

Terminal Type ID	Terminated Lead	Diagnostic Test Probe	Terminal Removal Tool	Service Terminal	Tray Name	Core Crimp	Insulation Crimp
I	Not Required	J-35616-4A (PU)	Not Required	Not Required	Not Required	Not Required	Not Required

A7 Fuel Pump and Level Sensor Assembly (L20 or L96)

Pin	Size	Color	Circuit	Function	Terminal Type ID	Option
A	3	BK	150	Ground	I	—
B	0.5	PU	1589	Primary Fuel Level Sensor Signal	I	—
C	0.5	TN	2759	Fuel Tank Pressure Sensor Low Reference	I	—
D	3	GY	120	Fuel Pump Control	I	—

A9A Outside Rearview Mirror - Driver (DEB or DE5)

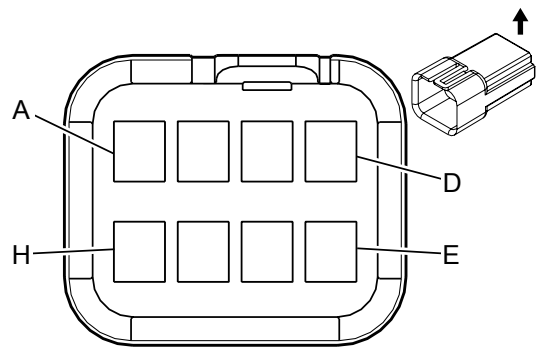

Connector Part Information

Harness Type: Driver Door

OEM Connector: 12065396

Service Connector: Service by Harness - See Part Catalog

Description: 8-Way M 150 Metri-Pack Series (NA)

Terminal Part Information

Terminal Type ID	Terminated Lead	Diagnostic Test Probe	Terminal Removal Tool	Service Terminal	Tray Name	Core Crimp	Insulation Crimp
I	Not Required	J-35616-3 (GY)	Not Required	Not Required	Not Required	Not Required	Not Required

A9A Outside Rearview Mirror - Driver (DEB or DE5)

Pin	Size	Color	Circuit	Function	Terminal Type ID	Option
A	0.8	BK	450	Ground	I	—
B	0.5	L-BU/WH	1314	Left Front Turn Signal Lamp Control	I	—
C	0.8	OG	2267	Mirror Heating Element Control	I	—
D	0.5	BK	450	Ground	I	—
E	0.35	YE	88	Left Mirror Motor Up Control	I	—
F	0.35	L-GN	89	Left Mirror Motor Down Control	I	—
G	0.35	WH	81	Left Mirror Motor Right Control	I	—
H	0.35	YE	88	Left Mirror Motor Up Control	I	—

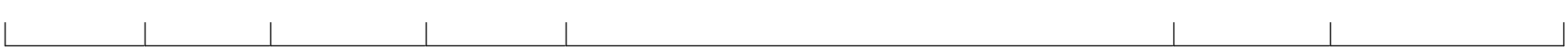

A9B Outside Rearview Mirror - Passenger (DEB or DE5)

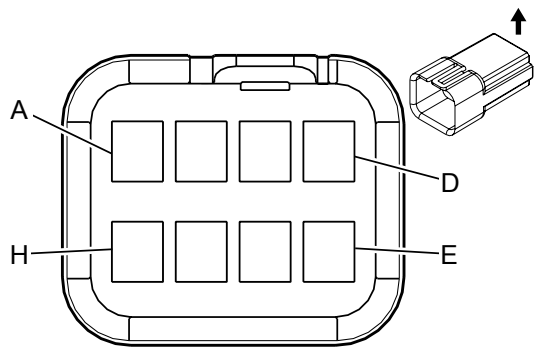

Connector Part Information

Harness Type: Passenger Door

OEM Connector: 12162427

Service Connector: Service by Harness - See Part Catalog

Description: 8-Way M 150 Metri-Pack Series (NA)

Terminal Part Information

Terminal Type ID	Terminated Lead	Diagnostic Test Probe	Terminal Removal Tool	Service Terminal	Tray Name	Core Crimp	Insulation Crimp
I	Not Required	J-35616-3 (GY)	Not Required	Not Required	Not Required	Not Required	Not Required

A9B Outside Rearview Mirror - Passenger (DEB or DE5)

Pin	Size	Color	Circuit	Function	Terminal Type ID	Option
A	0.8	BK	1850	Ground	I	—
B	0.5	D-BU/WH	1315	Right Front Turn Signal Lamp Control	I	—
C	0.8	OG	2267	Mirror Heating Element Control	I	—
D	0.5	BK	1850	Ground	I	—
E	0.35	BN/WH	1498	Right Mirror Motor Up Control	I	—
F	0.35	PU/WH	889	Right Mirror Motor Down Control	I	—
G	0.35	OG/WH	881	Right Mirror Motor Right Control	I	—
H	0.35	BN/WH	1498	Right Mirror Motor Up Control	I	—

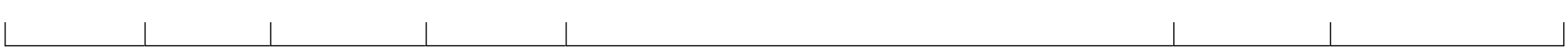

A10 Inside Rearview Mirror (UVC)

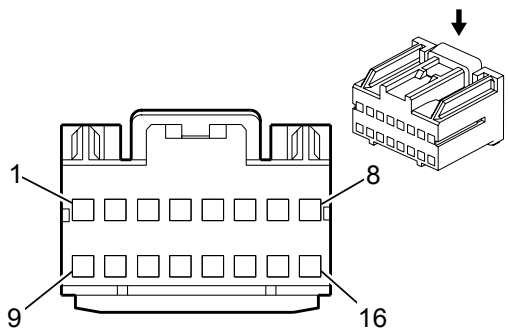

Connector Part Information

Harness Type: Headliner

OEM Connector: 15441350

Service Connector: 15306351

Description: 16-Way F Micro-Pack 100A Series (BK)

Terminal Part Information

Terminal Type ID	Terminated Lead	Diagnostic Test Probe	Terminal Removal Tool	Service Terminal	Tray Name	Core Crimp	Insulation Crimp
I	13575548	J-35616-16 (LT GN)	J-38125-559	15445905	Delphi 23	J	J

A10 Inside Rearview Mirror (UVC)

Pin	Size	Color	Circuit	Function	Terminal Type ID	Option
1 - 5	—	—	—	Not Occupied	—	—
6	0.5	WH	7641	Camera Rear Vision Signal +	I	—
7	0.5	D-BU	7642	Camera Rear Vision Signal (-)	I	—
	0.5	L-BU	7642			—
8	0.5	BK/WH	351	Signal Ground	I	—
9	0.5	L-GN	24	Backup Lamp Control	I	—
10 - 12	—	—	—	Not Occupied	—	—
13	0.5	PK	239	Run/Crank Ignition 1 Voltage	I	—
14 - 16	—	—	—	Not Occupied	—	—

A11 Radio X1 (UI8)

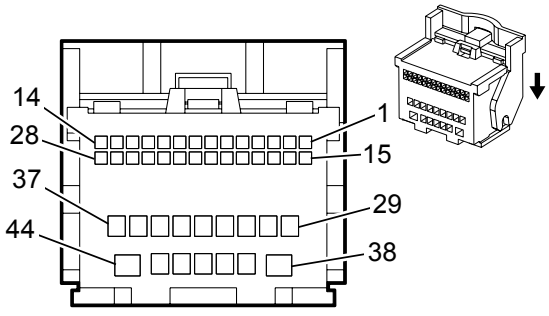

Connector Part Information

Harness Type: Instrument Panel

OEM Connector: 13589609

Service Connector: 88988902

Description: 44-Way F GT 150/280 64 Series (BK)

Terminal Part Information

Pins: 6, 20, 28

Terminated Lead: 13327119

Release Tool: J-38125-215A

Diagnostic Test Probe: J-35616-64B (L-BU)

Terminal/Tray: SAIT-A03T-M064/14

Core/Insulation Crimp: P/P

Pins: 29, 31–34, 39–43

Terminated Lead: 13327109

Release Tool: J-38125-553

Diagnostic Test Probe: J-35616-2A (GY)

Terminal/Tray: 12191812/19

Core/Insulation Crimp: E/C

Pins: 38, 44

Terminated Lead: 13327130

Release Tool: J-38125-553

Diagnostic Test Probe: J-35616-4A (PU)

Terminal/Tray: 15304711/8

Core/Insulation Crimp: 2/A

A11 Radio X1 (UI8)

Pin	Wire	Circuit	Function
1–5	—	—	Not Used
6	0.35 L-BU/BK	659	Low Reference (UE1)
7	0.35 YE	6817	LED Backlight Dimming Control
8–19	—	—	Not Used
20	0.35 D-BU	658	Cellular Telephone Voice Signal (UE1)
21–27	—	—	Not Used

21–27	—	—	Not Used
28	0.35 D-GN	5060	Low Speed GMLAN Serial Data
29–30	—	—	Not Used
31	0.8 D-GN	1953	Right Front Midrange Speaker (-)
32	0.8 L-BU	1957	Left Front Midrange Speaker (-)
33	0.8 OG	1955	Right Rear Midrange Speaker (-)
34	0.8 WH	1959	Left Rear Midrange Speaker (-)
35–37	—	—	Not Used
38	1 BK	351	Ground
39	0.8 OG	1853	Right Front Midrange Speaker (+)
40	0.8 D-BU	1857	Left Front Midrange Speaker (+)
41	0.8 TN	1855	Right Rear Midrange Speaker (+)
42	0.8 TN	1859	Left Rear Midrange Speaker (+)
43	—	—	Not Used
44	1 RD/WH	340	Battery Positive Voltage

A11 Radio X1 (Without UI8)

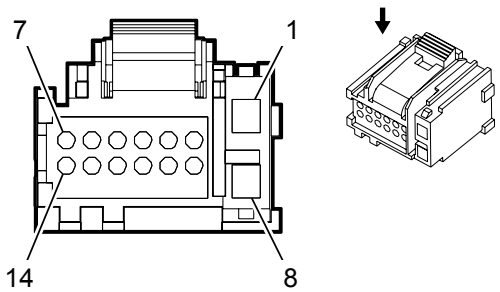

Connector Part Information

Harness Type: Instrument Panel

OEM Connector: 13545675

Service Connector: 13580448

Description: 14-Way F 150 GT Micro 64 Series (BK)

Terminal Part Information

Terminal Type ID	Terminated Lead	Diagnostic Test Probe	Terminal Removal Tool	Service Terminal	Tray Name	Core Crimp	Insulation Crimp
I	13575535	J-35616-64B (LT BU)	J-38125-21	15359541	Delphi 4	M	M
II	13575735	J-35616-14 (GN)	J-38125-553	12191812	Delphi 19	C	A
III	13579976	J-35616-64B (LT BU)	J-38125-21	15359541	Delphi 4	M	M

A11 Radio X1 (Without UI8)

Pin	Size	Color	Circuit	Function	Terminal Type ID	Option
1	1	RD/WH	340	Battery Positive Voltage	II	—
2	0.8	D-BU	1857	Left Front Midrange Speaker Control (+)	III	—
3	0.8	OG	1853	Right Front Midrange Speaker Control (+)	III	—
4	0.35	PK	5149	Voice Recognition Audio Signal	I	—
	0.8	GY	655	Cellular Telephone Microphone Signal	III	—
5	0.35	PK/BK	5152	Voice Recognition Audio Low Reference	I	—
	0.8	D-GN	654	Cellular Telephone Microphone Low Reference	III	—
6	—	—	—	Not Occupied	—	—

6	—	—	—	Not Occupied	—	—
7	0.35	YE	6817	LED Backlight Dimming Control	I	—
8	1	BK/WH	351	Signal Ground	II	—
9	0.8	L-BU	1957	Left Front Midrange Speaker (-) Low Reference	III	—
10	0.8	D-GN	1953	Right Front Midrange Speaker (-) Low Reference	III	—
11 - 12	—	—	—	Not Occupied	—	—
13	0.35	D-GN	5060	Low Speed GMLAN Serial Data	I	—
14	—	—	—	Not Occupied	—	—

A11 Radio X2 (Without UI8)

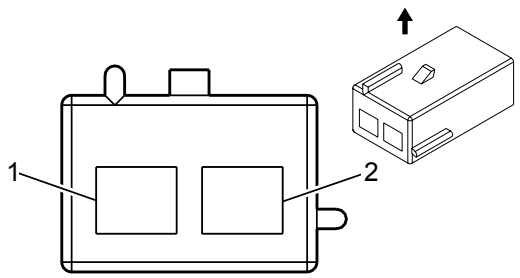

Connector Part Information

Harness Type: Instrument Panel

OEM Connector: 15318080

Service Connector: 21019410

Description: 2-Way F 280 Metri-Pack Series (BK)

Terminal Part Information

Terminal Type ID	Terminated Lead	Diagnostic Test Probe	Terminal Removal Tool	Service Terminal	Tray Name	Core Crimp	Insulation Crimp
I	Not Required	J-35616-4A (PU)	Not Required	Not Required	Not Required	Not Required	Not Required

A11 Radio X2 (Without UI8)

Pin	Size	Color	Circuit	Function	Terminal Type ID	Option
1	0.5	L-GN	66	A/C Request Signal	I	—
2	0.5	D-GN/WH	762	A/C Request Signal	I	—

A11 Radio X4 (UI8)

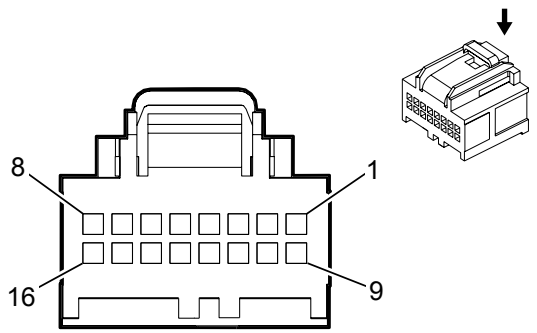

Connector Part Information

Harness Type: Instrument Panel

OEM Connector: 13819411

Service Connector: 13582574

Description: 16-Way F 0.64 OCS Series (BN)

Terminal Part Information

Terminal Type ID	Terminated Lead	Diagnostic Test Probe	Terminal Removal Tool	Service Terminal	Tray Name	Core Crimp	Insulation Crimp
I	19300660	J-35616-64B (LT BU)	J-38125-12A	Not Available	Not Available	Not Available	Not Available

A11 Radio X4 (UI8)

Pin	Size	Color	Circuit	Function	Terminal Type ID	Option
1 - 5	—	—	—	Not Occupied	—	—
6	0.35	WH	7641	Camera Rear Vision Signal +	I	—
7	0.35	L-BU	7642	Camera Rear Vision Signal (-)	I	—
8 - 16	—	—	—	Not Occupied	—	—

A12 Digital Radio Receiver Control Module (U2K or UBS)

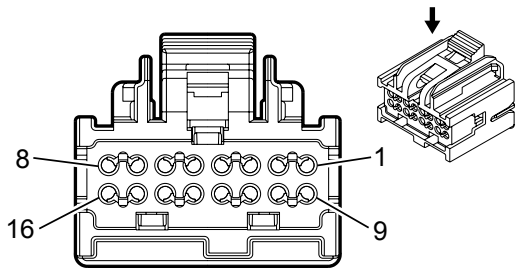

Connector Part Information

Harness Type: Instrument Panel

OEM Connector: 13568238

Service Connector: 13504130

Description: 16-Way F 64 Micro Series, Sealed (BK)

Terminal Part Information

Terminal Type ID	Terminated Lead	Diagnostic Test Probe	Terminal Removal Tool	Service Terminal	Tray Name	Core Crimp	Insulation Crimp
I	13575535	J-35616-64B (LT BU)	J-38125-21	15359541	Delphi 4	M	M
II	13579976	J-35616-64B (LT BU)	J-38125-21	15359541	Delphi 4	M	M

A12 Digital Radio Receiver Control Module (U2K or UBS)

Pin	Size	Color	Circuit	Function	Terminal Type ID	Option
1	0.35	TN/WH	372	Remote Radio Audio (-) Low Reference	I	—
2	0.35	BN/WH	367	Remote Radio Left Audio Signal	I	—
3	0.35	D-GN/WH	368	Remote Radio Right Audio Signal (1)	I	—
4	0.35	GY	388	Remote Radio Right Audio Signal (2)	I	—
5	0.5	D-GN	5060	Low Speed GMLAN Serial Data	II	—
6 - 8	—	—	—	Not Occupied	—	—
9	0.8	BK/WH	351	Signal Ground	II	—
10	—	—	—	Not Occupied	—	—

11	0.35	BARE	1573	Front Audio Low Reference	I	—
12 - 15	—	—	—	Not Occupied	—	—
16	0.8	RD/WH	340	Battery Positive Voltage	II	—

A23D Door Latch Assembly - Driver X1

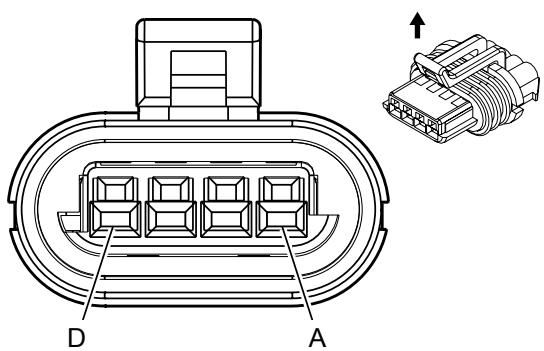

Connector Part Information

Harness Type: Driver Door

OEM Connector: 15354716

Service Connector: Service by Harness - See Part Catalog

Description: 4-Way F 150 GT Series, Sealed (BK)

Terminal Part Information

Terminal Type ID	Terminated Lead	Diagnostic Test Probe	Terminal Removal Tool	Service Terminal	Tray Name	Core Crimp	Insulation Crimp
I	Not Required	J-35616-14 (GN)	Not Required	Not Required	Not Required	Not Required	Not Required

A23D Door Latch Assembly - Driver X1

Pin	Size	Color	Circuit	Function	Terminal Type ID	Option
A	0.35	TN	126	Left Front Door Open Switch Signal	I	—
B	0.35	GY/BK	745	Left Front Door Ajar Switch Signal	I	—
C	—	—	—	Not Occupied	—	—
D	0.35	BK	450	Ground	I	—

A23D Door Latch Assembly - Driver X2

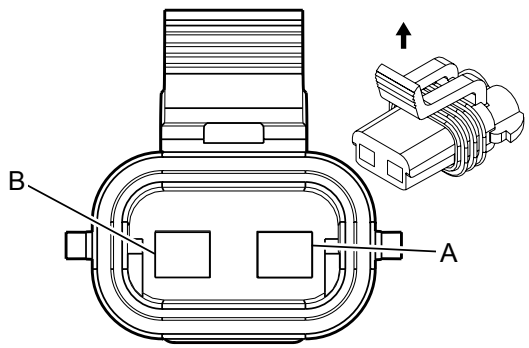

Connector Part Information

Harness Type: Driver Door

OEM Connector: 15300027

Service Connector: Service by Harness - See Part Catalog

Description: 2-Way F 280 Metri-Pack Series, Sealed (BK)

Terminal Part Information

Terminal Type ID	Terminated Lead	Diagnostic Test Probe	Terminal Removal Tool	Service Terminal	Tray Name	Core Crimp	Insulation Crimp
I	Not Required	J-35616-4A (PU)	Not Required	Not Required	Not Required	Not Required	Not Required

A23D Door Latch Assembly - Driver X2

Pin	Size	Color	Circuit	Function	Terminal Type ID	Option
A	0.8	TN	694	Driver Door Lock Actuator Unlock Control	I	—
B	0.8	GY	295	Door Lock Actuator Lock Control	I	—

A23P Door Latch Assembly - Passenger X1

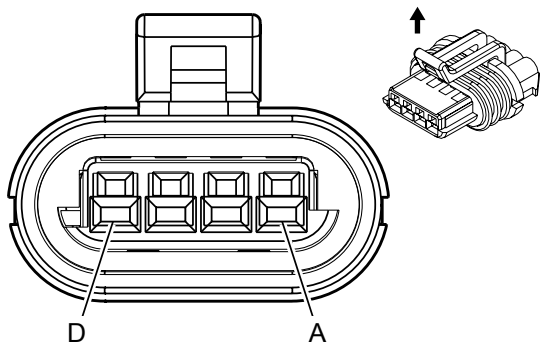

Connector Part Information

Harness Type: Passenger Door

OEM Connector: 15354716

Service Connector: Service by Harness - See Part Catalog

Description: 4-Way F 150 GT Series, Sealed (BK)

Terminal Part Information

Terminal Type ID	Terminated Lead	Diagnostic Test Probe	Terminal Removal Tool	Service Terminal	Tray Name	Core Crimp	Insulation Crimp
I	Not Required	J-35616-14 (GN)	Not Required	Not Required	Not Required	Not Required	Not Required

A23P Door Latch Assembly - Passenger X1

Pin	Size	Color	Circuit	Function	Terminal Type ID	Option
A	0.35	BK	1850	Ground	I	—
B	—	—	—	Not Occupied	—	—
C	0.35	TN/WH	746	Right Front Door Ajar Switch Signal	I	—
D	0.35	L-GN	1177	Right Front Door Open Switch Signal	I	—

A32A LPG Pump Assembly - Primary (KO7 with UFP)

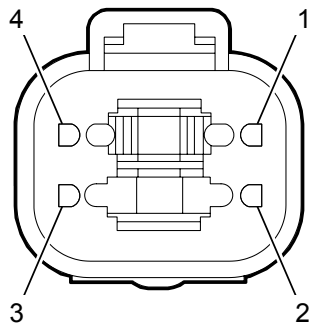

Connector Part Information

Harness Type: LPG

OEM Connector: DT04 – 4P

Service Connector: Pending

Description: 4-Way M Deutsch DT Series, Sealed (GY)

Terminal Part Information

Terminal Type ID	Terminated Lead	Diagnostic Test Probe	Terminal Removal Tool	Service Terminal	Tray	Core Crimp	Insulation Crimp
I	Service by Harness – See Part Catalog	Pending	Pending	Not Available	Not Available	Not Available	Not Available

A32A LPG Pump Assembly - Primary (KO7 with UFP)

Pin	Size	Color	Circuit	Function	Terminal Type ID	Option
1	2	RE/WH	—	Fuel Pump – Primary	I	-
2	2	OR	—	Fuel Pump – Scavenge	I	-
3	0.8	YE	—	LPDM Signal	I	-
4	2	BK	—	Ground	I	-

A32B LPG Pump Assembly - Secondary (KO7 with UFP)

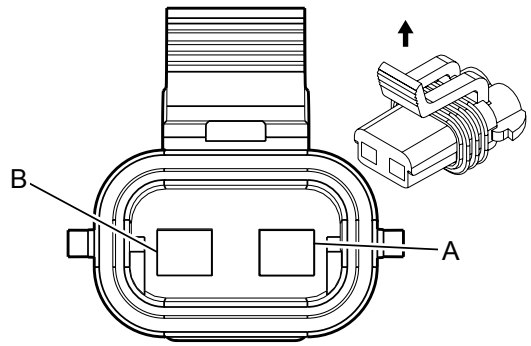

Connector Part Information

Harness Type: LPG

OEM Connector: 15300027

Service Connector: 12101855

Description: 2-Way F Metri-Pack 280 Series, Sealed (BK)

Terminal Part Information

Terminal Type ID	Terminated Lead	Diagnostic Test Probe	Terminal Removal Tool	Service Terminal	Tray	Core Crimp	Insulation Crimp
I	Service by Harness– See Part Catalog	J-35616-4A (PU)	J-38125-11A	12077411	2	2	5

A32B LPG Pump Assembly - Secondary (KO7 with UFP)

Pin	Size	Color	Circuit	Function	Terminal Type ID	Option
A	0.8	RD/WH	—	Secondary LPDM Signal	I	-
B	0.8	BK	—	Ground	I	-

B1 A/C Refrigerant Pressure Sensor (C60 with L20, L96, or LC8)

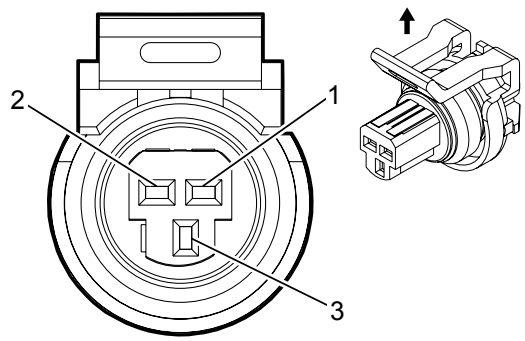

Connector Part Information

Harness Type: Engine

OEM Connector: 13532244

Service Connector: 88988301

Description: 3-Way F 150 GT Series, Sealed (BK)

Terminal Part Information

Terminal Type ID	Terminated Lead	Diagnostic Test Probe	Terminal Removal Tool	Service Terminal	Tray Name	Core Crimp	Insulation Crimp
I	Not Required	J-35616-14 (GN)	Not Required	Not Required	Not Required	Not Required	Not Required

B1 A/C Refrigerant Pressure Sensor (C60 with L20, L96, or LC8)

Pin	Size	Color	Circuit	Function	Terminal Type ID	Option
1	0.5	TN	5514	A/C Refrigerant Pressure Sensor Low Reference	I	—
	0.8	TN	5514			—
2	0.5	GY	2700	A/C Pressure Sensor 5 Volt Reference	I	—
	0.8	GY	2700			—
3	0.5	OG/BK	380	A/C Refrigerant Pressure Sensor Signal	I	—
	0.8	OG/BK	380			—

B1 A/C Refrigerant Pressure Sensor (C60 with LGH)

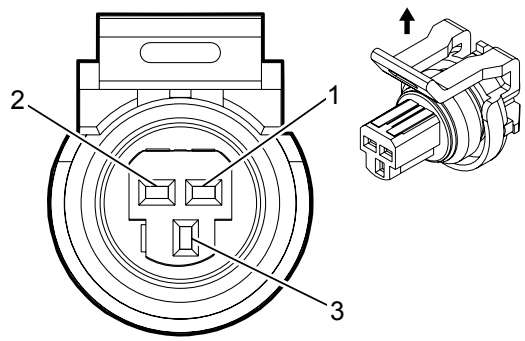

Connector Part Information

Harness Type: Engine

OEM Connector: 13532244

Service Connector: 88988301

Description: 3-Way F GT 150 Series, Sealed (BK)

Terminal Part Information

Terminal Type ID	Terminated Lead	Diagnostic Test Probe	Terminal Removal Tool	Service Terminal	Tray	Core Crimp	Insulation Crimp
I	13575433	J-35616-2A (GY)	J-38125-553	15326267	19	E	4

B1 A/C Refrigerant Pressure Sensor (C60 with LGH)

Pin	Size	Color	Circuit	Function	Terminal Type ID	Option
1	0.5	TN	5514	Low Reference	I	-
2	0.5	GY	2700	5-Volt Reference	I	-
3	0.5	OG/BK	380	A/C Refrigerant Pressure Sensor Signal	I	-

B1B A/C Low Side Pressure Switch (C60 with L20, L96, or LC8)

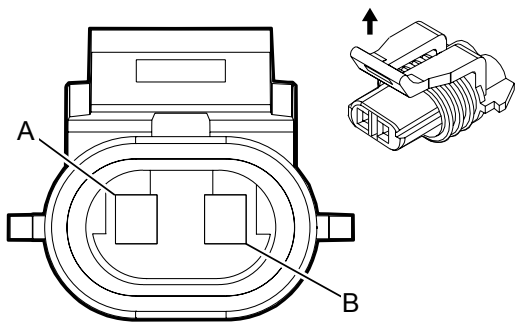

Connector Part Information

Harness Type: Engine

OEM Connector: 12052644

Service Connector: 15306302

Description: 2-Way F 150 Metri-Pack Series, Sealed (GY)

Terminal Part Information

Terminal Type ID	Terminated Lead	Diagnostic Test Probe	Terminal Removal Tool	Service Terminal	Tray Name	Core Crimp	Insulation Crimp
I	Not Required	J-35616-14 (GN)	Not Required	Not Required	Not Required	Not Required	Not Required

B1B A/C Low Side Pressure Switch (C60 with L20, L96, or LC8)

Pin	Size	Color	Circuit	Function	Terminal Type ID	Option
A	0.5	L-GN	66	A/C Request Signal	I	—
B	0.5	L-GN/WH	66	A/C Request Signal	I	—

B1B A/C Low Pressure Switch (C60 with LGH)

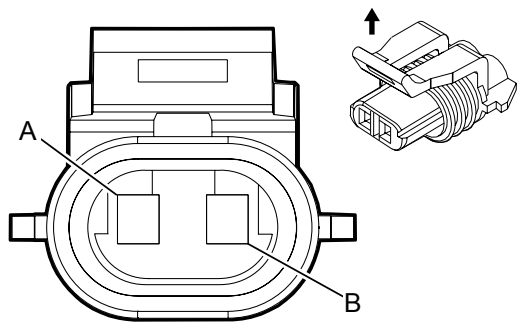

Connector Part Information

Harness Type: Engine Chassis

OEM Connector: 12052644

Service Connector: 15306302

Description: 2-Way F Metri-Pack 150 Series, Sealed (GY)

Terminal Part Information

Terminal Type ID	Terminated Lead	Diagnostic Test Probe	Terminal Removal Tool	Service Terminal	Tray	Core Crimp	Insulation Crimp
I	13575419	J-35616-14 (GN)	J-38125-12A	12048074	2	E	1

B1B A/C Low Pressure Switch (C60 with LGH)

Pin	Size	Color	Circuit	Function	Terminal Type ID	Option
A	0.5	L-GN	66	A/C Request Signal	I	-
B	0.5	L-GN/WH	66	A/C Request Signal	I	-

B5LF Wheel Speed Sensor - Left Front

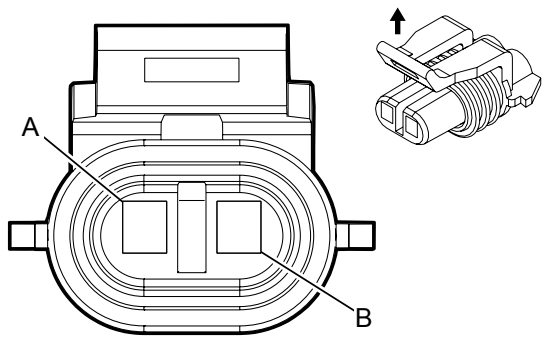

Connector Part Information

Harness Type: Chassis

OEM Connector: 12052641

Service Connector: 13586114

Description: 2-Way F 150 Metri-Pack Series (BK)

Terminal Part Information

Terminal Type ID	Terminated Lead	Diagnostic Test Probe	Terminal Removal Tool	Service Terminal	Tray Name	Core Crimp	Insulation Crimp
I	Not Required	J-35616-14 (GN)	Not Required	Not Required	Not Required	Not Required	Not Required

B5LF Wheel Speed Sensor - Left Front

Pin	Size	Color	Circuit	Function	Terminal Type ID	Option
A	0.5	YE	873	Left Front Wheel Speed Sensor Low Reference	I	—
B	0.5	L-BU	830	Wheel Speed Sensor Signal Left Front	I	—

B5RF Wheel Speed Sensor - Right Front

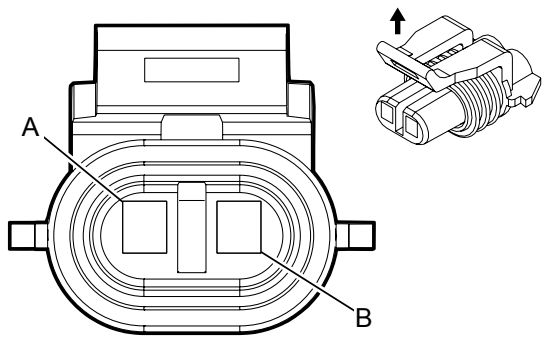

Connector Part Information

Harness Type: Chassis

OEM Connector: 12052641

Service Connector: 13586114

Description: 2-Way F 150 Metri-Pack Series (BK)

Terminal Part Information

Terminal Type ID	Terminated Lead	Diagnostic Test Probe	Terminal Removal Tool	Service Terminal	Tray Name	Core Crimp	Insulation Crimp
I	Not Required	J-35616-14 (GN)	Not Required	Not Required	Not Required	Not Required	Not Required

B5RF Wheel Speed Sensor - Right Front

Pin	Size	Color	Circuit	Function	Terminal Type ID	Option
A	0.5	TN	833	Wheel Speed Sensor Low Reference Right Front	I	—
B	0.5	D-GN	872	Wheel Speed Sensor Signal Right Front	I	—

B5LR Wheel Speed Sensor - Left Rear (JL4)

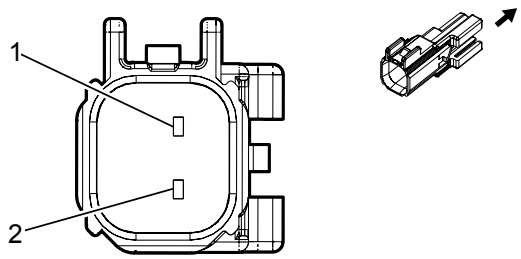

Connector Part Information

Harness Type: Chassis

OEM Connector: 13719748

Service Connector: 19301583

Description: 2-Way M 1.5 Series, Sealed (BK)

Terminal Part Information

Terminal Type ID	Terminated Lead	Diagnostic Test Probe	Terminal Removal Tool	Service Terminal	Tray Name	Core Crimp	Insulation Crimp
I	Not Required	J-35616-3 (GY)	Not Required	Not Required	Not Required	Not Required	Not Required

B5LR Wheel Speed Sensor - Left Rear (JL4)

Pin	Size	Color	Circuit	Function	Terminal Type ID	Option
1	0.5	OG	885	Wheel Speed Sensor Low Reference Left Rear	I	—
2	0.5	TN	884	Wheel Speed Sensor Signal Left Rear	I	—

B5RR Wheel Speed Sensor - Right Rear (JL4)

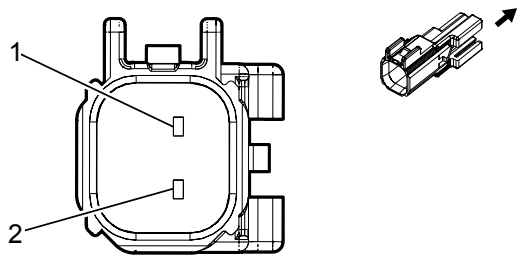

Connector Part Information

Harness Type: Chassis

OEM Connector: 13719748

Service Connector: 19301583

Description: 2-Way M 1.5 Series, Sealed (BK)

Terminal Part Information

Terminal Type ID	Terminated Lead	Diagnostic Test Probe	Terminal Removal Tool	Service Terminal	Tray Name	Core Crimp	Insulation Crimp
I	Not Required	J-35616-3 (GY)	Not Required	Not Required	Not Required	Not Required	Not Required

B5RR Wheel Speed Sensor - Right Rear (JL4)

Pin	Size	Color	Circuit	Function	Terminal Type ID	Option
1	0.5	WH	883	Wheel Speed Sensor Low Reference Right Rear	I	—
2	0.5	BN	882	Wheel Speed Sensor Signal Right Rear	I	—

B9 Ambient Air Temperature Sensor (UFA)

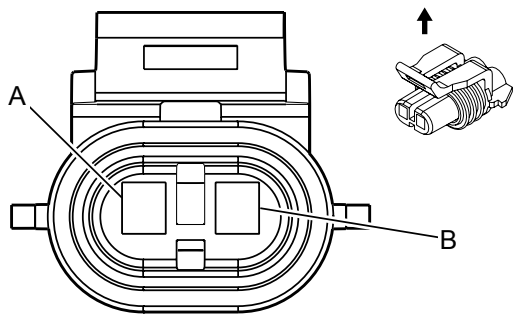

Connector Part Information

Harness Type: Forward Lamp

OEM Connector: 12052642

Service Connector: 12101856

Description: 2-Way F 150 Metri-Pack Series, Sealed (L-GN)

Terminal Part Information

Terminal Type ID	Terminated Lead	Diagnostic Test Probe	Terminal Removal Tool	Service Terminal	Tray Name	Core Crimp	Insulation Crimp
I	Not Required	J-35616-14 (GN)	Not Required	Not Required	Not Required	Not Required	Not Required

B9 Ambient Air Temperature Sensor (UFA)

Pin	Size	Color	Circuit	Function	Terminal Type ID	Option
A	0.5	D-GN/WH	636	Outside Ambient Air Temperature Sensor Signal	I	—
B	0.5	YE	61	Outside Ambient Temperature Sensor Low Reference	I	—

B10 Ambient Light Sensor

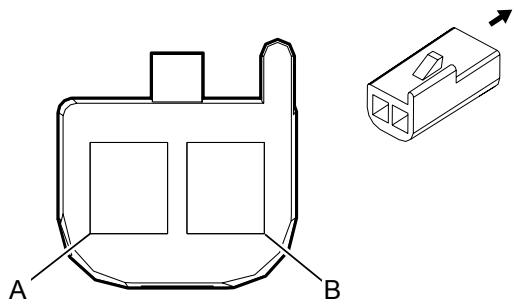

Connector Part Information

Harness Type: Instrument Panel

OEM Connector: 12047662

Service Connector: 12085535

Description: 2-Way F 150 Metri-Pack Series (BK)

Terminal Part Information

Terminal Type ID	Terminated Lead	Diagnostic Test Probe	Terminal Removal Tool	Service Terminal	Tray Name	Core Crimp	Insulation Crimp
I	Not Required	J-35616-14 (GN)	Not Required	Not Required	Not Required	Not Required	Not Required

B10 Ambient Light Sensor

Pin	Size	Color	Circuit	Function	Terminal Type ID	Option
A	0.35	WH	278	Ambient Light Sensor Signal	I	—
B	0.35	BK/WH	351	Signal Ground	I	—

B14A Transmission Output Shaft Speed Sensor

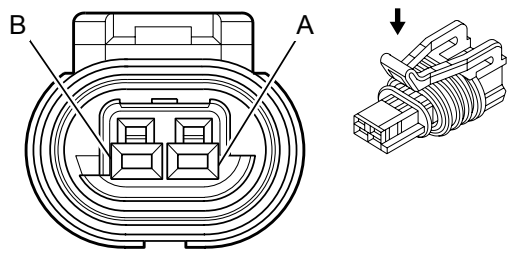

Connector Part Information

Harness Type: Engine

OEM Connector: 15449028

Service Connector: 88987993

Description: 2-Way F GT 150 Series, Sealed (BK)

Terminal Part Information

Terminal Type ID	Terminated Lead	Diagnostic Test Probe	Terminal Removal Tool	Service Terminal	Tray	Core Crimp	Insulation Crimp
I	13575433	J-35616-2A (GY)	J-38125-553	15326267	19	E	4

B14A Transmission Output Shaft Speed Sensor

Pin	Size	Color	Circuit	Function	Terminal Type ID	Option
A	0.5	L-GN/BK	822	Vehicle Speed Sensor (VSS) Low Signal	I	-
B	0.5	PU/WH	821	Vehicle Speed Sensor (VSS) High Signal	I	-

B19A Brake Booster Fluid Pressure Alarm Switch (UJ1)

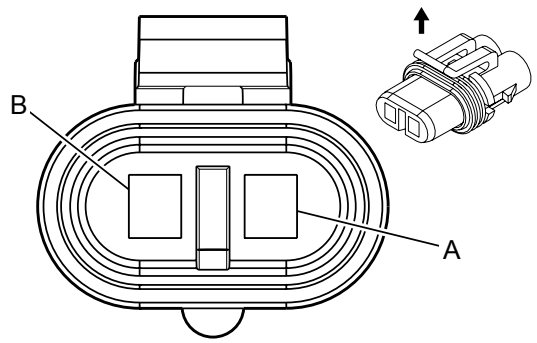

Connector Part Information

Harness Type: Brake Fluid Level Switch

OEM Connector: 12020599

Service Connector: Service by Harness - See Part Catalog

Description: 2-Way F 280 Metri-Pack Series, Sealed (BK)

Terminal Part Information

Terminal Type ID	Terminated Lead	Diagnostic Test Probe	Terminal Removal Tool	Service Terminal	Tray Name	Core Crimp	Insulation Crimp
I	Not Required	J-35616-4A (PU)	Not Required	Not Required	Not Required	Not Required	Not Required

B19A Brake Booster Fluid Pressure Alarm Switch (UJ1)

Pin	Size	Color	Circuit	Function	Terminal Type ID	Option
A	0.5	TN/WH	33	Brake Warning Indicator Control	I	—
B	0.5	L-BU/BK	1928	Brake Booster Fluid Flow Switch Signal	I	—

B20 Brake Fluid Level Switch

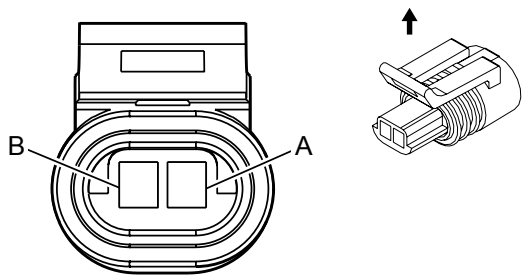

Connector Part Information

Harness Type: Engine

OEM Connector: 12162193

Service Connector: 88987993

Description: 2-Way F 150.2 Metri-Pack Series, Sealed, Pull To Seat (BK)

Terminal Part Information

Terminal Type ID	Terminated Lead	Diagnostic Test Probe	Terminal Removal Tool	Service Terminal	Tray Name	Core Crimp	Insulation Crimp
I	Not Required	J-35616-14 (GN)	Not Required	Not Required	Not Required	Not Required	Not Required

B20 Brake Fluid Level Switch

Pin	Size	Color	Circuit	Function	Terminal Type ID	Option
A	0.5	BK/WH	1551	Signal Ground	I	—
B	0.5	PU	333	Brake Fluid Level Sensor Signal	I	—

B22 Brake Pedal Position Sensor

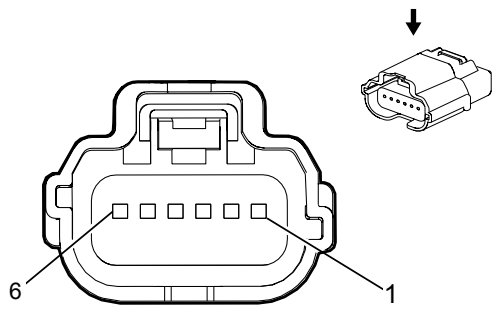

Connector Part Information

Harness Type: Instrument Panel

OEM Connector: 13893502

Service Connector: 13577043

Description: 6-Way F 64 Series, Sealed (NA)

Terminal Part Information

Terminal Type ID	Terminated Lead	Diagnostic Test Probe	Terminal Removal Tool	Service Terminal	Tray Name	Core Crimp	Insulation Crimp
I	Not Required	J-35616-64B (LT BU)	Not Required	Not Required	Not Required	Not Required	Not Required

B22 Brake Pedal Position Sensor

Pin	Size	Color	Circuit	Function	Terminal Type ID	Option
1	0.5	BN/WH	5382	Brake Position Sensor Low Reference	I	—
2	0.5	GY	5381	Brake Position Sensor 5 Volt Reference	I	—
3	0.5	TN	5380	Brake Position Sensor Signal	I	—
4	0.5	YE	5361	Brake Apply Sensor Signal	I	—
5	0.5	BN	5360	Brake Apply Sensor Low Reference	I	—
6	0.5	WH	5359	Brake Apply Sensor Control	I	—

B23 Camshaft Position Sensor (L20, L96, or LC8)

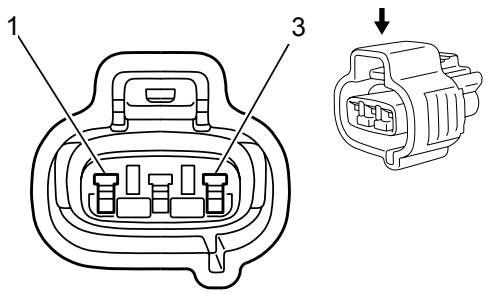

Connector Part Information

Harness Type: Engine

OEM Connector: 6248-5317

Service Connector: 13576413

Description: 3-Way F Sealed (GY)

Terminal Part Information

Terminal Type ID	Terminated Lead	Diagnostic Test Probe	Terminal Removal Tool	Service Terminal	Tray Name	Core Crimp	Insulation Crimp
I	Not Required	J-35616-18 (BK)	Not Required	Not Required	Not Required	Not Required	Not Required

B23 Camshaft Position Sensor (L20, L96, or LC8)

Pin	Size	Color	Circuit	Function	Terminal Type ID	Option
1	0.5	BU/WH	6265	Camshaft CAM W Signal	I	LGH
2	0.5	BN	6266	Camshaft CAM W Ground	I	LGH
3	0.5	BU	6259	Camshaft CAM W Control	I	LGH

B23 Camshaft Position Sensor (LGH)

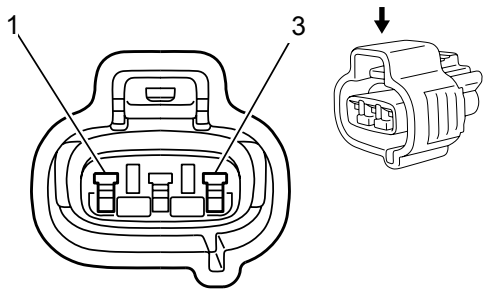

Connector Part Information

Harness Type: Engine

OEM Connector: 6248-5317

Service Connector: 13576413

Description: 3-Way F Sealed (GY)

Terminal Part Information

Terminal Type ID	Terminated Lead	Diagnostic Test Probe	Terminal Removal Tool	Service Terminal	Tray	Core Crimp	Insulation Crimp
I	Pending	J-35616-18 (BK)	J-38125-552	7116-4025	11	E	1

B23 Camshaft Position Sensor (LGH)

Pin	Size	Color	Circuit	Function	Terminal Type ID	Option
1	0.5	D-BU/WH	6265	Camshaft Position (CMP) Sensor Signal	I	-
2	0.5	BN	6266	Low Reference	I	-
3	0.5	D-BU	6259	5-Volt Reference	I	-

B24 Cellular Phone Microphone (UE1 or UI8)

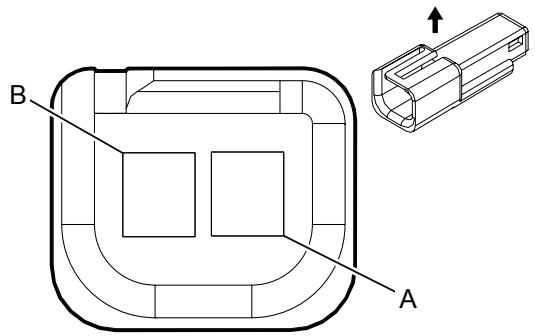

Connector Part Information

Harness Type: Headliner

OEM Connector: 12047663

Service Connector: 13584278

Description: 2-Way M 150 Metri-Pack Series (BK)

Terminal Part Information

Terminal Type ID	Terminated Lead	Diagnostic Test Probe	Terminal Removal Tool	Service Terminal	Tray Name	Core Crimp	Insulation Crimp
I	Not Required	J-35616-3 (GY)	Not Required	Not Required	Not Required	Not Required	Not Required

B24 Cellular Phone Microphone (UE1 or UI8)

Pin	Size	Color	Circuit	Function	Terminal Type ID	Option
A	0.8	D-GN	654	Cellular Telephone Microphone Low Reference	I	—
B	0.8	GY	655	Cellular Telephone Microphone Signal	I	—

B26 Crankshaft Position Sensor (L20, L96, or LC8)

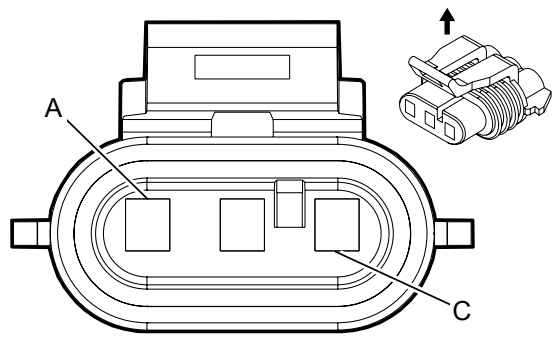

Connector Part Information

Harness Type: Engine

OEM Connector: 12129946

Service Connector: 88987997

Description: 3-Way F 150 Metri-Pack Series, Sealed (GY)

Terminal Part Information

Terminal Type ID	Terminated Lead	Diagnostic Test Probe	Terminal Removal Tool	Service Terminal	Tray Name	Core Crimp	Insulation Crimp
I	Not Required	J-35616-14 (GN)	Not Required	Not Required	Not Required	Not Required	Not Required

B26 Crankshaft Position Sensor (L20, L96, or LC8)

Pin	Size	Color	Circuit	Function	Terminal Type ID	Option
A	0.8	WH/BK	6271	Crankshaft 60X Sensor Signal	I	—
B	0.8	GY/BK	6272	Crankshaft 60X Sensor Low Reference	I	—
C	0.8	PU/WH	6270	Crankshaft 60X Sensor 5 Volt Reference	I	—

B26 Crankshaft Position Sensor (LGH)

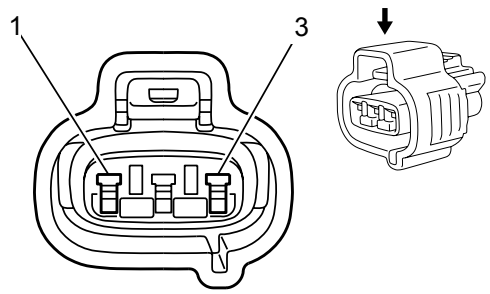

Connector Part Information

Harness Type: Engine

OEM Connector: 6248-5317

Service Connector: 13576413

Description: 3-Way F Sealed (GY)

Terminal Part Information

Terminal Type ID	Terminated Lead	Diagnostic Test Probe	Terminal Removal Tool	Service Terminal	Tray Name	Core Crimp	Insulation Crimp
I	Not Required	J-35616-18 (BK)	Not Required	Not Required	Not Required	Not Required	Not Required

B26 Crankshaft Position Sensor (LGH)

Pin	Size	Color	Circuit	Function	Terminal Type ID	Option
1	0.5	WH/BK	6271	Crankshaft 60X Sensor Signal	I	LGH
2	0.5	GY/BK	6272	Crankshaft 60X Sensor Low Reference	I	LGH
3	0.5	VT/WH	6270	Crankshaft 60X Sensor 5 Volt Reference	I	LGH

B28F Door Ajar Switch - Right Sliding

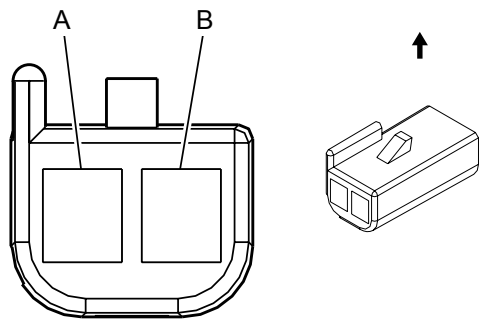

Connector Part Information

Harness Type: Body

OEM Connector: 12059251

Service Connector: 12101848

Description: 2-Way F 150 Metri-Pack Series (RD)

Terminal Part Information

Terminal Type ID	Terminated Lead	Diagnostic Test Probe	Terminal Removal Tool	Service Terminal	Tray Name	Core Crimp	Insulation Crimp
I	Not Required	J-35616-14 (GN)	Not Required	Not Required	Not Required	Not Required	Not Required

B28F Door Ajar Switch - Right Sliding

Pin	Size	Color	Circuit	Function	Terminal Type ID	Option
A	0.35	BK	1850	Ground	I	—
B	0.35	YE/BK	1181	Right Rear Door Open Switch Signal	I	—

B33 Engine Coolant Level Switch (LGH)

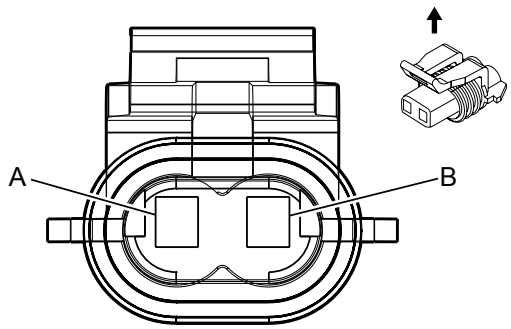

Connector Part Information

Harness Type: Engine

OEM Connector: 15324243

Service Connector: 15306302

Description: 2-Way F 150 Metri-Pack Series, Sealed (GY)

Terminal Part Information

Terminal Type ID	Terminated Lead	Diagnostic Test Probe	Terminal Removal Tool	Service Terminal	Tray Name	Core Crimp	Insulation Crimp
I	Not Required	J-35616-14 (GN)	Not Required	Not Required	Not Required	Not Required	Not Required

B33 Engine Coolant Level Switch (LGH)

Pin	Size	Color	Circuit	Function	Terminal Type ID	Option
A	0.5	L-GN	1478	Coolant Level Switch Signal	I	—
B	0.5	BK/WH	351	Signal Ground	I	—

B34 Engine Coolant Temperature Sensor (L20, L96, or LC8)

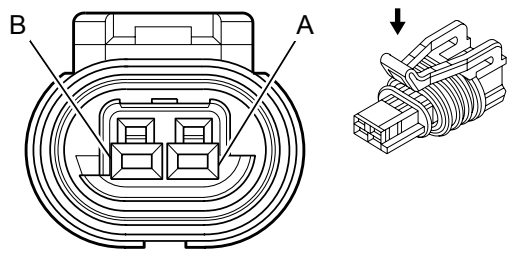

Connector Part Information

Harness Type: Engine

OEM Connector: 15449028

Service Connector: 88987993

Description: 2-Way F GT 150 Series, Sealed (BK)

Terminal Part Information

Terminal Type ID	Terminated Lead	Diagnostic Test Probe	Terminal Removal Tool	Service Terminal	Tray	Core Crimp	Insulation Crimp
I	13575400	J-35616-2A (GY)	J-38125-553	15326267	19	E	1

B34 Engine Coolant Temperature Sensor (L20, L96, or LC8)

Pin	Size	Color	Circuit	Function	Terminal Type ID	Option
A	0.8	TN	2761	Low Reference	I	-
B	0.8	YE	410	Engine Coolant Temperature (ECT) Sensor Signal	I	-

B34 Engine Coolant Temperature Sensor (LGH)

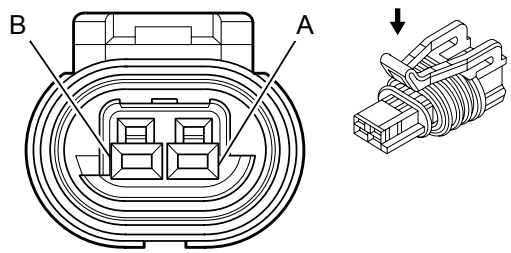

Connector Part Information

Harness Type: Engine

OEM Connector: 15449028

Service Connector: 88987993

Description: 2-Way F 150 GT Series, Sealed (BK)

Terminal Part Information

Terminal Type ID	Terminated Lead	Diagnostic Test Probe	Terminal Removal Tool	Service Terminal	Tray Name	Core Crimp	Insulation Crimp
I	Not Required	J-35616-14 (GN)	Not Required	Not Required	Not Required	Not Required	Not Required

B34 Engine Coolant Temperature Sensor (LGH)

Pin	Size	Color	Circuit	Function	Terminal Type ID	Option
A	0.8	TN	2761	Coolant Temperature Sensor Low Reference	I	—
	0.5	YE	410	Engine Coolant Temperature Sensor Signal		LML/LGH
B	0.8	YE	410	Engine Coolant Temperature Sensor Signal	I	—
	0.5	TN	2761	Coolant Temperature Sensor Low Reference		LML/LGH

B35 Engine Oil Level Switch (LGH)

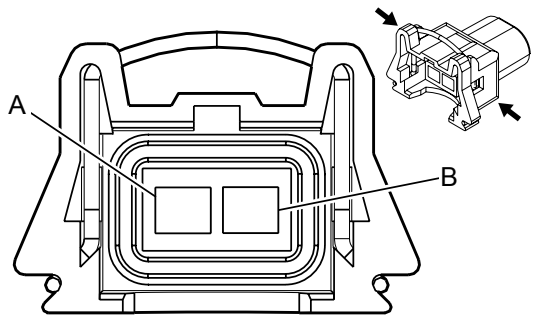

Connector Part Information

Harness Type: Engine

OEM Connector: 12129140

Service Connector: 12085491

Description: 2-Way F 280 Metri-Pack.1 , Pull To Seat (BK)

Terminal Part Information

Terminal Type ID	Terminated Lead	Diagnostic Test Probe	Terminal Removal Tool	Service Terminal	Tray Name	Core Crimp	Insulation Crimp
I	Not Required	J-35616-4A (PU)	Not Required	Not Required	Not Required	Not Required	Not Required

B35 Engine Oil Level Switch (LGH)

Pin	Size	Color	Circuit	Function	Terminal Type ID	Option
A	0.5	BN	1174	Oil Level Switch Signal	I	LML/LGH
B	0.5	BK/WH	451	Signal Ground	I	LML/LGH

B37B Engine Oil Pressure Sensor (L20, L96, or LC8)

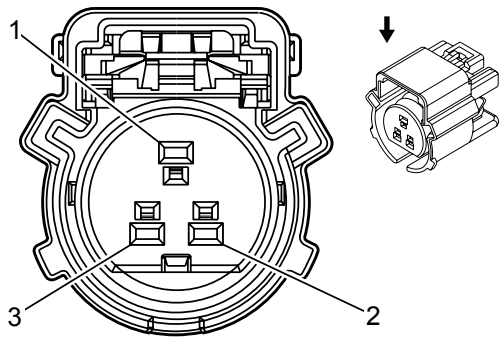

Connector Part Information

Harness Type: Engine

OEM Connector: 13589761

Service Connector: 13501882

Description: 3-Way F GT 150 Series, Sealed (BK)

Terminal Part Information

Terminal Type ID	Terminated Lead	Diagnostic Test Probe	Terminal Removal Tool	Service Terminal	Tray	Core Crimp	Insulation Crimp
I	13327113	J-35616-2A (GY)	J-38125-553	12191819	8	2	1

B37B Engine Oil Pressure Sensor (L20, L96, or LC8)

Pin	Size	Color	Circuit	Function	Terminal Type ID	Option
1	0.8	TN/WH	331	Oil Pressure Sensor Signal	I	-
2	0.8	GY	2705	5-Volt Reference	I	-
3	0.8	BK	2755	Low Reference	I	-

B37B Engine Oil Pressure Sensor (LGH)

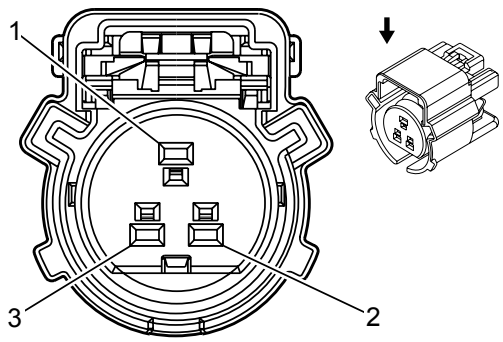

Connector Part Information

Harness Type: Engine

OEM Connector: 13589761

Service Connector: 13501882

Description: 3-Way F 150 GT Series, Sealed (BK)

Terminal Part Information

Terminal Type ID	Terminated Lead	Diagnostic Test Probe	Terminal Removal Tool	Service Terminal	Tray Name	Core Crimp	Insulation Crimp
I	Not Required	J-35616-14 (GN)	Not Required	Not Required	Not Required	Not Required	Not Required

B37B Engine Oil Pressure Sensor (LGH)

Pin	Size	Color	Circuit	Function	Terminal Type ID	Option
1	0.8	TN/WH	331	Oil Pressure Sensor Signal	I	—
	0.5	TN/WH	331			LML/LGH
2	0.8	GY	2705	Oil Pressure Sensor 5 Volt Reference	I	—
	0.5	GY	2705			LML/LGH
3	0.8	BK	2755	Oil Pressure Sensor Low Reference	I	—
	0.5	BK	2755			LML/LGH

B46 Fuel Level Sensor (LGH)

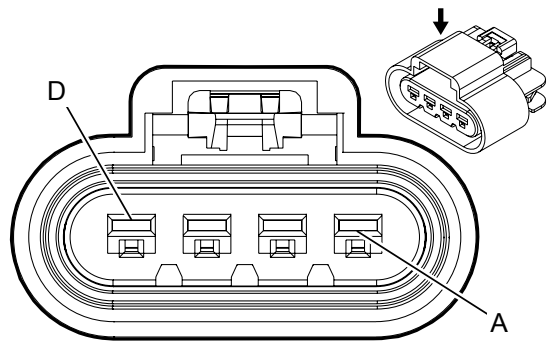

Connector Part Information

Harness Type: Chassis

OEM Connector: 13521459

Service Connector: 13580864

Description: 4-Way F GT 280 5.8 Series, Sealed (BK)

Terminal Part Information

Terminal Type ID	Terminated Lead	Diagnostic Test Probe	Terminal Removal Tool	Service Terminal	Tray	Core Crimp	Insulation Crimp
I				15304719	19	E	5

B46 Fuel Level Sensor (LGH)

Pin	Size	Color	Circuit	Function	Terminal Type ID	Option
A	-	-	-	Not Occupied	-	-
B	0.35	PU	1589	Fuel Level Sensor Signal – Primary	I	-
C	0.35	TN	2759	Low Reference	I	-
D	-	-	-	Not Occupied	-	-

B46 Fuel Level Sensor (KO7 with UFM)

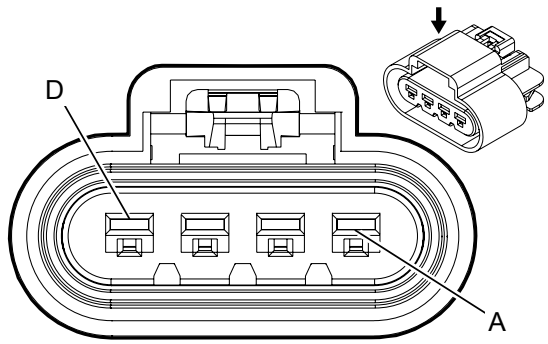

Connector Part Information

Harness Type: Chassis

OEM Connector: 13521459

Service Connector: 19300465

Description: 4-Way F 280 GT 5.8 Series, Sealed (BK)

Terminal Part Information

Terminal Type ID	Terminated Lead	Diagnostic Test Probe	Terminal Removal Tool	Service Terminal	Tray Name	Core Crimp	Insulation Crimp
I	Not Required	J-35616-4A (PU)	Not Required	Not Required	Not Required	Not Required	Not Required

B46 Fuel Level Sensor (KO7 with UFM)

Pin	Size	Color	Circuit	Function	Terminal Type ID	Option
A	3	BK	150	Ground	I	—
B	0.35 0.5	PU PU	1589 1589	Primary Fuel Level Sensor Signal	I	— —
C	0.35 0.5	TN TN	2759 2759	Fuel Tank Pressure Sensor Low Reference	I	— —
D	3	GY	120	Fuel Pump Control	I	—

B46A Fuel Level Sensor - Primary (KO7 with UFP)

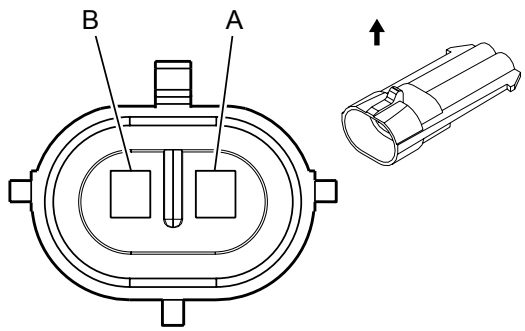

Connector Part Information

Harness Type: LPG

OEM Connector: 12162000

Service Connector: 12167120

Description: 2-Way M Metri-Pack 150 Series (BK)

Terminal Part Information

Terminal Type ID	Terminated Lead	Diagnostic Test Probe	Terminal Removal Tool	Service Terminal	Tray	Core Crimp	Insulation Crimp
I	Service by Harness – See Part Catalog	J-35616-3 (GY)	J-38125-12A	12045773	2	E	1

B46A Fuel Level Sensor - Primary (KO7 with UFP)

Pin	Size	Color	Circuit	Function	Terminal Type ID	Option
A	0.8	BN	—	LPG Primary Fuel Sender	I	-
B	0.8	BK	—	Ground	I	-

B46B Fuel Level Sensor - Secondary (KO7 with UFP)

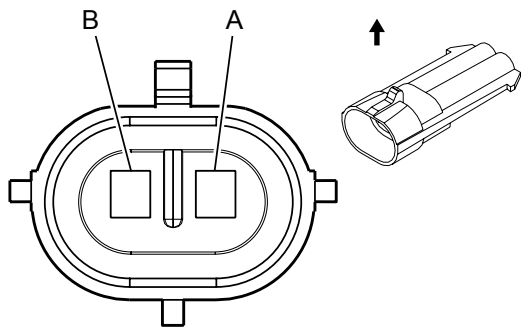

Connector Part Information

Harness Type: LPG

OEM Connector: 12162000

Service Connector: 12167120

Description: 2-Way M Metri-Pack 150 Series (BK)

Terminal Part Information

Terminal Type ID	Terminated Lead	Diagnostic Test Probe	Terminal Removal Tool	Service Terminal	Tray	Core Crimp	Insulation Crimp
I	Service by Harness – See Part Catalog	J-35616-3 (GY)	J-38125-12A	12045773	2	E	1

B46B Fuel Level Sensor - Secondary (KO7 with UFP)

Pin	Size	Color	Circuit	Function	Terminal Type ID	Option
A	0.8	GN	—	LPG Secondary Fuel Sender	I	-
B	0.8	BK	—	Ground	I	-

B47B Fuel Rail Pressure Sensor (LGH)

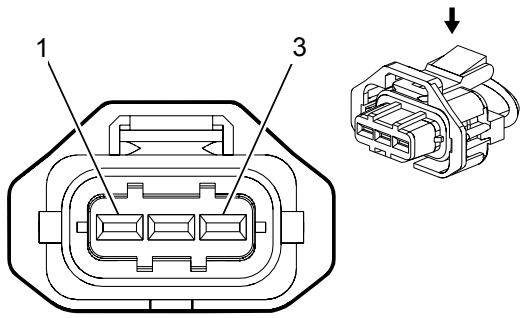

Connector Part Information

Harness Type: Fuel Rail Jumper

OEM Connector: 1928403968

Service Connector: Service by Harness - See Part Catalog

Description: 3-Way F 2.8 Series, Sealed (BK)

Terminal Part Information

Terminal Type ID	Terminated Lead	Diagnostic Test Probe	Terminal Removal Tool	Service Terminal	Tray Name	Core Crimp	Insulation Crimp
I	Not Required	J-35616-35 (VT)	Not Required	Not Required	Not Required	Not Required	Not Required

B47B Fuel Rail Pressure Sensor (LGH)

Pin	Size	Color	Circuit	Function	Terminal Type ID	Option
1	0.5	OG/BK	2919	Fuel Rail Pressure Sensor Low Reference	I	LML/LGH
2	0.5	YE	2918	Fuel Rail Pressure Sensor Signal	I	LML/LGH
3	0.5	TN	2917	Fuel Rail Pressure Sensor 5 Volt Reference	I	LML/LGH

B48A Fuel Temperature Sensor 1 (LGH)

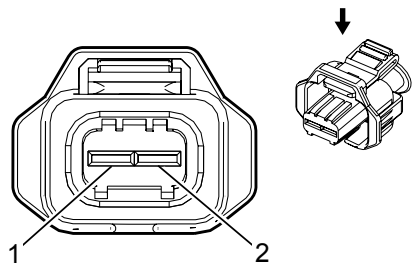

Connector Part Information

Harness Type: Engine

OEM Connector: 1928404114

Service Connector: 13576410

Description: 2-Way F 2.8 Series, Sealed (BK)

Terminal Part Information

Terminal Type ID	Terminated Lead	Diagnostic Test Probe	Terminal Removal Tool	Service Terminal	Tray Name	Core Crimp	Insulation Crimp
I	Not Required	J-35616-35 (VT)	Not Required	Not Required	Not Required	Not Required	Not Required

B48A Fuel Temperature Sensor 1 (LGH)

Pin	Size	Color	Circuit	Function	Terminal Type ID	Option
1	0.5	BN/GY	7072	Sensor Fuel Temperature 1 Signal	I	LML/LGH
2	0.5	BN/WH	7073	Sensor Fuel Temperature 1 Low Reference	I	LML/LGH

B48B Fuel Temperature Sensor 2 (LGH)

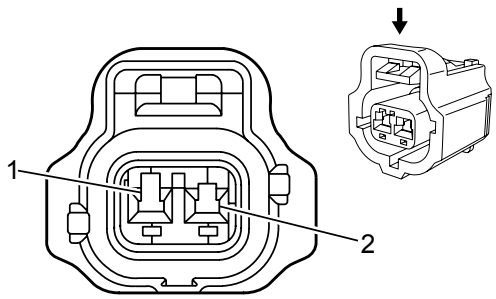

Connector Part Information

Harness Type: Fuel Rail Jumper

OEM Connector: 178392-6

Service Connector: Service by Harness - See Part Catalog

Description: 2-Way F 070 Econoseal J Series, Sealed (GY)

Terminal Part Information

Terminal Type ID	Terminated Lead	Diagnostic Test Probe	Terminal Removal Tool	Service Terminal	Tray Name	Core Crimp	Insulation Crimp
I	Not Required	J-35616-33 (YE)	Not Required	Not Required	Not Required	Not Required	Not Required

B48B Fuel Temperature Sensor 2 (LGH)

Pin	Size	Color	Circuit	Function	Terminal Type ID	Option
1	0.5	YE	1578	Fuel Temperature Signal	I	LML/LGH
2	0.5	BN	6062	Fuel Temperature Sensor Low Reference	I	LML/LGH

B52C Heated Oxygen Sensor - Bank 1 Sensor 1 (Gas except Cutaway with L96 or LC8)

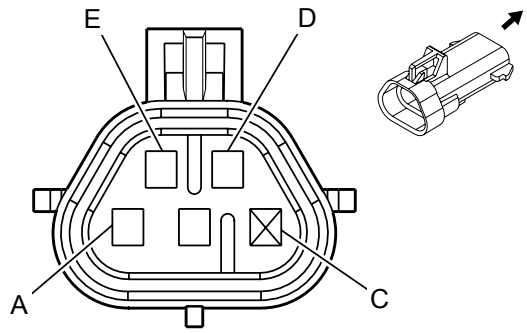

Connector Part Information

Harness Type: Engine

OEM Connector: 12092840

Service Connector: 15306311

Description: 5-Way M Metri-Pack 150 Series, Sealed (GY)

Terminal Part Information

Terminal Type ID	Terminated Lead	Diagnostic Test Probe	Terminal Removal Tool	Service Terminal	Tray	Core Crimp	Insulation Crimp
I	Pending	J-35616-3 (GY)	J-38125-12A	12045773	2	E	1

B52C Heated Oxygen Sensor - Bank 1 Sensor 1 (Gas except Cutaway with L96 or LC8)

Pin	Size	Color	Circuit	Function	Terminal Type ID	Option
A	0.8	TN	1664	Heated Oxygen Sensor (HO2S) Low Signal – Bank 1 Sensor 1	I	-
B	0.8	PU/WH	1665	Heated Oxygen Sensor (HO2S) High Signal – Bank 1 Sensor 1	I	-
C	-	-	-	Not Occupied	-	-
D	0.8	PK	539	Ignition Voltage	I	-
E	0.8	GY/WH	3113	Heated Oxygen Sensor (HO2S) Heater Low Control – Bank 1 Sensor 1	I	-

B52C Heated Oxygen Sensor - Bank 1 Sensor 1 (Cutaway with L96 or LC8)

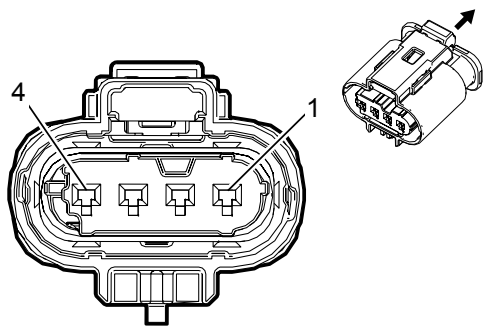

Connector Part Information

Harness Type: Engine

OEM Connector: 13869004

Service Connector: 19301716

Description: 4-Way F 1.2 MLK Series, Sealed (D-GY)

Terminal Part Information

Terminal Type ID	Terminated Lead	Diagnostic Test Probe	Terminal Removal Tool	Service Terminal	Tray Name	Core Crimp	Insulation Crimp
I	Not Required	J-35616-16 (LT GN)	Not Required	Not Required	Not Required	Not Required	Not Required

B52C Heated Oxygen Sensor - Bank 1 Sensor 1 (Cutaway with L96 or LC8)

Pin	Size	Color	Circuit	Function	Terminal Type ID	Option
1	0.8	GY/WH	3113	Heated Oxygen Sensor Heater Low Control Bank 1 Sensor (1)	I	—
2	0.8	PK	539	Run/Crank Ignition 1 Voltage	I	—
3	0.8	TN	1664	Heated Oxygen Sensor Low Signal Bank 1 Sensor (1)	I	—
4	0.8	PU/WH	1665	Heated Oxygen Sensor High Signal Bank 1 Sensor (1)	I	—

B52D Heated Oxygen Sensor - Bank 1 Sensor 2 (Gas except Cutaway with L96 or LC8)

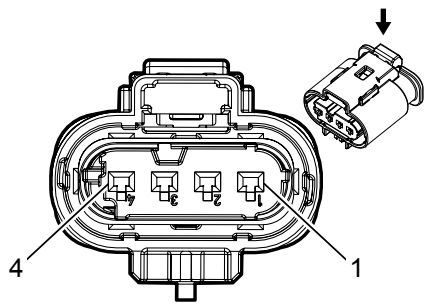

Connector Part Information

Harness Type: Engine

OEM Connector: 13815348

Service Connector: 13587298

Description: 4-Way F 1.2 MLK Series, Sealed (L-GY)

Terminal Part Information

Terminal Type ID	Terminated Lead	Diagnostic Test Probe	Terminal Removal Tool	Service Terminal	Tray Name	Core Crimp	Insulation Crimp
I	Not Required	J-35616-16 (LT GN)	Not Required	Not Required	Not Required	Not Required	Not Required

B52D Heated Oxygen Sensor - Bank 1 Sensor 2 (Gas except Cutaway with L96 or LC8)

Pin	Size	Color	Circuit	Function	Terminal Type ID	Option
1	0.8	GY/WH	3122	Heated Oxygen Sensor Heater Low Control Bank 1 Sensor (2)	I	—
2	0.8	PK	1539	Run/Crank Ignition 1 Voltage	I	—
3	0.8	TN/WH	1669	Heated Oxygen Sensor Low Signal Bank 1 Sensor (2)	I	—
4	0.8	PU/WH	1668	Heated Oxygen Sensor High Signal Bank 1 Sensor (2)	I	—

B52D Heated Oxygen Sensor - Bank 1 Sensor 2 (Cutaway with L20 or L96)

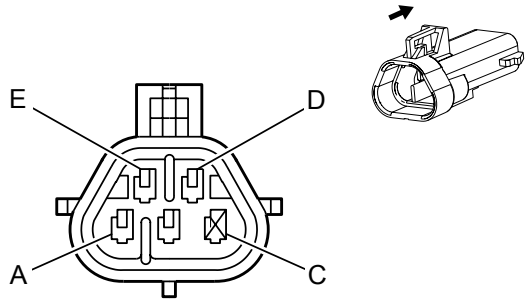

Connector Part Information

Harness Type: Heated Oxygen Sensor Jumper

OEM Connector: 12092839

Service Connector: 13585848

Description: 5-Way M Metri-Pack 150 Series (BK)

Terminal Part Information

Terminal Type ID	Terminated Lead	Diagnostic Test Probe	Terminal Removal Tool	Service Terminal	Tray	Core Crimp	Insulation Crimp
I	Service by Connector Assembly - 13585848	J-35616-3 (GY)	J-38125-12A	12045773	2	E	1

B52D Heated Oxygen Sensor - Bank 1 Sensor 2 (Cutaway with L20 or L96)

Pin	Size	Color	Circuit	Function	Terminal Type ID	Option
A	0.8	TN/WH	1669	Heated Oxygen Sensor (HO2S) Low Signal – Bank 1 Sensor 2	I	-
B	0.8	PU/WH	1668	Heated Oxygen Sensor (HO2S) High Signal – Bank 1 Sensor 2	I	-
C	-	-	-	Not Occupied	-	-
D	0.8	PK	1539	Ignition Voltage	I	-
E	0.8	GY/WH	3122	Heated Oxygen Sensor (HO2S) Heater Low Control – Bank 1 Sensor 2	I	-

B52E Heated Oxygen Sensor - Bank 2 Sensor 1 (Gas except Cutaway with L96 or LC8)

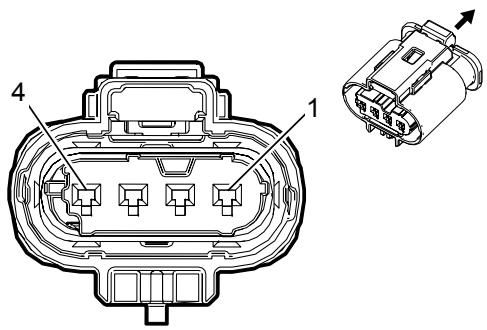

Connector Part Information

Harness Type: Engine

OEM Connector: 13869004

Service Connector: 19301716

Description: 4-Way F 1.2 MLK Series, Sealed (D-GY)

Terminal Part Information

Terminal Type ID	Terminated Lead	Diagnostic Test Probe	Terminal Removal Tool	Service Terminal	Tray Name	Core Crimp	Insulation Crimp
I	Not Required	J-35616-16 (LT GN)	Not Required	Not Required	Not Required	Not Required	Not Required

B52E Heated Oxygen Sensor - Bank 2 Sensor 1 (Gas except Cutaway with L96 or LC8)

Pin	Size	Color	Circuit	Function	Terminal Type ID	Option
1	0.8	L-GN	3212	Heated Oxygen Sensor Heater Low Control Bank 2 Sensor (1)	I	—
2	0.8	PK	539	Run/Crank Ignition 1 Voltage	I	—
3	0.8	TN	1667	Heated Oxygen Sensor Low Signal Bank 2 Sensor (1)	I	—
4	0.8	PU	1666	Heated Oxygen Sensor High Signal Bank 2 Sensor (1)	I	—

B52E Heated Oxygen Sensor - Bank 2 Sensor 1 (Cutaway with L96 or LC8)

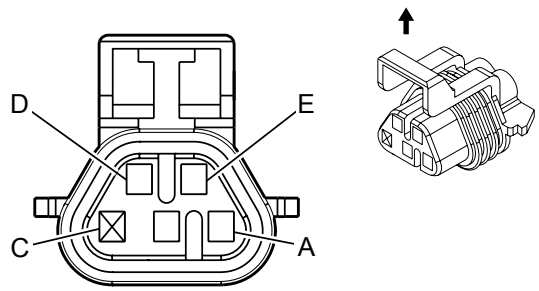

Connector Part Information

Harness Type: Engine

OEM Connector: 12146047

Service Connector: 12146047

Description: 5-Way F Metri-Pack 150 Series, Sealed (BK)

Terminal Part Information

Terminal Type ID	Terminated Lead	Diagnostic Test Probe	Terminal Removal Tool	Service Terminal	Tray	Core Crimp	Insulation Crimp
I	13575427	J-35616-14 (GN)	J-38125-12A	12048074	2	E	1

B52E Heated Oxygen Sensor - Bank 2 Sensor 1 (Cutaway with L96 or LC8)

Pin	Size	Color	Circuit	Function	Terminal Type ID	Option
A	0.8	TN	1667	Heated Oxygen Sensor (HO2S) Low Signal – Bank 2 Sensor 1	I	-
B	0.8	PU	1666	Heated Oxygen Sensor (HO2S) High Signal – Bank 2 Sensor 1	I	-
C	-	-	-	Not Occupied	-	-
D	0.8	PK	539	Ignition Voltage	I	-
E	0.8	L-GN	3212	Heated Oxygen Sensor (HO2S) Heater Low Control – Bank 2 Sensor 1	I	-

B52F Heated Oxygen Sensor - Bank 2 Sensor 2 (Gas except Cutaway with L96 or LC8)

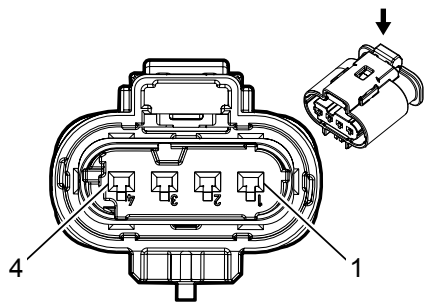

Connector Part Information

Harness Type: Engine

OEM Connector: 13815348

Service Connector: 13587298

Description: 4-Way F 1.2 MLK Series, Sealed (L-GY)

Terminal Part Information

Terminal Type ID	Terminated Lead	Diagnostic Test Probe	Terminal Removal Tool	Service Terminal	Tray Name	Core Crimp	Insulation Crimp
I	Not Required	J-35616-16 (LT GN)	Not Required	Not Required	Not Required	Not Required	Not Required

B52F Heated Oxygen Sensor - Bank 2 Sensor 2 (Gas except Cutaway with L96 or LC8)

Pin	Size	Color	Circuit	Function	Terminal Type ID	Option
1	0.8	OG/WH	3223	Heated Oxygen Sensor Heater Low Control Bank 2 Sensor (2)	I	—
2	0.8	PK	1539	Run/Crank Ignition 1 Voltage	I	—
3	0.8	TN	1671	Heated Oxygen Sensor Low Signal Bank 2 Sensor (2)	I	—
4	0.8	PU	1670	Heated Oxygen Sensor High Signal Bank 2 Sensor (2)	I	—

B52F Heated Oxygen Sensor - Bank 2 Sensor 2 (Cutaway with L20 or L96)

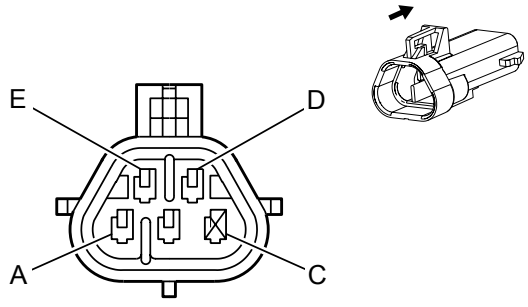

Connector Part Information

Harness Type: Heated Oxygen Sensor Jumper

OEM Connector: 12092839

Service Connector: 13585848

Description: 5-Way M Metri-Pack 150 Series (BK)

Terminal Part Information

Terminal Type ID	Terminated Lead	Diagnostic Test Probe	Terminal Removal Tool	Service Terminal	Tray	Core Crimp	Insulation Crimp
I	Service by Connector Assembly - 13585848	J-35616-3 (GY)	J-38125-12A	12045773	2	E	1

B52F Heated Oxygen Sensor - Bank 2 Sensor 2 (Cutaway with L20 or L96)

Pin	Size	Color	Circuit	Function	Terminal Type ID	Option
A	0.8	TN	1671	Heated Oxygen Sensor (HO2S) Low Signal – Bank 2 Sensor 2	I	-
B	0.8	PU	1670	Heated Oxygen Sensor (HO2S) High Signal – Bank 2 Sensor 2	I	-
C	-	-	-	Not Occupied	-	-
D	0.8	PK	1539	Ignition Voltage	I	-
E	0.8	OG/WH	3223	Heated Oxygen Sensor (HO2S) Heater Low Control – Bank 2 Sensor 2	I	-

B55 Hood Ajar Switch (BTV)

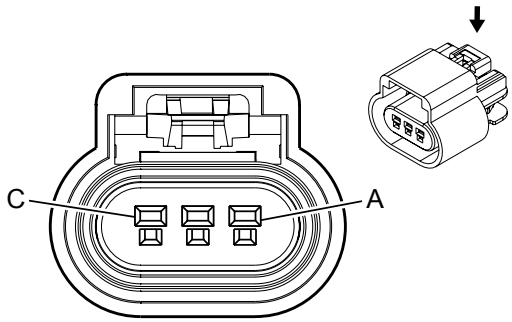

Connector Part Information

Harness Type: Forward Lamp

OEM Connector: 13519047

Service Connector: 13580871

Description: 3-Way F 150 GT Series, Sealed (BK)

Terminal Part Information

Terminal Type ID	Terminated Lead	Diagnostic Test Probe	Terminal Removal Tool	Service Terminal	Tray Name	Core Crimp	Insulation Crimp
I	Not Required	J-35616-14 (GN)	Not Required	Not Required	Not Required	Not Required	Not Required

B55 Hood Ajar Switch (BTV)

Pin	Size	Color	Circuit	Function	Terminal Type ID	Option
A	0.5	PK/BK	109	Hood Ajar Switch Signal	I	—
B	0.5	PU	5531	Hood Closed Switch Signal	I	—
C	0.5	BK	250	Ground	I	—

B59 Front Impact Sensor

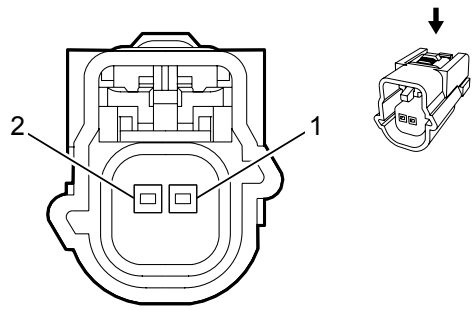

Connector Part Information

Harness Type: Seat Airbag Jumper

OEM Connector: 13593078

Service Connector: Service by Harness - See Part Catalog

Description: 2-Way F 0.64 Series, Sealed (L-GY)

Terminal Part Information

Terminal Type ID	Terminated Lead	Diagnostic Test Probe	Terminal Removal Tool	Service Terminal	Tray Name	Core Crimp	Insulation Crimp
I	Not Required	J-35616-64B (LT BU)	Not Required	Not Required	Not Required	Not Required	Not Required

B59 Front Impact Sensor

Pin	Size	Color	Circuit	Function	Terminal Type ID	Option
1	0.5	BN/WH	6618	Middle Front Discriminating Sensor Signal	I	—
2	0.5	D-BU/WH	6619	Middle Front Discriminating Sensor Low Reference	I	—

B60 Passenger Presence Sensor (AL0)

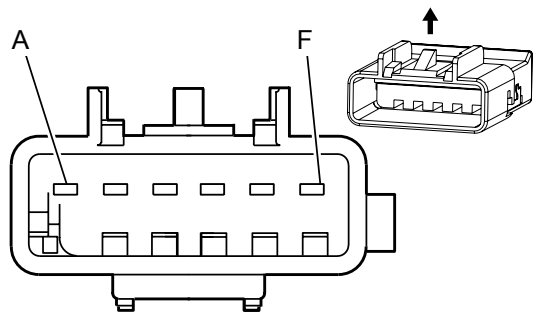

Connector Part Information

Harness Type: Passenger Seat

OEM Connector: 15332142

Service Connector: 89046638

Description: 6-Way M GT 150 Series, Sealed (BK)

Terminal Part Information

Terminal Type ID	Terminated Lead	Diagnostic Test Probe	Terminal Removal Tool	Service Terminal	Tray	Core Crimp	Insulation Crimp
I	Service by Harness – See Part Catalog	Not Available	Not Available	Not Available	Not Available	Not Available	Not Available

B60 Passenger Presence Sensor (AL0)

Pin	Size	Color	Circuit	Function	Terminal Type ID	Option
A	0.5	RD/WH	3440	Battery Positive Voltage	I	-
B	-	-	-	Not Occupied	-	-
C	0.5	D-GN	5060	Low Speed GMLAN Serial Data	I	-
D	0.5	BK/WH	1751	Ground	I	-
E–F	-	-	-	Not Occupied	-	-

B63LF Side Impact Sensor - Left Front (ASF)

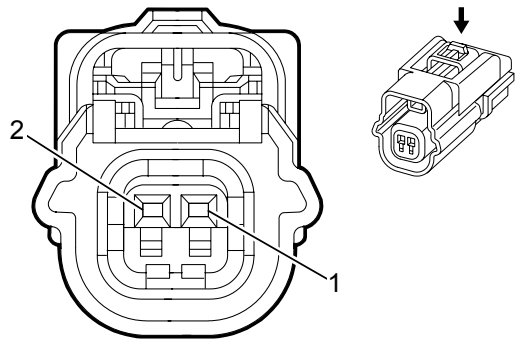

Connector Part Information

Harness Type: Air Bag Jumper

OEM Connector: 13528494

Service Connector: Service by Harness - See Part Catalog

Description: 2-Way F Kaizen 64 Series, Sealed (BK)

Terminal Part Information

Terminal Type ID	Terminated Lead	Diagnostic Test Probe	Terminal Removal Tool	Service Terminal	Tray Name	Core Crimp	Insulation Crimp
I	Not Required	J-35616-64B (LT BU)	Not Required	Not Required	Not Required	Not Required	Not Required

B63LF Side Impact Sensor - Left Front (ASF)

Pin	Size	Color	Circuit	Function	Terminal Type ID	Option
1	0.5	WH	2132	Left Front Side Impact Sensing Module Signal	I	—
2	0.5	PU/WH	6628	Left Front Side Impact Sensing Module Low Reference	I	—

B63RF Side Impact Sensor - Right Front (ASF)

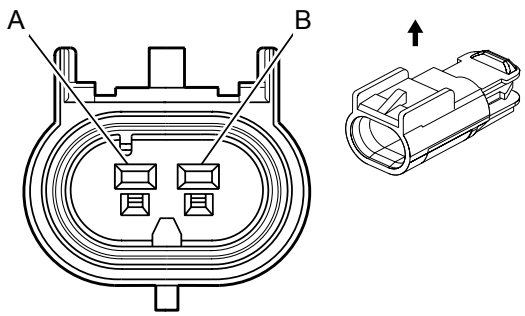

Connector Part Information

Harness Type: Passenger Door

OEM Connector: 13510099

Service Connector: Service by Harness - See Part Catalog

Description: 2-Way M 150 GT Series, Sealed (BK)

Terminal Part Information

Terminal Type ID	Terminated Lead	Diagnostic Test Probe	Terminal Removal Tool	Service Terminal	Tray Name	Core Crimp	Insulation Crimp
I	Not Required	J-35616-3 (GY)	Not Required	Not Required	Not Required	Not Required	Not Required

B63RF Side Impact Sensor - Right Front (ASF)

Pin	Size	Color	Circuit	Function	Terminal Type ID	Option
A	0.5	WH/BK	6629	Right Front Side Impact Sensing Module Low Reference	I	—
B	0.5	D-GN	2134	Right Front Side Impact Sensing Module Signal	I	—

B63LR Side Impact Sensor - Left Rear (Passenger with ASF)

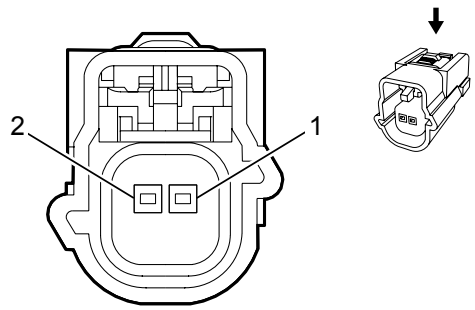

Connector Part Information

Harness Type: Air Bag Jumper

OEM Connector: 13610095

Service Connector: Service by Harness - See Part Catalog

Description: 2-Way F 0.64 Series, Sealed (D-GY)

Terminal Part Information

Terminal Type ID	Terminated Lead	Diagnostic Test Probe	Terminal Removal Tool	Service Terminal	Tray Name	Core Crimp	Insulation Crimp
I	Not Required	J-35616-64B (LT BU)	Not Required	Not Required	Not Required	Not Required	Not Required

B63LR Side Impact Sensor - Left Rear (Passenger with ASF)

Pin	Size	Color	Circuit	Function	Terminal Type ID	Option
1	0.5	D-GN/WH	6620	Left Middle Side Impact Sensing Module Signal	I	—
2	0.5	GY/BK	6621	Left Middle Side Impact Sensing Module Low Reference	I	—

B63RR Side Impact Sensor - Right Rear (Passenger with ASF with E24)

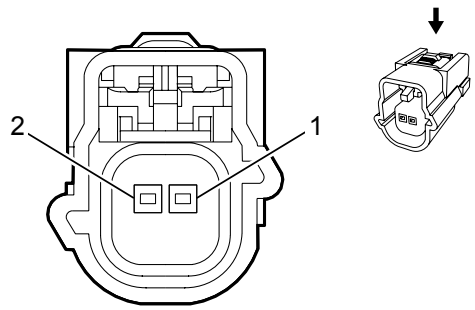

Connector Part Information

Harness Type: Air Bag Jumper

OEM Connector: 13593078

Service Connector: Service by Harness - See Part Catalog

Description: 2-Way F 0.64 Series, Sealed (L-GY)

Terminal Part Information

Terminal Type ID	Terminated Lead	Diagnostic Test Probe	Terminal Removal Tool	Service Terminal	Tray Name	Core Crimp	Insulation Crimp
I	Not Required	J-35616-64B (LT BU)	Not Required	Not Required	Not Required	Not Required	Not Required

B63RR Side Impact Sensor - Right Rear (Passenger with ASF with E24)

Pin	Size	Color	Circuit	Function	Terminal Type ID	Option
1	0.5	L-BU/BK	6624	Right Middle Side Impact Sensing Module Signal	I	—
2	0.5	L-GN/WH	6625	Right Middle Side Impact Sensing Module Low Reference	I	—

B63RR Side Impact Sensor - Right Rear (Passenger with ASF with YA2)

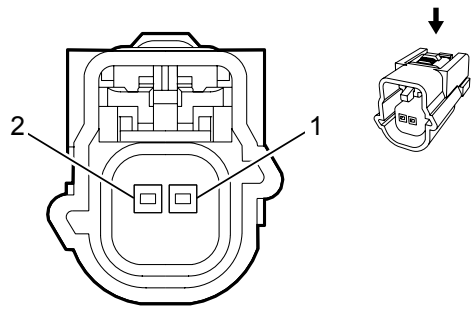

Connector Part Information

Harness Type: Air Bag Jumper

OEM Connector: 13610095

Service Connector: Service by Harness - See Part Catalog

Description: 2-Way F 0.64 Series, Sealed (D-GY)

Terminal Part Information

Terminal Type ID	Terminated Lead	Diagnostic Test Probe	Terminal Removal Tool	Service Terminal	Tray Name	Core Crimp	Insulation Crimp
I	Not Required	J-35616-64B (LT BU)	Not Required	Not Required	Not Required	Not Required	Not Required

B63RR Side Impact Sensor - Right Rear (Passenger with ASF with YA2)

Pin	Size	Color	Circuit	Function	Terminal Type ID	Option
1	0.5	L-BU/BK	6624	Right Middle Side Impact Sensing Module Signal	I	—
2	0.5	L-GN/WH	6625	Right Middle Side Impact Sensing Module Low Reference	I	—

B68A Knock Sensor 1 (L20, L96, or LC8)

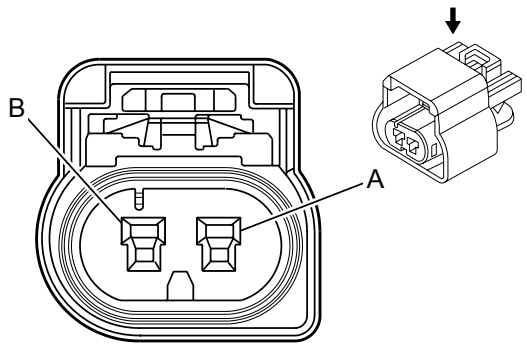

Connector Part Information

Harness Type: Engine

OEM Connector: 15374222

Service Connector: 13580877

Description: 2-Way F 150 GT Series, Sealed (NA)

Terminal Part Information

Terminal Type ID	Terminated Lead	Diagnostic Test Probe	Terminal Removal Tool	Service Terminal	Tray Name	Core Crimp	Insulation Crimp
I	Not Required	J-35616-14 (GN)	Not Required	Not Required	Not Required	Not Required	Not Required

B68A Knock Sensor 1 (L20, L96, or LC8)

Pin	Size	Color	Circuit	Function	Terminal Type ID	Option
A	0.8	D-BU	496	Knock Sensor Signal (1)	I	—
B	0.8	GY	1716	Knock Sensor Low Reference (1)	I	—

B68B Knock Sensor 2 (L20, L96, or LC8)

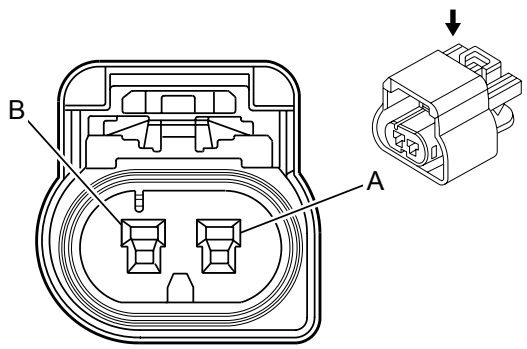

Connector Part Information

Harness Type: Engine

OEM Connector: 15374222

Service Connector: 13580877

Description: 2-Way F 150 GT Series, Sealed (NA)

Terminal Part Information

Terminal Type ID	Terminated Lead	Diagnostic Test Probe	Terminal Removal Tool	Service Terminal	Tray Name	Core Crimp	Insulation Crimp
I	Not Required	J-35616-14 (GN)	Not Required	Not Required	Not Required	Not Required	Not Required

B68B Knock Sensor 2 (L20, L96, or LC8)

Pin	Size	Color	Circuit	Function	Terminal Type ID	Option
A	0.8	L-BU	1876	Knock Sensor Signal (2)	I	—
B	0.8	GY	2303	Knock Sensor Low Reference (2)	I	—

B74 Manifold Absolute Pressure Sensor (L20, L96, or LC8)

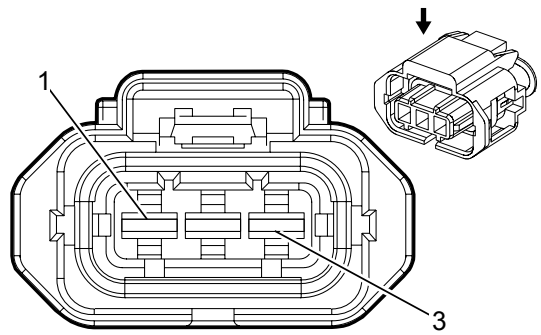

Connector Part Information

Harness Type: Engine

OEM Connector: 13639747

Service Connector: 19181248

Description: 3-Way F 2.8 Junior Power Timer Series, Sealed (BK)

Terminal Part Information

Terminal Type ID	Terminated Lead	Diagnostic Test Probe	Terminal Removal Tool	Service Terminal	Tray Name	Core Crimp	Insulation Crimp
I	Not Required	J-35616-4A (PU)	Not Required	Not Required	Not Required	Not Required	Not Required

B74 Manifold Absolute Pressure Sensor (L20, L96, or LC8)

Pin	Size	Color	Circuit	Function	Terminal Type ID	Option
1	0.8	GY	2704	Manifold Absolute Pressure Sensor 5 Volt Reference	I	—
2	0.8	OG/BK	469	Manifold Absolute Pressure Sensor Low Reference	I	—
3	0.8	L-GN	432	Manifold Absolute Pressure Sensor Signal	I	—

B74 Manifold Absolute Pressure Sensor (LGH)

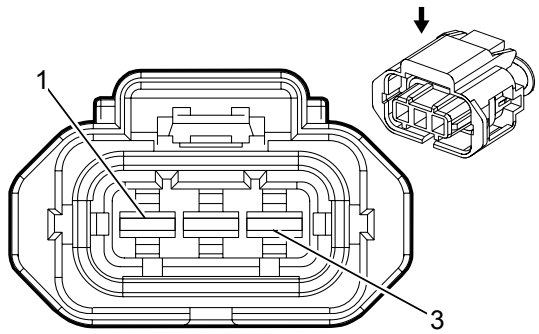

Connector Part Information

Harness Type: Engine

OEM Connector: 15345983

Service Connector: 13580231

Description: 3-Way F 2.8 Junior Power Timer Series, Sealed (GY)

Terminal Part Information

Terminal Type ID	Terminated Lead	Diagnostic Test Probe	Terminal Removal Tool	Service Terminal	Tray Name	Core Crimp	Insulation Crimp
I	Not Required	J-35616-4A (PU)	Not Required	Not Required	Not Required	Not Required	Not Required

B74 Manifold Absolute Pressure Sensor (LGH)

Pin	Size	Color	Circuit	Function	Terminal Type ID	Option
1	0.5	GY	2704	Manifold Absolute Pressure Sensor 5 Volt Reference	I	LGH
2	0.5	OG/BK	469	Manifold Absolute Pressure Sensor Low Reference	I	LGH
3	0.5	L-GN	432	Manifold Absolute Pressure Sensor Signal	I	LGH

B75B Mass Air Flow/Intake Air Temperature Sensor (L20, L96, or LC8)

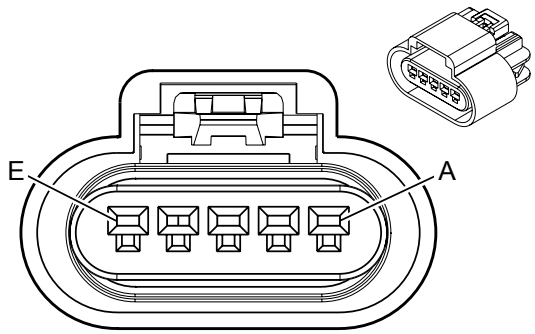

Connector Part Information

Harness Type: Engine

OEM Connector: 13519051

Service Connector: 13585858

Description: 5-Way F GT 150 Series, Sealed (BK)

Terminal Part Information

Terminal Type ID	Terminated Lead	Diagnostic Test Probe	Terminal Removal Tool	Service Terminal	Tray	Core Crimp	Insulation Crimp
I	13327113	J-35616-2A (GY)	J-38125-553	12191819	8	2	1

B75B Mass Air Flow/Intake Air Temperature Sensor (L20, L96, or LC8)

Pin	Size	Color	Circuit	Function	Terminal Type ID	Option
A	0.8	YE	492	Mass Air Flow (MAF) Sensor Signal	I	-
B	0.8	PK	1939	Ignition Voltage	I	-
C	0.8	BK/WH	1551	Ground	I	-
D	0.8	TN	472	Intake Air Temperature (IAT) Sensor Signal	I	-
E	0.8	TN	2760	Low Reference	I	-

B75B Mass Air Flow/Intake Air Temperature Sensor (LGH)

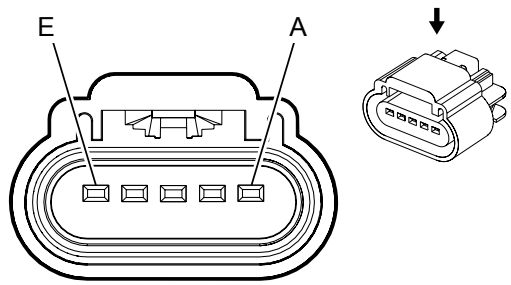

Connector Part Information

Harness Type: Engine

OEM Connector: 13519912

Service Connector: 13586116

Description: 5-Way F 150 GT Series, Sealed (D-GY)

Terminal Part Information

Terminal Type ID	Terminated Lead	Diagnostic Test Probe	Terminal Removal Tool	Service Terminal	Tray Name	Core Crimp	Insulation Crimp
I	Not Required	J-35616-14 (GN)	Not Required	Not Required	Not Required	Not Required	Not Required

B75B Mass Air Flow/Intake Air Temperature Sensor (LGH)

Pin	Size	Color	Circuit	Function	Terminal Type ID	Option
A	0.5	L-BU	6289	Induction Air Temperature Sensor Signal	I	—
B	0.5	L-BU/WH	6288	Induction Air Temperature Sensor Low Reference	I	—
C	0.5	YE	492	Mass Air Flow Sensor Signal	I	—
D	0.8	PK	1939	Run/Crank Ignition 1 Voltage	I	—
E	0.5	GY/BK	2931	Mass Air Flow Sensor Low Reference	I	—

B75C Multifunction Intake Air Sensor (L20/L96/LC8)

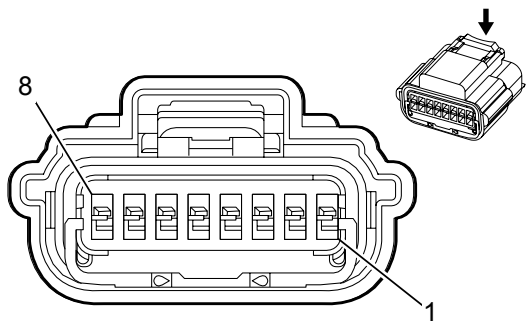

Connector Part Information

Harness Type: Engine

OEM Connector: 13774439

Service Connector: 13583440

Description: 8-Way F 0.64 Series, Sealed (BK)

Terminal Part Information

Terminal Type ID	Terminated Lead	Diagnostic Test Probe	Terminal Removal Tool	Service Terminal	Tray Name	Core Crimp	Insulation Crimp
I	Not Required	J-35616-64B (LT BU)	Not Required	Not Required	Not Required	Not Required	Not Required

B75C Multifunction Intake Air Sensor (L20/L96/LC8)

Pin	Size	Color	Circuit	Function	Terminal Type ID	Option
1	0.8	TN/WH	472	Intake Air Temperature Sensor Signal	I	—
2	0.8	GY/WH	3201	Throttle Inlet Absolute Pressure Sensor 5 Volt Reference	I	—
3	0.8	TN	2760	Intake Air Temperature Sensor Low Reference	I	—
4	0.8	YE/WH	3200	Throttle Inlet Absolute Pressure Sensor Signal	I	—
5	0.8	PK	1939	Run/Crank Ignition 1 Voltage	I	—
6	0.8	YE	492	Mass Air Flow Sensor Signal	I	—
7	0.8	BK/WH	1551	Signal Ground	I	—
8	0.8	L-BU	7564	Humidity Sensor Signal	I	—

B75C Multifunction Intake Air Sensor (LGH)

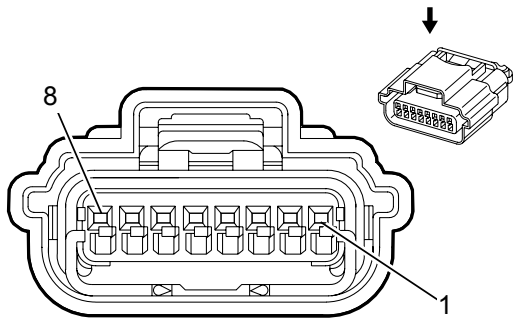

Connector Part Information

Harness Type: Engine

OEM Connector: 13913550

Service Connector: 19301584

Description: 8-Way F 0.64 Series, Sealed (BK)

Terminal Part Information

Terminal Type ID	Terminated Lead	Diagnostic Test Probe	Terminal Removal Tool	Service Terminal	Tray Name	Core Crimp	Insulation Crimp
I	Not Required	J-35616-64B (LT BU)	Not Required	Not Required	Not Required	Not Required	Not Required

B75C Multifunction Intake Air Sensor (LGH)

Pin	Size	Color	Circuit	Function	Terminal Type ID	Option
1 - 4	—	—	—	Not Occupied	—	—
5	0.8	PK	1939	Run/Crank Ignition 1 Voltage	I	—
6	—	—	—	Not Occupied	—	—
7	0.8	BK/WH	1551	Signal Ground	I	—
8	0.5	L-BU	7564	Humidity Sensor Signal	I	—

B78E Rear Object Sensor - Left Middle (UD7)

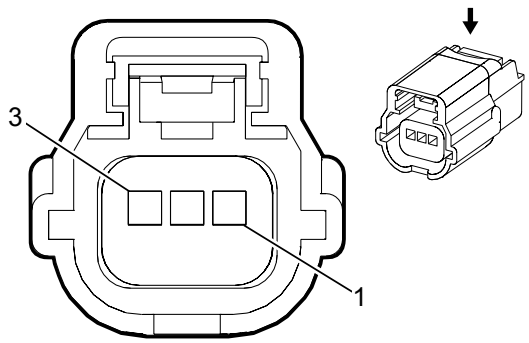

Connector Part Information

Harness Type: Rear Park Assist

OEM Connector: 13525738

Service Connector: Service by Harness - See Part Catalog

Description: 3-Way F 0.64 Series, Sealed (BK)

Terminal Part Information

Terminal Type ID	Terminated Lead	Diagnostic Test Probe	Terminal Removal Tool	Service Terminal	Tray Name	Core Crimp	Insulation Crimp
I	Not Required	J-35616-16 (LT GN)	Not Required	Not Required	Not Required	Not Required	Not Required

B78E Rear Object Sensor - Left Middle (UD7)

Pin	Size	Color	Circuit	Function	Terminal Type ID	Option
1	0.5	D-BU	2374	Object Sensor Control	I	—
2	0.5	GY	2379	Object Sensor Low Reference	I	—
3	0.5	OG	2376	Left Rear Middle Object Sensor Signal	I	—

B78F Rear Object Sensor - Right Middle (UD7)

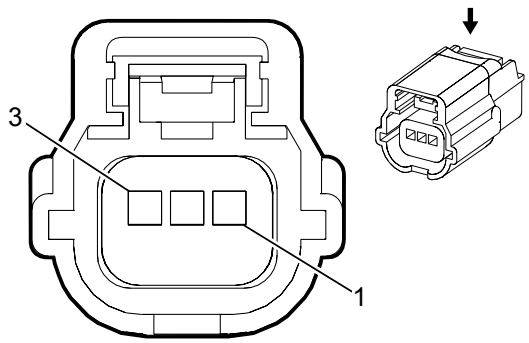

Connector Part Information

Harness Type: Rear Park Assist

OEM Connector: 13525738

Service Connector: Service by Harness - See Part Catalog

Description: 3-Way F 0.64 Series, Sealed (BK)

Terminal Part Information

Terminal Type ID	Terminated Lead	Diagnostic Test Probe	Terminal Removal Tool	Service Terminal	Tray Name	Core Crimp	Insulation Crimp
I	Not Required	J-35616-16 (LT GN)	Not Required	Not Required	Not Required	Not Required	Not Required

B78F Rear Object Sensor - Right Middle (UD7)

Pin	Size	Color	Circuit	Function	Terminal Type ID	Option
1	0.5	D-BU	2374	Object Sensor Control	I	—
2	0.5	GY	2379	Object Sensor Low Reference	I	—
3	0.5	D-GN	2377	Right Rear Middle Object Sensor Signal	I	—

B78G Rear Object Sensor - Left Outer (UD7)

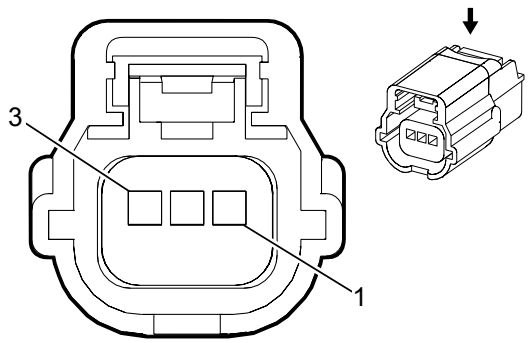

Connector Part Information

Harness Type: Rear Park Assist

OEM Connector: 13525738

Service Connector: Service by Harness - See Part Catalog

Description: 3-Way F 0.64 Series, Sealed (BK)

Terminal Part Information

Terminal Type ID	Terminated Lead	Diagnostic Test Probe	Terminal Removal Tool	Service Terminal	Tray Name	Core Crimp	Insulation Crimp
I	Not Required	J-35616-16 (LT GN)	Not Required	Not Required	Not Required	Not Required	Not Required

B78G Rear Object Sensor - Left Outer (UD7)

Pin	Size	Color	Circuit	Function	Terminal Type ID	Option
1	0.5	D-BU	2374	Object Sensor Control	I	—
2	0.5	GY	2379	Object Sensor Low Reference	I	—
3	0.5	YE	2375	Left Rear Corner Object Sensor Signal	I	—

B78H Rear Object Sensor - Right Outer (UD7)

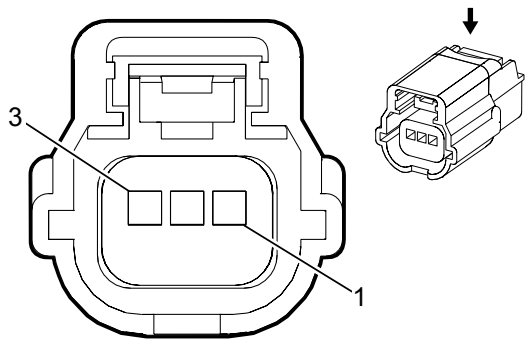

Connector Part Information

Harness Type: Rear Park Assist

OEM Connector: 13525738

Service Connector: Service by Harness - See Part Catalog

Description: 3-Way F 0.64 Series, Sealed (BK)

Terminal Part Information

Terminal Type ID	Terminated Lead	Diagnostic Test Probe	Terminal Removal Tool	Service Terminal	Tray Name	Core Crimp	Insulation Crimp
I	Not Required	J-35616-16 (LT GN)	Not Required	Not Required	Not Required	Not Required	Not Required

B78H Rear Object Sensor - Right Outer (UD7)

Pin	Size	Color	Circuit	Function	Terminal Type ID	Option
1	0.5	D-BU	2374	Object Sensor Control	I	—
2	0.5	GY	2379	Object Sensor Low Reference	I	—
3	0.5	PU	2378	Right Rear Corner Object Sensor Signal	I	—

B80 Park Brake Switch

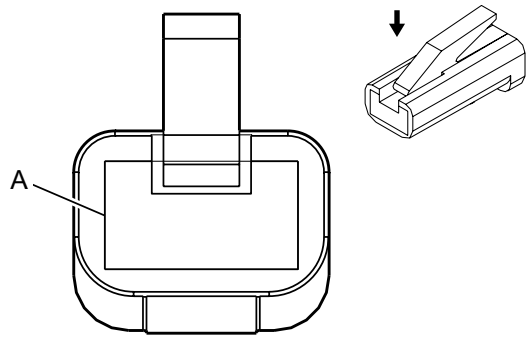

Connector Part Information

Harness Type: Park Brake Jumper

OEM Connector: 12004267

Service Connector: 12102561

Description: 1-Way F 56 Series Lock Type (BK)

Terminal Part Information

Terminal Type ID	Terminated Lead	Diagnostic Test Probe	Terminal Removal Tool	Service Terminal	Tray	Core Crimp	Insulation Crimp
I	Service by Connector Assembly - 12102561	Not Available	Not Available	Not Available	Not Available	Not Available	Not Available

B80 Park Brake Switch

Pin	Size	Color	Circuit	Function	Terminal Type ID	Option
A	0.5	L-BU	1134	Park Brake Switch Signal	I	-

B87 Rearview Camera (UVC)

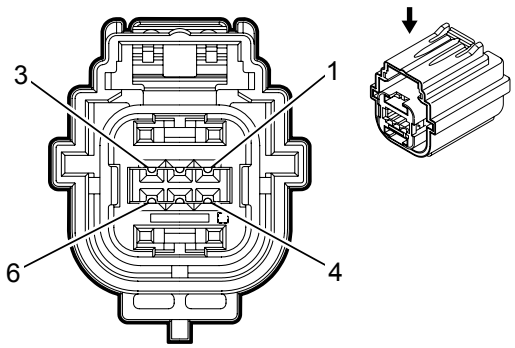

Connector Part Information

Harness Type: Right Rear Cargo Door

OEM Connector: 13629704

Service Connector: Service by Harness - See Part Catalog

Description: 6-Way F 0.64 Series, Sealed (GY)

Terminal Part Information

Terminal Type ID	Terminated Lead	Diagnostic Test Probe	Terminal Removal Tool	Service Terminal	Tray Name	Core Crimp	Insulation Crimp
I	Not Required	J-35616-64B (LT BU)	Not Required	Not Required	Not Required	Not Required	Not Required

B87 Rearview Camera (UVC)

Pin	Size	Color	Circuit	Function	Terminal Type ID	Option
1	0.5	WH	7641	Camera Rear Vision Signal +	I	—
	0.5	YE	7641			—
2	0.5	BARE	6799	Camera Shield Ground	I	—
3	0.5	L-GN	24	Backup Lamp Control	I	—
4	0.5	L-BU	7642	Camera Rear Vision Signal (-)	I	—
5	0.5	BK	351	Signal Ground	I	—
	0.5	BK/WH	351			—
6	0.5	PK	239	Run/Crank Ignition 1 Voltage	I	—

B99 Steering Wheel Angle Sensor (JL4)

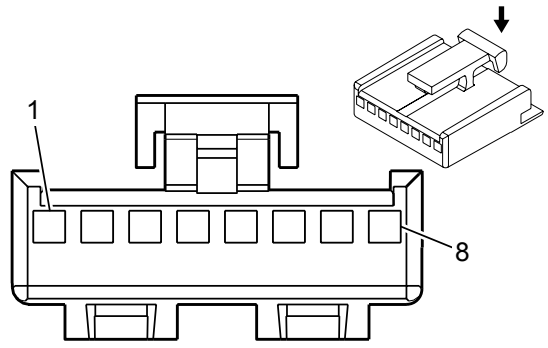

Connector Part Information

Harness Type: Steering Column

OEM Connector: 12052444

Service Connector: 12101874

Description: 8-Way F Micro-Pack 100 Series (BK)

Terminal Part Information

Terminal Type ID	Terminated Lead	Diagnostic Test Probe	Terminal Removal Tool	Service Terminal	Tray	Core Crimp	Insulation Crimp
I	13578899	J-35616-6 (BN)	J-38125-13A	12146447	3	E	C

B99 Steering Wheel Angle Sensor (JL4)

Pin	Size	Color	Circuit	Function	Terminal Type ID	Option
1	0.35	GY	6044	5-Volt Reference	I	-
2	0.35	OG/BK	6045	Low Reference	I	-
3	0.35	YE	6046	Steering Angle Sensor Phase A	I	-
4	0.35	D-BU	6047	Steering Angle Sensor Phase B	I	-
5	0.35	TN	6048	Steering Angle Sensor Phase C	I	-
6	0.35	L-GN	6043	Steering Angle Sensor Signal	I	-
7	0.35	PK	2239	Ignition Voltage	I	-
8	0.35	BK/WH	351	Ground	I	-

B107 Accelerator Pedal Position Sensor

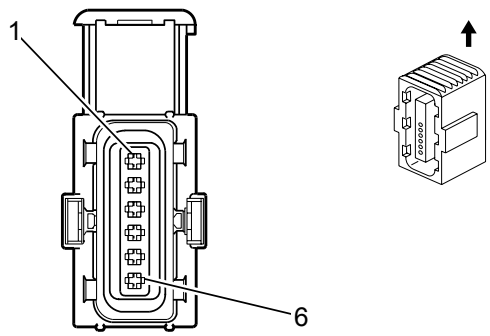

Connector Part Information

Harness Type: Accelerator Pedal Position Sensor

OEM Connector: 15383136

Service Connector: Service by Harness - See Part Catalog

Description: 6-Way F 1.2 Micro Timer Series, Sealed (BK)

Terminal Part Information

Terminal Type ID	Terminated Lead	Diagnostic Test Probe	Terminal Removal Tool	Service Terminal	Tray Name	Core Crimp	Insulation Crimp
I	Not Required	J-35616-2A (GY)	Not Required	Not Required	Not Required	Not Required	Not Required

B107 Accelerator Pedal Position Sensor

Pin	Size	Color	Circuit	Function	Terminal Type ID	Option
1	0.35	TN	1274	Accelerator Pedal Position 5 Volt Reference (2)	I	—
2	0.35	WH/BK	1164	Accelerator Pedal Position 5 Volt Reference (1)	I	—
3	0.35	D-BU	1161	Accelerator Pedal Position Signal (1)	I	—
4	0.35	BN	1271	Accelerator Pedal Position Low Reference (1)	I	—
5	0.35	PU	1272	Accelerator Pedal Position Low Reference (2)	I	—
6	0.35	L-BU	1162	Accelerator Pedal Position Signal (2)	I	—

B112 Turbocharger Vane Position Sensor (LGH)

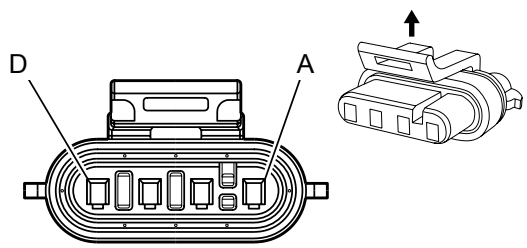

Connector Part Information

Harness Type: Engine

OEM Connector: 12191366

Service Connector: 88988603

Description: 4-Way F 150 Metri-Pack Series, Sealed (L-GY)

Terminal Part Information

Terminal Type ID	Terminated Lead	Diagnostic Test Probe	Terminal Removal Tool	Service Terminal	Tray Name	Core Crimp	Insulation Crimp
I	Not Required	J-35616-14 (GN)	Not Required	Not Required	Not Required	Not Required	Not Required

B112 Turbocharger Vane Position Sensor (LGH)

Pin	Size	Color	Circuit	Function	Terminal Type ID	Option
A	—	—	—	Not Occupied	—	—
B	0.5	YE	5947	Variable Nozzle Turbo Position Sensor Signal	I	LGH
C	0.5	OG/BK	5929	Variable Nozzle Turbo Position Sensor Low Reference	I	LGH
D	0.5	TN	5928	Variable Nozzle Turbo Position Sensor 5 Volt Reference	I	LGH

B116 Water in Fuel Sensor (LGH)

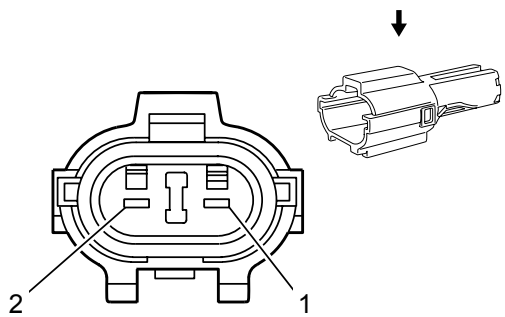

Connector Part Information

Harness Type: Transmission

OEM Connector: 10775361

Service Connector: Service by Harness - See Part Catalog

Description: 2-Way M 070 SWP Series, Sealed (GY)

Terminal Part Information

Terminal Type ID	Terminated Lead	Diagnostic Test Probe	Terminal Removal Tool	Service Terminal	Tray Name	Core Crimp	Insulation Crimp
I	Not Required	J-35616-34 (YE)	Not Required	Not Required	Not Required	Not Required	Not Required

B116 Water in Fuel Sensor (LGH)

Pin	Size	Color	Circuit	Function	Terminal Type ID	Option
1	0.5	D-BU/YE	6861	Water In Fuel Sensor Signal	I	—
2	0.5	D-BU	6863	Water In Fuel Sensor Low Reference	I	—

B119 Multi-axis Acceleration Sensor (JL4)

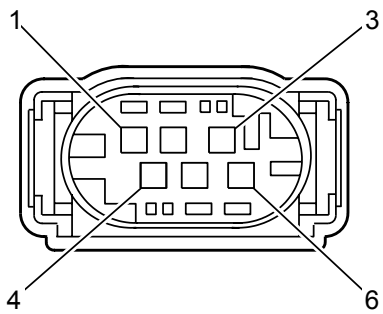

Connector Part Information

Harness Type: Body

OEM Connector: 15355474

Service Connector: 15306420

Description: 6-Way F 0.64 Micro-Quadlock Series, Sealed (BK)

Terminal Part Information

Terminal Type ID	Terminated Lead	Diagnostic Test Probe	Terminal Removal Tool	Service Terminal	Tray Name	Core Crimp	Insulation Crimp
I	Not Required	J-35616-64B (LT BU)	Not Required	Not Required	Not Required	Not Required	Not Required

B119 Multi-axis Acceleration Sensor (JL4)

Pin	Size	Color	Circuit	Function	Terminal Type ID	Option
1	0.5	GY/BK	1337	Yaw Rate Sensor 5 Volt Reference	I	—
2	0.5	BN/WH	6437	CAN Bus High Terminated Serial Data	I	—
3	0.5	WH/BK	6436	CAN Bus Low Terminated Serial Data	I	—
4 - 5	—	—	—	Not Occupied	—	—
6	0.5	BK/PU	7499	Yaw Rate Sensor Low Reference	I	—

B130A Exhaust Gas Recirculation Temperature Sensor 1 (LGH)

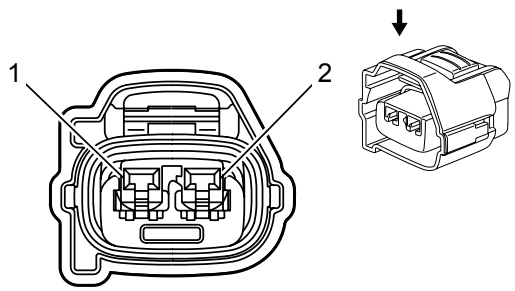

Connector Part Information

Harness Type: Engine

OEM Connector: 7283-7020-10

Service Connector: 13576415

Description: 2-Way F 090 Series, Sealed (D-GY)

Terminal Part Information

Terminal Type ID	Terminated Lead	Diagnostic Test Probe	Terminal Removal Tool	Service Terminal	Tray Name	Core Crimp	Insulation Crimp
I	Not Required	J-35616-18 (BK)	Not Required	Not Required	Not Required	Not Required	Not Required

B130A Exhaust Gas Recirculation Temperature Sensor 1 (LGH)

Pin	Size	Color	Circuit	Function	Terminal Type ID	Option
1	0.5	VT/WH	7584	Exhaust Gas Recirculation Temperature Sensor 1 Control	I	LGH
2	0.5	BN	6274	Exhaust Gas Recirculation Temperature Sensor Low Reference	I	LGH

B130B Exhaust Gas Recirculation Temperature Sensor 2 (LGH)

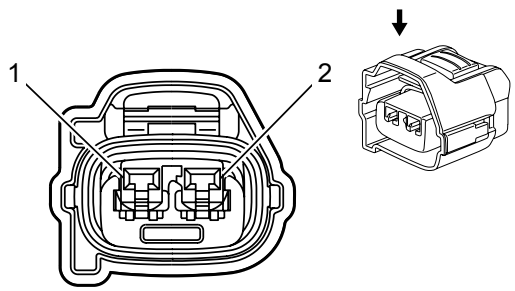

Connector Part Information

Harness Type: Engine

OEM Connector: 7283-7020-10

Service Connector: 13576415

Description: 2-Way F 090 Series, Sealed (D-GY)

Terminal Part Information

Terminal Type ID	Terminated Lead	Diagnostic Test Probe	Terminal Removal Tool	Service Terminal	Tray Name	Core Crimp	Insulation Crimp
I	Not Required	J-35616-18 (BK)	Not Required	Not Required	Not Required	Not Required	Not Required

B130B Exhaust Gas Recirculation Temperature Sensor 2 (LGH)

Pin	Size	Color	Circuit	Function	Terminal Type ID	Option
1	0.5	BU	7583	Exhaust Gas Recirculation Temperature Sensor 2 Control	I	LGH
2	0.5	WH	6275	Exhaust Gas Recirculation Temperature Sensor 2 Low Reference	I	LGH

B131A Exhaust Temperature Sensor 1 (LGH)

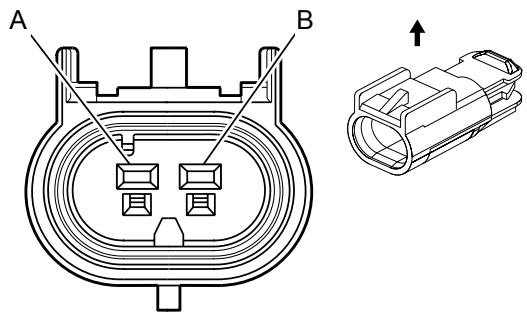

Connector Part Information

Harness Type: Engine

OEM Connector: 13546698

Service Connector: 13580103

Description: 2-Way M 150 GT Series, Sealed (NA)

Terminal Part Information

Terminal Type ID	Terminated Lead	Diagnostic Test Probe	Terminal Removal Tool	Service Terminal	Tray Name	Core Crimp	Insulation Crimp
I	Not Required	J-35616-3 (GY)	Not Required	Not Required	Not Required	Not Required	Not Required

B131A Exhaust Temperature Sensor 1 (LGH)

Pin	Size	Color	Circuit	Function	Terminal Type ID	Option
A	0.5	BU	5277	Exhaust Gas Temperature Sensor (1)	I	LGH
B	0.5	BN	6782	Exhaust Gas Temperature Sensor 1 Low Reference	I	LGH

B131B Exhaust Temperature Sensor 2 (LGH)

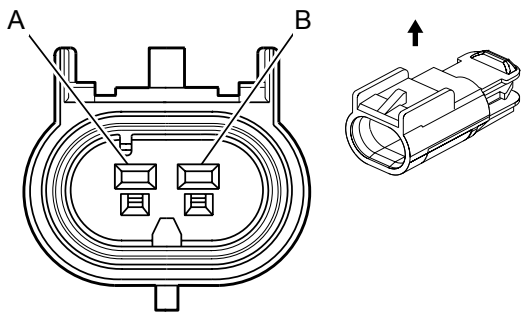

Connector Part Information

Harness Type: Transmission

OEM Connector: 13510099

Service Connector: Service by Harness - See Part Catalog

Description: 2-Way M 150 GT Series, Sealed (BK)

Terminal Part Information

Terminal Type ID	Terminated Lead	Diagnostic Test Probe	Terminal Removal Tool	Service Terminal	Tray Name	Core Crimp	Insulation Crimp
I	Not Required	J-35616-3 (GY)	Not Required	Not Required	Not Required	Not Required	Not Required

B131B Exhaust Temperature Sensor 2 (LGH)

Pin	Size	Color	Circuit	Function	Terminal Type ID	Option
A	0.8	L-BU	5377	Exhaust Gas Temperature Sensor (2)	I	—
B	0.8	BN/WH	6783	Exhaust Gas Temperature Sensor 2 Low Reference	I	—

B131C Exhaust Temperature Sensor 3 (LGH)

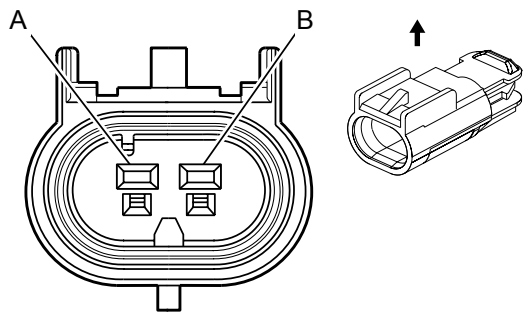

Connector Part Information

Harness Type: Engine

OEM Connector: 13546698

Service Connector: Service by Harness - See Part Catalog

Description: 2-Way M 150 GT Series, Sealed (NA)

Terminal Part Information

Terminal Type ID	Terminated Lead	Diagnostic Test Probe	Terminal Removal Tool	Service Terminal	Tray Name	Core Crimp	Insulation Crimp
I	Not Required	J-35616-3 (GY)	Not Required	Not Required	Not Required	Not Required	Not Required

B131C Exhaust Temperature Sensor 3 (LGH)

Pin	Size	Color	Circuit	Function	Terminal Type ID	Option
A	0.5	L-GN	5378	Exhaust Gas Temperature Sensor (3)	I	—
B	0.5	TN	3657	Exhaust Gas Temperature Sensor 3 Low Reference	I	—

B131D Exhaust Temperature Sensor 4 (LGH)

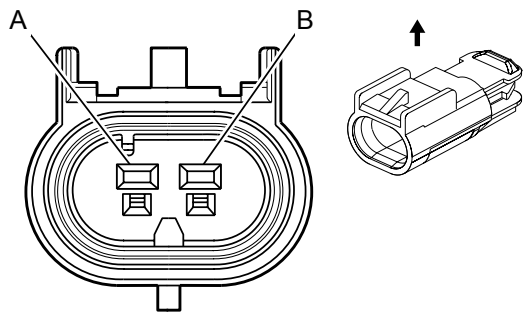

Connector Part Information

Harness Type: Engine

OEM Connector: 13546698

Service Connector: Service by Harness - See Part Catalog

Description: 2-Way M 150 GT Series, Sealed (NA)

Terminal Part Information

Terminal Type ID	Terminated Lead	Diagnostic Test Probe	Terminal Removal Tool	Service Terminal	Tray Name	Core Crimp	Insulation Crimp
I	Not Required	J-35616-3 (GY)	Not Required	Not Required	Not Required	Not Required	Not Required

B131D Exhaust Temperature Sensor 4 (LGH)

Pin	Size	Color	Circuit	Function	Terminal Type ID	Option
A	0.5	D-BU/WH	3660	Exhaust Gas Temperature Sensor 5 Signal	I	—
B	0.5	TN	3661	Exhaust Gas Temperature Sensor 5 Low Reference	I	—

B133 Brake Booster Fluid Flow Alarm Switch X1 (UJ1)

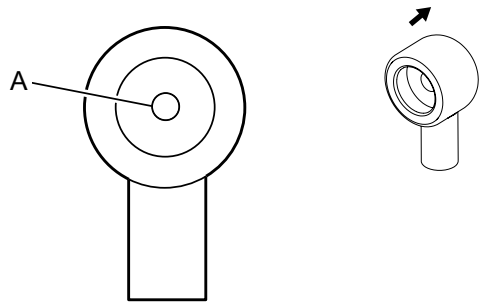

Connector Part Information

Harness Type: Brake Fluid Level Switch

OEM Connector: 6288440

Service Connector: Service by Harness - See Part Catalog

Description: 1-Way F Grip Series (BK)

Terminal Part Information

Terminal Type ID	Terminated Lead	Diagnostic Test Probe	Terminal Removal Tool	Service Terminal	Tray Name	Core Crimp	Insulation Crimp
I	Not Required	J-35616-4A (PU)	Not Required	Not Required	Not Required	Not Required	Not Required

B133 Brake Booster Fluid Flow Alarm Switch X1 (UJ1)

Pin	Size	Color	Circuit	Function	Terminal Type ID	Option
A	0.5	L-BU/BK	1928	Brake Booster Fluid Flow Switch Signal	I	—

B133 Brake Booster Fluid Flow Alarm Switch X2 (UJ1)

Connector Part Information

Harness Type: Brake Fluid Alarm Switch Jumper

OEM Connector: 12103516

Service Connector: Service by Harness – See Part Catalog

Description: Ring Terminal

Terminal Part Information

Terminal Type ID	Terminated Lead	Diagnostic Test Probe	Terminal Removal Tool	Service Terminal	Tray	Core Crimp	Insulation Crimp
I	Not Available	No Tool Required	No Tool Required	Not Available	Not Available	Not Available	Not Available

B133 Brake Booster Fluid Flow Alarm Switch X2 (UJ1)

Pin	Size	Color	Circuit	Function	Terminal Type ID	Option
A	0.5	BK/WH	350	Ground	I	-

B136 Exhaust Particulate Matter Sensor (LGH)

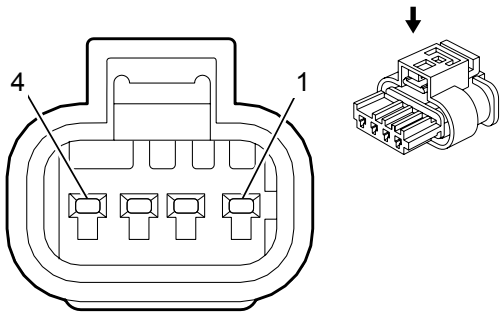

Connector Part Information

Harness Type: Engine

OEM Connector: 13781047

Service Connector: Service by Harness - See Part Catalog

Description: 4-Way F 1.2 Series, Sealed (BK)

Terminal Part Information

Terminal Type ID	Terminated Lead	Diagnostic Test Probe	Terminal Removal Tool	Service Terminal	Tray Name	Core Crimp	Insulation Crimp
I	Not Required	J-35616-16 (LT GN)	Not Required	Not Required	Not Required	Not Required	Not Required

B136 Exhaust Particulate Matter Sensor (LGH)

Pin	Size	Color	Circuit	Function	Terminal Type ID	Option
1	1	BK	2550	Ground	I	—
2	0.8	L-GN	7494	High Speed GMLAN Serial Data (-)(3)	I	—
3	0.8	D-GN	7493	High Speed GMLAN Serial Data (+)(3)	I	—
4	1	RD/BK	2842	Battery Positive Voltage	I	—

B150 Fuel Tank Pressure Sensor (L20, L96, or LC8)

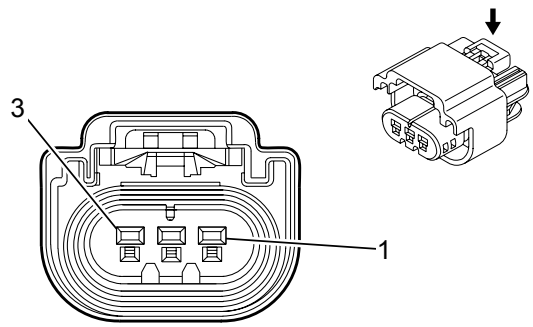

Connector Part Information

Harness Type: Chassis

OEM Connector: 13522407

Service Connector: 19179274

Description: 3-Way F 150 GT Series, Sealed (BK)

Terminal Part Information

Terminal Type ID	Terminated Lead	Diagnostic Test Probe	Terminal Removal Tool	Service Terminal	Tray Name	Core Crimp	Insulation Crimp
I	Not Required	J-35616-14 (GN)	Not Required	Not Required	Not Required	Not Required	Not Required

B150 Fuel Tank Pressure Sensor (L20, L96, or LC8)

Pin	Size	Color	Circuit	Function	Terminal Type ID	Option
1	0.5	D-GN	890	Fuel Tank Pressure Sensor Signal	I	—
2	0.5	TN	2759	Fuel Tank Pressure Sensor Low Reference	I	—
3	0.5	GY	2709	Fuel Tank Pressure Sensor 5 Volt Reference	I	—

B150 Fuel Tank Pressure Sensor (FHZ)

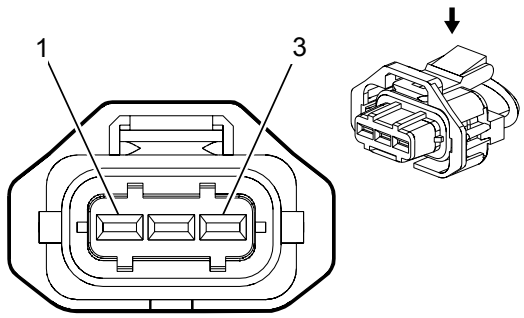

Connector Part Information

Harness Type: CNG Fuel Pressure

OEM Connector: 1928403966

Service Connector: 13585850

Description: 3-Way F Kompakt 280 Series, Sealed (BK)

Terminal Part Information

Terminal Type ID	Terminated Lead	Diagnostic Test Probe	Terminal Removal Tool	Service Terminal	Tray	Core Crimp	Insulation Crimp
I	Pending	Not Available	Not Available	Not Available	Not Available	Not Available	Not Available

B150 Fuel Tank Pressure Sensor (FHZ)

Pin	Size	Color	Circuit	Function	Terminal Type ID	Option
1	0.5	BK	—	Low Reference	I	-
2	0.5	GN	—	Alternative Fuel Tank Pressure Signal	I	-
3	0.5	RD	—	5-Volt Reference	I	-

B153D Seat Belt Buckle - Driver

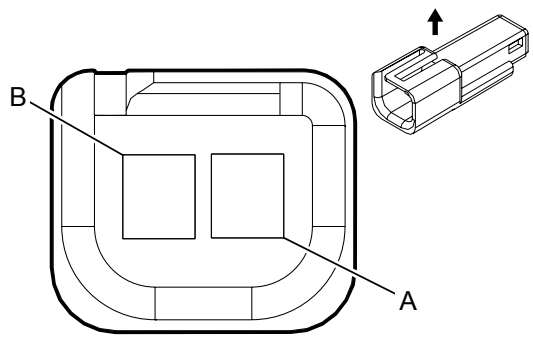

Connector Part Information

Harness Type: Driver Seat

OEM Connector: 12047663

Service Connector: 12085481

Description: 2-Way M Metri-Pack 150 Series (BK)

Terminal Part Information

Terminal Type ID	Terminated Lead	Diagnostic Test Probe	Terminal Removal Tool	Service Terminal	Tray	Core Crimp	Insulation Crimp
I	Service by Harness– See Part Catalog	Not Available	Not Available	Not Available	Not Available	Not Available	Not Available

B153D Seat Belt Buckle - Driver

Pin	Size	Color	Circuit	Function	Terminal Type ID	Option
A	0.5	PK	5057	Low Reference	I	-
B	0.5	TN/WH	238	Seat Belt Switch– Left	I	-

B153P Seat Belt Buckle - Passenger (AK5)

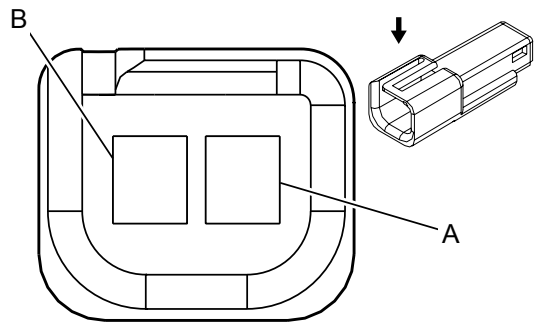

Connector Part Information

Harness Type: Passenger Seat

OEM Connector: 12048457

Service Connector: 12085481

Description: 2-Way M Metri-Pack 150 Series (BK)

Terminal Part Information

Terminal Type ID	Terminated Lead	Diagnostic Test Probe	Terminal Removal Tool	Service Terminal	Tray	Core Crimp	Insulation Crimp
I	Service by Harness– See Part Catalog	Not Available	Not Available	Not Available	Not Available	Not Available	Not Available

B153P Seat Belt Buckle - Passenger (AK5)

Pin	Size	Color	Circuit	Function	Terminal Type ID	Option
A	0.5	PK	5057	Low Reference	I	-
B	0.5	OG	1362	Seat Belt Switch– Right– Signal	I	-

B193A Charge Air Cooler Inlet Temperature Sensor (LGH)

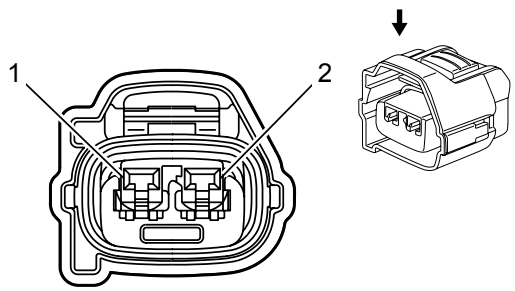

Connector Part Information

Harness Type: Engine

OEM Connector: 7283-7020-10

Service Connector: 13576415

Description: 2-Way F 090 Series, Sealed (D-GY)

Terminal Part Information

Terminal Type ID	Terminated Lead	Diagnostic Test Probe	Terminal Removal Tool	Service Terminal	Tray Name	Core Crimp	Insulation Crimp
I	Not Required	J-35616-18 (BK)	Not Required	Not Required	Not Required	Not Required	Not Required

B193A Charge Air Cooler Inlet Temperature Sensor (LGH)

Pin	Size	Color	Circuit	Function	Terminal Type ID	Option
1	0.5	D-GN	3683	Charge Air Cooler Inlet Temperature Sensor Signal	I	LGH
2	0.5	TN/BK	3682	Charge Air Cooler Inlet Temperature Sensor Low Reference	I	LGH

B193B Charge Air Cooler Outlet Temperature Sensor (LGH)

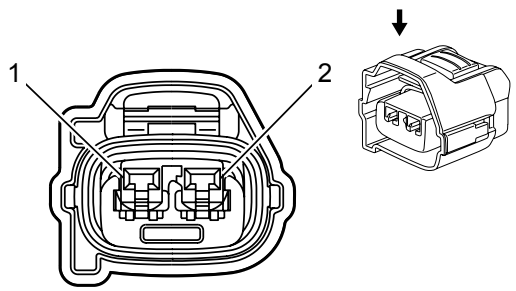

Connector Part Information

Harness Type: Engine

OEM Connector: 15401053

Service Connector: 13576415

Description: 2-Way F 090 Series, Sealed (D-GY)

Terminal Part Information

Terminal Type ID	Terminated Lead	Diagnostic Test Probe	Terminal Removal Tool	Service Terminal	Tray Name	Core Crimp	Insulation Crimp
I	Not Required	J-35616-18 (BK)	Not Required	Not Required	Not Required	Not Required	Not Required

B193B Charge Air Cooler Outlet Temperature Sensor (LGH)

Pin	Size	Color	Circuit	Function	Terminal Type ID	Option
1	0.5	BN	3681	Charge Air Cooler Outlet Temperature Sensor Signal	I	—
2	0.5	TN	3680	Charge Air Cooler Outlet Temperature Sensor Low Reference	I	—

B194 Reductant Pressue Sensor (LGH)

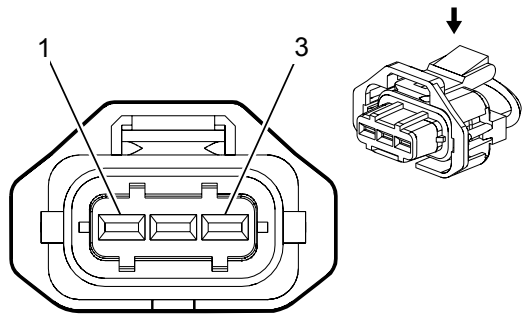

Connector Part Information

Harness: Reductant Jumper

OEM: 1928403966

Service: 13585850

Description: 3-Way F Kompakt 280 Series, Sealed (BK)

Terminal Part Information

Terminal Type ID	Terminated Lead	Diagnostic Test Probe	Terminal Removal Tool	Service Terminal	Tray	Core Crimp	Insulation Crimp
I				1928498058	8	E	1

B194 Reductant Pressue Sensor (LGH)

Pin	Size	Color	Circuit	Function	Terminal Type ID	Option
1	0.5	GY	617	DEF Pressure Sensor 5V Reference	I	-
2	0.5	BN	627	DEF Pressure Sensor Signal	I	-
3	0.5	TN	637	DEF Pressure Sensor Low Reference	I	-

B195A Nitrogen Oxides Sensor 1 (LGH)

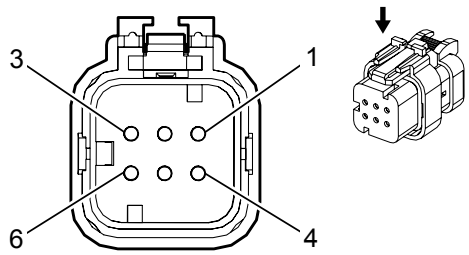

Connector Part Information

Harness Type: Chassis

OEM Connector: 13738257

Service Connector: 13578974

Description: 6-Way F 2.8 Series, Sealed (BK)

Terminal Part Information

Terminal Type ID	Terminated Lead	Diagnostic Test Probe	Terminal Removal Tool	Service Terminal	Tray Name	Core Crimp	Insulation Crimp
I	Not Required	J-35616-66 (YE)	Not Required	Not Required	Not Required	Not Required	Not Required

B195A Nitrogen Oxides Sensor 1 (LGH)

Pin	Size	Color	Circuit	Function	Terminal Type ID	Option
1	1	PU	3674	Nox Sensor (1) Control	I	—
2	0.8	L-GN	7494	High Speed GMLAN Serial Data (-)(3)	I	—
3	0.8	D-GN	7493	High Speed GMLAN Serial Data (+)(3)	I	—
4	1	TN	3673	Nox Sensor (1) Ground	I	—
5	0.8	L-GN	7494	High Speed GMLAN Serial Data (-)(3)	I	—
6	0.8	D-GN	7493	High Speed GMLAN Serial Data (+)(3)	I	—

B195B Nitrogen Oxides Sensor 2 (LGH)

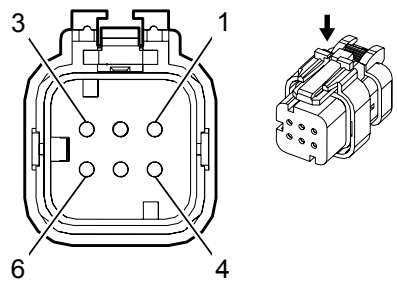

Connector Part Information

Harness Type: Engine

OEM Connector: 13734132

Service Connector: Service by Harness - See Part Catalog

Description: 6-Way F (BK)

Terminal Part Information

Terminal Type ID	Terminated Lead	Diagnostic Test Probe	Terminal Removal Tool	Service Terminal	Tray Name	Core Crimp	Insulation Crimp
I	Not Required	J-35616-66 (YE)	Not Required	Not Required	Not Required	Not Required	Not Required

B195B Nitrogen Oxides Sensor 2 (LGH)

Pin	Size	Color	Circuit	Function	Terminal Type ID	Option
1	1	GY	3672	Nox Sensor (2) Control	I	—
2	0.8	L-GN	7494	High Speed GMLAN Serial Data (-)(3)	I	—
3	0.8	D-GN	7493	High Speed GMLAN Serial Data (+)(3)	I	—
4	1	TN/BK	3671	Nox Sensor (2) Ground	I	—
5 - 6	—	—	—	Not Occupied	—	—

B198 Fuel Composition Sensor

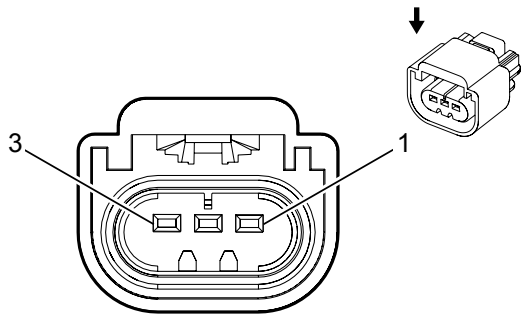

Connector Part Information

Harness Type: Chassis

OEM Connector: 13511132

Service Connector: 19301582

Description: 3-Way F 150 GT Series, Sealed (BN)

Terminal Part Information

Terminal Type ID	Terminated Lead	Diagnostic Test Probe	Terminal Removal Tool	Service Terminal	Tray Name	Core Crimp	Insulation Crimp
I	Not Required	J-35616-14 (GN)	Not Required	Not Required	Not Required	Not Required	Not Required

B198 Fuel Composition Sensor

Pin	Size	Color	Circuit	Function	Terminal Type ID	Option
1	0.8	PK/BK	5294	Powertrain Main Relay Fused Supply (5)	I	—
2	0.8	BK/WH	1551	Signal Ground	I	—
3	0.8	WH	1579	Fuel Temperature/Composition Signal	I	—

B203 Engine Coolant Radiator Temperature Sensor

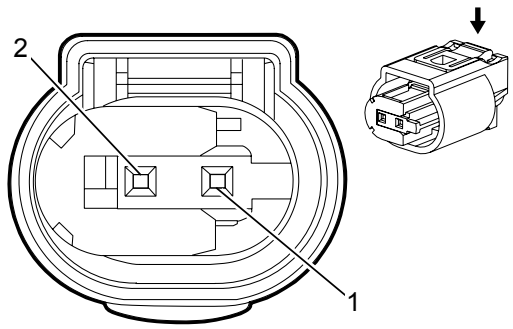

Connector Part Information

Harness Type: Forward Lamp

OEM Connector: 15365708

Service Connector: 13576533

Description: 2-Way F 0.64 Micro-Quadlock Series, Sealed (BK)

Terminal Part Information

Terminal Type ID	Terminated Lead	Diagnostic Test Probe	Terminal Removal Tool	Service Terminal	Tray Name	Core Crimp	Insulation Crimp
I	Not Required	J-35616-64B (LT BU)	Not Required	Not Required	Not Required	Not Required	Not Required

B203 Engine Coolant Radiator Temperature Sensor

Pin	Size	Color	Circuit	Function	Terminal Type ID	Option
1	0.8	L-GN	2032	Coolant Temperature Sensor Signal	I	—
2	0.8	L-BU/BK	6813	Coolant Temperature Sensor 2 Low Reference	I	—

B212 Reductant Sensor Module X1 (LGH)

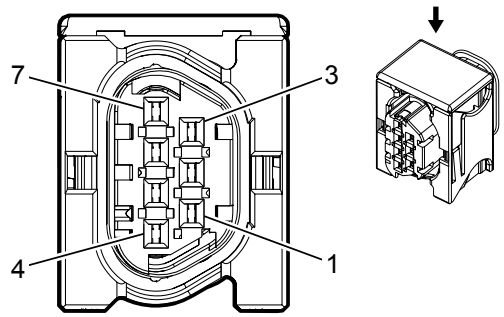

Connector Part Information

Harness: Reductant Jumper

OEM: 1928404791

Service: 13584258

Description: 7-Way F 1.6 Series, Sealed (BK)

Terminal Part Information

Terminal Type ID	Terminated Lead	Diagnostic Test Probe	Terminal Removal Tool	Service Terminal	Tray	Core Crimp	Insulation Crimp
I				964274-2	16	E	1

B212 Reductant Sensor Module X1 (LGH)

Pin	Size	Color	Circuit	Function	Terminal Type ID	Option
1	0.5	PK/BK	117	Ignition Voltage	I	-
2	0.5	BK	127	Ground	I	-
3	-	-	-	Not Occupied	-	-
4	0.5	D-GN	147	High Speed GMLAN Serial Data (-) (3)	I	-
5	0.5	L-GN	157	High Speed GMLAN Serial Data (+) (3)	I	-
6	0.5	D-GN	167	High Speed GMLAN Serial Data (-) (3)	I	-
7	0.5	L-GN	177	High Speed GMLAN Serial Data (-) (3)	I	-

B212 Reductant Sensor Module X2 (LGH)

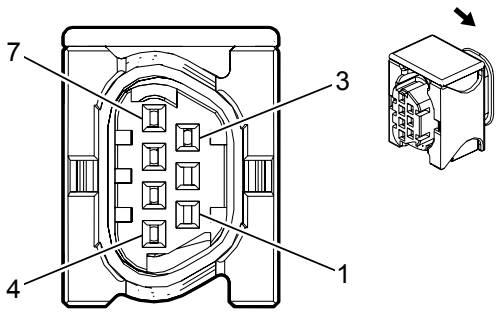

Connector Part Information

Harness: Reductant Fluid Reservoir Assembly

OEM: 1928405374

Service: Service by Harness - See Part Catalog

Description: 7-Way F 1.6 Series, Sealed (BK)

Terminal Part Information

Service: Service by Component Assembly – See Part Catalog

Release Tool: No Tool Required

Diagnostic Test Probe: No Tool Required

B212 Reductant Sensor Module X2 (LGH)

Pin	Wire	Circuit	Function
1	—	—	Not Used
2	WH	—	Temperature Sensor Signal Low
3	BK	—	Temperature Sensor Reference Voltage
4	GY	—	Level Sensor Common
5	RD	—	Level Sensor 1 Signal
6	BU	—	Level Sensor 2 Signal
7	YE	—	Level Sensor 3 Signal

B215 Fuel Filter Pressure Switch (LGH)

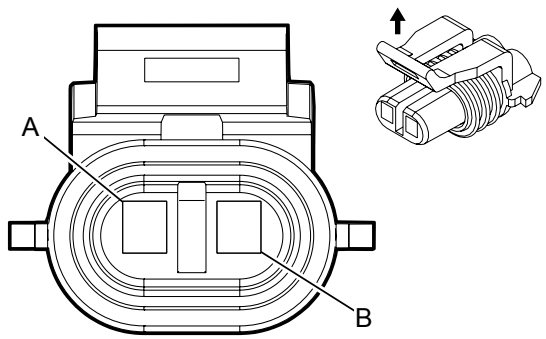

Connector Part Information

Harness Type: Engine

OEM Connector: 12052641

Service Connector: 13586114

Description: 2-Way F 150 Metri-Pack Series (BK)

Terminal Part Information

Terminal Type ID	Terminated Lead	Diagnostic Test Probe	Terminal Removal Tool	Service Terminal	Tray Name	Core Crimp	Insulation Crimp
I	Not Required	J-35616-14 (GN)	Not Required	Not Required	Not Required	Not Required	Not Required

B215 Fuel Filter Pressure Switch (LGH)

Pin	Size	Color	Circuit	Function	Terminal Type ID	Option
A	0.5	GY/BK	5765	Fuel Filter Pressure Switch Signal	I	LGH
B	0.5	BK	450	Ground	I	LGH

B259 Exhaust Pressure Sensor

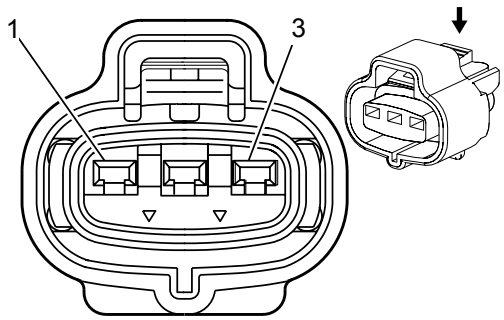

Connector Part Information

Harness Type: Engine

OEM Connector: 15401052

Service Connector: Service by Harness - See Part Catalog

Description: 3-Way F 090 Series, Sealed (BK)

Terminal Part Information

Terminal Type ID	Terminated Lead	Diagnostic Test Probe	Terminal Removal Tool	Service Terminal	Tray Name	Core Crimp	Insulation Crimp
I	Not Required	J-35616-18 (BK)	Not Required	Not Required	Not Required	Not Required	Not Required

B259 Exhaust Pressure Sensor

Pin	Size	Color	Circuit	Function	Terminal Type ID	Option
1	0.5	YE/BK	6055	Exhaust Pressure Sensor Low Reference (1)	I	—
2	0.5	D-BU	6053	Exhaust Pressure Sensor Signal (1)	I	—
3	0.5	GY	6054	Exhaust Pressure Sensor 5 Volt Reference (1)	I	—

C1 Battery

Connector Part Information

Harness Type: Battery Negative

OEM Connector: 12129465 (except LU3)

OEM Connector: 12160209 (LU3)

Service Connector: Service by Harness – See Part Catalog

Description: Battery Ring Terminal

Terminal Part Information

Terminal Type ID	Terminated Lead	Diagnostic Test Probe	Terminal Removal Tool	Service Terminal	Tray	Core Crimp	Insulation Crimp
I	Not Available	No Tool Required	No Tool Required	Not Available	Not Available	Not Available	Not Available

C1 Battery

Pin	Size	Color	Circuit	Function	Terminal Type ID	Option
–	19	BK	50	Ground	I	-
	32	BK	50	Ground		

C1B Battery - Auxiliary (LGH or TP2)

Connector Part Information

Harness Type: Battery Positive

OEM Connector: 12129465

Service Connector: Service by Harness – See Part Catalog

Description: Battery Ring Terminal

Terminal Part Information

Terminal Type ID	Terminated Lead	Diagnostic Test Probe	Terminal Removal Tool	Service Terminal	Tray	Core Crimp	Insulation Crimp
I	Not Available	No Tool Required	No Tool Required	Not Available	Not Available	Not Available	Not Available

C1B Battery - Auxiliary (LGH or TP2)

Pin	Size	Color	Circuit	Function	Terminal Type ID	Option
+	32	RD	1	Battery Positive Voltage	I	-
	8	RD	1	Battery Positive Voltage		
	8	RD	1	Battery Positive Voltage		

E2LF Side Marker Lamp - Left Front

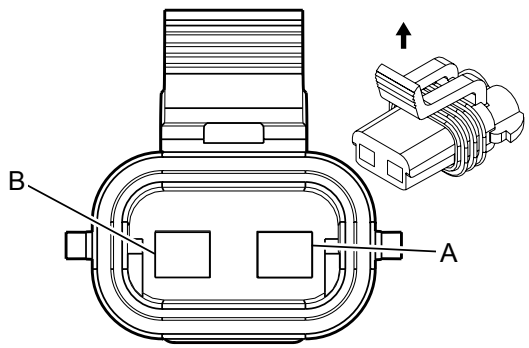

Connector Part Information

Harness Type: Forward Lamp

OEM Connector: 15300027

Service Connector: 12101855

Description: 2-Way F 280 Metri-Pack Series, Sealed (BK)

Terminal Part Information

Terminal Type ID	Terminated Lead	Diagnostic Test Probe	Terminal Removal Tool	Service Terminal	Tray Name	Core Crimp	Insulation Crimp
I	Not Required	J-35616-4A (PU)	Not Required	Not Required	Not Required	Not Required	Not Required

E2LF Side Marker Lamp - Left Front

Pin	Size	Color	Circuit	Function	Terminal Type ID	Option
A	0.5	BN	2309	Front Park Lamp Control	I	—
B	0.5	BK	250	Ground	I	—

E2RF Side Marker Lamp - Right Front

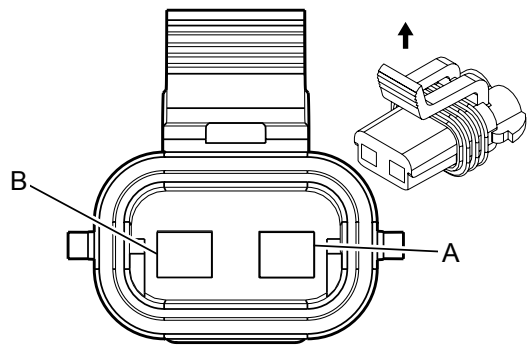

Connector Part Information

Harness Type: Forward Lamp

OEM Connector: 15300027

Service Connector: 12101855

Description: 2-Way F 280 Metri-Pack Series, Sealed (BK)

Terminal Part Information

Terminal Type ID	Terminated Lead	Diagnostic Test Probe	Terminal Removal Tool	Service Terminal	Tray Name	Core Crimp	Insulation Crimp
I	Not Required	J-35616-4A (PU)	Not Required	Not Required	Not Required	Not Required	Not Required

E2RF Side Marker Lamp - Right Front

Pin	Size	Color	Circuit	Function	Terminal Type ID	Option
A	0.5	BN	2309	Front Park Lamp Control	I	—
B	0.5	BK	650	Ground	I	—

E4E Headlamp - Left High Beam (V22)

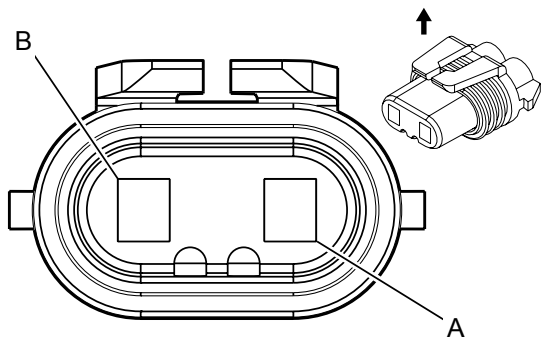

Connector Part Information

Harness Type: Forward Lamp

OEM Connector: 12059183

Service Connector: 12101898

Description: 2-Way F 280 Metri-Pack Series, Sealed (BK)

Terminal Part Information

Terminal Type ID	Terminated Lead	Diagnostic Test Probe	Terminal Removal Tool	Service Terminal	Tray Name	Core Crimp	Insulation Crimp
I	Not Required	J-35616-4A (PU)	Not Required	Not Required	Not Required	Not Required	Not Required

E4E Headlamp - Left High Beam (V22)

Pin	Size	Color	Circuit	Function	Terminal Type ID	Option
A	0.5	D-GN/WH	711	Left Headlamp High Beam Control	I	—
B	0.8	BK	250	Ground	I	—

E4F Headlamp - Right High Beam (V22)

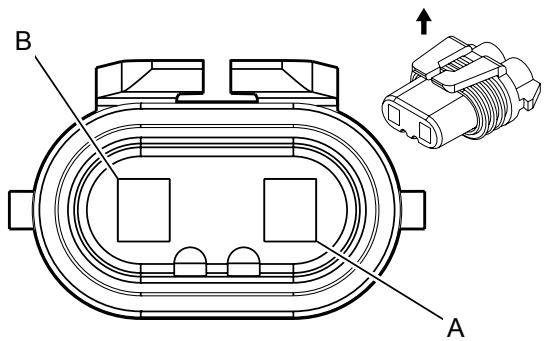

Connector Part Information

Harness Type: Forward Lamp

OEM Connector: 12059183

Service Connector: 12101898

Description: 2-Way F 280 Metri-Pack Series, Sealed (BK)

Terminal Part Information

Terminal Type ID	Terminated Lead	Diagnostic Test Probe	Terminal Removal Tool	Service Terminal	Tray Name	Core Crimp	Insulation Crimp
I	Not Required	J-35616-4A (PU)	Not Required	Not Required	Not Required	Not Required	Not Required

E4F Headlamp - Right High Beam (V22)

Pin	Size	Color	Circuit	Function	Terminal Type ID	Option
A	0.8	L-GN/BK	311	Right Headlamp High Beam Control	I	—
B	0.8	BK	650	Ground	I	—

E4G Headlamp - Left Low Beam (V22)

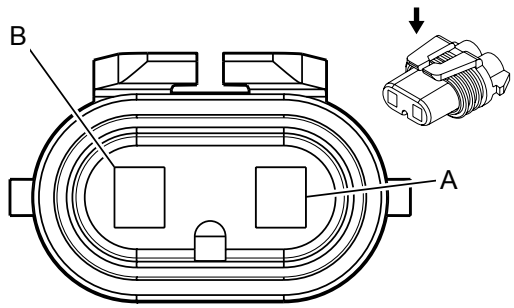

Connector Part Information

Harness Type: Forward Lamp

OEM Connector: 12059181

Service Connector: 19301866

Description: 2-Way F 280 Metri-Pack Series, Sealed (GY)

Terminal Part Information

Terminal Type ID	Terminated Lead	Diagnostic Test Probe	Terminal Removal Tool	Service Terminal	Tray Name	Core Crimp	Insulation Crimp
I	Not Required	J-35616-4A (PU)	Not Required	Not Required	Not Required	Not Required	Not Required

E4G Headlamp - Left Low Beam (V22)

Pin	Size	Color	Circuit	Function	Terminal Type ID	Option
A	0.5	YE	712	Left Headlamp Low Beam Control	I	—
	0.8	YE	712			—
B	0.8	BK	250	Ground	I	—

E4H Headlamp - Right Low Beam (V22)

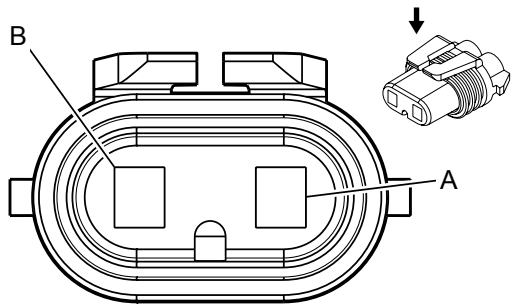

Connector Part Information

Harness Type: Forward Lamp

OEM Connector: 12059181

Service Connector: 19301866

Description: 2-Way F 280 Metri-Pack Series, Sealed (GY)

Terminal Part Information

Terminal Type ID	Terminated Lead	Diagnostic Test Probe	Terminal Removal Tool	Service Terminal	Tray Name	Core Crimp	Insulation Crimp
I	Not Required	J-35616-4A (PU)	Not Required	Not Required	Not Required	Not Required	Not Required

E4H Headlamp - Right Low Beam (V22)

Pin	Size	Color	Circuit	Function	Terminal Type ID	Option
A	0.5	TN/WH	312	Right Headlamp Low Beam Control	I	—
	0.8	TN/WH	312			—
B	0.8	BK	650	Ground	I	—

E4N Park/Turn Signal Lamp - Left

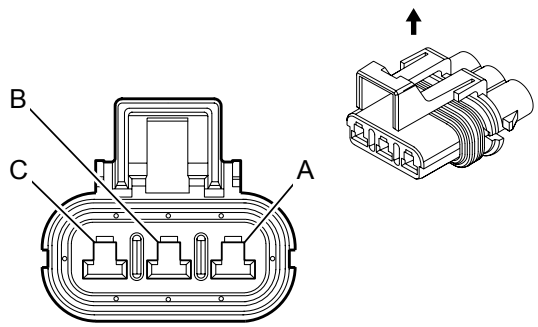

Connector Part Information

Harness Type: Forward Lamp

OEM Connector: 12040977

Service Connector: 12085492

Description: 3-Way F 280 Metri-Pack Sealed (BK)

Terminal Part Information

Terminal Type ID	Terminated Lead	Diagnostic Test Probe	Terminal Removal Tool	Service Terminal	Tray Name	Core Crimp	Insulation Crimp
I	Not Required	J-35616-4A (PU)	Not Required	Not Required	Not Required	Not Required	Not Required

E4N Park/Turn Signal Lamp - Left

Pin	Size	Color	Circuit	Function	Terminal Type ID	Option
A	0.8	L-BU/WH	1314	Left Front Turn Signal Lamp Control	I	—
B	0.5	BN	2309	Front Park Lamp Control	I	—
C	0.5	BK	250	Ground	I	—

E4P Park/Turn Signal Lamp - Right

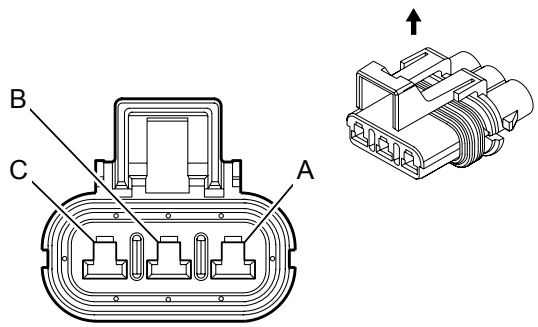

Connector Part Information

Harness Type: Forward Lamp

OEM Connector: 12040977

Service Connector: 12085492

Description: 3-Way F 280 Metri-Pack Sealed (BK)

Terminal Part Information

Terminal Type ID	Terminated Lead	Diagnostic Test Probe	Terminal Removal Tool	Service Terminal	Tray Name	Core Crimp	Insulation Crimp
I	Not Required	J-35616-4A (PU)	Not Required	Not Required	Not Required	Not Required	Not Required

E4P Park/Turn Signal Lamp - Right

Pin	Size	Color	Circuit	Function	Terminal Type ID	Option
A	0.8	D-BU/WH	1315	Right Front Turn Signal Lamp Control	I	—
B	0.5	BN	2309	Front Park Lamp Control	I	—
C	0.5	BK	650	Ground	I	—

E5A Backup Lamp - Left

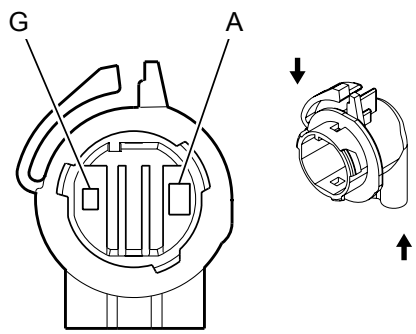

Connector Part Information

Harness Type: Left Tail Lamp

OEM Connector: 16530668

Service Connector: Service by Harness - See Part Catalog

Description: 2-Way Lamp Socket Wedge Base W3 Right Angle Sealed (L-GY)

Terminal Part Information

Terminal Type ID	Terminated Lead	Diagnostic Test Probe	Terminal Removal Tool	Service Terminal	Tray	Core Crimp	Insulation Crimp
I	Service by Harness - See Part Catalog	Not Available	Not Available	Not Available	Not Available	Not Available	Not Available

E5A Backup Lamp - Left

Pin	Size	Color	Circuit	Function	Terminal Type ID	Option
A	0.8	L-GN	24	Backup Lamp Supply Voltage	I	-
G	0.8	BK	850	Ground	I	-

E5B Backup Lamp - Right

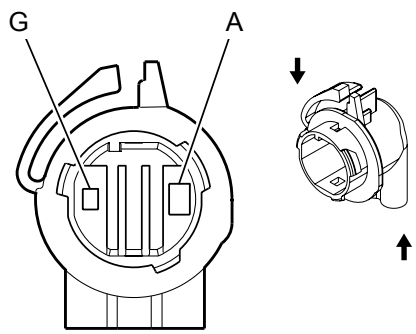

Connector Part Information

Harness Type: Right Tail Lamp

OEM Connector: 16530668

Service Connector: Service by Harness - See Part Catalog

Description: 2-Way Lamp Socket Wedge Base W3 Right Angle Sealed (L-GY)

Terminal Part Information

Terminal Type ID	Terminated Lead	Diagnostic Test Probe	Terminal Removal Tool	Service Terminal	Tray	Core Crimp	Insulation Crimp
I	Service by Harness - See Part Catalog	Not Available	Not Available	Not Available	Not Available	Not Available	Not Available

E5B Backup Lamp - Right

Pin	Size	Color	Circuit	Function	Terminal Type ID	Option
A	0.8	L-GN	24	Backup Lamp Supply Voltage	I	-
G	0.8	BK	1050	Ground	I	-

E5S Tail/Stop and Turn Signal Lamp - Left (Passenger or Cargo)

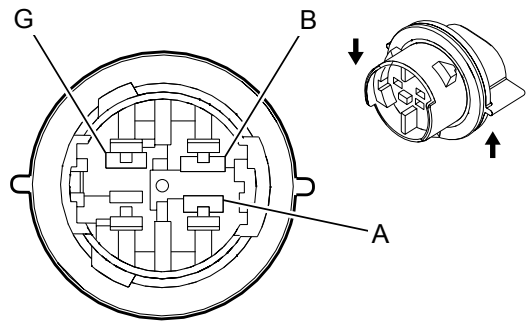

Connector Part Information

Harness Type: Left Tail Lamp

OEM Connector: 16530873

Service Connector: Service by Harness– See Part Catalog

Description: 3-Way F (BK)

Terminal Part Information

Terminal Type ID	Terminated Lead	Diagnostic Test Probe	Terminal Removal Tool	Service Terminal	Tray	Core Crimp	Insulation Crimp
I	Service by Harness - See Part Catalog	Not Available	Not Available	Not Available	Not Available	Not Available	Not Available

E5S Tail/Stop and Turn Signal Lamp - Left (Passenger or Cargo)

Pin	Size	Color	Circuit	Function	Terminal Type ID	Option
A	1	YE	618	Left Rear Turn Signal Lamp Control	I	-
B	1	BN	2509	Left Rear Park Lamps Control	I	-
G	1	BK	850	Ground	I	-
	1	BK	850	Ground		

E5T Tail/Stop and Turn Signal Lamp - Right (Passenger or Cargo)

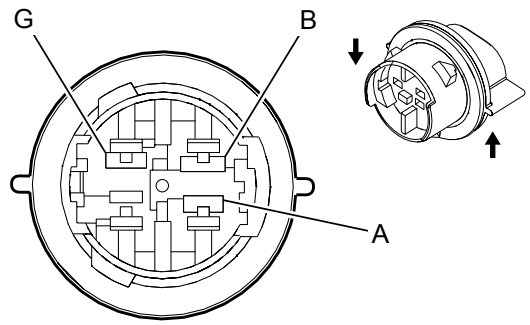

Connector Part Information

Harness Type: Right Tail Lamp

OEM Connector: 16530873

Service Connector: Service by Harness– See Part Catalog

Description: 3-Way F (BK)

Terminal Part Information

Terminal Type ID	Terminated Lead	Diagnostic Test Probe	Terminal Removal Tool	Service Terminal	Tray	Core Crimp	Insulation Crimp
I	Service by Harness - See Part Catalog	Not Available	Not Available	Not Available	Not Available	Not Available	Not Available

E5T Tail/Stop and Turn Signal Lamp - Right (Passenger or Cargo)

Pin	Size	Color	Circuit	Function	Terminal Type ID	Option
A	1	YE	619	Right Rear Turn Signal Lamp Control	I	-
B	1	BN	2609	Right Rear Park Lamps Control	I	-
G	1	BK	1050	Ground	I	-
	1	BK	1050	Ground		

E6 Center High Mounted Stop Lamp (Passenger or Cargo)

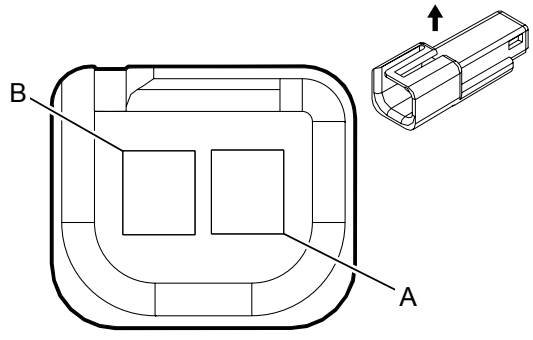

Connector Part Information

Harness Type: Center High Mounted Stop Lamp

OEM Connector: 12047663

Service Connector: 12085481

Description: 2-Way M Metri-Pack 150 Series (BK)

Terminal Part Information

Terminal Type ID	Terminated Lead	Diagnostic Test Probe	Terminal Removal Tool	Service Terminal	Tray	Core Crimp	Insulation Crimp
I	Service by Connector Assembly - 12047663	Not Available	Not Available	Not Available	Not Available	Not Available	Not Available

E6 Center High Mounted Stop Lamp (Passenger or Cargo)

Pin	Size	Color	Circuit	Function	Terminal Type ID	Option
A	0.8	L-BU	1320	CHMSL Supply Voltage	I	-
B	0.8	BK	850	Ground	I	-

E7 License Plate Lamp (Passenger or Cargo)

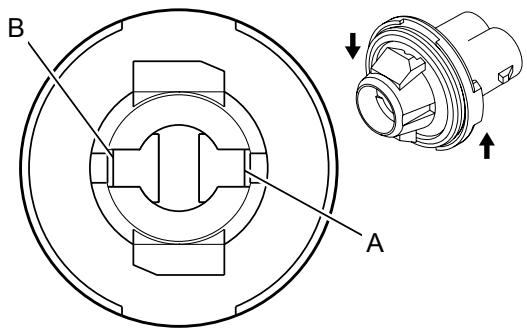

Connector Part Information

Harness Type: Right Rear Cargo Door

OEM Connector: 15324946

Service Connector: Service by Harness - See Part Catalog

Description: 2-Way F Lamp Socket Wedge Base W2 (D-GY)

Terminal Part Information

Terminal Type ID	Terminated Lead	Diagnostic Test Probe	Terminal Removal Tool	Service Terminal	Tray Name	Core Crimp	Insulation Crimp
I	Not Required	No Tool Required	Not Required	Not Required	Not Required	Not Required	Not Required

E7 License Plate Lamp (Passenger or Cargo)

Pin	Size	Color	Circuit	Function	Terminal Type ID	Option
A	0.5	BN	2509	Left Rear Park Lamp Control	I	—
B	0.5	BK	1050	Ground	I	—

E12A Glow Plug 1 (LGH)

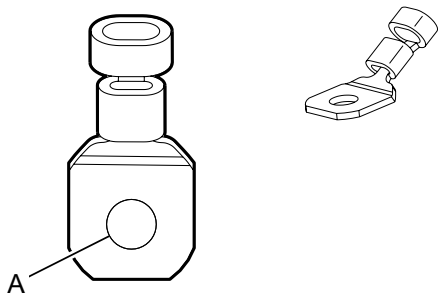

Connector Part Information

Harness Type: Engine

OEM Connector: 7009-1338-02

Service Connector: Service by Cable Assembly - See Part Catalog

Description: 1-Way Ring Terminal

Terminal Part Information

Terminal Type ID	Terminated Lead	Diagnostic Test Probe	Terminal Removal Tool	Service Terminal	Tray Name	Core Crimp	Insulation Crimp
I	Not Required	No Tool Required	Not Required	Not Required	Not Required	Not Required	Not Required

E12A Glow Plug 1 (LGH)

Pin	Size	Color	Circuit	Function	Terminal Type ID	Option
A	2	VT	1581	Glow Plug Control (1)	I	LGH

E12B Glow Plug 2 (LGH)

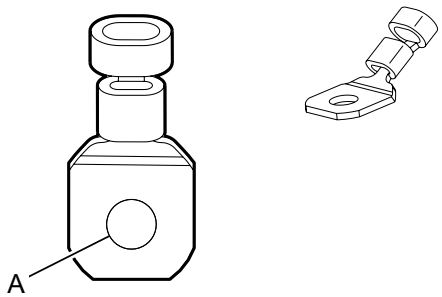

Connector Part Information

Harness Type: Engine

OEM Connector: 7009-1338-02

Service Connector: Service by Cable Assembly - See Part Catalog

Description: 1-Way Ring Terminal

Terminal Part Information

Terminal Type ID	Terminated Lead	Diagnostic Test Probe	Terminal Removal Tool	Service Terminal	Tray Name	Core Crimp	Insulation Crimp
I	Not Required	No Tool Required	Not Required	Not Required	Not Required	Not Required	Not Required

E12B Glow Plug 2 (LGH)

Pin	Size	Color	Circuit	Function	Terminal Type ID	Option
A	2	VT/WH	1582	Glow Plug Control (2)	I	LGH

E12C Glow Plug 3 (LGH)

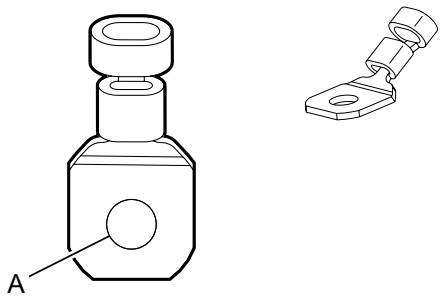

Connector Part Information

Harness Type: Engine

OEM Connector: 7009-1338-02

Service Connector: Service by Cable Assembly - See Part Catalog

Description: 1-Way Ring Terminal

Terminal Part Information

Terminal Type ID	Terminated Lead	Diagnostic Test Probe	Terminal Removal Tool	Service Terminal	Tray Name	Core Crimp	Insulation Crimp
I	Not Required	No Tool Required	Not Required	Not Required	Not Required	Not Required	Not Required

E12C Glow Plug 3 (LGH)

Pin	Size	Color	Circuit	Function	Terminal Type ID	Option
A	2	YE	1583	Glow Plug Control (3)	I	LGH

E12D Glow Plug 4 (LGH)

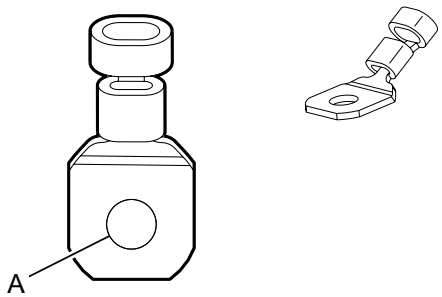

Connector Part Information

Harness Type: Engine

OEM Connector: 7009-1338-02

Service Connector: Service by Cable Assembly - See Part Catalog

Description: 1-Way Ring Terminal

Terminal Part Information

Terminal Type ID	Terminated Lead	Diagnostic Test Probe	Terminal Removal Tool	Service Terminal	Tray Name	Core Crimp	Insulation Crimp
I	Not Required	No Tool Required	Not Required	Not Required	Not Required	Not Required	Not Required

E12D Glow Plug 4 (LGH)

Pin	Size	Color	Circuit	Function	Terminal Type ID	Option
A	2	WH/YE	1584	Glow Plug Control (4)	I	LGH

E12E Glow Plug 5 (LGH)

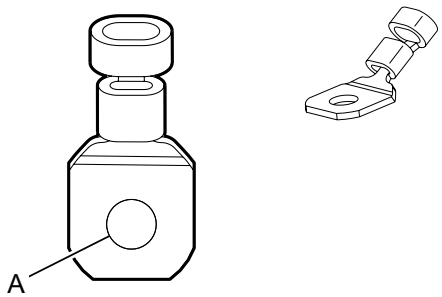

Connector Part Information

Harness Type: Engine

OEM Connector: 7009-1338-02

Service Connector: Service by Cable Assembly - See Part Catalog

Description: 1-Way Ring Terminal

Terminal Part Information

Terminal Type ID	Terminated Lead	Diagnostic Test Probe	Terminal Removal Tool	Service Terminal	Tray Name	Core Crimp	Insulation Crimp
I	Not Required	No Tool Required	Not Required	Not Required	Not Required	Not Required	Not Required

E12E Glow Plug 5 (LGH)

Pin	Size	Color	Circuit	Function	Terminal Type ID	Option
A	2	GN	1585	Glow Plug Control (5)	I	LGH

E12F Glow Plug 6 (LGH)

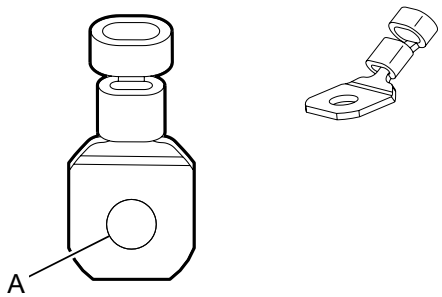

Connector Part Information

Harness Type: Engine

OEM Connector: 7009-1338-02

Service Connector: Service by Cable Assembly - See Part Catalog

Description: 1-Way Ring Terminal

Terminal Part Information

Terminal Type ID	Terminated Lead	Diagnostic Test Probe	Terminal Removal Tool	Service Terminal	Tray Name	Core Crimp	Insulation Crimp
I	Not Required	No Tool Required	Not Required	Not Required	Not Required	Not Required	Not Required

E12F Glow Plug 6 (LGH)

Pin	Size	Color	Circuit	Function	Terminal Type ID	Option
A	2	GN/WH	1586	Glow Plug Control (6)	I	LGH

E12G Glow Plug 7 (LGH)

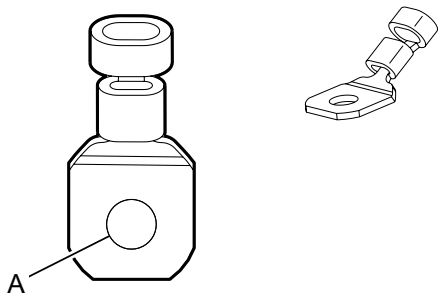

Connector Part Information

Harness Type: Engine

OEM Connector: 7009-1338-02

Service Connector: Service by Cable Assembly - See Part Catalog

Description: 1-Way Ring Terminal

Terminal Part Information

Terminal Type ID	Terminated Lead	Diagnostic Test Probe	Terminal Removal Tool	Service Terminal	Tray Name	Core Crimp	Insulation Crimp
I	Not Required	No Tool Required	Not Required	Not Required	Not Required	Not Required	Not Required

E12G Glow Plug 7 (LGH)

Pin	Size	Color	Circuit	Function	Terminal Type ID	Option
A	2	PK	1587	Glow Plug Control (7)	I	LGH

E12H Glow Plug 8 (LGH)

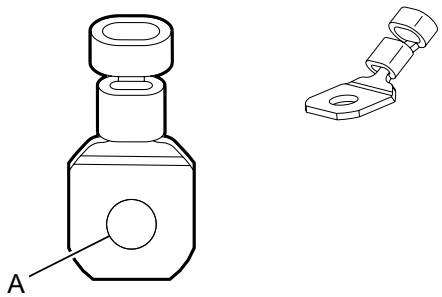

Connector Part Information

Harness Type: Engine

OEM Connector: 7009-1338-02

Service Connector: Service by Cable Assembly - See Part Catalog

Description: 1-Way Ring Terminal

Terminal Part Information

Terminal Type ID	Terminated Lead	Diagnostic Test Probe	Terminal Removal Tool	Service Terminal	Tray Name	Core Crimp	Insulation Crimp
I	Not Required	No Tool Required	Not Required	Not Required	Not Required	Not Required	Not Required

E12H Glow Plug 8 (LGH)

Pin	Size	Color	Circuit	Function	Terminal Type ID	Option
A	2	PK/WH	1588	Glow Plug Control (8)	I	LGH

E13L Headlamp - Left (Without V22)

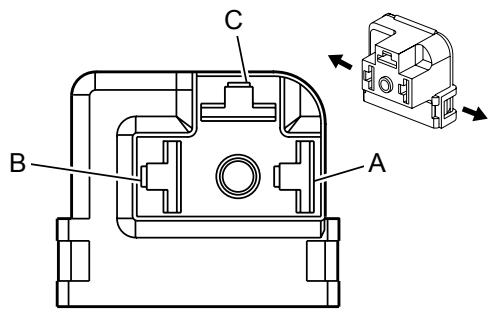

Connector Part Information

Harness Type: Forward Lamp

OEM Connector: 12034372

Service Connector: 12117369

Description: 3-Way F 800 Metri-Pack Series (BK)

Terminal Part Information

Terminal Type ID	Terminated Lead	Diagnostic Test Probe	Terminal Removal Tool	Service Terminal	Tray Name	Core Crimp	Insulation Crimp
I	Not Required	J-35616-44 (YE)	Not Required	Not Required	Not Required	Not Required	Not Required

E13L Headlamp - Left (Without V22)

Pin	Size	Color	Circuit	Function	Terminal Type ID	Option
A	0.5	BK	250	Ground	I	—
B	0.5	D-GN/WH	711	Left Headlamp High Beam Control	I	—
C	0.5	YE	712	Left Headlamp Low Beam Control	I	—

E13R Headlamp - Right (Without V22)

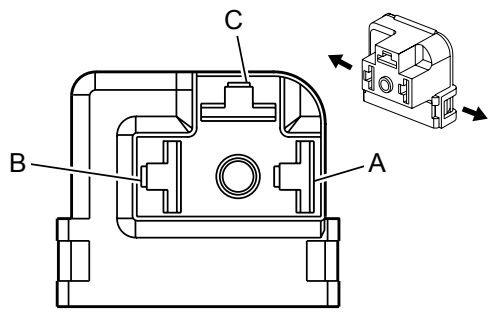

Connector Part Information

Harness Type: Forward Lamp

OEM Connector: 12034372

Service Connector: 12117369

Description: 3-Way F 800 Metri-Pack Series (BK)

Terminal Part Information

Terminal Type ID	Terminated Lead	Diagnostic Test Probe	Terminal Removal Tool	Service Terminal	Tray Name	Core Crimp	Insulation Crimp
I	Not Required	J-35616-44 (YE)	Not Required	Not Required	Not Required	Not Required	Not Required

E13R Headlamp - Right (Without V22)

Pin	Size	Color	Circuit	Function	Terminal Type ID	Option
A	0.8	BK	650	Ground	I	—
B	0.8	L-GN/BK	311	Right Headlamp High Beam Control	I	—
C	0.5	TN/WH	312	Right Headlamp Low Beam Control	I	—

E18L Rear Defogger Grid - Left (C49 with A18)

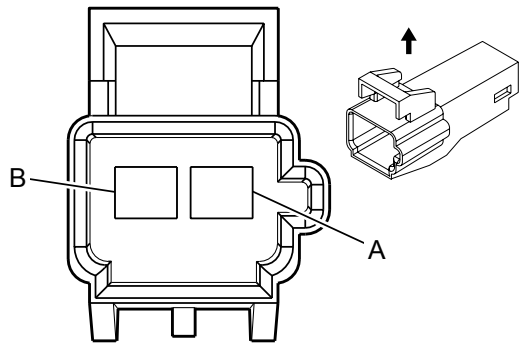

Connector Part Information

Harness Type: Rear Window Defogger Jumper

OEM Connector: 12129156

Service Connector: 12129156

Description: 2-Way M Metri-Pack 280 Series (GY)

Terminal Part Information

Terminal Type ID	Terminated Lead	Diagnostic Test Probe	Terminal Removal Tool	Service Terminal	Tray	Core Crimp	Insulation Crimp
I	Pending	J-35616-5 (PU)	J-38125-11A	12084586	4	Pin A– B	G

E18L Rear Defogger Grid - Left (C49 with A18)

Pin	Size	Color	Circuit	Function	Terminal Type ID	Option
A	5	PU	293	Rear Defog Element Control	I	-
B	3	BK	850	Ground	I	-

E18L Rear Defogger Grid - Left X1 (C49 with A12)

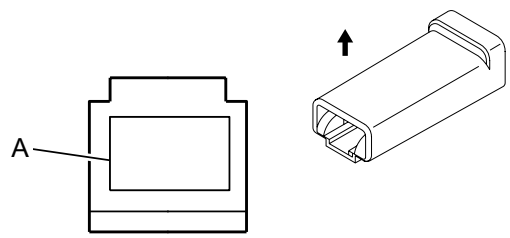

Connector Part Information

Harness Type: Rear Window Defogger Jumper

OEM Connector: 12103107

Service Connector: Service by Harness - See Part Catalog

Description: 1-Way F Positive Lock MK I 250 Series (BK)

Terminal Part Information

Terminal Type ID	Terminated Lead	Diagnostic Test Probe	Terminal Removal Tool	Service Terminal	Tray	Core Crimp	Insulation Crimp
I	Pending	J-35616-42 (RD)	J-38125-12A	154717-3	24	Not Available	Not Available

E18L Rear Defogger Grid - Left X1 (C49 with A12)

Pin	Size	Color	Circuit	Function	Terminal Type ID	Option
A	5	PU	293	Rear Defog Element Control	I	-

E18L Rear Defogger Grid - Left X2 (C49 with A12)

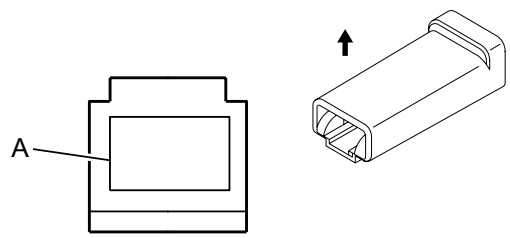

Connector Part Information

Harness Type: Rear Window Defogger Jumper

OEM Connector: 12103107

Service Connector: Service by Harness - See Part Catalog

Description: 1-Way F Positive Lock MK I 250 Series (BK)

Terminal Part Information

Terminal Type ID	Terminated Lead	Diagnostic Test Probe	Terminal Removal Tool	Service Terminal	Tray	Core Crimp	Insulation Crimp
I	Pending	J-35616-42 (RD)	J-38125-12A	154717-3	24	A	B

E18L Rear Defogger Grid - Left X2 (C49 with A12)

Pin	Size	Color	Circuit	Function	Terminal Type ID	Option
A	3	BK	850	Ground	I	-

E18R Rear Defogger Grid - Right (C49 with A18)

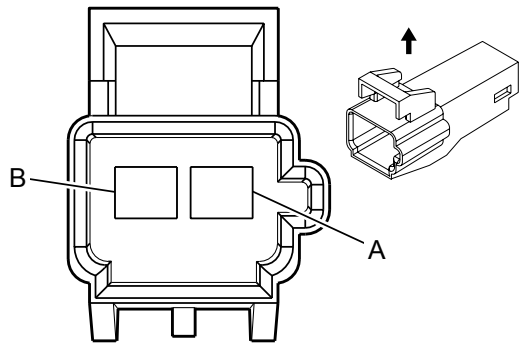

Connector Part Information

Harness Type: Rear Window Defogger Jumper

OEM Connector: 12129156

Service Connector: 12129156

Description: 2-Way M Metri-Pack 280 Series (GY)

Terminal Part Information

Terminal Type ID	Terminated Lead	Diagnostic Test Probe	Terminal Removal Tool	Service Terminal	Tray	Core Crimp	Insulation Crimp
I	Pending	J-35616-5 (PU)	J-38125-11A	12084586	4	Pin A– B	G

E18R Rear Defogger Grid - Right (C49 with A18)

Pin	Size	Color	Circuit	Function	Terminal Type ID	Option
A	5	PU	293	Rear Defog Element Control	I	-
B	3	BK	1050	Ground	I	-

E18R Rear Defogger Grid - Right X1 (C49 with A12)

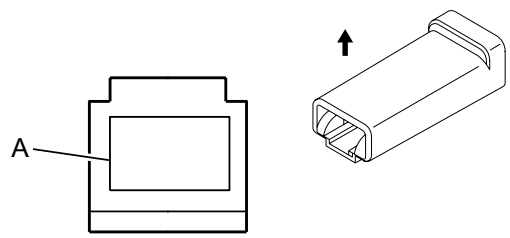

Connector Part Information

Harness Type: Rear Window Defogger Jumper

OEM Connector: 12103107

Service Connector: Service by Harness - See Part Catalog

Description: 1-Way F Positive Lock MK I 250 Series (BK)

Terminal Part Information

Terminal Type ID	Terminated Lead	Diagnostic Test Probe	Terminal Removal Tool	Service Terminal	Tray	Core Crimp	Insulation Crimp
I	Pending	J-35616-42 (RD)	J-38125-12A	154717-3	24	Not Available	Not Available

E18R Rear Defogger Grid - Right X1 (C49 with A12)

Pin	Size	Color	Circuit	Function	Terminal Type ID	Option
A	5	PU	293	Rear Defog Element Control	I	-

E18R Rear Defogger Grid - Right X2 (C49 with A12)

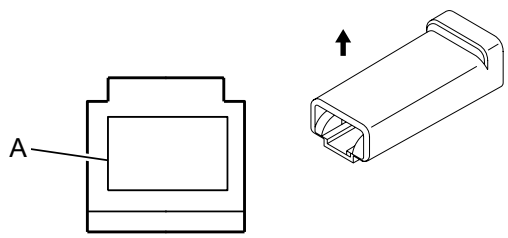

Connector Part Information

Harness Type: Rear Window Defogger Jumper

OEM Connector: 12103107

Service Connector: Service by Harness - See Part Catalog

Description: 1-Way F Positive Lock MK I 250 Series (BK)

Terminal Part Information

Terminal Type ID	Terminated Lead	Diagnostic Test Probe	Terminal Removal Tool	Service Terminal	Tray	Core Crimp	Insulation Crimp
I	Pending	J-35616-42 (RD)	J-38125-12A	154717-3	24	A	B

E18R Rear Defogger Grid - Right X2 (C49 with A12)

Pin	Size	Color	Circuit	Function	Terminal Type ID	Option
A	3	BK	1050	Ground	I	-

E19 Coolant Heater (K08)

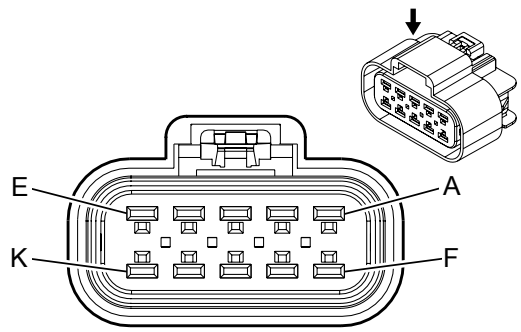

Connector Part Information

Harness Type: Chassis

OEM Connector: 15326660

Service Connector: 88986262

Description: 10-Way F 280 GT 5.8 Series, Sealed (BK)

Terminal Part Information

Terminal Type ID	Terminated Lead	Diagnostic Test Probe	Terminal Removal Tool	Service Terminal	Tray Name	Core Crimp	Insulation Crimp
I	13575403	J-35616-4A (PU)	J-38125-553	15304720	Delphi 19	4	5
II	13576356	J-35616-4A (PU)	J-38125-553	15304719	Delphi 19	2	5
III	13576356	J-35616-4A (PU)	J-38125-553	15304719	Delphi 19	E	5

E19 Coolant Heater (K08)

Pin	Size	Color	Circuit	Function	Terminal Type ID	Option
A	2	RD/WH	1740	Battery Positive Voltage	I	—
B	0.5	TN	2501	High Speed GMLAN Serial Data (-) (1)	III	—
C	0.5	TN/BK	2500	High Speed GMLAN Serial Data (+) (1)	III	—
D	0.5	TN	2501	High Speed GMLAN Serial Data (-) (1)	III	—
E	0.5	TN/BK	2500	High Speed GMLAN Serial Data (+) (1)	III	—
F	0.8	D-BU/L-GN	7077	Fuel Operated Heater Dosing Pump Control	II	—
G	—	—	—	Not Occupied	—	—

H	2	BK	150	Ground	I	—
J	0.5	L-BU	5986	Serial Data Communication Enable	III	—
K	—	—	—	Not Occupied	—	—

E22 Underhood Lamp

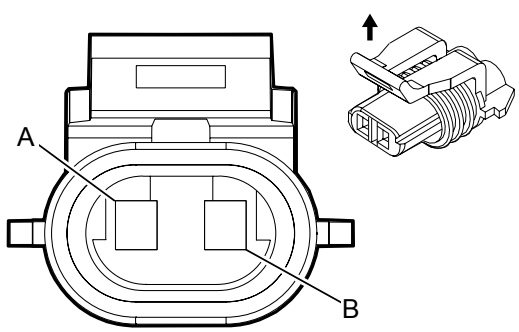

Connector Part Information

Harness Type: Underhood Lamp

OEM Connector: 12052644

Service Connector: 15306302

Description: 2-Way F Metri-Pack 150 Series, Sealed (GY)

Terminal Part Information

Terminal Type ID	Terminated Lead	Diagnostic Test Probe	Terminal Removal Tool	Service Terminal	Tray	Core Crimp	Insulation Crimp
I	13575419	J-35616-14 (GN)	J-38125-12A	12048074	2	E	1

E22 Underhood Lamp

Pin	Size	Color	Circuit	Function	Terminal Type ID	Option
A	0.5	OG	1732	Courtesy Lamp Control	I	-
B	0.5	BK	1250	Ground	I	-

E24 Intake Air Heater X1 (LGH)

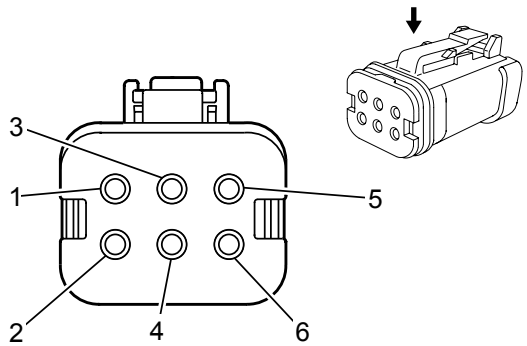

Connector Part Information

Harness Type: Engine

OEM Connector: DT16-6S-KP01

Service Connector: 13576409

Description: 6-Way F 2.8 Series, Sealed (GN)

Terminal Part Information

Terminal Type ID	Terminated Lead	Diagnostic Test Probe	Terminal Removal Tool	Service Terminal	Tray Name	Core Crimp	Insulation Crimp
I	Not Required	J-35616-66 (YE)	Not Required	Not Required	Not Required	Not Required	Not Required

E24 Intake Air Heater X1 (LGH)

Pin	Size	Color	Circuit	Function	Terminal Type ID	Option
1	0.5	BK	2923	Intake Air Heater Temperature Signal	I	LGH
2	0.5	OG/BK	2921	Intake Air Heater Switch On/Off Signal	I	LGH
3	0.5	YE	2920	Intake Air Heater Heart Beat Signal	I	LGH
4	0.5	D-GN	2924	Intake Air Heater Current Feedback Signal	I	LGH
5	0.5	TN	2925	Intake Air Heater Voltage Feedback Signal	I	LGH
6	0.5	VT	2922	Intake Air Heater Digital Response Signal	I	LGH

E24 Intake Air Heater X2 (LGH)

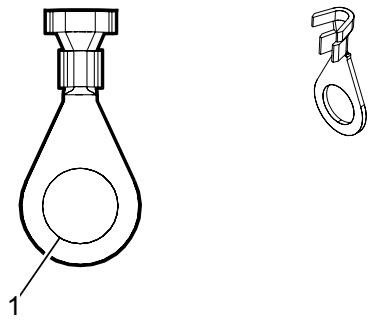

Connector Part Information

Harness Type: Accessory Power Fuse Block Front

OEM Connector: 12146366

Service Connector: Service by Cable Assembly - See Part Catalog

Description: 1-Way Ring Terminal

Terminal Part Information

Terminal Type ID	Terminated Lead	Diagnostic Test Probe	Terminal Removal Tool	Service Terminal	Tray Name	Core Crimp	Insulation Crimp
I	Not Required	No Tool Required	Not Required	Not Required	Not Required	Not Required	Not Required

E24 Intake Air Heater X2 (LGH)

Pin	Size	Color	Circuit	Function	Terminal Type ID	Option
1	—	—	—	Not Occupied	—	—

E32 Cigarette Lighter Receptacle (DT4)

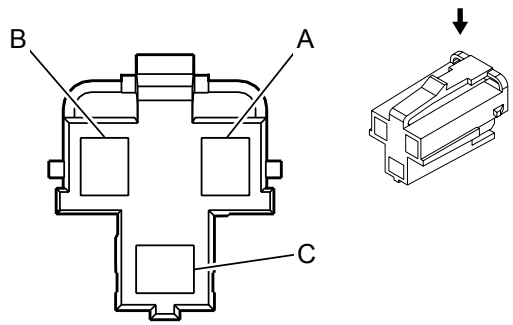

Connector Part Information

Harness Type: Instrument Panel

OEM Connector: 12176836

Service Connector: 19257374

Description: 3-Way F 280 Metri-Pack Series (GY)

Terminal Part Information

Terminal Type ID	Terminated Lead	Diagnostic Test Probe	Terminal Removal Tool	Service Terminal	Tray Name	Core Crimp	Insulation Crimp
I	Not Required	J-35616-4A (PU)	Not Required	Not Required	Not Required	Not Required	Not Required

E32 Cigarette Lighter Receptacle (DT4)

Pin	Size	Color	Circuit	Function	Terminal Type ID	Option
A	1	RD/WH	640	Battery Positive Voltage	I	—
B	—	—	—	Not Occupied	—	—
C	1	BK	550	Ground	I	—

E36AH Dome Lamp (Cargo)

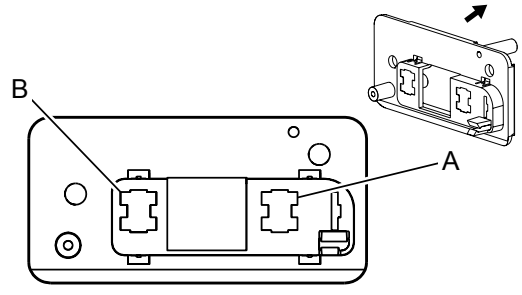

Connector Part Information

Harness Type: Dome Lamp

OEM Connector: 15528758

Service Connector: Service by Harness– See Part Catalog

Description: 2-Way F (NA)

Terminal Part Information

Terminal Type ID	Terminated Lead	Diagnostic Test Probe	Terminal Removal Tool	Service Terminal	Tray	Core Crimp	Insulation Crimp
I	Pending	Pending	Not Available	Service by Connector Assembly– 15528758	Service by Connector Assembly– 15528758	Not Available	Not Available

E36AH Dome Lamp (Cargo)

Pin	Size	Color	Circuit	Function	Terminal Type ID	Option
A	0.8	D-BU/WH	149	Courtesy Lamp Control	I	-
B	0.5	BK	850	Ground	I	-

E37F Dome/Reading Lamps - Front (Without YF7)

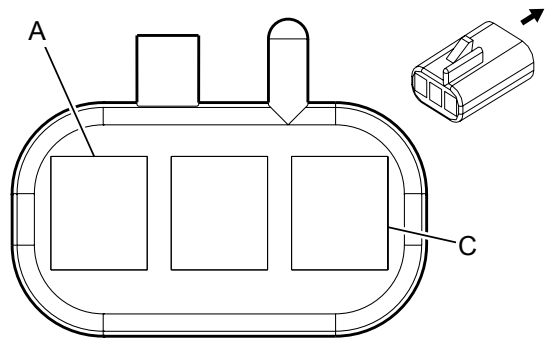

Connector Part Information

Harness Type: Headliner

OEM Connector: 12047781

Service Connector: 13586139

Description: 3-Way F 150 Metri-Pack Series (BK)

Terminal Part Information

Terminal Type ID	Terminated Lead	Diagnostic Test Probe	Terminal Removal Tool	Service Terminal	Tray Name	Core Crimp	Insulation Crimp
I	Not Required	J-35616-14 (GN)	Not Required	Not Required	Not Required	Not Required	Not Required

E37F Dome/Reading Lamps - Front (Without YF7)

Pin	Size	Color	Circuit	Function	Terminal Type ID	Option
A	0.5	D-BU/WH	149	Courtesy Lamp Control	I	—
B	0.8	BK	1850	Ground	I	—
	1	BK	1850			—
C	0.8	OG	1732	Electronic Control Unit 12 Volt Reference (3)	I	—

E37M Dome/Reading Lamps - Middle (Passenger)

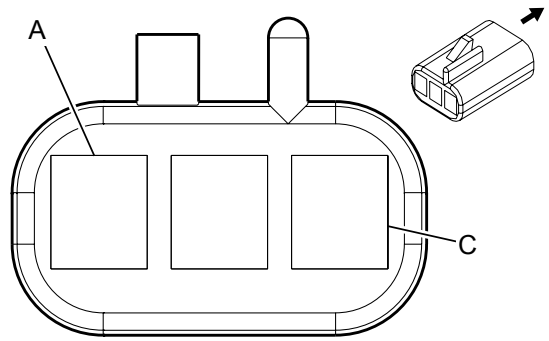

Connector Part Information

Harness Type: Headliner

OEM Connector: 12047781

Service Connector: 12101864

Description: 3-Way F Metri-Pack 150 Series (BK)

Terminal Part Information

Terminal Type ID	Terminated Lead	Diagnostic Test Probe	Terminal Removal Tool	Service Terminal	Tray	Core Crimp	Insulation Crimp
I	Pins: A, C– Pending	J-35616-14 (GN)	J-38125-12A	Pins: A, C– 15326030	2	Pins: A, C– E	A

E37M Dome/Reading Lamps - Middle (Passenger)

Pin	Size	Color	Circuit	Function	Terminal Type ID	Option
A	0.8	D-BU/WH	149	Courtesy Lamp Control	I	-
B	0.5	BK	1050	Ground	I	-
C	0.8	OG	1732	Courtesy Lamp Control	I	-

E37R Dome/Reading Lamps - Rear (Passenger)

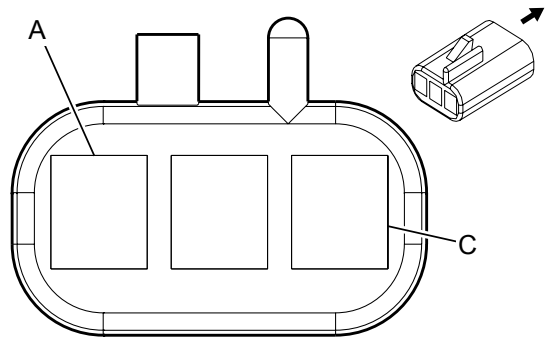

Connector Part Information

Harness Type: Headliner

OEM Connector: 12047781

Service Connector: 12101864

Description: 3-Way F Metri-Pack 150 Series (BK)

Terminal Part Information

Terminal Type ID	Terminated Lead	Diagnostic Test Probe	Terminal Removal Tool	Service Terminal	Tray	Core Crimp	Insulation Crimp
I	Pins: A, C– Pending	J-35616-14 (GN)	J-38125-12A	Pins: A, C– 15326030	2	Pins: A, C– E	A

E37R Dome/Reading Lamps - Rear (Passenger)

Pin	Size	Color	Circuit	Function	Terminal Type ID	Option
A	0.8	D-BU/WH	149	Courtesy Lamp Control	I	-
B	0.5	BK	1050	Ground	I	-
C	0.8	OG	1732	Courtesy Lamp Control	I	-

E52 Reductant Line Heater (LGH)

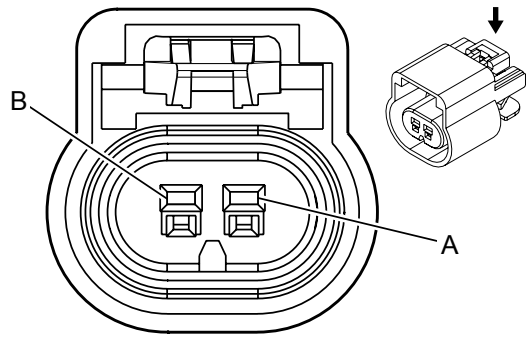

Connector Part Information

Harness Type: Reductant Jumper

OEM Connector: 13510085

Service Connector: 13580114

Description: 2-Way F GT 150 Series (BK)

Terminal Part Information

Terminal Type ID	Terminated Lead	Diagnostic Test Probe	Terminal Removal Tool	Service Terminal	Tray	Core Crimp	Insulation Crimp
I				12191819	8	2	1

E52 Reductant Line Heater (LGH)

Pin	Size	Color	Circuit	Function	Terminal Type ID	Option
A	1	BK	317	Ground	I	-
B	1	PU/WH	327	DEF Pump Heater Control	I	-

E53 Reductant Tank Heater (LGH)

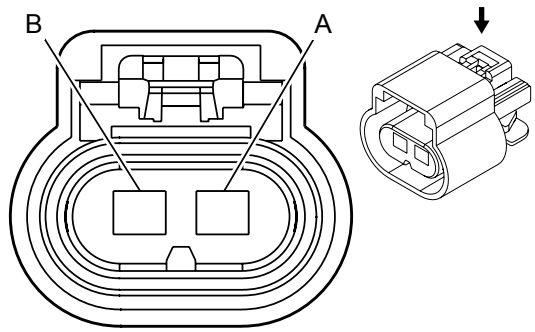

Connector Part Information

Harness: Reductant Jumper

OEM: 15326679

Service: 88988942

Description: 2-Way F GT 280 Series, Sealed (BK)

Terminal Part Information

Terminal Type ID	Terminated Lead	Diagnostic Test Probe	Terminal Removal Tool	Service Terminal	Tray	Core Crimp	Insulation Crimp
I				15304719	19	2	5

E53 Reductant Tank Heater (LGH)

Pin	Size	Color	Circuit	Function	Terminal Type ID	Option
A	1	BK	217	Ground	I	-
B	1	D-GN/WH	227	DEF Reservoir Heater Control	I	-

F101 Passenger Instrument Panel Air Bag

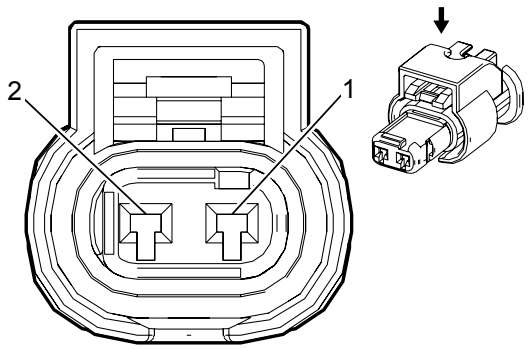

Connector Part Information

Harness Type: Instrument Panel

OEM Connector: 13863037

Service Connector: 13587886

Description: 2-Way F 1.2 Multiple Contact Point Series, Sealed (YE with BK Inner Connector)

Terminal Part Information

Terminal Type ID	Terminated Lead	Diagnostic Test Probe	Terminal Removal Tool	Service Terminal	Tray Name	Core Crimp	Insulation Crimp
I	Not Required	J-35616-16 (LT GN)	Not Required	Not Required	Not Required	Not Required	Not Required

F101 Passenger Instrument Panel Air Bag

Pin	Size	Color	Circuit	Function	Terminal Type ID	Option
1	0.5	YE	3025	Passenger IP Module Stage 1 High Control	I	—
2	0.5	OG	3024	Passenger IP Module Stage 1 Low Control	I	—

F105LF Roof Rail Air Bag - Left Front (ASF)

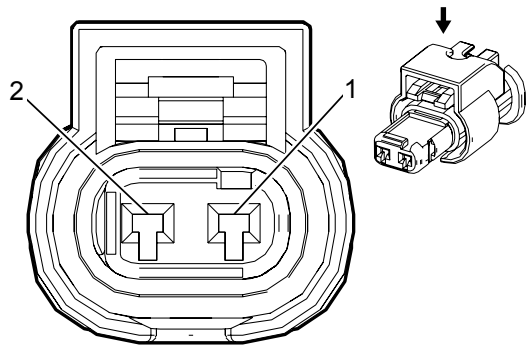

Connector Part Information

Harness Type: Body

OEM Connector: 13863037

Service Connector: 13587886

Description: 2-Way F 1.2 Multiple Contact Point Series, Sealed (YE with BK Inner Connector)

Terminal Part Information

Terminal Type ID	Terminated Lead	Diagnostic Test Probe	Terminal Removal Tool	Service Terminal	Tray Name	Core Crimp	Insulation Crimp
I	Not Required	J-35616-16 (LT GN)	Not Required	Not Required	Not Required	Not Required	Not Required

F105LF Roof Rail Air Bag - Left Front (ASF)

Pin	Size	Color	Circuit	Function	Terminal Type ID	Option
1	0.5	PK	5020	Left Front Head Curtain Module Low Control	I	—
2	0.5	PU/WH	5019	Left Front Head Curtain Module High Control	I	—

F105RF Roof Rail Air Bag - Right Front (ASF)

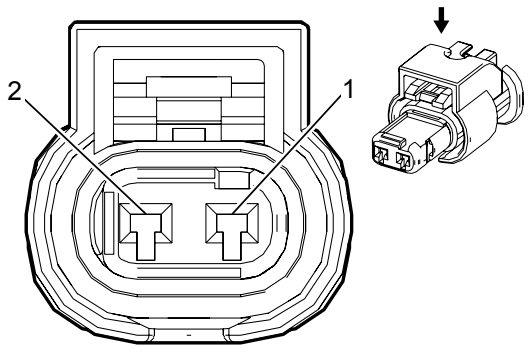

Connector Part Information

Harness Type: Body

OEM Connector: 13863037

Service Connector: 13587886

Description: 2-Way F 1.2 Multiple Contact Point Series, Sealed (YE with BK Inner Connector)

Terminal Part Information

Terminal Type ID	Terminated Lead	Diagnostic Test Probe	Terminal Removal Tool	Service Terminal	Tray Name	Core Crimp	Insulation Crimp
I	Not Required	J-35616-16 (LT GN)	Not Required	Not Required	Not Required	Not Required	Not Required

F105RF Roof Rail Air Bag - Right Front (ASF)

Pin	Size	Color	Circuit	Function	Terminal Type ID	Option
1	0.5	WH/BK	5022	Right Front Head Curtain Module Low Control	I	—
2	0.5	YE/BK	5021	Right Front Head Curtain Module High Control	I	—

F105RR Roof Rail Air Bag - Right Rear (ASF with YA2)

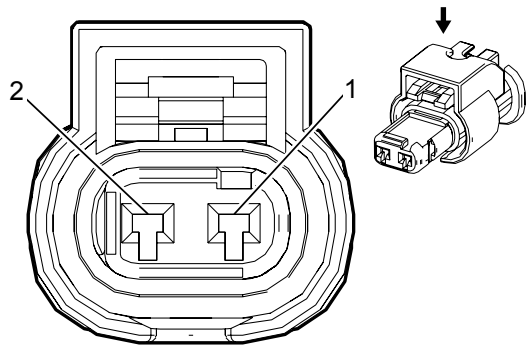

Connector Part Information

Harness Type: Body

OEM Connector: 13863037

Service Connector: 13587886

Description: 2-Way F 1.2 Multiple Contact Point Series, Sealed (YE with BK Inner Connector)

Terminal Part Information

Terminal Type ID	Terminated Lead	Diagnostic Test Probe	Terminal Removal Tool	Service Terminal	Tray Name	Core Crimp	Insulation Crimp
I	Not Required	J-35616-16 (LT GN)	Not Required	Not Required	Not Required	Not Required	Not Required

F105RR Roof Rail Air Bag - Right Rear (ASF with YA2)

Pin	Size	Color	Circuit	Function	Terminal Type ID	Option
1	0.5	TN/BK	7016	Right Rear Head Curtain Module Low Control	I	—
2	0.5	L-BU	7015	Right Rear Head Curtain Module High Control	I	—

F107 Steering Wheel Air Bag

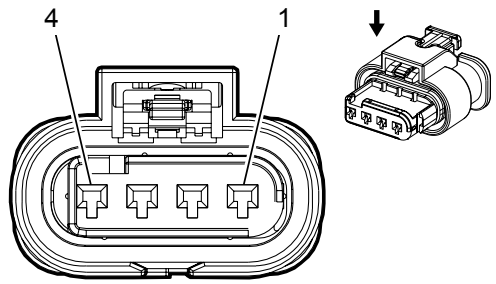

Connector Part Information

Harness Type: Instrument Panel

OEM Connector: 13854531

Service Connector: 13586137

Description: 4-Way F 1.2 Series, Sealed (YE)

Terminal Part Information

Terminal Type ID	Terminated Lead	Diagnostic Test Probe	Terminal Removal Tool	Service Terminal	Tray Name	Core Crimp	Insulation Crimp
I	Not Required	J-35616-16 (LT GN)	Not Required	Not Required	Not Required	Not Required	Not Required

F107 Steering Wheel Air Bag

Pin	Size	Color	Circuit	Function	Terminal Type ID	Option
1	0.5	TN	3021	Steering Wheel Module Stage 1 High Control	I	—
2	0.5	BN	3020	Steering Wheel Module Stage 1 Low Control	I	—
3	0.5	WH	3023	Steering Wheel Module Stage 2 High Control	I	—
4	0.5	PK	3022	Steering Wheel Module Stage 2 Low Control	I	—

F109D Seat Belt Buckle Pretensioner - Driver

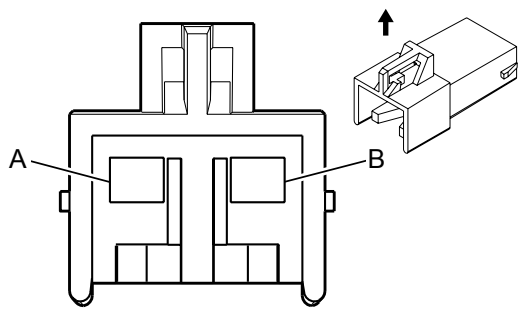

Connector Part Information

Harness Type: Body

OEM Connector: 12110288

Service Connector: 12126040

Description: 2-Way M Metri-Pack 280 Series (YE)

Terminal Part Information

Terminal Type ID	Terminated Lead	Diagnostic Test Probe	Terminal Removal Tool	Service Terminal	Tray	Core Crimp	Insulation Crimp
I	13575715	J-35616-5 (PU)	J-38125-11A	12034047	2	E	A

F109D Seat Belt Buckle Pretensioner - Driver

Pin	Size	Color	Circuit	Function	Terminal Type ID	Option
A	0.5	TN/WH	2118	Seat Belt Pretensioner– Left– High Control	I	-
B	0.5	OG/BK	2119	Seat Belt Pretensioner– Left– Low Control	I	-

F109P Seat Belt Buckle Pretensioner - Passenger (AK5)

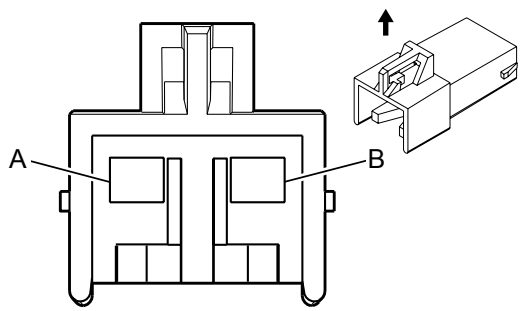

Connector Part Information

Harness Type: Body

OEM Connector: 12110288

Service Connector: 12126040

Description: 2-Way M Metri-Pack 280 Series (YE)

Terminal Part Information

Terminal Type ID	Terminated Lead	Diagnostic Test Probe	Terminal Removal Tool	Service Terminal	Tray	Core Crimp	Insulation Crimp
I	13575715	J-35616-5 (PU)	J-38125-11A	12034047	2	E	A

F109P Seat Belt Buckle Pretensioner - Passenger (AK5)

Pin	Size	Color	Circuit	Function	Terminal Type ID	Option
A	0.5	L-GN	2116	Seat Belt Pretensioner– Right– High Control	I	-
B	0.5	OG	2117	Seat Belt Pretensioner– Right– Low Control	I	-

G7 Coolant Heater Fuel Pump (LGH with K08)

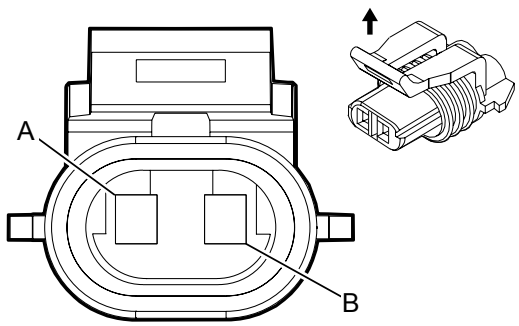

Connector Part Information

Harness Type: Chassis

OEM Connector: 12052644

Service Connector: Service by Harness – See Part Catalog

Description: 2-Way F 150 Metri-Pack Series, Sealed (GY)

Terminal Part Information

Terminal Type ID	Terminated Lead	Diagnostic Test Probe	Terminal Removal Tool	Service Terminal	Tray	Core Crimp	Insulation Crimp
I	Not Available	Not Available	Not Available	Not Available	Not Available	Not Available	Not Available

G7 Coolant Heater Fuel Pump (LGH with K08)

Pin	Size	Color	Circuit	Function	Terminal Type ID	Option
A	0.8	D-BU/GN	7077	Fuel Operated Heater Dosing Pump Control	I	—
B	0.8	BK	150	Ground	I	—

G10 Cooling Fan Motor (LGH)

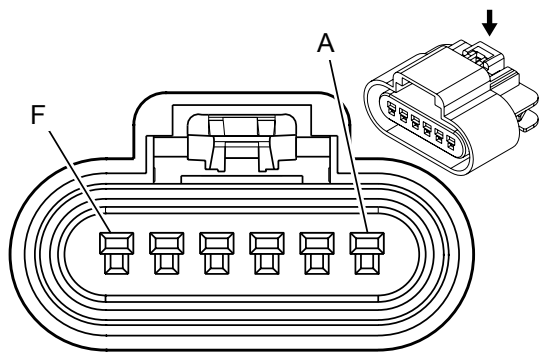

Connector Part Information

Harness: Fan Jumper

OEM: 15326829

Service: 88988944

Description: 6-Way F GT 150 Series Sealed (BK)

Terminal Part Information

Terminal Type ID	Terminated Lead	Diagnostic Test Probe	Terminal Removal Tool	Service Terminal	Tray	Core Crimp	Insulation Crimp
I				See Terminal Repair Kit	See Terminal Repair Kit	See Terminal Repair Kit	See Terminal Repair Kit

G10 Cooling Fan Motor (LGH)

Pin	Size	Color	Circuit	Function	Terminal Type ID	Option
A	0.5	BK	1250	Ground	I	-
B	0.5	WH	2368	Cooling Fan Clutch Control	I	-
C	0.5	BN/WH	6141	Low Reference	I	-
D	0.5	D-BU	2364	Cooling Fan Speed Signal	I	-
E	0.5	GY	2365	Low Reference	I	-
F	-	-	-	Not Occupied	-	-

G12 Fuel Pump (LGH)

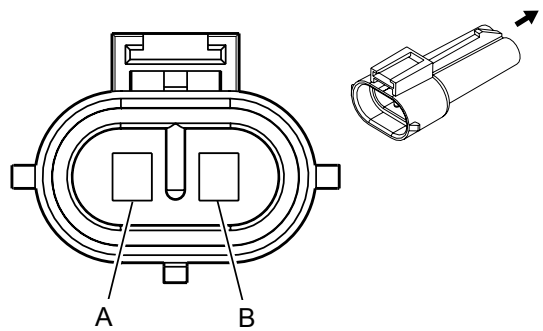

Connector Part Information

Harness Type: Fuel Pump

OEM Connector: 12059450

Service Connector: 13580868

Description: 2-Way M Metri-Pack 280 Series, Sealed (BK)

Terminal Part Information

Terminal Type ID	Terminated Lead	Diagnostic Test Probe	Terminal Removal Tool	Service Terminal	Tray	Core Crimp	Insulation Crimp
I				See Terminal Repair Kit	See Terminal Repair Kit	See Terminal Repair Kit	See Terminal Repair Kit

G12 Fuel Pump (LGH)

Pin	Size	Color	Circuit	Function	Terminal Type ID	Option
A	0.5	GY	120	Fuel Pump Control	I	-
B	2	BK	150	Ground	I	-

G12 Fuel Pump (KO7 with UFM)

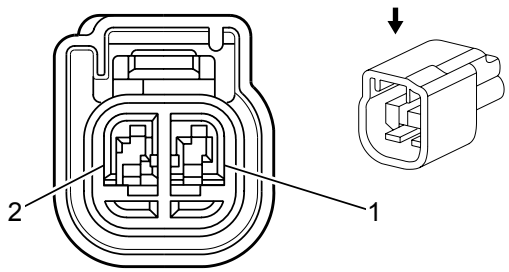

Connector Part Information

Harness Type: Transmission

OEM Connector: 15419380

Service Connector: Service by Harness - See Part Catalog

Description: 2-Way F 1.5 Series, Sealed (GY)

Terminal Part Information

Terminal Type ID	Terminated Lead	Diagnostic Test Probe	Terminal Removal Tool	Service Terminal	Tray Name	Core Crimp	Insulation Crimp
I	Not Required	J-35616-2A (GY)	Not Required	Not Required	Not Required	Not Required	Not Required

G12 Fuel Pump (KO7 with UFM)

Pin	Size	Color	Circuit	Function	Terminal Type ID	Option
1	0.8	GY	120	Fuel Pump Control	I	—
2	1	BK	150	Ground	I	—

G13 Generator X1 ((L20/L96/LC8)+K68/KG3)

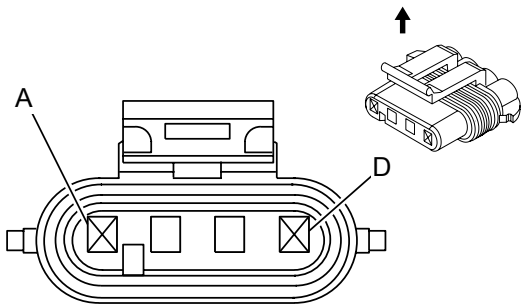

Connector Part Information

Harness Type: Engine

OEM Connector: 15355066

Service Connector: 15306329

Description: 2-Way F 150 Metri-Pack Series, Sealed (BG)

Terminal Part Information

Terminal Type ID	Terminated Lead	Diagnostic Test Probe	Terminal Removal Tool	Service Terminal	Tray Name	Core Crimp	Insulation Crimp
I	Not Required	J-35616-14 (GN)	Not Required	Not Required	Not Required	Not Required	Not Required

G13 Generator X1 ((L20/L96/LC8)+K68/KG3)

Pin	Size	Color	Circuit	Function	Terminal Type ID	Option
A	—	—	—	Not Occupied	—	—
B	0.5	OG	225	Generator Turn On Signal	I	—
C	0.5	GY	23	Generator Field Duty Cycle Signal	I	—
D	—	—	—	Not Occupied	—	—

G13 Generator X1 ((L20/L96/LC8)+KW5)

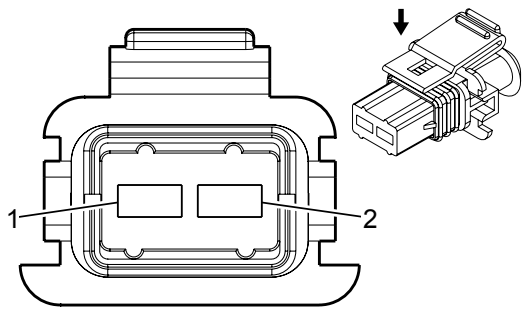

Connector Part Information

Harness Type: Engine

OEM Connector: 12186308

Service Connector: 13585849

Description: 2-Way F Junior Power Timer Series, Sealed (BK)

Terminal Part Information

Terminal Type ID	Terminated Lead	Diagnostic Test Probe	Terminal Removal Tool	Service Terminal	Tray Name	Core Crimp	Insulation Crimp
I	Not Required	J-35616-4A (PU)	Not Required	Not Required	Not Required	Not Required	Not Required

G13 Generator X1 ((L20/L96/LC8)+KW5)

Pin	Size	Color	Circuit	Function	Terminal Type ID	Option
1	0.5	OG	225	Generator Turn On Signal	I	—
2	0.5	GY	23	Generator Field Duty Cycle Signal	I	—

G13 Generator X1

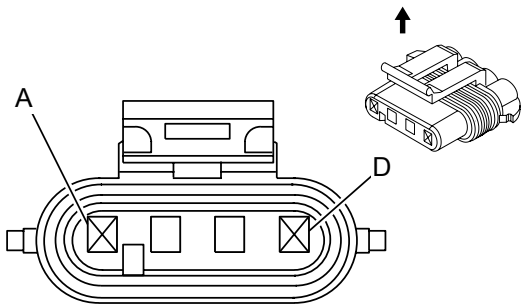

Connector Part Information

Harness Type: Engine

OEM Connector: 15355066

Service Connector: 15306329

Description: 2-Way F 150 Metri-Pack Series, Sealed (BG)

Terminal Part Information

Terminal Type ID	Terminated Lead	Diagnostic Test Probe	Terminal Removal Tool	Service Terminal	Tray Name	Core Crimp	Insulation Crimp
I	Not Required	J-35616-14 (GN)	Not Required	Not Required	Not Required	Not Required	Not Required

G13 Generator X1

Pin	Size	Color	Circuit	Function	Terminal Type ID	Option
A	—	—	—	Not Occupied	—	—
B	0.8	OG	225	Generator Turn On Signal	I	—
C	0.8	GY	23	Generator Field Duty Cycle Signal	I	—
D	—	—	—	Not Occupied	—	—

G13 Generator X2

Connector Part Information

Harness Type: Battery Positive

OEM Connector: 15355282

Service Connector: Service by Harness – See Part Catalog

Description: Ring Terminal

Terminal Part Information

Terminal Type ID	Terminated Lead	Diagnostic Test Probe	Terminal Removal Tool	Service Terminal	Tray	Core Crimp	Insulation Crimp
I	Not Available	No Tool Required	No Tool Required	Not Available	Not Available	Not Available	Not Available

G13 Generator X2

Pin	Size	Color	Circuit	Function	Terminal Type ID	Option
1	19	RD	1	Battery Positive Voltage	I	-

G13E Generator - Auxiliary X1 (LGH with KD9)

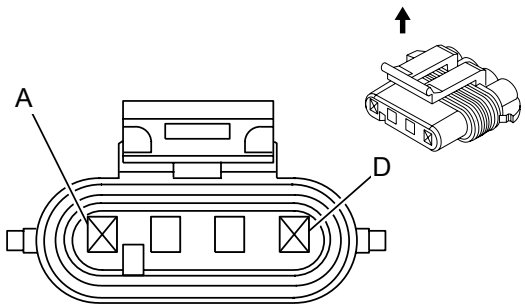

Connector Part Information

Harness Type: Engine Chassis

OEM Connector: 15355066

Service Connector: 15306329

Description: 2-Way F Metri-Pack 150 Series, Sealed (BG)

Terminal Part Information

Terminal Type ID	Terminated Lead	Diagnostic Test Probe	Terminal Removal Tool	Service Terminal	Tray	Core Crimp	Insulation Crimp
I	13575427	J-35616-14 (GN)	J-38125-12A	12048074	2	E	1

G13E Generator - Auxiliary X1 (LGH with KD9)

Pin	Size	Color	Circuit	Function	Terminal Type ID	Option
A	-	-	-	Not Occupied	-	-
B	0.8	BN/WH	7076	Charge Indicator Control	I	-
C–D	-	-	-	Not Occupied	-	-

G13E Generator - Auxiliary X2 (LGH with KD9)

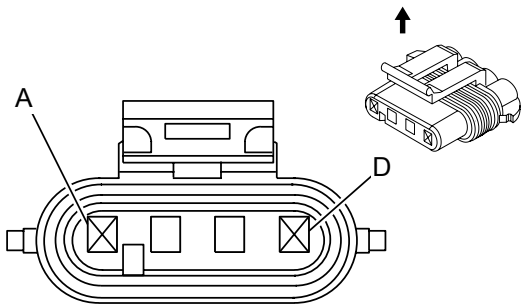

Connector Part Information

Harness Type: Engine

OEM Connector: 15355066

Service Connector: 15306329

Description: 2-Way F 150 Metri-Pack Series, Sealed (BG)

Terminal Part Information

Terminal Type ID	Terminated Lead	Diagnostic Test Probe	Terminal Removal Tool	Service Terminal	Tray Name	Core Crimp	Insulation Crimp
I	Not Required	J-35616-14 (GN)	Not Required	Not Required	Not Required	Not Required	Not Required

G13E Generator - Auxiliary X2 (LGH with KD9)

Pin	Size	Color	Circuit	Function	Terminal Type ID	Option
A	—	—	—	Not Occupied	—	—
B	0.8	OG	225	Generator Turn On Signal	I	—
C - D	—	—	—	Not Occupied	—	—

G24 Windshield Washer Pump

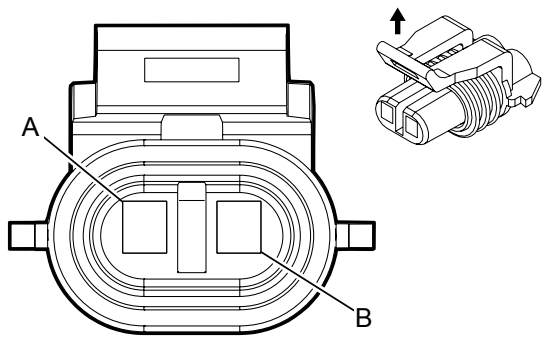

Connector Part Information

Harness Type: Instrument Panel

OEM Connector: 12052641

Service Connector: 13586114

Description: 2-Way F 150 Metri-Pack Series (BK)

Terminal Part Information

Terminal Type ID	Terminated Lead	Diagnostic Test Probe	Terminal Removal Tool	Service Terminal	Tray Name	Core Crimp	Insulation Crimp
I	Not Required	J-35616-14 (GN)	Not Required	Not Required	Not Required	Not Required	Not Required

G24 Windshield Washer Pump

Pin	Size	Color	Circuit	Function	Terminal Type ID	Option
A	0.5	OG	228	Windshield Washer Pump Control	I	—
B	0.5	BK	350	Ground	I	—

G33 Reductant Pump (LGH)

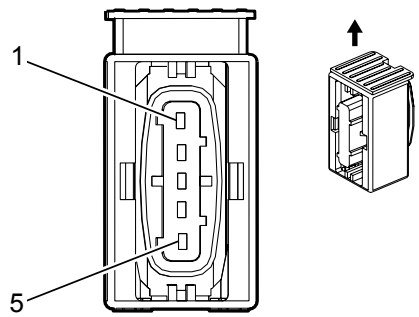

Connector Part Information

Harness: Reductant Jumper

OEM: 1928404276

Service: Service by Harness - See Part Catalog

Description: 5−Way F 2.8 Junior Power Timer Series, Sealed (BK)

Terminal Part Information

Terminal Type ID	Terminated Lead	Diagnostic Test Probe	Terminal Removal Tool	Service Terminal	Tray	Core Crimp	Insulation Crimp
I				4-964273-1	15	E	1
II				4-964286-1	16	E	1

G33 Reductant Pump (LGH)

Pin	Size	Color	Circuit	Function	Terminal Type ID	Option
1	1	BK	417	Ground	I	-
2	1	GY/WH	427	DEF Pump Heater Control	I	-
3	0.5	D-BU	437	DEF Smart Pump Control	-	-
4	0.5	TN	447	DEF Smart Pump Low Reference	-	-
5	0.5	GY	457	DEF Smart Pump Supply Voltage	-	-

G34 Evaporative Emission System Leak Detection Pump (LGH)

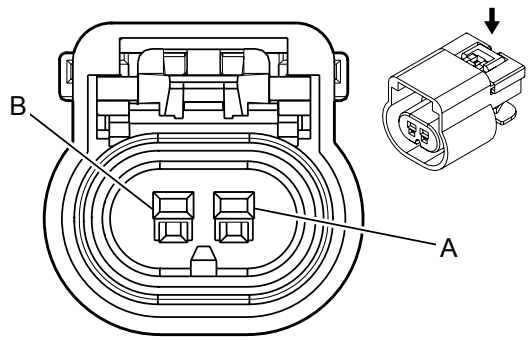

Connector Part Information

Harness Type: Engine Chassis

OEM Connector: 15326802

Service Connector: 13580114

Description: 2-Way F 150 Series, Sealed (BK)

Terminal Part Information

Terminal Type ID	Terminated Lead	Diagnostic Test Probe	Terminal Removal Tool	Service Terminal	Tray	Core Crimp	Insulation Crimp
I				12191819	8	2	1

G34 Evaporative Emission System Leak Detection Pump (LGH)

Pin	Size	Color	Circuit	Function	Terminal Type ID	Option
A	0.8	BK	1250	Ground	I	-
B	0.8	BN	141	Ignition Voltage	I	-

G34 Evaporative Emission System Leak Detection Pump (KO7 with UFM)

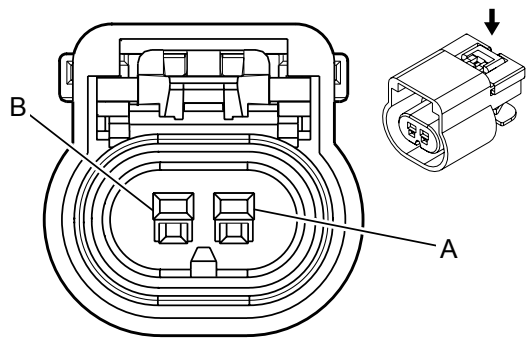

Connector Part Information

Harness Type: Engine

OEM Connector: 15326802

Service Connector: 13580114

Description: 2-Way F 150 Series, Sealed (BK)

Terminal Part Information

Terminal Type ID	Terminated Lead	Diagnostic Test Probe	Terminal Removal Tool	Service Terminal	Tray Name	Core Crimp	Insulation Crimp
I	Not Required	J-35616-14 (GN)	Not Required	Not Required	Not Required	Not Required	Not Required

G34 Evaporative Emission System Leak Detection Pump (KO7 with UFM)

Pin	Size	Color	Circuit	Function	Terminal Type ID	Option
A	0.8	BK	1250	Ground	I	—
B	0.8	BN	141	Run Ignition 3 Voltage	I	—

K9 Body Control Module X1

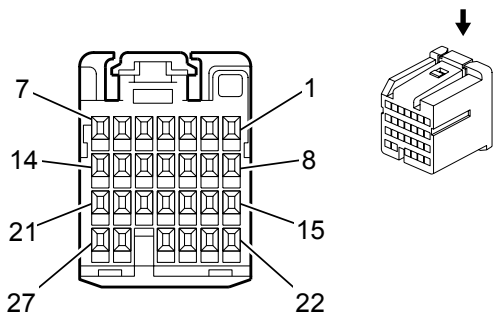

Connector Part Information

Harness Type: Instrument Panel

OEM Connector: 15482789

Service Connector: 88988838

Description: 27-Way F HIT Series (L-GN)

Terminal Part Information

Terminal Type ID	Terminated Lead	Diagnostic Test Probe	Terminal Removal Tool	Service Terminal	Tray Name	Core Crimp	Insulation Crimp
I	13575870	J-35616-64B (LT BU)	J-38125-12A	SNAC3-A021T-M0.64	Delphi 20	J	J

K9 Body Control Module X1

Pin	Size	Color	Circuit	Function	Terminal Type ID	Option
1	—	—	—	Not Occupied	—	—
2	0.35	PK	1020	Off/Run/Crank Ignition Voltage	I	—
3	0.35	GY	1884	Cruise Control Set/Coast/Resume/Accelerate Switch Signal	I	—
4	0.35	WH	530	Off/Run/Crank Ignition Voltage	I	—
5	0.35	L-GN	1715	Windshield Wiper Switch High Signal	I	—
6	0.35	L-GN	6818	Steering Wheel Resistor Ladder Signal 1	I	—
7	—	—	—	Not Occupied	—	—
8	0.35	TN/BK	6009	Windshield Wiper Switch Low Reference	I	—
9	0.35	L-BU	1714	Windshield Wiper Switch Low Signal	I	—

10 - 13	—	—	—	Not Occupied	—	—
14	0.35	PK	3	Run/Crank Ignition 1 Voltage	I	—
15	0.35	D-GN	663	Hazard Switch Left Turn Signal	I	—
16	0.35	TN	664	Hazard Switch Right Turn Signal	I	—
17	0.35	PK	1444	12 Volt Reference	I	—
18	0.35	YE	525	Headlamp Dimmer Switch Low Beam Signal	I	—
19	0.35	WH	111	Hazard Switch Signal	I	—
20	0.35	PU	5526	Tap Up/Tap Down Switch Signal	I	—
21	0.35	BN	4	Accessory Ignition Voltage	I	—
22	—	—	—	Not Occupied	—	—
23	0.35	L-BU	1788	Traction Control Switch Signal (1)	I	—
24	0.35	PK	94	Windshield Washer Switch Signal	I	—
25	0.35	YE	307	Headlamp Switch Flash To Pass Signal	I	—
26	0.5	TN/WH	816	Brake Transmission Shift Interlock Solenoid Control	I	—
27	—	—	—	Not Occupied	—	—

K9 Body Control Module X2

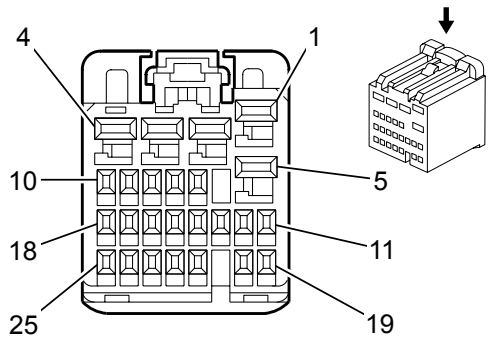

Connector Part Information

Harness Type: Instrument Panel

OEM Connector: 15482790

Service Connector: 88988839

Description: 25-Way F HIT Series (NA)

Terminal Part Information

Terminal Type ID	Terminated Lead	Diagnostic Test Probe	Terminal Removal Tool	Service Terminal	Tray Name	Core Crimp	Insulation Crimp
I	13575870	J-35616-64B (LT BU)	J-38125-12A	SNAC3-A021T-M0.64	Delphi 20	J	J
II	13575871	J-35616-35 (VT)	J-38125-12A	SNAC-A061T-M2.8	Delphi 20	E	A

K9 Body Control Module X2

Pin	Size	Color	Circuit	Function	Terminal Type ID	Option
1	0.8	OG	1732	Electronic Control Unit 12 Volt Reference (3)	II	—
2	0.5	RD/WH	2540	Battery Positive Voltage	II	—
3	0.5	BN/WH	230	Instrument Panel Lamp Dimming Control	II	—
4	—	—	—	Not Occupied	—	—
5	0.5	GY/BK	690	Courtesy Lamp Relay Control	II	—
	0.8	D-BU/WH	149	Courtesy Lamp Control		—
6 - 7	—	—	—	Not Occupied	—	—
8	0.35	L-BU	13	Headlamp Switch Park Lamp Signal	I	—
9 - 10	—	—	—	Not Occupied	—	—

11	0.35	WH	278	Ambient Light Sensor Signal	I	—
12	0.35	WH	103	Headlamp Switch On Signal	I	—
13 - 16	—	—	—	Not Occupied	—	—
17	0.35	D-GN	306	Headlamp Switch Headlamps Off Signal Control	I	—
18	0.35	D-BU/WH	149	Courtesy Lamp Control	I	—
19 - 20	—	—	—	Not Occupied	—	—
21	0.5	D-BU	6727	Vehicle Stability Control Off Switch Signal	I	—
22	0.35	D-BU	38	Backup Lamp Relay Control	I	—
23 - 24	—	—	—	Not Occupied	—	—
25	0.35	PU	328	Interior Lamp Defeat Switch Signal	I	—

K9 Body Control Module X3

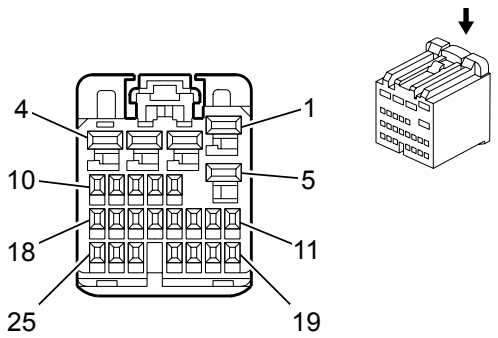

Connector Part Information

Harness Type: Instrument Panel

OEM Connector: 15482791

Service Connector: 88988840

Description: 25-Way F HIT Series (L-BU)

Terminal Part Information

Terminal Type ID	Terminated Lead	Diagnostic Test Probe	Terminal Removal Tool	Service Terminal	Tray Name	Core Crimp	Insulation Crimp
I	13575870	J-35616-64B (LT BU)	J-38125-12A	SNAC3-A021T-M0.64	Delphi 20	J	J
II	13575871	J-35616-35 (VT)	J-38125-12A	SNAC-A061T-M2.8	Delphi 20	E	A

K9 Body Control Module X3

Pin	Size	Color	Circuit	Function	Terminal Type ID	Option
1	0.8	BK/WH	351	Signal Ground	II	—
2	0.8	RD/WH	2140	Battery Positive Voltage	II	—
3	0.5	RD/WH	3840	Battery Positive Voltage	II	—
4	—	—	—	Not Occupied	—	—
5	0.8	BK/WH	351	Signal Ground	II	—
6 - 7	—	—	—	Not Occupied	—	—
8	0.5	TN/BK	2500	High Speed GMLAN Serial Data (+) (1)	I	—
9	0.5	TN	2501	High Speed GMLAN Serial Data (-) (1)	I	—

10	0.35	D-GN	5060	Low Speed GMLAN Serial Data	I	—
11	0.35	D-GN	44	Instrument Panel Lamp Dimmer Switch Signal	I	—
12	0.35	OG/WH	812	12 Volt Reference	I	—
13	0.5	TN	5380	Brake Position Sensor Signal	I	—
14	0.5	BN/WH	5382	Brake Position Sensor Low Reference	I	—
15	0.5	GY	5381	Brake Position Sensor 5 Volt Reference	I	—
16	0.5	TN/BK	2500	High Speed GMLAN Serial Data (+) (1)	I	—
17	0.5	TN	2501	High Speed GMLAN Serial Data (-) (1)	I	—
18	0.5	YE	6817	LED Backlight Dimming Control	I	—
19	0.5	L-BU	5986	Serial Data Communication Enable	I	—
20 - 21	—	—	—	Not Occupied	—	—
22	0.35	D-GN/WH	7158	Cruise Control Indicator Dimming Signal	I	—
23 - 25	—	—	—	Not Occupied	—	—

K9 Body Control Module X4

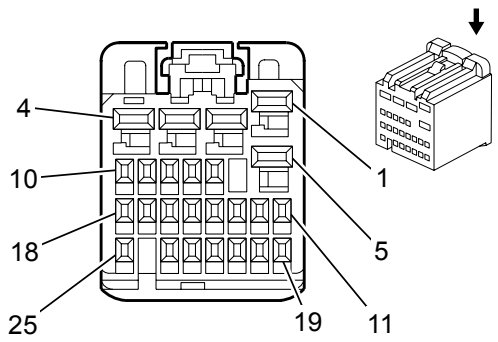

Connector Part Information

Harness Type: Instrument Panel

OEM Connector: 15482792

Service Connector: 88988841

Description: 25-Way F HIT Series (BK)

Terminal Part Information

Terminal Type ID	Terminated Lead	Diagnostic Test Probe	Terminal Removal Tool	Service Terminal	Tray Name	Core Crimp	Insulation Crimp
I	13575870	J-35616-64B (LT BU)	J-38125-12A	SNAC3-A021T-M0.64	Delphi 20	J	J
II	13575871	J-35616-35 (VT)	J-38125-12A	SNAC-A061T-M2.8	Delphi 20	E	A

K9 Body Control Module X4

Pin	Size	Color	Circuit	Function	Terminal Type ID	Option
1	0.8	RD/WH	2740	Battery Positive Voltage	II	—
2	0.8	RD/WH	3040	Battery Positive Voltage	II	—
3	0.8	RD/WH	2940	Battery Positive Voltage	II	—
4	0.8	RD/WH	2240	Battery Positive Voltage	II	—
5	0.8	D-BU/WH	1315	Right Front Turn Signal Lamp Control	II	—
6	0.35	D-GN	6134	Local Interconnect Network Serial Data Bus 3	I	—
7	0.35	YE	196	Windshield Wiper Motor Park Switch Signal	I	—
8 - 10	—	—	—	Not Occupied	—	—

8 - 10	—	—	—	Not Occupied	—	—
11	0.5	L-GN	1391	Left Front Door Lock Relay Control	I	—
12	0.35	YE	5187	Right Trailer Turn Signal Lamp Control	I	—
13	0.35	OG	5186	Left Trailer Turn Signal Lamp Control	I	—
14	—	—	—	Not Occupied	—	—
15	0.35	OG	2268	Windshield Washer Relay Control	I	—
16	0.35	TN/WH	1969	Headlamp High Beam Relay Control	I	—
17	0.5	PK/BK	109	Hood Ajar Switch Signal	I	—
18	—	—	—	Not Occupied	—	—
19	0.5	D-BU	5985	Accessory Wakeup Serial Data	I	—
20	0.5	L-BU	1344	Rear Compartment Lid Release Relay Control	I	—
21	0.35	YE	5199	Run/Crank Relay Coil Control	I	—
22	—	—	—	Not Occupied	—	—
23	0.35	PU	544	DRL Relay Control	I	—
24	0.5	L-BU	244	Passenger Door Lock Switch Lock Control	I	—
25	—	—	—	Not Occupied	—	—

K9 Body Control Module X5

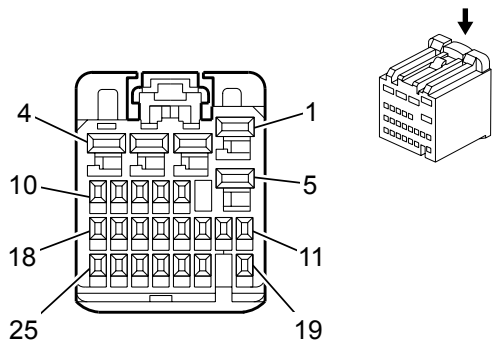

Connector Part Information

Harness Type: Instrument Panel

OEM Connector: 15480179

Service Connector: 88988837

Description: 25-Way F HIT Series (BN)

Terminal Part Information

Terminal Type ID	Terminated Lead	Diagnostic Test Probe	Terminal Removal Tool	Service Terminal	Tray Name	Core Crimp	Insulation Crimp
I	13575870	J-35616-64B (LT BU)	J-38125-12A	SNAC3-A021T-M0.64	Delphi 20	J	J
II	13575871	J-35616-35 (VT)	J-38125-12A	SNAC-A061T-M2.8	Delphi 20	C	A
III	13575871	J-35616-35 (VT)	J-38125-12A	SNAC-A061T-M2.8	Delphi 20	E	A

K9 Body Control Module X5

Pin	Size	Color	Circuit	Function	Terminal Type ID	Option
1	1	YE	618	Left Rear Turn Signal Lamp Control	II	—
2	1	D-GN	619	Right Rear Turn Signal Lamp Control	II	—
3	—	—	—	Not Occupied	—	—
4	0.8	L-BU/WH	1314	Left Front Turn Signal Lamp Control	III	—
5	0.5	WH	5065	Stop Lamp Relay Coil Control	III	—
6	0.35	L-BU/WH	6311	Cruise/ETC/TCC Brake Signal	I	—
7 - 10	—	—	—	Not Occupied	—	—
11	0.35	YE	43	Accessory Ignition Voltage	I	—

12	—	—	—	Not Occupied	—	—
13	0.35	OG	300	Run Ignition 3 Voltage	I	—
14	0.5	L-GN	24	Backup Lamp Control	I	—
15	0.5	PU	5531	Hood Closed Switch Signal	I	—
16	0.35	L-BU	1134	Park Brake Switch Signal	I	—
17	—	—	—	Not Occupied	—	—
18	0.35	TN	28	Horn Relay Control	I	—
19	0.5	YE	5810	Park Enable Signal	I	—
20	0.35	GY	91	Windshield Wiper Motor Relay Coil Control	I	—
21	0.35	TN	860	Front Windshield Wiper Switch High Signal	I	—
22	—	—	—	Not Occupied	—	—
23	0.35	PK/WH	1970	Headlamp Low Beam Relay Control	I	—
24	0.35	D-BU	45	Park Lamp Relay Control	I	—
25	—	—	—	Not Occupied	—	—

K9 Body Control Module X6

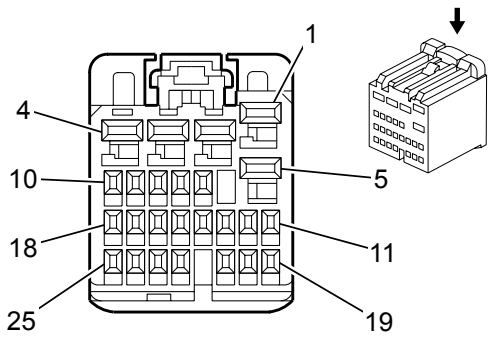

Connector Part Information

Harness Type: Instrument Panel

OEM Connector: 15482793

Service Connector: 88988842

Description: 25-Way F HIT Series (PK)

Terminal Part Information

Terminal Type ID	Terminated Lead	Diagnostic Test Probe	Terminal Removal Tool	Service Terminal	Tray Name	Core Crimp	Insulation Crimp
I	13575870	J-35616-64B (LT BU)	J-38125-12A	SNAC3-A021T-M0.64	Delphi 20	J	J
II	13575871	J-35616-35 (VT)	J-38125-12A	SNAC-A061T-M2.8	Delphi 20	E	A

K9 Body Control Module X6

Pin	Size	Color	Circuit	Function	Terminal Type ID	Option
1	—	—	—	Not Occupied	—	—
2	0.8	L-BU	1320	CHMSL Control	II	—
3 - 7	—	—	—	Not Occupied	—	—
8	0.35	TN/WH	746	Right Front Door Ajar Switch Signal	I	—
9	0.35	D-BU	245	Passenger Door Lock Switch Unlock Control	I	—
10	0.35	GY/BK	745	Left Front Door Ajar Switch Signal	I	—
11	—	—	—	Not Occupied	—	—
12	0.35	PK/BK	1303	Lift Gate Ajar Switch Signal (1)	I	—
13	—	—	—	Not Occupied	—	—

14	0.35	YE/BK	1181	Right Rear Door Open Switch Signal	I	—
15	—	—	—	Not Occupied	—	—
16	0.35	L-GN	1177	Right Front Door Open Switch Signal	I	—
17	—	—	—	Not Occupied	—	—
18	0.35	L-BU	244	Passenger Door Lock Switch Lock Control	I	—
19 - 21	—	—	—	Not Occupied	—	—
22	0.35	L-GN	5926	Rear Access Open Switch Signal	I	—
23 - 25	—	—	—	Not Occupied	—	—

K9 Body Control Module X7

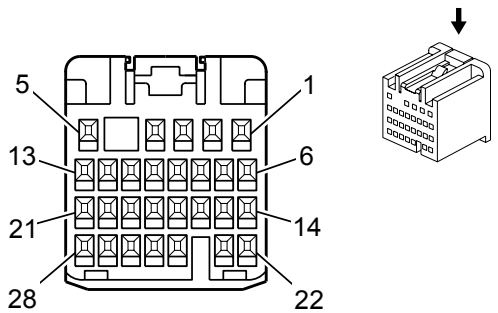

Connector Part Information

Harness Type: Instrument Panel

OEM Connector: 15466053

Service Connector: 88988806

Description: 28-Way F HIT Series (GY)

Terminal Part Information

Terminal Type ID	Terminated Lead	Diagnostic Test Probe	Terminal Removal Tool	Service Terminal	Tray Name	Core Crimp	Insulation Crimp
I	13575870	J-35616-64B (LT BU)	J-38125-12A	SNAC3-A021T-M0.64	Delphi 20	J	J

K9 Body Control Module X7

Pin	Size	Color	Circuit	Function	Terminal Type ID	Option
1	—	—	—	Not Occupied	—	—
2	0.5	YE	356	Driver Door Lock Relay Unlock Control	I	—
3 - 5	—	—	—	Not Occupied	—	—
6	0.5	YE	356	Driver Door Lock Relay Unlock Control	I	—
7	0.5	L-BU	244	Passenger Door Lock Switch Lock Control	I	—
8	—	—	—	Not Occupied	—	—
9	0.5	L-BU	244	Passenger Door Lock Switch Lock Control	I	—
10	—	—	—	Not Occupied	—	—
11	0.5	OG/BK	781	Driver Door Lock Switch Unlock Signal	I	—
12	0.5	PK/BK	780	Driver Door Lock Switch Lock Signal	I	—

13 - 22	—	—	—	Not Occupied	—	—
23	0.5	TN	126	Left Front Door Open Switch Signal	I	—
24	0.5	L-GN	66	A/C Request Signal	I	—
25 - 28	—	—	—	Not Occupied	—	—

K17 Electronic Brake Control Module (Without JL4)

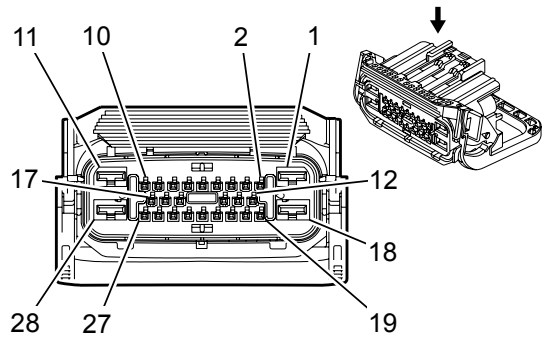

Connector Part Information

Harness Type: Chassis

OEM Connector: 13628862

Service Connector: 19149286

Description: 28-Way F 0.64, 6.3 Series, Sealed (BK)

Terminal Part Information

Terminal Type ID	Terminated Lead	Diagnostic Test Probe	Terminal Removal Tool	Service Terminal	Tray Name	Core Crimp	Insulation Crimp
I	13578883	J-35616-64B (LT BU)	J-38125-215A	SAITS-A03T-M064	Yazaki 14	9	9
II	13578926	J-35616-42 (RD)	J-38125-11A	7116-4142-02	Yazaki 10	D	3
III	13579767	J-35616-42 (RD)	J-38125-11A	7116-4142-02	Yazaki 10	A	3

K17 Electronic Brake Control Module (Without JL4)

Pin	Size	Color	Circuit	Function	Terminal Type ID	Option
1	3	RD/WH	1640	Battery Positive Voltage	III	—
2	0.5	TN/BK	2500	High Speed GMLAN Serial Data (+) (1)	I	—
3	0.5	TN/BK	2500	High Speed GMLAN Serial Data (+) (1)	I	—
4 - 10	—	—	—	Not Occupied	—	—
11	3	BK	2150	Ground	III	—
12	0.5	TN	2501	High Speed GMLAN Serial Data (-) (1)	I	—
13	0.5	TN	2501	High Speed GMLAN Serial Data (-) (1)	I	—

14	0.5	D-GN/WH	817	Vehicle Speed Signal	I	—
15	0.5	L-BU	830	Wheel Speed Sensor Signal Left Front	I	—
16	0.5	YE	873	Left Front Wheel Speed Sensor Low Reference	I	—
17	—	—	—	Not Occupied	—	—
18	5	RD/BK	442	Battery Positive Voltage	II	—
19	0.5	L-BU	5986	Serial Data Communication Enable	I	—
20	0.5	YE/BK	1827	Vehicle Speed Signal	I	—
21 - 25	—	—	—	Not Occupied	—	—
26	0.5	D-GN	872	Wheel Speed Sensor Signal Right Front	I	—
27	0.5	TN	833	Wheel Speed Sensor Low Reference Right Front	I	—
28	5	BK	2150	Ground	II	—

K17 Electronic Brake Control Module (JL4)

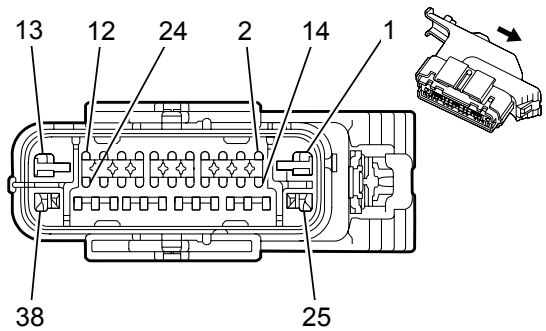

Connector Part Information

Harness Type: Chassis

OEM Connector: 13528146

Service Connector: 19178085

Description: 38-Way F 0.64, 280 GT Series, Sealed (BK)

Terminal Part Information

Terminal Type ID	Terminated Lead	Diagnostic Test Probe	Terminal Removal Tool	Service Terminal	Tray Name	Core Crimp	Insulation Crimp
I	13575403	J-35616-4A (PU)	J-38125-553	15304720	Delphi 19	4	5
II	13575408	J-35616-4A (PU)	J-38125-553	Not Available	Not Available	Not Available	Not Available
III	13578883	J-35616-64B (LT BU)	J-38125-215A	SAITS-A03T-M064	Yazaki 14	9	9
IV	13578926	J-35616-42 (RD)	J-38125-11A	7116-4142-02	Yazaki 10	D	3

K17 Electronic Brake Control Module (JL4)

Pin	Size	Color	Circuit	Function	Terminal Type ID	Option
1	5	BK	2150	Ground	IV	—
2	0.5	WH	883	Wheel Speed Sensor Low Reference Right Rear	III	—
3	0.5	BN	882	Wheel Speed Sensor Signal Right Rear	III	—
4	0.5	TN	884	Wheel Speed Sensor Signal Left Rear	III	—
5	0.5	OG	885	Wheel Speed Sensor Low Reference Left Rear	III	—
6	0.5	TN	833	Wheel Speed Sensor Low Reference Right Front	III	—

7	0.5	YE	6046	Steering Angle Sensor Phase A Signal	III	—
8	0.5	TN	6048	Steering Angle Sensor Phase C Signal	III	—
9	0.5	L-GN	6043	Steering Angle Sensor Signal	III	—
10 - 11	—	—	—	Not Occupied	—	—
12	0.5	L-BU	5986	Serial Data Communication Enable	III	—
13	5	RD/BK	442	Battery Positive Voltage	IV	—
14 - 15	—	—	—	Not Occupied	—	—
16	0.5	OG/BK	6045	Steering Angle Sensor Low Reference	III	—
17	0.5	D-GN	872	Wheel Speed Sensor Signal Right Front	III	—
18	—	—	—	Not Occupied	—	—
19	0.5	GY/BK	1337	Yaw Rate Sensor 5 Volt Reference	III	—
20	0.5	D-BU	6047	Steering Angle Sensor Phase B Signal	III	—
21	0.5	WH/BK	6436	CAN Bus Low Terminated Serial Data	III	—
22	—	—	—	Not Occupied	—	—
23	0.5	TN	2501	High Speed GMLAN Serial Data (-) (1)	III	—
24	0.5	TN	2501	High Speed GMLAN Serial Data (-) (1)	III	—
25	3	BK	2150	Ground	I	—
	3	BK	2150		II	—
26 - 27	—	—	—	Not Occupied	—	—

28	0.5	L-BU	830	Wheel Speed Sensor Signal Left Front	III	—
29	0.5	YE	873	Left Front Wheel Speed Sensor Low Reference	III	—
30	0.5	BK/PU	7499	Yaw Rate Sensor Low Reference	III	—
31	0.5	GY	6044	Steering Angle Sensor 5 Volt Reference	III	—
32	0.5	D-GN/WH	817	Vehicle Speed Signal	III	—
33	0.5	BN/WH	6437	CAN Bus High Terminated Serial Data	III	—
34 - 35	—	—	—	Not Occupied	—	—
36	0.5	TN/BK	2500	High Speed GMLAN Serial Data (+) (1)	III	—
37	0.5	TN/BK	2500	High Speed GMLAN Serial Data (+) (1)	III	—
38	3	RD/WH	1640	Battery Positive Voltage	II	—
	3	RD/WH	1640		I	—

K18 Compass Module (U80)

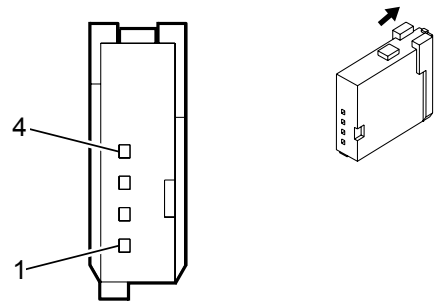

Connector Part Information

Harness Type: Headliner

OEM Connector: 13820711

Service Connector: 19300398

Description: 4-Way F 0.64 Series (BK)

Terminal Part Information

Terminal Type ID	Terminated Lead	Diagnostic Test Probe	Terminal Removal Tool	Service Terminal	Tray Name	Core Crimp	Insulation Crimp
I	Not Required	J-35616-64B (LT BU)	Not Required	Not Required	Not Required	Not Required	Not Required

K18 Compass Module (U80)

Pin	Size	Color	Circuit	Function	Terminal Type ID	Option
1	0.35	BN	441	Run Ignition 3 Voltage	I	—
2	0.35	BK/WH	351	Signal Ground	I	—
3	0.35	D-GN	6134	Local Interconnect Network Serial Data Bus 3	I	—
4	—	—	—	Not Occupied	—	—

K20 Engine Control Module X1 (L20, L96, or LC8)

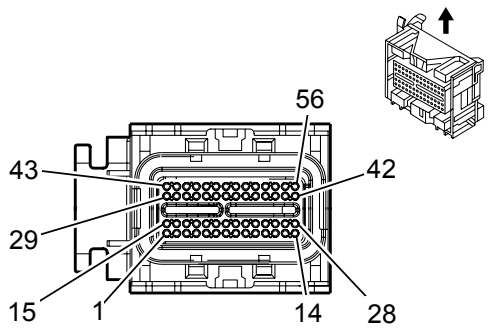

Connector Part Information

Harness Type: Engine

OEM Connector: 13510837

Service Connector: 88988373

Description: 56-Way F 0.64 Series, Sealed (BU with BU Terminal Position Assurance)

Terminal Part Information

Terminal Type ID	Terminated Lead	Diagnostic Test Probe	Terminal Removal Tool	Service Terminal	Tray Name	Core Crimp	Insulation Crimp
I	13575812	J-35616-64B (LT BU)	J-38125-213	Not Available	Not Available	Not Available	Not Available

K20 Engine Control Module X1 (L20, L96, or LC8)

Pin	Size	Color	Circuit	Function	Terminal Type ID	Option
1	—	—	—	Not Occupied	—	—
2	0.5	L-BU	1162	Accelerator Pedal Position Signal (2)	I	—
3	0.8	YE	492	Mass Air Flow Sensor Signal	I	—
4 - 7	—	—	—	Not Occupied	—	—
8	0.8	L-BU	7564	Humidity Sensor Signal	I	—
9	—	—	—	Not Occupied	—	—
10	0.5	D-BU	1161	Accelerator Pedal Position Signal (1)	I	—
11	0.8	YE/WH	3200	Throttle Inlet Absolute Pressure Sensor Signal	I	—
12	0.8	OG/BK	380	A/C Refrigerant Pressure Sensor Signal	I	—

13	0.8	TN	5514	A/C Refrigerant Pressure Sensor Low Reference	I	—
14 - 15	—	—	—	Not Occupied	—	—
16	0.5	TN	1274	Accelerator Pedal Position 5 Volt Reference (2)	I	—
17	—	—	—	Not Occupied	—	—
18	0.5	D-BU	5985	Accessory Wakeup Serial Data	I	—
19	0.5	PK	439	Run/Crank Ignition 1 Voltage	I	—
20	0.5	RD/WH	440	Battery Positive Voltage	I	—
21 - 23	—	—	—	Not Occupied	—	—
24	0.5	WH/BK	1164	Accelerator Pedal Position 5 Volt Reference (1)	I	—
25	0.8	GY/WH	3201	Throttle Inlet Absolute Pressure Sensor 5 Volt Reference	I	—
26	0.8	GY	2700	A/C Pressure Sensor 5 Volt Reference	I	—
27	0.5	YE/BK	625	Starter Enable Relay Control	I	—
28	0.5	D-GN/WH	465	Fuel Pump Primary Relay Control	I	—
29	0.5	TN/BK	2500	High Speed GMLAN Serial Data (+) (1)	I	—
30	0.5	PU	1272	Accelerator Pedal Position Low Reference (2)	I	—
31	0.8	TN	2760	Intake Air Temperature Sensor Low Reference	I	—
32	0.8	L-BU/BK	6813	Coolant Temperature Sensor 2 Low Reference	I	—
33	0.5	L-BU/WH	6311	Cruise/ETC/TCC Brake Signal	I	—

34	0.5	OG/BK	1786	Transmission Park/Neutral Signal (1)	I	—
35 - 37	—	—	—	Not Occupied	—	—
38	0.5	BN	1271	Accelerator Pedal Position Low Reference (1)	I	—
39	—	—	—	Not Occupied	—	—
40	0.5	YE	5991	Powertrain Relay Coil Control	I	—
41 - 42	—	—	—	Not Occupied	—	—
43	0.5	TN	2501	High Speed GMLAN Serial Data (-) (1)	I	—
44	—	—	—	Not Occupied	—	—
45	0.8	TN/WH	472	Intake Air Temperature Sensor Signal	I	—
46	0.8	L-GN	2032	Coolant Temperature Sensor Signal	I	—
47	0.5	OG	225	Generator Turn On Signal	I	—
48 - 49	—	—	—	Not Occupied	—	—
50	0.5	YE/BK	1827	Vehicle Speed Signal	I	—
	0.5	D-GN/WH	817			—
51	—	—	—	Not Occupied	—	—
52	0.5	BN/WH	419	Check Engine Indicator Control	I	—
53	0.5	D-GN/WH	459	A/C Compressor Clutch Relay Control	I	—
54 - 55	—	—	—	Not Occupied	—	—
56	0.5	WH	1310	EVAP Canister Vent Solenoid Control	I	—

K20 Engine Control Module X1 (LGH)

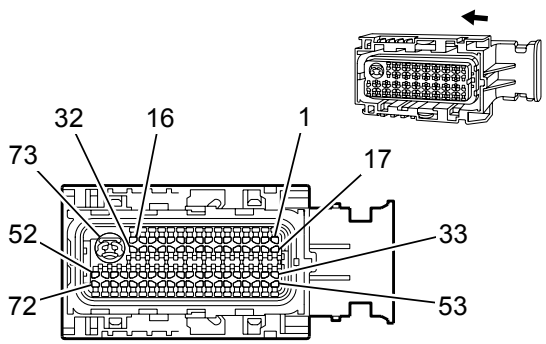

Connector Part Information

Harness Type: Engine

OEM Connector: 15509846

Service Connector: 13574782

Description: 73-Way F 0.64, 2.8 Series, Sealed (BK with BU Terminal Position Assurance)

Terminal Part Information

Terminal Type ID	Terminated Lead	Diagnostic Test Probe	Terminal Removal Tool	Service Terminal	Tray Name	Core Crimp	Insulation Crimp
I	13575812	J-35616-64B (LT BU)	J-38125-213	Not Available	Not Available	Not Available	Not Available
II	13579770	J-35616-35 (VT)	J-38125-11A	7116-4152-02	Yazaki 9	A	5

K20 Engine Control Module X1 (LGH)

Pin	Size	Color	Circuit	Function	Terminal Type ID	Option
1	0.8	BN/WH	3100	DEF Dosing Valve Low Control	I	—
2	0.8	BN	3099	DEF Dosing Valve High Control	I	—
3	0.5	D-BU	3105	DEF Smart Pump Control	I	—
4	0.5	D-GN/WH	465	Fuel Pump Primary Relay Control	I	—
5	0.5	YE/BK	625	Starter Enable Relay Control	I	—
6	0.5	D-GN	3101	DEF Reverting Valve High Control	I	—
7	0.5	BN/WH	6783	Exhaust Gas Temperature Sensor 2 Low Reference	I	—
8	—	—	—	Not Occupied	—	—

8	—	—	—	Not Occupied	—	—
9	0.5	L-BU/WH	6311	Cruise/ETC/TCC Brake Signal	I	—
10 - 13	—	—	—	Not Occupied	—	—
14	0.5	GY	2365	Cooling Fan Speed 5 Volt Reference	I	—
15	0.5	GY/BK	2931	Mass Air Flow Sensor Low Reference	I	—
16	0.5	L-BU/WH	6288	Induction Air Temperature Sensor Low Reference	I	—
17	0.5	BN/WH	419	Check Engine Indicator Control	I	—
18	0.8	PU	2927	Hydrocarbon Injector Low Control	I	—
19	0.5	WH/BK	2366	Cooling Fan Control Relay Speed Signal	I	—
20	0.5	D-BU	507	Wait To Start Indicator Control	I	—
21	0.5	WH/BK	2366	Cooling Fan Control Relay Speed Signal	I	—
22	0.5	TN	3657	Exhaust Gas Temperature Sensor 3 Low Reference	I	—
23 - 24	—	—	—	Not Occupied	—	—
25	0.5	OG/BK	1786	Transmission Park/Neutral Signal (1)	I	—
26	0.5	D-BU	5985	Accessory Wakeup Serial Data	I	—
27	0.5	TN	3661	Exhaust Gas Temperature Sensor 5 Low Reference	I	—
28	0.5	TN	2759	Fuel Tank Pressure Sensor Low Reference	I	—
29	0.5	BN	3108	DEF Pressure Sensor Signal	I	—

30	0.5	GY	3106	DEF Pressure Sensor 5 Volt Reference	I	—
31	0.5	TN	3107	DEF Pressure Sensor Low Reference	I	—
32	—	—	—	Not Occupied	—	—
33	0.8	D-BU	2926	Hydrocarbon Injector High Control	I	—
34	0.5	D-GN/WH	459	A/C Compressor Clutch Relay Control	I	—
35	0.5	TN	3104	DEF Smart Pump Low Reference	I	—
36	0.5	TN	5514	A/C Refrigerant Pressure Sensor Low Reference	I	—
37	—	—	—	Not Occupied	—	—
38	0.5	L-BU	5377	Exhaust Gas Temperature Sensor (2)	I	—
39	0.5	L-BU	1162	Accelerator Pedal Position Signal (2)	I	—
40	0.5	L-BU	6289	Induction Air Temperature Sensor Signal	I	—
41	0.5	D-BU	6053	Exhaust Pressure Sensor Signal (1)	I	—
42	0.5	WH/BK	1164	Accelerator Pedal Position 5 Volt Reference (1)	I	—
43	0.5	GY	6054	Exhaust Pressure Sensor 5 Volt Reference (1)	I	—
44	0.5	YE/BK	6055	Exhaust Pressure Sensor Low Reference (1)	I	—
45	0.8	L-GN	7494	High Speed GMLAN Serial Data (-)(3)	I	—
46	0.5	TN	2501	High Speed GMLAN Serial Data (-) (1)	I	—

47	—	—	—	Not Occupied	—	—
48	0.5	PK	439	Run/Crank Ignition 1 Voltage	I	—
49	0.5	YE	492	Mass Air Flow Sensor Signal	I	—
50	0.8	OG	225	Generator Turn On Signal	I	—
51	0.5	PU	1272	Accelerator Pedal Position Low Reference (2)	I	—
52	—	—	—	Not Occupied	—	—
53	0.5	BK	3102	DEF Reverting Valve Low Control	I	—
54	0.5	GY	3103	DEF Smart Pump Control	I	—
55	0.5	BN	1271	Accelerator Pedal Position Low Reference (1)	I	—
56	0.5	D-BU/WH	3660	Exhaust Gas Temperature Sensor 5 Signal	I	—
57	0.5	L-GN	5378	Exhaust Gas Temperature Sensor (3)	I	—
58	0.5	PU	1589	Primary Fuel Level Sensor Signal	I	—
59	0.5	OG/BK	380	A/C Refrigerant Pressure Sensor Signal	I	—
60	—	—	—	Not Occupied	—	—
61	0.5	D-BU	1161	Accelerator Pedal Position Signal (1)	I	—
62	0.5	TN	1274	Accelerator Pedal Position 5 Volt Reference (2)	I	—
63	0.5	GY	2700	A/C Pressure Sensor 5 Volt Reference	I	—

64	—	—	—	Not Occupied	—	—
65	0.8	D-GN	7493	High Speed GMLAN Serial Data (+)(3)	I	—
66	0.5	TN/BK	2500	High Speed GMLAN Serial Data (+) (1)	I	—
67	0.5	RD/WH	440	Battery Positive Voltage	I	—
68	0.5	YE	5991	Powertrain Relay Coil Control	I	—
69	0.5	D-BU	2364	Cooling Fan Speed Signal	I	—
70	0.8	GY	23	Generator Field Duty Cycle Signal	I	—
71	0.5	BN/WH	6141	Cooling Fan Speed Low Reference	I	—
72	0.5	OG/BK	6399	Replicated TOS Signal	I	—
73	3	PK	1439	Run/Crank Ignition 1 Voltage	II	—

K20 Engine Control Module X2 (L20, L96, or LC8)

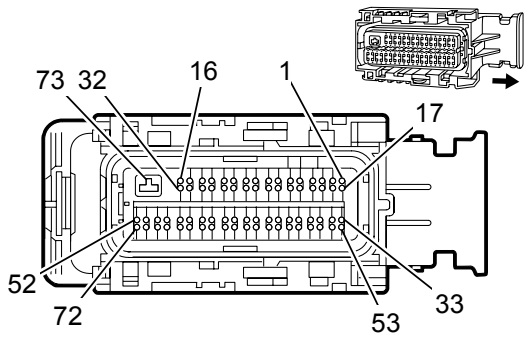

Connector Part Information

Harness Type: Engine

OEM Connector: 15499466

Service Connector: 88988931

Description: 73-Way F 0.64, 2.8 Series, Sealed (BK with BK Terminal Position Assurance)

Terminal Part Information

Terminal Type ID	Terminated Lead	Diagnostic Test Probe	Terminal Removal Tool	Service Terminal	Tray Name	Core Crimp	Insulation Crimp
I	13575812	J-35616-64B (LT BU)	J-38125-213	Not Available	Not Available	Not Available	Not Available
II	13579770	J-35616-35 (VT)	J-38125-11A	7116-4152-02	Yazaki 9	A	5

K20 Engine Control Module X2 (L20, L96, or LC8)

Pin	Size	Color	Circuit	Function	Terminal Type ID	Option
1	0.8	PU	2121	Ignition Control (1)	I	—
2	0.5	TN	1744	Fuel Injector Control (1)	I	—
3	0.5	D-BU/WH	878	Fuel Injector Control (8)	I	—
4	0.5	OG/BK	877	Fuel Injector Control (7)	I	—
5	0.5	L-GN/BK	1745	Fuel Injector Control (2)	I	—
6	0.5	YE/BK	846	Fuel Injector Control (6)	I	—
7	0.5	TN/WH	845	Fuel Injector Control (5)	I	—

8	0.5	L-BU/BK	844	Fuel Injector Control (4)	I	—
9	0.5	PK/BK	1746	Fuel Injector Control (3)	I	—
10	—	—	—	Not Occupied	—	—
11	0.8	PU	5284	Camshaft Phaser Intake Solenoid (1)	I	—
12 - 14	—	—	—	Not Occupied	—	—
15	0.5	YE	581	Throttle Actuator Control Open	I	—
16	0.5	BN	582	Throttle Actuator Control Close	I	—
17	0.8	PU/WH	2128	Ignition Control (8)	I	—
18	0.8	D-GN/WH	2124	Ignition Control (4)	I	—
19	0.8	BN/WH	2130	Ignition Control Low Reference Bank 2	I	—
20	0.8	GY/BK	6272	Crankshaft 60X Sensor Low Reference	I	—
21 - 23	—	—	—	Not Occupied	—	—
24	0.8	BN	6266	Camshaft CAM W Ground	I	—
25	0.8	BK	2755	Oil Pressure Sensor Low Reference	I	—
26 - 27	—	—	—	Not Occupied	—	—
28	0.8	PK	1339	Run/Crank Ignition 1 Voltage	I	—
29	0.8	TN	2199	Camshaft Phaser Solenoid Low Reference	I	—
30 - 32	—	—	—	Not Occupied	—	—
33	0.8	OG	2127	Ignition Control (7)	I	—

34	0.8	D-GN	2125	Ignition Control (5)	I	—
35	0.8	BN	2129	Ignition Control Low Reference Bank 1	I	—
36	0.8	PU/WH	6270	Crankshaft 60X Sensor 5 Volt Reference	I	—
37 - 39	—	—	—	Not Occupied	—	—
40	0.8	D-BU	6259	Camshaft CAM W Control	I	—
41	0.8	GY	2705	Oil Pressure Sensor 5 Volt Reference	I	—
42	—	—	—	Not Occupied	—	—
43	0.5	GY	2701	Throttle Position Sensor 5 Volt Reference	I	—
44	0.5	TN	2752	Throttle Position Sensor Low Reference	I	—
45	0.5	D-GN	485	Throttle Position Sensor Signal (1)	I	—
46	—	—	—	Not Occupied	—	—
47	0.8	TN	1664	Heated Oxygen Sensor Low Signal Bank 1 Sensor (1)	I	—
48	0.8	TN	1667	Heated Oxygen Sensor Low Signal Bank 2 Sensor (1)	I	—
49	0.8	GY	1716	Knock Sensor Low Reference (1)	I	—
50	0.8	GY	2303	Knock Sensor Low Reference (2)	I	—
51	—	—	—	Not Occupied	—	—
52	0.8	L-GN	3212	Heated Oxygen Sensor Heater Low Control Bank 2 Sensor (1)	I	—
53	0.8	OG/WH	2122	Ignition Control (2)	I	—

54	0.8	L-BU/WH	2126	Ignition Control (6)	I	—
55	0.8	L-BU	2123	Ignition Control (3)	I	—
56	0.8	WH/BK	6271	Crankshaft 60X Sensor Signal	I	—
57 - 59	—	—	—	Not Occupied	—	—
60	0.8	D-BU/WH	6265	Camshaft CAM W Signal	I	—
61	0.8	TN/WH	331	Oil Pressure Sensor Signal	I	—
62 - 66	—	—	—	Not Occupied	—	—
67	0.8	PU/WH	1665	Heated Oxygen Sensor High Signal Bank 1 Sensor (1)	I	—
68	0.8	PU	1666	Heated Oxygen Sensor High Signal Bank 2 Sensor (1)	I	—
69	0.8	D-BU	496	Knock Sensor Signal (1)	I	—
70	0.8	L-BU	1876	Knock Sensor Signal (2)	I	—
71	—	—	—	Not Occupied	—	—
72	0.8	GY/WH	3113	Heated Oxygen Sensor Heater Low Control Bank 1 Sensor (1)	I	—
73	3	BK/WH	1551	Signal Ground	II	—

K20 Engine Control Module X2 (LGH)

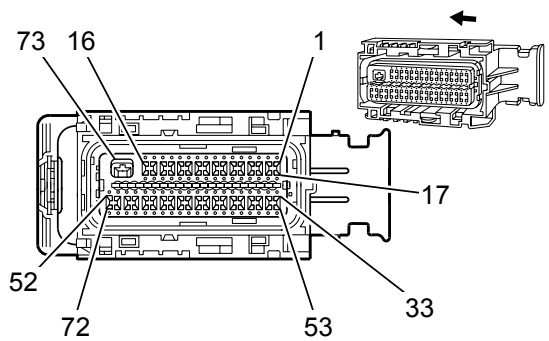

Connector Part Information

Harness Type: Engine

OEM Connector: 34566-4673

Service Connector: 88988931

Description: 73-Way F 0.64, 2.8 Series, Sealed (BK with BK Terminal Position Assurance)

Terminal Part Information

Terminal Type ID	Terminated Lead	Diagnostic Test Probe	Terminal Removal Tool	Service Terminal	Tray Name	Core Crimp	Insulation Crimp
I	13579770	J-35616-35 (VT)	J-38125-11A	7116-4152-02	Yazaki 9	A	5
II	19301532	J-35616-64B (LT BU)	J-38125-213	Not Available	Not Available	Not Available	Not Available
III	19331732	J-35616-64A (LT BU)	J-38125-12A	Not Available	Not Available	Not Available	Not Available

K20 Engine Control Module X2 (LGH)

Pin	Size	Color	Circuit	Function	Terminal Type ID	Option
1 - 2	—	—	—	Not Occupied	—	—
3	0.5	YE	2928	Fuel Metering Valve High Control	III	LGH
4	0.8	VT/WH	2530	Fuel Rail Pressure Solenoid Control	II	LGH
5	0.5	BK	2929	Fuel Metering Valve Low Control	III	LGH
6	0.5	WH	5931	Variable Nozzle Turbo Solenoid Low Signal	III	LGH
7	0.5	TN	2752	Throttle Position Sensor Low Reference	III	LGH
8	0.5	TN	2753	Exhaust Gas Recirculation Sensor Low Reference	III	LGH

9	0.5	BN	1174	Oil Level Switch Signal	III	LGH
10	0.5	BN	6782	Exhaust Gas Temperature Sensor 1 Low Reference	III	LGH
11 - 12	—	—	—	Not Occupied	—	—
13	0.8	BN/WH	4901	Direct Fuel Injector (DFI) High Voltage Supply Cylinder 1	II	LGH
14	0.8	TN/WH	4907	Direct Fuel Injector (DFI) High Voltage Supply Cylinder 7	II	LGH
15	0.8	L-BU	4804	Direct Fuel Injector (DFI) High Voltage Control Cylinder 4	II	LGH
16	0.8	BN	4801	Direct Fuel Injector (DFI) High Voltage Control Cylinder 1	II	LGH
17	0.8	BK/WH	451	Signal Ground	II	LGH
18	0.8	BK/WH	451	Signal Ground	II	LGH
19	0.8	YE	2834	Fuel Rail Pressure Solenoid Low Reference	II	LGH
20	—	—	—	Not Occupied	—	—
21	0.8	BK/WH	451	Signal Ground	II	LGH
22	0.5	BU	5930	Variable Nozzle Turbo Solenoid High Signal	III	LGH
23 - 24	—	—	—	Not Occupied	—	—
25	0.5	OG/BK	5929	Variable Nozzle Turbo Position Sensor Low Reference	III	LGH
26	0.5	L-BU/BK	6813	Coolant Temperature Sensor 2 Low Reference	III	LGH
27	0.5	YE/BK	1827	Vehicle Speed Signal	III	LGH
28	—	—	—	Not Occupied	—	—

29	0.8	L-BU/WH	4904	Direct Fuel Injector (DFI) High Voltage Supply Cylinder 4	II	LGH
30	0.8	VT/WH	4906	Direct Fuel Injector (DFI) High Voltage Supply Cylinder 6	II	LGH
31	0.8	TN	4807	Direct Fuel Injector (DFI) High Voltage Control Cylinder 7	II	LGH
32	0.8	VT	4806	Direct Fuel Injector (DFI) High Voltage Control Cylinder 6	II	LGH
33 - 40	—	—	—	Not Occupied	—	—
41	0.5	BK	2755	Oil Pressure Sensor Low Reference	III	LGH
42 - 46	—	—	—	Not Occupied	—	—
47	0.5	GY	2702	Exhaust Gas Recirculation 5 Volt Reference (2)	III	LGH
48 - 65	—	—	—	Not Occupied	—	—
66	0.5	TN	5928	Variable Nozzle Turbo Position Sensor 5 Volt Reference	III	LGH
67	0.5	VT/WH	6270	Crankshaft 60X Sensor 5 Volt Reference	III	LGH
68 - 72	—	—	—	Not Occupied	—	—
73	3	BK/WH	451	Signal Ground	I	LGH

K20 Engine Control Module X3 (L20/L96/LC8)

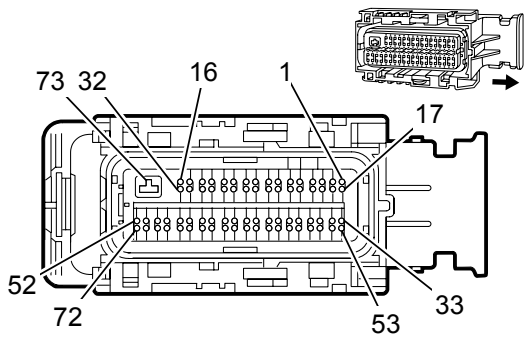

Connector Part Information

Harness Type: Engine

OEM Connector: 15497996

Service Connector: 88988372

Description: 73-Way F 0.64, 2.8 Series, Sealed (BK with GY Terminal Position Assurance)

Terminal Part Information

Terminal Type ID	Terminated Lead	Diagnostic Test Probe	Terminal Removal Tool	Service Terminal	Tray Name	Core Crimp	Insulation Crimp
I	13575812	J-35616-64B (LT BU)	J-38125-213	Not Available	Not Available	Not Available	Not Available

K20 Engine Control Module X3 (L20/L96/LC8)

Pin	Size	Color	Circuit	Function	Terminal Type ID	Option
1 - 9	—	—	—	Not Occupied	—	—
10	0.5	D-GN/WH	428	EVAP Canister Purge Solenoid Control	I	—
11 - 15	—	—	—	Not Occupied	—	—
16	0.8	OG/WH	3223	Heated Oxygen Sensor Heater Low Control Bank 2 Sensor (2)	I	—
17	0.5	GY	23	Generator Field Duty Cycle Signal	I	—
18 - 21	—	—	—	Not Occupied	—	—
22	0.5	BN	5360	Brake Apply Sensor Low Reference	I	—
23 - 26	—	—	—	Not Occupied	—	—
27	0.5	TN	2759	Fuel Tank Pressure Sensor Low Reference	I	—
28	0.8	GY	2704	Manifold Absolute Pressure Sensor 5 Volt Reference	I	—

29	0.8	OG/BK	469	Manifold Absolute Pressure Sensor Low Reference	I	—
30	0.8	TN	2761	Coolant Temperature Sensor Low Reference	I	—
31	—	—	—	Not Occupied	—	—
32	0.8	GY/WH	3122	Heated Oxygen Sensor Heater Low Control Bank 1 Sensor (2)	I	—
33	—	—	—	Not Occupied	—	—
34	0.8	WH	1579	Fuel Temperature/Composition Signal	I	—
35 - 37	—	—	—	Not Occupied	—	—
38	0.5	WH	5359	Brake Apply Sensor Control	I	—
39 - 42	—	—	—	Not Occupied	—	—
43	0.5	GY	2709	Fuel Tank Pressure Sensor 5 Volt Reference	I	—
44	—	—	—	Not Occupied	—	—
45	0.8	L-GN	432	Manifold Absolute Pressure Sensor Signal	I	—
46	0.8	YE	410	Engine Coolant Temperature Sensor Signal	I	—
47 - 54	—	—	—	Not Occupied	—	—
55	0.5	OG/BK	6399	Replicated TOS Signal	I	—
56 - 57	—	—	—	Not Occupied	—	—
58	0.5	YE	5361	Brake Apply Sensor Signal	I	—
59 - 62	—	—	—	Not Occupied	—	—
63	0.5	D-GN	890	Fuel Tank Pressure Sensor Signal	I	—
64	0.5	PU	1589	Primary Fuel Level Sensor Signal	I	—

65	0.8	PU	1670	Heated Oxygen Sensor High Signal Bank 2 Sensor (2)	I	—
66	0.8	TN	1671	Heated Oxygen Sensor Low Signal Bank 2 Sensor (2)	I	—
67	0.8	PU/WH	1668	Heated Oxygen Sensor High Signal Bank 1 Sensor (2)	I	—
68	0.8	TN/WH	1669	Heated Oxygen Sensor Low Signal Bank 1 Sensor (2)	I	—
69 - 73	—	—	—	Not Occupied	—	—

K20 Engine Control Module X3 (LGH)

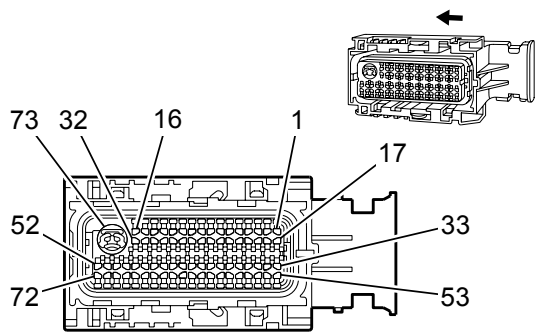

Connector Part Information

Harness Type: Engine

OEM Connector: 34566-4693

Service Connector: 88988372

Description: 73-Way F 0.64, 2.8 Series, Sealed (BK with GY Terminal Position Assurance)

Terminal Part Information

Terminal Type ID	Terminated Lead	Diagnostic Test Probe	Terminal Removal Tool	Service Terminal	Tray Name	Core Crimp	Insulation Crimp
I	13579770	J-35616-35 (VT)	J-38125-11A	7116-4152-02	Yazaki 9	A	5
II	19301532	J-35616-64B (LT BU)	J-38125-213	Not Available	Not Available	Not Available	Not Available
III	19331732	J-35616-64A (LT BU)	J-38125-12A	Not Available	Not Available	Not Available	Not Available

K20 Engine Control Module X3 (LGH)

Pin	Size	Color	Circuit	Function	Terminal Type ID	Option
1	—	—	—	Not Occupied	—	—
2	0.5	BU/YE	6861	Water In Fuel Sensor Signal	III	LGH
3	—	—	—	Not Occupied	—	—
4	0.5	TN/WH	331	Oil Pressure Sensor Signal	III	LGH
5	0.5	YE	5361	Brake Apply Sensor Signal	III	LGH
6	0.5	VT/WH	7584	Exhaust Gas Recirculation Temperature Sensor 1 Control	III	LGH
7	0.5	BU	7583	Exhaust Gas Recirculation Temperature Sensor 2 Control	III	LGH
8	0.5	L-GN	2032	Coolant Temperature Sensor Signal	III	LGH

9	0.5	BN/WH	5763	Exhaust Gas Recirculation Valve Sensor Signal	III	LGH
10	0.5	YE	5947	Variable Nozzle Turbo Position Sensor Signal	III	LGH
11	0.5	YE	1578	Fuel Temperature Signal	III	LGH
12	0.5	BN	3681	Charge Air Cooler Outlet Temperature Sensor Signal	III	LGH
13	0.5	TN	3680	Charge Air Cooler Outlet Temperature Sensor Low Reference	III	LGH
14	0.5	TN	2917	Fuel Rail Pressure Sensor 5 Volt Reference	III	LGH
15	0.5	WH	5359	Brake Apply Sensor Control	III	LGH
16	0.5	GY	2704	Manifold Absolute Pressure Sensor 5 Volt Reference	III	LGH
17	0.5	BU	6863	Water In Fuel Sensor Low Reference	III	LGH
18	0.5	BU	5277	Exhaust Gas Temperature Sensor (1)	III	LGH
19	0.5	D-GN	485	Throttle Position Sensor Signal (1)	III	LGH
20	0.5	YE	2918	Fuel Rail Pressure Sensor Signal	III	LGH
21	0.5	L-GN	432	Manifold Absolute Pressure Sensor Signal	III	LGH
22 - 23	—	—	—	Not Occupied	—	—
24	0.5	YE	410	Engine Coolant Temperature Sensor Signal	III	LGH
25 - 26	—	—	—	Not Occupied	—	—
27	0.5	BN/GY	7072	Sensor Fuel Temperature 1 Signal	III	LGH

28	0.5	D-GN	3683	Charge Air Cooler Inlet Temperature Sensor Signal	III	LGH
29	0.5	TN/BK	3682	Charge Air Cooler Inlet Temperature Sensor Low Reference	III	LGH
30	0.5	GY	2705	Oil Pressure Sensor 5 Volt Reference	III	LGH
31	0.5	BU	6259	Camshaft CAM W Control	III	LGH
32	0.5	GY	2701	Throttle Position Sensor 5 Volt Reference	III	LGH
33 - 35	—	—	—	Not Occupied	—	—
36	0.5	OG/BK	2919	Fuel Rail Pressure Sensor Low Reference	III	LGH
37	0.5	OG/BK	469	Manifold Absolute Pressure Sensor Low Reference	III	LGH
38	0.5	BN/WH	5360	Brake Apply Sensor Low Reference	III	LGH
39	—	—	—	Not Occupied	—	—
40	0.5	TN	2761	Coolant Temperature Sensor Low Reference	III	LGH
41	0.5	L-BU	7564	Humidity Sensor Signal	III	LGH
42 - 43	—	—	—	Not Occupied	—	—
44	0.5	GY/BK	5765	Fuel Filter Pressure Switch Signal	III	LGH
45	—	—	—	Not Occupied	—	—
46	0.5	BN/WH	7073	Sensor Fuel Temperature 1 Low Reference	III	LGH
47	—	—	—	Not Occupied	—	—
48	0.5	BN	6062	Fuel Temperature Sensor Low Reference	III	LGH

49	0.8	GY/WH	4908	Direct Fuel Injector (DFI) High Voltage Supply Cylinder 8	II	LGH
50	0.8	D-BU/WH	4902	Direct Fuel Injector (DFI) High Voltage Supply Cylinder 2	II	LGH
51	0.8	D-BU	4802	Direct Fuel Injector (DFI) High Voltage Control Cylinder 2	II	LGH
52	0.8	L-GN	4805	Direct Fuel Injector (DFI) High Voltage Control Cylinder 5	II	LGH
53	—	—	—	Not Occupied	—	—
54	0.5	L-GN/BK	5746	Exhaust Gas Recirculation Valve Motor Low Signal	III	LGH
55	0.5	OG/BK	5764	Exhaust Gas Recirculation Valve Motor High Signal	III	LGH
56	75	BN	582	Throttle Actuator Control Close	II	LGH
57	75	YE	581	Throttle Actuator Control Open	II	LGH
58 - 59	—	—	—	Not Occupied	—	—
60	0.5	GY/BK	6272	Crankshaft 60X Sensor Low Reference	III	LGH
61	0.5	WH/BK	6271	Crankshaft 60X Sensor Signal	III	LGH
62 - 64	—	—	—	Not Occupied	—	—
65	0.5	BU/WH	6265	Camshaft CAM W Signal	III	LGH
66	0.5	BN	6266	Camshaft CAM W Ground	III	LGH
67	0.5	BN	6274	Exhaust Gas Recirculation Temperature Sensor Low Reference	III	LGH
68	0.5	WH	6275	Exhaust Gas Recirculation Temperature Sensor 2 Low Reference	III	LGH
69	0.8	D-GN/WH	4903	Direct Fuel Injector (DFI) High Voltage Supply Cylinder 3	II	LGH

70	0.8	L-GN/WH	4905	Direct Fuel Injector (DFI) High Voltage Supply Cylinder 5	II	LGH
71	0.8	D-GN	4803	Direct Fuel Injector (DFI) High Voltage Control Cylinder 3	II	LGH
72	0.8	GY	4808	Direct Fuel Injector (DFI) High Voltage Control Cylinder 8	II	LGH
73	3	BK/WH	451	Signal Ground	I	LGH

K34 Glow Plug Control Module X1 (LGH)

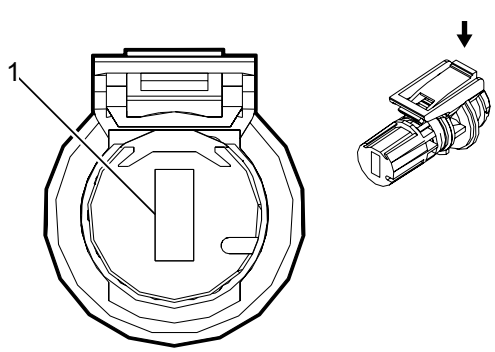

Connector Part Information

Harness Type: Positive Battery Cable

OEM Connector: 13779103

Service Connector: Service by Harness - See Part Catalog

Description: 1-Way F 8.0 LSK Series, Sealed (BK)

Terminal Part Information

Terminal Type ID	Terminated Lead	Diagnostic Test Probe	Terminal Removal Tool	Service Terminal	Tray Name	Core Crimp	Insulation Crimp
I	Not Required	J-35616-43 (RD)	Not Required	Not Required	Not Required	Not Required	Not Required

K34 Glow Plug Control Module X1 (LGH)

Pin	Size	Color	Circuit	Function	Terminal Type ID	Option
1	8	RD	1	Unfused Battery Positive Voltage	I	—

K34 Glow Plug Control Module X2 (LGH)

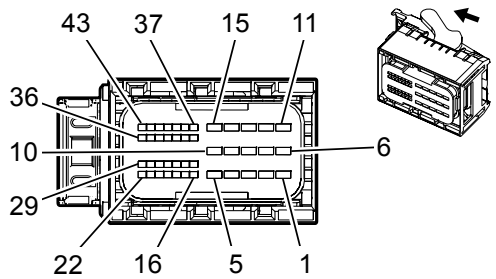

Connector Part Information

Harness Type: Engine

OEM Connector: 10001042

Service Connector: 13576417

Description: 43-Way F 1.2, 2.8 Series, Sealed

Terminal Part Information

Terminal Type ID	Terminated Lead	Diagnostic Test Probe	Terminal Removal Tool	Service Terminal	Tray Name	Core Crimp	Insulation Crimp
I	13576372	J-35616-4A (PU)	J-38125-556	Not Available	Not Available	Not Available	Not Available
II	13580008	J-35616-16 (LT GN)	J-38125-21	Not Available	Not Available	Not Available	Not Available

K34 Glow Plug Control Module X2 (LGH)

Pin	Size	Color	Circuit	Function	Terminal Type ID	Option
1	2	GY/WH	3675	DEF Pump Heater Control	I	LGH
2	2	WH/YE	1584	Glow Plug Control (4)	I	LGH
3	2	YE	1583	Glow Plug Control (3)	I	LGH
4	2	VT/WH	1582	Glow Plug Control (2)	I	LGH
5	2	VT	1581	Glow Plug Control (1)	I	LGH
6	2	VT/WH	3199	DEF Pressure Line Heater Control	I	LGH
7	1.25	TN	3673	Nox Sensor (1) Ground	I	LGH

8	2	BK/WH	351	Signal Ground	I	LGH
9	1.25	TN/BK	3671	Nox Sensor (2) Ground	I	LGH
10	2	BK	550	Ground	I	LGH
11	2	OG/WH	3677	DEF Reservoir Heater Control	I	LGH
12	2	GN	1585	Glow Plug Control (5)	I	LGH
13	2	GN/WH	1586	Glow Plug Control (6)	I	LGH
14	2	PK	1587	Glow Plug Control (7)	I	LGH
15	2	PK/WH	1588	Glow Plug Control (8)	I	LGH
16	0.5	D-GN	2924	Intake Air Heater Current Feedback Signal	II	LGH
17	0.5	VT	2922	Intake Air Heater Digital Response Signal	II	LGH
18	0.5	TN	2501	High Speed GMLAN Serial Data (-) (1)	II	LGH
19	0.5	TN	2501	High Speed GMLAN Serial Data (-) (1)	II	LGH
20 - 22	—	—	—	Not Occupied	—	—
23	0.5	TN	2925	Intake Air Heater Voltage Feedback Signal	II	LGH
24	0.5	BK	2923	Intake Air Heater Temperature Signal	II	LGH
25	0.5	TN/BK	2500	High Speed GMLAN Serial Data (+) (1)	II	LGH
26	0.5	TN/BK	2500	High Speed GMLAN Serial Data (+) (1)	II	LGH

27 - 29	—	—	—	Not Occupied	—	—
30	0.5	OG/BK	2921	Intake Air Heater Switch On/Off Signal	II	LGH
31	0.5	YE	2920	Intake Air Heater Heart Beat Signal	II	LGH
32	—	—	—	Not Occupied	—	—
33	0.5	PK	2139	Run/Crank Ignition 1 Voltage	II	LGH
34 - 36	—	—	—	Not Occupied	—	—
37	0.5	VT	3674	Nox Sensor (1) Control	II	LGH
38	0.5	GY	3672	Nox Sensor (2) Control	II	LGH
39	—	—	—	Not Occupied	—	—
40	0.5	BU	5985	Accessory Wakeup Serial Data	II	LGH
41 - 43	—	—	—	Not Occupied	—	—

K36 Inflatable Restraint Sensing and Diagnostic Module

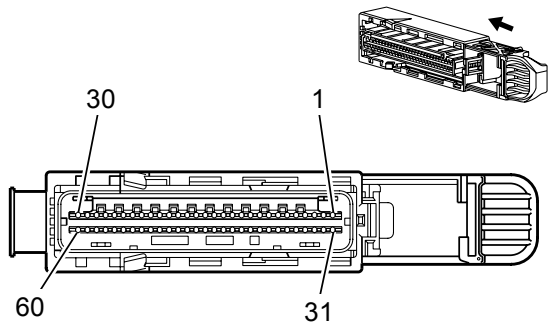

Connector Part Information

Harness Type: Body

OEM Connector: 13549639

Service Connector: 19180985

Description: 60-Way F 64 GET Series, Sealed (YE w/ BK Slide Lock)

Terminal Part Information

Terminal Type ID	Terminated Lead	Diagnostic Test Probe	Terminal Removal Tool	Service Terminal	Tray	Core Crimp	Insulation Crimp
I	13505341	J-35616-64B (L-BU)	J-38125-553	1393365-2	A	Not Available	Not Available

K36 Inflatable Restraint Sensing and Diagnostic Module

Pin	Size	Color	Circuit	Function	Terminal Type ID	Option
1	0.5	BK/WH	1751	Ground	I	-
2	0.35	D-GN	5060	Low Speed GMLAN Serial Data	I	-
3	0.35	D-GN	5060	Low Speed GMLAN Serial Data	I	-
4	0.5	PK	3022	Steering Wheel Module – Stage 2 – Low Control	I	Light Duty
5	0.5	WH	3023	Steering Wheel Module – Stage 2 – High Control	I	Light Duty
6	0.5	GY	3027	Instrument Panel Module – Stage 2 – High Control	I	Light Duty with AK5
7	0.5	PU	3026	Instrument Panel Module – Stage 2 – Low Control	I	Light Duty with AK5
8	0.5	BN	3020	Steering Wheel Module – Stage 1 – Low Control	I	-
9	0.5	TN	3021	Steering Wheel Module – Stage 1 – High Control	I	-
10	0.5	YE	3025	Instrument Panel Module – Stage 1 – High Control	I	-
11	0.5	OG	3024	Instrument Panel Module – Stage 1 – Low Control	I	-
12	0.5	PK	5020	Roof Rail Module – Left – Low Control	I	ASF
13	0.5	PU/WH	5019	Roof Rail Module – Left – High Control	I	ASF

14	0.5	YE/BK	5021	Roof Rail Module – Right – High Control	I	ASF
15	0.5	WH/BK	5022	Roof Rail Module – Right – Low Control	I	ASF
16–21	-	-	-	Not Occupied	-	-
22	0.5	L-BU	7015	Roof Rail Module – Right Rear High Control	I	Passenger with ASF
23	0.5	TN/BK	7016	Roof Rail Module – Right Rear Low Control	I	Passenger with ASF
24	0.5	OG/BK	2119	Seat Belt Pretensioner – Left – Low Control	I	Light Duty
25	0.5	TN/WH	2118	Seat Belt Pretensioner – Left – High Control	I	Light Duty
26	0.5	L-GN	2116	Seat Belt Pretensioner – Right – High Control	I	Light Duty
27	0.5	OG	2117	Seat Belt Pretensioner – Right – Low Control	I	Light Duty
28	0.5	PK	5057	Low Reference	I	-
29	0.5	L-GN	5055	Seat Position Sensor – Left – Signal	I	Light Duty
30	0.5	L-BU	5056	Seat Position Sensor – Right – Signal	I	Light Duty
31	0.5	RD/WH	3440	Battery Positive Voltage	I	-
32	0.35	PK	1139	Ignition Voltage	I	-
33	0.5	PK	353	Instrument Panel Module Suppression Indicator Control	I	C99
34	0.5	TN/PK	371	Instrument Panel Module Disable Switch – Signal	I	C99
35	-	-	-	Not Occupied	-	-
36	0.5	D-BU/WH	6619	Low Reference	I	-
37	-	-	-	Not Occupied	-	-
38	0.5	BN/WH	6618	Discriminating Sensor – Signal	I	-
39	-	-	-	Not Occupied	-	-
40	0.5	PU/WH	6628	Low Reference	I	ASF
41	0.5	WH/BK	6629	Low Reference	I	ASF
42	0.5	WH	2132	Left Front Side Impact Sensing Module Signal	I	ASF
43	0.5	D-GN	2134	Right Front Side Impact Sensing Module Signal	I	ASF
44	0.5	L-BU	6622	Left Rear Side Impact Sensing Module Signal	I	Passenger with ASF
45	0.5	L-BU/WH	6626	Right Rear Side Impact Sensing Module Signal	I	Passenger with ASF with E24/YA2
46	0.5	L-GN/BK	6623	Low Reference	I	Passenger with ASF

47	0.5	PK/BK	6627	Low Reference	I	Passenger with ASF with E24/YA2
48–57	-	-	-	Not Occupied	-	-
58	0.5	YE/BK	5229	Rollover Sensor High Signal	I	ASF
59	0.5	TN/WH	238	Seat Belt Switch – Left	I	-
60	0.5	OG	1362	Seat Belt Switch – Right – Signal	I	Light Duty

K36 Inflatable Restraint Sensing and Diagnostic Module X1

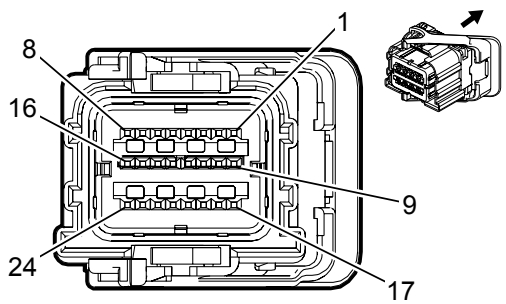

Connector Part Information

Harness Type: Body

OEM Connector: 13887360

Service Connector: 19328755

Description: 24-Way F 0.64 Series, Sealed (YE)

Terminal Part Information

Terminal Type ID	Terminated Lead	Diagnostic Test Probe	Terminal Removal Tool	Service Terminal	Tray Name	Core Crimp	Insulation Crimp
I	19328872	J-35616-64B (LT BU)	J-38125-11A	Not Available	Not Available	Not Available	Not Available

K36 Inflatable Restraint Sensing and Diagnostic Module X1

Pin	Size	Color	Circuit	Function	Terminal Type ID	Option
1	0.5	WH	3023	Steering Wheel Module Stage 2 High Control	I	—
2	0.5	PK	3022	Steering Wheel Module Stage 2 Low Control	I	—
3	0.5	BN	3020	Steering Wheel Module Stage 1 Low Control	I	—
4	0.5	TN	3021	Steering Wheel Module Stage 1 High Control	I	—
5	0.5	YE	3025	Passenger IP Module Stage 1 High Control	I	—
6	0.5	OG	3024	Passenger IP Module Stage 1 Low Control	I	—
7	0.5	PU	3026	Passenger IP Module Stage 2 Low Control	I	—
8	0.5	GY	3027	Passenger IP Module Stage 2 High Control	I	—

9	0.5	RD/WH	3440	Battery Positive Voltage	I	—
10 - 12	—	—	—	Not Occupied	—	—
13	0.5	PK	353	Passenger IP Module Suppression Indicator Control	I	—
14	0.5	TN/BK	371	Passenger IP Module Disable Switch Signal	I	—
15	0.35	D-GN	5060	Low Speed GMLAN Serial Data	I	—
16	—	—	—	Not Occupied	—	—
17	0.35	PK	1139	Run/Crank Ignition 1 Voltage	I	—
18	—	—	—	Not Occupied	—	—
19	0.5	BK/WH	1751	Signal Ground	I	—
20 - 24	—	—	—	Not Occupied	—	—

K36 Inflatable Restraint Sensing and Diagnostic Module X2

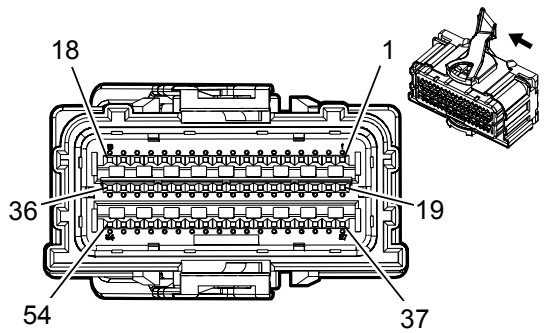

Connector Part Information

Harness Type: Body

OEM Connector: 13887359

Service Connector: 19119424

Description: 54-Way F 0.64 Series, Sealed (YE)

Terminal Part Information

Terminal Type ID	Terminated Lead	Diagnostic Test Probe	Terminal Removal Tool	Service Terminal	Tray Name	Core Crimp	Insulation Crimp
I	19328872	J-35616-64B (LT BU)	J-38125-11A	Not Available	Not Available	Not Available	Not Available

K36 Inflatable Restraint Sensing and Diagnostic Module X2

Pin	Size	Color	Circuit	Function	Terminal Type ID	Option
1 - 10	—	—	—	Not Occupied	—	—
11	0.5	TN/BK	7016	Right Rear Head Curtain Module Low Control	I	—
12	0.5	L-BU	7015	Right Rear Head Curtain Module High Control	I	—
13	0.5	BN	2137	Left Front Side Impact Module High Control	I	—
14	0.5	YE/BK	2138	Left Front Side Impact Module Low Control	I	—
15	0.5	L-GN	2136	Right Front Side Impact Module Low Control	I	—
16	0.5	TN/WH	2135	Right Front Side Impact Module High Control	I	—
17	0.5	PU/WH	5019	Left Front Head Curtain Module High Control	I	—

18	0.5	PK	5020	Left Front Head Curtain Module Low Control	I	—
19	0.5	WH	2132	Left Front Side Impact Sensing Module Signal	I	—
20	0.5	PU/WH	6628	Left Front Side Impact Sensing Module Low Reference	I	—
21	0.5	WH/BK	6629	Right Front Side Impact Sensing Module Low Reference	I	—
22	0.5	D-GN	2134	Right Front Side Impact Sensing Module Signal	I	—
23 - 24	—	—	—	Not Occupied	—	—
25	0.5	D-BU/WH	6619	Middle Front Discriminating Sensor Low Reference	I	—
26	0.5	BN/WH	6618	Middle Front Discriminating Sensor Signal	I	—
27	0.5	D-GN/WH	6620	Left Middle Side Impact Sensing Module Signal	I	—
28	0.5	GY/BK	6621	Left Middle Side Impact Sensing Module Low Reference	I	—
29	0.5	L-GN/WH	6625	Right Middle Side Impact Sensing Module Low Reference	I	—
30	0.5	L-BU/BK	6624	Right Middle Side Impact Sensing Module Signal	I	—
31 - 36	—	—	—	Not Occupied	—	—
37	0.5	TN/WH	2118	Driver Seat Belt Pretensioner High Control	I	—
38	0.5	OG/BK	2119	Driver Seat Belt Pretensioner Low Control	I	—
39	0.5	OG	2117	Passenger Seat Belt Pretensioner Low Control	I	—
40	0.5	L-GN	2116	Passenger Seat Belt Pretensioner High Control	I	—

41	0.5	TN/WH	238	Driver Seat Belt Switch Signal	I	—
42	—	—	—	Not Occupied	—	—
43	0.5	PK	5057	Seat Position Switch Low Reference	I	—
44	0.5	L-BU	1361	Passenger Seat Belt Switch Low Reference	I	—
45	0.5	OG	1362	Passenger Seat Belt Switch Signal	I	—
46 - 52	—	—	—	Not Occupied	—	—
53	0.5	YE/BK	5021	Right Front Head Curtain Module High Control	I	—
54	0.5	WH/BK	5022	Right Front Head Curtain Module Low Control	I	—

K41R Rear Parking Assist Control Module X1 (UD7)

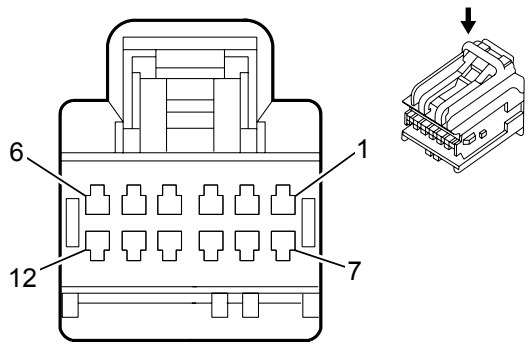

Connector Part Information

Harness Type: Instrument Panel

OEM Connector: 13784026

Service Connector: 13578574

Description: 12-Way F 0.64 Series (BK)

Terminal Part Information

Terminal Type ID	Terminated Lead	Diagnostic Test Probe	Terminal Removal Tool	Service Terminal	Tray Name	Core Crimp	Insulation Crimp
I	13575550	J-35616-16 (LT GN)	J-38125-559	15445905	Delphi 23	J	J

K41R Rear Parking Assist Control Module X1 (UD7)

Pin	Size	Color	Circuit	Function	Terminal Type ID	Option
1	0.5	RD/WH	840	Battery Positive Voltage	I	—
2 - 5	—	—	—	Not Occupied	—	—
6	0.35	D-GN	5060	Low Speed GMLAN Serial Data	I	—
7	0.5	BK/WH	351	Signal Ground	I	—
8 - 12	—	—	—	Not Occupied	—	—

K41R Rear Parking Assist Control Module X2 (UD7)

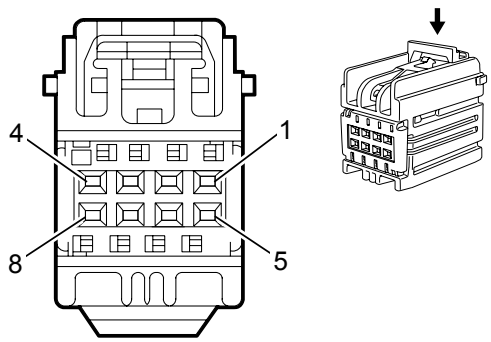

Connector Part Information

Harness Type: Instrument Panel

OEM Connector: 13551679

Service Connector: 19115653

Description: 8-Way F YESC Kaizen Series (L-GY)

Terminal Part Information

Terminal Type ID	Terminated Lead	Diagnostic Test Probe	Terminal Removal Tool	Service Terminal	Tray Name	Core Crimp	Insulation Crimp
I	Not Required	J-35616-64B (LT BU)	Not Required	Not Required	Not Required	Not Required	Not Required

K41R Rear Parking Assist Control Module X2 (UD7)

Pin	Size	Color	Circuit	Function	Terminal Type ID	Option
1	0.5	PU	2378	Right Rear Corner Object Sensor Signal	I	—
2	0.5	D-GN	2377	Right Rear Middle Object Sensor Signal	I	—
3	0.5	OG	2376	Left Rear Middle Object Sensor Signal	I	—
4	0.5	D-BU	2374	Object Sensor Control	I	—
5	0.5	YE	2375	Left Rear Corner Object Sensor Signal	I	—
6 - 7	—	—	—	Not Occupied	—	—
8	0.5	GY	2379	Object Sensor Low Reference	I	—

K64 Content Theft Deterrent Control Module

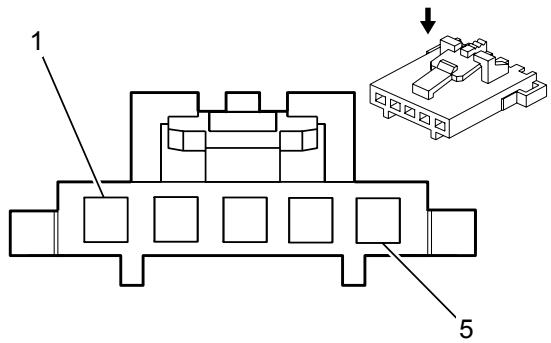

Connector Part Information

Harness Type: Steering Column

OEM Connector: 15383337

Service Connector: 88988353

Description: 5-Way F SL Series (BK)

Terminal Part Information

Terminal Type ID	Terminated Lead	Diagnostic Test Probe	Terminal Removal Tool	Service Terminal	Tray	Core Crimp	Insulation Crimp
I	Pending	J-35616-64B (L-BU)	J-38125-213	16-02-1110	20	H	H

K64 Content Theft Deterrent Control Module

Pin	Size	Color	Circuit	Function	Terminal Type ID	Option
1	0.35	RD/WH	540	Battery Positive Voltage	I	-
2	0.35	BN	4	Ignition Voltage	I	-
3	0.35	BK/WH	351	Ground	I	-
4	0.35	D-GN	5060	Low Speed GMLAN Serial Data	I	-
5	-	-	-	Not Occupied	-	-

K71 Transmission Control Module

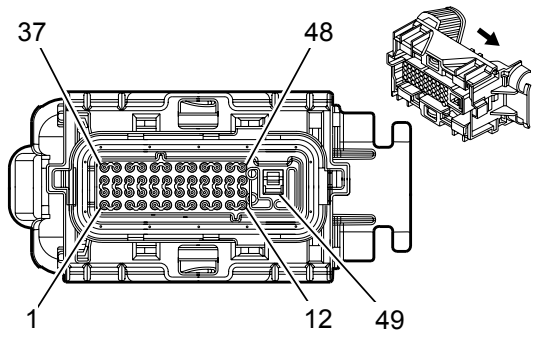

Connector Part Information

Harness Type: Engine

OEM Connector: 15463921

Service Connector: 88987979

Description: 49-Way F GT 280 Micro-Pack 64 Series, Sealed (BK)

Terminal Part Information

Terminal Type ID	Terminated Lead	Diagnostic Test Probe	Terminal Removal Tool	Service Terminal	Tray	Core Crimp	Insulation Crimp
I	Pins: 1–2, 5–7, 11, 15–16, 19–20, 25, 31, 37–38, 41–42 – 13575528	J-35616-64B (L-BU)	J-38125-21	15359541	4	M	M
II	13575386	J-35616-4A (PU)	J-38125-553	15392777	23	D	5

K71 Transmission Control Module

Pin	Size	Color	Circuit	Function	Terminal Type ID	Option
1	0.5	BN	418	Torque Converter Clutch Pulse Width Modulation (TCC PWM) Solenoid Valve Control	I	-
2	0.5	L-GN	1222	Shift Solenoid A Valve Control	I	-
3	0.5	OG/BK	1230	Automatic Transmission Input Speed Sensor (AT ISS) High Signal	I	-
4	-	-	-	Not Occupied	-	-
5	0.5	OG/BK	6399	Replicated TOS Signal	I	-
6	0.5	TN	2501	High Speed GMLAN Serial Data Bus (−)	I	-
7	0.5	TN/BK	2500	High Speed GMLAN Serial Data Bus (+)	I	-
8–10	-	-	-	Not Occupied	-	-
11	0.5	D-BU	5985	Accessory Wakeup Serial Data	I	-
12–14	-	-	-	Not Occupied	-	-

15	0.5	TN	2501	High Speed GMLAN Serial Data Bus (−)	I	-
16	0.5	L-GN/BK	822	Vehicle Speed Sensor (VSS) Low Signal	I	-
17	0.35	L-BU/WH	1229	PC Solenoid Valve Low Control	I	Sol. A
18	-	-	-	Not Occupied	-	-
19	0.5	TN/BK	2500	High Speed GMLAN Serial Data Bus (+)	I	-
20	0.5	YE/BK	1223	Shift Solenoid B Valve Control	I	-
21–22	-	-	-	Not Occupied	-	-
23	0.35	GY	773	Transmission Range Switch Signal C	I	-
24	-	-	-	Not Occupied	-	-
25	0.5	TN/BK	422	Torque Converter Clutch (TCC) Solenoid Valve Control	I	-
26–28	-	-	-	Not Occupied	-	-
29	0.35	TN/WH	771	Transmission Range Switch Signal A	I	-
30	0.35	TN	452	Low Reference	I	-
31	0.5	PK	2139	Ignition Voltage	I	-
32	0.35	RD/WH	1840	Battery Positive Voltage	I	-
33–34	-	-	-	Not Occupied	-	-
35	0.35	YE/BK	1227	Transmission Fluid Temperature (TFT) Sensor Signal	I	-
36	-	-	-	Not Occupied	-	-
37	0.5	TN	2501	High Speed GMLAN Serial Data Bus (−)	I	-
38	0.5	TN/BK	2500	High Speed GMLAN Serial Data Bus (+)	I	-
39	0.35	WH	776	Transmission Range Switch Signal P	I	-
40	0.35	OG/BK	1228	PC Solenoid Valve High Control	I	Sol. A
41	0.5	PU/WH	821	Vehicle Speed Sensor (VSS) High Signal	I	-
42	0.5	L-BU/WH	6311	Torque Converter Clutch (TCC) Brake Signal	I	-
43–44	-	-	-	Not Occupied	-	-
45	0.35	D-BU/WH	1231	Low Reference	I	-
46	0.35	YE	772	Transmission Range Switch Signal B	I	-
47–48	-	-	-	Not Occupied	-	-
49	2	BK/WH	1551	Ground	-	-

K73 Telematics Communication Interface Control Module X1 (UE1)

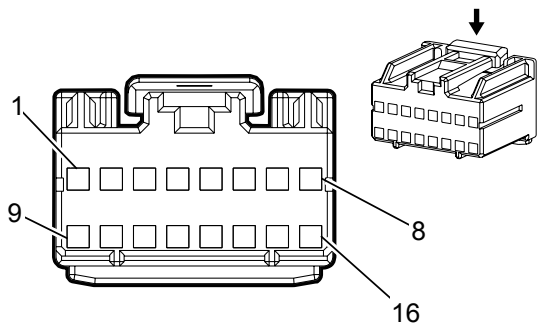

Connector Part Information

Harness Type: Instrument Panel

OEM Connector: 15431362

Service Connector: 15306351

Description: 16-Way F Micro-Pack 100A Series (NA)

Terminal Part Information

Terminal Type ID	Terminated Lead	Diagnostic Test Probe	Terminal Removal Tool	Service Terminal	Tray Name	Core Crimp	Insulation Crimp
I	13575548	J-35616-16 (LT GN)	J-38125-559	15445905	Delphi 23	J	J
II	13575548	J-35616-16 (LT GN)	J-38125-559	15445905	Delphi 23	K	K

K73 Telematics Communication Interface Control Module X1 (UE1)

Pin	Size	Color	Circuit	Function	Terminal Type ID	Option
1	0.5	D-GN	5060	Low Speed GMLAN Serial Data	I	—
2	0.8	BN/WH	2517	Keypad Red LED Control	II	—
3	0.8	YE/BK	2516	Keypad Green LED Control	II	—
4 - 5	—	—	—	Not Occupied	—	—
6	0.8	L-GN/BK	2515	Keypad Control	II	—
7	0.8	BK/WH	351	Signal Ground	II	—
8 - 9	—	—	—	Not Occupied	—	—
10	0.5	TN/BK	2500	High Speed GMLAN Serial Data (+) (1)	I	—

11	0.8	D-GN/WH	2514	Keypad Signal	II	—
12	0.5	TN	2501	High Speed GMLAN Serial Data (-) (1)	I	—
13 - 14	—	—	—	Not Occupied	—	—
15	0.8	RD/WH	3240	Battery Positive Voltage	II	—
16	—	—	—	Not Occupied	—	—

K73 Telematics Communication Interface Control Module X2 (UE1)

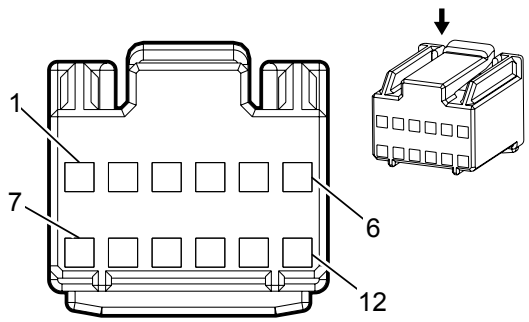

Connector Part Information

Harness Type: Instrument Panel

OEM Connector: 15431365

Service Connector: 88952886

Description: 12-Way F Micro-Pack 100A Series (NA)

Terminal Part Information

Terminal Type ID	Terminated Lead	Diagnostic Test Probe	Terminal Removal Tool	Service Terminal	Tray Name	Core Crimp	Insulation Crimp
I	13575548	J-35616-16 (LT GN)	J-38125-559	15445905	Delphi 23	J	J
II	13575548	J-35616-16 (LT GN)	J-38125-559	15445905	Delphi 23	K	K

K73 Telematics Communication Interface Control Module X2 (UE1)

Pin	Size	Color	Circuit	Function	Terminal Type ID	Option
1	0.35	D-BU	658	Cellular Telephone Voice Signal	I	—
	0.8	D-BU	658		II	—
2	0.35	L-BU/BK	659	Cellular Telephone Voice Low Reference	I	—
	0.8	L-BU/BK	659		II	—
3	0.5	TN/BK	2500	High Speed GMLAN Serial Data (+) (1)	I	—
4	0.5	TN	2501	High Speed GMLAN Serial Data (-) (1)	I	—
5 - 7	—	—	—	Not Occupied	—	—
8	0.35	BARE	1782	Low Reference	I	—

	0.8	BARE	1792		II	—
9	0.8	GY	655	Cellular Telephone Microphone Signal	II	—
10	0.8	D-GN	654	Cellular Telephone Microphone Low Reference	II	—
11 - 12	—	—	—	Not Occupied	—	—

K73 Telematics Communication Interface Control Module X3 (UE1)

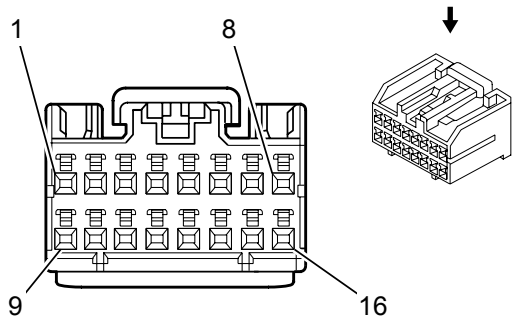

Connector Part Information

Harness Type: Instrument Panel

OEM Connector: 15431359

Service Connector: 88988722

Description: 16-Way F Micro-Pack 100A Series (GY)

Terminal Part Information

Terminal Type ID	Terminated Lead	Diagnostic Test Probe	Terminal Removal Tool	Service Terminal	Tray Name	Core Crimp	Insulation Crimp
I	13575548	J-35616-16 (LT GN)	J-38125-559	15445905	Delphi 23	J	J

K73 Telematics Communication Interface Control Module X3 (UE1)

Pin	Size	Color	Circuit	Function	Terminal Type ID	Option
1	—	—	—	Not Occupied	—	—
2	0.35	PK	5149	Voice Recognition Audio Signal	I	—
3	—	—	—	Not Occupied	—	—
4	0.35	PK/BK	5152	Voice Recognition Audio Low Reference	I	—
5	0.35	BARE	1792	Low Reference	I	—
6 - 16	—	—	—	Not Occupied	—	—

K77 Remote Control Door Lock Receiver (ATG or UJM)

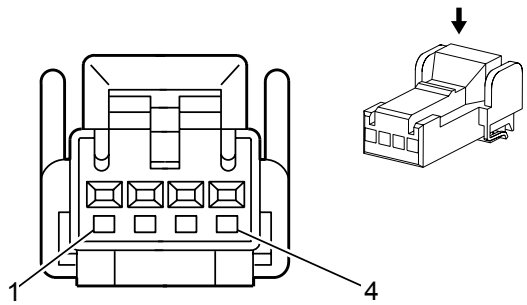

Connector Part Information

Harness Type: Instrument Panel

OEM Connector: 15462684

Service Connector: 13585474

Description: 4-Way F ILAG5 Series (GN)

Terminal Part Information

Terminal Type ID	Terminated Lead	Diagnostic Test Probe	Terminal Removal Tool	Service Terminal	Tray Name	Core Crimp	Insulation Crimp
I	Not Required	J-35616-64B (LT BU)	Not Required	Not Required	Not Required	Not Required	Not Required

K77 Remote Control Door Lock Receiver (ATG or UJM)

Pin	Size	Color	Circuit	Function	Terminal Type ID	Option
1	0.5	RD/WH	5340	Battery Positive Voltage	I	—
2	0.35	D-GN	5060	Low Speed GMLAN Serial Data	I	—
3	—	—	—	Not Occupied	—	—
4	0.35	BK/WH	351	Signal Ground	I	—

K103 LPG Control Module (KO7 with UFM)

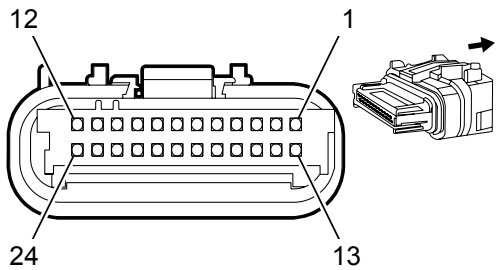

Connector Part Information

Harness Type: LPG Main

OEM Connector: 1635–1764

Service Connector: Service by Harness — See Part Catalog

Description: 24-Way F Woodward (BK)

Terminal Part Information

Terminal Type ID	Terminated Lead	Diagnostic Test Probe	Terminal Removal Tool	Service Terminal	Tray	Core Crimp	Insulation Crimp
I	Service by Harness – See Part Catalog	Not Available	Not Available	Not Available	Not Available	Not Available	Not Available

K103 LPG Control Module (KO7 with UFM)

Pin	Size	Color	Circuit	Function	Terminal Type ID	Option
1	0.5	BK	—	LPG Pressure and Temperature Sensor Low Reference	I	-
2	0.5	RD	—	Fuel Pump Relay Voltage	I	-
3 — 4	-	-	-	Not Occupied	-	-
5	0.5	GN	—	Fuel Pressure Signal	I	-
6 — 11	-	-	-	Not Occupied	-	-
12	0.5	GY	—	Wait To Start Relay Signal	I	-
13	0.5	RD	—	Battery Positive Voltage	I	-
14	0.5	BK	—	Ground	I	-
15	-	-	-	Not Occupied	-	-
16	0.5	RD/BK	—	Resisted Battery Positive Voltage	I	-
17	0.5	WH	—	Fuel Temperature Signal	I	-
18	0.5	RD	—	5 Volt Reference	I	-
19 — 21	-	-	-	Not Occupied	-	-

22	0.5	YE	—	LPG Bypass Solenoid Relay Signal	I	-
23	-	-	-	Not Occupied	-	-
24	0.5	WH	—	Vacuum Pump Signal	I	-

K103 LPG Control Module (KO7 with UFP)

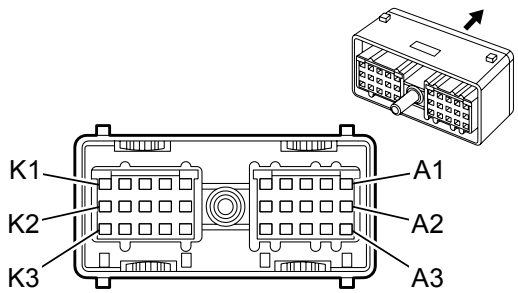

Connector Part Information

Harness Type: LPG

OEM Connector: 581–01–30–029

Service Connector: Pending

Description: 30-Way F Cinch 1.5 SHS, Sealed (BK)

Terminal Part Information

Terminal Type ID	Terminated Lead	Diagnostic Test Probe	Terminal Removal Tool	Service Terminal	Tray	Core Crimp	Insulation Crimp
I	Service by Harness – See Part Catalog	Pending	Pending	Not Available	Not Available	Not Available	Not Available

K103 LPG Control Module (KO7 with UFP)

Pin	Size	Color	Circuit	Function	Terminal Type ID	Option
A1 – C1	-	-	-	Not Occupied	-	-
C2	0.8	PU	—	Fuel Pump Relay Signal	I	-
C3	0.8	OR	—	Scavenge Pump Signal	I	-
D1	-	-	-	Not Occupied	-	-
D2	0.8	BN	—	Fuel Sender – Primary Signal	I	-
D3	-	-	-	Not Occupied	-	-
E1	0.8	RD/WH	—	Primary Pump Signal	I	-
E2	0.8	GN	—	Fuel Sender – Secondary Signal	I	-
E3 — F3	-	-	-	Not Occupied	-	-
G1	0.8	BU	—	Fuel Pump – Secondary Signal	I	-
G2 – G3	-	-	-	Not Occupied	-	-
H1	0.8	RD	—	Battery Positive Voltage	I	-
H2	-	-	-	Not Occupied	-	-

H3	0.8	GY	—	Wait to Start Lamp	I	-
J1	-	-	-	Not Occupied	-	-
J2	0.8	WH	—	Fuel Gauge Signal	I	-
J3	-	-	-	Not Occupied	-	-
K1	0.8	YE	—	12 Volt Reference	I	-
K2	0.8	BK	—	Ground	I	-
K3	-	-	-	Not Occupied	-	-

K119 CNG Control Module X1 (FHZ)

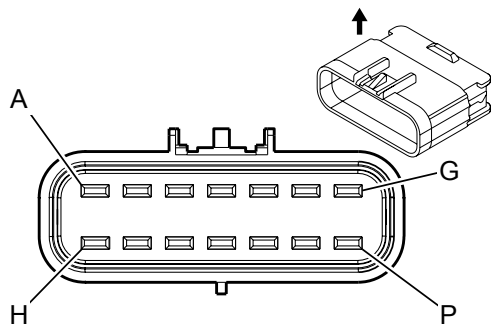

Connector Part Information

Harness Type: CNG Fuel Tank

OEM Connector: 15326922

Service Connector: 15326922

Description: 14-Way M GT 280 Series, Sealed (BK)

Terminal Part Information

Terminal Type ID	Terminated Lead	Diagnostic Test Probe	Terminal Removal Tool	Service Terminal	Tray	Core Crimp	Insulation Crimp
I	13327135	J-35616-5 (PU)	J-38125-553	15304731	19	C	5

K119 CNG Control Module X1 (FHZ)

Pin	Size	Color	Circuit	Function	Terminal Type ID	Option
A	-	-	-	Not Occupied	-	-
B	0.75	GY	—	CNG Solenoid Valve Control	I	-
C	0.75	GY	—	CNG Solenoid Valve Control	I	-
D	0.75	GY	—	CNG Solenoid Valve Control	I	-
E	0.75	GY	—	CNG Solenoid Valve Control	I	-
F	0.75	GY	—	CNG Solenoid Valve Control	I	-
G	0.75	GY	—	CNG Solenoid Valve Control	I	-
H	0.75	BK	—	Ground	I	-
J	0.75	BK	—	Low Reference	I	-
K	0.75	BK	—	Low Reference	I	-
L	0.75	BK	—	Low Reference	I	-
M	0.75	BK	—	Low Reference	I	-
N	0.75	BK	—	Low Reference	I	-
P	0.75	BK	—	Low Reference	I	-

K119 CNG Control Module X2 (FHZ)

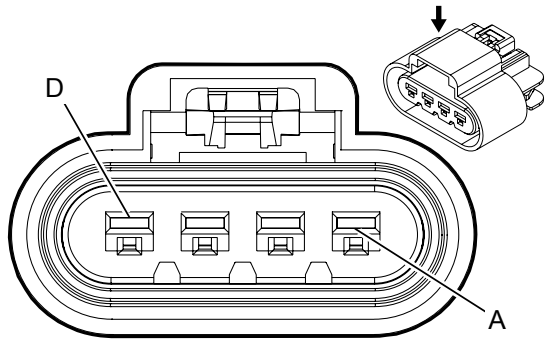

Connector Part Information

Harness Type: CNG Power

OEM Connector: 15326631

Service Connector: 13580864

Description: 4-Way F GT 280 5.8 Series, Sealed (BK)

Terminal Part Information

Terminal Type ID	Terminated Lead	Diagnostic Test Probe	Terminal Removal Tool	Service Terminal	Tray	Core Crimp	Insulation Crimp
I	13575405	J-35616-4A (PU)	J-38125-553	15304719	19	2	5

K119 CNG Control Module X2 (FHZ)

Pin	Size	Color	Circuit	Function	Terminal Type ID	Option
A	0.75	BK	—	Ground	I	-
B	-	-	-	Not Occupied	-	-
C	0.75	PU	—	Fuel Level Sensor Signal	I	-
D	0.75	GY	—	Fuel Pump Control	I	-

K119 CNG Control Module X3 (FHZ)

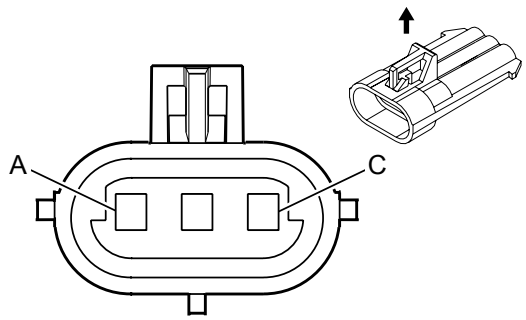

Connector Part Information

Harness Type: CNG Fuel Pressure

OEM Connector: 12129615

Service Connector: 15305889

Description: 3-Way M Metri-Pack 150 (BK)

Terminal Part Information

Terminal Type ID	Terminated Lead	Diagnostic Test Probe	Terminal Removal Tool	Service Terminal	Tray	Core Crimp	Insulation Crimp
I	Pending	J-35616-3 (GY)	J-38125-12A	12045773	2	E	1

K119 CNG Control Module X3 (FHZ)

Pin	Size	Color	Circuit	Function	Terminal Type ID	Option
A	0.5	RD	—	5-Volt Reference	I	-
B	0.5	GN	—	Alternative Fuel Tank Pressure Signal	I	-
C	0.5	BK	—	Low Reference	I	-

K119 CNG Control Module X4 (FHZ)

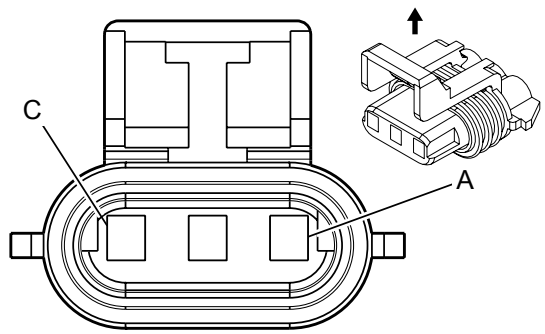

Connector Part Information

Harness Type: CNG Control Module

OEM Connector: 12110293

Service Connector: 12117025

Description: 3-Way F Metri-Pack 150 Series, Sealed (BK)

Terminal Part Information

Terminal Type ID	Terminated Lead	Diagnostic Test Probe	Terminal Removal Tool	Service Terminal	Tray	Core Crimp	Insulation Crimp
I	Not Available	Not Available	Not Available	Not Available	Not Available	Not Available	Not Available

K119 CNG Control Module X4 (FHZ)

Pin	Size	Color	Circuit	Function	Terminal Type ID	Option
A-C	-	-	-	Not Occupied	-	-

KR23B Fuel Pump Relay - Secondary (KO7 with UFP)

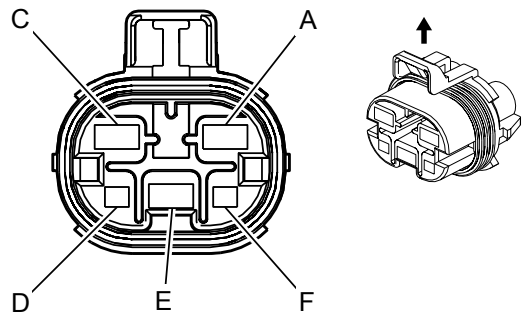

Connector Part Information

Harness Type: LPG

OEM Connector: 12052287

Service Connector: 15306002

Description: 5-Way F Metri-Pack 280,630 Series, Sealed (BK)

Terminal Part Information

Terminal Type ID	Terminated Lead	Diagnostic Test Probe	Terminal Removal Tool	Service Terminal	Tray	Core Crimp	Insulation Crimp
I	Service by Harness – See Part Catalog	J-35616-4A (PU)	J-38125-11A	12129493	2	4	5

KR23B Fuel Pump Relay - Secondary (KO7 with UFP)

Pin	Size	Color	Circuit	Function	Terminal Type ID	Option
A	2.0	RD/WH	—	Secondary Fuel Pump/Rear LPG Cut-Off Solenoid Valve	I	-
C	-	-	-	Not Occupied	-	-
D	0.8	RD/WH	—	Secondary Fuel Pump Relay Signal	I	-
E	3.0	RD	—	Battery Positive Voltage	I	-
F	0.8	RD	—	Battery Positive Voltage	I	-

KR23C Fuel Pump Relay - Primary (KO7 with UFP)

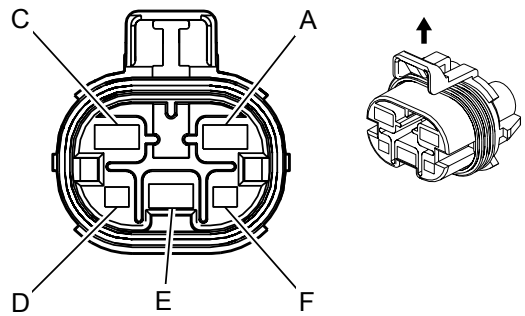

Connector Part Information

Harness Type: LPG

OEM Connector: 12052287

Service Connector: 15306002

Description: 5-Way F Metri-Pack 280,630 Series, Sealed (BK)

Terminal Part Information

Terminal Type ID	Terminated Lead	Diagnostic Test Probe	Terminal Removal Tool	Service Terminal	Tray	Core Crimp	Insulation Crimp
I	Service by Harness – See Part Catalog	J-35616-4A (PU)	J-38125-11A	12129493	2	4	5

KR23C Fuel Pump Relay - Primary (KO7 with UFP)

Pin	Size	Color	Circuit	Function	Terminal Type ID	Option
A	2.0	RD/WH	—	Primary Fuel Pump	I	-
C	-	-	-	Not Occupied	-	-
D	0.8	RD/WH	—	Fuel Pump Relay Signal	I	-
E	2.0	RD	—	Battery Positive Voltage	I	-
F	0.8	RD	—	Battery Positive Voltage	I	-

KR32B Blower Motor High Speed Relay - Auxiliary

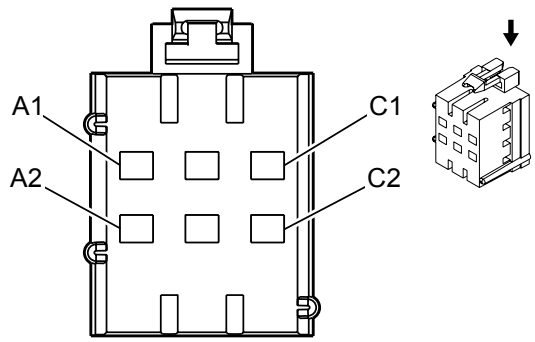

Connector Part Information

Harness Type: Auxiliary HVAC

OEM Connector: 12129715

Service Connector: Service by Harness - See Part Catalog

Description: 6-Way F 280 Metri-Pack Series, Flexlock (GY)

Terminal Part Information

Terminal Type ID	Terminated Lead	Diagnostic Test Probe	Terminal Removal Tool	Service Terminal	Tray Name	Core Crimp	Insulation Crimp
I	Not Required	J-35616-4A (PU)	Not Required	Not Required	Not Required	Not Required	Not Required

KR32B Blower Motor High Speed Relay - Auxiliary

Pin	Size	Color	Circuit	Function	Terminal Type ID	Option
A1	0.35	WH	1924	Auxiliary Blower Motor High Speed Control	I	—
A2	5	YE	1172	Auxiliary Blower Motor Control	I	—
B1 - B2	—	—	—	Not Occupied	—	—
C1	5	RD/WH	1740	Battery Positive Voltage	I	—
C2	0.35	BN	341	Run Ignition 3 Voltage	I	—

KR32C Blower Motor Low Speed Relay - Auxiliary

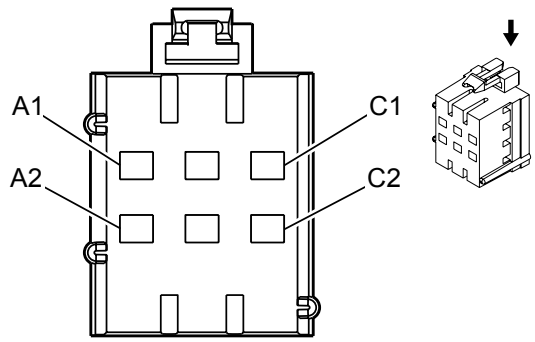

Connector Part Information

Harness Type: Auxiliary HVAC

OEM Connector: 12129715

Service Connector: Service by Harness - See Part Catalog

Description: 6-Way F 280 Metri-Pack Series, Flexlock (GY)

Terminal Part Information

Terminal Type ID	Terminated Lead	Diagnostic Test Probe	Terminal Removal Tool	Service Terminal	Tray Name	Core Crimp	Insulation Crimp
I	Not Required	J-35616-4A (PU)	Not Required	Not Required	Not Required	Not Required	Not Required

KR32C Blower Motor Low Speed Relay - Auxiliary

Pin	Size	Color	Circuit	Function	Terminal Type ID	Option
A1	0.35	D-BU	1926	Auxiliary Blower Motor Low Speed Control	I	—
A2	3	YE	1176	Auxiliary Blower Motor Low Speed Control	I	—
B1 - B2	—	—	—	Not Occupied	—	—
C1	5	RD/WH	1740	Battery Positive Voltage	I	—
C2	0.35	BN	341	Run Ignition 3 Voltage	I	—

KR32D Blower Motor Medium Speed Relay - Auxiliary

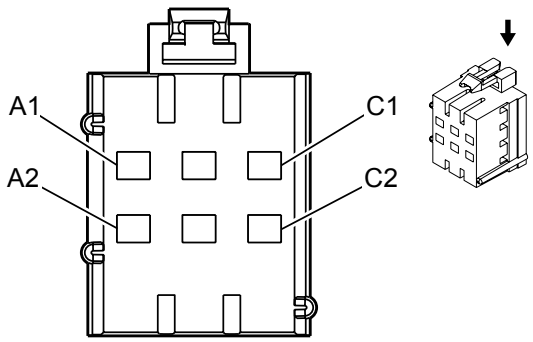

Connector Part Information

Harness Type: Auxiliary HVAC

OEM Connector: 12129715

Service Connector: Service by Harness - See Part Catalog

Description: 6-Way F 280 Metri-Pack Series, Flexlock (GY)

Terminal Part Information

Terminal Type ID	Terminated Lead	Diagnostic Test Probe	Terminal Removal Tool	Service Terminal	Tray Name	Core Crimp	Insulation Crimp
I	Not Required	J-35616-4A (PU)	Not Required	Not Required	Not Required	Not Required	Not Required

KR32D Blower Motor Medium Speed Relay - Auxiliary

Pin	Size	Color	Circuit	Function	Terminal Type ID	Option
A1	0.35	OG	1925	Auxiliary Blower Motor Medium Speed Control	I	—
A2	3	L-BU	1072	Auxiliary Blower Motor Medium Speed Control	I	—
B1 - B2	—	—	—	Not Occupied	—	—
C1	5	RD/WH	1740	Battery Positive Voltage	I	—
C2	0.35	BN	341	Run Ignition 3 Voltage	I	—

KR81 Auxiliary Battery Relay 1 (L20/L96)

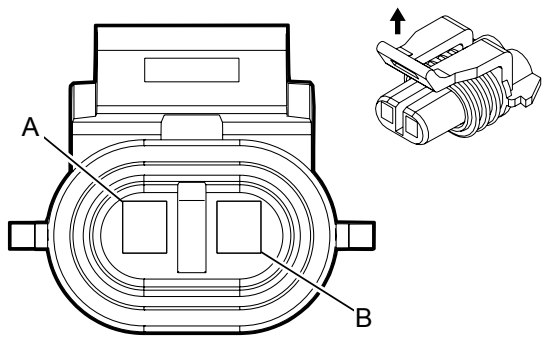

Connector Part Information

Harness Type: Engine

OEM Connector: 12052641

Service Connector: 13586114

Description: 2-Way F 150 Metri-Pack Series (BK)

Terminal Part Information

Terminal Type ID	Terminated Lead	Diagnostic Test Probe	Terminal Removal Tool	Service Terminal	Tray Name	Core Crimp	Insulation Crimp
I	Not Required	J-35616-14 (GN)	Not Required	Not Required	Not Required	Not Required	Not Required

KR81 Auxiliary Battery Relay 1 (L20/L96)

Pin	Size	Color	Circuit	Function	Terminal Type ID	Option
A	0.5	RD/WH	4892	Auxiliary Battery Relay Control	I	—
B	0.5	BK/WH	1551	Signal Ground	I	—

KR81 Auxiliary Battery Relay 1 (LGH)

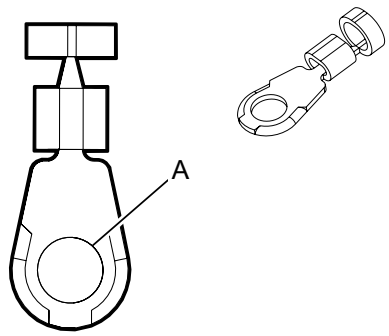

Connector Part Information

Harness Type: Battery Cable

OEM Connector: 12146365

Service Connector: Service by Cable Assembly - See Part Catalog

Description: 1-Way Ring Terminal

Terminal Part Information

Terminal Type ID	Terminated Lead	Diagnostic Test Probe	Terminal Removal Tool	Service Terminal	Tray Name	Core Crimp	Insulation Crimp
I	Not Required	No Tool Required	Not Required	Not Required	Not Required	Not Required	Not Required

KR81 Auxiliary Battery Relay 1 (LGH)

Pin	Size	Color	Circuit	Function	Terminal Type ID	Option
A	—	—	—	Not Occupied	—	—

KR142 LPG Tank Scavange Pump Relay (KO7 with UFP)

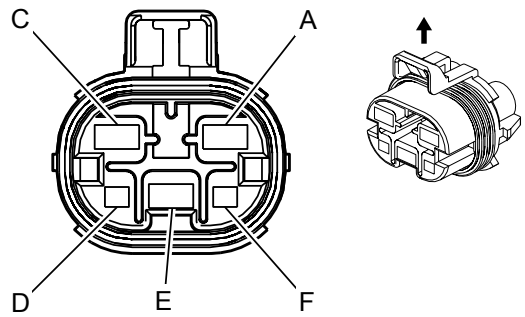

Connector Part Information

Harness Type: LPG

OEM Connector: 12052287

Service Connector: 15306002

Description: 5-Way F Metri-Pack 280,630 Series, Sealed (BK)

Terminal Part Information

Terminal Type ID	Terminated Lead	Diagnostic Test Probe	Terminal Removal Tool	Service Terminal	Tray	Core Crimp	Insulation Crimp
I	Service by Harness – See Part Catalog	J-35616-4A (PU)	J-38125-11A	12129493	2	4	5

KR142 LPG Tank Scavange Pump Relay (KO7 with UFP)

Pin	Size	Color	Circuit	Function	Terminal Type ID	Option
A	2.0	RD/WH	—	Scavenge Fuel Pump	I	-
C	-	-	-	Not Occupied	-	-
D	0.8	RD/WH	—	Scavenge Fuel Pump Relay Signal	I	-
E	2.0	RD	—	Battery Positive Voltage	I	-
F	0.8	RD	—	Battery Positive Voltage	I	-

KR143 Wait to Start Indicator Relay (KO7 with UFM)

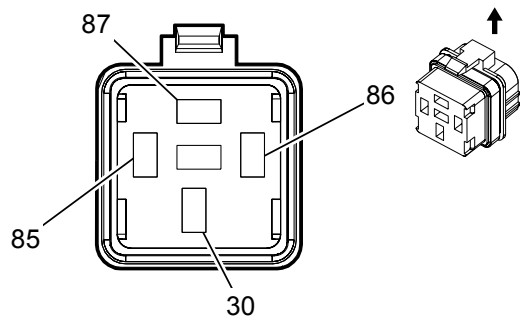

Connector Part Information

Harness Type: LPG Main

OEM Connector: 12065686

Service Connector: 12101881

Description: 4-Way F Metri-Pack 630 Series, (BK)

Terminal Part Information

Terminal Type ID	Terminated Lead	Diagnostic Test Probe	Terminal Removal Tool	Service Terminal	Tray	Core Crimp	Insulation Crimp
I	Service by Harness – See Part Catalog	Not Available	Not Available	Not Available	Not Available	Not Available	Not Available

KR143 Wait to Start Indicator Relay (KO7 with UFM)

Pin	Size	Color	Circuit	Function	Terminal Type ID	Option
30	0.5	RD	-	Battery Positive Voltage	I	-
85	0.5	GY	-	Wait To Start Lamp Relay Signal	I	-
86	0.5	RD	-	Battery Positive Voltage	I	-
87	0.5	RD	-	Wait To Start Lamp	I	-

KR152 LPG Bypass Solenoid Valve Relay (KO7 with UFM)

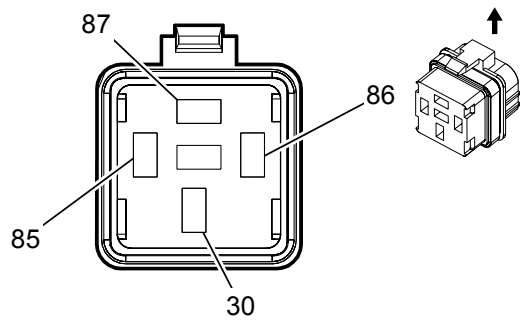

Connector Part Information

Harness Type: LPG Main

OEM Connector: 12065686

Service Connector: 12101881

Description: 4-Way F Metri-Pack 630 Series, (BK)

Terminal Part Information

Terminal Type ID	Terminated Lead	Diagnostic Test Probe	Terminal Removal Tool	Service Terminal	Tray	Core Crimp	Insulation Crimp
I	Service by Harness – See Part Catalog	Not Available	Not Available	Not Available	Not Available	Not Available	Not Available

KR152 LPG Bypass Solenoid Valve Relay (KO7 with UFM)

Pin	Size	Color	Circuit	Function	Terminal Type ID	Option
30	0.5	RD	-	Battery Positive Voltage	I	-
85	0.5	YE	-	Bypass Solenoid Relay Signal	I	-
86	0.5	RD	-	Battery Positive Voltage	I	-
87	0.8	RD	-	Bypass Solenoid	I	-

M6 Air Temperature Door Actuator

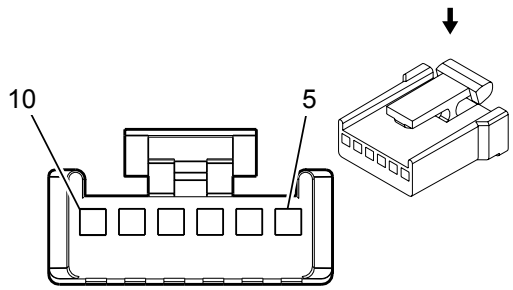

Connector Part Information

Harness Type: Instrument Panel

OEM Connector: 12040953

Service Connector: 12102632

Description: 6-Way F Micro-Pack 100 Series (BK)

Terminal Part Information

Terminal Type ID	Terminated Lead	Diagnostic Test Probe	Terminal Removal Tool	Service Terminal	Tray Name	Core Crimp	Insulation Crimp
I	Not Required	J-35616-6 (BN)	Not Required	Not Required	Not Required	Not Required	Not Required

M6 Air Temperature Door Actuator

Pin	Size	Color	Circuit	Function	Terminal Type ID	Option
5 - 6	—	—	—	Not Occupied	—	—
7	1	BK	550	Ground	I	—
8	0.8	L-BU	733	Air Temperature Door Position Signal	I	—
9	—	—	—	Not Occupied	—	—
10	0.35	BN	341	Run Ignition 3 Voltage	I	—

M6B Air Temperature Door Actuator - Auxiliary (C69)

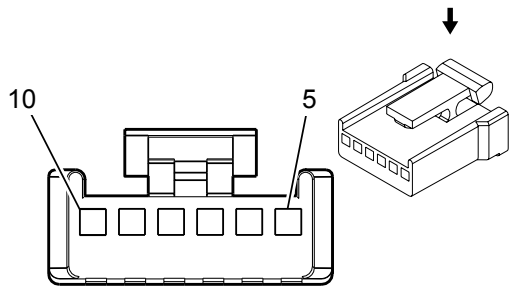

Connector Part Information

Harness Type: Auxiliary HVAC

OEM Connector: 12040953

Service Connector: Service by Harness - See Part Catalog

Description: 6-Way F Micro-Pack 100 Series (BK)

Terminal Part Information

Terminal Type ID	Terminated Lead	Diagnostic Test Probe	Terminal Removal Tool	Service Terminal	Tray Name	Core Crimp	Insulation Crimp
I	Not Required	J-35616-6 (BN)	Not Required	Not Required	Not Required	Not Required	Not Required

M6B Air Temperature Door Actuator - Auxiliary (C69)

Pin	Size	Color	Circuit	Function	Terminal Type ID	Option
5 - 6	—	—	—	Not Occupied	—	—
7	0.35	BK	850	Ground	I	—
8	0.35	OG	2775	Rear Air Temperature Motor Control	I	—
9	—	—	—	Not Occupied	—	—
10	0.35	BN	341	Run Ignition 3 Voltage	I	—

M7 Transmission Shift Lock Control Solenoid Actuator

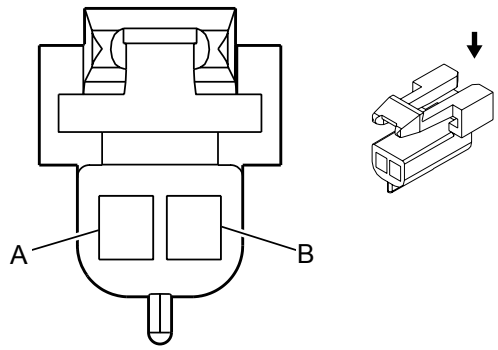

Connector Part Information

Harness Type: Steering Column

OEM Connector: 12052832

Service Connector: 13583033

Description: 2-Way F Metri-Pack 150 Series (BK)

Terminal Part Information

Terminal Type ID	Terminated Lead	Diagnostic Test Probe	Terminal Removal Tool	Service Terminal	Tray	Core Crimp	Insulation Crimp
I	13575464	J-35616-14 (GN)	J-38125-12A	15326030	5	E	C

M7 Transmission Shift Lock Control Solenoid Actuator

Pin	Size	Color	Circuit	Function	Terminal Type ID	Option
A	0.5	TN/WH	816	A/T Shift Lock Solenoid Control	I	-
B	0.5	BK	350	Ground	I	-

M8 Blower Motor (L20, L96, or LC8)

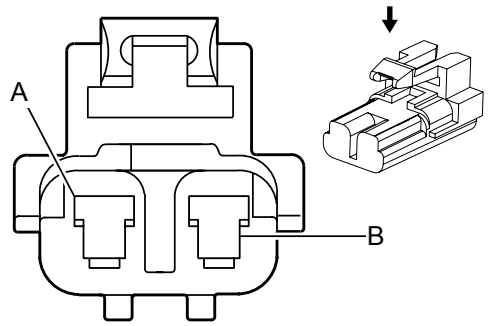

Connector Part Information

Harness Type: Engine (LU3, L20, LMF or L96)

Harness Type: Engine Chassis (LMM or LGH)

OEM Connector: 12084957

Service Connector: 12126461

Description: 2-Way F Metri-Pack 280 Series (BK)

Terminal Part Information

Terminal Type ID	Terminated Lead	Diagnostic Test Probe	Terminal Removal Tool	Service Terminal	Tray	Core Crimp	Insulation Crimp
I	Service by Connector Assembly - 12126461	Not Available	Not Available	Not Available	Not Available	Not Available	Not Available

M8 Blower Motor (L20, L96, or LC8)

Pin	Size	Color	Circuit	Function	Terminal Type ID	Option
A	3	BK	1250	Ground	I	-
B	3	RD	65	Auxiliary Blower Motor Control	I	-

M8 Blower Motor (LGH)

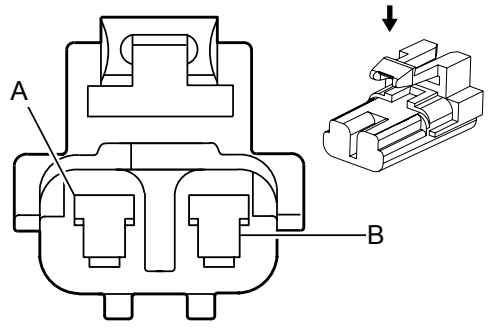

Connector Part Information

Harness Type: Engine Chassis

OEM Connector: 12084957

Service Connector: 12126461

Description: 2-Way F Metri-Pack 280 Series (BK)

Terminal Part Information

Terminal Type ID	Terminated Lead	Diagnostic Test Probe	Terminal Removal Tool	Service Terminal	Tray	Core Crimp	Insulation Crimp
I	Service by Connector Assembly - 12126461	Not Available	Not Available	Not Available	Not Available	Not Available	Not Available

M8 Blower Motor (LGH)

Pin	Size	Color	Circuit	Function	Terminal Type ID	Option
A	3	BK	1250	Ground	I	-
B	3	RD	65	Auxiliary Blower Motor Control	I	-

M8B Blower Motor - Auxiliary (C36 or C69)

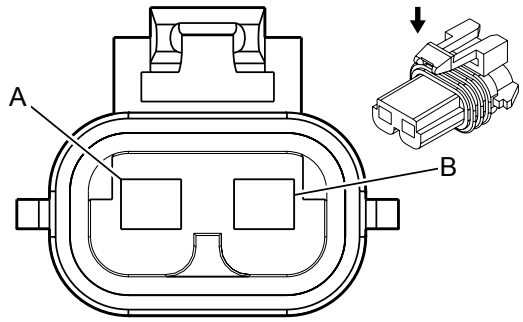

Connector Part Information

Harness Type: Auxiliary HVAC

OEM Connector: 12077900

Service Connector: Service by Harness - See Part Catalog

Description: 2-Way F 280 Metri-Pack Series, Sealed (BK)

Terminal Part Information

Terminal Type ID	Terminated Lead	Diagnostic Test Probe	Terminal Removal Tool	Service Terminal	Tray Name	Core Crimp	Insulation Crimp
I	Not Required	J-35616-4A (PU)	Not Required	Not Required	Not Required	Not Required	Not Required

M8B Blower Motor - Auxiliary (C36 or C69)

Pin	Size	Color	Circuit	Function	Terminal Type ID	Option
A	5	BK	850	Ground	I	—
B	5	YE	1172	Auxiliary Blower Motor Control	I	—

M13 Door Latch Assembly - Rear Cargo X1 (Passenger or Cargo)

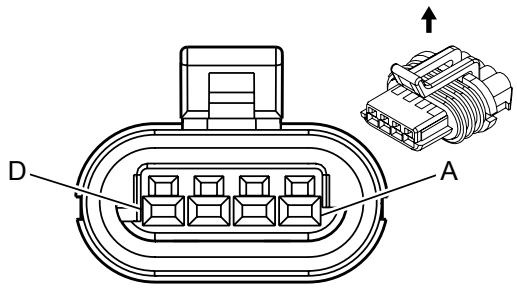

Connector Part Information

Harness Type: Right Rear Cargo Door

OEM Connector: 15336846

Service Connector: Service by Harness - See Part Catalog

Description: 4-Way F 150 GT Series, Sealed (BU)

Terminal Part Information

Terminal Type ID	Terminated Lead	Diagnostic Test Probe	Terminal Removal Tool	Service Terminal	Tray Name	Core Crimp	Insulation Crimp
I	Not Required	J-35616-14 (GN)	Not Required	Not Required	Not Required	Not Required	Not Required

M13 Door Latch Assembly - Rear Cargo X1 (Passenger or Cargo)

Pin	Size	Color	Circuit	Function	Terminal Type ID	Option
A	0.35	BK/WH	1051	Signal Ground	I	—
B	—	—	—	Not Occupied	—	—
C	0.35	PK/BK	1303	Lift Gate Ajar Switch Signal (1)	I	—
D	0.35	L-GN	5926	Rear Access Open Switch Signal	I	—

M13 Door Latch Assembly - Rear Cargo X2 (Passenger or Cargo)

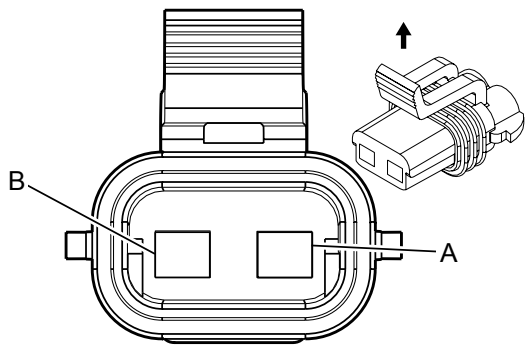

Connector Part Information

Harness Type: Right Rear Cargo Door

OEM Connector: 15300027

Service Connector: Service by Harness - See Part Catalog

Description: 2-Way F 280 Metri-Pack Series, Sealed (BK)

Terminal Part Information

Terminal Type ID	Terminated Lead	Diagnostic Test Probe	Terminal Removal Tool	Service Terminal	Tray Name	Core Crimp	Insulation Crimp
I	Not Required	J-35616-4A (PU)	Not Required	Not Required	Not Required	Not Required	Not Required

M13 Door Latch Assembly - Rear Cargo X2 (Passenger or Cargo)

Pin	Size	Color	Circuit	Function	Terminal Type ID	Option
A	1	TN/BK	1095	Right Rear Door Lock Actuator Unlock Control	I	—
B	1	GY	295	Door Lock Actuator Lock Control	I	—

M14RR Door Lock Actuator - Right Rear (AU3 with E24)

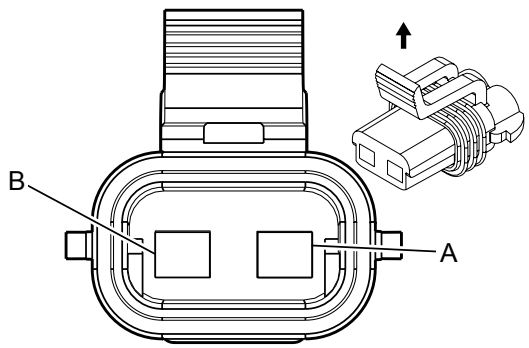

Connector Part Information

Harness Type: Passenger Door

OEM Connector: 15300027

Service Connector: Service by Harness - See Part Catalog

Description: 2-Way F 280 Metri-Pack Series, Sealed (BK)

Terminal Part Information

Terminal Type ID	Terminated Lead	Diagnostic Test Probe	Terminal Removal Tool	Service Terminal	Tray Name	Core Crimp	Insulation Crimp
I	Not Required	J-35616-4A (PU)	Not Required	Not Required	Not Required	Not Required	Not Required

M14RR Door Lock Actuator - Right Rear (AU3 with E24)

Pin	Size	Color	Circuit	Function	Terminal Type ID	Option
A	0.8	TN	294	Door Lock Actuator Unlock Control	I	—
B	0.8	GY	295	Door Lock Actuator Lock Control	I	—

M14RR Door Lock Actuator - Right Rear (AU3 with YA2)

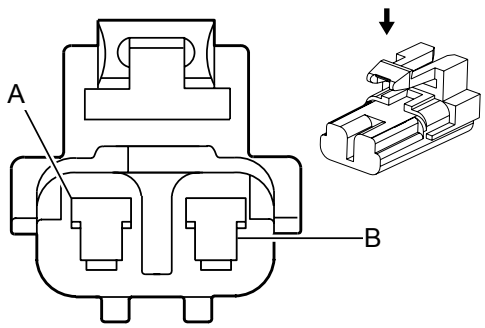

Connector Part Information

Harness Type: Right Rear Door

OEM Connector: 12084957

Service Connector: Service by Harness - See Part Catalog

Description: 2-Way F 280 Metri-Pack Series (BK)

Terminal Part Information

Terminal Type ID	Terminated Lead	Diagnostic Test Probe	Terminal Removal Tool	Service Terminal	Tray Name	Core Crimp	Insulation Crimp
I	Not Required	J-35616-4A (PU)	Not Required	Not Required	Not Required	Not Required	Not Required

M14RR Door Lock Actuator - Right Rear (AU3 with YA2)

Pin	Size	Color	Circuit	Function	Terminal Type ID	Option
A	0.8	GY	295	Door Lock Actuator Lock Control	I	—
B	0.8	TN	294	Door Lock Actuator Unlock Control	I	—

M37B Mode Door Actuator - Auxiliary (C69)

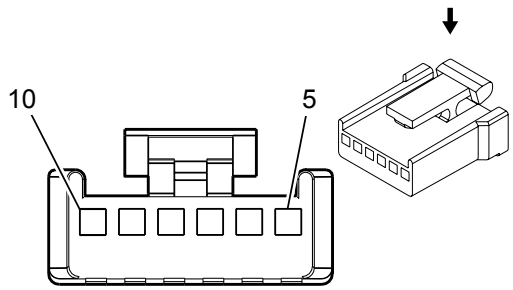

Connector Part Information

Harness Type: Auxiliary HVAC

OEM Connector: 12040953

Service Connector: Service by Harness - See Part Catalog

Description: 6-Way F Micro-Pack 100 Series (BK)

Terminal Part Information

Terminal Type ID	Terminated Lead	Diagnostic Test Probe	Terminal Removal Tool	Service Terminal	Tray Name	Core Crimp	Insulation Crimp
I	Not Required	J-35616-6 (BN)	Not Required	Not Required	Not Required	Not Required	Not Required

M37B Mode Door Actuator - Auxiliary (C69)

Pin	Size	Color	Circuit	Function	Terminal Type ID	Option
5 - 6	—	—	—	Not Occupied	—	—
7	0.35	BK	850	Ground	I	—
8	0.35	GY	2599	Rear Mode Motor Signal	I	—
9	—	—	—	Not Occupied	—	—
10	0.35	BN	341	Run Ignition 3 Voltage	I	—

M49D Seat Motor Assembly - Driver (AG1)

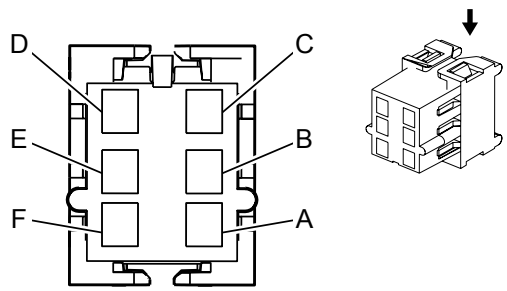

Connector Part Information

Harness Type: Driver Seat

OEM Connector: 12015344

Service Connector: 12101900

Description: 6-Way F Metri-Pack 280 Series (BK)

Terminal Part Information

Terminal Type ID	Terminated Lead	Diagnostic Test Probe	Terminal Removal Tool	Service Terminal	Tray	Core Crimp	Insulation Crimp
I	Service by Harness– See Part Catalog	Not Available	Not Available	Not Available	Not Available	Not Available	Not Available

M49D Seat Motor Assembly - Driver (AG1)

Pin	Size	Color	Circuit	Function	Terminal Type ID	Option
A	3	YE	282	Driver Seat Rear Vertical Motor Up Control	I	-
B	3	L-BU	283	Driver Seat Rear Vertical Motor Down Control	I	-
C	3	TN	285	Driver Seat Horizontal Motor Forward Control	I	-
D	3	L-GN	284	Driver Seat Horizontal Motor Rearward Control	I	-
E	3	D-GN	286	Driver Seat Front Vertical Motor Up Control	I	-
F	3	D-BU	287	Driver Seat Front Vertical Motor Down Control	I	-

M49P Seat Motor Assembly - Passenger (AG2)

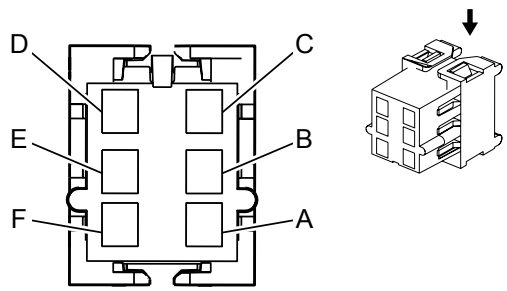

Connector Part Information

Harness Type: Passenger Seat

OEM Connector: 12015344

Service Connector: 12101900

Description: 6-Way F Metri-Pack 280 Series (BK)

Terminal Part Information

Terminal Type ID	Terminated Lead	Diagnostic Test Probe	Terminal Removal Tool	Service Terminal	Tray	Core Crimp	Insulation Crimp
I	Service by Harness– See Part Catalog	Not Available	Not Available	Not Available	Not Available	Not Available	Not Available

M49P Seat Motor Assembly - Passenger (AG2)

Pin	Size	Color	Circuit	Function	Terminal Type ID	Option
A	3	YE	288	Passenger Seat Rear Vertical Motor Up Control	I	-
B	3	L-BU	289	Passenger Seat Rear Vertical Motor Down Control	I	-
C	3	TN	296	Passenger Seat Horizontal Motor Forward Control	I	-
D	3	L-GN	290	Passenger Seat Horizontal Motor Rearward Control	I	-
E	3	D-GN	297	Passenger Seat Front Vertical Motor Up Control	I	-
F	3	D-BU	298	Passenger Seat Front Vertical Motor Down Control	I	-

M64 Starter Motor X1 (L20, L96, or LC8)

Connector Part Information

Harness Type: Battery Positive

OEM Connector: 12176602

Service Connector: Service by Harness – See Part Catalog

Description: Ring Terminal

Terminal Part Information

Terminal Type ID	Terminated Lead	Diagnostic Test Probe	Terminal Removal Tool	Service Terminal	Tray	Core Crimp	Insulation Crimp
I	Not Available	No Tool Required	No Tool Required	Not Available	Not Available	Not Available	Not Available

M64 Starter Motor X1 (L20, L96, or LC8)

Pin	Size	Color	Circuit	Function	Terminal Type ID	Option
A	32	RD	1	Battery Positive Voltage	I	-

M64 Starter Motor X1 (LGH)

Connector Part Information

Harness Type: Battery Positive

OEM Connector: 15358800

Service Connector: Service by Harness – See Part Catalog

Description: Ring Terminal

Terminal Part Information

Terminal Type ID	Terminated Lead	Diagnostic Test Probe	Terminal Removal Tool	Service Terminal	Tray	Core Crimp	Insulation Crimp
I	Not Available	No Tool Required	No Tool Required	Not Available	Not Available	Not Available	Not Available

M64 Starter Motor X1 (LGH)

Pin	Size	Color	Circuit	Function	Terminal Type ID	Option
A	32	RD	1	Battery Positive Voltage	I	-
	32	RD	1	Battery Positive Voltage		

M64 Starter Motor X2 (L20, L96, or LC8)

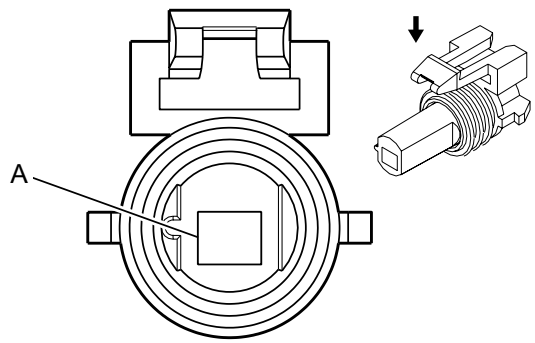

Connector Part Information

Harness Type: Engine

OEM Connector: 15481001

Service Connector: 13584479

Description: 1-Way F 280 Metri-Pack Series, Sealed (BK)

Terminal Part Information

Terminal Type ID	Terminated Lead	Diagnostic Test Probe	Terminal Removal Tool	Service Terminal	Tray Name	Core Crimp	Insulation Crimp
I	Not Required	J-35616-4A (PU)	Not Required	Not Required	Not Required	Not Required	Not Required

M64 Starter Motor X2 (L20, L96, or LC8)

Pin	Size	Color	Circuit	Function	Terminal Type ID	Option
A	5	PU	6	Starter Solenoid Crank Ignition Voltage	I	—

M64 Starter Motor X2 (LGH)

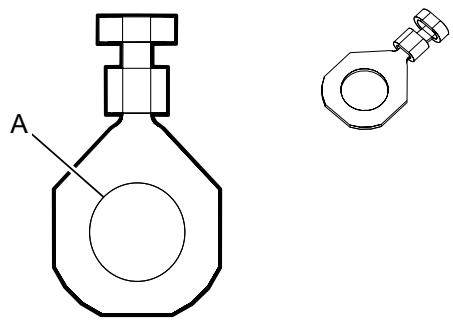

Connector Part Information

Harness Type: Engine Chassis

OEM Connector: 2965719

Service Connector: Service by Harness – See Part Catalog

Description: Ring Terminal

Terminal Part Information

Terminal Type ID	Terminated Lead	Diagnostic Test Probe	Terminal Removal Tool	Service Terminal	Tray	Core Crimp	Insulation Crimp
I	Not Available	No Tool Required	No Tool Required	Not Available	Not Available	Not Available	Not Available

M64 Starter Motor X2 (LGH)

Pin	Size	Color	Circuit	Function	Terminal Type ID	Option
A	5	PU	6	Starter Solenoid Crank Voltage	I	-

M74D Window Motor - Driver (A31)

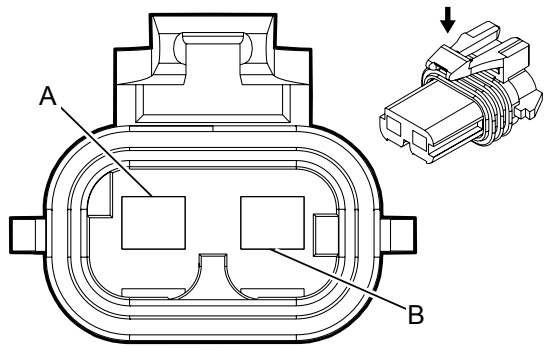

Connector Part Information

Harness Type: Driver Door

OEM Connector: 12129487

Service Connector: Service by Harness - See Part Catalog

Description: 2-Way F 280 Metri-Pack Series, Flexlock, Sealed (GY)

Terminal Part Information

Terminal Type ID	Terminated Lead	Diagnostic Test Probe	Terminal Removal Tool	Service Terminal	Tray Name	Core Crimp	Insulation Crimp
I	Not Required	J-35616-4A (PU)	Not Required	Not Required	Not Required	Not Required	Not Required

M74D Window Motor - Driver (A31)

Pin	Size	Color	Circuit	Function	Terminal Type ID	Option
A	3	BN	165	Power Window Motor Left Front Down Control	I	—
B	3	D-BU	164	Power Window Motor Left Front Up Control	I	—

M74P Window Motor - Passenger (A31)

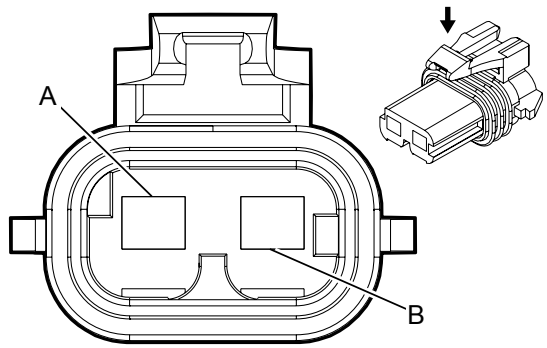

Connector Part Information

Harness Type: Passenger Door

OEM Connector: 12129487

Service Connector: Service by Harness - See Part Catalog

Description: 2-Way F 280 Metri-Pack Series, Flexlock, Sealed (GY)

Terminal Part Information

Terminal Type ID	Terminated Lead	Diagnostic Test Probe	Terminal Removal Tool	Service Terminal	Tray Name	Core Crimp	Insulation Crimp
I	Not Required	J-35616-4A (PU)	Not Required	Not Required	Not Required	Not Required	Not Required

M74P Window Motor - Passenger (A31)

Pin	Size	Color	Circuit	Function	Terminal Type ID	Option
A	3	BN	667	Power Window Motor Right Front Down Control	I	—
B	3	D-BU	666	Power Window Motor Right Front Up Control	I	—

M75 Windshield Wiper Motor

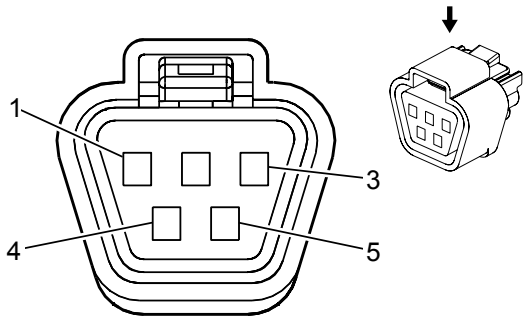

Connector Part Information

Harness Type: Instrument Panel

OEM Connector: 15316488

Service Connector: 13587179

Description: 5-Way F 090 Series, Sealed (GY)

Terminal Part Information

Terminal Type ID	Terminated Lead	Diagnostic Test Probe	Terminal Removal Tool	Service Terminal	Tray Name	Core Crimp	Insulation Crimp
I	Not Required	J-35616-14 (GN)	Not Required	Not Required	Not Required	Not Required	Not Required
II	Not Required	J-35616-18 (BK)	Not Required	Not Required	Not Required	Not Required	Not Required

M75 Windshield Wiper Motor

Pin	Size	Color	Circuit	Function	Terminal Type ID	Option
1	2	D-GN	95	Windshield Wiper Motor Low Speed Control	II	—
2	0.35	BK/WH	351	Signal Ground	I	—
3	0.35	YE	196	Windshield Wiper Motor Park Switch Signal	I	—
4	2	PU	92	Windshield Wiper Motor High Speed Control	II	—
5	2	BK	1250	Ground	II	—

P3 Backup Alarm (8S3)

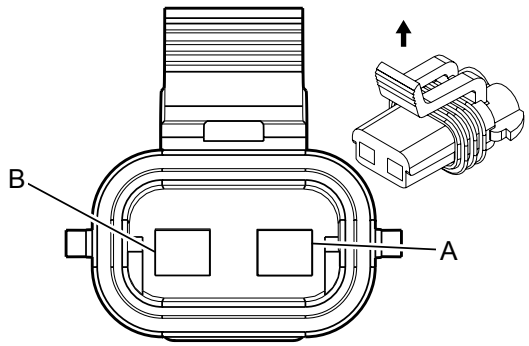

Connector Part Information

Harness Type: Chassis

OEM Connector: 15300027

Service Connector: 12101855

Description: 2-Way F 280 Metri-Pack Series, Sealed (BK)

Terminal Part Information

Terminal Type ID	Terminated Lead	Diagnostic Test Probe	Terminal Removal Tool	Service Terminal	Tray Name	Core Crimp	Insulation Crimp
I	Not Required	J-35616-4A (PU)	Not Required	Not Required	Not Required	Not Required	Not Required

P3 Backup Alarm (8S3)

Pin	Size	Color	Circuit	Function	Terminal Type ID	Option
A	1	L-GN	1624	Trailer Backup Lamp Control	I	—
B	1	BK	150	Ground	I	—

P5 Chime Alarm Control Module (UL5)

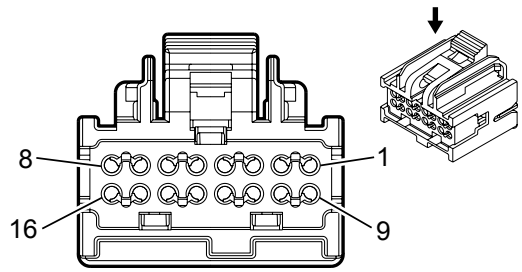

Connector Part Information

Harness Type: Instrument Panel

OEM Connector: 13567860

Service Connector: 13504130

Description: 16-Way F 64 Micro Series, Sealed (PU)

Terminal Part Information

Terminal Type ID	Terminated Lead	Diagnostic Test Probe	Terminal Removal Tool	Service Terminal	Tray Name	Core Crimp	Insulation Crimp
I	13575535	J-35616-64B (LT BU)	J-38125-21	15359541	Delphi 4	M	M
II	13579976	J-35616-64B (LT BU)	J-38125-21	15359541	Delphi 4	M	M

P5 Chime Alarm Control Module (UL5)

Pin	Size	Color	Circuit	Function	Terminal Type ID	Option
1	0.35	BN/WH	367	Remote Radio Left Audio Signal	I	—
2	0.35	D-GN/WH	368	Remote Radio Right Audio Signal (1)	I	—
3 - 4	—	—	—	Not Occupied	—	—
5	0.8	TN	1859	Left Rear Midrange Speaker Control (+)	II	—
6	0.8	TN	1855	Right Rear Midrange Speaker Control (+)	II	—
7	0.35	D-BU	658	Cellular Telephone Voice Signal	I	—
	0.8	D-BU	658		II	—
8	—	—	—	Not Occupied	—	—
9	0.35	TN/WH	372	Remote Radio Audio (-) Low Reference	I	—

9	0.35	TN/WH	372	Remote Radio Audio (-) Low Reference	I	—
10	0.35	GY	388	Remote Radio Right Audio Signal (2)	I	—
11 - 12	—	—	—	Not Occupied	—	—
13	0.8	WH	1959	Left Rear Midrange Speaker (-) Low Reference	II	—
14	0.8	OG	1955	Right Rear Midrange Speaker (-) Low Reference	II	—
15	0.35	L-BU/BK	659	Cellular Telephone Voice Low Reference	I	—
	0.8	L-BU/BK	659		II	—
16	—	—	—	Not Occupied	—	—

P13 Horn Assembly (L20, L96, or LC8)

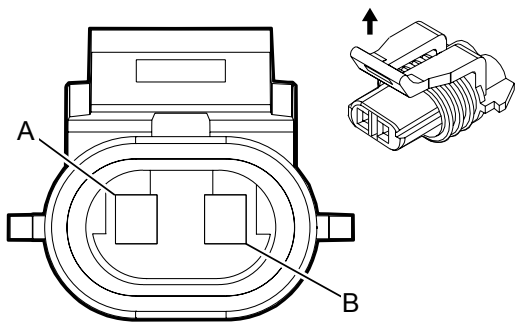

Connector Part Information

Harness Type: Engine

OEM Connector: 12052644

Service Connector: 15306302

Description: 2-Way F 150 Metri-Pack Series, Sealed (GY)

Terminal Part Information

Terminal Type ID	Terminated Lead	Diagnostic Test Probe	Terminal Removal Tool	Service Terminal	Tray Name	Core Crimp	Insulation Crimp
I	Not Required	J-35616-14 (GN)	Not Required	Not Required	Not Required	Not Required	Not Required

P13 Horn Assembly (L20, L96, or LC8)

Pin	Size	Color	Circuit	Function	Terminal Type ID	Option
A	0.8	BK	1250	Ground	I	—
B	0.8	D-GN	29	Horn Control	I	—

P13 Horn Assembly (LGH)

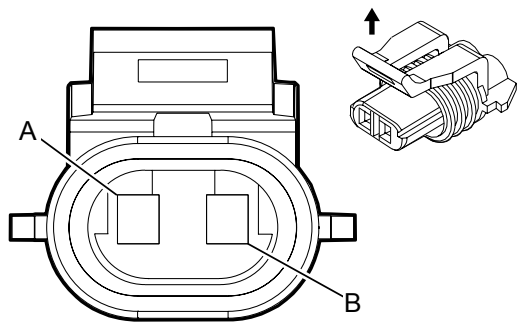

Connector Part Information

Harness Type: Engine Chassis

OEM Connector: 12052644

Service Connector: 15306302

Description: 2-Way F Metri-Pack 150 Series, Sealed (GY)

Terminal Part Information

Terminal Type ID	Terminated Lead	Diagnostic Test Probe	Terminal Removal Tool	Service Terminal	Tray	Core Crimp	Insulation Crimp
I	13575427	J-35616-14 (GN)	J-38125-12A	12048074	2	E	1

P13 Horn Assembly (LGH)

Pin	Size	Color	Circuit	Function	Terminal Type ID	Option
A	0.8	BK	1250	Ground	I	-
B	0.8	D-GN	29	Horn Control	I	-

P14 Passenger Air Bag Disable Indicator (AL0)

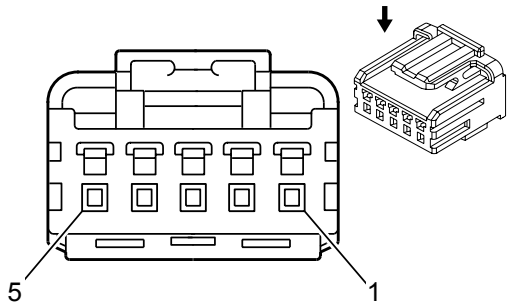

Connector Part Information

Harness Type: Instrument Panel

OEM Connector: 15398877

Service Connector: 88988112

Description: 5-Way F 0.64 HCM Series (NA)

Terminal Part Information

Terminal Type ID	Terminated Lead	Diagnostic Test Probe	Terminal Removal Tool	Service Terminal	Tray Name	Core Crimp	Insulation Crimp
I	Not Required	J-35616-64B (LT BU)	Not Required	Not Required	Not Required	Not Required	Not Required

P14 Passenger Air Bag Disable Indicator (AL0)

Pin	Size	Color	Circuit	Function	Terminal Type ID	Option
1	0.35	D-BU	2307	Passenger Air Bag On Indicator Control	I	—
2	0.5	BK/WH	351	Signal Ground	I	—
3	0.35	D-GN	2308	Passenger Air Bag Off Indicator Control	I	—
4	0.35	PK	1139	Run/Crank Ignition 1 Voltage	I	—
5	0.35	PU	5234	Passenger Seat Belt Indicator Control	I	—

P16 Instrument Cluster

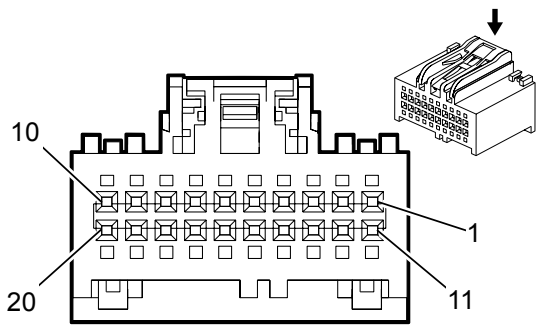

Connector Part Information

Harness Type: Instrument Panel

OEM Connector: 15489824

Service Connector: 15126711

Description: 20-Way F 0.64 Series (BK with WH Terminal Position Assurance)

Terminal Part Information

Terminal Type ID	Terminated Lead	Diagnostic Test Probe	Terminal Removal Tool	Service Terminal	Tray Name	Core Crimp	Insulation Crimp
I	13575867	J-35616-64B (LT BU)	J-38125-215A	SAIT-A03T-M064	Yazaki 14	P	P

P16 Instrument Cluster

Pin	Size	Color	Circuit	Function	Terminal Type ID	Option
1	0.35	D-GN	5060	Low Speed GMLAN Serial Data	I	—
2	—	—	—	Not Occupied	—	—
3	0.5	L-GN	1478	Coolant Level Switch Signal	I	—
4	0.5	BN/WH	419	Check Engine Indicator Control	I	—
5	0.35	PU	5234	Passenger Seat Belt Indicator Control	I	—
6	—	—	—	Not Occupied	—	—
7	0.35	BK/WH	351	Signal Ground	I	—
8	—	—	—	Not Occupied	—	—
9	0.35	D-BU	507	Wait To Start Indicator Control	I	—

10	0.5	D-GN/WH	636	Outside Ambient Air Temperature Sensor Signal	I	—
11	0.5	YE	61	Outside Ambient Temperature Sensor Low Reference	I	—
12	0.35	D-BU	2307	Passenger Air Bag On Indicator Control	I	—
13	0.35	D-GN	2308	Passenger Air Bag Off Indicator Control	I	—
14	0.5	TN/WH	33	Brake Warning Indicator Control	I	—
15	0.5	PU	333	Brake Fluid Level Sensor Signal	I	—
16	0.35	PK	893	Driver Information Center Select Menu Switch Signal	I	—
17	0.35	D-GN/WH	1358	Driver Information Center Switch Signal	I	—
18	0.35	BN	897	Driver Information Center Switch Low Reference	I	—
19	0.35	PK	1639	Run/Crank Ignition 1 Voltage	I	—
20	0.35	RD/WH	2840	Battery Positive Voltage	I	—

P19AG Speaker - Left Front Door

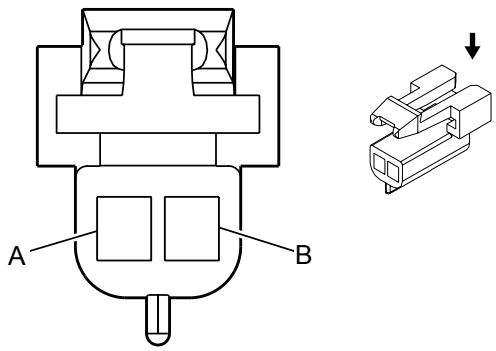

Connector Part Information

Harness Type: Driver Door

OEM Connector: 12052832

Service Connector: Service by Harness - See Part Catalog

Description: 2-Way F 150 Metri-Pack Series (BK)

Terminal Part Information

Terminal Type ID	Terminated Lead	Diagnostic Test Probe	Terminal Removal Tool	Service Terminal	Tray Name	Core Crimp	Insulation Crimp
I	Not Required	J-35616-14 (GN)	Not Required	Not Required	Not Required	Not Required	Not Required

P19AG Speaker - Left Front Door

Pin	Size	Color	Circuit	Function	Terminal Type ID	Option
A	0.8	L-BU	1957	Left Front Midrange Speaker (-) Low Reference	I	—
B	0.8	D-BU	1857	Left Front Midrange Speaker Control (+)	I	—

P19AH Speaker - Right Front Door

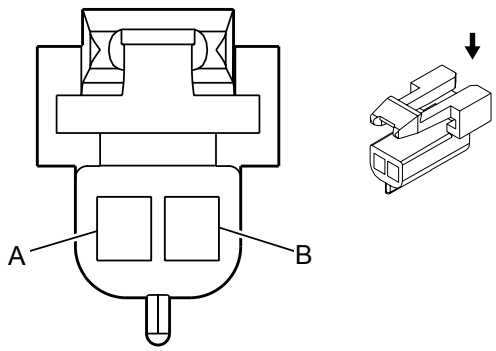

Connector Part Information

Harness Type: Passenger Door

OEM Connector: 12052832

Service Connector: Service by Harness - See Part Catalog

Description: 2-Way F 150 Metri-Pack Series (BK)

Terminal Part Information

Terminal Type ID	Terminated Lead	Diagnostic Test Probe	Terminal Removal Tool	Service Terminal	Tray Name	Core Crimp	Insulation Crimp
I	Not Required	J-35616-14 (GN)	Not Required	Not Required	Not Required	Not Required	Not Required

P19AH Speaker - Right Front Door

Pin	Size	Color	Circuit	Function	Terminal Type ID	Option
A	0.8	D-GN	1953	Right Front Midrange Speaker (-) Low Reference	I	—
B	0.8	OG	1853	Right Front Midrange Speaker Control (+)	I	—

P19LR Speaker - Left Rear Roof (Passenger or Cargo)

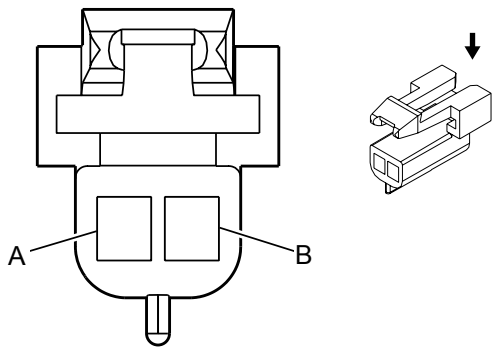

Connector Part Information

Harness Type: Left Rear Cargo Door

OEM Connector: 12052832

Service Connector: Service by Harness - See Part Catalog

Description: 2-Way F 150 Metri-Pack Series (BK)

Terminal Part Information

Terminal Type ID	Terminated Lead	Diagnostic Test Probe	Terminal Removal Tool	Service Terminal	Tray Name	Core Crimp	Insulation Crimp
I	Not Required	J-35616-14 (GN)	Not Required	Not Required	Not Required	Not Required	Not Required

P19LR Speaker - Left Rear Roof (Passenger or Cargo)

Pin	Size	Color	Circuit	Function	Terminal Type ID	Option
A	1	WH	1959	Left Rear Midrange Speaker (-) Low Reference	I	—
B	1	TN	1859	Left Rear Midrange Speaker Control (+)	I	—

P19RR Speaker - Right Rear Roof (Passenger or Cargo)

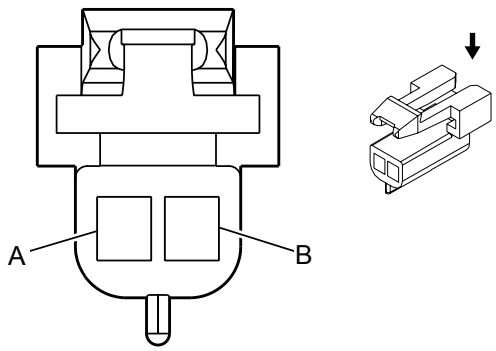

Connector Part Information

Harness Type: Right Rear Cargo Door

OEM Connector: 12052832

Service Connector: Service by Harness - See Part Catalog

Description: 2-Way F 150 Metri-Pack Series (BK)

Terminal Part Information

Terminal Type ID	Terminated Lead	Diagnostic Test Probe	Terminal Removal Tool	Service Terminal	Tray Name	Core Crimp	Insulation Crimp
I	Not Required	J-35616-14 (GN)	Not Required	Not Required	Not Required	Not Required	Not Required

P19RR Speaker - Right Rear Roof (Passenger or Cargo)

Pin	Size	Color	Circuit	Function	Terminal Type ID	Option
A	1	OG	1955	Right Rear Midrange Speaker (-) Low Reference	I	—
B	1	TN	1855	Right Rear Midrange Speaker Control (+)	I	—

P19F Speaker - Left Rear Cargo Door (US8)

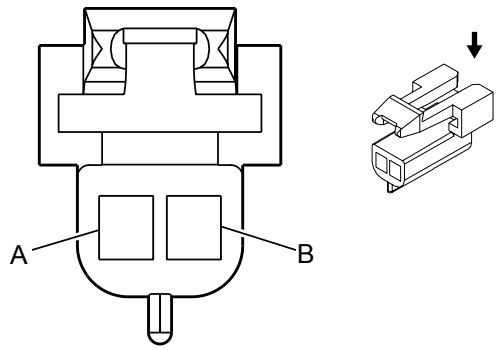

Connector Part Information

Harness: Left Rear Cargo Door

OEM: 12052832

Service: 13583033

Description: 2-Way F Metri-Pack 150 Series (BK)

Terminal Part Information

Terminal Type ID	Terminated Lead	Diagnostic Test Probe	Terminal Removal Tool	Service Terminal	Tray	Core Crimp	Insulation Crimp
I				12047767	2	E	A

P19F Speaker - Left Rear Cargo Door (US8)

Pin	Size	Color	Circuit	Function	Terminal Type ID	Option
A	1	WH	1959	Left Rear Midrange Speaker Output (–)	I	-
B	1	TN	1859	Left Rear Midrange Speaker Output (+)	I	-

P19T Speaker - Right Rear Cargo Door (US8)

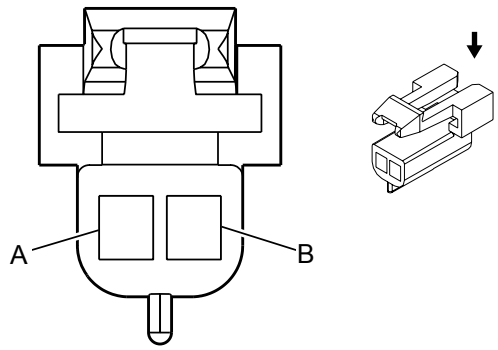

Connector Part Information

Harness: Right Rear Cargo Door

OEM: 12052832

Service: 13583033

Description: 2-Way F Metri-Pack 150 Series (BK)

Terminal Part Information

Terminal Type ID	Terminated Lead	Diagnostic Test Probe	Terminal Removal Tool	Service Terminal	Tray	Core Crimp	Insulation Crimp
I				12047767	2	E	A

P19T Speaker - Right Rear Cargo Door (US8)

Pin	Size	Color	Circuit	Function	Terminal Type ID	Option
A	1	OG	1955	Right Rear Midrange Speaker Output (−)	I	-
B	1	TN	1855	Right Rear Midrange Speaker Output (+)	I	-

P44 Wait to Start Indicator (KO7)

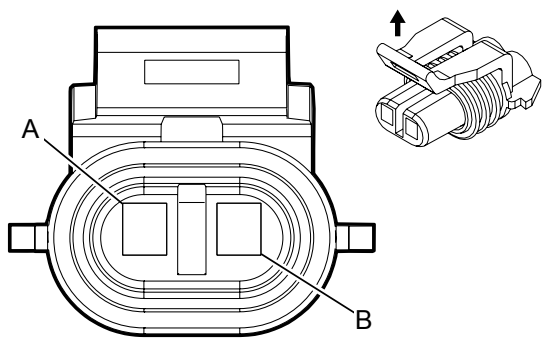

Connector Part Information

Harness Type: LPG Main

OEM Connector: 12052641

Service Connector: 12102747

Description: 2-Way F Metri-Pack 150 Series (BK)

Terminal Part Information

Terminal Type ID	Terminated Lead	Diagnostic Test Probe	Terminal Removal Tool	Service Terminal	Tray	Core Crimp	Insulation Crimp
I	Service by Harness – See Part Catalog	J-35616-14 (GN)	J-38125-12A	12048074	2	E	1

P44 Wait to Start Indicator (KO7)

Pin	Size	Color	Circuit	Function	Terminal Type ID	Option
A	0.35	RD	—	Wait to Start Lamp Control	I	-
B	0.35	BK	—	Ground	I	-

Q1A 1-2 Shift Solenoid Valve

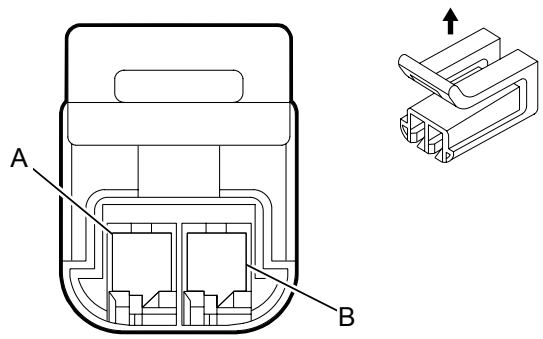

Connector Part Information

Harness: Transmission

OEM: 15473843

Service: Service by Harness - See Part Catalog

Description: 2-Way F Metri-Pack 150.2 Series (NA)

Terminal Part Information

Terminal Type ID	Terminated Lead	Diagnostic Test Probe	Terminal Removal Tool	Service Terminal	Tray	Core Crimp	Insulation Crimp
I				12124075	5	E	C

Q1A 1-2 Shift Solenoid Valve

Pin	Size	Color	Circuit	Function	Terminal Type ID	Option
A	0.5	RD	839	Ignition Voltage	I	-
B	0.5	L-GN	1222	1-2 Shift Solenoid Valve Control	I	-

Q1B 2-3 Shift Solenoid Valve

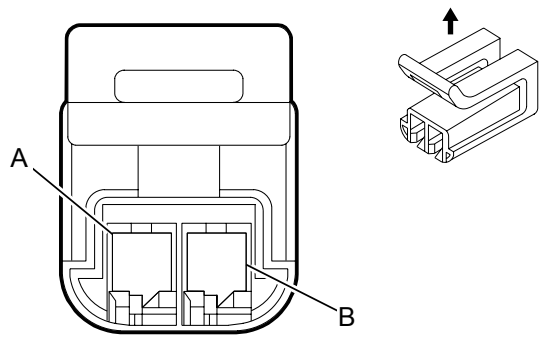

Connector Part Information

Harness: Transmission

OEM: 15473843

Service: Service by Harness - See Part Catalog

Description: 2-Way F Metri-Pack 150.2 Series (NA)

Terminal Part Information

Terminal Type ID	Terminated Lead	Diagnostic Test Probe	Terminal Removal Tool	Service Terminal	Tray	Core Crimp	Insulation Crimp
I				12124075	5	E	C

Q1B 2-3 Shift Solenoid Valve

Pin	Size	Color	Circuit	Function	Terminal Type ID	Option
A	0.5	RD	839	Ignition Voltage	I	-
B	0.5	YE	1223	2-3 Shift Solenoid Valve Control	I	-

Q2 A/C Compressor Clutch (C60 with L20, L96, or LC8)

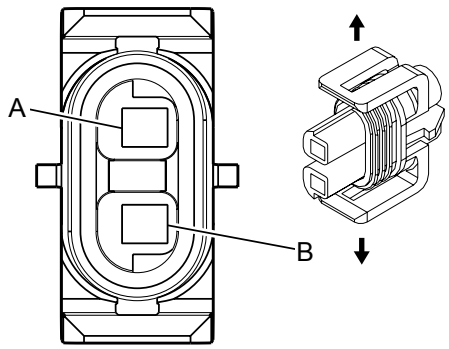

Connector Part Information

Harness Type: Engine (LU3, L20, LMF or L96)

Harness Type: Engine Chassis (LMM or LGH)

OEM Connector: 12162017

Service Connector: 12101937

Description: 2-Way F Metri-Pack 150 Series, Sealed (GY)

Terminal Part Information

Terminal Type ID	Terminated Lead	Diagnostic Test Probe	Terminal Removal Tool	Service Terminal	Tray	Core Crimp	Insulation Crimp
I	Pin A (L20 or L96) – 13575427	J-35616-14 (GN)	J-38125-12A	12048074	2	E	1

Q2 A/C Compressor Clutch (C60 with L20, L96, or LC8)

Pin	Size	Color	Circuit	Function	Terminal Type ID	Option
A	0.8 0.5	BK BK	1250 1250	Ground Ground	I	L20, L96, LMF or LU3 LGH or LMM
B	0.5	D-GN	59	A/C Compressor Clutch Control	I	-

Q2 A/C Compressor Clutch (C60 with LGH)

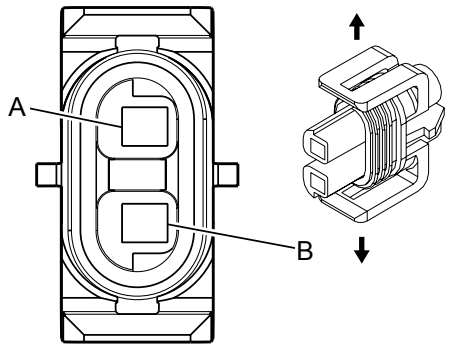

Connector Part Information

Harness Type: Engine

OEM Connector: 12162017

Service Connector: 12101937

Description: 2-Way F 150 Metri-Pack Series, Sealed (GY)

Terminal Part Information

Terminal Type ID	Terminated Lead	Diagnostic Test Probe	Terminal Removal Tool	Service Terminal	Tray Name	Core Crimp	Insulation Crimp
I	Not Required	J-35616-14 (GN)	Not Required	Not Required	Not Required	Not Required	Not Required

Q2 A/C Compressor Clutch (C60 with LGH)

Pin	Size	Color	Circuit	Function	Terminal Type ID	Option
A	0.8	BK	1250	Ground	I	—
B	0.5	D-GN	59	A/C Compressor Clutch Control	I	—

Q6 Camshaft Position Actuator Solenoid Valve (L20, L96, or LC8)

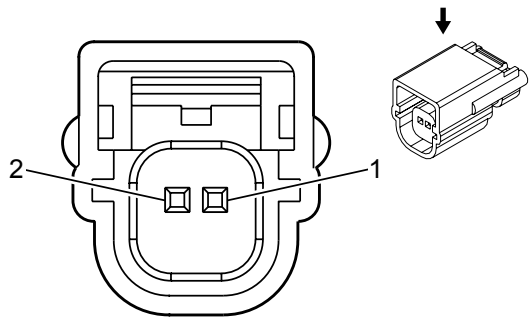

Connector Part Information

Harness Type: Camshaft Position Sensor Jumper

OEM Connector: 15472554

Service Connector: 88988610

Description: 2-Way F 64 Sleeve Assembly (BK)

Terminal Part Information

Terminal Type ID	Terminated Lead	Diagnostic Test Probe	Terminal Removal Tool	Service Terminal	Tray	Core Crimp	Insulation Crimp
I	13578815	J-35616-64B (L-BU)	J-38125-553	1393365-2//A	1393365-2//A	Not Available	Not Available

Q6 Camshaft Position Actuator Solenoid Valve (L20, L96, or LC8)

Pin	Size	Color	Circuit	Function	Terminal Type ID	Option
1	0.35	TN	2199	Low Reference	I	-
2	0.35	PU	5284	Camshaft Actuator Solenoid Control	I	-

Q8 Control Solenoid Valve Assembly X1

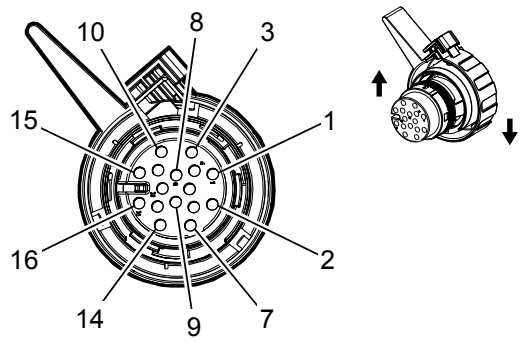

Connector Part Information

Harness Type: Transmission

OEM Connector: 13878751

Service Connector: 19303772

Description: 16-Way F 1.5 Series, Sealed (BK)

Terminal Part Information

Terminal Type ID	Terminated Lead	Diagnostic Test Probe	Terminal Removal Tool	Service Terminal	Tray Name	Core Crimp	Insulation Crimp
I	13575434	J-35616-66 (YE)	J-38125-28	2 21 24 47220 0	Yazaki 12	E	1
II	13578934	J-35616-66 (YE)	J-38125-28	2 21 24 47220 0	Yazaki 12	E	1

Q8 Control Solenoid Valve Assembly X1

Pin	Size	Color	Circuit	Function	Terminal Type ID	Option
1	0.35	RD/WH	1840	Battery Positive Voltage	I	—
2	0.8	BK/WH	1551	Signal Ground	II	—
3	0.5	OG/BK	1786	Transmission Park/Neutral Signal (1)	I	—
	0.5	OG/BK	1786		II	—
4	0.35	RD/WH	1840	Battery Positive Voltage	I	—
5	0.8	BK/WH	1551	Signal Ground	II	—
6	0.5	L-BU/WH	6311	Cruise/ETC/TCC Brake Signal	II	—
7	—	—	—	Not Occupied	—	—

8	0.5	TN	2501	High Speed GMLAN Serial Data (-) (1)	II	—
9	0.5	D-BU	5985	Accessory Wakeup Serial Data	II	—
10	0.5	TN/BK	2500	High Speed GMLAN Serial Data (+) (1)	II	—
11	0.5	TN	2501	High Speed GMLAN Serial Data (-) (1)	II	—
12	0.5	PK	2139	Run/Crank Ignition 1 Voltage	II	—
13	0.5	TN	2501	High Speed GMLAN Serial Data (-) (1)	II	—
14	0.5	TN/BK	2500	High Speed GMLAN Serial Data (+) (1)	II	—
15	0.5	TN/BK	2500	High Speed GMLAN Serial Data (+) (1)	II	—
16	0.5	OG/BK	6399	Replicated TOS Signal	II	—

Q8 Control Solenoid Valve Assembly X1 (L20, L96, or LC8)

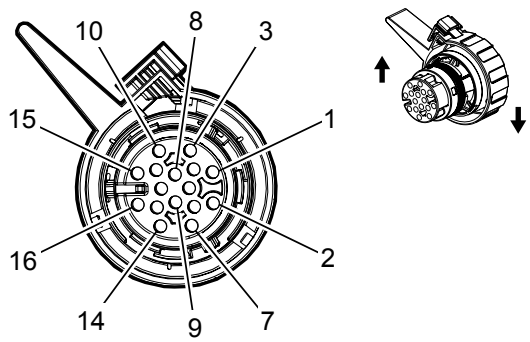

Connector Part Information

Harness Type: Engine (L20 or L96)

Harness Type: Transmission Jumper (LGH)

OEM Connector: 15491328

Service Connector: 15131300

Description: 16-Way F 1.5 Series, Sealed (BK)

Terminal Part Information

Terminal Type ID	Terminated Lead	Diagnostic Test Probe	Terminal Removal Tool	Service Terminal	Tray	Core Crimp	Insulation Crimp
I	13578934	J-35616-66 (YE)	J-38125-28	2 21 24 47220 0	12	E	1

Q8 Control Solenoid Valve Assembly X1 (L20, L96, or LC8)

Pin	Size	Color	Circuit	Function	Terminal Type ID	Option
1	0.35	RD/WH	1840	Battery Positive Voltage	I	LGH
2	0.8	BK/WH	1551	Ground	I	LGH
3	0.5	OG/BK	1786	Park/Neutral Signal	I	-
4	0.35	RD/WH	1840	Battery Positive Voltage	I	L20 or L96
5	0.8	BK/WH	1551	Ground	I	L20 or L96
6	0.5	L-BU/WH	6311	Brake Switch Signal	I	-
7	-	-	-	Not Occupied	-	-
8	0.5	TN	2501	High Speed GMLAN Serial Data Bus (−)	I	-
9	0.5	D-BU	5985	Accessory Wakeup Serial Data	I	-
10	0.5	TN/BK	2500	High Speed GMLAN Serial Data Bus (+)	I	-
11	0.5	TN	2501	High Speed GMLAN Serial Data Bus (−)	I	-
12	0.5	PK	2139	Ignition 1 Voltage	I	-
13	0.5	TN	2501	High Speed GMLAN Serial Data Bus (−)	I	-

14	0.5	TN/BK	2500	High Speed GMLAN Serial Data Bus (+)	I	-
15	0.5	TN/BK	2500	High Speed GMLAN Serial Data Bus (+)	I	-
16	0.5	OG/BK	6399	Replicated TOS Signal	I	-

Q8 Control Solenoid Valve Assembly X1 (LGH)

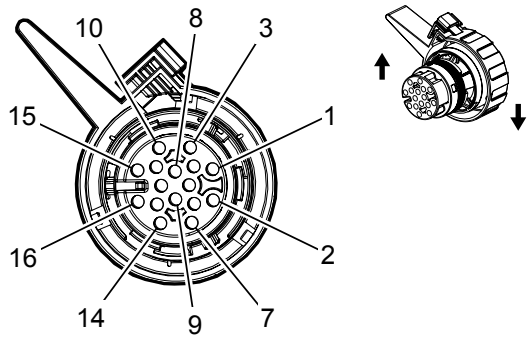

Connector Part Information

Harness Type: Transmission Jumper

OEM Connector: 15491328

Service Connector: 15131300

Description: 16-Way F 1.5 Series, Sealed (BK)

Terminal Part Information

Terminal Type ID	Terminated Lead	Diagnostic Test Probe	Terminal Removal Tool	Service Terminal	Tray	Core Crimp	Insulation Crimp
I	13578934	J-35616-66 (YE)	J-38125-28	10725296	17	E	1

Q8 Control Solenoid Valve Assembly X1 (LGH)

Pin	Size	Color	Circuit	Function	Terminal Type ID	Option
1	0.35	RD/WH	1840	Battery Positive Voltage	I	-
2	0.8	BK/WH	1551	Ground	I	-
3	0.5	OG/BK	1786	Park/Neutral Signal	I	-
4–5	-	-	-	Not Occupied	-	-
6	0.5	L-BU/WH	6311	Brake Switch Signal	I	-
7	-	-	-	Not Occupied	-	-
8	0.5	TN	2501	High Speed GMLAN Serial Data Bus (−)	I	-
9	0.5	D-BU	5985	Accessory Wakeup Serial Data	I	-
10	0.5	TN/BK	2500	High Speed GMLAN Serial Data Bus (+)	I	-
11	0.5	TN	2501	High Speed GMLAN Serial Data Bus (−)	I	-
12	0.5	PK	2139	Ignition 1 Voltage	I	-
13	0.5	TN	2501	High Speed GMLAN Serial Data Bus (−)	I	-
14	0.5	TN/BK	2500	High Speed GMLAN Serial Data Bus (+)	I	-
15	0.5	TN/BK	2500	High Speed GMLAN Serial Data Bus (+)	I	-

16	0.5	OG/BK	6399	Replicated TOS Signal	I	-

Q8 Control Solenoid Valve Assembly X2

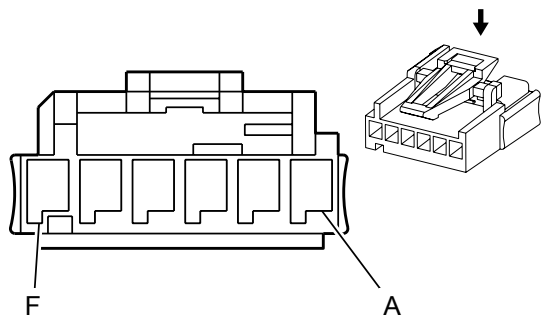

Connector Part Information

Harness Type: Transmission

OEM Connector: 15336500

Service Connector: 89046635

Description: 6-Way F Metri-Pack 150.2 Series (GN)

Terminal Part Information

Terminal Type ID	Terminated Lead	Diagnostic Test Probe	Terminal Removal Tool	Service Terminal	Tray	Core Crimp	Insulation Crimp
I	Service by Connector Assembly - 89046635	Not Available	Not Available	Not Available	Not Available	Not Available	Not Available

Q8 Control Solenoid Valve Assembly X2

Pin	Size	Color	Circuit	Function	Terminal Type ID	Option
A	GY	GY	—	Ground	I	-
B	BK	BK	—	Transmission Range Switch Signal P	I	-
C	YE	YE	—	Transmission Range Switch Signal C	I	-
D	RD	RD	—	Transmission Range Switch Signal B	I	-
E	GN	GN	—	Transmission Range Switch Signal A	I	-
F	WH	WH	—	Park/Neutral Switch Signal	I	-

Q8 Control Solenoid Valve Assembly X3

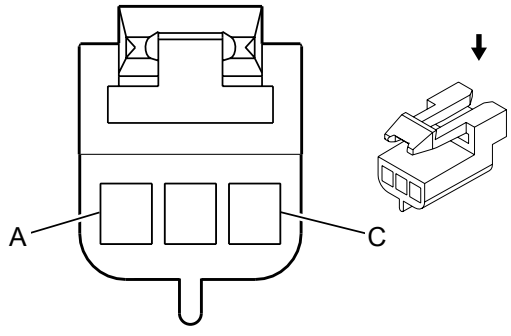

Connector Part Information

Harness Type: Transmission

OEM Connector: 12064758

Service Connector: 12117320

Description: 3-Way F Metri-Pack 150 Series (BK)

Terminal Part Information

Terminal Type ID	Terminated Lead	Diagnostic Test Probe	Terminal Removal Tool	Service Terminal	Tray	Core Crimp	Insulation Crimp
I	Service by Connector Assembly - 12117320	Not Available	Not Available	Not Available	Not Available	Not Available	Not Available

Q8 Control Solenoid Valve Assembly X3

Pin	Size	Color	Circuit	Function	Terminal Type ID	Option
A	GN	GN	—	Input Speed Sensor (ISS) Signal	I	-
B	RD	RD	—	8-Volt Reference	I	-
C	BK	BK	—	Output Speed Sensor (OSS) Signal	I	-

Q12 Evaporative Emission Purge Solenoid Valve (L20, L96, or LC8)

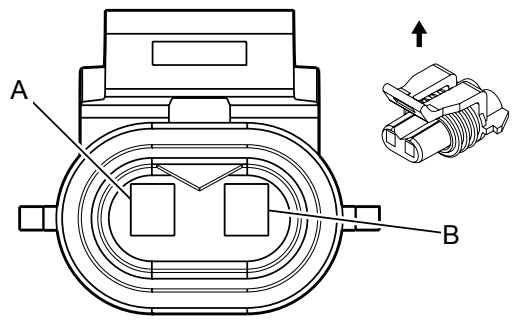

Connector Part Information

Harness Type: Engine

OEM Connector: 12124037

Service Connector: 13585860

Description: 2-Way F 150 Metri-Pack Series, Sealed (BK)

Terminal Part Information

Terminal Type ID	Terminated Lead	Diagnostic Test Probe	Terminal Removal Tool	Service Terminal	Tray Name	Core Crimp	Insulation Crimp
I	Not Required	J-35616-14 (GN)	Not Required	Not Required	Not Required	Not Required	Not Required

Q12 Evaporative Emission Purge Solenoid Valve (L20, L96, or LC8)

Pin	Size	Color	Circuit	Function	Terminal Type ID	Option
A	0.5	PK	1939	Run/Crank Ignition 1 Voltage	I	—
B	0.5	D-GN/WH	428	EVAP Canister Purge Solenoid Control	I	—

Q13 Evaporative Emission Vent Solenoid Valve (L20, L96, or LC8)

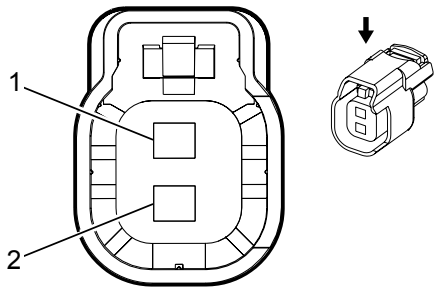

Connector Part Information

Harness Type: Chassis

OEM Connector: 13771883

Service Connector: 13579002

Description: 2-Way F 1.5 Series, Sealed (BK)

Terminal Part Information

Terminal Type ID	Terminated Lead	Diagnostic Test Probe	Terminal Removal Tool	Service Terminal	Tray Name	Core Crimp	Insulation Crimp
I	Not Required	J-35616-2A (GY)	Not Required	Not Required	Not Required	Not Required	Not Required

Q13 Evaporative Emission Vent Solenoid Valve (L20, L96, or LC8)

Pin	Size	Color	Circuit	Function	Terminal Type ID	Option
1	0.5	WH	1310	EVAP Canister Vent Solenoid Control	I	—
2	0.5	RD/WH	40	Battery Positive Voltage	I	—

Q14 Exhaust Gas Recirculation Valve (LGH)

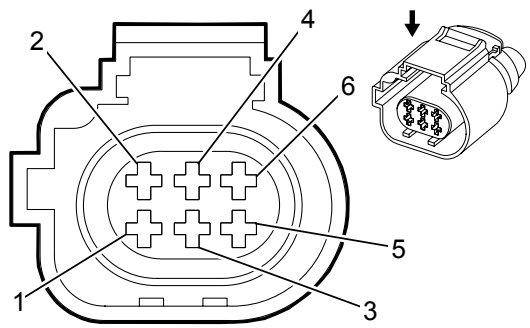

Connector Part Information

Harness Type: Engine

OEM Connector: 284716-3

Service Connector: 13586128

Description: 6-Way F 1.6 Micro Timer Series, Sealed (BN)

Terminal Part Information

Terminal Type ID	Terminated Lead	Diagnostic Test Probe	Terminal Removal Tool	Service Terminal	Tray Name	Core Crimp	Insulation Crimp
I	Not Required	J-35616-14 (GN)	Not Required	Not Required	Not Required	Not Required	Not Required

Q14 Exhaust Gas Recirculation Valve (LGH)

Pin	Size	Color	Circuit	Function	Terminal Type ID	Option
1	0.5	GY	2702	Exhaust Gas Recirculation 5 Volt Reference (2)	I	LGH
2	0.5	L-GN/BK	5746	Exhaust Gas Recirculation Valve Motor Low Signal	I	LGH
3	0.5	TN	2753	Exhaust Gas Recirculation Sensor Low Reference	I	LGH
4	—	—	—	Not Occupied	—	—
5	0.5	BN/WH	5763	Exhaust Gas Recirculation Valve Sensor Signal	I	LGH
6	0.5	OG/BK	5764	Exhaust Gas Recirculation Valve Motor High Signal	I	LGH

Q17A Fuel Injector 1 (L20 or L96)

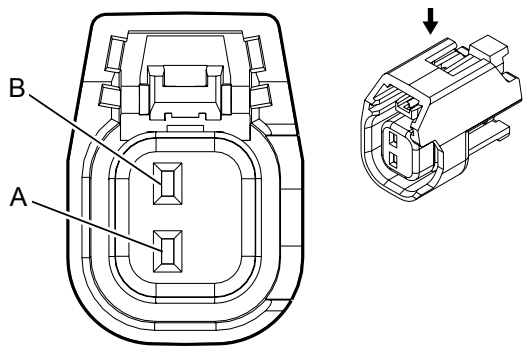

Connector Part Information

Harness Type: Engine

OEM Connector: 15419715

Service Connector: 13580876

Description: 2-Way F GT 150 Series, Sealed (GY)

Terminal Part Information

Terminal Type ID	Terminated Lead	Diagnostic Test Probe	Terminal Removal Tool	Service Terminal	Tray	Core Crimp	Insulation Crimp
I	Pin A– 13327113	J-35616-2A (GY)	J-38125-553	12191819	8	Pin A– 2	1

Q17A Fuel Injector 1 (L20 or L96)

Pin	Size	Color	Circuit	Function	Terminal Type ID	Option
A	0.8	PK	1039	Ignition Voltage	I	-
B	0.5	TN	1744	Fuel Injector 1 Control	I	-

Q17A Fuel Injector 1 (LGH)

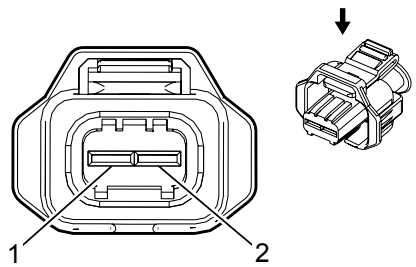

Connector Part Information

Harness Type: Engine

OEM Connector: 1928404114

Service Connector: 13576410

Description: 2-Way F 2.8 Series, Sealed (BK)

Terminal Part Information

Terminal Type ID	Terminated Lead	Diagnostic Test Probe	Terminal Removal Tool	Service Terminal	Tray Name	Core Crimp	Insulation Crimp
I	Not Required	J-35616-35 (VT)	Not Required	Not Required	Not Required	Not Required	Not Required

Q17A Fuel Injector 1 (LGH)

Pin	Size	Color	Circuit	Function	Terminal Type ID	Option
1	0.8	BN/WH	4901	Direct Fuel Injector (DFI) High Voltage Supply Cylinder 1	I	LGH
2	0.8	BN	4801	Direct Fuel Injector (DFI) High Voltage Control Cylinder 1	I	LGH

Q17A Fuel Injector 1 (LC8 with KO7 and UFM)

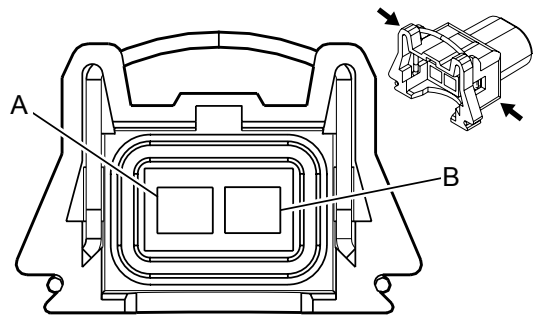

Connector Part Information

Harness Type: Fuel Injector Jumper

OEM Connector: 12129140

Service Connector: 12085491

Description: 2-Way F Metri-Pack 280.1 , Pull To Seat (BK)

Terminal Part Information

Terminal Type ID	Terminated Lead	Diagnostic Test Probe	Terminal Removal Tool	Service Terminal	Tray	Core Crimp	Insulation Crimp
I	Service by Harness – See Part Catalog	J-35616-4A (PU)	J-38125-559	12077939	18	C	A

Q17A Fuel Injector 1 (LC8 with KO7 and UFM)

Pin	Size	Color	Circuit	Function	Terminal Type ID	Option
A	1	RD	—	Ignition Voltage	I	-
B	1	BK	—	Fuel Injector 1 Control	I	-

Q17A Fuel Injector 1 (LC8 with FHZ)

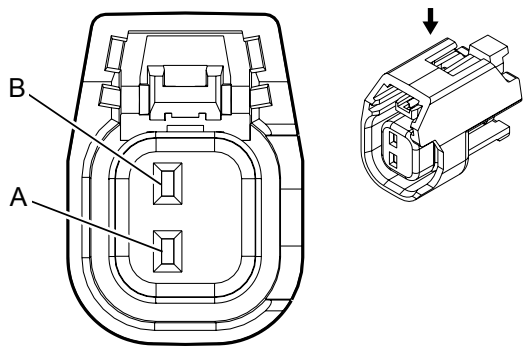

Connector Part Information

Harness Type: Engine

OEM Connector: 15419715

Service Connector: 13580876

Description: 2-Way F 150 GT Series, Sealed (GY)

Terminal Part Information

Terminal Type ID	Terminated Lead	Diagnostic Test Probe	Terminal Removal Tool	Service Terminal	Tray Name	Core Crimp	Insulation Crimp
I	Not Required	J-35616-14 (GN)	Not Required	Not Required	Not Required	Not Required	Not Required

Q17A Fuel Injector 1 (LC8 with FHZ)

Pin	Size	Color	Circuit	Function	Terminal Type ID	Option
A	0.8	PK	1039	Run/Crank Ignition 1 Voltage	I	—
B	0.5	TN	1744	Fuel Injector Control (1)	I	—

Q17B Fuel Injector 2 (L20 or L96)

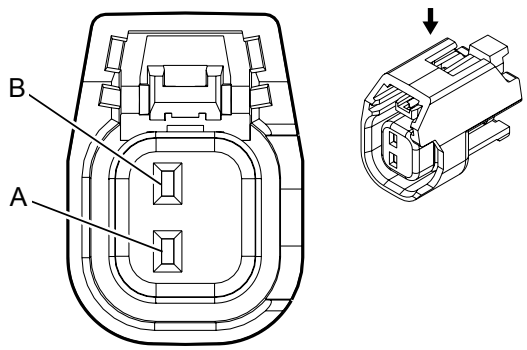

Connector Part Information

Harness Type: Engine

OEM Connector: 15419715

Service Connector: 13580876

Description: 2-Way F GT 150 Series, Sealed (GY)

Terminal Part Information

Terminal Type ID	Terminated Lead	Diagnostic Test Probe	Terminal Removal Tool	Service Terminal	Tray	Core Crimp	Insulation Crimp
I	Pin A– 13327113	J-35616-2A (GY)	J-38125-553	12191819	8	Pin A– 2	1

Q17B Fuel Injector 2 (L20 or L96)

Pin	Size	Color	Circuit	Function	Terminal Type ID	Option
A	0.8	PK	1239	Ignition Voltage	I	-
B	0.5	L-GN/BK	1745	Fuel Injector 2 Control	I	-

Q17B Fuel Injector 2 (LGH)

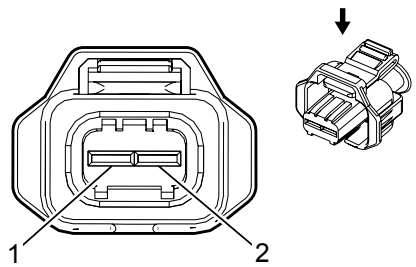

Connector Part Information

Harness Type: Engine

OEM Connector: 1928404114

Service Connector: 13576410

Description: 2-Way F 2.8 Series, Sealed (BK)

Terminal Part Information

Terminal Type ID	Terminated Lead	Diagnostic Test Probe	Terminal Removal Tool	Service Terminal	Tray Name	Core Crimp	Insulation Crimp
I	Not Required	J-35616-35 (VT)	Not Required	Not Required	Not Required	Not Required	Not Required

Q17B Fuel Injector 2 (LGH)

Pin	Size	Color	Circuit	Function	Terminal Type ID	Option
1	0.8	D-BU/WH	4902	Direct Fuel Injector (DFI) High Voltage Supply Cylinder 2	I	LGH
2	0.8	D-BU	4802	Direct Fuel Injector (DFI) High Voltage Control Cylinder 2	I	LGH

Q17B Fuel Injector 2 (LC8 with KO7 and UFM)

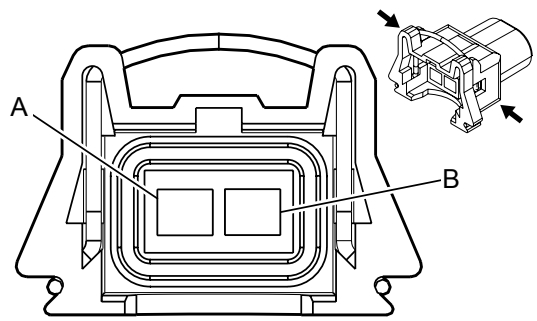

Connector Part Information

Harness Type: Fuel Injector Jumper

OEM Connector: 12129140

Service Connector: 12085491

Description: 2-Way F Metri-Pack 280.1 , Pull To Seat (BK)

Terminal Part Information

Terminal Type ID	Terminated Lead	Diagnostic Test Probe	Terminal Removal Tool	Service Terminal	Tray	Core Crimp	Insulation Crimp
I	Service by Harness – See Part Catalog	J-35616-4A (PU)	J-38125-559	12077939	18	C	A

Q17B Fuel Injector 2 (LC8 with KO7 and UFM)

Pin	Size	Color	Circuit	Function	Terminal Type ID	Option
A	1	RD	—	Ignition Voltage	I	-
B	1	BK	—	Fuel Injector 2 Control	I	-

Q17B Fuel Injector 2 (LC8 with FHZ)

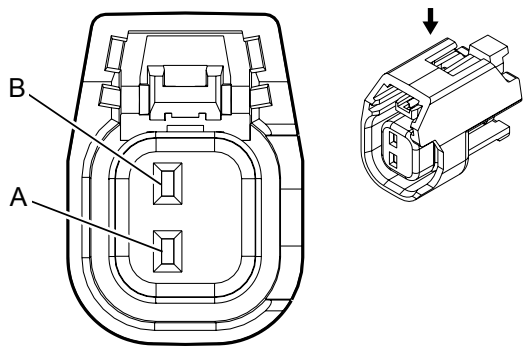

Connector Part Information

Harness Type: Engine

OEM Connector: 15419715

Service Connector: 13580876

Description: 2-Way F 150 GT Series, Sealed (GY)

Terminal Part Information

Terminal Type ID	Terminated Lead	Diagnostic Test Probe	Terminal Removal Tool	Service Terminal	Tray Name	Core Crimp	Insulation Crimp
I	Not Required	J-35616-14 (GN)	Not Required	Not Required	Not Required	Not Required	Not Required

Q17B Fuel Injector 2 (LC8 with FHZ)

Pin	Size	Color	Circuit	Function	Terminal Type ID	Option
A	0.8	PK	1239	Run/Crank Ignition 1 Voltage	I	—
B	0.5	L-GN/BK	1745	Fuel Injector Control (2)	I	—

Q17C Fuel Injector 3 (L20 or L96)

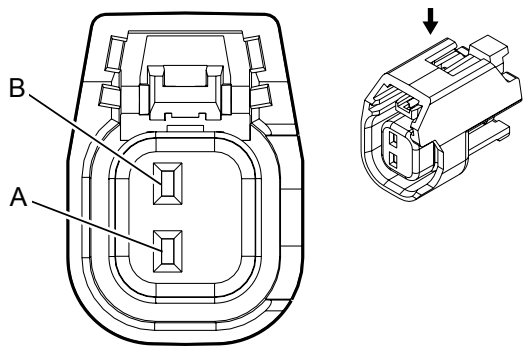

Connector Part Information

Harness Type: Engine

OEM Connector: 15419715

Service Connector: 13580876

Description: 2-Way F 150 GT Series, Sealed (GY)

Terminal Part Information

Terminal Type ID	Terminated Lead	Diagnostic Test Probe	Terminal Removal Tool	Service Terminal	Tray Name	Core Crimp	Insulation Crimp
I	Not Required	J-35616-14 (GN)	Not Required	Not Required	Not Required	Not Required	Not Required

Q17C Fuel Injector 3 (L20 or L96)

Pin	Size	Color	Circuit	Function	Terminal Type ID	Option
A	0.8	PK	1039	Run/Crank Ignition 1 Voltage	I	—
B	0.5	PK/BK	1746	Fuel Injector Control (3)	I	—

Q17C Fuel Injector 3 (LGH)

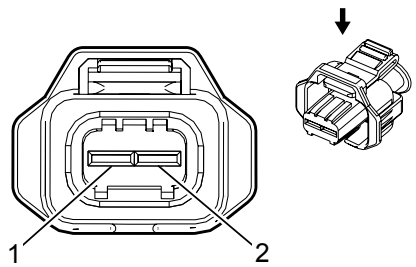

Connector Part Information

Harness Type: Engine

OEM Connector: 1928404114

Service Connector: 13576410

Description: 2-Way F 2.8 Series, Sealed (BK)

Terminal Part Information

Terminal Type ID	Terminated Lead	Diagnostic Test Probe	Terminal Removal Tool	Service Terminal	Tray Name	Core Crimp	Insulation Crimp
I	Not Required	J-35616-35 (VT)	Not Required	Not Required	Not Required	Not Required	Not Required

Q17C Fuel Injector 3 (LGH)

Pin	Size	Color	Circuit	Function	Terminal Type ID	Option
1	0.8	D-GN/WH	4903	Direct Fuel Injector (DFI) High Voltage Supply Cylinder 3	I	LGH
2	0.8	D-GN	4803	Direct Fuel Injector (DFI) High Voltage Control Cylinder 3	I	LGH

Q17C Fuel Injector 3 (LC8 with KO7 and UFM)

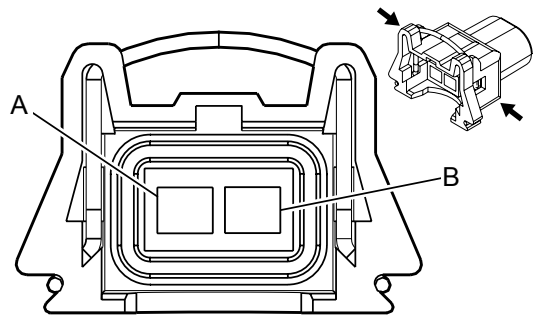

Connector Part Information

Harness Type: Fuel Injector Jumper

OEM Connector: 12129140

Service Connector: 12085491

Description: 2-Way F Metri-Pack 280.1 , Pull To Seat (BK)

Terminal Part Information

Terminal Type ID	Terminated Lead	Diagnostic Test Probe	Terminal Removal Tool	Service Terminal	Tray	Core Crimp	Insulation Crimp
I	Service by Harness – See Part Catalog	J-35616-4A (PU)	J-38125-559	12077939	18	C	A

Q17C Fuel Injector 3 (LC8 with KO7 and UFM)

Pin	Size	Color	Circuit	Function	Terminal Type ID	Option
A	1	RD	—	Ignition Voltage	I	-
B	1	BK	—	Fuel Injector 3 Control	I	-

Q17C Fuel Injector 3 (LC8 with FHZ)

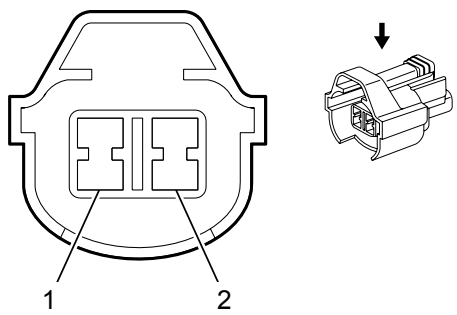

Connector Part Information

Harness Type: Fuel Injector 3

OEM Connector: FDJ2

Service Connector: Service by Harness – See Part Catalog

Description: 2-Way F Sealed (GY)

Terminal Part Information

Terminal Type ID	Terminated Lead	Diagnostic Test Probe	Terminal Removal Tool	Service Terminal	Tray	Core Crimp	Insulation Crimp
I	Service by Harness – See Part Catalog	Pending	Pending	Not Available	Not Available	Not Available	Not Available

Q17C Fuel Injector 3 (LC8 with FHZ)

Pin	Size	Color	Circuit	Function	Terminal Type ID	Option
1	RD	RD	—	Ignition Voltage	I	-
2	GY	GY	—	Fuel Injector 3 Control	I	-

Q17D Fuel Injector 4 (L20 or L96)

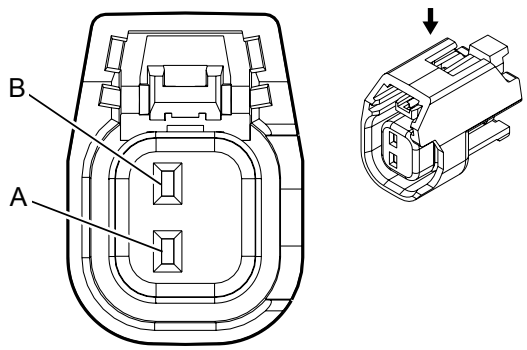

Connector Part Information

Harness Type: Engine

OEM Connector: 15419715

Service Connector: 13580876

Description: 2-Way F GT 150 Series, Sealed (GY)

Terminal Part Information

Terminal Type ID	Terminated Lead	Diagnostic Test Probe	Terminal Removal Tool	Service Terminal	Tray	Core Crimp	Insulation Crimp
I	Pin A– 13327113	J-35616-2A (GY)	J-38125-553	12191819	8	Pin A– 2	1

Q17D Fuel Injector 4 (L20 or L96)

Pin	Size	Color	Circuit	Function	Terminal Type ID	Option
A	0.8	PK	1239	Ignition Voltage	I	-
B	0.5	L-BU/BK	844	Fuel Injector 4 Control	I	-

Q17D Fuel Injector 4 (LGH)

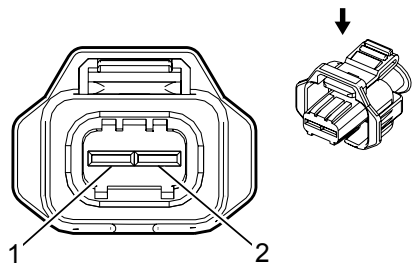

Connector Part Information

Harness Type: Engine

OEM Connector: 1928404114

Service Connector: 13576410

Description: 2-Way F 2.8 Series, Sealed (BK)

Terminal Part Information

Terminal Type ID	Terminated Lead	Diagnostic Test Probe	Terminal Removal Tool	Service Terminal	Tray Name	Core Crimp	Insulation Crimp
I	Not Required	J-35616-35 (VT)	Not Required	Not Required	Not Required	Not Required	Not Required

Q17D Fuel Injector 4 (LGH)

Pin	Size	Color	Circuit	Function	Terminal Type ID	Option
1	0.8	L-BU/WH	4904	Direct Fuel Injector (DFI) High Voltage Supply Cylinder 4	I	LGH
2	0.8	L-BU	4804	Direct Fuel Injector (DFI) High Voltage Control Cylinder 4	I	LGH

Q17D Fuel Injector 4 (LC8 with KO7 and UFM)

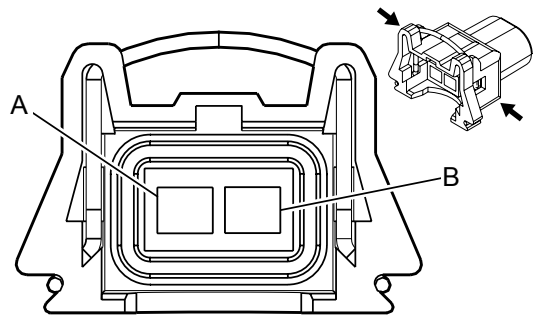

Connector Part Information

Harness Type: Fuel Injector Jumper

OEM Connector: 12129140

Service Connector: 12085491

Description: 2-Way F Metri-Pack 280.1 , Pull To Seat (BK)

Terminal Part Information

Terminal Type ID	Terminated Lead	Diagnostic Test Probe	Terminal Removal Tool	Service Terminal	Tray	Core Crimp	Insulation Crimp
I	Service by Harness – See Part Catalog	J-35616-4A (PU)	J-38125-559	12077939	18	C	A

Q17D Fuel Injector 4 (LC8 with KO7 and UFM)

Pin	Size	Color	Circuit	Function	Terminal Type ID	Option
A	1	RD	—	Ignition Voltage	I	-
B	1	BK	—	Fuel Injector 4 Control	I	-

Q17D Fuel Injector 4 (LC8 with FHZ)

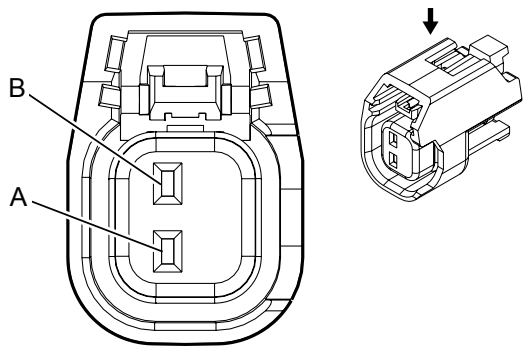

Connector Part Information

Harness Type: Engine

OEM Connector: 15419715

Service Connector: 13580876

Description: 2-Way F 150 GT Series, Sealed (GY)

Terminal Part Information

Terminal Type ID	Terminated Lead	Diagnostic Test Probe	Terminal Removal Tool	Service Terminal	Tray Name	Core Crimp	Insulation Crimp
I	Not Required	J-35616-14 (GN)	Not Required	Not Required	Not Required	Not Required	Not Required

Q17D Fuel Injector 4 (LC8 with FHZ)

Pin	Size	Color	Circuit	Function	Terminal Type ID	Option
A	0.8	PK	1239	Run/Crank Ignition 1 Voltage	I	—
B	0.5	L-BU/BK	844	Fuel Injector Control (4)	I	—

Q17E Fuel Injector 5 (L20 or L96)

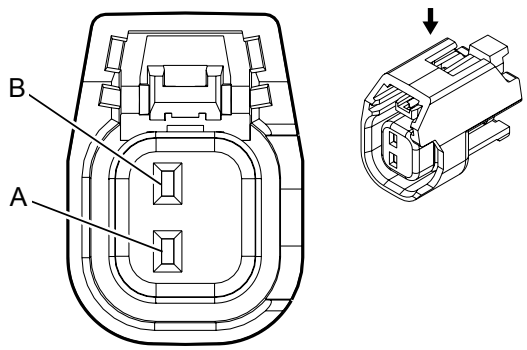

Connector Part Information

Harness Type: Engine

OEM Connector: 15419715

Service Connector: 13580876

Description: 2-Way F GT 150 Series, Sealed (GY)

Terminal Part Information

Terminal Type ID	Terminated Lead	Diagnostic Test Probe	Terminal Removal Tool	Service Terminal	Tray	Core Crimp	Insulation Crimp
I	Pin A– 13327113	J-35616-2A (GY)	J-38125-553	12191819	8	Pin A– 2	1

Q17E Fuel Injector 5 (L20 or L96)

Pin	Size	Color	Circuit	Function	Terminal Type ID	Option
A	0.8	PK	1039	Ignition Voltage	I	-
B	0.5	TN/WH	845	Fuel Injector 5 Control	I	-

Q17E Fuel Injector 5 (LGH)

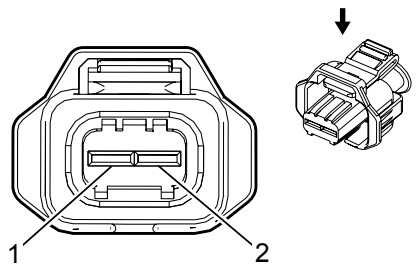

Connector Part Information

Harness Type: Engine

OEM Connector: 1928404114

Service Connector: 13576410

Description: 2-Way F 2.8 Series, Sealed (BK)

Terminal Part Information

Terminal Type ID	Terminated Lead	Diagnostic Test Probe	Terminal Removal Tool	Service Terminal	Tray Name	Core Crimp	Insulation Crimp
I	Not Required	J-35616-35 (VT)	Not Required	Not Required	Not Required	Not Required	Not Required

Q17E Fuel Injector 5 (LGH)

Pin	Size	Color	Circuit	Function	Terminal Type ID	Option
1	0.8	L-GN/WH	4905	Direct Fuel Injector (DFI) High Voltage Supply Cylinder 5	I	LGH
2	0.8	L-GN	4805	Direct Fuel Injector (DFI) High Voltage Control Cylinder 5	I	LGH

Q17E Fuel Injector 5 (LC8 with KO7 and UFM)

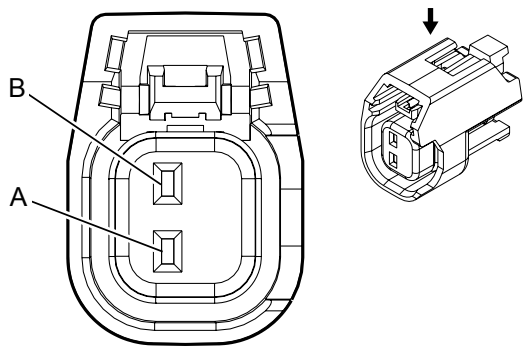

Connector Part Information

Harness Type: Engine

OEM Connector: 15419715

Service Connector: 13580876

Description: 2-Way F 150 GT Series, Sealed (GY)

Terminal Part Information

Terminal Type ID	Terminated Lead	Diagnostic Test Probe	Terminal Removal Tool	Service Terminal	Tray Name	Core Crimp	Insulation Crimp
I	Not Required	J-35616-14 (GN)	Not Required	Not Required	Not Required	Not Required	Not Required

Q17E Fuel Injector 5 (LC8 with KO7 and UFM)

Pin	Size	Color	Circuit	Function	Terminal Type ID	Option
A	0.8	PK	1039	Run/Crank Ignition 1 Voltage	I	—
B	0.5	TN/WH	845	Fuel Injector Control (5)	I	—

Q17E Fuel Injector 5 (LC8 with FHZ)

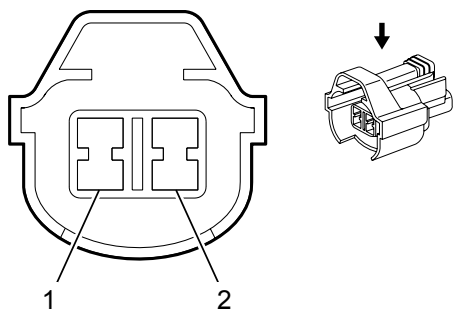

Connector Part Information

Harness Type: Fuel Injector 5

OEM Connector: FDJ2

Service Connector: Service by Harness – See Part Catalog

Description: 2-Way F Sealed (GY)

Terminal Part Information

Terminal Type ID	Terminated Lead	Diagnostic Test Probe	Terminal Removal Tool	Service Terminal	Tray	Core Crimp	Insulation Crimp
I	Service by Harness – See Part Catalog	Pending	Pending	Not Available	Not Available	Not Available	Not Available

Q17E Fuel Injector 5 (LC8 with FHZ)

Pin	Size	Color	Circuit	Function	Terminal Type ID	Option
1	RD	RD	—	Ignition Voltage	I	-
2	GY	GY	—	Fuel Injector 5 Control	I	-

Q17F Fuel Injector 6 (L20 or L96)

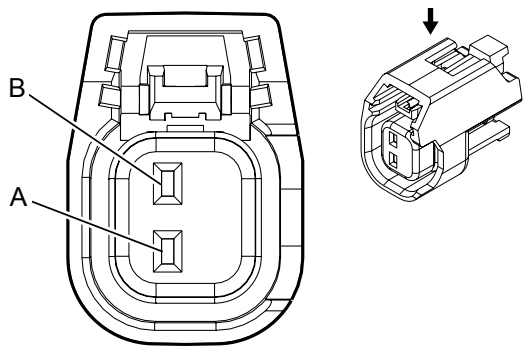

Connector Part Information

Harness Type: Engine

OEM Connector: 15419715

Service Connector: 13580876

Description: 2-Way F 150 GT Series, Sealed (GY)

Terminal Part Information

Terminal Type ID	Terminated Lead	Diagnostic Test Probe	Terminal Removal Tool	Service Terminal	Tray Name	Core Crimp	Insulation Crimp
I	Not Required	J-35616-14 (GN)	Not Required	Not Required	Not Required	Not Required	Not Required

Q17F Fuel Injector 6 (L20 or L96)

Pin	Size	Color	Circuit	Function	Terminal Type ID	Option
A	0.8	PK	1239	Run/Crank Ignition 1 Voltage	I	—
B	0.5	YE/BK	846	Fuel Injector Control (6)	I	—

Q17F Fuel Injector 6 (LGH)

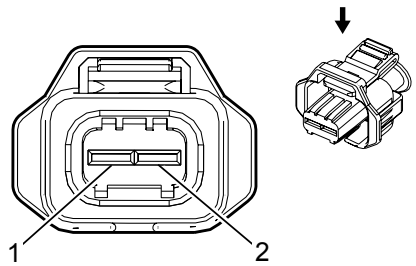

Connector Part Information

Harness Type: Engine

OEM Connector: 1928404114

Service Connector: 13576410

Description: 2-Way F 2.8 Series, Sealed (BK)

Terminal Part Information

Terminal Type ID	Terminated Lead	Diagnostic Test Probe	Terminal Removal Tool	Service Terminal	Tray Name	Core Crimp	Insulation Crimp
I	Not Required	J-35616-35 (VT)	Not Required	Not Required	Not Required	Not Required	Not Required

Q17F Fuel Injector 6 (LGH)

Pin	Size	Color	Circuit	Function	Terminal Type ID	Option
1	0.8	VT/WH	4906	Direct Fuel Injector (DFI) High Voltage Supply Cylinder 6	I	LGH
2	0.8	VT	4806	Direct Fuel Injector (DFI) High Voltage Control Cylinder 6	I	LGH

Q17F Fuel Injector 6 (LC8 with KO7 and UFM)

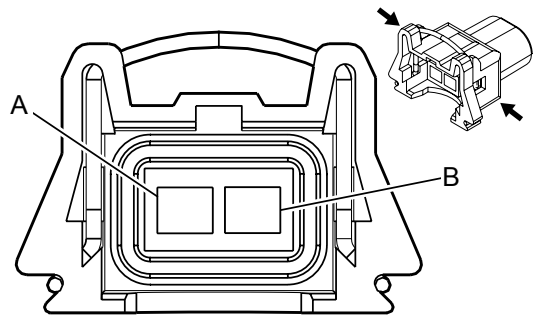

Connector Part Information

Harness Type: Fuel Injector Jumper

OEM Connector: 12129140

Service Connector: 12085491

Description: 2-Way F Metri-Pack 280.1 , Pull To Seat (BK)

Terminal Part Information

Terminal Type ID	Terminated Lead	Diagnostic Test Probe	Terminal Removal Tool	Service Terminal	Tray	Core Crimp	Insulation Crimp
I	Service by Harness – See Part Catalog	J-35616-4A (PU)	J-38125-559	12077939	18	C	A

Q17F Fuel Injector 6 (LC8 with KO7 and UFM)

Pin	Size	Color	Circuit	Function	Terminal Type ID	Option
A	1	RD	—	Ignition Voltage	I	-
B	1	BK	—	Fuel Injector 6 Control	I	-

Q17F Fuel Injector 6 (LC8 with FHZ)

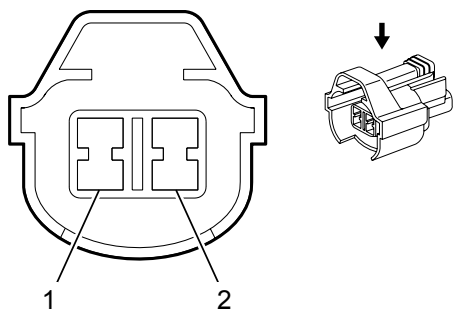

Connector Part Information

Harness Type: Fuel Injector 6

OEM Connector: FDJ2

Service Connector: Service by Harness – See Part Catalog

Description: 2-Way F Sealed (GY)

Terminal Part Information

Terminal Type ID	Terminated Lead	Diagnostic Test Probe	Terminal Removal Tool	Service Terminal	Tray	Core Crimp	Insulation Crimp
I	Service by Harness – See Part Catalog	Pending	Pending	Not Available	Not Available	Not Available	Not Available

Q17F Fuel Injector 6 (LC8 with FHZ)

Pin	Size	Color	Circuit	Function	Terminal Type ID	Option
1	RD	RD	—	Ignition Voltage	I	-
2	GY	GY	—	Fuel Injector 6 Control	I	-

Q17G Fuel Injector 7 (L20 or L96)

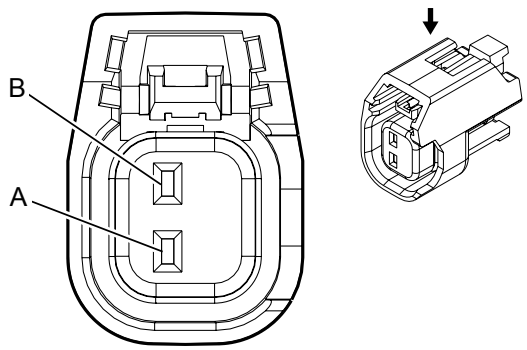

Connector Part Information

Harness Type: Engine

OEM Connector: 15419715

Service Connector: 13580876

Description: 2-Way F GT 150 Series, Sealed (GY)

Terminal Part Information

Terminal Type ID	Terminated Lead	Diagnostic Test Probe	Terminal Removal Tool	Service Terminal	Tray	Core Crimp	Insulation Crimp
I	Pin A– 13327113	J-35616-2A (GY)	J-38125-553	12191819	8	Pin A– 2	1

Q17G Fuel Injector 7 (L20 or L96)

Pin	Size	Color	Circuit	Function	Terminal Type ID	Option
A	0.8	PK	1039	Ignition Voltage	I	-
B	0.5	OG/BK	877	Fuel Injector 7 Control	I	-

Q17G Fuel Injector 7 (LGH)

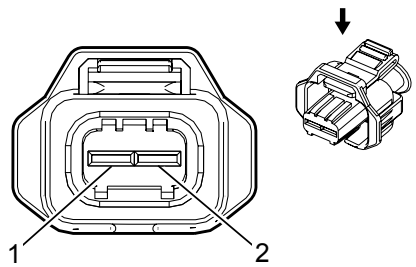

Connector Part Information

Harness Type: Engine

OEM Connector: 1928404114

Service Connector: 13576410

Description: 2-Way F 2.8 Series, Sealed (BK)

Terminal Part Information

Terminal Type ID	Terminated Lead	Diagnostic Test Probe	Terminal Removal Tool	Service Terminal	Tray Name	Core Crimp	Insulation Crimp
I	Not Required	J-35616-35 (VT)	Not Required	Not Required	Not Required	Not Required	Not Required

Q17G Fuel Injector 7 (LGH)

Pin	Size	Color	Circuit	Function	Terminal Type ID	Option
1	0.8	TN/WH	4907	Direct Fuel Injector (DFI) High Voltage Supply Cylinder 7	I	LGH
2	0.8	TN	4807	Direct Fuel Injector (DFI) High Voltage Control Cylinder 7	I	LGH

Q17G Fuel Injector 7 (LC8 with KO7 and UFM)

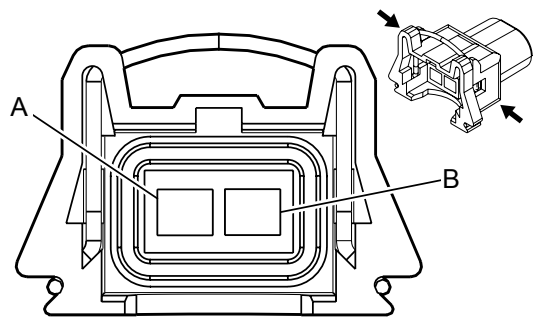

Connector Part Information

Harness Type: Fuel Injector Jumper

OEM Connector: 12129140

Service Connector: 12085491

Description: 2-Way F Metri-Pack 280.1 , Pull To Seat (BK)

Terminal Part Information

Terminal Type ID	Terminated Lead	Diagnostic Test Probe	Terminal Removal Tool	Service Terminal	Tray	Core Crimp	Insulation Crimp
I	Service by Harness – See Part Catalog	J-35616-4A (PU)	J-38125-559	12077939	18	C	A

Q17G Fuel Injector 7 (LC8 with KO7 and UFM)

Pin	Size	Color	Circuit	Function	Terminal Type ID	Option
A	1	RD	—	Ignition Voltage	I	-
B	1	BK	—	Fuel Injector 7 Control	I	-

Q17G Fuel Injector 7 (LC8 with FHZ)

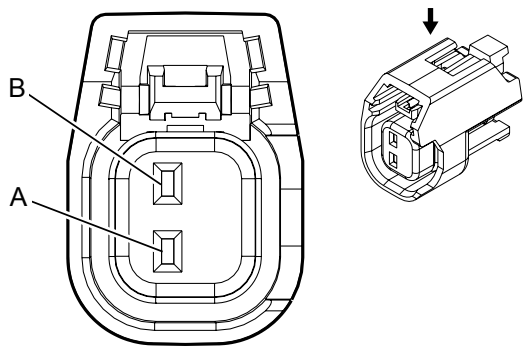

Connector Part Information

Harness Type: Engine

OEM Connector: 15419715

Service Connector: 13580876

Description: 2-Way F 150 GT Series, Sealed (GY)

Terminal Part Information

Terminal Type ID	Terminated Lead	Diagnostic Test Probe	Terminal Removal Tool	Service Terminal	Tray Name	Core Crimp	Insulation Crimp
I	Not Required	J-35616-14 (GN)	Not Required	Not Required	Not Required	Not Required	Not Required

Q17G Fuel Injector 7 (LC8 with FHZ)

Pin	Size	Color	Circuit	Function	Terminal Type ID	Option
A	0.8	PK	1039	Run/Crank Ignition 1 Voltage	I	—
B	0.5	OG/BK	877	Fuel Injector Control (7)	I	—

Q17H Fuel Injector 8 (L20 or L96)

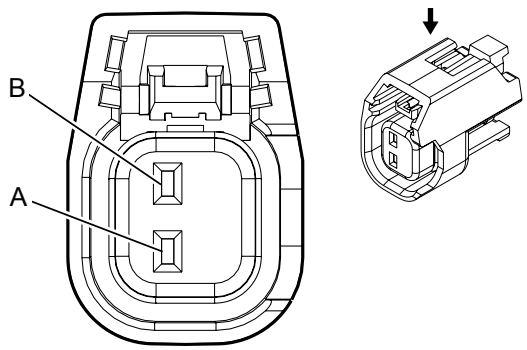

Connector Part Information

Harness Type: Engine

OEM Connector: 15419715

Service Connector: 13580876

Description: 2-Way F 150 GT Series, Sealed (GY)

Terminal Part Information

Terminal Type ID	Terminated Lead	Diagnostic Test Probe	Terminal Removal Tool	Service Terminal	Tray Name	Core Crimp	Insulation Crimp
I	Not Required	J-35616-14 (GN)	Not Required	Not Required	Not Required	Not Required	Not Required

Q17H Fuel Injector 8 (L20 or L96)

Pin	Size	Color	Circuit	Function	Terminal Type ID	Option
A	0.8	PK	1239	Run/Crank Ignition 1 Voltage	I	—
B	0.5	D-BU/WH	878	Fuel Injector Control (8)	I	—

Q17H Fuel Injector 8 (LGH)

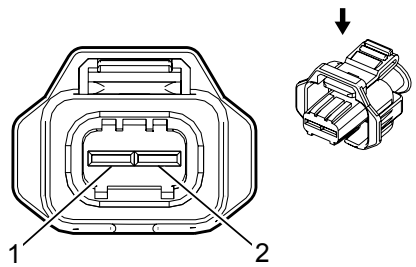

Connector Part Information

Harness Type: Engine

OEM Connector: 1928404114

Service Connector: 13576410

Description: 2-Way F 2.8 Series, Sealed (BK)

Terminal Part Information

Terminal Type ID	Terminated Lead	Diagnostic Test Probe	Terminal Removal Tool	Service Terminal	Tray Name	Core Crimp	Insulation Crimp
I	Not Required	J-35616-35 (VT)	Not Required	Not Required	Not Required	Not Required	Not Required

Q17H Fuel Injector 8 (LGH)

Pin	Size	Color	Circuit	Function	Terminal Type ID	Option
1	0.8	GY/WH	4908	Direct Fuel Injector (DFI) High Voltage Supply Cylinder 8	I	LGH
2	0.8	GY	4808	Direct Fuel Injector (DFI) High Voltage Control Cylinder 8	I	LGH

Q17H Fuel Injector 8 (LC8 with KO7 and UFM)

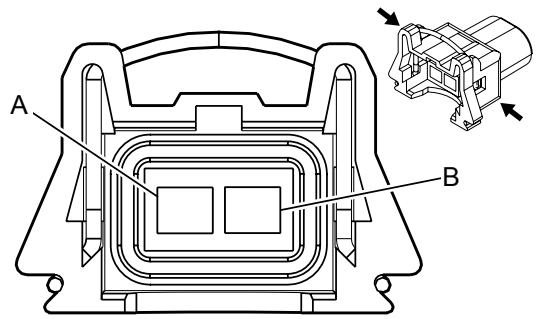

Connector Part Information

Harness Type: Fuel Injector Jumper

OEM Connector: 12129140

Service Connector: 12085491

Description: 2-Way F Metri-Pack 280.1 , Pull To Seat (BK)

Terminal Part Information

Terminal Type ID	Terminated Lead	Diagnostic Test Probe	Terminal Removal Tool	Service Terminal	Tray	Core Crimp	Insulation Crimp
I	Service by Harness – See Part Catalog	J-35616-4A (PU)	J-38125-559	12077939	18	C	A

Q17H Fuel Injector 8 (LC8 with KO7 and UFM)

Pin	Size	Color	Circuit	Function	Terminal Type ID	Option
A	1	RD	—	Ignition Voltage	I	-
B	1	BK	—	Fuel Injector 8 Control	I	-

Q17H Fuel Injector 8 (LC8 with FHZ)

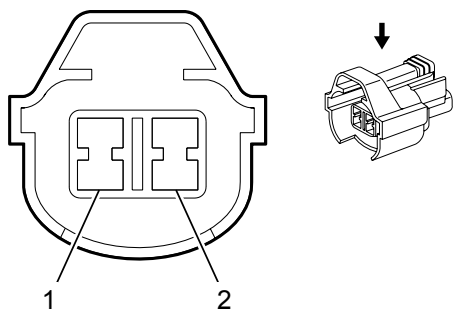

Connector Part Information

Harness Type: Fuel Injector 8

OEM Connector: FDJ2

Service Connector: Service by Harness – See Part Catalog

Description: 2-Way F Sealed (GY)

Terminal Part Information

Terminal Type ID	Terminated Lead	Diagnostic Test Probe	Terminal Removal Tool	Service Terminal	Tray	Core Crimp	Insulation Crimp
I	Service by Harness – See Part Catalog	Pending	Pending	Not Available	Not Available	Not Available	Not Available

Q17H Fuel Injector 8 (LC8 with FHZ)

Pin	Size	Color	Circuit	Function	Terminal Type ID	Option
1	RD	RD	—	Ignition Voltage	I	-
2	GY	GY	—	Fuel Injector 8 Control	I	-

Q18A Fuel Pressure Regulator 1 (LGH)

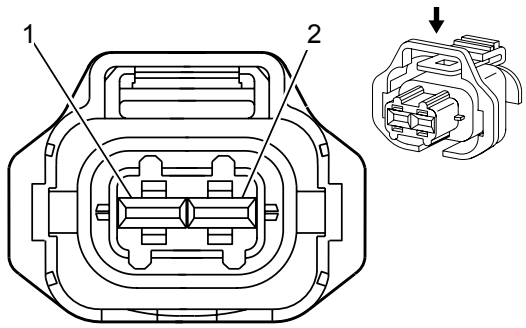

Connector Part Information

Harness Type: Engine

OEM Connector: 1928403874

Service Connector: 88988963

Description: 2-Way F Kompakt 2.8 Series, Sealed (BK)

Terminal Part Information

Terminal Type ID	Terminated Lead	Diagnostic Test Probe	Terminal Removal Tool	Service Terminal	Tray Name	Core Crimp	Insulation Crimp
I	Not Required	J-35616-35 (VT)	Not Required	Not Required	Not Required	Not Required	Not Required

Q18A Fuel Pressure Regulator 1 (LGH)

Pin	Size	Color	Circuit	Function	Terminal Type ID	Option
1	0.5	YE	2928	Fuel Metering Valve High Control	I	LML/LGH
2	0.5	BK	2929	Fuel Metering Valve Low Control	I	LML/LGH

Q18B Fuel Pressure Regulator 2 (LGH)

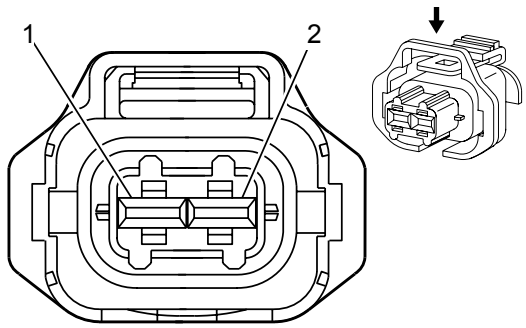

Connector Part Information

Harness Type: Engine

OEM Connector: 1928403874

Service Connector: 88988963

Description: 2-Way F Kompakt 2.8 Series, Sealed (BK)

Terminal Part Information

Terminal Type ID	Terminated Lead	Diagnostic Test Probe	Terminal Removal Tool	Service Terminal	Tray Name	Core Crimp	Insulation Crimp
I	Not Required	J-35616-35 (VT)	Not Required	Not Required	Not Required	Not Required	Not Required

Q18B Fuel Pressure Regulator 2 (LGH)

Pin	Size	Color	Circuit	Function	Terminal Type ID	Option
1	0.8	VT/WH	2530	Fuel Rail Pressure Solenoid Control	I	LML/LGH
2	0.8	YE	2834	Fuel Rail Pressure Solenoid Low Reference	I	LML/LGH

Q20 Intake Air Flow Valve (LGH)

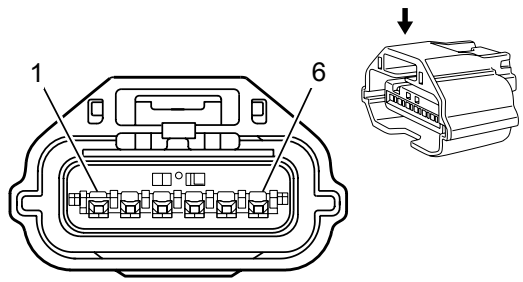

Connector Part Information

Harness Type: Engine

OEM Connector: 7283-8850-30

Service Connector: 13576408

Description: 6-Way F 0.64 Series, Sealed (BK)

Terminal Part Information

Terminal Type ID	Terminated Lead	Diagnostic Test Probe	Terminal Removal Tool	Service Terminal	Tray Name	Core Crimp	Insulation Crimp
I	Not Required	J-35616-64B (LT BU)	Not Required	Not Required	Not Required	Not Required	Not Required

Q20 Intake Air Flow Valve (LGH)

Pin	Size	Color	Circuit	Function	Terminal Type ID	Option
1	75	BN	582	Throttle Actuator Control Close	I	LGH
2	75	YE	581	Throttle Actuator Control Open	I	LGH
3	0.5	TN	2752	Throttle Position Sensor Low Reference	I	LGH
4	—	—	—	Not Occupied	—	—
5	0.5	D-GN	485	Throttle Position Sensor Signal (1)	I	LGH
6	0.5	GY	2701	Throttle Position Sensor 5 Volt Reference	I	LGH

Q38 Throttle Body (L20, L96, or LC8)

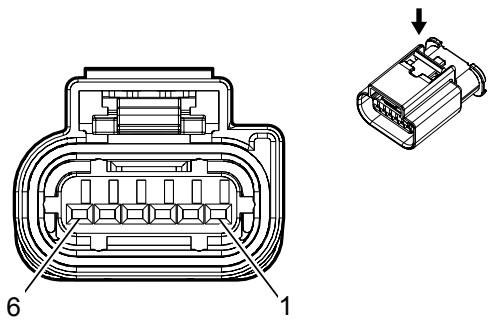

Connector Part Information

Harness Type: Engine

OEM Connector: 13944349

Service Connector: 19329736

Description: 6-Way F 1.2 Series, Sealed (BK)

Terminal Part Information

Terminal Type ID	Terminated Lead	Diagnostic Test Probe	Terminal Removal Tool	Service Terminal	Tray Name	Core Crimp	Insulation Crimp
I	Not Required	J-35616-16 (LT GN)	Not Required	Not Required	Not Required	Not Required	Not Required

Q38 Throttle Body (L20, L96, or LC8)

Pin	Size	Color	Circuit	Function	Terminal Type ID	Option
1	0.5	YE	581	Throttle Actuator Control Open	I	—
2	0.5	BN	582	Throttle Actuator Control Close	I	—
3	0.5	D-GN	485	Throttle Position Sensor Signal (1)	I	—
4	0.5	TN	2752	Throttle Position Sensor Low Reference	I	—
5	0.5	GY	2701	Throttle Position Sensor 5 Volt Reference	I	—
6	—	—	—	Not Occupied	—	—

Q41 Turbocharger Vane Position Control Solenoid Valve (LGH)

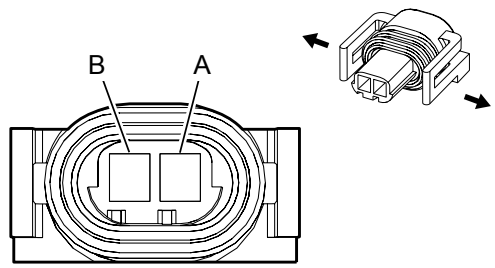

Connector Part Information

Harness Type: Engine

OEM Connector: 12162215

Service Connector: 12085496

Description: 2-Way F 150.2 Metri-Pack Series, Sealed, Pull To Seat (BK)

Terminal Part Information

Terminal Type ID	Terminated Lead	Diagnostic Test Probe	Terminal Removal Tool	Service Terminal	Tray Name	Core Crimp	Insulation Crimp
I	Not Required	J-35616-14 (GN)	Not Required	Not Required	Not Required	Not Required	Not Required

Q41 Turbocharger Vane Position Control Solenoid Valve (LGH)

Pin	Size	Color	Circuit	Function	Terminal Type ID	Option
A	0.5	BU	5930	Variable Nozzle Turbo Solenoid High Signal	I	LGH
B	0.5	WH	5931	Variable Nozzle Turbo Solenoid Low Signal	I	LGH

Q53 Fuel Cut-Off Solenoid Valve (KO7 with UFM)

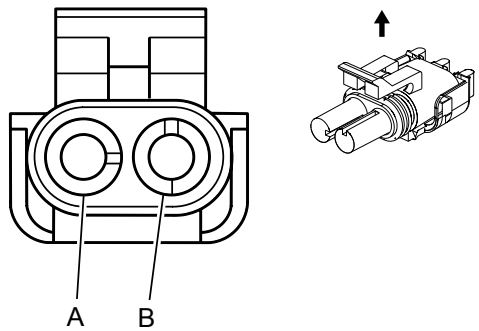

Connector Part Information

Harness Type: LPG Tank

OEM Connector: 12015792

Service Connector: 12126452

Description: 2-Way F Weather Pack Series (BK)

Terminal Part Information

Terminal Type ID	Terminated Lead	Diagnostic Test Probe	Terminal Removal Tool	Service Terminal	Tray	Core Crimp	Insulation Crimp
I	Service by Harness – See Part Catalog	J-35616-8 (OG)	J-38125-10A	12089188	3	E	5

Q53 Fuel Cut-Off Solenoid Valve (KO7 with UFM)

Pin	Size	Color	Circuit	Function	Terminal Type ID	Option
A	0.8	RD	—	Fuel Pump Control	I	-
B	0.8	BK	—	Ground	I	-

Q61 Reductant Injector (LGH)

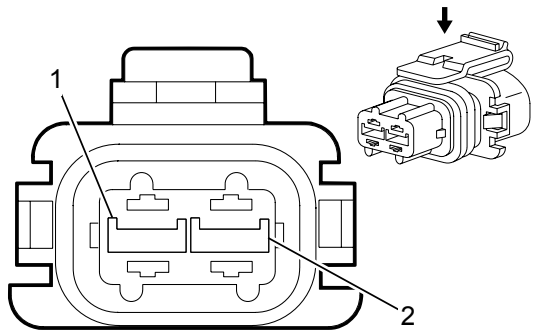

Connector Part Information

Harness Type: Engine

OEM Connector: 10740370

Service Connector: Service by Harness - See Part Catalog

Description: 2-Way F 2.8 Junior Power Timer Series, Sealed (BK)

Terminal Part Information

Terminal Type ID	Terminated Lead	Diagnostic Test Probe	Terminal Removal Tool	Service Terminal	Tray Name	Core Crimp	Insulation Crimp
I	Not Required	J-35616-35 (VT)	Not Required	Not Required	Not Required	Not Required	Not Required

Q61 Reductant Injector (LGH)

Pin	Size	Color	Circuit	Function	Terminal Type ID	Option
1	0.8	BN/WH	3100	DEF Dosing Valve Low Control	I	—
2	0.8	BN	3099	DEF Dosing Valve High Control	I	—

Q62 Reductant Purge Solenoid Valve (LGH)

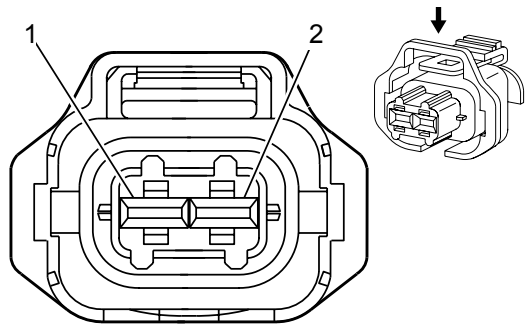

Connector Part Information

Harness: Reductant Jumper

OEM: 1928403874

Service: 88988963

Description: 2-Way F Kompakt 280 Series, Sealed (BK)

Terminal Part Information

Terminal Type ID	Terminated Lead	Diagnostic Test Probe	Terminal Removal Tool	Service Terminal	Tray	Core Crimp	Insulation Crimp
I				1928498058	8	E	1

Q62 Reductant Purge Solenoid Valve (LGH)

Pin	Size	Color	Circuit	Function	Terminal Type ID	Option
1	0.5	D-GN	517	DEF Reverting Valve High Control	I	-
2	0.5	BK	527	DEF Reverting Valve Low Control	I	-

Q67 Exhaust After treatment Fuel Injector (LGH)

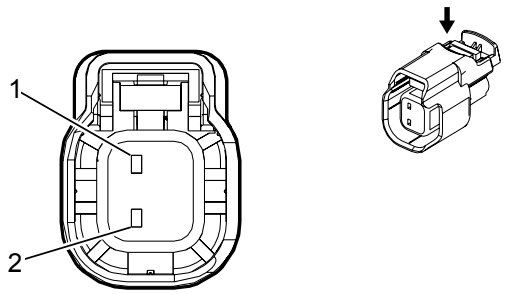

Connector Part Information

Harness Type: Engine

OEM Connector: 34062-0025

Service Connector: 13580230

Description: 2-Way F 1.5 Series, Sealed (BK)

Terminal Part Information

Terminal Type ID	Terminated Lead	Diagnostic Test Probe	Terminal Removal Tool	Service Terminal	Tray Name	Core Crimp	Insulation Crimp
I	Not Required	J-35616-2A (GY)	Not Required	Not Required	Not Required	Not Required	Not Required

Q67 Exhaust After treatment Fuel Injector (LGH)

Pin	Size	Color	Circuit	Function	Terminal Type ID	Option
1	0.5	VT	2927	Hydrocarbon Injector Low Control	I	LGH
2	0.5	BU	2926	Hydrocarbon Injector High Control	I	LGH

Q68A CNG Cut-Off Solenoid Valve 1 (FHZ)

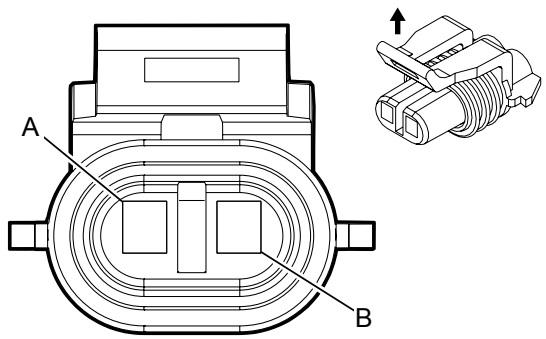

Connector Part Information

Harness Type: CNG Fuel Tank

OEM Connector: 12052641

Service Connector: 12102747

Description: 2-Way F Metri-Pack 150 Series (BK)

Terminal Part Information

Terminal Type ID	Terminated Lead	Diagnostic Test Probe	Terminal Removal Tool	Service Terminal	Tray	Core Crimp	Insulation Crimp
I	13575427	J-35616-14 (GN)	J-38125-12A	12048074	2	E	1

Q68A CNG Cut-Off Solenoid Valve 1 (FHZ)

Pin	Size	Color	Circuit	Function	Terminal Type ID	Option
A	0.75	GY	—	CNG Solenoid Valve Control	I	-
B	0.75	BK	—	Low Reference	I	-

Q68B CNG Cut-Off Solenoid Valve 2 (FHZ)

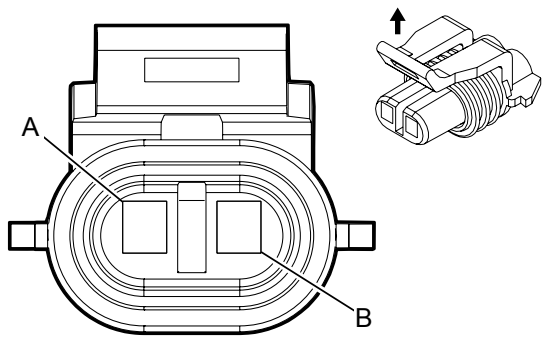

Connector Part Information

Harness Type: CNG Fuel Tank

OEM Connector: 12052641

Service Connector: 12102747

Description: 2-Way F Metri-Pack 150 Series (BK)

Terminal Part Information

Terminal Type ID	Terminated Lead	Diagnostic Test Probe	Terminal Removal Tool	Service Terminal	Tray	Core Crimp	Insulation Crimp
I	13575427	J-35616-14 (GN)	J-38125-12A	12048074	2	E	1

Q68B CNG Cut-Off Solenoid Valve 2 (FHZ)

Pin	Size	Color	Circuit	Function	Terminal Type ID	Option
A	0.75	GY	—	CNG Solenoid Valve Control	I	-
B	0.75	BK	—	Low Reference	I	-

Q68C CNG Cut-Off Solenoid Valve 3 (FHZ)

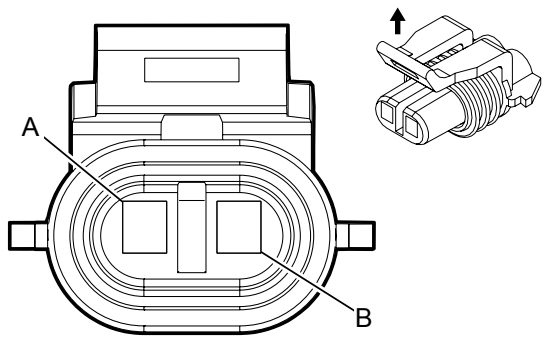

Connector Part Information

Harness Type: CNG Fuel Tank

OEM Connector: 12052641

Service Connector: 12102747

Description: 2-Way F Metri-Pack 150 Series (BK)

Terminal Part Information

Terminal Type ID	Terminated Lead	Diagnostic Test Probe	Terminal Removal Tool	Service Terminal	Tray	Core Crimp	Insulation Crimp
I	13575427	J-35616-14 (GN)	J-38125-12A	12048074	2	E	1

Q68C CNG Cut-Off Solenoid Valve 3 (FHZ)

Pin	Size	Color	Circuit	Function	Terminal Type ID	Option
A	0.75	GY	—	CNG Solenoid Valve Control	I	-
B	0.75	BK	—	Low Reference	I	-

Q68D CNG Cut-Off Solenoid Valve 4 (FHZ)

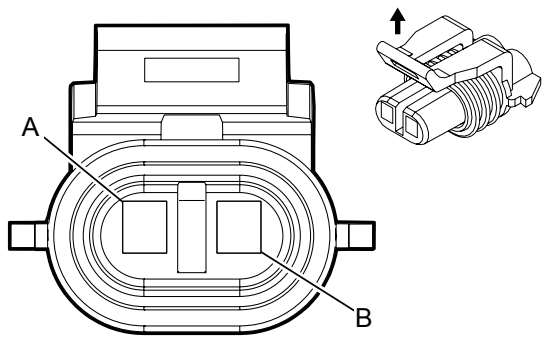

Connector Part Information

Harness Type: CNG Fuel Tank

OEM Connector: 12052641

Service Connector: 12102747

Description: 2-Way F Metri-Pack 150 Series (BK)

Terminal Part Information

Terminal Type ID	Terminated Lead	Diagnostic Test Probe	Terminal Removal Tool	Service Terminal	Tray	Core Crimp	Insulation Crimp
I	13575427	J-35616-14 (GN)	J-38125-12A	12048074	2	E	1

Q68D CNG Cut-Off Solenoid Valve 4 (FHZ)

Pin	Size	Color	Circuit	Function	Terminal Type ID	Option
A	0.75	GY	—	CNG Solenoid Valve Control	I	-
B	0.75	BK	—	Low Reference	I	-

Q68E CNG Cut-Off Solenoid Valve 5 (FHZ)

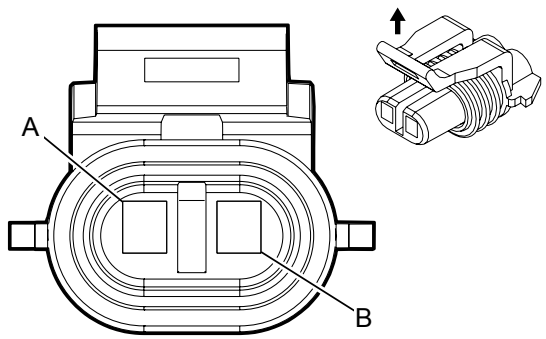

Connector Part Information

Harness Type: CNG Fuel Tank

OEM Connector: 12052641

Service Connector: 12102747

Description: 2-Way F Metri-Pack 150 Series (BK)

Terminal Part Information

Terminal Type ID	Terminated Lead	Diagnostic Test Probe	Terminal Removal Tool	Service Terminal	Tray	Core Crimp	Insulation Crimp
I	13575427	J-35616-14 (GN)	J-38125-12A	12048074	2	E	1

Q68E CNG Cut-Off Solenoid Valve 5 (FHZ)

Pin	Size	Color	Circuit	Function	Terminal Type ID	Option
A	0.75	GY	—	CNG Solenoid Valve Control	I	-
B	0.75	BK	—	Low Reference	I	-

Q69 CNG High Pressure Regulator Solenoid Valve (FHZ)

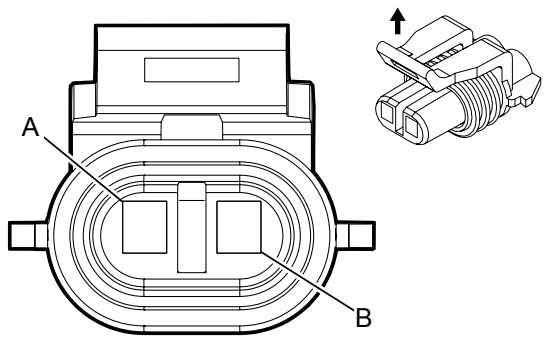

Connector Part Information

Harness Type: CNG Fuel Tank

OEM Connector: 12052641

Service Connector: 12102747

Description: 2-Way F Metri-Pack 150 Series (BK)

Terminal Part Information

Terminal Type ID	Terminated Lead	Diagnostic Test Probe	Terminal Removal Tool	Service Terminal	Tray	Core Crimp	Insulation Crimp
I	13575427	J-35616-14 (GN)	J-38125-12A	12048074	2	E	1

Q69 CNG High Pressure Regulator Solenoid Valve (FHZ)

Pin	Size	Color	Circuit	Function	Terminal Type ID	Option
A	0.75	GY	—	CNG Solenoid Valve Control	I	-
B	0.75	BK	—	Low Reference	I	-

Q72 LPG Bypass Solenoid Valve (KO7 with UFM)

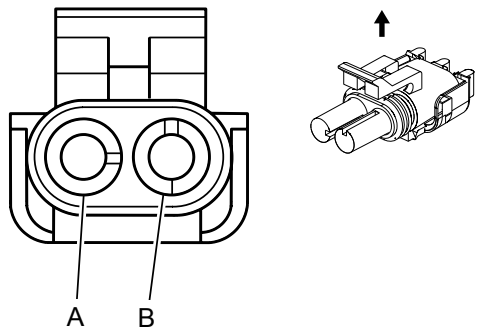

Connector Part Information

Harness Type: LPG Power

OEM Connector: 12015792

Service Connector: 12126452

Description: 2-Way F Weather Pack Series (BK)

Terminal Part Information

Terminal Type ID	Terminated Lead	Diagnostic Test Probe	Terminal Removal Tool	Service Terminal	Tray	Core Crimp	Insulation Crimp
I	Service by Harness – See Part Catalog	J-35616-8 (OG)	J-38125-10A	12089188	3	E	5

Q72 LPG Bypass Solenoid Valve (KO7 with UFM)

Pin	Size	Color	Circuit	Function	Terminal Type ID	Option
A	0.8	RD	—	LPG Bypass Solenoid Control	I	-
B	0.8	BK	—	Ground	I	-

R3 Blower Motor Resistor (L20, L96, or LC8)

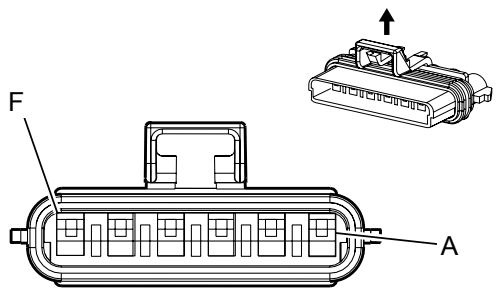

Connector Part Information

Harness Type: Engine

OEM Connector: 12160746

Service Connector: 15306007

Description: 6-Way F 280 Metri-Pack Series, Flexlock, Sealed (L-GY)

Terminal Part Information

Terminal Type ID	Terminated Lead	Diagnostic Test Probe	Terminal Removal Tool	Service Terminal	Tray Name	Core Crimp	Insulation Crimp
I	Not Required	J-35616-4A (PU)	Not Required	Not Required	Not Required	Not Required	Not Required

R3 Blower Motor Resistor (L20, L96, or LC8)

Pin	Size	Color	Circuit	Function	Terminal Type ID	Option
A	5	RD/BK	542	Battery Positive Voltage	I	—
B	0.8	OG	52	High Blower Motor Control	I	—
C	5	BK	1250	Ground	I	—
D	0.8	TN	63	Medium Blower Motor Control (1)	I	—
E	0.8	YE	60	Low Blower Motor Control	I	—
F	2	L-BU	72	Medium 2 Blower Motor Control	I	—

R3 Blower Motor Resistor (LGH)

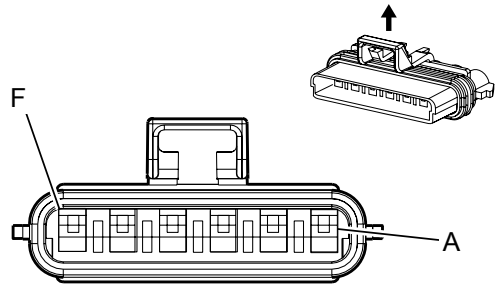

Connector Part Information

Harness Type: Engine Chassis

OEM Connector: 12160746

Service Connector: 15306007

Description: 6-Way F Metri-Pack 280 Series, Flexlock, Sealed (L-GY)

Terminal Part Information

Terminal Type ID	Terminated Lead	Diagnostic Test Probe	Terminal Removal Tool	Service Terminal	Tray	Core Crimp	Insulation Crimp
I	Service by Connector Assembly - 15306007	J-35616-4A (PU)	J-38125-553	Pins: A, C– 12110853	4	Pins: A, C– B	5

R3 Blower Motor Resistor (LGH)

Pin	Size	Color	Circuit	Function	Terminal Type ID	Option
A	5	RD/BK	542	Battery Positive Voltage	I	-
B	0.8	OG	52	Blower Motor High Control	I	-
C	5	BK	1250	Ground	I	-
D	0.8	TN	63	Blower Motor Medium Control	I	-
E	0.8	YE	60	Blower Motor Low Control	I	-
F	0.8	L-BU	72	Medium 2 Blower Motor Control	I	-

R3B Blower Motor Resistor - Auxiliary (C69)

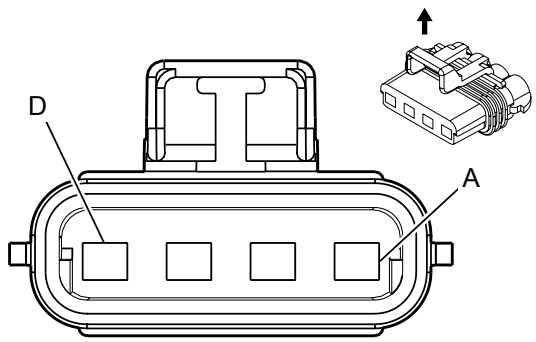

Connector Part Information

Harness Type: Auxiliary HVAC

OEM Connector: 12129566

Service Connector: Service by Harness - See Part Catalog

Description: 4-Way F 280 Metri-Pack Series, Sealed (GY)

Terminal Part Information

Terminal Type ID	Terminated Lead	Diagnostic Test Probe	Terminal Removal Tool	Service Terminal	Tray Name	Core Crimp	Insulation Crimp
I	Not Required	J-35616-4A (PU)	Not Required	Not Required	Not Required	Not Required	Not Required

R3B Blower Motor Resistor - Auxiliary (C69)

Pin	Size	Color	Circuit	Function	Terminal Type ID	Option
A	3	YE	1176	Auxiliary Blower Motor Low Speed Control	I	—
B	—	—	—	Not Occupied	—	—
C	3	L-BU	1072	Auxiliary Blower Motor Medium Speed Control	I	—
D	3	YE	1172	Auxiliary Blower Motor Control	I	—

S13A Door Lock Switch - Rear Cargo (Passenger or Cargo with AU3)

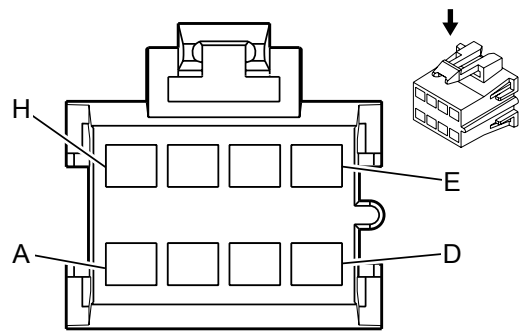

Connector Part Information

Harness Type: Right Rear Cargo Door

OEM Connector: 12064998

Service Connector: Service by Harness - See Part Catalog

Description: 8-Way F 280 Metri-Pack Series (BK)

Terminal Part Information

Terminal Type ID	Terminated Lead	Diagnostic Test Probe	Terminal Removal Tool	Service Terminal	Tray Name	Core Crimp	Insulation Crimp
I	Not Required	J-35616-4A (PU)	Not Required	Not Required	Not Required	Not Required	Not Required

S13A Door Lock Switch - Rear Cargo (Passenger or Cargo with AU3)

Pin	Size	Color	Circuit	Function	Terminal Type ID	Option
A	0.35	L-BU	244	Passenger Door Lock Switch Lock Control	I	—
B - C	—	—	—	Not Occupied	—	—
D	0.35	D-BU	245	Passenger Door Lock Switch Unlock Control	I	—
E	0.35	BK/WH	1051	Signal Ground	I	—
F - H	—	—	—	Not Occupied	—	—

S13D Door Lock Switch - Driver (AU3)

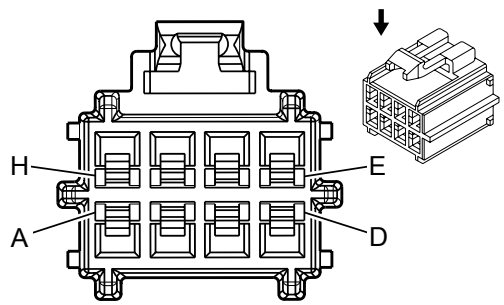

Connector Part Information

Harness Type: Driver Door

OEM Connector: 15418533

Service Connector: Service by Harness - See Part Catalog

Description: 8-Way F 280 GT (L-GN)

Terminal Part Information

Terminal Type ID	Terminated Lead	Diagnostic Test Probe	Terminal Removal Tool	Service Terminal	Tray Name	Core Crimp	Insulation Crimp
I	Not Required	J-35616-4A (PU)	Not Required	Not Required	Not Required	Not Required	Not Required

S13D Door Lock Switch - Driver (AU3)

Pin	Size	Color	Circuit	Function	Terminal Type ID	Option
A	0.35	BK	450	Ground	I	—
B	0.35	BK	450	Ground	I	—
C	0.35	BN/WH	230	Instrument Panel Lamp Dimming Control	I	—
D - E	—	—	—	Not Occupied	—	—
F	0.35	OG/BK	781	Driver Door Lock Switch Unlock Signal	I	—
G	0.35	PK/BK	780	Driver Door Lock Switch Lock Signal	I	—
H	—	—	—	Not Occupied	—	—

S13P Door Lock Switch - Passenger (AU3)

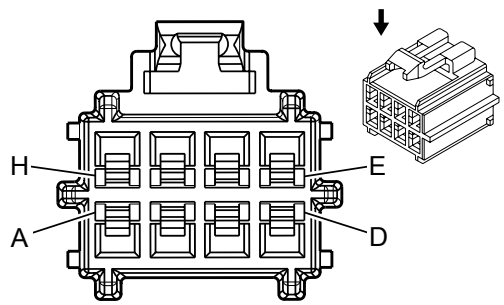

Connector Part Information

Harness Type: Passenger Door

OEM Connector: 15418533

Service Connector: Service by Harness - See Part Catalog

Description: 8-Way F 280 GT (L-GN)

Terminal Part Information

Terminal Type ID	Terminated Lead	Diagnostic Test Probe	Terminal Removal Tool	Service Terminal	Tray Name	Core Crimp	Insulation Crimp
I	Not Required	J-35616-4A (PU)	Not Required	Not Required	Not Required	Not Required	Not Required

S13P Door Lock Switch - Passenger (AU3)

Pin	Size	Color	Circuit	Function	Terminal Type ID	Option
A	0.35	BK	1850	Ground	I	—
B	0.35	BK	1850	Ground	I	—
C	0.35	BN/WH	230	Instrument Panel Lamp Dimming Control	I	—
D - E	—	—	—	Not Occupied	—	—
F	0.35	D-BU	245	Passenger Door Lock Switch Unlock Control	I	—
G	0.35	L-BU	244	Passenger Door Lock Switch Lock Control	I	—
H	—	—	—	Not Occupied	—	—

S16 Driver Information Center Switch

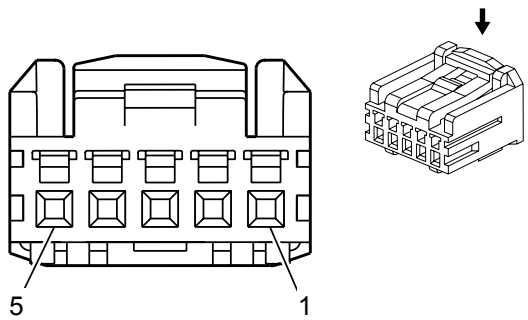

Connector Part Information

Harness Type: Instrument Panel

OEM Connector: 15491277

Service Connector: 88988747

Description: 5-Way F HCM Series (BK)

Terminal Part Information

Terminal Type ID	Terminated Lead	Diagnostic Test Probe	Terminal Removal Tool	Service Terminal	Tray Name	Core Crimp	Insulation Crimp
I	Not Required	J-35616-64B (LT BU)	Not Required	Not Required	Not Required	Not Required	Not Required

S16 Driver Information Center Switch

Pin	Size	Color	Circuit	Function	Terminal Type ID	Option
1	0.35	D-GN/WH	1358	Driver Information Center Switch Signal	I	—
2	0.35	BN	897	Driver Information Center Switch Low Reference	I	—
3	0.35	PK	893	Driver Information Center Select Menu Switch Signal	I	—
4	0.5	YE	6817	LED Backlight Dimming Control	I	—
5	0.5	BK/WH	351	Signal Ground	I	—

S30 Headlamp Switch

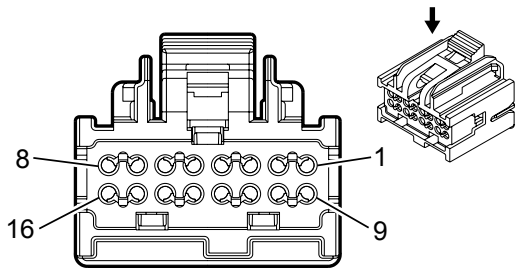

Connector Part Information

Harness Type: Instrument Panel

OEM Connector: 13568238

Service Connector: 13504130

Description: 16-Way F 64 Micro Series, Sealed (BK)

Terminal Part Information

Terminal Type ID	Terminated Lead	Diagnostic Test Probe	Terminal Removal Tool	Service Terminal	Tray Name	Core Crimp	Insulation Crimp
I	13575535	J-35616-64B (LT BU)	J-38125-21	15359541	Delphi 4	M	M
II	13579976	J-35616-64B (LT BU)	J-38125-21	15359541	Delphi 4	M	M

S30 Headlamp Switch

Pin	Size	Color	Circuit	Function	Terminal Type ID	Option
1	0.35	WH	103	Headlamp Switch On Signal	I	—
2	0.35	L-BU	13	Headlamp Switch Park Lamp Signal	I	—
3	0.35	D-GN	306	Headlamp Switch Headlamps Off Signal Control	I	—
4 - 6	—	—	—	Not Occupied	—	—
7	0.35	BN/WH	230	Instrument Panel Lamp Dimming Control	I	—
8	0.5	BK/WH	351	Signal Ground	II	—
9	0.35	PU	328	Interior Lamp Defeat Switch Signal	I	—
10 - 11	—	—	—	Not Occupied	—	—

12	0.35	D-BU/WH	149	Courtesy Lamp Control	I	—
13	0.35	D-GN	44	Instrument Panel Lamp Dimmer Switch Signal	I	—
14	—	—	—	Not Occupied	—	—
15	0.35	OG/WH	812	12 Volt Reference	I	—
16	—	—	—	Not Occupied	—	—

S33 Horn Switch X1

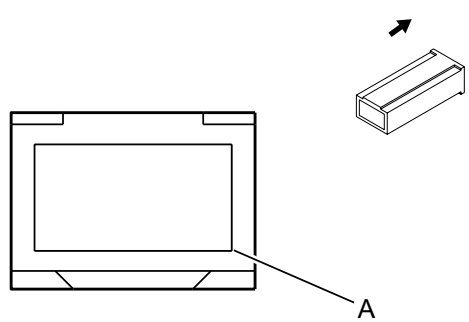

Connector Part Information

Harness Type: Steering Wheel

OEM Connector: 12052018

Service Connector: 13580102

Description: 1-Way F 6.3 Series (BK)

Terminal Part Information

Terminal Type ID	Terminated Lead	Diagnostic Test Probe	Terminal Removal Tool	Service Terminal	Tray	Core Crimp	Insulation Crimp
I	Service by Connector Assembly	Not Available	Not Available	Not Available	Not Available	Not Available	Not Available

S33 Horn Switch X1

Pin	Size	Color	Circuit	Function	Terminal Type ID	Option
A	0.35	OG	28	Horn Relay Control	I	-

S33 Horn Switch X2

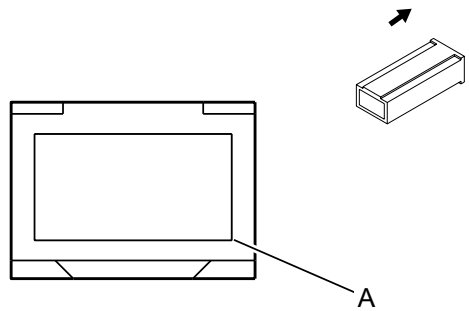

Connector Part Information

Harness Type: Steering Wheel

OEM Connector: 12052018

Service Connector: 13580102

Description: 1-Way F 6.3 Series (BK)

Terminal Part Information

Terminal Type ID	Terminated Lead	Diagnostic Test Probe	Terminal Removal Tool	Service Terminal	Tray	Core Crimp	Insulation Crimp
I	Service by Connector Assembly	Not Available	Not Available	Not Available	Not Available	Not Available	Not Available

S33 Horn Switch X2

Pin	Size	Color	Circuit	Function	Terminal Type ID	Option
A	0.35	BK	350	Ground	I	-
	0.35	BK	350	Ground		
	0.35	BK	350	Ground		

S34 HVAC Controls Switch Assembly X1

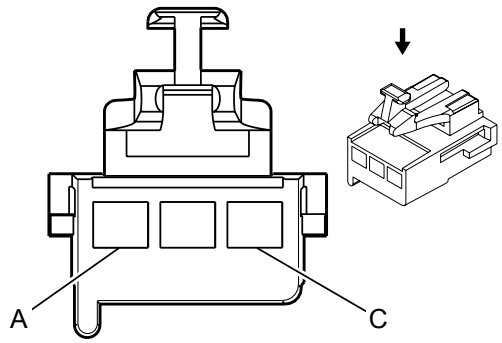

Connector Part Information

Harness Type: Instrument Panel

OEM Connector: 12129489

Service Connector: 12126486

Description: 3-Way F 280 Metri-Pack Series, Flexlock (BK)

Terminal Part Information

Terminal Type ID	Terminated Lead	Diagnostic Test Probe	Terminal Removal Tool	Service Terminal	Tray Name	Core Crimp	Insulation Crimp
I	Not Required	J-35616-4A (PU)	Not Required	Not Required	Not Required	Not Required	Not Required

S34 HVAC Controls Switch Assembly X1

Pin	Size	Color	Circuit	Function	Terminal Type ID	Option
A	1	WH	119	Mode Door Control	I	—
B	1	BK	550	Ground	I	—
C	0.35	BN/WH	230	Instrument Panel Lamp Dimming Control	I	—

S34 HVAC Controls Switch Assembly X2

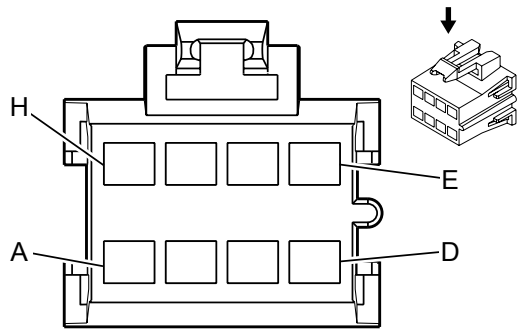

Connector Part Information

Harness Type: Instrument Panel

OEM Connector: 12064998

Service Connector: 15306189

Description: 8-Way F 280 Metri-Pack Series (BK)

Terminal Part Information

Terminal Type ID	Terminated Lead	Diagnostic Test Probe	Terminal Removal Tool	Service Terminal	Tray Name	Core Crimp	Insulation Crimp
I	Not Required	J-35616-4A (PU)	Not Required	Not Required	Not Required	Not Required	Not Required

S34 HVAC Controls Switch Assembly X2

Pin	Size	Color	Circuit	Function	Terminal Type ID	Option
A	0.8	YE	60	Low Blower Motor Control	I	—
B	0.8	TN	63	Medium Blower Motor Control (1)	I	—
C	0.8	L-BU	72	Medium 2 Blower Motor Control	I	—
D	0.8	OG	52	High Blower Motor Control	I	—
E	1	BN	141	Run Ignition 3 Voltage	I	—
F	0.8	L-BU	733	Air Temperature Door Position Signal	I	—
G	1	WH	119	Mode Door Control	I	—
H	0.5	D-GN/WH	762	A/C Request Signal	I	—

S34 HVAC Controls Switch Assembly X3

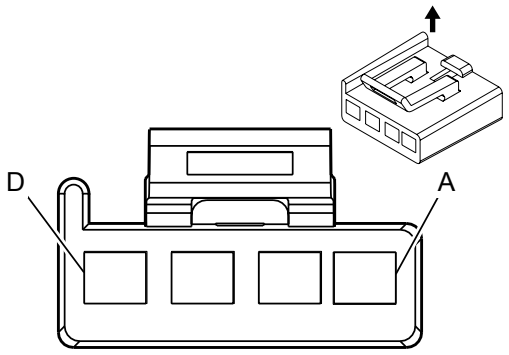

Connector Part Information

Harness Type: Instrument Panel

OEM Connector: 12052856

Service Connector: 12125636

Description: 4-Way F 280 Metri-Pack Series (BK)

Terminal Part Information

Terminal Type ID	Terminated Lead	Diagnostic Test Probe	Terminal Removal Tool	Service Terminal	Tray Name	Core Crimp	Insulation Crimp
I	Not Required	J-35616-4A (PU)	Not Required	Not Required	Not Required	Not Required	Not Required

S34 HVAC Controls Switch Assembly X3

Pin	Size	Color	Circuit	Function	Terminal Type ID	Option
A	0.8	RD/WH	4440	Battery Positive Voltage	I	—
B	0.35	BN	341	Run Ignition 3 Voltage	I	—
C	1	BK	550	Ground	I	—
D	0.35	WH	193	Rear Defog Relay Control	I	—

S34 HVAC Controls Switch Assembly X4 (C60)

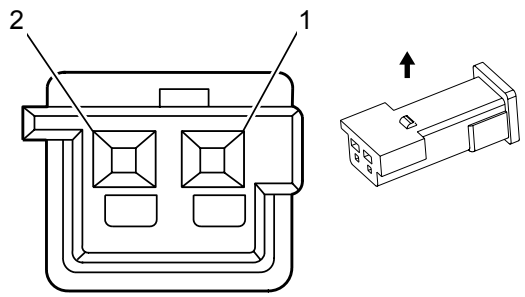

Connector Part Information

Harness Type: Instrument Panel

OEM Connector: 15318080

Service Connector: 21019410

Description: 2-Way F Metri-Pack 280 Series (BK)

Terminal Part Information

Terminal Type ID	Terminated Lead	Diagnostic Test Probe	Terminal Removal Tool	Service Terminal	Tray	Core Crimp	Insulation Crimp
I	Pending	J-35616-4A (PU)	J-38125-11A	12034046	2	E	A

S34 HVAC Controls Switch Assembly X4 (C60)

Pin	Size	Color	Circuit	Function	Terminal Type ID	Option
1	0.5	L-GN	66	A/C Request Signal	I	-
2	0.5	D-GN/WH	762	A/C Request Signal	I	-

S34B HVAC Controls Switch Assembly - Auxiliary (C69 with Rear HVAC Controls)

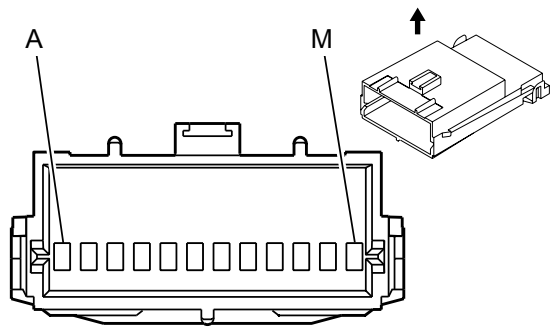

Connector Part Information

Harness Type: Headliner

OEM Connector: 12040747

Service Connector: 12101938

Description: 12-Way P/C Edgeboard Standard Series (BK)

Terminal Part Information

Terminal Type ID	Terminated Lead	Diagnostic Test Probe	Terminal Removal Tool	Service Terminal	Tray Name	Core Crimp	Insulation Crimp
I	19330178	J-35616-4A (PU)	J-38125-12A	12040511	Delphi 3	E	A

S34B HVAC Controls Switch Assembly - Auxiliary (C69 with Rear HVAC Controls)

Pin	Size	Color	Circuit	Function	Terminal Type ID	Option
A	0.35	PU	5260	Dual Logic Module Front Temperature Signal	I	—
B	0.35	OG	2775	Rear Air Temperature Motor Control	I	—
C	0.35	BN	5263	Dual Logic Module Rear Temperature Signal	I	—
	0.5	BN	5263			—
D	0.35	PU/WH	5264	Dual Logic Module Rear Mode Signal	I	—
	0.5	PU/WH	5264			—
E	0.35	TN	5261	Dual Logic Module Front Mode Signal	I	—
F	0.35	GY	2599	Rear Mode Motor Signal	I	—
G	—	—	—	Not Occupied	—	—

G	—	—	—	Not Occupied	—	—
H	0.35	BK	1850	Ground	I	—
J	0.35	BN	341	Run Ignition 3 Voltage	I	—
K	—	—	—	Not Occupied	—	—
L	0.35 0.5	PK/BK PK/BK	5265 5265	Dual Logic Module Rear Control Signal	I	— —
M	0.35	YE	5262	Dual Logic Module Rear Control Enable Signal	I	—

S34F HVAC Controls Switch Assembly - Auxiliary Front (C69 with Rear HVAC Controls)

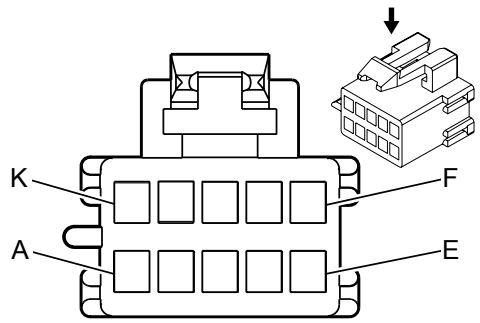

Connector Part Information

Harness Type: Headliner

OEM Connector: 12064769

Service Connector: 12101762

Description: 10-Way F 150 Metri-Pack Series (NA)

Terminal Part Information

Terminal Type ID	Terminated Lead	Diagnostic Test Probe	Terminal Removal Tool	Service Terminal	Tray Name	Core Crimp	Insulation Crimp
I	13575464	J-35616-14 (GN)	J-38125-12A	15326030	Delphi 2	E	C

S34F HVAC Controls Switch Assembly - Auxiliary Front (C69 with Rear HVAC Controls)

Pin	Size	Color	Circuit	Function	Terminal Type ID	Option
A	0.35	BN/WH	230	Instrument Panel Lamp Dimming Control	I	—
B	0.35	BK	1850	Ground	I	—
C	0.5	D-BU	1926	Auxiliary Blower Motor Low Speed Control	I	—
D	0.5	WH	1924	Auxiliary Blower Motor High Speed Control	I	—
E	0.5	OG	1925	Auxiliary Blower Motor Medium Speed Control	I	—
F	0.35	YE	5262	Dual Logic Module Rear Control Enable Signal	I	—
G	0.35	BN	341	Run Ignition 3 Voltage	I	—
H	0.35	PU	5260	Dual Logic Module Front Temperature Signal	I	—

J	0.35	TN	5261	Dual Logic Module Front Mode Signal	I	—
K	—	—	—	Not Occupied	—	—

S34F HVAC Controls Switch Assembly - Auxiliary Front (C69 without Rear HVAC Controls)

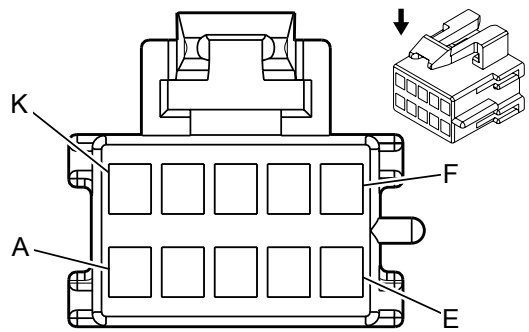

Connector Part Information

Harness Type: Headliner

OEM Connector: 12064871

Service Connector: 12101832

Description: 10-Way F 150 Metri-Pack Series (BU)

Terminal Part Information

Terminal Type ID	Terminated Lead	Diagnostic Test Probe	Terminal Removal Tool	Service Terminal	Tray Name	Core Crimp	Insulation Crimp
I	13575464	J-35616-14 (GN)	J-38125-12A	15326030	Delphi 2	E	C

S34F HVAC Controls Switch Assembly - Auxiliary Front (C69 without Rear HVAC Controls)

Pin	Size	Color	Circuit	Function	Terminal Type ID	Option
A	0.35	BN/WH	230	Instrument Panel Lamp Dimming Control	I	—
B	0.35	BK	1850	Ground	I	—
C	0.5	D-BU	1926	Auxiliary Blower Motor Low Speed Control	I	—
D	0.5	WH	1924	Auxiliary Blower Motor High Speed Control	I	—
E	0.5	OG	1925	Auxiliary Blower Motor Medium Speed Control	I	—
F	0.35	BK	1850	Ground	I	—
G	0.35	BN	341	Run Ignition 3 Voltage	I	—
H	0.35	OG	2775	Rear Air Temperature Motor Control	I	—

J	0.35	GY	2599	Rear Mode Motor Signal	I	—
K	—	—	—	Not Occupied	—	—

S34R HVAC Controls Switch Assembly - Auxiliary Rear (C69 with Rear HVAC Controls)

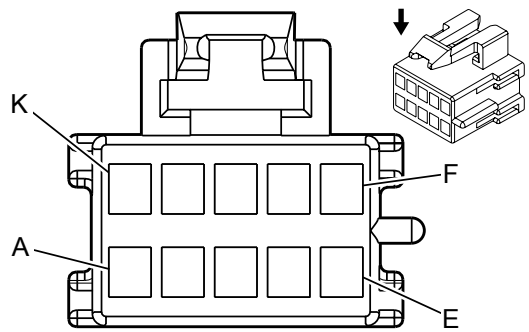

Connector Part Information

Harness Type: Headliner

OEM Connector: 12064871

Service Connector: 12101832

Description: 10-Way F 150 Metri-Pack Series (BU)

Terminal Part Information

Terminal Type ID	Terminated Lead	Diagnostic Test Probe	Terminal Removal Tool	Service Terminal	Tray Name	Core Crimp	Insulation Crimp
I	13575464	J-35616-14 (GN)	J-38125-12A	15326030	Delphi 2	E	C

S34R HVAC Controls Switch Assembly - Auxiliary Rear (C69 with Rear HVAC Controls)

Pin	Size	Color	Circuit	Function	Terminal Type ID	Option
A	0.35	BN/WH	230	Instrument Panel Lamp Dimming Control	I	—
B	0.5	BK	1850	Ground	I	—
C	0.5	D-BU	1926	Auxiliary Blower Motor Low Speed Control	I	—
D	0.5	WH	1924	Auxiliary Blower Motor High Speed Control	I	—
E	0.5	OG	1925	Auxiliary Blower Motor Medium Speed Control	I	—
F	0.35	PK/BK	5265	Dual Logic Module Rear Control Signal	I	—
G	0.35	BN	341	Run Ignition 3 Voltage	I	—
H	0.35	BN	5263	Dual Logic Module Rear Temperature Signal	I	—

J	0.35	PU/WH	5264	Dual Logic Module Rear Mode Signal	I	—
K	—	—	—	Not Occupied	—	—

S39 Ignition Switch

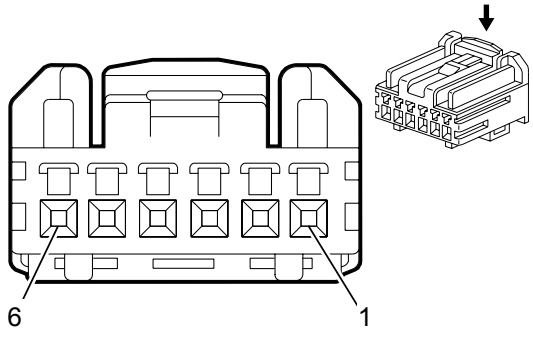

Connector Part Information

Harness Type: Steering Column

OEM Connector: 15484551

Service Connector: 19153174

Description: 6-Way F HCM Series (BK)

Terminal Part Information

Terminal Type ID	Terminated Lead	Diagnostic Test Probe	Terminal Removal Tool	Service Terminal	Tray	Core Crimp	Insulation Crimp
I	Pending	J-35616-64B (L-BU)	J-38125-12A	SHCM-A03T-P025	20	J	J

S39 Ignition Switch

Pin	Size	Color	Circuit	Function	Terminal Type ID	Option
1	-	-	-	Not Occupied	-	-
2	0.35	PK	3	Ignition Voltage	I	-
3	0.35	BN	4	Ignition Voltage	I	-
4	0.35	RD/WH	540	Battery Positive Voltage	I	-
5	0.35	PK	1020	Ignition Voltage	I	-
6	0.35	WH	530	Ignition Voltage	I	-

S40 Passenger Air Bag Disable Switch (C99)

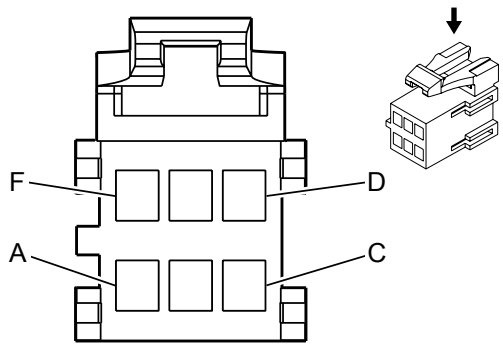

Connector Part Information

Harness Type: Instrument Panel

OEM Connector: 15305286

Service Connector: 15306014

Description: 6-Way F 150 Metri-Pack Series (YE)

Terminal Part Information

Terminal Type ID	Terminated Lead	Diagnostic Test Probe	Terminal Removal Tool	Service Terminal	Tray Name	Core Crimp	Insulation Crimp
I	Not Required	J-35616-14 (GN)	Not Required	Not Required	Not Required	Not Required	Not Required

S40 Passenger Air Bag Disable Switch (C99)

Pin	Size	Color	Circuit	Function	Terminal Type ID	Option
A	0.5	TN/BK	371	Passenger IP Module Disable Switch Signal	I	—
B	0.35	PK	1139	Run/Crank Ignition 1 Voltage	I	—
C	0.35	D-BU	2307	Passenger Air Bag On Indicator Control	I	—
D	0.5	PK	353	Passenger IP Module Suppression Indicator Control	I	—
E	0.5	BK/WH	1751	Signal Ground	I	—
F	0.35	D-GN	2308	Passenger Air Bag Off Indicator Control	I	—

S51 Telematics Button Assembly (UE1)

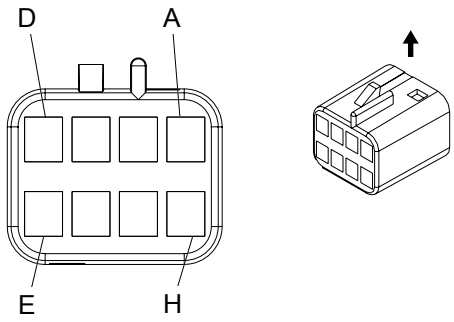

Connector Part Information

Harness Type: Instrument Panel

OEM Connector: 12047886

Service Connector: 13584485

Description: 8-Way F 150 Metri-Pack Series (BK)

Terminal Part Information

Terminal Type ID	Terminated Lead	Diagnostic Test Probe	Terminal Removal Tool	Service Terminal	Tray Name	Core Crimp	Insulation Crimp
I	Not Required	J-35616-14 (GN)	Not Required	Not Required	Not Required	Not Required	Not Required

S51 Telematics Button Assembly (UE1)

Pin	Size	Color	Circuit	Function	Terminal Type ID	Option
A	0.8	L-GN/BK	2515	Keypad Control	I	—
B	0.8	D-GN/WH	2514	Keypad Signal	I	—
C - D	—	—	—	Not Occupied	—	—
E	1	BK/WH	351	Signal Ground	I	—
F	0.8	YE/BK	2516	Keypad Green LED Control	I	—
G	0.8	BN/WH	2517	Keypad Red LED Control	I	—
H	—	—	—	Not Occupied	—	—

S52 Outside Rearview Mirror Switch (DEB or DE5)

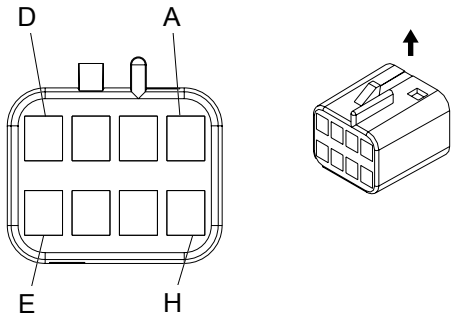

Connector Part Information

Harness Type: Driver Door

OEM Connector: 12047886

Service Connector: Service by Harness - See Part Catalog

Description: 8-Way F 150 Metri-Pack Series (BK)

Terminal Part Information

Terminal Type ID	Terminated Lead	Diagnostic Test Probe	Terminal Removal Tool	Service Terminal	Tray Name	Core Crimp	Insulation Crimp
I	Not Required	J-35616-14 (GN)	Not Required	Not Required	Not Required	Not Required	Not Required

S52 Outside Rearview Mirror Switch (DEB or DE5)

Pin	Size	Color	Circuit	Function	Terminal Type ID	Option
A	0.35	OG/WH	881	Right Mirror Motor Right Control	I	—
B	0.35	PU/WH	889	Right Mirror Motor Down Control	I	—
C	0.35	BN/WH	1498	Right Mirror Motor Up Control	I	—
D	0.5	BK	450	Ground	I	—
E	0.5	RD/WH	4340	Battery Positive Voltage	I	—
F	0.35	L-GN	89	Left Mirror Motor Down Control	I	—
G	0.35	WH	81	Left Mirror Motor Right Control	I	—
H	0.35	YE	88	Left Mirror Motor Up Control	I	—

S64D Seat Adjuster Switch - Driver (AG1)

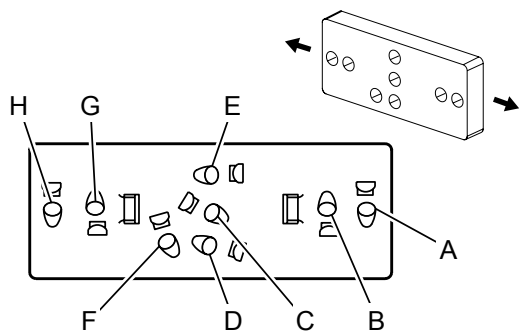

Connector Part Information

Harness Type: Driver Seat

OEM Connector: 12066386

Service Connector: 12116251

Description: 8-Way F Pin Grip Connectors (GY)

Terminal Part Information

Terminal Type ID	Terminated Lead	Diagnostic Test Probe	Terminal Removal Tool	Service Terminal	Tray	Core Crimp	Insulation Crimp
I	Service by Harness– See Part Catalog	Not Available	Not Available	Not Available	Not Available	Not Available	Not Available

S64D Seat Adjuster Switch - Driver (AG1)

Pin	Size	Color	Circuit	Function	Terminal Type ID	Option
A	3	L-BU	283	Driver Seat Rear Vertical Motor Down Control	I	-
B	3	YE	282	Driver Seat Rear Vertical Motor Up Control	I	-
C	3	BK	450	Ground	I	-
D	3	TN	285	Driver Seat Horizontal Motor Forward Control	I	-
E	3	L-GN	284	Driver Seat Horizontal Motor Rearward Control	I	-
F	3	RD/WH	3540	Battery Positive Voltage	I	-
G	3	D-BU	287	Driver Seat Front Vertical Motor Down Control	I	-
H	3	D-GN	286	Driver Seat Front Vertical Motor Up Control	I	-

S64P Seat Adjuster Switch - Passenger (AG2)

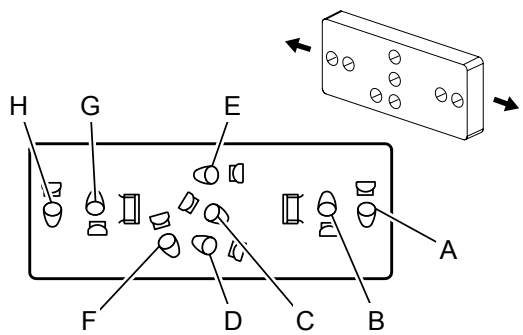

Connector Part Information

Harness Type: Passenger Seat

OEM Connector: 12066386

Service Connector: 12116251

Description: 8-Way F Pin Grip Connectors (GY)

Terminal Part Information

Terminal Type ID	Terminated Lead	Diagnostic Test Probe	Terminal Removal Tool	Service Terminal	Tray	Core Crimp	Insulation Crimp
I	Service by Harness– See Part Catalog	Not Available	Not Available	Not Available	Not Available	Not Available	Not Available

S64P Seat Adjuster Switch - Passenger (AG2)

Pin	Size	Color	Circuit	Function	Terminal Type ID	Option
A	3	L-BU	289	Passenger Seat Rear Vertical Motor Down Control	I	-
B	3	YE	288	Passenger Seat Rear Vertical Motor Up Control	I	-
C	3	BK	1850	Ground	I	-
D	3	TN	296	Passenger Seat Horizontal Motor Forward Control	I	-
E	3	L-GN	290	Passenger Seat Horizontal Motor Rearward Control	I	-
F	3	RD/WH	3540	Battery Positive Voltage	I	-
G	3	D-BU	298	Passenger Seat Front Vertical Motor Down Control	I	-
H	3	D-GN	297	Passenger Seat Front Vertical Motor Up Control	I	-

S70L Steering Wheel Controls Switch - Left (K34)

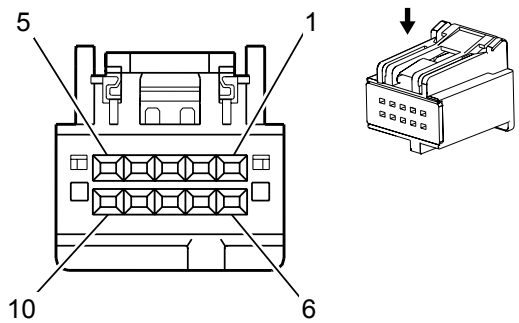

Connector Part Information

Harness Type: Steering Wheel

OEM Connector: 30700-1100

Service Connector: Service by Harness – See Part Catalog

Description: 10-Way F H-DAC 64 Series (GY)

Terminal Part Information

Terminal Type ID	Terminated Lead	Diagnostic Test Probe	Terminal Removal Tool	Service Terminal	Tray	Core Crimp	Insulation Crimp
I	Service by Harness - See Part Catalog	Not Available	Not Available	Not Available	Not Available	Not Available	Not Available

S70L Steering Wheel Controls Switch - Left (K34)

Pin	Size	Color	Circuit	Function	Terminal Type ID	Option
1	0.35	YE	1444	12-Volt Reference	I	-
2	-	-	-	Not Occupied	-	-
3	0.35	GY	1884	Cruise Control Switch Signal	I	-
4–5	-	-	-	Not Occupied	-	-
6	0.35	PK	6136	Supply Voltage	I	-
7	-	-	-	Not Occupied	-	-
8	0.35	BK	350	Ground	I	-
9	0.35	D-GN/WH	7158	Cruise Control Indicator Dimming Signal	I	-
10	-	-	-	Not Occupied	-	-

S70R Steering Wheel Controls Switch - Right (W1Y)

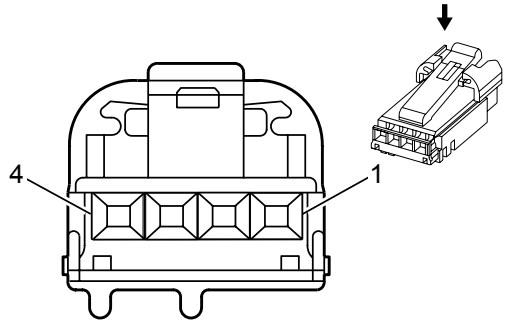

Connector Part Information

Harness Type: Steering Wheel

OEM Connector: 31068-1010

Service Connector: 19153195

Description: 4-Way F H-DAC 64 Series (BK)

Terminal Part Information

Terminal Type ID	Terminated Lead	Diagnostic Test Probe	Terminal Removal Tool	Service Terminal	Tray	Core Crimp	Insulation Crimp
I	Service by Connector Assembly - 19153195	Not Available	Not Available	Not Available	Not Available	Not Available	Not Available

S70R Steering Wheel Controls Switch - Right (W1Y)

Pin	Size	Color	Circuit	Function	Terminal Type ID	Option
1	0.35	BK	350	Ground	I	-
2	0.35	PK	6136	Supply Voltage	I	-
3	0.35	YE	1444	12-Volt Reference	I	-
4	0.35	D-GN	6818	Steering Wheel Control Signal	I	-

S74 Tow/Haul Mode Switch

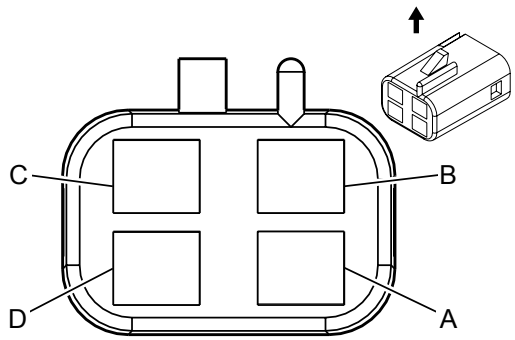

Connector Part Information

Harness Type: Instrument Panel

OEM Connector: 12047785

Service Connector: 12102900

Description: 4-Way F 150 Metri-Pack Series (BK)

Terminal Part Information

Terminal Type ID	Terminated Lead	Diagnostic Test Probe	Terminal Removal Tool	Service Terminal	Tray Name	Core Crimp	Insulation Crimp
I	Not Required	J-35616-14 (GN)	Not Required	Not Required	Not Required	Not Required	Not Required

S74 Tow/Haul Mode Switch

Pin	Size	Color	Circuit	Function	Terminal Type ID	Option
A	0.5	BK/WH	351	Signal Ground	I	—
B	0.35	BN/WH	230	Instrument Panel Lamp Dimming Control	I	—
C	—	—	—	Not Occupied	—	—
D	0.35	L-BU	1788	Traction Control Switch Signal (1)	I	—

S75 Traction Control Switch (JL4)

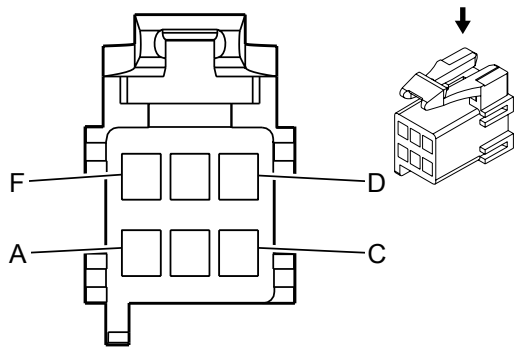

Connector Part Information

Harness Type: Instrument Panel

OEM Connector: 12177195

Service Connector: 15305931

Description: 6-Way F 150 Metri-Pack Series (BK)

Terminal Part Information

Terminal Type ID	Terminated Lead	Diagnostic Test Probe	Terminal Removal Tool	Service Terminal	Tray Name	Core Crimp	Insulation Crimp
I	Not Required	J-35616-14 (GN)	Not Required	Not Required	Not Required	Not Required	Not Required

S75 Traction Control Switch (JL4)

Pin	Size	Color	Circuit	Function	Terminal Type ID	Option
A - B	—	—	—	Not Occupied	—	—
C	0.35	BK/WH	351	Signal Ground	I	—
D	0.35	BN/WH	230	Instrument Panel Lamp Dimming Control	I	—
E	—	—	—	Not Occupied	—	—
F	0.5	D-BU	6727	Vehicle Stability Control Off Switch Signal	I	—

S78 Turn Signal/Multifunction Switch X1

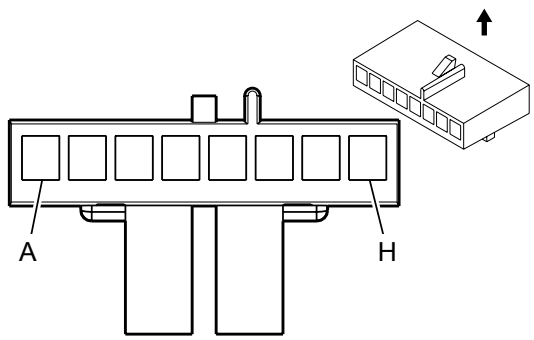

Connector Part Information

Harness Type: Steering Column

OEM Connector: 12064862

Service Connector: 12126438

Description: 8-Way F 150 Metri-Pack Series (BK)

Terminal Part Information

Terminal Type ID	Terminated Lead	Diagnostic Test Probe	Terminal Removal Tool	Service Terminal	Tray	Core Crimp	Insulation Crimp
I	13575464	J-35616-14 (GN)	J-38125-12A	15326030	5	E	C

S78 Turn Signal/Multifunction Switch X1

Pin	Size	Color	Circuit	Function	Terminal Type ID	Option
A	—	—	—	Not Used	I	—
B	—	—	—	Not Used	I	—
C	0.35	BK/WH	351	Ground	I	-
D	0.35	TN	664	Hazard Switch Turn Right Signal	I	—
E	0.35	D-GN	663	Hazard Switch Left Turn Signal	I	—
F	0.35	BK/WH	351	Ground	I	—
G	0.35	WH	111	Theft Deterrent Alarm Enable Signal	I	—
H	—	—	—	Not Used	I	—

S78 Turn Signal/Multifunction Switch X2

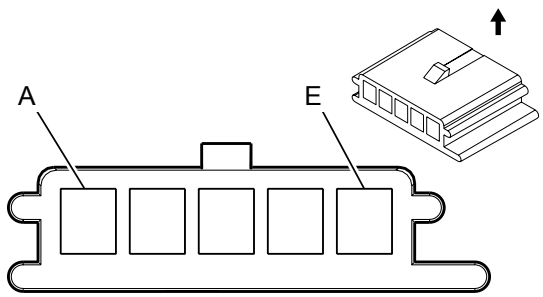

Connector Part Information

Harness Type: Steering Column

OEM Connector: 12059800

Service Connector: 15306169

Description: 5-Way F 150 Metri-Pack Series (BK)

Terminal Part Information

Terminal Type ID	Terminated Lead	Diagnostic Test Probe	Terminal Removal Tool	Service Terminal	Tray	Core Crimp	Insulation Crimp
I	13575464	J-35616-14 (GN)	J-38125-12A	15326030	5	E	C

S78 Turn Signal/Multifunction Switch X2

Pin	Size	Color	Circuit	Function	Terminal Type ID	Option
A	—	—	—	Not Used	I	—
B	—	—	—	Not Used	I	—
C	0.35	YE	525	Headlamp Dimmer Switch Low Beam Signal	I	—
D	0.35	BK/WH	351	Ground	I	—
E	0.35	YE	307	Headlamp Switch Flash to Pass Signal	I	—

S78 Turn Signal/Multifunction Switch X3

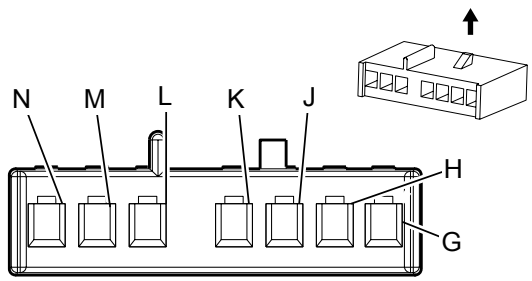

Connector Part Information

Harness Type: Steering Column

OEM Connector: 15339058

Service Connector: Service by Harness – See Part Catalog

Description: 7-Way F 150 Metri-Pack Series (GY)

Terminal Part Information

Terminal Type ID	Terminated Lead	Diagnostic Test Probe	Terminal Removal Tool	Service Terminal	Tray	Core Crimp	Insulation Crimp
I	13575464	J-35616-14 (GN)	J-38125-12A	15326030	5	E	C

S78 Turn Signal/Multifunction Switch X3

Pin	Size	Color	Circuit	Function	Terminal Type ID	Option
G	—	—	—	Not Used	—	—
H	—	—	—	Not Used	—	—
I	—	—	—	Not Used	—	—
K	0.35	L-GN	1715	Windshield Wiper Switch High Signal	I	-
L	0.35	PK	94	Windshield Washer Switch Signal	I	-
M	0.35	TN/BK	6009	Low Reference	I	-
N	0.35	L-BU	1714	Windshield Wiper Switch Low Signal	I	-

S79D Window Switch - Driver (A31)

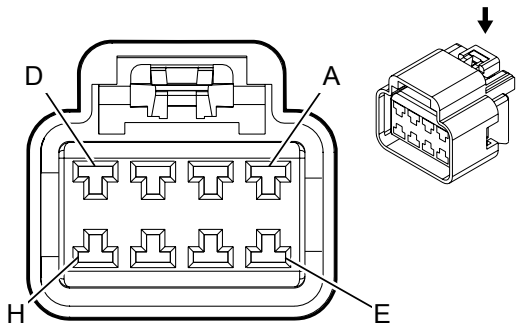

Connector Part Information

Harness Type: Driver Door

OEM Connector: 15459914

Service Connector: Service by Harness - See Part Catalog

Description: 8-Way F 280 GT Series (BK)

Terminal Part Information

Terminal Type ID	Terminated Lead	Diagnostic Test Probe	Terminal Removal Tool	Service Terminal	Tray Name	Core Crimp	Insulation Crimp
I	Not Required	J-35616-4A (PU)	Not Required	Not Required	Not Required	Not Required	Not Required

S79D Window Switch - Driver (A31)

Pin	Size	Color	Circuit	Function	Terminal Type ID	Option
A	3	L-BU	166	Power Window Master Switch Right Front Up Signal	I	—
B	0.35	BN/WH	230	Instrument Panel Lamp Dimming Control	I	—
C	3	D-GN	1001	Retained Accessory Power Ignition	I	—
D	3	TN	167	Power Window Master Switch Right Front Down Signal	I	—
E	—	—	—	Not Occupied	—	—
F	3	BK	450	Ground	I	—
G	3	D-BU	164	Power Window Motor Left Front Up Control	I	—
H	3	BN	165	Power Window Motor Left Front Down Control	I	—

S79P Window Switch - Passenger (A31)

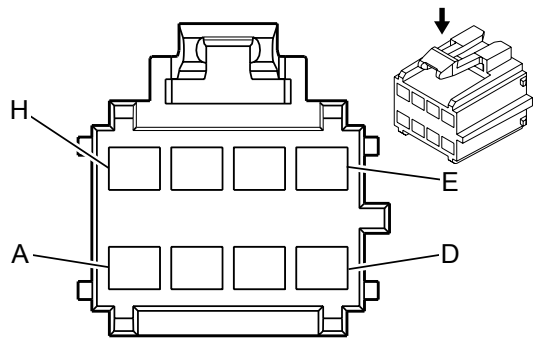

Connector Part Information

Harness Type: Passenger Door

OEM Connector: 12191825

Service Connector: Service by Harness - See Part Catalog

Description: 8-Way F 280 Metri-Pack Series (BN)

Terminal Part Information

Terminal Type ID	Terminated Lead	Diagnostic Test Probe	Terminal Removal Tool	Service Terminal	Tray Name	Core Crimp	Insulation Crimp
I	Not Required	J-35616-4A (PU)	Not Required	Not Required	Not Required	Not Required	Not Required

S79P Window Switch - Passenger (A31)

Pin	Size	Color	Circuit	Function	Terminal Type ID	Option
A	3	D-GN	1001	Retained Accessory Power Ignition	I	—
B	0.35	BN/WH	230	Instrument Panel Lamp Dimming Control	I	—
C	0.35	BK	1850	Ground	I	—
D	3	TN	167	Power Window Master Switch Right Front Down Signal	I	—
E	—	—	—	Not Occupied	—	—
F	3	BN	667	Power Window Motor Right Front Down Control	I	—
G	3	D-BU	666	Power Window Motor Right Front Up Control	I	—
H	3	L-BU	166	Power Window Master Switch Right Front Up Signal	I	—

S85 Auxiliary Blower Motor Switch (C36 or C69)

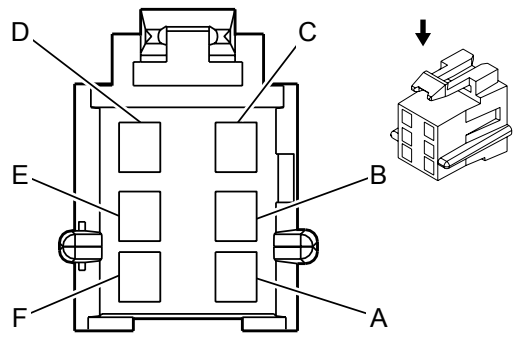

Connector Part Information

Harness Type: Rear Heater Switch

OEM Connector: 12064752

Service Connector: 15305888

Description: 6-Way F Metri-Pack 280 Series (BK)

Terminal Part Information

Terminal Type ID	Terminated Lead	Diagnostic Test Probe	Terminal Removal Tool	Service Terminal	Tray	Core Crimp	Insulation Crimp
I	Pending	J-35616-4A (PU)	J-38125-11A	12034046	2	E	A

S85 Auxiliary Blower Motor Switch (C36 or C69)

Pin	Size	Color	Circuit	Function	Terminal Type ID	Option
A	0.35	BN/WH	230	Instrument Panel Lamps Dimming Control	I	-
B	0.35	BK	450	Ground	I	-
C	-	-	-	Not Occupied	-	-
D	0.35	WH	1924	Auxiliary Blower Motor High Control	I	-
E	0.35	D-BU	1926	Auxiliary Blower Motor Low Control	I	-
F	0.35	OG	1925	Auxiliary Blower Motor Medium Control	I	-

T1 Accessory DC/AC Power Inverter Module

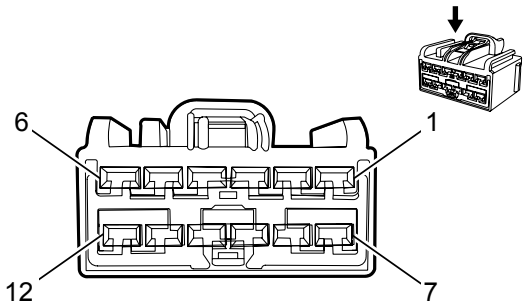

Connector Part Information

Harness Type: Instrument Panel

OEM Connector: 10846814

Service Connector: 13580444

Description: 12-Way F 2.8 Kaizen Series (L-GY)

Terminal Part Information

Terminal Type ID	Terminated Lead	Diagnostic Test Probe	Terminal Removal Tool	Service Terminal	Tray Name	Core Crimp	Insulation Crimp
I	19301761	J-35616-35 (VT)	J-38125-11A	Not Available	Not Available	Not Available	Not Available
II	19301761	J-35616-35 (VT)	J-38125-12A	Not Available	Not Available	Not Available	Not Available

T1 Accessory DC/AC Power Inverter Module

Pin	Size	Color	Circuit	Function	Terminal Type ID	Option
1	—	—	—	Not Occupied	—	—
2	1	BK	5683	120 V AC Phase A	II	—
3 - 5	—	—	—	Not Occupied	—	—
6	3	RD/WH	4140	Battery Positive Voltage	I	—
7	1	WH	5685	120 V AC Neutral	II	—
8 - 9	—	—	—	Not Occupied	—	—
10	0.5	BK/WH	1351	Signal Ground	II	—
11	3	BK	550	Ground	I	—
12	0.35	D-GN	2266	DC To AC Inverter Control 2	II	—

T4M Radio Antenna

—

Connector Part Information

Harness Type: Antenna Cable

OEM Connector: Not Available

Service Connector: Not Available

Description: 1-Way F COAX (NA)

Terminal Part Information

Terminal Type ID	Terminated Lead	Diagnostic Test Probe	Terminal Removal Tool	Service Terminal	Tray	Core Crimp	Insulation Crimp
I	Not Available	Not Available	Not Available	Not Available	Not Available	Not Available	Not Available

T4M Radio Antenna

Pin	Size	Color	Circuit	Function	Terminal Type ID	Option
—	—	COAX	—	AM/FM Antenna Signal	I	—

T4G Cellular Phone, Navigation, and Digital Radio Antenna X1 (U2K or UBS)

—

Connector Part Information

Harness Type: Antenna Cable

OEM Connector: Not Available

Service Connector: Not Available

Description: 1-Way F COAX (NA)

Terminal Part Information

Terminal Type ID	Terminated Lead	Diagnostic Test Probe	Terminal Removal Tool	Service Terminal	Tray	Core Crimp	Insulation Crimp
I	Not Available	Not Available	Not Available	Not Available	Not Available	Not Available	Not Available

T4G Cellular Phone, Navigation, and Digital Radio Antenna X1 (U2K or UBS)

Pin	Size	Color	Circuit	Function	Terminal Type ID	Option
—	—	COAX	—	XM Antenna Signal	I	—

T4G Cellular Phone, Navigation, and Digital Radio Antenna X2 (UI8 or UE1)

—

Connector Part Information

Harness Type: Antenna Cable

OEM Connector: Not Available

Service Connector: Not Available

Description: 1-Way F COAX (NA)

Terminal Part Information

Terminal Type ID	Terminated Lead	Diagnostic Test Probe	Terminal Removal Tool	Service Terminal	Tray	Core Crimp	Insulation Crimp
I	Not Available	Not Available	Not Available	Not Available	Not Available	Not Available	Not Available

T4G Cellular Phone, Navigation, and Digital Radio Antenna X2 (UI8 or UE1)

Pin	Size	Color	Circuit	Function	Terminal Type ID	Option
—	—	COAX	—	GPS/Cellular Network Antenna Signal	I	—

T8A Ignition Coil 1 (L20, L96, or LC8)

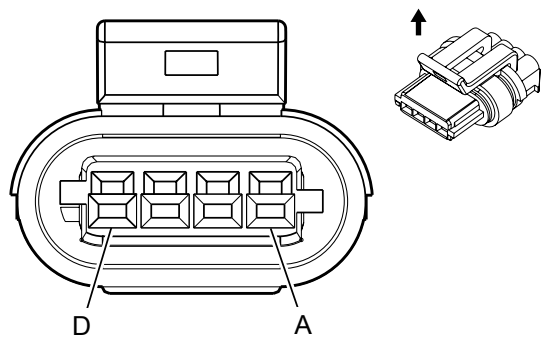

Connector Part Information

Harness Type: Left Ignition Coil

OEM Connector: 15439568

Service Connector: 88987184

Description: 4-Way F GT 150 Series, Sealed (BK)

Terminal Part Information

Terminal Type ID	Terminated Lead	Diagnostic Test Probe	Terminal Removal Tool	Service Terminal	Tray	Core Crimp	Insulation Crimp
I	13575400	J-35616-2A (GY)	J-38125-553	15326267	19	Pins: A, D–E	1

T8A Ignition Coil 1 (L20, L96, or LC8)

Pin	Size	Color	Circuit	Function	Terminal Type ID	Option
A	0.8	BK	350	Ground	I	-
B	0.5	BN	2129	Low Reference	I	-
C	0.5	PU	2121	Ignition Coil 1 Control	I	-
D	0.8	PK	1039	Ignition Voltage	I	-

T8B Ignition Coil 2 (L20, L96, or LC8)

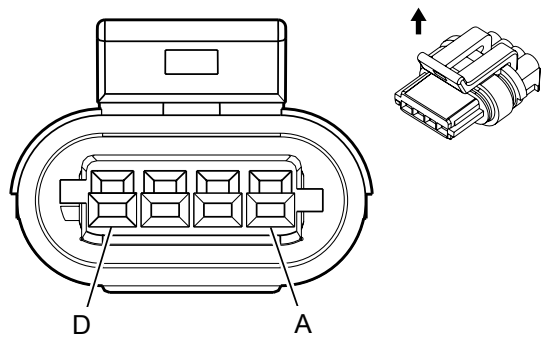

Connector Part Information

Harness Type: Right Ignition Coil

OEM Connector: 15439568

Service Connector: 88987184

Description: 4-Way F GT 150 Series, Sealed (BK)

Terminal Part Information

Terminal Type ID	Terminated Lead	Diagnostic Test Probe	Terminal Removal Tool	Service Terminal	Tray	Core Crimp	Insulation Crimp
I	13575400	J-35616-2A (GY)	J-38125-553	15326267	19	Pins: A, D–E	1

T8B Ignition Coil 2 (L20, L96, or LC8)

Pin	Size	Color	Circuit	Function	Terminal Type ID	Option
A	0.8	BK	350	Ground	I	-
B	0.5	BN	2130	Low Reference	I	-
C	0.5	RD	2122	Ignition Coil 2 Control	I	-
D	0.8	PK	1239	Ignition Voltage	I	-

T8C Ignition Coil 3 (L20, L96, or LC8)

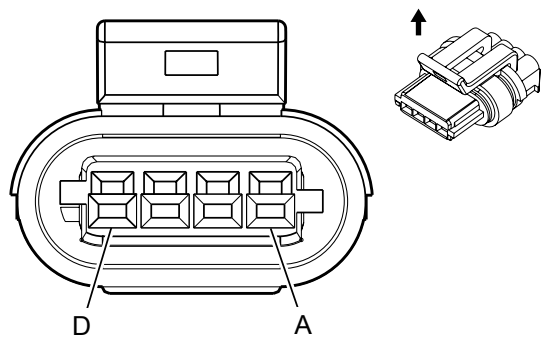

Connector Part Information

Harness Type: Left Ignition Coil

OEM Connector: 15439568

Service Connector: 88987184

Description: 4-Way F GT 150 Series, Sealed (BK)

Terminal Part Information

Terminal Type ID	Terminated Lead	Diagnostic Test Probe	Terminal Removal Tool	Service Terminal	Tray	Core Crimp	Insulation Crimp
I	13575400	J-35616-2A (GY)	J-38125-553	15326267	19	Pins: A, D–E	1

T8C Ignition Coil 3 (L20, L96, or LC8)

Pin	Size	Color	Circuit	Function	Terminal Type ID	Option
A	0.8	BK	350	Ground	I	-
B	0.5	BN	2129	Low Reference	I	-
C	0.5	L-BU	2123	Ignition Coil 3 Control	I	-
D	0.8	PK	1039	Ignition Voltage	I	-

T8D Ignition Coil 4 (L20, L96, or LC8)

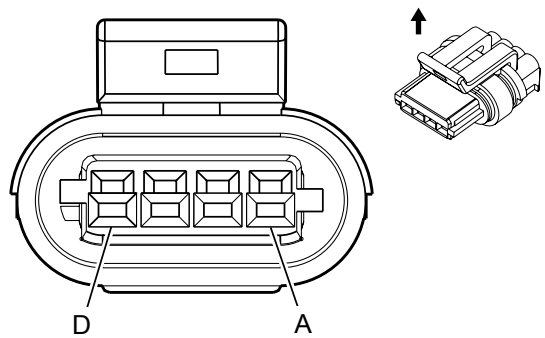

Connector Part Information

Harness Type:Right Ignition Coil

OEM Connector: 15439568

Service Connector: 88987184

Description: 4-Way F GT 150 Series, Sealed (BK)

Terminal Part Information

Terminal Type ID	Terminated Lead	Diagnostic Test Probe	Terminal Removal Tool	Service Terminal	Tray	Core Crimp	Insulation Crimp
I	13575400	J-35616-2A (GY)	J-38125-553	15326267	19	Pins: A, D–E	1

T8D Ignition Coil 4 (L20, L96, or LC8)

Pin	Size	Color	Circuit	Function	Terminal Type ID	Option
A	0.8	BK	350	Ground	I	-
B	0.5	BN	2130	Low Reference	I	-
C	0.5	D-GN	2124	Ignition Coil 4 Control	I	-
D	0.8	PK	1239	Ignition Voltage	I	-

T8E Ignition Coil 5 (L20, L96, or LC8)

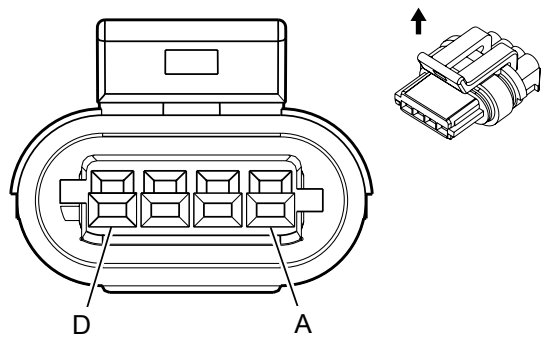

Connector Part Information

Harness Type: Left Ignition Coil

OEM Connector: 15439568

Service Connector: 88987184

Description: 4-Way F GT 150 Series, Sealed (BK)

Terminal Part Information

Terminal Type ID	Terminated Lead	Diagnostic Test Probe	Terminal Removal Tool	Service Terminal	Tray	Core Crimp	Insulation Crimp
I	13575400	J-35616-2A (GY)	J-38125-553	15326267	19	Pins: A, D–E	1

T8E Ignition Coil 5 (L20, L96, or LC8)

Pin	Size	Color	Circuit	Function	Terminal Type ID	Option
A	0.8	BK	350	Ground	I	-
B	0.5	BN	2129	Low Reference	I	-
C	0.5	D-GN	2125	Ignition Coil 5 Control	I	-
D	0.8	PK	1039	Ignition Voltage	I	-

T8F Ignition Coil 6 (LC8, LMF, L20 or L96)

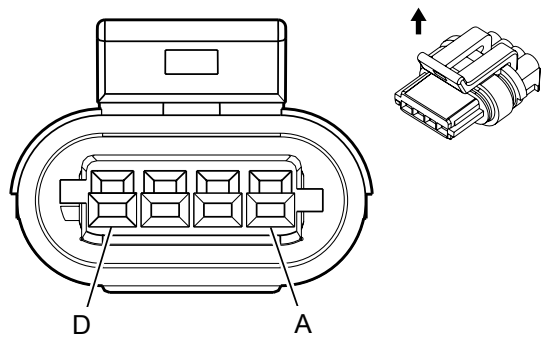

Connector Part Information

Harness Type: Right Ignition Coil

OEM Connector: 15439568

Service Connector: 88987184

Description: 4-Way F GT 150 Series, Sealed (BK)

Terminal Part Information

Terminal Type ID	Terminated Lead	Diagnostic Test Probe	Terminal Removal Tool	Service Terminal	Tray	Core Crimp	Insulation Crimp
I	13575400	J-35616-2A (GY)	J-38125-553	15326267	19	Pins: A, D–E	1

T8F Ignition Coil 6 (LC8, LMF, L20 or L96)

Pin	Size	Color	Circuit	Function	Terminal Type ID	Option
A	0.8	BK	350	Ground	I	-
B	0.5	BN	2130	Low Reference	I	-
C	0.5	L-BU	2126	Ignition Coil 6 Control	I	-
D	0.8	PK	1239	Ignition Voltage	I	-

T8G Ignition Coil 7 (L20, L96, or LC8)

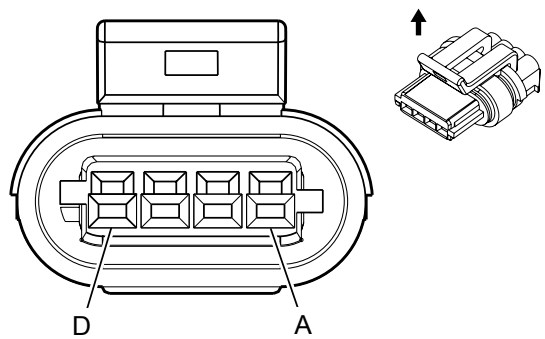

Connector Part Information

Harness Type: Left Ignition Coil

OEM Connector: 15439568

Service Connector: 88987184

Description: 4-Way F GT 150 Series, Sealed (BK)

Terminal Part Information

Terminal Type ID	Terminated Lead	Diagnostic Test Probe	Terminal Removal Tool	Service Terminal	Tray	Core Crimp	Insulation Crimp
I	13575400	J-35616-2A (GY)	J-38125-553	15326267	19	Pins: A, D–E	1

T8G Ignition Coil 7 (L20, L96, or LC8)

Pin	Size	Color	Circuit	Function	Terminal Type ID	Option
A	0.8	BK	350	Ground	I	-
B	0.5	BN	2129	Low Reference	I	-
C	0.5	RD	2127	Ignition Coil 7 Control	I	-
D	0.8	PK	1039	Ignition Voltage	I	-

T8H Ignition Coil 8 (L20, L96, or LC8)

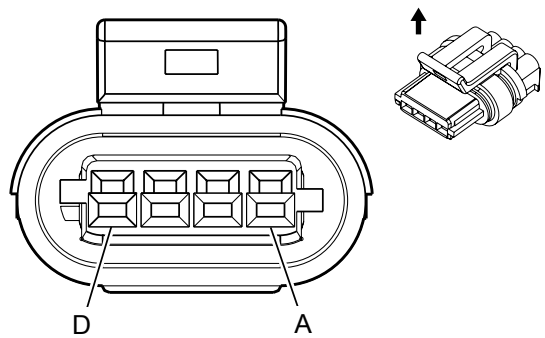

Connector Part Information

Harness Type: Right Ignition Coil

OEM Connector: 15439568

Service Connector: 88987184

Description: 4-Way F GT 150 Series, Sealed (BK)

Terminal Part Information

Terminal Type ID	Terminated Lead	Diagnostic Test Probe	Terminal Removal Tool	Service Terminal	Tray	Core Crimp	Insulation Crimp
I	13575400	J-35616-2A (GY)	J-38125-553	15326267	19	Pins: A, D–E	1

T8H Ignition Coil 8 (L20, L96, or LC8)

Pin	Size	Color	Circuit	Function	Terminal Type ID	Option
A	0.8	BK	350	Ground	I	-
B	0.5	BN	2130	Low Reference	I	-
C	0.5	PU	2128	Ignition Coil 8 Control	I	-
D	0.8	PK	1239	Ignition Voltage	I	-

X80B Accessory Power Receptacle - Center Console 2

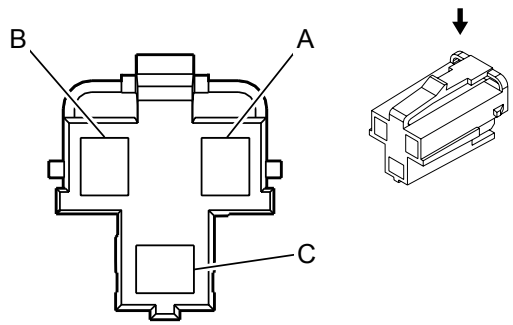

Connector Part Information

Harness Type: Instrument Panel

OEM Connector: 12176836

Service Connector: 19257374

Description: 3-Way F 280 Metri-Pack Series (GY)

Terminal Part Information

Terminal Type ID	Terminated Lead	Diagnostic Test Probe	Terminal Removal Tool	Service Terminal	Tray Name	Core Crimp	Insulation Crimp
I	Not Required	J-35616-4A (PU)	Not Required	Not Required	Not Required	Not Required	Not Required

X80B Accessory Power Receptacle - Center Console 2

Pin	Size	Color	Circuit	Function	Terminal Type ID	Option
A	1	RD/WH	1040	Battery Positive Voltage	I	—
B	—	—	—	Not Occupied	—	—
C	1	BK	550	Ground	I	—

X81 Accessory Power Receptacle - 110V AC X1

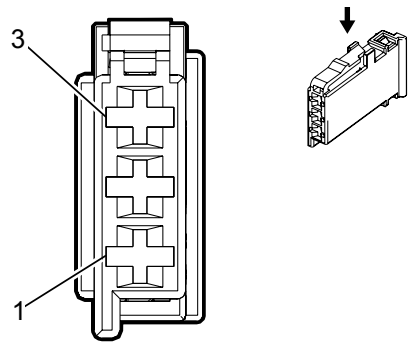

Connector Part Information

Harness Type: Instrument Panel

OEM Connector: 10865339

Service Connector: 93186706

Description: 3-Way F 1.6 Micro-Timer Series (BK)

Terminal Part Information

Terminal Type ID	Terminated Lead	Diagnostic Test Probe	Terminal Removal Tool	Service Terminal	Tray Name	Core Crimp	Insulation Crimp
I	Not Required	J-35616-14 (GN)	Not Required	Not Required	Not Required	Not Required	Not Required

X81 Accessory Power Receptacle - 110V AC X1

Pin	Size	Color	Circuit	Function	Terminal Type ID	Option
1	0.5	D-BU	6807	DC To AC Inverter Control	I	—
2	—	—	—	Not Occupied	—	—
3	1	BK	5683	120 V AC Phase A	I	—

X81 Accessory Power Receptacle - 110V AC X2

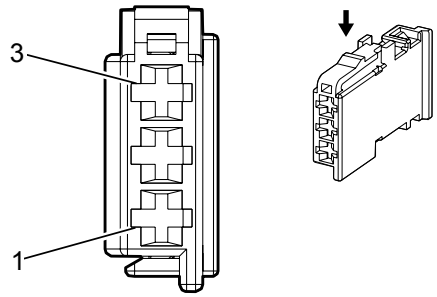

Connector Part Information

Harness Type: Instrument Panel

OEM Connector: 13648774

Service Connector: 13583924

Description: 3-Way F 1.6 Timer Series, Sealed (GY)

Terminal Part Information

Terminal Type ID	Terminated Lead	Diagnostic Test Probe	Terminal Removal Tool	Service Terminal	Tray Name	Core Crimp	Insulation Crimp
I	Not Required	J-35616-14 (GN)	Not Required	Not Required	Not Required	Not Required	Not Required

X81 Accessory Power Receptacle - 110V AC X2

Pin	Size	Color	Circuit	Function	Terminal Type ID	Option
1	0.35	D-GN	2266	DC To AC Inverter Control 2	I	—
2	—	—	—	Not Occupied	—	—
3	1	WH	5685	120 V AC Neutral	I	—

X84 Data Link Connector

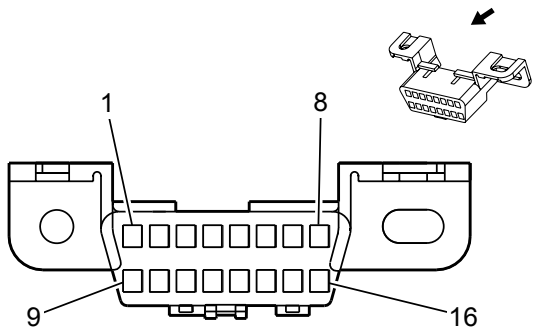

Connector Part Information

Harness Type: Instrument Panel

OEM Connector: 12110250

Service Connector: 12110250

Description: 16-Way F 150 Metri-Pack Series (BK)

Terminal Part Information

Terminal Type ID	Terminated Lead	Diagnostic Test Probe	Terminal Removal Tool	Service Terminal	Tray Name	Core Crimp	Insulation Crimp
I	13575725	J-35616-14 (GN)	J-38125-12A	12129484	Delphi 19	E	A
II	13575725	J-35616-14 (GN)	J-38125-12A	12129484	Delphi 19	E	C

X84 Data Link Connector

Pin	Size	Color	Circuit	Function	Terminal Type ID	Option
1	0.35	D-GN	5060	Low Speed GMLAN Serial Data	II	—
2 - 3	—	—	—	Not Occupied	—	—
4	0.5	BK/WH	351	Signal Ground	II	—
5	0.5	BK/WH	351	Signal Ground	II	—
6	0.5	TN/BK	2500	High Speed GMLAN Serial Data (+) (1)	II	—
7 - 13	—	—	—	Not Occupied	—	—
14	0.5	TN	2501	High Speed GMLAN Serial Data (-) (1)	II	—
15	—	—	—	Not Occupied	—	—
16	0.8	RD/WH	640	Battery Positive Voltage	I	—

X85 Steering Wheel Air Bag Coil X1

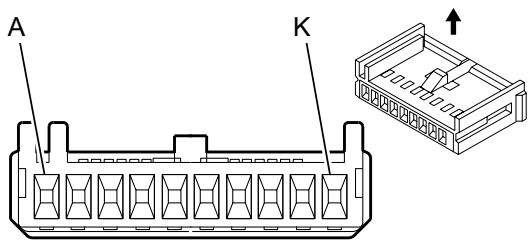

Connector Part Information

Harness Type: Steering Column

OEM Connector: 15393433

Service Connector: 22710638

Description: 10-Way F Micro-Pack 064 Series (BK)

Terminal Part Information

Terminal Type ID	Terminated Lead	Diagnostic Test Probe	Terminal Removal Tool	Service Terminal	Tray	Core Crimp	Insulation Crimp
I	Pending	J-35616-64B (L-BU)	J-38125-559	12177007	19	E	2

X85 Steering Wheel Air Bag Coil X1

Pin	Size	Color	Circuit	Function	Terminal Type ID	Option
A	0.5	BK	350	Ground	I	-
B	0.35	TN	28	Horn Relay Control	I	-
C	0.35	D-GN/WH	7158	Cruise Control Indicator Dimming Signal	I	-
D–E	-	-	-	Not Occupied	-	-
F	0.35	PK	1444	12-Volt Reference	I	-
G	0.35	BN	6136	Supply Voltage	I	-
H	0.35	L-GN	6818	Steering Wheel Control Signal	I	-
J	-	-	-	Not Occupied	-	-
K	0.35	GY	1884	Cruise Control Switch Signal	I	-

X85 Steering Wheel Air Bag Coil X2

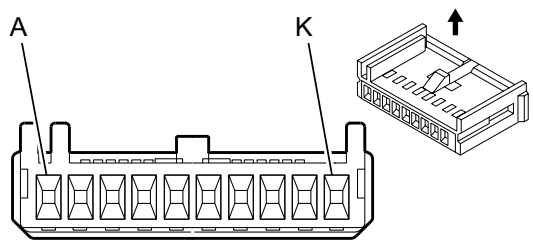

Connector Part Information

Harness Type: Steering Wheel

OEM Connector: 15393433

Service Connector: 22710638

Description: 10-Way F Micro-Pack 064 Series (BK)

Terminal Part Information

Terminal Type ID	Terminated Lead	Diagnostic Test Probe	Terminal Removal Tool	Service Terminal	Tray	Core Crimp	Insulation Crimp
I	Service by Harness - See Part Catalog	Not Available	Not Available	Not Available	Not Available	Not Available	Not Available

X85 Steering Wheel Air Bag Coil X2

Pin	Size	Color	Circuit	Function	Terminal Type ID	Option
A	0.35	GY	1884	Cruise Control Switch Signal	I	-
B	-	-	-	Not Occupied	-	-
C	0.35	D-GN	6818	Steering Wheel Control Signal	I	-
D	0.35	PK	6136	Supply Voltage	I	-
E	0.35	YE	1444	12-Volt Reference	I	-
F–G	-	-	-	Not Occupied	-	-
H	0.35	D-GN/WH	7158	Cruise Control Indicator Dimming Signal	I	-
J	0.35	OG	28	Horn Relay Control	I	-
K	0.35 0.5	BK BK	350 350	Ground Ground	I	K34/W1Y without K34/W1Y

X87RB Sliding Door Jamb Contact Plate - Right Body (AU3 with E24 or YA2)

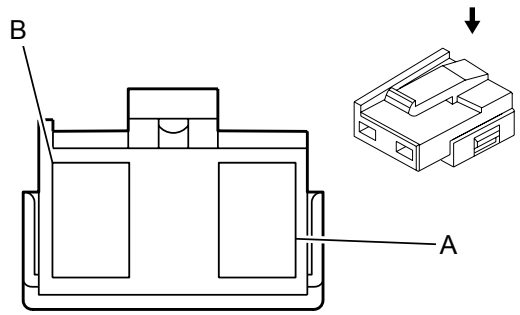

Connector Part Information

Harness Type: Body

OEM Connector: 12034343

Service Connector: 12101821

Description: 2-Way F 280 Metri-Pack Series (BK)

Terminal Part Information

Terminal Type ID	Terminated Lead	Diagnostic Test Probe	Terminal Removal Tool	Service Terminal	Tray Name	Core Crimp	Insulation Crimp
I	Not Required	J-35616-4A (PU)	Not Required	Not Required	Not Required	Not Required	Not Required

X87RB Sliding Door Jamb Contact Plate - Right Body (AU3 with E24 or YA2)

Pin	Size	Color	Circuit	Function	Terminal Type ID	Option
A	0.8	TN	294	Door Lock Actuator Unlock Control	I	—
B	0.8	GY	295	Door Lock Actuator Lock Control	I	—
	1	GY	295			—

X88 Trailer Connector (UY7 without NE7)

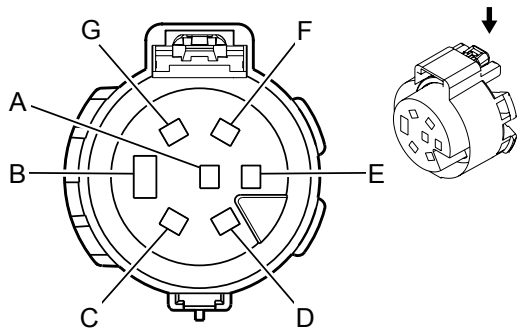

Connector Part Information

Harness Type: Chassis

OEM Connector: 15354653

Service Connector: 15306164

Description: 7-Way F 280 Metri-Pack, Sealed (BK)

Terminal Part Information

Terminal Type ID	Terminated Lead	Diagnostic Test Probe	Terminal Removal Tool	Service Terminal	Tray Name	Core Crimp	Insulation Crimp
I	Not Required	J-35616-42 (RD)	Not Required	Not Required	Not Required	Not Required	Not Required
II	Not Required	J-35616-4A (PU)	Not Required	Not Required	Not Required	Not Required	Not Required

X88 Trailer Connector (UY7 without NE7)

Pin	Size	Color	Circuit	Function	Terminal Type ID	Option
A	1	L-GN	1624	Trailer Backup Lamp Control	II	—
B	8	WH	22	Trailer Ground	I	—
C	3	D-BU	47	Trailer Auxiliary Control	II	—
D	1	D-GN	1619	Right Rear Trailer Stop/Turn Lamp Control	II	—
E	3	RD/BK	742	Battery Positive Voltage	II	—
F	1	BN	2109	Trailer Park Lamp Control	II	—
G	1	YE	1618	Left Rear Trailer Stop/Turn Lamp Control	II	—

X88 Trailer Connector (UY7 with NE7)

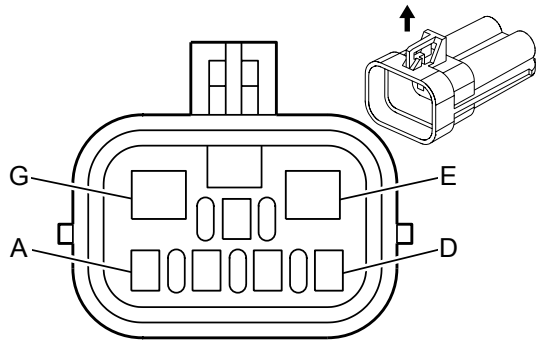

Connector Part Information

Harness Type: Chassis

OEM Connector: 12052200

Service Connector: 19299890

Description: 7-Way M 150, 480 Metri-Pack Series, Sealed (BK)

Terminal Part Information

Terminal Type ID	Terminated Lead	Diagnostic Test Probe	Terminal Removal Tool	Service Terminal	Tray Name	Core Crimp	Insulation Crimp
I	Not Required	J-35616-3 (GY)	Not Required	Not Required	Not Required	Not Required	Not Required
II	Not Required	J-35616-41 (BU)	Not Required	Not Required	Not Required	Not Required	Not Required

X88 Trailer Connector (UY7 with NE7)

Pin	Size	Color	Circuit	Function	Terminal Type ID	Option
A	1	L-GN	1624	Trailer Backup Lamp Control	I	—
B	1	BN	2109	Trailer Park Lamp Control	I	—
C	1	YE	1618	Left Rear Trailer Stop/Turn Lamp Control	I	—
D	—	—	—	Not Occupied	—	—
E	3	D-BU	47	Trailer Auxiliary Control	II	—
F	1	D-GN	1619	Right Rear Trailer Stop/Turn Lamp Control	I	—
G	3	RD/BK	742	Battery Positive Voltage	II	—

Inline Harness Connector End Views

X100 Instrument Panel Harness to Engine Harness (L20, L96, or LC8)

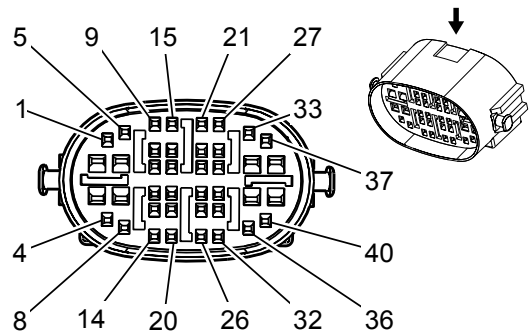

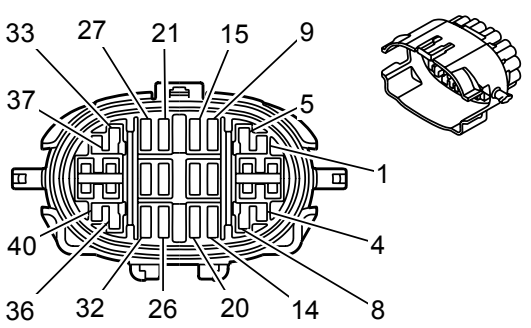

Connector Part Information

Harness Type: Instrument Panel

OEM Connector: 13601803

Service Connector: 19166997

Description: 40-Way F 150, 280 GT Series, Sealed (BK)

Connector Part Information

Harness Type: Engine

OEM Connector: 13605375

Service Connector: 19169297

Description: 40-Way M 150, 280 GT Series, Sealed (BK)

Terminal Part Information

Terminal Type ID	Terminated Lead	Diagnostic Test Probe	Terminal Removal Tool	Service Terminal	Tray Name	Core Crimp	Insulation Crimp
I	13575396	J-35616-14 (GN)	J-38125-553	15326427	Delphi 5	E	A
II	13575403	J-35616-4A (PU)	J-38125-553	15304720	Delphi 19	4	5
III	13575412	J-35616-14 (GN)	J-38125-553	12191819	Delphi 8	2	1
IV	13575412	J-35616-14 (GN)	J-38125-553	12191819	Delphi 8	E	1
V	13576356	J-35616-4A (PU)	J-38125-553	15304719	Delphi 19	2	5
VI	13576356	J-35616-4A (PU)	J-38125-553	15304719	Delphi 19	E	5
VII	13575397	J-35616-3 (GY)	J-38125-553	15326269	Delphi 19	E	4
VIII	13575443	J-35616-5 (PU)	J-38125-553	15304732	Delphi 8	A	5
IX	13576364	J-35616-3 (GY)	J-38125-553	15326269	Delphi 19	E	1
X	13580826	J-35616-5 (PU)	J-38125-553	15304731	Delphi 19	C	5

XI	13580826	J-35616-5 (PU)	J-38125-553	15304731	Delphi 19	E	5
XII	13588381	J-35616-3 (GY)	J-38125-553	15373403	Delphi 5	E	4

X100 Instrument Panel Harness to Engine Harness (L20, L96, or LC8)

Pin	Size	Color	Circuit	Terminal Type ID	Option	Function	Pin	Size	Color	Circuit	Terminal Type ID	Option
1	0.35	L-BU/WH	6311	IV	—	Cruise/ETC/TCC Brake Signal	1	0.5	L-BU/WH	6311	VII	—
2	0.8	OG	52	V	—	High Blower Motor Control	2	0.8	OG	52	X	—
3	0.8	L-BU	72	V	—	Medium 2 Blower Motor Control	3	2	L-BU	72	VIII	—
4	0.5 0.8	OG OG	1732 1732	IV III	— —	Electronic Control Unit 12 Volt Reference (3)	4	0.5	OG	1732	VII	—
5	0.8	BN	141	III	—	Run Ignition 3 Voltage	5	0.8	BN	141	IX	—
6	0.8	TN	63	V	—	Medium Blower Motor Control (1)	6	0.8	TN	63	X	—
7	2	BK	1250	II	—	Ground	7	2	BK	1250	VIII	—
8	0.8	YE	60	III	—	Low Blower Motor Control	8	0.8	YE	60	IX	—
9	0.35	D-BU	507	IV	—	Wait To Start Indicator Control	9	0.5	D-BU	507	VII	—

9	0.35					Control	9	0.5				
10	—	—	—	—	—	Not Occupied	10	—	—	—	—	—
11	0.8	L-GN	2032	III	—	Coolant Temperature Sensor Signal	11	0.8	L-GN	2032	IX	—
12	0.5	L-GN	1478	IV	—	Coolant Level Switch Signal	12	0.5	L-GN	1478	VII	—
13	0.5	BK/WH	351	IV	—	Signal Ground	13	0.5	BK/WH	351	VII	—
14	0.5	L-GN	66	IV	—	A/C Request Signal	14	0.5	L-GN	66	VII	—
15	0.5	L-BU	5986	IV	—	Serial Data Communication Enable	15	0.5	L-BU	5986	VII	—
16	0.5	L-GN	66	IV	—	A/C Request Signal	16	0.5	L-GN/WH	66	VII	—
17	0.5	PU	333	IV	—	Brake Fluid Level Sensor Signal	17	0.5	PU	333	VII	—
18	0.5	BN/WH	419	IV	—	Check Engine Indicator Control	18	0.5	BN/WH	419	VII	—
19	0.5	D-BU	5985	IV	—	Accessory Wakeup Serial Data	19	0.5	D-BU	5985	VII	—
20	0.8	L-BU/BK	6813	III	—	Coolant Temperature Sensor 2 Low Reference	20	0.8	L-BU/BK	6813	IX	—

21	0.35	BN	1271	I	—	Accelerator Pedal Position Low Reference (1)	21	0.5	BN	1271	XII	—
22	0.35	WH/BK	1164	I	—	Accelerator Pedal Position 5 Volt Reference (1)	22	0.5	WH/BK	1164	XII	—
23	0.35	TN	1274	I	—	Accelerator Pedal Position 5 Volt Reference (2)	23	0.5	TN	1274	XII	—
24	0.5	GY	6044	IV	—	Steering Angle Sensor 5 Volt Reference	24	0.5	GY	6044	VII	—
25	0.5	YE	6046	IV	—	Steering Angle Sensor Phase A Signal	25	0.5	YE	6046	VII	—
26	0.5	TN	6048	IV	—	Steering Angle Sensor Phase C Signal	26	0.5	TN	6048	VII	—
27	0.35	D-BU	1161	I	—	Accelerator Pedal Position Signal (1)	27	0.5	D-BU	1161	XII	—
28	0.35	PU	1272	I	—	Accelerator Pedal Position Low Reference (2)	28	0.5	PU	1272	XII	—
29	0.35	L-BU	1162	I	—	Accelerator Pedal Position Signal (2)	29	0.5	L-BU	1162	XII	—
30	0.5	OG/BK	6045	IV	—	Steering Angle Sensor Low Reference	30	0.5	OG/BK	6045	VII	—
31	0.5	D-BU	6047	IV	—	Steering Angle Sensor Phase B Signal	31	0.5	D-BU	6047	VII	—

32	0.5	L-GN	6043	IV	—	Steering Angle Sensor Signal	32	0.5	L-GN	6043	VII	—
33	0.5	TN/BK	2500	IV	—	High Speed GMLAN Serial Data (+) (1)	33	0.5	TN/BK	2500	VII	—
34	0.5	BN/WH	6437	VI	—	CAN Bus High Terminated Serial Data	34	0.5	BN/WH	6437	XI	—
35	0.5	GY/BK	1337	VI	—	Yaw Rate Sensor 5 Volt Reference	35	0.5	GY/BK	1337	XI	—
36	0.5	TN/BK	2500	IV	—	High Speed GMLAN Serial Data (+) (1)	36	0.5	TN/BK	2500	VII	—
37	0.5	TN	2501	IV	—	High Speed GMLAN Serial Data (-) (1)	37	0.5	TN	2501	VII	—
38	0.5	WH/BK	6436	VI	—	CAN Bus Low Terminated Serial Data	38	0.5	WH/BK	6436	XI	—
39	0.5	BK/PU	7499	VI	—	Yaw Rate Sensor Low Reference	39	0.5	BK/PU	7499	XI	—
40	0.5	TN	2501	IV	—	High Speed GMLAN Serial Data (-) (1)	40	0.5	TN	2501	VII	—

X100 Instrument Panel Harness to Engine Chassis Harness (LGH)

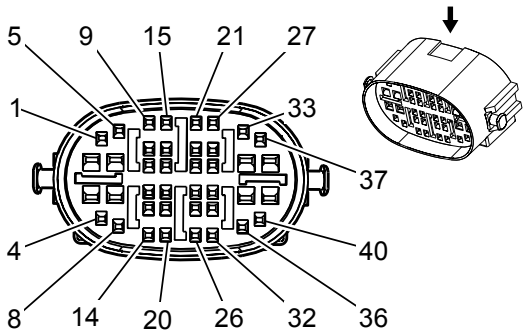

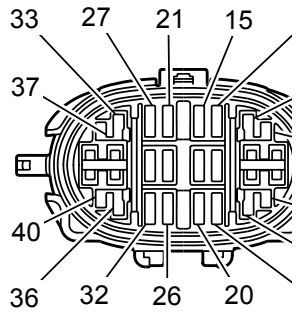

Connector Part Information

Harness Type: Instrument Panel

OEM Connector: 13601803

Service Connector: 19166997

Description: 40-Way F GT 150 280 Series Sealed (BK)

Connector Part Information

Harness Type: Engine Chassis

OEM Connector: 13605375

Service Connector: 19169297

Description: 40-Way M GT 150 280

Terminal Part Information

Terminal Type ID	Terminated Lead	Diagnostic Test Probe	Terminal Removal Tool	Service Terminal	Tray	Core Crimp	Insulation Crimp
I	Pins: 1, 9 (LGH or LMM), 18 – 13327112	J-35616-2A (GY)	J-38125-553	Pins: 1, 4-5, 8-20, 24-26, 30-33, 36-37, 40 – 12191819	8	Pins: 1, 4, 9-11, 13–19, 24–26, 30–33, 36–37, 40 – E	1
II	Pins: 2-3, 6 – 13575405	J-35616-4A (PU)	J-38125-553	Pins: 2-3, 6, 34-35, 38-39 – 15304719	19	Pins: 2-3, 6 – 2	5
III	Pins: 1, 4, 10, 11, 13–17, 19, 24–26, 30–33, 36–37, 40 – 13575398	J-35616-3 (GY)	J-38125-553	Pins: 1, 4, 8–19, 24–26, 30–33, 36–37, 40 – 15326269	19	Pins: 1, 4, 14-19, 21-33, 36-37, 40 – E	4
IV	Pins: 2-3, 6 – 13327135	J-35616-5 (PU)	J-38125-553	Pins: 2-3, 6–7, 34-35, 38-39 – 15304731	19	Pins: 2-3, 6 – C	5

X100 Instrument Panel Harness to Engine Chassis Harness (LGH)

Pin	Size	Color	Circuit	T Type ID	Option	Function	Pin	Size	Color	Circuit	T Type ID	Option
1	0.35	L-BU/WH	6311	I	-	Torque Converter Clutch (TCC) Brake Signal	1	0.5	L-BU/WH	6311	III	-
2	0.8	OG	52	II	-	Blower Motor High Control	2	0.8	OG	52	IV	-
3	0.8	L-BU	72	II	-	Medium 2 Blower Motor Control	3	0.8	L-BU	72	IV	-
4	0.5	OG	1732	I	-	Courtesy Lamp Control	4	0.5	OG	1732	III	-

5	0.8	BN	141	I	-	Ignition Voltage	5	0.8	BN	141	-	-
6	0.8	TN	63	II	-	Blower Motor Medium Control	6	0.8	TN	63	IV	-
7	2	BK	1250	II	-	Ground	7	2	BK	1250	IV	-
8	0.8	YE	60	I	-	Blower Motor Low Control	8	0.8	YE	60	III	-
9	0.35	D-BU	507	I	-	Wait to Start Indicator Control	9	0.5	D-BU	507	III	-
10, 11	-	-	-	-	-	Not Occupied	10, 11	-	-	-	-	-
12	0.5	L-GN	1478	I	-	Coolant Level Switch Signal	12	0.5	L-GN	1478	III	-
13	0.5	BK/WH	351	I	-	Ground	13	0.5	BK/WH	351	III	-
14	0.5	L-GN	66	I	C60	A/C Request Signal	14	0.5	L-GN	66	III	C60
15	0.5	L-BU	5986	I	-	Serial Data Communication Enable	15	0.5	L-BU	5986	III	-
16	0.5	L-GN	66	I	C60	A/C Request Signal	16	0.5	L-GN	66	III	C60
17	0.5	PU	333	I	-	Brake Fluid Level Sensor Signal	17	0.5	PU	333	III	-
18	0.35	BN/WH	419	I	-	MIL Control	18	0.5	BN/WH	419	III	-
19	0.5	D-BU	5985	I	-	Accessory Wakeup Serial Data	19	0.5	D-BU	5985	III	-
20	-	-	-	-	-	Not Occupied	20	-	-	-	-	-
21	0.35	BN	1271	I	-	Low Reference	21	0.5	BN	1271	III	-
22	0.35	WH/BK	1164	I	-	5-Volt Reference	22	0.5	WH/BK	1164	III	-
23	0.35	TN	1274	I	-	5-Volt Reference	23	0.5	TN	1274	III	-
24	0.5	GY	6044	I	JL4	5-Volt Reference	24	0.5	GY	6044	III	JL4
25	0.5	YE	6046	I	JL4	Steering Angle Sensor Phase A	25	0.5	YE	6046	III	JL4
26	0.5	TN	6048	I	JL4	Steering Angle Sensor Phase C	26	0.5	TN	6048	III	JL4
27	0.35	D-BU	1161	I	-	Accelerator Pedal Position (APP) Sensor 1 Signal	27	0.5	D-BU	1161	III	-
28	0.35	PU	1272	I	-	Low Reference	28	0.5	PU	1272	III	-
29	0.35	L-BU	1162	I	-	Accelerator Pedal Position (APP) Sensor 2 Signal	29	0.5	L-BU	1162	III	-

30	0.5	OG/BK	6045	I	JL4	Low Reference	30	0.5	OG/BK	6045	III	JL4
31	0.5	D-BU	6047	I	JL4	Steering Angle Sensor Phase B	31	0.5	D-BU	6047	III	JL4
32	0.5	L-GN	6043	I	JL4	Steering Angle Sensor Signal	32	0.5	L-GN	6043	III	JL4
33	0.5	TN/BK	2500	I	-	High Speed GMLAN Serial Data Bus (+)	33	0.5	TN/BK	2500	III	-
34	0.5	BN/WH	6437	II	JL4	CAN Bus High Terminated Serial Data	34	0.5	BN/WH	6437	IV	JL4
35	0.5	GY/BK	1337	II	JL4	5-Volt Reference	35	0.5	GY/BK	1337	IV	JL4
36	0.5	TN/BK	2500	I	-	High Speed GMLAN Serial Data Bus (+)	36	0.5	TN/BK	2500	III	-
37	0.5	TN	2501	I	-	High Speed GMLAN Serial Data Bus (−)	37	0.5	TN	2501	III	-
38	0.5	WH/BK	6436	II	JL4	CAN Bus Low Terminated Serial Data	38	0.5	WH/BK	6436	IV	JL4
39	0.5	BK/PU	7499	II	JL4	Low Reference	39	0.5	BK/PU	7499	IV	JL4
40	0.5	TN	2501	I	-	High Speed GMLAN Serial Data Bus (−)	40	0.5	TN	2501	III	-

X101 Chassis Harness to Engine Harness (L20, L96, or LC8)

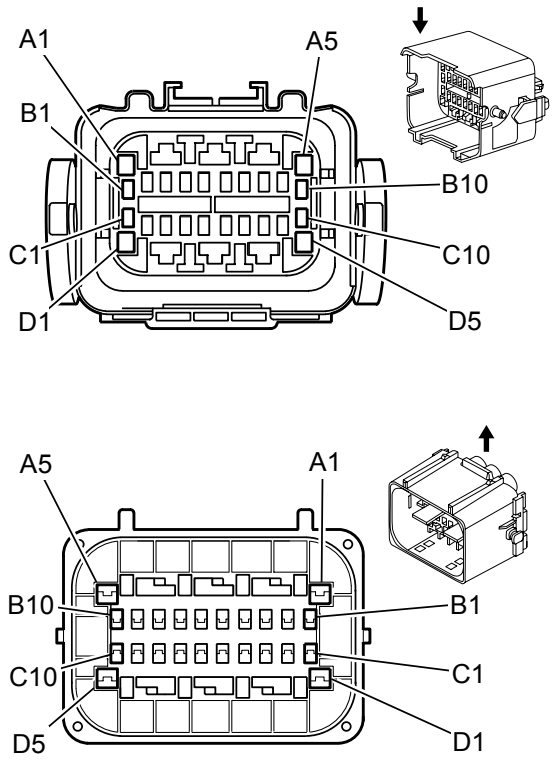

Connector Part Information

Harness Type: Chassis

OEM Connector: 15355480

Service Connector: 19181242

Description: 30-Way F 150 GT Series, Sealed (BK)

Connector Part Information

Harness Type: Engine

OEM Connector: 15450272

Service Connector: 89046785

Description: 30-Way M 150 GT, 280 Series, Sealed (BK)

Terminal Part Information

Terminal Type ID	Terminated Lead	Diagnostic Test Probe	Terminal Removal Tool	Service Terminal	Tray Name	Core Crimp	Insulation Crimp
I	13575412	J-35616-14 (GN)	J-38125-553	12191819	Delphi 8	2	1
II	13575412	J-35616-14 (GN)	J-38125-553	12191819	Delphi 8	E	1
III	13576356	J-35616-4A (PU)	J-38125-553	15304719	Delphi 19	E	5
IV	19303716	J-35616-42 (RD)	J-38125-11A	15305232	Delphi 23	B/4	3
V	13575397	J-35616-3 (GY)	J-38125-553	15326269	Delphi 19	E	4
VI	13576364	J-35616-3 (GY)	J-38125-553	15326269	Delphi 19	E	1
VII	13580826	J-35616-5 (PU)	J-38125-553	15304731	Delphi 19	E	5
VIII	19303715	J-35616-43 (RD)	J-38125-11A	12064734	Delphi 8	E	3

X101 Chassis Harness to Engine Harness (L20, L96, or LC8)

Pin	Size	Color	Circuit	Terminal Type	Option	Function	Pin	Size	Color	Circuit	Terminal Type	Option

				ID							ID	
A1	0.5	YE	6046	III	—	Steering Angle Sensor Phase A Signal	A1	0.5	YE	6046	VII	—
A2	0.5	D-BU	6047	IV	—	Steering Angle Sensor Phase B Signal	A2	0.5	D-BU	6047	VIII	—
A3	0.5	TN	6048	IV	—	Steering Angle Sensor Phase C Signal	A3	0.5	TN	6048	VIII	—
A4	—	—	—	—	—	Not Occupied	A4	—	—	—	—	—
A5	0.5	D-GN/WH	817	III	—	Vehicle Speed Signal	A5	0.35	D-GN/WH	817	VII	—
B1	0.5	GY	2709	II	—	Fuel Tank Pressure Sensor 5 Volt Reference	B1	0.5	GY	2709	V	—
B2	0.5	D-GN	890	II	—	Fuel Tank Pressure Sensor Signal	B2	0.5	D-GN	890	V	—
B3	0.5	TN/BK	2500	II	—	High Speed GMLAN Serial Data (+) (1)	B3	0.5	TN/BK	2500	V	—
B4	—	—	—	—	—	Not Occupied	B4	—	—	—	—	—
B5	0.5	TN/BK	2500	II	—	High Speed GMLAN Serial Data (+) (1)	B5	0.5	TN/BK	2500	V	—
B6	0.5 0.5	YE/BK D-GN/WH	1827 817	II	— —	Vehicle Speed Signal	B6	0.5 0.5	YE/BK D-GN/WH	1827 817	V	— —

B7	0.5	GY/BK	1337	II	—	Yaw Rate Sensor 5 Volt Reference	B7	0.5	GY/BK	1337	V	—
B8	0.5	BK/PU	7499	II	—	Yaw Rate Sensor Low Reference	B8	0.5	BK/PU	7499	V	—
B9 - B10	—	—	—	—	—	Not Occupied	B9 - B10	—	—	—	—	—
C1	0.5	TN	2759	II	—	Fuel Tank Pressure Sensor Low Reference	C1	0.5	TN	2759	V	—
C2	0.5	PU	1589	II	—	Primary Fuel Level Sensor Signal	C2	0.5	PU	1589	V	—
C3	0.5	TN	2501	II	—	High Speed GMLAN Serial Data (-) (1)	C3	0.5	TN	2501	V	—
C4	0.5	L-GN	6043	II	—	Steering Angle Sensor Signal	C4	0.5	L-GN	6043	V	—
C5	0.5	TN	2501	II	—	High Speed GMLAN Serial Data (-) (1)	C5	0.5	TN	2501	V	—
C6	0.5	WH/BK	6436	II	—	CAN Bus Low Terminated Serial Data	C6	0.5	WH/BK	6436	V	—
C7	0.5	BN/WH	6437	II	—	CAN Bus High Terminated Serial Data	C7	0.5	BN/WH	6437	V	—
C8	0.8	WH	1579	I	—	Fuel Temperature/Compositi on Signal	C8	0.8	WH	1579	VI	—
C9	—	—	—	—	—	Not Occupied	C9	—	—	—	—	—
		BK/WH	1551	I	—	Signal Ground			BK/WH	1551	VI	—

C10	0.8	BK/WH	1551	I	—	Signal Ground	C10	0.8	BK/WH	1551	VI	—
D1	0.5	L-BU	5986	III	—	Serial Data Communication Enable	D1	0.5	L-BU	5986	VII	—
D2	0.5	GY	6044	IV	—	Steering Angle Sensor 5 Volt Reference	D2	0.5	GY	6044	VIII	—
D3	0.5	OG/BK	6045	IV	—	Steering Angle Sensor Low Reference	D3	0.5	OG/BK	6045	VIII	—
D4	—	—	—	—	—	Not Occupied	D4	—	—	—	—	—
D5	0.5	WH	1310	III	—	EVAP Canister Vent Solenoid Control	D5	0.5	WH	1310	VII	—

X101 Engine Chassis Harness to Chassis Harness (LGH)

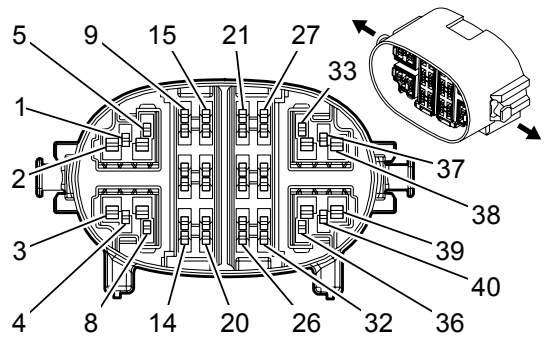

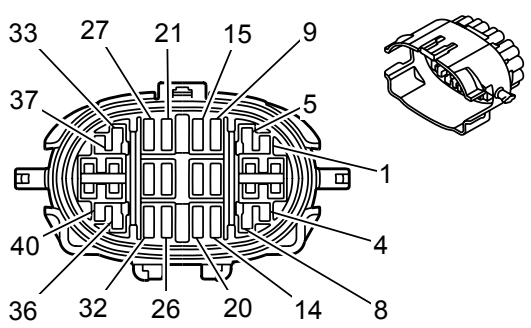

Connector Part Information

Harness Type: Engine

OEM Connector: 13601804

Service Connector: 19166998

Description: 40-Way F 150, 280 GT Series, Sealed (GY)

Connector Part Information

Harness Type: Chassis

OEM Connector: 13605376

Service Connector: 19169298

Description: 40-Way M 150, 280 GT Series, Sealed (BK)

Terminal Part Information

Terminal Type ID	Terminated Lead	Diagnostic Test Probe	Terminal Removal Tool	Service Terminal	Tray Name	Core Crimp	Insulation Crimp
I	13575396	J-35616-14 (GN)	J-38125-553	15326427	Delphi 5	2	1
II	13575396	J-35616-14 (GN)	J-38125-553	15326427	Delphi 5	E	A
III	13575412	J-35616-14 (GN)	J-38125-553	12191819	Delphi 8	2	1
IV	13575412	J-35616-14 (GN)	J-38125-553	12191819	Delphi 8	E	1
V	13576356	J-35616-4A (PU)	J-38125-553	15304719	Delphi 19	2	5
VI	13576356	J-35616-4A (PU)	J-38125-553	15304719	Delphi 19	E	5
VII	13575397	J-35616-3 (GY)	J-38125-553	15326269	Delphi 19	E	4
VIII	13576364	J-35616-3 (GY)	J-38125-553	15326269	Delphi 19	E	1
IX	13580826	J-35616-5 (PU)	J-38125-553	15304731	Delphi 19	2	5
X	13580826	J-35616-5 (PU)	J-38125-553	15304731	Delphi 19	E	5

XI	13588381	J-35616-3 (GY)	J-38125-553	15373403	Delphi 5	E	1

X101 Engine Chassis Harness to Chassis Harness (LGH)

Pin	Size	Color	Circuit	Terminal Type ID	Option	Function	Pin	Size	Color	Circuit	Terminal Type ID	Option
1	0.5	TN/BK	2500	IV	—	High Speed GMLAN Serial Data (+) (1)	1	0.5	TN/BK	2500	VII	—
2	0.5	PK	2139	VI	—	Run/Crank Ignition 1 Voltage	2	0.5	PK	2139	X	—
3	0.5	OG/BK	1786	VI	—	Transmission Park/Neutral Signal (1)	3	0.5	OG/BK	1786	X	—
4	0.5	L-BU	5377	II	—	Exhaust Gas Temperature Sensor (2)	4	0.8	L-BU	5377	XI	—
5	0.5	BN/WH	6783	II	—	Exhaust Gas Temperature Sensor 2 Low Reference	5	0.8	BN/WH	6783	XI	—
6	0.5 0.5	TN L-BU	2501 5986	VI	— —	High Speed GMLAN Serial Data (-) (1) Serial Data Communication Enable	6	0.5 0.5	TN L-BU	2501 5986	X	— —
7	0.5	BN	3108	VI	—	DEF Pressure Sensor Signal	7	0.5	BN	3108	X	—
8	1	OG/WH	3677	III	—	DEF Reservoir Heater Control	8	1	OG/WH	3677	VIII	—
9	0.5	BK	3102	IV	—	DEF Reverting Valve Low Control	9	0.5	BK	3102	VII	—

10	0.5	D-GN	3101	IV	—	DEF Reverting Valve High Control	10	0.5	D-GN	3101	VII	—
11	0.8	L-GN	7494	III	—	High Speed GMLAN Serial Data (-)(3)	11	0.8	L-GN	7494	VIII	—
12	0.5	OG/BK	6399	IV	—	Replicated TOS Signal	12	0.5	OG/BK	6399	VII	—
13	0.8	D-GN	7493	III	—	High Speed GMLAN Serial Data (+)(3)	13	0.8	D-GN	7493	VIII	—
14	0.5	TN/BK	2500	IV	—	High Speed GMLAN Serial Data (+) (1)	14	0.5	TN/BK	2500	VII	—
15	0.5	TN	2501	IV	—	High Speed GMLAN Serial Data (-) (1)	15	0.5	TN	2501	VII	—
16	0.35 0.35	YE/BK D-GN/WH	1827 817	IV	— —	Vehicle Speed Signal	16	0.5 0.5	D-GN/WH YE/BK	817 1827	VII	— —
17	0.5	L-BU/WH	6311	IV	—	Cruise/ETC/TCC Brake Signal	17	0.5	L-BU/WH	6311	VII	—
18	0.35	RD/WH	1840	IV	—	Battery Positive Voltage	18	0.35	RD/WH	1840	VII	—
19	0.8	D-GN	7493	I	—	High Speed GMLAN Serial Data (+)(3)	19	0.8	D-GN	7493	XI	—

20	0.8	L-GN	7494	I	—	High Speed GMLAN Serial Data (-)(3)	20	0.8	L-GN	7494	XI	—
21	0.5	TN	2759	IV	—	Fuel Tank Pressure Sensor Low Reference	21	0.35	TN	2759	VII	—
22	0.5	PU	1589	IV	—	Primary Fuel Level Sensor Signal	22	0.35	PU	1589	VII	—
23	0.5	GY	3103	IV	—	DEF Smart Pump Control	23	0.5	GY	3103	VII	—
24	0.5	TN	3104	IV	—	DEF Smart Pump Low Reference	24	0.5	TN	3104	VII	—
25	0.5	D-BU	3105	IV	—	DEF Smart Pump Control	25	0.5	D-BU	3105	VII	—
26	0.5	D-BU	5985	IV	—	Accessory Wakeup Serial Data	26	0.5	D-BU	5985	VII	—
27	0.5	GY	3106	IV	—	DEF Pressure Sensor 5 Volt Reference	27	0.5	GY	3106	VII	—
28	1	PK/BK	5293	III	—	Powertrain Main Relay Fused Supply (4)	28	1	PK/BK	5293	VIII	—
29	0.5	TN	3107	IV	—	DEF Pressure Sensor Low Reference	29	0.5	TN	3107	VII	—
30	1	TN	3673	III	—	Nox Sensor (1) Ground	30	1	TN	3673	VIII	—

31	0.5	L-BU	5986	IV	—	Serial Data Communication Enable	31	0.5	L-BU	5986	VII	—
32	0.8	BK/WH	1551	III	—	Signal Ground	32	0.8	BK/WH	1551	VIII	—
33	0.5	PU	3674	IV	—	Nox Sensor (1) Control	33	1	PU	3674	VIII	—
34	1	PU/WH	3199	V	—	DEF Pressure Line Heater Control	34	1	PU/WH	3199	IX	—
35	1	GY/WH	3675	V	—	DEF Pump Heater Control	35	1	GY/WH	3675	IX	—
36	0.5	D-BU	6863	IV	—	Water In Fuel Sensor Low Reference	36	0.5	D-BU	6863	VII	—
37	0.5	D-BU/YE	6861	IV	—	Water In Fuel Sensor Signal	37	0.5	L-BU/YE	6861	VII	—
38	0.5	TN/BK	2500	VI	—	High Speed GMLAN Serial Data (+) (1)	38	0.5	TN/BK	2500	X	—
39	0.5	TN	2501	VI	—	High Speed GMLAN Serial Data (-) (1)	39	0.5	TN	2501	X	—
40	0.35	D-GN/WH	817	IV	—	Vehicle Speed Signal	40	0.5	D-GN/WH	817	VII	—

X104 Instrument Panel Harness to Front Impact Sensor Jumper

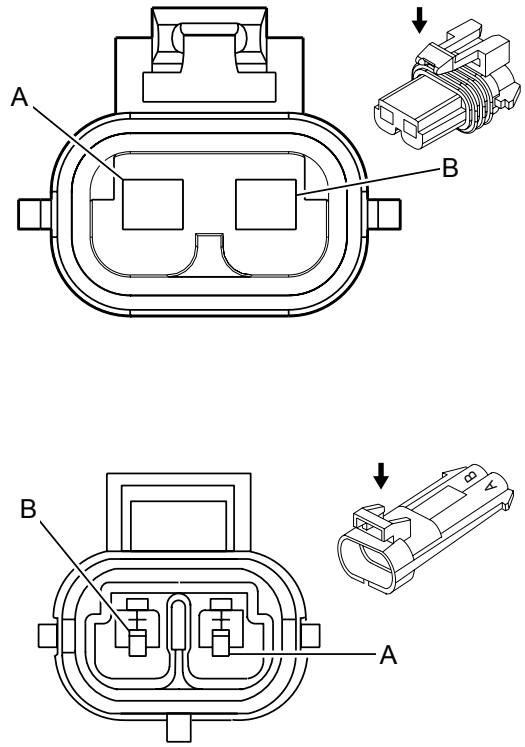

Connector Part Information

Harness Type: Instrument Panel

OEM Connector: 12077900

Service Connector: 12116247

Description: 2-Way F 280 Metri-Pack Series, Sealed (BK)

Connector Part Information

Harness Type: Seat Airbag Jumper

OEM Connector: 15317807

Service Connector: Service by Harness - See Part Catalog

Description: 2-Way M 280 Metri-Pack (BK)

Terminal Part Information

Terminal Type ID	Terminated Lead	Diagnostic Test Probe	Terminal Removal Tool	Service Terminal	Tray Name	Core Crimp	Insulation Crimp
I	Not Required	J-35616-4A (PU)	Not Required	Not Required	Not Required	Not Required	Not Required
II	Not Required	J-35616-5 (PU)	Not Required	Not Required	Not Required	Not Required	Not Required

X104 Instrument Panel Harness to Front Impact Sensor Jumper

Pin	Size	Color	Circuit	Terminal Type ID	Option	Function	Pin	Size	Color	Circuit	Terminal Type ID	Option
A	0.5	D-BU/WH	6619	I	—	Middle Front Discriminating Sensor Low Reference	A	0.5	D-BU/WH	6619	II	—
B	0.5	BN/WH	6618	I	—	Middle Front Discriminating Sensor Signal	B	0.5	BN/WH	6618	II	—

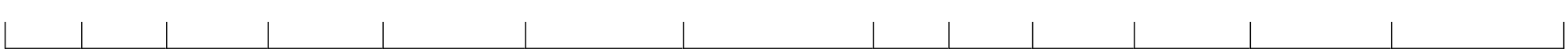

X105 Engine Harness to Chassis Harness (LGH)

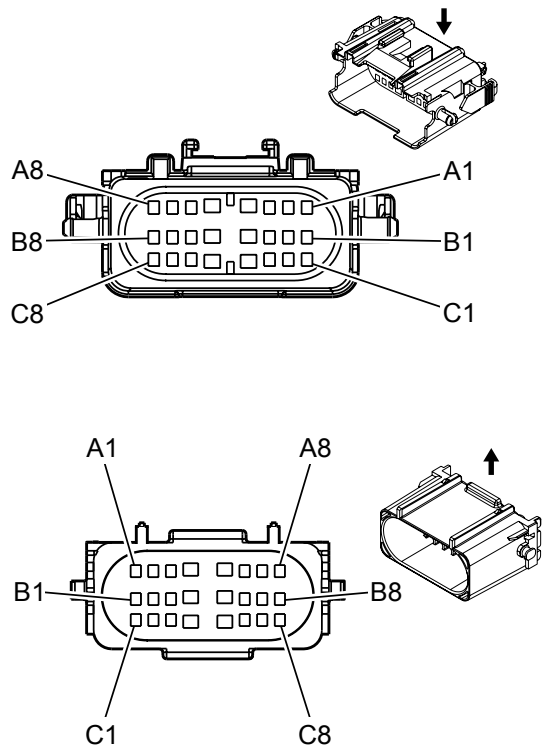

Connector Part Information

Harness Type: Engine

OEM Connector: 15366099

Service Connector: 19153767

Description: 24-Way F 150, 280 GT Series, Sealed (BK)

Connector Part Information

Harness Type: Chassis

OEM Connector: 15336173

Service Connector: 19167005

Description: 24-Way M 150, 280 GT Series, Sealed (BK)

Terminal Part Information

Terminal Type ID	Terminated Lead	Diagnostic Test Probe	Terminal Removal Tool	Service Terminal	Tray Name	Core Crimp	Insulation Crimp
I	13575412	J-35616-14 (GN)	J-38125-553	12191819	Delphi 8	E	1
II	13575397	J-35616-3 (GY)	J-38125-553	15326269	Delphi 19	E	4

X105 Engine Harness to Chassis Harness (LGH)

Pin	Size	Color	Circuit	Terminal Type ID	Option	Function	Pin	Size	Color	Circuit	Terminal Type ID	Option
A1	0.5	D-GN	2377	I	—	Right Rear Middle Object Sensor Signal	A1	0.5	D-GN	2377	II	—
A2	0.5	D-BU	2374	I	—	Object Sensor Control	A2	0.5	D-BU	2374	II	—

A3	0.5	GY	6044	I	—	Steering Angle Sensor 5 Volt Reference	A3	0.5	GY	6044	II	—
A4 - A5	—	—	—	—	—	Not Occupied	A4 - A5	—	—	—	—	—
A6	0.5	BK/PU	7499	I	—	Yaw Rate Sensor Low Reference	A6	0.5	BK/PU	7499	II	—
A7	0.5	WH/BK	6436	I	—	CAN Bus Low Terminated Serial Data	A7	0.5	WH/BK	6436	II	—
A8	0.5	TN/BK	2500	I	—	High Speed GMLAN Serial Data (+) (1)	A8	0.5	TN/BK	2500	II	—
B1	0.5	PU	2378	I	—	Right Rear Corner Object Sensor Signal	B1	0.5	PU	2378	II	—
B2	0.5	YE	2375	I	—	Left Rear Corner Object Sensor Signal	B2	0.5	YE	2375	II	—
B3	0.5	OG/BK	6045	I	—	Steering Angle Sensor Low Reference	B3	0.5	OG/BK	6045	II	—
B4 - B5	—	—	—	—	—	Not Occupied	B4 - B5	—	—	—	—	—
B6	0.5	GY/BK	1337	I	—	Yaw Rate Sensor 5 Volt Reference	B6	0.5	GY/BK	1337	II	—
B7	0.5	BN/WH	6437	I	—	CAN Bus High Terminated Serial Data	B7	0.5	BN/WH	6437	II	—
B8	0.5	TN	2501	I	—	High Speed GMLAN Serial Data (-) (1)	B8	0.5	TN	2501	II	—

C1	0.5	GY	2379	I	—	Object Sensor Low Reference	C1	0.5	GY	2379	II	—
C2	0.5	OG	2376	I	—	Left Rear Middle Object Sensor Signal	C2	0.5	OG	2376	II	—
C3	0.5	YE	6046	I	—	Steering Angle Sensor Phase A Signal	C3	0.5	YE	6046	II	—
C4 - C5	—	—	—	—	—	Not Occupied	C4 - C5	—	—	—	—	—
C6	0.5	D-BU	6047	I	—	Steering Angle Sensor Phase B Signal	C6	0.5	D-BU	6047	II	—
C7	0.5	TN	6048	I	—	Steering Angle Sensor Phase C Signal	C7	0.5	TN	6048	II	—
C8	0.5	L-GN	6043	I	—	Steering Angle Sensor Signal	C8	0.5	L-GN	6043	II	—

X107 Engine Chassis Harness to Engine Harness (LGH)

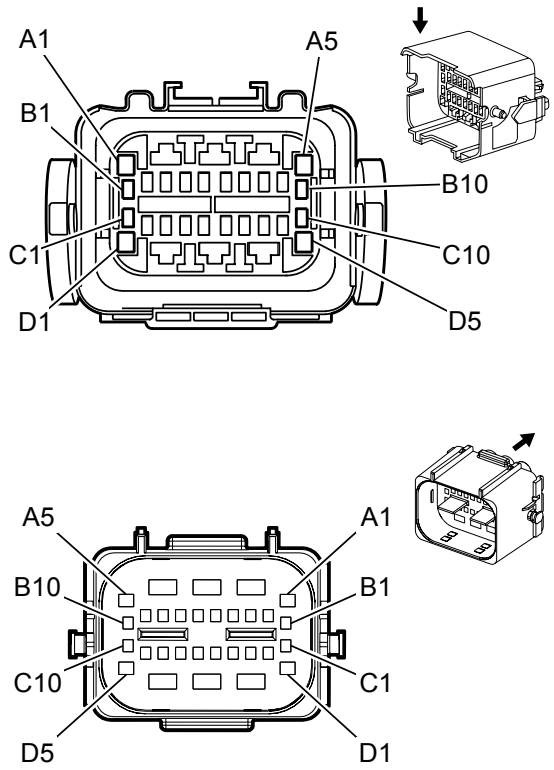

Connector Part Information

Harness Type: Engine

OEM Connector: 15355480

Service Connector: 19181242

Description: 30-Way F 150 GT Series, Sealed (BK)

Connector Part Information

Harness Type: Engine

OEM Connector: 15450510

Service Connector: 89046785

Description: 30-Way M 150 280 630 Metri-Pack Series, Sealed (BK)

Terminal Part Information

Terminal Type ID	Terminated Lead	Diagnostic Test Probe	Terminal Removal Tool	Service Terminal	Tray Name	Core Crimp	Insulation Crimp
I	13575412	J-35616-14 (GN)	J-38125-553	12191819	Delphi 8	2	1
II	13575412	J-35616-14 (GN)	J-38125-553	12191819	Delphi 8	E	1
III	13576356	J-35616-4A (PU)	J-38125-553	15304719	Delphi 19	2	5
IV	19303716	J-35616-42 (RD)	J-38125-11A	15305232	Delphi 23	B/4	3
V	13575443	J-35616-5 (PU)	J-38125-553	15304732	Delphi 8	A	5
VI	13575443	J-35616-5 (PU)	J-38125-553	Not Available	Not Available	Not Available	Not Available
VII	13579780	J-35616-3 (GY)	J-38125-560	Not Available	Not Available	Not Available	Not Available
VIII	19303715	J-35616-43 (RD)	J-38125-11A	12064734	Delphi 8	E	3
IX	19332836	J-35616-3 (GY)	J-38125-560	Not Available	Not Available	Not Available	Not Available

X107 Engine Chassis Harness to Engine Harness (LGH)

Pin	Size	Color	Circuit	Terminal Type ID	Option	Function	Pin	Size	Color	Circuit	Terminal Type ID	Option
A1	1	OG/WH	3677	III	—	DEF Reservoir Heater Control	A1	2	OG/WH	3677	VI	LGH
A2	—	—	—	—	—	Not Occupied	A2	—	—	—	—	—
A3	0.5	TN	3680	IV	—	Charge Air Cooler Outlet Temperature Sensor Low Reference	A3	0.5	TN	3680	VIII	LGH
A4	0.5	BN	3681	IV	—	Charge Air Cooler Outlet Temperature Sensor Signal	A4	0.5	BN	3681	VIII	LGH
A5	1	PU/WH	3199	III	—	DEF Pressure Line Heater Control	A5	2	VT/WH	3199	V	LGH
B1	0.5	PU	3674	II	—	Nox Sensor (1) Control	B1	0.5	VT	3674	VII	LGH
B2	0.5	TN/BK	2500	II	—	High Speed GMLAN Serial Data (+) (1)	B2	0.5	TN/BK	2500	VII	LGH
B3	0.5	D-BU	5985	II	—	Accessory Wakeup Serial Data	B3	0.5	BU	5985	VII	LGH
B4	0.5	PK	439	II	—	Run/Crank Ignition 1 Voltage	B4	0.5	PK	2139	VII	LGH
B5	0.5	D-BU	6863	II	—	Water In Fuel Sensor Low Reference	B5	0.5	BU	6863	VII	LGH
B6	0.5	D-BU/YE	6861	II	—	Water In Fuel Sensor Signal	B6	0.5	BU/YE	6861	VII	LGH

B7	—	—	—	—	—	Not Occupied	B7	—	—	—	—	—
B8	0.5	BN	5360	II	—	Brake Apply Sensor Low Reference	B8	0.5	BN/WH	5360	VII	LGH
B9	0.5	TN/BK	2500	II	—	High Speed GMLAN Serial Data (+) (1)	B9	0.5	TN/BK	2500	VII	LGH
B10	1	GY	3672	I	—	Nox Sensor (2) Control	B10	0.5	GY	3672	VII	LGH
C1	1	TN	3673	I	—	Nox Sensor (1) Ground	C1	1.25	TN	3673	IX	LGH
C2	0.5	TN	2501	II	—	High Speed GMLAN Serial Data (-) (1)	C2	0.5	TN	2501	VII	LGH
C3	0.8	D-BU	2926	I	—	Hydrocarbon Injector High Control	C3	0.5	BU	2926	VII	LGH
C4	0.8	PU	2927	I	—	Hydrocarbon Injector Low Control	C4	0.5	VT	2927	VII	LGH
C5	0.35 0.35	YE/BK D-GN/WH	1827 817	II	— —	Vehicle Speed Signal	C5	0.5	YE/BK	1827	VII	LGH
C6	—	—	—	—	—	Not Occupied	C6	—	—	—	—	—
C7	0.5	WH	5359	II	—	Brake Apply Sensor Control	C7	0.5	WH	5359	VII	LGH
C8	0.5	YE	5361	II	—	Brake Apply Sensor Signal	C8	0.5	YE	5361	VII	LGH

C8	0.5					Signal	C8	0.5				
C9	0.5	TN	2501	II	—	High Speed GMLAN Serial Data (-) (1)	C9	0.5	TN	2501	VII	LGH
C10	1	TN/BK	3671	I	—	Nox Sensor (2) Ground	C10	1.25	TN/BK	3671	IX	LGH
D1	1	GY/WH	3675	III	—	DEF Pump Heater Control	D1	2	GY/WH	3675	VI	LGH
D2	0.5	L-BU	7564	IV	—	Humidity Sensor Signal	D2	0.5	L-BU	7564	VIII	LGH
D3	—	—	—	—	—	Coolant Temperature Sensor Signal	D3	0.5	L-GN	2032	VIII	LGH
D4	—	—	—	—	—	Coolant Temperature Sensor 2 Low Reference	D4	0.5	L-BU/BK	6813	VIII	LGH
D5	—	—	—	—	—	Not Occupied	D5	—	—	—	—	—

X109 Engine Harness to Underhood Lamp Harness (L20, L96, or LC8)

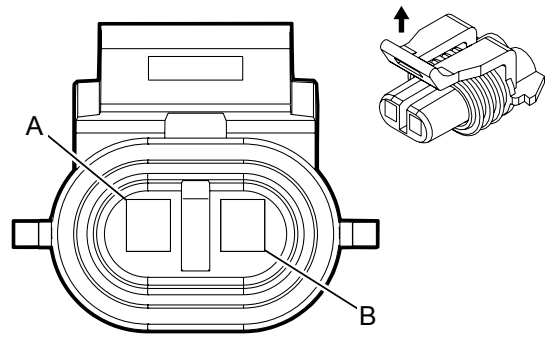

—

Connector Part Information

Harness Type: Engine

OEM Connector: 12052641

Service Connector: 13586114

Description: 2-Way F 150 Metri-Pack Series (BK)

Connector Part Information

Harness Type: Underhood Lamp

OEM Connector: Not Available

Service Connector: Service by Harness - See Part Catalog

Description: 2-Way M

Terminal Part Information

Terminal Type ID	Terminated Lead	Diagnostic Test Probe	Terminal Removal Tool	Service Terminal	Tray Name	Core Crimp	Insulation Crimp
I	Not Required	J-35616-14 (GN)	Not Required	Not Required	Not Required	Not Required	Not Required
II	Not Required	Not Available	No Tool Required	Not Required	Not Required	Not Required	Not Required

X109 Engine Harness to Underhood Lamp Harness (L20, L96, or LC8)

Pin	Size	Color	Circuit	Terminal Type ID	Option	Function	Pin	Size	Color	Circuit	Terminal Type ID	Option
A	0.5	OG	1732	I	—	Electronic Control Unit 12 Volt Reference (3)	A	0.5	OG	1732	II	—
B	0.8	BK	1250	I	—	Ground	B	0.8	BK	1250	II	—

X109 Engine Chassis Harness to Underhood Lamp Harness (LGH)

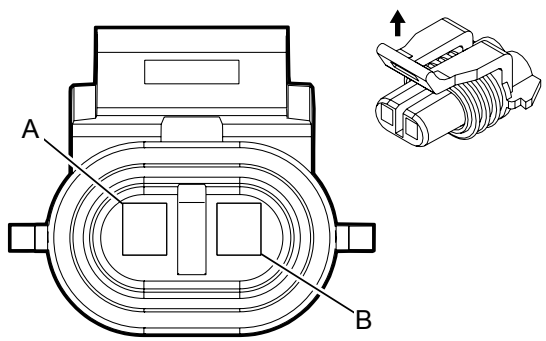

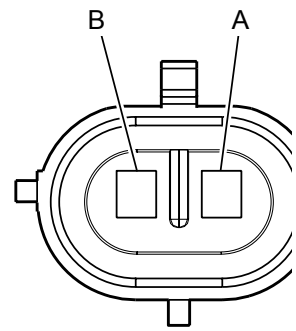

Connector Part Information

Harness Type: Engine Chassis

OEM Connector: 12052641

Service Connector: 13586114

Description: 2-Way F Metri-Pack 150 Series (BK)

Connector Part Information

Harness Type: Underhood Lamp

OEM Connector: 12162000

Service Connector: 12167120

Description: 2-Way M Metri-Pack 15

Terminal Part Information

Terminal Type ID	Terminated Lead	Diagnostic Test Probe	Terminal Removal Tool	Service Terminal	Tray	Core Crimp	Insulation Crimp
I	Pending	J-35616-14 (GN)	J-38125-559	12124075	5	E	C
II	13575420	J-35616-3 (GY)	J-38125-12A	12045773	2	E	1

X109 Engine Chassis Harness to Underhood Lamp Harness (LGH)

Pin	Size	Color	Circuit	T Type ID	Option	Function	Pin	Size	Color	Circuit	T Type ID	Option
A	0.5	OG	1732	I	-	Courtesy Lamp Control	A	0.5	OG	1732	II	-
B	0.5	BK	1250	I	-	Ground	B	0.5	BK	1250	II	-

X110 Engine Jumper Harness to Engine Harness (LGH)

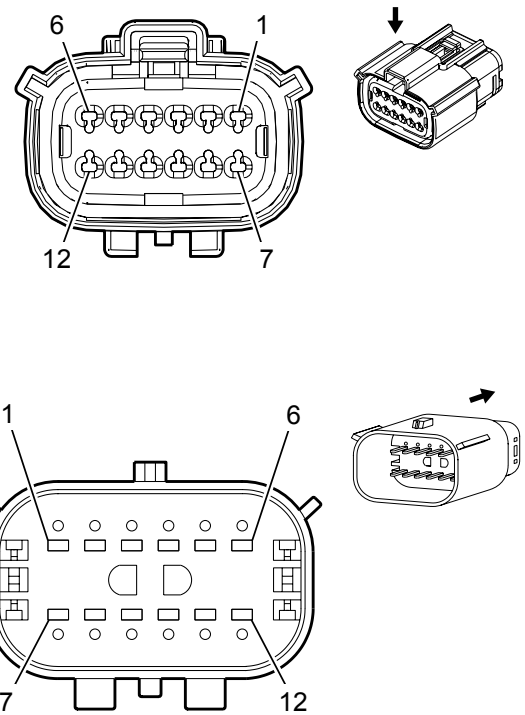

Connector Part Information

Harness Type: Engine

OEM Connector: 33472-1301

Service Connector: 19260932

Description: 12-Way F 150 MX Series, Sealed (BK)

Connector Part Information

Harness Type: Engine

OEM Connector: 33482-1201

Service Connector: 13503540

Description: 12-Way M 150 MX Series, Sealed (BK)

Terminal Part Information

Terminal Type ID	Terminated Lead	Diagnostic Test Probe	Terminal Removal Tool	Service Terminal	Tray Name	Core Crimp	Insulation Crimp
I	13578813	J-35616-2A (GY)	J-38125-217	Not Available	Not Available	Not Available	Not Available
II	13580014	J-35616-3 (GY)	J-38125-217	Not Available	Not Available	Not Available	Not Available

X110 Engine Jumper Harness to Engine Harness (LGH)

Pin	Size	Color	Circuit	Terminal Type ID	Option	Function	Pin	Size	Color	Circuit	Terminal Type ID	Option
1	0.5	YE	410	I	LML/LGH	Engine Coolant Temperature Sensor Signal	1	0.5	YE	410	II	LGH
2	0.5	TN	2761	I	LML/LGH	Coolant Temperature Sensor Low Reference	2	0.5	TN	2761	II	LGH

3	0.5	BN/GY	7072	I	LML/LGH	Sensor Fuel Temperature 1 Signal	3	0.5	BN/GY	7072	II	LGH
4	0.5	BN/WH	7073	I	LML/LGH	Sensor Fuel Temperature 1 Low Reference	4	0.5	BN/WH	7073	II	LGH
5	0.5	YE	2928	I	LML/LGH	Fuel Metering Valve High Control	5	0.5	YE	2928	II	LGH
6	0.5	BK	2929	I	LML/LGH	Fuel Metering Valve Low Control	6	0.5	BK	2929	II	LGH
7	0.8	VT/WH	2530	I	LML/LGH	Fuel Rail Pressure Solenoid Control	7	0.8	VT/WH	2530	II	LGH
8	0.8	YE	2834	I	LML/LGH	Fuel Rail Pressure Solenoid Low Reference	8	0.8	YE	2834	II	LGH
9	0.5	TN/WH	331	I	LML/LGH	Oil Pressure Sensor Signal	9	0.5	TN/WH	331	II	LGH
10	0.5	BK	2755	I	LML/LGH	Oil Pressure Sensor Low Reference	10	0.5	BK	2755	II	LGH
11	0.5	GY	2705	I	LML/LGH	Oil Pressure Sensor 5 Volt Reference	11	0.5	GY	2705	II	LGH
12	0.5	BN	1174	I	LML/LGH	Oil Level Switch Signal	12	0.5	BN	1174	II	LGH

X112 Fuel Rail Jumper Harness to Engine Harness (LGH)

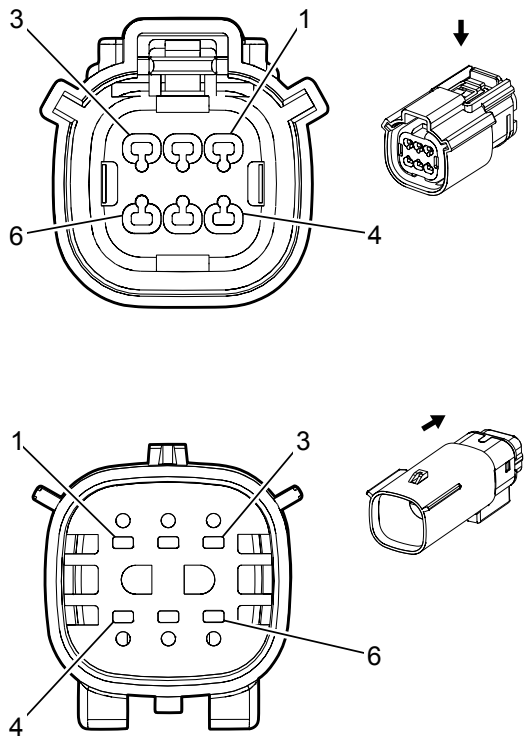

Connector Part Information

Harness Type: Fuel Rail Jumper

OEM Connector: 33472-0709

Service Connector: Service by Harness - See Part Catalog

Description: 6-Way F 150 MX Series, Sealed (BK)

Connector Part Information

Harness Type: Engine

OEM Connector: 33482-0606

Service Connector: 13576414

Description: 6-Way M 150 MX Series, Sealed (BK)

Terminal Part Information

Terminal Type ID	Terminated Lead	Diagnostic Test Probe	Terminal Removal Tool	Service Terminal	Tray Name	Core Crimp	Insulation Crimp
I	Not Required	J-35616-2A (GY)	Not Required	Not Required	Not Required	Not Required	Not Required
II	Not Required	J-35616-3 (GY)	Not Required	Not Required	Not Required	Not Required	Not Required

X112 Fuel Rail Jumper Harness to Engine Harness (LGH)

Pin	Size	Color	Circuit	Terminal Type ID	Option	Function	Pin	Size	Color	Circuit	Terminal Type ID	Option
1	0.5	YE	1578	I	LML/LGH	Fuel Temperature Signal	1	0.5	YE	1578	II	LGH
2	0.5	BN	6062	I	LML/LGH	Fuel Temperature Sensor Low Reference	2	0.5	BN	6062	II	LGH

3	—	—	—	—	—	Not Occupied	3	—	—	—	—	—
4	0.5	TN	2917	I	LML/LGH	Fuel Rail Pressure Sensor 5 Volt Reference	4	0.5	TN	2917	II	LGH
5	0.5	YE	2918	I	LML/LGH	Fuel Rail Pressure Sensor Signal	5	0.5	YE	2918	II	LGH
6	0.5	OG/BK	2919	I	LML/LGH	Fuel Rail Pressure Sensor Low Reference	6	0.5	OG/BK	2919	II	LGH

X115 Engine Chassis Harness to Catalytic Converter Jumper Harness (Cutaway with LGH)

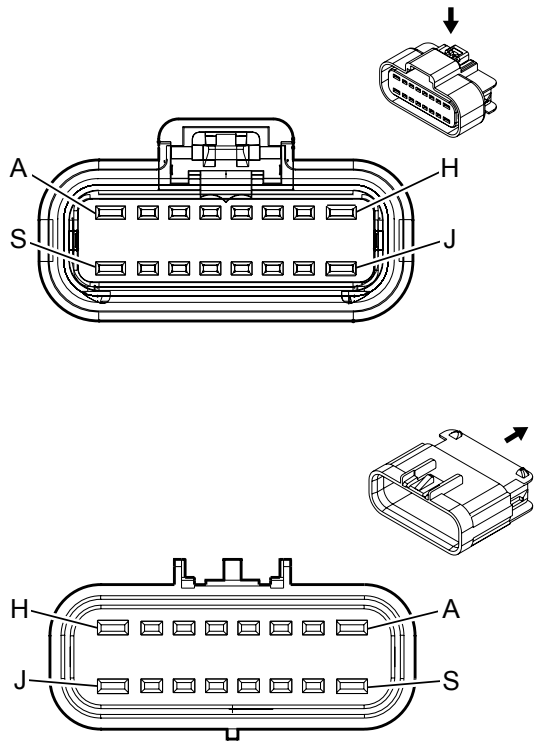

Connector Part Information

Harness Type: Engine

OEM Connector: 15326084

Service Connector: 15306348

Description: 16-Way F 150, 280 GT Series, Sealed (BK)

Connector Part Information

Harness Type: Catalytic Converter Temperature Alarm

OEM Connector: 15326085

Service Connector: Service by Harness - See Part Catalog

Description: 16-Way M 150, 280 GT Series, Sealed (BK)

Terminal Part Information

Terminal Type ID	Terminated Lead	Diagnostic Test Probe	Terminal Removal Tool	Service Terminal	Tray Name	Core Crimp	Insulation Crimp
I	13575396	J-35616-14 (GN)	J-38125-553	15326427	Delphi 5	2	1
II	13575396	J-35616-14 (GN)	J-38125-553	15326427	Delphi 5	E	A
III	13587389	J-35616-4A (PU)	J-38125-553	Not Available	Not Available	Not Available	Not Available
IV	Not Required	J-35616-3 (GY)	Not Required	Not Required	Not Required	Not Required	Not Required
V	Not Required	J-35616-5 (PU)	Not Required	Not Required	Not Required	Not Required	Not Required

X115 Engine Chassis Harness to Catalytic Converter Jumper Harness (Cutaway with LGH)

Pin	Size	Color	Circuit	Terminal Type ID	Option	Function	Pin	Size	Color	Circuit	Terminal Type ID	Option
A	1	TN/BK	3671	III	—	Nox Sensor (2) Ground	A	1	TN/BK	3671	V	—

B	1	BK	2550	I	—	Ground	B	1	BK	2550	IV	—
C	0.5	TN	3657	II	—	Exhaust Gas Temperature Sensor 3 Low Reference	C	0.5	TN	3657	IV	—
D	0.5	TN	3661	II	—	Exhaust Gas Temperature Sensor 5 Low Reference	D	0.5	TN	3661	IV	—
E	0.5	GY	6054	II	—	Exhaust Pressure Sensor 5 Volt Reference (1)	E	0.5	GY	6054	IV	—
F	1	GY	3672	I	—	Nox Sensor (2) Control	F	1	GY	3672	IV	—
G	0.8	D-GN	7493	I	—	High Speed GMLAN Serial Data (+)(3)	G	0.8	D-GN	7493	IV	—
H	—	—	—	—	—	Not Occupied	H	—	—	—	—	—
J	1	RD/BK	2842	III	—	Battery Positive Voltage	J	1	RD/BK	2842	V	—
K	0.5	L-GN	5378	II	—	Exhaust Gas Temperature Sensor (3)	K	0.5	L-GN	5378	IV	—
L	0.5	D-BU/WH	3660	II	—	Exhaust Gas Temperature Sensor 5 Signal	L	0.5	D-BU/WH	3660	IV	—
M	0.5	YE/BK	6055	II	—	Exhaust Pressure Sensor Low Reference (1)	M	0.5	YE/BK	6055	IV	—
		D-BU	6053	II	—	Exhaust Pressure			D-BU	6053	IV	—

N	0.5					Sensor Signal (1)	N	0.5				
P	0.8	L-GN	7494	I	—	High Speed GMLAN Serial Data (-)(3)	P	0.8	L-GN	7494	IV	—
R	0.8	BN/WH	3100	I	—	DEF Dosing Valve Low Control	R	0.8	BN/WH	3100	IV	—
S	0.8	BN	3099	III	—	DEF Dosing Valve High Control	S	0.8	BN	3099	V	—

X115 Chassis Harness to Catalytic Converter Temperature Alarm Harness (-LGH)

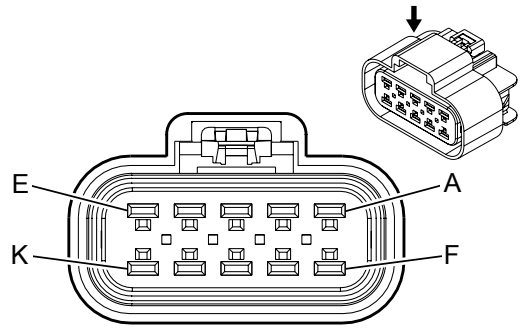

—

Connector Part Information

Harness Type: Chassis

OEM Connector: 15326660

Service Connector: 88986262

Description: 10-Way F 280 GT 5.8 Series, Sealed (BK)

Connector Part Information

Harness Type: Catalytic Converter Temperature Alam

OEM Connector: Not Available

Service Connector: Service by Harness - See Part Catalog

Description: 10-Way M

Terminal Part Information

Terminal Type ID	Terminated Lead	Diagnostic Test Probe	Terminal Removal Tool	Service Terminal	Tray Name	Core Crimp	Insulation Crimp
I	13576356	J-35616-4A (PU)	J-38125-553	15304719	Delphi 19	E	5
II	Not Required	Not Available	No Tool Required	Not Required	Not Required	Not Required	Not Required

X115 Chassis Harness to Catalytic Converter Temperature Alarm Harness (-LGH)

Pin	Size	Color	Circuit	Terminal Type ID	Option	Function	Pin	Size	Color	Circuit	Terminal Type ID	Option
A	0.5	PU	2378	I	—	Right Rear Corner Object Sensor Signal	A	0.5	PU	2378	II	—
B	0.5	D-GN	2377	I	—	Right Rear Middle Object Sensor Signal	B	0.5	D-GN	2377	II	—
C	—	—	—	—	—	Not Occupied	C	—	—	—	—	—
D	0.5	D-BU	2374	I	—	Object Sensor Control	D	0.5	D-BU	2374	II	—
E	0.5	YE	2375	I	—	Left Rear Corner Object Sensor Signal	E	0.5	YE	2375	II	—

F	0.5	GY	2379	I	—	Object Sensor Low Reference	F	0.5	GY	2379	II	—
G - J	—	—	—	—	—	Not Occupied	G - J	—	—	—	—	—
K	0.5	OG	2376	I	—	Left Rear Middle Object Sensor Signal	K	0.5	OG	2376	II	—

X126 Engine Harness to Left Ignition Coil Harness (L20, L96, or LC8)

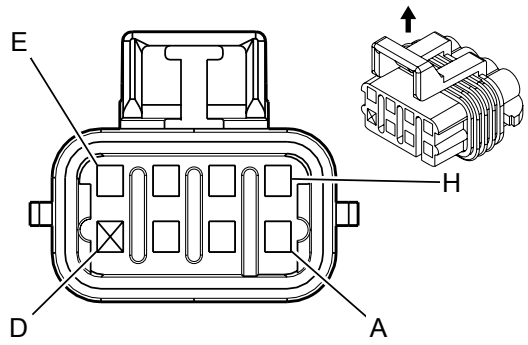

—

Connector Part Information

Harness Type: Engine

OEM Connector: 12047938

Service Connector: 13580883

Description: 8-Way F 150 Metri-Pack Series, Sealed (L-GY)

Connector Part Information

Harness Type: Left Ignition Coil

OEM Connector: Not Available

Service Connector: Service by Harness - See Part Catalog

Description: 8-Way M

Terminal Part Information

Terminal Type ID	Terminated Lead	Diagnostic Test Probe	Terminal Removal Tool	Service Terminal	Tray Name	Core Crimp	Insulation Crimp
I	Not Required	J-35616-14 (GN)	Not Required	Not Required	Not Required	Not Required	Not Required
II	Not Required	Not Available	No Tool Required	Not Required	Not Required	Not Required	Not Required

X126 Engine Harness to Left Ignition Coil Harness (L20, L96, or LC8)

Pin	Size	Color	Circuit	Terminal Type ID	Option	Function	Pin	Size	Color	Circuit	Terminal Type ID	Option
A	1	BK	1250	I	—	Ground	A	1	BK	1250	II	—
B	0.8	OG	2127	I	—	Ignition Control (7)	B	0.8	OG	2127	II	—
C	0.8	D-GN	2125	I	—	Ignition Control (5)	C	0.8	D-GN	2125	II	—
E	0.8	BN	2129	I	—	Ignition Control Low Reference Bank 1	E	0.8	BN	2129	II	—

F	0.8	L-BU	2123	I	—	Ignition Control (3)	F	0.8	L-BU	2123	II	—
G	0.8	PU	2121	I	—	Ignition Control (1)	G	0.8	PU	2121	II	—
H	1	PK	1039	I	—	Run/Crank Ignition 1 Voltage	H	1	PK	1039	II	—

X127 Engine Harness to Right Ignition Coil Harness (L20, L96, or LC8)

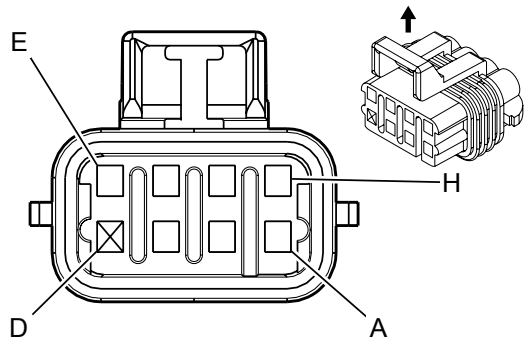

—

Connector Part Information

Harness Type: Engine

OEM Connector: 12047938

Service Connector: 13580883

Description: 8-Way F 150 Metri-Pack Series, Sealed (L-GY)

Connector Part Information

Harness Type: Right Ignition Coil

OEM Connector: Not Available

Service Connector: Service by Harness - See Part Catalog

Description: 8-Way M

Terminal Part Information

Terminal Type ID	Terminated Lead	Diagnostic Test Probe	Terminal Removal Tool	Service Terminal	Tray Name	Core Crimp	Insulation Crimp
I	Not Required	J-35616-14 (GN)	Not Required	Not Required	Not Required	Not Required	Not Required
II	Not Required	Not Available	No Tool Required	Not Required	Not Required	Not Required	Not Required

X127 Engine Harness to Right Ignition Coil Harness (L20, L96, or LC8)

Pin	Size	Color	Circuit	Terminal Type ID	Option	Function	Pin	Size	Color	Circuit	Terminal Type ID	Option
A	1	BK	1250	I	—	Ground	A	1	BK	1250	II	—
B	0.8	OG/WH	2122	I	—	Ignition Control (2)	B	0.8	OG/WH	2122	II	—
C	0.8	D-GN/WH	2124	I	—	Ignition Control (4)	C	0.8	D-GN/WH	2124	II	—
E	0.8	BN/WH	2130	I	—	Ignition Control Low Reference Bank 2	E	0.8	BN/WH	2130	II	—

F	0.8	L-BU/WH	2126	I	—	Ignition Control (6)	F	0.8	L-BU/WH	2126	II	—
G	0.8	PU/WH	2128	I	—	Ignition Control (8)	G	0.8	PU/WH	2128	II	—
H	1	PK	1239	I	—	Run/Crank Ignition 1 Voltage	H	1	PK	1239	II	—

X128 Engine Harness to Heated Oxygen Sensor Jumper Harness (L20, L96, or LC8)

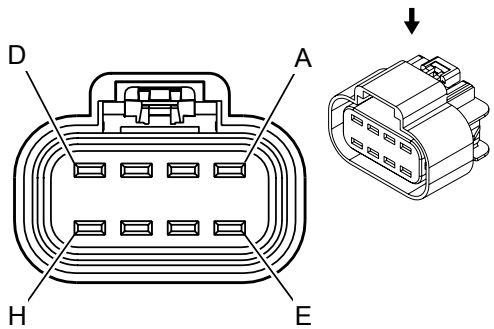

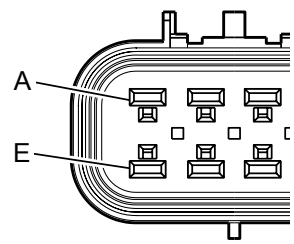

Connector Part Information

Harness Type: Engine

OEM Connector: 15326654

Service Connector: 88986254

Description: 8-Way F GT 280 5.8 Series, Sealed (BK)

Connector Part Information

Harness Type: Heated Oxygen Sen

OEM Connector: 15326655

Service Connector: 15306424

Description: 8-Way M GT 280 5.8 S

Terminal Part Information

Terminal Type ID	Terminated Lead	Diagnostic Test Probe	Terminal Removal Tool	Service Terminal	Tray	Core Crimp	Insulation Crimp
I	13575405	J-35616-4A (PU)	J-38125-553	15304719	19	2	5
II	Pending	J-35616-5 (PU)	J-38125-553	15304731	19	C	5

X128 Engine Harness to Heated Oxygen Sensor Jumper Harness (L20, L96, or LC8)

Pin	Size	Color	Circuit	T Type ID	Option	Function	Pin	Size	Color	Circuit	T Type ID	Option
A	0.8	PU/WH	1668	I	-	Heated Oxygen Sensor (HO2S) High Signal– Bank 1 Sensor 2	A	0.8	PU/WH	1668	II	-
B	0.8	PK	1539	I	-	Ignition Voltage	B	0.8	PK	1539	II	-
C	0.8	TN/WH	1669	I	-	Heated Oxygen Sensor (HO2S) Low Signal– Bank 1 Sensor 2	C	0.8	TN/WH	1669	II	-
D	0.8	TN	1671	I	-	Heated Oxygen Sensor (HO2S) Heater Low Control– Bank 2 Sensor 2	D	0.8	TN	1671	II	-
E	0.8	PU	1670	I	-	Heated Oxygen Sensor (HO2S) High Signal– Bank 2 Sensor 2	E	0.8	PU	1670	II	-
F	0.8	PK	1539	I	-	Ignition Voltage	F	0.8	PK	1539	II	-
G	0.8	GY/WH	3122	I	-	Heated Oxygen Sensor (HO2S) Heater Low Control– Bank 2	G	0.8	GY/WH	3122	II	-

						Low Control– Bank 2 Sensor 1						
H	0.8	OG/WH	3223	I	-	Heated Oxygen Sensor (HO2S) Heater Low Control– Bank 2 Sensor 2	H	0.8	OG/WH	3223	II	-

X141 Instrument Panel Harness to Brake Fluid Level Jumper Harness (UJ1)

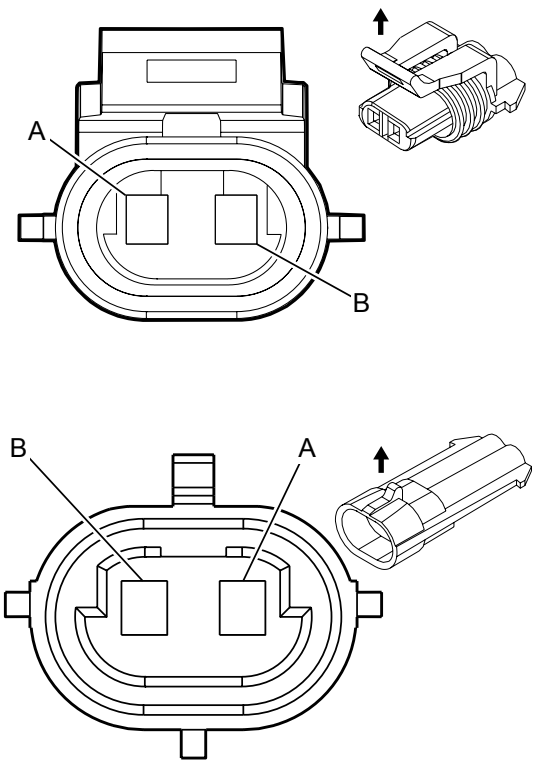

Connector Part Information

Harness Type: Instrument Panel

OEM Connector: 12052644

Service Connector: 15306302

Description: 2-Way F 150 Metri-Pack Series, Sealed (GY)

Connector Part Information

Harness Type: Brake Fluid Level Switch

OEM Connector: 12162343

Service Connector: Service by Harness - See Part Catalog

Description: 2-Way M 150 Metri-Pack Series (GY)

Terminal Part Information

Terminal Type ID	Terminated Lead	Diagnostic Test Probe	Terminal Removal Tool	Service Terminal	Tray Name	Core Crimp	Insulation Crimp
I	Not Required	J-35616-14 (GN)	Not Required	Not Required	Not Required	Not Required	Not Required
II	Not Required	J-35616-3 (GY)	Not Required	Not Required	Not Required	Not Required	Not Required

X141 Instrument Panel Harness to Brake Fluid Level Jumper Harness (UJ1)

Pin	Size	Color	Circuit	Terminal Type ID	Option	Function	Pin	Size	Color	Circuit	Terminal Type ID	Option
A	0.5	TN/WH	33	I	—	Brake Warning Indicator Control	A	0.5	TN/WH	33	II	—
B	0.5	BK/WH	351	I	—	Signal Ground	B	0.5	BK	350	II	—

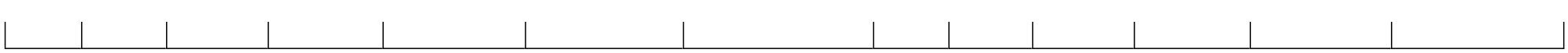

X142 Engine Chassis Harness to Fan Jumper Harness (LGH)

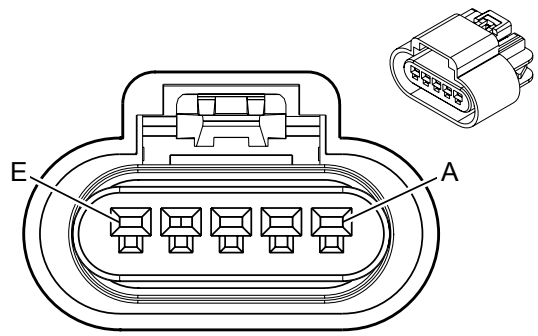

—

Connector Part Information

Harness Type: Engine

OEM Connector: 13519051

Service Connector: 13585858

Description: 5-Way F 150 GT Series, Sealed (BK)

Connector Part Information

Harness Type: Fan Jumper

OEM Connector: Not Available

Service Connector: Service by Harness - See Part Catalog

Description: 5-Way M

Terminal Part Information

Terminal Type ID	Terminated Lead	Diagnostic Test Probe	Terminal Removal Tool	Service Terminal	Tray Name	Core Crimp	Insulation Crimp
I	Not Required	J-35616-14 (GN)	Not Required	Not Required	Not Required	Not Required	Not Required
II	Not Required	Not Available	No Tool Required	Not Required	Not Required	Not Required	Not Required

X142 Engine Chassis Harness to Fan Jumper Harness (LGH)

Pin	Size	Color	Circuit	Terminal Type ID	Option	Function	Pin	Size	Color	Circuit	Terminal Type ID	Option
A	0.5	WH/BK	2366	I	—	Cooling Fan Control Relay Speed Signal	A	0.5	WH/BK	2366	II	—
B	0.5	PK	939	I	—	—	B	0.5	PK	939	II	—
C	0.5	BN/WH	6141	I	—	Cooling Fan Speed Low Reference	C	0.5	BN/WH	6141	II	—
D	0.5	D-BU	2364	I	—	Cooling Fan Speed Signal	D	0.5	D-BU	2364	II	—

E	0.5	GY	2365	I	—	Cooling Fan Speed 5 Volt Reference	E	0.5	GY	2365	II	—

X150 Instrument Panel Harness to Forward Lamp Harness

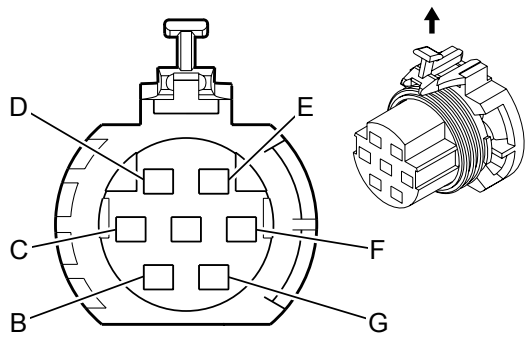

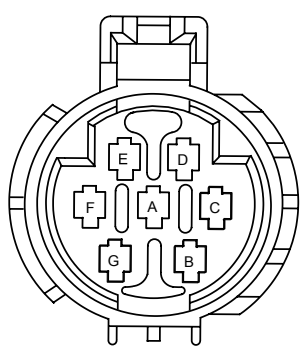

Connector Part Information

Harness Type: Instrument Panel

OEM Connector: 12110751

Service Connector: 12110751

Description: 7-Way F 280 Metri-Pack Series, Flexlock, Sealed (BK)

Connector Part Information

Harness Type: Forward Lamp

OEM Connector: 12110753

Service Connector: 12110753

Description: 7-Way M 280 Metri-Pack Series, Sealed (BK)

Terminal Part Information

Terminal Type ID	Terminated Lead	Diagnostic Test Probe	Terminal Removal Tool	Service Terminal	Tray Name	Core Crimp	Insulation Crimp
I	Not Required	J-35616-4A (PU)	Not Required	Not Required	Not Required	Not Required	Not Required
II	Not Required	J-35616-5 (PU)	Not Required	Not Required	Not Required	Not Required	Not Required

X150 Instrument Panel Harness to Forward Lamp Harness

Pin	Size	Color	Circuit	Terminal Type ID	Option	Function	Pin	Size	Color	Circuit	Terminal Type ID	Option
A	0.5	PK/BK	109	I	—	Hood Ajar Switch Signal	A	0.5	PK/BK	109	II	—
B	0.5	PU	5531	I	—	Hood Closed Switch Signal	B	0.5	PU	5531	II	—

C	0.5	D-GN/WH	636	I	—	Outside Ambient Air Temperature Sensor Signal	C	0.5	D-GN/WH	636	II	—
D	0.5	YE	61	I	—	Outside Ambient Temperature Sensor Low Reference	D	0.5	YE	61	II	—
E	0.8	L-GN	2032	I	—	Coolant Temperature Sensor Signal	E	0.8	L-GN	2032	II	—
F	0.8	L-BU/BK	6813	I	—	Coolant Temperature Sensor 2 Low Reference	F	0.8	L-BU/BK	6813	II	—
G	—	—	—	—	—	Not Occupied	G	—	—	—	—	—

X161 Engine Harness to Fuel Injector 1 Harness (KO7 and UFM)

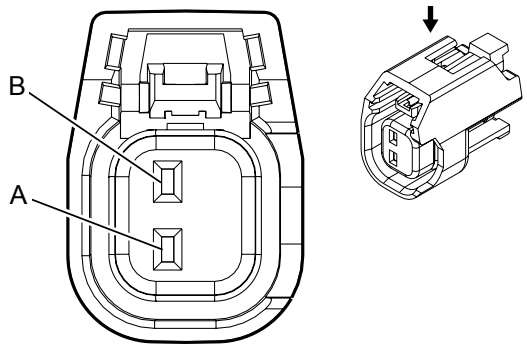

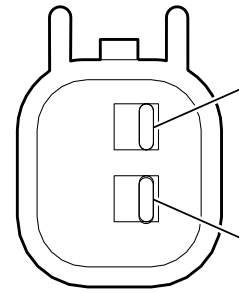

Connector Part Information

Harness Type: Engine

OEM Connector: 15419715

Service Connector: 13580876

Description: 2-Way F GT 150 Series, Sealed (GY)

Connector Part Information

Harness Type: Fuel Injector Jumper

OEM Connector: EV6

Service Connector: Service by Harn

Description: 2-Way M GT 150 Serie

Terminal Part Information

Terminal Type ID	Terminated Lead	Diagnostic Test Probe	Terminal Removal Tool	Service Terminal	Tray	Core Crimp	Insulation Crimp
I	Pin A — 13327113	J-35616-2A (GY)	J-38125-553	12191819	8	Pin A — 2	1
II	Service by Harness – See Part Catalog	Pending	Pending	Not Available	Not Available	Not Available	Not Available

X161 Engine Harness to Fuel Injector 1 Harness (KO7 and UFM)

Pin	Size	Color	Circuit	T Type ID	Option	Function	Pin	Size	Color	Circuit	T Type ID	Option
A	0.8	PK	1239	I	-	Ignition Voltage	A	RD	RD	—	II	-
B	0.5	TN	1745	I	-	Fuel Injector 1 Control	B	BK	BK	—	II	-

X161 Engine Harness to Fuel Injector 1 Harness (LC8 with FHZ)

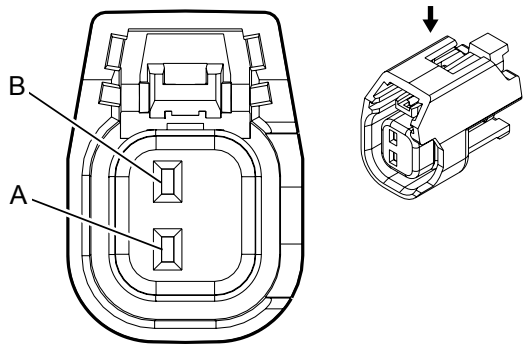

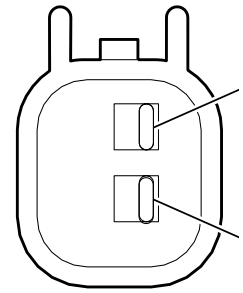

Connector Part Information

Harness Type: Engine

OEM Connector: 15419715

Service Connector: 13580876

Description: 2-Way F GT 150 Series, Sealed (GY)

Connector Part Information

Harness Type:Fuel Injector 1

OEM Connector: EV6

Service Connector: Service by Harn

Description: 2-Way M GT 150 Serie

Terminal Part Information

Terminal Type ID	Terminated Lead	Diagnostic Test Probe	Terminal Removal Tool	Service Terminal	Tray	Core Crimp	Insulation Crimp
I	Pin A - 13327113	J-35616-2A (GY)	J-38125-553	12191819	8	Pin A - 2	1
II	Service by Harness – See Part Catalog	Pending	Pending	Not Available	Not Available	Not Available	Not Available

X161 Engine Harness to Fuel Injector 1 Harness (LC8 with FHZ)

Pin	Size	Color	Circuit	T Type ID	Option	Function	Pin	Size	Color	Circuit	T Type ID	Option
A	0.8	PK	1039	I	-	Ignition Voltage	A	RD	RD	—	II	-
B	0.5	TN	1744	I	-	Fuel Injector 1 Control	B	GY	GY	—	II	-

X162 Engine Harness to Fuel Injector 2 Harness (KO7 and UFM)

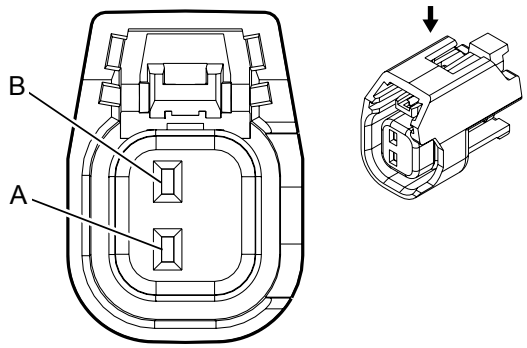

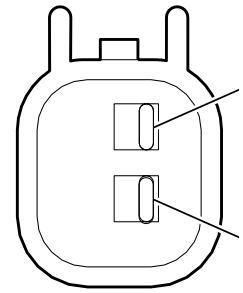

Connector Part Information

Harness Type: Engine

OEM Connector: 15419715

Service Connector: 13580876

Description: 2-Way F GT 150 Series, Sealed (GY)

Connector Part Information

Harness Type: Fuel Injector Jumper

OEM Connector: EV6

Service Connector: Service by Harn

Description: 2-Way M GT 150 Serie

Terminal Part Information

Terminal Type ID	Terminated Lead	Diagnostic Test Probe	Terminal Removal Tool	Service Terminal	Tray	Core Crimp	Insulation Crimp
I	Pin A — 13327113	J-35616-2A (GY)	J-38125-553	12191819	8	Pin A — 2	1
II	Service by Harness – See Part Catalog	Pending	Pending	Not Available	Not Available	Not Available	Not Available

X162 Engine Harness to Fuel Injector 2 Harness (KO7 and UFM)

Pin	Size	Color	Circuit	T Type ID	Option	Function	Pin	Size	Color	Circuit	T Type ID	Option
A	0.8	PK	1039	I	-	Ignition Voltage	A	RD	RD	—	II	-
B	0.5	TN	1744	I	-	Fuel Injector 2 Control	B	BK	BK	—	II	-

X162 Engine Harness to Fuel Injector 2 Harness (LC8 with FHZ)

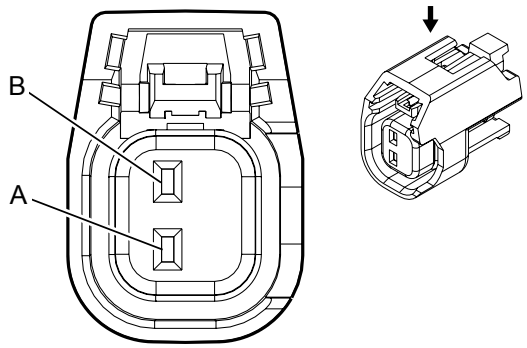

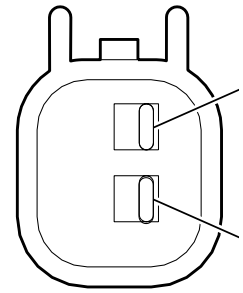

Connector Part Information

Harness Type: Engine

OEM Connector: 15419715

Service Connector: 13580876

Description: 2-Way F GT 150 Series, Sealed (GY)

Connector Part Information

Harness Type:Fuel Injector 2

OEM Connector: EV6

Service Connector: Service by Harn

Description: 2-Way M GT 150 Serie

Terminal Part Information

Terminal Type ID	Terminated Lead	Diagnostic Test Probe	Terminal Removal Tool	Service Terminal	Tray	Core Crimp	Insulation Crimp
I	Pin A - 13327113	J-35616-2A (GY)	J-38125-553	12191819	8	Pin A - 2	1
II	Service by Harness – See Part Catalog	Pending	Pending	Not Available	Not Available	Not Available	Not Available

X162 Engine Harness to Fuel Injector 2 Harness (LC8 with FHZ)

Pin	Size	Color	Circuit	T Type ID	Option	Function	Pin	Size	Color	Circuit	T Type ID	Option
A	0.8	PK	1239	I	-	Ignition Voltage	A	RD	RD	—	II	-
B	0.5	L-GN/BK	1745	I	-	Fuel Injector 2 Control	B	GY	GY	—	II	-

X163 Engine Harness to Fuel Injector 3 Harness (KO7 and UFM)

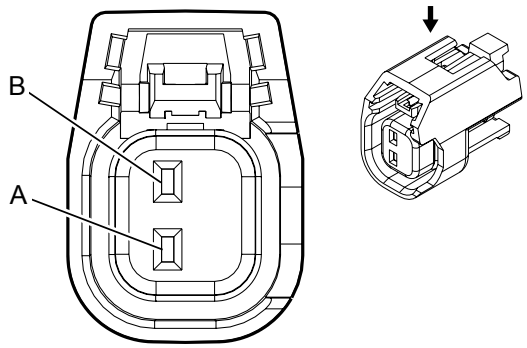

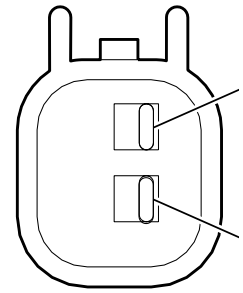

Connector Part Information

Harness Type: Engine

OEM Connector: 15419715

Service Connector: 13580876

Description: 2-Way F GT 150 Series, Sealed (GY)

Connector Part Information

Harness Type: Fuel Injector Jumper

OEM Connector: EV6

Service Connector: Service by Harn

Description: 2-Way M GT 150 Serie

Terminal Part Information

Terminal Type ID	Terminated Lead	Diagnostic Test Probe	Terminal Removal Tool	Service Terminal	Tray	Core Crimp	Insulation Crimp
I	Pin A — 13327113	J-35616-2A (GY)	J-38125-553	12191819	8	Pin A — 2	1
II	Service by Harness – See Part Catalog	Pending	Pending	Not Available	Not Available	Not Available	Not Available

X163 Engine Harness to Fuel Injector 3 Harness (KO7 and UFM)

Pin	Size	Color	Circuit	T Type ID	Option	Function	Pin	Size	Color	Circuit	T Type ID	Option
A	0.8	PK	1039	I	-	Ignition Voltage	A	RD	RD	—	II	-
B	0.5	PK/BK	1746	I	-	Fuel Injector 3 Control	B	BK	BK	—	II	-

X163 Engine Harness to Fuel Injector 3 Harness (LC8 with FHZ)

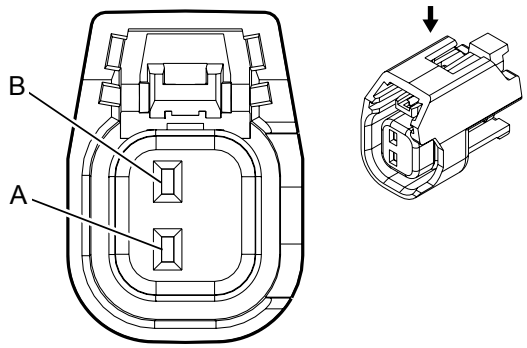

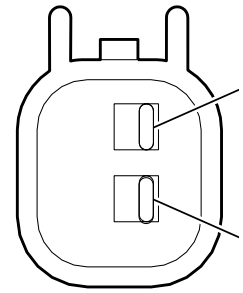

Connector Part Information

Harness Type: Engine

OEM Connector: 15419715

Service Connector: 13580876

Description: 2-Way F GT 150 Series, Sealed (GY)

Connector Part Information

Harness Type:Fuel Injector 3

OEM Connector: EV6

Service Connector: Service by Harn

Description: 2-Way M GT 150 Serie

Terminal Part Information

Terminal Type ID	Terminated Lead	Diagnostic Test Probe	Terminal Removal Tool	Service Terminal	Tray	Core Crimp	Insulation Crimp
I	Pin A - 13327113	J-35616-2A (GY)	J-38125-553	12191819	8	Pin A - 2	1
II	Service by Harness – See Part Catalog	Pending	Pending	Not Available	Not Available	Not Available	Not Available

X163 Engine Harness to Fuel Injector 3 Harness (LC8 with FHZ)

Pin	Size	Color	Circuit	T Type ID	Option	Function	Pin	Size	Color	Circuit	T Type ID	Option
A	0.8	PK	1039	I	-	Ignition Voltage	A	RD	RD	—	II	-
B	0.5	PK/BK	1746	I	-	Fuel Injector 3 Control	B	GY	GY	—	II	-

X164 Engine Harness to Fuel Injector 4 Harness (KO7 and UFM)

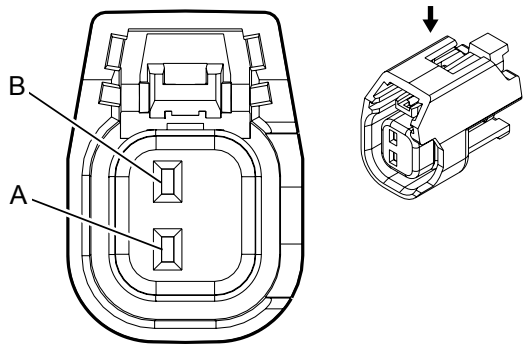

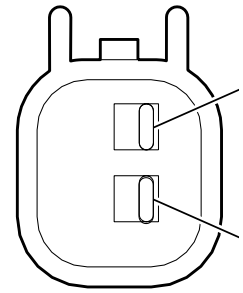

Connector Part Information

Harness Type: Engine

OEM Connector: 15419715

Service Connector: 13580876

Description: 2-Way F GT 150 Series, Sealed (GY)

Connector Part Information

Harness Type: Fuel Injector Jumper

OEM Connector: EV6

Service Connector: Service by Harn

Description: 2-Way M GT 150 Serie

Terminal Part Information

Terminal Type ID	Terminated Lead	Diagnostic Test Probe	Terminal Removal Tool	Service Terminal	Tray	Core Crimp	Insulation Crimp
I	Pin A — 13327113	J-35616-2A (GY)	J-38125-553	12191819	8	Pin A — 2	1
II	Service by Harness – See Part Catalog	Pending	Pending	Not Available	Not Available	Not Available	Not Available

X164 Engine Harness to Fuel Injector 4 Harness (KO7 and UFM)

Pin	Size	Color	Circuit	T Type ID	Option	Function	Pin	Size	Color	Circuit	T Type ID	Option
A	0.8	PK	1239	I	-	Ignition Voltage	A	RD	RD	—	II	-
B	0.5	TN	844	I	-	Fuel Injector 4 Control	B	BK	BK	—	II	-

X164 Engine Harness to Fuel Injector 4 Harness (LC8 with FHZ)

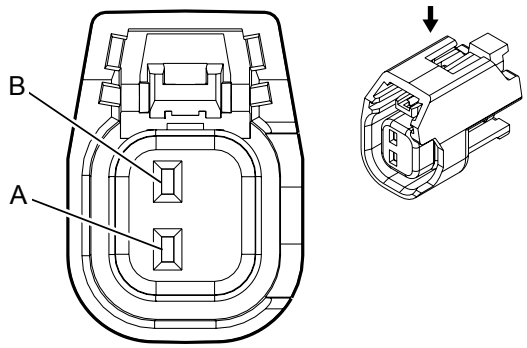

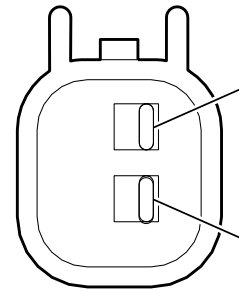

Connector Part Information

Harness Type: Engine

OEM Connector: 15419715

Service Connector: 13580876

Description: 2-Way F GT 150 Series, Sealed (GY)

Connector Part Information

Harness Type:Fuel Injector 4

OEM Connector: EV6

Service Connector: Service by Harn

Description: 2-Way M GT 150 Serie

Terminal Part Information

Terminal Type ID	Terminated Lead	Diagnostic Test Probe	Terminal Removal Tool	Service Terminal	Tray	Core Crimp	Insulation Crimp
I	Pin A - 13327113	J-35616-2A (GY)	J-38125-553	12191819	8	Pin A - 2	1
II	Service by Harness – See Part Catalog	Pending	Pending	Not Available	Not Available	Not Available	Not Available

X164 Engine Harness to Fuel Injector 4 Harness (LC8 with FHZ)

Pin	Size	Color	Circuit	T Type ID	Option	Function	Pin	Size	Color	Circuit	T Type ID	Option
A	0.8	PK	1239	I	-	Ignition Voltage	A	RD	RD	—	II	-
B	0.5	L-BU/BK	844	I	-	Fuel Injector 4 Control	B	GY	GY	—	II	-

X165 Engine Harness to Fuel Injector 5 Harness (KO7 and UFM)

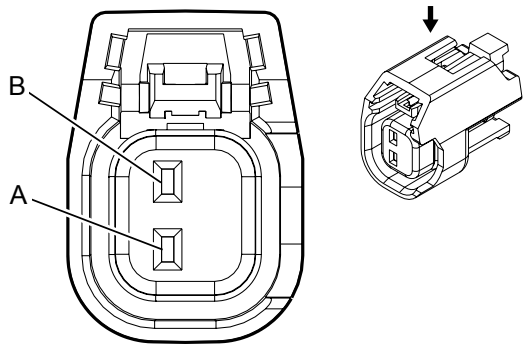

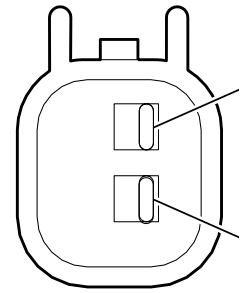

Connector Part Information

Harness Type: Engine

OEM Connector: 15419715

Service Connector: 13580876

Description: 2-Way F GT 150 Series, Sealed (GY)

Connector Part Information

Harness Type: Fuel Injector Jumper

OEM Connector: EV6

Service Connector: Service by Harn

Description: 2-Way M GT 150 Serie

Terminal Part Information

Terminal Type ID	Terminated Lead	Diagnostic Test Probe	Terminal Removal Tool	Service Terminal	Tray	Core Crimp	Insulation Crimp
I	Pin A — 13327113	J-35616-2A (GY)	J-38125-553	12191819	8	Pin A — 2	1
II	Service by Harness – See Part Catalog	Pending	Pending	Not Available	Not Available	Not Available	Not Available

X165 Engine Harness to Fuel Injector 5 Harness (KO7 and UFM)

Pin	Size	Color	Circuit	T Type ID	Option	Function	Pin	Size	Color	Circuit	T Type ID	Option
A	0.8	PK	1039	I	-	Ignition Voltage	A	RD	RD	—	II	-
B	0.5	TN/WH	845	I	-	Fuel Injector 5 Control	B	BK	BK	—	II	-

X165 Engine Harness to Fuel Injector 5 Harness (LC8 with FHZ)

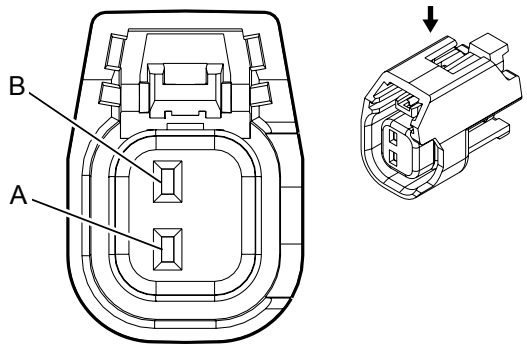

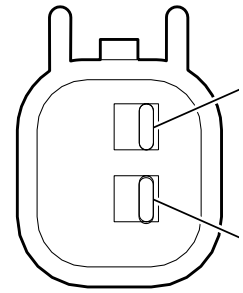

Connector Part Information

Harness Type: Engine

OEM Connector: 15419715

Service Connector: 13580876

Description: 2-Way F GT 150 Series, Sealed (GY)

Connector Part Information

Harness Type:Fuel Injector 5

OEM Connector: EV6

Service Connector: Service by Harn

Description: 2-Way M GT 150 Serie

Terminal Part Information

Terminal Type ID	Terminated Lead	Diagnostic Test Probe	Terminal Removal Tool	Service Terminal	Tray	Core Crimp	Insulation Crimp
I	Pin A - 13327113	J-35616-2A (GY)	J-38125-553	12191819	8	Pin A - 2	1
II	Service by Harness – See Part Catalog	Pending	Pending	Not Available	Not Available	Not Available	Not Available

X165 Engine Harness to Fuel Injector 5 Harness (LC8 with FHZ)

Pin	Size	Color	Circuit	T Type ID	Option	Function	Pin	Size	Color	Circuit	T Type ID	Option
A	0.8	PK	1039	I	-	Ignition Voltage	A	RD	RD	—	II	-
B	0.5	TN/WH	845	I	-	Fuel Injector 5 Control	B	GY	GY	—	II	-

X166 Engine Harness to Fuel Injector 6 Harness (KO7 and UFM)

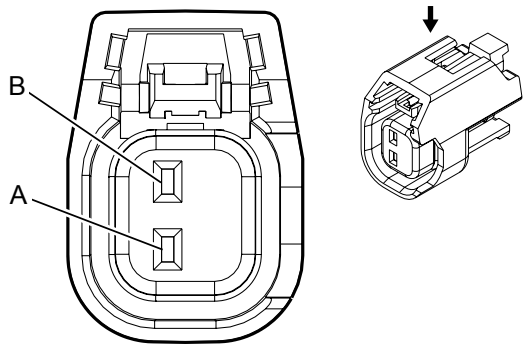

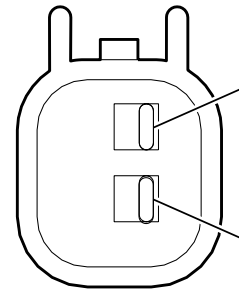

Connector Part Information

Harness Type: Engine

OEM Connector: 15419715

Service Connector: 13580876

Description: 2-Way F GT 150 Series, Sealed (GY)

Connector Part Information

Harness Type: Fuel Injector Jumper

OEM Connector: EV6

Service Connector: Service by Harn

Description: 2-Way M GT 150 Serie

Terminal Part Information

Terminal Type ID	Terminated Lead	Diagnostic Test Probe	Terminal Removal Tool	Service Terminal	Tray	Core Crimp	Insulation Crimp
I	Pin A — 13327113	J-35616-2A (GY)	J-38125-553	12191819	8	Pin A — 2	1
II	Service by Harness – See Part Catalog	Pending	Pending	Not Available	Not Available	Not Available	Not Available

X166 Engine Harness to Fuel Injector 6 Harness (KO7 and UFM)

Pin	Size	Color	Circuit	T Type ID	Option	Function	Pin	Size	Color	Circuit	T Type ID	Option
A	0.8	PK	1239	I	-	Ignition Voltage	A	RD	RD	—	II	-
B	0.5	TN	846	I	-	Fuel Injector 6 Control	B	BK	BK	—	II	-

X166 Engine Harness to Fuel Injector 6 Harness (LC8 with FHZ)

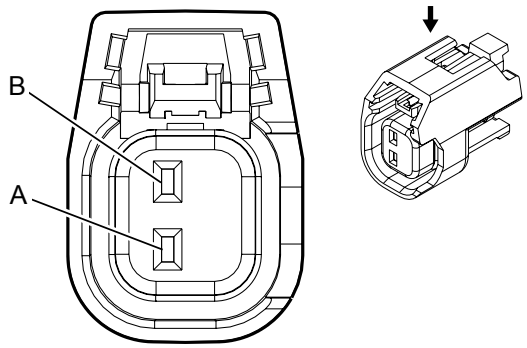

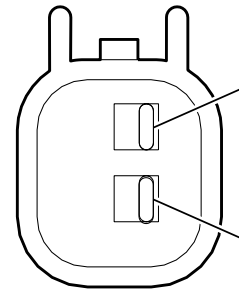

Connector Part Information

Harness Type: Engine

OEM Connector: 15419715

Service Connector: 13580876

Description: 2-Way F GT 150 Series, Sealed (GY)

Connector Part Information

Harness Type:Fuel Injector 6

OEM Connector: EV6

Service Connector: Service by Harn

Description: 2-Way M GT 150 Serie

Terminal Part Information

Terminal Type ID	Terminated Lead	Diagnostic Test Probe	Terminal Removal Tool	Service Terminal	Tray	Core Crimp	Insulation Crimp
I	Pin A - 13327113	J-35616-2A (GY)	J-38125-553	12191819	8	Pin A - 2	1
II	Service by Harness – See Part Catalog	Pending	Pending	Not Available	Not Available	Not Available	Not Available

X166 Engine Harness to Fuel Injector 6 Harness (LC8 with FHZ)

Pin	Size	Color	Circuit	T Type ID	Option	Function	Pin	Size	Color	Circuit	T Type ID	Option
A	0.8	PK	1239	I	-	Ignition Voltage	A	RD	RD	—	II	-
B	0.5	YE/BK	846	I	-	Fuel Injector 6 Control	B	GY	GY	—	II	-

X167 Engine Harness to Fuel Injector 7 Harness (KO7 and UFM)

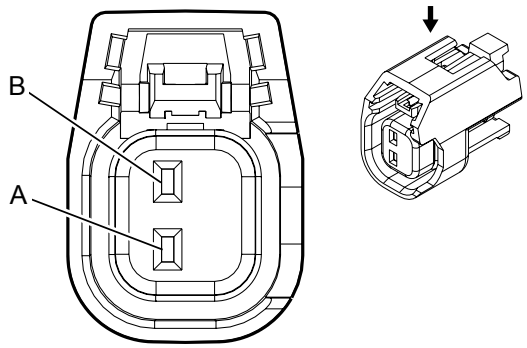

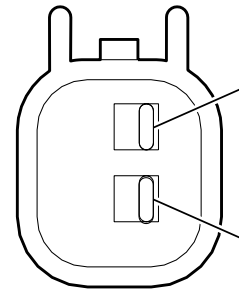

Connector Part Information

Harness Type: Engine

OEM Connector: 15419715

Service Connector: 13580876

Description: 2-Way F GT 150 Series, Sealed (GY)

Connector Part Information

Harness Type: Fuel Injector Jumper

OEM Connector: EV6

Service Connector: Service by Harn

Description: 2-Way M GT 150 Serie

Terminal Part Information

Terminal Type ID	Terminated Lead	Diagnostic Test Probe	Terminal Removal Tool	Service Terminal	Tray	Core Crimp	Insulation Crimp
I	Pin A — 13327113	J-35616-2A (GY)	J-38125-553	12191819	8	Pin A — 2	1
II	Service by Harness – See Part Catalog	Pending	Pending	Not Available	Not Available	Not Available	Not Available

X167 Engine Harness to Fuel Injector 7 Harness (KO7 and UFM)

Pin	Size	Color	Circuit	T Type ID	Option	Function	Pin	Size	Color	Circuit	T Type ID	Option
A	0.8	PK	1039	I	-	Ignition Voltage	A	RD	RD	—	II	-
B	0.5	OG/BK	877	I	-	Fuel Injector 7 Control	B	BK	BK	—	II	-

X167 Engine Harness to Fuel Injector 7 Harness (LC8 with FHZ)

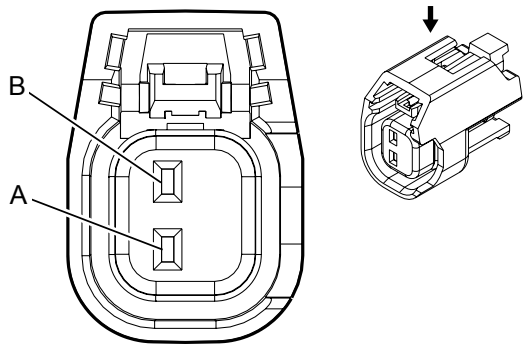

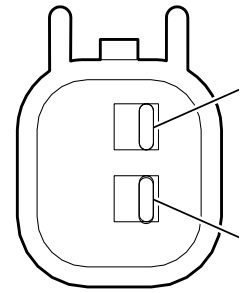

Connector Part Information

Harness Type: Engine

OEM Connector: 15419715

Service Connector: 13580876

Description: 2-Way F GT 150 Series, Sealed (GY)

Connector Part Information

Harness Type:Fuel Injector 7

OEM Connector: EV6

Service Connector: Service by Harn

Description: 2-Way M GT 150 Serie

Terminal Part Information

Terminal Type ID	Terminated Lead	Diagnostic Test Probe	Terminal Removal Tool	Service Terminal	Tray	Core Crimp	Insulation Crimp
I	Pin A - 13327113	J-35616-2A (GY)	J-38125-553	12191819	8	Pin A - 2	1
II	Service by Harness – See Part Catalog	Pending	Pending	Not Available	Not Available	Not Available	Not Available

X167 Engine Harness to Fuel Injector 7 Harness (LC8 with FHZ)

Pin	Size	Color	Circuit	T Type ID	Option	Function	Pin	Size	Color	Circuit	T Type ID	Option
A	0.8	PK	1039	I	-	Ignition Voltage	A	RD	RD	—	II	-
B	0.5	OG/BK	877	I	-	Fuel Injector 7 Control	B	GY	GY	—	II	-

X168 Engine Harness to Fuel Injector 8 Harness (KO7 and UFM)

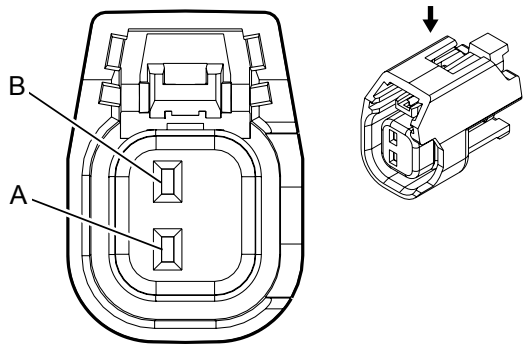

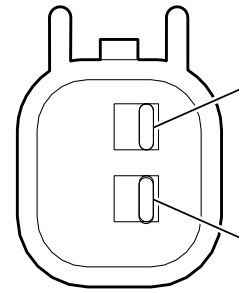

Connector Part Information

Harness Type: Engine

OEM Connector: 15419715

Service Connector: 13580876

Description: 2-Way F GT 150 Series, Sealed (GY)

Connector Part Information

Harness Type: Fuel Injector Jumper

OEM Connector: EV6

Service Connector: Service by Harn

Description: 2-Way M GT 150 Serie

Terminal Part Information

Terminal Type ID	Terminated Lead	Diagnostic Test Probe	Terminal Removal Tool	Service Terminal	Tray	Core Crimp	Insulation Crimp
I	Pin A — 13327113	J-35616-2A (GY)	J-38125-553	12191819	8	Pin A — 2	1
II	Service by Harness – See Part Catalog	Pending	Pending	Not Available	Not Available	Not Available	Not Available

X168 Engine Harness to Fuel Injector 8 Harness (KO7 and UFM)

Pin	Size	Color	Circuit	T Type ID	Option	Function	Pin	Size	Color	Circuit	T Type ID	Option
A	0.8	PK	1239	I	-	Ignition Voltage	A	RD	RD	—	II	-
B	0.5	TN	878	I	-	Fuel Injector 8 Control	B	BK	BK	—	II	-

X168 Engine Harness to Fuel Injector 8 Harness (LC8 with FHZ)

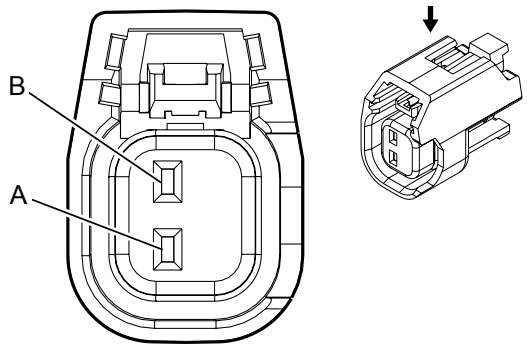

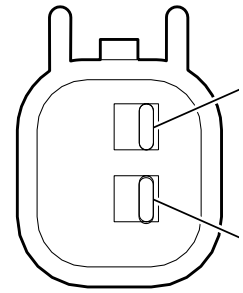

Connector Part Information

Harness Type: Engine

OEM Connector: 15419715

Service Connector: 13580876

Description: 2-Way F GT 150 Series, Sealed (GY)

Connector Part Information

Harness Type:Fuel Injector 8

OEM Connector: EV6

Service Connector: Service by Harn

Description: 2-Way M GT 150 Serie

Terminal Part Information

Terminal Type ID	Terminated Lead	Diagnostic Test Probe	Terminal Removal Tool	Service Terminal	Tray	Core Crimp	Insulation Crimp
I	Pin A - 13327113	J-35616-2A (GY)	J-38125-553	12191819	8	Pin A - 2	1
II	Service by Harness – See Part Catalog	Pending	Pending	Not Available	Not Available	Not Available	Not Available

X168 Engine Harness to Fuel Injector 8 Harness (LC8 with FHZ)

Pin	Size	Color	Circuit	T Type ID	Option	Function	Pin	Size	Color	Circuit	T Type ID	Option
A	0.8	PK	1239	I	-	Ignition Voltage	A	RD	RD	—	II	-
B	0.5	D-BU/WH	878	I	-	Fuel Injector 8 Control	B	GY	GY	—	II	-

X174 Transmission Harness to Chassis Harness (LGH)

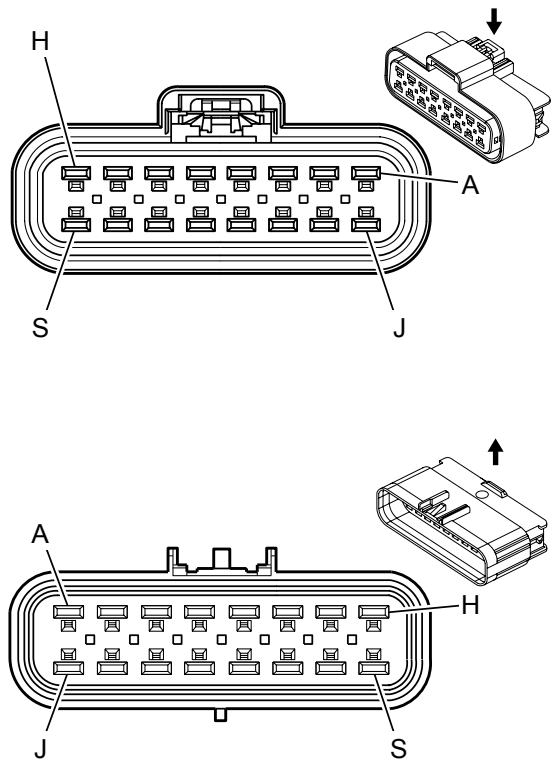

Connector Part Information

Harness Type: Transmission

OEM Connector: 15326666

Service Connector: Service by Harness - See Part Catalog

Description: 16-Way F 280 GT 5.8 Series, Sealed (BK)

Connector Part Information

Harness Type: Chassis

OEM Connector: 15326667

Service Connector: 88986347

Description: 16-Way M 280 GT 5.8 Series, Sealed (BK)

Terminal Part Information

Terminal Type ID	Terminated Lead	Diagnostic Test Probe	Terminal Removal Tool	Service Terminal	Tray Name	Core Crimp	Insulation Crimp
I	Not Required	J-35616-4A (PU)	Not Required	Not Required	Not Required	Not Required	Not Required
II	13580826	J-35616-5 (PU)	J-38125-553	15304731	Delphi 19	C	5
III	13580826	J-35616-5 (PU)	J-38125-553	15304731	Delphi 19	E	5
IV	13587390	J-35616-5 (PU)	J-38125-553	Not Available	Not Available	Not Available	Not Available
V	19301592	J-35616-5 (PU)	J-38125-553	Not Available	Not Available	Not Available	Not Available

X174 Transmission Harness to Chassis Harness (LGH)

Pin	Size	Color	Circuit	Terminal Type ID	Option	Function	Pin	Size	Color	Circuit	Terminal Type ID	Option
A	0.5	OG/BK	1786	I	—	Transmission Park/Neutral Signal (1)	A	0.5	OG/BK	1786	III	—

B	—	—	—	—	—	Not Occupied	B	—	—	—	—	—
C	0.8	GY	120	I	—	Fuel Pump Control	C	0.8	GY	120	IV	—
D	0.35	RD/WH	1840	I	—	Battery Positive Voltage	D	0.35	RD/WH	1840	III	—
E	0.5	OG/BK	6399	I	—	Replicated TOS Signal	E	0.5	OG/BK	6399	III	—
F	0.8	BN/WH	6783	I	—	Exhaust Gas Temperature Sensor 2 Low Reference	F	0.8	BN/WH	6783	IV	—
G	1	BK	150	I	—	Ground	G	2	BK	150	V	—
H	0.5	TN	2501	I	—	High Speed GMLAN Serial Data (-) (1)	H	0.5	TN	2501	III	—
J	0.8	BK/WH	1551	I	—	Signal Ground	J	0.8	BK/WH	1551	II	—
K	0.5	D-BU	6863	I	—	Water In Fuel Sensor Low Reference	K	0.5	D-BU	6863	III	—
L	0.5	D-BU/YE	6861	I	—	Water In Fuel Sensor Signal	L	0.5	L-BU/YE	6861	III	—
M	0.5	PK	2139	I	—	Run/Crank Ignition 1 Voltage	M	0.5	PK	2139	III	—
		L-BU/WH	6311	I	—	Cruise/ETC/TCC Brake			L-BU/WH	6311	III	—

N	0.5					Signal	N	0.5				
P	0.8	L-BU	5377	I	—	Exhaust Gas Temperature Sensor (2)	P	0.8	L-BU	5377	IV	—
R	0.5	D-BU	5985	I	—	Accessory Wakeup Serial Data	R	0.5	D-BU	5985	III	—
S	0.5	TN/BK	2500	I	—	High Speed GMLAN Serial Data (+) (1)	S	0.5	TN/BK	2500	III	—

X175 Engine Harness to Transmission Harness (M30)

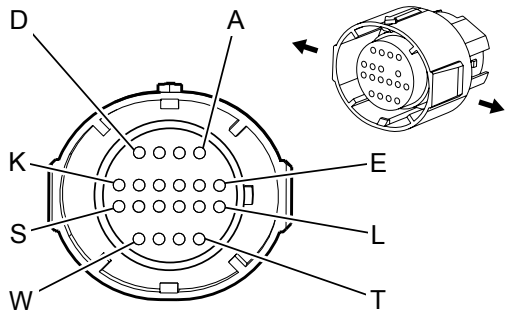

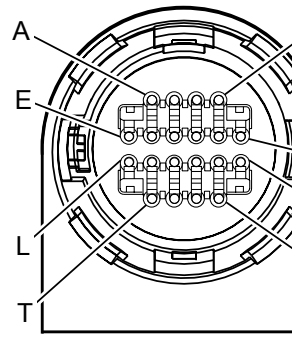

Connector Part Information

Harness Type: Engine

OEM Connector: 13603424

Service Connector: 13503285

Description: 20-Way F Micro-Pack 100W Series, Sealed (BK)

Connector Part Information

Harness Type: Transmission

OEM Connector: 15443076

Service Connector: Service by Harn

Description: 20-Way M Micro-Pack

Terminal Part Information

Terminal Type ID	Terminated Lead	Diagnostic Test Probe	Terminal Removal Tool	Service Terminal	Tray	Core Crimp	Insulation Crimp
I	Service by Harness - See Part Catalog	J-35616-6 (BN)	J-38125-33	Pins: A–D, F–M, T–W – 12084913	5	W	W
II	Service by Harness - See Part Catalog	Not Available	Not Available	Not Available	Not Available	Not Available	Not Available

X175 Engine Harness to Transmission Harness (M30)

Pin	Size	Color	Circuit	T Type ID	Option	Function	Pin	Size	Color	Circuit	T Type ID	Option
A	0.5	L-GN	1222	I	-	1-2 Shift Solenoid Valve Control	A	0.5	L-GN	1222	II	-
B	0.5	YE/BK	1223	I	-	2-3 Shift Solenoid Valve Control	B	0.5	YE	1223	II	-
C	0.35	OG/BK	1228	I	-	PC Solenoid Valve High Control	C	0.5	PU	1228	II	-
D	0.35	L-BU/WH	1229	I	-	PC Solenoid Valve Low Control	D	0.5	L-BU	1229	II	-
E	0.8	PK	3039	I	-	Ignition Voltage	E	0.5	RD	839	II	-
F	0.35	TN/WH	771	I	-	Transmission Range Switch Signal A	F	0.35	TN/WH	771	II	-
G	0.35	YE	772	I	-	Transmission Range Switch Signal B	G	0.35	YE	772	II	-
H	0.35	GY	773	I	-	Transmission Range Switch Signal C	H	0.35	GY	773	II	-

J	0.35	WH	776	I	-	Transmission Range Switch Signal P	J	0.35	WH	776	II	-
K	0.35	OG/BK	1230	I	-	Input Speed Sensor (ISS) High Signal	K	0.35	OG/BK	1230	II	-
L	0.35	YE/BK	1227	I	-	Transmission Fluid Temperature (TFT) Sensor Signal	L	0.5	BN	1227	II	-
M	0.35	TN	452	I	-	Low Reference	M	0.5	GY	452	II	-
N	0.8	BK/WH	1551	I	-	Ground	N	0.8	BK/WH	1551	II	-
P–S	-	-	-	-	-	Not Occupied	P–S	-	-	-	-	-
T	0.5	TN/BK	422	I	-	Torque Converter Clutch (TCC) Solenoid Valve Control	T	0.5	BK	422	II	-
U	0.5	BN	418	I	-	Torque Converter Clutch Pulse Width Modulation (TCC PWM) Solenoid Valve Control	U	0.5	TN	418	II	-
V	0.35	D-BU/WH	1231	I	-	Input Speed Sensor (ISS) Low Signal	V	0.35	D-BU/WH	1231	II	-
W	0.35	OG/BK	1786	I	-	P/N Position Switch Signal	W	0.35	OG/BK	1786	II	-

X176 Engine Harness to Camshaft Position Sensor Jumper Harness (LU3)

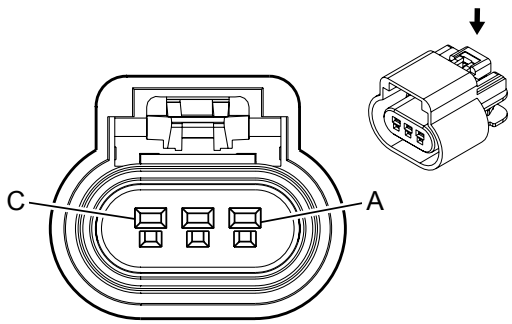

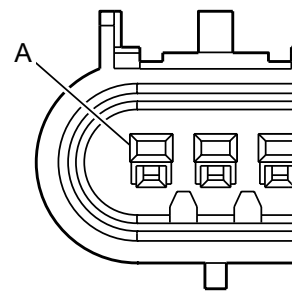

Connector Part Information

Harness Type: Engine

OEM Connector: 13519047

Service Connector: 13580871

Description: 3-Way F GT 150 Series, Sealed (BK)

Connector Part Information

Harness Type: Camshaft Position S

OEM Connector: 15326813

Service Connector: 13580881

Description: 3-Way M 150 Series, S

Terminal Part Information

Terminal Type ID	Terminated Lead	Diagnostic Test Probe	Terminal Removal Tool	Service Terminal	Tray	Core Crimp	Insulation Crimp
I	13327113	J-35616-2A (GY)	J-38125-553	12191819	8	2	1
II	13576363	J-35616-3 (GY)	J-38125-553	15326269	19	E	4

X176 Engine Harness to Camshaft Position Sensor Jumper Harness (LU3)

Pin	Size	Color	Circuit	T Type ID	Option	Function	Pin	Size	Color	Circuit	T Type ID	Option
A	0.8	D-BU	6259	I	-	5-Volt Reference	A	0.35	RD	631	II	-
B	0.8	BN	6266	I	-	Low Reference	B	0.35	PK/BK	632	II	-
C	0.8	D-BU/WH	6265	I	-	Camshaft Position (CMP) Sensor Signal	C	0.35	BN/WH	633	II	-

X177 Engine Harness to Camshaft Position Sensor Jumper Harness (L20)

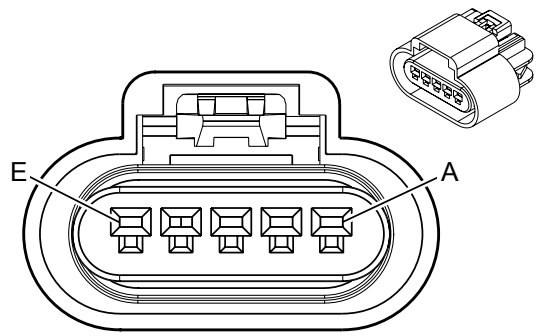

—

Connector Part Information

Harness Type: Engine

OEM Connector: 13519051

Service Connector: 13585858

Description: 5-Way F 150 GT Series, Sealed (BK)

Connector Part Information

Harness Type: Fan Jumper

OEM Connector: Not Available

Service Connector: Service by Harness - See Part Catalog

Description: 5-Way M

Terminal Part Information

Terminal Type ID	Terminated Lead	Diagnostic Test Probe	Terminal Removal Tool	Service Terminal	Tray Name	Core Crimp	Insulation Crimp
I	Not Required	J-35616-14 (GN)	Not Required	Not Required	Not Required	Not Required	Not Required
II	Not Required	Not Available	No Tool Required	Not Required	Not Required	Not Required	Not Required

X177 Engine Harness to Camshaft Position Sensor Jumper Harness (L20)

Pin	Size	Color	Circuit	Terminal Type ID	Option	Function	Pin	Size	Color	Circuit	Terminal Type ID	Option
A	0.8	D-BU	6259	I	—	Camshaft CAM W Control	A	0.8	D-BU	6259	II	—
B	0.8	BN	6266	I	—	Camshaft CAM W Ground	B	0.8	BN	6266	II	—
C	0.8	D-BU/WH	6265	I	—	Camshaft CAM W Signal	C	0.8	D-BU/WH	6265	II	—
D	0.8	PU	5284	I	—	Camshaft Phaser Intake Solenoid (1)	D	0.8	PU	5284	II	—

E	0.8	TN	2199	I	—	Camshaft Phaser Solenoid Low Reference	E	0.8	—	2199	II	—

X177 Engine Harness to Camshaft Position Sensor Jumper Harness (L96 or LC8)

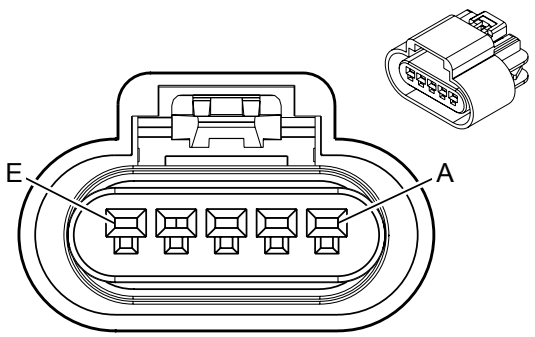

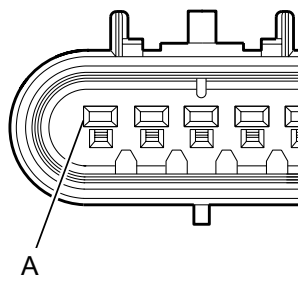

Connector Part Information

Harness Type: Engine

OEM Connector: 13519051

Service Connector: 13585858

Description: 5-Way F GT 150 Series, Sealed (BK)

Connector Part Information

Harness Type: Camshaft Position S

OEM Connector: 15326827

Service Connector: 13504593

Description: 5-Way M GT 150 Serie

Terminal Part Information

Terminal Type ID	Terminated Lead	Diagnostic Test Probe	Terminal Removal Tool	Service Terminal	Tray	Core Crimp	Insulation Crimp
I	13327113	J-35616-2A (GY)	J-38125-553	12191819	8	2	1
II	Service by Connector Assembly–13504593	Not Available	Not Available	Not Available	Not Available	Not Available	Not Available

X177 Engine Harness to Camshaft Position Sensor Jumper Harness (L96 or LC8)

Pin	Size	Color	Circuit	T Type ID	Option	Function	Pin	Size	Color	Circuit	T Type ID	Option
A	0.8	D-BU	6259	I	-	5-Volt Reference	A	0.35	D-BU	6259	II	-
B	0.8	BN	6266	I	-	Low Reference	B	0.35	BN	6266	II	-
C	0.8	D-BU/WH	6265	I	-	Camshaft Position (CMP) Sensor Signal	C	0.35	D-BU/WH	6265	II	-
D	0.8	PU	5284	I	-	Camshaft Phaser Intake Solenoid (1)	D	0.8	PU	5284	II	-
E	0.8	TN	2199	I	-	Low Reference	E	0.8	TN	2199	II	-

X180 LPG Tank Harness to LPG Main Harness (KO7 with UFM)

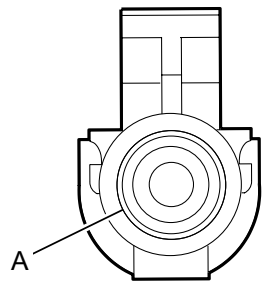

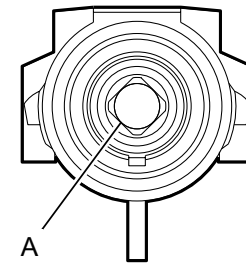

Connector Part Information

Harness Type: LPG Tank

OEM Connector: 12015791

Service Connector: 12117385

Description: 1-Way F Weather Pack Series (BK)

Connector Part Information

Harness Type: LPG Main

OEM Connector: 12010996

Service Connector: 12126451

Description: 1-Way M Weather Pacl

Terminal Part Information

Terminal Type ID	Terminated Lead	Diagnostic Test Probe	Terminal Removal Tool	Service Terminal	Tray	Core Crimp	Insulation Crimp
I	Service by Harness – See Part Catalog	Not Available	Not Available	Not Available	Not Available	Not Available	Not Available
II	Service by Harness – See Part Catalog	J-35616-9 (OG)	J-38125-10A	12089040	3	E	5

X180 LPG Tank Harness to LPG Main Harness (KO7 with UFM)

Pin	Size	Color	Circuit	T Type ID	Option	Function	Pin	Size	Color	Circuit	T Type ID	Option
A	0.35	RD	—	I	-	Fuel Pump Control	A	0.35	RD	—	II	-

X200 Steering Column Harness to Instrument Panel Harness

—

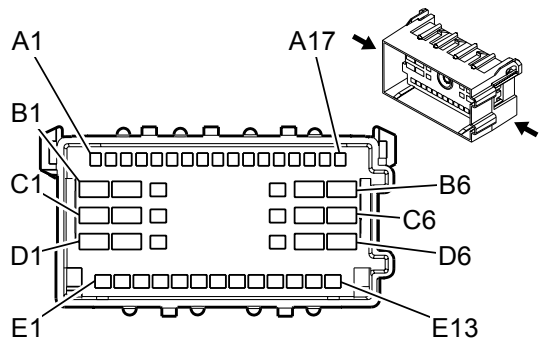

Connector Part Information

Harness Type: Steering Column

OEM Connector: Not Available

Service Connector: Service by Harness - See Part Catalog

Description: 48-Way F

Connector Part Information

Harness Type: Instrument Panel

OEM Connector: 15492579

Service Connector: 88988982

Description: 48-Way M 150, 280, 630 Metri-Pack Series (BK)

Terminal Part Information

Terminal Type ID	Terminated Lead	Diagnostic Test Probe	Terminal Removal Tool	Service Terminal	Tray Name	Core Crimp	Insulation Crimp
I	Not Required	Not Available	No Tool Required	Not Required	Not Required	Not Required	Not Required
II	13575462	J-35616-3 (GY)	J-38125-12A	12047581	Delphi 2	E	C
III	13575715	J-35616-5 (PU)	J-38125-11A	12034047	Delphi 2	E	A
IV	19330180	J-35616-43 (RD)	J-38125-11A	12020126	Delphi 2	E	A

X200 Steering Column Harness to Instrument Panel Harness

Pin	Size	Color	Circuit	Terminal Type ID	Option	Function	Pin	Size	Color	Circuit	Terminal Type ID	Option
A17	0.35	GY	1884	I	—	Cruise Control Set/Coast/Resume/Acc elerate Switch Signal	A17	0.35	GY	1884	II	—
A1	0.35	—	28	I	—	Horn Relay Control	A1	0.35	TN	28	II	—
B3	0.35	WH	111	I	—	Hazard Switch Signal	B3	0.35	WH	111	III	—

B1	0.35	RD/WH	540	I	—	Battery Positive Voltage	B1	0.35	RD/WH	540	IV	—
A9	0.35	PK	3	I	—	Run/Crank Ignition 1 Voltage	A9	0.35	PK	3	II	—
A6	0.5	PK	2239	I	—	Run/Crank Ignition 1 Voltage	A6	0.5	PK	2239	II	—
C1	0.35	WH	530	I	—	Off/Run/Crank Ignition Voltage	C1	0.35	WH	530	IV	—
A3	0.35	PK	1444	I	—	12 Volt Reference	A3	0.35	PK	1444	II	—
C3	0.35	YE	307	I	—	Headlamp Switch Flash To Pass Signal	C3	0.35	YE	307	III	—
A16	0.5	—	6048	I	—	Steering Angle Sensor Phase C Signal	A16	0.5	TN	6048	II	—
A15	0.35	BN	6136	I	—	Control	A15	0.35	BN	6136	II	—
A14	0.5	D-BU	6047	I	—	Steering Angle Sensor Phase B Signal	A14	0.5	D-BU	6047	II	—
A13	0.35	D-GN/WH	7158	I	—	Cruise Control Indicator Dimming Signal	A13	0.35	D-GN/WH	7158	II	—
A12	0.5	YE	6046	I	—	Steering Angle Sensor Phase A Signal	A12	0.5	YE	6046	II	—

A11	0.35	L-GN	6818	I	—	Steering Wheel Resistor Ladder Signal 1	A11	0.35	L-GN	6818	II	—
A4	0.35	PU	5526	I	—	Tap Up/Tap Down Switch Signal	A4	0.35	PU	5526	II	—
E1	0.5	BK	350	I	—	Ground	E1	0.5	BK	350	III	—
E8	0.35	D-GN	663	I	—	Hazard Switch Left Turn Signal	E8	0.35	D-GN	663	III	—
E4	0.5	OG/BK	6045	I	—	Steering Angle Sensor Low Reference	E4	0.5	OG/BK	6045	III	—
E3	0.5	BK/WH	351	I	—	Signal Ground	E3	0.5	BK/WH	351	III	—
E13	0.35	D-GN	5060	I	—	Low Speed GMLAN Serial Data	E13	0.35	D-GN	5060	III	—
E12	0.35	L-GN	1715	I	—	Windshield Wiper Switch High Signal	E12	0.35	L-GN	1715	III	—
B6	0.35	PK	1020	I	—	Off/Run/Crank Ignition Voltage	B6	0.35	PK	1020	IV	—
E10	0.5	GY	6044	I	—	Steering Angle Sensor 5 Volt Reference	E10	0.5	GY	6044	III	—
E9	0.35	—	664	I	—	Hazard Switch Right Turn Signal	E9	0.35	TN	664	III	—

D6	0.35	PK	94	I	—	Windshield Washer Switch Signal	D6	0.35	PK	94	IV	—
D5	0.5	L-GN	6043	I	—	Steering Angle Sensor Signal	D5	0.5	L-GN	6043	IV	—
D4	0.5	—	816	I	—	Brake Transmission Shift Interlock Solenoid Control	D4	0.5	TN/WH	816	III	—
D3	0.35	YE	525	I	—	Headlamp Dimmer Switch Low Beam Signal	D3	0.35	YE	525	III	—
D1	0.35	—	6009	I	—	Windshield Wiper Switch Low Reference	D1	0.35	TN/BK	6009	IV	—
C6	0.35	BN	4	I	—	Accessory Ignition Voltage	C6	0.35	BN	4	IV	—
E11	0.35	L-BU	1714	I	—	Windshield Wiper Switch Low Signal	E11	0.35	L-BU	1714	III	—

X202 Instrument Panel Harness to Engine Harness (UD7)

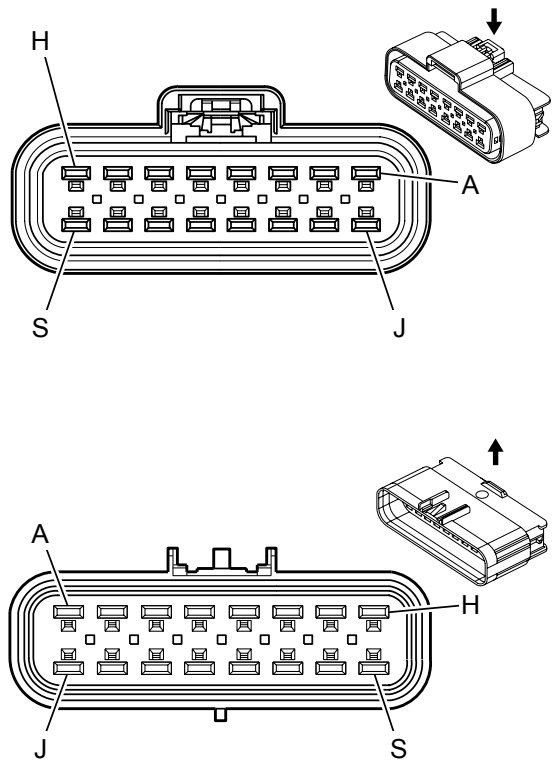

Connector Part Information

Harness Type: Instrument Panel

OEM Connector: 15326666

Service Connector: 15326666

Description: 16-Way F 280 GT 5.8 Series, Sealed (BK)

Connector Part Information

Harness Type: Engine

OEM Connector: 15326667

Service Connector: 88986347

Description: 16-Way M 280 GT 5.8 Series, Sealed (BK)

Terminal Part Information

Terminal Type ID	Terminated Lead	Diagnostic Test Probe	Terminal Removal Tool	Service Terminal	Tray Name	Core Crimp	Insulation Crimp
I	13576356	J-35616-4A (PU)	J-38125-553	15304719	Delphi 19	E	5
II	13580826	J-35616-5 (PU)	J-38125-553	15304731	Delphi 19	E	5

X202 Instrument Panel Harness to Engine Harness (UD7)

Pin	Size	Color	Circuit	Terminal Type ID	Option	Function	Pin	Size	Color	Circuit	Terminal Type ID	Option
A	0.5	PU	2378	I	—	Right Rear Corner Object Sensor Signal	A	0.5	PU	2378	II	—
B	0.5	D-GN	2377	I	—	Right Rear Middle Object Sensor Signal	B	0.5	D-GN	2377	II	—

C	0.5	RD/WH	840	I	—	Battery Positive Voltage	C	0.5	RD/WH	840	II	—
D - E	—	—	—	—	—	Not Occupied	D - E	—	—	—	—	—
F	0.5	BN	5360	I	—	Brake Apply Sensor Low Reference	F	0.5	BN	5360	II	—
G	0.5	D-BU	2374	I	—	Object Sensor Control	G	0.5	D-BU	2374	II	—
H	0.5	YE	2375	I	—	Left Rear Corner Object Sensor Signal	H	0.5	YE	2375	II	—
J	0.5	GY	2379	I	—	Object Sensor Low Reference	J	0.5	GY	2379	II	—
K - L	—	—	—	—	—	Not Occupied	K - L	—	—	—	—	—
M	0.5	RD/WH	4892	I	—	Auxiliary Battery Relay Control	M	0.5	RD/WH	4892	II	—
N						Vehicle Speed Signal	N	0.35 0.5	D-GN/WH D-GN/WH	817 817	II	— —
P	0.5	YE	5361	I	—	Brake Apply Sensor Signal	P	0.5	YE	5361	II	—
R	0.5	WH	5359	I	—	Brake Apply Sensor Control	R	0.5	WH	5359	II	—

S	0.5	OG	2376	I	—	Left Rear Middle Object Sensor Signal	S	0.5	OG	2376	II	—

X204 Body Harness to Headliner Harness (UVC)

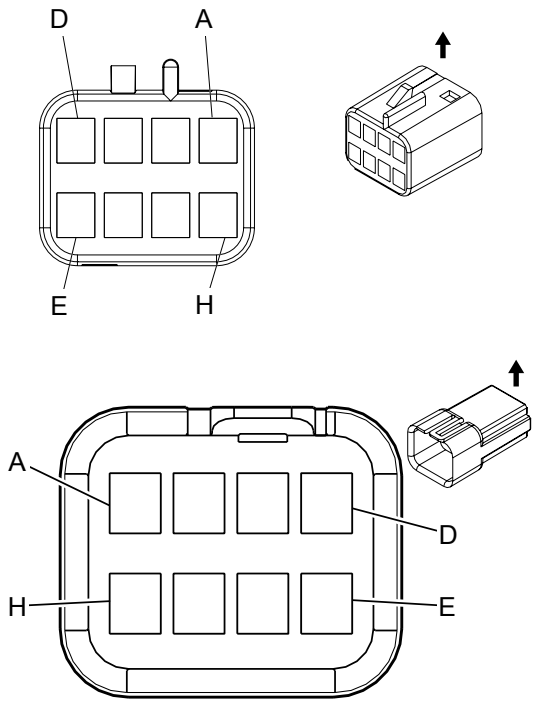

Connector Part Information

Harness Type: Body

OEM Connector: 12047886

Service Connector: 13584485

Description: 8-Way F 150 Metri-Pack Series (BK)

Connector Part Information

Harness Type: Headliner

OEM Connector: 12045688

Service Connector: 13584253

Description: 8-Way M 150 Metri-Pack Series (BK)

Terminal Part Information

Terminal Type ID	Terminated Lead	Diagnostic Test Probe	Terminal Removal Tool	Service Terminal	Tray Name	Core Crimp	Insulation Crimp
I	Not Required	J-35616-14 (GN)	Not Required	Not Required	Not Required	Not Required	Not Required
II	Not Required	J-35616-3 (GY)	Not Required	Not Required	Not Required	Not Required	Not Required

X204 Body Harness to Headliner Harness (UVC)

Pin	Size	Color	Circuit	Terminal Type ID	Option	Function	Pin	Size	Color	Circuit	Terminal Type ID	Option
A	—	—	—	—	—	Camera Rear Vision Signal +	A	0.5	WH	7641	II	—
B						Camera Rear Vision Signal (-)	B	0.5	D-BU L-BU	7642 7642	II	— —

								0.5				
C	0.35	BARE	6799	I	—	Camera Shield Ground	C	0.5	BARE	6799	II	—
D	—	—	—	—	—	Not Occupied	D	—	—	—	—	—
E	0.5	PK	239	I	—	Run/Crank Ignition 1 Voltage	E	0.5	PK	239	II	—
F	0.5	L-GN	24	I	—	Backup Lamp Control	F	0.5	L-GN	24	II	—
G	0.8	D-GN	654	I	—	Cellular Telephone Microphone Low Reference	G	0.8	D-GN	654	II	—
H	0.8	GY	655	I	—	Cellular Telephone Microphone Signal	H	0.8	GY	655	II	—

X205 Front Headliner Harness to Body Harness

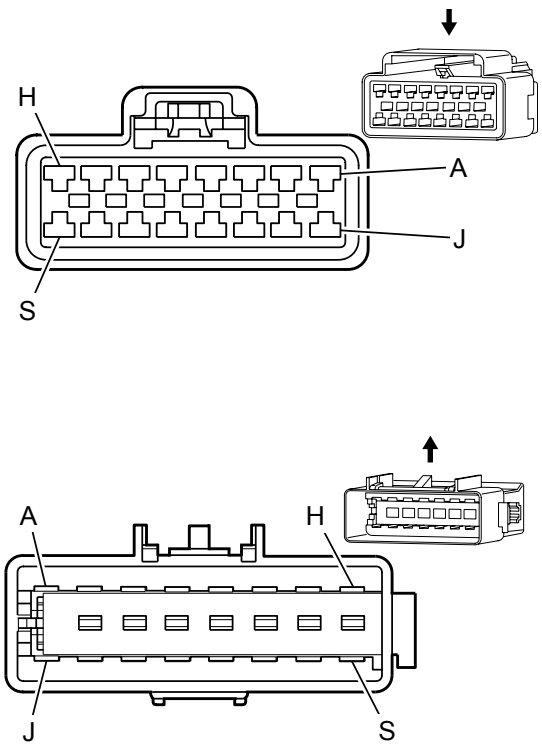

Connector Part Information

Harness Type: Headliner

OEM Connector: 15326952

Service Connector: 15306426

Description: 16-Way F 280 GT Series (BK)

Connector Part Information

Harness Type: Body

OEM Connector: 13573920

Service Connector: 15326956

Description: 16-Way M 280 GT Series (BK)

Terminal Part Information

Terminal Type ID	Terminated Lead	Diagnostic Test Probe	Terminal Removal Tool	Service Terminal	Tray Name	Core Crimp	Insulation Crimp
I	13575753	J-35616-4A (PU)	J-38125-553	15304711	Delphi 8	2	A
II	13575753	J-35616-4A (PU)	J-38125-553	15304711	Delphi 8	E	A
III	13575507	J-35616-5 (PU)	J-38125-553	15304724	Delphi 8	2	A
IV	13575511	J-35616-5 (PU)	J-38125-553	15304722	Delphi 8	E	C

X205 Front Headliner Harness to Body Harness

Pin	Size	Color	Circuit	Terminal Type ID	Option	Function	Pin	Size	Color	Circuit	Terminal Type ID	Option
A	0.35	BN	441	II	—	Run Ignition 3 Voltage	A	0.35	BN	441	IV	—

B	0.5 0.8	PU/WH D-GN	5264 654	II I	— —	Dual Logic Module Rear Mode Signal Cellular Telephone Microphone Low Reference	B	0.5	PU/WH	5264	IV	—
C	0.5 0.8	PK/BK GY	5265 655	II I	— —	Dual Logic Module Rear Control Signal Cellular Telephone Microphone Signal	C	0.5	PK/BK	5265	IV	—
D	0.35	GY	2599	II	—	Rear Mode Motor Signal	D	0.35	GY	2599	IV	—
E	0.5	WH	1924	II	—	Auxiliary Blower Motor High Speed Control	E	0.35	WH	1924	IV	—
F	0.35	BN	341	II	—	Run Ignition 3 Voltage	F	0.35	BN	341	IV	—
G	0.8 1	BK BK	1850 1850	I	— —	Ground	G	1	BK	1850	III	—
H	0.5	D-BU/WH	149	II	—	Courtesy Lamp Control	H	0.5	D-BU/WH	149	IV	—
J	0.35 0.5	BK/WH BK/WH	351 351	II	— —	Signal Ground	J	0.35	BK/WH	351	IV	—

K	0.5	BN	5263	II	—	Dual Logic Module Rear Temperature Signal	K	0.5	BN	5263	IV	—
L	0.35	D-GN	6134	II	—	Local Interconnect Network Serial Data Bus 3	L	0.35	D-GN	6134	IV	—
M	0.35	OG	2775	II	—	Rear Air Temperature Motor Control	M	0.35	OG	2775	IV	—
N	0.5	OG	1925	II	—	Auxiliary Blower Motor Medium Speed Control	N	0.35	OG	1925	IV	—
P	0.5	D-BU	1926	II	—	Auxiliary Blower Motor Low Speed Control	P	0.35	D-BU	1926	IV	—
R	0.35	BN/WH	230	II	—	Instrument Panel Lamp Dimming Control	R	0.35	BN/WH	230	IV	—
S	0.5 0.8	OG OG	1732 1732	II I	— —	Electronic Control Unit 12 Volt Reference (3)	S	0.8	OG	1732	III	—

X206 Body Harness to Front Headliner Harness (C69)

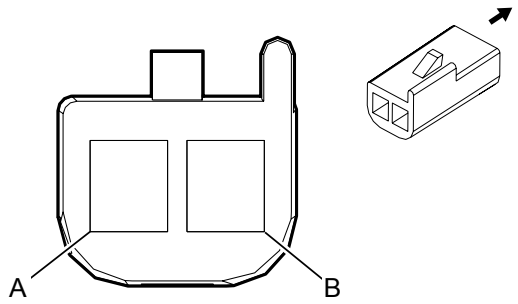

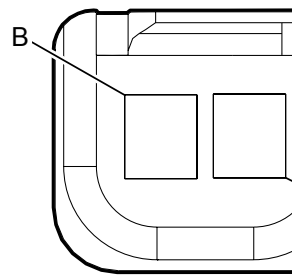

Connector Part Information

Harness Type: Body

OEM Connector: 12047662

Service Connector: 12085535

Description: 2-Way F Metri-Pack 150 Series (BK)

Connector Part Information

Harness Type: Front Headliner

OEM Connector: 12047663

Service Connector: 13584278

Description: 2-Way M Metri-Pack 15

Terminal Part Information

Terminal Type ID	Terminated Lead	Diagnostic Test Probe	Terminal Removal Tool	Service Terminal	Tray	Core Crimp	Insulation Crimp
I				15326030	5	E	C
II				12047581	2	E	C

X206 Body Harness to Front Headliner Harness (C69)

Pin	Size	Color	Circuit	T Type ID	Option	Function	Pin	Size	Color	Circuit	T Type ID	Option
A	0.5	PU/WH	5265	I	-	Rear Auxiliary Mode Door Control	A	0.5	PU/WH	5265	II	-
B	0.5	PK/BK	5264	I	-	Rear Auxiliary Blower Motor Switch Control	B	0.5	PK/BK	5264	II	-

X220 Instrument Panel Harness to Park Brake Jumper Harness

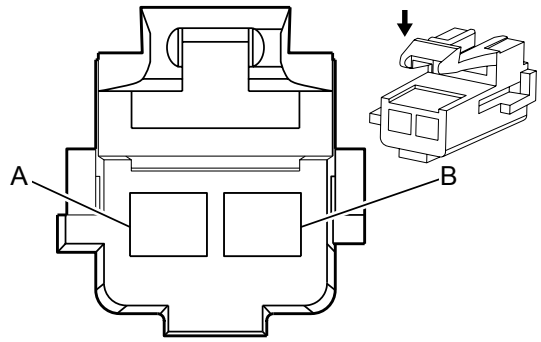

—

Connector Part Information

Harness Type: Instrument Panel

OEM Connector: 12129082

Service Connector: 15305896

Description: 2-Way F 280 Metri-Pack Series, Flexlock (GY)

Connector Part Information

Harness Type: Park Brake Jumper

OEM Connector: Not Available

Service Connector: Service by Harness - See Part Catalog

Description: 2-Way M

Terminal Part Information

Terminal Type ID	Terminated Lead	Diagnostic Test Probe	Terminal Removal Tool	Service Terminal	Tray Name	Core Crimp	Insulation Crimp
I	Not Required	J-35616-4A (PU)	Not Required	Not Required	Not Required	Not Required	Not Required
II	Not Required	Not Available	No Tool Required	Not Required	Not Required	Not Required	Not Required

X220 Instrument Panel Harness to Park Brake Jumper Harness

Pin	Size	Color	Circuit	Terminal Type ID	Option	Function	Pin	Size	Color	Circuit	Terminal Type ID	Option
A	0.35	L-BU	1134	I	—	Park Brake Switch Signal	A	0.35	L-BU	1134	II	—
B	—	—	—	—	—	Not Occupied	B	—	—	—	—	—

X222 Upfitter Provision Harness to Instrument Panel Harness (YF2 or YF7)

—

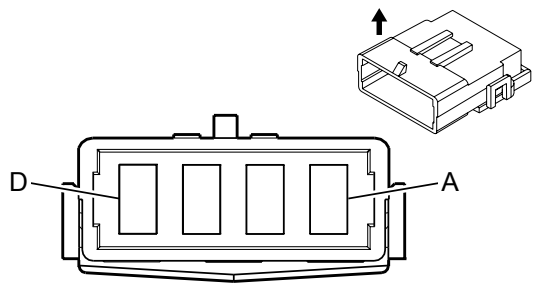

Connector Part Information

Harness Type: Upfitter Provision

OEM Connector: Not Available

Service Connector: Service by Harness - See Part Catalog

Description: 4-Way F

Connector Part Information

Harness Type: Instrument Panel

OEM Connector: 12052623

Service Connector: 15306008

Description: 4-Way M 630 Metri-Pack Series (BK)

Terminal Part Information

Terminal Type ID	Terminated Lead	Diagnostic Test Probe	Terminal Removal Tool	Service Terminal	Tray Name	Core Crimp	Insulation Crimp
I	Not Required	Not Available	No Tool Required	Not Required	Not Required	Not Required	Not Required
II	Not Required	J-35616-43 (RD)	Not Required	Not Required	Not Required	Not Required	Not Required

X222 Upfitter Provision Harness to Instrument Panel Harness (YF2 or YF7)

Pin	Size	Color	Circuit	Terminal Type ID	Option	Function	Pin	Size	Color	Circuit	Terminal Type ID	Option
C	5	BK	350	I	—	Ground	C	5	BK	350	II	—
B	5	BN	541	I	—	Run Ignition 3 Voltage	B	5	BN	541	II	—
A	5	RD/BK	1042	I	—	Battery Positive Voltage	A	5	RD/BK	1042	II	—

X225 Accelerator Pedal Position (APP) Sensor Jumper Harness to Instrument Panel Harness

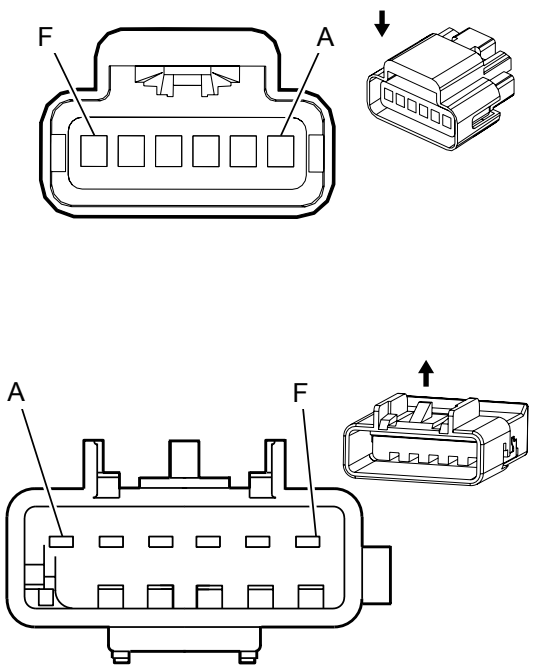

Connector Part Information

Harness Type: Accelerator Pedal Position Sensor

OEM Connector: 13667186

Service Connector: Service by Harness - See Part Catalog

Description: 6-Way F 150 GT FBT Series (BK)

Connector Part Information

Harness Type: Instrument Panel

OEM Connector: 15332142

Service Connector: 89046638

Description: 6-Way M 150 GT Series (BK)

Terminal Part Information

Terminal Type ID	Terminated Lead	Diagnostic Test Probe	Terminal Removal Tool	Service Terminal	Tray Name	Core Crimp	Insulation Crimp
I	Not Required	J-35616-2A (GY)	No Tool Required	Not Required	Not Required	Not Required	Not Required
II	Not Required	J-35616-3 (GY)	No Tool Required	Not Required	Not Required	Not Required	Not Required

X225 Accelerator Pedal Position (APP) Sensor Jumper Harness to Instrument Panel Harness

Pin	Size	Color	Circuit	Terminal Type ID	Option	Function	Pin	Size	Color	Circuit	Terminal Type ID	Option
A	0.35	TN	1274	I	—	Accelerator Pedal Position 5 Volt Reference (2)	A	0.35	TN	1274	II	—
B	0.35	WH/BK	1164	I	—	Accelerator Pedal Position 5 Volt Reference (1)	B	0.35	WH/BK	1164	II	—

C	0.35	D-BU	1161	I	—	Accelerator Pedal Position Signal (1)	C	0.35	D-BU	1161	II	—
D	0.35	BN	1271	I	—	Accelerator Pedal Position Low Reference (1)	D	0.35	BN	1271	II	—
E	0.35	PU	1272	I	—	Accelerator Pedal Position Low Reference (2)	E	0.35	PU	1272	II	—
F	0.35	L-BU	1162	I	—	Accelerator Pedal Position Signal (2)	F	0.35	L-BU	1162	II	—

X276 Steering Wheel Harness to Instrument Panel Harness

—

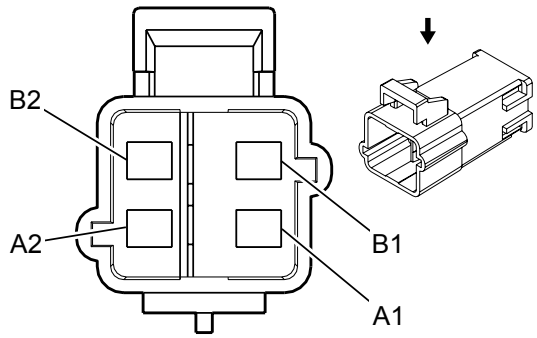

Connector Part Information

Harness Type: Steering Wheel

OEM Connector: Not Available

Service Connector: Service by Harness - See Part Catalog

Description: 4-Way F

Connector Part Information

Harness Type: Instrument Panel

OEM Connector: 15336476

Service Connector: 88987998

Description: 4-Way M 280 Metri-Pack Series (YE)

Terminal Part Information

Terminal Type ID	Terminated Lead	Diagnostic Test Probe	Terminal Removal Tool	Service Terminal	Tray Name	Core Crimp	Insulation Crimp
I	Not Required	Not Available	No Tool Required	Not Required	Not Required	Not Required	Not Required
II	Not Required	J-35616-5 (PU)	Not Required	Not Required	Not Required	Not Required	Not Required

X276 Steering Wheel Harness to Instrument Panel Harness

Pin	Size	Color	Circuit	Terminal Type ID	Option	Function	Pin	Size	Color	Circuit	Terminal Type ID	Option
B2	0.5	PK	3022	I	—	Steering Wheel Module Stage 2 Low Control	B2	0.5	PK	3022	II	—
B1	0.5	WH	3023	I	—	Steering Wheel Module Stage 2 High Control	B1	0.5	WH	3023	II	—
A2	0.5	BN	3020	I	—	Steering Wheel Module Stage 1 Low Control	A2	0.5	BN	3020	II	—
A1	0.5	—	3021	I	—	Steering Wheel Module Stage 1 High Control	A1	0.5	TN	3021	II	—

X289 Side Access Panel Harness to Instrument Panel Harness (PRP)

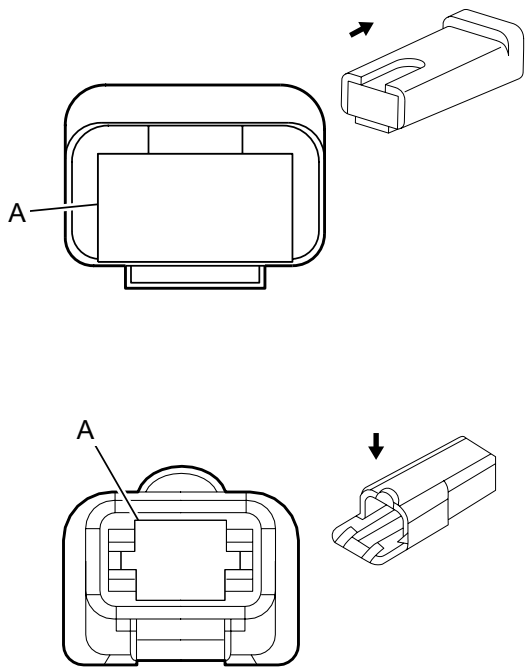

Connector Part Information

Harness Type: Rear Body

OEM Connector: 6288704

Service Connector: Service by Harness - See Part Catalog

Description: 1-Way F 56 Series (CR)

Connector Part Information

Harness Type: Instrument Panel

OEM Connector: 2984528

Service Connector: 2984528

Description: 1-Way M 56 Series (BK)

Terminal Part Information

Terminal Type ID	Terminated Lead	Diagnostic Test Probe	Terminal Removal Tool	Service Terminal	Tray Name	Core Crimp	Insulation Crimp
I	Not Required	J-35616-42 (RD)	Not Required	Not Required	Not Required	Not Required	Not Required
II	Not Required	J-35616-43 (RD)	Not Required	Not Required	Not Required	Not Required	Not Required

X289 Side Access Panel Harness to Instrument Panel Harness (PRP)

Pin	Size	Color	Circuit	Terminal Type ID	Option	Function	Pin	Size	Color	Circuit	Terminal Type ID	Option
A	5	RD	1042	I	—	Battery Positive Voltage	A	5	RD/BK	1042	II	—

X290 Instrument Panel Harness to Side Access Panel Harness (PRP)

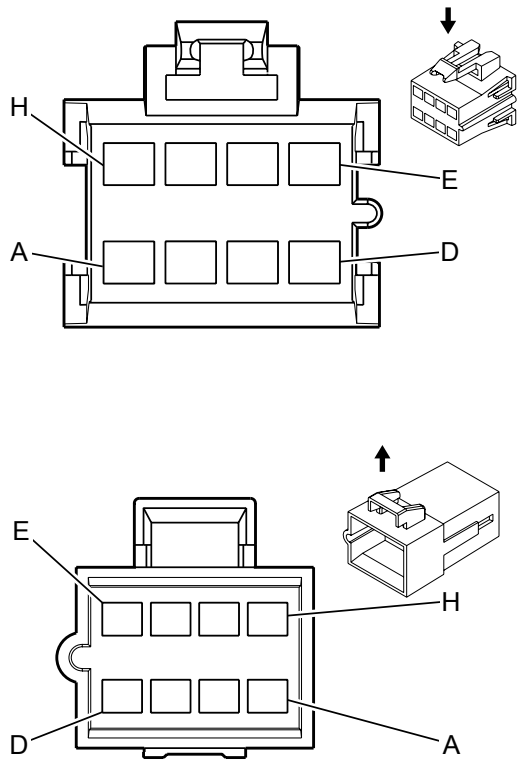

Connector Part Information

Harness Type: Instrument Panel

OEM Connector: 12064998

Service Connector: 15306189

Description: 8-Way F 280 Metri-Pack Series (BK)

Connector Part Information

Harness Type: Rear Body

OEM Connector: 12066195

Service Connector: Service by Harness - See Part Catalog

Description: 8-Way M 280 Metri-Pack Series (BK)

Terminal Part Information

Terminal Type ID	Terminated Lead	Diagnostic Test Probe	Terminal Removal Tool	Service Terminal	Tray Name	Core Crimp	Insulation Crimp
I	Not Required	J-35616-4A (PU)	Not Required	Not Required	Not Required	Not Required	Not Required
II	Not Required	J-35616-5 (PU)	Not Required	Not Required	Not Required	Not Required	Not Required

X290 Instrument Panel Harness to Side Access Panel Harness (PRP)

Pin	Size	Color	Circuit	Terminal Type ID	Option	Function	Pin	Size	Color	Circuit	Terminal Type ID	Option
A	0.5	L-BU	244	I	—	Passenger Door Lock Switch Lock Control	A	0.5	L-BU/WH	244	II	—
B	0.5	L-BU	1344	I	—	Rear Compartment Lid Release Relay Control	B	0.5	L-BU	1344	II	—

C	0.5	L-GN	1391	I	—	Left Front Door Lock Relay Control	C	20	L-GN	1391	II	—
D - F	—	—	—	—	—	Not Occupied	D - F	—	—	—	—	—
G	0.8	OG	1732	I	—	Electronic Control Unit 12 Volt Reference (3)	G	0.8	RD	1732	II	—
H	0.5	YE	5810	I	—	Park Enable Signal	H	0.5	OG	5810	II	—

X305 Chassis Harness to Fuel Pump Jumper Harness (K08)

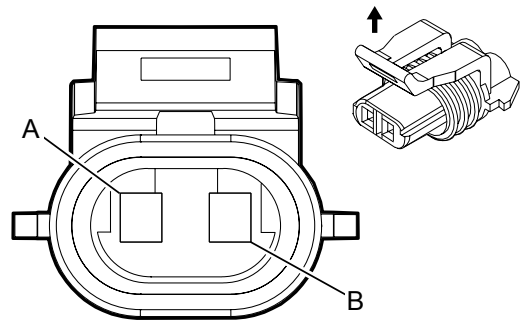

—

Connector Part Information

Harness Type: Chassis

OEM Connector: 12052644

Service Connector: 15306302

Description: 2-Way F 150 Metri-Pack Series, Sealed (GY)

Connector Part Information

Harness Type: Fuel Pump Jumper

OEM Connector: Not Available

Service Connector: Service by Harness - See Part Catalog

Description: 2-Way M

Terminal Part Information

Terminal Type ID	Terminated Lead	Diagnostic Test Probe	Terminal Removal Tool	Service Terminal	Tray Name	Core Crimp	Insulation Crimp
I	Not Required	J-35616-14 (GN)	Not Required	Not Required	Not Required	Not Required	Not Required
II	Not Required	Not Available	No Tool Required	Not Required	Not Required	Not Required	Not Required

X305 Chassis Harness to Fuel Pump Jumper Harness (K08)

Pin	Size	Color	Circuit	Terminal Type ID	Option	Function	Pin	Size	Color	Circuit	Terminal Type ID	Option
A	0.8	D-BU/L-GN	7077	I	—	Fuel Operated Heater Dosing Pump Control	A	0.8	D-BU/L-GN	7077	II	—
B	0.8	BK	150	I	—	Ground	B	0.8	BK	150	II	—

X306 Body Harness to Passenger Seat Harness

—

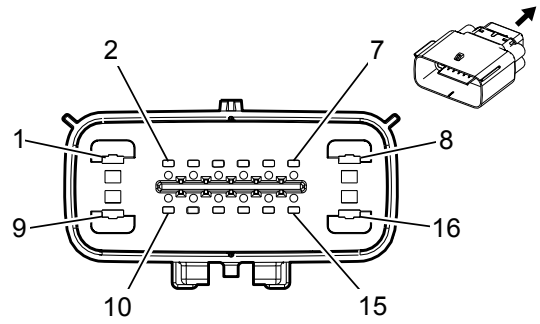

Connector Part Information

Harness Type: Passenger Seat

OEM Connector: Not Available

Service Connector: Service by Harness - See Part Catalog

Description: 16-Way F

Connector Part Information

Harness Type: Body

OEM Connector: 33152585

Service Connector: 19332830

Description: 16-Way M 1.5, 2.8 Series, Sealed (YE)

Terminal Part Information

Terminal Type ID	Terminated Lead	Diagnostic Test Probe	Terminal Removal Tool	Service Terminal	Tray Name	Core Crimp	Insulation Crimp
I	Not Required	Not Available	No Tool Required	Not Required	Not Required	Not Required	Not Required
II	19119440	J-35616-3 (GY)	J-38125-217	Not Available	Not Available	Not Available	Not Available
III	19332835	J-35616-5 (PU)	J-38125-12A	Not Available	Not Available	Not Available	Not Available

X306 Body Harness to Passenger Seat Harness

Pin	Size	Color	Circuit	Terminal Type ID	Option	Function	Pin	Size	Color	Circuit	Terminal Type ID	Option
1	3	BK	1850	I	—	Ground	1	3	BK	1850	III	—
2	0.5	OG	1362	I	—	Passenger Seat Belt Switch Signal	2	0.5	OG	1362	II	—
3	0.5	L-BU	1361	I	—	Passenger Seat Belt Switch Low Reference	3	0.5	L-BU	1361	II	—
5	0.5	L-GN	2116	I	—	Passenger Seat Belt Pretensioner High	5	0.5	L-GN	2116	II	—

						Control						
6	0.5	OG	2117	I	—	Passenger Seat Belt Pretensioner Low Control	6	0.5	OG	2117	II	—
9	3	RD/WH	3540	I	—	Battery Positive Voltage	9	3	RD/WH	3540	III	—
10	0.5	L-GN	2136	I	—	Right Front Side Impact Module Low Control	10	0.5	L-GN	2136	II	—
11	0.5	—	2135	I	—	Right Front Side Impact Module High Control	11	0.5	TN/WH	2135	II	—
13	0.5	RD/WH	3440	I	—	Battery Positive Voltage	13	0.5	RD/WH	3440	II	—
14	0.5	BK/WH	1751	I	—	Signal Ground	14	0.5	BK/WH	1751	II	—
15	0.5	D-GN	5060	I	—	Low Speed GMLAN Serial Data	15	0.5	D-GN	5060	II	—

X307 Body Harness to Driver Seat Harness

—

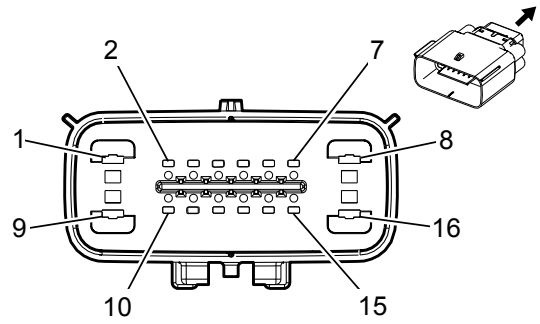

Connector Part Information

Harness Type: Driver Seat

OEM Connector: Not Available

Service Connector: Service by Harness - See Part Catalog

Description: 16-Way F

Connector Part Information

Harness Type: Body

OEM Connector: 33152585

Service Connector: 19332830

Description: 16-Way M 1.5, 2.8 Series, Sealed (YE)

Terminal Part Information

Terminal Type ID	Terminated Lead	Diagnostic Test Probe	Terminal Removal Tool	Service Terminal	Tray Name	Core Crimp	Insulation Crimp
I	Not Required	Not Available	No Tool Required	Not Required	Not Required	Not Required	Not Required
II	19119440	J-35616-3 (GY)	J-38125-217	Not Available	Not Available	Not Available	Not Available
III	19332835	J-35616-5 (PU)	J-38125-12A	Not Available	Not Available	Not Available	Not Available

X307 Body Harness to Driver Seat Harness

Pin	Size	Color	Circuit	Terminal Type ID	Option	Function	Pin	Size	Color	Circuit	Terminal Type ID	Option
1	3	RD/WH	3540	I	—	Battery Positive Voltage	1	3	RD/WH	3540	III	—
2	0.5	PK	5057	I	—	Seat Position Switch Low Reference	2	0.5	PK	5057	II	—
3	0.5	—	238	I	—	Driver Seat Belt Switch Signal	3	0.5	TN/WH	238	II	—
5	0.5	—	2118	I	—	Driver Seat Belt Pretensioner High	5	0.5	TN/WH	2118	II	—

						Control						
6	0.5	OG/BK	2119	I	—	Driver Seat Belt Pretensioner Low Control	6	0.5	OG/BK	2119	II	—
9	3	BK	450	I	—	Ground	9	3	BK	450	III	—
10	0.5	YE/BK	2138	I	—	Left Front Side Impact Module Low Control	10	0.5	YE/BK	2138	II	—
11	0.5	BN	2137	I	—	Left Front Side Impact Module High Control	11	0.5	BN	2137	II	—

X316 Transmission Harness to Fuel Pump Harness (LGH)

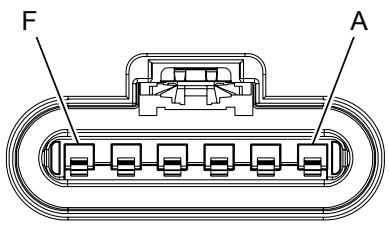

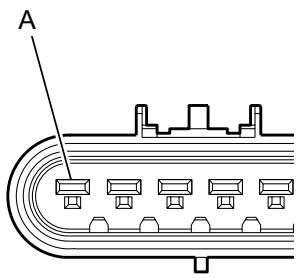

Connector Part Information

Harness Type: Transmission

OEM Connector: 13521467

Service Connector: 13506001

Description: 6-Way F GT 280 Series, Sealed (BK)

Connector Part Information

Harness Type: Fuel Pump

OEM Connector: 15326640

Service Connector: 88953150

Description: 6-Way M GT 280 Serie

Terminal Part Information

Terminal Type ID	Terminated Lead	Diagnostic Test Probe	Terminal Removal Tool	Service Terminal	Tray	Core Crimp	Insulation Crimp
I				15304719	19	Pins: C–F : 2	5
II				See Terminal Repair Kit	See Terminal Repair Kit	See Terminal Repair Kit	See Terminal Repair Kit

X316 Transmission Harness to Fuel Pump Harness (LGH)

Pin	Size	Color	Circuit	T Type ID	Option	Function	Pin	Size	Color	Circuit	T Type ID	Option
A	0.5	D-BU/YE	6861	I	-	Water In Fuel Indicator Control	A	0.5	YE/BK	508	II	-
B	0.5	D-BU	6863	I	-	Low Reference	B	0.5	D-BU	6863	II	-
C	1	BK	150	I	-	Ground	C	1	BK	150	II	-
D	0.8	PK	2239	I	-	Ignition Voltage	D	0.8	PK	2239	II	-
E	1	BK	150	I	-	Ground	E	1	BK	150	II	-
F	0.8	GY	120	I	-	Fuel Pump Control	F	0.8	GY	120	II	-

X318 Instrument Panel Harness to Body Harness

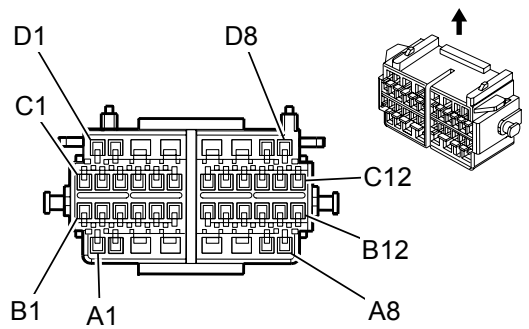

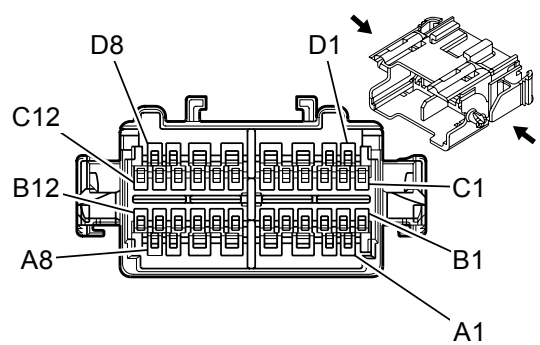

Connector Part Information

Harness Type: Instrument Panel

OEM Connector: 15448130

Service Connector: 89046970

Description: 40-Way F 150, 280 GT Series (L-GY)

Connector Part Information

Harness Type: Body

OEM Connector: 15416977

Service Connector: 19331377

Description: 40-Way M 150, 280 GT Series (L-GY)

Terminal Part Information

Terminal Type ID	Terminated Lead	Diagnostic Test Probe	Terminal Removal Tool	Service Terminal	Tray Name	Core Crimp	Insulation Crimp
I	13575735	J-35616-14 (GN)	J-38125-553	12191812	Delphi 19	C	A
II	13575735	J-35616-14 (GN)	J-38125-553	12191812	Delphi 19	E	C
III	13575753	J-35616-4A (PU)	J-38125-553	15304711	Delphi 8	2	A
IV	13575753	J-35616-4A (PU)	J-38125-553	15304711	Delphi 8	E	A
V	13575502	J-35616-3 (GY)	J-38125-553	15304702	Delphi 19	2	4
VI	13575502	J-35616-3 (GY)	J-38125-553	15304702	Delphi 19	E	4
VII	13575502	J-35616-3 (GY)	J-38125-553	15304702	Delphi 19	E	C
VIII	13575507	J-35616-5 (PU)	J-38125-553	15304724	Delphi 8	2	A
IX	13575511	J-35616-5 (PU)	J-38125-553	15304722	Delphi 8	E	C

X318 Instrument Panel Harness to Body Harness

Pin	Size	Color	Circuit	Terminal Type ID	Option	Function	Pin	Size	Color	Circuit	Terminal Type ID	Option
A1	0.8	OG	1853	I	—	Right Front Midrange Speaker Control (+)	A1	0.8	OG	1853	V	—
A2	0.8	D-GN	1953	I	—	Right Front Midrange Speaker (-) Low Reference	A2	0.8	D-GN	1953	V	—
A3	0.5	BK/WH	1751	IV	—	Signal Ground	A3	0.5	BK/WH	1751	IX	—
A4	0.5	TN/BK	371	IV	—	Passenger IP Module Disable Switch Signal	A4	0.5	TN/BK	371	IX	—
A5	0.5	WH/BK	6436	IV	—	CAN Bus Low Terminated Serial Data	A5	0.5	WH/BK	6436	IX	—
A6	0.5	BN/WH	6437	IV	—	CAN Bus High Terminated Serial Data	A6	0.5	BN/WH	6437	IX	—
A7	—	—	—	—	—	Left Rear Door Open Switch Signal	A7	0.35	D-BU/WH	1179	VII	—
A8	0.35	YE/BK	1181	II	—	Right Rear Door Open Switch Signal	A8	0.35	YE/BK	1181	VII	—
B1	0.8	L-BU	1320	I	—	CHMSL Control	B1	0.8	L-BU	1320	V	—
B2	0.5	BK/WH	1751	II	—	Signal Ground	B2	0.5	BK/WH	1751	VI	—
		TN	1855	I	—	Right Rear Midrange			TN	1855	V	—

B3	0.8					Speaker Control (+)	B3	1				
B4	0.8	OG	1955	I	—	Right Rear Midrange Speaker (-) Low Reference	B4	1	OG	1955	V	—
B5	—	—	—	—	—	Not Occupied	B5	—	—	—	—	—
B6	0.5	GY/BK	1337	II	—	Yaw Rate Sensor 5 Volt Reference	B6	0.5	GY/BK	1337	VI	—
B7	0.5	D-BU/WH	6619	II	—	Middle Front Discriminating Sensor Low Reference	B7	0.5	D-BU/WH	6619	VI	—
B8	0.5	BN/WH	6618	II	—	Middle Front Discriminating Sensor Signal	B8	0.5	BN/WH	6618	VI	—
B9	0.35	D-GN	5060	II	—	Low Speed GMLAN Serial Data	B9	0.5	D-GN	5060	VI	—
B10	0.35	D-GN	5060	II	—	Low Speed GMLAN Serial Data	B10	0.35	D-GN	5060	VII	—
B11	0.35	D-GN	6134	II	—	Local Interconnect Network Serial Data Bus 3	B11	0.35	D-GN	6134	VII	—
B12	—	—	—	—	—	Not Occupied	B12	—	—	—	—	—
C1	0.8	D-GN	654	I	—	Cellular Telephone Microphone Low Reference	C1	0.8	D-GN	654	V	—
C2	0.35	PK	1139	II	—	Run/Crank Ignition 1 Voltage	C2	0.35	PK	1139	VII	—
C3	0.8	TN	1859	I	—	Left Rear Midrange Speaker Control (+)	C3	1	TN	1859	V	—

C4	0.8	WH	1959	I	—	Left Rear Midrange Speaker (-) Low Reference	C4	1	WH	1959	V	—
C5	0.8	GY	655	I	—	Cellular Telephone Microphone Signal	C5	0.8	GY	655	V	—
C6	0.5	BK/PU	7499	II	—	Yaw Rate Sensor Low Reference	C6	0.5	BK/PU	7499	VI	—
C7	0.35	L-GN	5926	II	—	Rear Access Open Switch Signal	C7	0.35	L-GN	5926	VII	—
C8	0.35	PK/BK	1303	II	—	Lift Gate Ajar Switch Signal (1)	C8	0.35	PK/BK	1303	VII	—
C9	0.35	TN/WH	746	II	—	Right Front Door Ajar Switch Signal	C9	0.35	TN/WH	746	VII	—
C10	0.35	L-GN	1177	II	—	Right Front Door Open Switch Signal	C10	0.35	L-GN	1177	VII	—
C11	0.5	TN	126	II	—	Left Front Door Open Switch Signal	C11	0.35	TN	126	VII	—
C12	0.35	GY/BK	745	II	—	Left Front Door Ajar Switch Signal	C12	0.35	GY/BK	745	VII	—
D1	0.8	D-BU	1857	I	—	Left Front Midrange Speaker Control (+)	D1	0.8	D-BU	1857	V	—
D2	0.8	L-BU	1957	I	—	Left Front Midrange Speaker (-) Low Reference	D2	0.8	L-BU	1957	V	—

						Reference							
D3	0.5 0.8	OG OG	1732 1732	IV III	— —	Electronic Control Unit 12 Volt Reference (3)	D3	0.8	OG	1732	VIII	—
D4	0.5	PK	353	IV	—	Passenger IP Module Suppression Indicator Control	D4	0.5	PK	353	IX	—
D5	0.5	PK/BK	780	IV	—	Driver Door Lock Switch Lock Signal	D5	0.35	PK/BK	780	IX	—
D6	0.35 0.5	OG/BK OG/BK	781 781	IV	— —	Driver Door Lock Switch Unlock Signal	D6	0.35	OG/BK	781	IX	—
D7	0.35	L-BU	244	II	—	Passenger Door Lock Switch Lock Control	D7	0.35	L-BU	244	VII	—
D8	0.35 0.35	D-BU OG/BK	245 781	II	— —	Passenger Door Lock Switch Unlock Control Driver Door Lock Switch Unlock Signal	D8	0.35	D-BU	245	VII	—

X319 Rear Heater Switch Harness to Body Harness (ENC, C69, or C36)

—

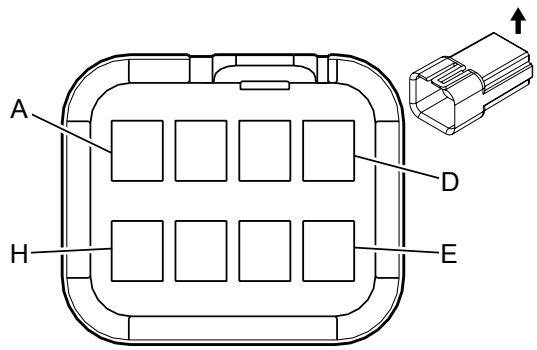

Connector Part Information

Harness Type: Rear Heater Switch

OEM Connector: Not Available

Service Connector: Service by Harness - See Part Catalog

Description: 8-Way F

Connector Part Information

Harness Type: Body

OEM Connector: 12045688

Service Connector: 13584253

Description: 8-Way M 150 Metri-Pack Series (BK)

Terminal Part Information

Terminal Type ID	Terminated Lead	Diagnostic Test Probe	Terminal Removal Tool	Service Terminal	Tray Name	Core Crimp	Insulation Crimp
I	Not Required	Not Available	No Tool Required	Not Required	Not Required	Not Required	Not Required
II	Not Required	J-35616-3 (GY)	Not Required	Not Required	Not Required	Not Required	Not Required

X319 Rear Heater Switch Harness to Body Harness (ENC, C69, or C36)

Pin	Size	Color	Circuit	Terminal Type ID	Option	Function	Pin	Size	Color	Circuit	Terminal Type ID	Option
E	0.35	BK	450	I	—	Ground	E	0.35	BK	450	II	—
D	0.35	BN/WH	230	I	—	Instrument Panel Lamp Dimming Control	D	0.35	BN/WH	230	II	—
C	0.35	D-BU	1926	I	—	Auxiliary Blower Motor Low Speed Control	C	0.35	D-BU	1926	II	—
B	0.35	OG	1925	I	—	Auxiliary Blower Motor Medium Speed Control	B	0.35	OG	1925	II	—

A	0.35	WH	1924	I	—	Auxiliary Blower Motor High Speed Control	A	0.35	WH	1924	II	—

X320 Upfitter Provision Harness to Body Harness (YF2 or YF7)

—

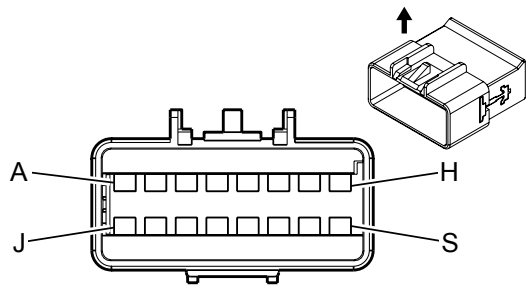

Connector Part Information

Harness Type: Upfitter Provision

OEM Connector: Not Available

Service Connector: Service by Harness - See Part Catalog

Description: 16-Way F

Connector Part Information

Harness Type: Body

OEM Connector: 13516907

Service Connector: 19153746

Description: 16-Way M 150 GT Series (BK)

Terminal Part Information

Terminal Type ID	Terminated Lead	Diagnostic Test Probe	Terminal Removal Tool	Service Terminal	Tray Name	Core Crimp	Insulation Crimp
I	Not Required	Not Available	No Tool Required	Not Required	Not Required	Not Required	Not Required
II	13575502	J-35616-3 (GY)	J-38125-553	15304702	Delphi 19	2	4
III	13575502	J-35616-3 (GY)	J-38125-553	15304702	Delphi 19	E	4

X320 Upfitter Provision Harness to Body Harness (YF2 or YF7)

Pin	Size	Color	Circuit	Terminal Type ID	Option	Function	Pin	Size	Color	Circuit	Terminal Type ID	Option
S	0.5	BN	2209	I	—	Rear Park Lamp Control	S	0.5	BN	2209	III	—
R	0.5	D-BU/WH	149	I	—	Courtesy Lamp Control	R	0.5	D-BU/WH	149	III	—
P	0.5	BK	450	I	—	Ground	P	0.5	BK	450	III	—
D	1	—	1855	I	—	Right Rear Midrange Speaker Control (+)	D	1	TN	1855	II	—

B	1					Speaker Control (+)	B	1				
C	1	OG	1955	I	—	Right Rear Midrange Speaker (-) Low Reference	C	1	OG	1955	II	—
B	1	—	1859	I	—	Left Rear Midrange Speaker Control (+)	B	1	TN	1859	II	—
A	1	WH	1959	I	—	Left Rear Midrange Speaker (-) Low Reference	A	1	WH	1959	II	—

X321 Upfitter Provision Harness to Body Harness (YF2 or YF7)

—

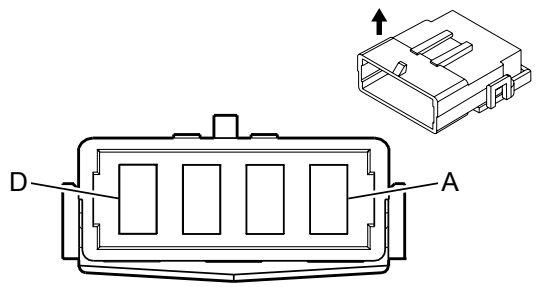

Connector Part Information

Harness Type: Upfitter Provision

OEM Connector: Not Available

Service Connector: Service by Harness - See Part Catalog

Description: 4-Way F

Connector Part Information

Harness Type: Body

OEM Connector: 12052623

Service Connector: 15306008

Description: 4-Way M 630 Metri-Pack Series (BK)

Terminal Part Information

Terminal Type ID	Terminated Lead	Diagnostic Test Probe	Terminal Removal Tool	Service Terminal	Tray Name	Core Crimp	Insulation Crimp
I	Not Required	Not Available	No Tool Required	Not Required	Not Required	Not Required	Not Required
II	Not Required	J-35616-43 (RD)	Not Required	Not Required	Not Required	Not Required	Not Required

X321 Upfitter Provision Harness to Body Harness (YF2 or YF7)

Pin	Size	Color	Circuit	Terminal Type ID	Option	Function	Pin	Size	Color	Circuit	Terminal Type ID	Option
C	5	BK	450	I	—	Ground	C	5	BK	450	II	—
B	5	BN	541	I	—	Run Ignition 3 Voltage	B	5	BN	541	II	—
A	5	RD/BK	1042	I	—	Battery Positive Voltage	A	5	RD/BK	1042	II	—

X323 Left Rear Side Impact Sensor Jumper to Body Harness (ASF)

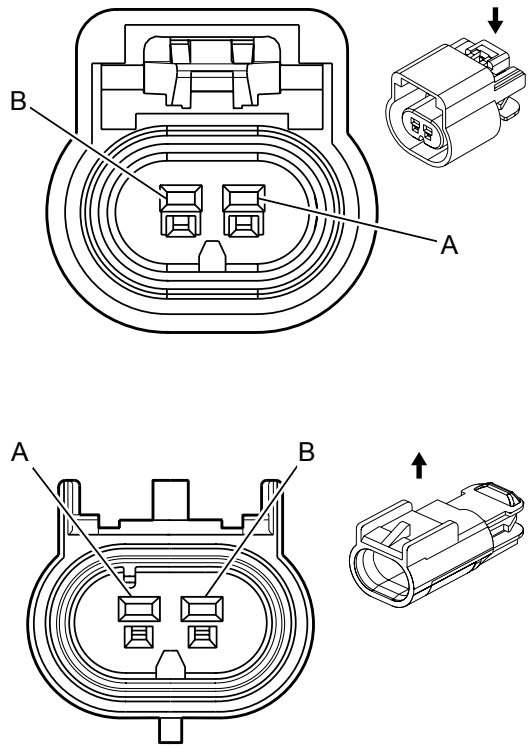

Connector Part Information

Harness Type: Air Bag Jumper

OEM Connector: 13510085

Service Connector: Service by Harness - See Part Catalog

Description: 2-Way F 150 GT Series, Sealed (BK)

Connector Part Information

Harness Type: Body

OEM Connector: 13510099

Service Connector: 13580103

Description: 2-Way M 150 GT Series, Sealed (BK)

Terminal Part Information

Terminal Type ID	Terminated Lead	Diagnostic Test Probe	Terminal Removal Tool	Service Terminal	Tray Name	Core Crimp	Insulation Crimp
I	Not Required	J-35616-14 (GN)	Not Required	Not Required	Not Required	Not Required	Not Required
II	Not Required	J-35616-3 (GY)	Not Required	Not Required	Not Required	Not Required	Not Required

X323 Left Rear Side Impact Sensor Jumper to Body Harness (ASF)

Pin	Size	Color	Circuit	Terminal Type ID	Option	Function	Pin	Size	Color	Circuit	Terminal Type ID	Option
A	0.5	GY/BK	6621	I	—	Left Middle Side Impact Sensing Module Low Reference	A	0.5	GY/BK	6621	II	—
B	0.5	D-GN/WH	6620	I	—	Left Middle Side Impact Sensing Module Signal	B	0.5	D-GN/WH	6620	II	—

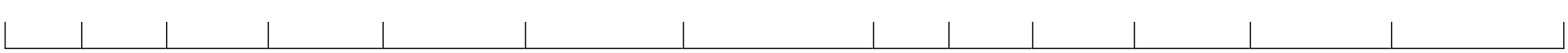

X324 Right Rear Side Impact Sensor Jumper to Body Harness (ASF)

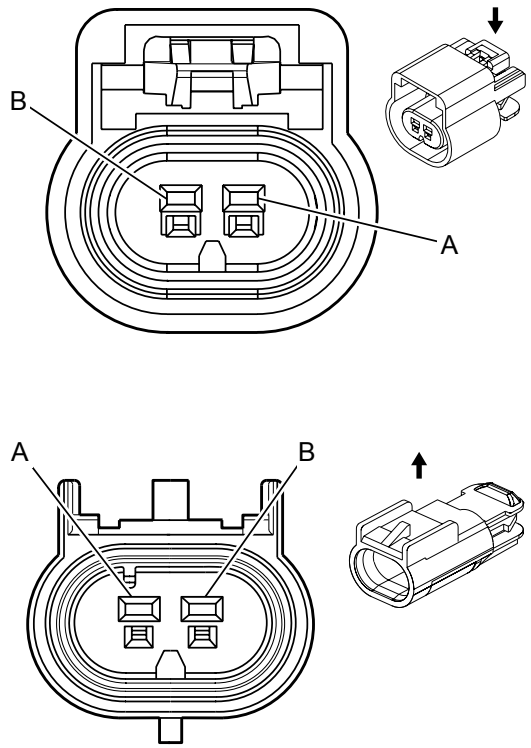

Connector Part Information

Harness Type: Air Bag Jumper

OEM Connector: 13510085

Service Connector: Service by Harness - See Part Catalog

Description: 2-Way F 150 GT Series, Sealed (BK)

Connector Part Information

Harness Type: Body

OEM Connector: 13510099

Service Connector: 13580103

Description: 2-Way M 150 GT Series, Sealed (BK)

Terminal Part Information

Terminal Type ID	Terminated Lead	Diagnostic Test Probe	Terminal Removal Tool	Service Terminal	Tray Name	Core Crimp	Insulation Crimp
I	Not Required	J-35616-14 (GN)	Not Required	Not Required	Not Required	Not Required	Not Required
II	Not Required	J-35616-3 (GY)	Not Required	Not Required	Not Required	Not Required	Not Required

X324 Right Rear Side Impact Sensor Jumper to Body Harness (ASF)

Pin	Size	Color	Circuit	Terminal Type ID	Option	Function	Pin	Size	Color	Circuit	Terminal Type ID	Option
A	0.5	L-GN/WH	6625	I	—	Right Middle Side Impact Sensing Module Low Reference	A	0.5	L-GN/WH	6625	II	—
B	0.5	L-BU/BK	6624	I	—	Right Middle Side Impact Sensing Module Signal	B	0.5	L-BU/BK	6624	II	—

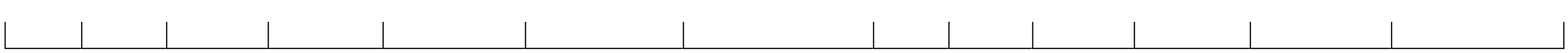

X329 Instrument Panel Harness to Body Harness (UVC)

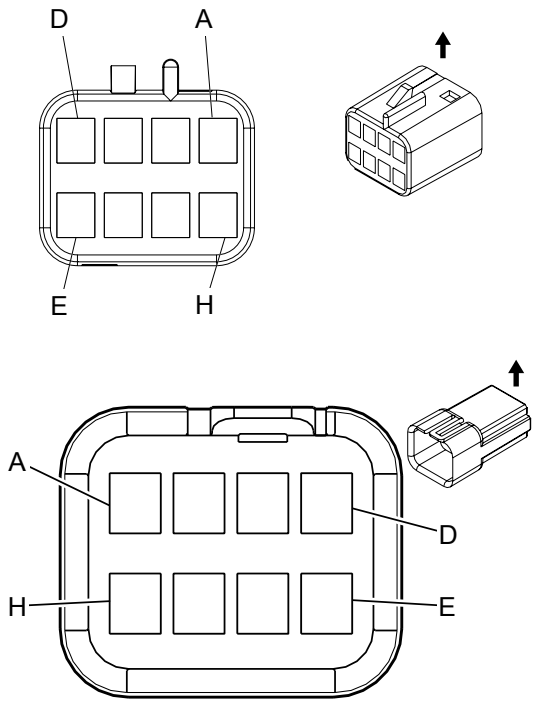

Connector Part Information

Harness Type: Instrument Panel

OEM Connector: 12047886

Service Connector: 13584485

Description: 8-Way F 150 Metri-Pack Series (BK)

Connector Part Information

Harness Type: Body

OEM Connector: 12089526

Service Connector: 13584253

Description: 8-Way M 150 Metri-Pack Series (BK)

Terminal Part Information

Terminal Type ID	Terminated Lead	Diagnostic Test Probe	Terminal Removal Tool	Service Terminal	Tray Name	Core Crimp	Insulation Crimp
I	Not Required	J-35616-14 (GN)	Not Required	Not Required	Not Required	Not Required	Not Required
II	Not Required	J-35616-3 (GY)	Not Required	Not Required	Not Required	Not Required	Not Required

X329 Instrument Panel Harness to Body Harness (UVC)

Pin	Size	Color	Circuit	Terminal Type ID	Option	Function	Pin	Size	Color	Circuit	Terminal Type ID	Option
A	0.35	WH	7641	I	—	Camera Rear Vision Signal +	A	0.35	WH	7641	II	—
B	0.35	L-BU	7642	I	—	Camera Rear Vision Signal (-)	B	0.35	L-BU	7642	II	—
C	—	—	—	—	—	Not Occupied	C	—	—	—	—	—

D	0.5	L-GN	24	I	—	Backup Lamp Control	D	0.5	L-GN	24	II	—
E	0.5	PK	239	I	—	Run/Crank Ignition 1 Voltage	E	0.5	PK	239	II	—
F	0.5	L-GN	24	I	—	Backup Lamp Control	F	0.5	L-GN	24	II	—
G	—	—	—	—	—	Not Occupied	G	—	—	—	—	—
H	0.35	BARE	6799	I	—	Camera Shield Ground	H	0.35	BARE	6799	II	—

X330 Instrument Panel Harness to Body Harness

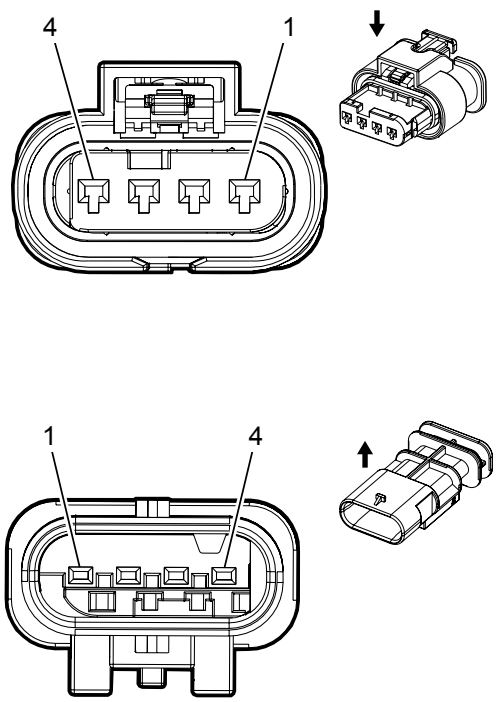

Connector Part Information

Harness Type: Instrument Panel

OEM Connector: 13854532

Service Connector: 13586575

Description: 4-Way F 1.2 Series, Sealed (YE)

Connector Part Information

Harness Type: Body

OEM Connector: 13854529

Service Connector: 19299698

Description: 4-Way M 1.2 Series, Sealed (YE)

Terminal Part Information

Terminal Type ID	Terminated Lead	Diagnostic Test Probe	Terminal Removal Tool	Service Terminal	Tray Name	Core Crimp	Insulation Crimp
I	Not Required	J-35616-16 (LT GN)	Not Required	Not Required	Not Required	Not Required	Not Required
II	Not Required	J-35616-13 (BU)	Not Required	Not Required	Not Required	Not Required	Not Required

X330 Instrument Panel Harness to Body Harness

Pin	Size	Color	Circuit	Terminal Type ID	Option	Function	Pin	Size	Color	Circuit	Terminal Type ID	Option
1	—	—	—	—	—	Steering Wheel Module Stage 1 High Control	1	0.5	TN	3021	II	—
2	—	—	—	—	—	Steering Wheel Module Stage 1 Low Control	2	0.5	BN	3020	II	—

3	—	—	—	—	—	Steering Wheel Module Stage 2 High Control	3	0.5	WH	3023	II	—
4	—	—	—	—	—	Steering Wheel Module Stage 2 Low Control	4	0.5	PK	3022	II	—

X331 Instrument Panel Harness to Body Harness

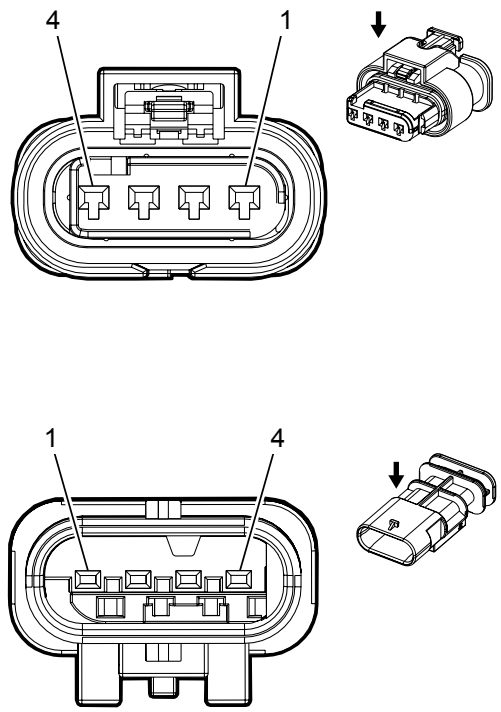

Connector Part Information

Harness Type: Instrument Panel

OEM Connector: 13854531

Service Connector: 13586137

Description: 4-Way F 1.2 Series, Sealed (YE)

Connector Part Information

Harness Type: Body

OEM Connector: 13854530

Service Connector: 13586576

Description: 4-Way M 1.2 Series, Sealed (YE)

Terminal Part Information

Terminal Type ID	Terminated Lead	Diagnostic Test Probe	Terminal Removal Tool	Service Terminal	Tray Name	Core Crimp	Insulation Crimp
I	Not Required	J-35616-16 (LT GN)	Not Required	Not Required	Not Required	Not Required	Not Required
II	Not Required	J-35616-13 (BU)	Not Required	Not Required	Not Required	Not Required	Not Required

X331 Instrument Panel Harness to Body Harness

Pin	Size	Color	Circuit	Terminal Type ID	Option	Function	Pin	Size	Color	Circuit	Terminal Type ID	Option
1	—	—	—	—	—	Passenger IP Module Stage 1 High Control	1	0.5	YE	3025	II	—
2	—	—	—	—	—	Passenger IP Module Stage 1 Low Control	2	0.5	OG	3024	II	—

3	0.5	GY	3027	I	—	Passenger IP Module Stage 2 High Control	3	0.5	GY	3027	II	—
4	0.5	PU	3026	I	—	Passenger IP Module Stage 2 Low Control	4	0.5	PU	3026	II	—

X350 Chassis Harness to LPG Chassis Harness (KO7 with UFM)

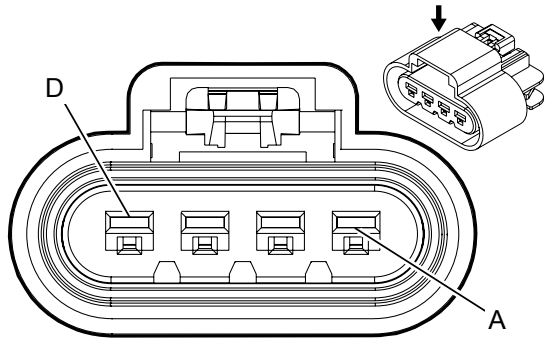

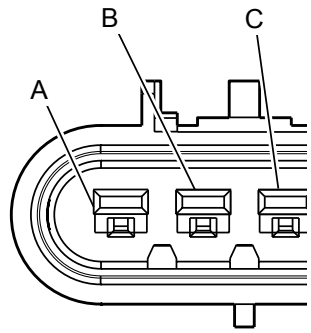

Connector Part Information

Harness Type: Chassis

OEM Connector: 13521459

Service Connector: 13580864

Description: 4-Way F GT 280 5.8 Series, Sealed (BK)

Connector Part Information

Harness Type: LPG Chassis

OEM Connector: 15326633

Service Connector: 13580884

Description: 4-Way M GT 280 Seale

Terminal Part Information

Terminal Type ID	Terminated Lead	Diagnostic Test Probe	Terminal Removal Tool	Service Terminal	Tray	Core Crimp	Insulation Crimp
I	13575403	J-35616-4A (PU)	J-38125-553	15304720	19	4	5
II	13578915	J-35616-4A (PU)	J-38125-553	15304719	19	E	5
III	Service by Harness – See Part Catalog	Pending	Pending	Not Available	Not Available	Not Available	Not Available
IV	13580826	J-35616-5 (PU)	J-38125-553	15304731	19	C	5

X350 Chassis Harness to LPG Chassis Harness (KO7 with UFM)

Pin	Size	Color	Circuit	T Type ID	Option	Function	Pin	Size	Color	Circuit	T Type ID	Option
A	3	BK	150	I	-	Ground	A	3	BK	—	III	-
B	0.5	PU	1589	II	-	Fuel Level Sensor	B	0.8	PU	—	IV	-
C	0.5	TN	2759	II	-	Low Reference	C	0.8	TN	—	IV	-
D	3	GY	120	I	-	Fuel Pump Control	D	3	GY	—	III	-

X350 Chassis Harness to LPG Harness (KO7 with UFP)

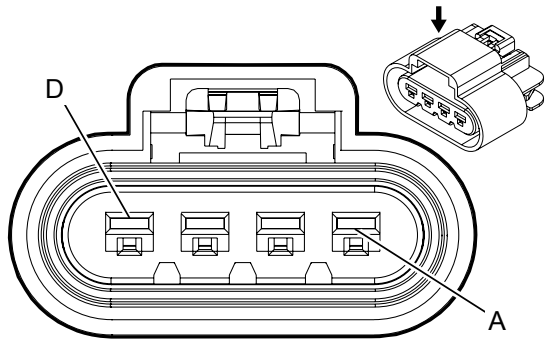

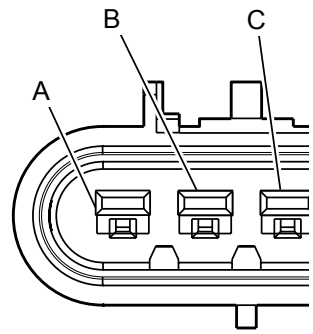

Connector Part Information

Harness Type: Chassis

OEM Connector: 13521459

Service Connector: 13580864

Description: 4-Way F GT 280 5.8 Series, Sealed (BK)

Connector Part Information

Harness Type: LPG Chassis

OEM Connector: 15326633

Service Connector: 13580884

Description: 4-Way M GT 280 Seale

Terminal Part Information

Terminal Type ID	Terminated Lead	Diagnostic Test Probe	Terminal Removal Tool	Service Terminal	Tray	Core Crimp	Insulation Crimp
I	13575403	J-35616-4A (PU)	J-38125-553	15304720	19	4	5
II	13578915	J-35616-4A (PU)	J-38125-553	15304719	19	E	5
III	13580826	J-35616-5 (PU)	J-38125-553	15304731	19	C	5

X350 Chassis Harness to LPG Harness (KO7 with UFP)

Pin	Size	Color	Circuit	T Type ID	Option	Function	Pin	Size	Color	Circuit	T Type ID	Option
A	3	BK	150	I	-	Ground	A	—	—	—	III	-
B	0.5	PU	1589	II	-	Fuel Level Sensor – Primary	B	0.8	PU	—	III	-
C	0.5	TN	2759	II	-	Low Reference	C	—	—	—	III	-
D	3	GY	120	I	-	Fuel Pump Control	D	0.8	WH	—	III	-

X350 Chassis Harness to CNG Power Harness (FHZ)

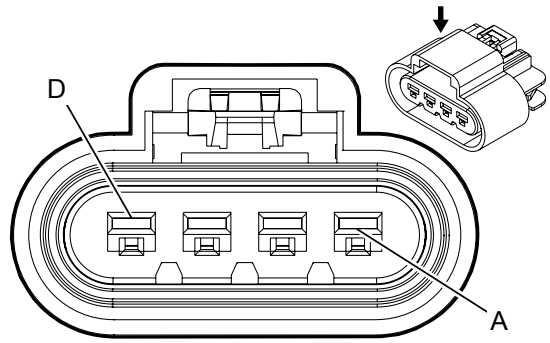

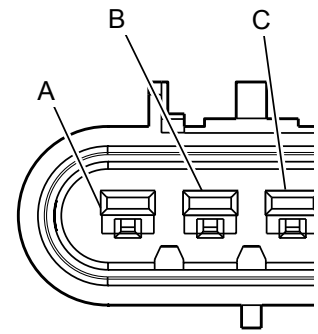

Connector Part Information

Harness Type: Chassis

OEM Connector: 13521459

Service Connector: 13580864

Description: 4-Way F GT 280 5.8 Series, Sealed (BK)

Connector Part Information

Harness Type: CNG Power

OEM Connector: 15326633

Service Connector: 13580884

Description: 4-Way M GT 280 Seale

Terminal Part Information

Terminal Type ID	Terminated Lead	Diagnostic Test Probe	Terminal Removal Tool	Service Terminal	Tray	Core Crimp	Insulation Crimp
I	13575403	J-35616-4A (PU)	J-38125-553	15304720	19	4	5
II	13578915	J-35616-4A (PU)	J-38125-553	15304719	19	E	5
III	13327135	J-35616-5 (PU)	J-38125-553	15304731	19	C	5

X350 Chassis Harness to CNG Power Harness (FHZ)

Pin	Size	Color	Circuit	T Type ID	Option	Function	Pin	Size	Color	Circuit	T Type ID	Option
A	3	BK	150	I	-	Ground	A	0.75	BK	—	III	-
B	0.5	PU	1589	II	-	Fuel Level Sensor Signal	B	0.75	PU	—	III	-
C	0.5	TN	2759	II	-	Low Reference	C	—	—	—	III	-
D	3	GY	120	I	-	Fuel Pump Control	D	0.75	GY	—	III	-

X395 Chassis Harness to Reductant Jumper Harness (LGH)

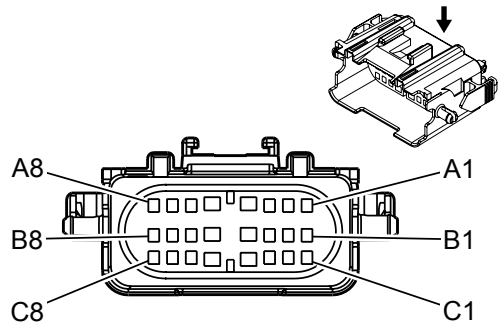

—

Connector Part Information

Harness Type: Chassis

OEM Connector: 15366099

Service Connector: 19153767

Description: 24-Way F 150, 280 GT Series, Sealed (BK)

Connector Part Information

Harness Type: Reductant Jumper

OEM Connector: Not Available

Service Connector: Service by Harness - See Part Catalog

Description: 24-Way M

Terminal Part Information

Terminal Type ID	Terminated Lead	Diagnostic Test Probe	Terminal Removal Tool	Service Terminal	Tray Name	Core Crimp	Insulation Crimp
I	13575408	J-35616-4A (PU)	J-38125-553	Not Available	Not Available	Not Available	Not Available
II	13575412	J-35616-14 (GN)	J-38125-553	12191819	Delphi 8	2	1
III	13575412	J-35616-14 (GN)	J-38125-553	12191819	Delphi 8	E	1
IV	13576356	J-35616-4A (PU)	J-38125-553	15304719	Delphi 19	2	5
V	Not Required	Not Available	No Tool Required	Not Required	Not Required	Not Required	Not Required

X395 Chassis Harness to Reductant Jumper Harness (LGH)

Pin	Size	Color	Circuit	Terminal Type ID	Option	Function	Pin	Size	Color	Circuit	Terminal Type ID	Option
A1	1	BK	150	II	—	Ground	A1	1	BK	150	V	—
A2	1	PK/BK	5293	II	—	Powertrain Main Relay Fused Supply (4)	A2	1	PK/BK	5293	V	—
A3	—	—	—	—	—	Not Occupied	A3	—	—	—	—	—
A4	2	BK	150	I	—	Ground	A4	2	BK	150	V	—

A4	2						A4	2				
A5	1	GY/WH	3675	IV	—	DEF Pump Heater Control	A5	1	GY/WH	3675	V	—
A6	0.5	D-BU	3105	III	—	DEF Smart Pump Control	A6	0.5	D-BU	3105	V	—
A7	0.5	D-GN	3101	III	—	DEF Reverting Valve High Control	A7	0.5	D-GN	3101	V	—
A8	0.5	GY	3106	III	—	DEF Pressure Sensor 5 Volt Reference	A8	0.5	GY	3106	V	—
B1	0.8	D-GN	7493	II	—	High Speed GMLAN Serial Data (+)(3)	B1	0.8	D-GN	7493	V	—
B2	0.8	D-GN	7493	II	—	High Speed GMLAN Serial Data (+)(3)	B2	0.8	D-GN	7493	V	—
B3	—	—	—	—	—	Not Occupied	B3	—	—	—	—	—
B4	1	BK	150	IV	—	Ground	B4	1	BK	150	V	—
B5	1	PU/WH	3199	IV	—	DEF Pressure Line Heater Control	B5	1	PU/WH	3199	V	—
B6	0.5	GY	3103	III	—	DEF Smart Pump Control	B6	0.5	GY	3103	V	—
B7	0.5	BK	3102	III	—	DEF Reverting Valve Low Control	B7	0.5	BK	3102	V	—

B8	0.5	BN	3108	III	—	DEF Pressure Sensor Signal	B8	0.5	BN	3108	V	—
C1	0.8	L-GN	7494	II	—	High Speed GMLAN Serial Data (-)(3)	C1	0.8	L-GN	7494	V	—
C2	0.8	L-GN	7494	II	—	High Speed GMLAN Serial Data (-)(3)	C2	0.8	L-GN	7494	V	—
C3	—	—	—	—	—	Not Occupied	C3	—	—	—	—	—
C4	1	BK	150	IV	—	Ground	C4	1	BK	150	V	—
C5	1	OG/WH	3677	IV	—	DEF Reservoir Heater Control	C5	1	OG/WH	3677	V	—
C6	0.5	TN	3104	III	—	DEF Smart Pump Low Reference	C6	0.5	—	3104	V	—
C7	—	—	—	—	—	Not Occupied	C7	—	—	—	—	—
C8	0.5	TN	3107	III	—	DEF Pressure Sensor Low Reference	C8	0.5	—	3107	V	—

X400 Right Rear Cargo Door to Body Harness (Passenger or Cargo)

—

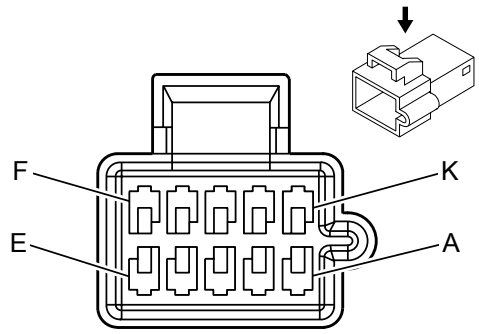

Connector Part Information

Harness Type: Right Rear Cargo Door

OEM Connector: Not Available

Service Connector: Service by Harness - See Part Catalog

Description: 10-Way F

Connector Part Information

Harness Type: Body

OEM Connector: 15324758

Service Connector: 19179279

Description: 10-Way M 150 Metri-Pack Series (BK)

Terminal Part Information

Terminal Type ID	Terminated Lead	Diagnostic Test Probe	Terminal Removal Tool	Service Terminal	Tray Name	Core Crimp	Insulation Crimp
I	Not Required	Not Available	No Tool Required	Not Required	Not Required	Not Required	Not Required
II	13575462	J-35616-3 (GY)	J-38125-12A	12047581	Delphi 2	E	A
III	13575462	J-35616-3 (GY)	J-38125-12A	12047581	Delphi 2	E	C

X400 Right Rear Cargo Door to Body Harness (Passenger or Cargo)

Pin	Size	Color	Circuit	Terminal Type ID	Option	Function	Pin	Size	Color	Circuit	Terminal Type ID	Option
K	0.35	L-BU	244	I	—	Passenger Door Lock Switch Lock Control	K	0.35	L-BU	244	III	—
J	0.35	PK/BK	1303	I	—	Lift Gate Ajar Switch Signal (1)	J	0.35	PK/BK	1303	III	—
H	0.35	L-GN	5926	I	—	Rear Access Open Switch Signal	H	0.35	L-GN	5926	III	—
G	1	—	1095	I	—	Right Rear Door Lock Actuator Unlock Control	G	1	TN/BK	1095	II	—

F	1	GY	295	I	—	Door Lock Actuator Lock Control	F	1	GY	295	II	—
E	0.35	D-BU	245	I	—	Passenger Door Lock Switch Unlock Control	E	0.35	D-BU	245	III	—
D	1	BK/WH	1051	I	—	Signal Ground	D	1	BK/WH	1051	II	—
B	1	OG	1955	I	—	Right Rear Midrange Speaker (-) Low Reference	B	1	OG	1955	II	—
A	1	—	1855	I	—	Right Rear Midrange Speaker Control (+)	A	1	TN	1855	II	—

X401 Left Tail Lamp Harness to Body Harness (Passenger or Cargo)

—

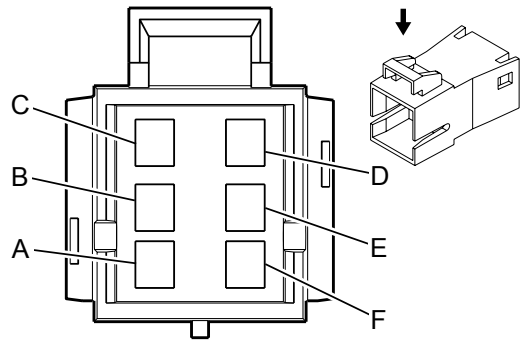

Connector Part Information

Harness Type: Auxiliary HVAC

OEM Connector: Not Available

Service Connector: Service by Harness - See Part Catalog

Description: 6-Way F

Connector Part Information

Harness Type: Body

OEM Connector: 12064754

Service Connector: 15305872

Description: 6-Way M 280 Metri-Pack Series, Self Lock (BK)

Terminal Part Information

Terminal Type ID	Terminated Lead	Diagnostic Test Probe	Terminal Removal Tool	Service Terminal	Tray Name	Core Crimp	Insulation Crimp
I	Not Required	Not Available	No Tool Required	Not Required	Not Required	Not Required	Not Required
II	Not Required	J-35616-5 (PU)	Not Required	Not Required	Not Required	Not Required	Not Required

X401 Left Tail Lamp Harness to Body Harness (Passenger or Cargo)

Pin	Size	Color	Circuit	Terminal Type ID	Option	Function	Pin	Size	Color	Circuit	Terminal Type ID	Option
F	0.8	L-GN	24	I	—	Backup Lamp Control	F	0.8	L-GN	24	II	—
D	0.8	BK	850	I	—	Ground	D	0.8	BK	850	II	—
B	1	YE	618	I	—	Left Rear Turn Signal Lamp Control	B	1	YE	618	II	—
A	0.5	BN	2509	I	—	Left Rear Park Lamp Control	A	0.5	BN	2509	II	—



X402 Right Tail Lamp Harness to Body Harness (Passenger or Cargo)

—

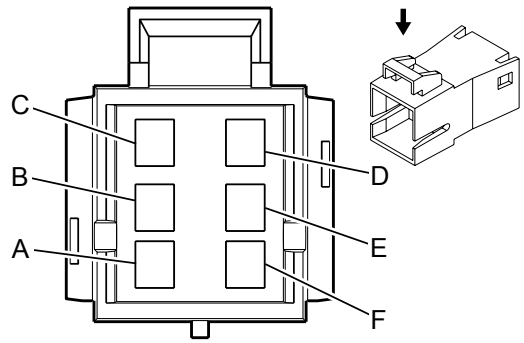

Connector Part Information

Harness Type: Rear Speaker

OEM Connector: Not Available

Service Connector: Service by Harness - See Part Catalog

Description: 6-Way F

Connector Part Information

Harness Type: Body

OEM Connector: 12064754

Service Connector: 15305872

Description: 6-Way M 280 Metri-Pack Series, Self Lock (BK)

Terminal Part Information

Terminal Type ID	Terminated Lead	Diagnostic Test Probe	Terminal Removal Tool	Service Terminal	Tray Name	Core Crimp	Insulation Crimp
I	Not Required	Not Available	No Tool Required	Not Required	Not Required	Not Required	Not Required
II	Not Required	J-35616-5 (PU)	Not Required	Not Required	Not Required	Not Required	Not Required

X402 Right Tail Lamp Harness to Body Harness (Passenger or Cargo)

Pin	Size	Color	Circuit	Terminal Type ID	Option	Function	Pin	Size	Color	Circuit	Terminal Type ID	Option
F	0.8	L-GN	24	I	—	Backup Lamp Control	F	0.8	L-GN	24	II	—
D	0.8	BK	1050	I	—	Ground	D	0.8	BK	1050	II	—
B	1	D-GN	619	I	—	Right Rear Turn Signal Lamp Control	B	1	D-GN	619	II	—
A	0.5	BN	2609	I	—	Right Rear Park Lamp Control	A	0.5	BN	2609	II	—

A	0.5	BN	2609	I	—	Right Rear Park Lamp Control	A	0.5	BN	2609	II	—

X403 Rear Cargo Door Harness to Body Harness (UVC)

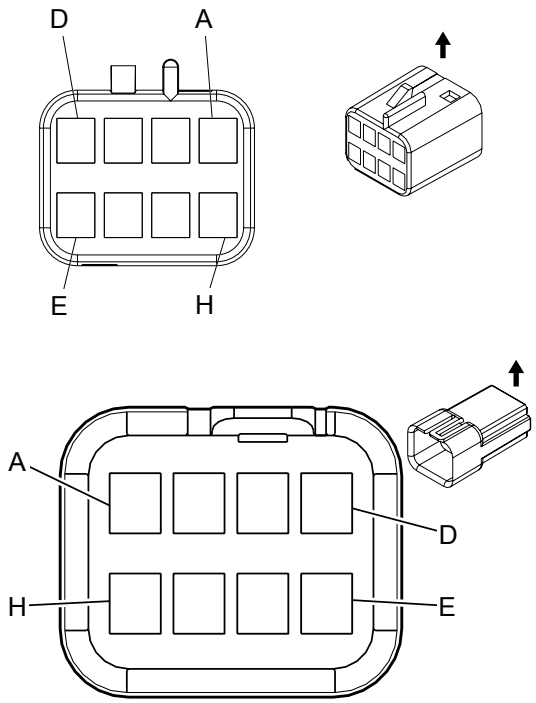

Connector Part Information

Harness Type: Right Rear Cargo Door

OEM Connector: 12047886

Service Connector: Service by Harness - See Part Catalog

Description: 8-Way F 150 Metri-Pack Series (BK)

Connector Part Information

Harness Type: Body

OEM Connector: 12089526

Service Connector: 13584253

Description: 8-Way M 150 Metri-Pack Series (BK)

Terminal Part Information

Terminal Type ID	Terminated Lead	Diagnostic Test Probe	Terminal Removal Tool	Service Terminal	Tray Name	Core Crimp	Insulation Crimp
I	Not Required	J-35616-14 (GN)	Not Required	Not Required	Not Required	Not Required	Not Required
II	Not Required	J-35616-3 (GY)	Not Required	Not Required	Not Required	Not Required	Not Required

X403 Rear Cargo Door Harness to Body Harness (UVC)

Pin	Size	Color	Circuit	Terminal Type ID	Option	Function	Pin	Size	Color	Circuit	Terminal Type ID	Option
A	0.5	YE	7641	I	—	Camera Rear Vision Signal +	A	0.5	WH	7641	II	—
B	0.5	L-BU	7642	I	—	Camera Rear Vision Signal (-)	B	0.5	L-BU	7642	II	—
C	—	—	—	—	—	Not Occupied	C	—	—	—	—	—

D	0.5	BK	351	I	—	Signal Ground	D	0.35	BK/WH	351	II	—
E	0.5	PK	239	I	—	Run/Crank Ignition 1 Voltage	E	0.5	PK	239	II	—
F	0.5	L-GN	24	I	—	Backup Lamp Control	F	0.5	L-GN	24	II	—
G	—	—	—	—	—	Not Occupied	G	—	—	—	—	—
H	0.5	BARE	6799	I	—	Camera Shield Ground	H	0.5	BARE	6799	II	—

X405 Cutaway Rear Lighting Connector to Chassis Harness (Cutaway)

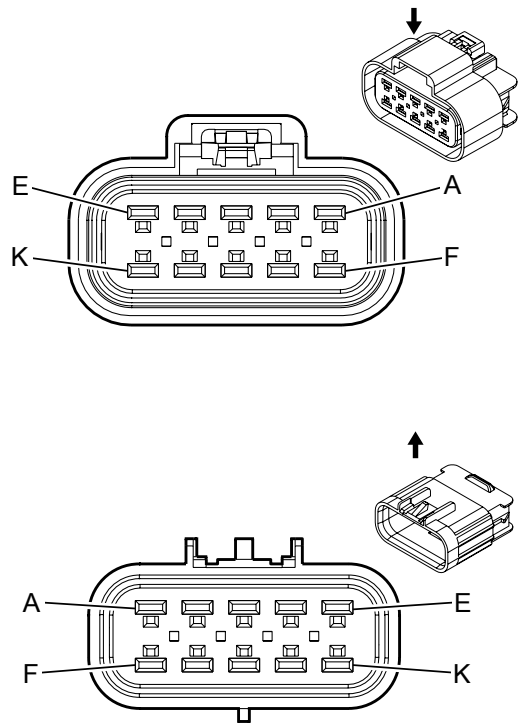

Connector Part Information

Harness Type: Chassis

OEM Connector: 15326660

Service Connector: 88986262

Description: 10-Way F 280 GT 5.8 Series, Sealed (BK)

Connector Part Information

Harness Type: Chassis

OEM Connector: 15326661

Service Connector: 88986245

Description: 10-Way M 280 GT 5.8 Series, Sealed (BK)

Terminal Part Information

Terminal Type ID	Terminated Lead	Diagnostic Test Probe	Terminal Removal Tool	Service Terminal	Tray Name	Core Crimp	Insulation Crimp
I	13576356	J-35616-4A (PU)	J-38125-553	15304719	Delphi 19	2	5
II	13576356	J-35616-4A (PU)	J-38125-553	Not Available	Not Available	Not Available	Not Available
III	13580826	J-35616-5 (PU)	J-38125-553	15304731	Delphi 19	2	5
IV	13580826	J-35616-5 (PU)	J-38125-553	15304731	Delphi 19	C	5

X405 Cutaway Rear Lighting Connector to Chassis Harness (Cutaway)

Pin	Size	Color	Circuit	Terminal Type ID	Option	Function	Pin	Size	Color	Circuit	Terminal Type ID	Option
A - B	—	—	—	—	—	Not Occupied	A - B	—	—	—	—	—
C	0.8	L-BU	1320	I	—	CHMSL Control	C	0.8	L-BU	1320	IV	—

	1	L-BU	1320	II	—			1	L-BU	1320	III	—
D	1	YE	618	II	—	Left Rear Turn Signal Lamp Control	D	1	YE	618	III	—
E	1	D-GN	619	II	—	Right Rear Turn Signal Lamp Control	E	1	D-GN	619	III	—
F	1	BN	2109	II	—	Trailer Park Lamp Control	F	1	BN	2109	III	—
G	0.8 1	BK D-BU	150 150	I II	— —	Ground	G	1 1	BK L-BU	150 150	III	— —
H	1	WH	1624	II	—	Trailer Backup Lamp Control	H	1 1	OG L-GN	1624 1624	III	— —
J	—	—	—	—	—	Not Occupied	J	—	—	—	—	—
K	0.8	D-BU/WH	149	I	—	Courtesy Lamp Control	K	0.8	D-BU/WH	149	IV	—

X407 Rear HVAC Harness to Body Harness (C36 or C69)

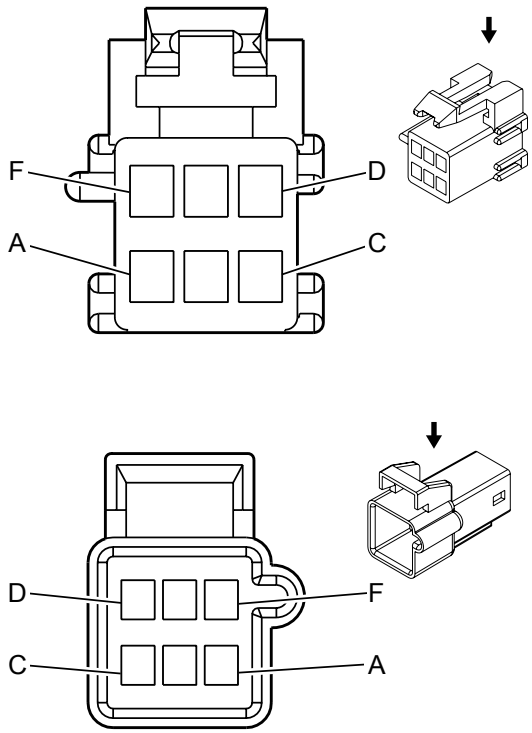

Connector Part Information

Harness Type: Auxiliary HVAC

OEM Connector: 12064762

Service Connector: Service by Harness - See Part Catalog

Description: 6-Way F 150 Metri-Pack Series (GY)

Connector Part Information

Harness Type: Body

OEM Connector: 12064763

Service Connector: 12101876

Description: 6-Way M 150 Metri-Pack Series (GY)

Terminal Part Information

Terminal Type ID	Terminated Lead	Diagnostic Test Probe	Terminal Removal Tool	Service Terminal	Tray Name	Core Crimp	Insulation Crimp
I	Not Required	J-35616-14 (GN)	Not Required	Not Required	Not Required	Not Required	Not Required
II	Not Required	J-35616-3 (GY)	Not Required	Not Required	Not Required	Not Required	Not Required

X407 Rear HVAC Harness to Body Harness (C36 or C69)

Pin	Size	Color	Circuit	Terminal Type ID	Option	Function	Pin	Size	Color	Circuit	Terminal Type ID	Option
A	0.35	OG	2775	I	—	Rear Air Temperature Motor Control	A	0.35	OG	2775	II	—
B	0.35	D-BU	1926	I	—	Auxiliary Blower Motor Low Speed Control	B	0.35	D-BU	1926	II	—

C	0.35	WH	1924	I	—	Auxiliary Blower Motor High Speed Control	C	0.35	WH	1924	II	—
D	0.35	OG	1925	I	—	Auxiliary Blower Motor Medium Speed Control	D	0.35	OG	1925	II	—
E	0.35	BN	341	I	—	Run Ignition 3 Voltage	E	0.35	BN	341	II	—
F	0.35	GY	2599	I	—	Rear Mode Motor Signal	F	0.35	GY	2599	II	—

X408 Rear Bumper Harness to Chassis Harness (UD7)

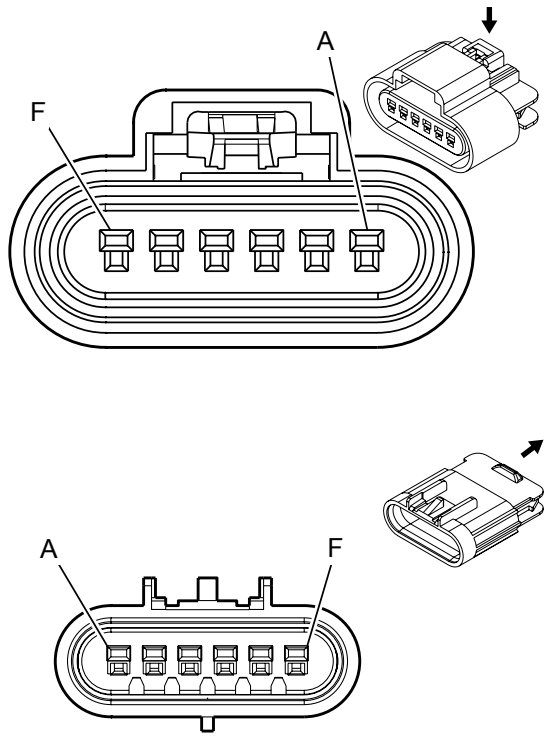

Connector Part Information

Harness Type: Rear Park Assist

OEM Connector: 15326829

Service Connector: Service by Harness - See Part Catalog

Description: 6-Way F 150 GT Series, Sealed (BK)

Connector Part Information

Harness Type: Chassis

OEM Connector: 15326833

Service Connector: 15326833

Description: 6-Way M 150 GT Series, Sealed (BK)

Terminal Part Information

Terminal Type ID	Terminated Lead	Diagnostic Test Probe	Terminal Removal Tool	Service Terminal	Tray Name	Core Crimp	Insulation Crimp
I	Not Required	J-35616-14 (GN)	Not Required	Not Required	Not Required	Not Required	Not Required
II	Not Required	J-35616-3 (GY)	Not Required	Not Required	Not Required	Not Required	Not Required

X408 Rear Bumper Harness to Chassis Harness (UD7)

Pin	Size	Color	Circuit	Terminal Type ID	Option	Function	Pin	Size	Color	Circuit	Terminal Type ID	Option
A	0.5	D-GN	2377	I	—	Right Rear Middle Object Sensor Signal	A	0.5	D-GN	2377	II	—
B	0.5	PU	2378	I	—	Right Rear Corner Object Sensor Signal	B	0.5	PU	2378	II	—

C	0.5	GY	2379	I	—	Object Sensor Low Reference	C	0.5	GY	2379	II	—
D	0.5	D-BU	2374	I	—	Object Sensor Control	D	0.5	D-BU	2374	II	—
E	0.5	YE	2375	I	—	Left Rear Corner Object Sensor Signal	E	0.5	YE	2375	II	—
F	0.5	OG	2376	I	—	Left Rear Middle Object Sensor Signal	F	0.5	OG	2376	II	—

X409 Rear HVAC Harness to Body Harness (C36 or C69)

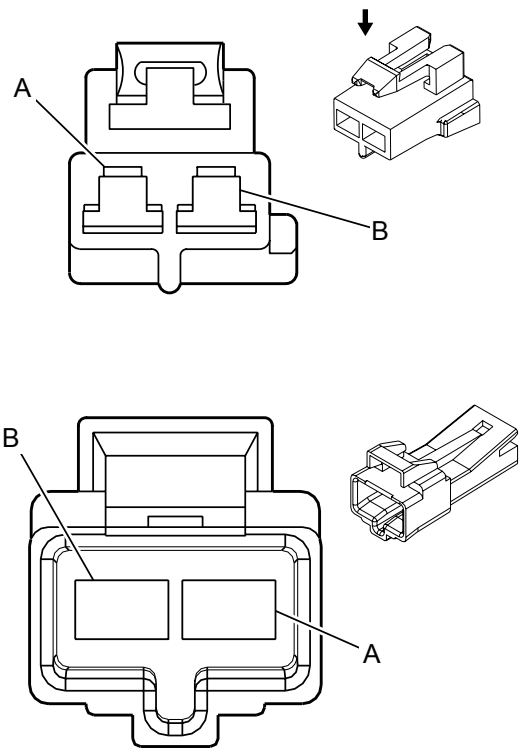

Connector Part Information

Harness Type: Auxiliary HVAC

OEM Connector: 12064749

Service Connector: Service by Harness - See Part Catalog

Description: 2-Way F 480 Metri-Pack Series (BK)

Connector Part Information

Harness Type: Body

OEM Connector: 12064750

Service Connector: 12101935

Description: 2-Way M 480 Metri-Pack Series (BK)

Terminal Part Information

Terminal Type ID	Terminated Lead	Diagnostic Test Probe	Terminal Removal Tool	Service Terminal	Tray Name	Core Crimp	Insulation Crimp
I	Not Required	J-35616-40 (BU)	Not Required	Not Required	Not Required	Not Required	Not Required
II	Not Required	J-35616-40 (BU)	Not Required	Not Required	Not Required	Not Required	Not Required

X409 Rear HVAC Harness to Body Harness (C36 or C69)

Pin	Size	Color	Circuit	Terminal Type ID	Option	Function	Pin	Size	Color	Circuit	Terminal Type ID	Option
A	5	RD/WH	1740	I	—	Battery Positive Voltage	A	5	RD/WH	1740	II	—
B	5	BK	850	I	—	Ground	B	5	BK	850	II	—

								5	BK	450		—

X411 Left Rear Cargo Door Harness to Body Harness (Passenger or Cargo)

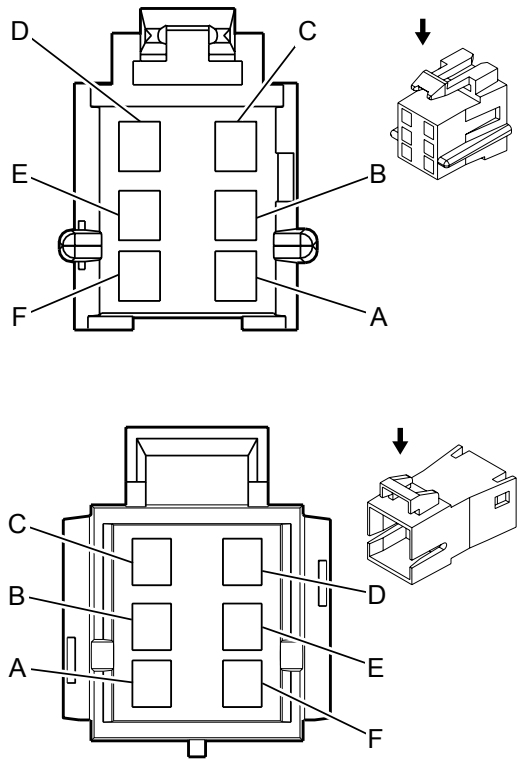

Connector Part Information

Harness Type: Left Rear Cargo Door

OEM Connector: 12064752

Service Connector: Service by Harness - See Part Catalog

Description: 6-Way F 280 Metri-Pack Series (BK)

Connector Part Information

Harness Type: Body

OEM Connector: 12064754

Service Connector: 15305872

Description: 6-Way M 280 Metri-Pack Series, Self Lock (BK)

Terminal Part Information

Terminal Type ID	Terminated Lead	Diagnostic Test Probe	Terminal Removal Tool	Service Terminal	Tray Name	Core Crimp	Insulation Crimp
I	Not Required	J-35616-4A (PU)	Not Required	Not Required	Not Required	Not Required	Not Required
II	Not Required	J-35616-5 (PU)	Not Required	Not Required	Not Required	Not Required	Not Required

X411 Left Rear Cargo Door Harness to Body Harness (Passenger or Cargo)

Pin	Size	Color	Circuit	Terminal Type ID	Option	Function	Pin	Size	Color	Circuit	Terminal Type ID	Option
A	1	TN	1859	I	—	Left Rear Midrange Speaker Control (+)	A	1	TN	1859	II	—
B	1	WH	1959	I	—	Left Rear Midrange Speaker (-) Low Reference	B	1	WH	1959	II	—

C	—	—	—	—	—	Not Occupied	C	—	—	—	—	—
D	5	PU	293	I	—	Rear Defog Element Control	D	5	PU	293	II	—
E	3	BK	850	I	—	Ground	E	3	BK	850	II	—
F	—	—	—	—	—	Not Occupied	F	—	—	—	—	—

X412 Right Rear Cargo Door to Body Harness (Passenger or Cargo)

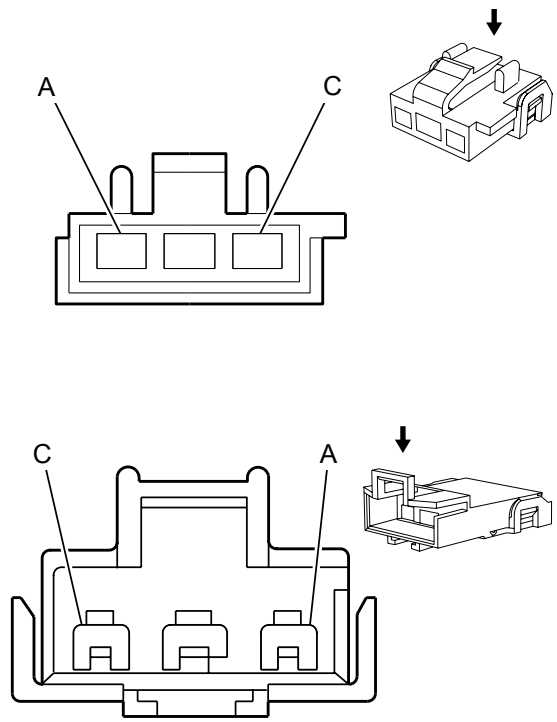

Connector Part Information

Harness Type: Right Rear Cargo Door

OEM Connector: 12020014

Service Connector: Service by Harness - See Part Catalog

Description: 3-Way F Weather Pack Series (BK)

Connector Part Information

Harness Type: Body

OEM Connector: 12045681

Service Connector: 12102634

Description: 3-Way M 280 Metri-Pack, 480 Series (BK)

Terminal Part Information

Terminal Type ID	Terminated Lead	Diagnostic Test Probe	Terminal Removal Tool	Service Terminal	Tray Name	Core Crimp	Insulation Crimp
I	Not Required	J-35616-40 (BU)	Not Required	Not Required	Not Required	Not Required	Not Required
II	Not Required	J-35616-4A (PU)	Not Required	Not Required	Not Required	Not Required	Not Required
III	Not Required	J-35616-40 (BU)	Not Required	Not Required	Not Required	Not Required	Not Required
IV	Not Required	J-35616-5 (PU)	Not Required	Not Required	Not Required	Not Required	Not Required

X412 Right Rear Cargo Door to Body Harness (Passenger or Cargo)

Pin	Size	Color	Circuit	Terminal Type ID	Option	Function	Pin	Size	Color	Circuit	Terminal Type ID	Option
A	0.5	BN	2509	II	—	Left Rear Park Lamp Control	A	0.5	BN	2509	IV	—

B	5	PU	293	I	—	Rear Defog Element Control	B	5	PU	293	III	—
C	0.5 3	BK BK	1050 1050	II	— —	Ground	C	3	BK	1050	IV	—

X413 Chassis Harness to Left Rear Wheel Speed Sensor Jumper Harness (JL4)

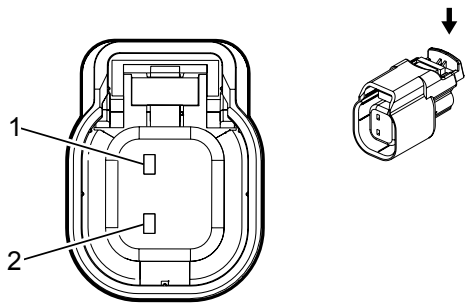

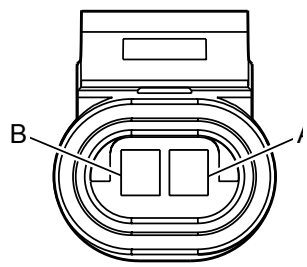

Connector Part Information

Harness Type: Chassis

OEM Connector: 13828712

Service Connector: Pending

Description: 2-Way F 1.5 Series, Sealed (BK)

Connector Part Information

Harness Type: Left Rear Wheel Spe

OEM Connector: 12162193

Service Connector: 88987993

Description: 2-Way F Metri-Pack 15

Terminal Part Information

Terminal Type ID	Terminated Lead	Diagnostic Test Probe	Terminal Removal Tool	Service Terminal	Tray/Position	Core Crimp	Insulation Crimp
I	13578914	J-35616-2A (GY)	J-38125-11A	7116-4102-08	9/7	E	1
II	Service by Harness – See Part Catalog	J-35616-14	J-38125-559	12124075	5/10	E	C

X413 Chassis Harness to Left Rear Wheel Speed Sensor Jumper Harness (JL4)

Pin	Size	Color	Circuit	T Type ID	Option	Function	Pin	Size	Color	Circuit	T Type ID	Option
A	0.5	OG	885	I	-	Low Reference	A	0.5	BK	885	II	-
B	0.5	TN	884	I	-	Left Rear Wheel Speed Sensor Signal	B	0.5	RD	884	II	-

X414 Chassis Harness to Right Rear Wheel Speed Sensor Jumper Harness (JL4)

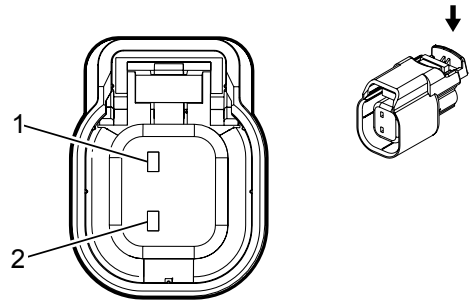

—

Connector Part Information

Harness Type: Right Rear Wheel Speed Sensor Jumper

OEM Connector: 13828712

Service Connector: Service by Harness - See Part Catalog

Description: 2-Way F 1.5 Series, Sealed (BK)

Connector Part Information

Harness Type: Chassis

OEM Connector: Not Available

Service Connector: Service by Harness - See Part Catalog

Description: 2-Way M

Terminal Part Information

Terminal Type ID	Terminated Lead	Diagnostic Test Probe	Terminal Removal Tool	Service Terminal	Tray Name	Core Crimp	Insulation Crimp
I	Not Required	J-35616-2A (GY)	Not Required	Not Required	Not Required	Not Required	Not Required
II	Not Required	Not Available	No Tool Required	Not Required	Not Required	Not Required	Not Required

X414 Chassis Harness to Right Rear Wheel Speed Sensor Jumper Harness (JL4)

Pin	Size	Color	Circuit	Terminal Type ID	Option	Function	Pin	Size	Color	Circuit	Terminal Type ID	Option
1	0.5	WH	883	I	—	Wheel Speed Sensor Low Reference Right Rear	1	0.5	WH	883	II	—
2	0.5	BN	882	I	—	Wheel Speed Sensor Signal Right Rear	2	0.5	BN	882	II	—

X415 Roof Center Speaker Harness to Body Harness (Passenger or Cargo)

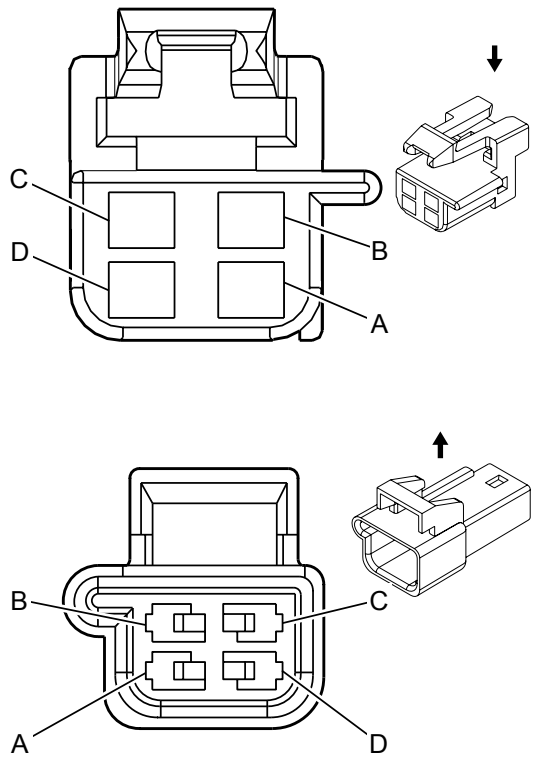

Connector Part Information

Harness Type: Rear Speaker

OEM Connector: 12064760

Service Connector: Service by Harness - See Part Catalog

Description: 4-Way F 150 Metri-Pack Series (BK)

Connector Part Information

Harness Type: Body

OEM Connector: 12065658

Service Connector: 12085206

Description: 4-Way M 150 Metri-Pack Series (BK)

Terminal Part Information

Terminal Type ID	Terminated Lead	Diagnostic Test Probe	Terminal Removal Tool	Service Terminal	Tray Name	Core Crimp	Insulation Crimp
I	Not Required	J-35616-14 (GN)	Not Required	Not Required	Not Required	Not Required	Not Required
II	Not Required	J-35616-3 (GY)	Not Required	Not Required	Not Required	Not Required	Not Required

X415 Roof Center Speaker Harness to Body Harness (Passenger or Cargo)

Pin	Size	Color	Circuit	Terminal Type ID	Option	Function	Pin	Size	Color	Circuit	Terminal Type ID	Option
A	1	WH	1959	I	—	Left Rear Midrange Speaker (-) Low Reference	A	1	WH	1959	II	—
B	1	TN	1859	I	—	Left Rear Midrange Speaker Control (+)	B	1	TN	1859	II	—

C	1	OG	1955	I	—	Right Rear Midrange Speaker (-) Low Reference	C	1	OG	1955	II	—
D	1	TN	1855	I	—	Right Rear Midrange Speaker Control (+)	D	1	TN	1855	II	—

X417 Dome Lamp Harness to Body Harness (Cargo without YF7)

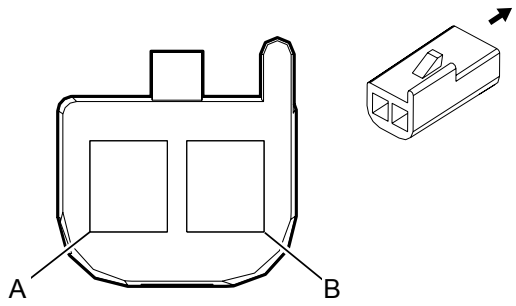

—

Connector Part Information

Harness Type: Body

OEM Connector: 12047662

Service Connector: 12085535

Description: 2-Way F 150 Metri-Pack Series (BK)

Connector Part Information

Harness Type: Dome Lamp

OEM Connector: Not Available

Service Connector: Service by Harness - See Part Catalog

Description: 2-Way M

Terminal Part Information

Terminal Type ID	Terminated Lead	Diagnostic Test Probe	Terminal Removal Tool	Service Terminal	Tray Name	Core Crimp	Insulation Crimp
I	Not Required	J-35616-14 (GN)	Not Required	Not Required	Not Required	Not Required	Not Required
II	Not Required	Not Available	No Tool Required	Not Required	Not Required	Not Required	Not Required

X417 Dome Lamp Harness to Body Harness (Cargo without YF7)

Pin	Size	Color	Circuit	Terminal Type ID	Option	Function	Pin	Size	Color	Circuit	Terminal Type ID	Option
A	0.8	D-BU/WH	149	I	—	Courtesy Lamp Control	A	0.8	D-BU/WH	149	II	—
B	0.8	BK	850	I	—	Ground	B	0.8	BK	850	II	—

X419 Center High Mounted Stop Lamp Harness to Body Harness (Passenger or Cargo)

—

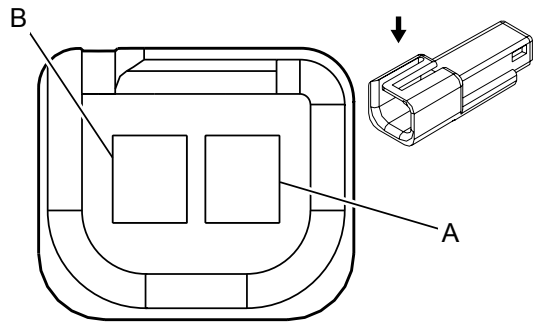

Connector Part Information

Harness Type: Center High Mounted Stop Lamp

OEM Connector: Not Available

Service Connector: Service by Harness - See Part Catalog

Description: 2-Way F

Connector Part Information

Harness Type: Body

OEM Connector: 12048457

Service Connector: 13584278

Description: 2-Way M 150 Metri-Pack Series (BK)

Terminal Part Information

Terminal Type ID	Terminated Lead	Diagnostic Test Probe	Terminal Removal Tool	Service Terminal	Tray Name	Core Crimp	Insulation Crimp
I	Not Required	Not Available	No Tool Required	Not Required	Not Required	Not Required	Not Required
II	Not Required	J-35616-3 (GY)	Not Required	Not Required	Not Required	Not Required	Not Required

X419 Center High Mounted Stop Lamp Harness to Body Harness (Passenger or Cargo)

Pin	Size	Color	Circuit	Terminal Type ID	Option	Function	Pin	Size	Color	Circuit	Terminal Type ID	Option
B	0.8	BK	850	I	—	Ground	B	0.8	BK	850	II	—
A	0.8	L-BU	1320	I	—	CHMSL Control	A	0.8	L-BU	1320	II	—

X420 Headliner Harness to Body Harness (Passenger or Cargo)

—

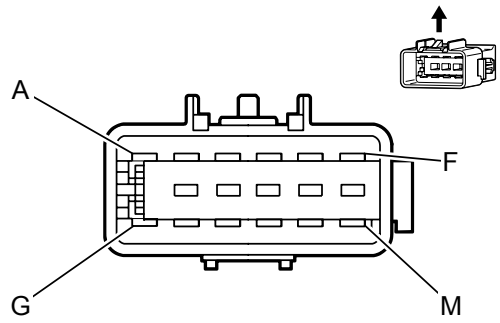

Connector Part Information

Harness Type: Rear Headliner

OEM Connector: Not Available

Service Connector: Service by Harness - See Part Catalog

Description: 12-Way F

Connector Part Information

Harness Type: Body

OEM Connector: 15326942

Service Connector: 15326942

Description: 12-Way M 280 GT Series (BK)

Terminal Part Information

Terminal Type ID	Terminated Lead	Diagnostic Test Probe	Terminal Removal Tool	Service Terminal	Tray Name	Core Crimp	Insulation Crimp
I	Not Required	Not Available	No Tool Required	Not Required	Not Required	Not Required	Not Required
II	13575507	J-35616-5 (PU)	J-38125-553	15304724	Delphi 8	2	A
III	13575511	J-35616-5 (PU)	J-38125-553	15304722	Delphi 8	E	C

X420 Headliner Harness to Body Harness (Passenger or Cargo)

Pin	Size	Color	Circuit	Terminal Type ID	Option	Function	Pin	Size	Color	Circuit	Terminal Type ID	Option
M	0.5	PK/BK	5265	I	—	Dual Logic Module Rear Control Signal	M	0.5	PK/BK	5265	III	—
L	0.5	PU/WH	5264	I	—	Dual Logic Module Rear Mode Signal	L	0.5	PU/WH	5264	III	—
K	0.5	BN	5263	I	—	Dual Logic Module Rear Temperature Signal	K	0.5	BN	5263	III	—
J	0.8	OG	1732	I	—	Electronic Control Unit 12 Volt Reference (3)	J	0.8	OG	1732	II	—

H	0.8	BK	1050	I	—	Ground	H	0.8	BK	1050	II	—
G	0.35	BN	341	I	—	Run Ignition 3 Voltage	G	0.35	BN	341	III	—
F	0.5	D-BU	1926	I	—	Auxiliary Blower Motor Low Speed Control	F	0.5	D-BU	1926	III	—
E	0.5	OG	1925	I	—	Auxiliary Blower Motor Medium Speed Control	E	0.5	OG	1925	III	—
D	0.5	WH	1924	I	—	Auxiliary Blower Motor High Speed Control	D	0.5	WH	1924	III	—
C	0.35	BN/WH	230	I	—	Instrument Panel Lamp Dimming Control	C	0.35	BN/WH	230	III	—
B	0.8	D-BU/WH	149	I	—	Courtesy Lamp Control	B	0.8	D-BU/WH	149	II	—
A	0.8	D-BU/WH	149	I	—	Courtesy Lamp Control	A	0.8	D-BU/WH	149	II	—

X460 Chassis Harness to Trailer Provision (Cutaway with UY7 and NE7)

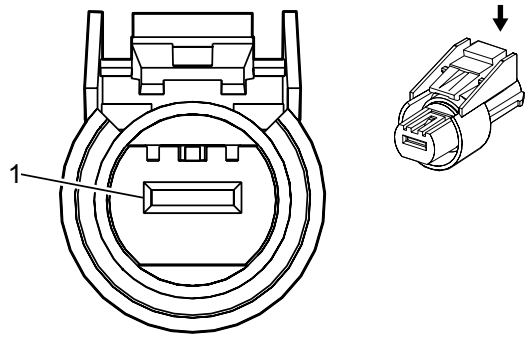

—

Connector Part Information

Harness Type: Chassis

OEM Connector: 15326120

Service Connector: 15326120

Description: 1-Way F 800 Metri-Pack Series, Sealed (BK)

Connector Part Information

Harness Type: Trailer Provision

OEM Connector: Not Available

Service Connector: Service by Harness - See Part Catalog

Description: 1-Way M

Terminal Part Information

Terminal Type ID	Terminated Lead	Diagnostic Test Probe	Terminal Removal Tool	Service Terminal	Tray Name	Core Crimp	Insulation Crimp
I	Not Required	J-35616-44 (YE)	Not Required	Not Required	Not Required	Not Required	Not Required
II	Not Required	Not Available	No Tool Required	Not Required	Not Required	Not Required	Not Required

X460 Chassis Harness to Trailer Provision (Cutaway with UY7 and NE7)

Pin	Size	Color	Circuit	Terminal Type ID	Option	Function	Pin	Size	Color	Circuit	Terminal Type ID	Option
1	8	WH	22	I	—	Trailer Ground	1	8	WH	22	II	—

X500 Driver Door Harness to Body Harness

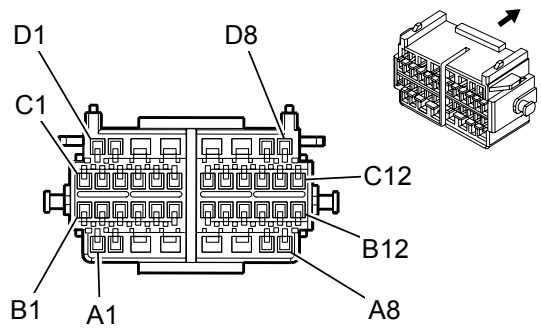

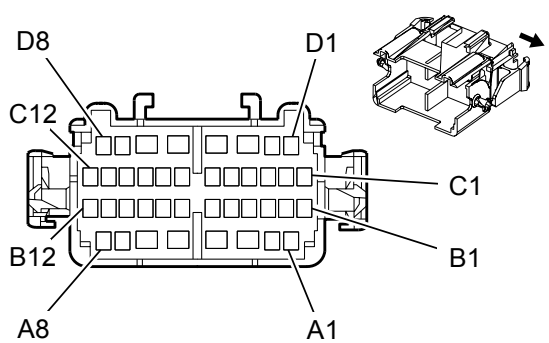

Connector Part Information

Harness Type: Driver Door

OEM Connector: 15448129

Service Connector: Service by Harness - See Part Catalog

Description: 40-Way F 150, 280 GT Series (BK)

Connector Part Information

Harness Type: Body

OEM Connector: 15416976

Service Connector: 89047197

Description: 40-Way M 150, 280 GT Series (BK)

Terminal Part Information

Terminal Type ID	Terminated Lead	Diagnostic Test Probe	Terminal Removal Tool	Service Terminal	Tray Name	Core Crimp	Insulation Crimp
I	Not Required	J-35616-14 (GN)	Not Required	Not Required	Not Required	Not Required	Not Required
II	Not Required	J-35616-4A (PU)	Not Required	Not Required	Not Required	Not Required	Not Required
III	13575502	J-35616-3 (GY)	J-38125-553	15304702	Delphi 19	2	4
IV	13575502	J-35616-3 (GY)	J-38125-553	15304702	Delphi 19	E	4
V	13575502	J-35616-3 (GY)	J-38125-553	15304702	Delphi 19	E	C
VI	13575510	J-35616-5 (PU)	J-38125-553	15304724	Delphi 8	A	D
VII	13575511	J-35616-5 (PU)	J-38125-553	15304722	Delphi 8	E	C

X500 Driver Door Harness to Body Harness

Pin	Size	Color	Circuit	Terminal Type ID	Option	Function	Pin	Size	Color	Circuit	Terminal Type ID	Option

A1	0.35	TN	126	I	—	Left Front Door Open Switch Signal	A1	0.35	TN	126	V	—
A2 - A4	—	—	—	—	—	Not Occupied	A2 - A4	—	—	—	—	—
A5	0.35 3	BK BK	450 450	II	— —	Ground	A5	3	BK	450	VI	—
A6	0.35	BN/WH	230	II	—	Instrument Panel Lamp Dimming Control	A6	0.35	BN/WH	230	VII	—
A7	0.8	OG	2267	I	—	Mirror Heating Element Control	A7	0.8	OG	2267	III	—
A8	0.35	PU/WH	889	I	—	Right Mirror Motor Down Control	A8	0.5	PU/WH	889	IV	—
B1	0.35	OG/BK	781	I	—	Driver Door Lock Switch Unlock Signal	B1	0.35	OG/BK	781	V	—
B2	0.35	PK/BK	780	I	—	Driver Door Lock Switch Lock Signal	B2	0.35	PK/BK	780	V	—
B3	0.35	GY/BK	745	I	—	Left Front Door Ajar Switch Signal	B3	0.35	GY/BK	745	V	—
B4	0.35	BK	450	I	—	Ground	B4	0.35	BK	450	V	—
B5 - B6	—	—	—	—	—	Not Occupied	B5 - B6	—	—	—	—	—
B7	0.8	TN	694	I	—	Driver Door Lock Actuator Unlock Control	B7	0.8	TN	694	III	—

B7	0.8					Actuator Unlock Control	B7	0.8				
B8	0.8	GY	295	I	—	Door Lock Actuator Lock Control	B8	0.8	GY	295	III	—
B9 - B11	—	—	—	—	—	Not Occupied	B9 - B11	—	—	—	—	—
B12	0.8	D-BU	1857	I	—	Left Front Midrange Speaker Control (+)	B12	0.8	D-BU	1857	III	—
C1	0.5	PU/WH	6628	I	—	Left Front Side Impact Sensing Module Low Reference	C1	0.5	PU/WH	6628	IV	—
C2	0.5	WH	2132	I	—	Left Front Side Impact Sensing Module Signal	C2	0.5	WH	2132	IV	—
C3 - C6	—	—	—	—	—	Not Occupied	C3 - C6	—	—	—	—	—
C7	0.5	L-BU/WH	1314	I	—	Left Front Turn Signal Lamp Control	C7	0.5	L-BU/WH	1314	IV	—
C8	0.5	RD/WH	4340	I	—	Battery Positive Voltage	C8	0.5	RD/WH	4340	IV	—
C9 - C11	—	—	—	—	—	Not Occupied	C9 - C11	—	—	—	—	—
C12	0.8	L-BU	1957	I	—	Left Front Midrange Speaker (-) Low Reference	C12	0.8	L-BU	1957	III	—
D1 - D3	—	—	—	—	—	Not Occupied	D1 - D3	—	—	—	—	—
D4	3	TN	167	II	—	Power Window Master Switch Right Front Down Signal	D4	3	TN	167	VI	—
D5	3	L-BU	166	II	—	Power Window Master Switch Right Front Up Signal	D5	3	L-BU	166	VI	—

D6	3	D-GN	1001	II	—	Retained Accessory Power Ignition	D6	3	D-GN	1001	VI	—
D7	0.35	BN/WH	1498	I	—	Right Mirror Motor Up Control	D7	0.5	BN/WH	1498	IV	—
D8	0.35	OG/WH	881	I	—	Right Mirror Motor Right Control	D8	0.5	OG/WH	881	IV	—

X501 Driver Side Impact Sensor Jumper Harness to Driver Door Harness (ASF)

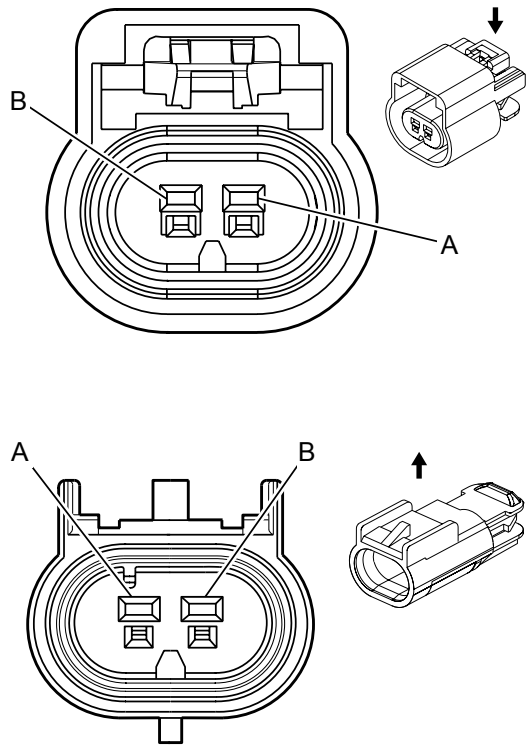

Connector Part Information

Harness Type: Air Bag Jumper

OEM Connector: 13510085

Service Connector: Service by Harness - See Part Catalog

Description: 2-Way F 150 GT Series, Sealed (BK)

Connector Part Information

Harness Type: Driver Door

OEM Connector: 13510099

Service Connector: Service by Harness - See Part Catalog

Description: 2-Way M 150 GT Series, Sealed (BK)

Terminal Part Information

Terminal Type ID	Terminated Lead	Diagnostic Test Probe	Terminal Removal Tool	Service Terminal	Tray Name	Core Crimp	Insulation Crimp
I	Not Required	J-35616-14 (GN)	Not Required	Not Required	Not Required	Not Required	Not Required
II	Not Required	J-35616-3 (GY)	Not Required	Not Required	Not Required	Not Required	Not Required

X501 Driver Side Impact Sensor Jumper Harness to Driver Door Harness (ASF)

Pin	Size	Color	Circuit	Terminal Type ID	Option	Function	Pin	Size	Color	Circuit	Terminal Type ID	Option
A	0.5	PU/WH	6628	I	—	Left Front Side Impact Sensing Module Low Reference	A	0.5	PU/WH	6628	II	—
B	0.5	WH	2132	I	—	Left Front Side Impact Sensing Module Signal	B	0.5	WH	2132	II	—

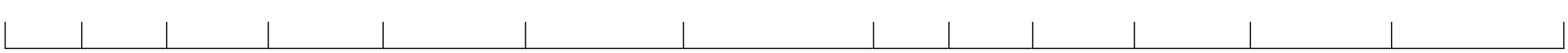

X600 Passenger Door Harness to Body Harness

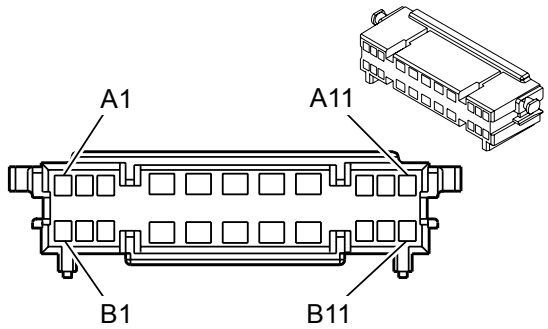

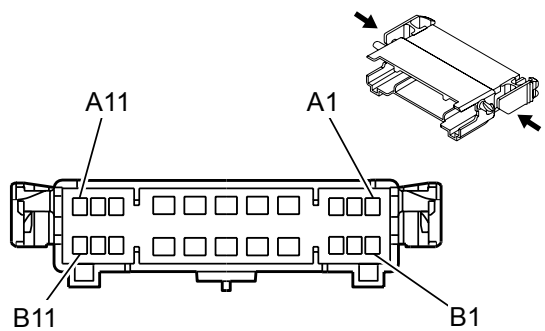

Connector Part Information

Harness Type: Passenger Door

OEM Connector: 15326063

Service Connector: Service by Harness - See Part Catalog

Description: 22-Way F 150 GT, 280 Series (GY)

Connector Part Information

Harness Type: Body

OEM Connector: 15326064

Service Connector: 15326064

Description: 22-Way M 150 GT, 280 Series (GY)

Terminal Part Information

Terminal Type ID	Terminated Lead	Diagnostic Test Probe	Terminal Removal Tool	Service Terminal	Tray Name	Core Crimp	Insulation Crimp
I	Not Required	J-35616-14 (GN)	Not Required	Not Required	Not Required	Not Required	Not Required
II	Not Required	J-35616-4A (PU)	Not Required	Not Required	Not Required	Not Required	Not Required
III	13575502	J-35616-3 (GY)	J-38125-553	15304702	Delphi 19	2	4
IV	13575502	J-35616-3 (GY)	J-38125-553	15304702	Delphi 19	E	4
V	13575502	J-35616-3 (GY)	J-38125-553	15304702	Delphi 19	E	C
VI	13575507	J-35616-5 (PU)	J-38125-553	15304724	Delphi 8	2	A
VII	13575510	J-35616-5 (PU)	J-38125-553	15304724	Delphi 8	A	D
VIII	13575511	J-35616-5 (PU)	J-38125-553	15304722	Delphi 8	E	C

X600 Passenger Door Harness to Body Harness

Pin	Size	Color	Circuit	Terminal Type	Option	Function	Pin	Size	Color	Circuit	Terminal Type	Option

Pin	Size	Color	Circuit	Terminal Type ID	Option	Function	Pin	Size	Color	Circuit	Terminal Type ID	Option
A1	0.8	OG	1853	I	—	Right Front Midrange Speaker Control (+)	A1	0.8	OG	1853	III	—
A2	0.8	TN	294	I	—	Door Lock Actuator Unlock Control	A2	0.8	TN	294	III	—
A3	0.8	OG	2267	I	—	Mirror Heating Element Control	A3	0.8	OG	2267	III	—
A4	3	L-BU	166	II	—	Power Window Master Switch Right Front Up Signal	A4	3	L-BU	166	VII	—
A5	0.35 0.8	BK BK	1850 1850	II	— —	Ground	A5	0.8	BK	1850	VI	—
A6	0.35	BN/WH	1498	II	—	Right Mirror Motor Up Control	A6	0.5	BN/WH	1498	VIII	—
A7	0.35	OG/WH	881	II	—	Right Mirror Motor Right Control	A7	0.5	OG/WH	881	VIII	—
A8	0.35	TN/WH	746	II	—	Right Front Door Ajar Switch Signal	A8	0.35	TN/WH	746	VIII	—
A9	0.35	BK	1850	I	—	Ground	A9	0.35	BK	1850	V	—
A10	0.5	D-GN	2134	I	—	Right Front Side Impact Sensing Module Signal	A10	0.5	D-GN	2134	IV	—

A11	0.35	L-BU	244	I	—	Passenger Door Lock Switch Lock Control	A11	0.35	L-BU	244	V	—
B1	0.8	D-GN	1953	I	—	Right Front Midrange Speaker (-) Low Reference	B1	0.8	D-GN	1953	III	—
B2	0.8	GY	295	I	—	Door Lock Actuator Lock Control	B2	0.8	GY	295	III	—
B3	0.5	D-BU/WH	1315	I	—	Right Front Turn Signal Lamp Control	B3	0.5	D-BU/WH	1315	IV	—
B4	3	TN	167	II	—	Power Window Master Switch Right Front Down Signal	B4	3	TN	167	VII	—
B5	3	D-GN	1001	II	—	Retained Accessory Power Ignition	B5	3	D-GN	1001	VII	—
B6	0.35	BN/WH	230	II	—	Instrument Panel Lamp Dimming Control	B6	0.35	BN/WH	230	VIII	—
B7	0.35	PU/WH	889	II	—	Right Mirror Motor Down Control	B7	0.5	PU/WH	889	VIII	—
B8	0.35	L-GN	1177	II	—	Right Front Door Open Switch Signal	B8	0.35	L-GN	1177	VIII	—
B9	—	—	—	—	—	Not Occupied	B9	—	—	—	—	—
B10	0.5	WH/BK	6629	I	—	Right Front Side Impact Sensing Module Low Reference	B10	0.5	WH/BK	6629	IV	—
B11	0.35	D-BU	245	I	—	Passenger Door Lock	B11	0.35	D-BU	245	V	—

B11	0.35					Switch Unlock Control	B11	0.35			

X601 Passenger Side Impact Sensor Jumper Harness to Passenger Door Harness (ASF)

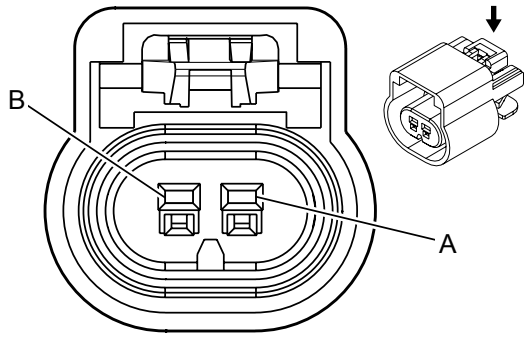

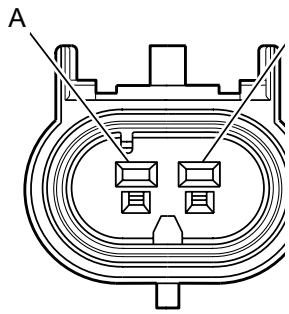

Connector Part Information

Harness Type: Passenger Side Impact Sensor Jumper

OEM Connector: 13510085

Service Connector: 13580114

Description: 2-Way F GT 150 Series Sealed (BK)

Connector Part Information

Harness Type: Passenger Door

OEM Connector: 13510099

Service Connector: 13580103

Description: 2-Way M GT 150 Serie

Terminal Part Information

Terminal Type ID	Terminated Lead	Diagnostic Test Probe	Terminal Removal Tool	Service Terminal	Tray	Core Crimp	Insulation Crimp
I	13575413	J-35616-2A (GY)	J-38125-553	12191819	8	E	1
II	13575398	J-35616-3 (GY)	J-38125-553	15326269	19	E	4

X601 Passenger Side Impact Sensor Jumper Harness to Passenger Door Harness (ASF)

Pin	Size	Color	Circuit	T Type ID	Option	Function	Pin	Size	Color	Circuit	T Type ID	Option
A	0.5	PU/WH	6628	I	-	Low Reference	A	0.5	WH/BK	6629	II	-
B	0.5	WH	2132	I	-	Side Impact Sensing Module– Right– Signal	B	0.5	D-GN	2134	II	-

X901 Defogger Jumper Harness to Left Rear Cargo Door Harness (C49 with A12)

—

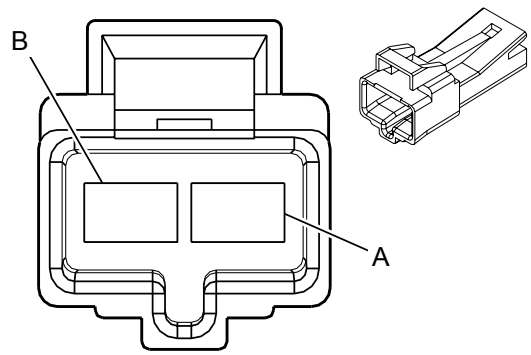

Connector Part Information

Harness Type: —

OEM Connector: Not Available

Service Connector: —

Description: —

Connector Part Information

Harness Type: Left Rear Cargo Door

OEM Connector: 12064750

Service Connector: Service by Harness - See Part Catalog

Description: 2-Way M 480 Metri-Pack Series (BK)

Terminal Part Information

Terminal Type ID	Terminated Lead	Diagnostic Test Probe	Terminal Removal Tool	Service Terminal	Tray Name	Core Crimp	Insulation Crimp
I	Not Required	J-35616-40 (BU)	Not Required	Not Required	Not Required	Not Required	Not Required

X901 Defogger Jumper Harness to Left Rear Cargo Door Harness (C49 with A12)

Pin	Size	Color	Circuit	Terminal Type ID	Option	Function	Pin	Size	Color	Circuit	Terminal Type ID	Option
B	—	—	—	—	—	Ground	B	3	BK	850	I	—

X902 Rear Window Defogger Jumper Harness to Right Rear Cargo Door Harness (C49 with A12)

—

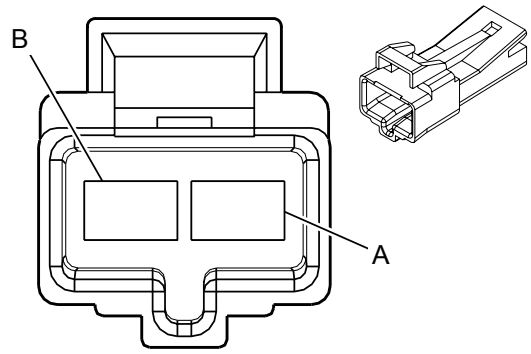

Connector Part Information

Harness Type: Rear Window Defogger Jumper

OEM Connector: Not Available

Service Connector: Service by Harness - See Part Catalog

Description: 2-Way F

Connector Part Information

Harness Type: Right Rear Cargo Door

OEM Connector: 12064750

Service Connector: Service by Harness - See Part Catalog

Description: 2-Way M 480 Metri-Pack Series (BK)

Terminal Part Information

Terminal Type ID	Terminated Lead	Diagnostic Test Probe	Terminal Removal Tool	Service Terminal	Tray Name	Core Crimp	Insulation Crimp
I	Not Required	Not Available	No Tool Required	Not Required	Not Required	Not Required	Not Required
II	Not Required	J-35616-40 (BU)	Not Required	Not Required	Not Required	Not Required	Not Required

X902 Rear Window Defogger Jumper Harness to Right Rear Cargo Door Harness (C49 with A12)

Pin	Size	Color	Circuit	Terminal Type ID	Option	Function	Pin	Size	Color	Circuit	Terminal Type ID	Option
B	3	BK	1050	I	—	Ground	B	3	BK	1050	II	—
A	5	PU	293	I	—	Rear Defog Element Control	A	5	PU	293	II	—

Safety and Security

Immobilizer

Schematic and Routing Diagrams

Immobilizer Schematics

Immobilizer

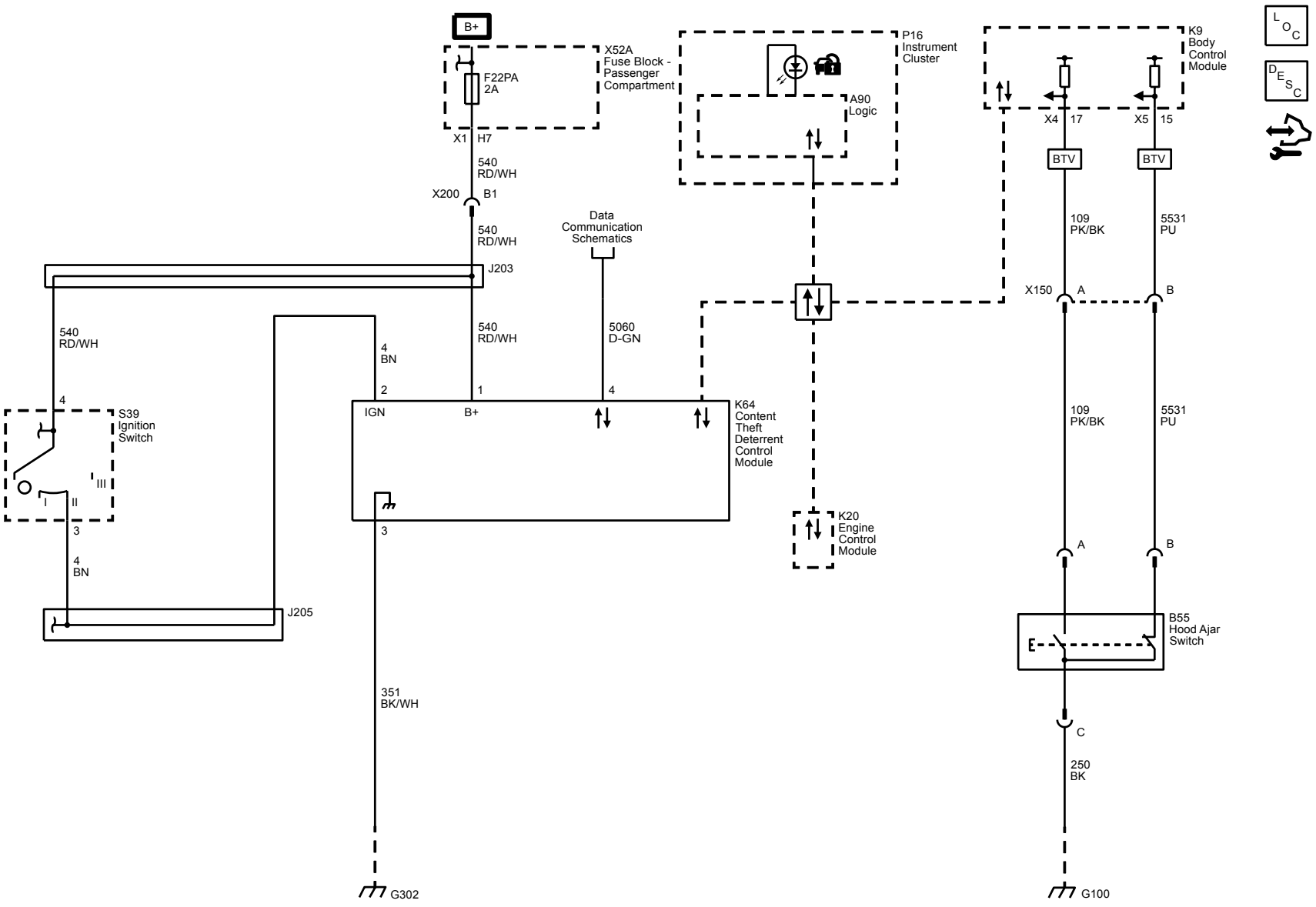

Description and Operation

Immobilizer Description and Operation

The immobilizer system functions are provided by the theft deterrent module (TDM) and the engine control module (ECM). When an ignition key is inserted into the ignition lock cylinder and the ignition is switched ON, the transponder embedded in the head of the key is energized by the exciter coil surrounding the ignition lock cylinder. This exciter coil is part of the TDM. The energized transponder transmits a signal that contains its unique value, which is received by the TDM. The TDM then compares this value to a value stored in memory. If the values match, the TDM will send the prerelease password via the serial data circuit to the ECM. If the transponders unique value is incorrect, the TDM will send the fuel disable password to the ECM.

When the ECM receives the TDM prerelease password, the ECM will challenge the password. The ECM sends this challenge back to the TDM via the serial data circuit. Both the ECM and TDM perform a calculation on this challenge. If the calculated response from the TDM equals the calculation performed by the ECM, the ECM will allow vehicle starting.

The components of the theft system are as follows:

- TDM
- ECM
- Ignition key (Transponder)
- Security indicator

Theft Deterrent Module (TDM)

Vehicles with steering column mounted ignition switches have the exciter integral with the theft deterrent module (TDM), which is located within the steering column. The TDM can learn up to 10 keys (transponder values).

The TDM uses the following inputs:

- Battery voltage
- Ignition switched voltage
- Ground circuit

The theft deterrent control module uses the following outputs:

- Password exchange
- Challenge/response with the engine control module (ECM)

When an ignition key is inserted into the ignition lock cylinder and the ignition is switched ON, the transponder embedded in the head of the key is energized by the exciter coils surrounding the ignition lock cylinder. The energized transponder transmits a signal that contains its unique value, which is received by the TDM. The TDM then compares this value to the learned key code stored in memory. The TDM then performs one of the following functions:

- If the transponder value matches the values stored in the TDM memory, the TDM will send the prerelease password to the ECM via the serial data circuit.
- If the transponders unique value does not match the value stored in the TDM, the TDM will send the fuel disable message to the ECM via the serial data circuit.
- If the TDM is unable to measure the ignition key transponder value, the TDM will not send any messages to the ECM.

Engine Control Module (ECM)

When the engine control module (ECM) receives the theft deterrent module (TDM) prerelease password, the ECM will challenge the password. The ECM sends this challenge back to the TDM via the serial data circuit. Both the ECM and TDM perform a calculation on this challenge. If the calculated response from the TDM equals the calculation performed by the ECM, the ECM will allow vehicle starting.

The ECM will disable vehicle starting if any of the following conditions occur:

- The prerelease password is invalid.
- The fuel disable password is sent by the TDM.
- No passwords are received. There is no communication with the TDM.
- The TDM calculated response to the challenge does not equal the calculation performed by the ECM.

The Ignition Key (Transponder)

Note: The ignition key will be stamped with a + or a + surrounded by a circle. This symbol only identifies the key as a PassKey III+ transponder key and is not a reliable way to determine if a particular key is the correct key for a vehicle. Service parts may have a different stamped symbol than the production part. The only way to determine the proper key for a vehicle is by referencing the parts catalog.

The ignition key for PassKey III+ (PK3+) equipped vehicles is a standard ignition key with a transponder located in the plastic head of the key. The transponder value is fixed and unable to be changed. The immobilizer system uses the ignition key transponder value to determine if a valid ignition key is being used to start the vehicle. There are approximately 3 trillion possible transponder values. There are no visible electrical contacts. The immobilizer system use the following types of ignition keys:

Master Keys

Master keys have a black plastic head for full access operation of the vehicle. Master keys may perform the following functions:

- Start the vehicle.
- Lock/unlock all of the door locks and rear compartment.
- Lock/unlock all of the storage compartments.

Valet Keys

Important: Valet keys are NOT standard equipment on all GM vehicle lines.

Valet keys have a gray plastic head and are for restricted operation of the vehicle. Valet keys may perform the following functions:

- Start the vehicle.
- Lock/unlock all of the door locks.

Fleet Keys

Important: Fleet keys are NOT standard equipment on all GM vehicle lines.

Fleets keys allow full access to the vehicle just as a master key would. However, unlike a master key which may only learn 10 keys to a particular vehicle, an unlimited number of fleet keys may be learned to the vehicle. Fleet keys are only used in vehicles configured for fleet use with RPO 6E2 or 6E8.

- Start the vehicle.
- Lock/unlock all of the door locks and rear compartment.
- Lock/unlock all of the storage compartments.

Security Indicator

The theft deterrent module (TDM) can command the instrument panel cluster (IPC) to illuminate the security indicator only when the ignition key is in the ON position. The TDM will command the security indicator be illuminated any time a fault is noted in the immobilizer system and when the engine starting is disabled.

Safety and Security

Object Detection and Pedestrian Protection

Schematic and Routing Diagrams

Object Detection Schematics

Rear Vision Camera (UVC with UI8)

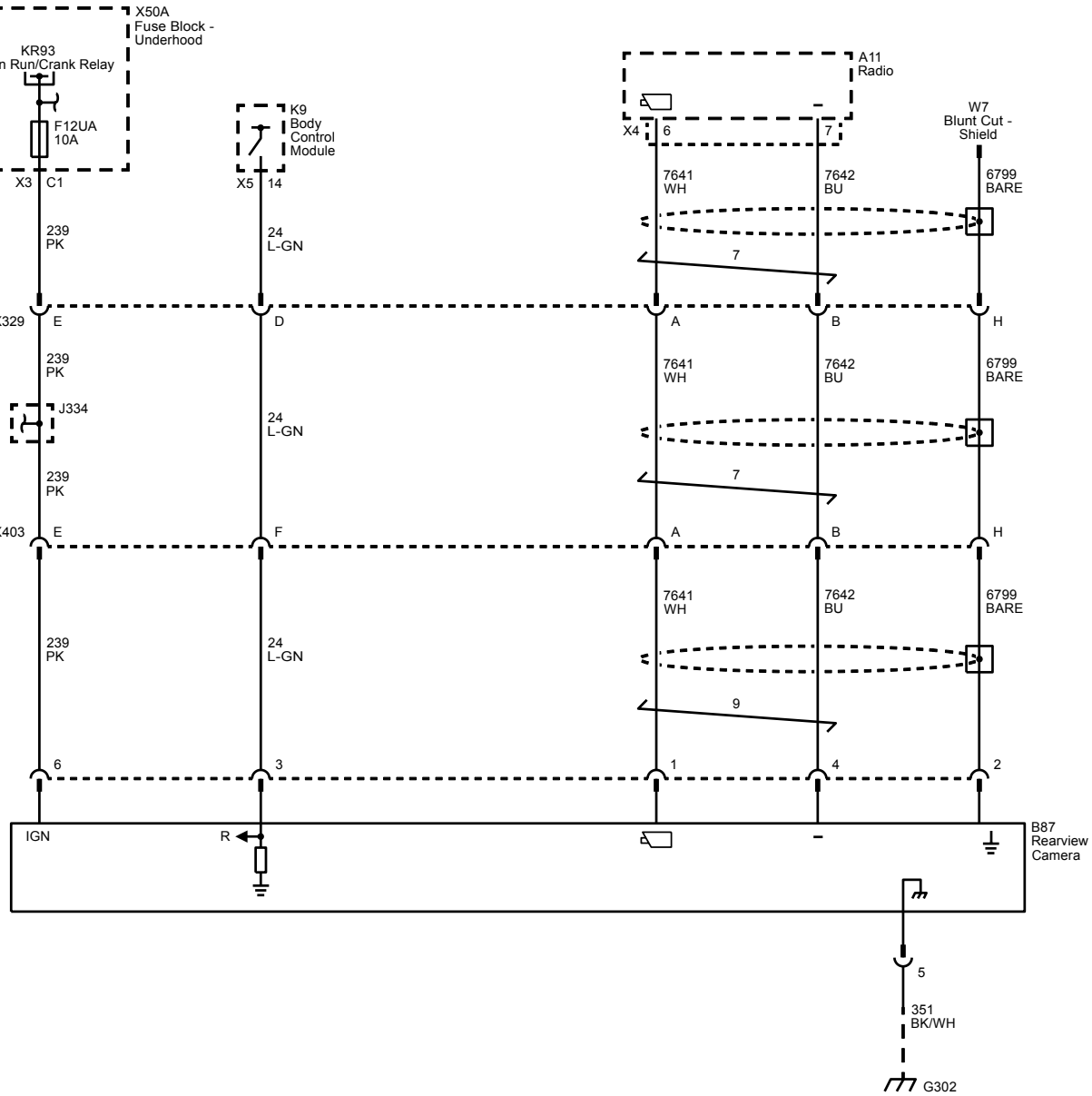

Rear Vision Camera (UVC without UI8)

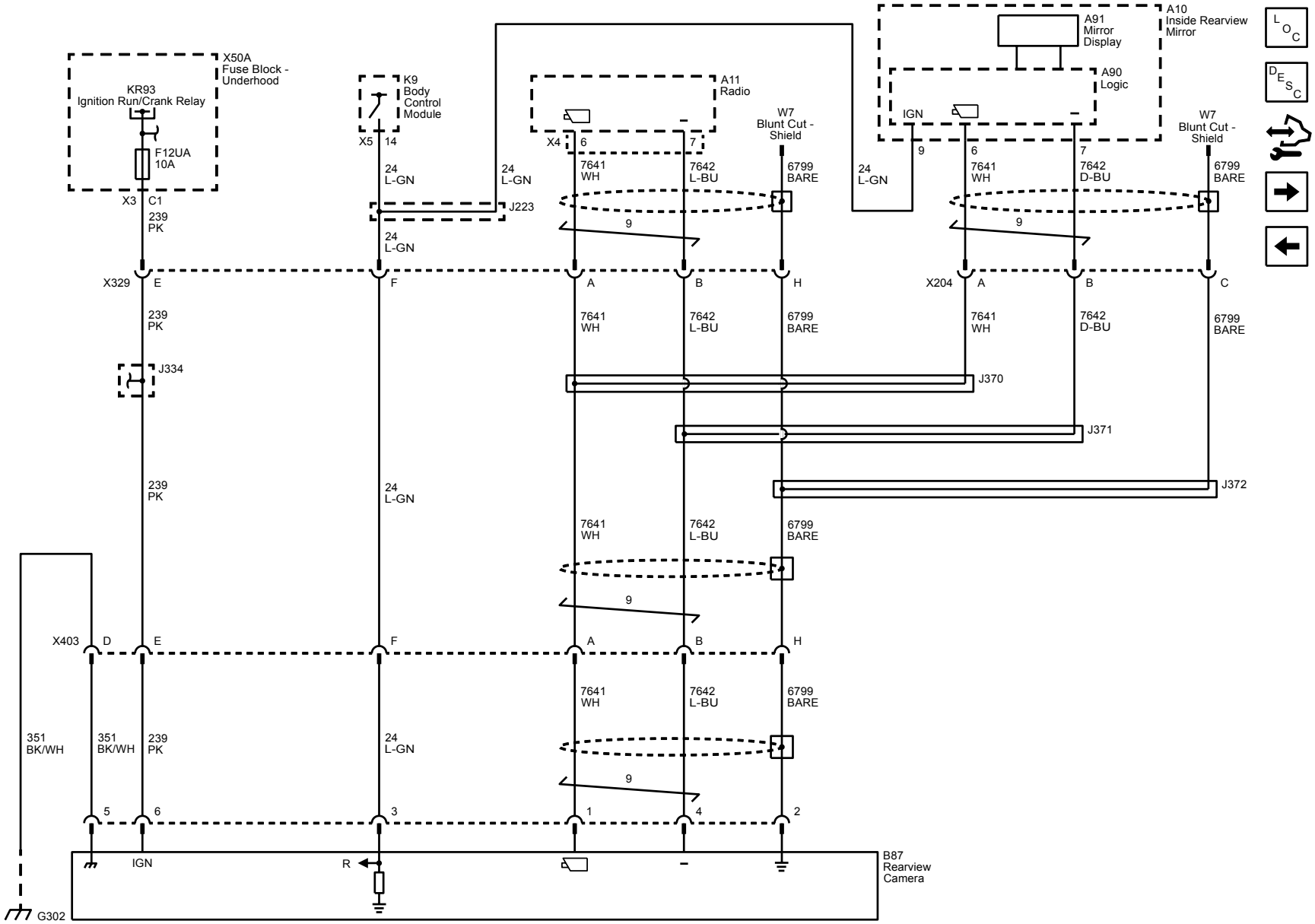

Rear Object Sensing Power, Ground, and Serial Data (UD7)

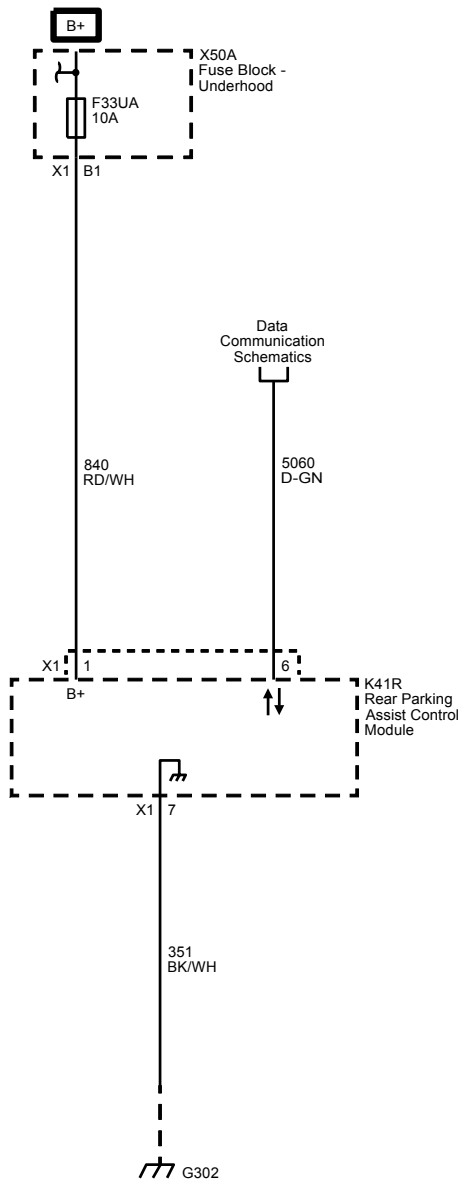

Rear Object Sensors (UD7)

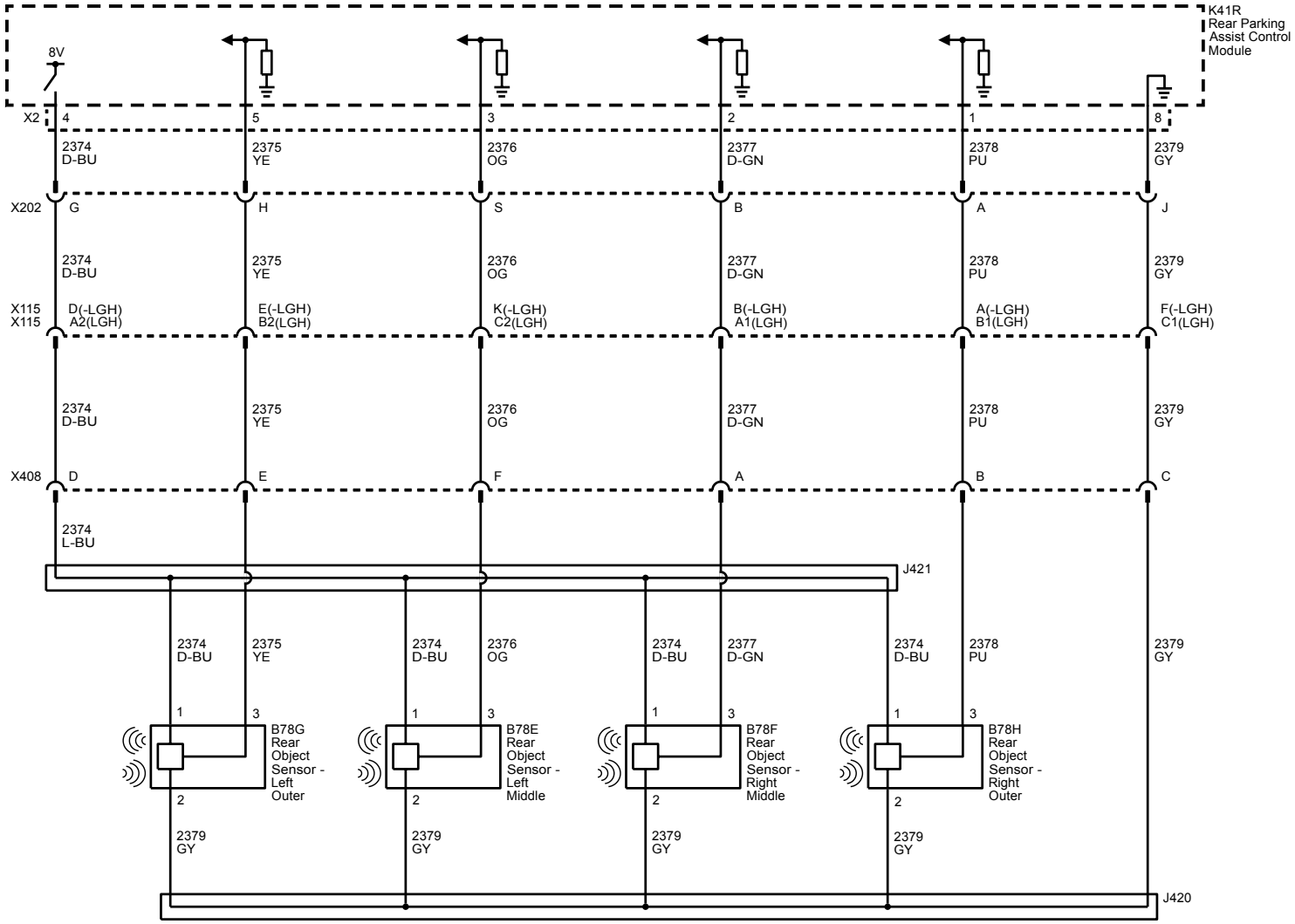

Description and Operation

Object Detection Description and Operation (with rear camera UVC)

Rear Vision Camera System Operation

The rear vision camera system consists of a video camera located at the rear of the vehicle and the radio.

When the transmission is placed into REVERSE, a 12 volt signal is sent to the rear vision camera by the body control module (BCM). This signal indicates to the camera that the vehicle is in reverse and image display is requested. The rear vision camera receives ignition voltage and a constant ground to power the camera. Video signal + and video signal – circuits carry the video image from the rear vision camera to the radio. Additionally, the video signal circuits are shielded to prevent any interference which may lead to a loss of video signal resolution and a degraded video image. The shield is provided a ground path by the rear vision camera.

The following conditions may cause a degraded rear vision camera image:

- Ice, snow, or mud has built up on the rear vision camera
- Dark conditions
- Extreme light conditions, such as glare from the sun or the headlights of another vehicle
- Damage to the rear of the vehicle
- Extreme high temperatures or extreme temperature changes

If a malfunction is detected in the system, Service Rear Vision Camera may be displayed on the navigation radio as an indicator to the customer that a problem exists that requires service.

Object Detection Description and Operation (with rear park assist UD7)

The ultrasonic parking assist system is designed to identify and notify the driver of an object in the vehicles path when reversing at speeds of less than 8 km/h (5 MPH). The distance and location of the object is determined by 4 object sensors located in the rear bumper. The parking assist system will notify the driver using an audible beep signal through the radio rear speakers.

The parking assist system is made up of the following components:

- Parking assist control module
- Rear object alarm sensors

Parking Assist Control Module

The parking assist control module provides an 8 V reference and a low reference to the four object alarm sensors. The parking assist control module receives individual signals from each of the four sensors and determines the location and distance of an object based on these inputs. When an object is detected, the parking assist control module will send a data message via CAN-Bus to the radio requesting an audible alert.

Rear Object Alarm Sensors

The object alarm sensors are located in the rear bumper of the vehicle. The sensors are used to determine the distance between an object and the bumper. Each sensor emits an ultrasonic frequency which is reflected off any object located behind the vehicle. These reflections are received by the sensors. The time difference between the emission of the frequency and when the reflection is received is known as sensor echo time, it is used to determine the distance to the object. The sensors report this information to the parking assist control module.

Rear Parking Assist Operation

When the vehicle is first placed into reverse there will be one audible beep through the rear speakers, to indicate that the system is working. If rear speakers are inoperable no audible signals will occur.

When backing up at speed of less than 8 km/h (5 MPH), the system is constantly monitoring for object of interest located behind the vehicle. The rear parking assist system can detect objects greater than 7.6 cm (3 in) wide and 25.4 cm (10 in) tall. The system cannot detect objects below the bumper, underneath the vehicle. If an object is detected within 2.5 m (8 ft) there will be a audible beep notification out of both rear speakers based upon the distance to the object. As the vehicle gets closer to an object, the time between the beeps become shorter.

If the vehicle stops in a range zone the beeping will stop after 5 s. When the distance between the object and the vehicle changes, beeping will start again.

If the rear parking assist system detects a malfunction the single audible beep will not chime when put into reverse along with a DTC being stored. The object alarm module will send a serial data message to the instrument panel cluster to display the SERVICE PARK ASSIST message on the driver information center.

Parking Assist System Driver Information Center Messages

SERVICE PARK ASSIST

The driver information center displays SERVICE PARK ASSIST when the parking assist control module detects a malfunction in the rear parking assist system and the system is disabled. The driver information center also displays SERVICE PARK ASSIST when a loss of communication occurs with the parking assist control module.

PARK ASSIST OFF

The PARK ASSIST OFF message is displayed in the driver information center when the parking assist system is disabled due to conditions that disable or inhibit the system. The parking assist control module requests the driver information center display PARK ASSIST OFF when it detects that one of the following conditions:

- The rear parking assist system is manually disabled by the vehicle operator through the audio system personalization menu.
- The park brake is applied or not fully released.
- An object is attached to the rear of the vehicle, such as a trailer, bicycle rack, trailer hitch receiver, or tow bar. Also, an object extending beyond a lowered endgate will disable the system.
- The parking assist sensors are covered by snow, mud, dirt or ice.
- The vehicle bumper is damaged.
- Excessive paint thickness on a replacement parking assist sensor.
- The parking assist sensors are disrupted by vibrations, like those caused by a large nearby vehicle or from heavy equipment such as a jackhammer.

Parking Assist Description and Operation

The ultrasonic parking assist system is designed to identify and notify the driver of an object in the vehicles path when reversing at speeds of less than 8 km/h (5 MPH). The distance and location of the object is determined by 4 object sensors located in the rear bumper. The parking assist system will notify the driver using an audible beep signal through the radio rear speakers.

The parking assist system is made up of the following components:

- Parking assist control module
- Rear object alarm sensors

Parking Assist Control Module

The parking assist control module provides an 8 V reference and a low reference to the four object alarm sensors. The parking assist control module receives individual signals from each of the four sensors and determines the location and distance of an object based on these inputs. When an object is detected, the parking assist control module will send a data message via CAN-Bus to the radio requesting an audible alert.

Rear Object Alarm Sensors

The object alarm sensors are located in the rear bumper of the vehicle. The sensors are used to determine the distance between an object and the bumper. Each sensor emits an ultrasonic frequency which is reflected off any object located behind the vehicle. These reflections are received by the sensors. The time difference between the emission of the frequency and when the reflection is received is known as sensor echo time, it is used to determine the distance to the object. The sensors report this information to the parking assist control module.

Rear Parking Assist Operation

When the vehicle is first placed into reverse there will be one audible beep through the rear speakers, to indicate that the system is working. If rear speakers are inoperable no audible signals will occur.

When backing up at speed of less than 8 km/h (5 MPH), the system is constantly monitoring for object of interest located behind the vehicle. The rear parking assist system can detect objects greater than 7.6 cm (3 in) wide and 25.4 cm (10 in) tall. The system cannot detect objects below the bumper, underneath the vehicle. If an object is detected within 2.5 m (8 ft) there will be a audible beep notification out of both rear speakers based upon the distance to the object. As the vehicle gets closer to an object, the time between the beeps become shorter.

If the vehicle stops in a range zone the beeping will stop after 5 s. When the distance between the object and the vehicle changes, beeping will start again.

If the rear parking assist system detects a malfunction the single audible beep will not chime when put into reverse along with a DTC being stored. The object alarm module will send a serial data message to the instrument panel cluster to display the SERVICE PARK ASSIST message on the driver information center.

Parking Assist System Driver Information Center Messages

SERVICE PARK ASSIST

The driver information center displays SERVICE PARK ASSIST when the parking assist control module detects a malfunction in the rear parking assist system and the system is disabled. The driver information center also displays SERVICE PARK ASSIST when a loss of communication occurs with the parking assist control module.

PARK ASSIST OFF

The PARK ASSIST OFF message is displayed in the driver information center when the parking assist system is disabled due to conditions that disable or inhibit the system. The parking assist control module requests the driver information center display PARK ASSIST OFF when it detects that one of the following conditions:

- The rear parking assist system is manually disabled by the vehicle operator through the audio system personalization menu.
- The park brake is applied or not fully released.
- An object is attached to the rear of the vehicle, such as a trailer, bicycle rack, trailer hitch receiver, or tow bar. Also, an object extending beyond a lowered endgate will disable the system.
- The parking assist sensors are covered by snow, mud, dirt or ice.
- The vehicle bumper is damaged.
- Excessive paint thickness on a replacement parking assist sensor.
- The parking assist sensors are disrupted by vibrations, like those caused by a large nearby vehicle or from heavy equipment such as a jackhammer.

Rear Vision Camera Description and Operation

The rear vision camera system consists of the rearview camera and the infotainment system.

When the transmission is placed into R, 12 V is applied to the reverse lamp control circuit by the body control module (BCM). The rearview camera monitors this circuit and when 12 V is seen, indicating that the transmission is in R, the rearview camera will activate. The rearview camera receives ignition voltage and a constant ground to power the camera. Video signal + and video signal – circuits carry the video image from the rearview camera to the infotainment system. Additionally, the video signal circuits are shielded to prevent any interference which may lead to a loss of video signal resolution and cause a degraded video image. The shield is grounded by the rearview camera.

The following conditions may cause a degraded rear vision camera image:

- Ice, snow, or mud has built up on the rear vision camera
- Dark conditions
- Extreme light conditions, such as glare from the sun or the headlights of another vehicle
- Damage to the rear of the vehicle
- Extreme high temperatures or extreme temperature changes

Safety and Security

Remote Functions

Schematic and Routing Diagrams

Remote Function Schematics

Keyless Entry (ATG or UJM)

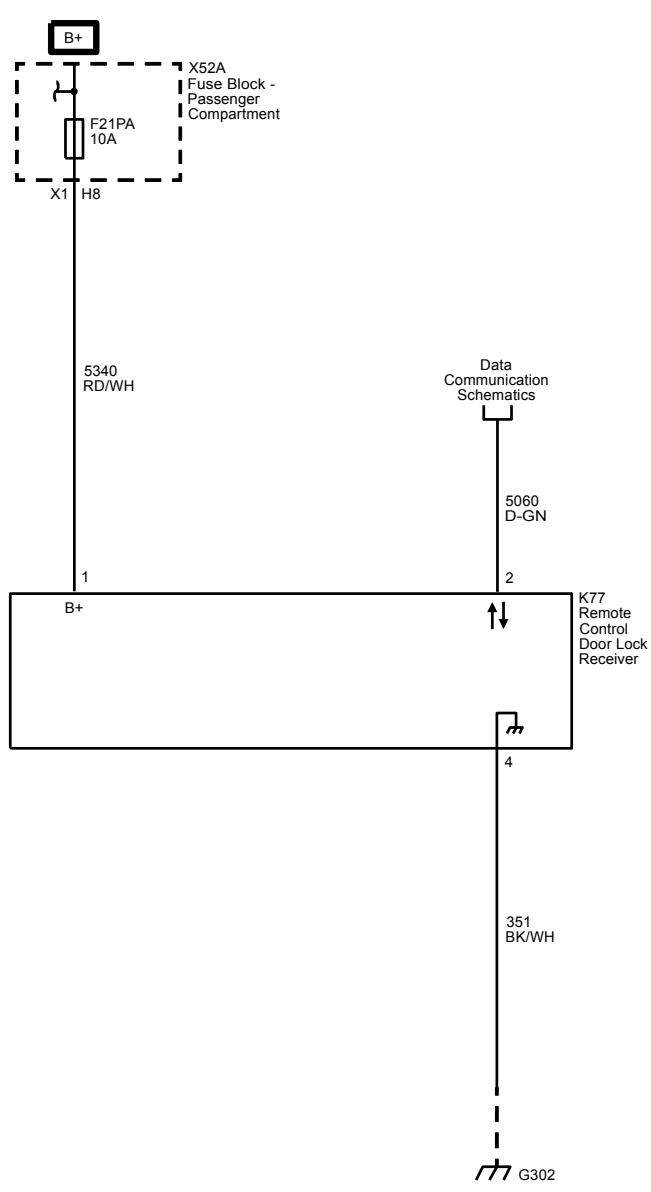

Description and Operation

Keyless Entry System Description and Operation

The keyless entry system is a vehicle entry device. The keyless entry system is used in conjunction with the body control module (BCM) to remotely activate certain vehicle features. Keyless entry will lock/unlock the doors when a corresponding button on the keyless entry transmitter is pressed. This is accomplished by the transmitter sending a radio frequency to the remote control door lock receiver (RCDLR). The RCDLR interprets the signal and activates the requested function via a serial data message to the BCM. A low transmitter or vehicle battery or radio frequency (RF) interference from aftermarket devices, such as 2-way radios, power inverters, computers, etc., may cause a system malfunction. High RF traffic areas may also cause interference that could lead to a malfunction. Keyless entry allows you to operate the following components:

- Door locks
- Cargo door unlock
- Vehicle locator/Panic alarm
- Illuminated entry lamps

The keyless entry system has the following components:

- Keyless entry transmitters
- BCM
- RCDLR

Keyless Entry Transmitters

The keyless entry transmitter are used to lock and unlock the vehicle doors from a distance of up to 65 feet (20 m) away. Up to 8 transmitters may be programmed to a single vehicle.

OnStar® Remote Link

A vehicle operator may have the ability to perform some of the keyless entry functions using applications on personal devices such as smart phones. Refer to CELL Link Error - Link target cell (cell ID 149754) is invalid for this publication..

Remote Control Door Lock Receiver (RCDLR)

The remote control door lock receiver (RCDLR) is a multifunction module that operates both the keyless entry system as well as the tire pressure monitoring (TPM) system. The RCDLR has an internal antenna that is used to receive radio frequency (RF) communications sent by the keyless entry transmitters. When an RF message is received from a keyless entry transmitter, the RCDLR interprets this signal and will request via serial data that the body control module (BCM) perform the specific function, i.e. door lock, door unlock, or vehicle locate. The RCDLR also receives RF signals from the TPM sensors located at each wheel.

Unlock Driver Door Only

Momentarily press the transmitter UNLOCK button in order to perform the following functions:

- Unlock only the driver door.
- Illuminate the interior lamps for a determined length of time, or until the ignition is turned ON.
- Flash the exterior lights, if enabled through personalization.

Unlock All Doors – Second Operation

Momentarily press the transmitter UNLOCK button a second time, within 5 seconds of the first press, to perform the following functions:

- Unlock the remaining doors.
- Unlock the cargo doors.

Cargo Door Unlock

Momentarily press the transmitter cargo door unlock button a second time, within 5 seconds of the first press, to perform the following function:

Unlock only the cargo doors.

Lock All Doors

Press the transmitter LOCK button to perform the following functions:

- Lock all vehicle doors.
- Immediately turn OFF the interior lamps.
- Flash the exterior lights, if enabled through personalization.
- Chirp the horn, if enabled through personalization.

Vehicle Locator/Panic Alarm

A single press of the panic button performs the following functions. Some functions may be dependent on personalization settings:

- Pulse the horn three times.
- Flash the exterior lamps three times.

A press and hold of the panic button performs the following functions:

- Illuminate the interior lamps.
- Pulse the horn and flash the exterior lamps for 30 second or until the following conditions occur:
  - The panic button is pressed.
  - The ignition switch is turned to the RUN position with a valid key.

Remote Vehicle Start (RVS) – if equipped

The remote vehicle start (RVS) function allows engine starting while not in the vehicle. It also allows the vehicle HVAC system and other vehicle systems to enable, providing a comfortable vehicle upon entry. RVS functions have an operating range of up to 195 feet, depending on conditions. The RVS sequence begins by pressing and releasing the lock button and then pressing and holding the RVS buttons on the keyless entry transmitter. The turn signal lamps will illuminate to indicate the vehicle has received the remote start request. Each time an RVS is performed, the vehicle doors are locked, however they may then be unlocked/locked with the transmitter or vehicle key at any time. Once activated, the engine is allowed to run for 10 minutes. The RVS time may be extended by an additional 10 minute by again pressing and releasing the lock button and then pressing and holding the RVS buttons on the transmitter. This feature is called a RVS continue and allows a maximum of 20 minutes of engine running. If the RVS continue is performed at 7 minutes into the initial 10 minute time-out, a total of 17 minutes of engine running would occur. The RVS event may be suspended at any time by pressing only the RVS button on the transmitter or by entering the vehicle and turning ON the hazard lamps.

In between ignition cycles, only two RVS events may occur or be attempted. Once two events or attempts have been made, future RVS events will be suspended until the vehicle is started using the ignition.

Enable/Disable RVS

Using the driver information center (DIC), RVS may be enabled or disabled as a part of vehicle personalization. Refer to the vehicle owners manual for more information.

Hood Ajar Switch

The hood switch provides status of the hood to the BCM for RVS purposes. The switch is integrated into the hood latch assembly. The hood ajar switch provides 2 separate inputs to the BCM. These separate inputs allow the BCM to actively monitor for a hood ajar switch fault.

RVS Circuit Description

The RCDLR receives a signal from the keyless entry transmitter indicating a RVS request. A message is then sent to the BCM which determines if a crank request message will be sent to the ECM to allow engine starting. To determine if conditions are correct for an RVS event, the BCM will ensure the following conditions are met:

- All vehicle doors are closed
- A valid hood ajar switch closed signal is present
- The doors are locked
- The hazard switch is OFF
- The vehicle power mode is correct
- No content theft deterrent (CTD) alarm triggers are present
- The vehicle is not in valet mode (if equipped)

When the BCM determines all conditions meet those required for an RVS event, a message is sent via serial data to the ECM. The ECM relies on the RVS message from BCM to enable RVS when the crank request signal is received. If the ECM does not receive a valid RVS message, it will not attempt to start the engine. While the ECM is in RVS mode it will suspend engine operation if any of the following additional conditions occur:

- Vehicle speed is greater than 0
- Transmission is not in PARK
- Excessive engine coolant temperature
- Low oil pressure
- The malfunction indicator lamp (MIL) is commanded ON
- Engine crank time is greater than 30 seconds
- Excessive engine speed
- Accelerator pedal position too high
- Remote start timer equals 0
- Immobilizer system indicates tamper

Keyless Entry Personalization

Vehicle lock/unlock functions and remote vehicle start (RVS) settings may be personalized. For functional descriptions and personalization instructions, refer to the vehicle owners manual.

Rolling Code

The Keyless Entry System uses rolling code technology. Rolling code technology prevents anyone from recording the message sent from the transmitter and using the message in order to gain entry to the vehicle. The term “rolling code” refers to the way that the Keyless Entry System sends and receives the signals. The transmitter sends the signal in a different order each time. The transmitter and the remote control door lock receiver (RCDLR) are synchronized to the appropriate order. If a programmed transmitter sends a signal that is not in the order that the RCDLR expects, then the transmitter is out of synchronization. This occurs after 256 presses of any transmitter button when it is out of range of the vehicle.

Automatic Synchronization

The keyless entry transmitters do not require a manual synchronization procedure. If needed, the transmitters automatically re-synchronize when any button on the transmitter is pressed within range of the vehicle. The

transmitter will operate normally after the automatic synchronization.

Safety and Security

Seat Belts

Schematic and Routing Diagrams

Seat Belt Schematics

Seat Belt Schematics

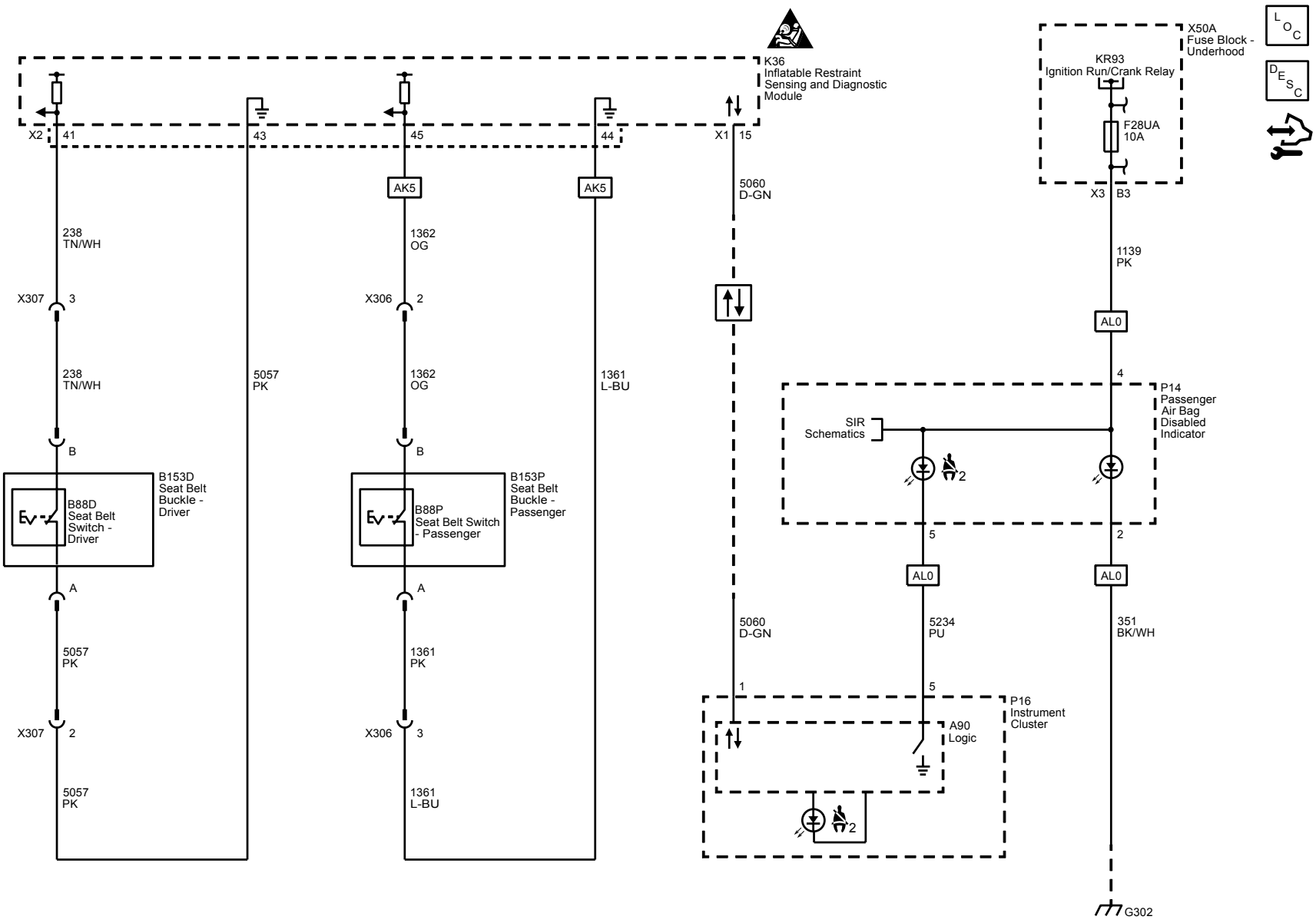

Description and Operation

Seat Belt System Description and Operation

Restraint System

Seat belts are the primary means of occupant restraint.

Seat belts help to keep occupants inside the passenger compartment and to gradually reduce the impact forces.

All seat belt retractors have emergency locks. The retractors remain unlocked during normal operation and under normal driving conditions. The retractors remain unlocked during normal conditions in order to allow free movement of the upper body of each occupant.

A pendulum locks the seat belt webbing into position. The pendulum causes a locking bar to engage a cog on the spool of the retractor mechanism when the following conditions occur:

- A rapid extraction of the seat belt webbing from the retractor
- An abrupt change in the vehicle speed
- An abrupt change in the vehicle direction
- Operation of the vehicle on a steep upgrade
- Operation of the vehicle on a steep downgrade

The seat belts, except for the driver seat belt, have an automatic locking feature, or a cinch feature. The cinch feature is recommended for securing a child seat. The cinch feature is engaged by fully extending the seat belt from the retractor. Once engaged, the seat belt can retract, but cannot be extended again until the cinch feature is cancelled. The cinch feature is cancelled when the seat belt has fully retracted.

This vehicle is also equipped with a supplemental inflatable restraint (SIR) system. Refer to Supplemental Inflatable Restraint System Description and Operation for a description of the seat belt retractor pretensioner.

Front Seat Belt System

The front seat belt system includes the following components:

- The driver and passenger seat belt buckles, attached to the inboard side of the seat frame
- The driver and passenger seat belt retractor pretensioners
- The driver and passenger seat belt switch located in the seat belt buckles

Seat Belt System Circuit Description

There are two fasten safety belt indicators for this vehicle. The driver fasten safety belt indicator is located on the instrument panel cluster (IPC) and the passenger fasten safety belt indicator is located in the passenger ON/OFF indicator. Both indicators are controlled by the IPC at the request of the inflatable restraint sensing and diagnostic module (SDM). The driver indicator, when initiated, will illuminate for 20 seconds followed by 55 seconds of flashing. Audible warnings will initiate simultaneously with visual warnings and last for 8 seconds. Subsequently, similar events will occur until the seat belts are buckled or the ignition is returned to the OFF position.

The driver fasten safety belt indicator will illuminate when any of the following occur:

- The driver seat belt is unbuckled while the ignition is ON.
- The driver seat belt remains unbuckled and vehicle speed is greater than 8 km/h (5 mph).
- Three minutes after previous seat belt status reminder event
- The IPC performs the displays test at the start of each ignition cycle.

Important: The front passenger seat is equipped with a passenger presence system (PPS), which detects an occupant. If the PPS detects an empty front passenger seat, then the passenger fasten safety belt indicator will be disabled.

The passenger fasten safety belt indicator will illuminate when any of the following occur:

- Twenty-five seconds after the ignition is ON and the front passenger seat belt remains unbuckled with passenger present
- The front passenger seat belt remains unbuckled with passenger present and vehicle speed is greater than 5 mph (8 km/h).
- Three minutes after previous seat belt status reminder event
- The IPC performs the displays test at the start of each ignition cycle.

Refer to CELL Link Error - Link target cell (cell ID 56800) is invalid for this publication. in order to diagnose faults of the fasten safety belt indicators.

Safety and Security

Supplemental Inflatable Restraints

Schematic and Routing Diagrams

SIR Schematics

Module Power, Ground, Serial Data, and Front Air Bags

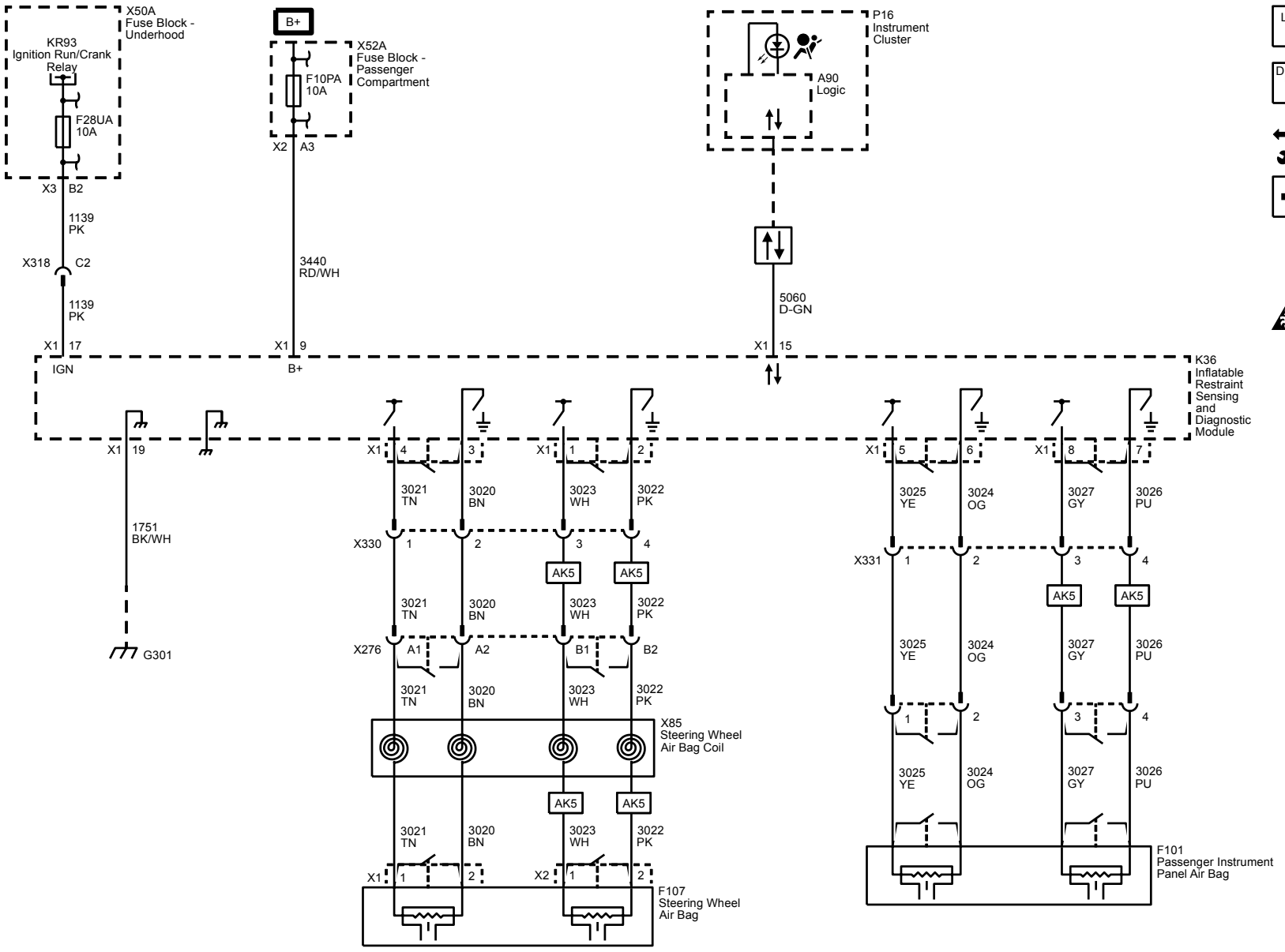

Impact Sensors

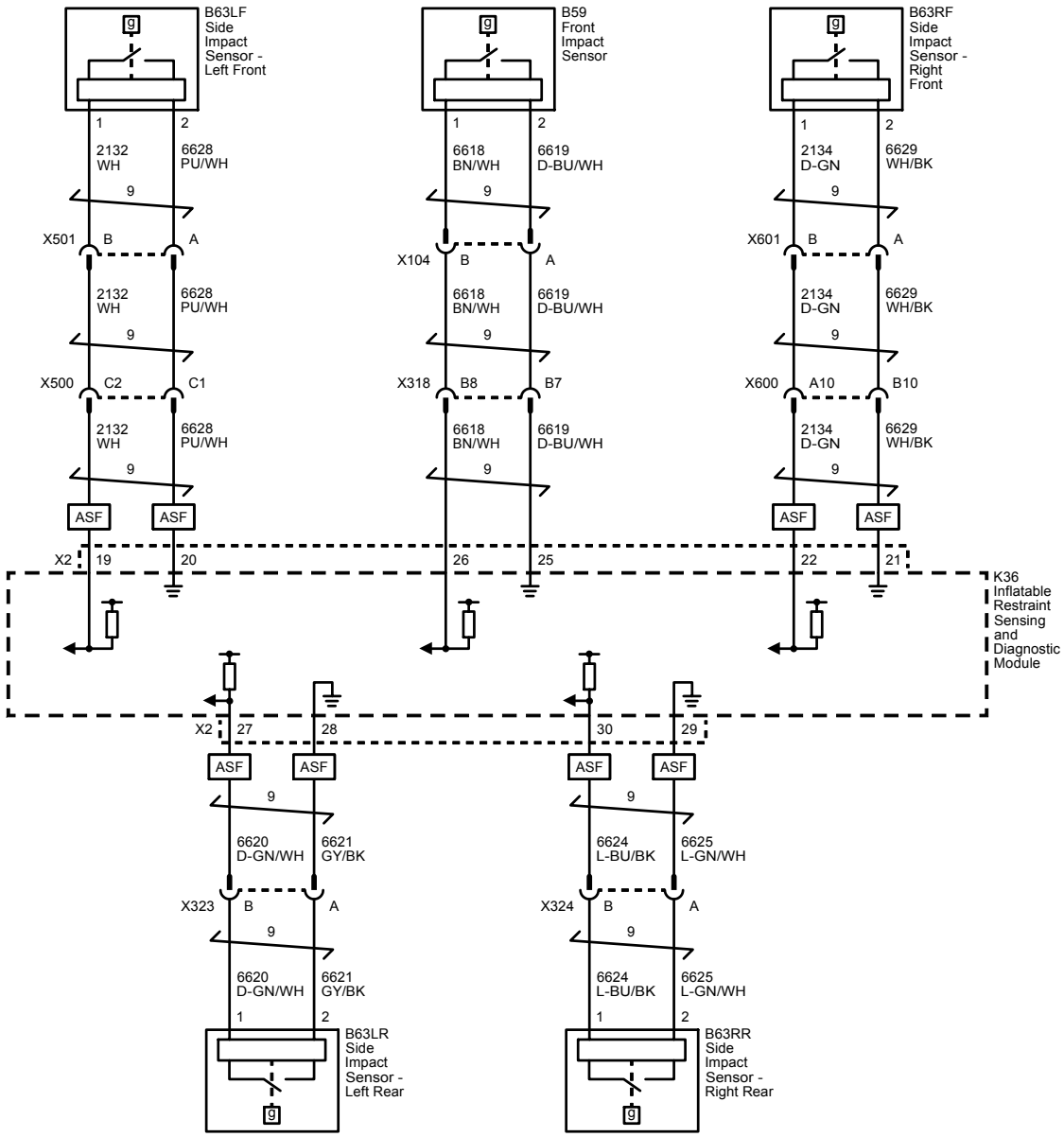

Roof Rail Air Bags, Seat Side Air Bags, and Seat Belt Pretensioners

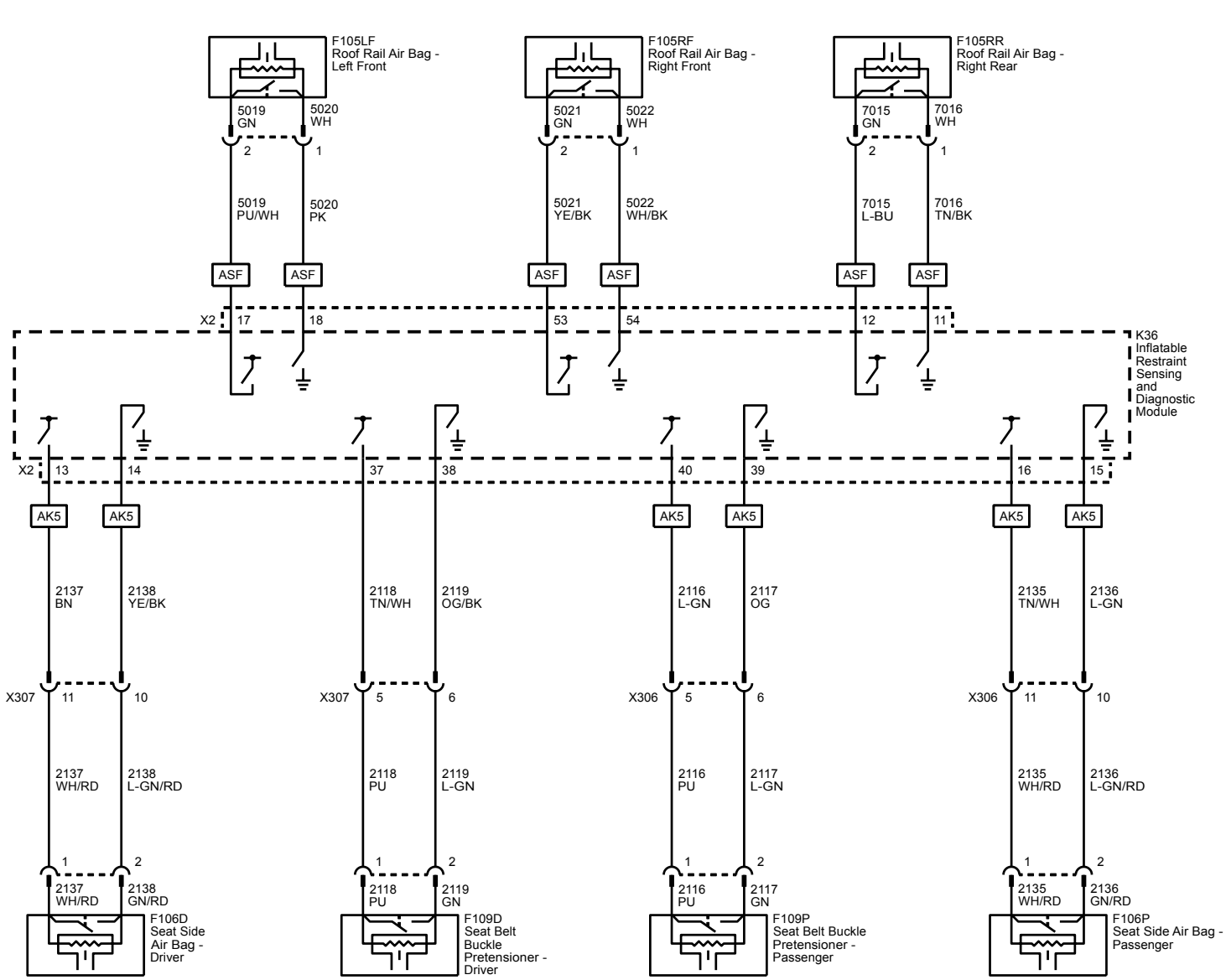

Passenger Air Bag Disable Switch (C99)

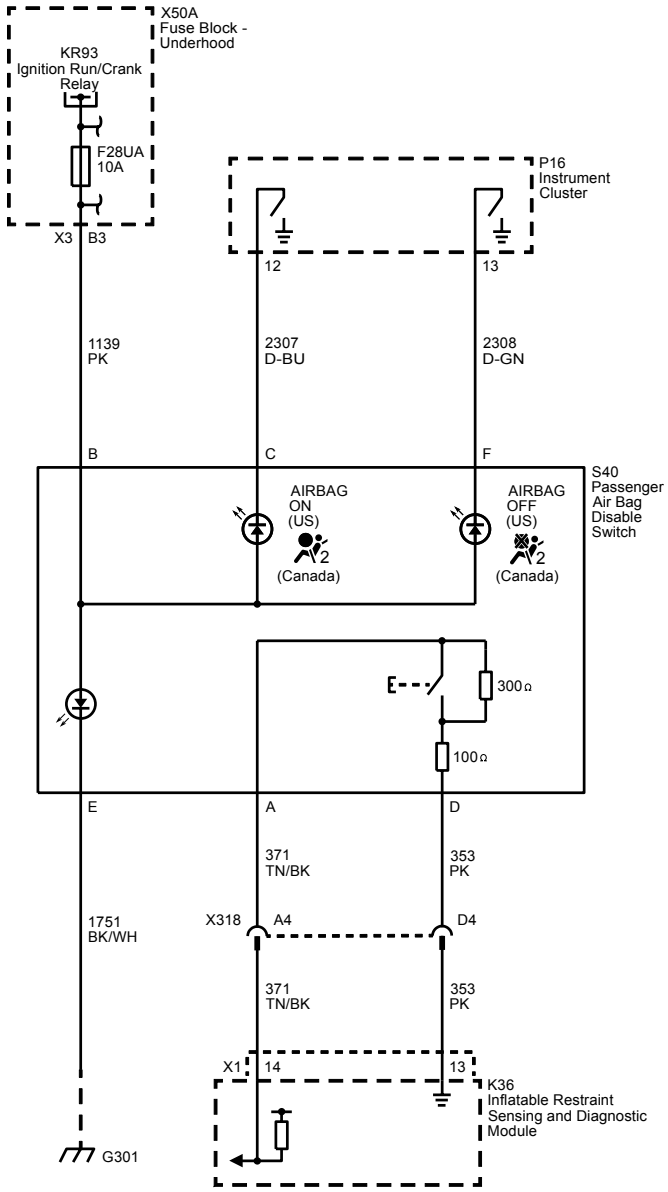

Passenger Presence Sensor and Passenger Air Bag Disabled Indicator (AL0)

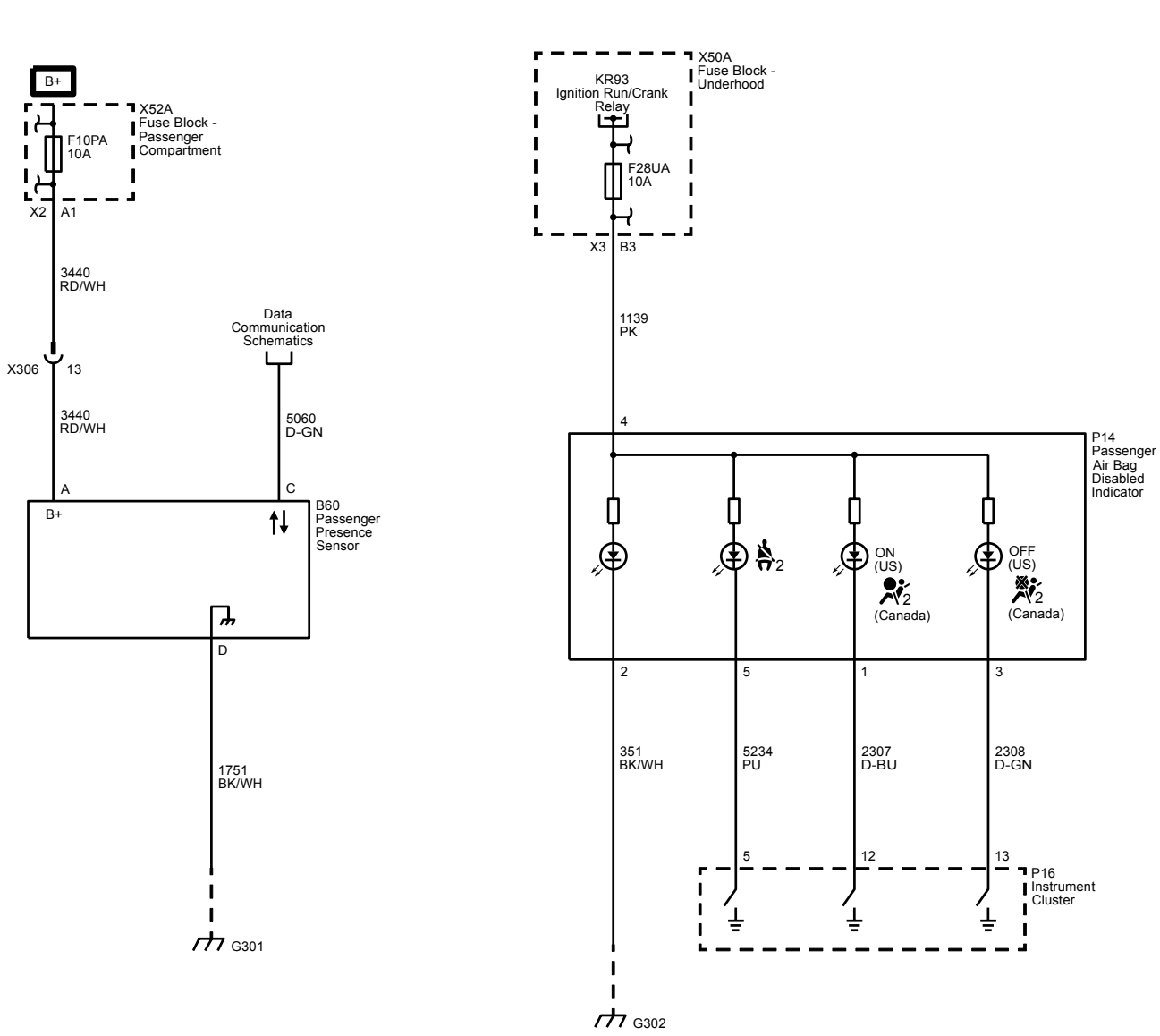

Description and Operation

Supplemental Inflatable Restraint System Description and Operation

SIR System Overview

The supplemental inflatable restraint (SIR) system supplements the protection offered by the seat belts. The SIR system contains an Inflatable Restraint Sensing and Diagnostic Module (SDM), air bags, seat belt pretensioners (buckle), and impact sensors. The Inflatable Restraint Sensing and Diagnostic Module determines the severity of a collision with the assistance of impact sensors located at strategic points on the vehicle. When the Inflatable Restraint Sensing and Diagnostic Module detects a collision, the Inflatable Restraint Sensing and Diagnostic Module will process the information provided by the sensors to further support air bag or pretensioner deployment. The Inflatable Restraint Sensing and Diagnostic Module will deploy the air bags and pretensioners if it detects a collision of sufficient force. If the force of the impact is not sufficient to warrant air bag deployment, the Inflatable Restraint Sensing and Diagnostic Module may still deploy the seat belt pretensioners. The Inflatable Restraint Sensing and Diagnostic Module contains a sensing device that converts vehicle velocity changes to an electrical signal. The Inflatable Restraint Sensing and Diagnostic Module compares these signals to values stored in memory. If the signals exceed a stored value, the Inflatable Restraint Sensing and Diagnostic Module will determine the severity of the impact and either cause current to flow through the frontal deployment loops deploying the frontal air bags and pretensioners, or it will deploy the pretensioners only. The Inflatable Restraint Sensing and Diagnostic Module continuously monitors the deployment loops for malfunctions and illuminates the SIR system AIR BAG indicator if a fault is detected. The Inflatable Restraint Sensing and Diagnostic Module performs continuous diagnostic monitoring of the SIR system electrical components. Upon detection of a circuit malfunction, the Inflatable Restraint Sensing and Diagnostic Module will set a DTC and inform the driver by illuminating the SIR system AIR BAG indicator. The steering column and knee bolsters are designed to absorb energy and compress during frontal collisions in order to limit leg movement and decrease the chance of injury to the driver and passenger.

SIR System AIR BAG Indicator

The SIR system AIR BAG indicator, located in the instrument cluster, is used to notify the driver of SIR system malfunctions and to verify that the Inflatable Restraint Sensing and Diagnostic Module (SDM) is communicating with the instrument cluster. When the ignition is turned ON, the Inflatable Restraint Sensing and Diagnostic Module is supplied with ignition positive voltage. The instrument cluster will momentarily turn on the SIR system AIR BAG indicator. While the indicator is on, the Inflatable Restraint Sensing and Diagnostic Module conducts tests on all SIR system components and circuits. If no malfunctions are detected the Inflatable Restraint Sensing and Diagnostic Module will communicate with the instrument cluster through the serial data circuit and command the SIR system AIR BAG indicator OFF. The Inflatable Restraint Sensing and Diagnostic Module provides continuous monitoring of the air bag circuits by conducting a sequence of checks. If a malfunction is detected the Inflatable Restraint Sensing and Diagnostic Module will store a diagnostic trouble code (DTC) and command the instrument cluster to illuminate the SIR system AIR BAG indicator via serial data. The presence of a SIR system malfunction could result in non-deployment of the air bags or deployment in conditions less severe than intended. The SIR system AIR BAG indicator will remain ON until the malfunction has been repaired.

Inflatable Restraint Sensing and Diagnostic Module (SDM)

The Inflatable Restraint Sensing and Diagnostic Module (SDM) is a microprocessor and the control center for the supplemental inflatable restraint (SIR) system. The Inflatable Restraint Sensing and Diagnostic Module contains internal sensors along with external impact sensors, mounted at strategic locations on the vehicle. In the event of a collision, the Inflatable Restraint Sensing and Diagnostic Module compares the signals from the internal and external impact sensors to a value stored in memory. When the generated signals exceed the stored value, the Inflatable Restraint Sensing and Diagnostic Module will cause current to flow through the appropriate deployment loops to deploy the air bags. The Inflatable Restraint Sensing and Diagnostic Module records the SIR system status when a deployment occurs and illuminates the SIR system AIR BAG indicator located in the instrument cluster. The Inflatable Restraint Sensing and Diagnostic Module performs continuous diagnostic monitoring of the SIR system electrical components and circuitry when the ignition is turned ON. If the Inflatable Restraint Sensing and Diagnostic Module detects a malfunction, a DTC will be stored and the Inflatable Restraint Sensing and Diagnostic Module will request the instrument cluster to illuminate the AIR BAG indicator, notifying the driver that a malfunction exists. In the event that ignition positive voltage is lost during a collision, the Inflatable Restraint Sensing and Diagnostic Module maintains a 23-volt loop reserve for deployment of the air bags. It is important when disabling the SIR system for servicing or rescue operations to allow the 23-volt loop reserve to dissipate, which could take up to 1 minute.

Air Bags

This vehicle contains 5 air bags. The 5 air bags are located in the driver steering wheel (dual air bags), passenger instrument panel (passenger side) (dual air bags), left roof rail, right roof rail, and right rear roof rail. To view the locations of the air bags refer to Master Electrical Component List. Air bags contain a housing, inflatable air bag, two initiating devices (if dual air bags), canister of gas generating material and, in some cases, stored compressed gas. The deployment loops supply current to deploy the air bags. The steering wheel and passenger instrument panel air bags have two stages of deployment, which varies the amount of restraint to the occupant according to the collision severity. For moderate frontal collisions the air bags deploy at less than full deployment which consists of stage 1 of the air bag. For more severe frontal collisions a full deployment is initiated which consists of stage 1 and stage 2 of the air bag. The current passing through the air bags ignite the material in the canister producing a rapid generation of gas and is some cases, the release of compressed gas. The gas produced from this reaction rapidly inflates the air bag. Once the air bag is inflated it quickly deflates through the air bag vent holes and/or the bag fabric. A shorting bar (if equipped) is located in the connector.

Seat Belt Pretensioners (Buckle)

The seat belt pretensioners (driver and passenger) consist of a housing, seat belt buckle (pretensioner), seat belt webbing, an initiator, and a canister of gas generating materials. To view the locations of the seat belt pretentioners refer to Master Electrical Component List. The initiator is part of the seat belt pretensioner deployment loop. When the vehicle is involved in a collision of sufficient force, the Inflatable Restraint Sensing and Diagnostic Module causes current to flow through the seat belt deployment loops to the initiator. Current passing through the initiator ignites the material in the canister producing a rapid generation of gas. The gas produced from this reaction deploys the seat belt pretensioners which removes all of the slack in the seat belts. Depending on the severity of the collision, the seat belt pretensioners may deploy without the front air bags deploying, or they will deploy immediately before the front air bags deploy. A shorting bar (if equipped) is located in the connector.

Impact Sensors

This vehicle contains anywhere from 3–5 impact sensors depending on option content. The options are as follows:

- Light Duty has 5 impact sensors: 1 in the front, 2 in the doors, 2 in the body
- Heavy Duty Regular Cab has 3 impact sensors: 1 in the front, 2 in the doors

To view the locations of the impact sensors refer to Master Electrical Component List. The impact sensors contain a sensing device which monitors vehicle acceleration and velocity changes to detect side collisions that are severe enough to warrant air bag deployment. The impact sensors are not part of the deployment loop, but instead provide input to the Inflatable Restraint Sensing and Diagnostic Module. The Inflatable Restraint Sensing and Diagnostic Module contains a microprocessor that performs calculations using the measured accelerations and compares these calculations to a value stored in memory. When the generated calculations exceed the stored value, the Inflatable Restraint Sensing and Diagnostic Module will cause current to flow through the deployment loops deploying the appropriate air bags.

Passenger Presence Detection System and Passenger Air Bag Indicator

Note: The passenger presence system (PPS) is a calibrated unit. When replacing the assembly all parts in the service kit must remain together. Do not mix any of the old parts with the new parts. After repairing or replacing the PPS, the preload test must be performed in order to function properly.

The passenger presence system is used to monitor the type of occupant that is sitting in the front passenger seat and communicate the status to the Inflatable Restraint Sensing and Diagnostic Module (SDM). The Inflatable Restraint Sensing and Diagnostic Module then uses this information to determine whether to enable or suppress the deployment of the passenger instrument panel air bag. The passenger presence system consists of an electronic control module, a sensor mat in the seat, a harness, and PASSENGER AIR BAG ON/OFF indicators. The passenger presence system transmits and receives a low-level electric field. The measured capacitance value of this field is used to determine the type of occupant sitting in the front passenger seat. If the measured capacitance is less than a calibrated value, then the passenger presence module will send a serial data signal to the Inflatable Restraint Sensing and Diagnostic Module to disable the passenger instrument panel air bag. If the measured capacitance is greater than a calibrated value, then the passenger presence module will send a serial data signal to the Inflatable Restraint Sensing and Diagnostic Module to enable the passenger instrument panel air bag. The Inflatable Restraint Sensing and Diagnostic Module will notify the customer of the enable/disable status by

illuminating one of the PASSENGER AIR BAG ON/OFF indicator. The passenger presence system monitors itself for faults and will displays diagnostic trouble codes (DTCs) on the scan tool. When a fault is detected, the passenger presence module sends out a message to the Inflatable Restraint Sensing and Diagnostic Module. The Inflatable Restraint Sensing and Diagnostic Module responds by sending a command message to the IPC to illuminate the SIR system AIR BAG indicator.

Vehicle Roll Over Sensor

The vehicle roll over sensor is used to supplement the side Supplemental Inflatable Restraint (SIR) System. The Inflatable Restraint Sensing and Diagnostic Module (SDM) uses the input from the vehicle roll over sensor to assist in determining the severity of a vehicle roll over or near roll over condition. If the Inflatable Restraint Sensing and Diagnostic Module determines a deployment is warranted, the Inflatable Restraint Sensing and Diagnostic Module will cause current to flow through the deployment loops deploying the roof rail air bags.

Seat Belt Indicators

The seat belt indicators are controlled through the Inflatable Restraint Sensing and Diagnostic Module (SDM). For further information on seat belt indicators refer to Seat Belt System Description and Operation

Seats

Power Seats

Schematic and Routing Diagrams

Driver Seat Schematics

Driver Seat (AG1)

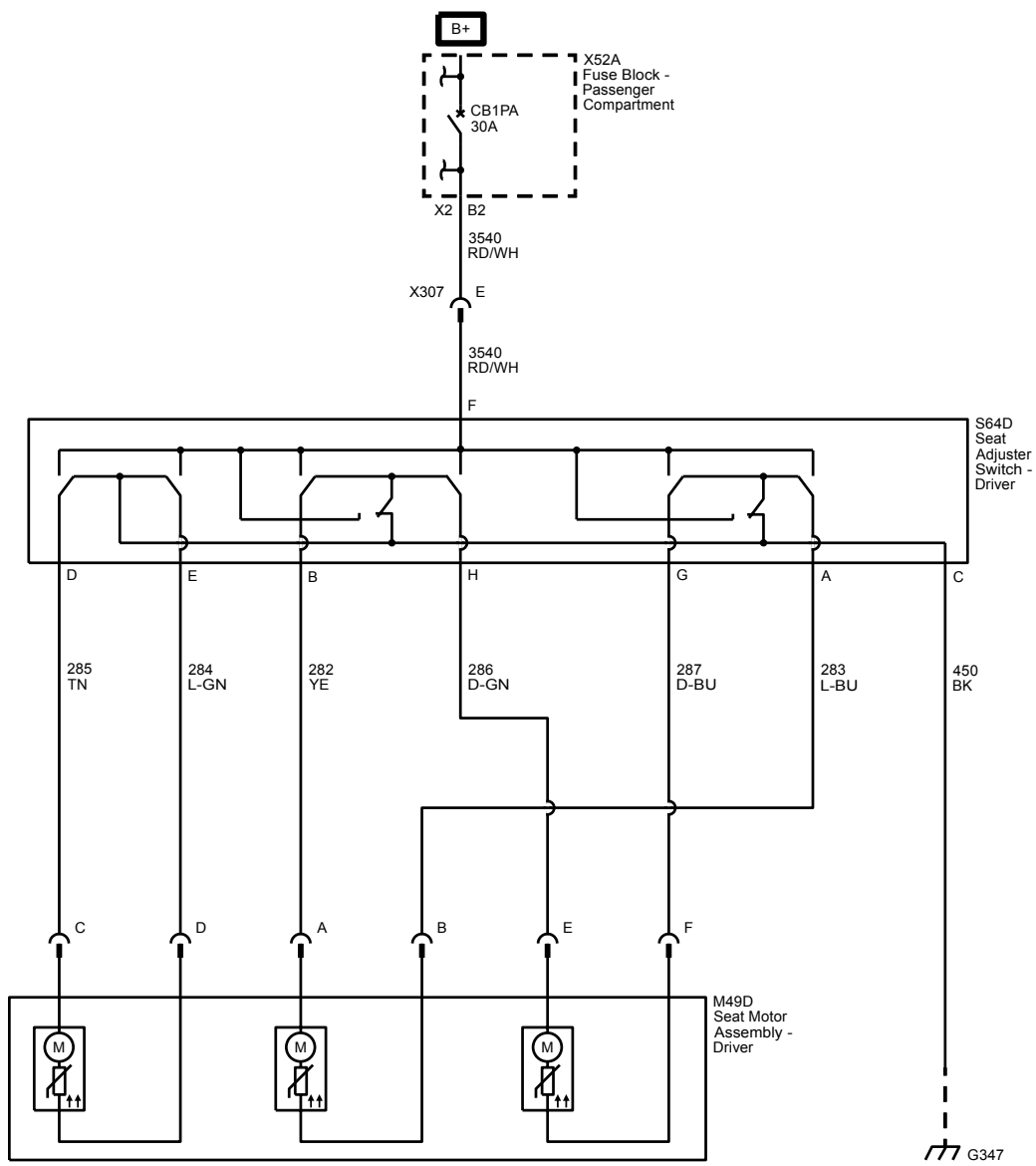

Passenger Seat (AG2)

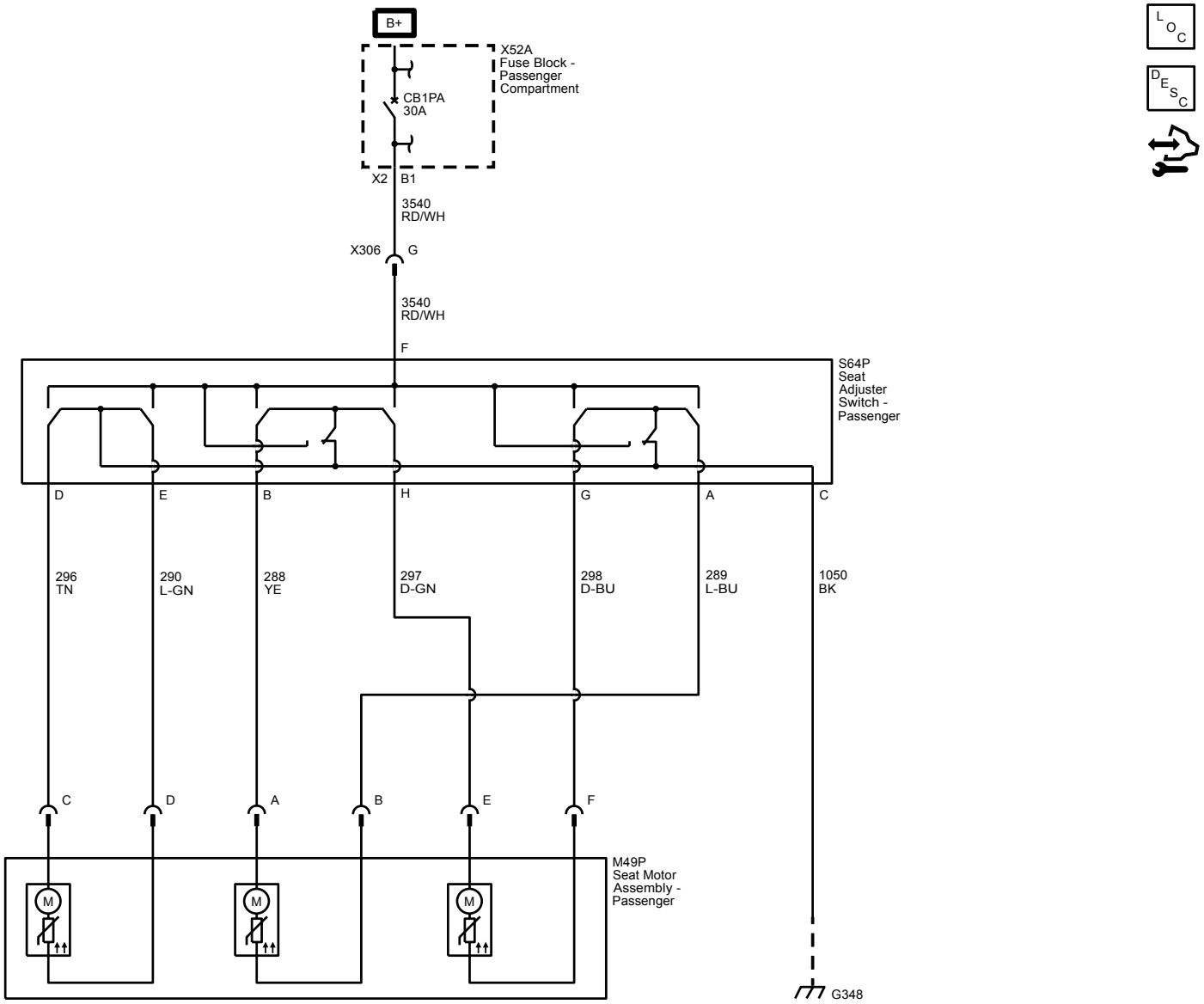

Description and Operation

Power Seats System Description and Operation

Power Seat System Components

The power seat system for the driver and passenger consists of the following components:

- Power Seat Switch
- Seat Horizontal Motor
- Seat Front Vertical Motor
- Seat Rear Vertical Motor

Power Seat System Operation

This seat contains three motors for positioning. They are the Horizontal motor, Rear Vertical motor, and a Front Vertical motor The Horizontal motor moves the seat forward and rearward. The Front Vertical motor raises and lowers the front of the seat and the Rear Vertical motor raises and lowers the rear of the seat. Power is supplied to the motors through a battery positive voltage supply circuit at the Power Seat Switch. A ground circuit is supplied to the motors through the Power Seat Switch also.

The direction the motor operates depends on the polarity applied to the motor control circuits. Each time direction is changed using the power seat switch, the power and ground paths are reversed at the control circuits causing the motor to position the seat in the desired direction.

Suspension

Tire Pressure Monitoring

Description and Operation

Tire Pressure Monitor Description and Operation

The tire pressure monitor (TPM) system warns the driver when a significant loss, or gain of tire pressure occurs in any of the 4 tires and allows the driver to display the individual tire pressures and their locations on the driver information center (DIC).

The system uses the body control module (BCM), driver information center (DIC), instrument panel cluster (IPC), remote control door lock receiver (RCDLR), a radio frequency (RF) transmitting pressure sensor in each wheel/tire assembly, and the serial data circuit to perform the system functions. Each sensor has an internal power supply with a 10 year service life.

When the vehicle is stationary, the sensors internal accelerometer is inactive, which puts the sensors into a stationary state. In this state the sensors sample tire pressure once every 30 seconds and do not transmit at all if the tire pressure does not change. As vehicle speed increases, centrifugal force activates the sensors internal accelerometer causing the sensors to go into rolling mode. In this mode, the sensors sample tire pressure once every 30 seconds and transmit in rolling mode once every 60 seconds. The RCDLR receives and translates the data contained in each sensors RF transmission into sensor presence, sensor mode, and tire pressure. The RCDLR sends the tire pressure and tire location data to the DIC via the serial data circuit where they are displayed.

The sensors continuously compare their last pressure sample to their current pressure sample and will transmit in re-measure mode if a 8.3 kPa (1.2 psi) change in tire pressure has been detected in either a stationary or rolling state. When the TPM system detects a significant loss, or gain of tire pressure, the tire pressure monitor indicator icon is illuminated on the IPC and if equipped, a check tire pressure type message is displayed on the DIC. Both the indicator icon and DIC message can be cleared by adjusting the tire pressures to the recommended kPa/psi and driving the vehicle above 40 km/h (25 mph) for at least 2 minutes.

If power is disconnected from the RCDLR or if the vehicle battery is disconnected each TPM sensor ID is retained but all of the tire pressure information is lost. Under these circumstances the RCDLR cannot assume that the tire pressures were maintained over an unknown period of time. If equipped, the DIC will display all dashes and the scan tool will indicate a default tire pressure value of 1020 kPa (148 psi) for each tire. Driving the vehicle above 40 km/h (25 mph) for at least 2 minutes will activate the sensors causing the DIC to display the current tire pressures. The **sptool-no** Tire Pressure Monitor Diagnostic Tool special tool or the pressure increase/decrease method may also be used to activate the sensors as well.

The RCDLR has the ability to detect malfunctions within the TPM system. In the event a DTC is set, the tire pressure monitor indicator icon on the IPC will flash for 1 minute and then remain illuminated after the ignition is turned ON and the IPC bulb check has been completed. Any malfunction detected will cause the DIC to display a service tire monitor system type message. For more information on other functions of the RCDLR, refer to Keyless Entry System Description and Operation.

Transmission

Automatic Transmission - 6L90 (MYD)

Schematic and Routing Diagrams

Automatic Transmission Controls Schematics

Module Power, Ground, Data Communication, MIL, and Stop Lamp Signal (L20, L96, or LC8)

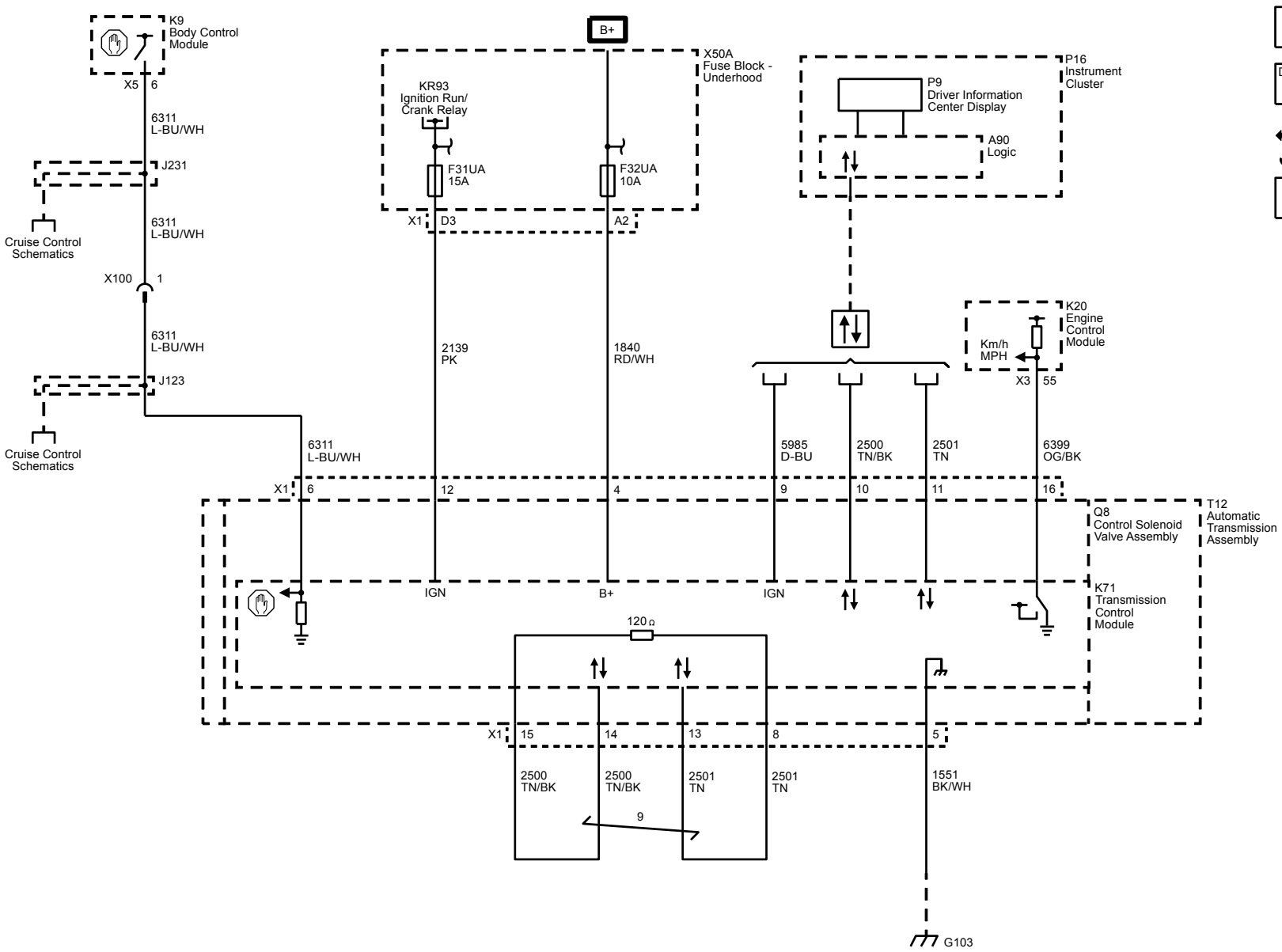

Module Power, Ground, Data Communication, MIL, and Stop Lamp Signal (Diesel)

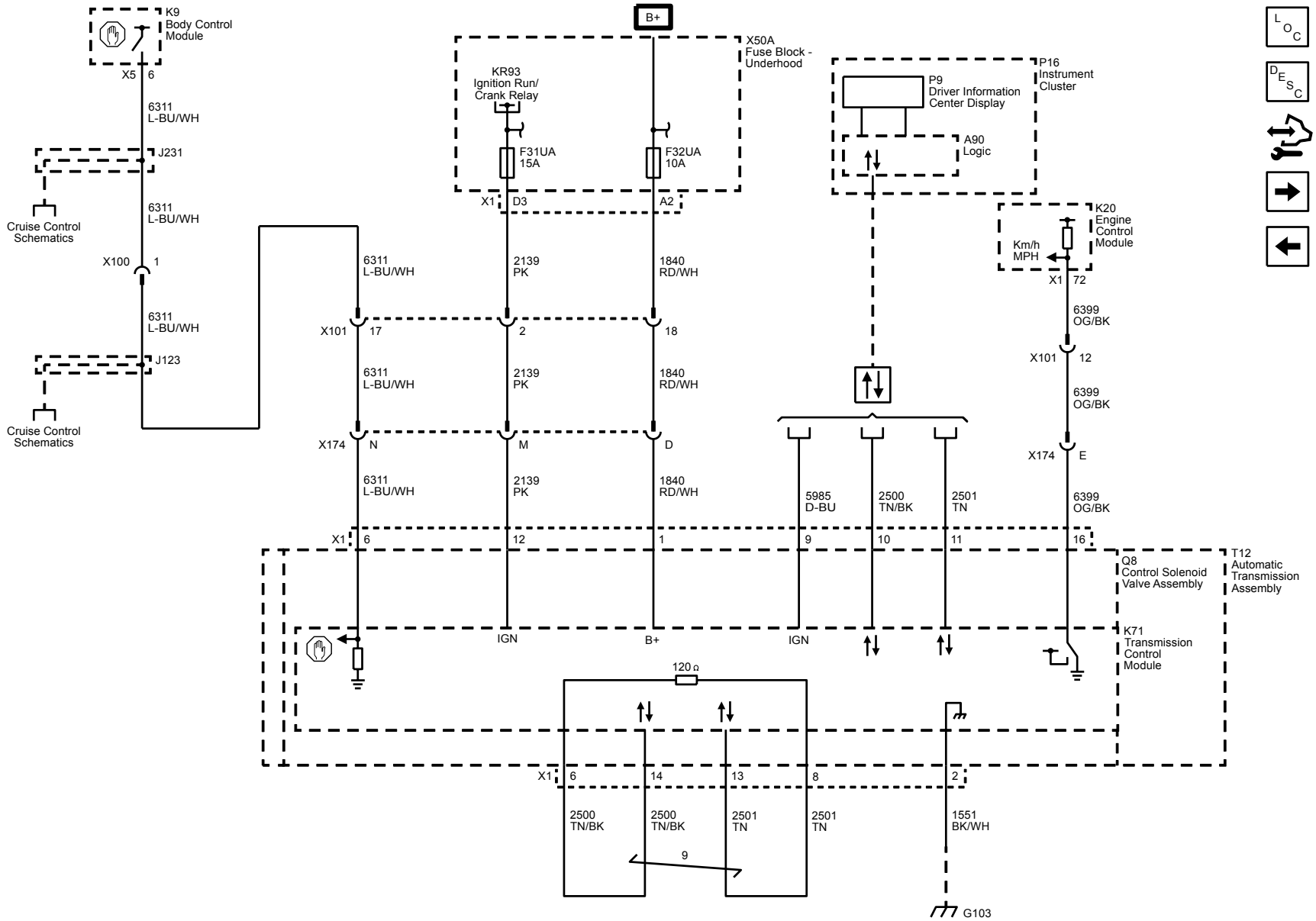

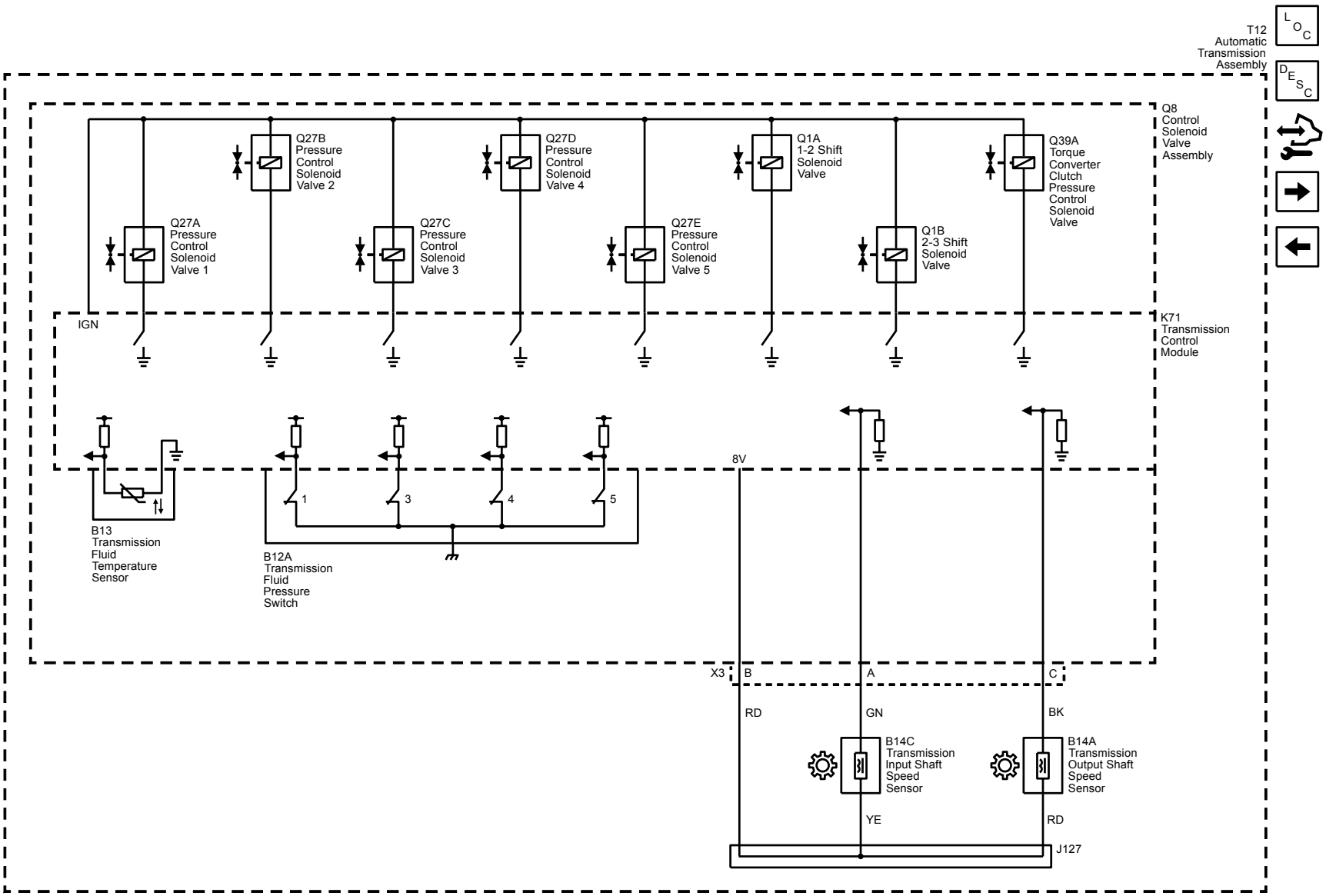
T12
Automatic
Transmission
Assembly
Q8
Control
Solenoid
Valve
Assembly
Q27A
Pressure
Control
Solenoid
Valve 1
Q27B
Pressure
Control
Solenoid
Valve 2
Q27C
Pressure
Control
Solenoid
Valve 3
Q27D
Pressure
Control
Solenoid
Valve 4
Q27E
Pressure
Control
Solenoid
Valve 5
Q1A
1-2 Shift
Solenoid
Valve
Q1B
2-3 Shift
Solenoid
Valve
Q39A
Torque
Converter
Clutch
Pressure
Control
Solenoid
Valve
IGN
K71
Transmission
Control
Module
8V
B13
Transmission
Fluid
Temperature
Sensor
B12A
Transmission
Fluid
Pressure
Switch
1
3
4
5
X3
B
A
C
RD
GN
BK
B14C
Transmission
Input Shaft
Speed
Sensor
B14A
Transmission
Output Shaft
Speed
Sensor
YE
RD
J127

IMS, Tow/Haul, and Tap Up/Tap Down Switches

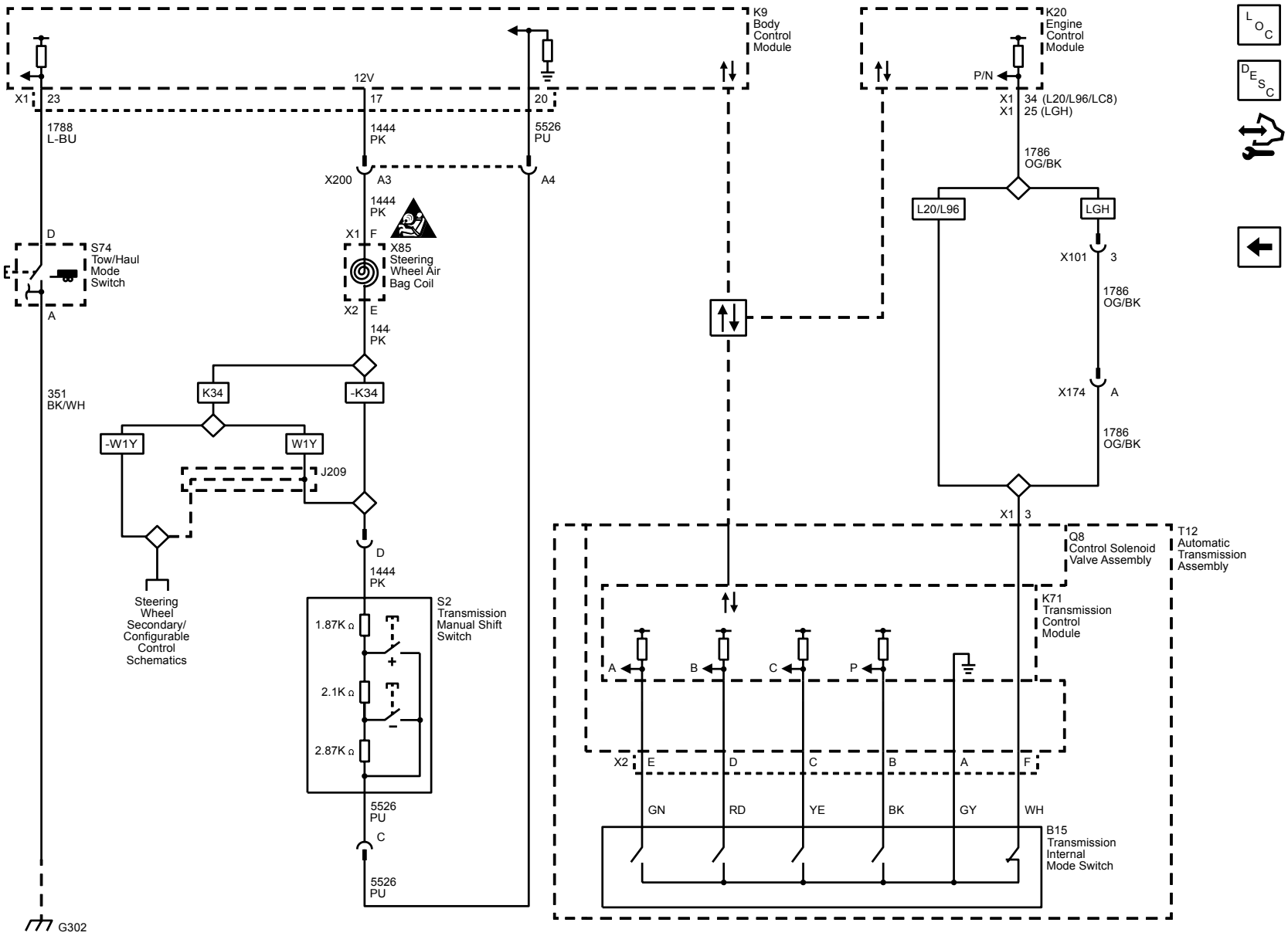

Transmission

Shift Lock Control

Schematic and Routing Diagrams

Shift Lock Control Schematics

Shift Lock Control

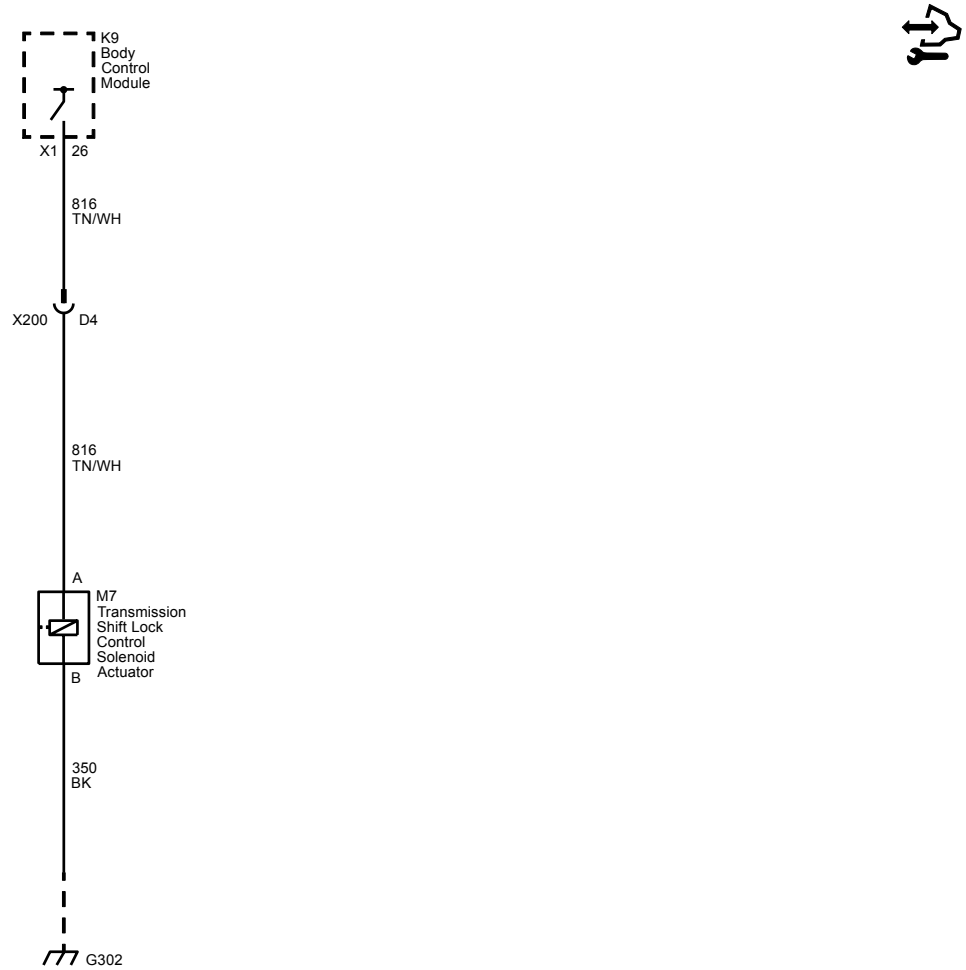

Description and Operation

Automatic Transmission Shift Lock Control Description and Operation

The automatic transmission shift lock control system is a safety device that prevents an inadvertent shift out of PARK when the engine is running. The driver must press the brake pedal before moving the shift lever out of the PARK position. The system consists of the following components:

- The automatic transmission shift lock solenoid (serviced as the automatic transmission shift lock actuator), as well as the body control module (BCM) and the engine control module (ECM). The shift lock solenoid is located within the floor shift control assembly with vehicles equipped with floor shift.
- The BCM controls the voltage to the shift lock control solenoid through the shift lock control solenoid controlled voltage circuit. The following conditions must be met before the BCM will remove voltage from the shift lock solenoid:
  - The ignition is in the ON position.
  - The engine control module (ECM) sends an input via GMLAN serial data to the BCM indicating the transmission is in the PARK position.
  - The BCM determines the brake pedal is applied according the brake pedal position.

Since the shift lock control solenoid is permanently grounded, the BCM supplies voltage to the automatic transmission shift lock control solenoid, mechanically locking the shift lever in the PARK position as the solenoid energizes. When the brake pedal is applied, the BCM turns the control voltage output of the shift lock control solenoid OFF, de-energizing the shift lock control solenoid. The de-energized solenoid releases the mechanical lock allowing the driver to move the shift lever out of the PARK position. When the transmission is out of the PARK position, the shift lock control solenoid remains de-energized.

During remote start operation, the BCM will energize the shift lock control circuit, locking the shift lever in the PARK position.