Table of Contents

General Information 1-1
General Information 1-3

Cab and Chassis Electrical 2-1
Cab and Chassis Electrical 2-3
Vehicle Control (FMS CAN Interface) 2-883
Vehicle Control (MIMAMORI) 2-887

INDEX INDEX-1

BLANK

Section 1

General Information

General Information 1-3
Visual Identification 1-3
Rear Axle Identification 1-3
Introduction 1-3
Vehicle, Engine and Transmission ID and VIN Location, Derivative and Usage 1-3
Model Identification 1-5
Vehicle Certification and Greenhouse Gas (GHG) Emissions Plate 1-5
Vehicle Identification 1-5
RPO Code List 1-6
Engine Identification 1-8

BLANK

General Information

Visual Identification

Rear Axle Identification

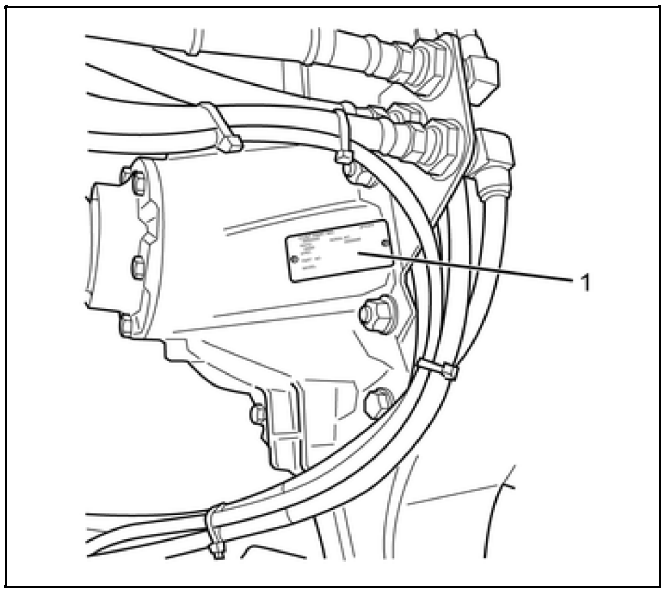

4826433

The Rear Axle Identification Tag (1) is located on the top of the rear axle.

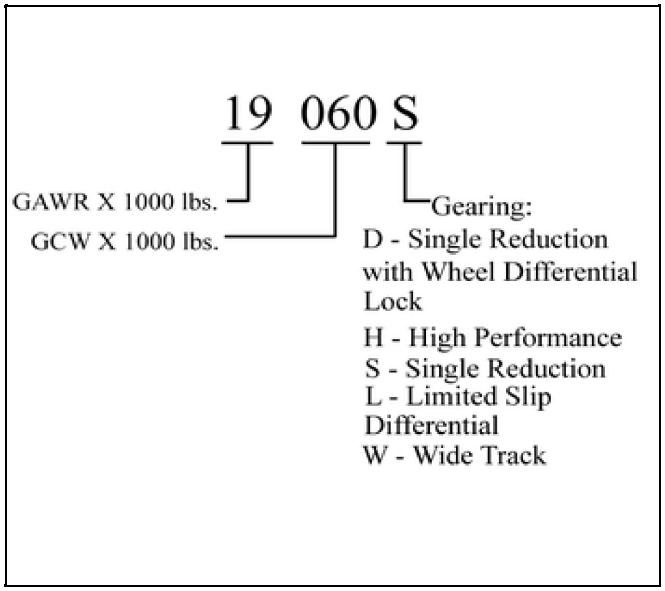

4826602

Introduction

Vehicle, Engine and Transmission ID and VIN Location, Derivative and Usage

The VIN label is attached to the driver door opening.

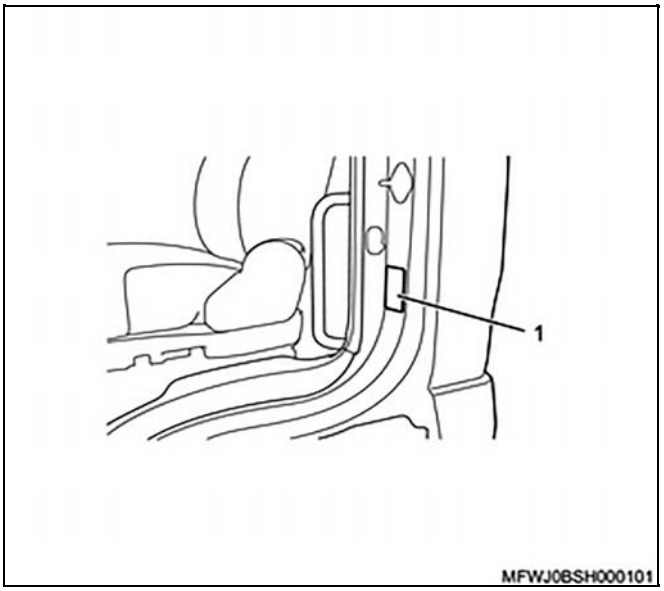

4861122

Vehicle Identification Number (VIN) System

Position	Definition	Character	Description
1	Country of Origin	J	Japan (JAL)
		5	United States (54D)
2	Manufacturer	A	Isuzu Motors Ltd.
		4	Spartan Motors Chassis Inc.

Vehicle Identification Number (VIN) System (cont'd)

Position	Definition	Character	Description
3	Make	L	Incomplete Vehicle — Medium and Heavy Duty
		D	Incomplete Vehicle
4	GVWR/Brake System/Body Style	B	10,001–14,000 lbs/Hydraulic/03–Regular Cab
		C	14,001–16,000 lbs/Hydraulic/03–Regular Cab
		E	16,001—19,500 lbs/Hydraulic/03–Regular Cab
		B	10,001–14,000 lbs/Hydraulic/43–Crew Cab
		C	14,001–16,000 lbs/Hydraulic/43–Crew Cab
		K	23,501–26,000 lbs/Air Brake
5	Make/Series	D	GM Chevrolet 3500 / 3500HD / 4500
		E	GM Chevrolet 5500HD/5500XD
		F	GM Chevrolet 6500XD
6	Line/Cab Type	J	Non-Tilt Cab, BBC = 110 Inches
		S	Tilt Cab, BBC = 81 Inches
		W	Tilt Cab, BBC = 71 Inches
7	Chassis Type	1	4x2, 2 Axles, 1 Driving
8	Engine Type	B	L96 - ENGINE GAS, 8 CYL, 6.0L, SFI, E85 MAX, IRON, GM
		C	LC8 - ENGINE LPG/CNG, 8 CYL, V8, 6.0L, SFI, GEN 1, GMNA
		6	I1B - ENGINE DIESEL, 4 CYL, 5.2L, 4HK1TC 215HP
		7	IZ3 - ENGINE DIESEL, 4 CYL, 3.0L, 4JJ1-TC 150HP
9	Check Digit	—	0~9, X - Calculated by Manufacturer
10	Model Year	G	2018
11	Plant Location	S	Charlotte, Michigan
		7	Fujisawa, Japan
12	Model Combination	F	3500HD 4J Diesel / 13,000 lbs
		K	4500XD 4H Diesel / 16,000 lbs
		9	5500HD 4H Diesel / 17,950 lbs
		3	5500XD 4H Diesel / 19,500 lbs
		G	6500XD 4H Diesel / 25,950 lbs
		8	Gas / 3500 L96 Gas / 12,000 lbs
		8	Gas / 4500 L96 Gas / 14,500 lbs
13–17	Sequence Number	—	Positions 13 through 17 represent the number sequentially assigned by the manufacturer in the production process.

Model Identification

F Series FTR

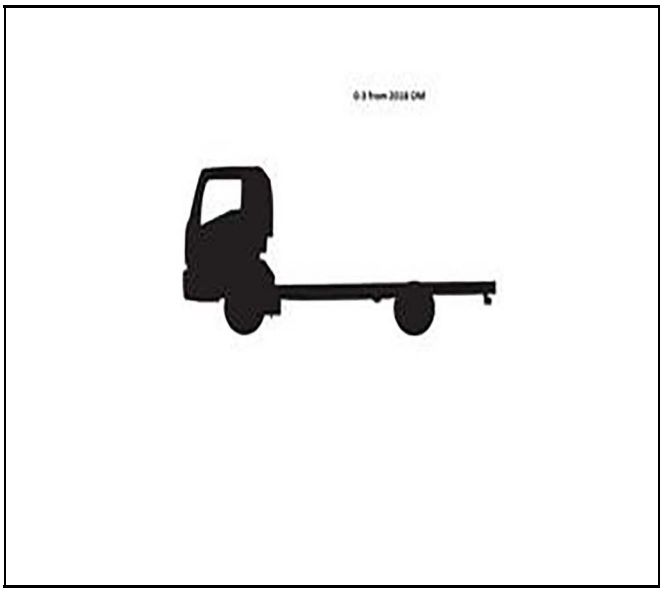

4826604

Vehicle Certification and Greenhouse Gas (GHG) Emissions Plate

The "Vehicle Certification and Greenhouse Gas (GHG) Emissions Plate" shows the manufacture's gross vehicle weight rating (GVWR), the front and rear gross axle weight ratings (GAWRs), as well as the VIN and emissions information for your vehicle. This plate is located on the left side rear pillar panel below the striker. The VIN is a legal identifier of your vehicle.

It not only appears on the "VIN, Weight Rating, and Greenhouse Gas (GHG) emissions Plate", but also on the vehicle title and registration

The VIN specifically identifies a vehicle by code.

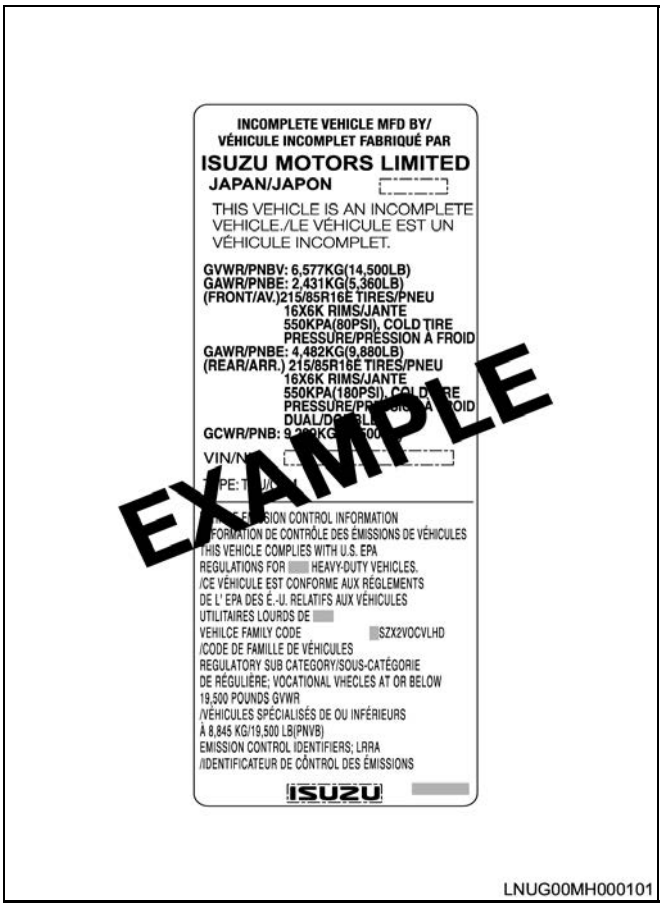

4696188

Vehicle Identification

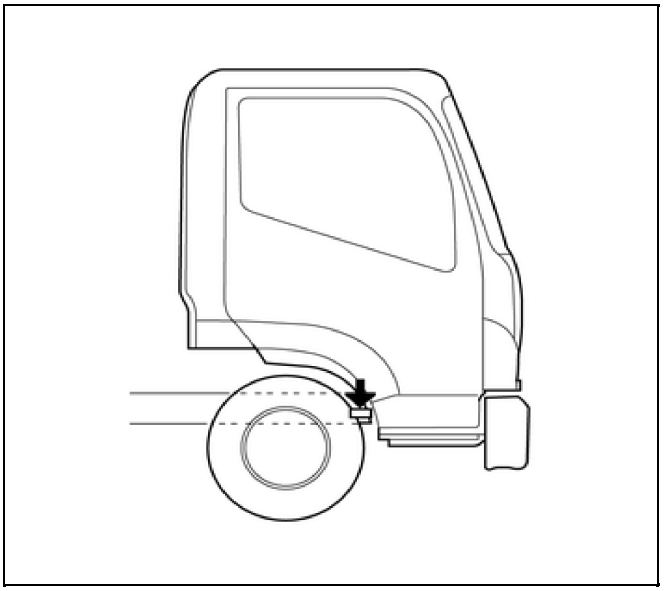

4826608

Stamped on the outer right frame rail, just in front of the right tire.

RPO Code List

The RPO list contains RPOs available on this model. Also, refer to the Service Parts Identification label for a list of the RPOs used on each specific vehicle.

Option Code	Option Description
005	RATIO-4.56 (4 5/9)
011	RATIO-5.57 (5 4/7)
015	RATIO-6.17
029	RATIO-4.77
062	RATIO-5.12
066	RATIO-4.10 (4 1/10)
092	RATIO-4.3
14B	TRIM COMBINATION-CLOTH, VERY DK GRAY (B) (97)
16U	PRIMARY COLOR-EXTERIOR, WHITE (02)152D
1WT	PACKAGE-WT OPTION 1
24J	SEAT BELT COLOR-RED, DRIVER SEAT ONLY
24K	SEAT BELT COLOR-RED, DRIVER AND PASSENGER SEAT
2TA	TIRE FRONT-LT215/85R16 E 115/112 L BW ALS VAR1
2TB	TIRE FRONT-225/70R19.5F 125/123L BW HWY VAR1
2TC	TIRE FRONT-225/70R19.5 G 125/123 L BW HWY VAR1.
3TA	TIRE REAR-LT215/85R16 E 115/112 L BW ALS VAR1
3TB	TIRE REAR-225/70R19.5F 125/123L BW HWY VAR1
3TC	TIRE REAR-225/70R19.5 G 128/126 L BW HWY VAR1
41U	PRIMARY COLOR-EXTERIOR, BLACK (8555)
46U	PRIMARY COLOR-EXTERIOR, DK GREEN (02)
47U	PRIMARY COLOR-EXTERIOR, DK BLUE MET (02)
5H5	FIRE EXTINGUISHER-2.50 LB OR EQUIV
5ME	FIRE EXTINGUISHER-5.0 LB
69I	INTERIOR TRIM-VERY DK PEWTER (01)
74U	PRIMARY COLOR-EXTERIOR, CARDINAL RED (02)
86U	PRIMARY COLOR-EXTERIOR, YELLOW (02)
9B9	GOVERNOR-ELECTRONIC SPEED SENSOR - 70 MPH
9C2	GOVERNOR-ELECTRONIC SPEED SENSOR - 65 MPH
9D2	GOVERNOR-ELECTRONIC SPEED SENSOR - 58 MPH
9E2	GOVERNOR-ELECTRONIC SPEED SENSOR - 68 MPH
9VS	COVER-SUSPENSION SEAT PROTECTOR
9W8	COVER-SEAT PROTECTOR
A1F	SEAT-FRT BKT, HIGH BACK, DRIVER & PASS
A1G	SEAT-FRT BKT, HIGH BACK, DRIVER ONLY AIR SUSPENSION & PASS
A31	WINDOW-POWER OPERATED, ALL DOORS (DO NOT USE ON NEW/ MAJOR PROGRAMS)
ATG	LOCK CONTROL, ENTRY-REMOTE ENTRY, STANDARD RANGE
AU3	LOCK CONTROL-SIDE DR, ELEC
C42	HVAC SYSTEM-HEATER, OUTSIDE AIR, DELUXE
C60	HVAC SYSTEM-AIR CONDITIONER FRT, MAN CONTROLS
C7J	GVW RATING-13,000 LBS
C7L	GVW RATING-12,000 LBS
C7P	GVW RATING-16,000 LBS
C7S	GVW RATING-14,500 LBS
C7X	GVW RATING-17,950 LBS
CD7	WIPER SYS WINDSHIELD-PULSE, WET ARM
CSM	PLANT CODE-CHARLOTTE, MI, USA
DB5	MIRROR O/S-LH & RH, WIDE LOAD, INTEGRAL ARM
DB6	MIRROR O/S-LH & RH, WIDE LOAD, ELEC REMOTE CONTROL, LIGHTED, HEATED, INTEGRAL ARM
DB8	MIRROR O/S-LH & RH, WIDE LOAD, HEATED, INTEGRAL ARM
DC1	MIRROR O/S-LH & RH, 96" WIDE, ELEC HEATED
DC3	MIRROR O/S-LH & RH, 96" WIDE, ELEC REMOTE CONTROL, HEATED
DF1	MIRROR O/S-LH & RH, 102" WIDE, ELEC HEATED
DF3	MIRROR O/S-LH & RH, 102" WIDE, ELEC HEATED, REMOTE
DF7	MIRROR O/S-LH & RH, 102" WIDE, STANDARD MIRROR HEADS
E01	STEPS-ASSIST
E8C	EQUIPMENT-CAN INTERFACE CONVERTER
EB4	WHEELBASE-109 INCH
EF7	COUNTRY-UNITED STATES OF AMERICA (USA)
EG7	WHEELBASE-236 INCH
EG9	WHEELBASE-152 INCH
EH8	WHEELBASE-170 INCH
EK6	WHEELBASE-224 INCH

Option Code	Option Description
EK8	WHEELBASE-188 INCH
EL5	WHEELBASE-212 INCH
EM2	WHEELBASE-200 INCH
ES5	WHEELBASE-248 INCH
F26	SUSPENSION FRONT-12000 LB (5,450 KG), TAPERED LEAF
FHO	VEHICLE FUEL-GASOLINE E10
FHX	VEHICLE FUEL-DIESEL B20
FL5	AXLE FRONT-6,830 LB (3,098 KG)
FL6	AXLE FRONT-7,275 LB (3,299 KG)
FL9	SUSPENSION FRONT-6,830 LB (3,098 KG), TAPERED LEAF
FM2	SUSPENSION FRONT-8,440 LB, 3,828 KG) TAPERED LEAF
FNJ	WHEELBASE-132.5 INCH / 3,365 MM
FNW	WHEELBASE-176 INCH
FS7	AXLE FRONT-12,000 LB (5,450 KG), HD
FU3	SUSPENSION REAR-9,880 LB (4,481 KG), MULTILEAF
FU4	SUSPENSION REAR-12,900 LB (5,851 KG), MULTILEAF
FU5	SUSPENSION REAR-14,308 LB (6,490 KG), MULTILEAF
FU6	SUSPENSION REAR-14,550 LB (6,559 KG), MULTILEAF
FUJ	PLANT CODE-FUJISAWA, JAPAN
FWH	WHEELBASE-150 INCH/3,815 MM
G7M	EQUIPMENT-AIR DEFLECTOR - OVER CAB
G86	AXLE-LIMITED SLIP
GN8	SUSPENSION REAR-21,000 LB (9,525 KG), MULTILEAF
GZG	GVW RATING-19,500 LBS
GZI	GVW RATING-25,950 LBS
HNF	INTERIOR TRIM CONFIG-CLOTH, V DK PEWTER
HPK	AXLE REAR-19,000 LB (8,618 KG), DANA 19060S, SINGLE SPEED
HS6	AXLE REAR-11,020 LB (4,998 KG)
HS9	AXLE REAR-14,550LB (6,599 KG)
I18	ENGINEERING YEAR-2018
I1B	ENGINE-DIESEL, 4 CYL, 5.2L, 4HK1TC 215HP
IR7	TRANSMISSION-AUTO 6 SPD, HMD, A465
IX0	TRANSMISSION-AUTO 6 SPD, HMD, A460
IX2	SWITCH-DOME LAMP, REAR BODY
IZ3	ENGINE-DIESEL, 4 CYL, 3.0L, 4JJ1-TC 150HP
J69	BRAKE PARKING-MECHANICALLY OPERATED

Option Code	Option Description
JE4	BRAKE-AIR
JE5	BRAKE SYSTEM-PWR, ANTILOCK, FRT & RR WHL
K05	HEATER ENG-BLOCK
K34	CRUISE CONTROL-AUTOMATIC, ELECTRONIC
K40	ENGINE BRAKE-EXHAUST
K45	AIR CLEANER-HEAVY DUTY
K63	GENERATOR-110 AMP
KG3	GENERATOR-145 AMP
KG9	GENERATOR-140 AMP
KPG	CAP-DEF FILL, LOCKING
KPJ	ENGINE SHUTDOWN-AUTOMATIC
KPK	HEATER-OIL PAN
KQJ	ENGINE SHUTDOWN-AUTOMATIC, 3 MINUTE TIMER
KQN	ENGINE SHUTDOWN-AUTOMATIC, 5 MINUTE TIMER
KQS	CAP-DEF FILL, LOCKING, KEYED ALIKE
L96	ENGINE-GAS, 8 CYL, 6.0L, SFI, E85 MAX, IRON, GM
LC8	ENGINE-LPG/CNG, 8 CYL, V8, 6.0L, SFI, GEN 1, GMNA
MAH	MARKETING AREA-US, PUERTO RICO/USVI
MPQ	TRANSMISSION-AUTO 6 SPD, ALLISON, 2550RDS/HS CONV CLUTCH, WITH PARK PAWL.
MTE	PROVISIONS-FIRE EXTINGUISHER/ SAFETY REFLECTOR KIT MOUNTING
MYD	TRANSMISSION-AUTO 6 SPD, HMD, 6L90
N33	STEERING COLUMN-TILT TYPE
N3R	STEERING WHEEL-URETHANE
N4C	CERTIFICATION-EMISSION, USA 50 STATE
N4E	EMISSION SYSTEM-USA, 50 STATE
NB5	EXHAUST SYSTEM-SINGLE
NC2	EXHAUST SYSTEM-SINGLE HORIZONTAL
NH2	FUEL TANK-113L, 30 GAL
NL0	FUEL TANK-189L, 50 GAL
NL7	FUEL TANK-FRONT, 33GAL, 125L
NLX	TANK-FUEL, LH MOUNT, 33 GAL ADDITIONAL
NNB	FUEL TANK-378L, 100 GAL
NPV	EXHAUST SYSTEM-SINGLE VERTICAL MUFF & TAILPIPE CAB MOUNTED
PTO	ENGINE CONTROL-POWER TAKE OFF (PTO) CONTROLS
PTX	ENGINE CONTROL-POWER TAKE-OFF (PTO), CONTROLS - NONE

Option Code	Option Description
PWJ	WHEEL-16 X 6.0, K, STEEL, DESIGN 1
PWK	WHEEL-19.5 X 6.0, K STEEL, DESIGN 1
RQ2	VEHICLE APPLICATION-TRUCK SERVICE
RTP	WHEEL-22.5 X 8.25, J, STEEL, DESIGN 1
RWL	CHASSIS DRIVE LINE-REAR WHEEL DRIVE (RWD)
TD1	REFLECTOR-SAFETY TRIANGLE
TP6	BATTERY-750 CCA, 12V, (SINGLE)
TP7	BATTERY-750 CCA, 12V, (DUAL)
UAD	SPEAKER SYSTEM-2, FRONT, BASE
UDH	DISPLAY INSTRUMENT-DRIVER INFO (ONE COLOR GRAPHIC)
UIY	RADIO-AM STEREO/FM STEREO, CD, AUX INPUT, USB PORT
UIZ	RADIO-AM STEREO/FM STEREO, CD, AUX INPUT, USB PORT, BLUETOOTH
UL5	RADIO-(NONE)
UZF	ALARM B/U-ELECTRICAL,
V10	PROVISION OPTIONS-COLD WEATHER
V22	GRILLE-RADIATOR, CHROME
V8D	VEHICLE STATEMENT-US
VT7	OWNERS MANUAL-ENGLISH LANGUAGE
VWX	GRILLE-BASE VEHICLE
VXT	VEHICLE TYPE-INCOMPLETE
WMJ	VIN MODEL YEAR-2018
X88	MARKET BRAND-CHEVROLET

Option Code	Option Description
XUH	TIRE FRONT-11R22.5 G 144/142 L BW HWY VAR1
XWL	MIRROR PROVISIONS-102" MIRROR BRACKET
YUH	TIRE REAR-11R22.5 G 144/142 L BW ALS VAR1
ZY1	COLOR COMBINATION-SOLID

Engine Identification

Chassis Number

It is stamped on the front right-hand side face of the chassis side member.

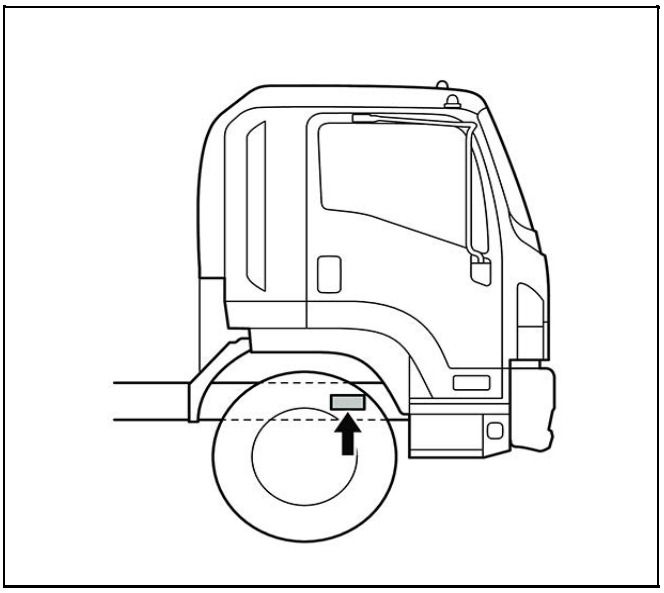

4862832

Engine Number

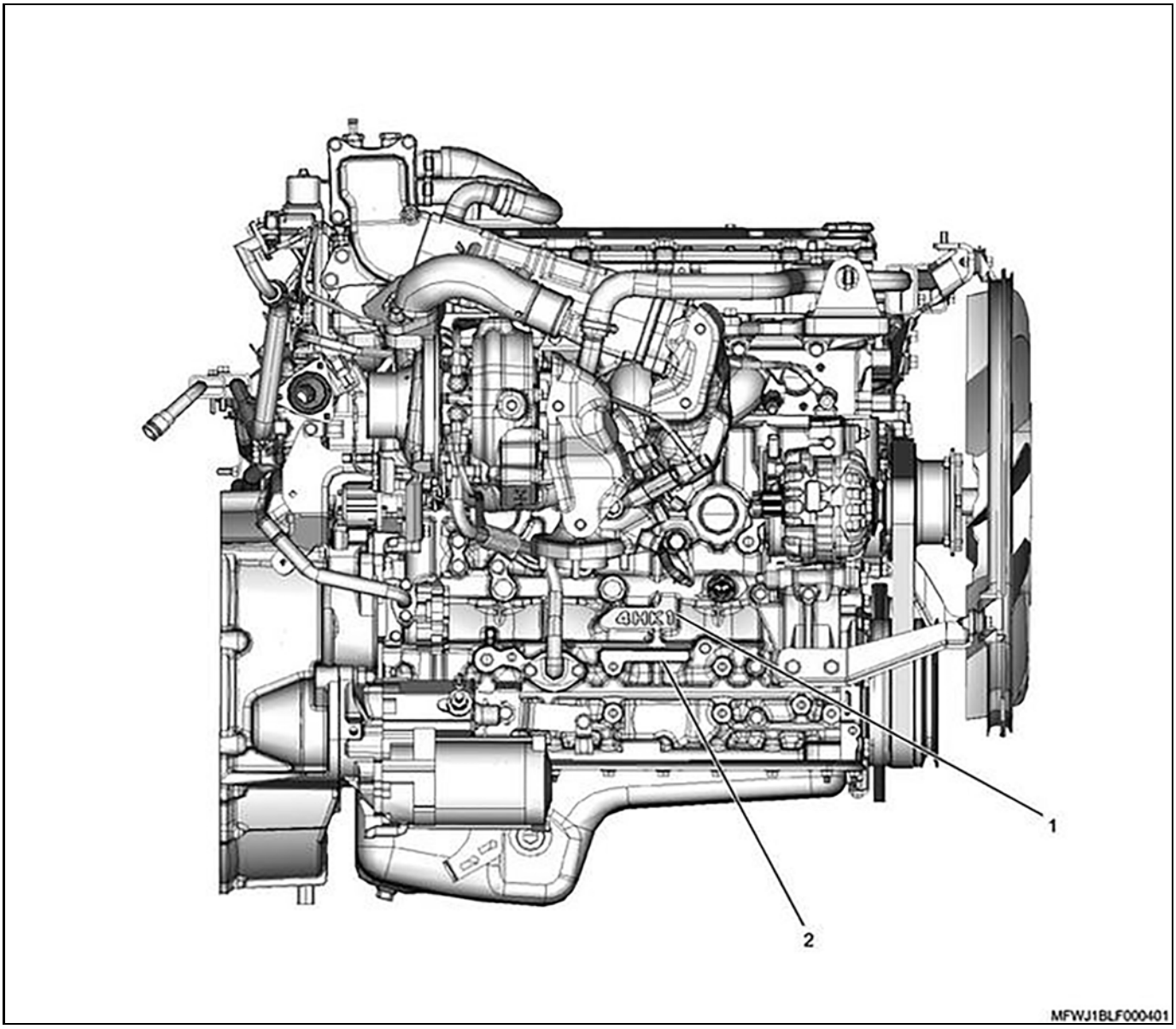

4861125

Legend

(1) Engine Type Stamping Location

(2) Engine Number Stamping Position

BLANK

Section 2

Cab and Chassis Electrical

Cab and Chassis Electrical 2-3
Specifications 2-3
Diode Specifications and Configurations 2-3
Fuses (Center) 2-3
Fuses (Cab) 2-16
Schematic and Routing Diagrams 2-39
Controller Area Network (CAN) Schematics 2-39
Data Link Connector Schematics 2-43
FMS CAN Interface Schematics 2-45
Ground Distribution Schematics 2-47
Heated Mirror Schematics 2-65
MIMAMORI Schematics 2-69
Power Distribution Schematics 2-71
Body Builder Connector Schematics 2-74
Rear Manufacture Connector Schematics 2-76
Power Outlet/Power Source Schematics 2-78
Power Take-Off System Schematics 2-80
Engine Heating/Cooling Schematics 2-87
Exhaust System Schematics 2-87
Component Locator 2-93
Ground Views 2-93
Component Connector End Views 2-105
Visual Identification 2-679
Inline Harness Connector End Views 2-679
Component Locator 2-768
Diode Location 2-768
Fuse, Fusible Link, and Slow-Blow Fuse Location 2-769
Relay Location 2-774
Diagnostic Information and Procedures 2-775
Instrumentation and Driver Information Diagnosis Introduction 2-775
Electrical Schematic Symbols 2-776
Schematic and Routing Diagrams 2-788
Selective Catalyst Reduction (SCR) Schematics 2-788
Exterior Lights Schematics 2-794
Interior Lights Schematics 2-808
Wiper/Washer Schematics 2-815
Horn Schematics 2-818
Radio and Cigarette Lighter Schematics 2-818
Instrument Cluster Schematics 2-820
Keyless Entry Schematics 2-840
HVAC Schematics 2-841
Power Window Schematics 2-845
Power Door Lock Schematics 2-845
Backup Alarm System Schematics 2-847
Description and Operation 2-854
Lighting Systems Description 2-854
Wiper/Washer Systems Description 2-861
Ignition Switch Description 2-862
Driver Information Description 2-862
Battery Description 2-871
Connector Description 2-873
Fuse, Fusible Link, and Slow-Blow Fuse Description 2-875
Relay Description 2-877
Wiring Description 2-881
Vehicle Control (FMS CAN Interface) 2-883
Schematic and Routing Diagrams 2-883
FMS CAN Interface Schematics 2-883
Component Locator 2-884
FMS CAN Interface Controls Component Views 2-884
Visual Identification 2-885
Connector End Views 2-885
Vehicle Control (MIMAMORI) 2-887
Schematic and Routing Diagrams 2-887
MIMAMORI Schematics 2-887
Component Locator 2-888
MIMAMORI Controls Component Views 2-888
Visual Identification 2-889
Connector End Views 2-889

BLANK

Cab and Chassis Electrical

Specifications

Diode Specifications and Configurations

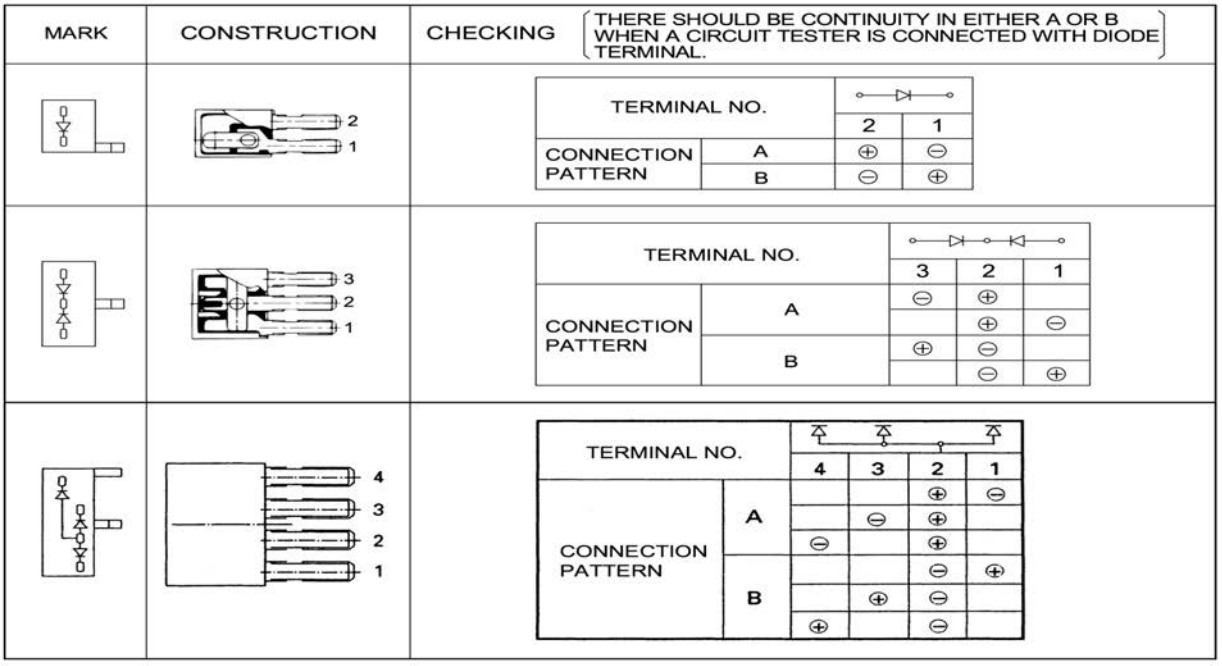

4495844

Maximum Rating (Temp. = 25°C {77°F})

Items	Rating	Remarks
Peak Reverse Voltage	400V	—
Transient Peak Reverse Voltage	500V	—
Average Output Current	1.5A	Temp. = 40°C (104°F)
Working Ambient Temperature	-30°C – 80°C (-22°F – 176°F)	—
Storage Temperature	-40°C – 100°C (-40°F – 212°F)	—

Fuses (Center) (FL-1, FL-2 Fuses)

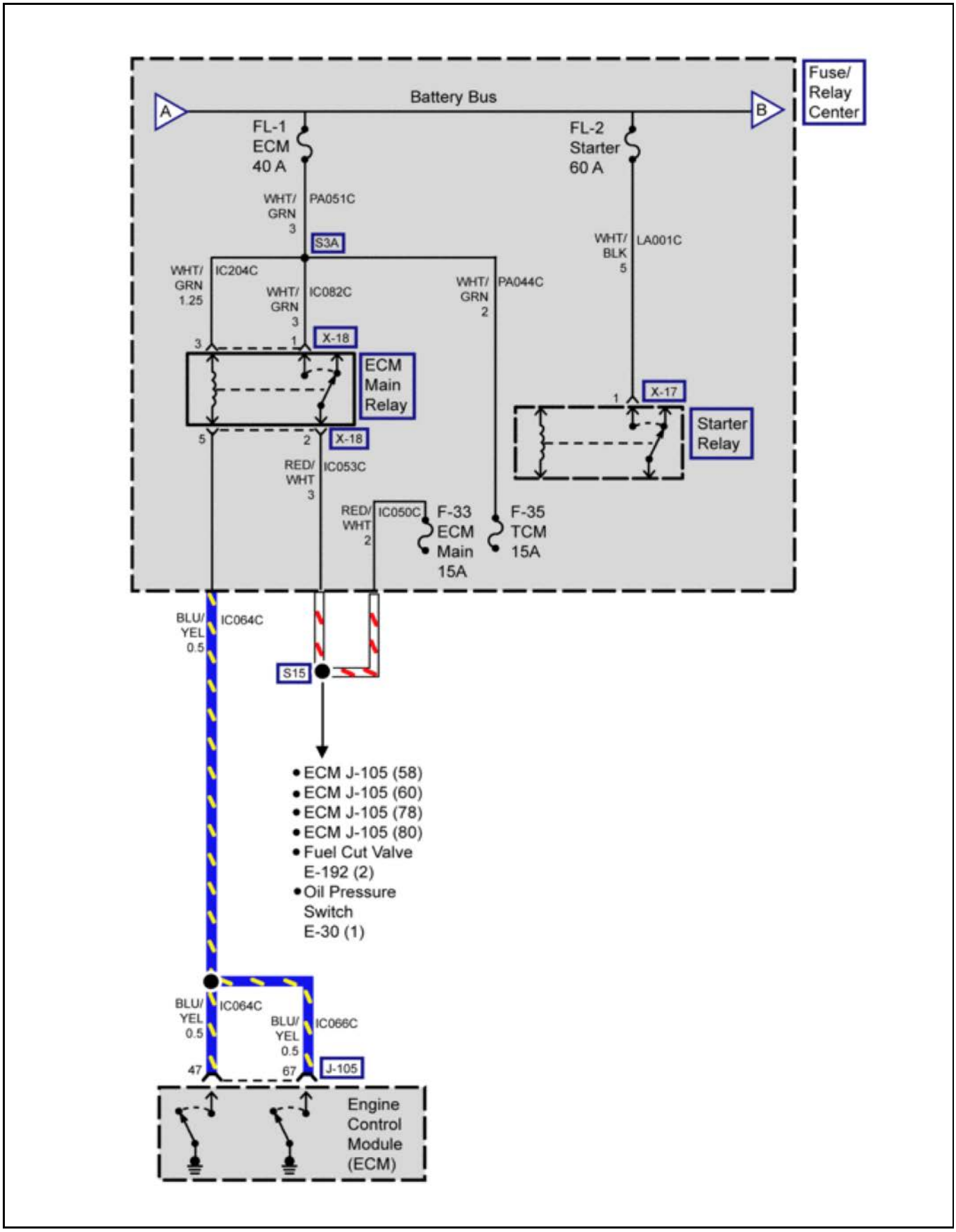

4891131

Fuses (Center) (FL-3, FL-4 Fuses)

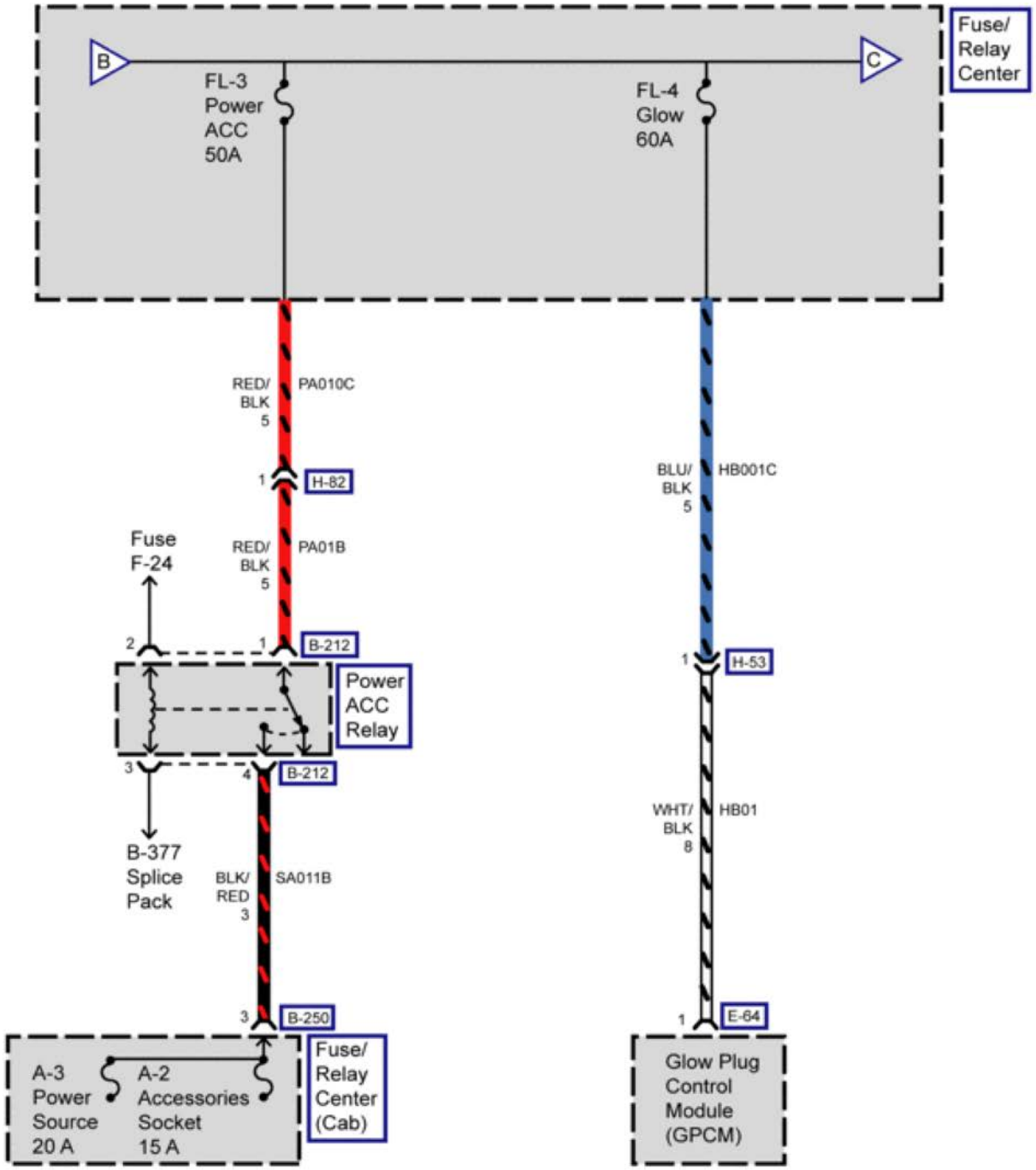

4891181

Fuses (Center) (FL-5, FL-6 Fuses)

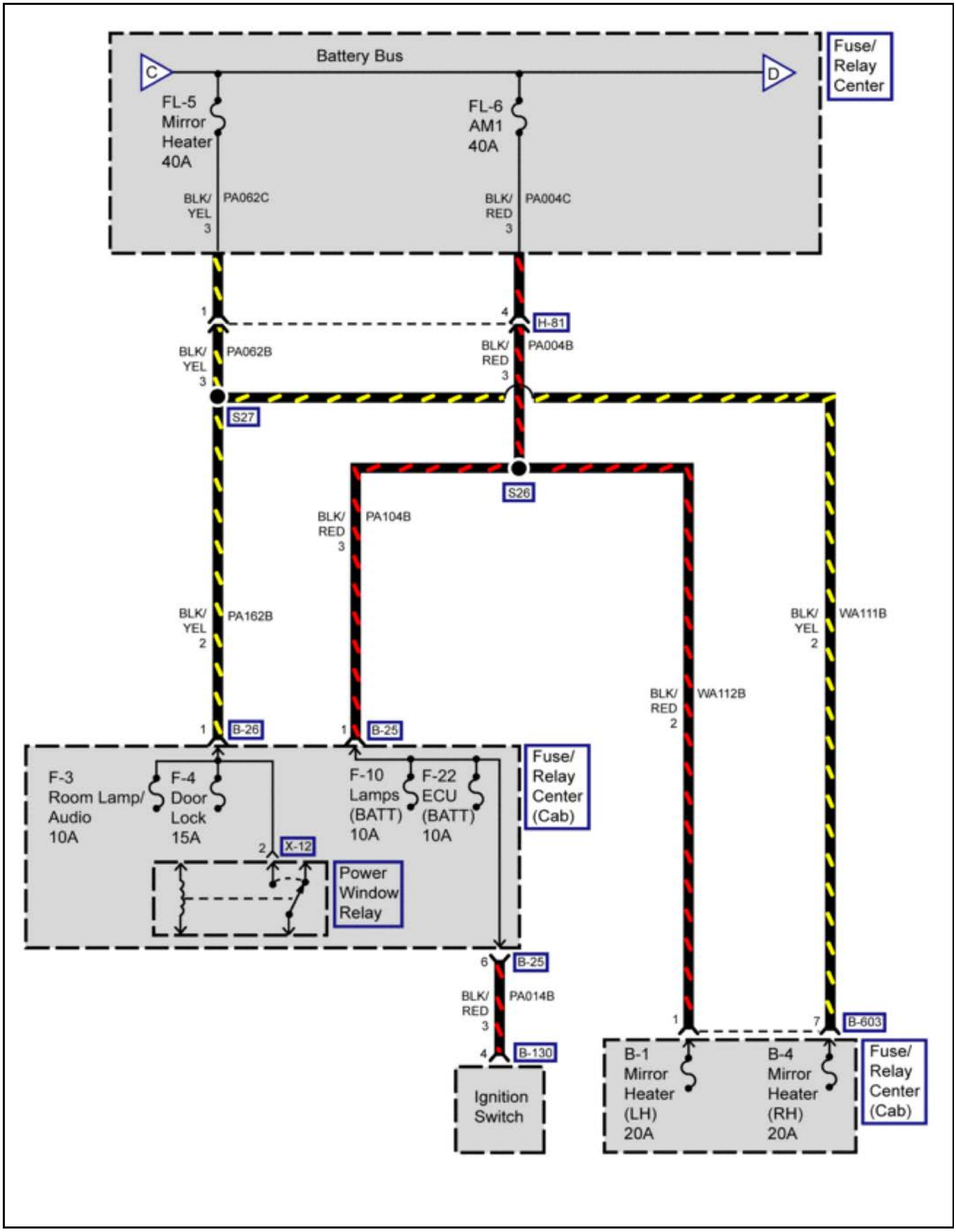

4891184

Fuses (Center) (FL-7, FL-8 Fuses)

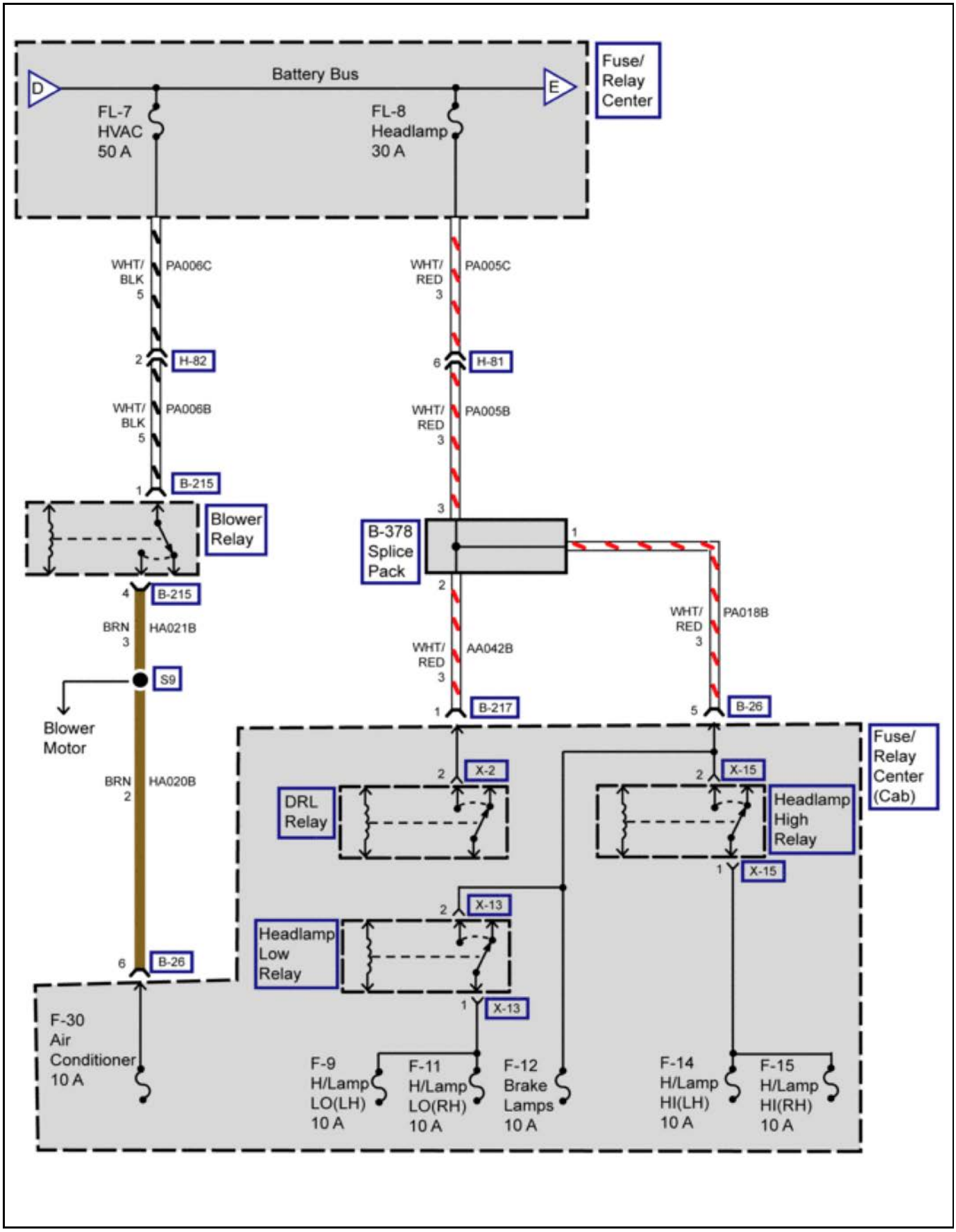

4891188

Fuses (Center) (FL-9, FL-10, FL-11 Fuses)

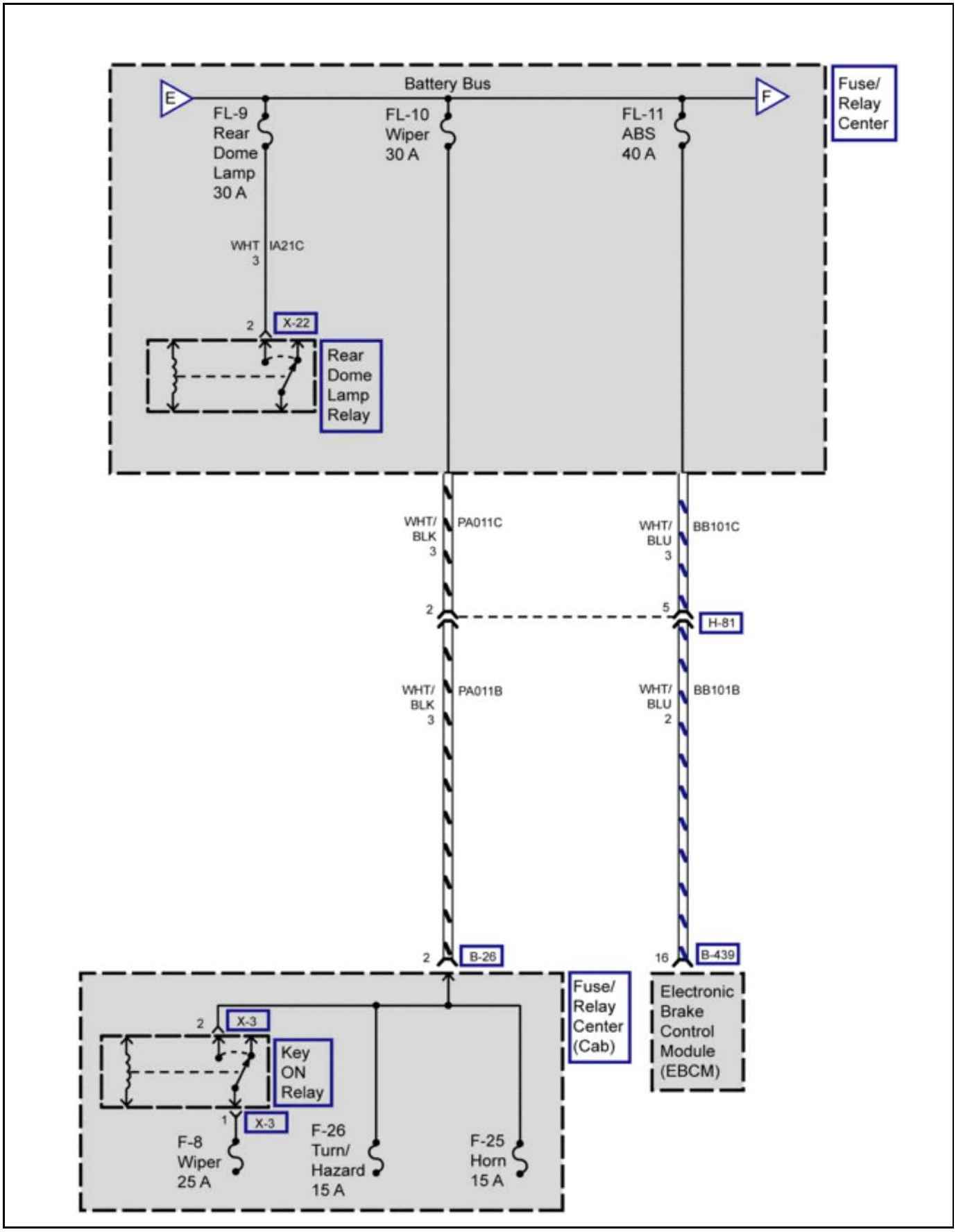

4891191

Fuses (Center) (FL-12 Fuse)

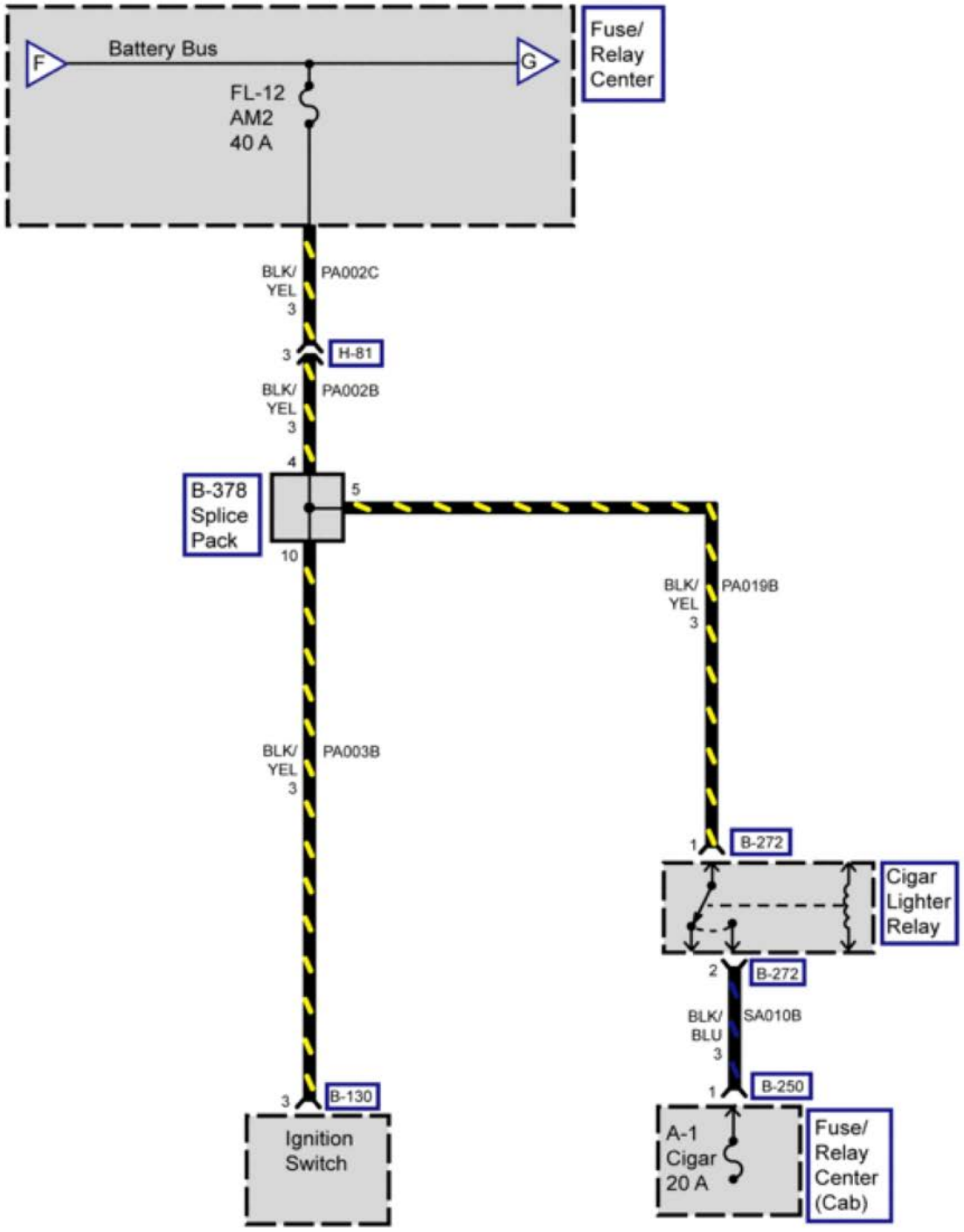

4891197

Fuses (Center) (F-31, F-32 Fuses)

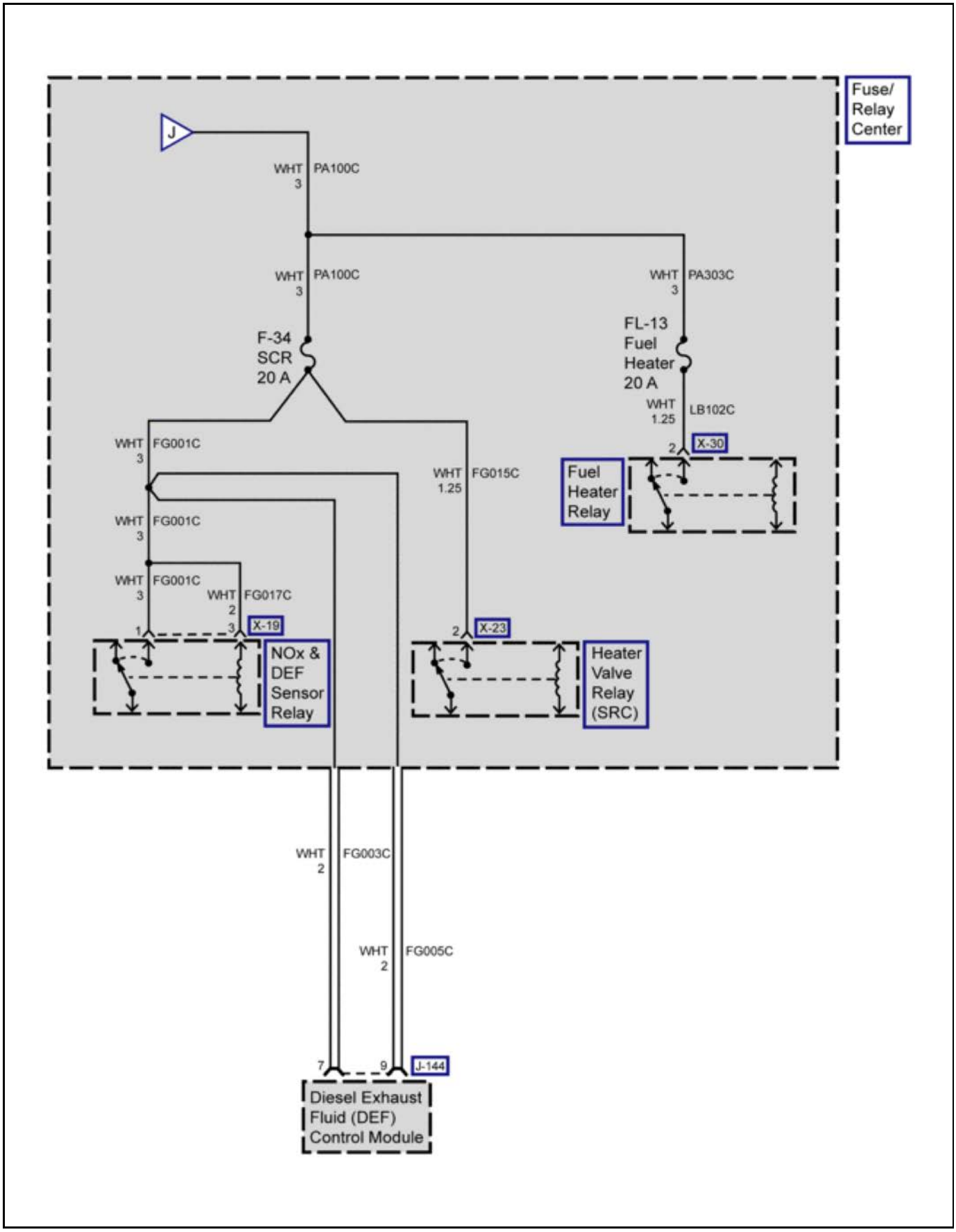

4891210

Fuses (Center) (F-31, F-32 Fuses)

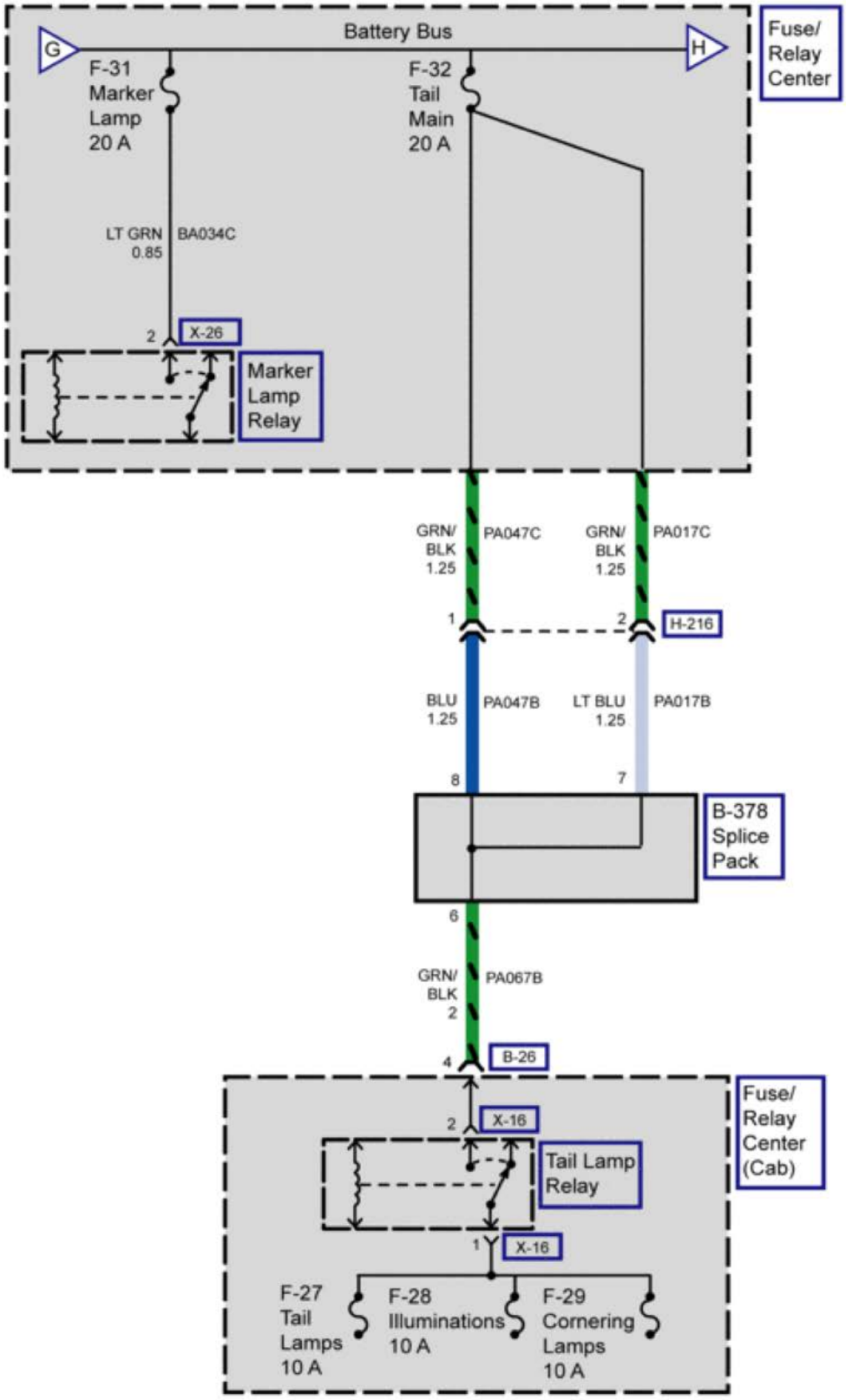

4891215

Fuses (Center) (F-33 Fuse)

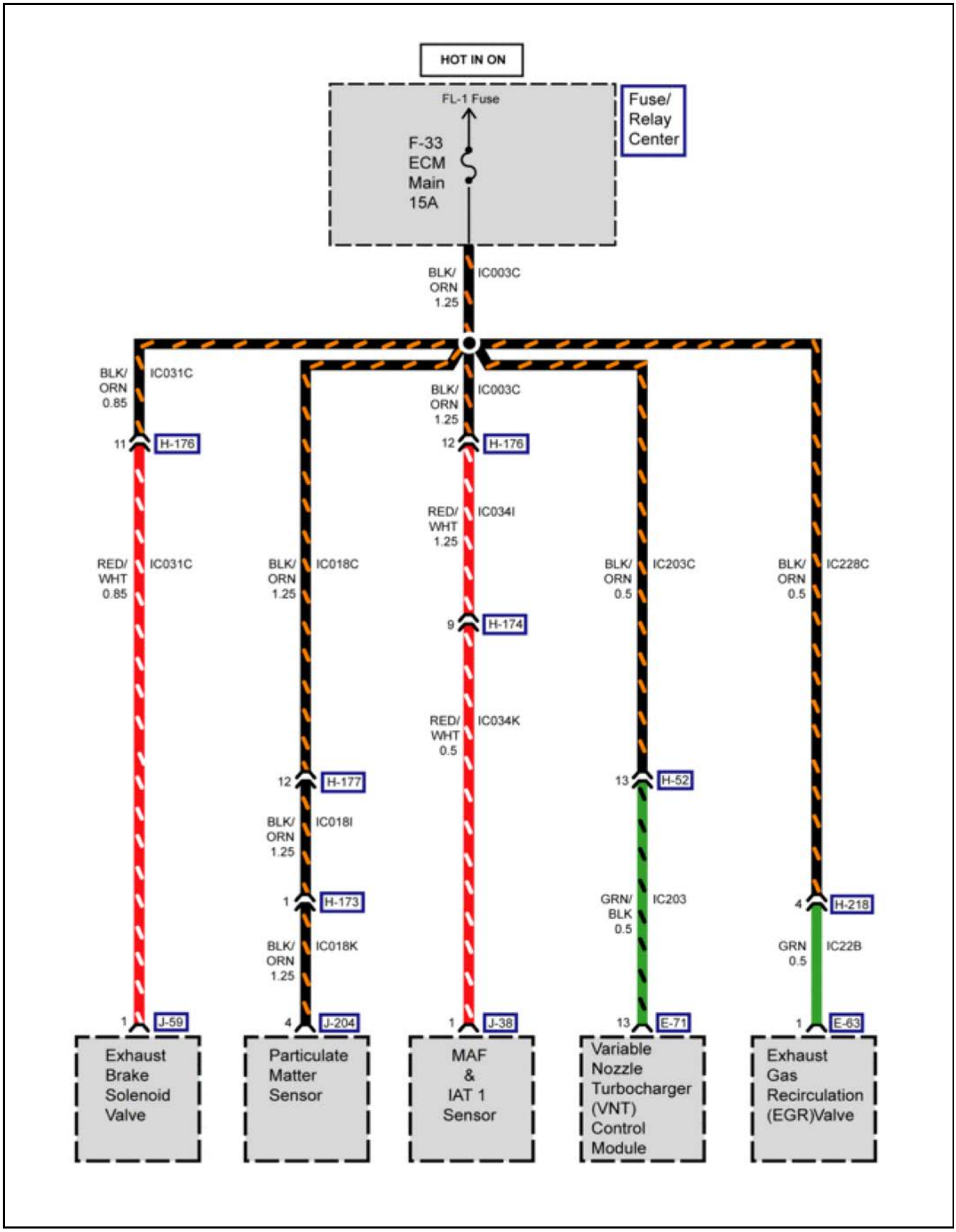

4891220

Fuses (Center) (F-34 Fuse)

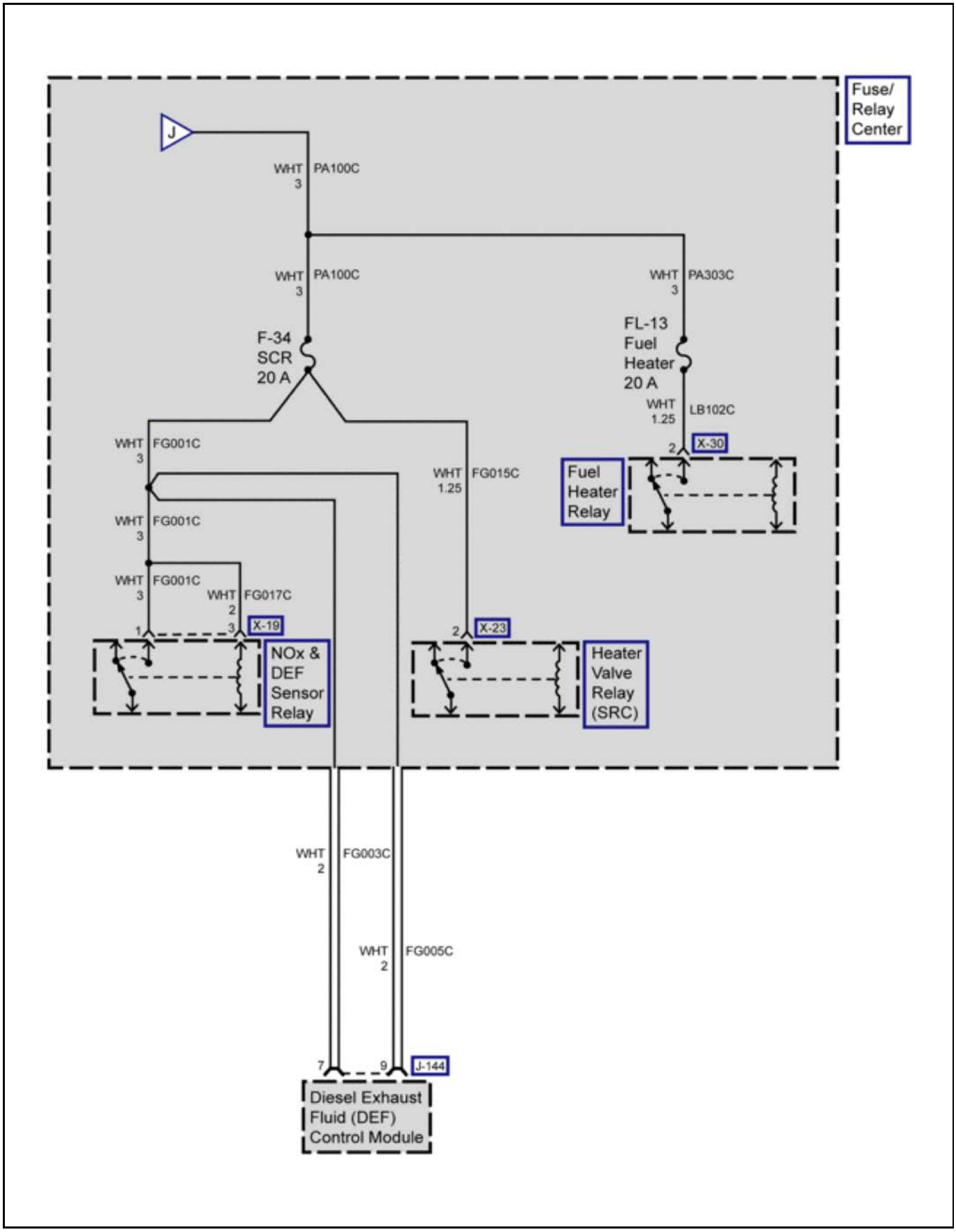

4891226

Fuses (Center) (F-35 Fuse)

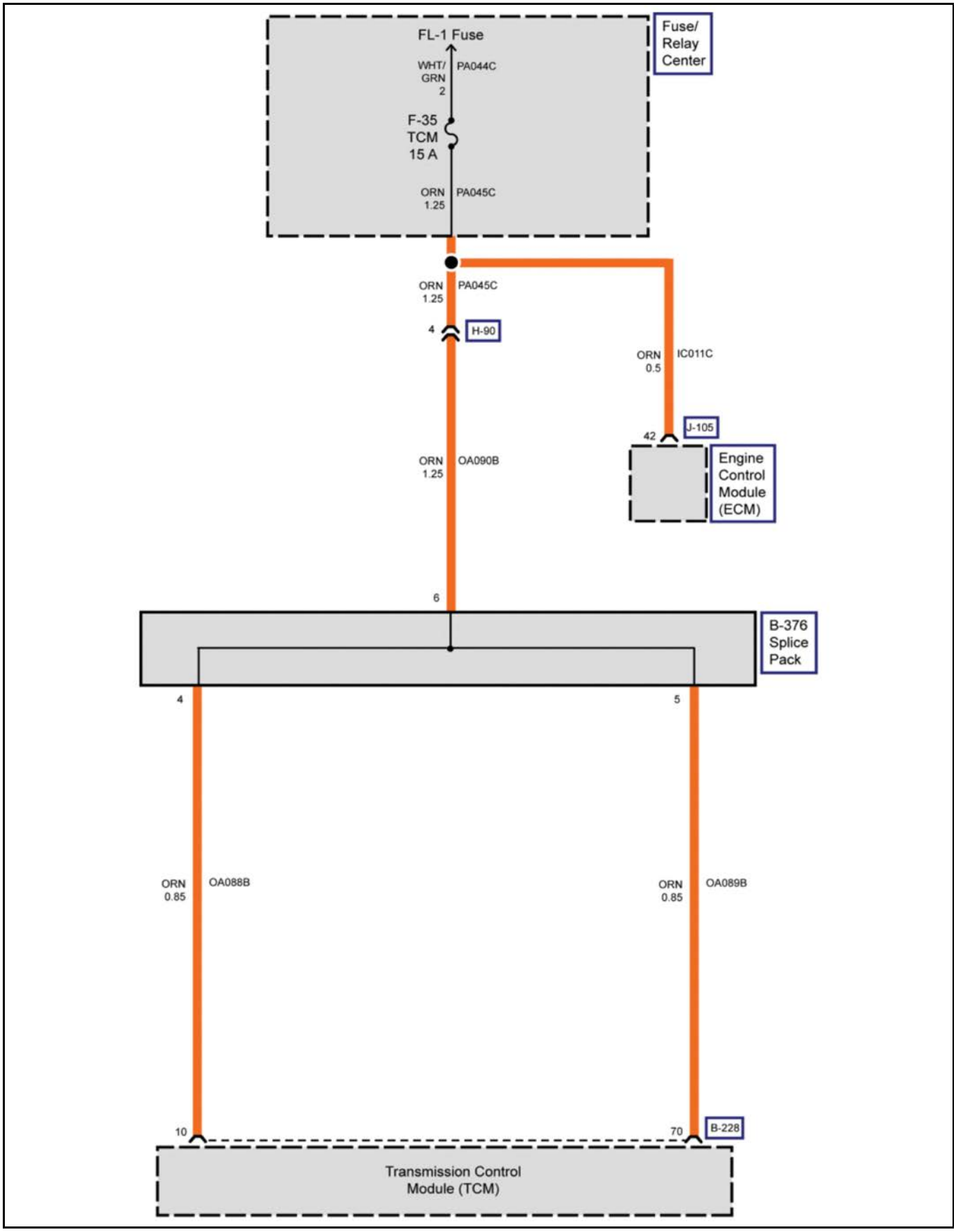

4891236

Fuses (Center) (F-36 Fuse)

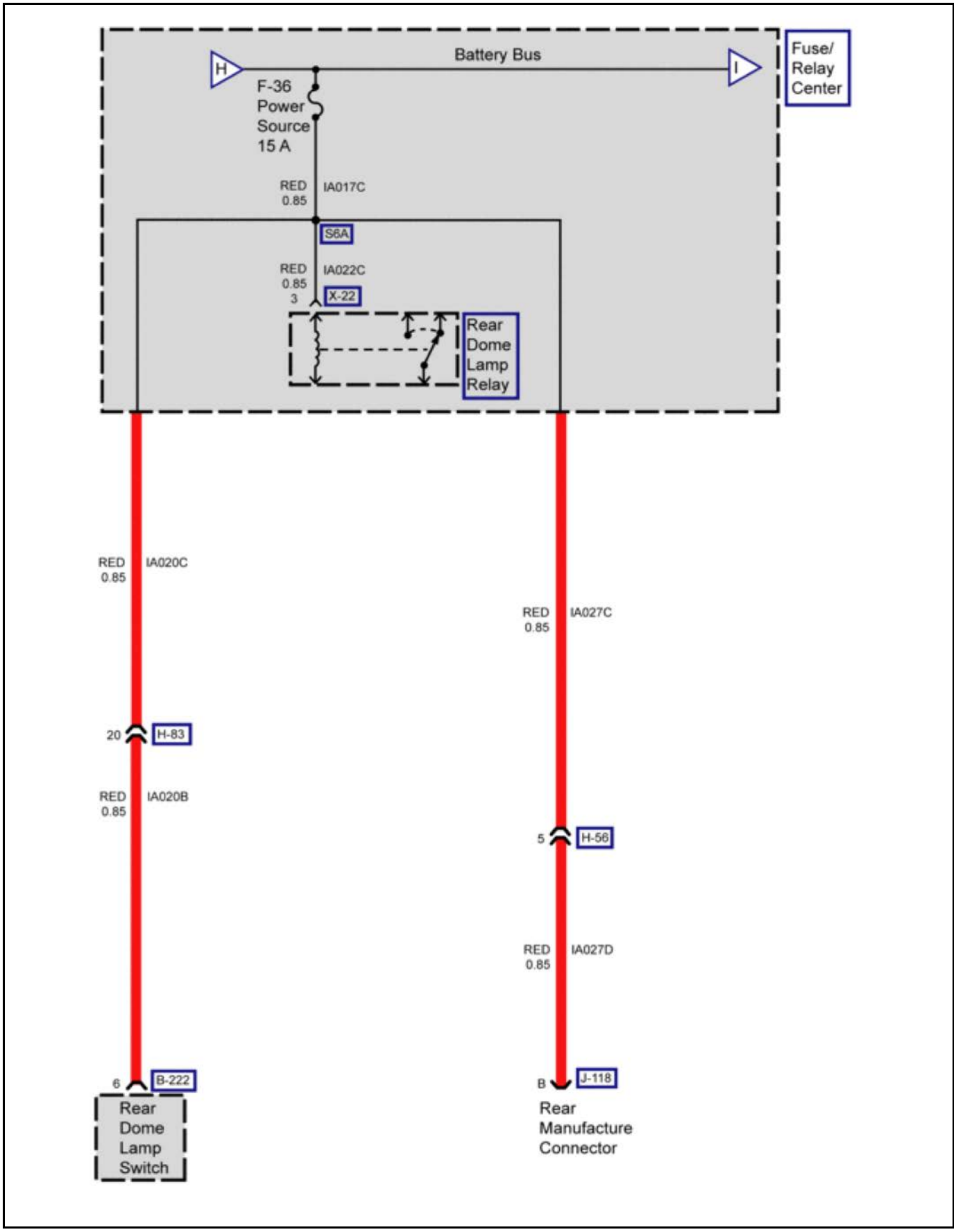

4891243

Fuses (Center) (F-37, F-38 Fuses)

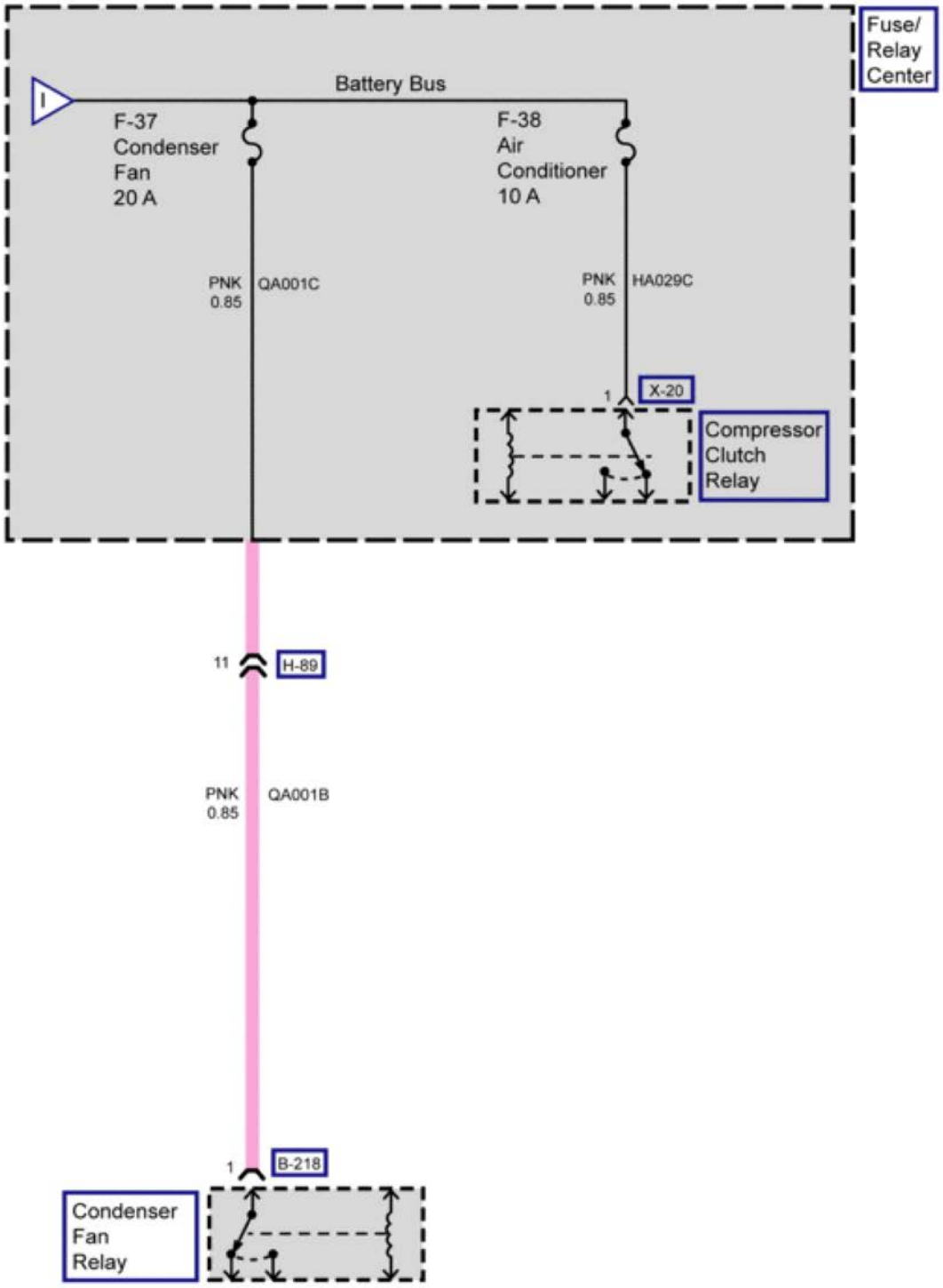

4891248

Fuses (Cab) (F-3 Fuse)

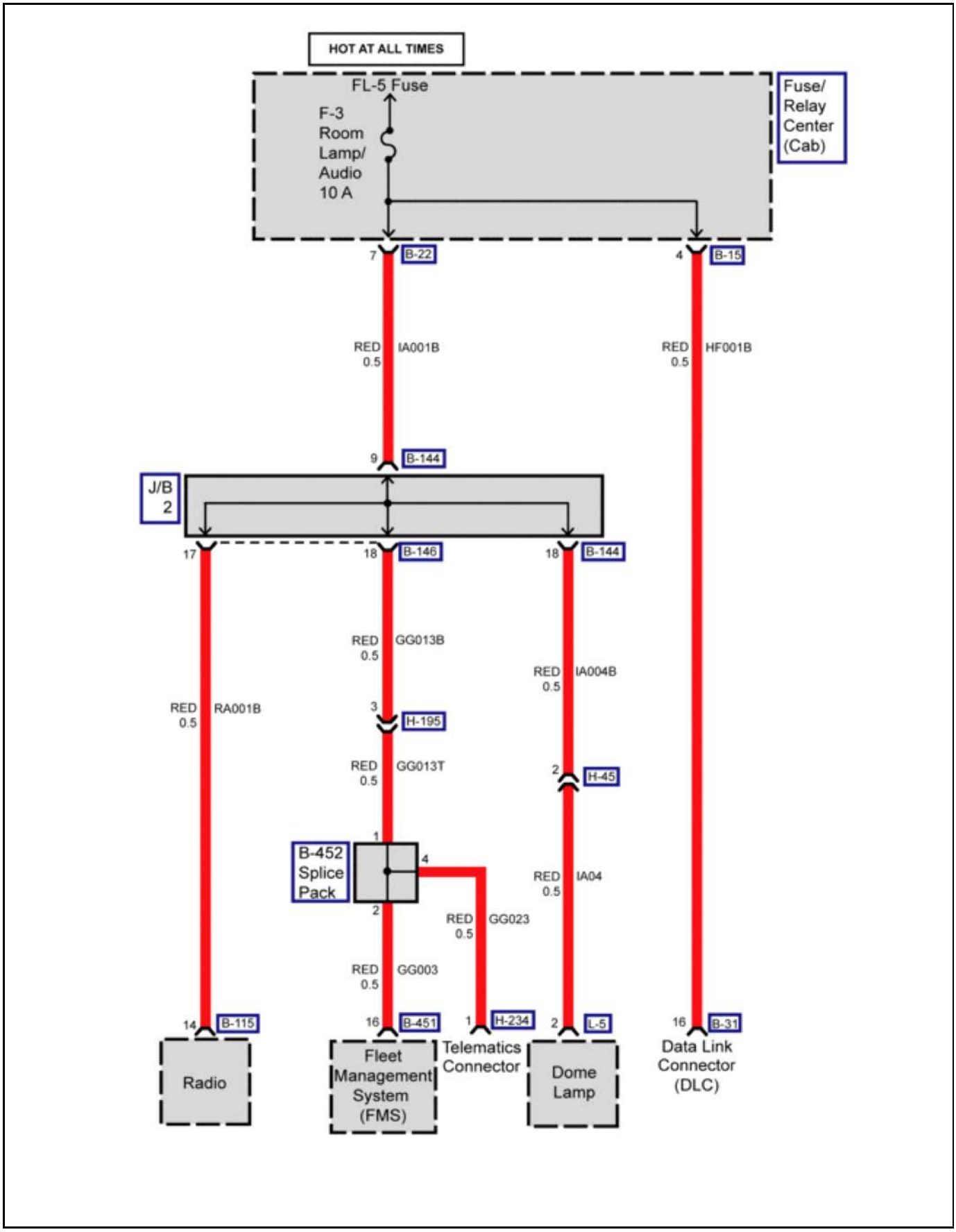

4891261

Fuses (Cab) (F-4, F-6 Fuses)

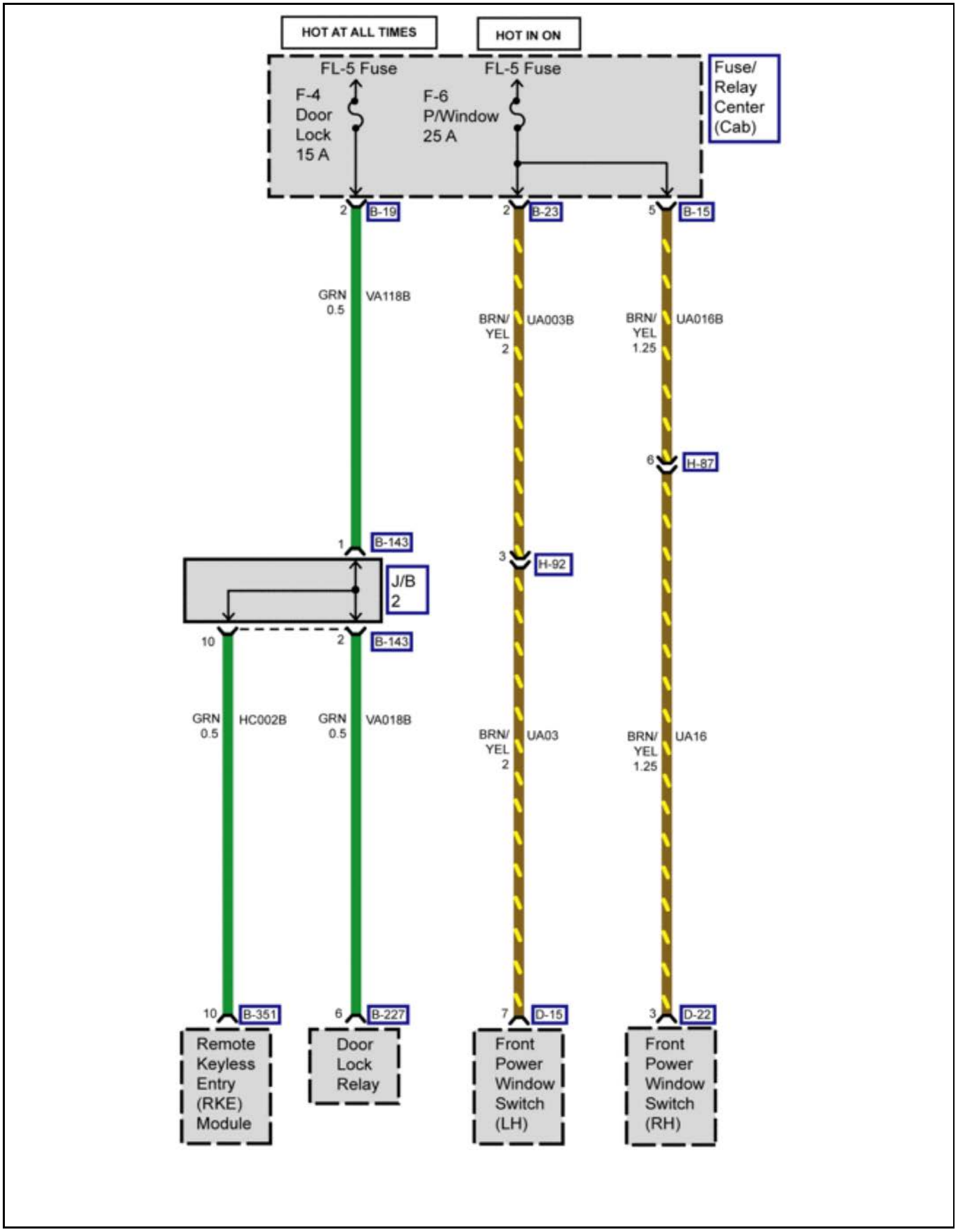

4891289

Fuses (Cab) (F-7 Fuse)

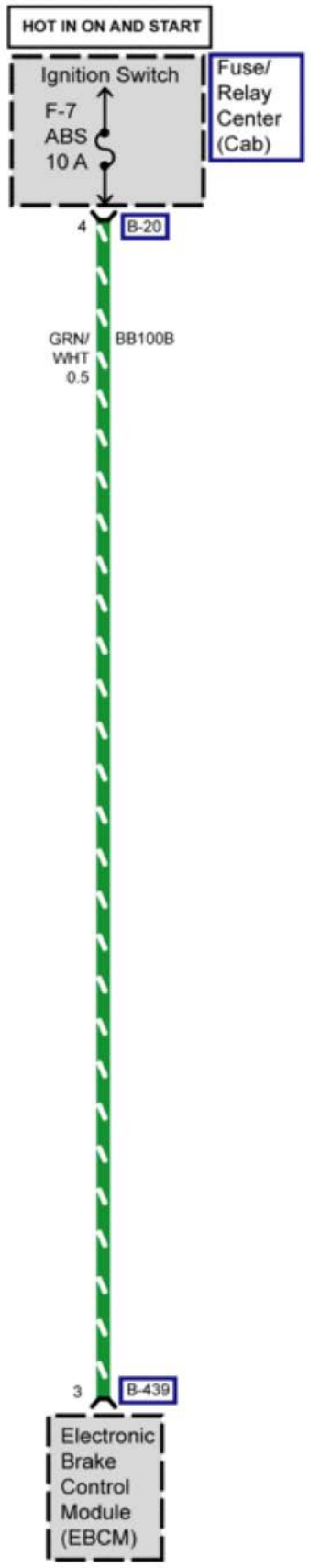

4891311

Fuses (Cab) (F-8 Fuse)

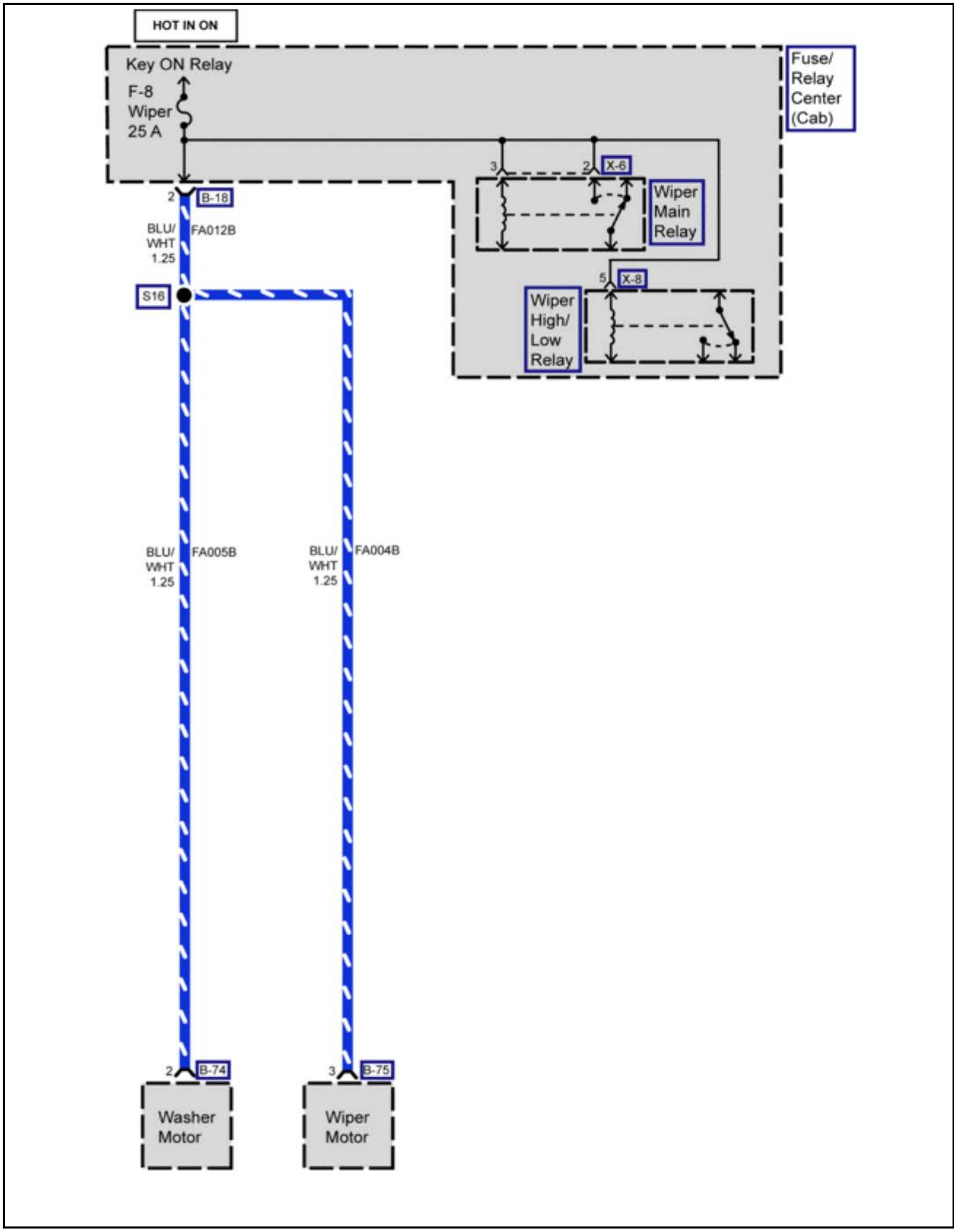

4891347

Fuses (Cab) (F-9, F-11 Fuses)

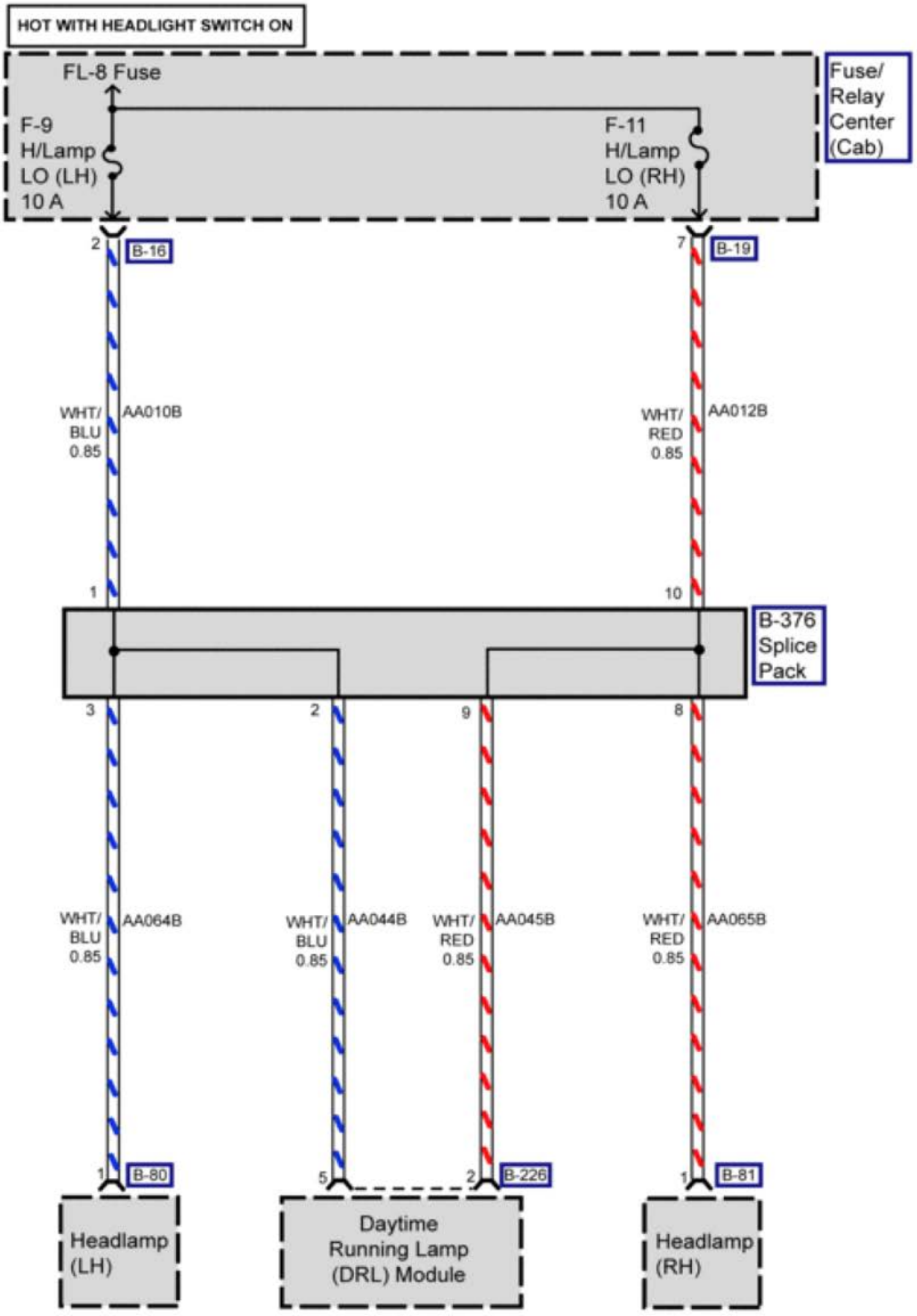

4891367

Fuses (Cab) (F-10 Fuse)

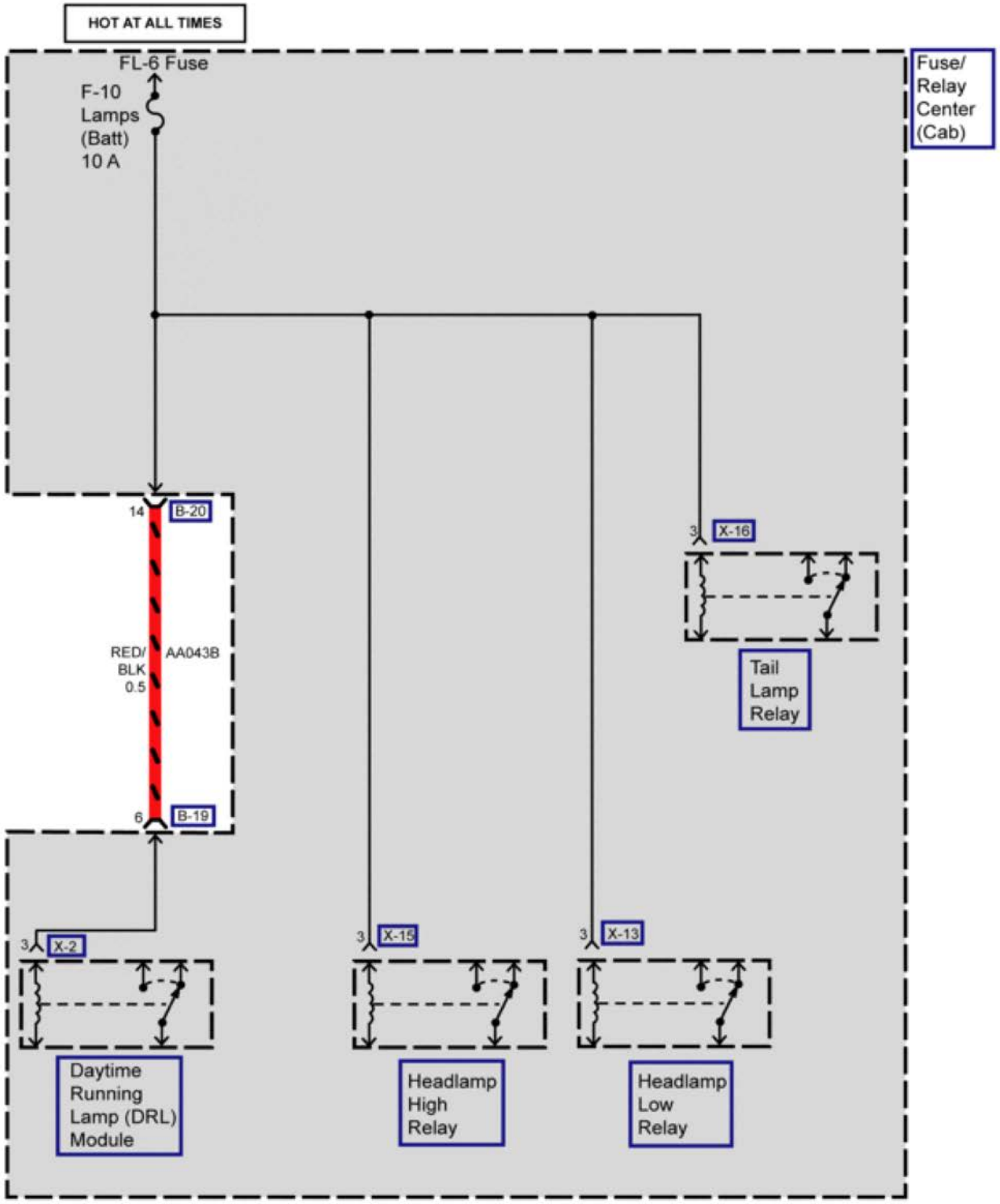

4891380

Fuses (Cab) (F-12, F-13 Fuses)

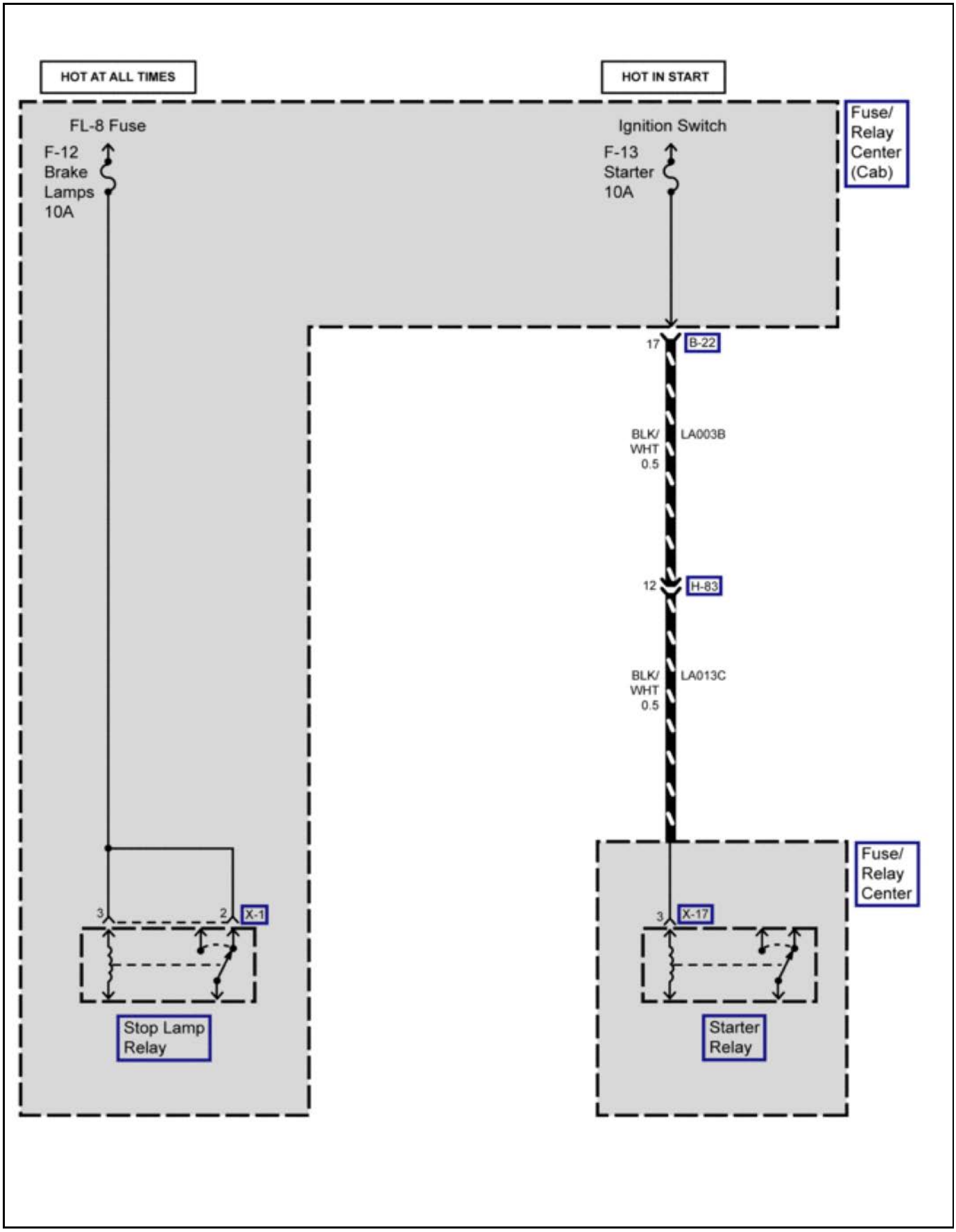

4891398

Fuses (Cab) (F-14, F-15 Fuses)

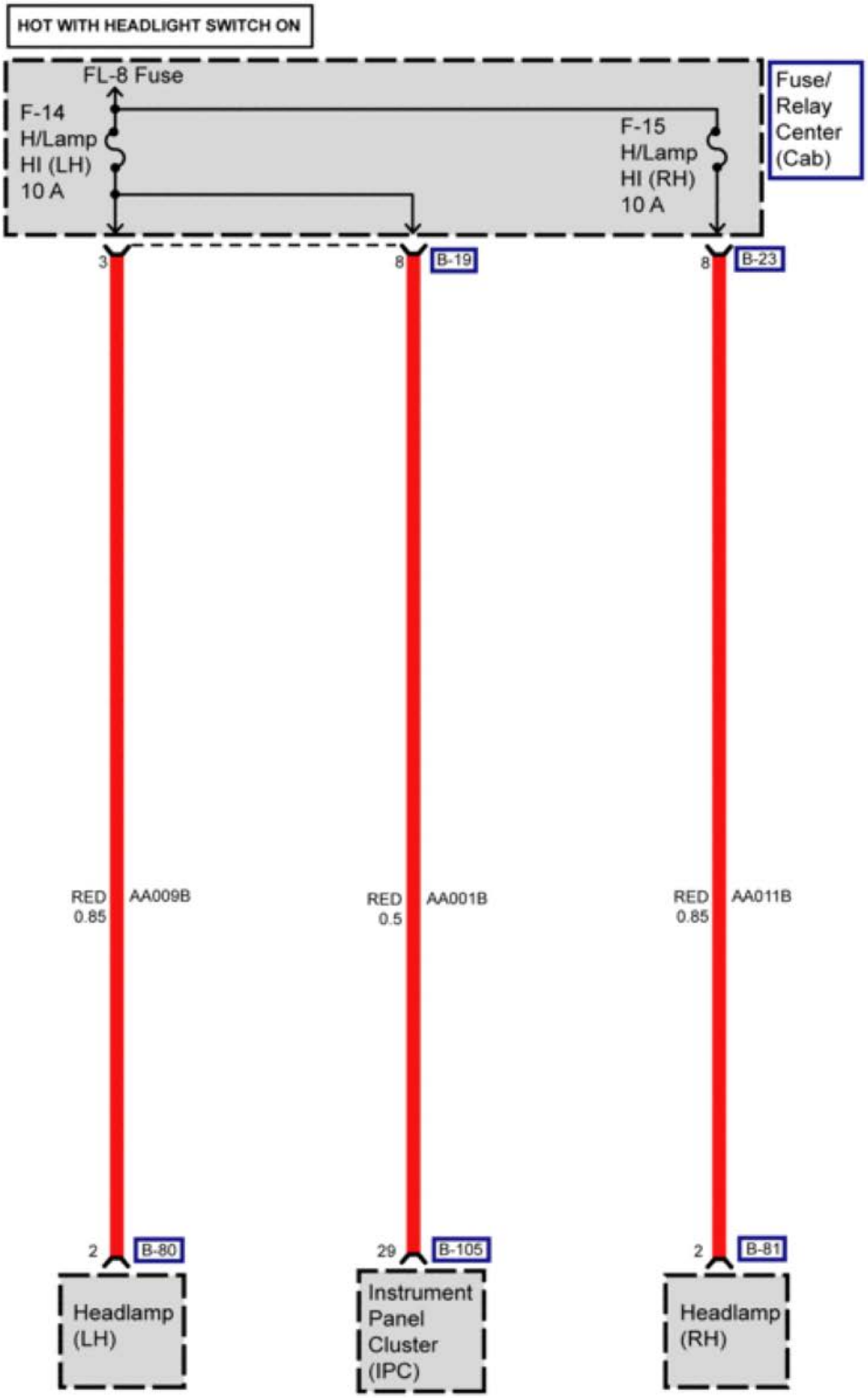

4891419

Fuses (Cab) (F-16 Fuse)

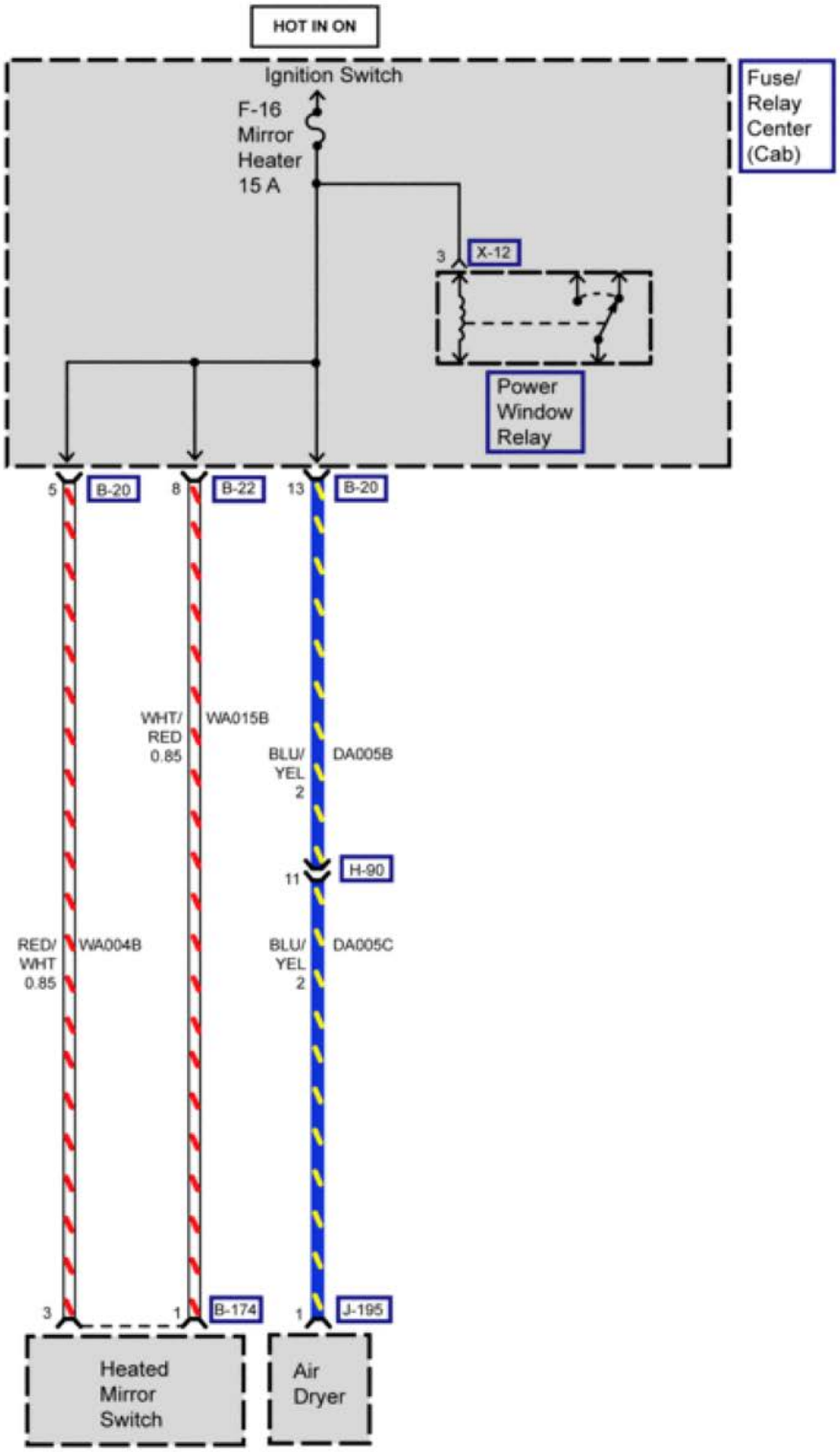

4891447

Fuses (Cab) (F-17, F-18 Fuses)

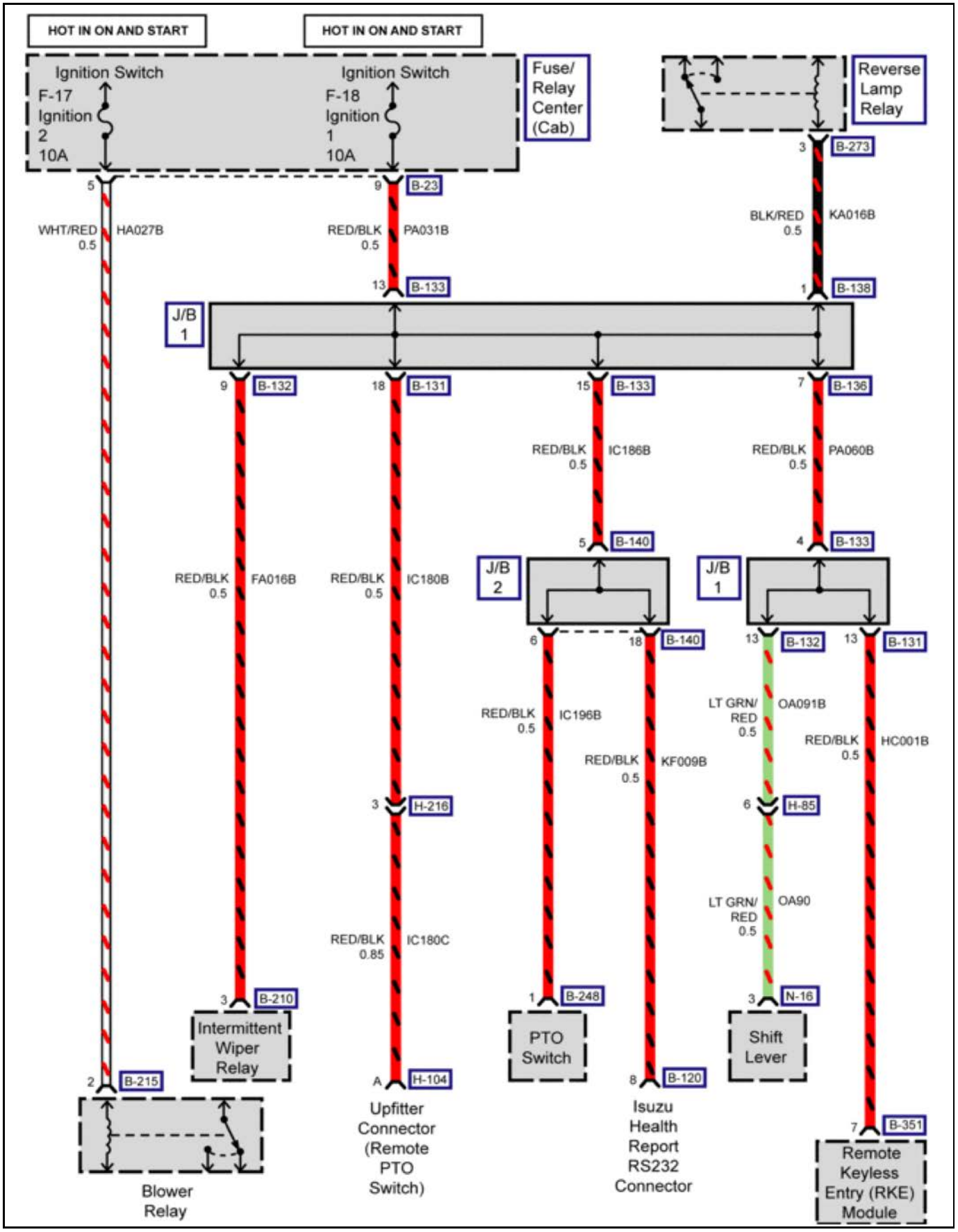

4891457

Fuses (Cab) (F-20 Fuse)

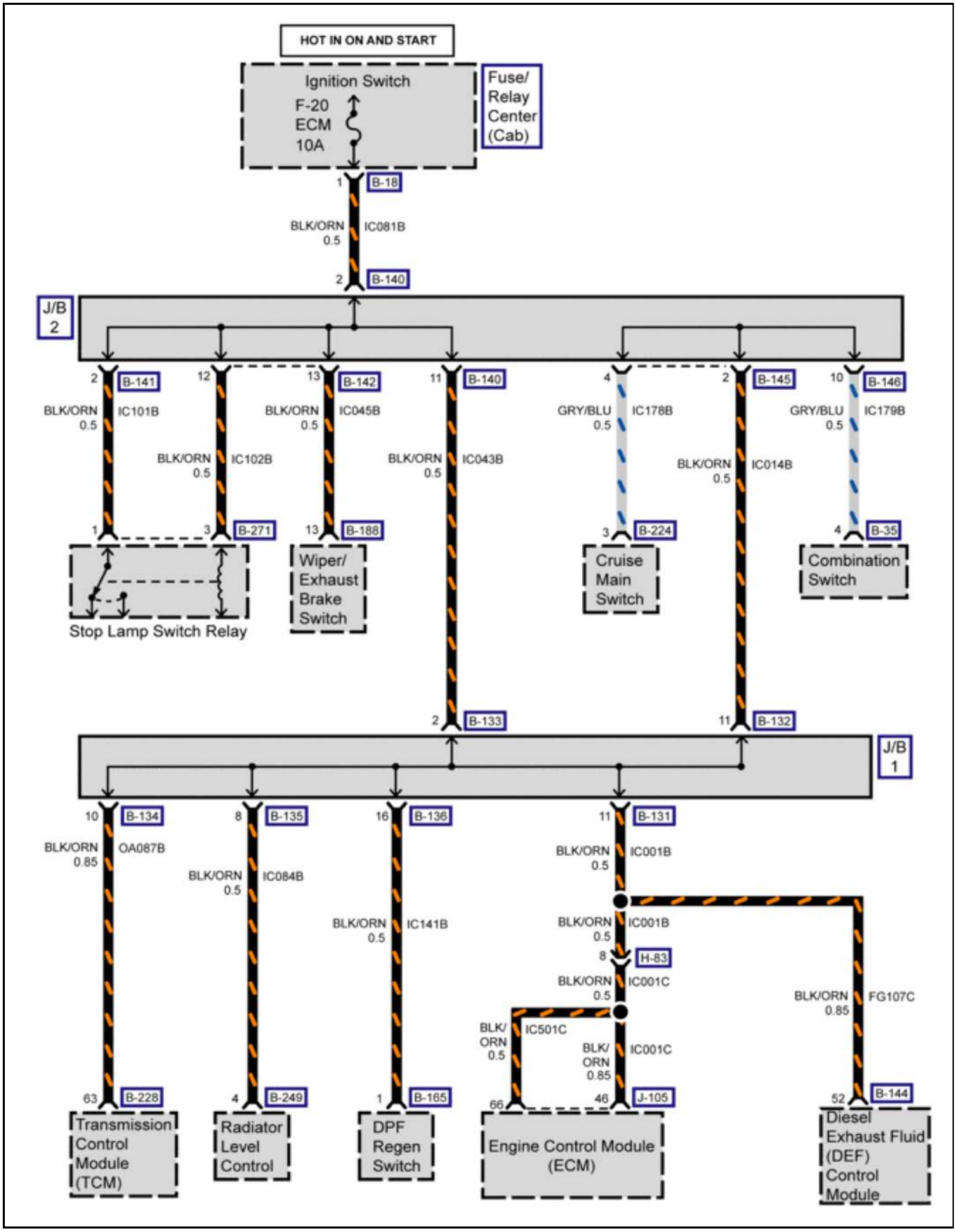

4891465

Fuses (Cab) (F-21 Fuse)

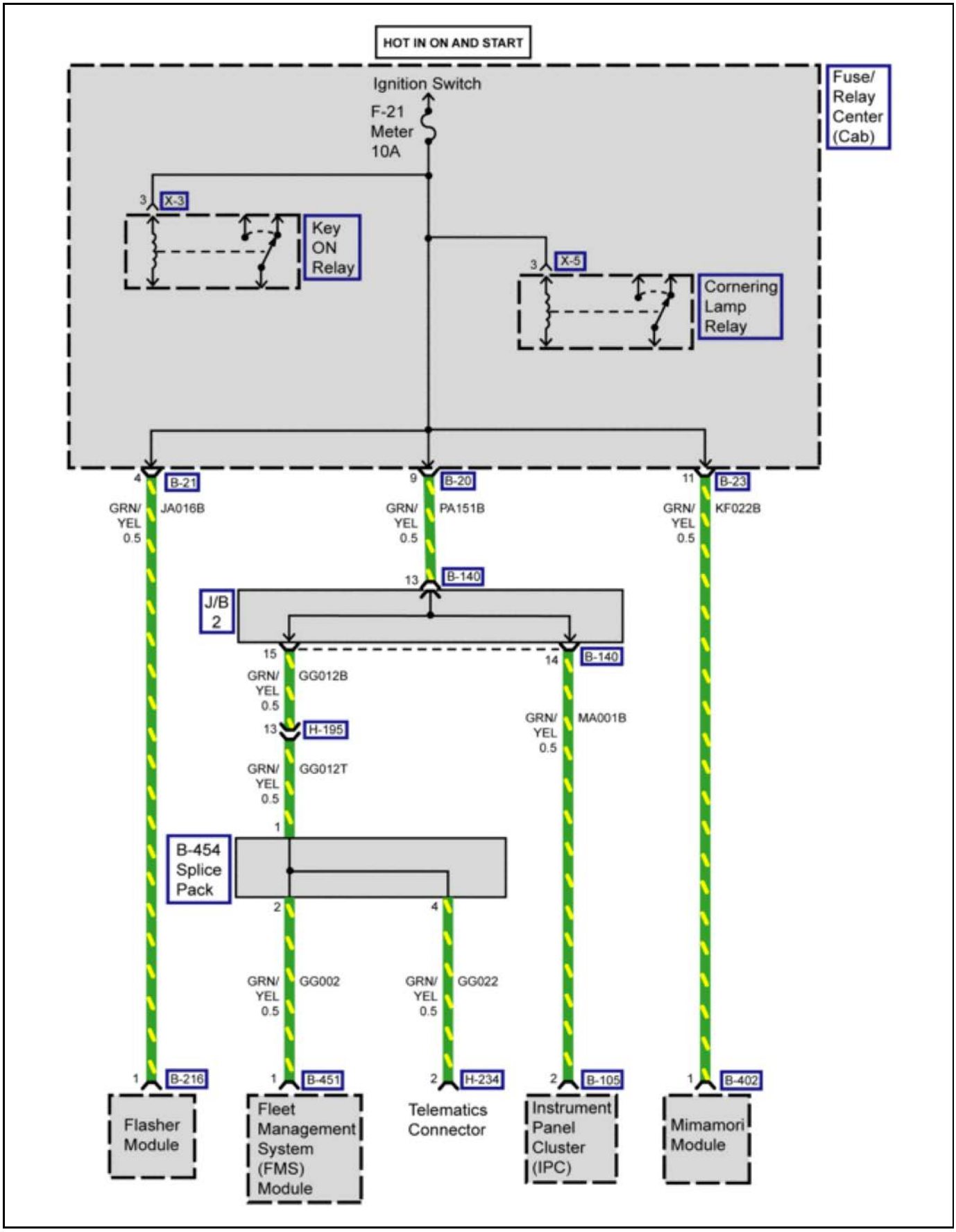

4891467

Fuses (Cab) (F-22 Fuse)

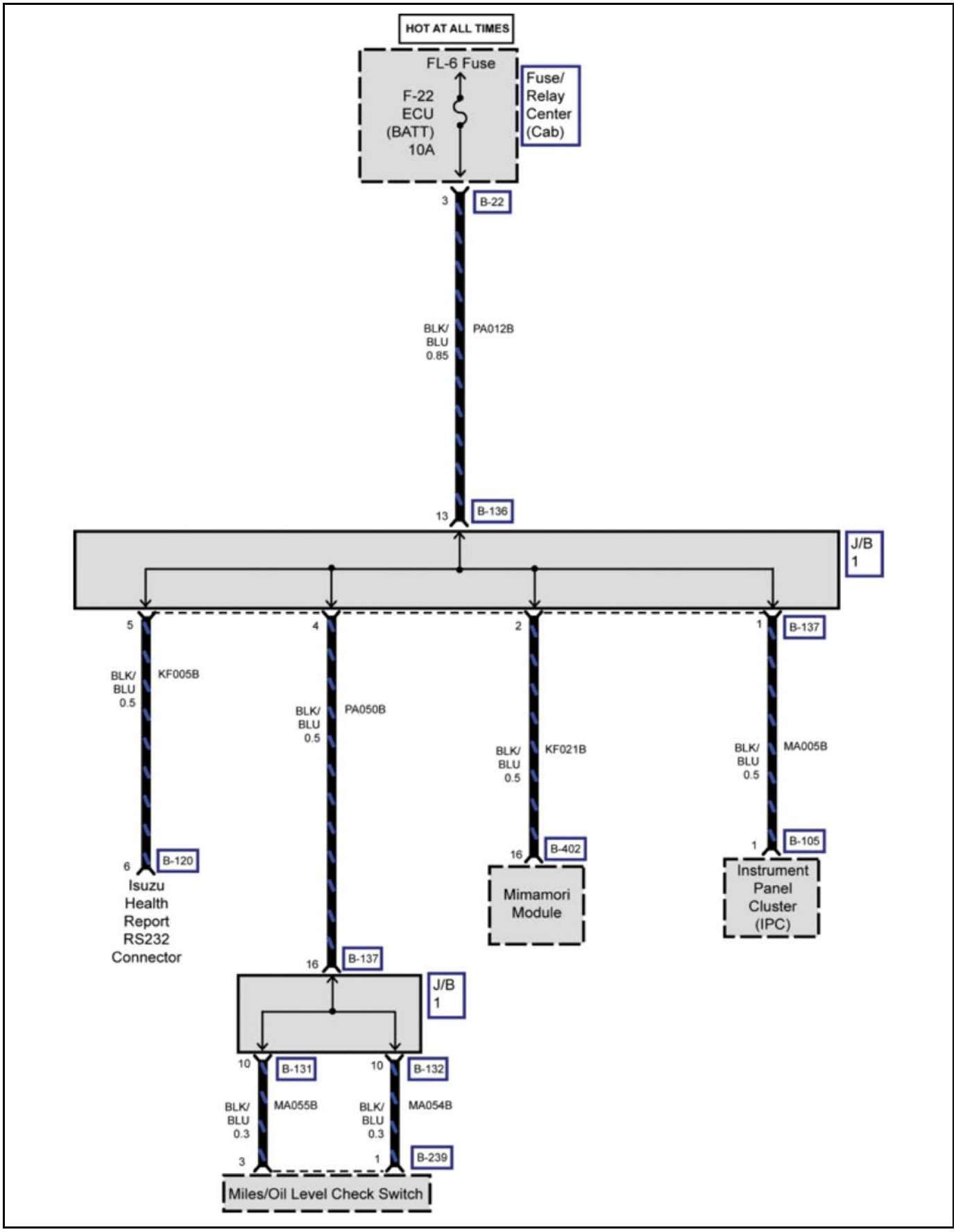

4891469

Fuses (Cab) (F-23, F-24 Fuses)

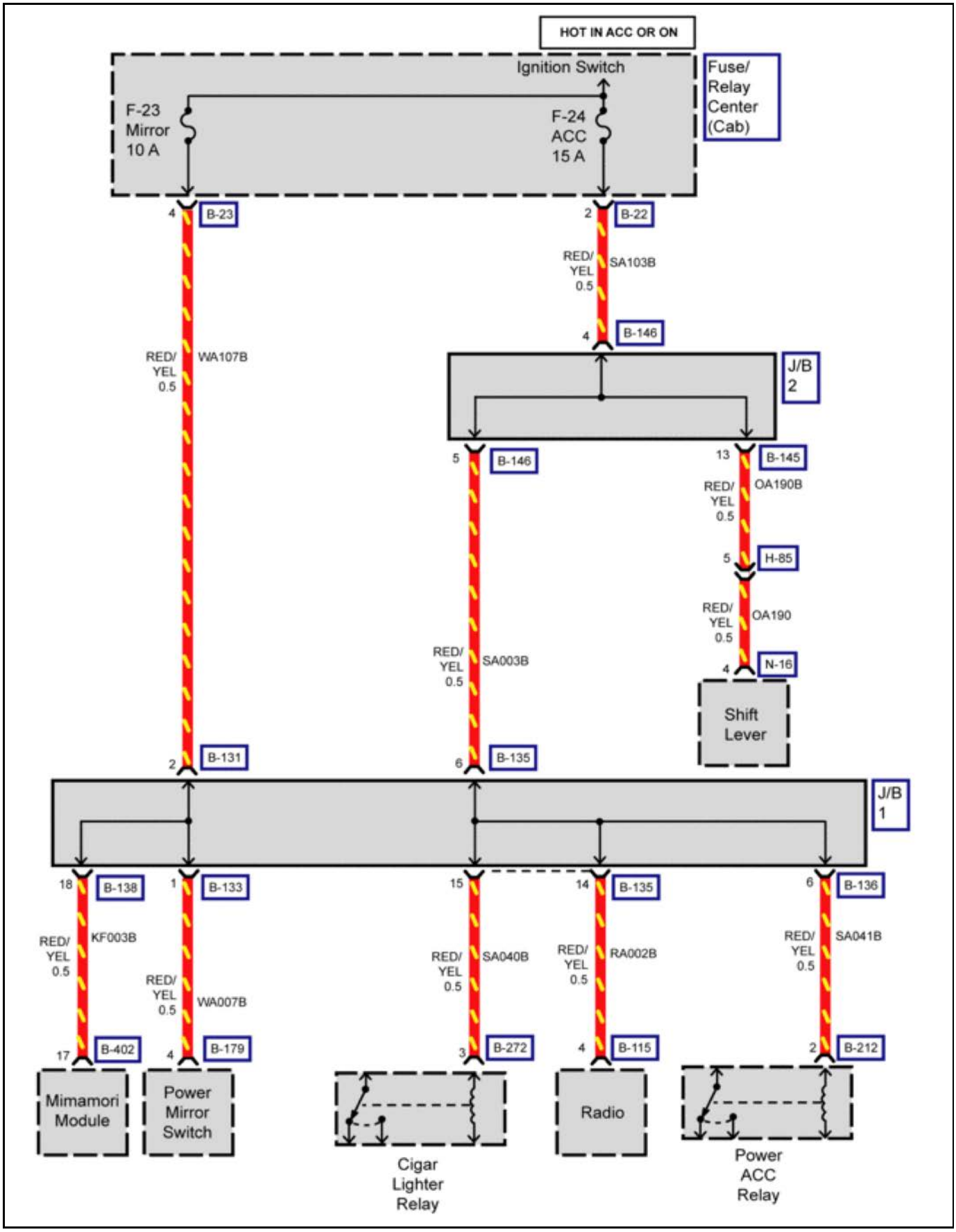

4891591

Fuses (Cab) (F-25, F-26 Fuses)

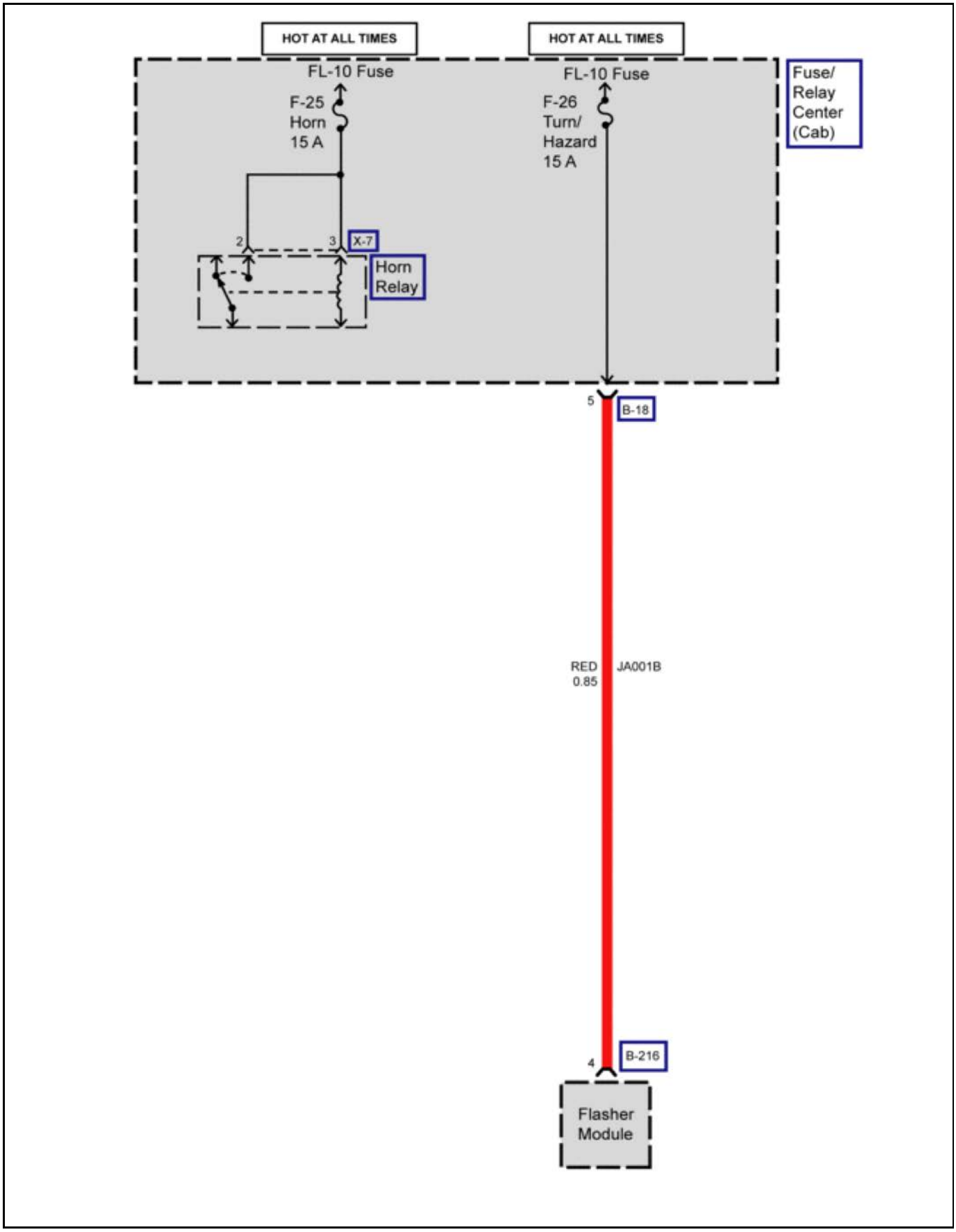

4891598

Fuses (Cab) (F-27 Fuse 1 of 3)

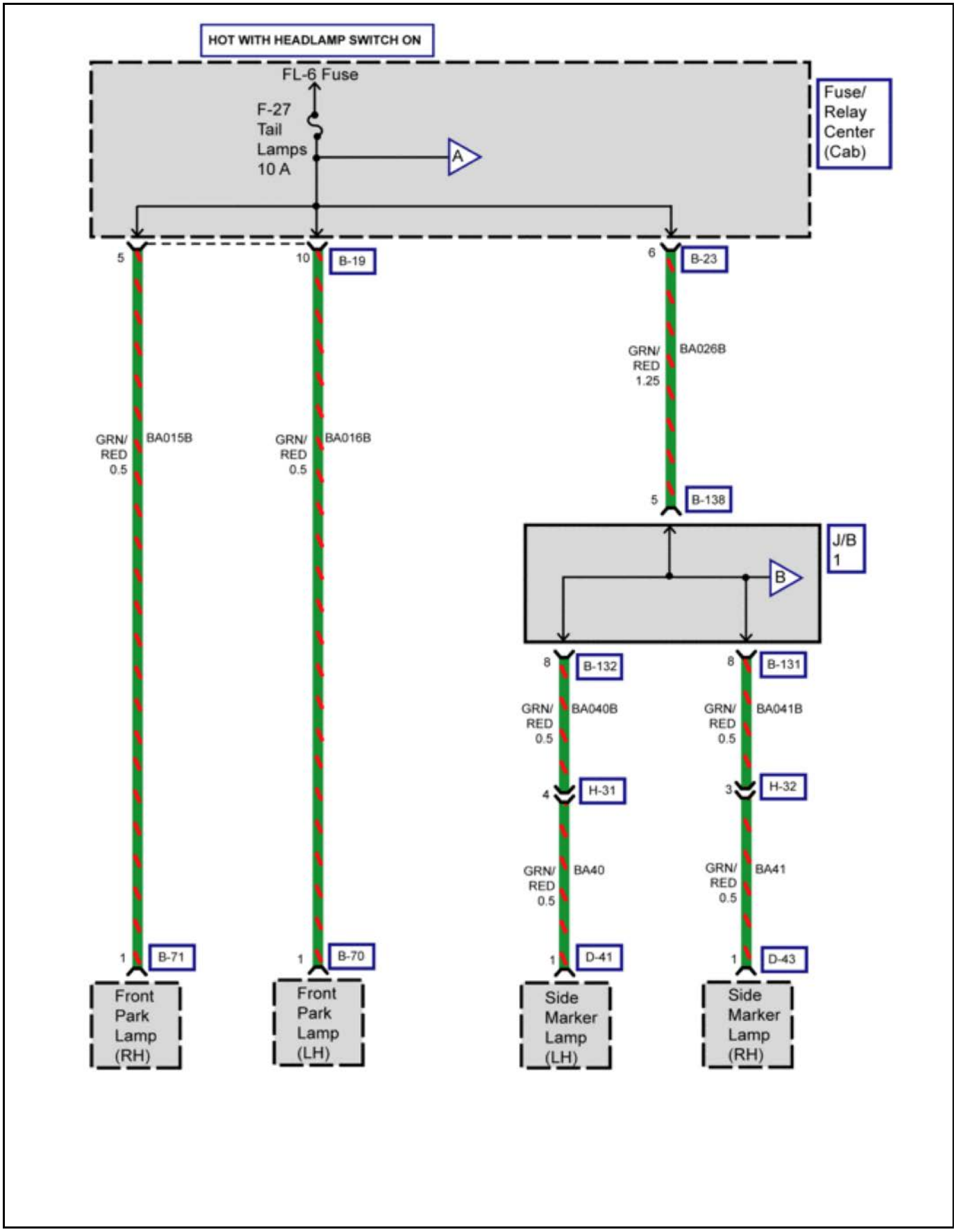

4891607

Fuses (Cab) (F-27 Fuse 2 of 3)

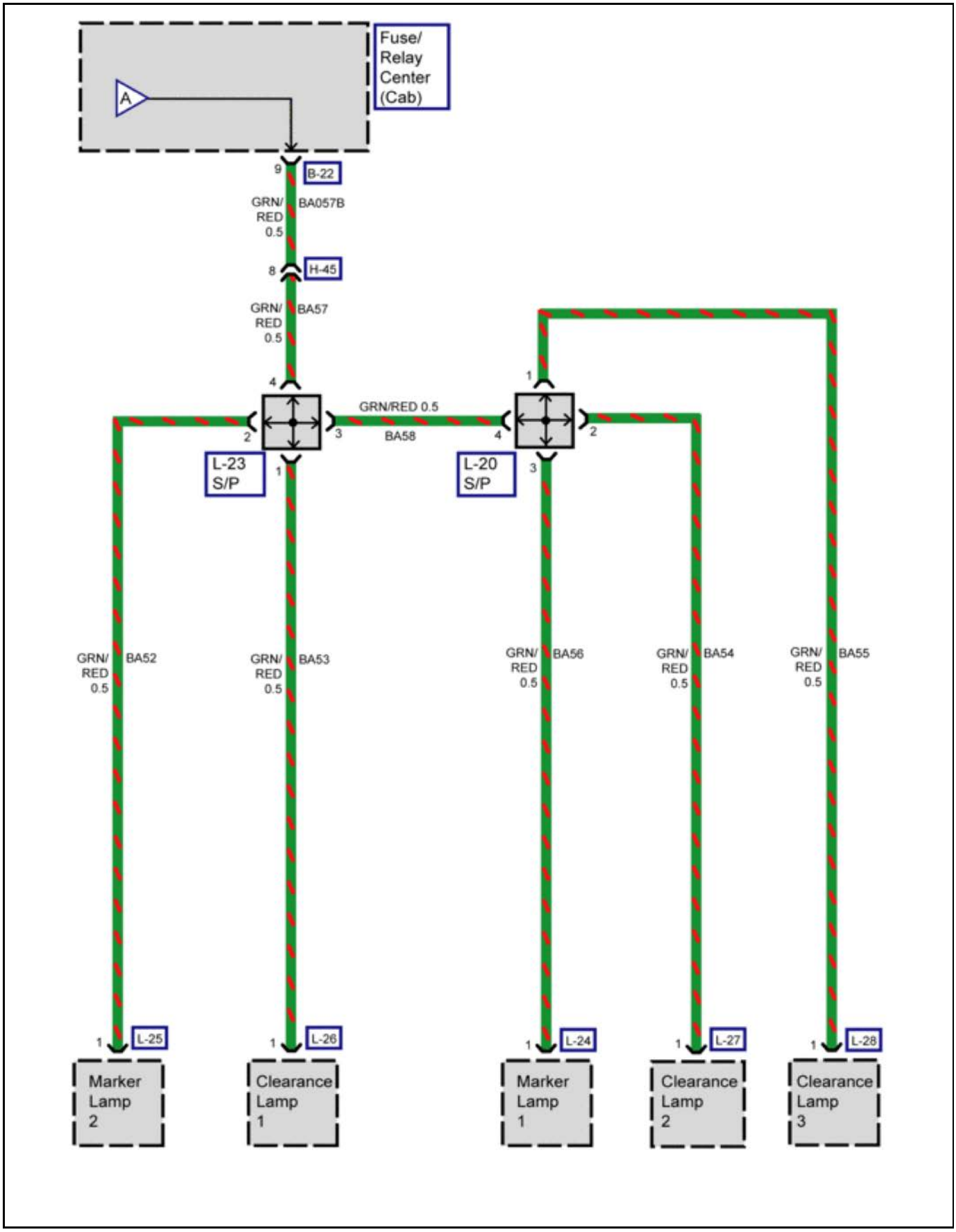

4891615

Fuses (Cab) (F-27 Fuse 3 of 3)

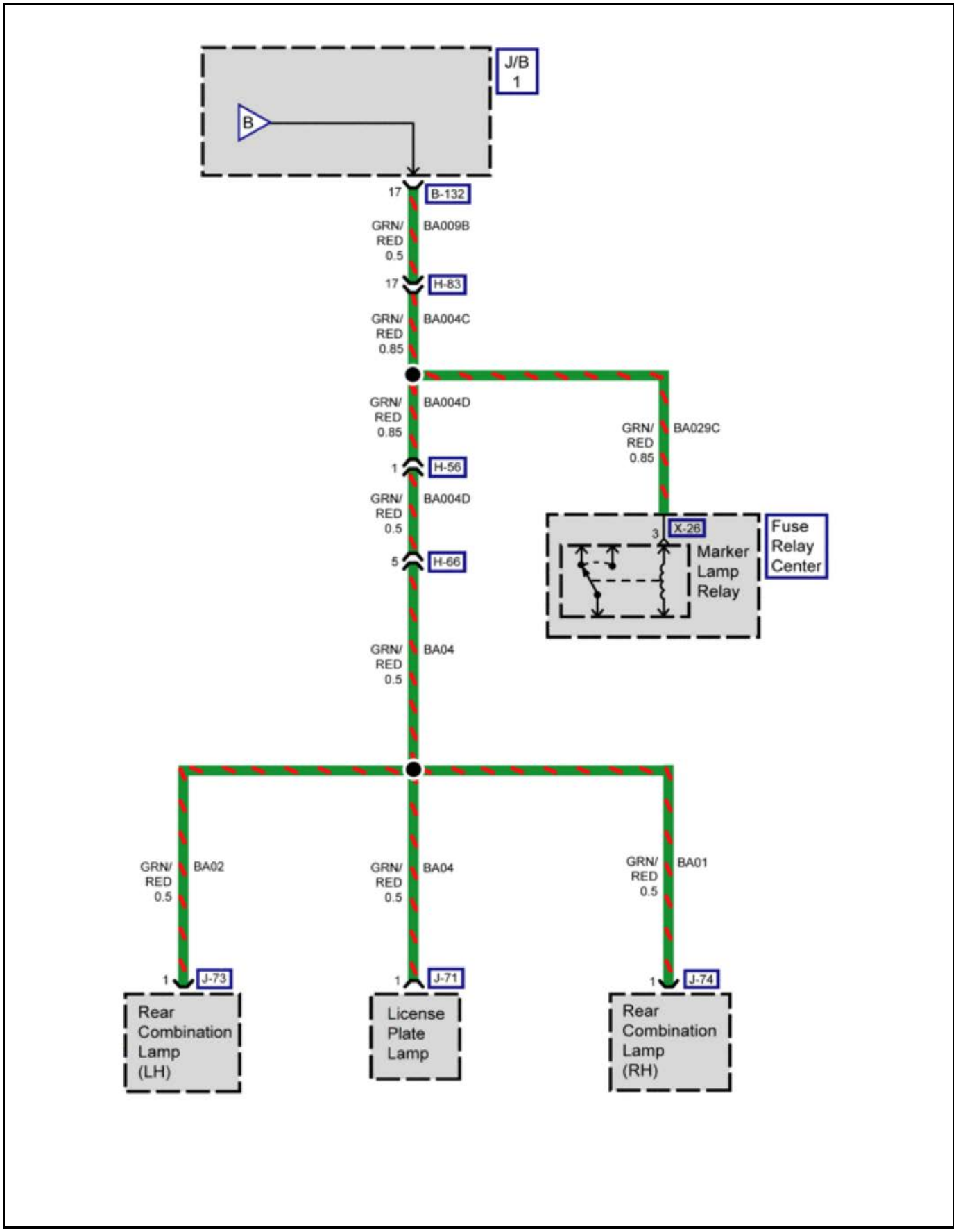

4891620

Fuses (Cab) (F-28 Fuse)

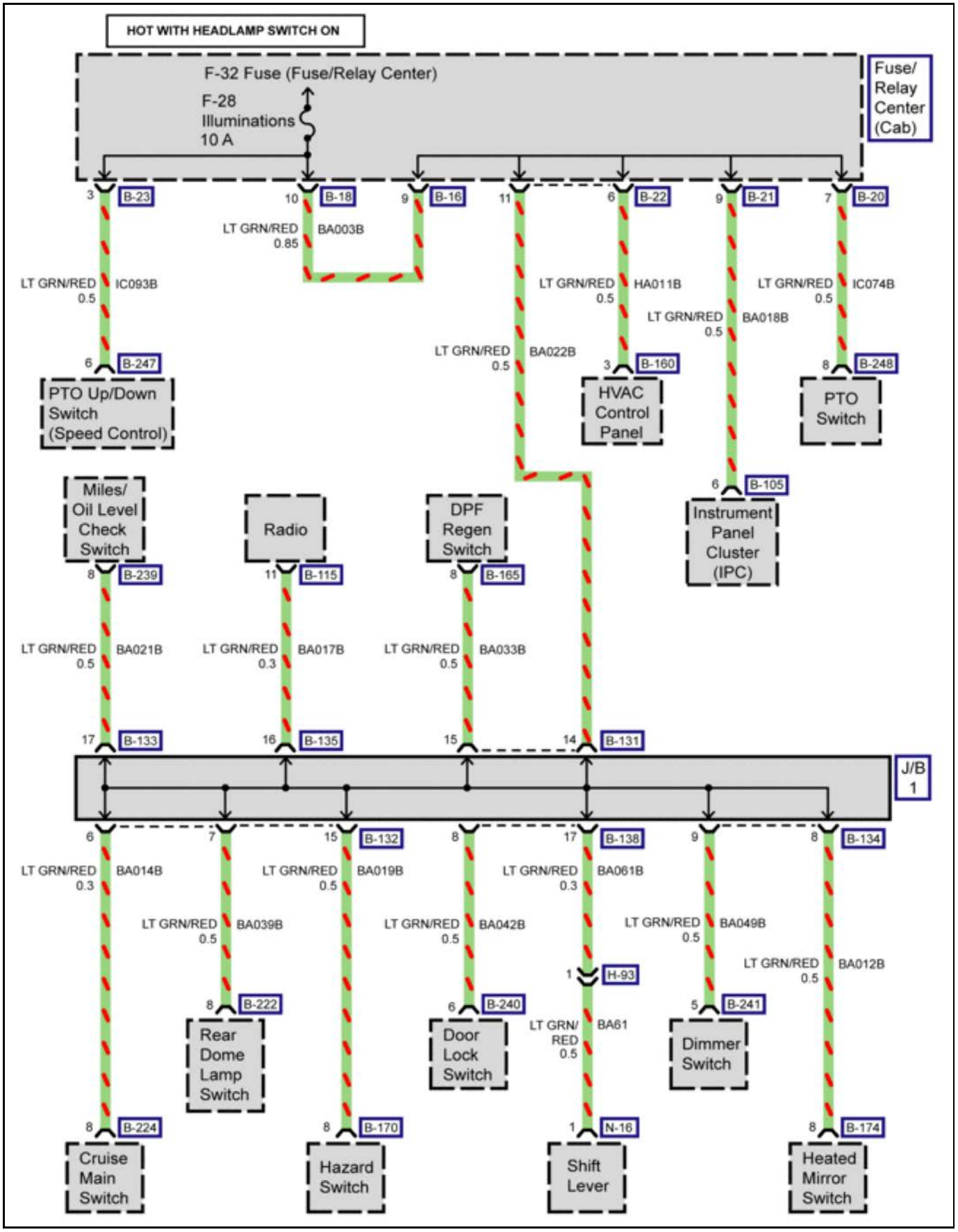

4891633

Fuses (Cab) (F-29, F-30 Fuses)

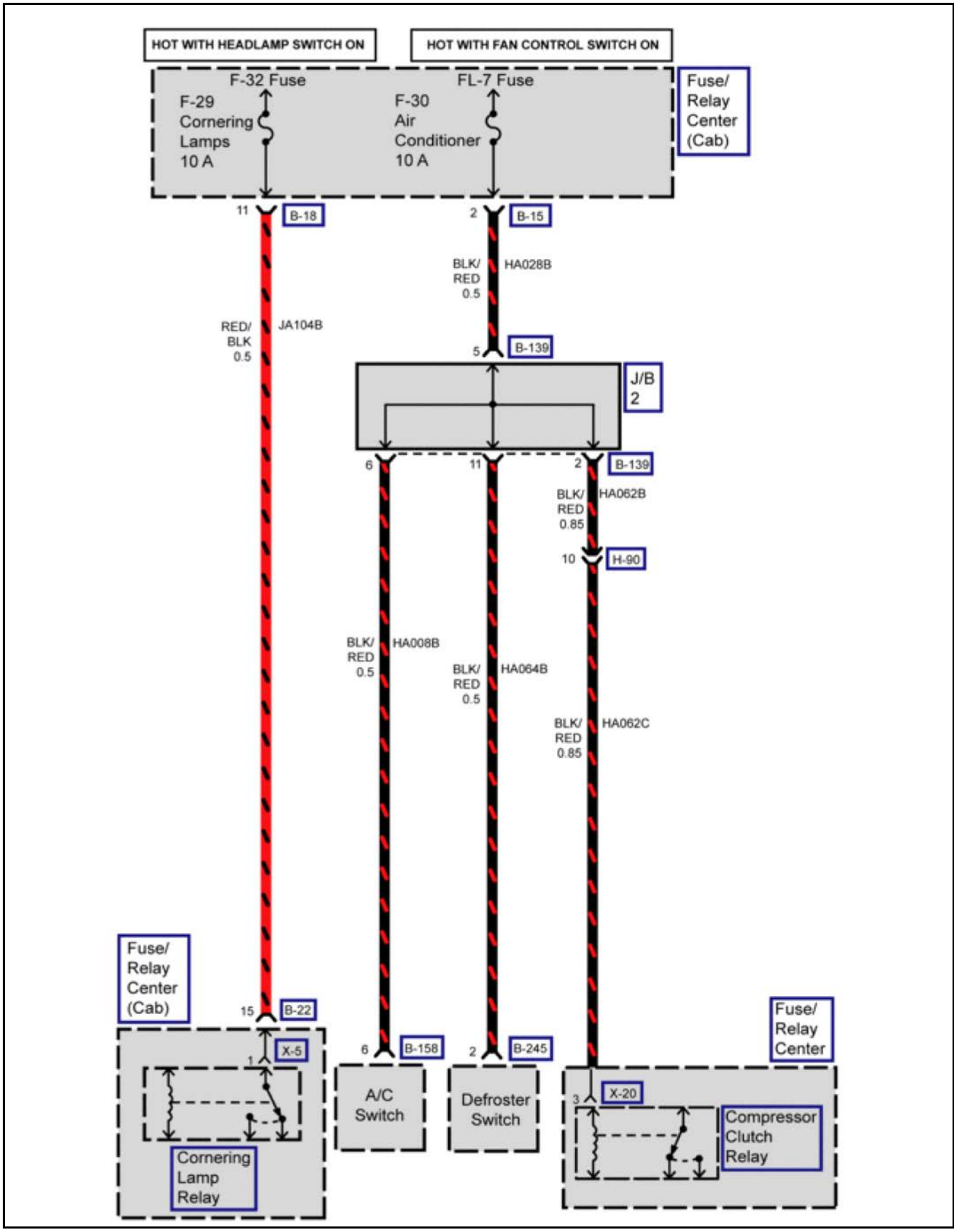

4891644

Fuses (Cab) (A-1, A-2, A-3, A-4 Fuses)

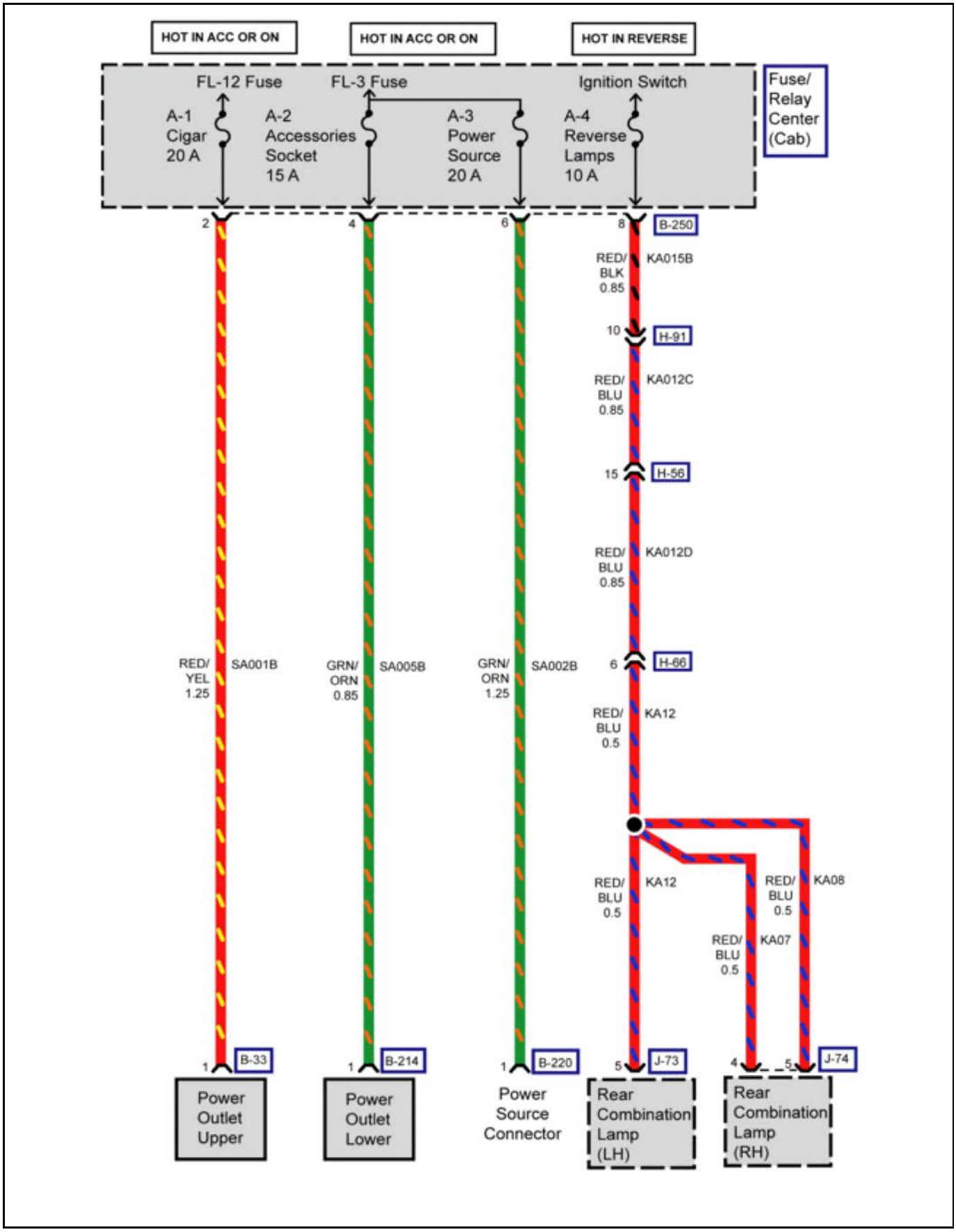

4891660

Fuses (Cab) (B-1, B-2, B-3, B-4 Fuses)

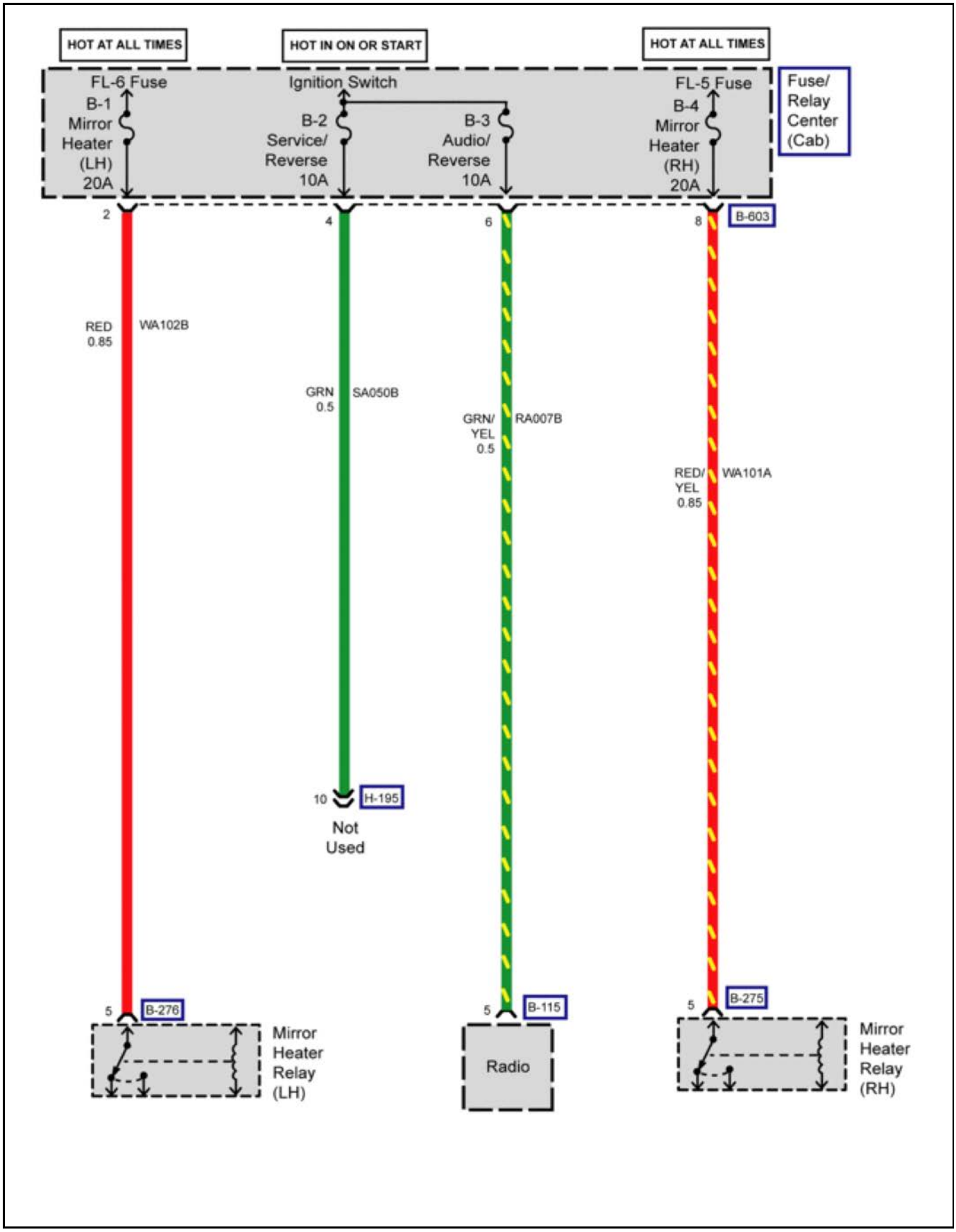

4891665

Schematic and Routing Diagrams

Controller Area Network (CAN) Schematics (CAN 1 (J1939))

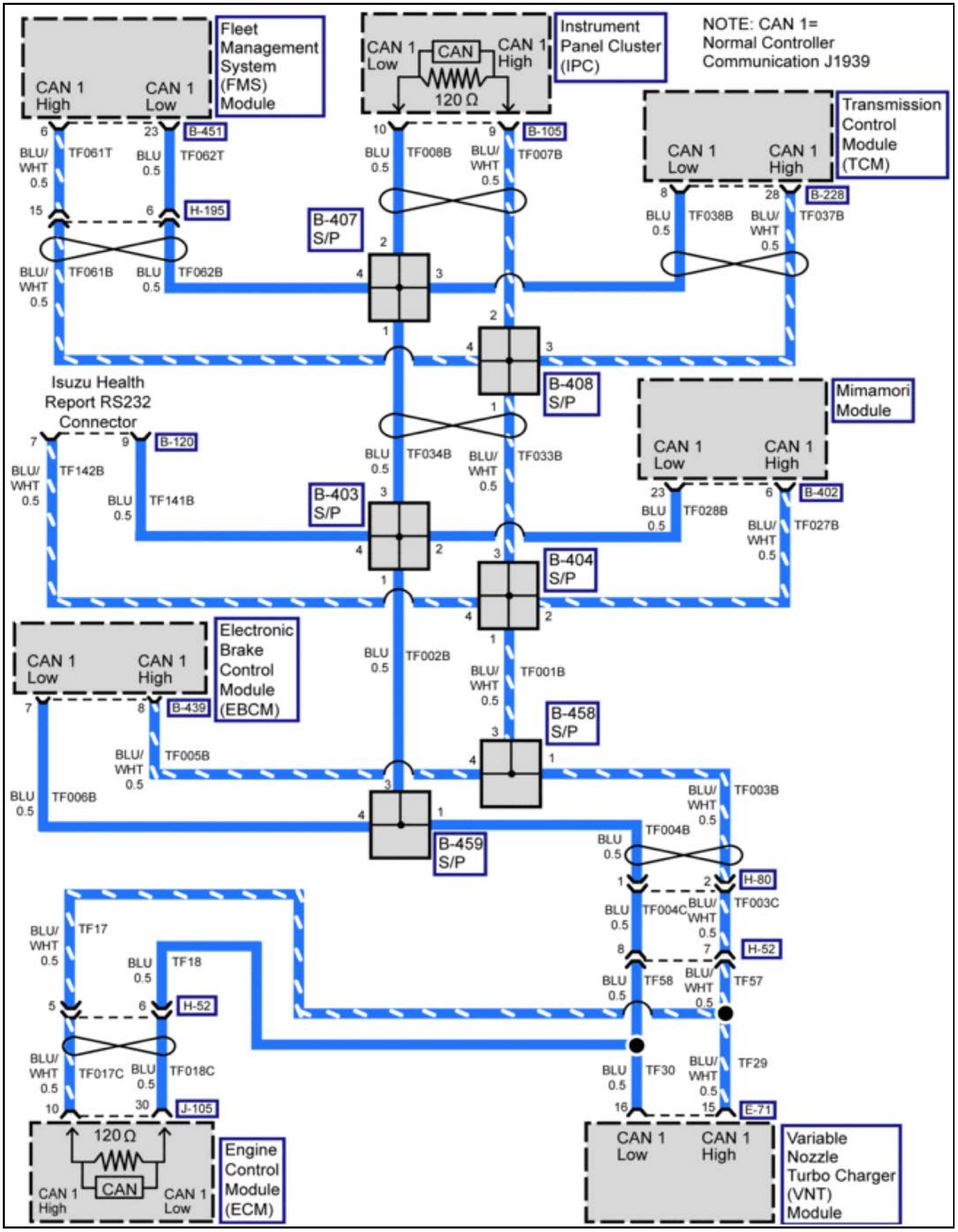

4891808

Controller Area Network (CAN) Schematics (CAN 2 (ISO 15765))

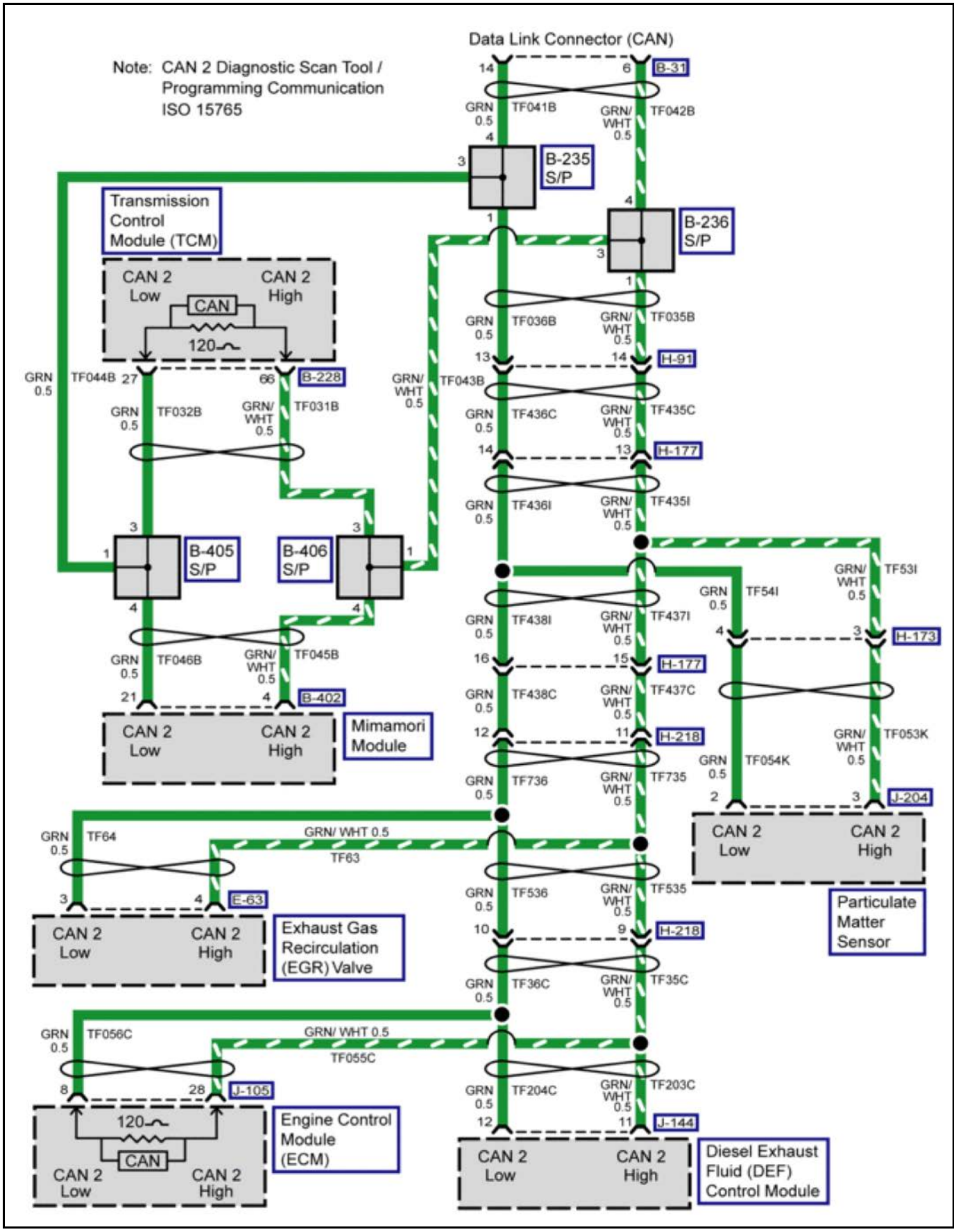

4891815

Controller Area Network (CAN) Schematics (CAN 3 (DEF))

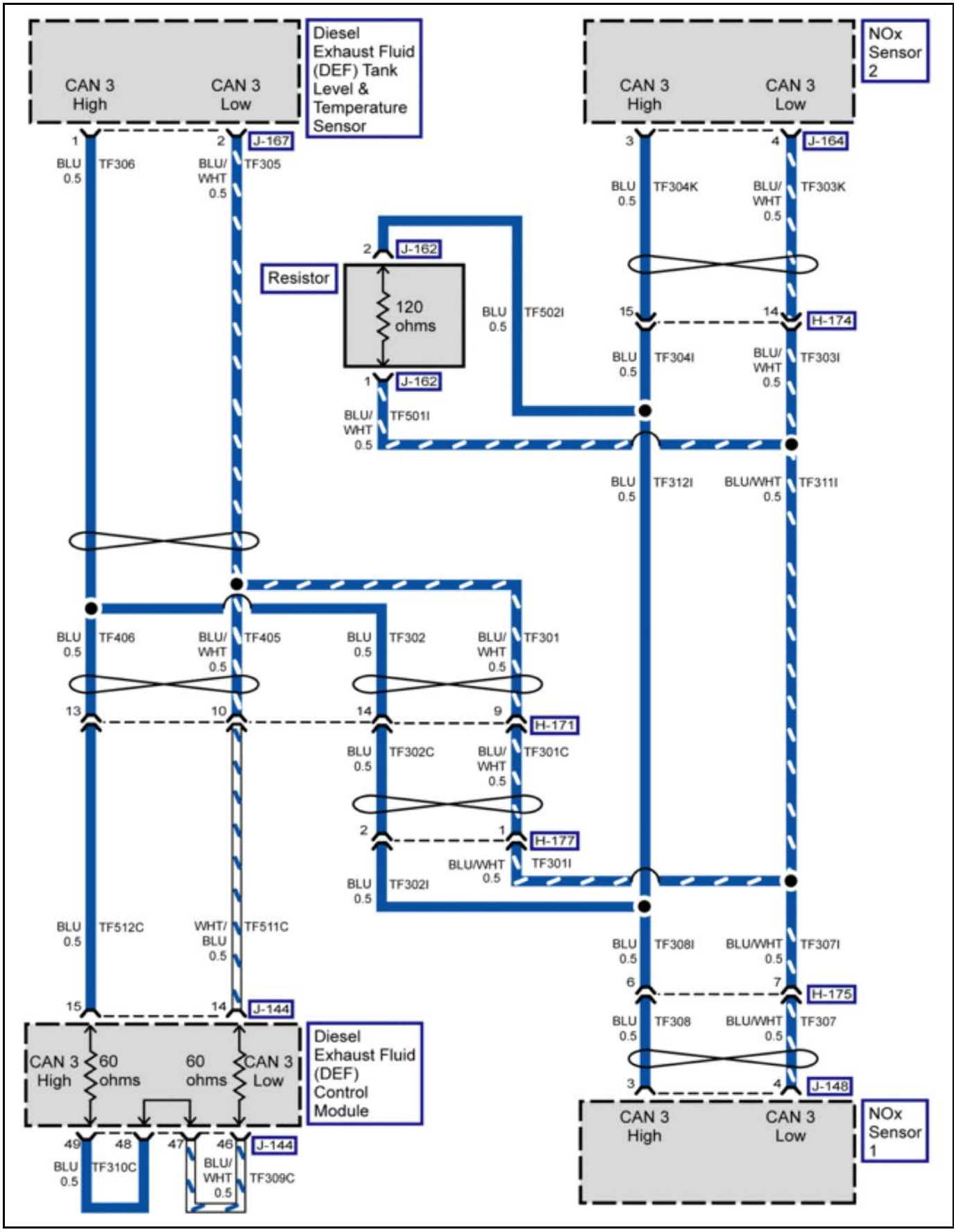

4891822

Controller Area Network (CAN) Schematics (CAN 4 (FMS))

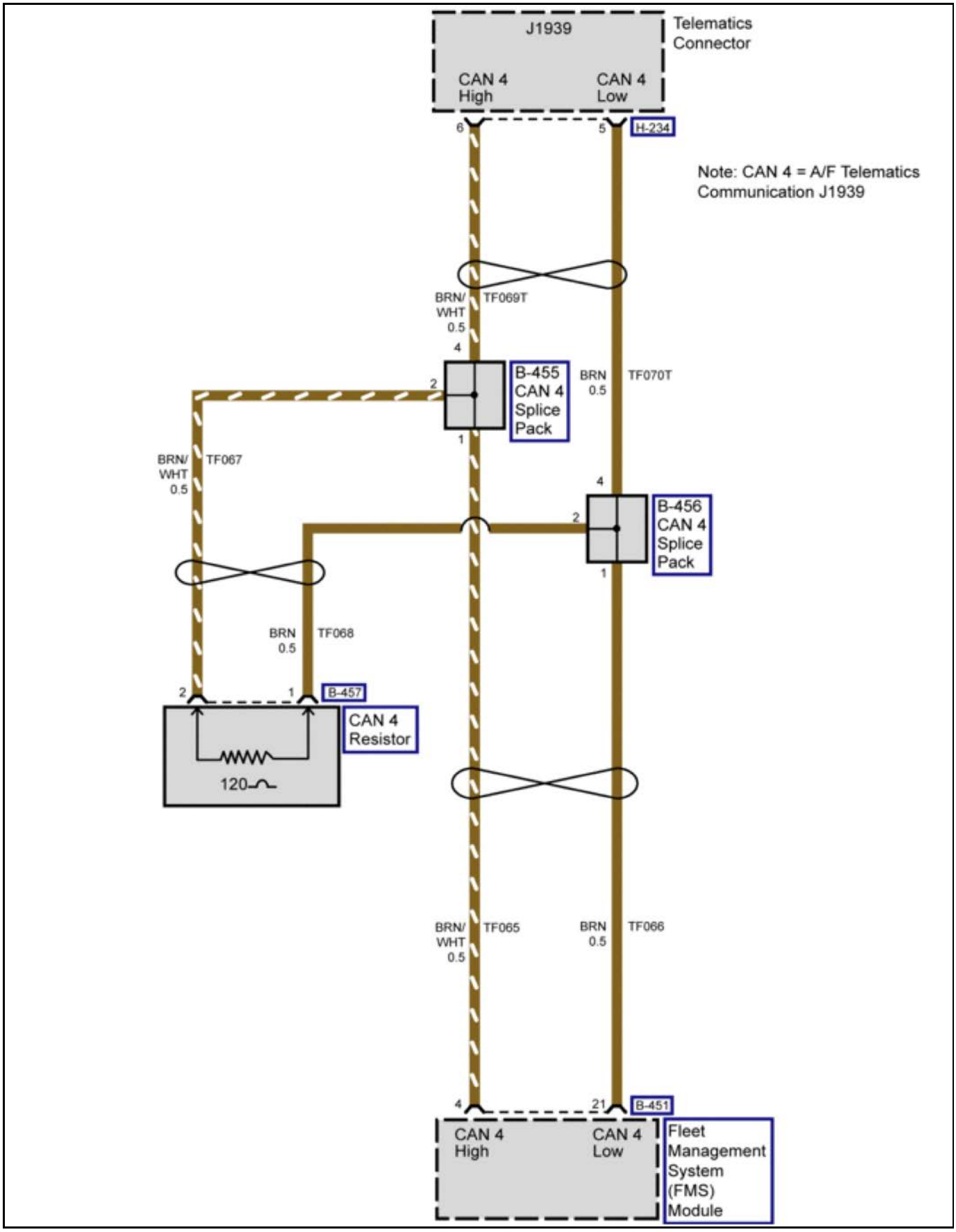

4891828

Data Link Connector Schematics (Powers and Grounds)

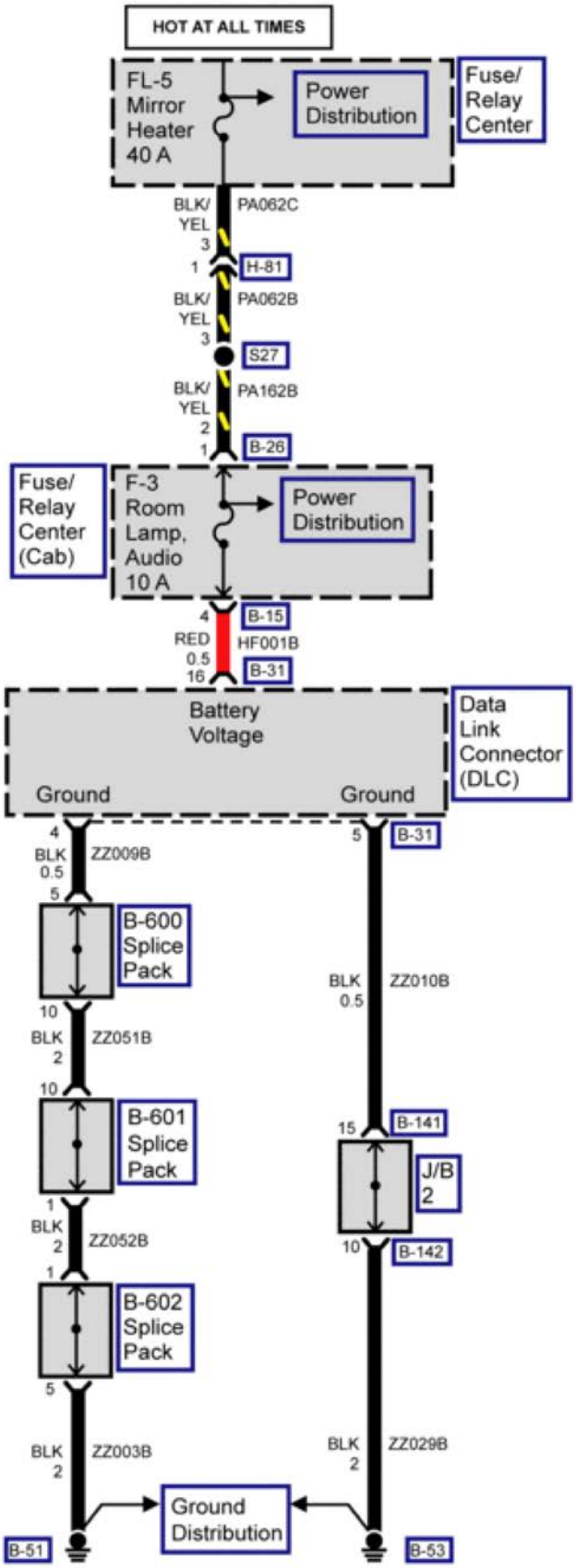

4891869

Data Link Connector Schematics (Communication)

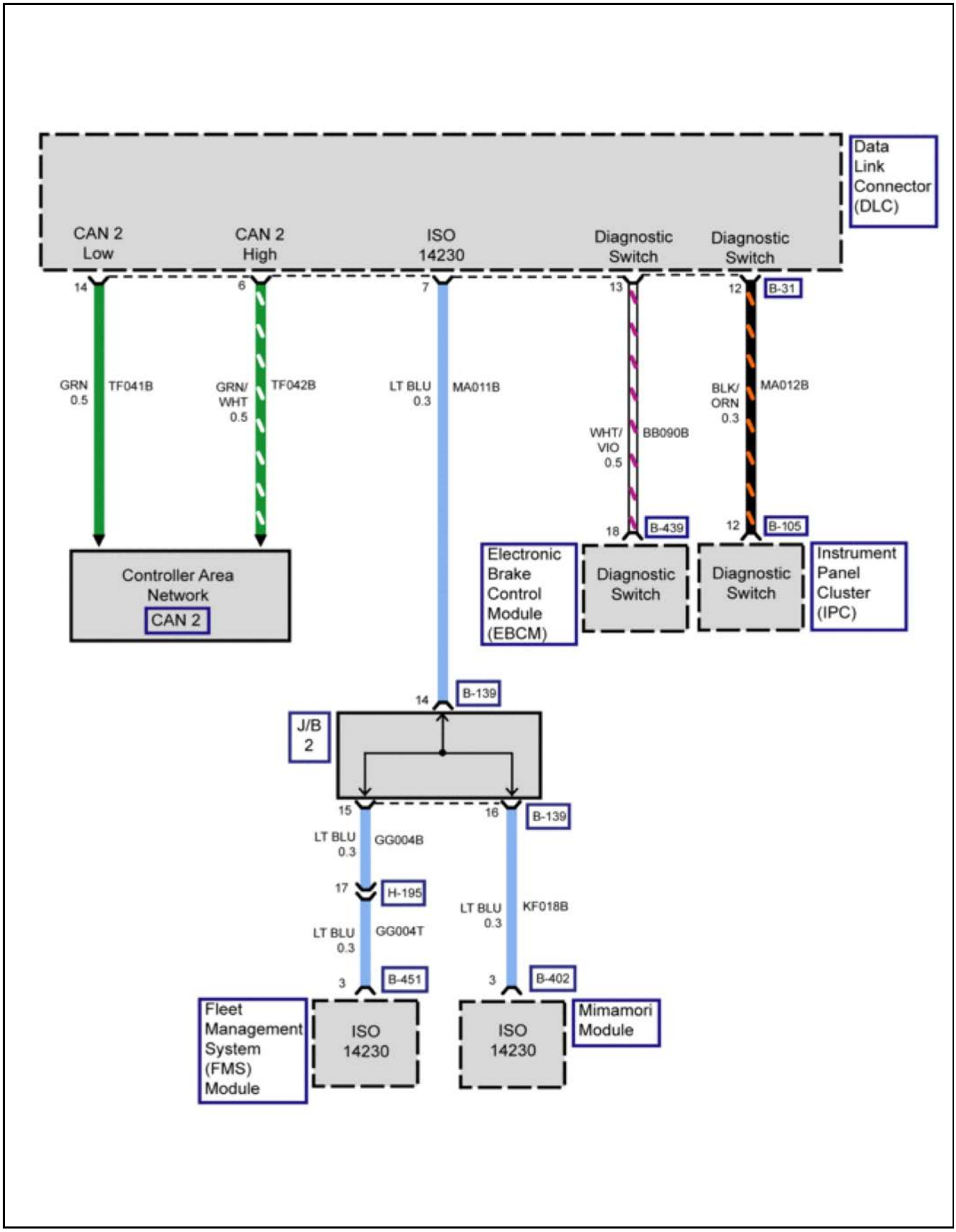

4891881

FMS CAN Interface Schematics (Module Power, Ground and Communication)

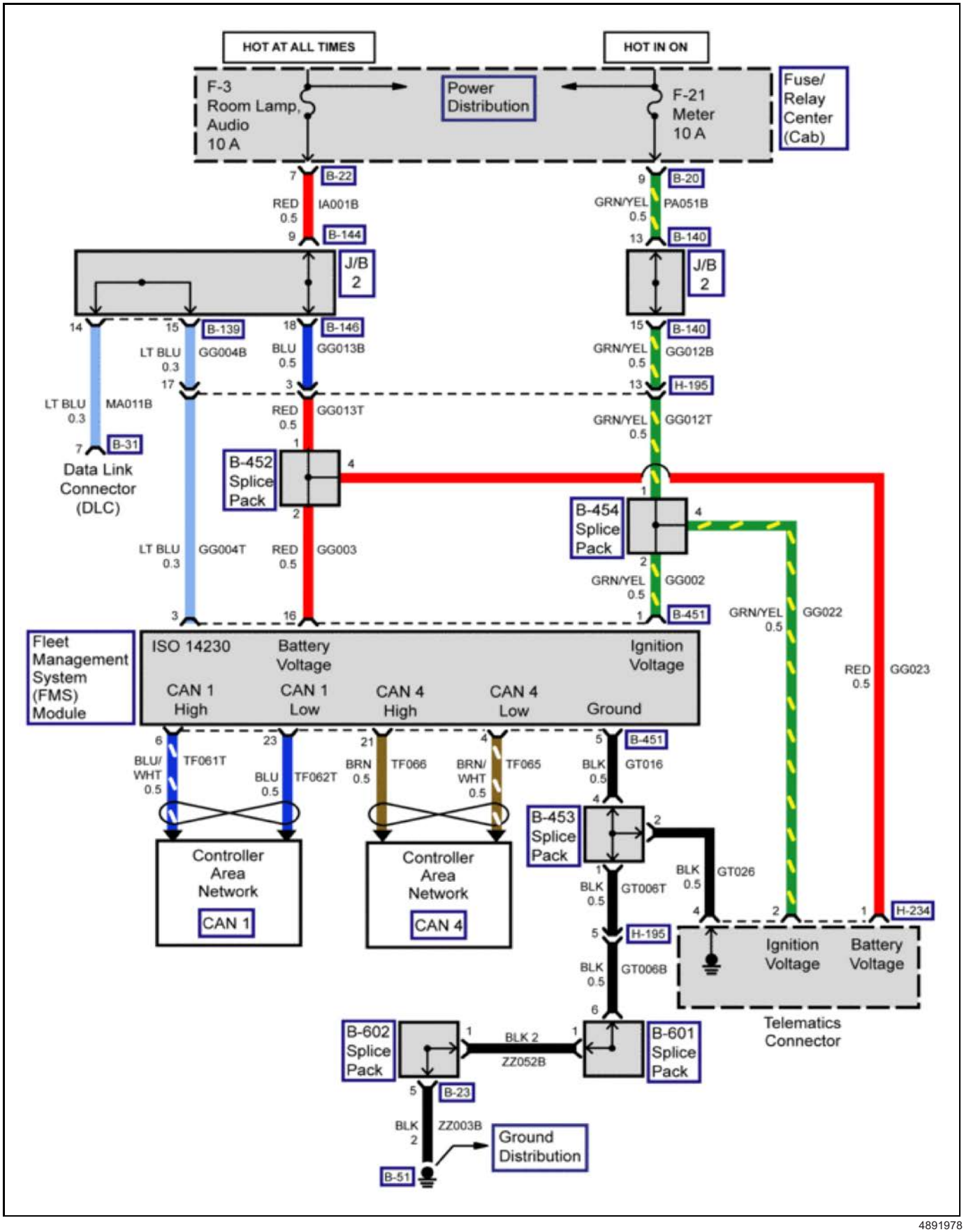

4891978

FMS CAN Interface Schematics (J1939 CAN Connector)

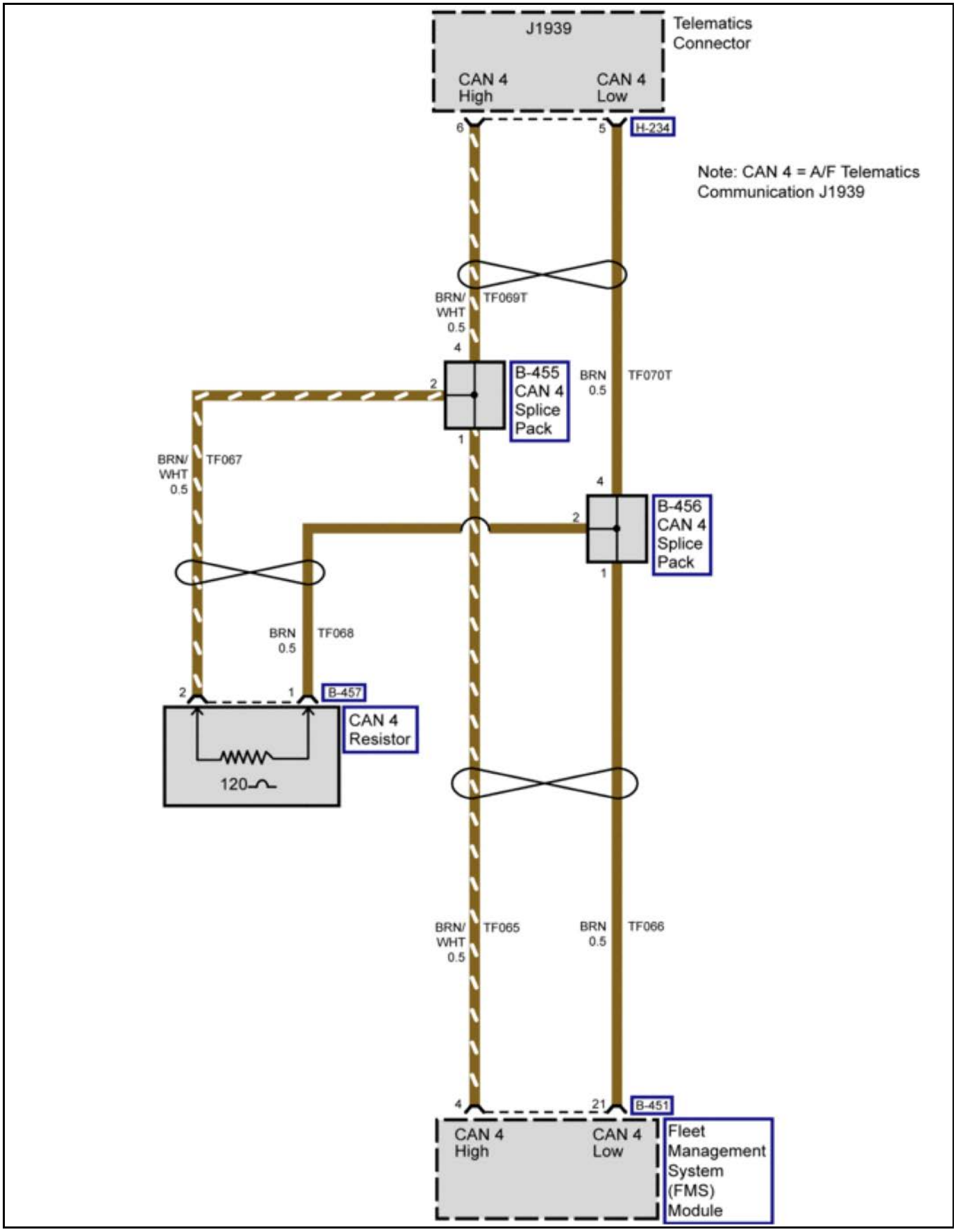

4891985

Ground Distribution Schematics (B-51, B-60 (B-379 and B-602 Splice Packs))

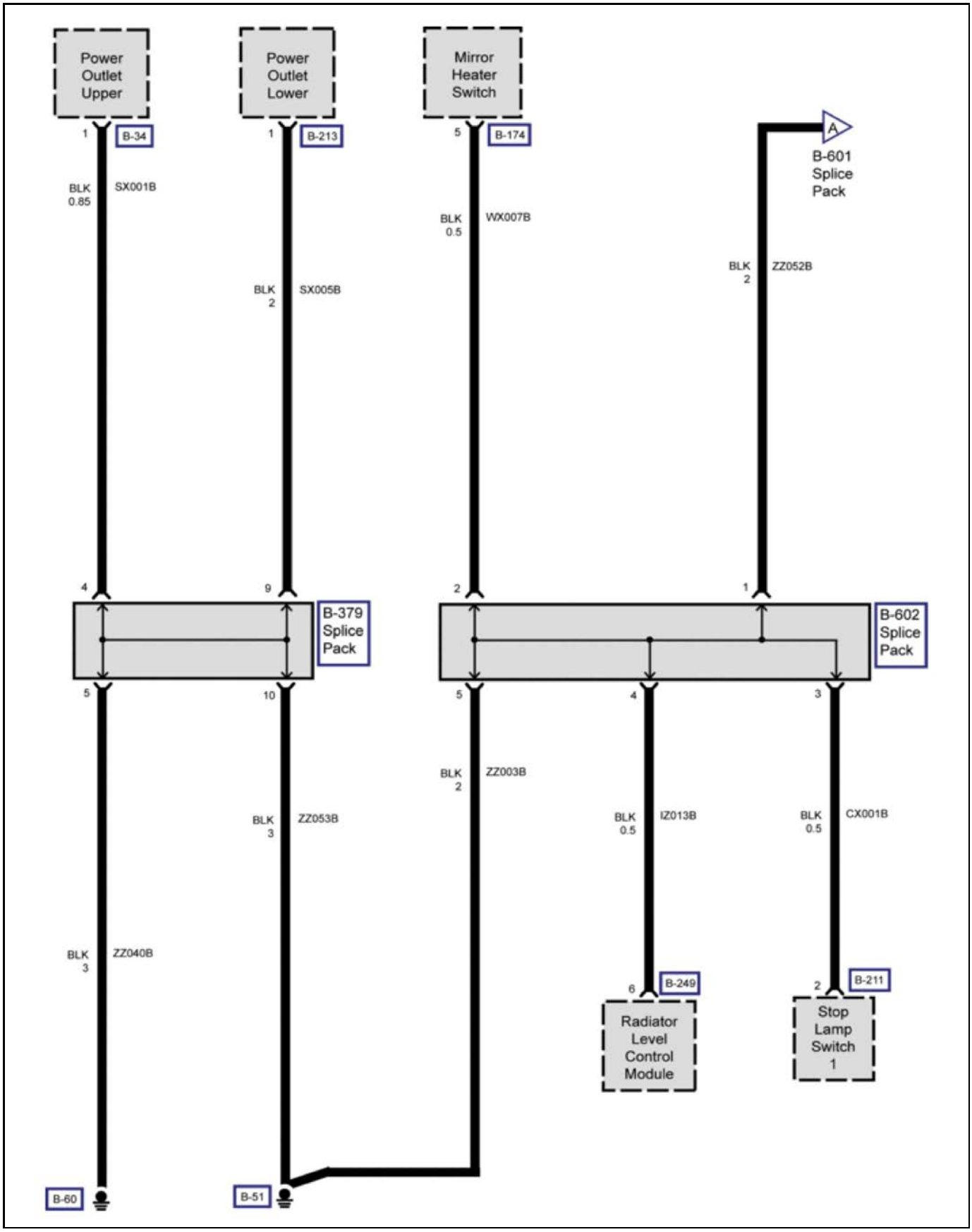

4890844

Ground Distribution Schematics (B-51 (B-601 Splice Pack))

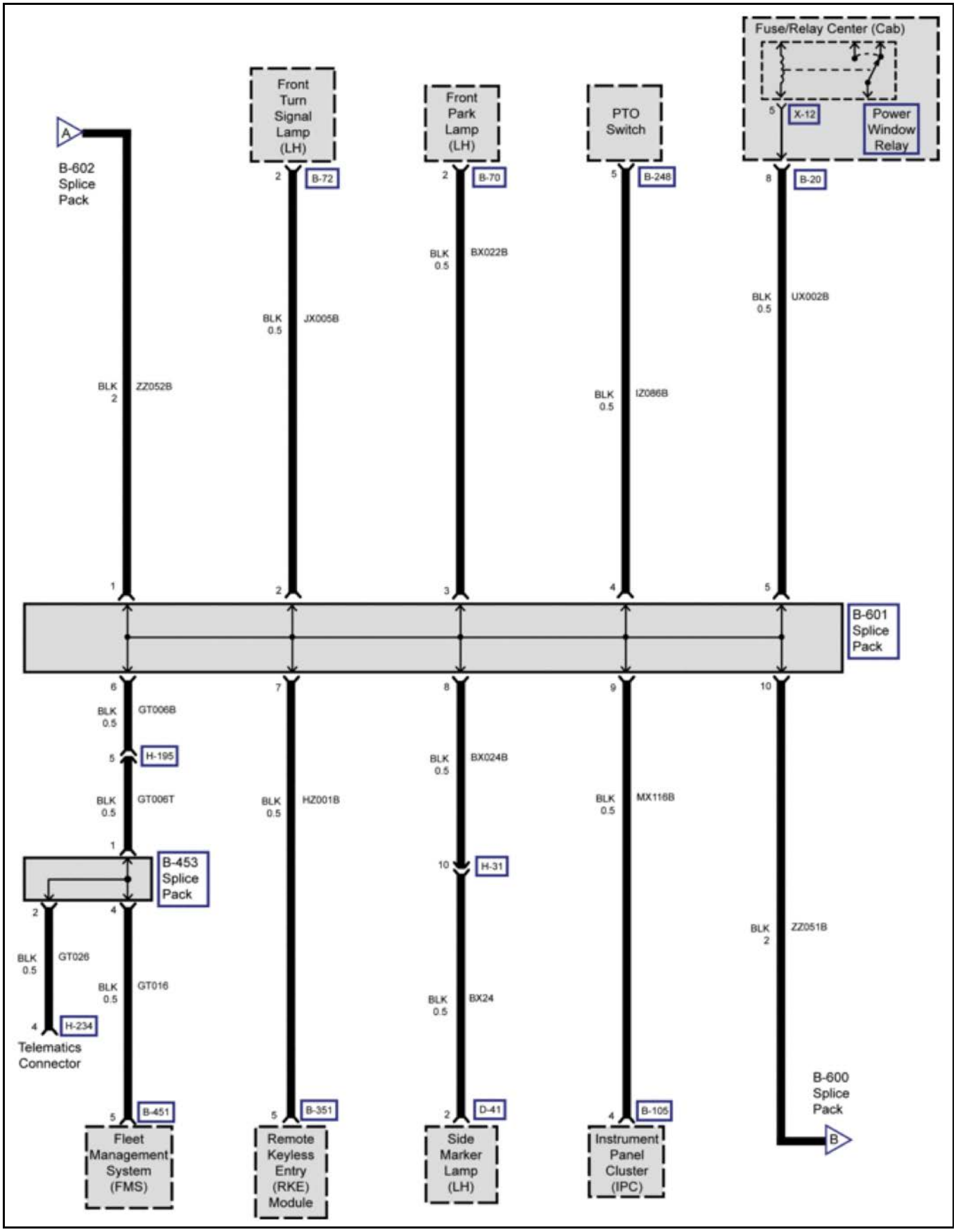

4890853

Ground Distribution Schematics (B-51 (B-600 Splice Pack))

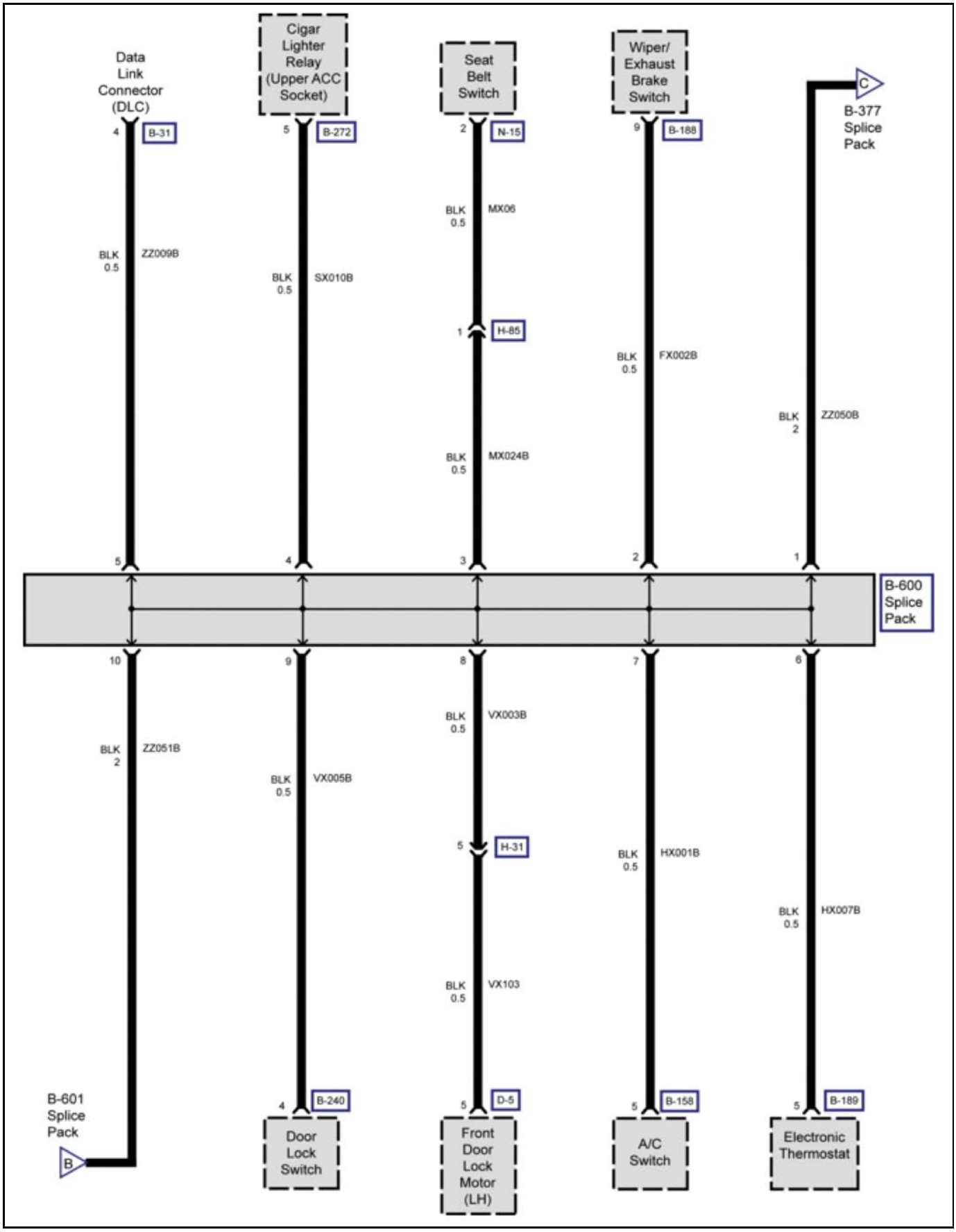

4890862

Ground Distribution Schematics (B-51 (B-377 Splice Pack))

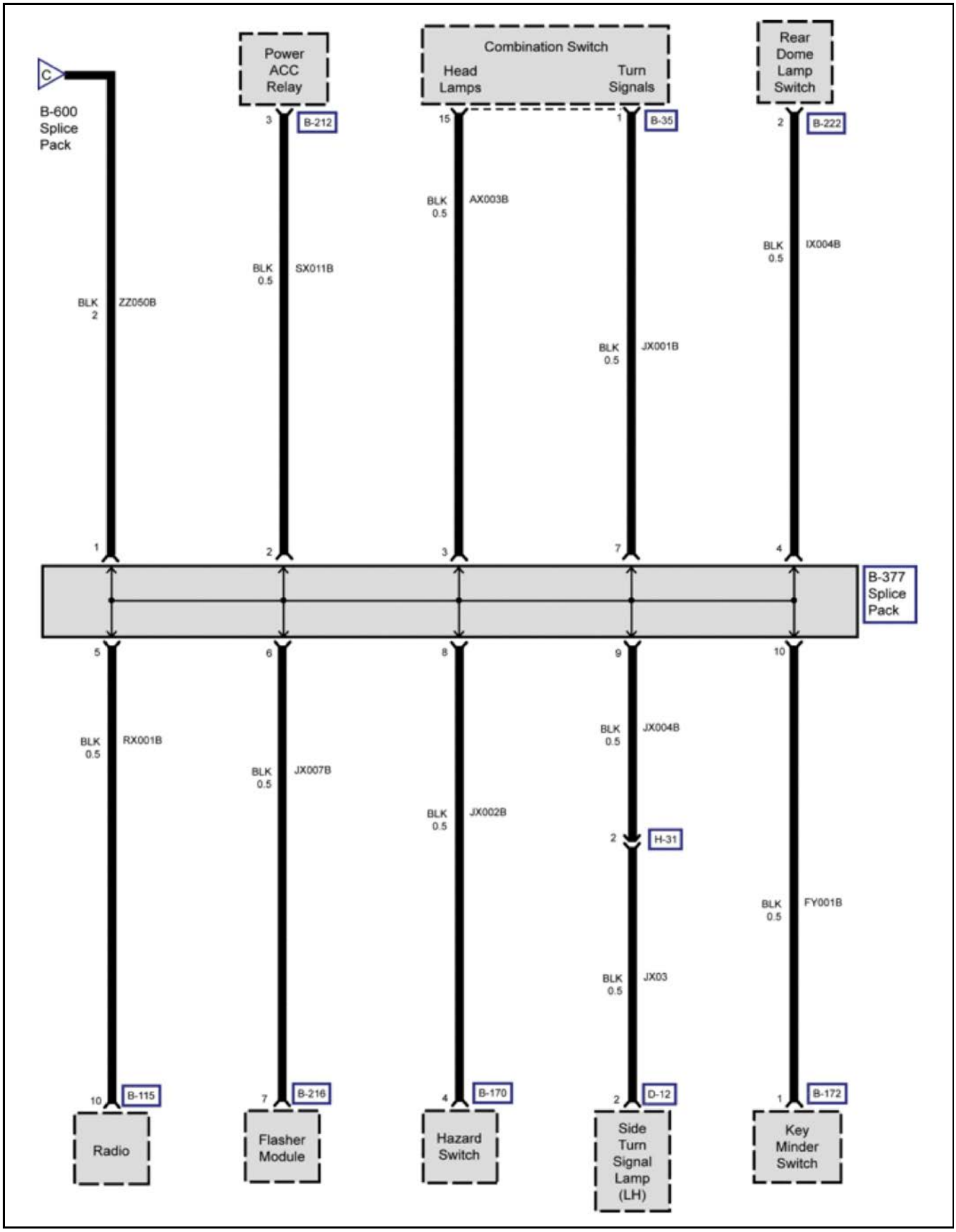

4890891

Ground Distribution Schematics (B-52 (B-49 Junction Block))

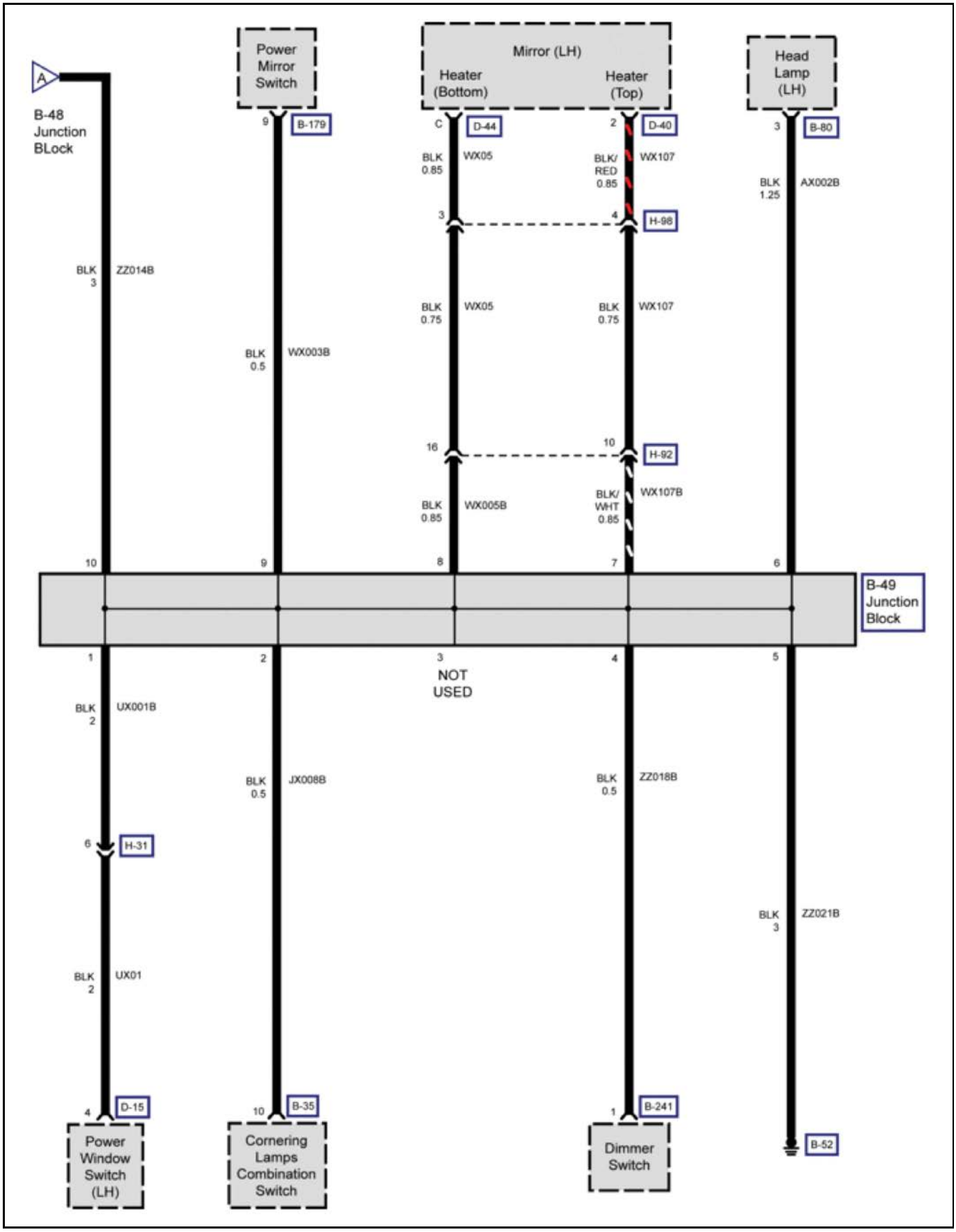

4890898

Ground Distribution Schematics (B-53 (B-48 Junction Block) 1 of 4)

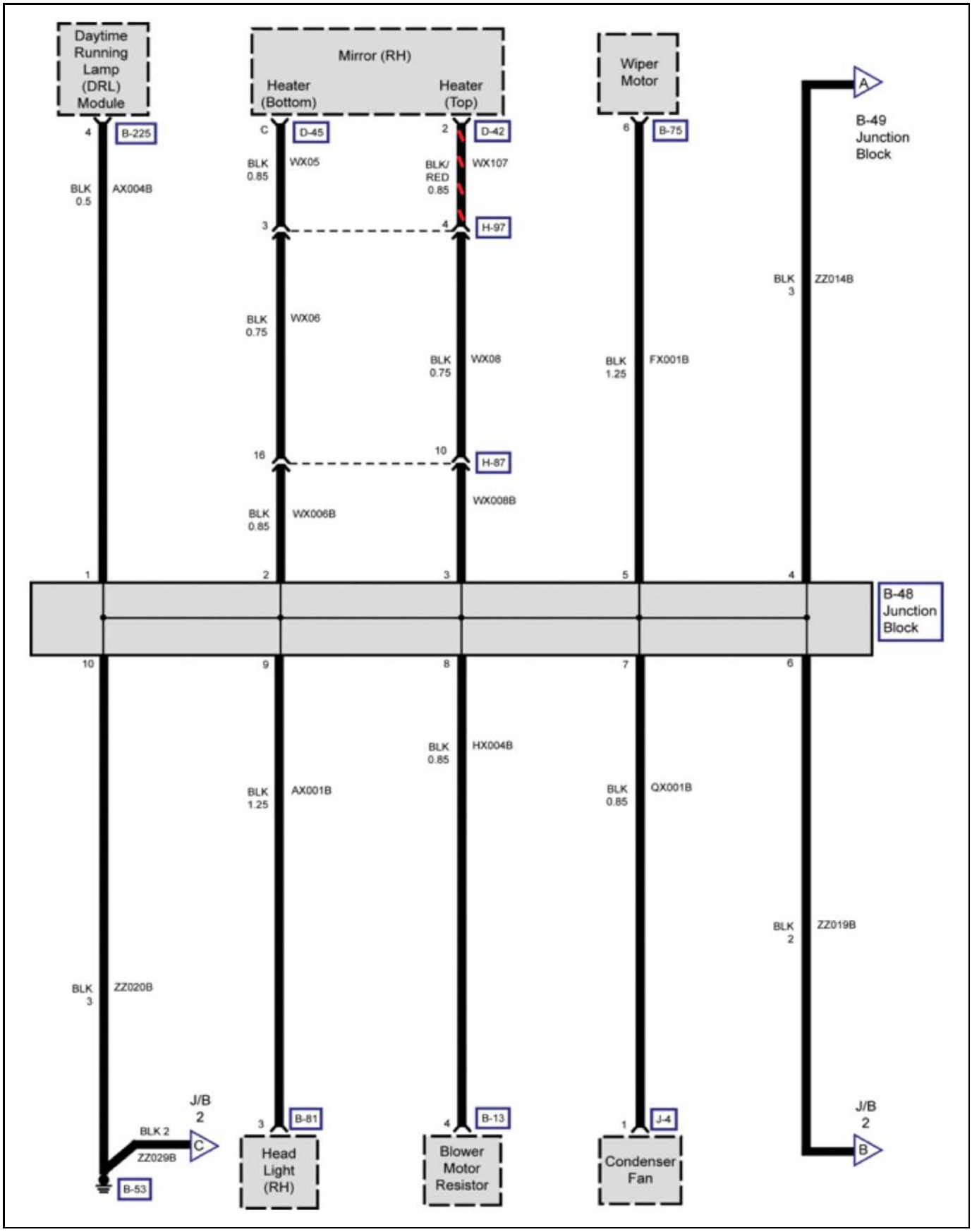

4890919

Ground Distribution Schematics (B-53 (Sub J/B 2) 2 of 4)

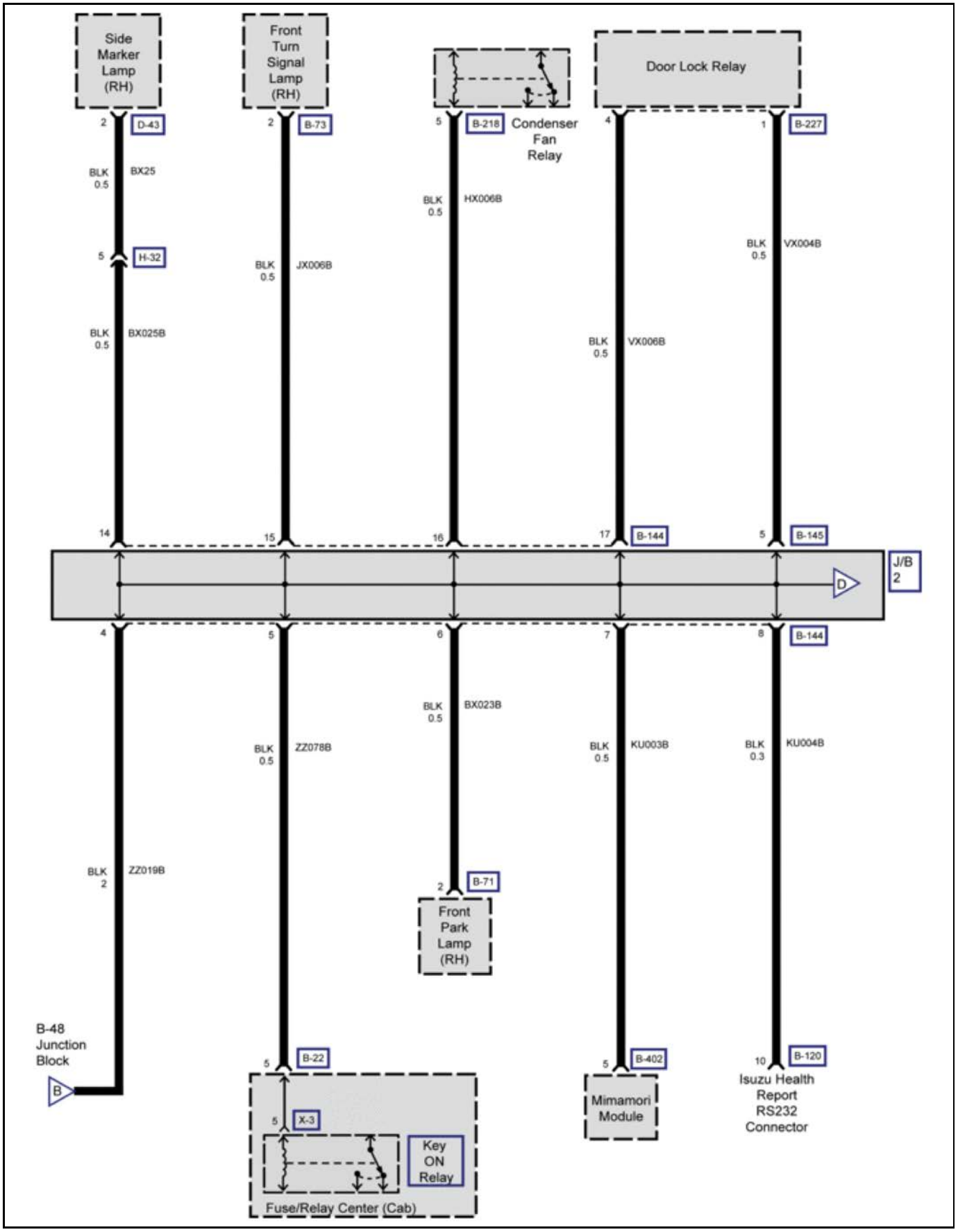

4890923

Ground Distribution Schematics (B-53 (Sub J/B 2) 3 of 4)

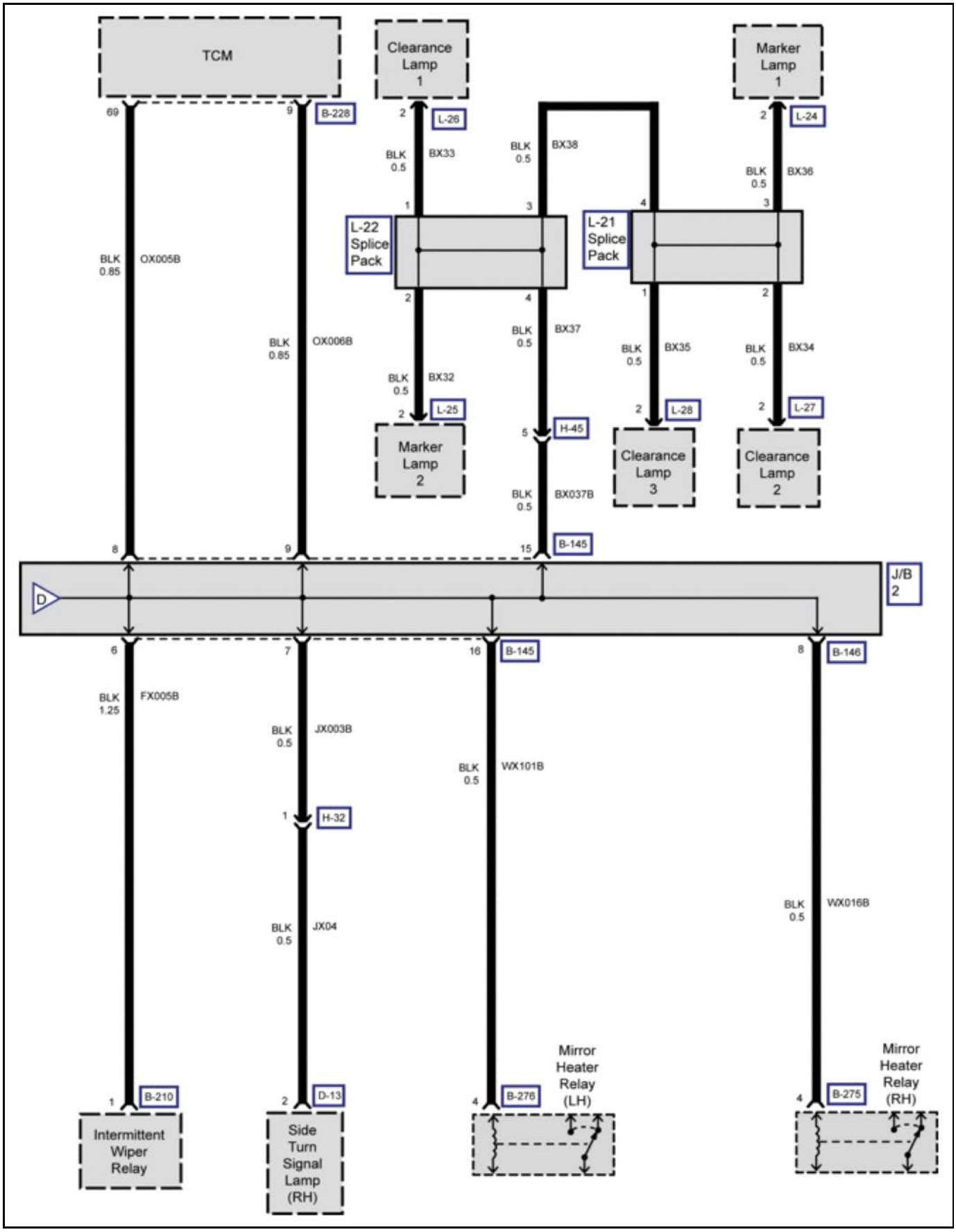

4890932

Ground Distribution Schematics (B-53 (Sub J/B 2) 4 of 4)

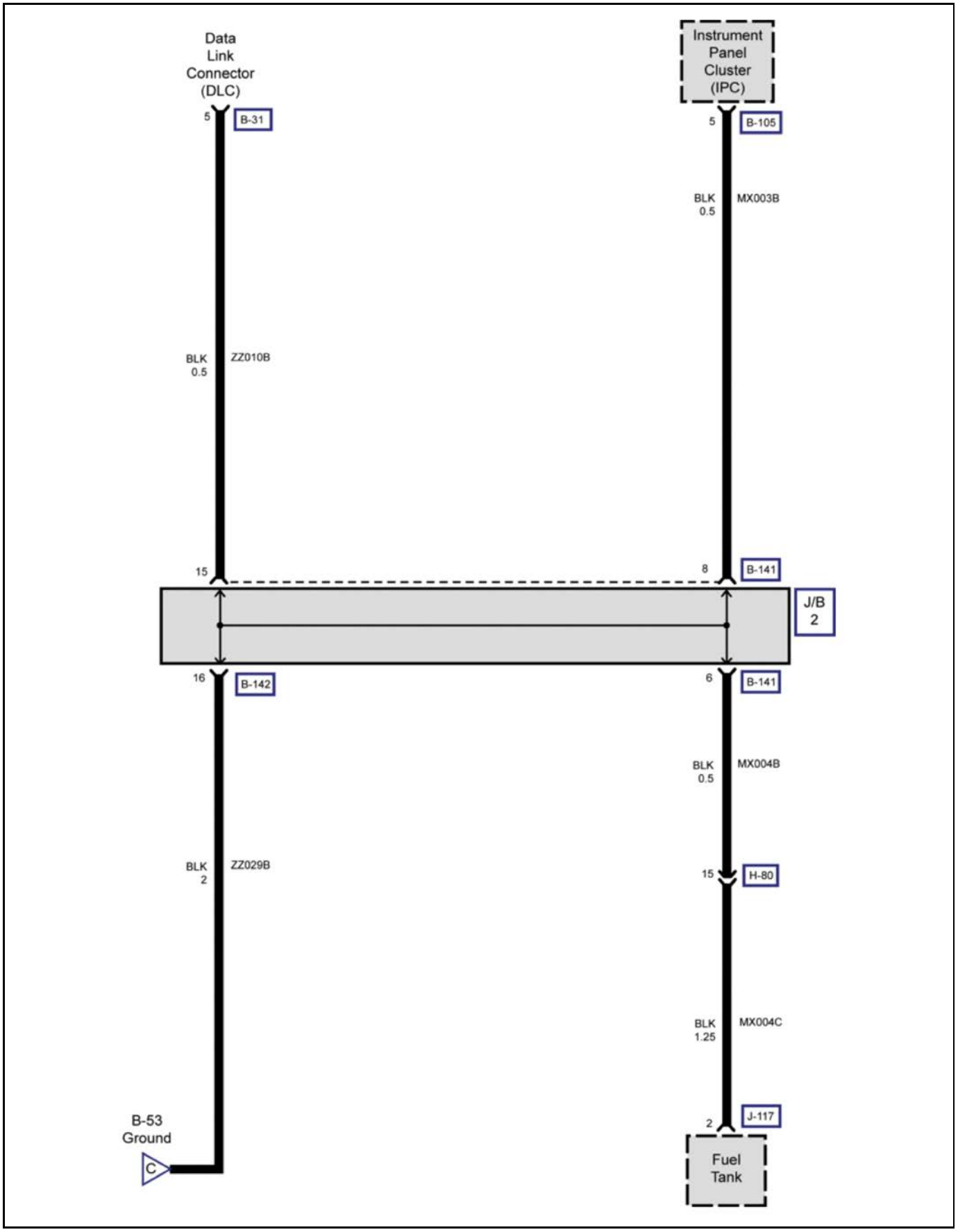

4890945

Ground Distribution Schematics (B-54, B-56, B-59, B-244)

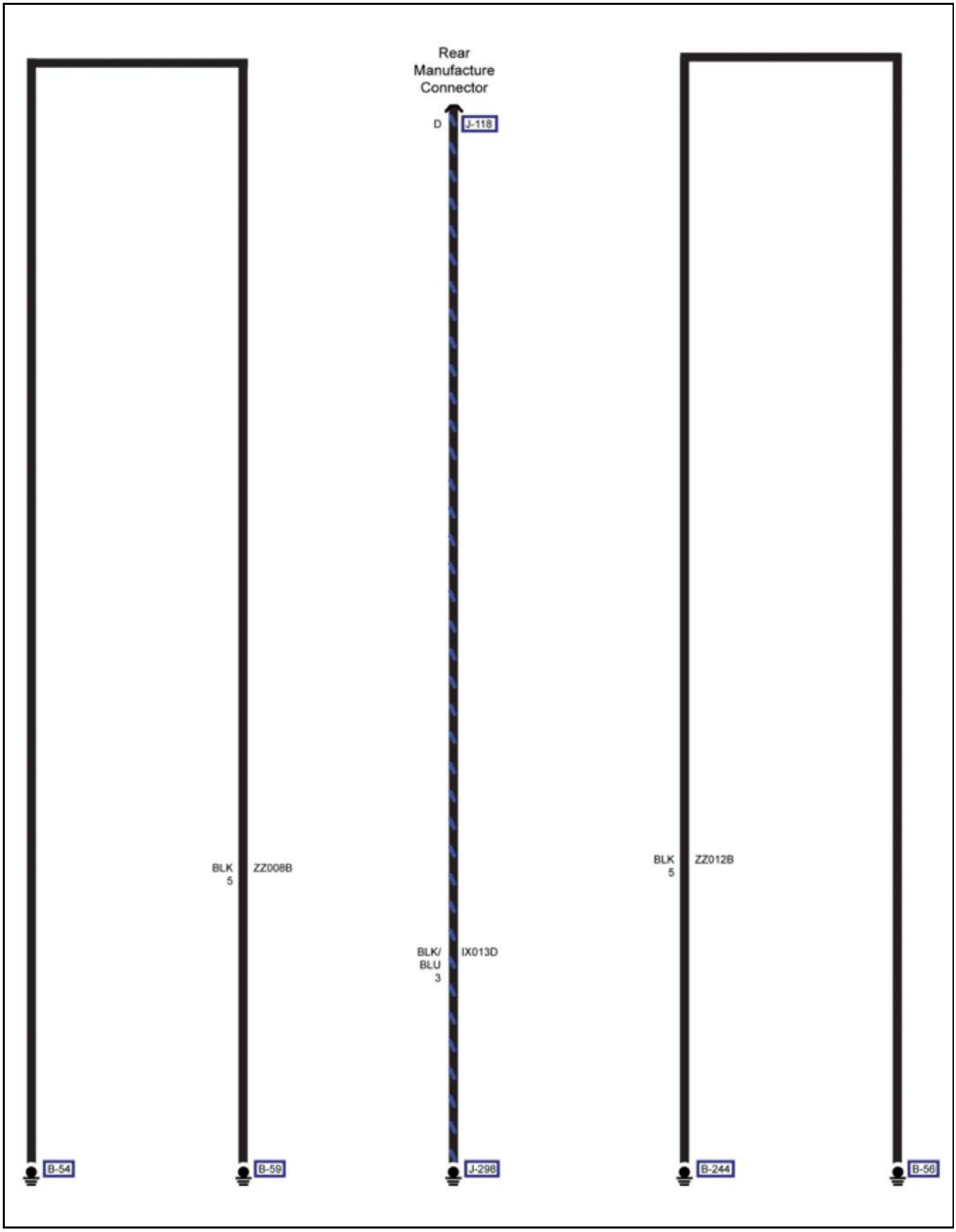

4890960

Ground Distribution Schematics (B-55, B-221 (Splice 18))

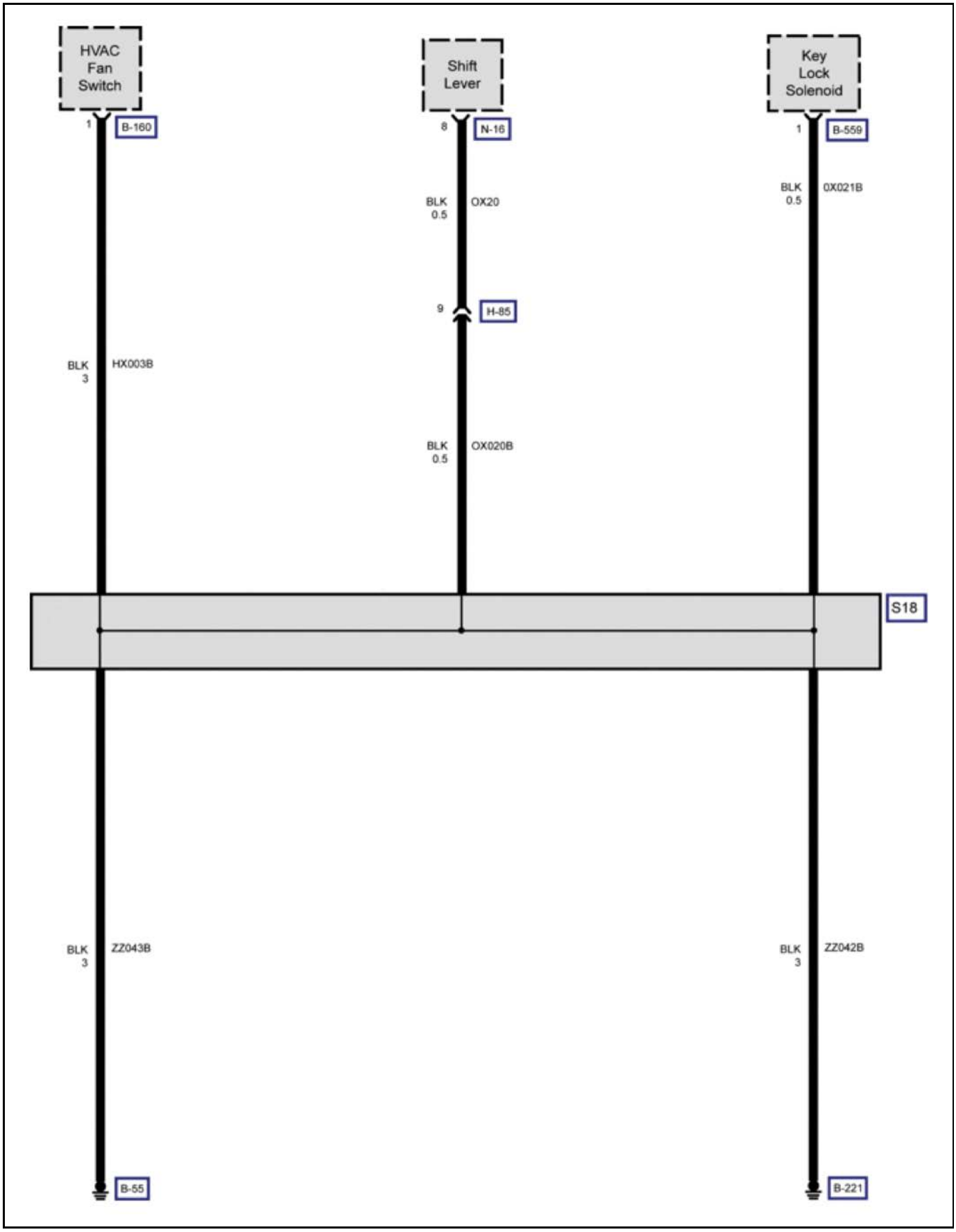

4890969

Ground Distribution Schematics (E-74)

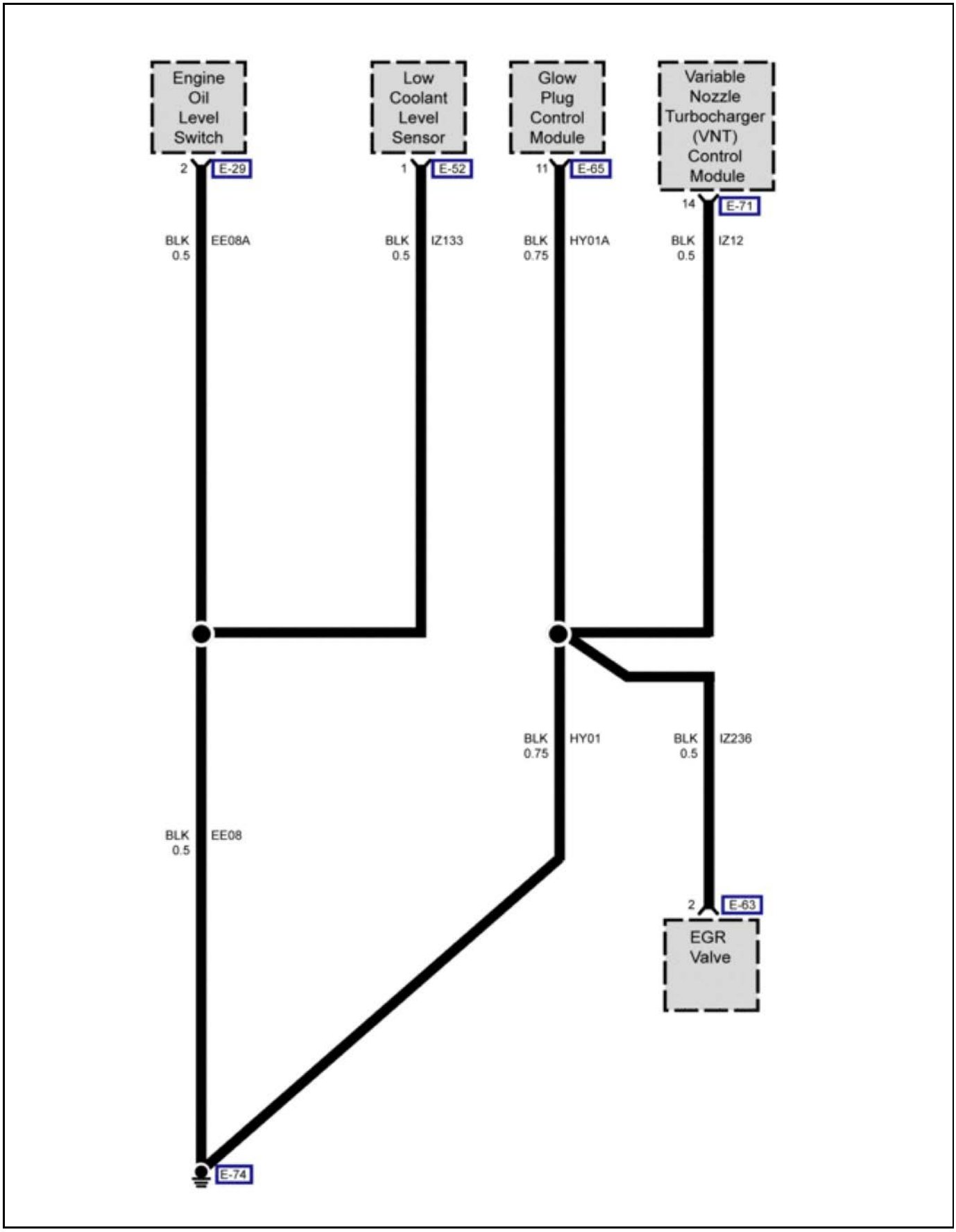

4890994

Ground Distribution Schematics (J-7, J-9 (Splice 5))

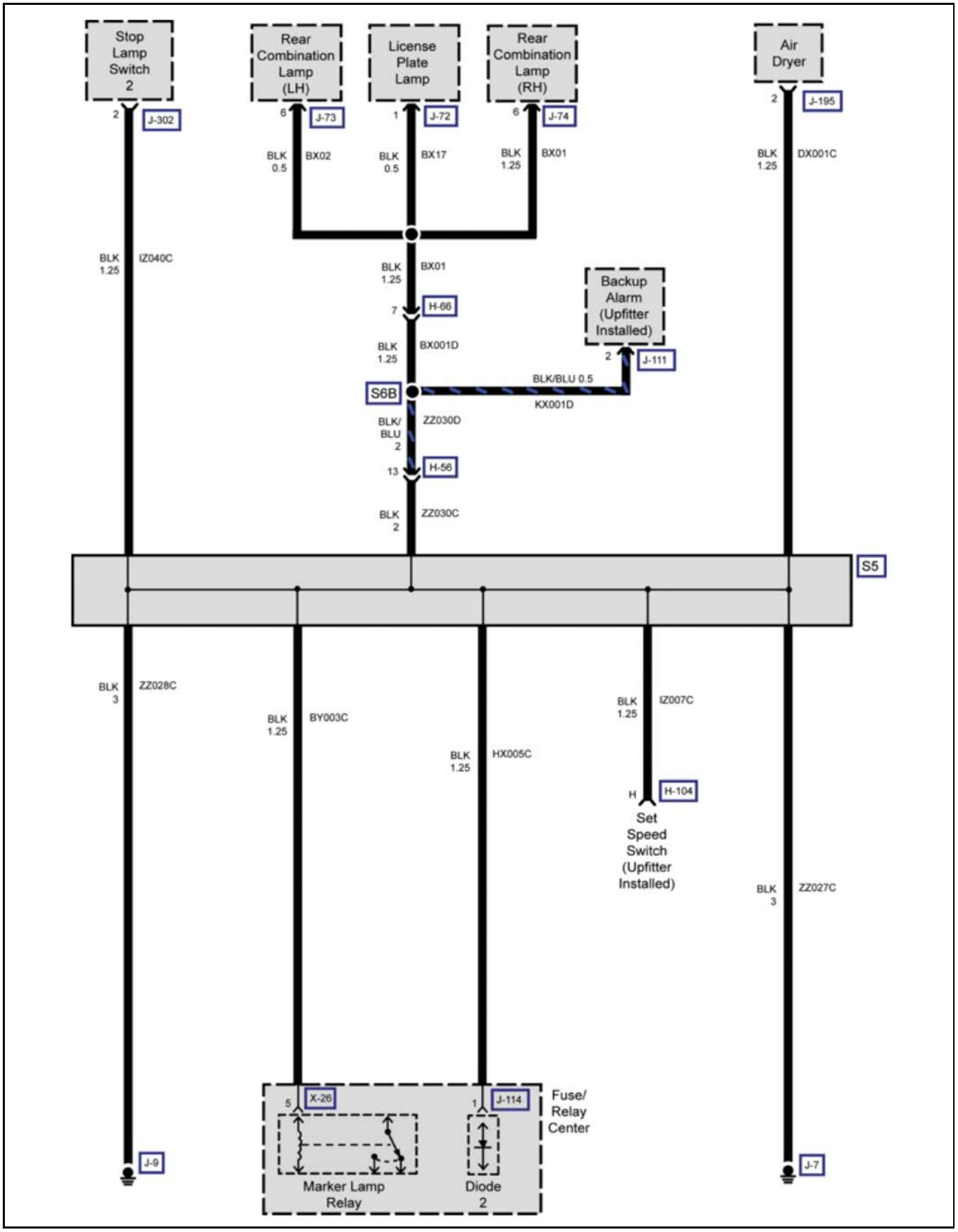

4891048

Ground Distribution Schematics (J-8, J-11 (Splice 2))

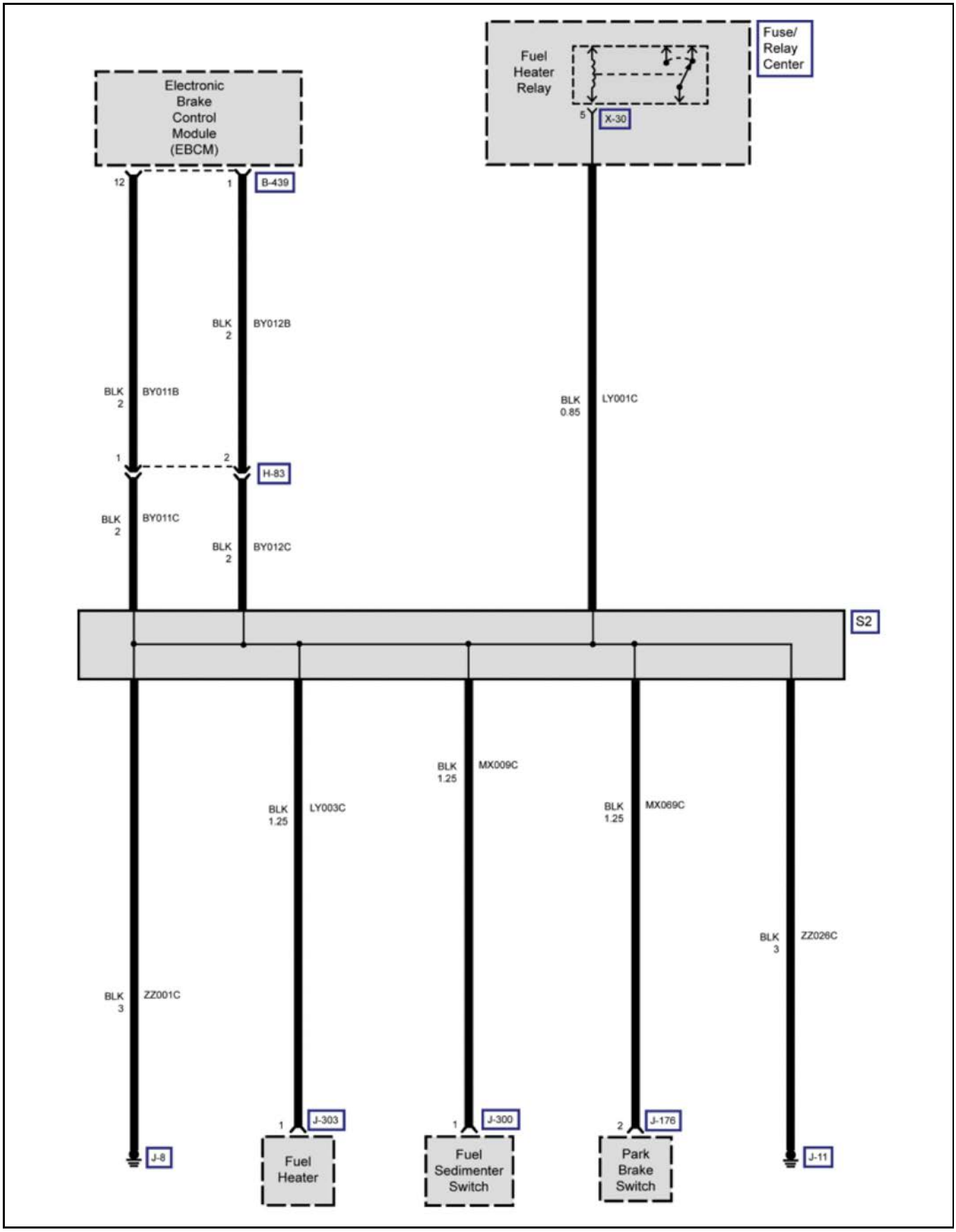

4891077

Ground Distribution Schematics (J-10, J-12 (Splice 7))

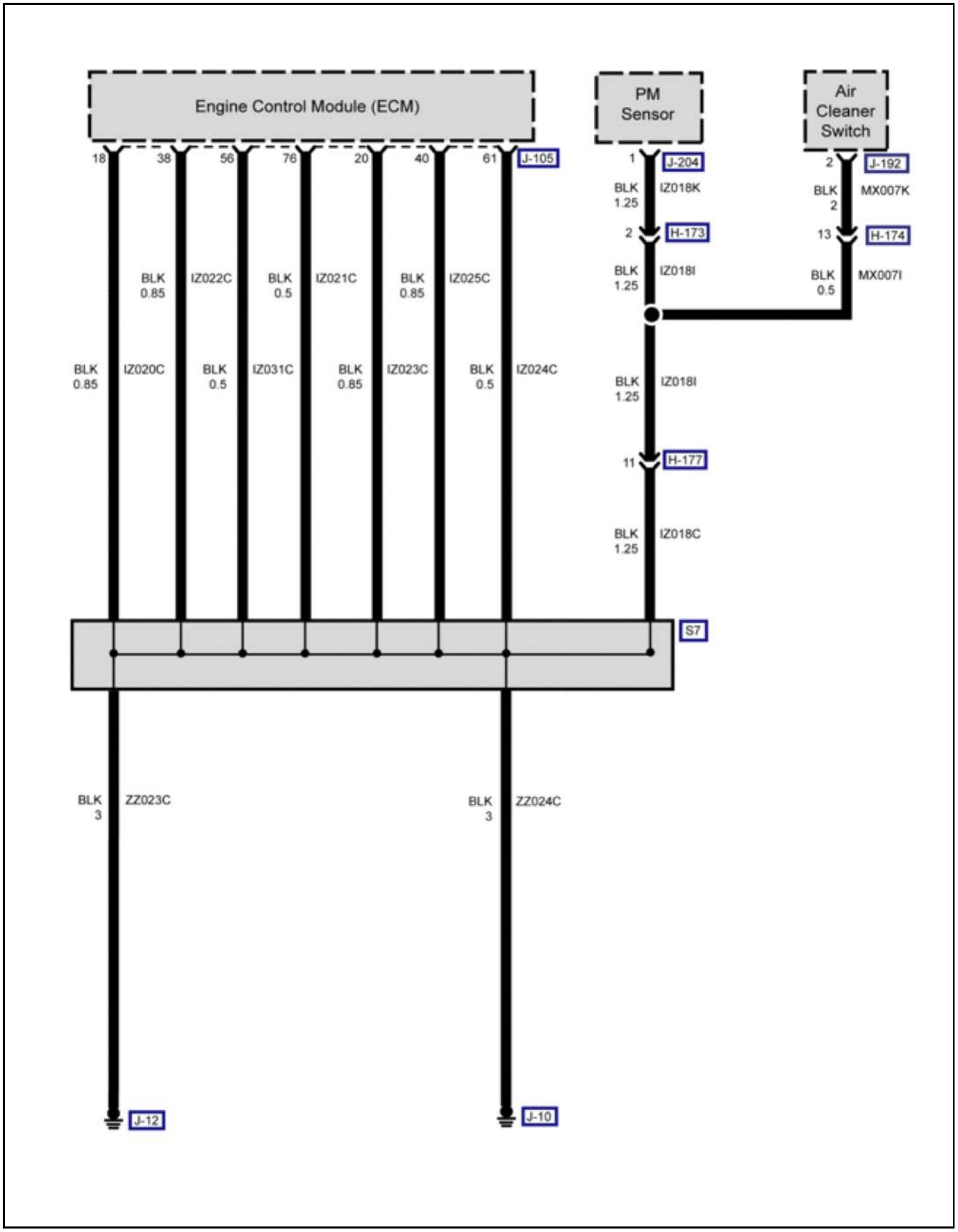

4891088

Ground Distribution Schematics (J-141, J-142 (Splice 1))

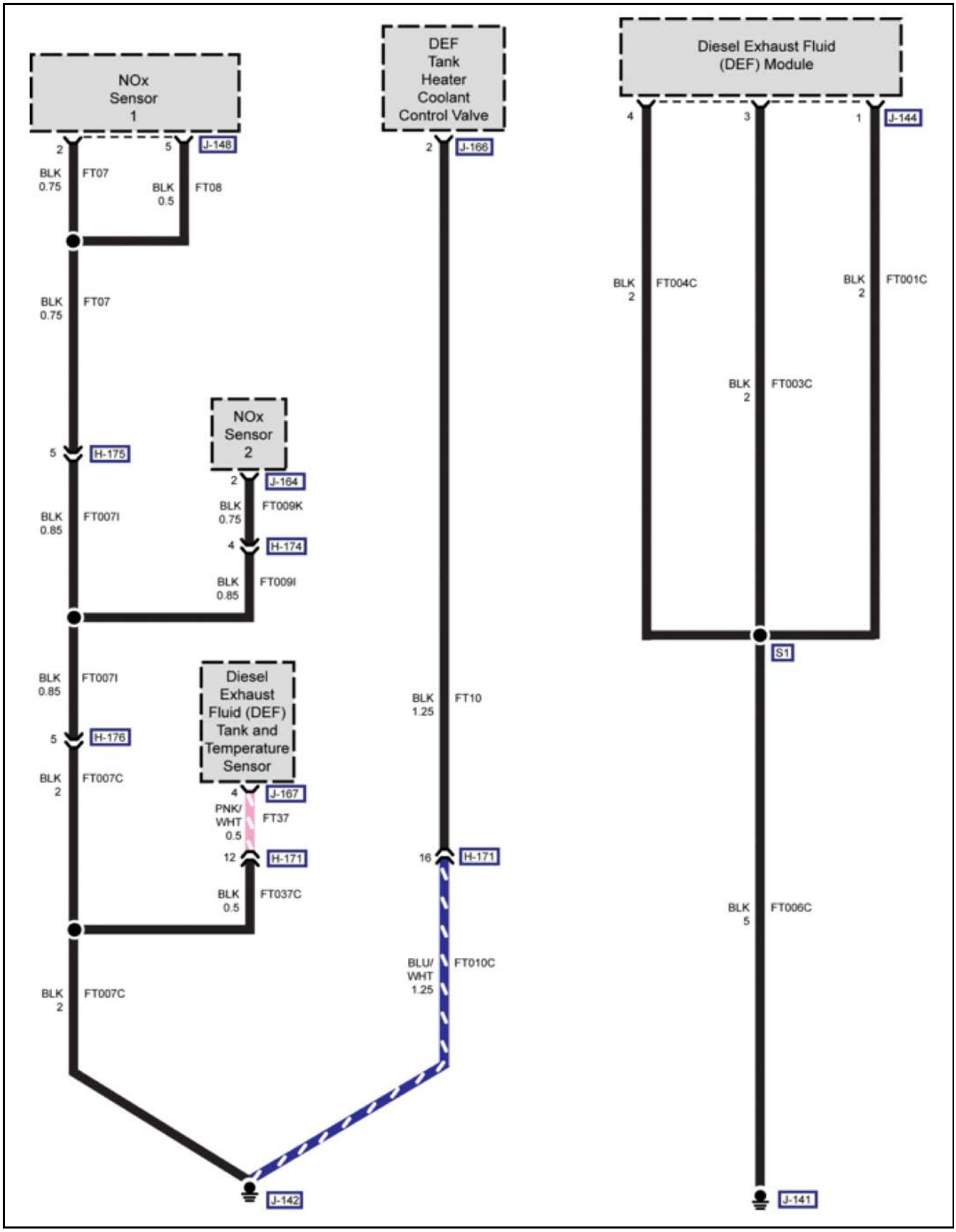

4891091

Ground Distribution Schematics (J-298)

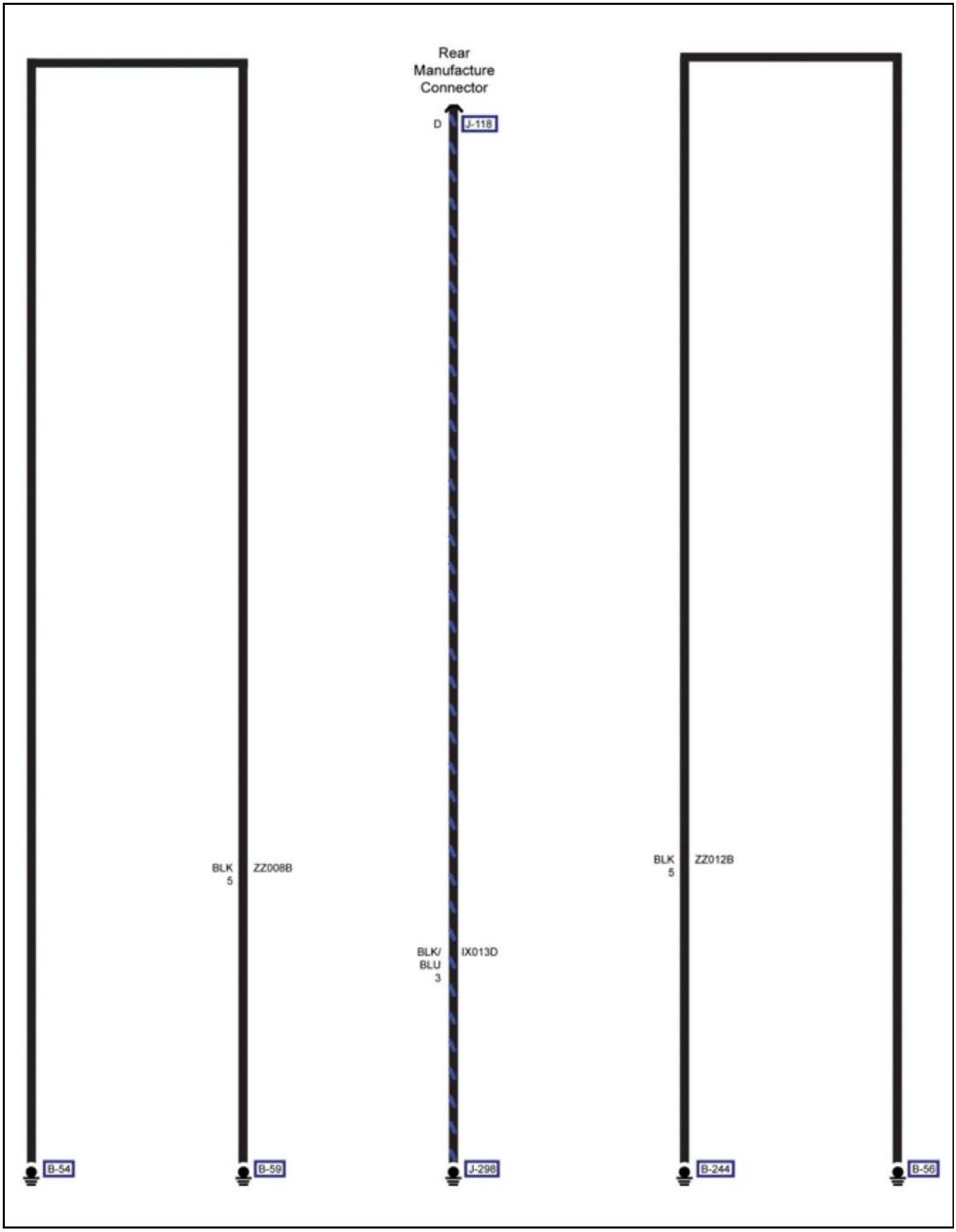

4891095

Ground Distribution Schematics (P-5, P-6, P-7)

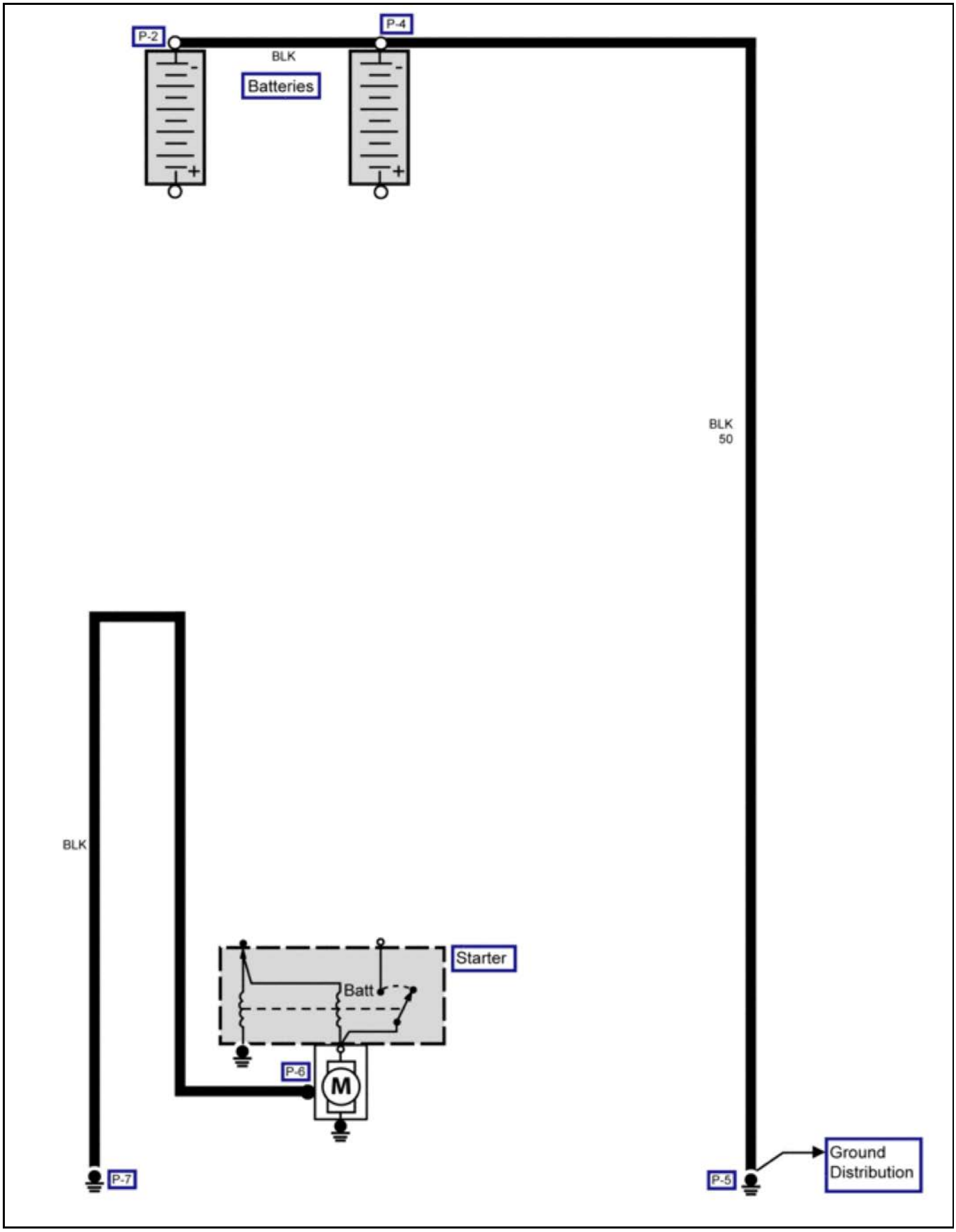

4891110

Heated Mirror Schematics (1 of 3 (Switch))

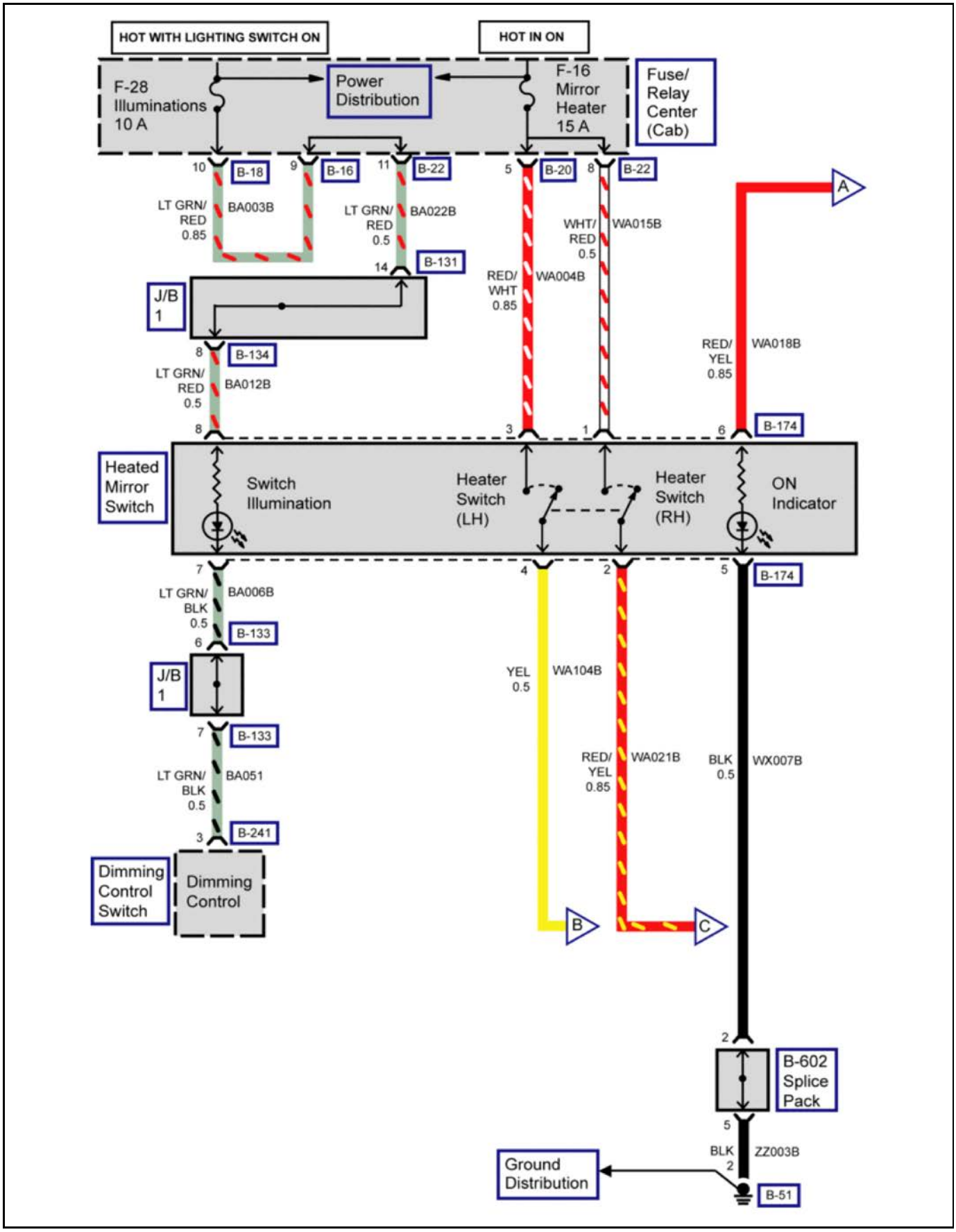

4891946

Heated Mirror Schematics (2 of 3 (Relays))

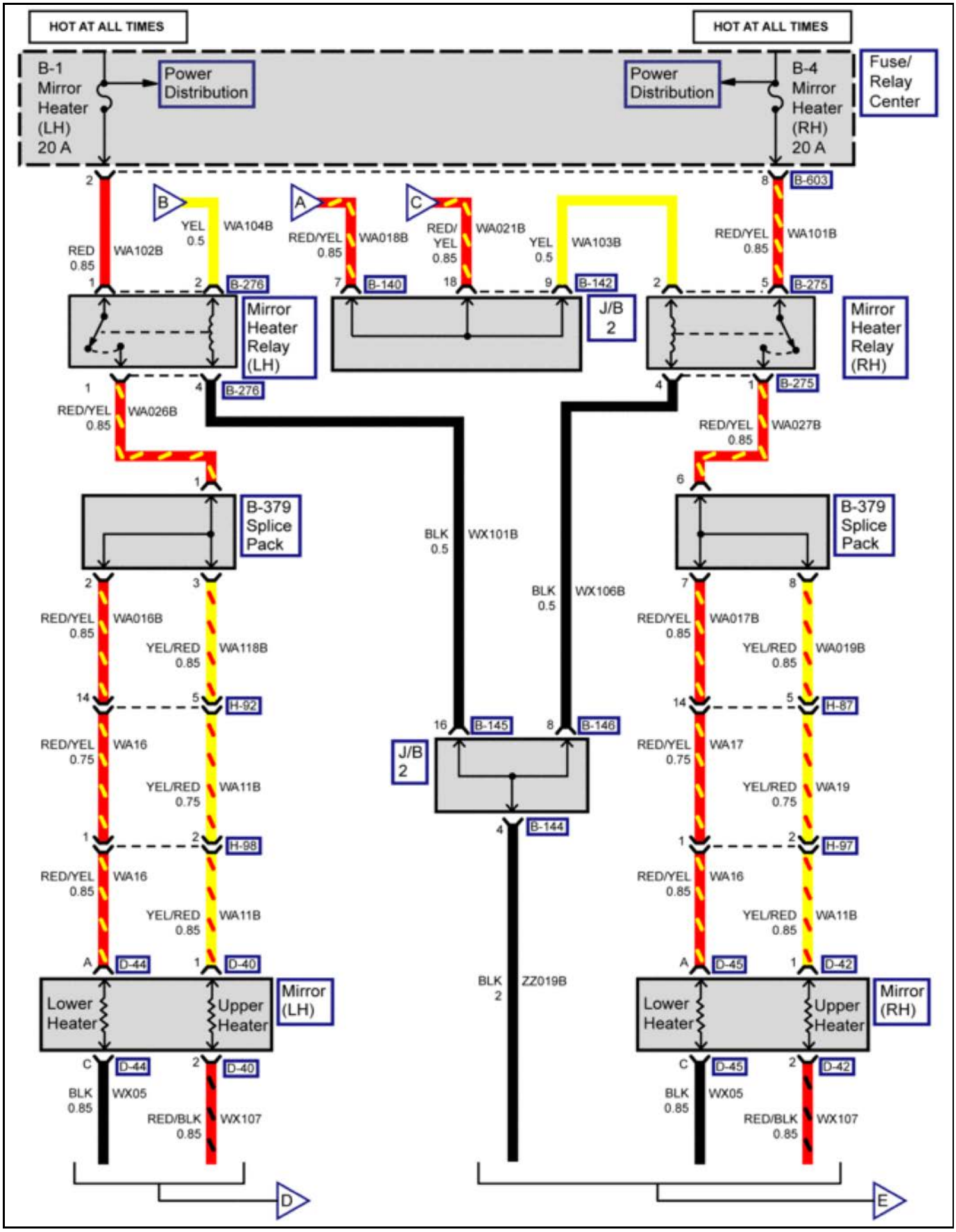

4891958

Heated Mirror Schematics (3 of 3 (Grounds))

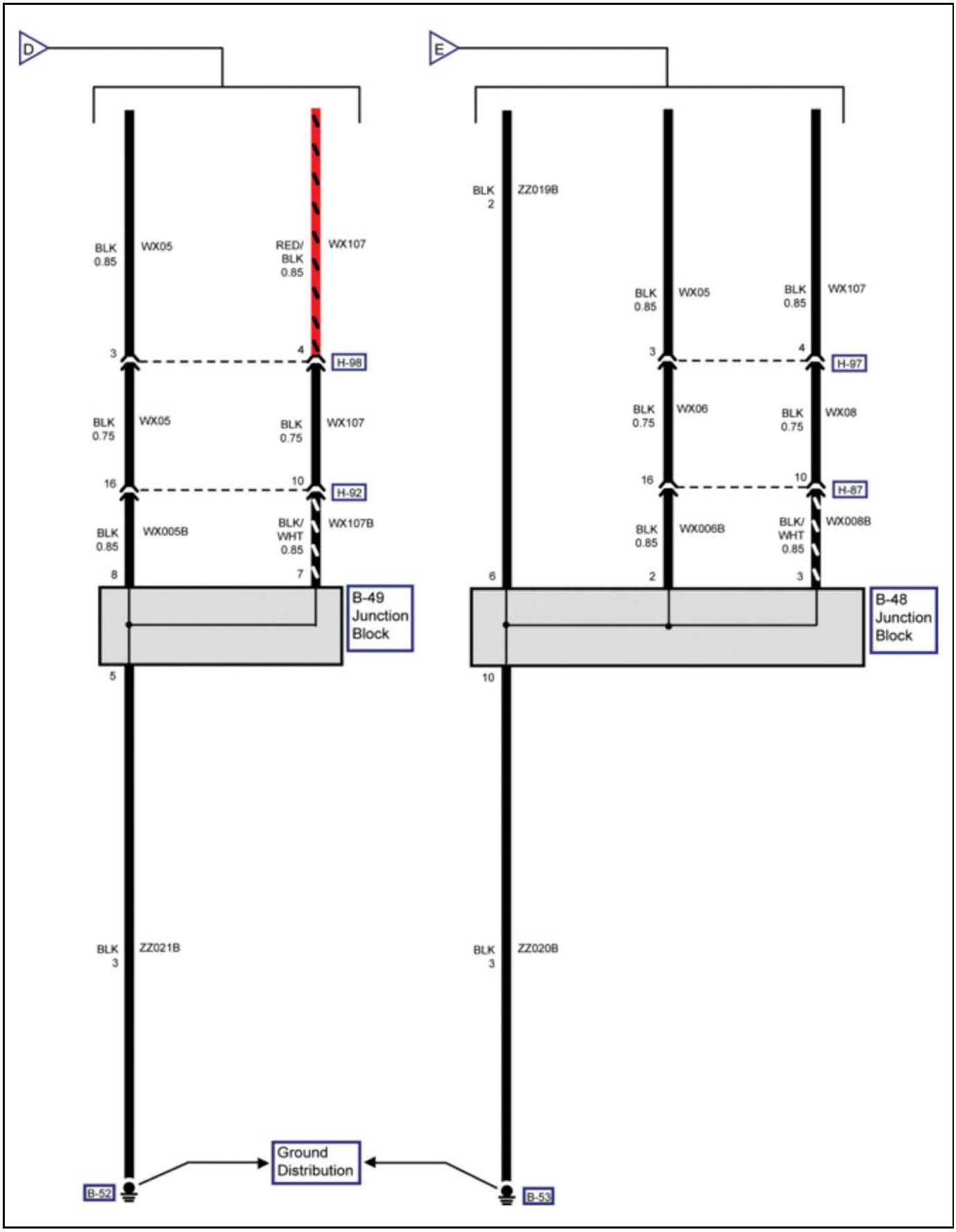

4891968

Heated Mirror Schematics (Power Mirrors)

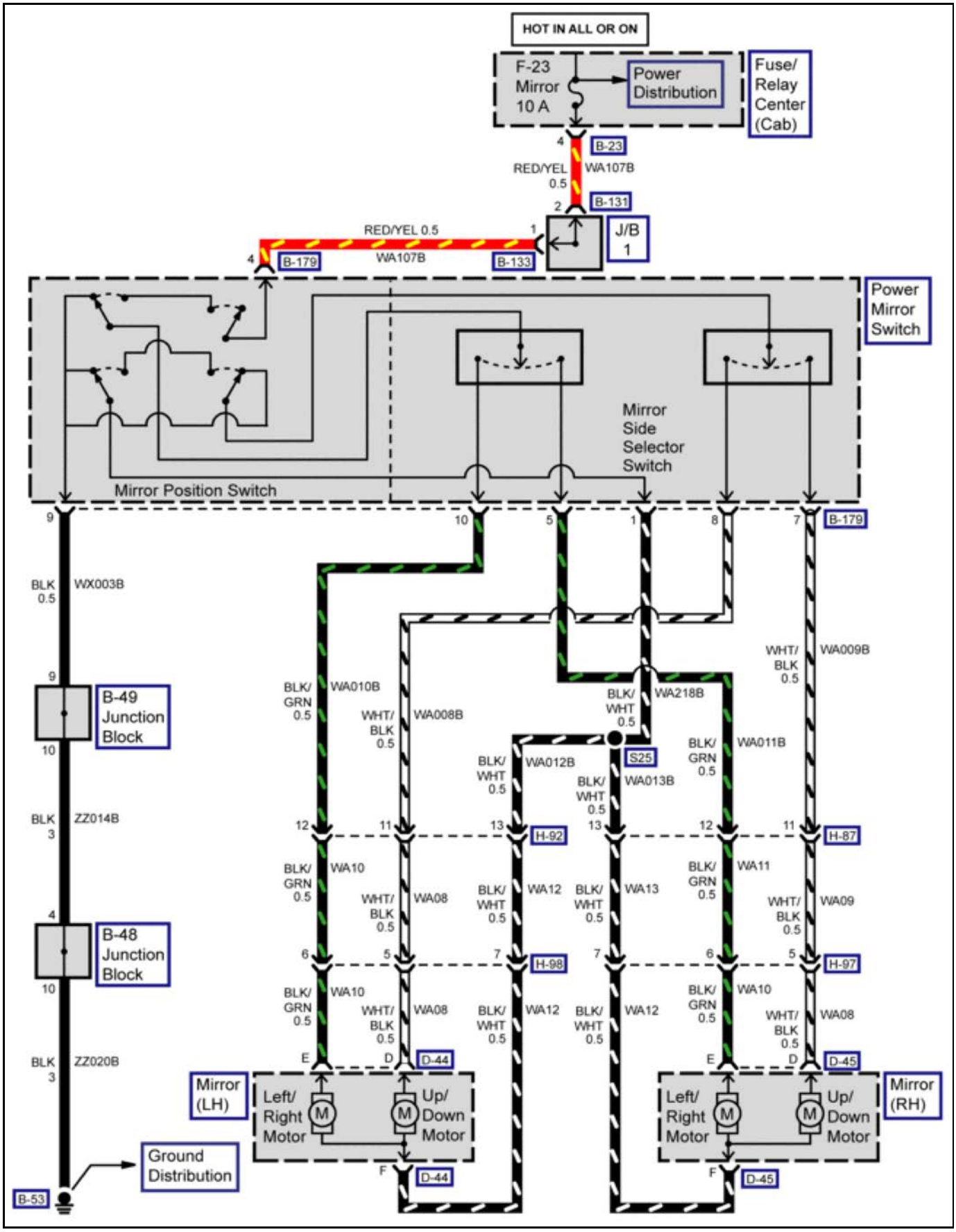

4891971

MIMAMORI Schematics (Module Powers, Grounds and Communication)

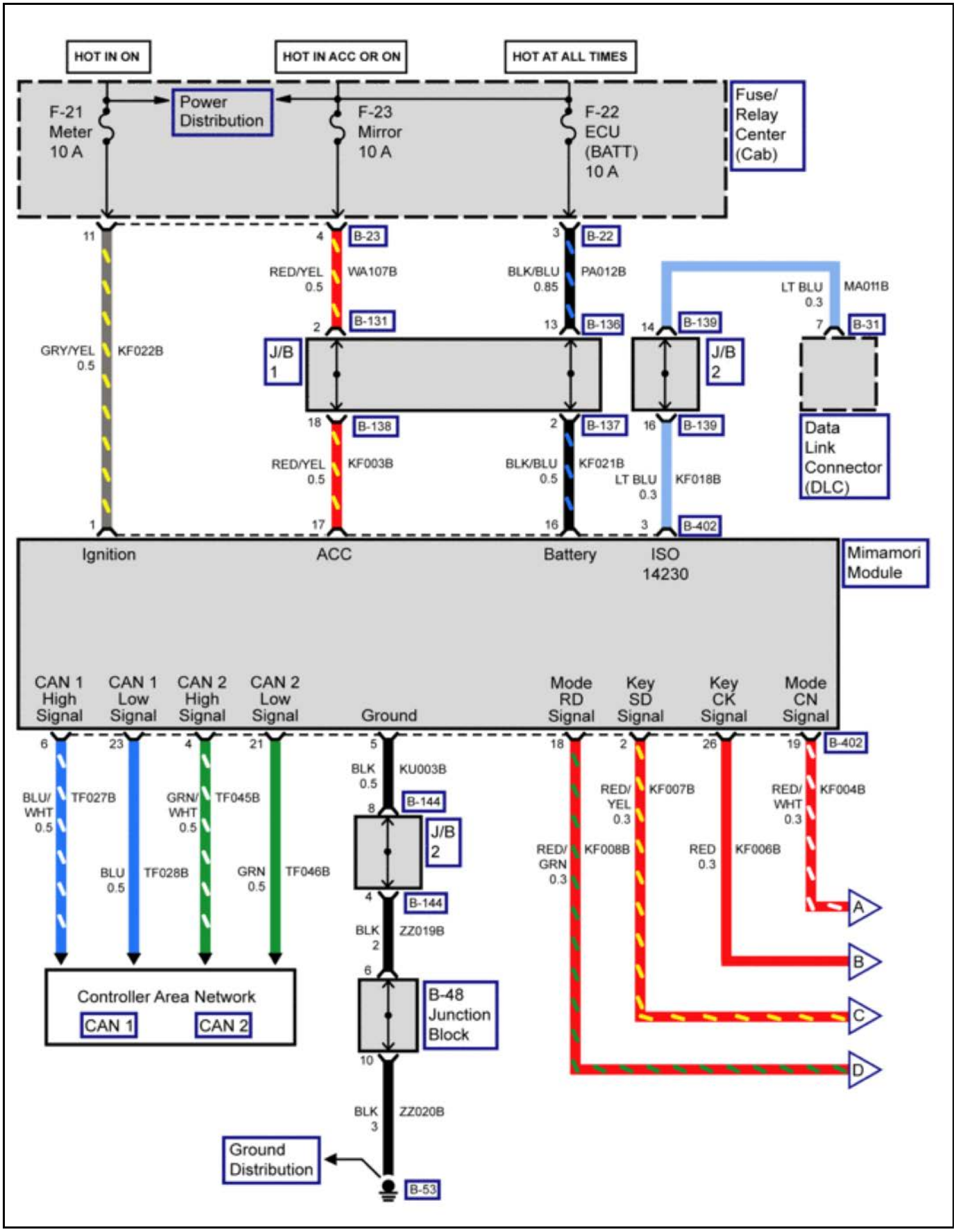

4892298

MIMAMORI Schematics (Health Report RS232 Connector)

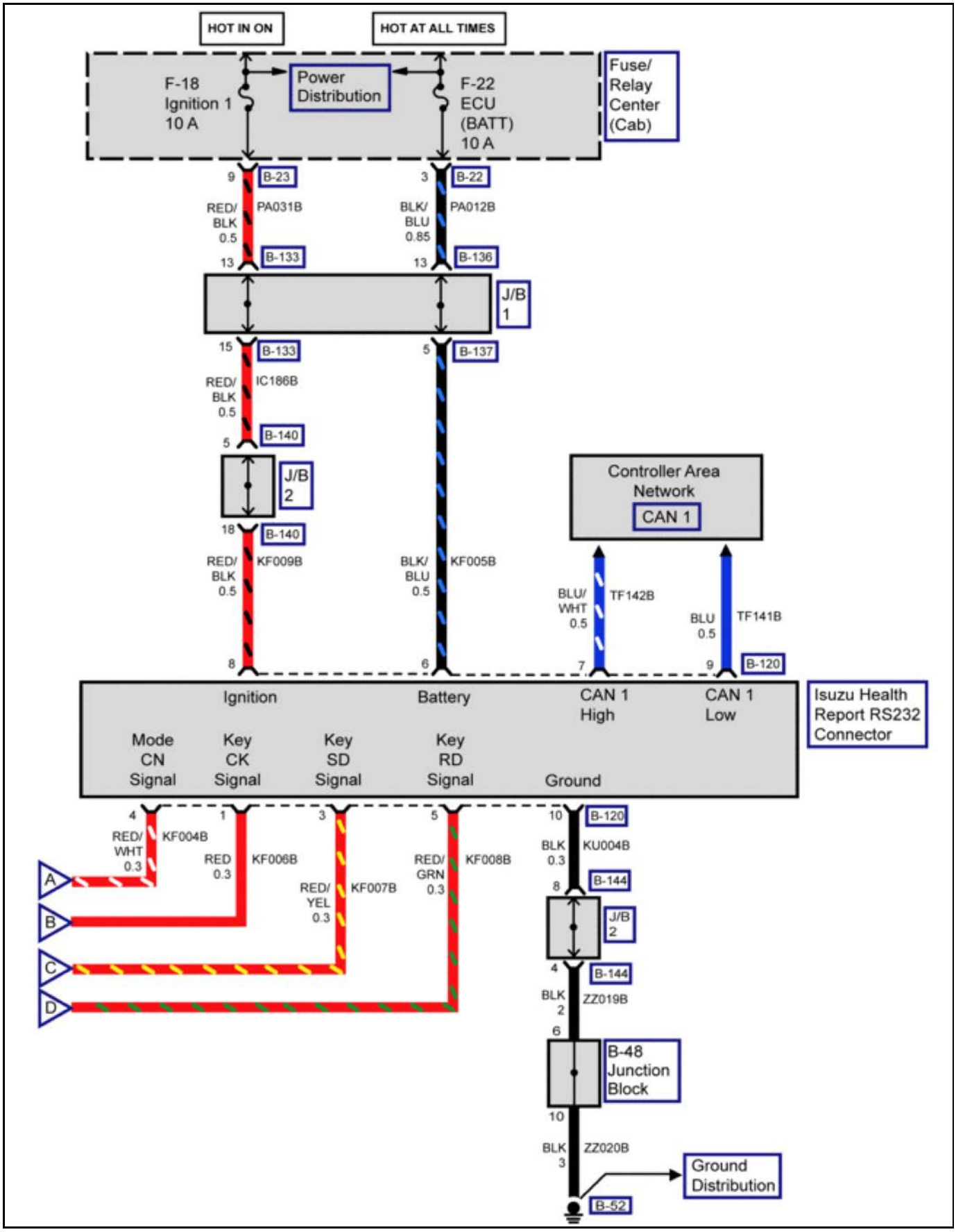

4892301

Power Distribution Schematics (Battery, Starter, Generator, Fuse/Relay Center Supply Voltage)

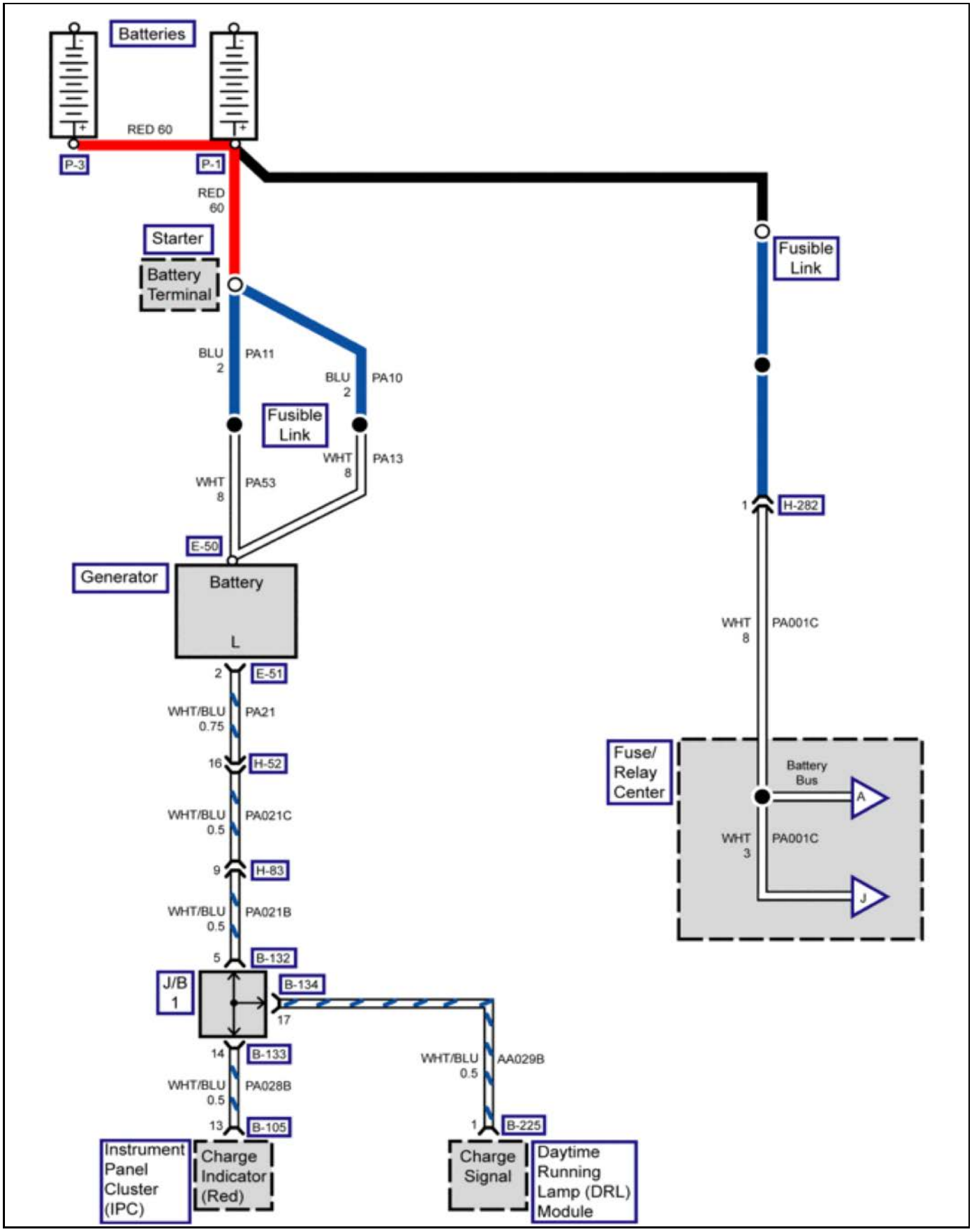

4891113

Power Distribution Schematics (Ignition Switch 1 of 2)

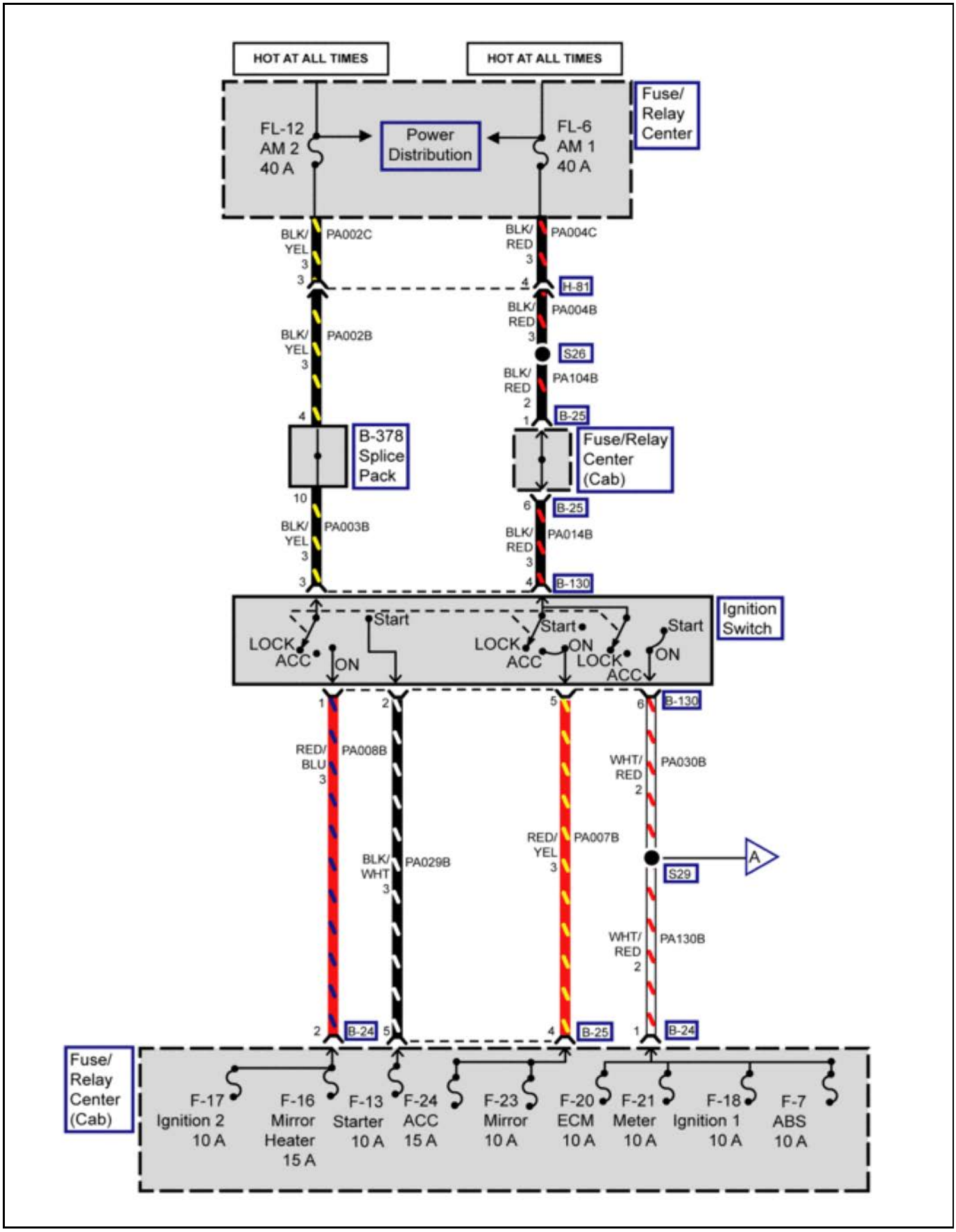

4891117

Power Distribution Schematics (Ignition Switch 2 of 2)

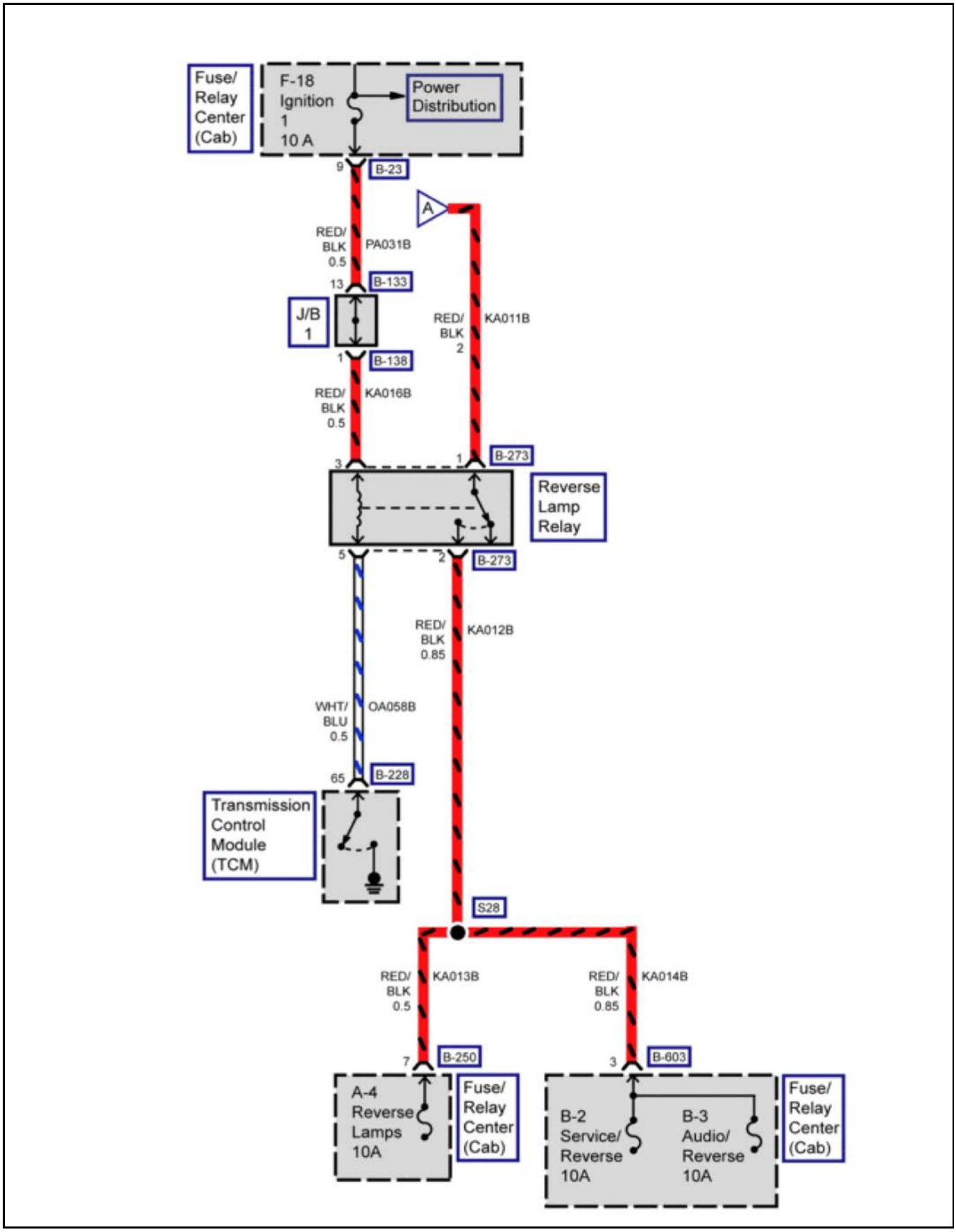

4891123

Body Builder Connector Schematics (Body Builder Connector)

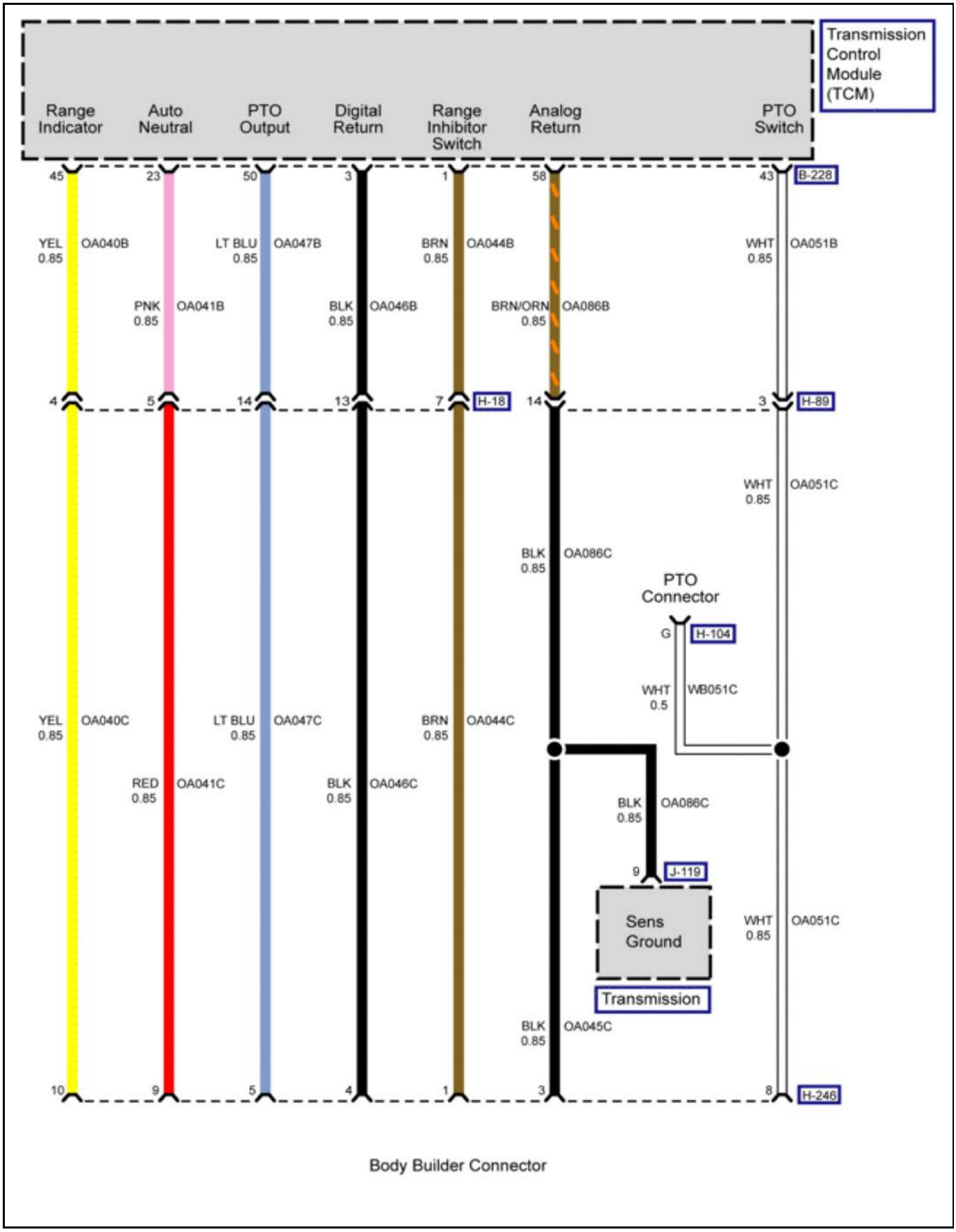

4891777

Body Builder Connector Schematics (Power Source Connector)

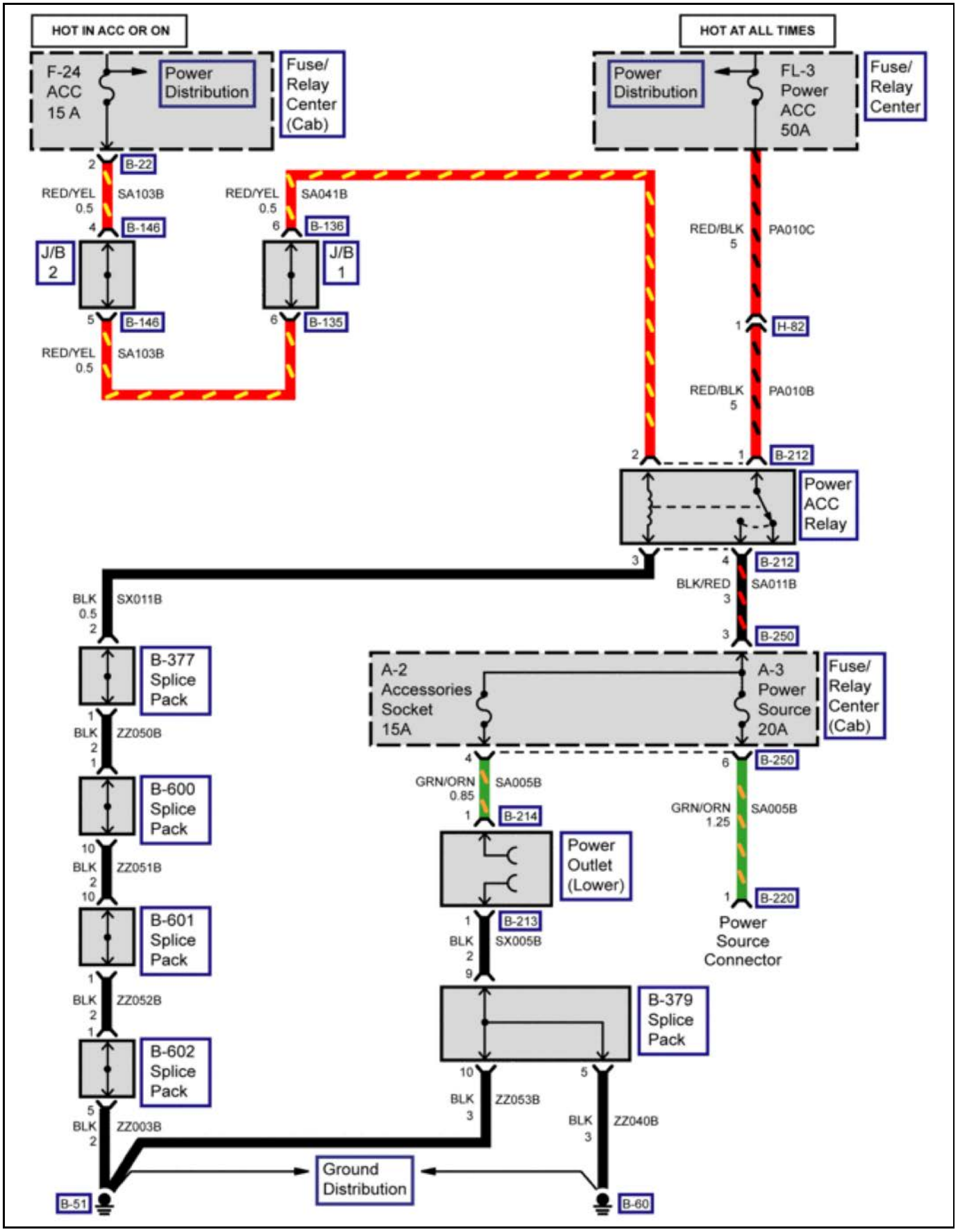

4891781

Rear Manufacture Connector Schematics (Switch Control)

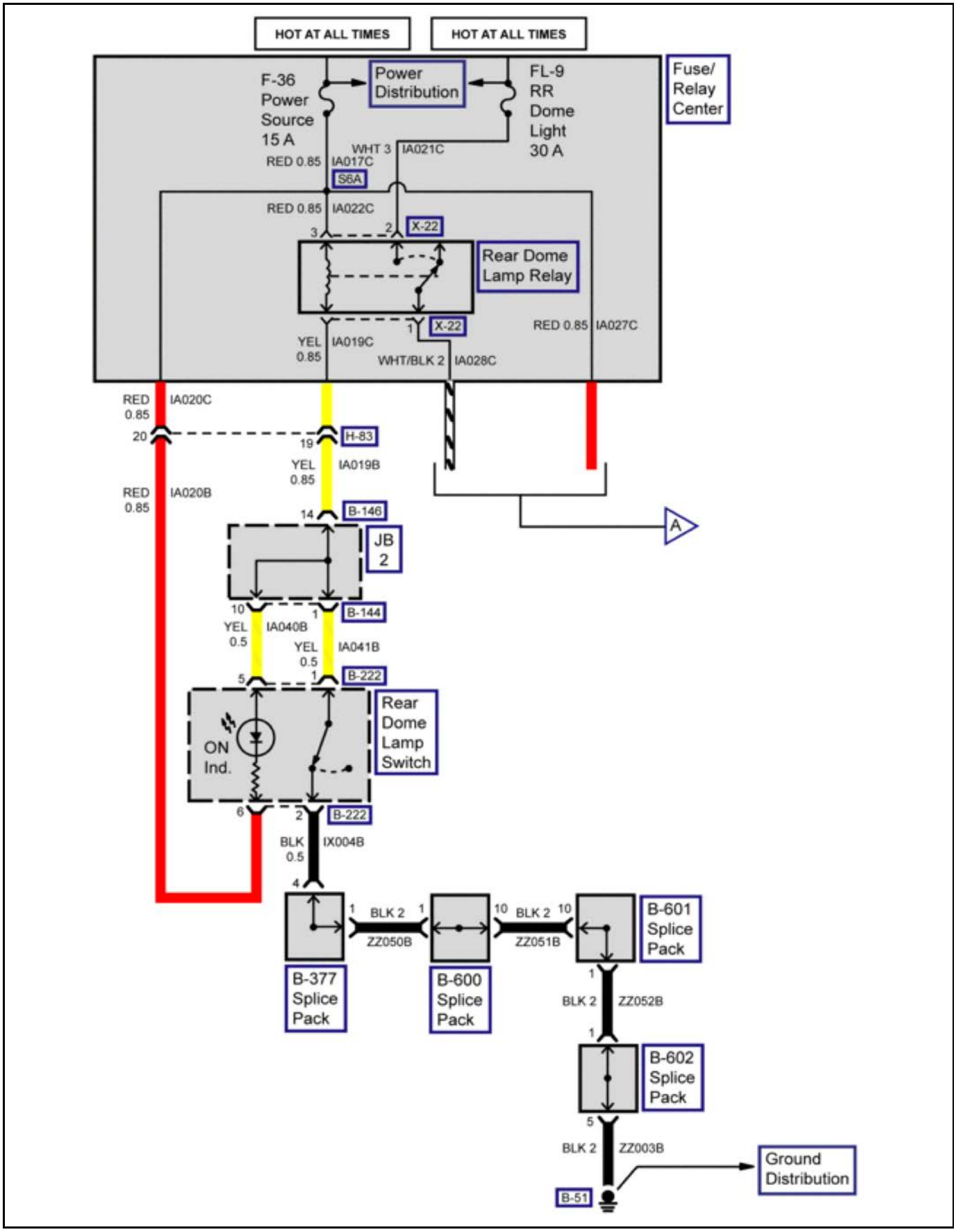

4891798

Rear Manufacture Connector Schematics (Connector)

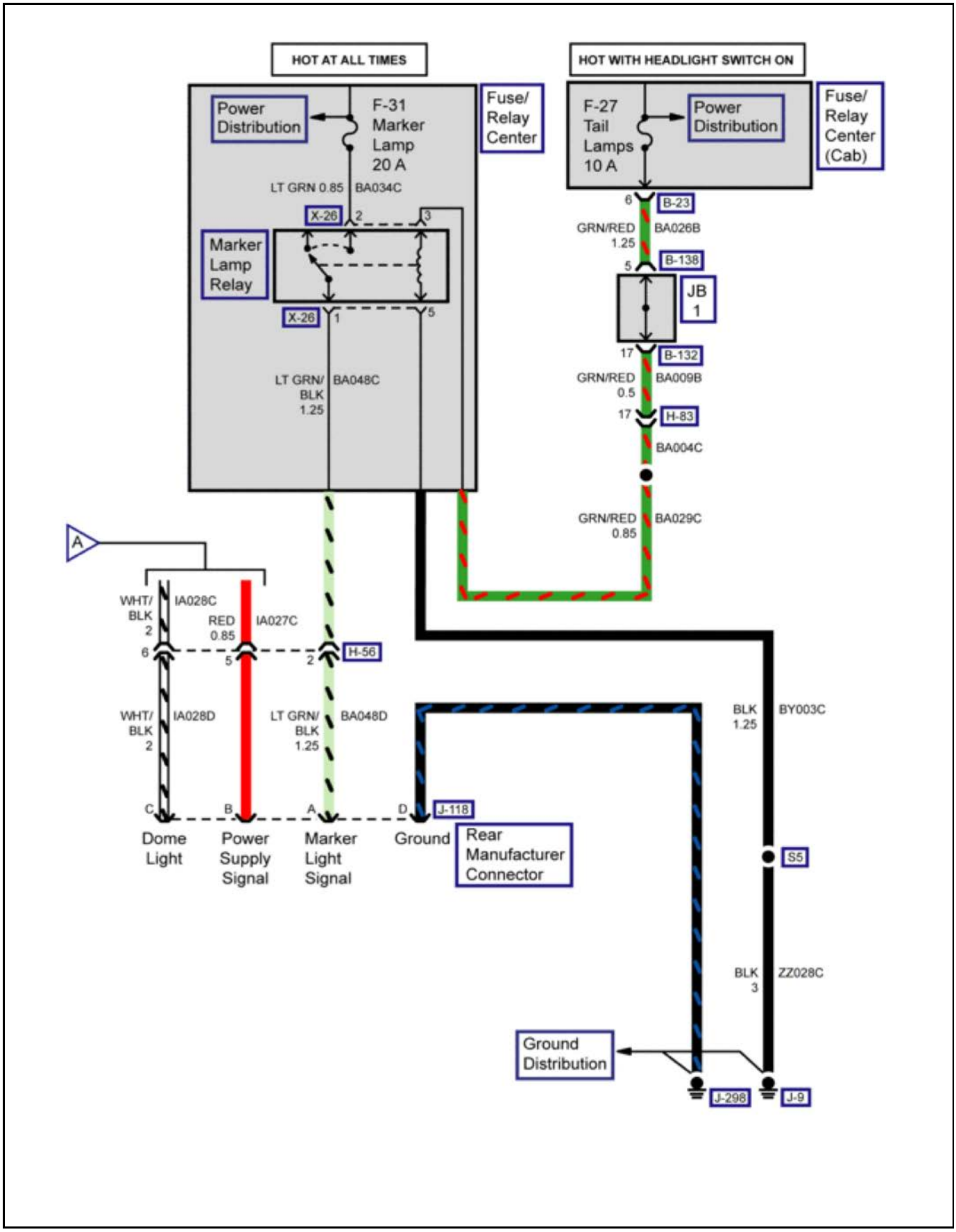

4891804

Power Outlet/Power Source Schematics (Power Outlet Upper)

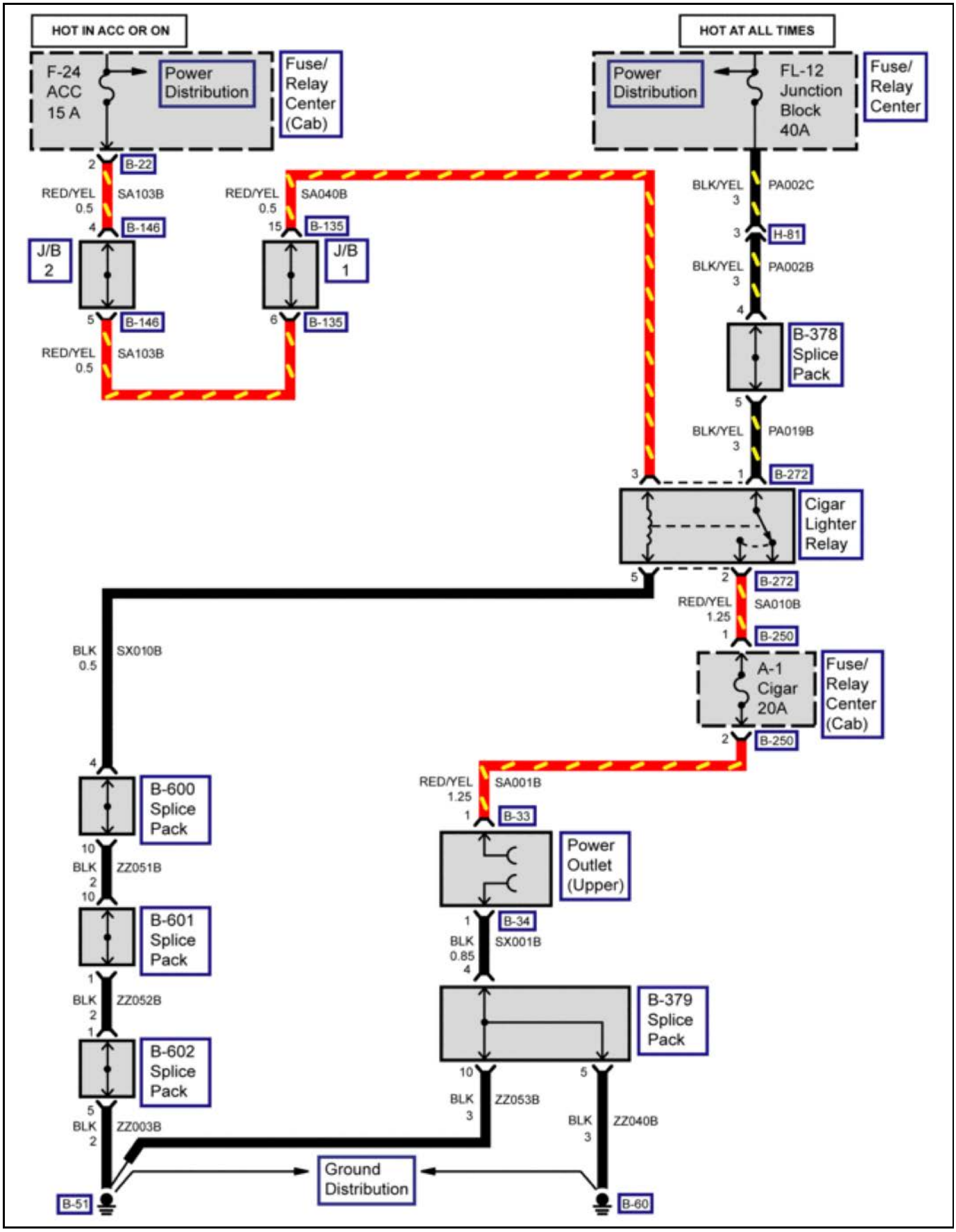

4892308

Power Outlet/Power Source Schematics (Power Outlet Lower, Power Source Connector)

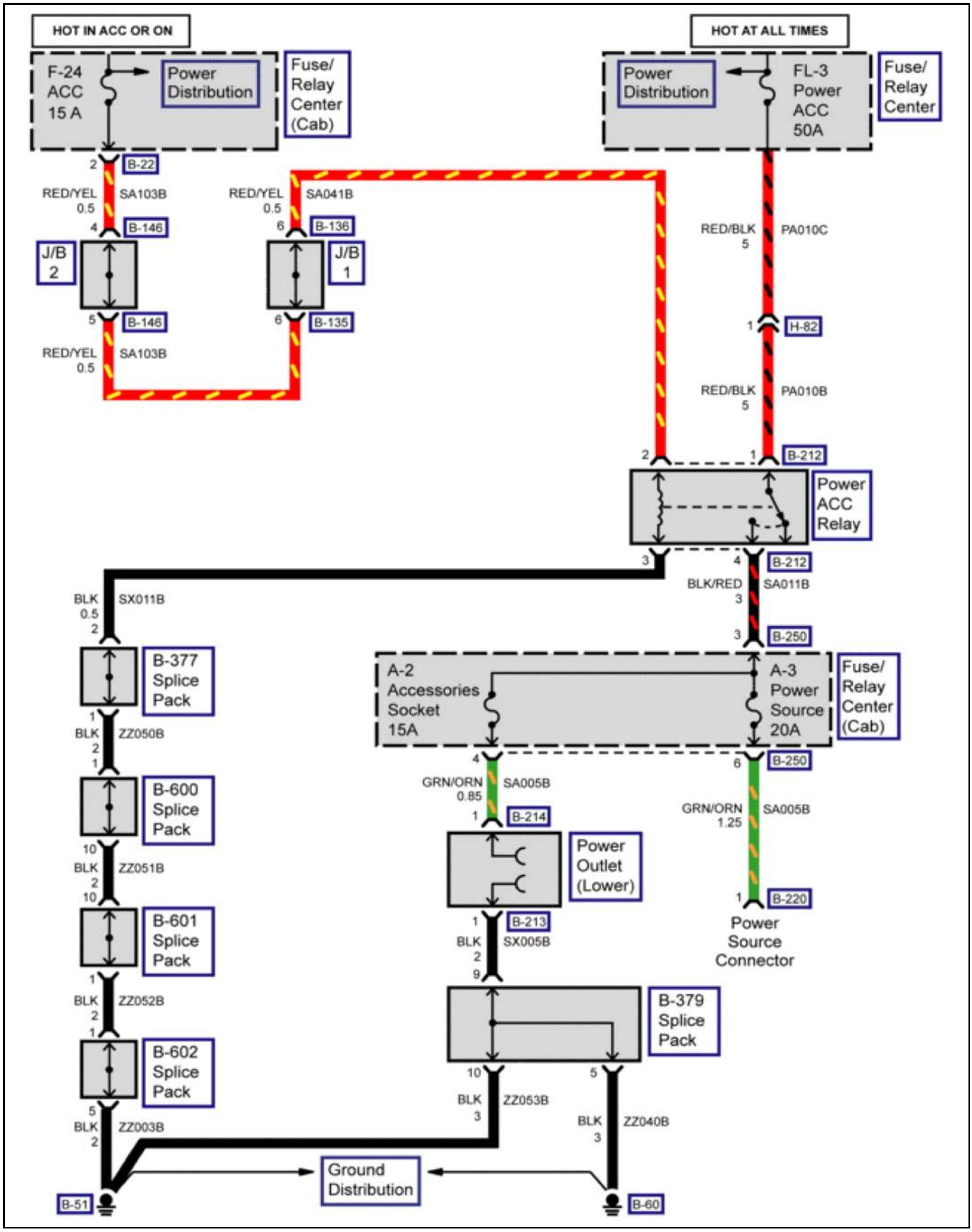

4892317

Power Take-Off System Schematics (Power Take-Off Switch)

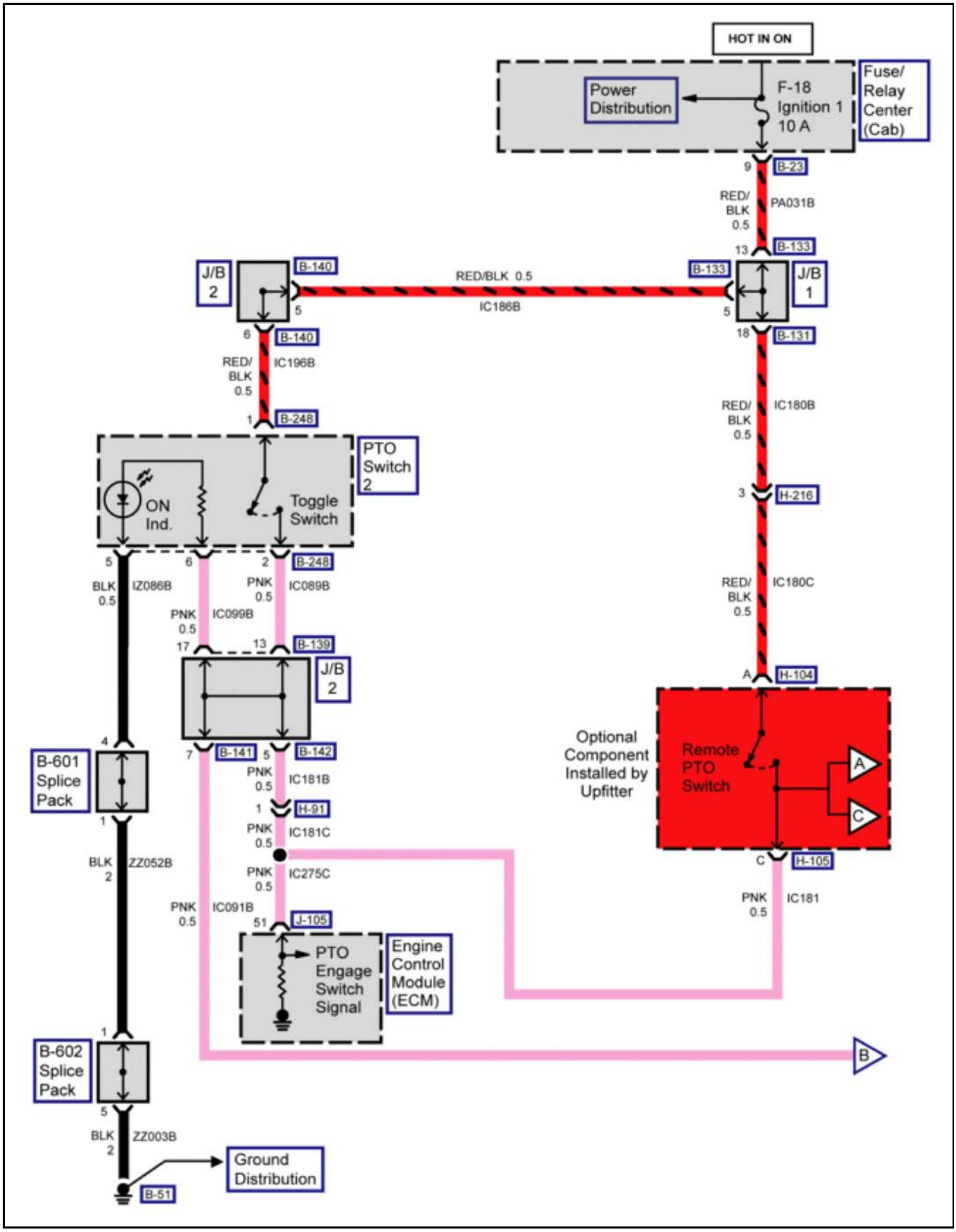

4892341

Power Take-Off System Schematics (PTO Set/Resumes Switches (Up/Down))

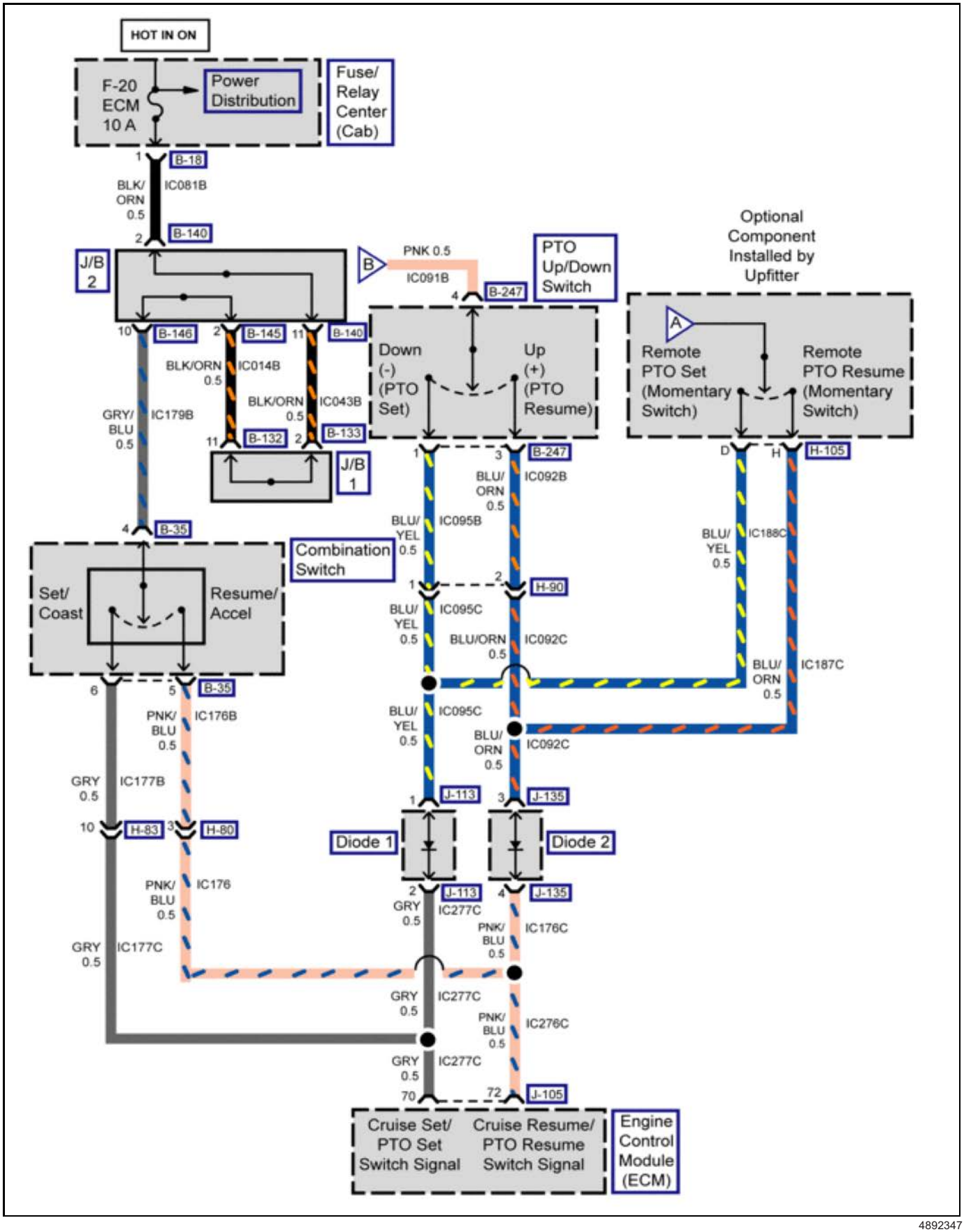

4892347

Power Take-Off System Schematics (Resume, PTO Disable and Set Switch)

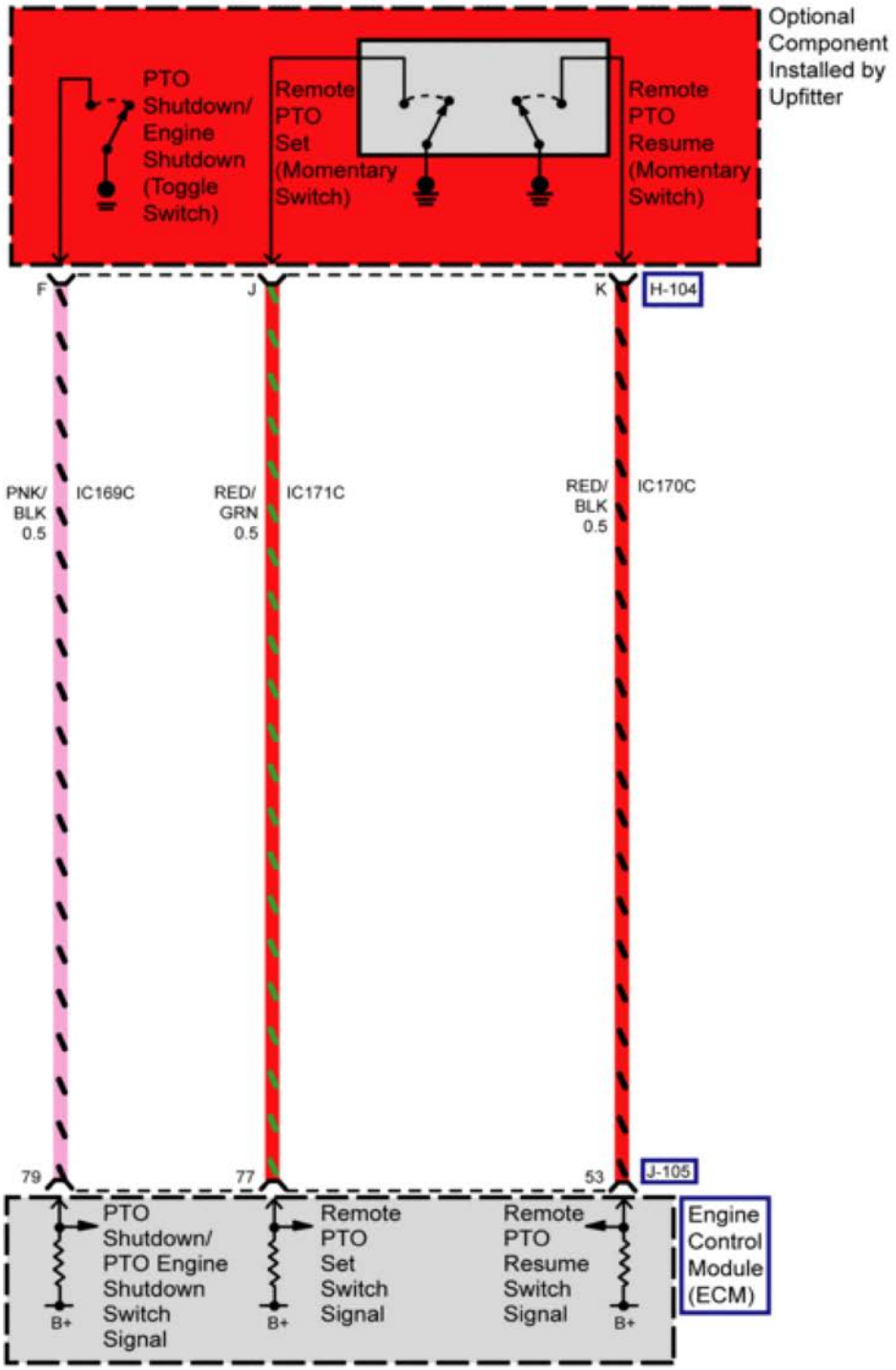

4892360

Power Take-Off System Schematics (Power Take-Off Enable Relay)

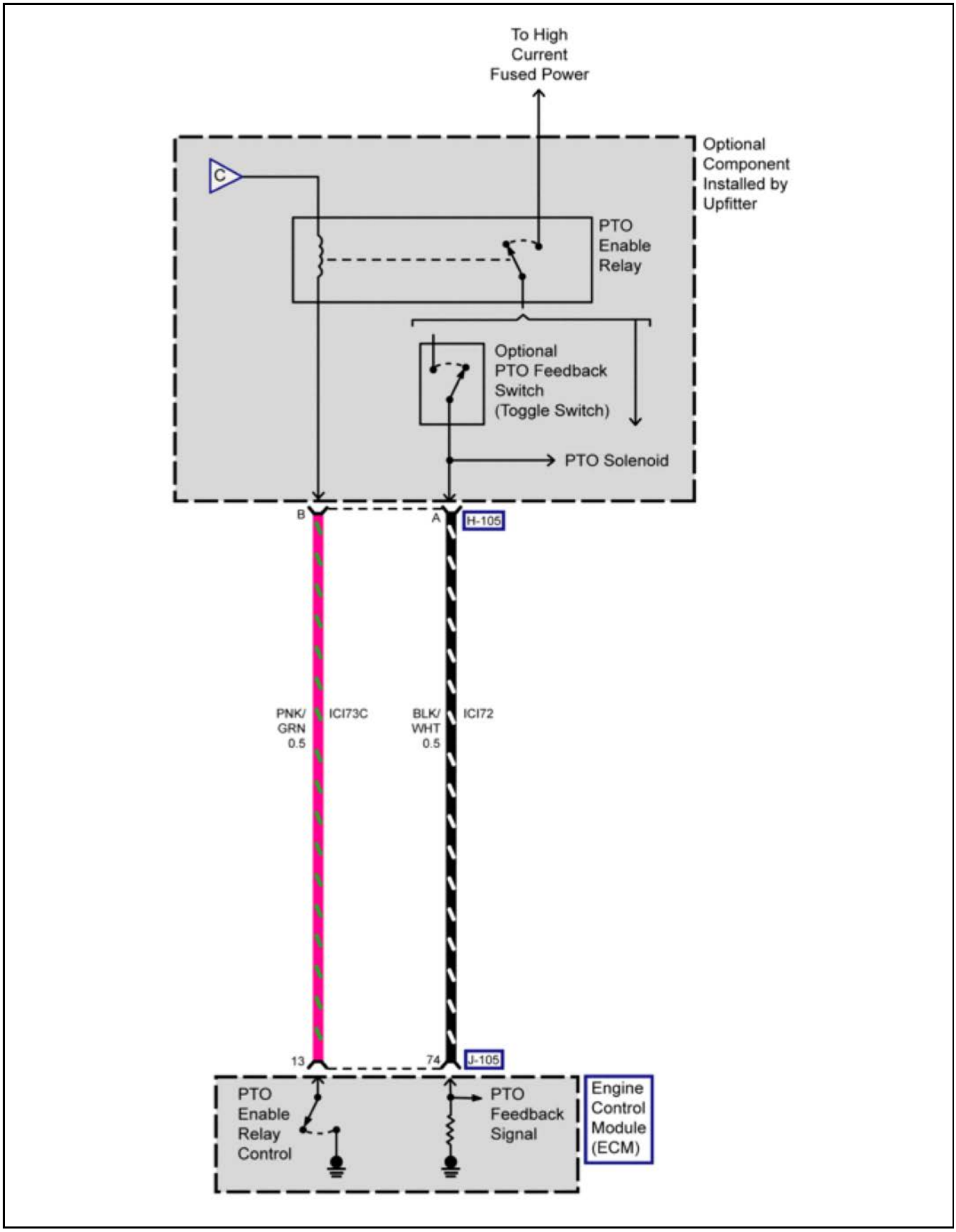

4892369

Power Take-Off System Schematics (Power Take-Off Throttle Sensor)

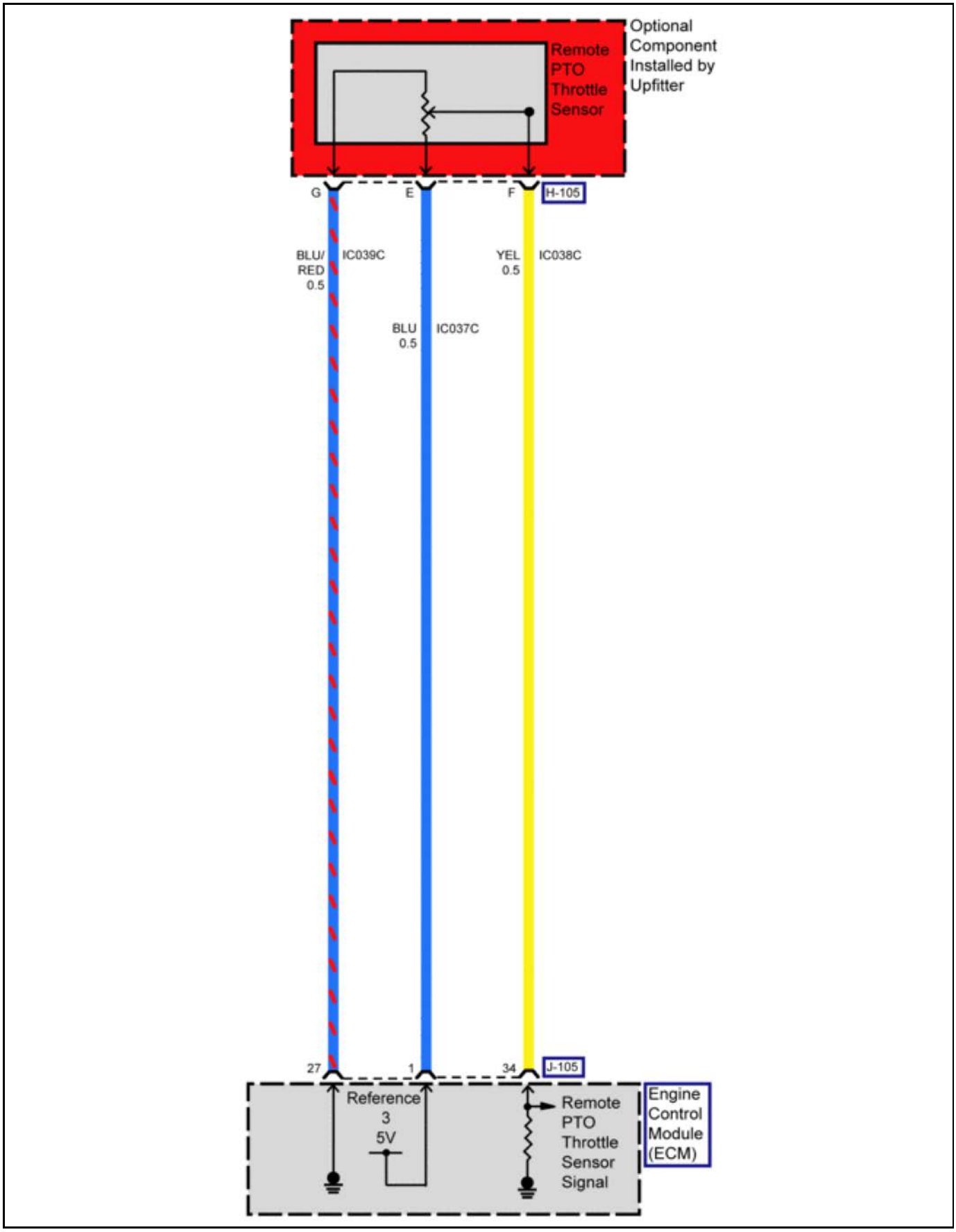

4892376

Power Take-Off System Schematics (Brake/Clutch Override, Cab Control Disable, Set Speed A and B Switches)

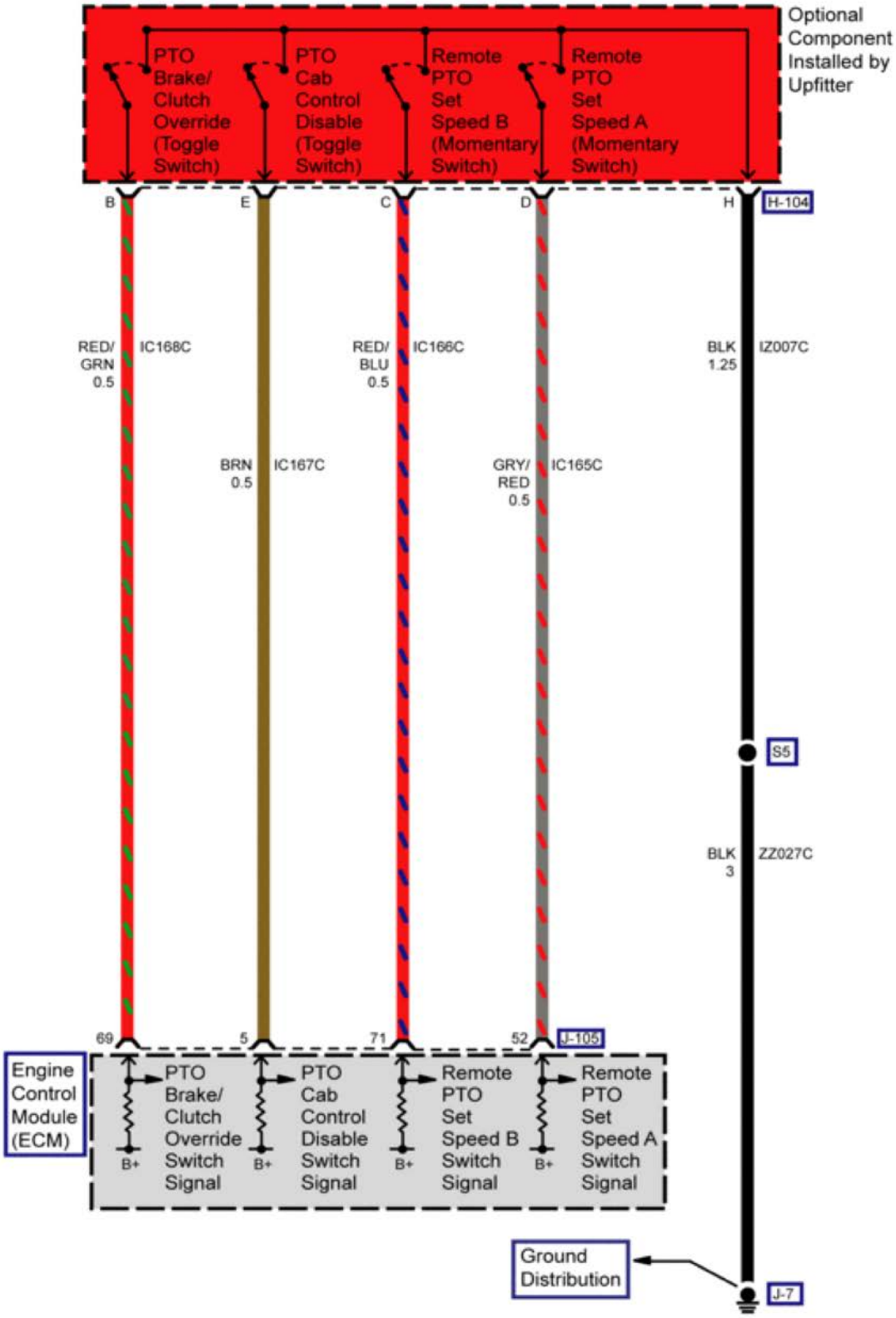

4892382

Engine Heating/Cooling Schematics (Engine Coolant Level Control Module)

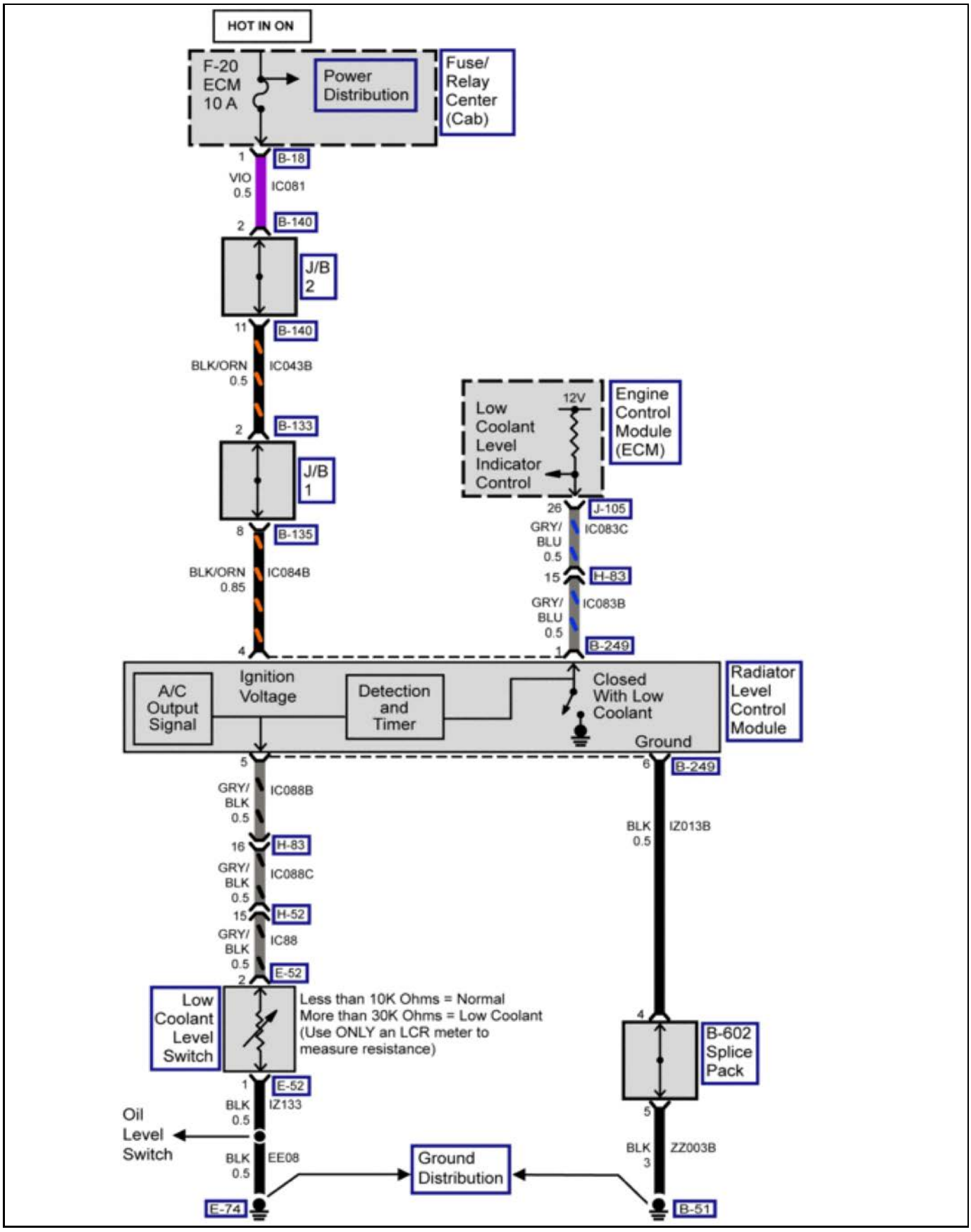

4892401

Exhaust System Schematics (Power, Ground, and Communication)

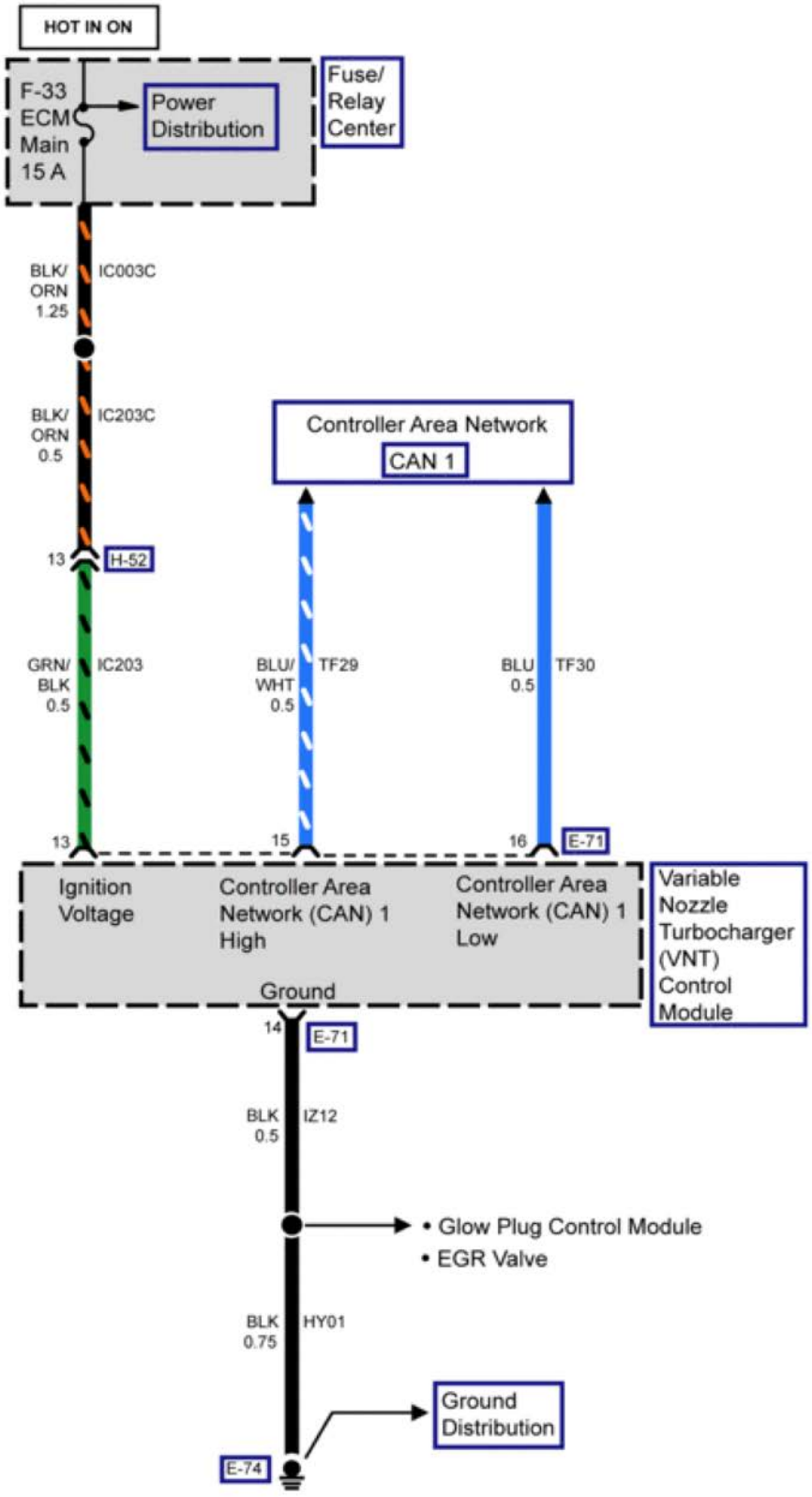

4892776

Exhaust System Schematics (Sensors)

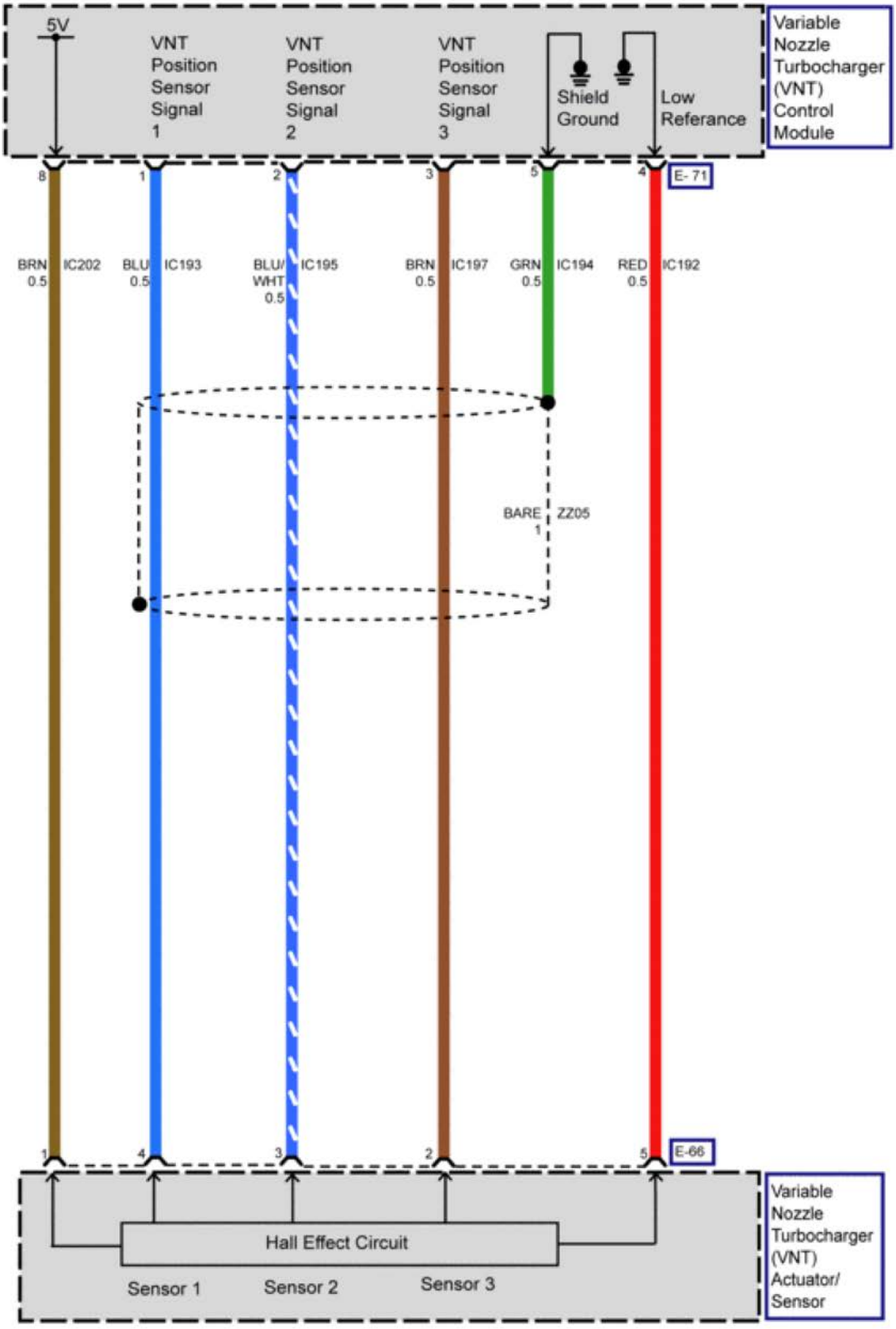

4892781

Exhaust System Schematics (VNT Motor)

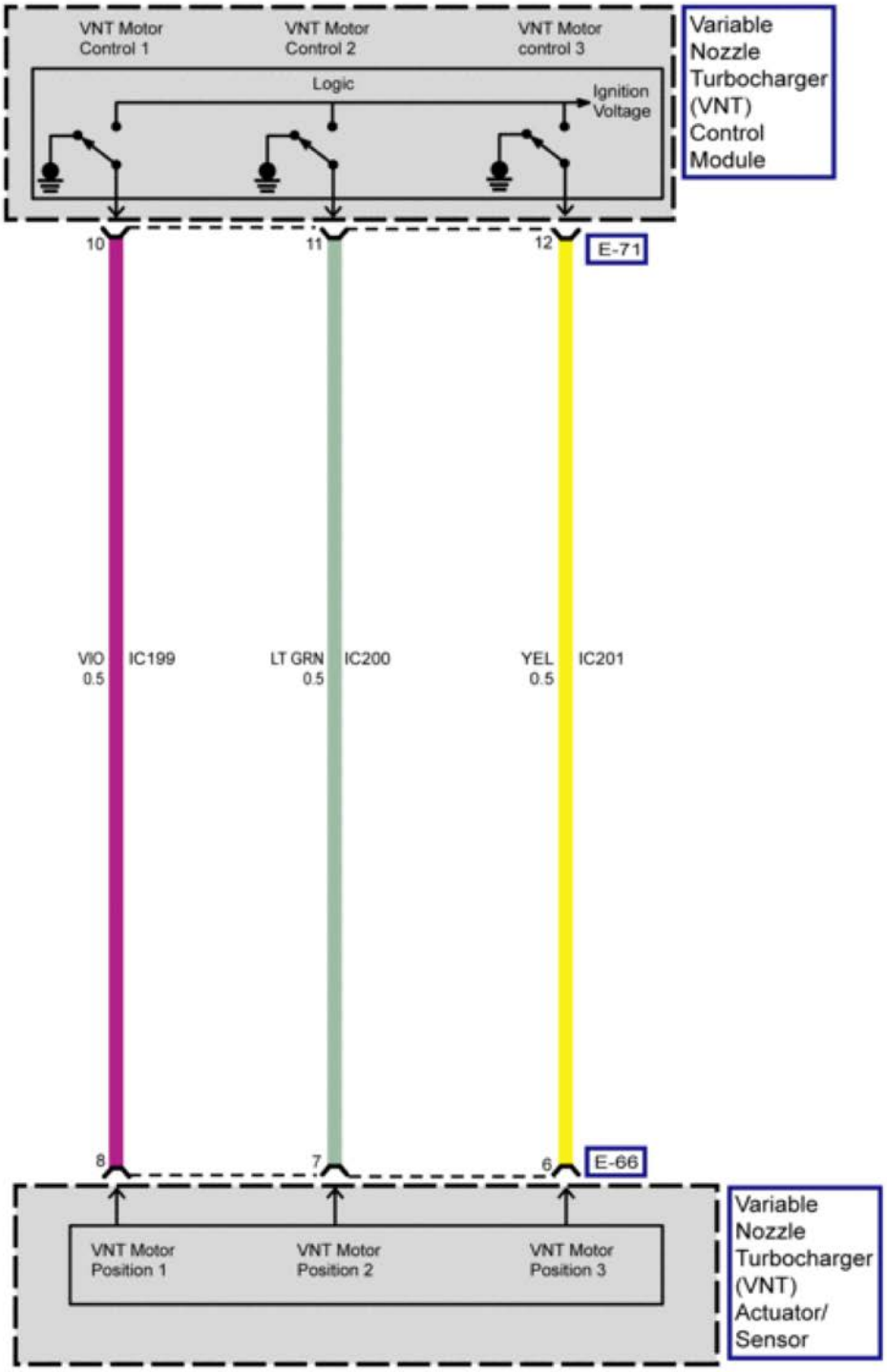

4892802

Exhaust System Schematics (Exhaust Brake Switch)

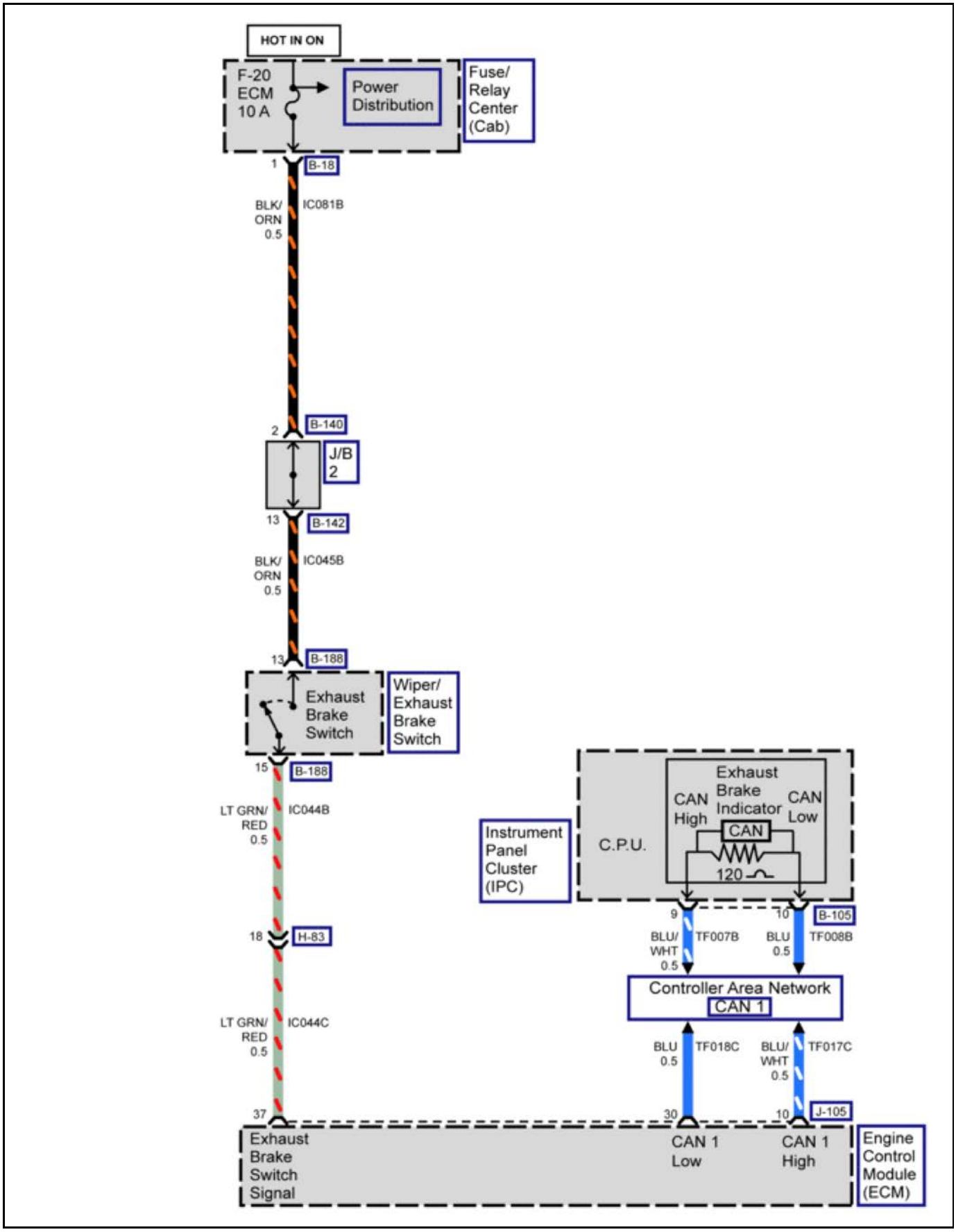

4892854

Exhaust System Schematics (Exhaust Brake Control)

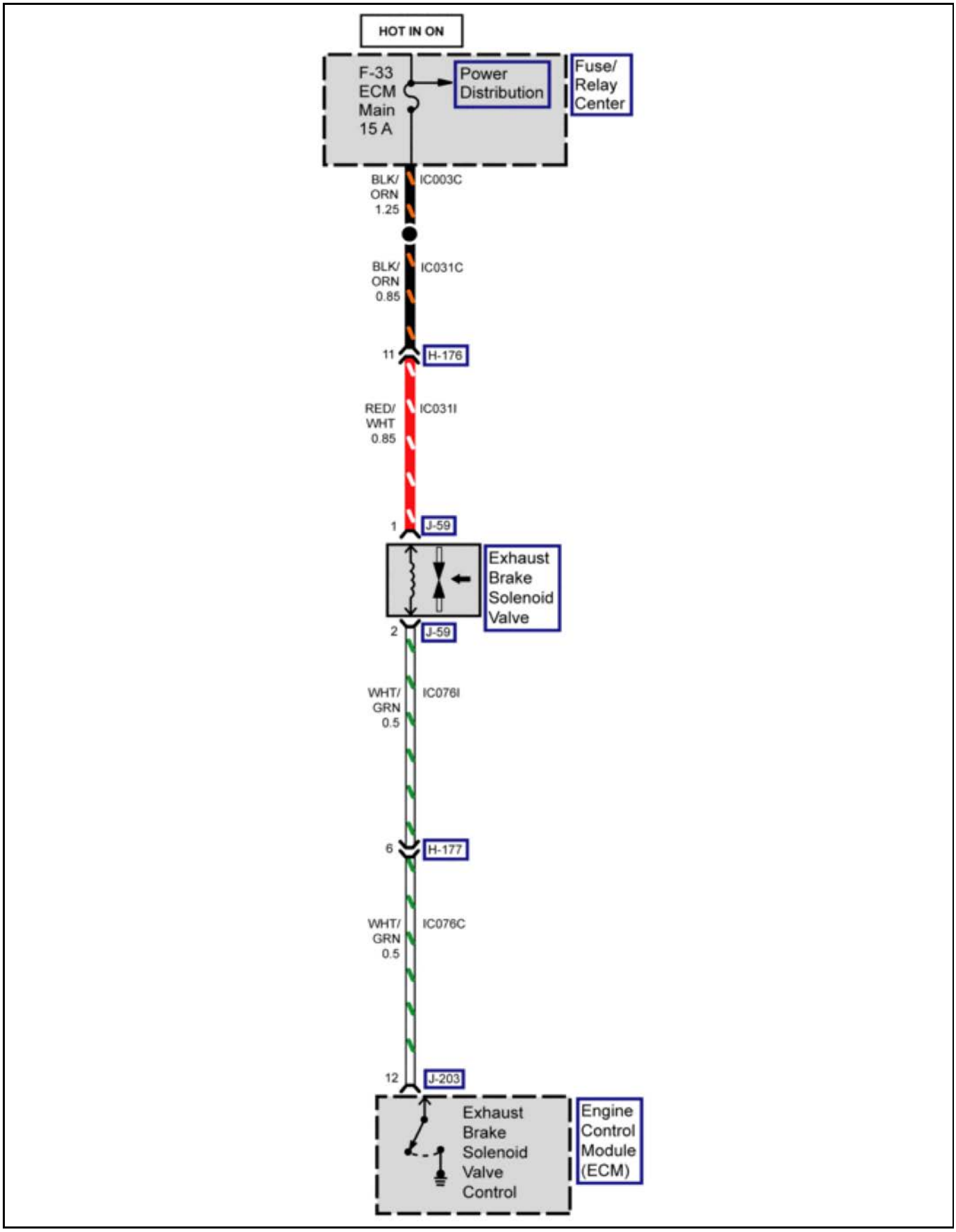

4892886

Component Locator

Ground Views

B-51 Ground Connector End View

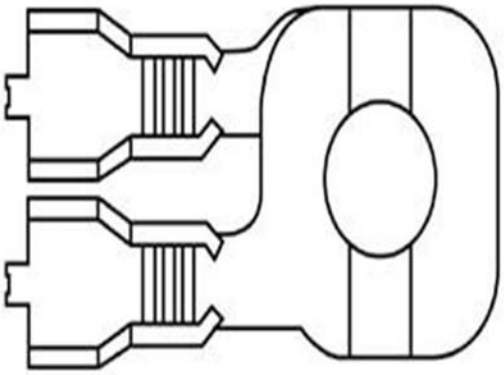

4892337

Connector Part Information		• 7009-1864-02 • 2-Way Eyelet	
Pin	**Wire Color**	**Circuit Number**	**Function**
1	BLK	ZZ003B	Ground for B-602 Splice Pack
1	BLK	ZZ053B	Ground for B-379 Splice Pack

B-52 Ground Connector End View

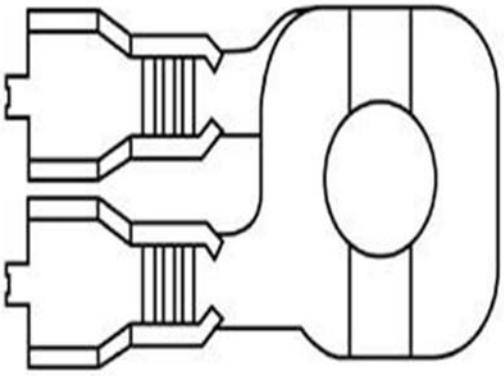

4892337

Connector Part Information		• 7009-9229-02 • 1-Way Eyelet	
Pin	**Wire Color**	**Circuit Number**	**Function**
1	BLK	ZZ021B	Ground for B-49 Junction Block

B-53 Ground Connector End View

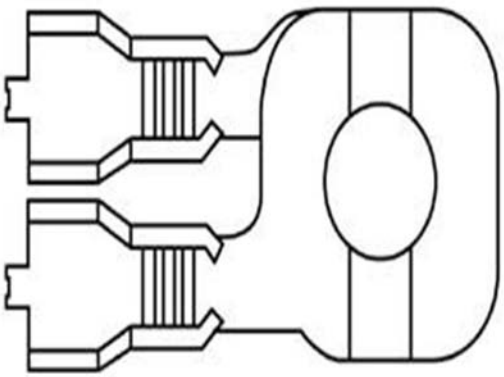

4892337

Connector Part Information		• 7009-9229-02 • 1-Way Eyelet	
Pin	**Wire Color**	**Circuit Number**	**Function**
—	BLK	ZZ020B	Ground to B-48 Junction Block
—	BLK	ZZ029B	J/B 2 (B-142 pin 16)

B-54 Ground Connector End View

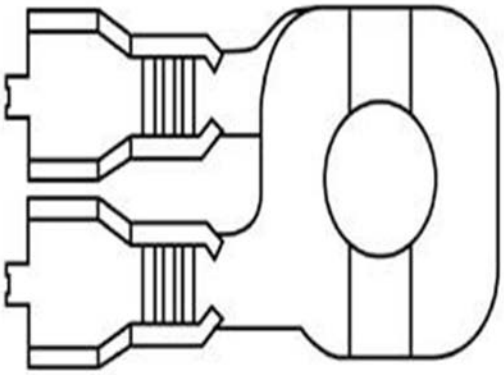

4892337

Connector Part Information		• 7009-9229-02 • 1-Way Eyelet	
Pin	**Wire Color**	**Circuit Number**	**Function**
—	BLK	ZZ008B	Ground to B-59

B-55 Ground Connector End View

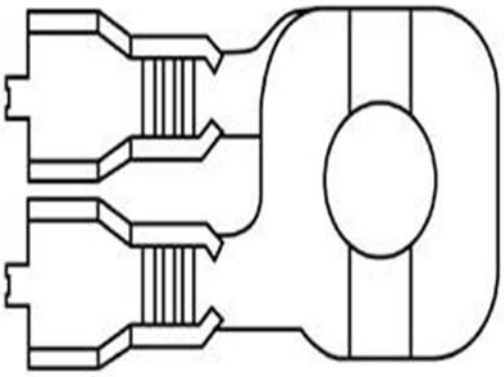

4892337

Connector Part Information		• 7009-1333 • 1-Way Eyelet	
Pin	**Wire Color**	**Circuit Number**	**Function**
—	BLK	ZZ043B	Ground to Splice 18

B-56 Ground Connector End View

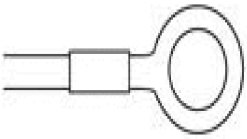

4891426

Connector Part Information		• 7009-1865-02 • 1-Way Eyelet	
Pin	**Wire Color**	**Circuit Number**	**Function**
—	BLK	ZZ012B	Ground to B-244

B-59 Ground Connector End View

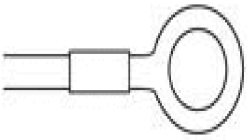

4891426

Connector Part Information		• 7009-1864-02 • 1-Way Eyelet	
Pin	**Wire Color**	**Circuit Number**	**Function**
1	BLK	ZZ008B	Ground to B-54

B-60 Ground Connector End View

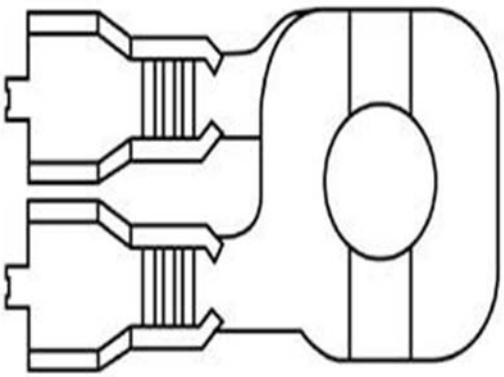

4892337

Connector Part Information		• 7009-1864-02 • 1-Way Eyelet	
Pin	**Wire Color**	**Circuit Number**	**Function**
—	BLK	ZZ040B	Ground for B-379 Splice PackGround for B-379 Splice Pack

B-221 Ground Connector End View

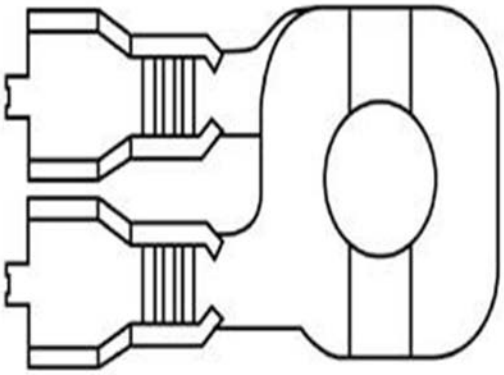

4892337

Connector Part Information		• 7009-1333 • 1-Way Eyelet	
Pin	**Wire Color**	**Circuit Number**	**Function**
1	BLK	ZZ042B	Ground to Splice 18

B-244 Ground Connector End View

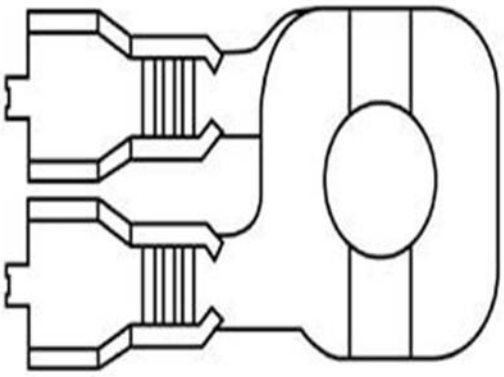

4892337

Connector Part Information		• 7009-9228-02 • 1-Way Eyelet	
Pin	**Wire Color**	**Circuit Number**	**Function**
—	BLK	ZZ012B	Ground to B-56

E-74 Ground Connector End View

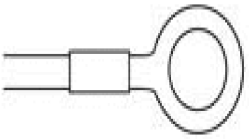

4891426

Connector Part Information		• LA 210 • 1-Way Eyelet	
Pin	**Wire Color**	**Circuit Number**	**Function**
—	BLK	HY01	Ground to Glow Plug Control Module, EGR Valve, VNT Control Module
—	BLK	EE08	Ground to Engine Oil Level Switch, Low Coolant Level Sensor

J-7 Ground Connector End View

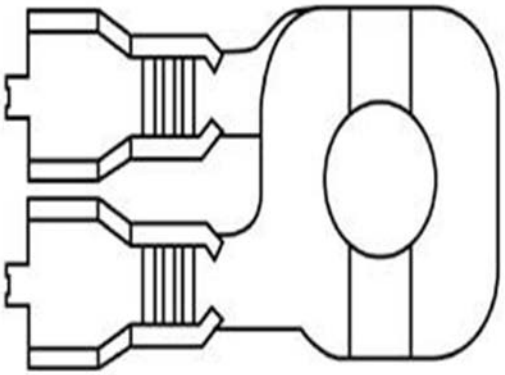

4892337

Connector Part Information		• LA-08-R1 • 1-Way Eyelet	
Pin	**Wire Color**	**Circuit Number**	**Function**
—	BLK	ZZ027C	Ground to Splice 5

J-8 Ground Connector End View

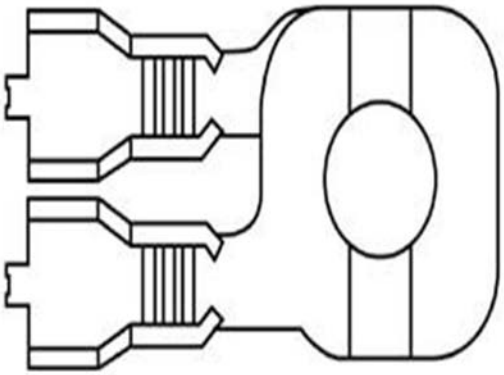

4892337

Connector Part Information		• LA-08-L1 • 1-Way Eyelet	
Pin	**Wire Color**	**Circuit Number**	**Function**
—	BLK	ZZ001C	Ground to Splice 2

J-9 Ground Connector End View

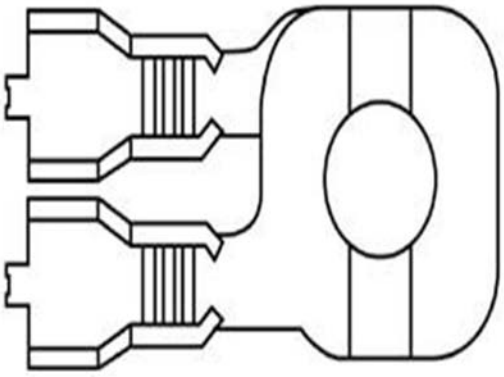

4892337

Connector Part Information		• LA-08-R1 • 1-Way Eyelet	
Pin	**Wire Color**	**Circuit Number**	**Function**
—	BLK	ZZ028C	Ground to Splice 5

J-10 Ground Connector End View

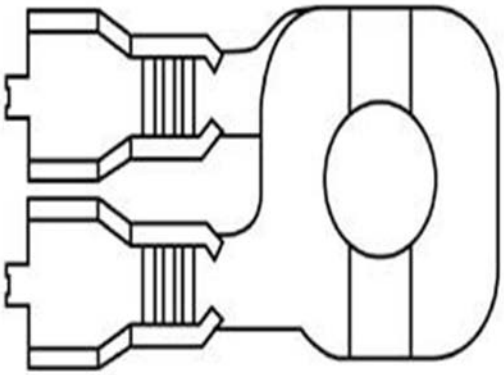

4892337

Connector Part Information		• LA-08-L1 • 1-Way Eyelet	
Pin	**Wire Color**	**Circuit Number**	**Function**
—	BLK	ZZ024C	Ground to Splice 7

J-11 Ground Connector End View

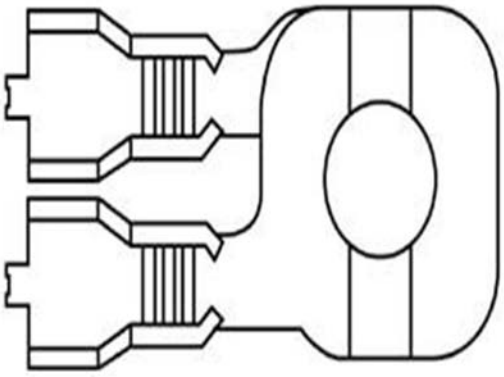

4892337

Connector Part Information		• LA-08-L1 • 1-Way Eyelet	
Pin	**Wire Color**	**Circuit Number**	**Function**
—	BLK	ZZ026C	Ground to Splice 2

J-12 Ground Connector End View

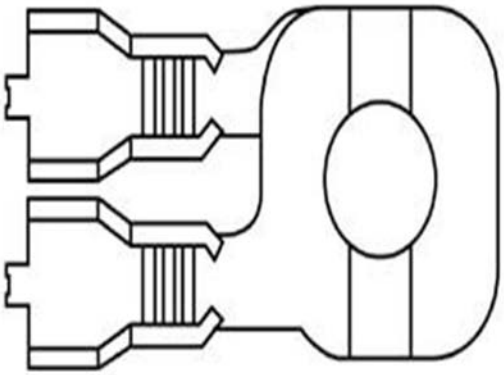

4892337

Connector Part Information		• LA-08-R1 • 1-Way Eyelet	
Pin	**Wire Color**	**Circuit Number**	**Function**
—	BLK	ZZ023C	Ground to Splice 7

J-141 Ground Connector End View

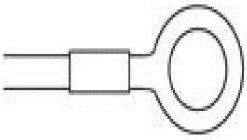

4891426

Connector Part Information		• LA-08 • 1-Way Eyelet	
Pin	**Wire Color**	**Circuit Number**	**Function**
—	BLK	FT006C	Ground to Splice 1

J-142 Ground Connector End View

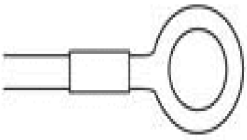

4891426

Connector Part Information		• LA-08 • 1-Way Eyelet	
Pin	**Wire Color**	**Circuit Number**	**Function**
—	BLK	FT007C	Ground to NOx Sensors 1 and 2
—	BLK	FT010C	Ground to DEF Tank Heater Coolant Control Valve

J-298 Ground Connector End View

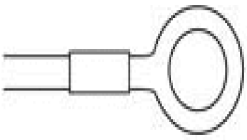

4891426

Connector Part Information		• 7009-1334 • 1-Way Eyelet	
Pin	**Wire Color**	**Circuit Number**	**Function**
—	BLK/BLU	IX013D	Ground for Rear Manufacture Connector

Component Connector End Views

B-5 Accelerator Pedal Position (APP) Sensor

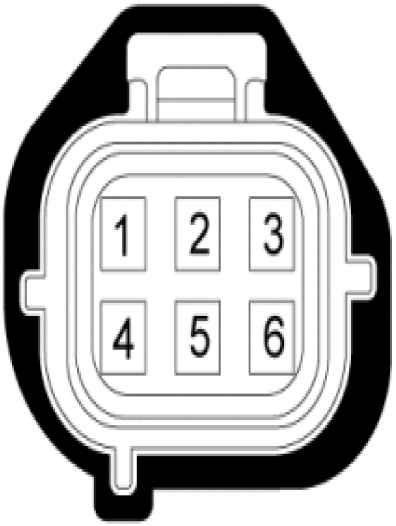

4894083

Connector Part Information		• 7383-7062-40 • 6-Way F (GRY)	
Pin	**Wire Color**	**Circuit Number**	**Function**
1	GRY	IC004B	Sensor 2, 5 Volt Reference 2
2	YEL	IC005B	Sensor 2, Signal
3	BLU	IC106B	Sensor 2, Low Reference
4	WHT	IC033B	Sensor 1, 5 Volt Reference 1
5	RED	IC023B	Sensor 1, Signal
6	BLK	IC032B	Sensor 1, Low Reference

Above the Accelerator Pedal

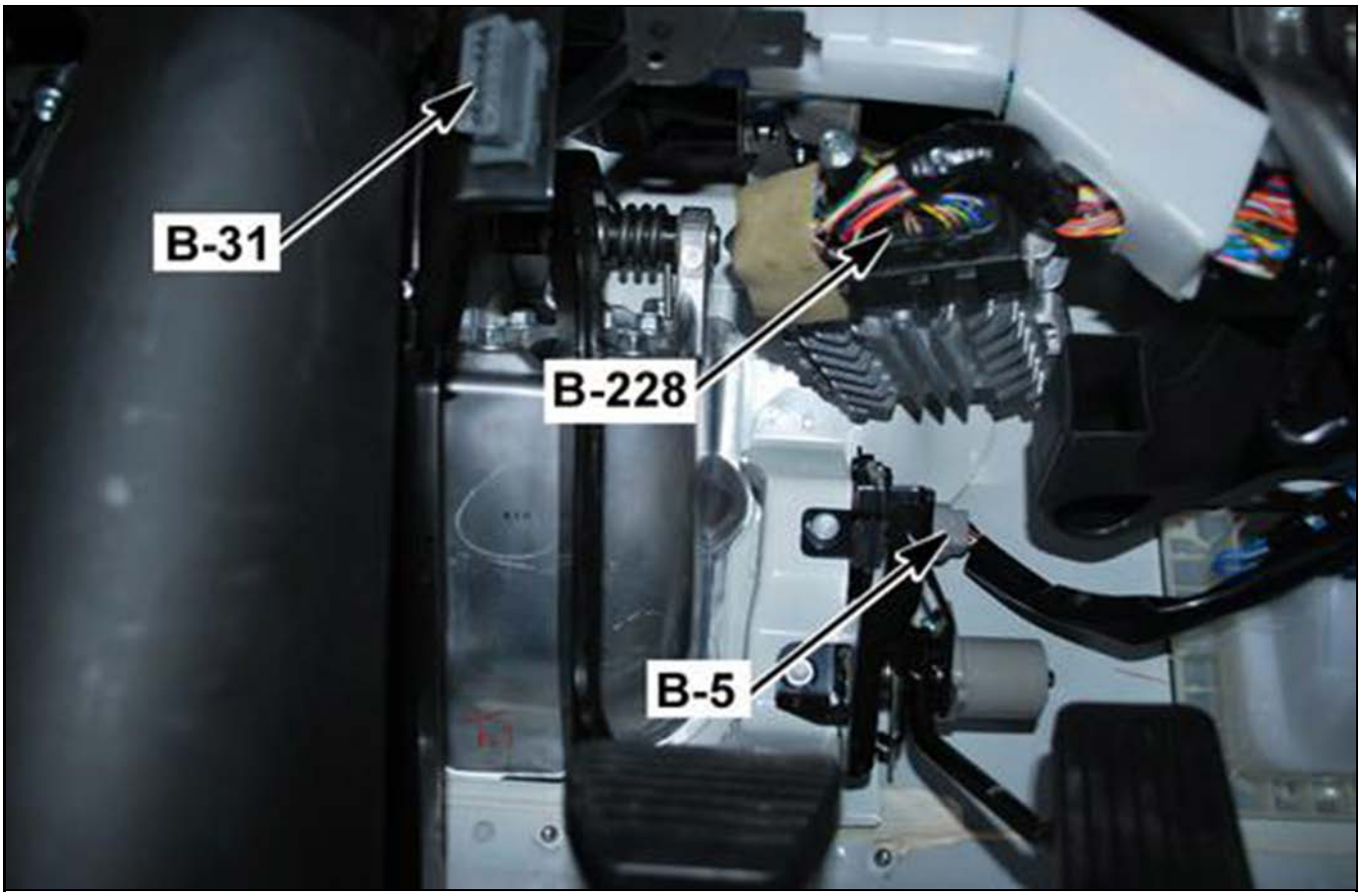

4894105

B-12 Blower Motor Connector End View

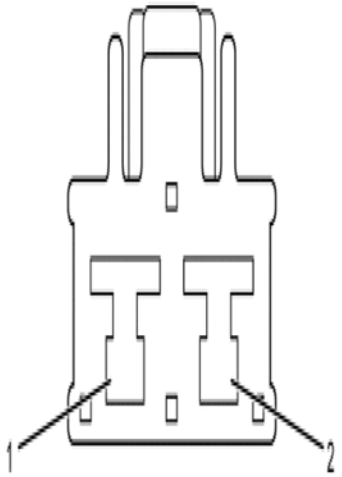

4894123

Connector Part Information		• 6098-1104 • 2-Way F (WHT)	
Pin	**Wire Color**	**Circuit Number**	**Function**
1	BLK/BLU	HA016B	Blower Motor Control
2	BRN	HA005B	Blower Motor Voltage from Blower Relay (B- 215)

Behind the Lower Right Side of the I/P

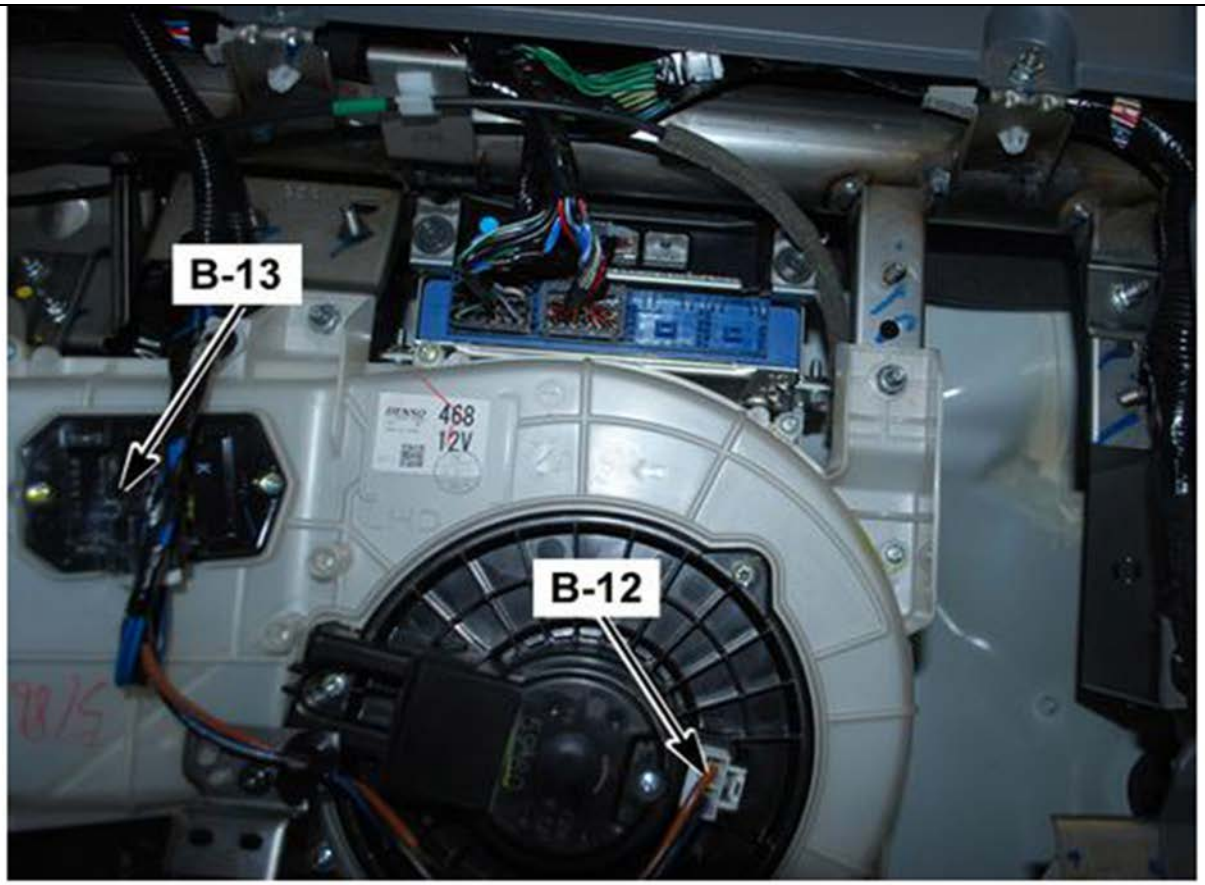

4894128

B-13 Blower Motor Resistor Connector End View

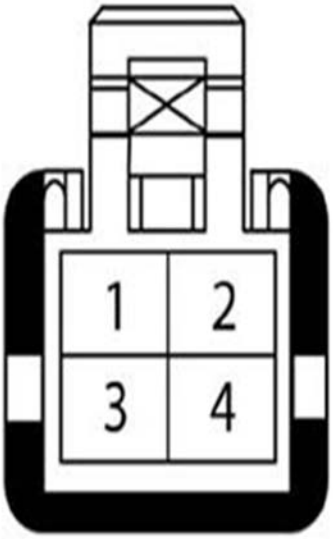

4894133

Connector Part Information		• 6089-0514 • 4-Way F (WHT)	
Pin	**Wire Color**	**Circuit Number**	**Function**
1	BLK/BLU	HA004B	Blower Motor High Control
2	BLU	HA003B	Blower Motor M1 Control
3	BLU/BLK	HA002B	Blower Motor M2 Control
4	BLK	HX004B	Ground to B-48 Junction Block (B-53 Ground)

Behind the Lower Right Side of the I/P

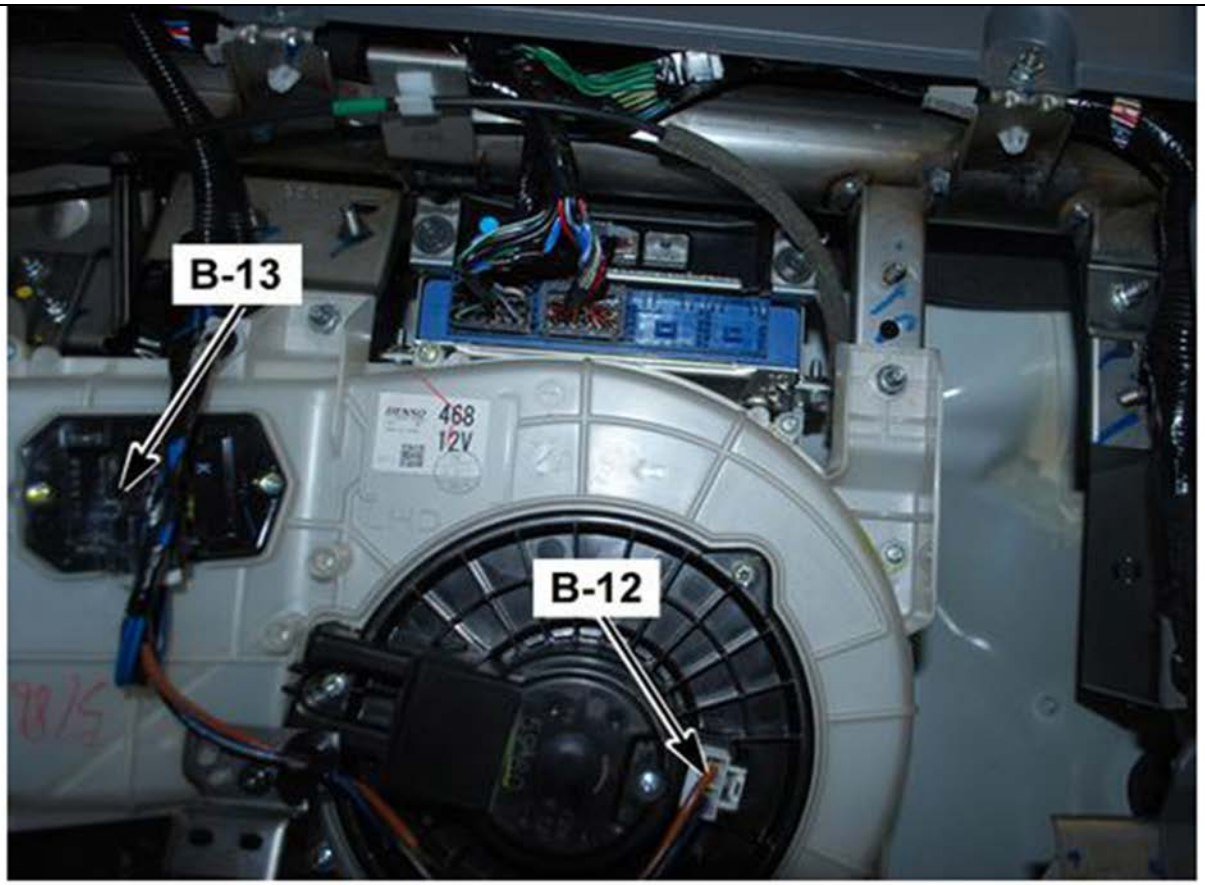

4894128

B-15 Fuse/Relay Center (Cab) Connector End View

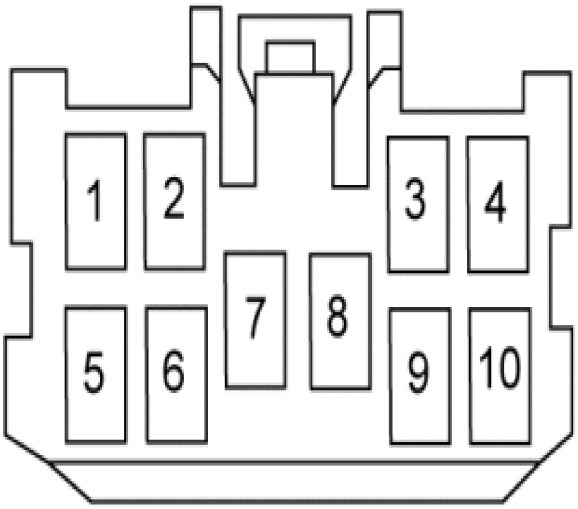

4894168

Connector Part Information		• 7383-1405-90 • 10-Way F (BLU)	
Pin	**Wire Color**	**Circuit Number**	**Function**
1	—	—	Not Used
2	BLK/RED	HA028B	Fuse F-30 Voltage (Fan Control Switch ON) to J/B 2 (B-139 pin 5)
3	—	—	Not Used
4	RED	HF001B	Battery Voltage from Fuse F-3
5	BRN/YEL	UA016B	Ignition Voltage from Fuse F-6
6	—	—	Not Used
7	RED/GRN	AA041B	X-2 DRL Relay Voltage (Switched Output Voltage) to DRL Module
8–10	—	—	Not Used

Behind the Center of the I/P

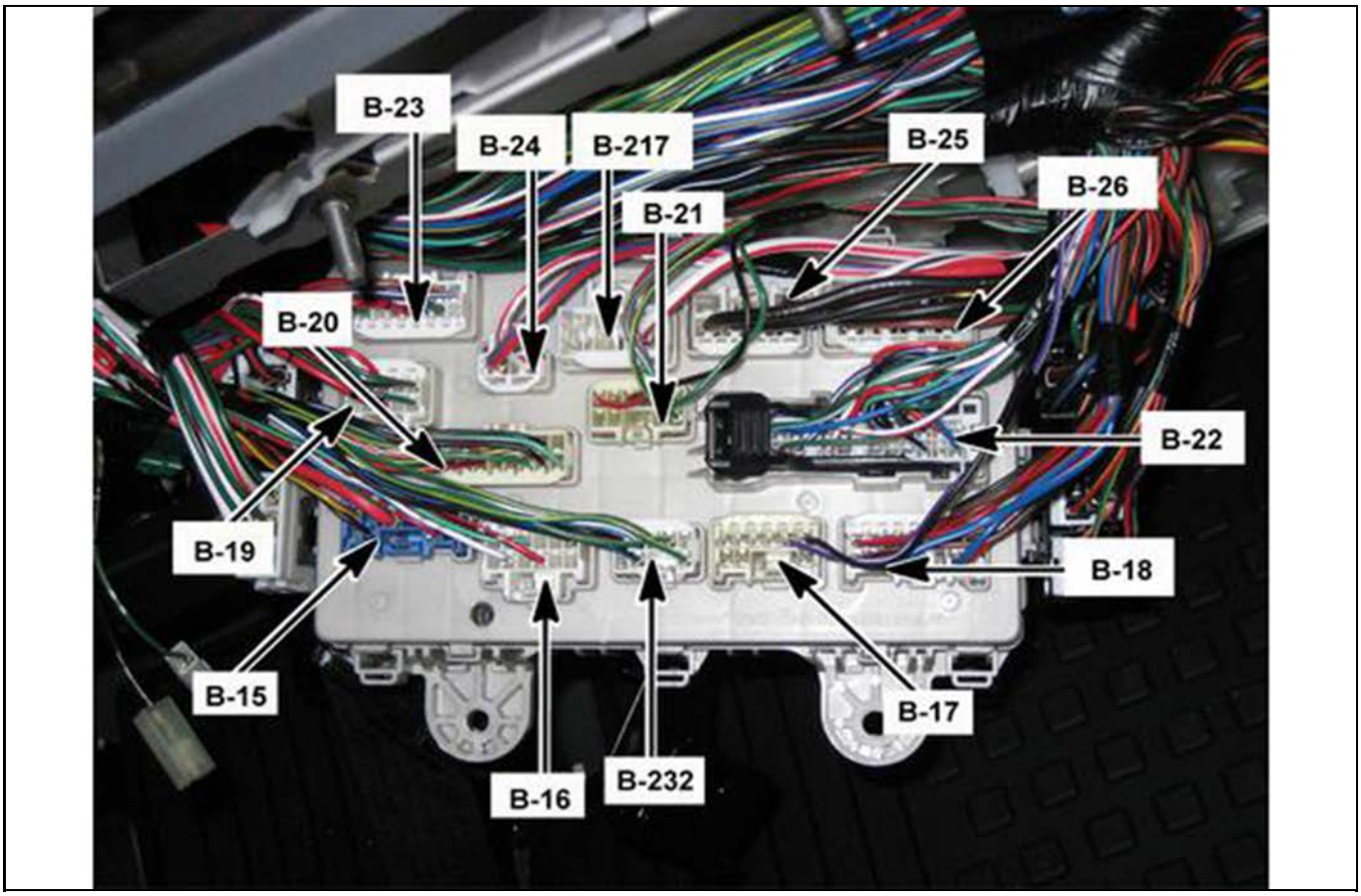

4894183

B-16 Fuse/Relay Center (Cab) Connector End View

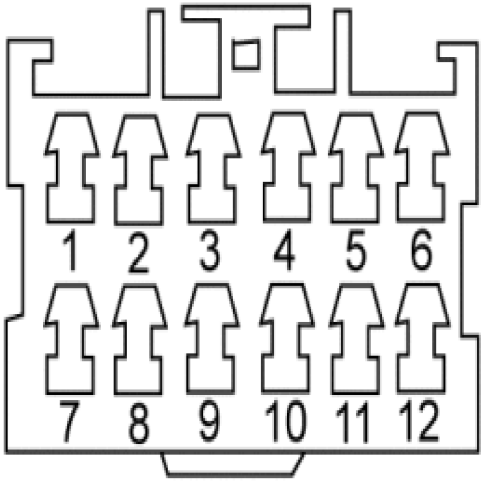

4894185

Connector Part Information		• 7383-2416 • 12-Way F (WHT)	
Pin	**Wire Color**	**Circuit Number**	**Function**
1	—	—	Not Used
2	WHT/BLU	AA010B	Fuse F-9 Voltage (Headlamp Switch ON)
3–8	—	—	Not Used
9	LT GRN/RED	BA003B	Fuse F-28 Voltage (Headlamp Switch ON) from Fuse/ Relay Center (Cab) (B-18 pin 10)
10–12	—	—	Not Used

Behind the Center of the I/P

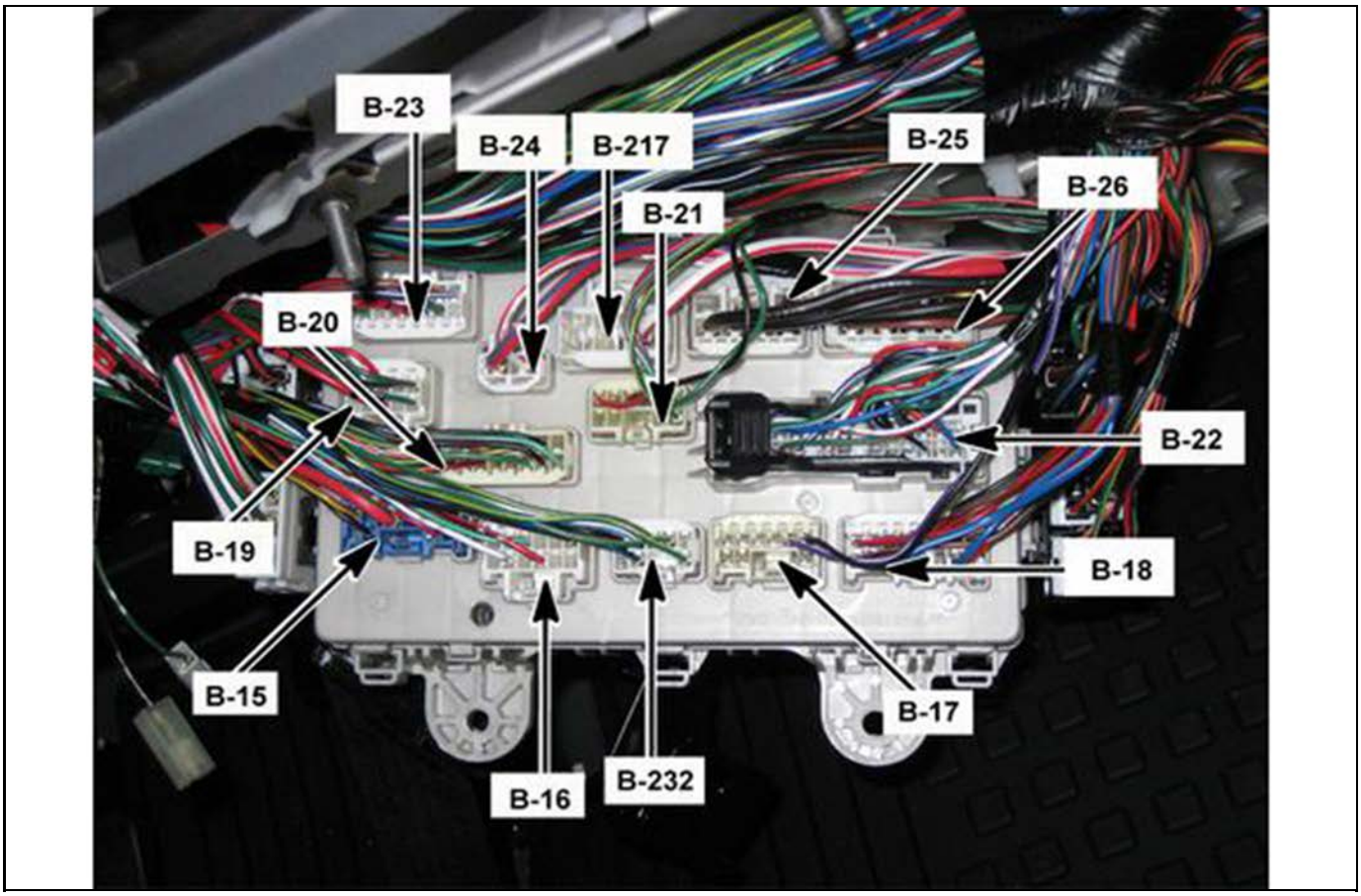

4894183

B-18 Fuse/Relay Center (Cab) Connector End View

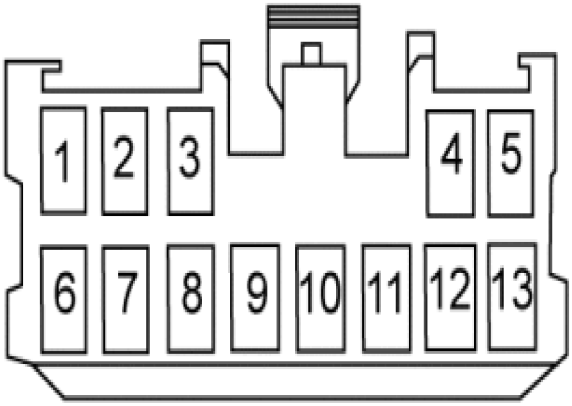

4894193

Connector Part Information		• 7383-2412 • 13-Way F (WHT)	
Pin	**Wire Color**	**Circuit Number**	**Function**
1	BLK/ORN	IC081B	Ignition Voltage from Fuse F-20
2	BLU/WHT	FA012B	Ignition Voltage from Fuse F-8
3	BRN/WHT	FA001B	Wiper Low Speed Control Voltage
4	BLU/ORN	FA015B	Wiper Main Relay (X-6) to Splice 20
5	RED	JA001B	Battery Voltage from Fuse F-26
6	RED/BLU	AA003B	Headlight Low Relay Coil Control to Combination Switch
7	RED/WHT	AA002B	Headlamp High Relay Coil Control to J/B 1 (B- 137 pin 3)
8	—	—	Not Used
9	RED/BLK	DA001B	Horn Supply Voltage from Horn Relay (Switched Output Voltage)
10	LT GRN/RED	BA003B	Fuse F-28 Voltage (Headlight Switch ON) to Fuse/Relay Center (Cab) B-16 pin 9
11	RED/BLK	JA104B	Fuse F-29 Voltage (Headlight Switch ON) to Cornering Light Relay (X-5)
12	BLK/GRN	FA007B	Wiper High Low Relay Control to Wiper Exhaust Brake Switch
13	BRN/BLK	FA002B	Wiper High Speed Control Voltage

Behind the Center of the I/P

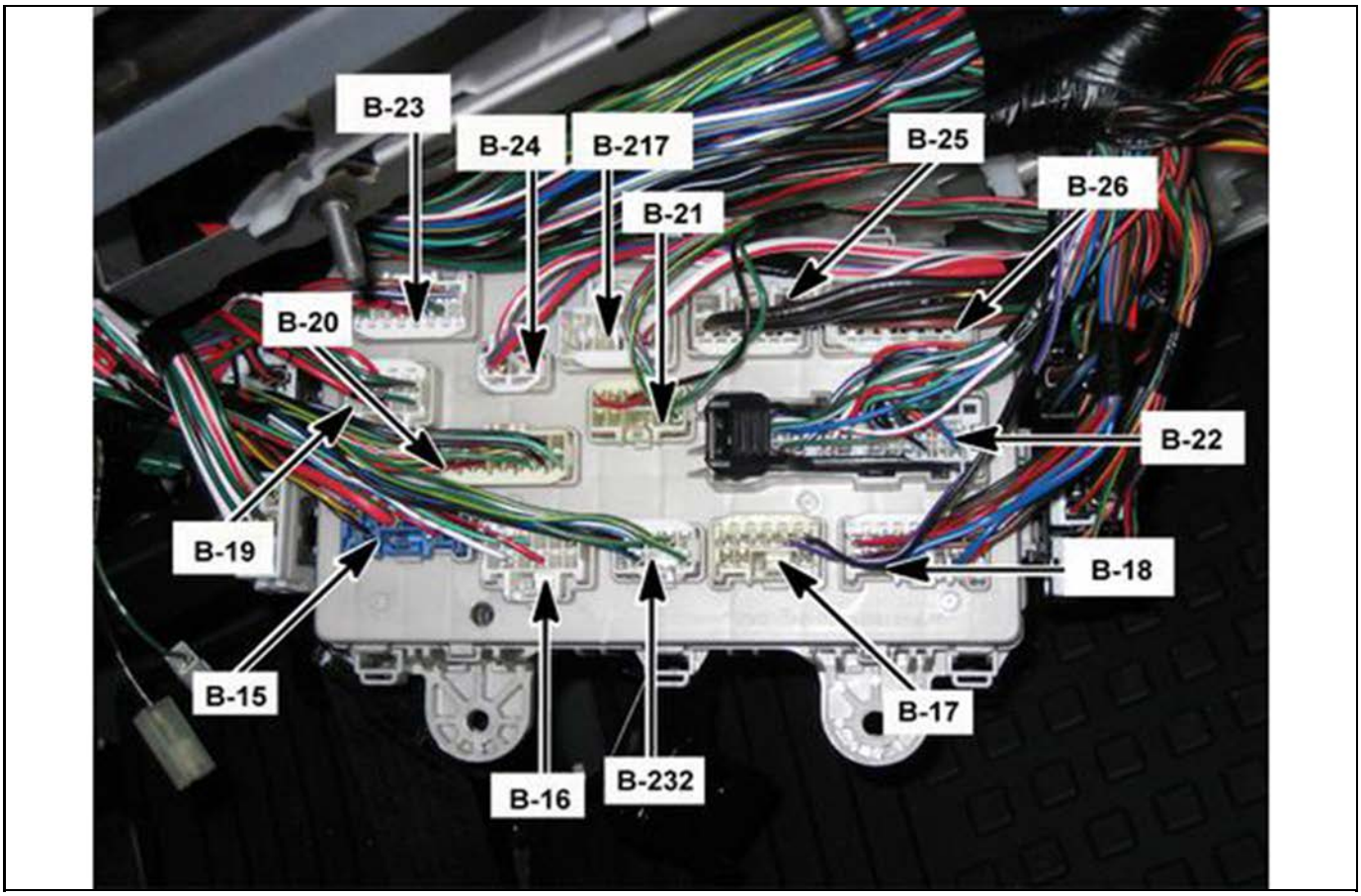

4894183

B-19 Fuse/Relay Center (Cab) Connector End View

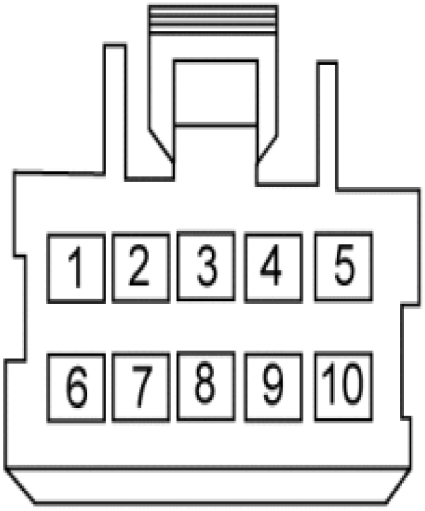

4894201

Connector Part Information		• 7383-6323 • 10-Way F (WHT)	
Pin	**Wire Color**	**Circuit Number**	**Function**
1	—	—	Not Used
2	GRN	VA118B	Battery Voltage from Fuse F-4 to J/B 2 (B-143 pin 1)
3	RED	AA009B	Fuse F-14 Voltage (Headlamp Switch ON)
4	GRN/WHT	IC013B	Stop Lamp Relay (Coil Control) to Stop Lamp Switch Diode
5	GRN/RED	BA015B	Fuse F-27 Voltage (Headlamp Switch ON) to Front Park Lamp (RH)
6	RED/BLK	AA043B	Battery Voltage from Fuse F-10 from Fuse/Relay Center (Cab) (B-20 pin 14)
7	WHT/RED	AA012B	Fuse F-11 Voltage (Headlamp Switch ON)
8	RED	AA001B	Fuse F-14 Voltage (Headlamp Switch ON)
9	—	—	Not Used
10	GRN/RED	BA016B	Fuse F-27 Voltage (Headlamp Switch ON) to Front Park Lamp (LH)

Behind the Center of the I/P

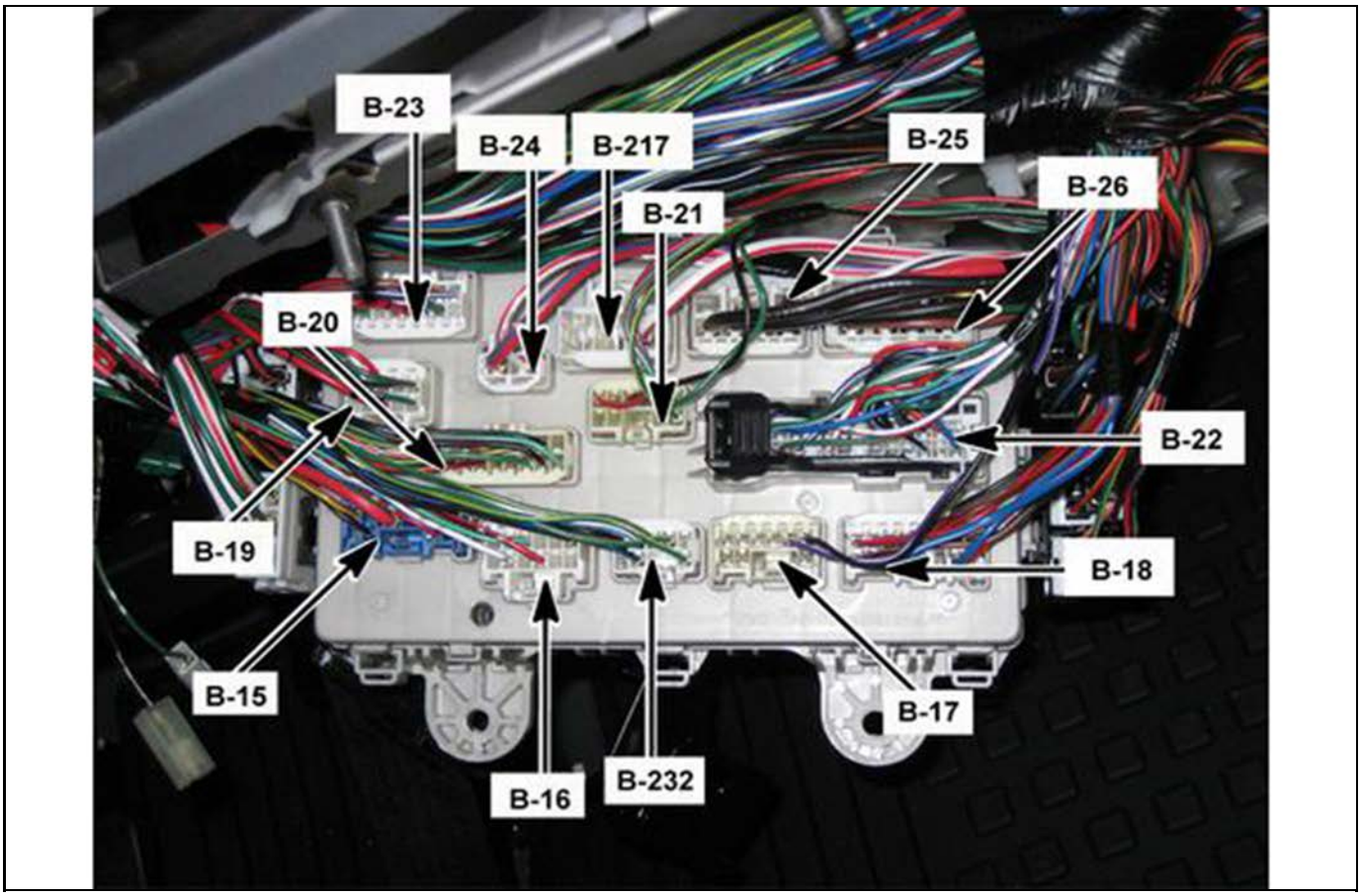

4894183

B-20 Fuse/Relay Center (Cab)

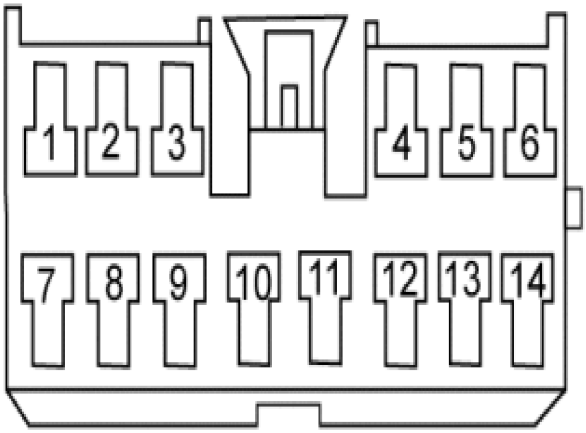

4894210

Connector Part Information		• 7383-1140 • 14-Way F (WHT)	
Pin	**Wire Color**	**Circuit Number**	**Function**
1	—	—	Not Used
2	BLK/RED	JA004B	Switched Output Voltage from Cornering Lamp Relay
3	—	—	Not Used
4	GRN/WHT	BB100B	Ignition Voltage from Fuse F-7 ABS
5	WHT/RED	WA004B	Voltage from Fuse F-16
6	—	—	Not Used
7	LT GRN/RED	IC074B	Fuse F-28 Voltage (Headlamp Switch ON) to PTO Switch
8	BLK	UX002B	Ground to B-601 Splice Pack (B-51 Ground)
9	GRN/YEL	PA151B	Ignition Voltage from Fuse F-21 to J/B 2 (B-140 pin 13)
10–12	—	—	Not Used
13	BLU/YEL	DA005B	Voltage from Fuse F-16
14	RED/BLK	AA043B	Battery Voltage from Fuse F-10

Behind the Center of the I/P

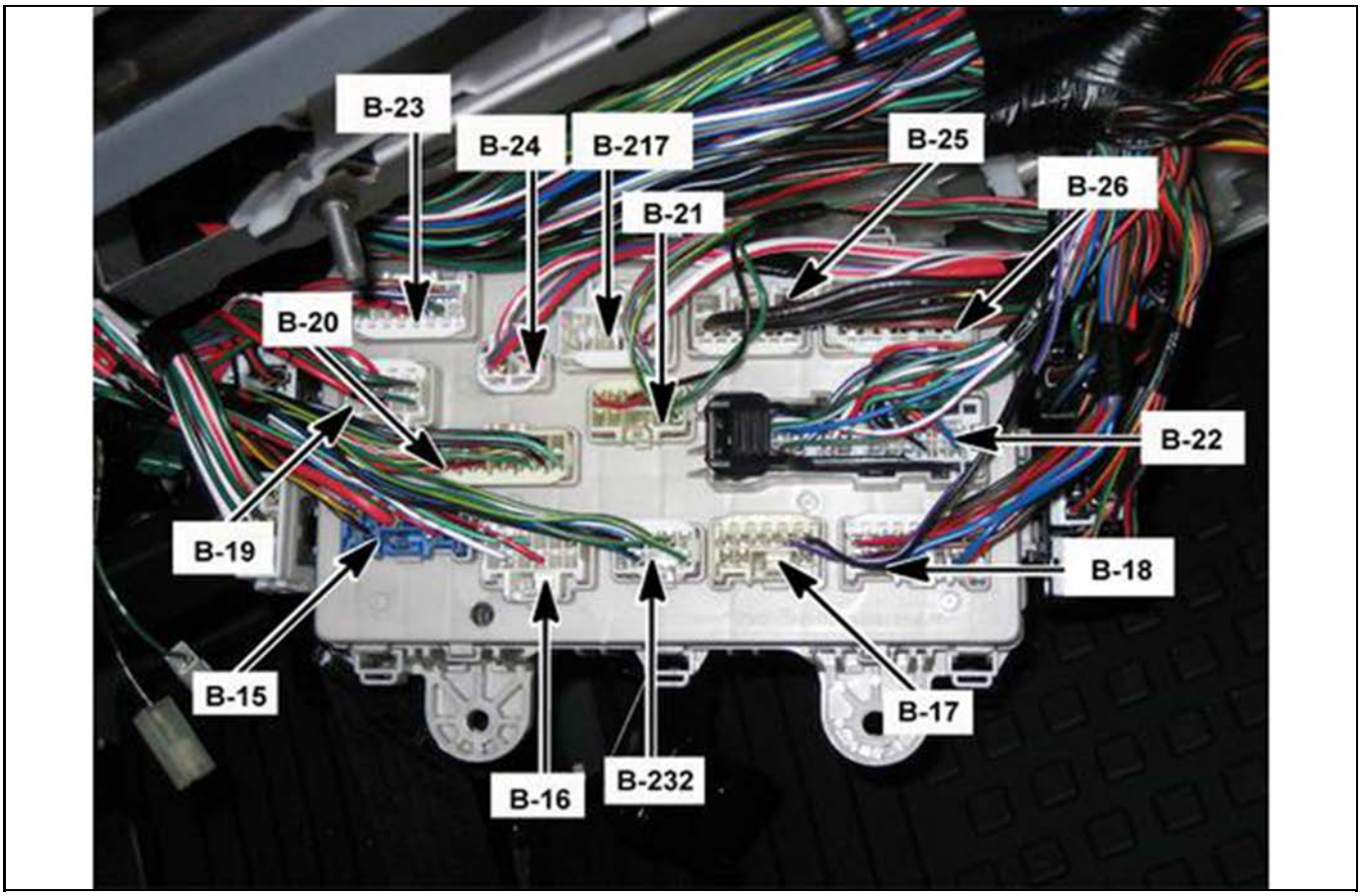

4894183

B-21 Fuse/Relay Center (Cab)

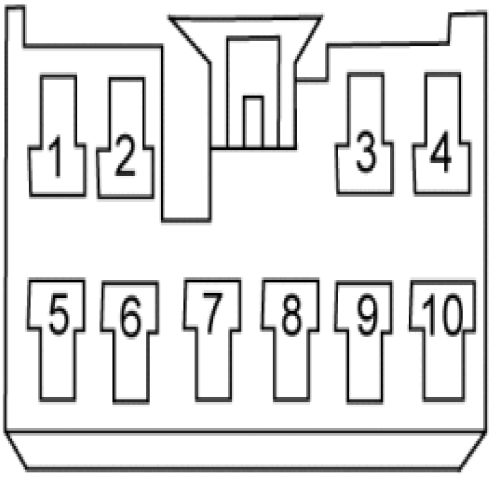

4894219

Connector Part Information		• 7383-1108 • 10-Way F (WHT)	
Pin	**Wire Color**	**Circuit Number**	**Function**
1–2	—	—	Not Used
3	GRN/WHT	CA003B	Stop Lamp Relay (Coil Control) to Stop Lamp Switch 1
4	GRN/YEL	JA016B	Ignition Voltage from Fuse F-21 to Flasher Module
5	RED/BLU	AA040B	X-2 DRL Relay Coil Control to DRL Module
6	—	—	Not Used
7	ORN/BLU	JA110B	Cornering Lamp Relay Coil Control to Diode 3
8	—	—	Not Used
9	LT GRN/RED	BA018B	Fuse F-28 Voltage (Headlamp Switch ON) to Instrument Panel Cluster (IPC)
10	—	—	Not Used

Behind the Center of the I/P

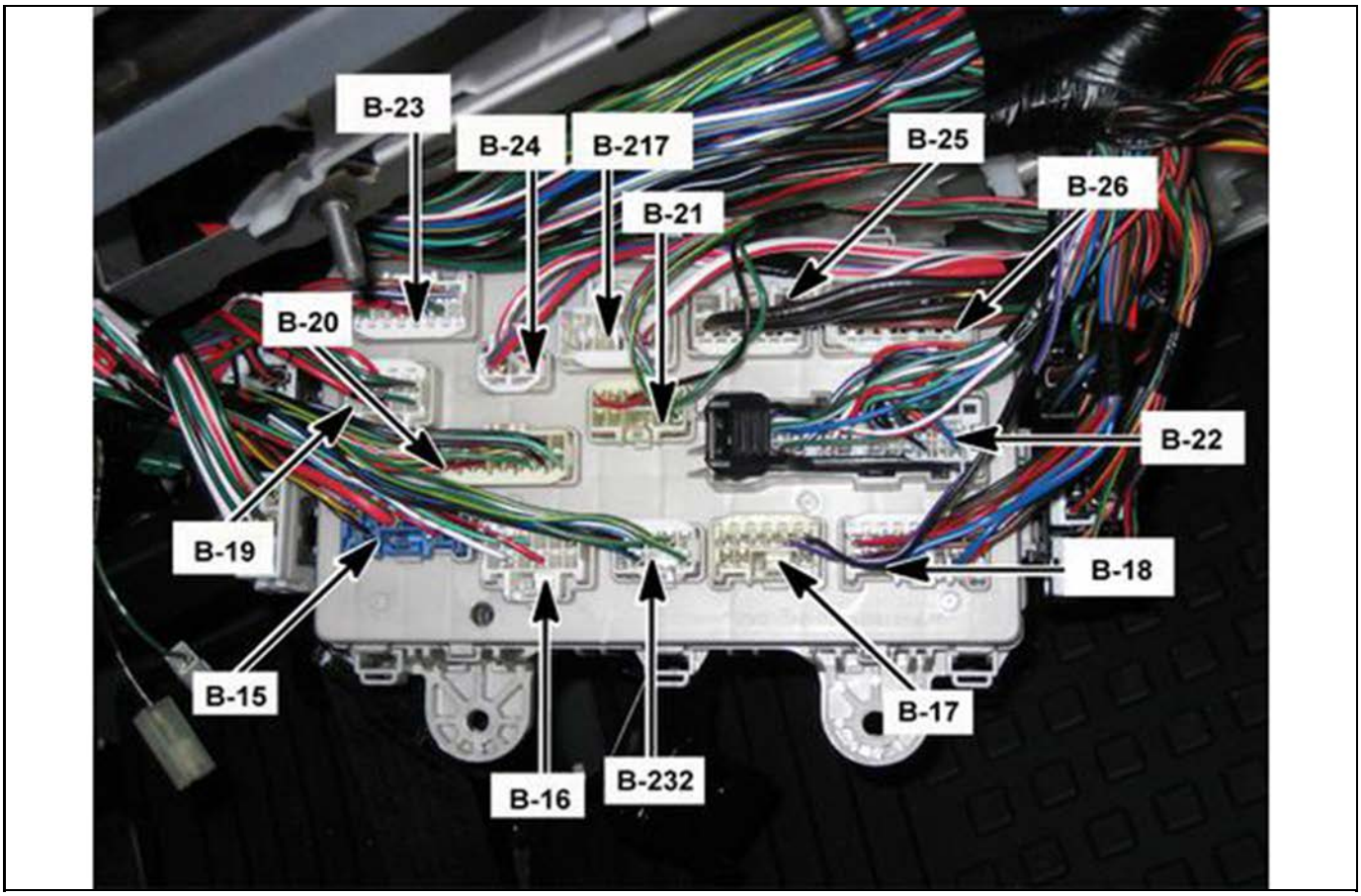

4894183

B-22 Fuse/Relay Center (Cab)

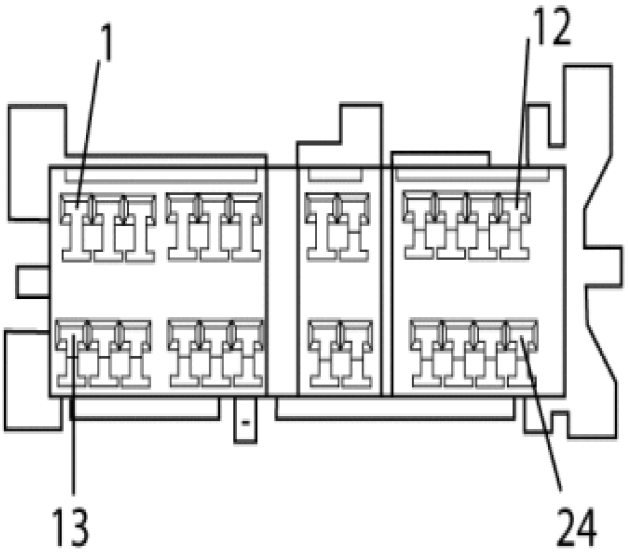

4894232

Connector Part Information		• 7483-6122 • 24-Way F (WHT)	
Pin	**Wire Color**	**Circuit Number**	**Function**
1	—	—	Not Used
2	RED/YEL	SA103B	Ignition Voltage from Fuse F-24 to J/B 12 (B- 146 pin 4)
3	BLK/BLU	PA012B	Battery Voltage from Fuse F-22
4	GRN	CA101B	Switched Output Voltage from X-1 Stop Lamp Relay
5	BLK	ZZ078B	Ground to J/B 2 (B-144 pin 5) (B-53 Ground)
6	LT GRN/RED	HA011B	Fuse F-28 Voltage (Headlamp Switch ON) to HVAC Control Panel
7	RED	IA001B	Battery Voltage from Fuse F-3 to J/B 2 (B-144 pin 9)
8	WHT/RED	WA015B	Voltage from Fuse F-16
9	GRN/RED	BA057B	Fuse F-27 Voltage (Headlamp Switch ON) to L- 23 Splice Pack
10	BLU	DA004B	Horn Relay X-7 Coil Control
11	LT GRN/RED	BA022B	Fuse F-28 Voltage (Headlamp Switch ON) to J/B 1 (B-131 pin 14)
12	GRN/WHT	IC190B	Stop Lamp Relay (Coil Control) to Stop Lamp Switch 2
13	BLU/RED	FA006B	X-6 Wiper Main Relay Coil Control to J/B 1 (B- 136 pin 17)
14	—	—	Not Used
15	RED/BLK	JA104B	Fuse F-30 Voltage (Fan Control Switch ON) to X-5 Corning Lamp Relay
16	—	—	Not Used
17	BLK/WHT	LA003B	Ignition Voltage from Fuse F-13 to X-17 Starter Relay
18–21	—	—	Not Used
22	GRN/ORN	BA010B	X-16 Tail Lamp Relay Coil Control to Combination Switch
23–24	—	—	Not Used

Behind the Center of the I/P

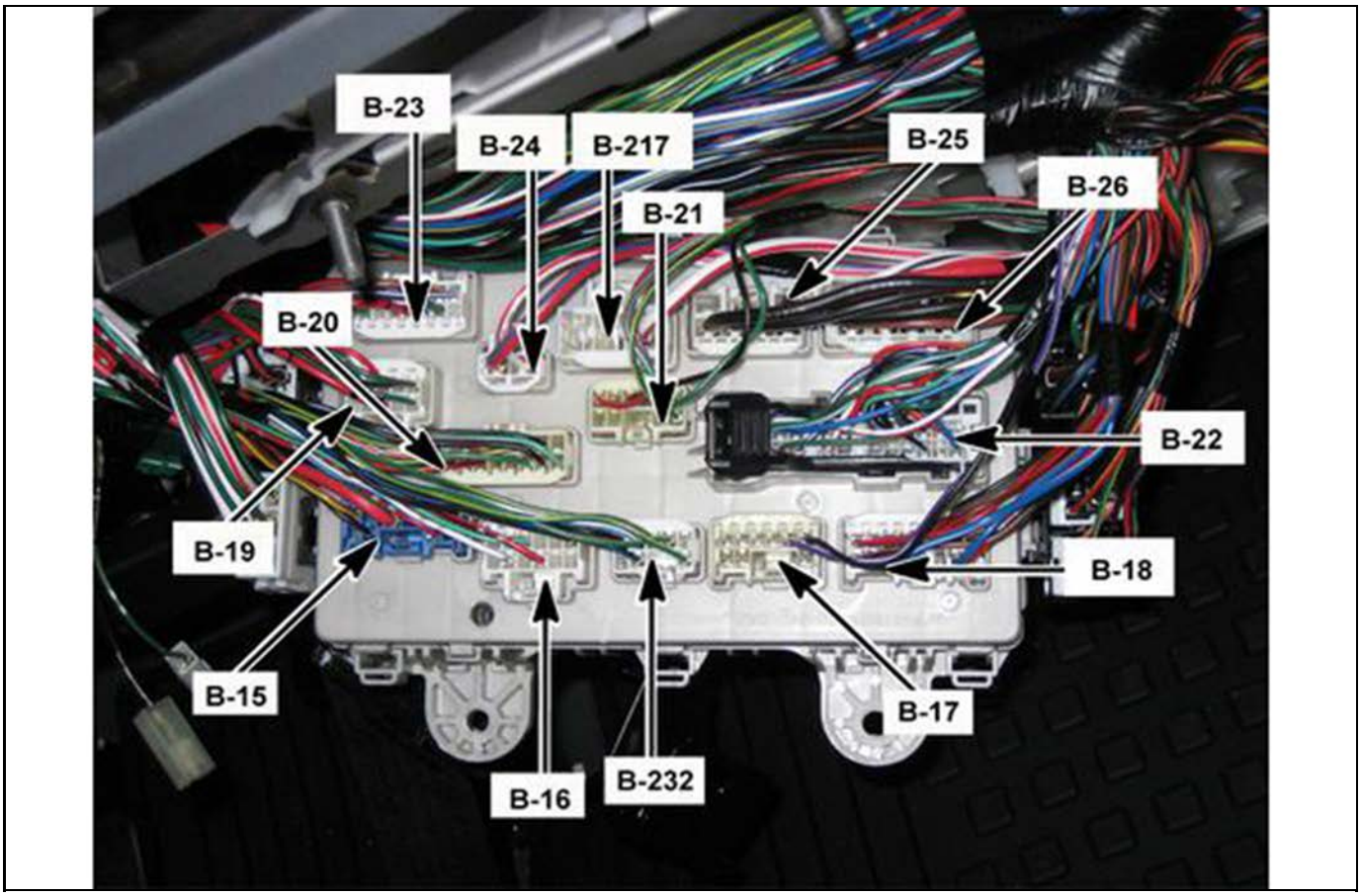

4894183

B-23 Fuse/Relay Center (Cab) Connector End View

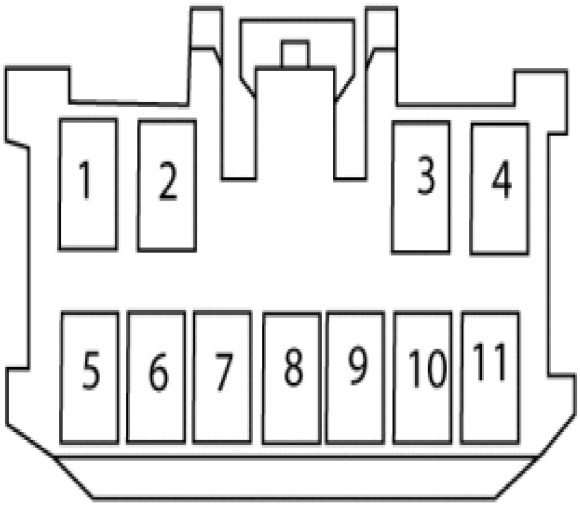

4894243

Connector Part Information		• 7383-2511 • 11-Way F (WHT)	
Pin	**Wire Color**	**Circuit Number**	**Function**
1	—	—	Not Used
2	BRN/YEL	UA003B	Ignition Voltage from Fuse F-6
3	LT GRN/RED	IC093B	Fuse F-28 Voltage (Headlamp Switch ON) to PTO Up/ Down Switch (Speed Control)
4	RED/YEL	WA107B	Ignition Voltage from Fuse F-23
5	WHT/RED	HA027B	Voltage from Fuse F-17
6	GRN/RED	BA026B	Fuse F-27 Voltage (Headlamp Switch ON)
7	—	—	Not Used
8	RED	AA011B	Fuse F-15 Voltage (Headlamp Switch ON)
9	RED/BLK	PA031B	Battery Voltage from Fuse F-18 to J/B 1 (B-133 pin 13)
10	—	—	Not Used
11	GRN/YEL	KF022B	Ignition Voltage from Fuse F-21 to Mimamori Module

Behind the Center of the I/P

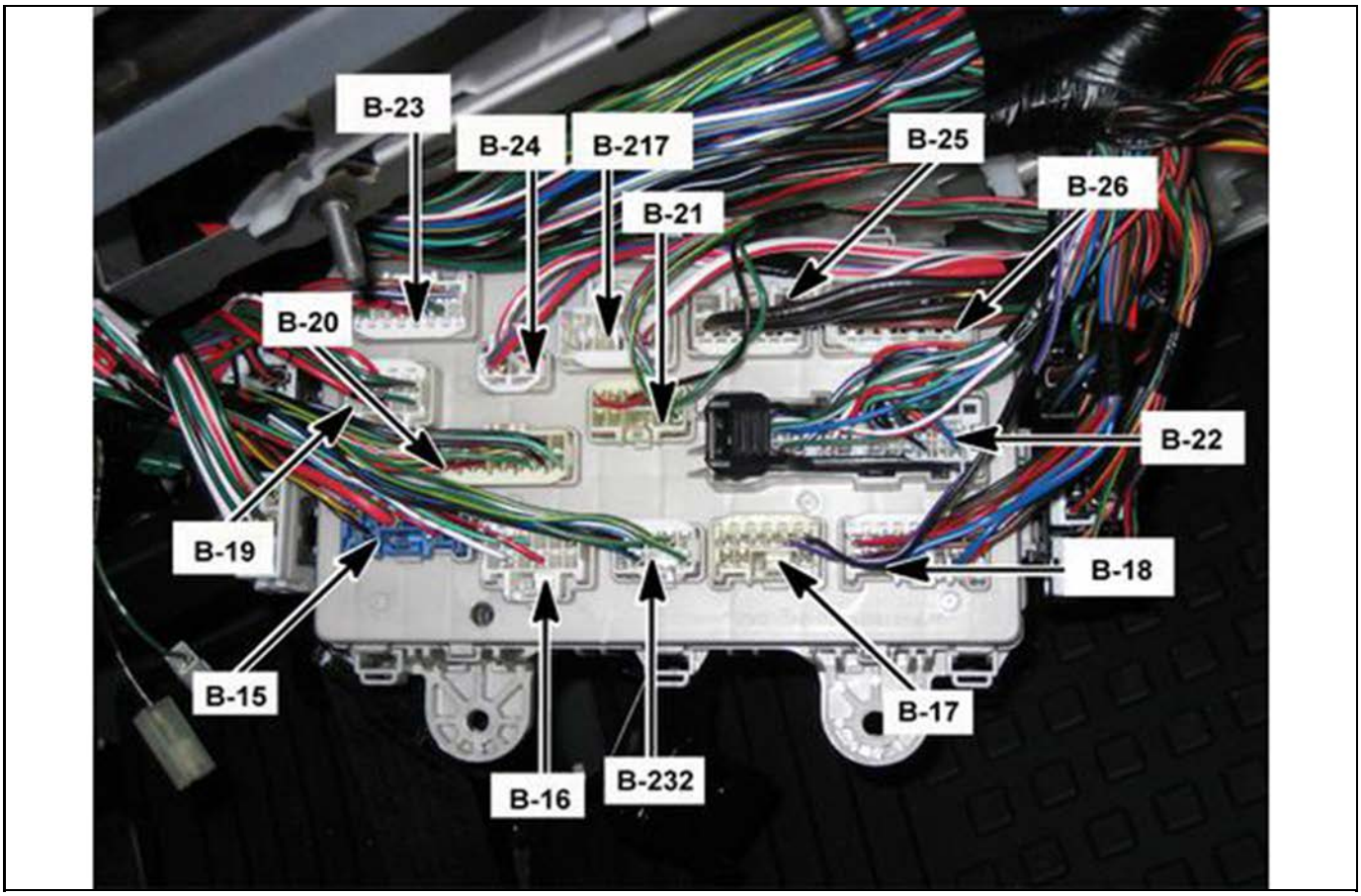

4894183

B-24 Fuse/Relay Center (Cab)

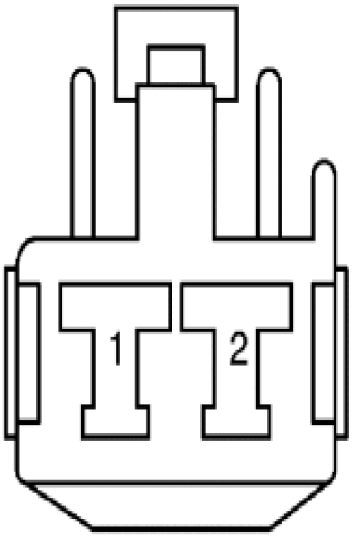

4894250

Connector Part Information		• 7383-1616 • 2-Way F (WHT)	
Pin	**Wire Color**	**Circuit Number**	**Function**
1	WHT/RED	PA130B	Ignition Voltage from Ignition Switch for Fuses F-7, F-18, F-20, F-21
2	RED/BLU	PA008B	Ignition Voltage from Ignition Switch for Fuses F-16, F-17

Behind the Center of the I/P

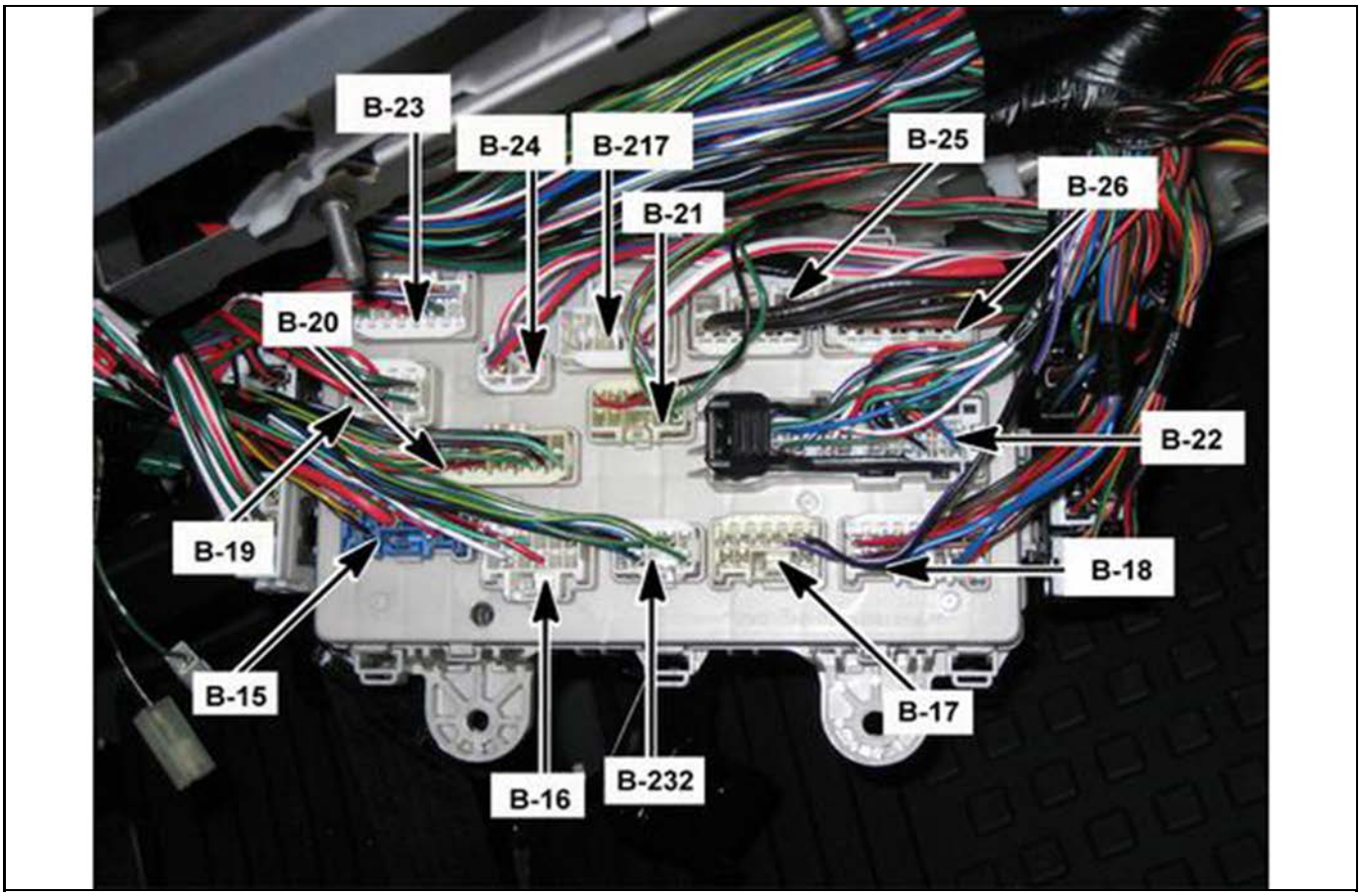

4894183

B-25 Fuse/Relay Center (Cab)

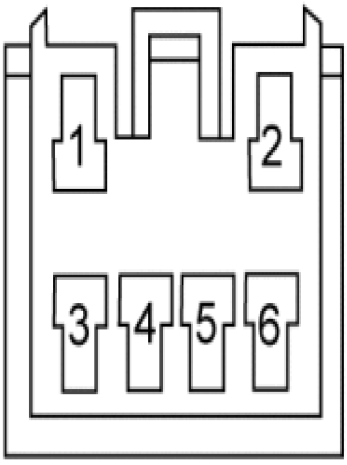

4894255

Connector Part Information		• 7383-4860 • 6-Way F (WHT)	
Pin	**Wire Color**	**Circuit Number**	**Function**
1	BLK/RED	PA104B	Battery Voltage from Splice 26 (Fuse FL-6)
2–3	—	—	Not Used
4	RED/YEL	PA007B	Ignition Voltage from Ignition Switch for Fuses F-23, F-24
5	BLK/WHT	PA029B	Ignition Voltage from Ignition Switch for Fuse F- 13
6	BLK/RED	PA014B	Battery Voltage from Splice 26 (Fuse FL-6) to Ignition Switch

Behind the Center of the I/P

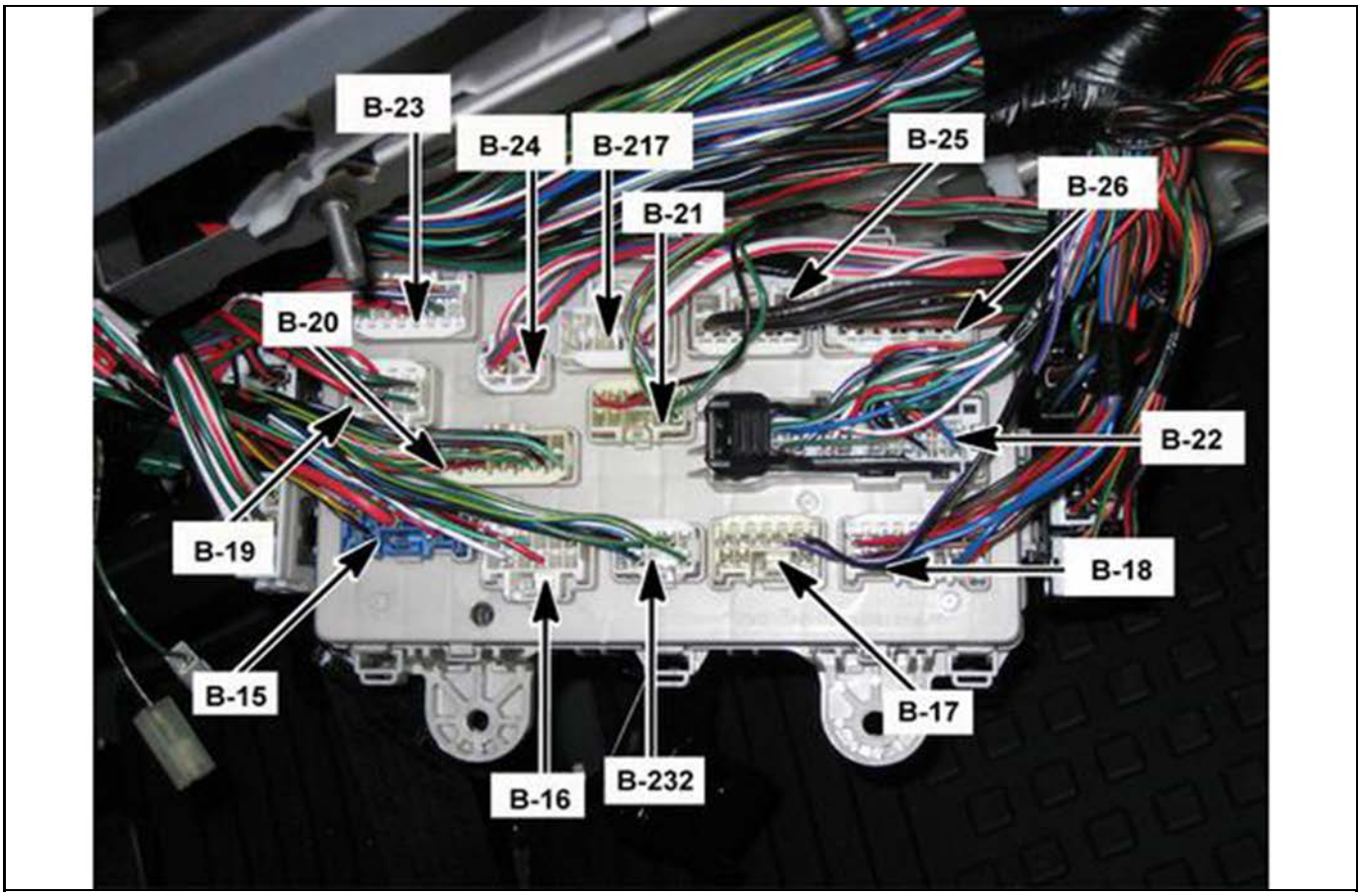

4894183

B-26 Fuse/Relay Center (Cab)

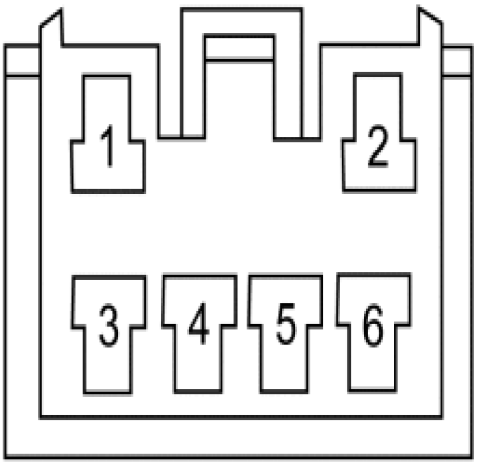

4894262

Connector Part Information		• 7383-4861 • 6-Way F (WHT)	
Pin	**Wire Color**	**Circuit Number**	**Function**
1	BLK/YEL	PA162B	Battery Voltage from Splice 27 (Fuse FL-5)
2	WHT/BLK	PA011B	Battery Voltage from Fuse FL-10
3	—	—	Not Used
4	GRN/BLK	PA067B	Battery Voltage from Fuse F-32
5	WHT/RED	PA018B	Battery Voltage from Fuse FL-8
6	BRN	HA020B	Fuse F-30 Supply Voltage, Switched Output Voltage from Blower Relay

Behind the Center of the I/P

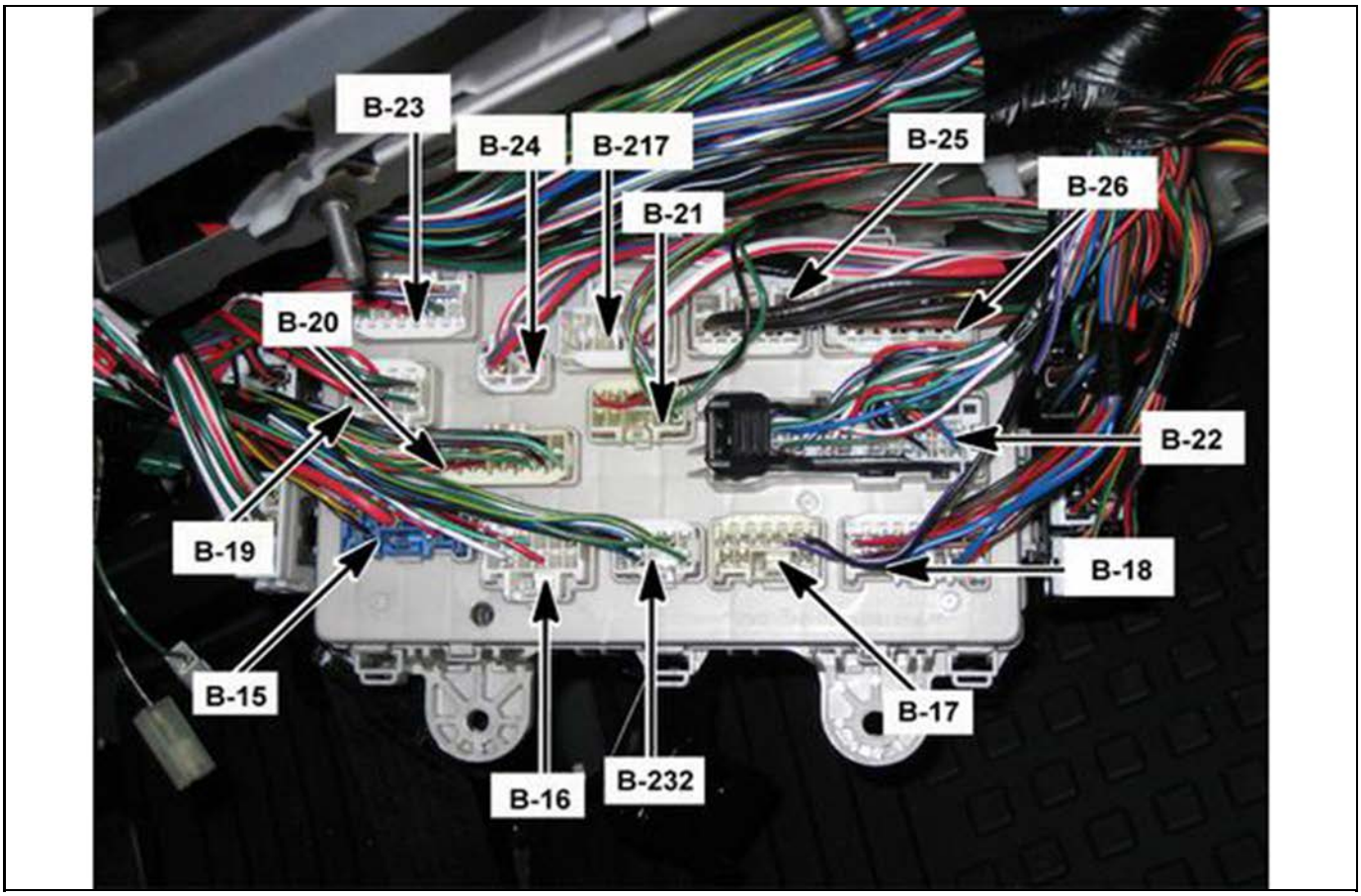

4894183

B-31 Data Link Connector (DLC)

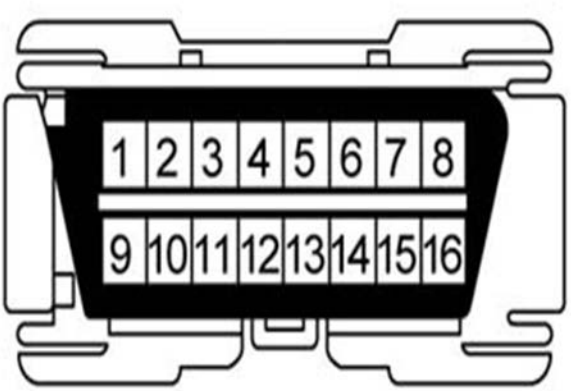

4894270

Connector Part Information		• MX8-C-165-C • 16-Way F (LT GRY)	
Pin	**Wire Color**	**Circuit Number**	**Function**
1–3	—	—	Not Used
4	BLK	ZZ009B	Ground to B-600 Splice Pack (B-51 Ground)
5	BLK	ZZ010B	Ground to J/B 2 (B-141 pin 15) (B-53 Ground)
6	GRN/WHT	TF042B	ISO 15765 CAN 2 High
7	LT BLU	MA011B	ISO 14230 Communication
8–11	—	—	Not Used
12	BLK/ORN	MA012B	Diagnostic Switch Signal from IPC
13	WHT/VIO	BB090B	Diagnostic Switch for EBCM
14	GRN	TF041B	ISO 15765 CAN 2 Low
15	—	—	Not Used
16	RED	HF001B	Battery Voltage from Fuse F-3 from Fuse/Relay Center (Cab)

Above the Accelerator Pedal, on the Right Side of the Steering Column

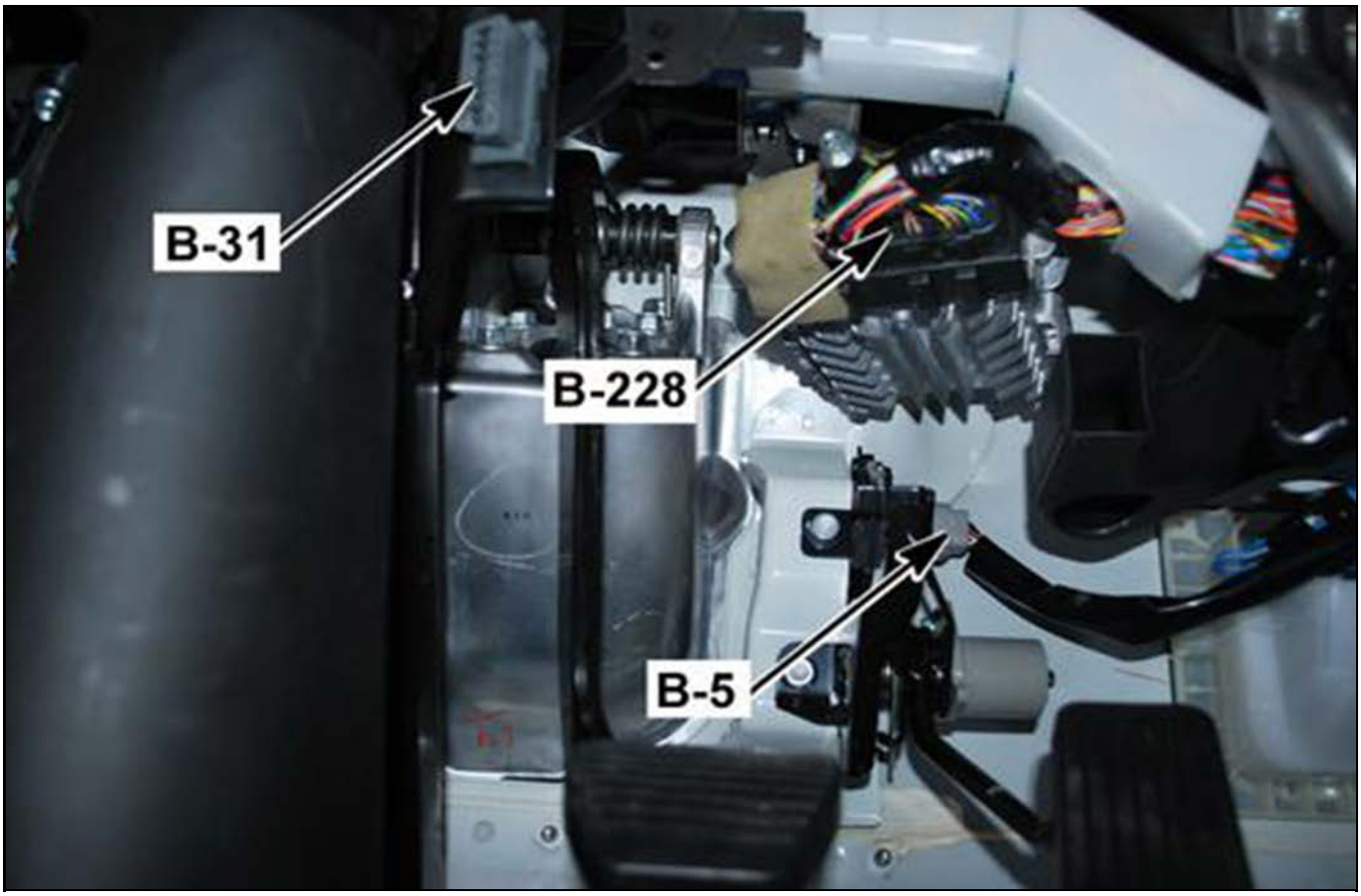

4894285

B-33 KPower Outlet Upper Connector End View

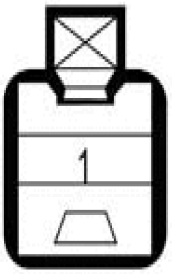

4894291

Connector Part Information		• 7323-8410 • 1-Way F (WHT)	
Pin	**Wire Color**	**Circuit Number**	**Function**
1	RED/YEL	SA001B	Ignition Voltage from Fuse A-1

Center of the I/P, Left of the Fuse/Relay Center (Cab)

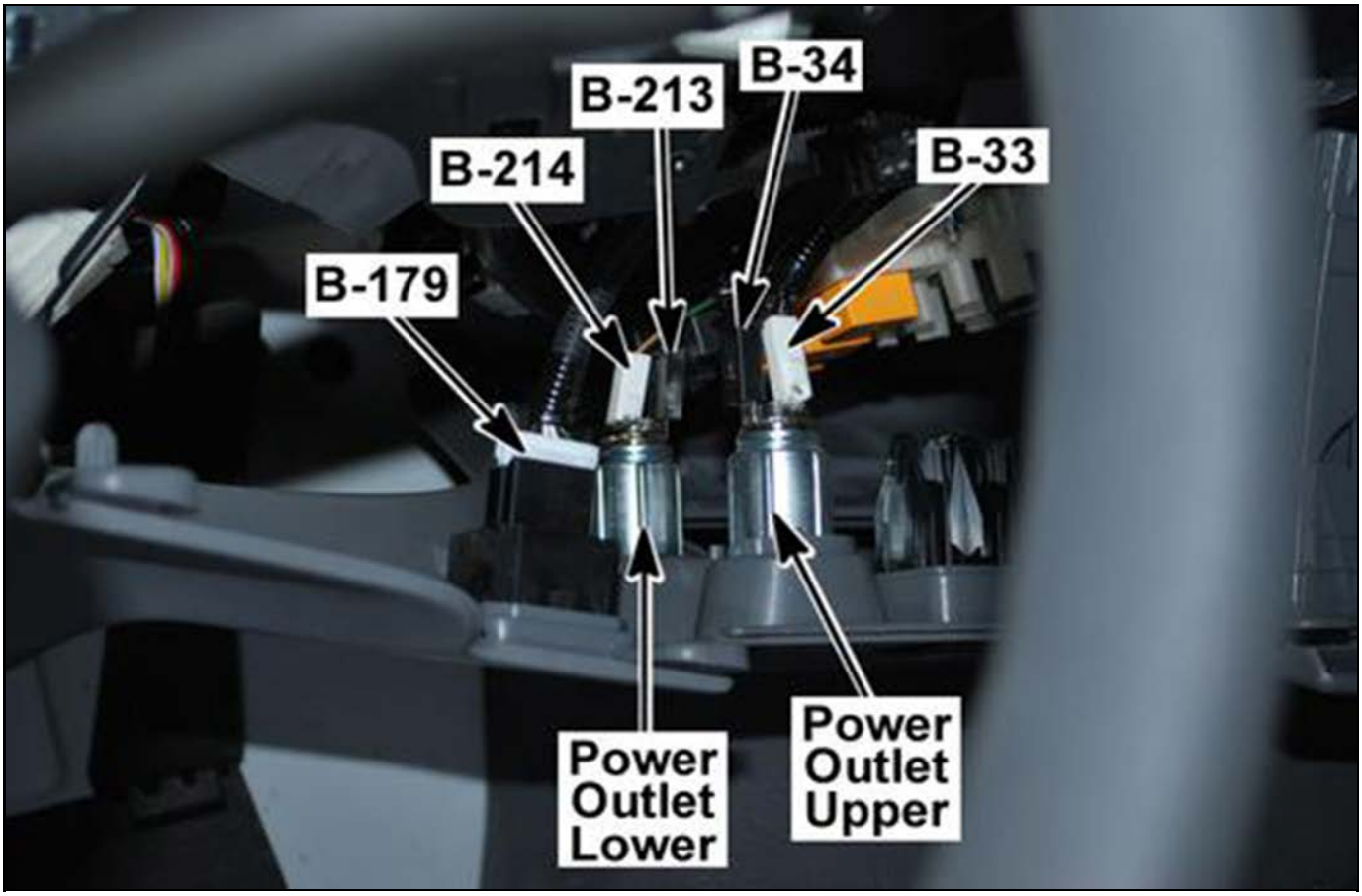

4894297

B-34 Power Outlet Upper

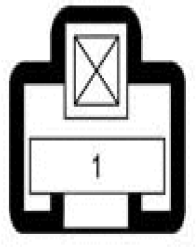

4894301

Connector Part Information		• 174090-2 • 1-Way F (WHT)	
Pin	**Wire Color**	**Circuit Number**	**Function**
1	BLK	SX001B	Ground to B-379 Splice Pack (B-60 and B-51 Ground)

Center of the I/P, Left of the Fuse/Relay Center (Cab)

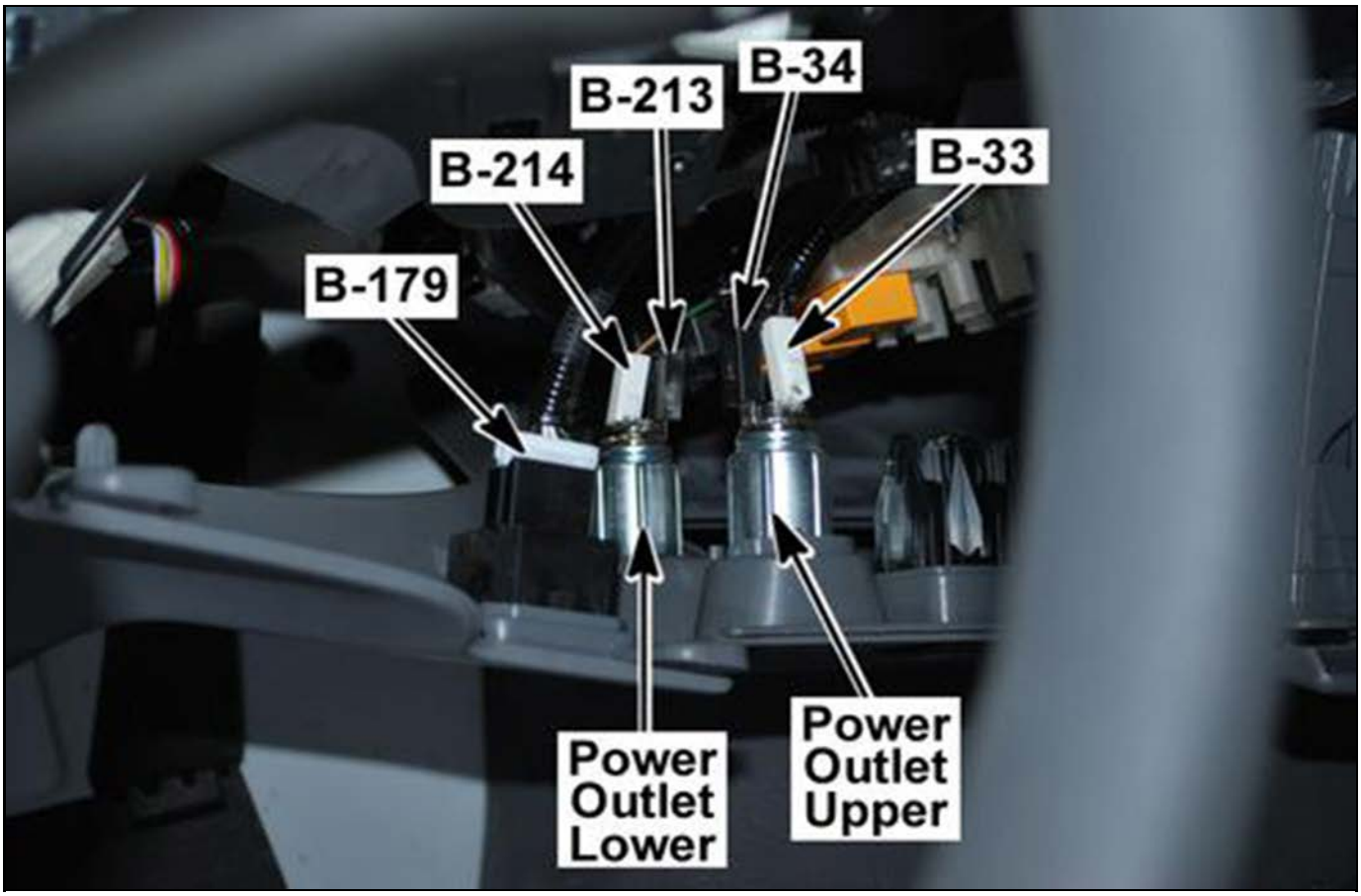

4894297

B-35 Combination Switch

4894313

Connector Part Information		• 7383-5833 • 18-Way F (WHT)	
Pin	**Wire Color**	**Circuit Number**	**Function**
1	BLK	JX001B	Ground to B-377 Splice Pack (B-51 Ground)
2	RED/BLK	JA003B	Left Turn Signal Control
3	RED/WHT	JA002B	Right Turn Signal Control
4	GRY/BLU	IC179B	Cruise Switch, Ignition Voltage from Fuse F-20
5	PNK/BLU	IC176B	Resume/Accel Control
6	GRY	IC177B	Set/Coast Control
7–9	—	—	Not Used
10	BLK	JX008B	Ground to B-49 Junction Block (B-52 Ground)
11	GRN/WHT	QB003B	Front Cornering Light (RH) Control
12	GRN/BLK	QB002B	Front Cornering Light (LH) Control
13	RED/BLU	AA003B	X-13 Headlight Low Relay Coil Control
14	VIO/WHT	AA069B	DRL Signal
15	BLK	AX003B	Ground to B-377 Splice Pack (B-51 Ground)
16	RED/WHT	AA032B	Headlamp High Relay Control
17	—	—	Not Used
18	GRN/ORN	BA010B	X-16 Tail Lamp Relay Coil Control

In the Steering Column, Under the Steering Column Trim Panels

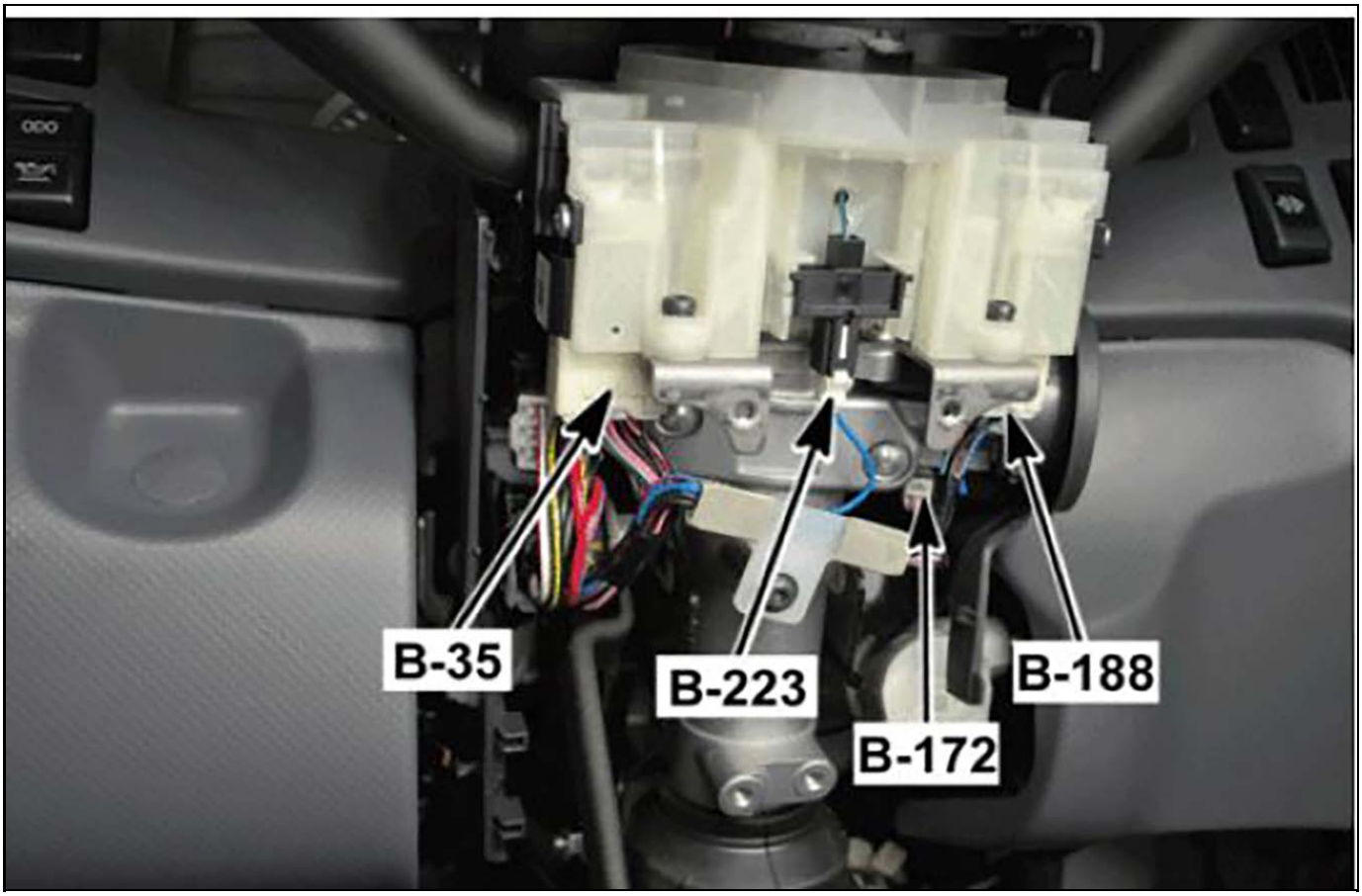

4895830

B-39 Cornering Lamp Diode 3

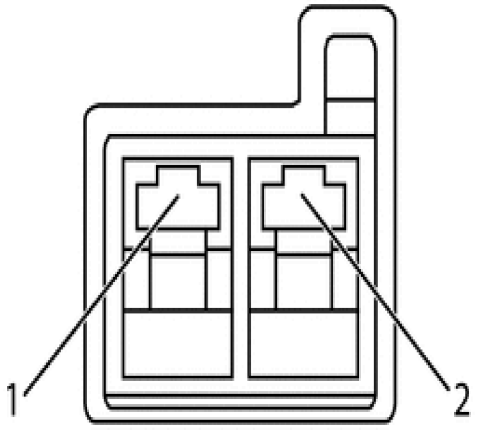

4894326

Connector Part Information		• 7323-9025-30 • 2-Way F (BLK)	
Pin	**Wire Color**	**Circuit Number**	**Function**
1	ORN/BLU	JA110B	Cornering Lamp Relay Control Coil Control (In)
2	VIO/WHT	JA109B	Cornering Lamp Relay Control Coil Control (Out)

Center of the I/P, Behind the Fuse/Relay Center (Cab)

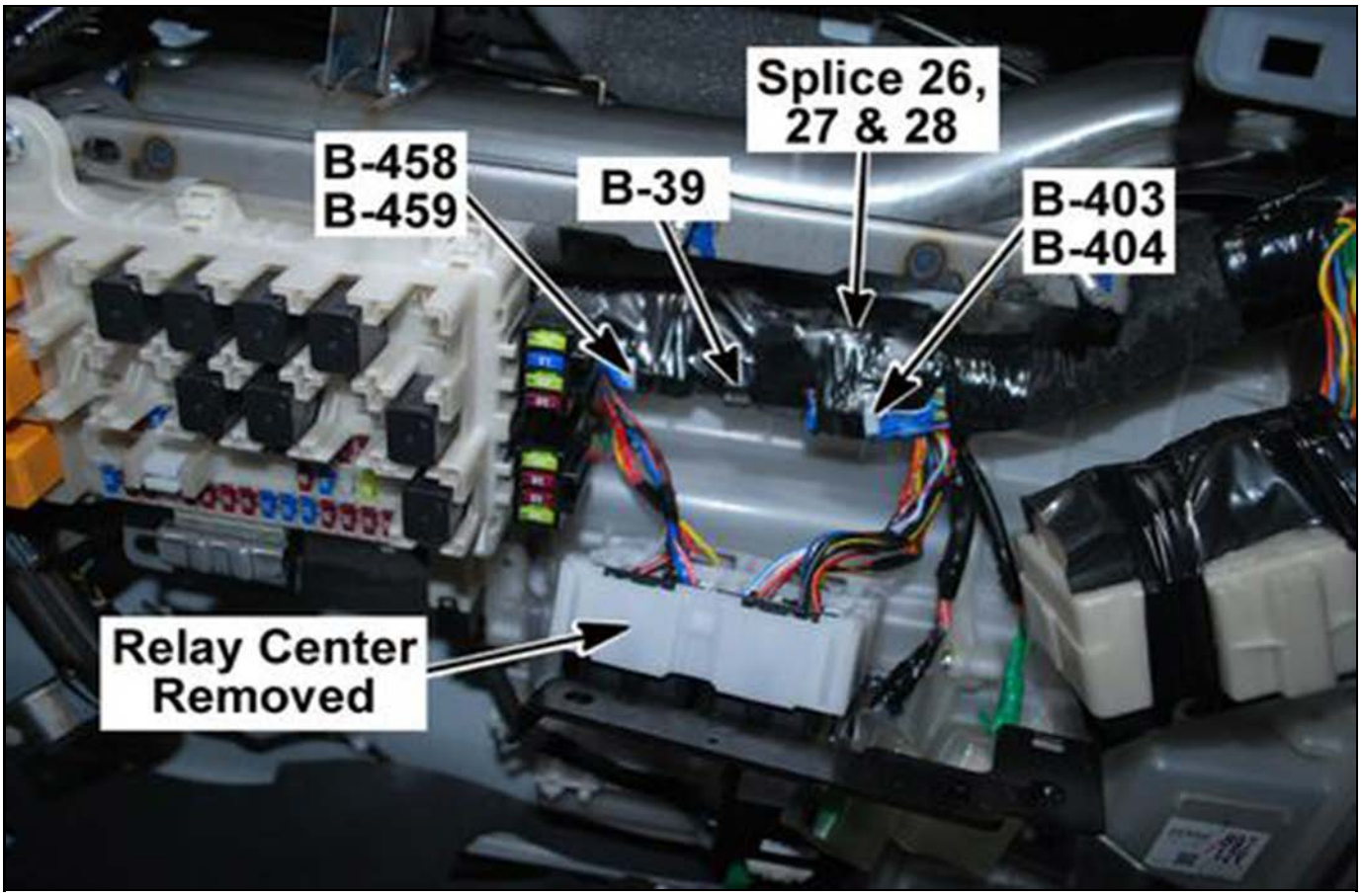

4894331

B-48 Junction Block

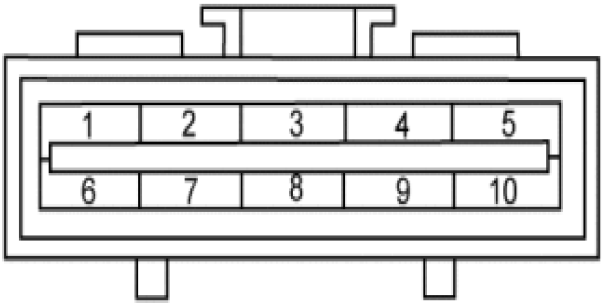

4894388

Connector Part Information		• 7323-7500 • 10-Way F (WHT)	
Pin	**Wire Color**	**Circuit Number**	**Function**
1	BLK	AX004B	Ground to DRL Module
2	BLK	WX006B	Ground to Mirror (RH) Lower Heater
3	BLK/WHT	WX008B	Ground to Mirror (RH) Upper Heater
4	BLK	ZZ014B	Ground from B-49 Junction Block
5	BLK	FX001B	Ground to Wiper Motor
6	BLK	ZZ019B	Ground from Junction Block (J/B) 2
7	BLK	QX001B	Ground to Condenser Fan
8	BLK	HX004B	Ground to Blower Motor Resistor
9	BLK	AX001B	Ground to Headlamp (RH)
10	BLK	ZZ020B	Ground from B-53

Behind the Right Side of the I/P, Next to the Right A-pillar

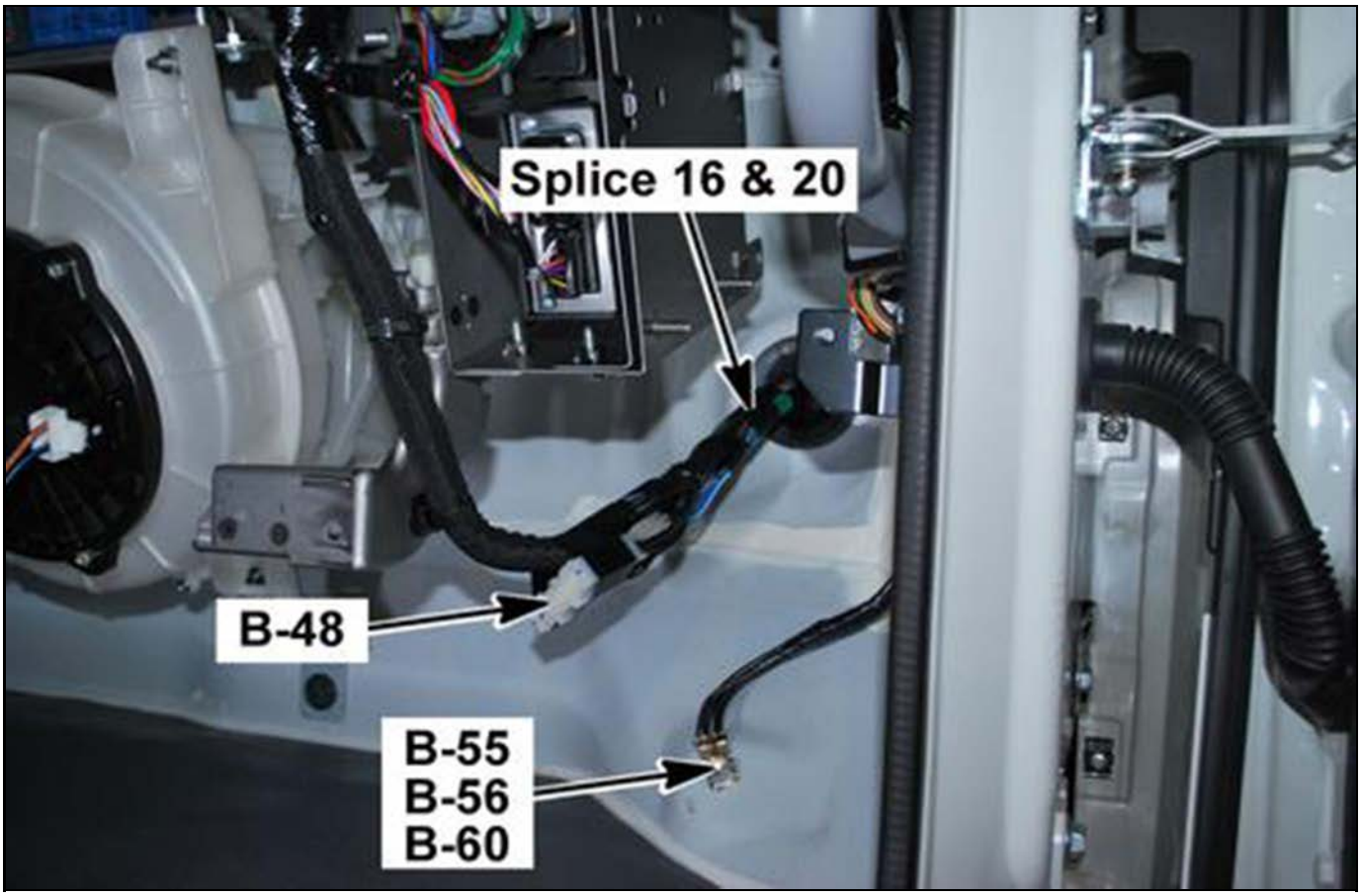

4894117

B-49 Junction Block

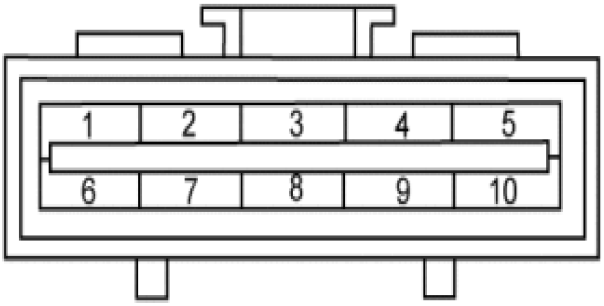

4894395

Connector Part Information		• 7323-7500 • 10-Way F (WHT)	
Pin	**Wire Color**	**Circuit Number**	**Function**
1	BLK	UX001B	Ground to Power Window Switch (LH)
2	BLK	JX008B	Ground to Combination Switch (Cornering Lamps)
3	—	—	Not Used
4	BLK	ZZ018B	Ground to Dimmer Switch
5	BLK	ZZ021B	Ground to B-52
6	BLK	AX002B	Ground to Headlamp (LH)
7	BLK/WHT	WX107B	Ground to Mirror (LH) Lower Heater
8	BLK	WX005B	Ground to Mirror (LH) Upper Heater
9	BLK	WX003B	Ground to Power Window Switch
10	BLK	ZZ014B	Ground from B-49 Junction Block

Under the Left Side of the Instrument Panel Cluster, (IPC is Removed for Photo)

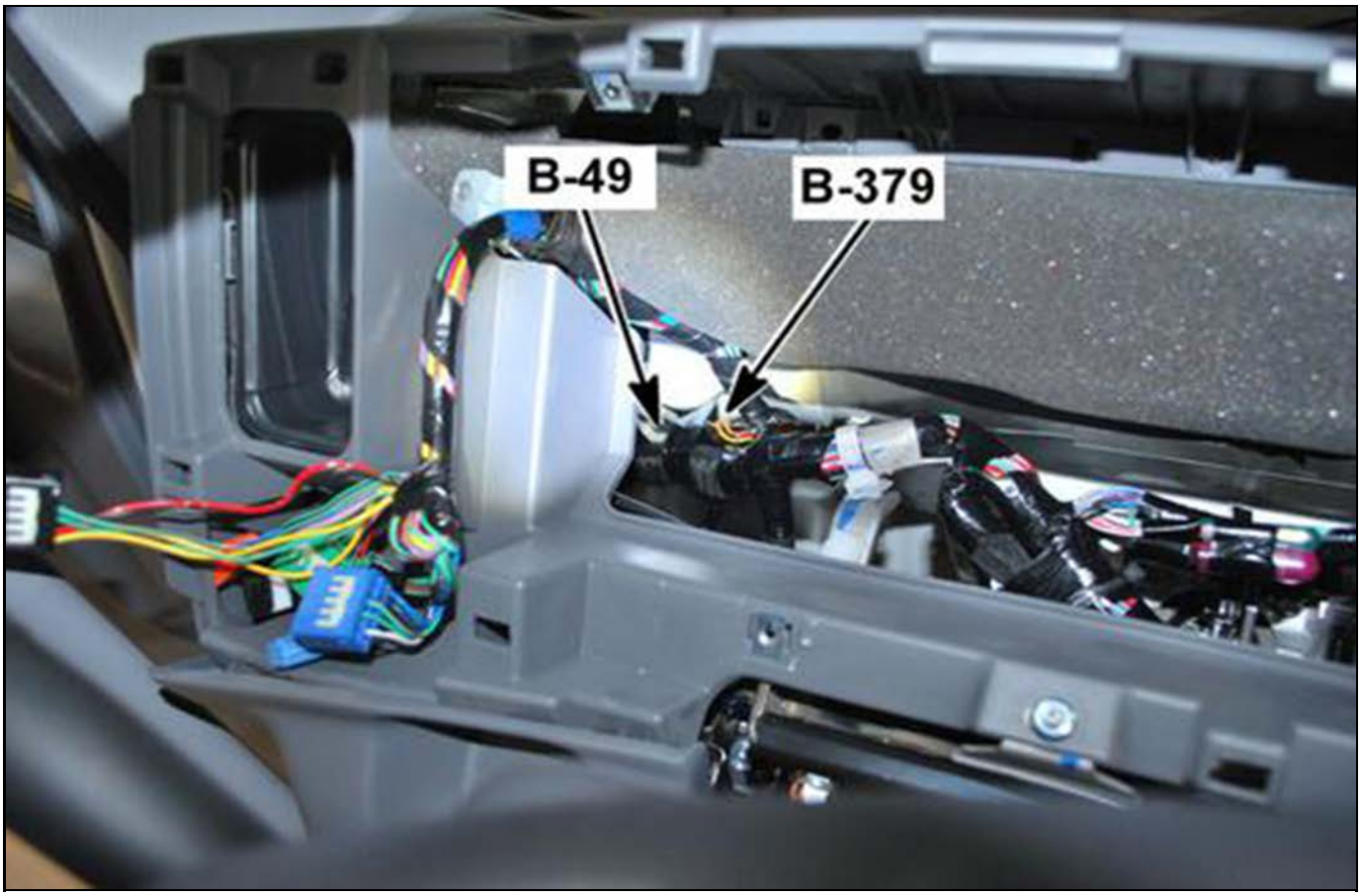

4894413

B-51 Ground Connector End View

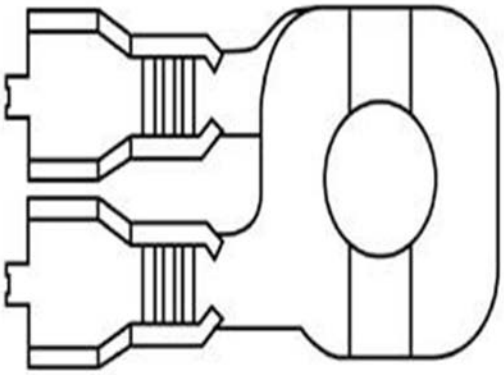

4894435

Connector Part Information		• 7009-1864-02 • 2-Way Eyelet	
Pin	**Wire Color**	**Circuit Number**	**Function**
1	BLK	ZZ003B	Ground for B-602 Splice Pack
1	BLK	ZZ053B	Ground for B-379 Splice Pack

Left Inner Corner of the Cab, Across from the Lower Door Hinge

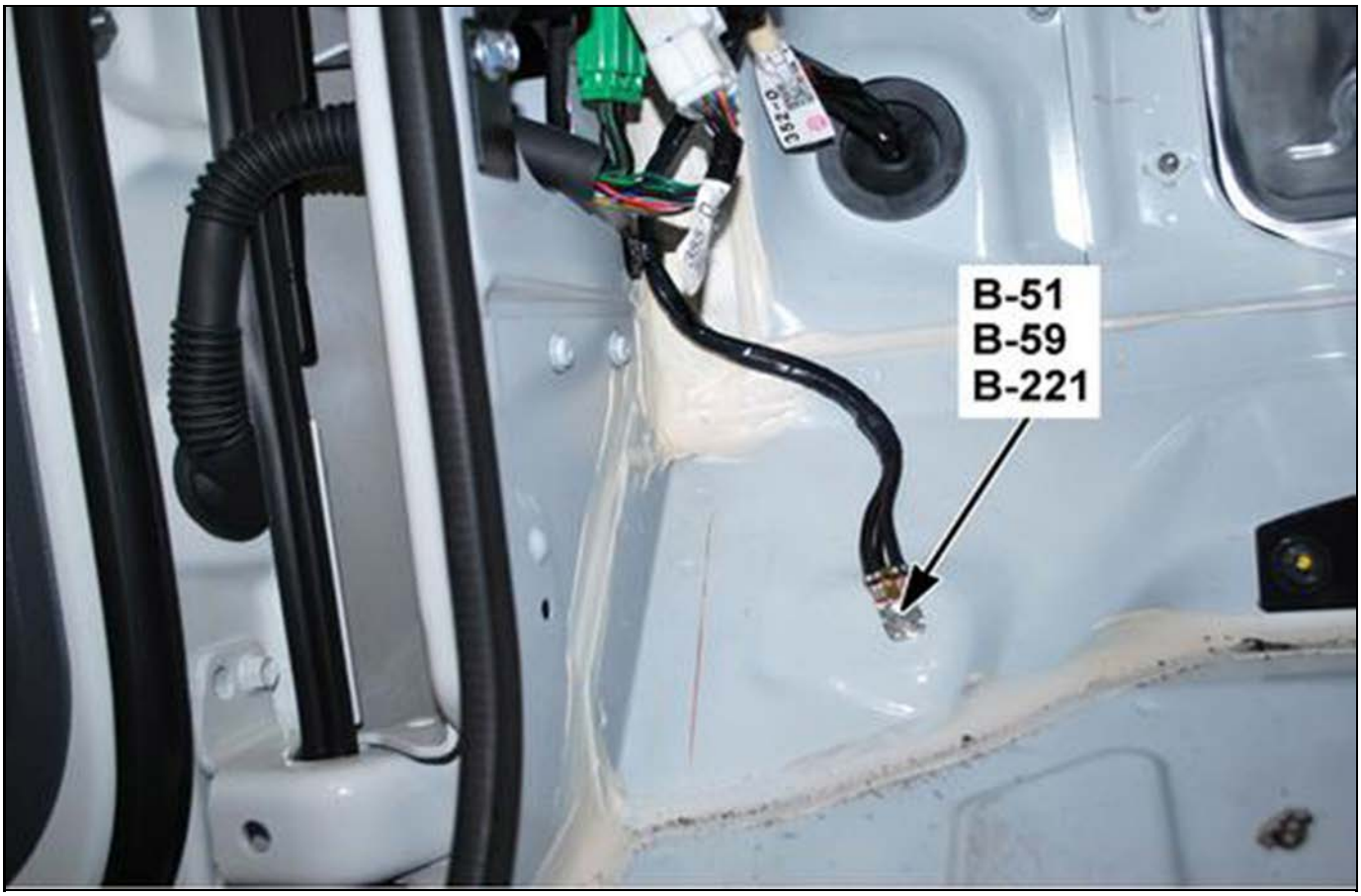

4894458

B-52 Gound

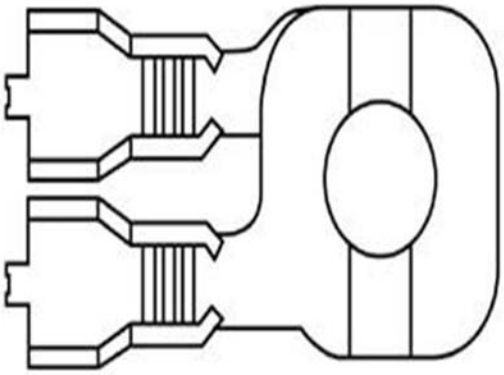

4894435

Connector Part Information		• 7009-9229-02 • 1-Way Eyelet	
Pin	**Wire Color**	**Circuit Number**	**Function**
—	BLK	ZZ021B	Ground for B-49 Junction Block

Left Front Corner of the Frame, Behind the Front Bumper

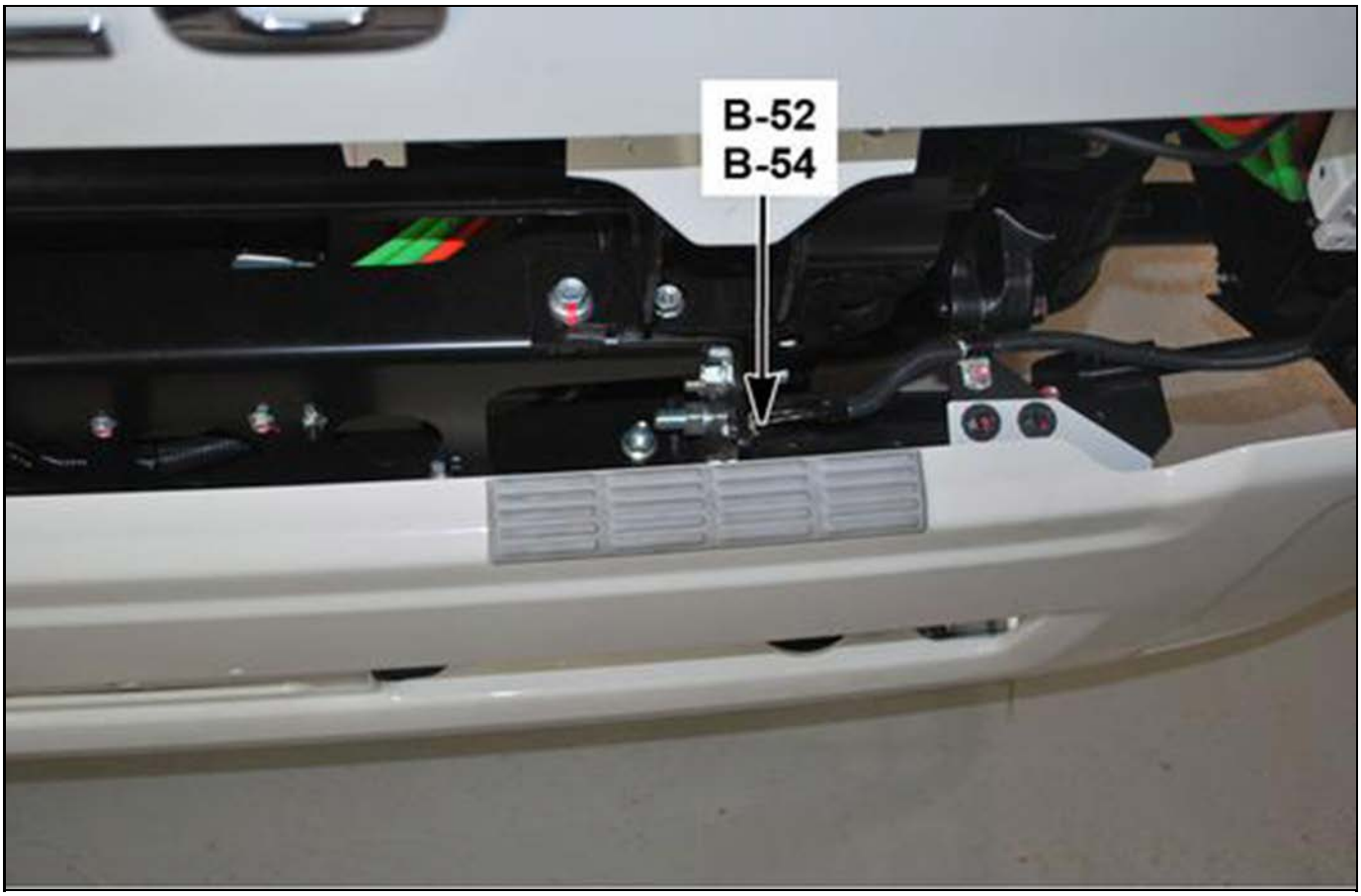

4894475

B-53 Ground

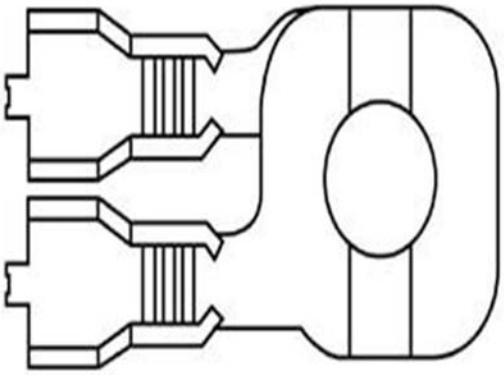

4894435

Connector Part Information		• 7009-9229-02 • 1-Way Eyelet	
Pin	**Wire Color**	**Circuit Number**	**Function**
—	BLK	ZZ020B	Ground to B-48 Junction Block
—	BLK	ZZ029B	J/B 2 (B-142 pin 16)

Right Front Corner of the Frame, Behind the Front Bumper

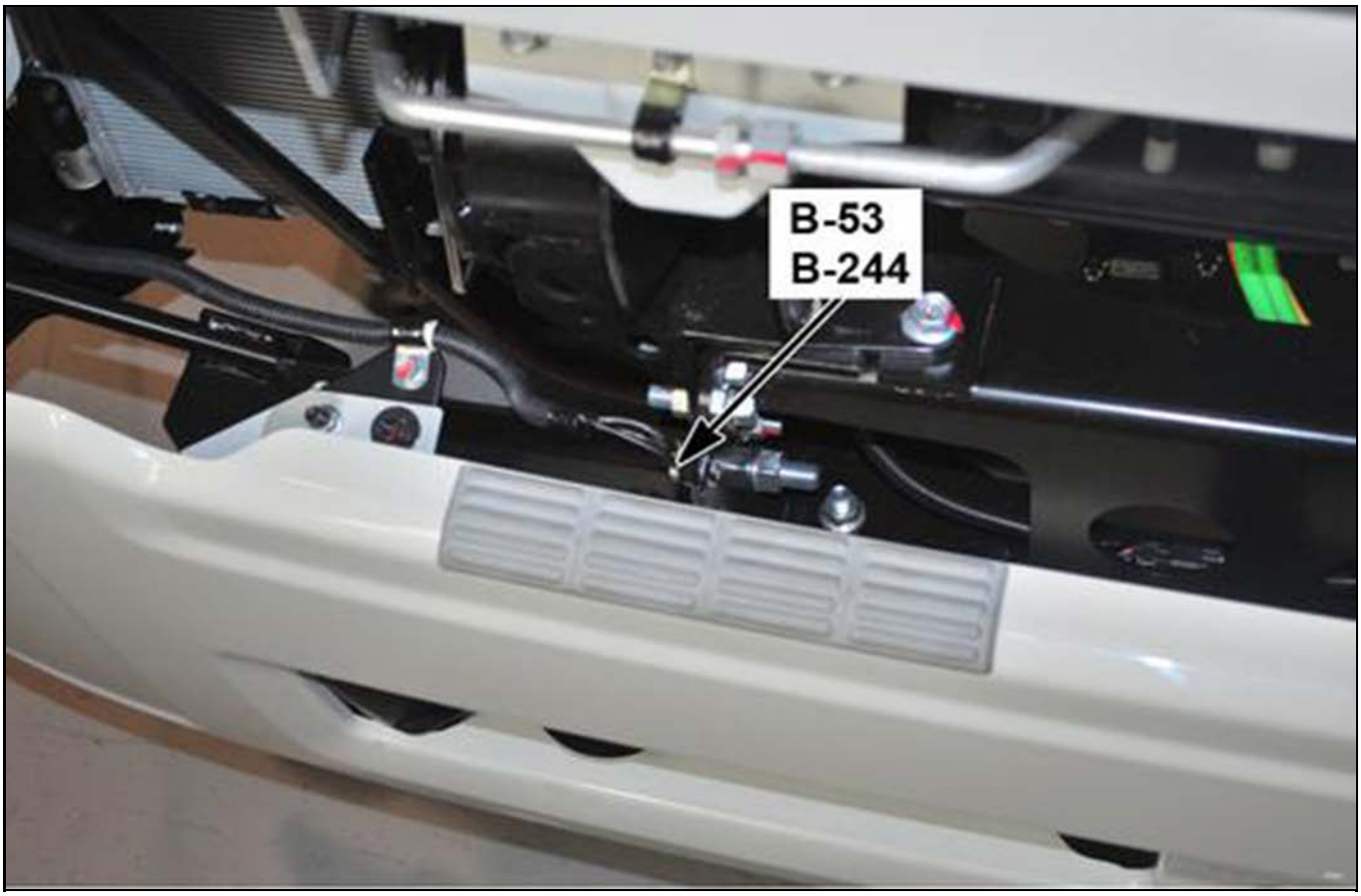

4894485

B-54 Ground

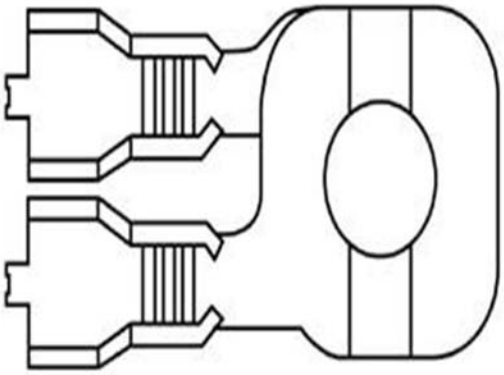

4894435

Connector Part Information		• 7009-9229-02 • 1-Way Eyelet	
Pin	**Wire Color**	**Circuit Number**	**Function**
—	BLK	ZZ008B	Ground to B-59

Left Front Corner of the Frame, Behind the Front Bumper

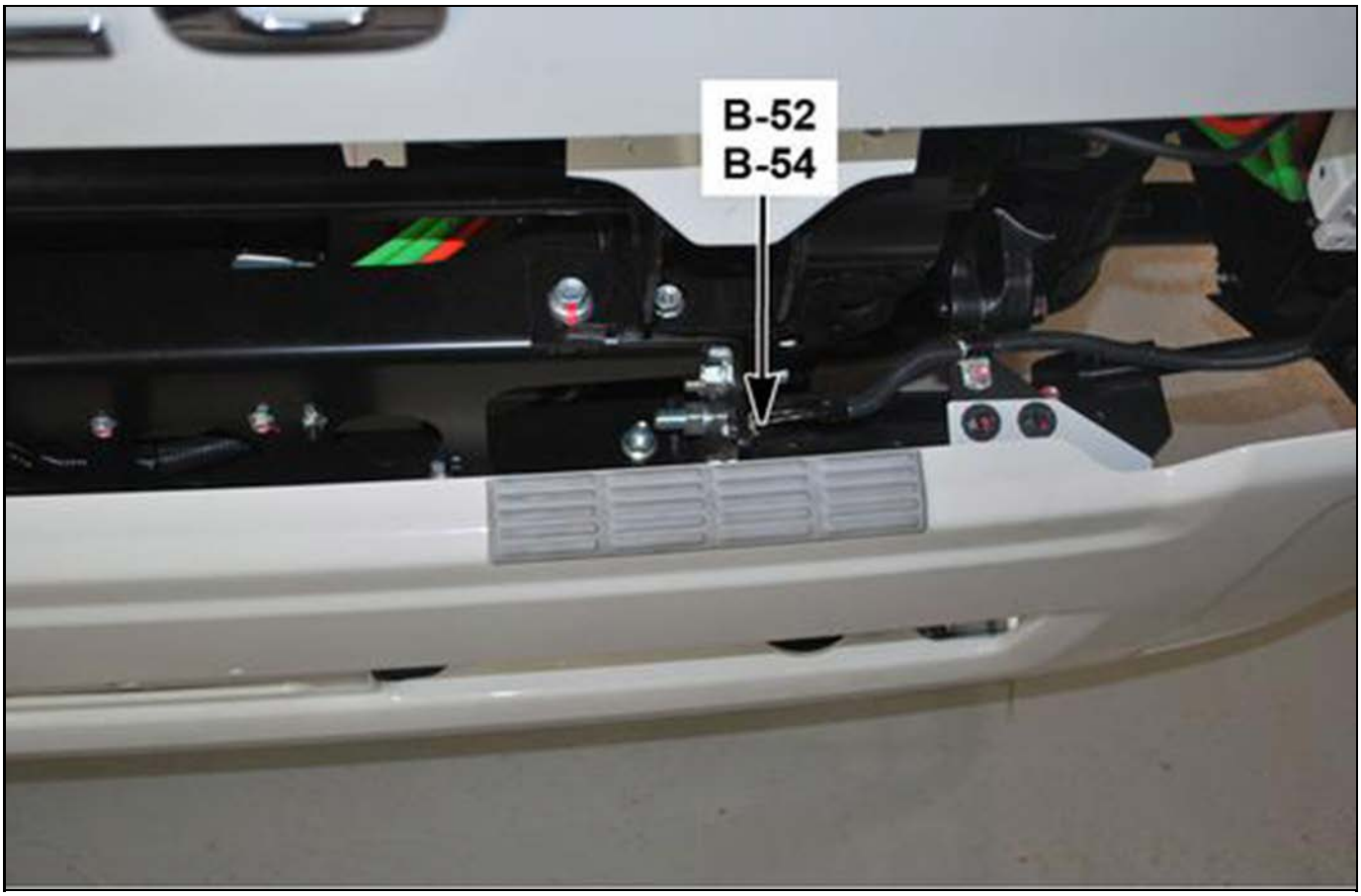

4894475

B-55 Ground

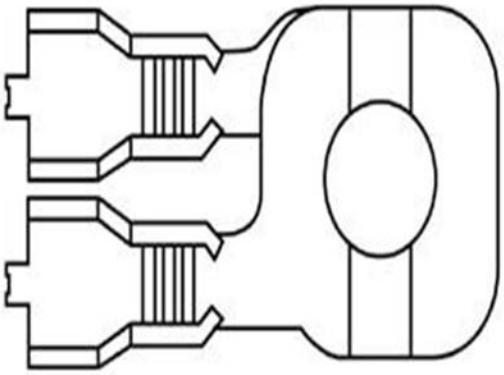

4894435

Connector Part Information		• 7009-1333 • 1-Way Eyelet	
Pin	**Wire Color**	**Circuit Number**	**Function**
—	BLK	ZZ043B	Ground to Splice 18

Lower Right Corner of the Cab, Across From the Lower Door Hinge

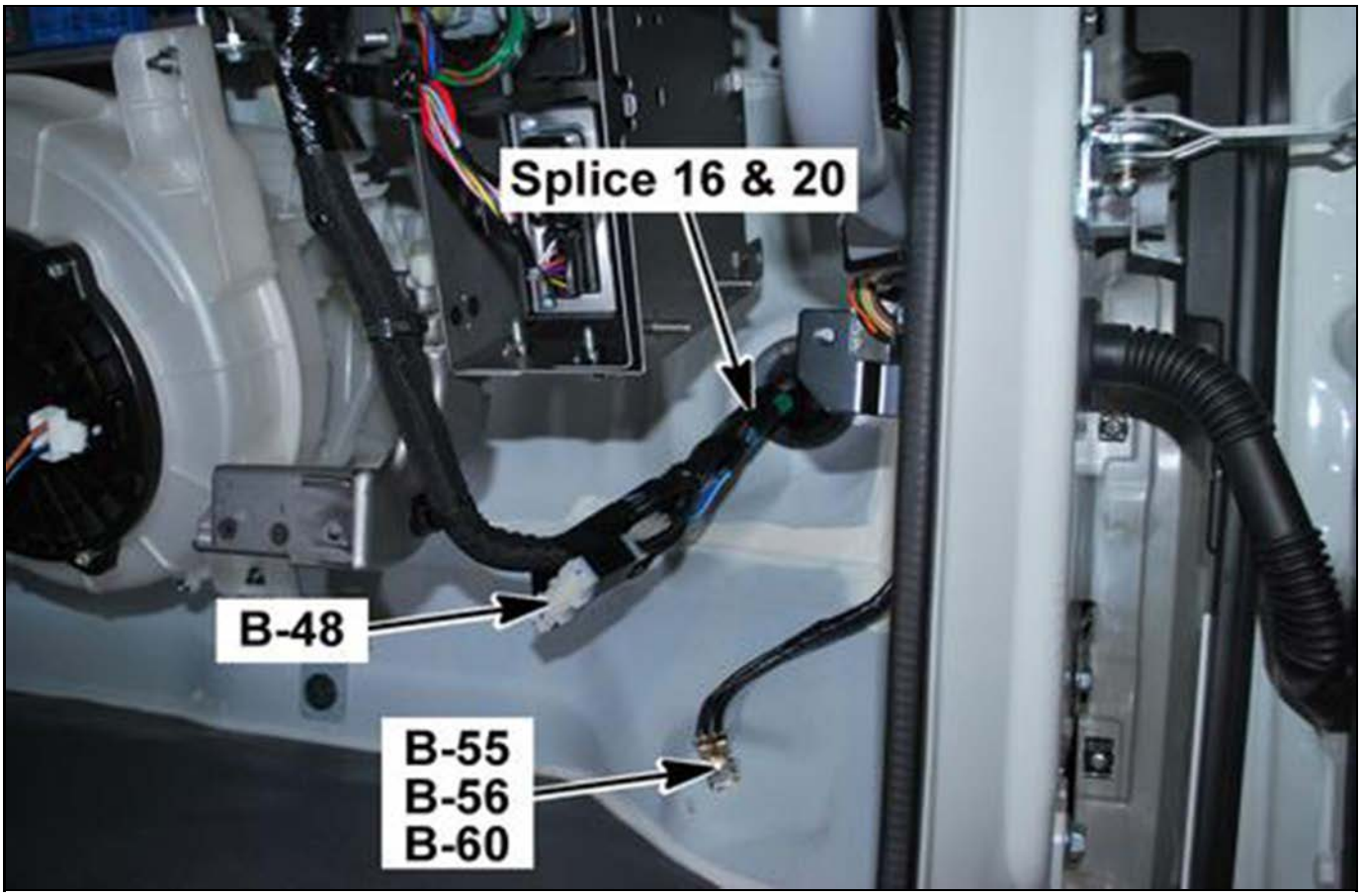

4894504

B-56 Ground

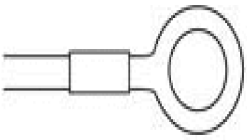

4894500

Connector Part Information		• 7009-1865-02 • 1-Way Eyelet	
Pin	**Wire Color**	**Circuit Number**	**Function**
—	BLK	ZZ012B	Ground to B-244

Lower Right Corner of the Cab, Across From the Lower Door Hinge

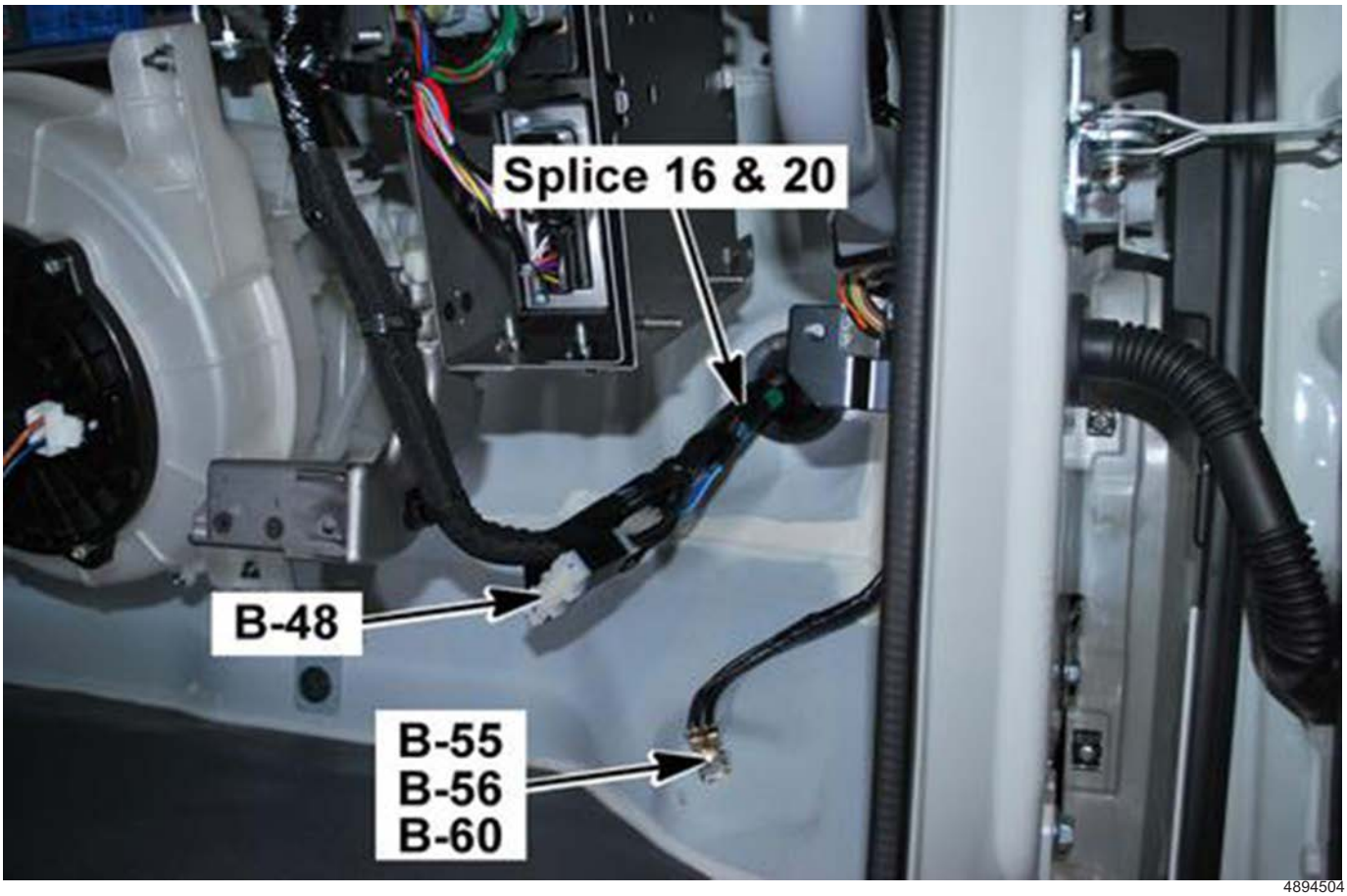

4894504

B-59 Ground

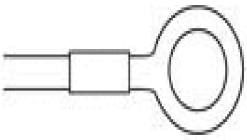

4894500

Connector Part Information		• 7009-1865-02 • 1-Way Eyelet	
Pin	**Wire Color**	**Circuit Number**	**Function**
—	BLK	ZZ008B	Ground to B-54

Left Inner Corner of the Cab, Across from the Lower Door Hinge

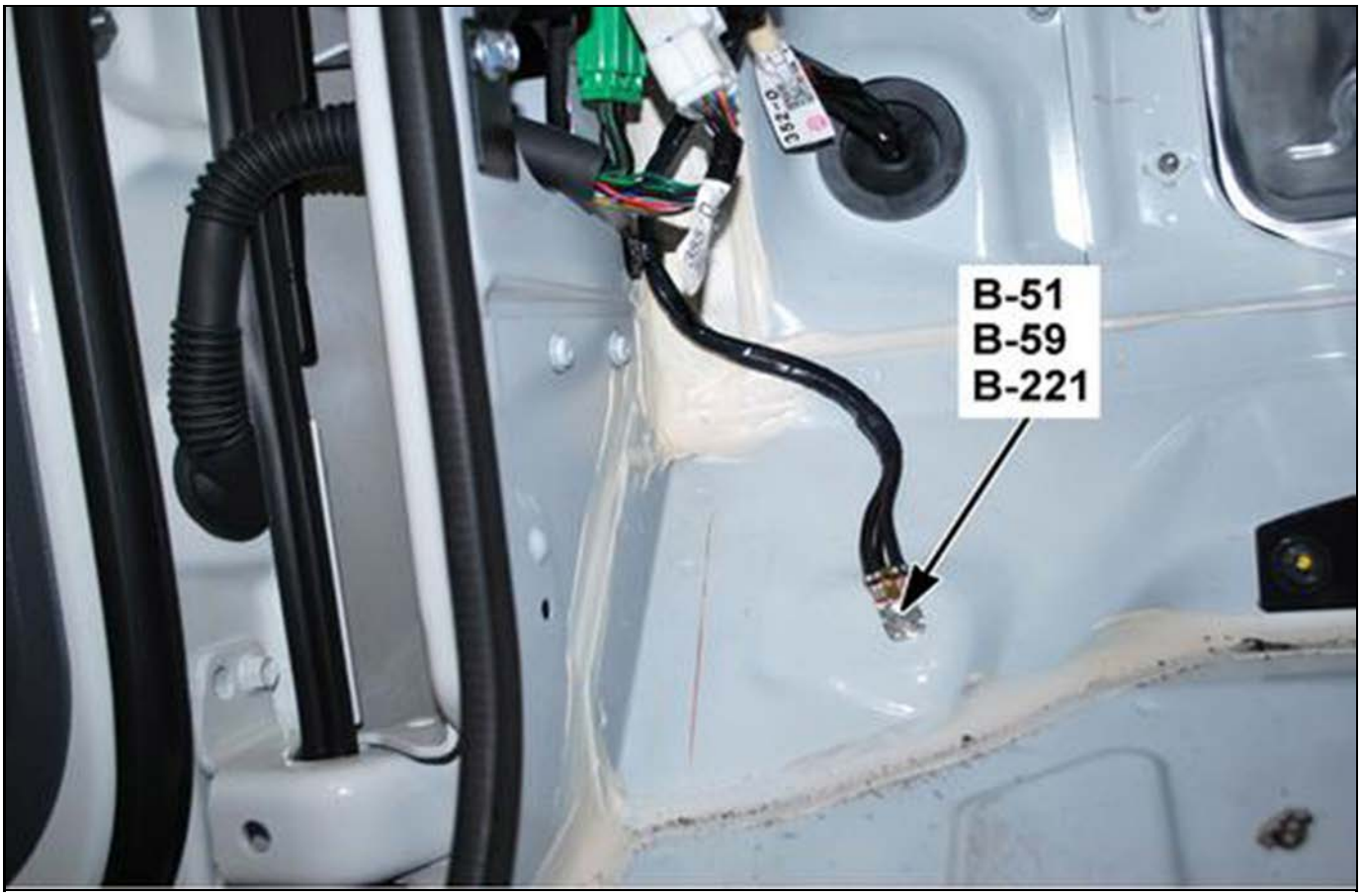

4894524

B-60 Ground

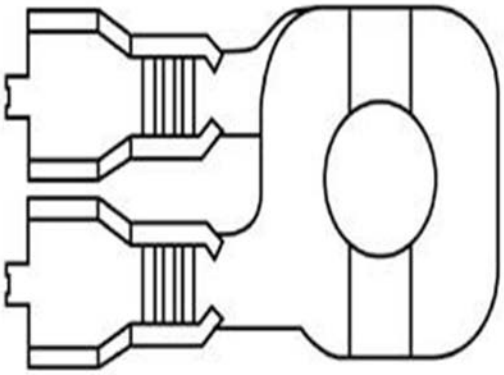

4894435

Connector Part Information		• 7009-1864-02 • 1-Way Eyelet	
Pin	**Wire Color**	**Circuit Number**	**Function**
—	BLK	ZZ040B	Ground for B-379 Splice Pack

Lower Right Corner of the Cab, Across From the Lower Door Hinge

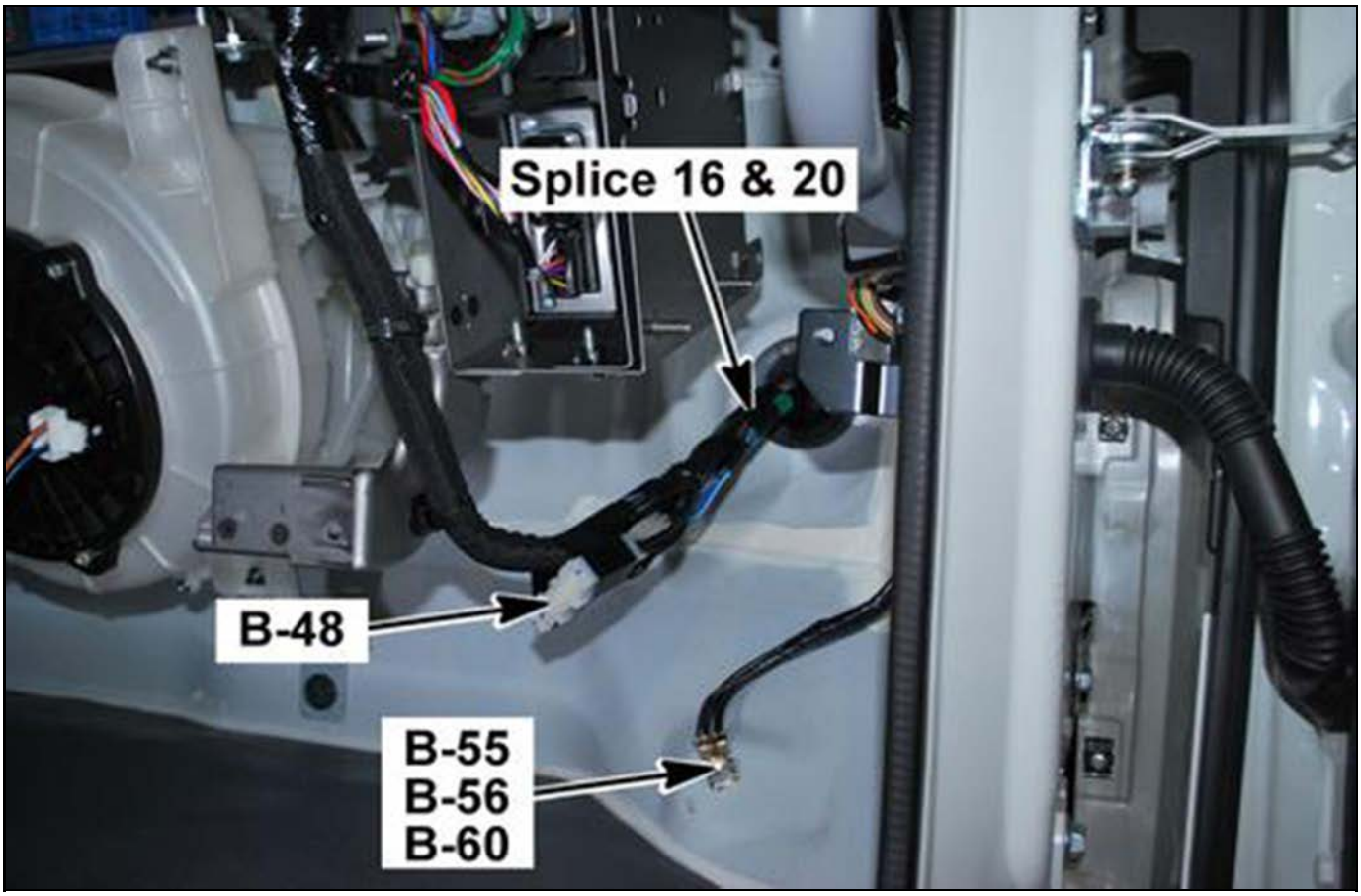

4894504

B-70 Front Park Lamp (LH)

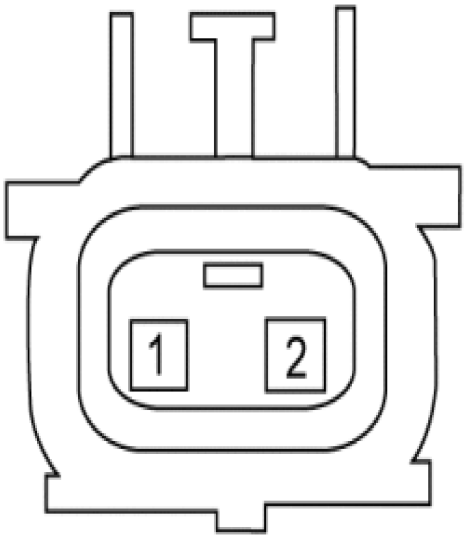

4894811

Connector Part Information		• 7383-7770-40 • 2-Way F (GRY)	
Pin	**Wire Color**	**Circuit Number**	**Function**
1	RN/RED	BA016B	Fuse F-27 Voltage (Headlamp Switch ON)
2	BLK	BX022B	Ground to B-601 Splice Pack (B-51 Ground)

B-70 Left Front Corner of the Vehicle, Behind the Headlamp Lens

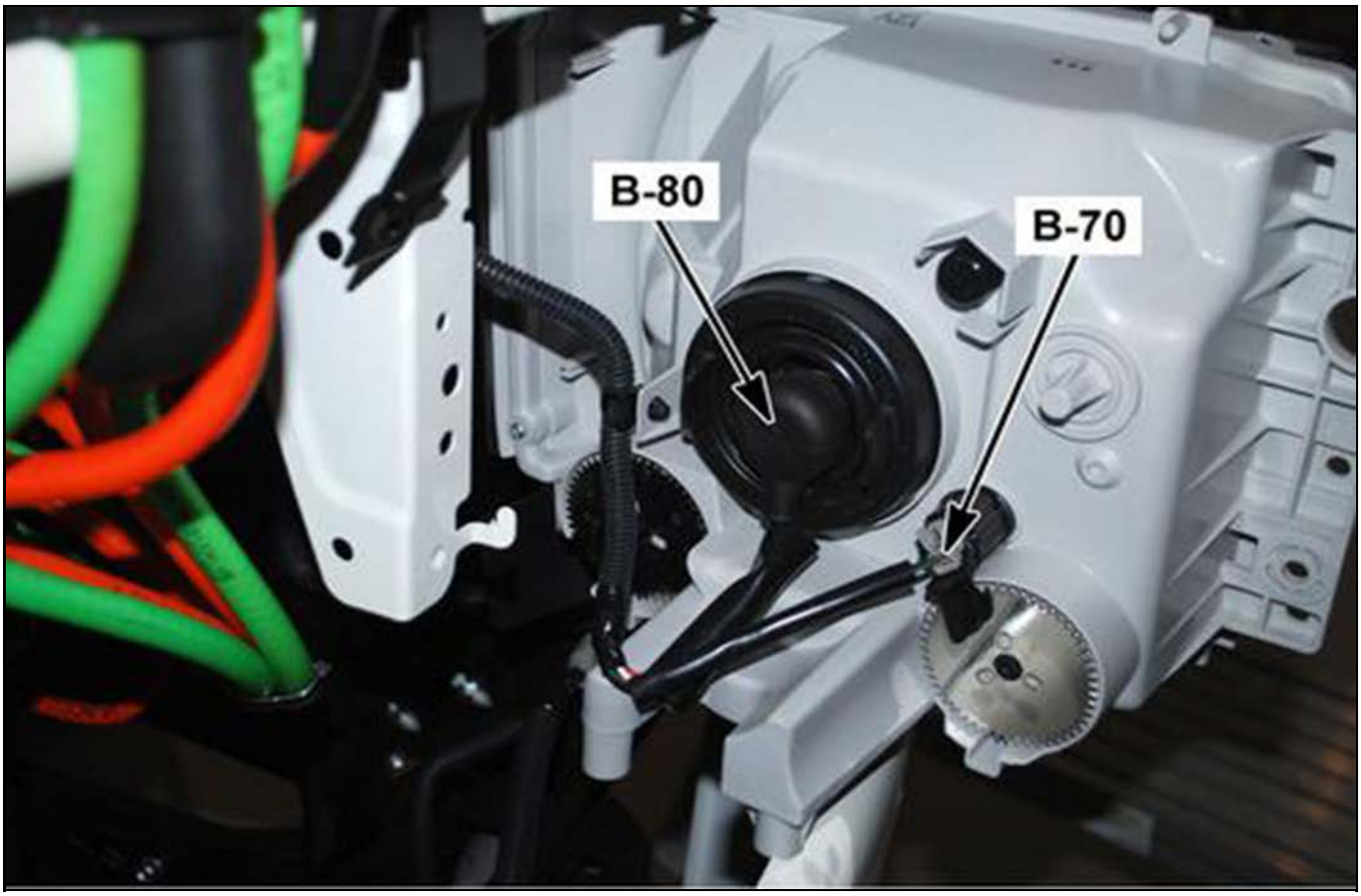

4894813

B-71 Front Park Lamp (RH)

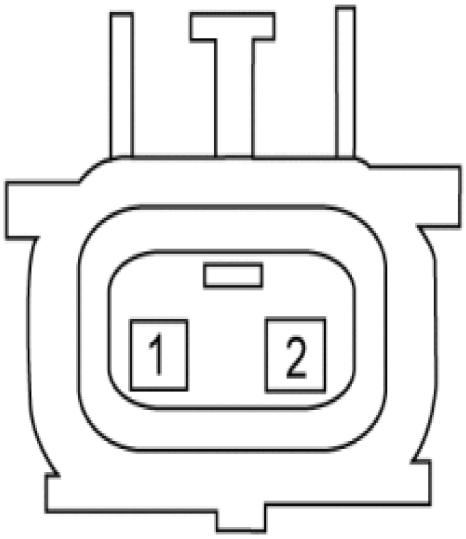

4894811

Connector Part Information		• 7383-7770-40 • 2-Way F (GRY)	
Pin	**Wire Color**	**Circuit Number**	**Function**
1	GRN/RED	BA015B	Fuse F-27 Voltage (Headlamp Switch ON)
2	BLK	BX023B	Ground to J/B 2 (B-144 pin 6) (B-53 Ground)

B-71 Behind the Right Headlamps Lens

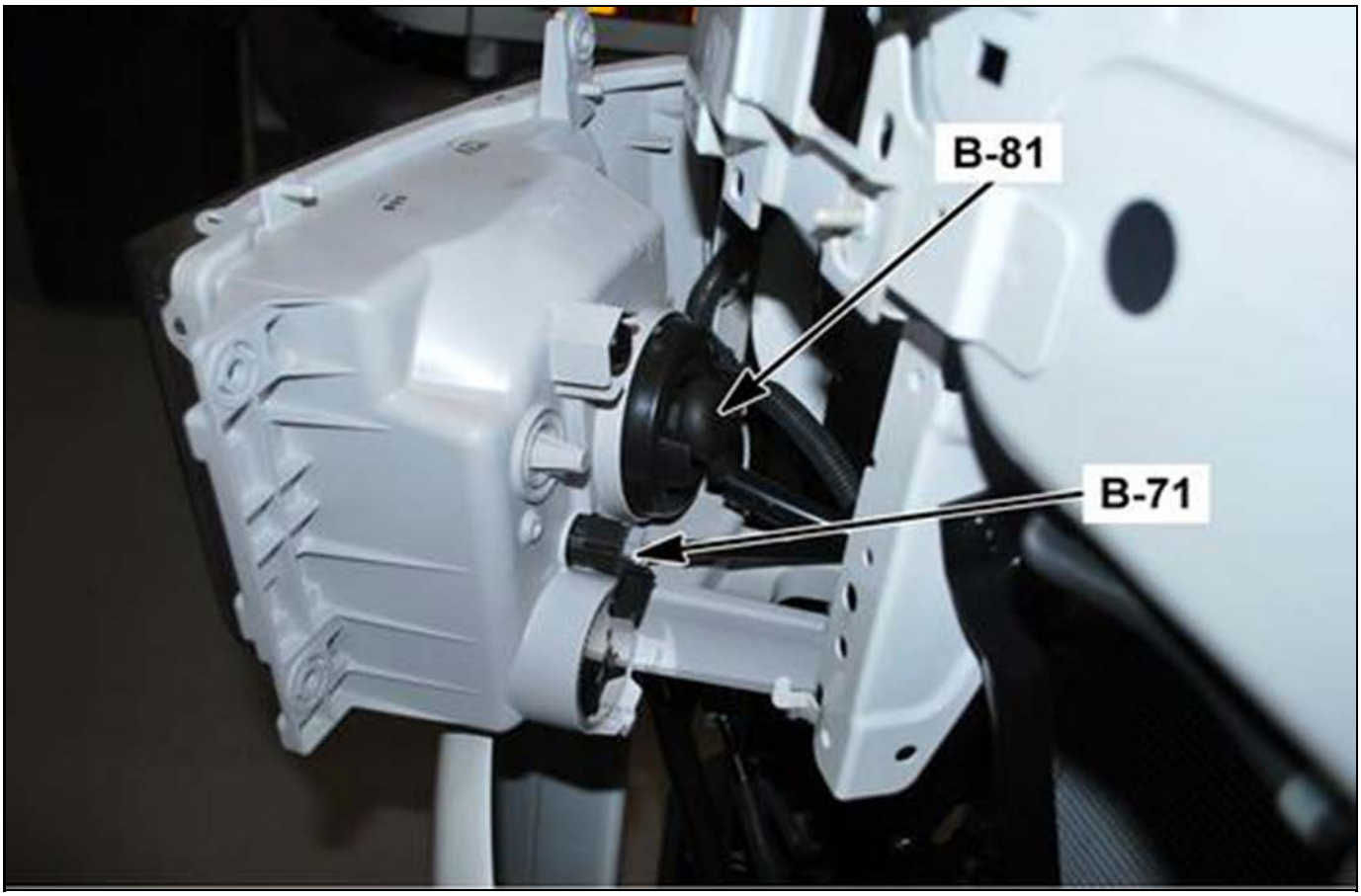

4894819

B-72 Front Turn Signal Lamp (LH)

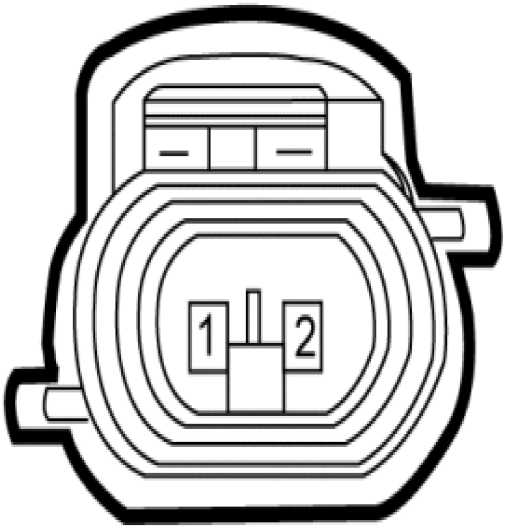

4894823

Connector Part Information		• 6189-0175 • 2-Way F (GRY)	
Pin	**Wire Color**	**Circuit Number**	**Function**
1	GRN/BLK	JA012B	Turn Signal Supply Voltage from J/B 1 (B-134 pin 11)
2	BLK	JX005B	Ground to B-601 Splice Pack (B-51 Ground)

B-72 Left Front Corner of the Vehicle, Behind the Turn Signal Lamp Lens

4894828

B-73 Front Turn Signal Lamp (RH)

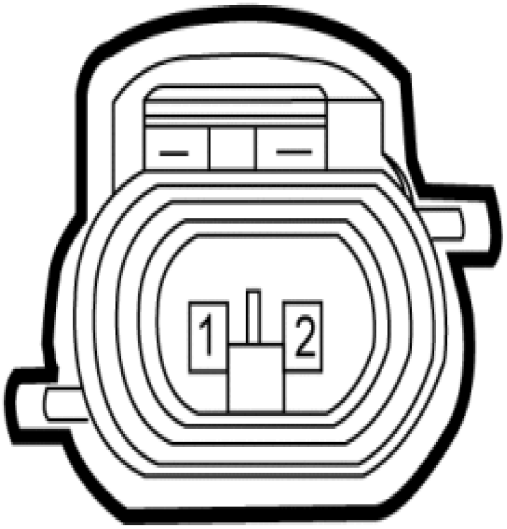

4894823

Connector Part Information		• 6189-0175 • 2-Way F (GRY)	
Pin	**Wire Color**	**Circuit Number**	**Function**
1	GRN/WHT	JA013B	Turn Signal Supply Voltage from J/B 1 (B-138 pin 7)
2	BLK	JX006B	Ground to J/B 2 (B-144 pin 15) (B-53 Ground)

Behind the Right Turn Signal Lamp Lens

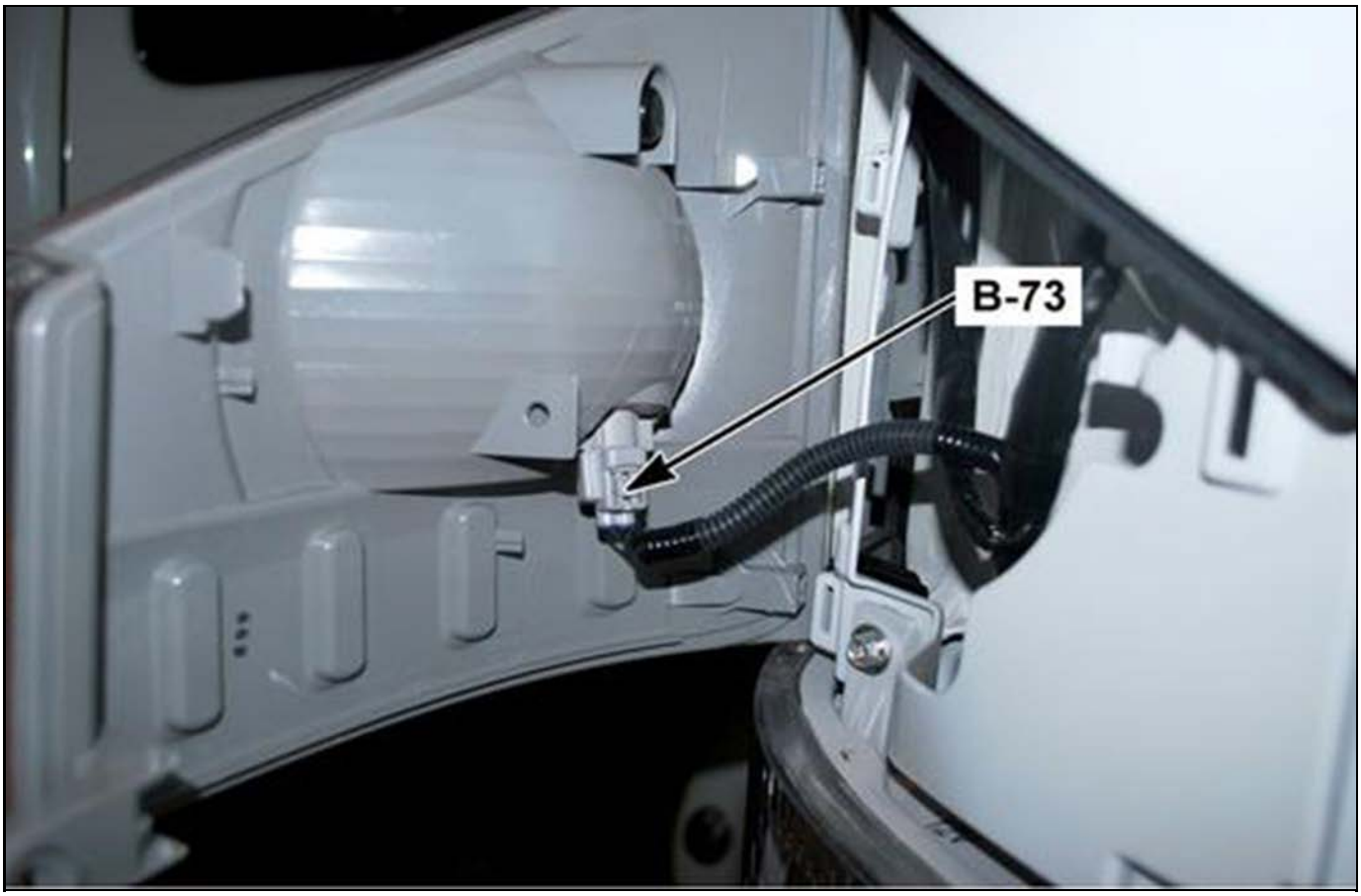

4894835

B-74 Washer Motor

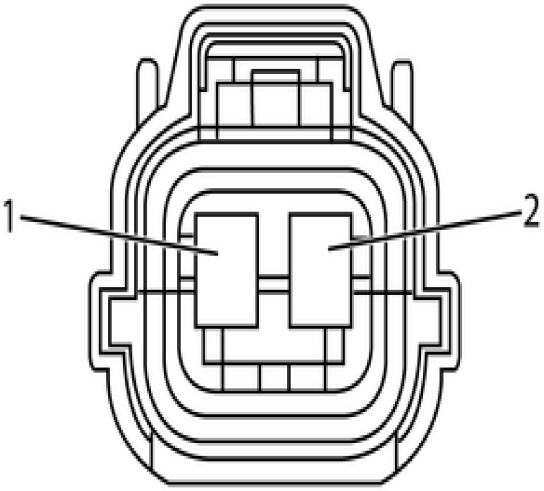

4894843

Connector Part Information		• 6098-0135 • 2-Way F (GRY)	
Pin	**Wire Color**	**Circuit Number**	**Function**
1	BLU/BLK	FA010B	Control Side to Wiper/Exhaust Brake Switch
2	BLU/WHT	FA005B	Ignition Voltage from Fuse F-20

Center Front of Vehicle, Under Hood

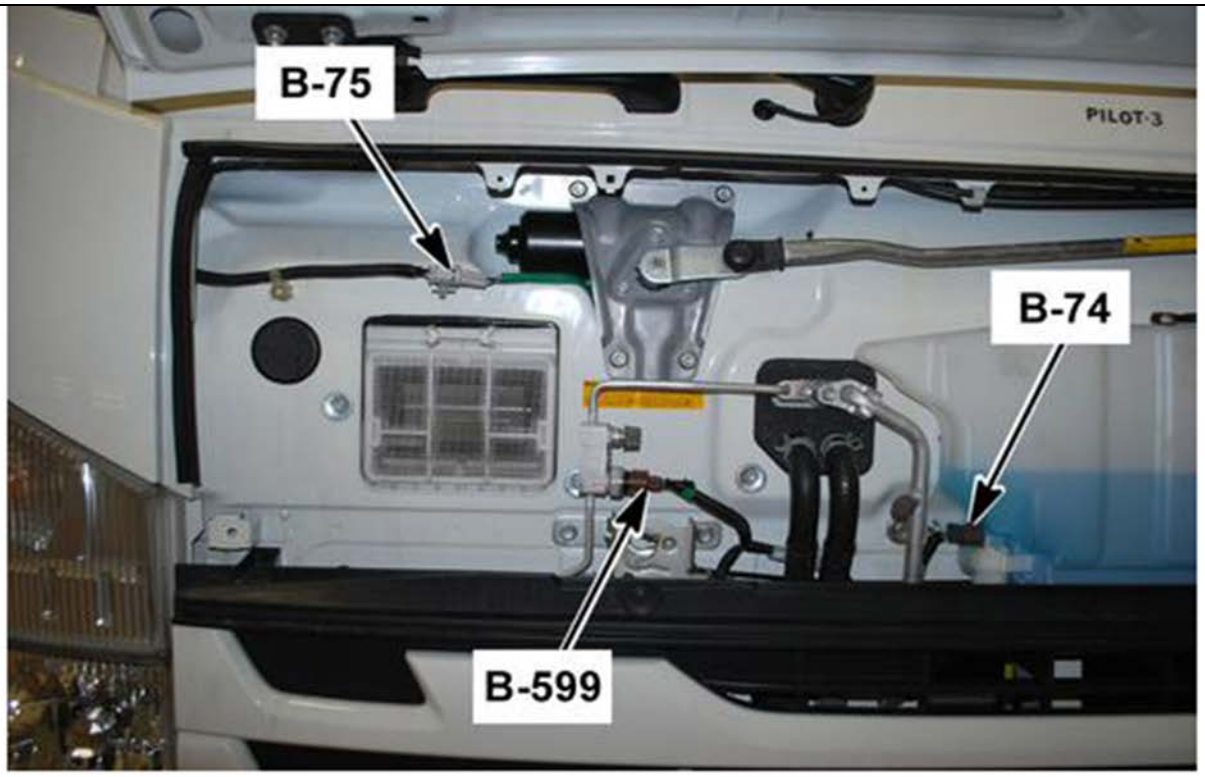

4894851

B-75 Wiper Motor

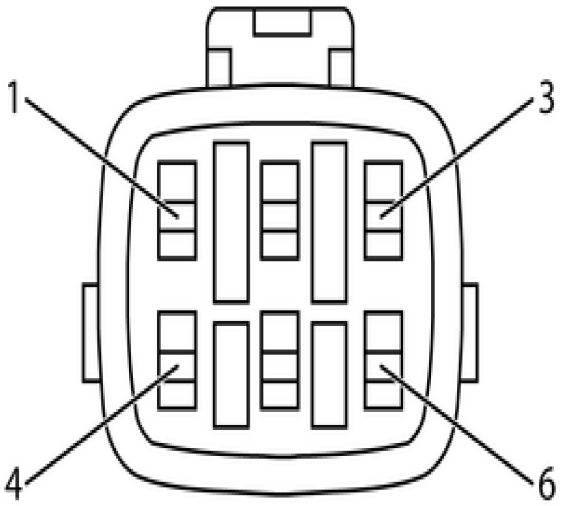

4894864

Connector Part Information		• 6189-0368 • 6-Way F (GRY)	
Pin	**Wire Color**	**Circuit Number**	**Function**
1	BRN/BLK	FA002B	Control Side to Wiper/Exhaust Brake Switch
2	BRN/WHT	FA001B	Low Speed Control Voltage
3	BLU/WHT	FA004B	Ignition Voltage from Fuse F-8, Fuse/Relay Center (Cab)
4	—	—	Not Used
5	BLU/ORN	FA003B	Wiper Park Signal
6	BLK	FX001B	Ground to B-48 Junction Block (B-53 Ground)

Right Front of Vehicle, Under Hood

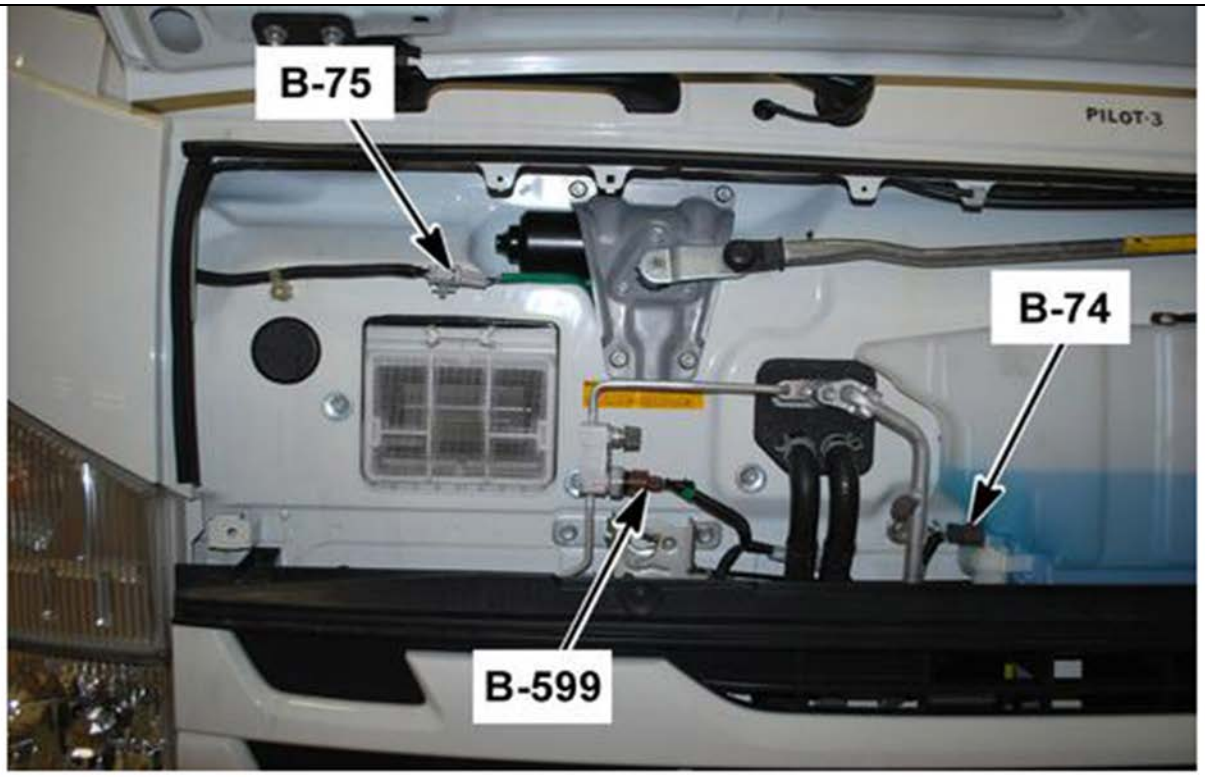

4894851

B-80 Headlamp (LH)

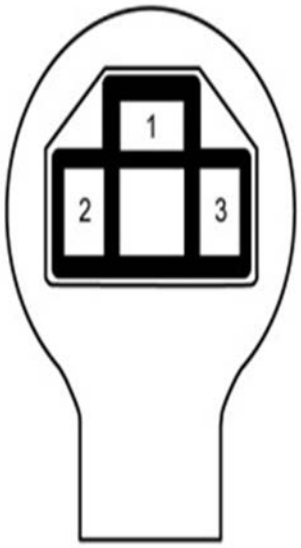

4894878

Connector Part Information		• 7334-1044 • 3-Way F (BLK)	
Pin	**Wire Color**	**Circuit Number**	**Function**
1	WHT/BLU	AA064B	Fuse F-9 Voltage (Headlamp Switch ON) from Fuse/ Relay Center (Cab) for Low Beam
2	RED	AA009B	Fuse F-14 Voltage (Headlamp Switch ON) from Fuse/ Relay Center (Cab) for High Beam
3	BLK	AX002B	Ground to B-49 Junction Block (B-52 and B-53 Ground)

Left Front Corner of the Vehicle, Behind the Headlamps Lens

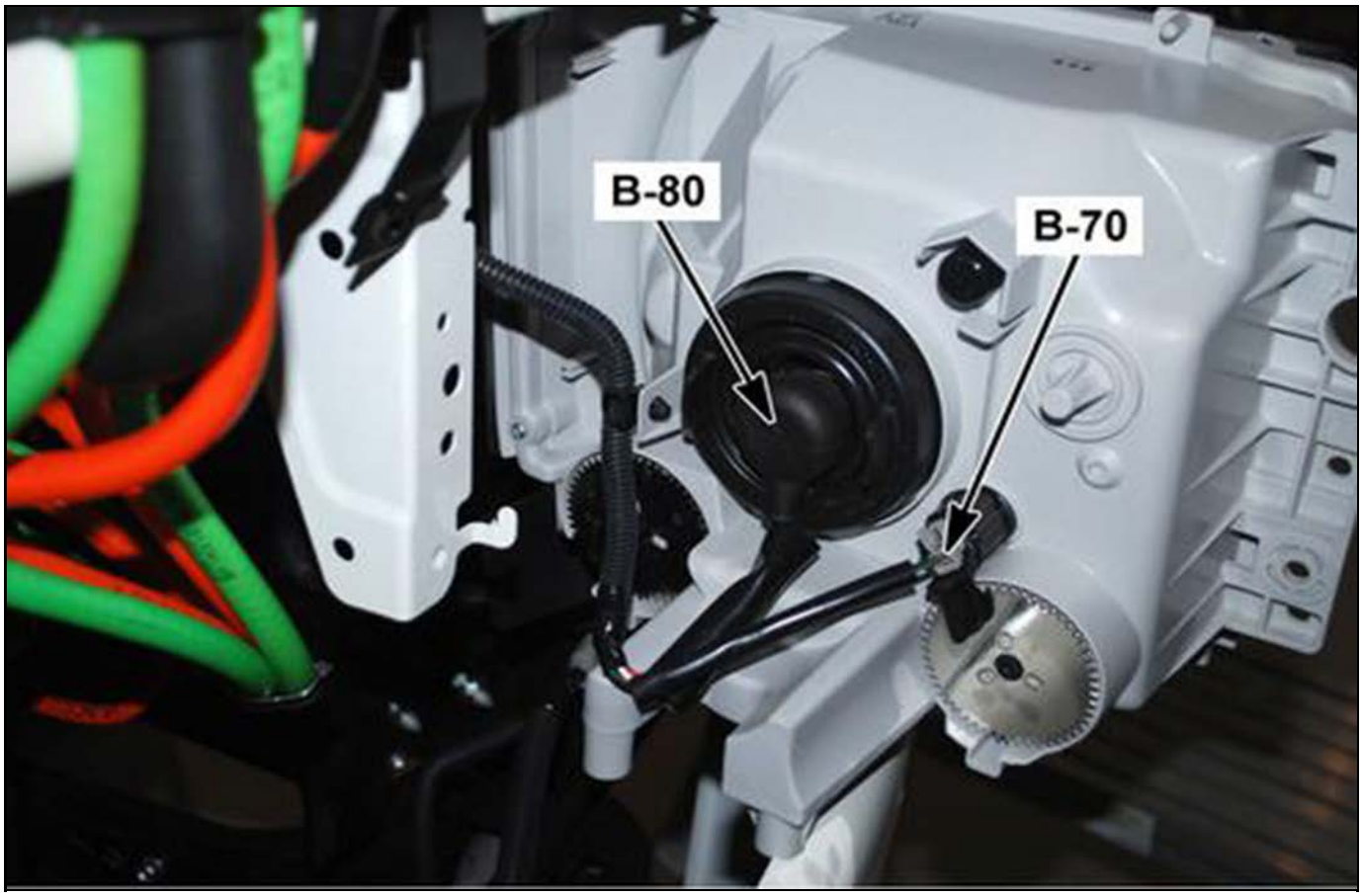

4894901

B-81 Headlamp (RH)

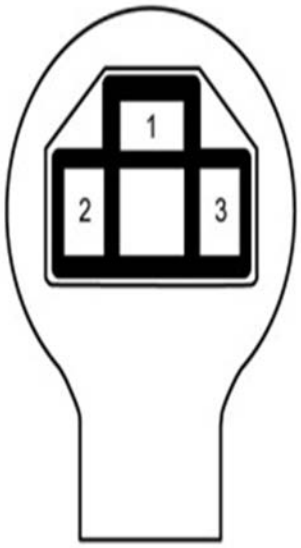

4894878

Connector Part Information		• 7334-1044 • 3-Way F (BLK)	
Pin	**Wire Color**	**Circuit Number**	**Function**
1	WHT/RED	AA065B	Fuse F-11 Voltage (Headlamp Switch ON) from Fuse/ Relay Center (Cab) for Low Beam
2	RED	AA011B	Fuse F-15 Voltage (Headlamp Switch ON) from Fuse/ Relay Center (Cab) for High Beam
3	BLK	AX001B	Ground to B-48 Junction Block (B-52 and B-53 Grounds)

Behind the Right Headlamp Lens

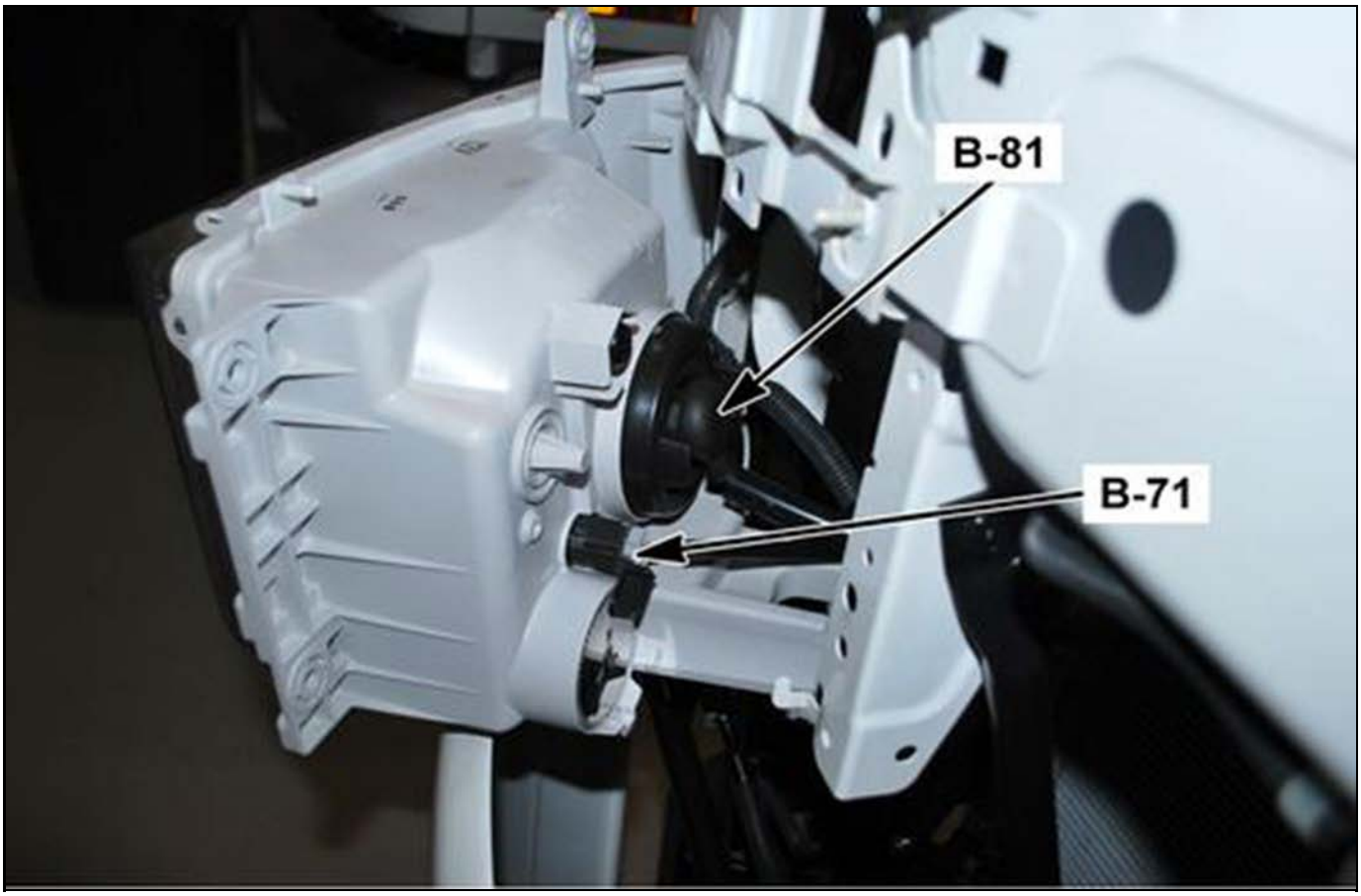

4894950

B-105 Instrument Panel Cluster (IPC)

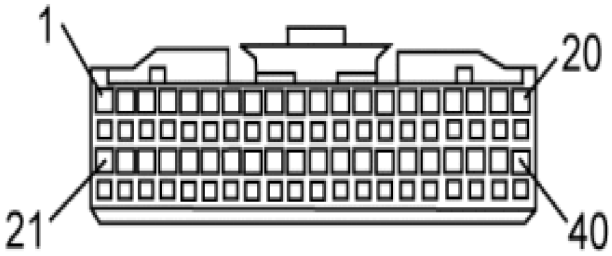

4894955

Connector Part Information		• 1674312-1 • 40-Way F (WHT)	
Pin	**Wire Color**	**Circuit Number**	**Function**
1	BLK/BLU	MA005B	Battery Voltage from Fuse F-22
2	GRN/YEL	MA001B	Ignition Voltage from Fuse F-21
3	BLU	MA053B	Miles Check Signal from Miles/Oil Level Check Switch
4	BLK	MX116B	Ground to B-601 Splice Pack (B-51 Ground)
5	BLK	MX003B	Ground to J/B 2 (B-141 pin 8) (B-53 Ground)
6	LT GRN/RED	BA018B	Fuse F-28 Voltage (Headlight Switch ON), Dimming Control
7	LT GRN/BLK	MA036B	Dimming Control to Dimming Control Switch
8	LT GRN/WHT	MA019B	Fuel Level Gauge Control
9	BLU/WHT	TF007B	CAN 1 High (J1939)
10	BLU	TF008B	CAN 1 Low (J1939)
11	—	—	Not Used
12	BLK/ORN	MA012B	Diagnostic Switch Signal
13	WHT/BLU	PA028B	Charge Indicator (Red) Control
14	—	—	Not Used
15	WHT/BLK	MA004B	Brake Indicator Control
16–17	—	—	Not Used
18	WHT/BLU	MA085B	Voltage to Primary and Secondary Air Pressure Gauges
19	WHT/GRN	MA083B	Primary Air Pressure Gauge Signal
20	VIO/RED	MA084B	Secondary Air Pressure Gauge Signal
21	WHT	MA086B	Low Reference for Primary and Secondary Air Pressure Gauges
22	YEL/BLK	IC010B	Malfunction Indicator Lamp (MIL) Control
23	BRN/WHT	MA009B	Fuel Sedimenter (Water Separator)
24	ORN/BLU	IC008B	Glow Plug Indicator Control
25	GRN/ORN	OA059B	Check Trans Indicator (Amber) Control
26	GRY	OA056B	Trans Fluid Temperature Indicator (Red) Control
27	—	—	Not Used
28	BLK/ORN	OA057B	Range Inhibitor Signal
29	RED	AA001B	High Beam Indicator Supply Voltage
30	GRN/WHT	JA007B	Right Turn Signal Indicator Control
31	GRN/BLK	JA006B	Left Turn Signal Indicator Control
32	—	—	Not Used
33	YEL/GRN	AA036B	DRL Indicator Control (Green)
34	BLU/YEL	MA015B	Air Filter Switch Signal
35	—	—	Not Used
36	WHT/GRN	MA010B	Seat Belt Indicator
37	BLU/YEL	MA002B	Oil Pressure Indicator Control from Engine Oil Pressure Switch
38	GRN/WHT	MA051B	Oil Level Switch
39	WHT	MA056B	Oil Level Indicator Control from Miles/Oil Level Check Switch
40	—	—	Not Used

B-105

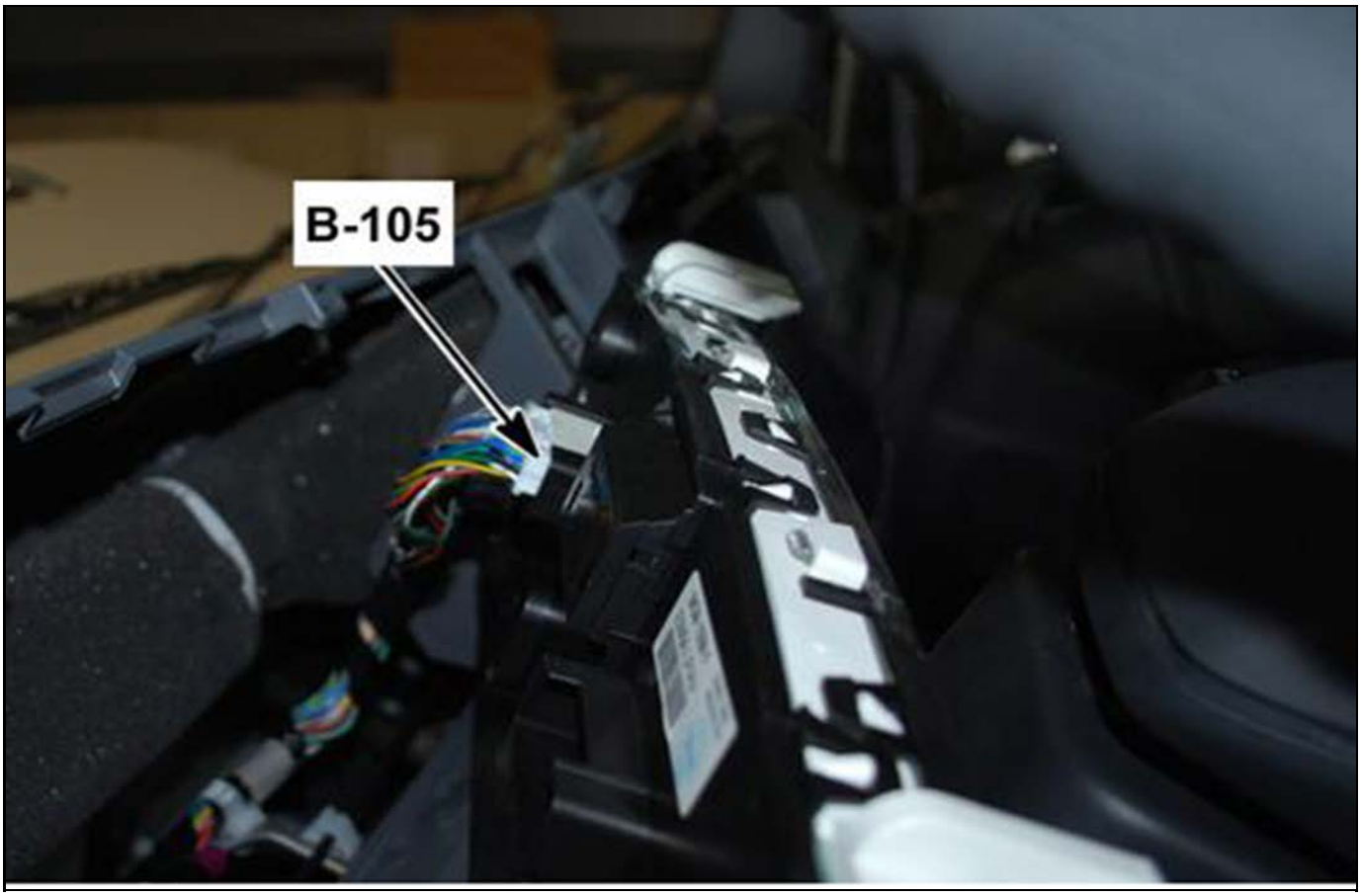

4894961

B-115

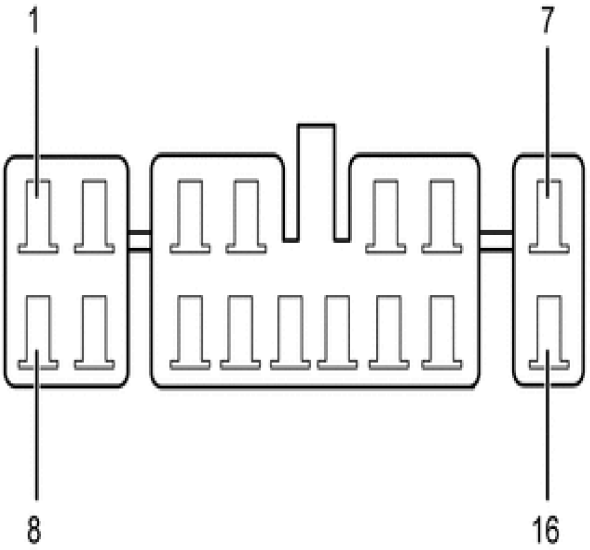

4894992

Connector Part Information		• 6240-5123 • 16-Way F (LT GRY)	
Pin	**Wire Color**	**Circuit Number**	**Function**
1–2	—	—	Not Used
3	LTGRN/BLK	BA030B	Dimming Control to Dimming Control Switch
4	RED/YEL	RA002B	Ignition Voltage from Fuse F-24
5	GRN/YEL	RA007B	Ignition Voltage from B-3
6	ORN	RA004B	Left Speaker Output (+)
7	GRY	RA006B	Right Speaker Output (+)
8–9	—	—	Not Used
10	BLK	RX001B	Ground to B-377 Splice Pack (B-51 Ground)
11	LT GRN/RED	BA017B	Fuse F-28 Voltage (Headlight Switch ON), Dimming Control
12–13	—	—	Not Used
14	RED	RA001B	Battery Voltage from Fuse F-3
15	BLK	RA003B	Left Speaker Output (-)
16	GRN	RA005B	Right Speaker Output (-)

B-115 Center of the IP, Back of the Radio

4895010

B-120 Isuzu Health Repport RS232 Connector

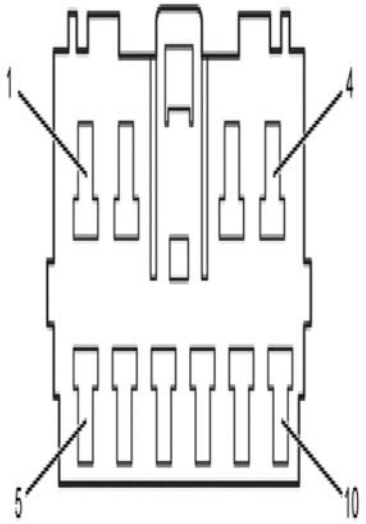

4895038

Connector Part Information		• 7323-8307-60 • 10-Way F (GRN)	
Pin	**Wire Color**	**Circuit Number**	**Function**
1	RED	KF006B	Key CK Signal
2	—	—	Not Used
3	RED/YEL	KF007B	Key SD Signal
4	RED/WHT	KF004B	Mode CN Signal
5	RED/GRN	KF008B	Key RD Signal
6	BLK/BLU	KF005B	Battery Voltage from Fuse F-22
7	BLU/WHT	TF142B	CAN 1 High
8	RED/BLK	KF009B	Ignition Voltage from Fuse F-18, Fuse/Relay Center (Cab)
9	BLU	TF141B	CAN 1 Low
10	BLK	KU004B	Ground to J/B 2 (B-144 pin 8) (B-53 Ground)

B-120 Center of the Instrument Panel, Below the Fuse/Relay Center (Cab)

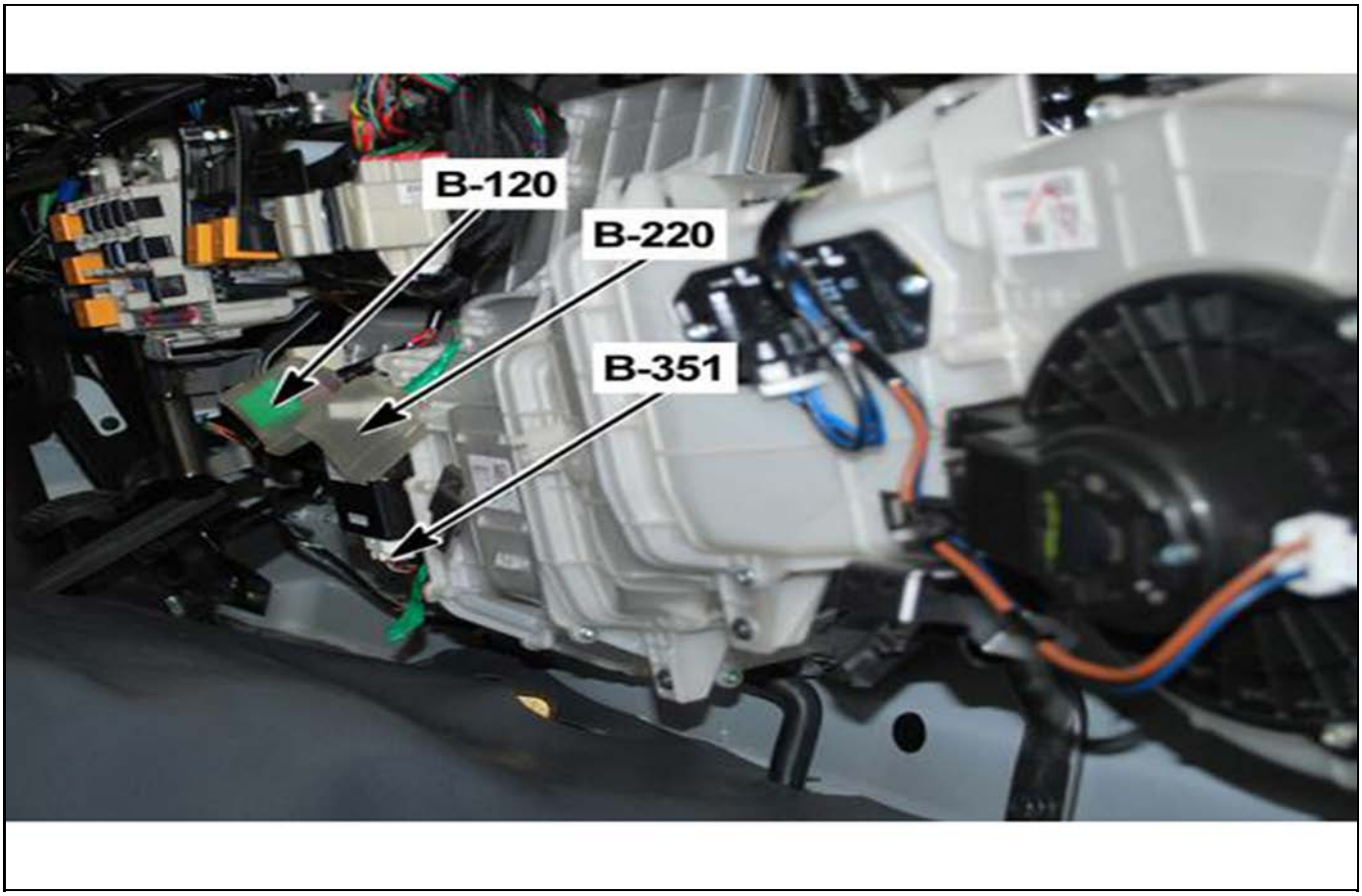

4895056

B-130 Ignition Switch

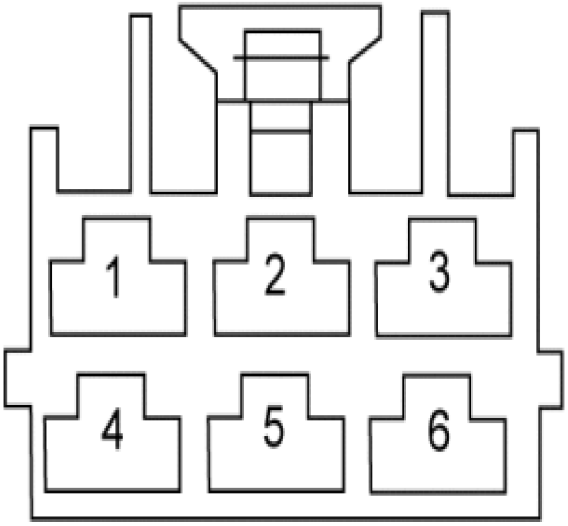

4895076

Connector Part Information		• 6098-1716) • 6-Way F (WHT	
Pin	**Wire Color**	**Circuit Number**	**Function**
1	RED/BLU	PA008B	Supply Voltage To Fuses F-16, F-17
2	BLK/WHT	PA029B	Supply Voltage To Fuse F-13
3	BLK/YEL	PA003B	Battery Voltage from Fuse FL-12
4	BLK/RED	PA014B	Battery Voltage from Splice 26 (Fuse FL-6)
5	RED/YEL	PA007B	Supply Voltage To Fuse F-23 and F-24
6	WHT/RED	PA030B	Supply Voltage To Fuses F-7, F-18, F-20, F-21

B-130 On the Left Side of the Steering Column Under the Steering Column Trim Covers

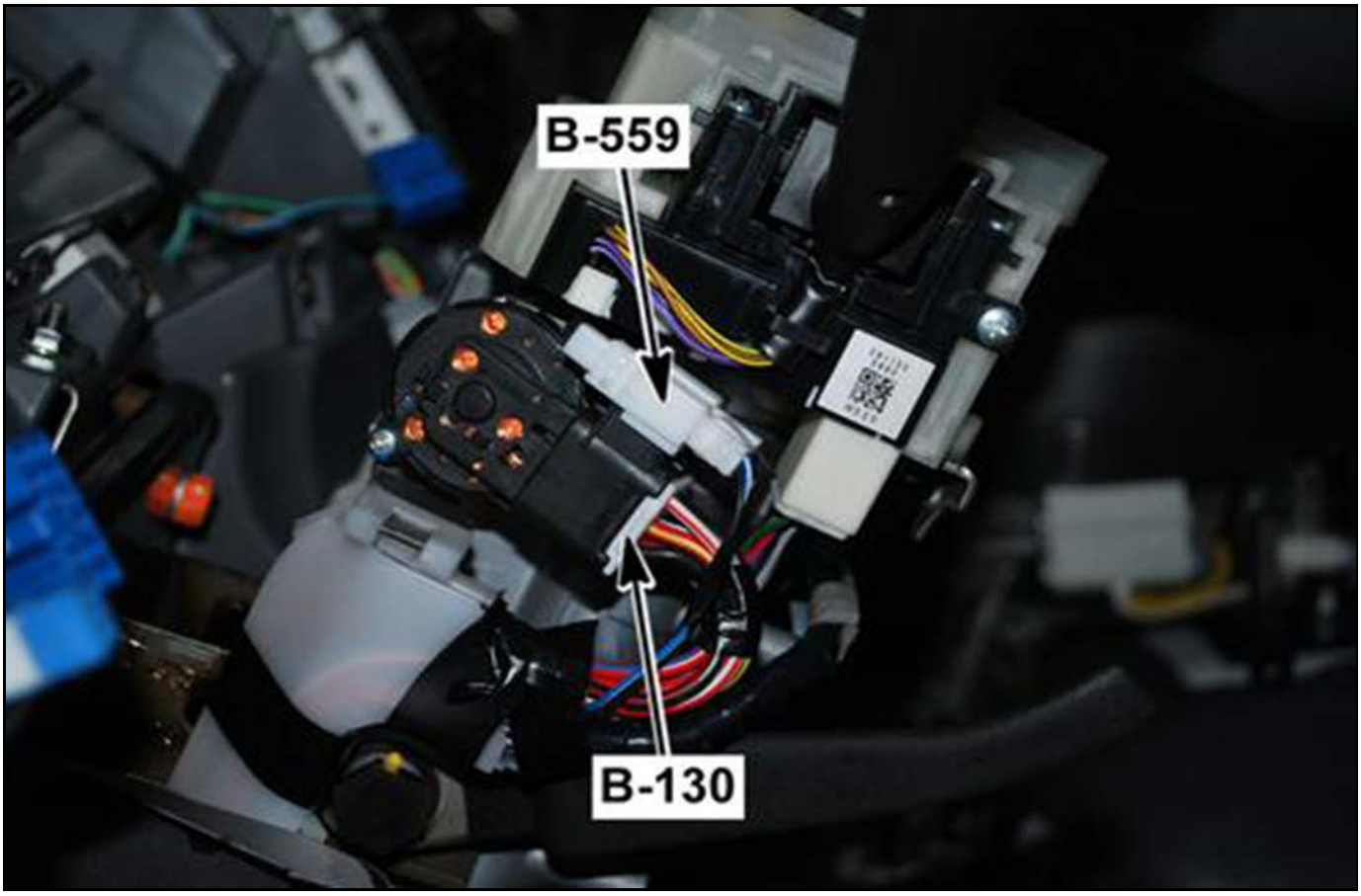

4895111

B-131 Junction Block (J/B) 1

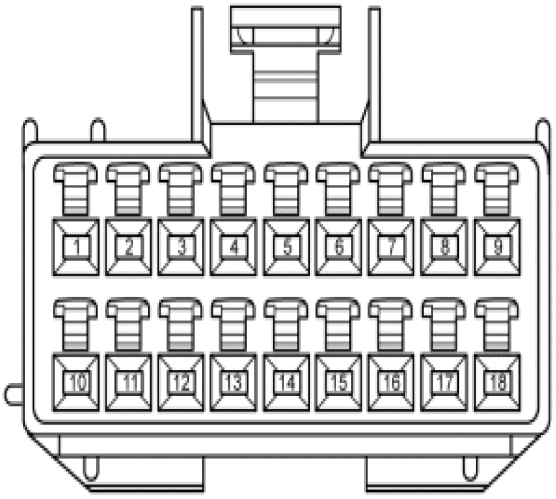

4895129

Connector Part Information		• 7383-0482 • 18-Way F (WHT)	
Pin	**Wire Color**	**Circuit Number**	**Function**
1	GRN/WHT	JA011B	Side Turn Signal (RH) Control Voltage from Flasher Module
2	RED/YEL	WA107B	Ignition Voltage from Fuse F-23 from Fuse/Relay Center (Cab) (B-23 pin 4)
3	—	—	Not Used
4	BLU/BLK	FA011B	Washer Motor Control to Wiper/Exhaust Brake Switch
5	BLU/BLK	FA009B	Washer Motor Input to Intermittent Relay
6	GRN/BLK	JA010B	Side Turn Signal (LH) Control Voltage from Flasher Module
7	—	—	Not Used
8	GRN/RED	BA041B	Fuse F-27 Voltage (Headlamp Switch ON) to Side Marker Lamp (RH)
9	BLU	HA066B	Switched Output Voltage from X-20 Compressor Clutch Relay from Relay
10	BLK/BLU	MA055B	Battery Voltage from Fuse F-22 to Miles/Oil Level Check Switch
11	BLK/ORN	IC001B	Ignition Voltage from Fuse F-20 to Engine Control Module (ECM) and Diesel Exhaust Fluid (DEF) Control Module
12	—	—	Not Used
13	RED/BLK	HC001B	Fuse F-18 Voltage to Remote Keyless Entry (RKE) Module
14	LT GRN/RED	BA022B	Fuse F-28 Voltage (Headlamp Switch ON) from Fuse/Relay Center (Cab) (B-22 pin 11) to DPF Regen Switch
15	LT GRN/RED	BA033B	Fuse F-28 Voltage (Headlamp Switch ON) to DPF Regen Switch
16	LT GRN/BLK	BA045B	Dimming Control to Rear Dome Lamp Switch (for Rear Manufacture Connector J-118)
17	—	—	Not Used
18	RED/BLK	IC180B	Fuse F-18 Voltage to Upfitter Connector (H-104 pin A)

B-131 Behind the HVAC Housing, On the Right of the FUSE/Relay Center (Cab)

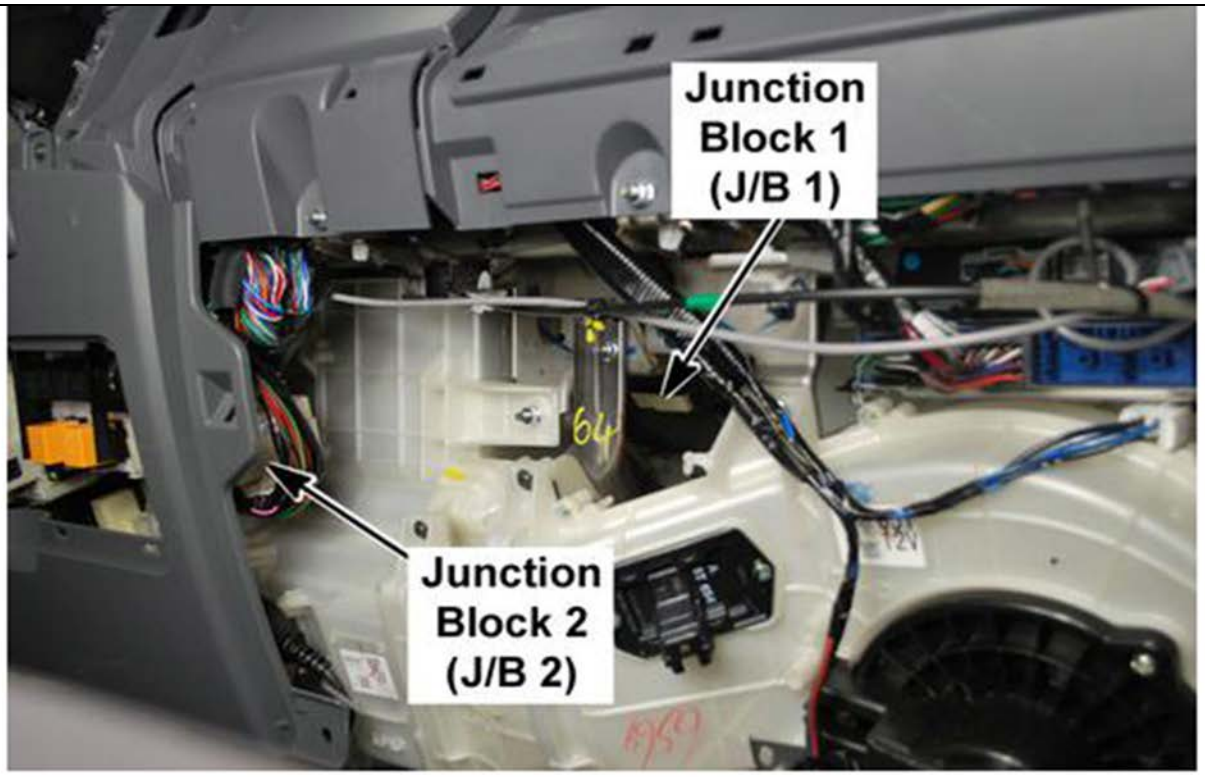

4895164

B-132 Junction Block (J/B) 1

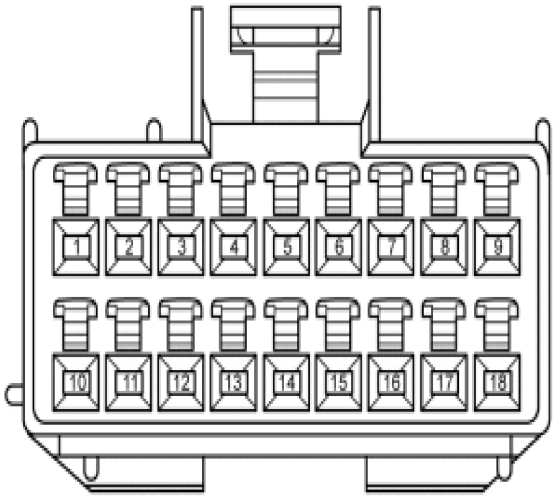

4895186

Connector Part Information		• 7383-0483-30 • 18-Way F (BLK)	
Pin	**Wire Color**	**Circuit Number**	**Function**
1	GRN/BLK	JA014B	Left Turn Signal Supply Voltage from Flasher Module
2	GRN/BLK	JA008B	Left Turn Signal Supply Voltage from Flasher Module
3	RED/BLU	JA005B	Hazard Switch Signal to the Flasher Module
4	—	—	Not Used
5	WHT/BLU	PA021B	Charge Indicator (Red) Control from Generator
6	LT GRN/RED	BA014B	Fuse F-28 Voltage (Headlamp Switch ON) to Cruise Main Switch
7	LT GRN/RED	BA039B	Fuse F-28 Voltage (Headlamp Switch ON) to Rear Dome Lamp Switch
8	GRN/RED	BA040B	Fuse F-27 Voltage (Headlamp Switch ON) to Side Marker Lamp (LH)
9	RED/BLK	FA016B	Fuse F-18 Voltage to Intermittent Wiper Relay
10	BLK/BLU	MA054B	Battery Voltage from Fuse F-22 to Miles/Oil Level Check Switch
11	BLK/ORN	IC014B	Ignition Voltage from Fuse F-20 to J/B 2 (B-145 pin 2)
12	RED/BLU	JA018B	Hazard Switch Signal from the Hazard Switch
13	LT GRN/RED	OA091B	Fuse F-18 Voltage to Shift Lever
14	—	—	Not Used
15	LT GRN/RED	BA019B	Fuse F-28 Voltage (Headlamp Switch ON) to Hazard Switch
16	VIO/WHT	AA069B	Combination Switch Signal from Combination Switch
17	GRN/RED	BA009B	Fuse F-27 Voltage (Headlamp Switch ON)
18	—	—	Not Used

B-131 Behind the HVAC Housing, On the Right of the FUSE/Relay Center (Cab)

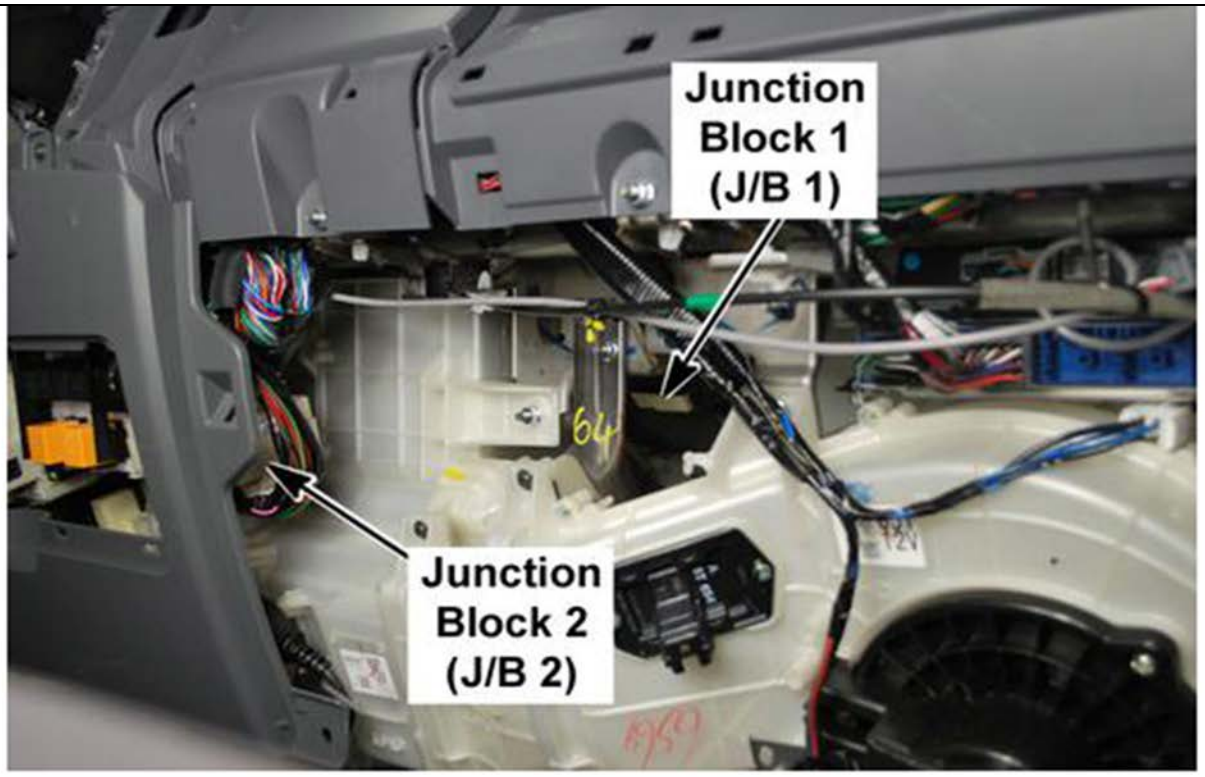

4895164

B-133 Junction Block (J/B) 1

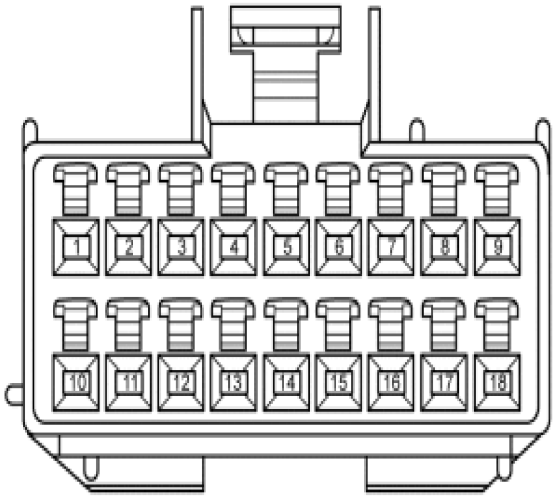

4895199

Connector Part Information		• 7383-0484-40 • 18-Way F (GRY)	
Pin	**Wire Color**	**Circuit Number**	**Function**
1	RED/YEL	WA007B	Ignition Voltage from Fuse F-23 to Power Window Switch
2	BLK/ORN	IC043B	Ignition Voltage from Fuse F-20 from J/B 2 (B- 140 pin 11)
3	RED/BLU	HC004B	Fuse F-18 Voltage from J/B 1 (B-136 pin 7)
4	RED/BLK	PA060B	Battery Voltage from Fuse F-18 from J/B 1)B- 136 pin 7)
5	GRN/WHT	JA007B	Right Turn Signal Supply Voltage to Instrument Panel Cluster (IPC)
6	LT GRN/BLK	BA006B	Dimming Control to Heated Mirror Switch
7	LT GRN/BLK	BA051B	Dimming Control to Dimming Control Switch
8	LT GRN/BLK	BX026B	Dimming Control to Door Lock Switch
9	LT GRN/BLK	BA020B	Dimming Control to Miles/Oil Level Check Switch
10	BLU	HA013B	Switched Output Voltage from X-20 Compressor Clutch Relay to A/C Pressure Switch
11	BLU	HA054B	Switched Output Voltage from X-20 Compressor Clutch Relay to Condenser Fan Relay
12	BLU/BLK	FA010B	Washer Motor Control from Washer Motor
13	RED/BLK	PA031B	Battery Voltage from Fuse F18, Fuse/Relay Center (Cab)
14	WHT/BLU	PA028B	Charge Indicator Control (Red) to IPC
15	RED/BLK	IC186B	Fuse F-18 Voltage to J/B 2 (B-140 pin 5)
16	WHT/BLK	MA098B	Parking Brake Switch Signal from Parking Brake Switch
17	LT GRN/RED	BA021B	Fuse F-28 Voltage (Headlamp Switch ON) to Miles/Oil Level Check Switch
18	—	—	Not Used

B-131 Behind the HVAC Housing, On the Right of the FUSE/Relay Center (Cab)

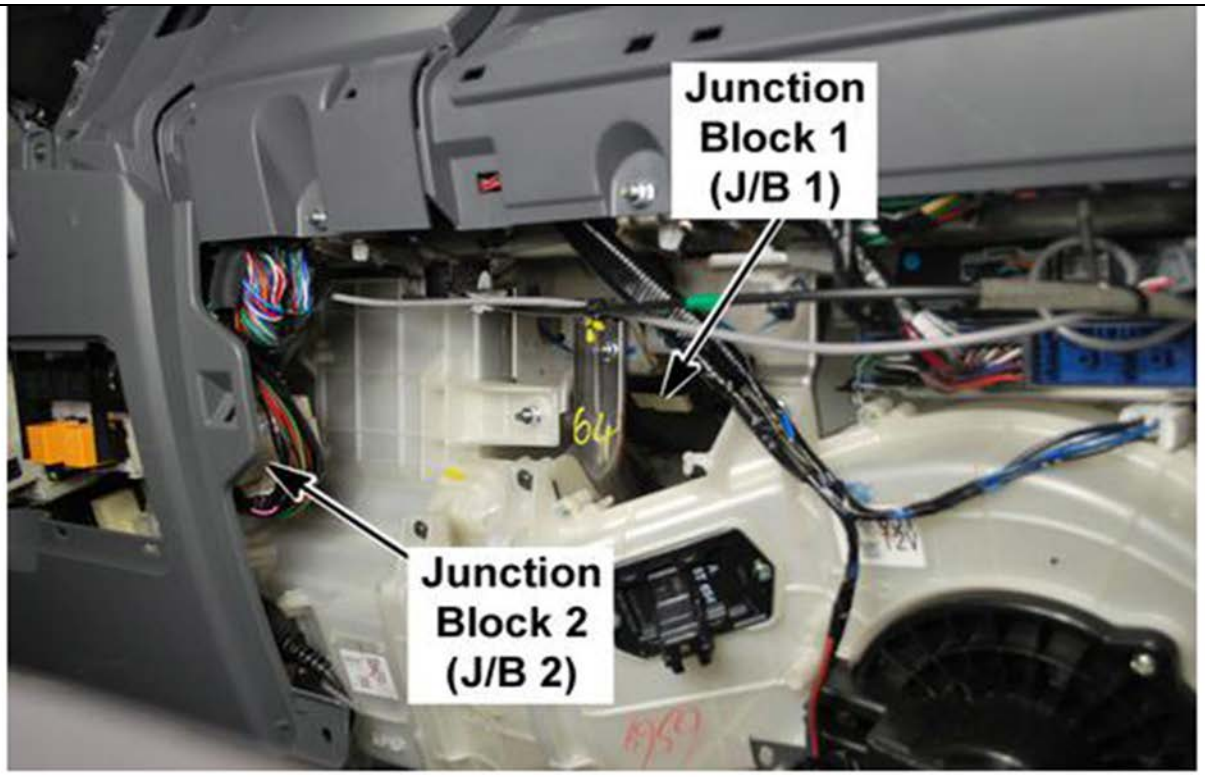

4895164

B-134 Junction Block (J/B) 1

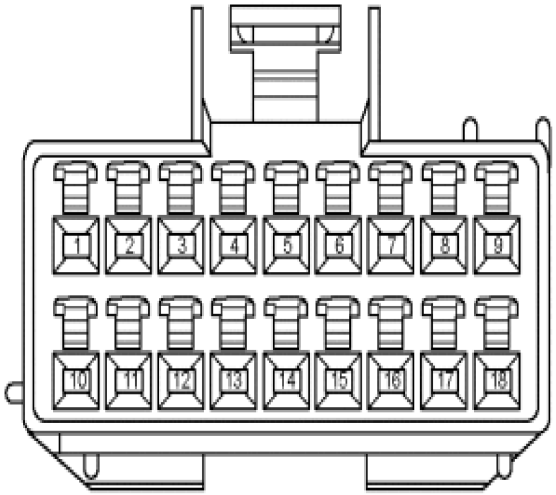

4895209

Connector Part Information		• 7383-0485-90 • 18-Way F (BLU)	
Pin	**Wire Color**	**Circuit Number**	**Function**
1	—	—	Not Used
2	GRN/BLK	JA006B	Left Turn Signal Supply Voltage to Instrument Panel Cluster (IPC)
3	—	—	Not Used
4	VIO/WHT	AA019B	Combination Switch Signal to DRL Module
5	—	—	Not Used
6	WHT/BLK	MA004B	Parking Brake Switch Signal to IPC
7	LT GRN/BLK	BA060B	Dimming Control to J/B 1 (B-138 pin 12)
8	LT GRN/RED	BA012B	Fuse F-28 Voltage (Headlamp Switch ON) to Heated Mirror Switch
9	LT GRN/RED	BA049B	Fuse F-28 Voltage (Headlamp Switch ON) to Dimmer Switch
10	BLK/ORN	OA087B	Ignition Voltage from Fuse F-20 to Transmission Control Module (TCM)
11	GRN/BLK	JA012B	Front Turn Signal (LH) Control Voltage
12	—	—	Not Used
13	—	—	Not Used
14	VIO/WHT	JA109B	Cornering Light Relay Control Coil Control from Diode 3
15	—	—	Not Used
16	LT GRN/BLK	IC094B	Dimming Control to PTO Up/Down Switch
17	WHT/BLU	AA029B	Charge Indicator (Red) Signal to DRL Module
18	—	—	Not Used

B-131 Behind the HVAC Housing, On the Right of the FUSE/Relay Center (Cab)

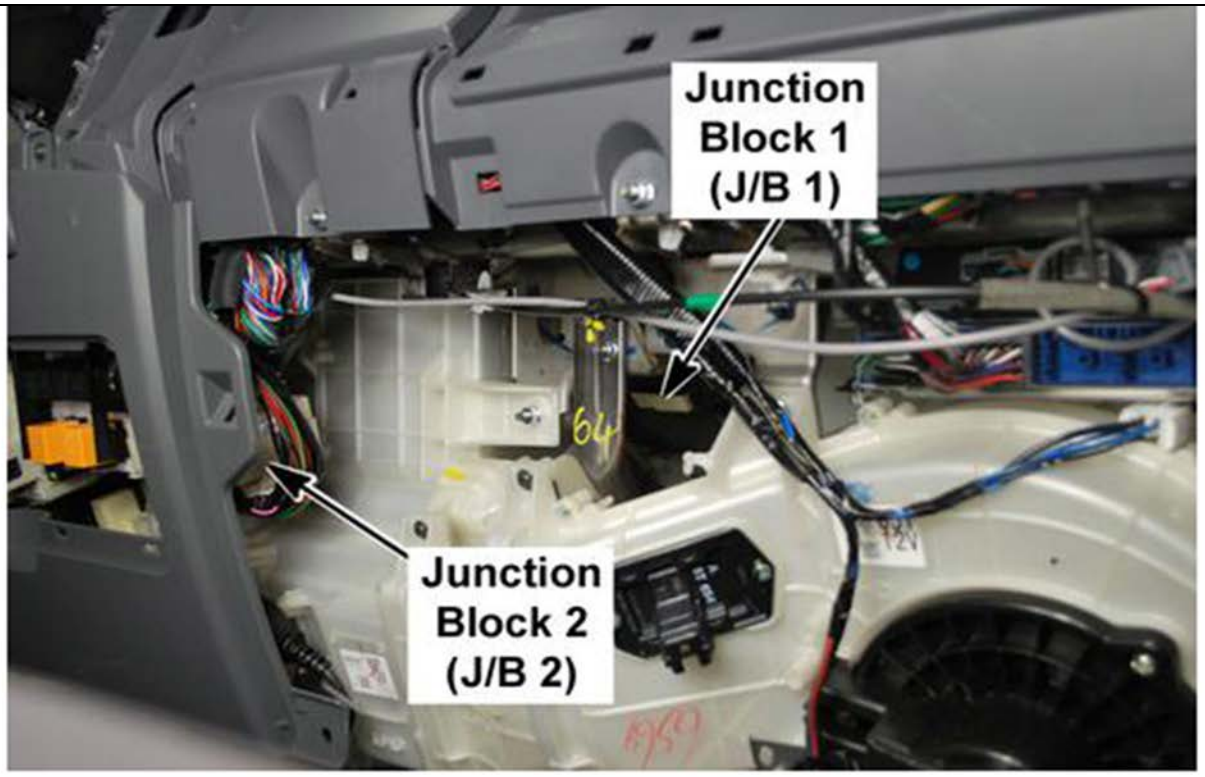

4895164

B-135 Junction Block (J/B) 1

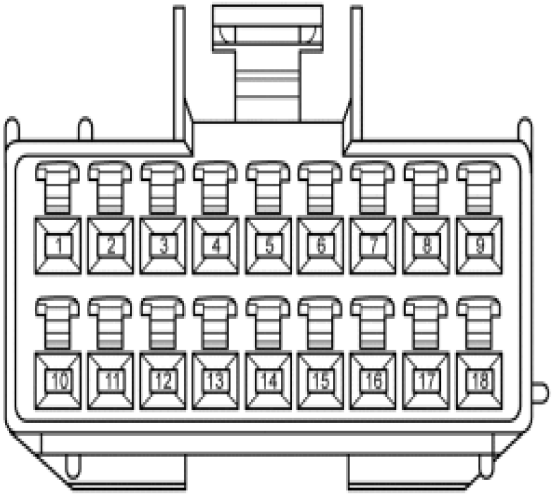

4895222

Connector Part Information		• 7383-0486-50 • 18-Way F (RED)	
Pin	**Wire Color**	**Circuit Number**	**Function**
1	LT GRN/BLK	BA013B	Dimming Control to Cruise Main Switch
2–5	—	—	Not Used
6	RED/YEL	SA003B	Ignition Voltage from Fuse F-24 from J/B 2 (B- 146 pin 5)
7	—	—	Not Used
8	BLK/ORN	IC084B	Ignition Voltage from Fuse F-20 to Radiator Level Control Module
9	LT GRN/BLK	BA043B	Dimming Control to Hazard Switch
10	—	—	Not Used
11	LT GRN/BLK	HX002B	Dimming Control to HVAC Control Panel
12–13	—	—	Not Used
14	RED/YEL	RA002B	Ignition Voltage from Fuse F-24 to Radio
15	RED/YEL	SA040B	Ignition Voltage from Fuse F-24 to Cigar Lighter Relay (Coil Control)
16	LT GRN/RED	BA017B	Fuse F-28 Voltage (Headlamp Switch ON) to Radio
17	LT GRN/BLK	BA030B	Dimming Control to Radio
18	RED/WHT	AA032B	Combination Switch Signal (High Beam) from Combination Switch

B-131 Behind the HVAC Housing, On the Right of the FUSE/Relay Center (Cab)

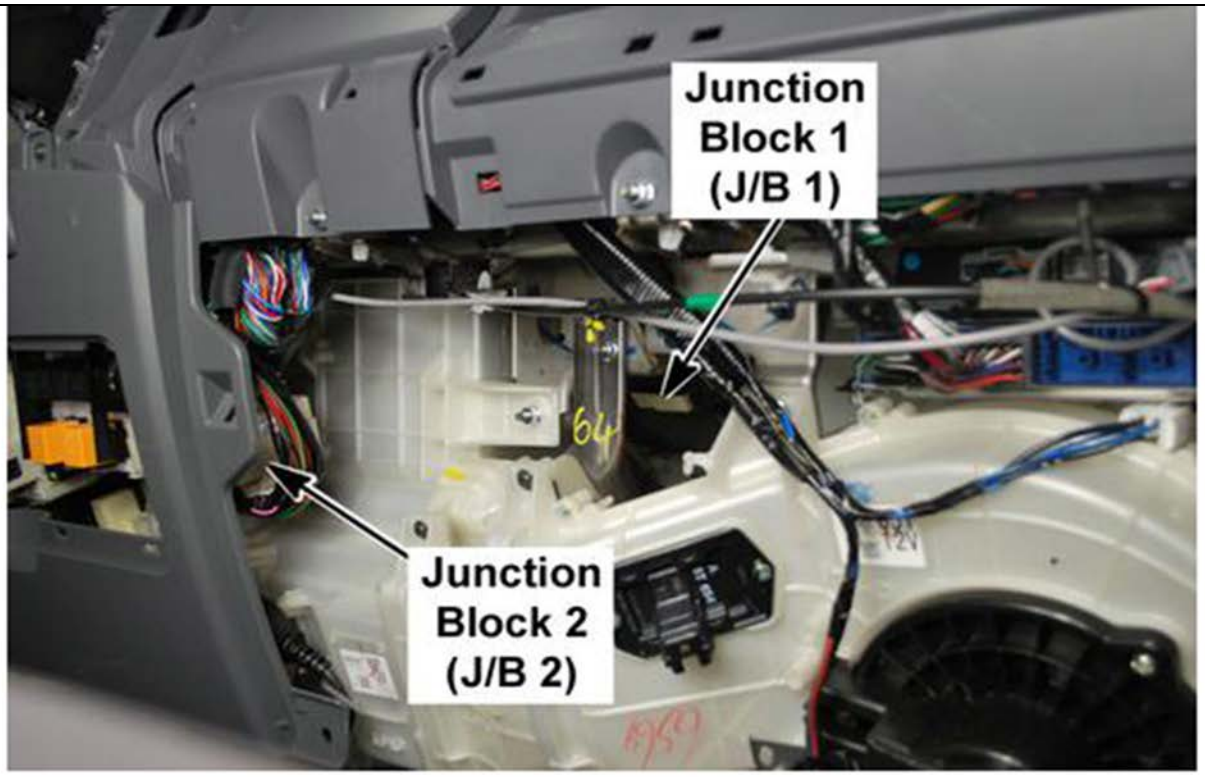

4895164

B-136 Junction Block (J/B) 1

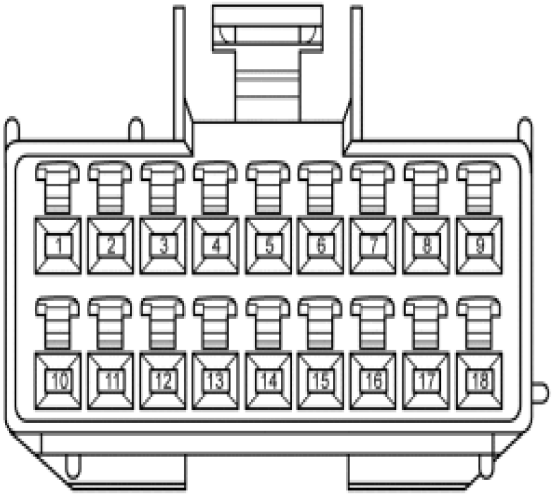

4895285

Connector Part Information		• 7383-0487-80 • 18-Way F (BRN)	
Pin	**Wire Color**	**Circuit Number**	**Function**
1–4	—	—	Not Used
5	GRN/WHT	JA009B	Right Turn Signal Supply Voltage from Flasher Module
6	RED/YEL	SA041B	Ignition Voltage from Fuse F-24 to Power ACC Relay (Coil Feed)
7	RED/BLK	PA060B	Battery Voltage from Fuse F-18 to J/B 1 (B-133 pin 4)
8	BLU/RED	FA021B	Wiper Run/Park Signal to Intermittent Relay
9	BLU/RED	FA020B	Wiper Low Signal from Wiper/Exhaust Brake Switch
10	LT GRN/BLK	BA038B	Dimming Control to DPF Regen Switch
11–12	—	—	Not Used
13	BLK/BLU	PA012B	Battery Voltage from Fuse F-22 from Fuse/Relay Center (Cab) (B-22 pin 3)
14	GRN/WHT	JA015B	Right Turn Signal Supply Voltage from Flasher Module
15	BLK/RED	JA004B	X-5 Cornering Lamp Relay Switched Output Voltage from Fuse/Relay Center (Cab)
16	BLK/ORN	IC141B	Ignition Voltage from Fuse F-20 to DPF Regen Switch
17	BLU/RED	FA006B	X-6 Wiper Main Relay Coil Control
18	—	—	Not Used

B-131 Behind the HVAC Housing, On the Right of the FUSE/Relay Center (Cab)

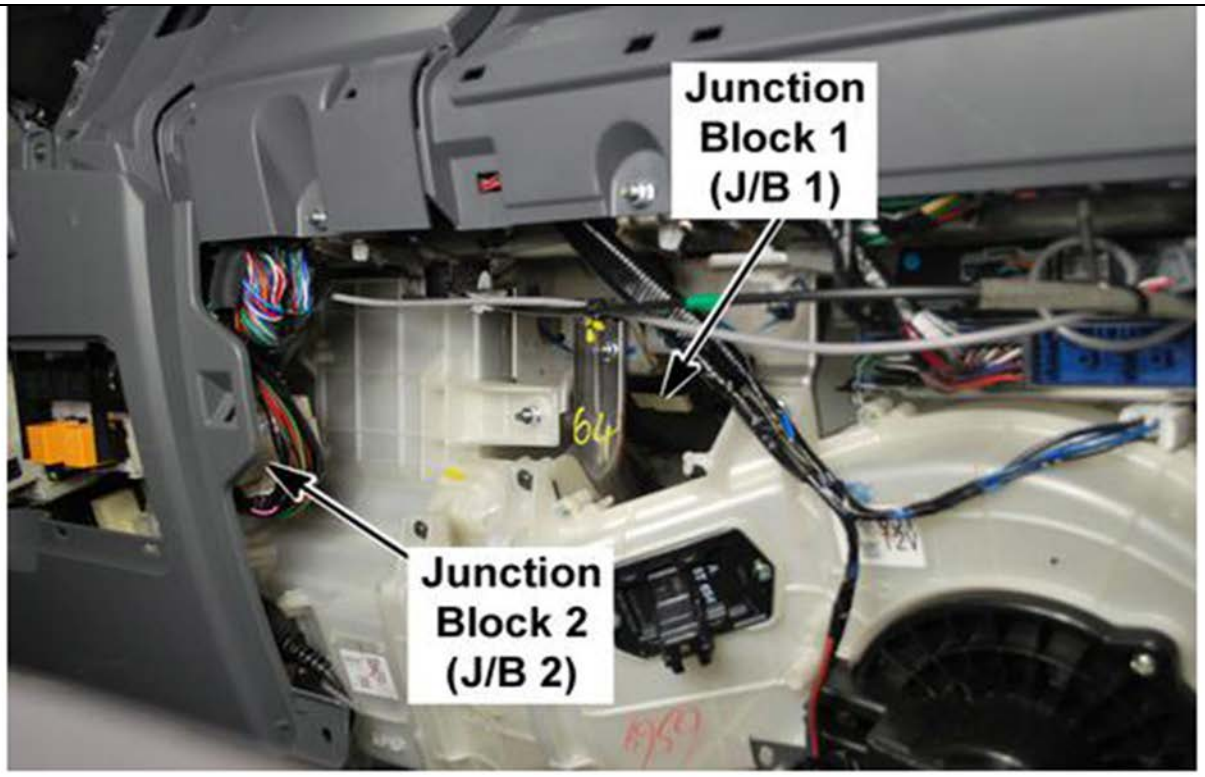

4895164

B-137 Junction Block (J/B) 1

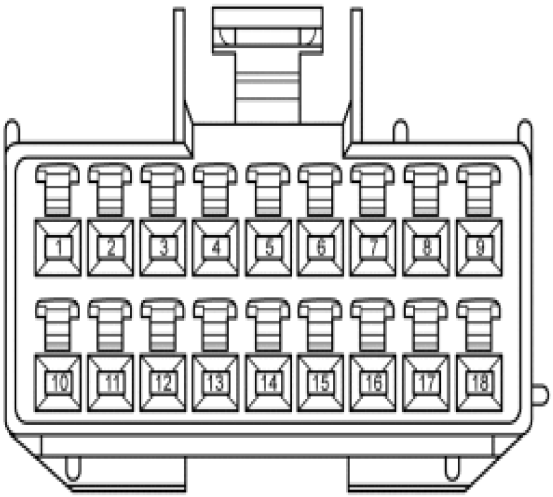

4895341

Connector Part Information		• 7383-0488-60 • 18-Way F (GRN)	
Pin	**Wire Color**	**Circuit Number**	**Function**
1	BLK/BLU	MA005B	Battery Voltage from Fuse F-22 to Instrument Panel Cluster (IPC)
2	BLK/BLU	KF021B	Battery Voltage from Fuse F-22 to Mimamori Module
3	RED/WHT	AA002B	X-15 Headlamp Relay Coil Control from Fuse/Relay Center (B-18 pin 7)
4	BLK/BLU	PA050B	Battery Voltage from Fuse F-22 to J/B 1 (B-137 pin 16)
5	BLK/BLU	KF005B	Battery Voltage from Fuse F-22 to Isuzu Health Report RS232 Connector
6–10	—	—	Not Used
11	LT GRN/BLK	IC077B	Dimming Control to PTO Switch
12–15	—	—	Not Used
16	BLK/BLU	PA050B	Battery Voltage from Fuse F-22 from J/B 1 (B- 137 pin 4)
17–18	—	—	Not Used

B-131 Behind the HVAC Housing, On the Right of the FUSE/Relay Center (Cab)

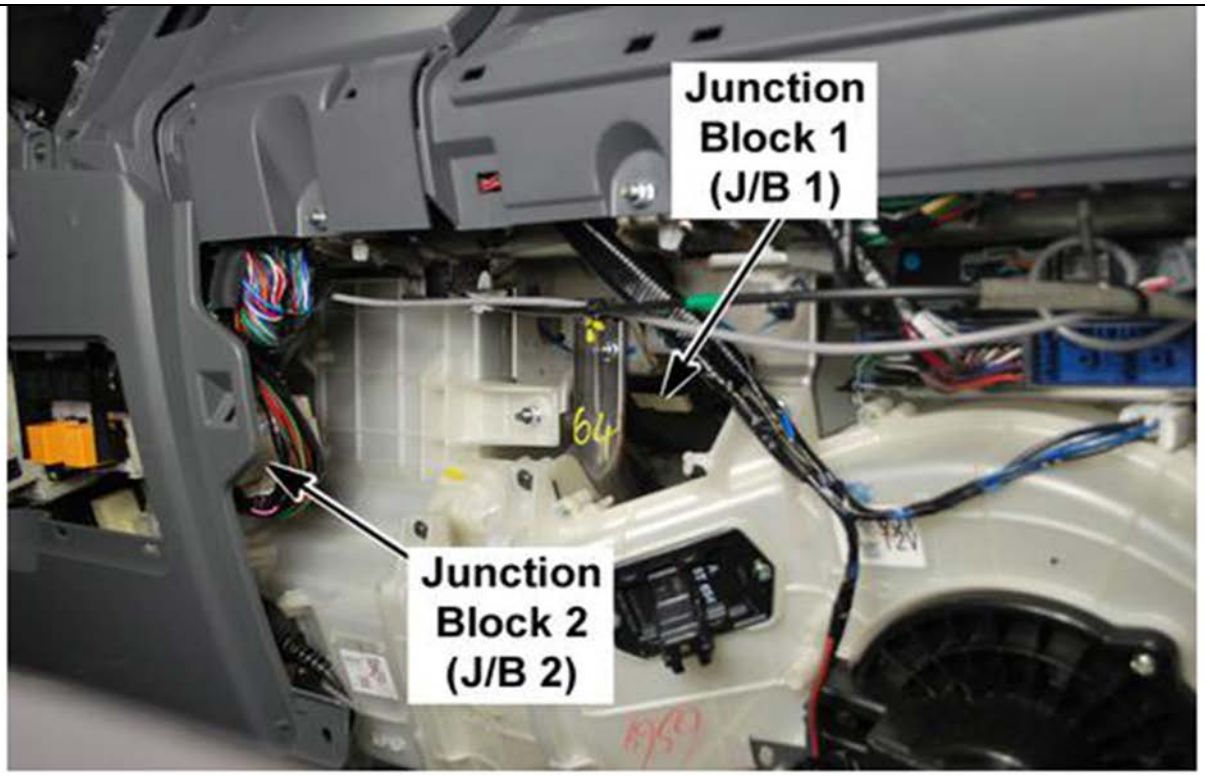

4895164

B-138 Junction Block (J/B) 1

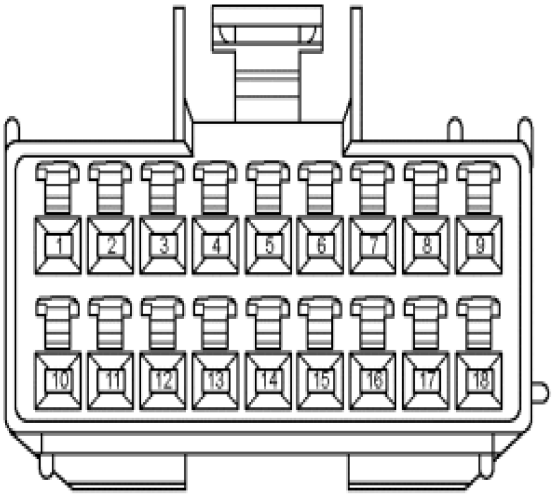

4895353

Connector Part Information		• 7383-0489-50 • 18-Way F (ORN)	
Pin	**Wire Color**	**Circuit Number**	**Function**
1	RED/BLK	KA016B	Fuse F-18 Voltage to Reverse Lamp Relay (Coil Control)
2	LT GRN/BLK	MA036B	Dimming Control to IPC
3–4	—	—	Not Used
5	GRN/RED	BA026B	Fuse F-27 Voltage (Headlamp Switch ON) from Fuse/ Relay Center (Cab) (B-23 pin 6)
6	BLK/RED	QB005B	X-5 Cornering Lamp Relay Switched Output Voltage to Cornering Lamp (RH)
7	GRN/WHT	JA013B	Front Turn Signal (RH) Control Voltage
8	LT GRN/RED	BA042B	Fuse F-28 Voltage (Headlamp Switch ON) to Door Lock Switch
9	—	—	Not Used
10	WHT/BLK	AA021B	Park Brake Switch Signal from DRL Module
11	LT GRN/BLK	BA063B	Dimming Control to Shift Lever
12	LT GRN/BLK	BA060B	Dimming Control to J/B 1 (B-134 pin 7)
13	—	—	Not Used
14	RED/WHT	AA023B	High Beam Headlamp Relay Coil Control
15	BLK/RED	QB004B	X-5 Cornering Lamp Relay Switched Output Voltage to Cornering Lamp (LH)
16	—	—	Not Used
17	LT GRN/RED	BA061B	Fuse F-28 Voltage (Headlamp Switch ON) to Shift Lever
18	RED/YEL	KF003B	Ignition Voltage from Fuse F-23 to Mimamori Module

B-131 Behind the HVAC Housing, On the Right of the FUSE/Relay Center (Cab)

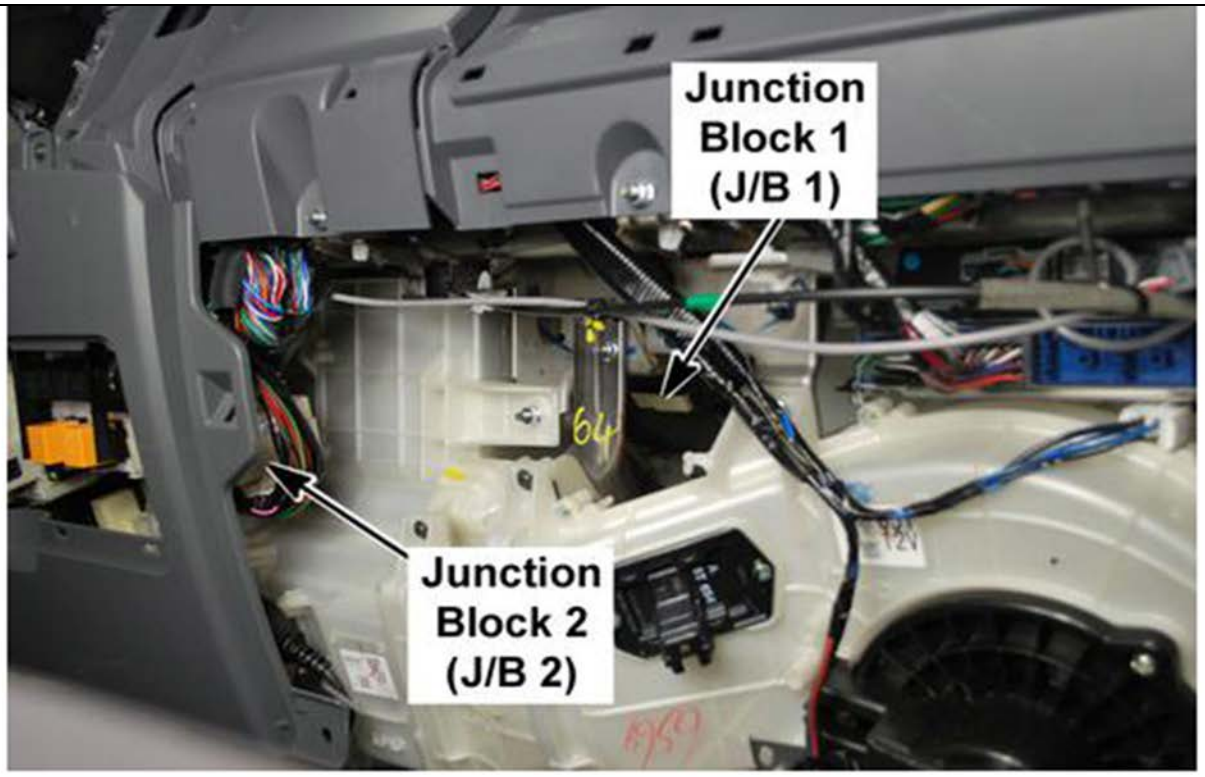

4895164

B-139 Junction Block (J/B) 2

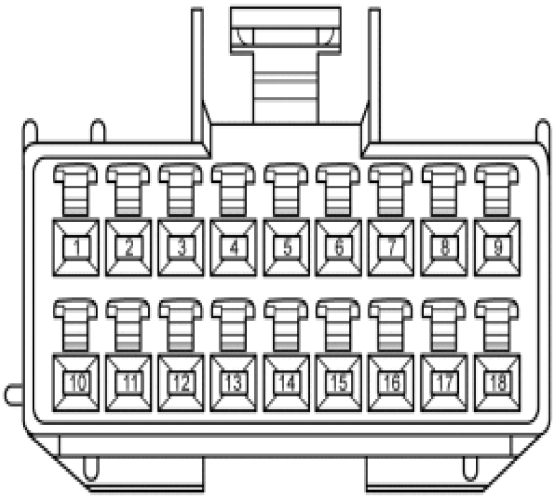

4895388

Connector Part Information		• 7383-0482 • 18-Way F (WHT)	
Pin	**Wire Color**	**Circuit Number**	**Function**
1	—	—	Not Used
2	BLK/RED	HA062B	Fuse F-30 Voltage (Fan Control Switch ON) to Compressor Clutch Relay (X-20)
3–4	—	—	Not Used
5	BLK/RED	HA028B	Fuse F-30 Voltage (Fan Control Switch ON) from Fuse/ Relay Center (Cab)
6	BLK/RED	HA008B	Fuse F-30 Voltage (Fan Control Switch ON) to A/C Switch
7–10	—	—	Not Used
11	BLK/RED	HA064B	Fuse F-30 Voltage (Fan Control Switch ON) to Defroster Switch
12	—	—	Not Used
13	PNK	IC089B	PTO Switch 2 Signal from Switch
14	LT BLU	MA011B	ISO 14230 communication to DLC Connector
15	LT BLU	GG004B	ISO 14230 communication to FMS Module
16	LT BLU	KF018B	ISO 14230 communication to Mimamori Module
17	PNK	IC099B	PTO Switch 2 ON Indicator Control
18	—	—	Not Used

B-131 Behind the HVAC Housing, On the Right of the FUSE/Relay Center (Cab)

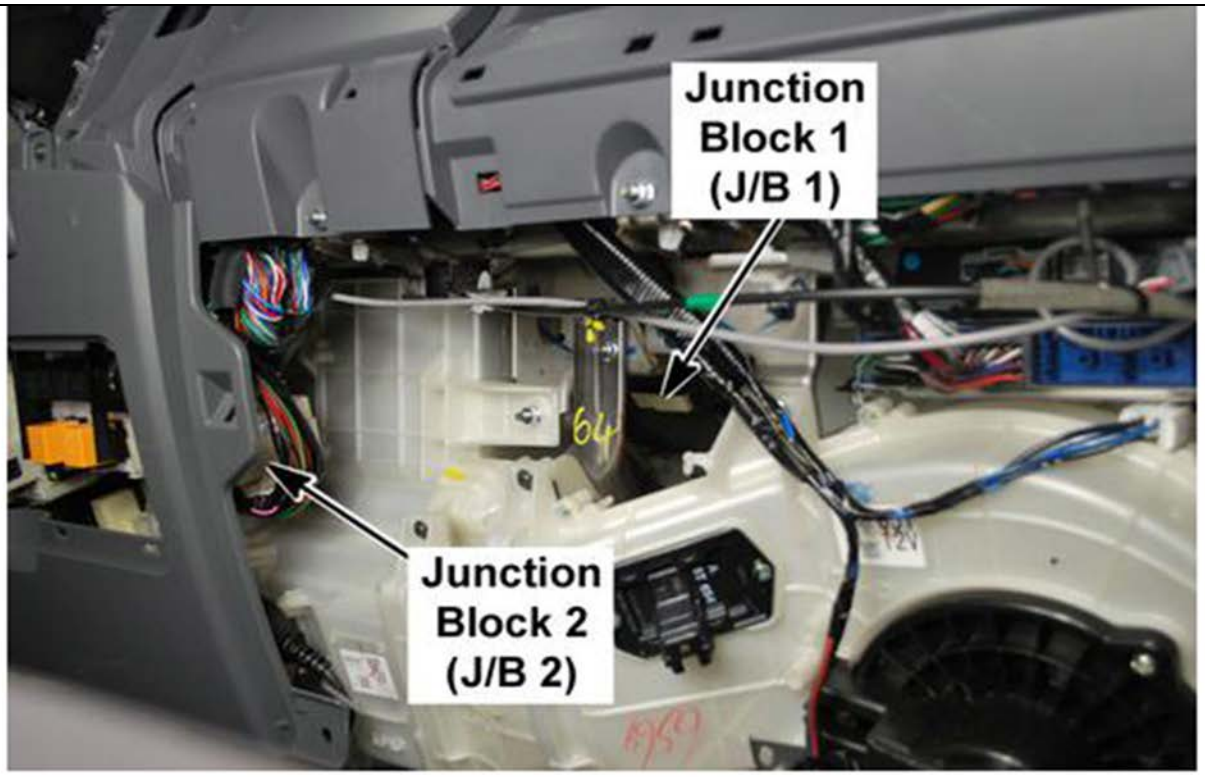

4895164

B-140 Junction Block (J/B) 2

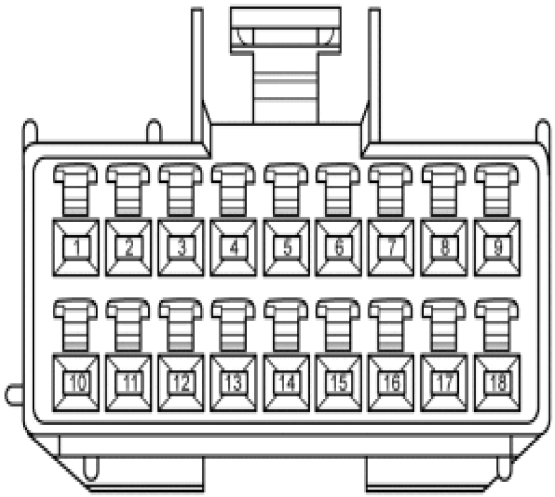

4895401

Connector Part Information		• 7383-0483-30 • 18-Way F (BLK)	
Pin	**Wire Color**	**Circuit Number**	**Function**
1	—	—	Not Used
2	BLK/ORN	IC081B	Ignition Voltage from Fuse F-20, Fuse/Relay Center (Cab)
3	GRN/BLK	VA019B	Door Lock Signal To Door Lock Relay
4	GRN/BLK	VA100B	Door Lock Signal to Diode Door Lock (In)
5	RED/BLK	IC186B	Fuse F-18 Voltage from J/B 1 (B-133 pin 15)
6	RED/BLK	IC196B	Fuse F-18 Voltage to PTO Switch
7	RED/YEL	WA018B	Heated Mirror Switch ON indicator Control Voltage
8–10	—	—	Not Used
11	BLK/ORN	IC043B	Ignition Voltage from Fuse F-20 to J/B 1 (B-133 pin 2)
12	GRN/BLK	VA004B	Door Lock Signal from Front Door Lock Switch
13	GRN/YEL	PA151B	Ignition Voltage from Fuse F-21 from Fuse/Relay Center (Cab)
14	GRN/YEL	MA001B	Ignition Voltage from Fuse F-21 to Instrument Panel Cluster (IPC)
15	GRN/YEL	GG012B	Ignition Voltage from Fuse F-21 to B-454 Splice Pack
16–17	—	—	Not Used
18	RED/BLK	KF009B	Fuse F-18 Voltage to Health Report RS232 Cable Connector

B-131 Behind the HVAC Housing, On the Right of the FUSE/Relay Center (Cab)

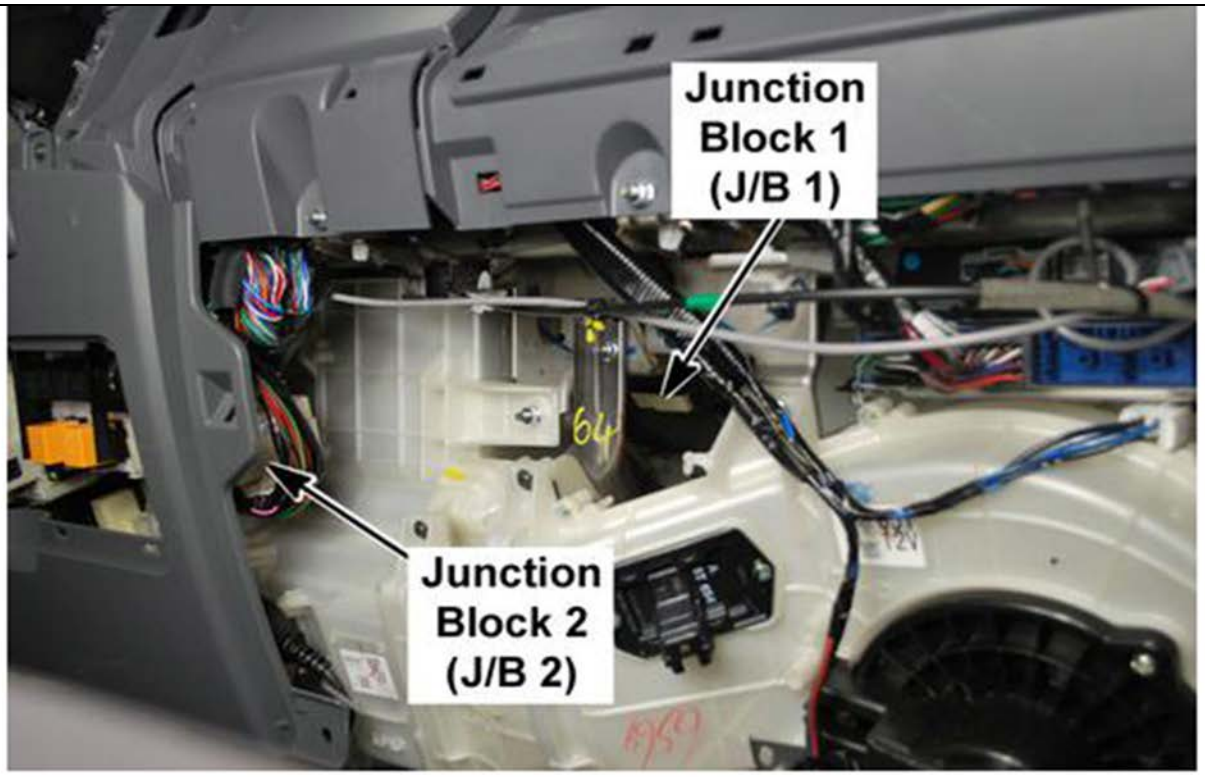

4895164

B-141 Junction Block (J/B) 2

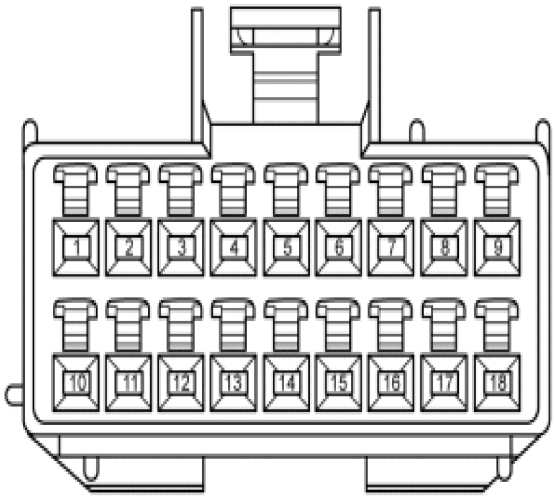

4895412

Connector Part Information		• 7383-0484-40 • 18-Way F (GRY)	
Pin	**Wire Color**	**Circuit Number**	**Function**
1	—	—	Not Used
2	BLK/ORN	IC101B	Ignition Voltage from Fuse F-20 to Stop Lamp Switch Relay
3–4	—	—	Not Used
5	—	—	—
6	BLK	MX004B	Ground to Fuel Tank Unit (B-53 Ground)
7	PNK	IC091B	Not Used
8	BLK	MX003B	Ground to Instrument Panel Cluster (IPC) (B-53 Ground)
9	—	—	Not Used
10	RED/BLK	DA001B	Switched Output Voltage From Horn Relay X-7 from Fuse/Relay Center (Cab) (B-18 pin 9)
11	RED/BLK	DA002B	Switched Output Voltage From Horn Relay X-7 to Horn (LH)
12–14	—	—	Not Used
15	BLK	ZZ010B	Ground to Data Link Connector (B-53 Ground)
16–18	—	—	Not Used

B-131 Behind the HVAC Housing, On the Right of the FUSE/Relay Center (Cab)

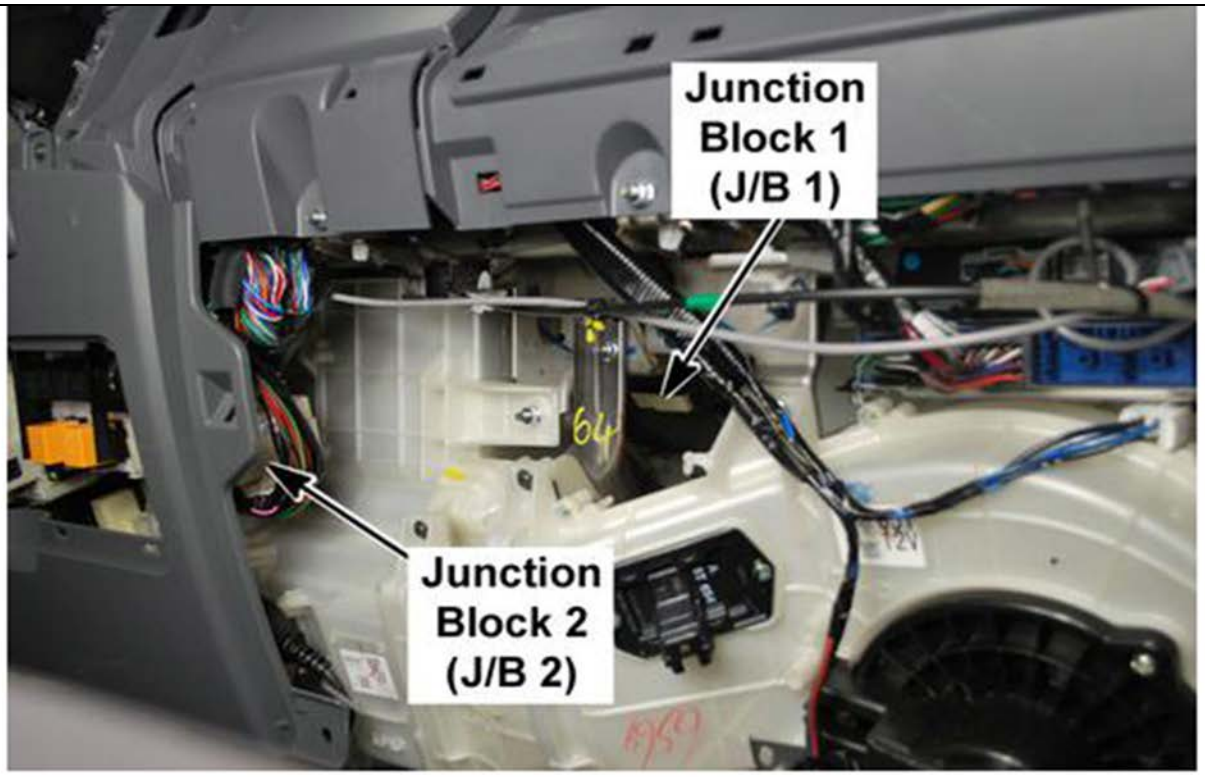

4895164

B-142 Junction Block (J/B) 2

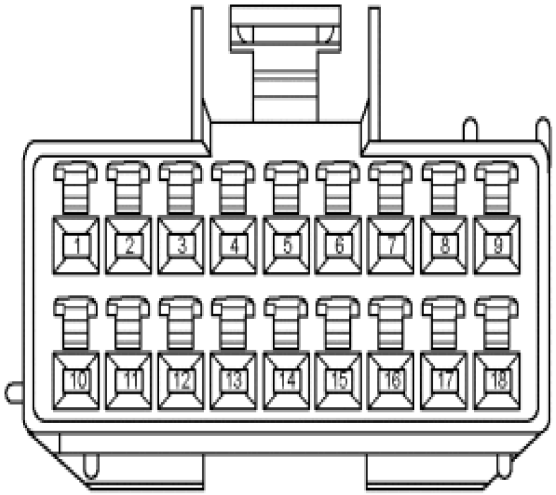

4895432

Connector Part Information		• 7383-0485-90 • 18-Way F (BLU)	
Pin	**Wire Color**	**Circuit Number**	**Function**
1–4	—	—	Not Used
5	PNK	IC181B	PTO Switch 2 Signal to ECM and Remote PTO Switch
6–8	—	—	Not Used
9	YEL	WA103B	Heated Mirror Switch, Heater Switch (RH) Voltage to Mirror Heater Relay (RH)
10–11	—	—	Not Used
12	BLK/ORN	IC102B	Ignition Voltage from Fuse F-20 to Stop Lamp Switch Relay
13	BLK/ORN	IC045B	Ignition Voltage from Fuse F-20 to Wiper/Exhaust Brake Switch
14	RED/BLK	DA003B	Switched Output Voltage From Horn Relay X-7 to Horn (RH)
15	—	—	Not Used
16	BLK	ZZ029B	Ground to B-53
17	—	—	Not Used
18	RED/YEL	WA021B	Heated Mirror Switch, Heater Switch (RH) Voltage

B-131 Behind the HVAC Housing, On the Right of the FUSE/Relay Center (Cab)

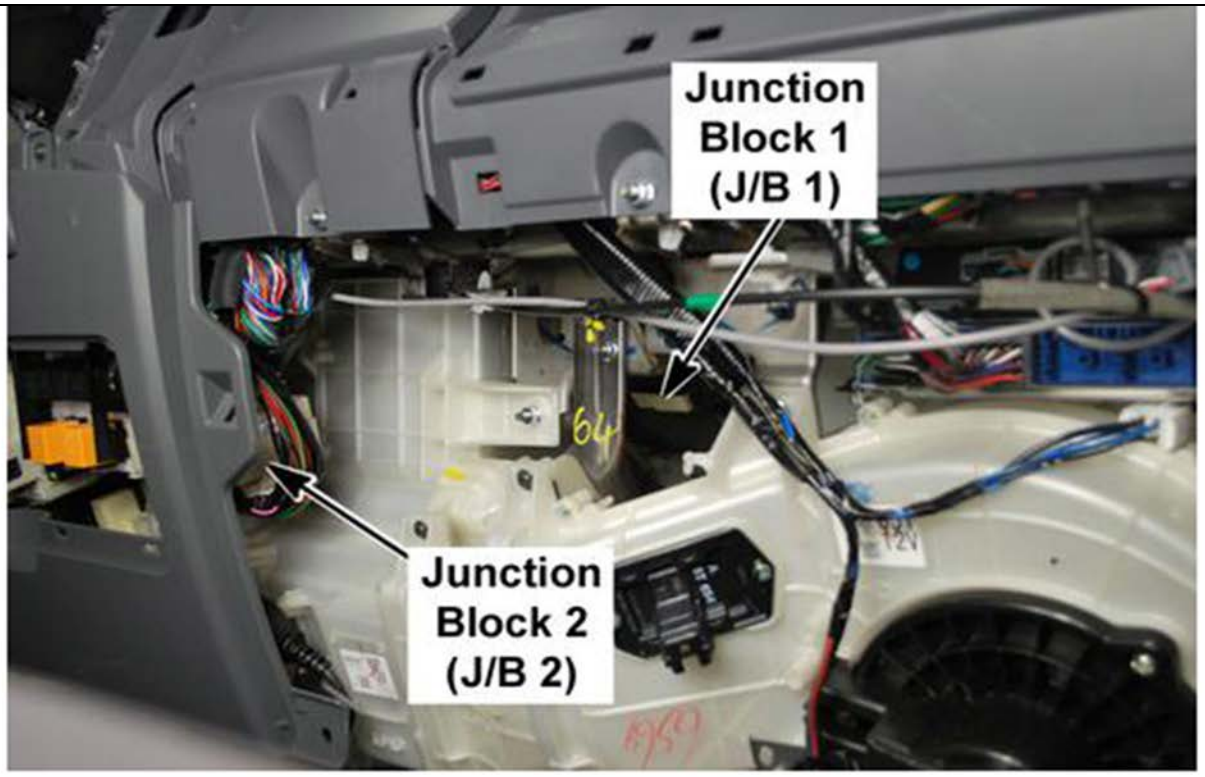

4895164

B-143 Junction Block (J/B) 2

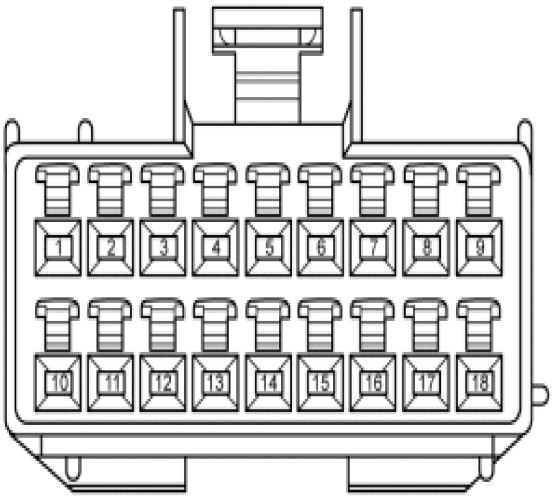

4895468

Connector Part Information		• 7383-0486-50 • 18-Way F (RED)	
Pin	**Wire Color**	**Circuit Number**	**Function**
1	GRN	VA118B	Battery Voltage from Fuse F-4 from Fuse/Relay Center (Cab) (B-19 pin 2)
2	GRN	VA018B	Battery Voltage from Fuse F-4 to Door Lock Relay
3–4	—	—	Not Used
5	GRN/RED	VA017B	Door Unlock Signal from the Door Lock Relay
6	GRN/RED	VA006B	Door Unlock Signal to the Front Door Lock Motor (LH)
7–9	—	—	Not Used
10	GRN	HC002B	Battery Voltage from Fuse F-4 to the Remote Keyless Entry (RKE) Module
11	GRN/YEL	VA016B	Door Lock Signal from the Door Lock Relay
12	—	—	Not Used
13	GRN/RED	VA008B	Door Unlock Signal to the Front Door Lock Motor (RH)
14	RED/YEL	VA007B	Door Lock Signal to the Front Door Lock Motor (LH)
15	GRN/YEL	VA009B	Door Lock Signal to the Front Door Lock Motor (RH)
16–18	—	—	Not Used

B-131 Behind the HVAC Housing, On the Right of the FUSE/Relay Center (Cab)

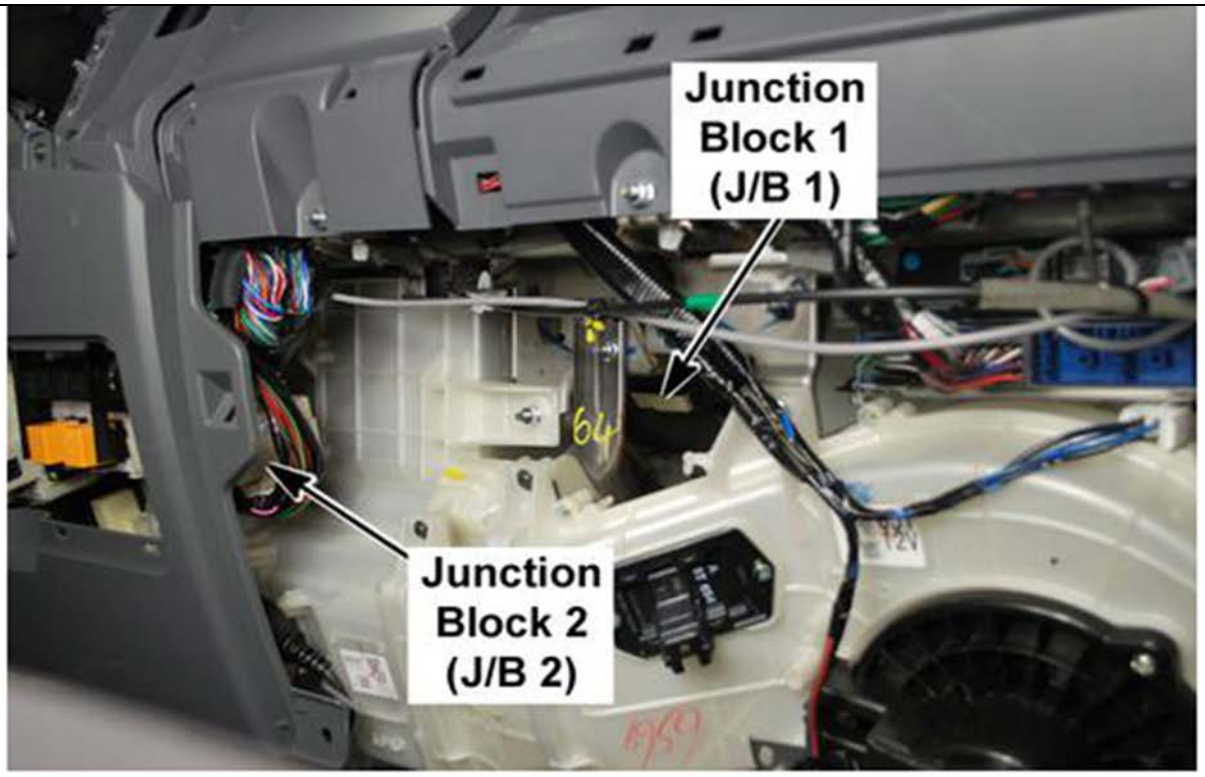

4895164

B-144 Junction Block (J/B) 2 Connector End View

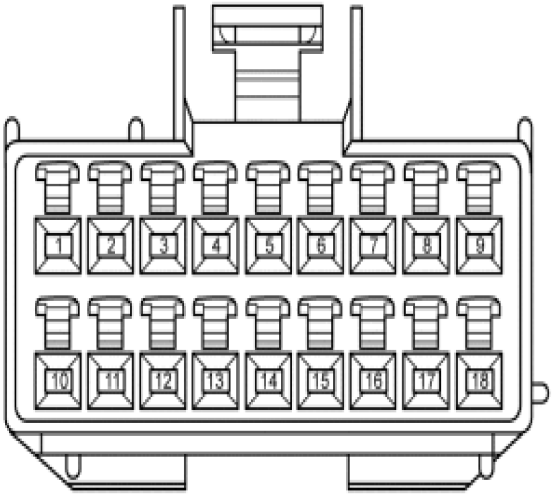

4895486

Connector Part Information		• 7383-0487-80 • 18-Way F (BRN)	
Pin	**Wire Color**	**Circuit Number**	**Function**
1	YEL	IA041B	X-22 Rear Dome Lamp Relay Coil Control to Rear Dome Lamps Switch 1
2	GRN	CA101B	Switched Output Voltage from X-1 Stop Lamp Relay from Relay
3	RED/GRN	HC005B	Door Unlock Signal to RKE Module
4	BLK	ZZ019B	Ground to B-48 Junction Block (B-53 Ground)
5	BLK	ZZ078B	Ground to Key ON Relay (Coil Ground) (B-53 Ground)
6	BLK	BX023B	Ground to Front Park Lamp (RH) (B-53 Ground)
7	BLK	KU003B	Ground to Mimamori Module (B-53 Ground)
8	BLK	KU004B	Ground to Health Report RS232 Connector (B-53 Ground)
9	RED	IA001B	Battery Voltage from Fuse F-3 to Fuse/Relay Center (Cab) (B-22 pin 7)
10	YEL	IA040B	Rear Dome Lamp Switch ON Indicator Control
11	GRN	CA001B	Switched Output Voltage from X-1 Stop Lamp Relay to Rear Combination Lamps
12	GRN/WHT	VA101B	Door Lock Signal to Diode Door Lock
13	—	—	Not Used
14	BLK	BX025B	Ground to Side Marker Lamp (RH) (B-53 Ground)
15	BLK	JX006B	Ground to Front Turn Signal Lamp (B-53 Ground)
16	BLK	HX006B	Ground to Condenser Fan Relay (B-53 Ground)
17	BLK	VX006B	Ground Door Lock Relay (B-53 Ground)
18	RED	IA004B	Battery Voltage from Fuse F-3 to Dome Lamp Switch

B-131 Behind the HVAC Housing, On the Right of the FUSE/Relay Center (Cab)

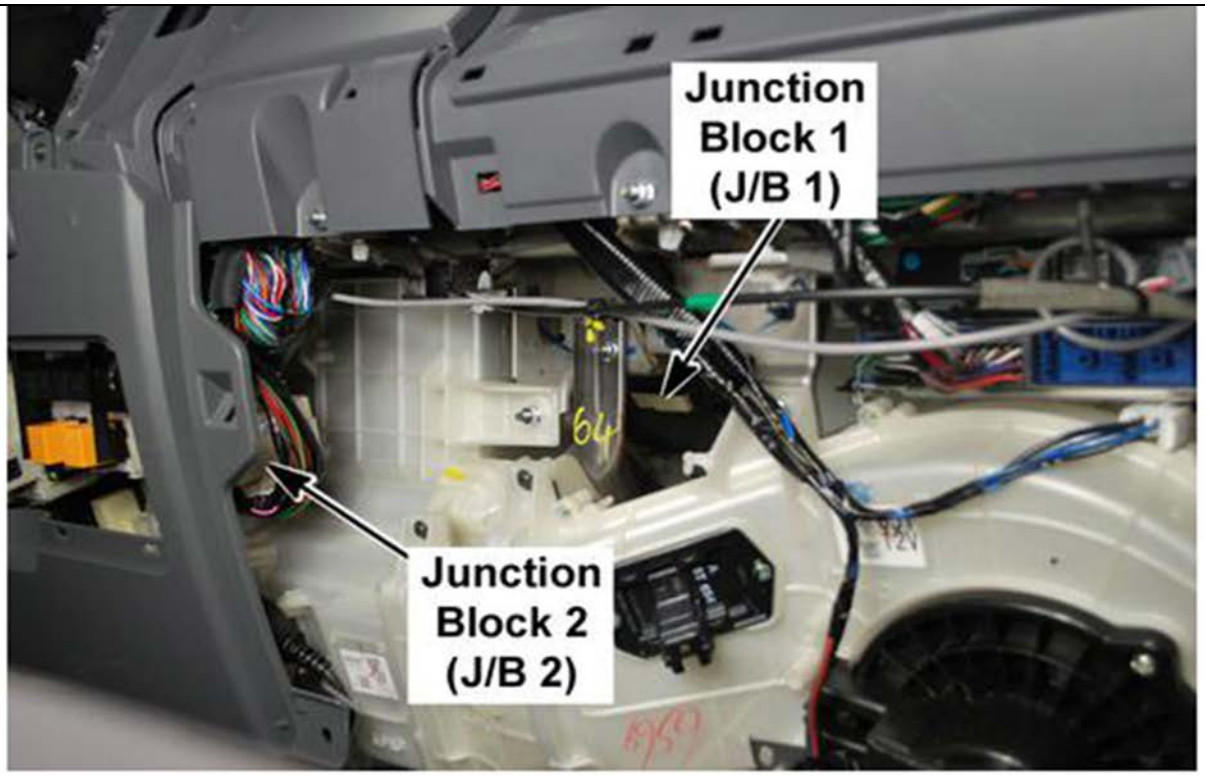

4895164

B-145 Junction Block (J/B) 2

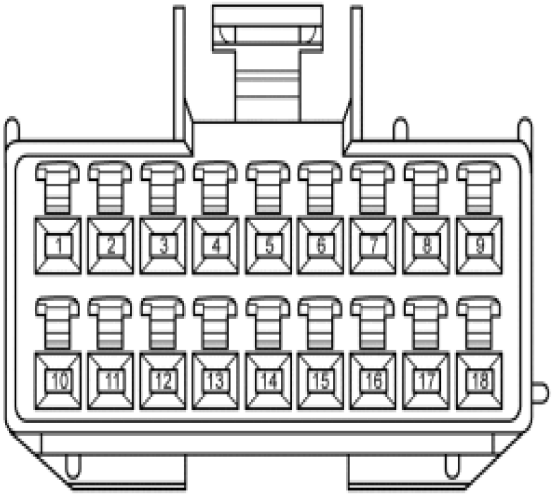

4895505

Connector Part Information		• 7383-0488-60 • 18-Way F (GRN)	
Pin	**Wire Color**	**Circuit Number**	**Function**
1	GRN/WHT	VA020B	Door Lock Signal to Door Lock Switch
2	BLK/ORN	IC014B	Ignition Voltage from Fuse F-20 to J/B 1 (B-132 pin 11)
3	GRN/WHT	VA014B	Door Lock Signal to Door Lock Relay
4	GRY/BLU	IC178B	Ignition Voltage from Fuse F-20 to Cruise Main Switch
5	BLK	VX004B	Ground to Door Lock Relay (B-53 Ground)
6	BLK	FX005B	Ground to Intermittent Wiper Relay
7	BLK	JX003B	Ground to Side Turn Signal Lamp (RH)
8	BLK	OX005B	Ground to Transmission Control Module (TCM)
9	BLK	OX006B	Ground to Transmission Control Module (TCM)
10	RED/GRN	VA005B	Door Unlock Signal to Door Lock Relay
11	—	—	Not Used
12	GRY	HC003B	Door Switch Signal to RKE Module
13	RED/YEL	OA190B	Ignition Voltage from Fuse F-24 to Shift Lever
14	—	—	Not Used
15	BLK	BX037B	Ground to L-22 Splice Pack
16	BLK	WX101B	Ground to Mirror Heater Relay (LH) Coil
17–18	—	—	Not Used

B-131 Behind the HVAC Housing, On the Right of the FUSE/Relay Center (Cab)

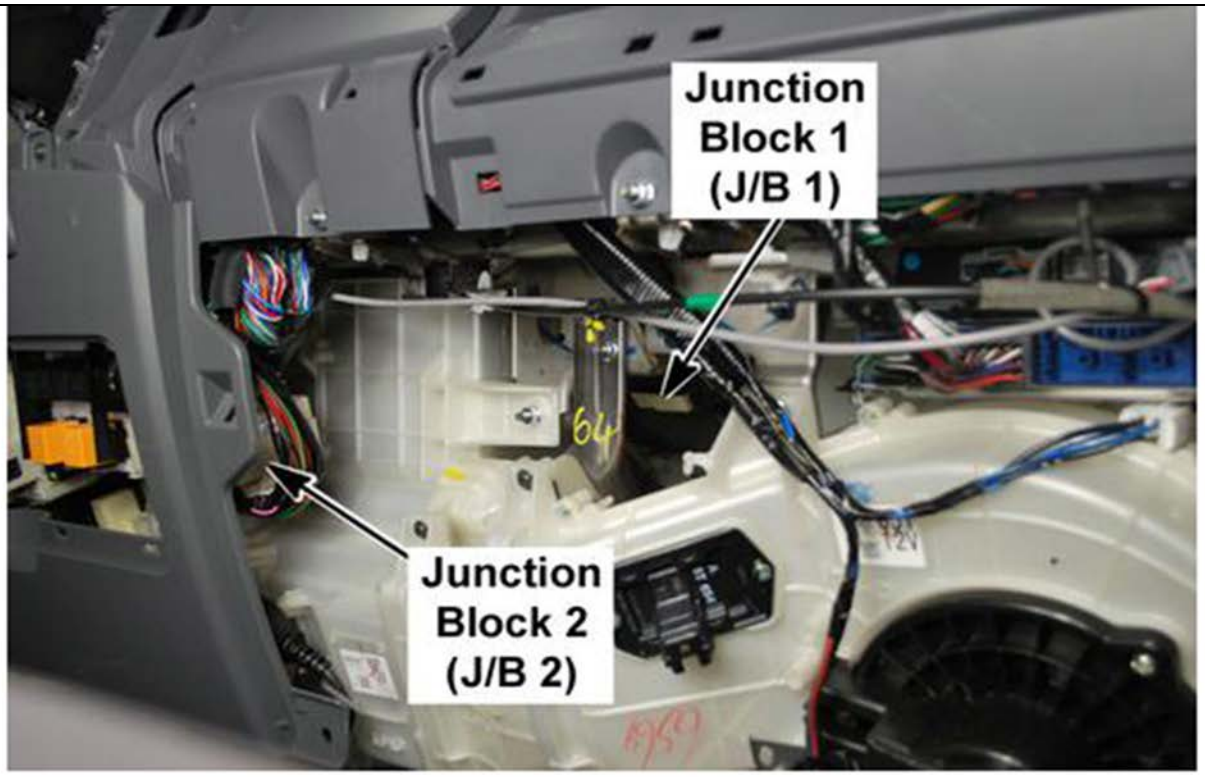

4895164

B-146 Junction Block (J/B) 2 Connector End View

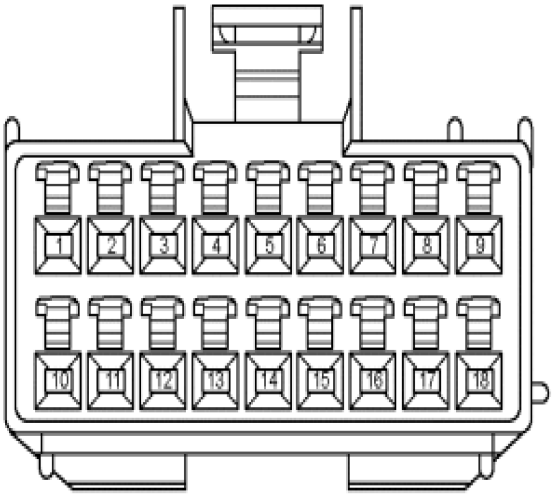

4895527

Connector Part Information		• 7383-0489-50 • 18-Way F (ORN)	
Pin	**Wire Color**	**Circuit Number**	**Function**
1	RED/GRN	VA015B	Door Unlock Signal to Door Lock Switch
2	—	—	Not Used
3	GRY/BLU	IA140B	Door Switch Signal to Dome Lamp
4	RED/YEL	SA103B	Ignition Voltage from Fuse F-24 from Fuse/Relay Center (Cab) (B-22 pin 2)
5	RED/YEL	SA003B	Ignition Voltage from Fuse F-24 to J/B 1 (B-135 pin 6)
6–7	—	—	Not Used
8	BLK	WX106B	Ground to Mirror Heater Relay (RH) Coil
9	—	—	Not Used
10	GRY/BLU	IC179B	Ignition Voltage from Fuse F-20 to Combination Switch
11	—	—	Not Used
12	GRY	IA014B	Dome Switch Signal from N-21 Splice Pack
13	GRN/WHT	HC007B	Door Lock Signal to RKE Module
14	YEL	IA019B	X-22 Rear Dome Lamp Relay Coil Control from Relay
15	—	—	Not Used
16	GRN	OA092B	Switched Output Voltage from X-1 Stop Lamp Relay to Shift Lever
17	RED	RA001B	Battery Voltage from Fuse F-3 to Radio
18	RED	GG013B	Battery Voltage from Fuse F-3 to B-452 Splice Pack

B-131 Behind the HVAC Housing, On the Right of the FUSE/Relay Center (Cab)

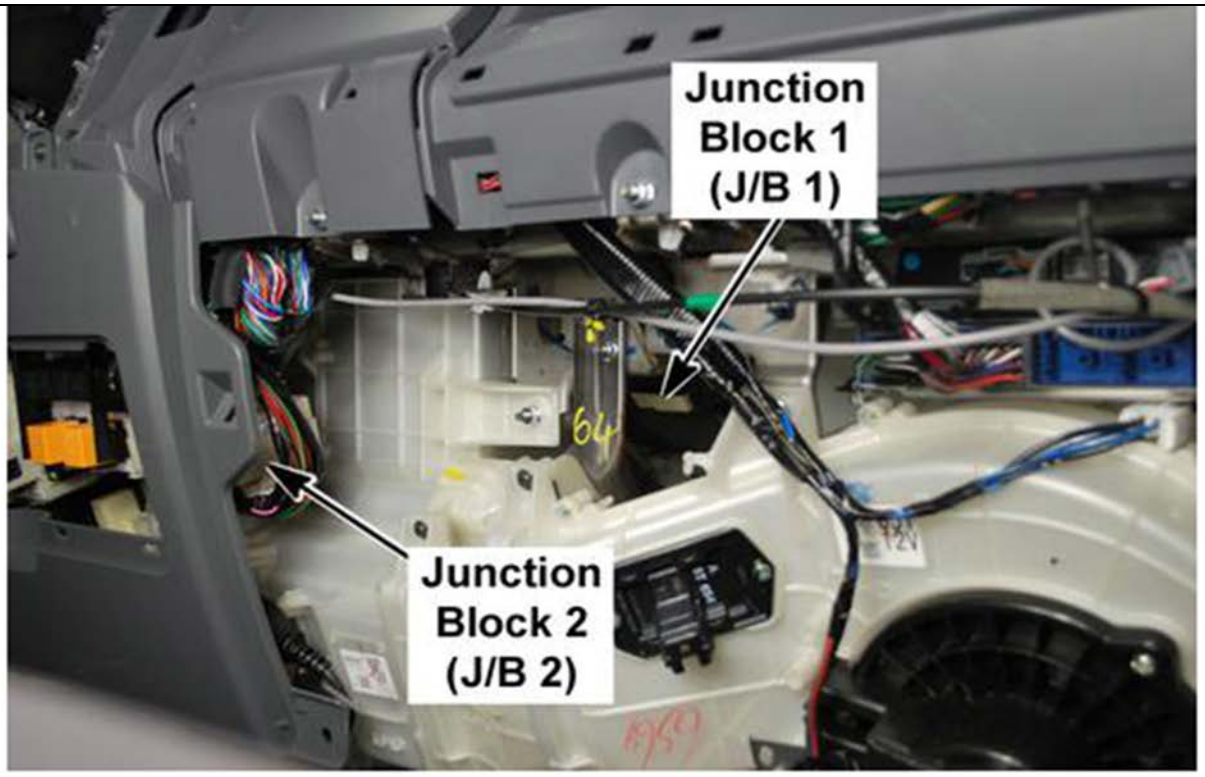

4895164

B-158 A/C Switch Connector End View

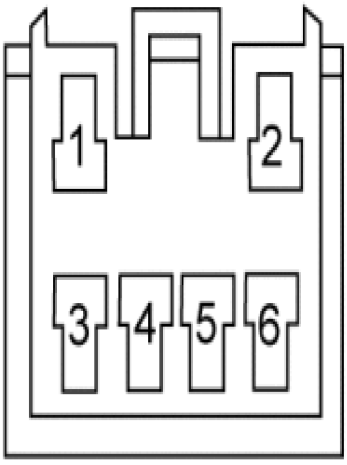

4895541

Connector Part Information		• 4F0630-000 • 6-Way F (WHT)	
Pin	**Wire Color**	**Circuit Number**	**Function**
1–2	—	—	Not Used
3	BRN/WHT	HA063B	Defroster Switch Signal
4	BRN/RED	HA007B	Electronic Thermostat Signal
5	BLK	HX001B	Ground to B-600 Splice Pack (B-51 Ground)
6	BLK/RED	HA008B	Fuse F-30 Voltage (Fan Control Switch ON)

In the Center of the I/P, Behind the HVAC Controls

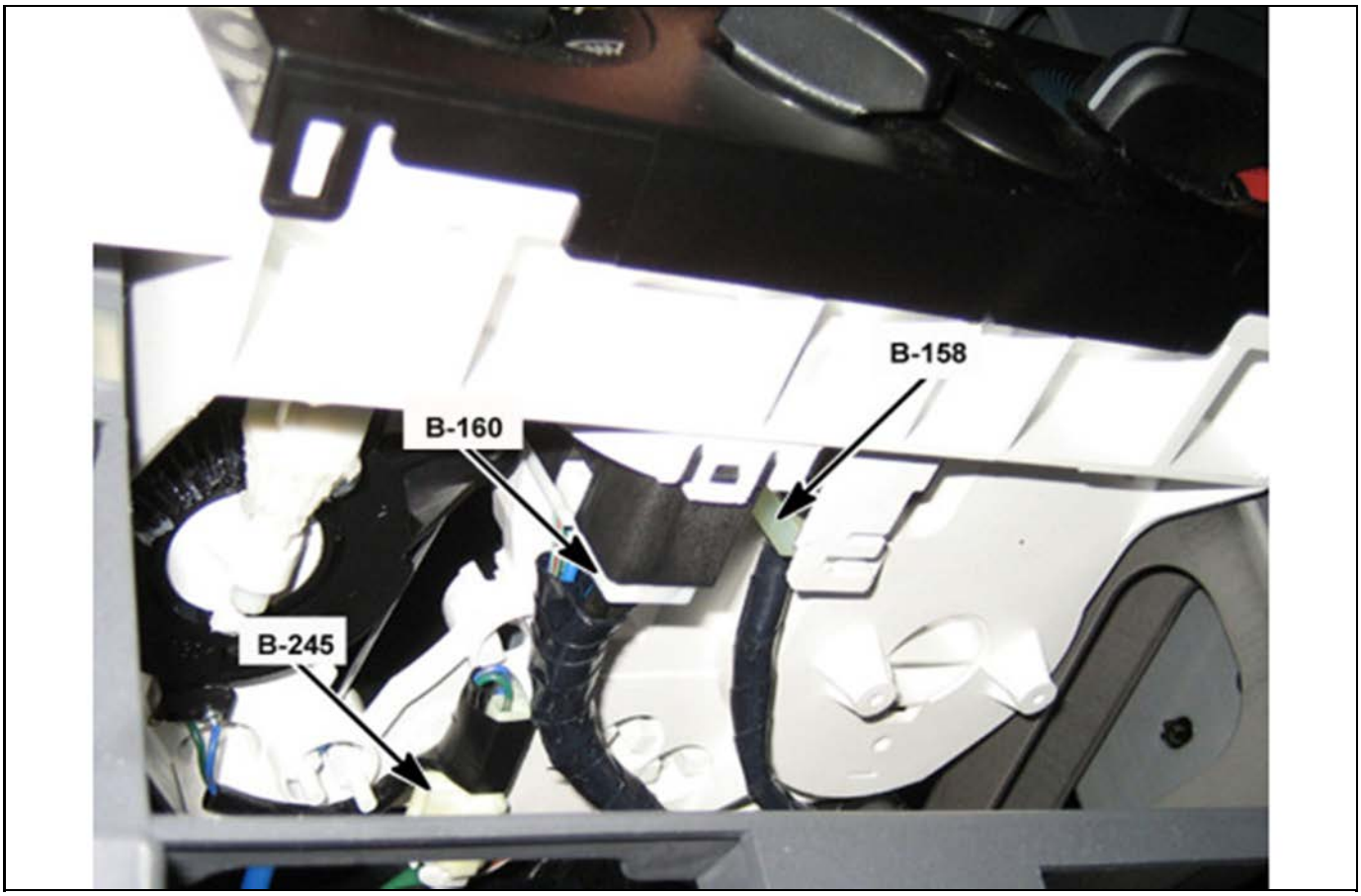

4895570

B-160 HVAC Control Panel

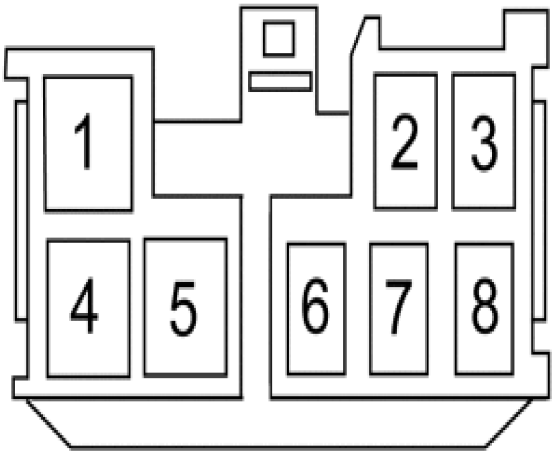

4895582

Connector Part Information		• 4F0880-000 • 8-Way F (WHT)	
Pin	**Wire Color**	**Circuit Number**	**Function**
1	BLK	HX003B	Ground to Splice 18 (B-55 and B-221)
2	LT GRN/BLK	HX002B	Dimming Control to Dimming Control Switch
3	LT GRN/RED	HA011B	Fuse F-28 Voltage (Headlight Switch ON), Dimming Control
4	BLK/BLU	HA001B	Blower Motor High Control
5	BLU/BLK	HA002B	Blower Motor M2 Control
6	BLU	HA003B	Blower Motor M1 Control
7	—	—	Not Used
8	VIO/YEL	HA006B	Blower Relay Control

In the Center of the I/P, Behind the HVAC Controls

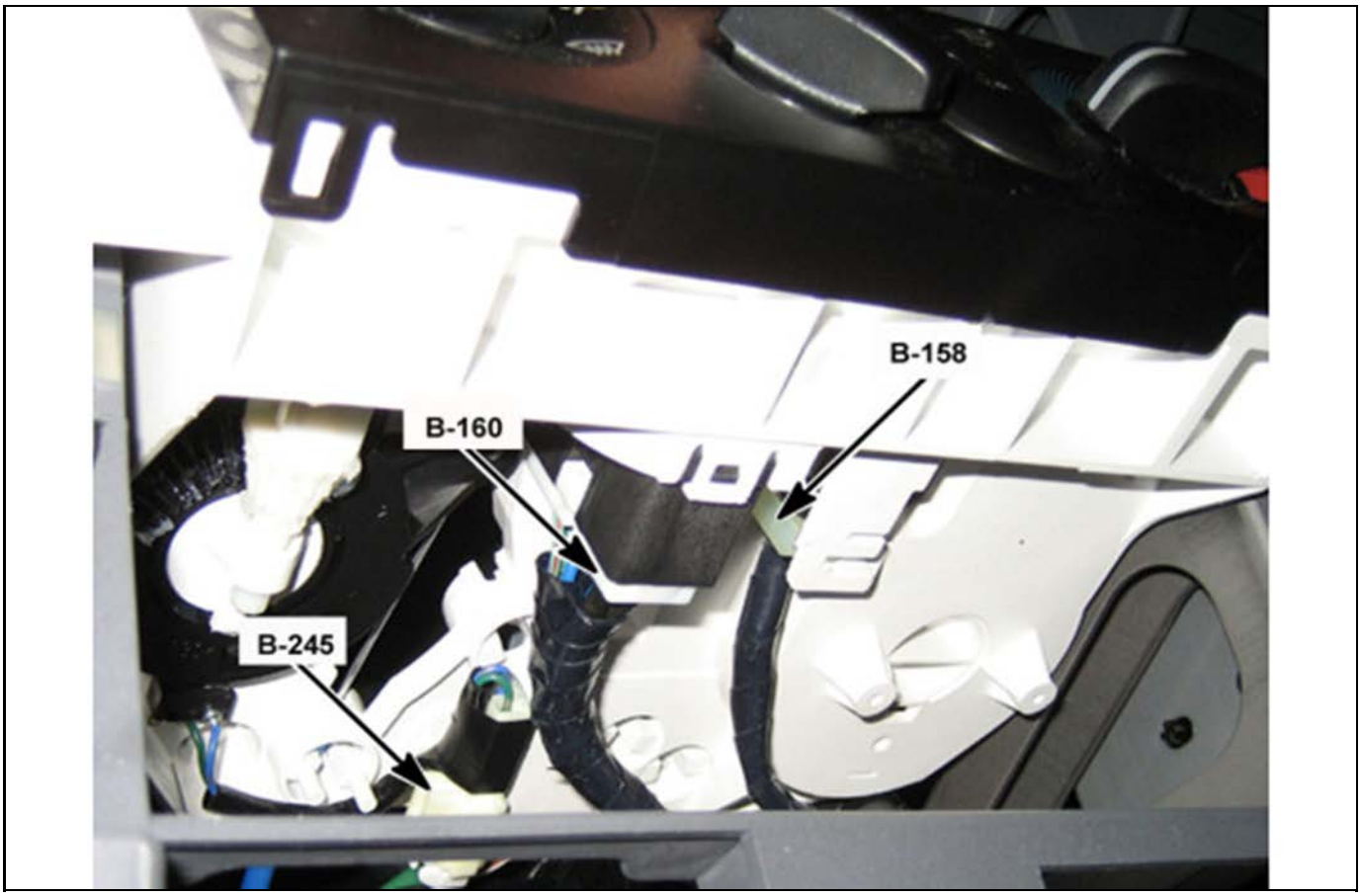

4895570

B-165 DPF Regeneration Switch

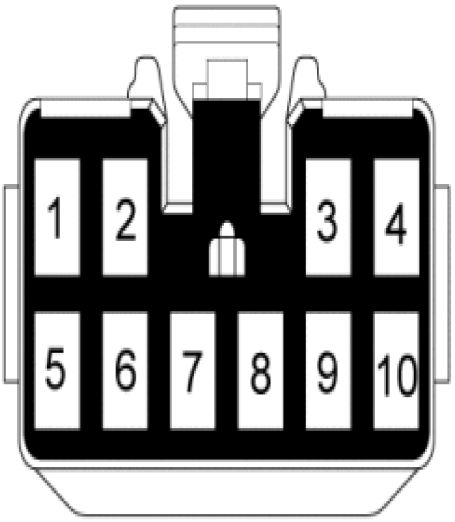

4895586

Connector Part Information		• 7383-1100-90 • 10-Way F (BLU)	
Pin	**Wire Color**	**Circuit Number**	**Function**
1	BLK/ORN	IC141B	Ignition Voltage from Fuse F-20
2	BLU/WHT	IC140B	Switch Signal to ECM
3–6	—	—	Not Used
7	LT GRN/BLK	BA038B	Dimming Control to Dimming Control Switch
8	LT GRN/RED	BA033B	Fuse F-28 Voltage (Headlight Switch ON), Dimming Control
9–10	—	—	Not Used

In the Center of the I/P On the Left Side of the HVAC

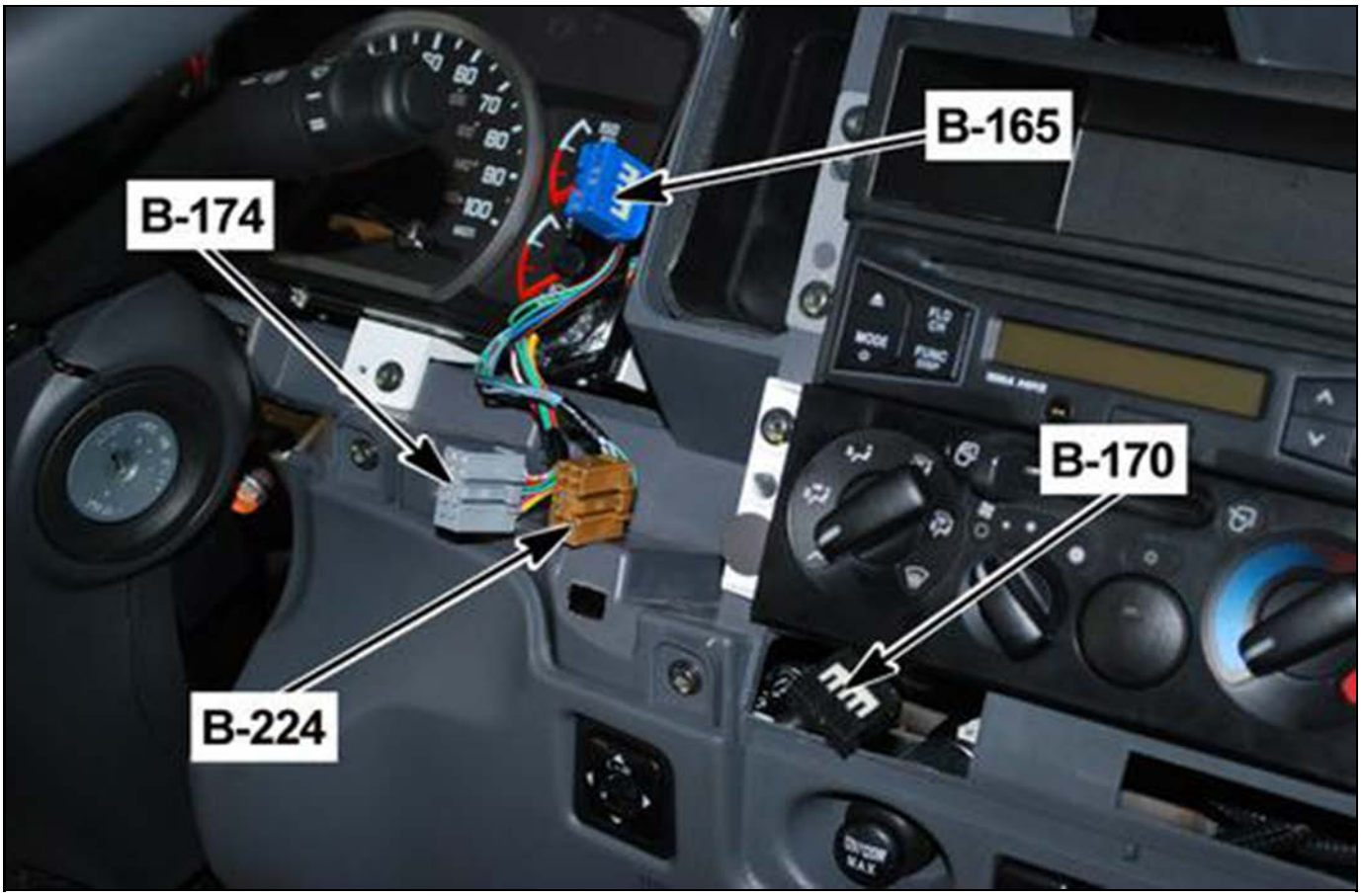

4895589

B-170 Hazard Switch

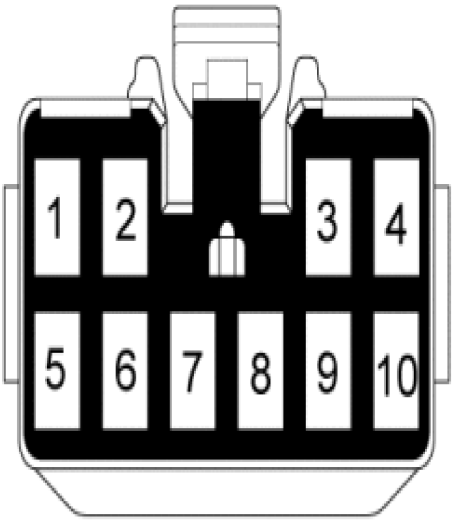

4895586

Connector Part Information		• 7383-1100-30 • 10-Way F (BLK)	
Pin	**Wire Color**	**Circuit Number**	**Function**
1–2	—	—	Not Used
3	RED/BLU	JA018B	Hazard Switch Signal to J/B 1 (B-132 pin 12)
4	BLK	JX002B	Ground to B-377 Splice Pack (B-51 Ground)
5–6	—	—	Not Used
7	LT GRN/BLK	BA043B	Dimming Control to Dimming Control Switch
8	LT GRN/RED	BA019B	Fuse F-28 Voltage (Headlight Switch ON), Dimming Control
9–10	—	—	Not Used

In the Center of the I/P On the Left Side of the HVAC

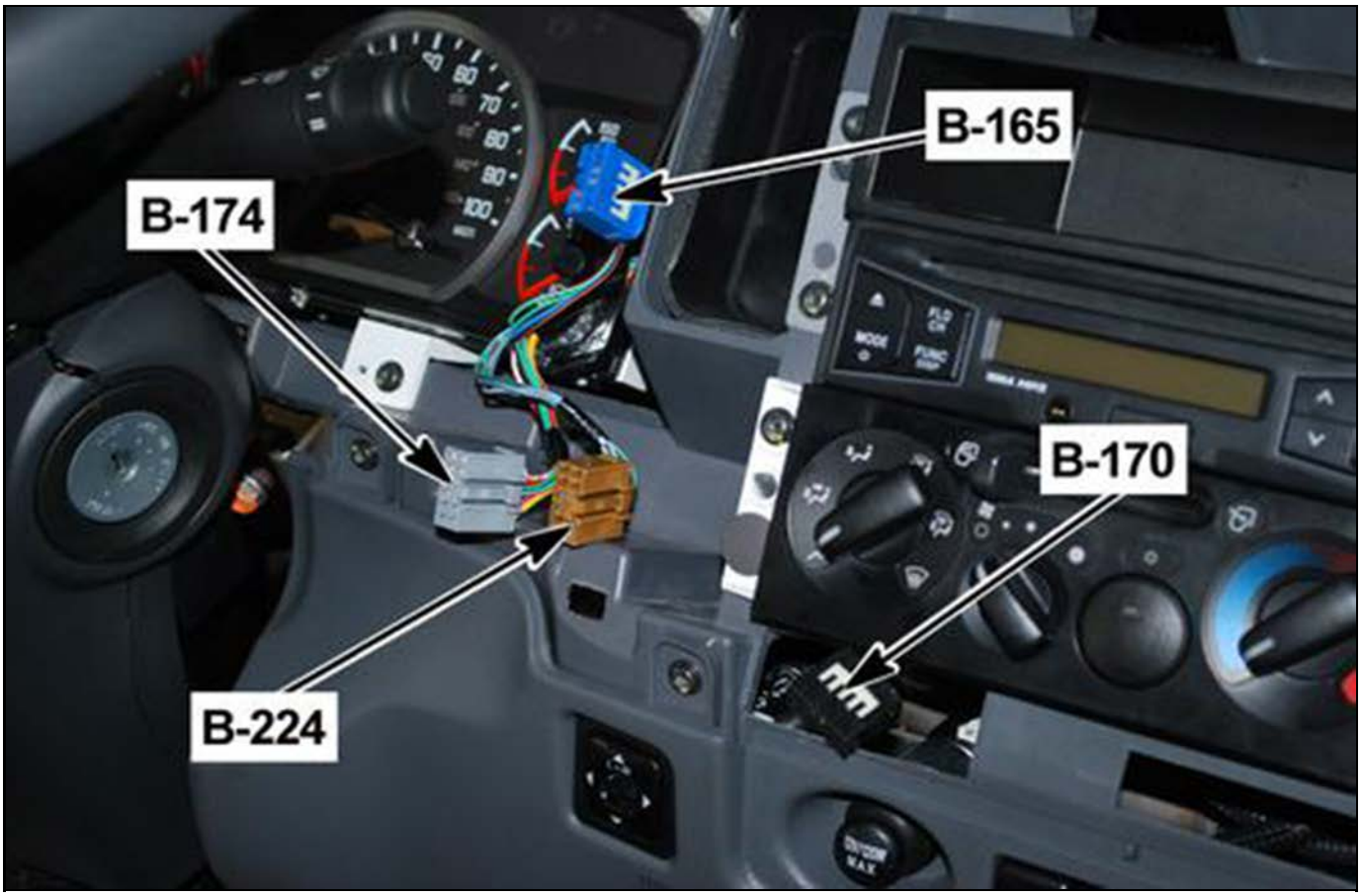

4895589

B-172 Key Reminder Switch

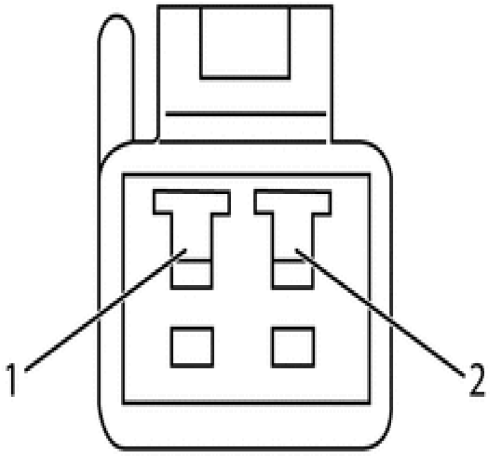

4895827

Connector Part Information		• 7383-5845 • 2-Way F (WHT)	
Pin	**Wire Color**	**Circuit Number**	**Function**
1	BLK	FY001B	Ground to B-377 Splice Pack (B-51 Ground)
2	PNK/BLU	FB005B	Key Reminder Switch Signal to RKE Module

B-172 In the Steering Column, Under the Steering Column Trim Panels

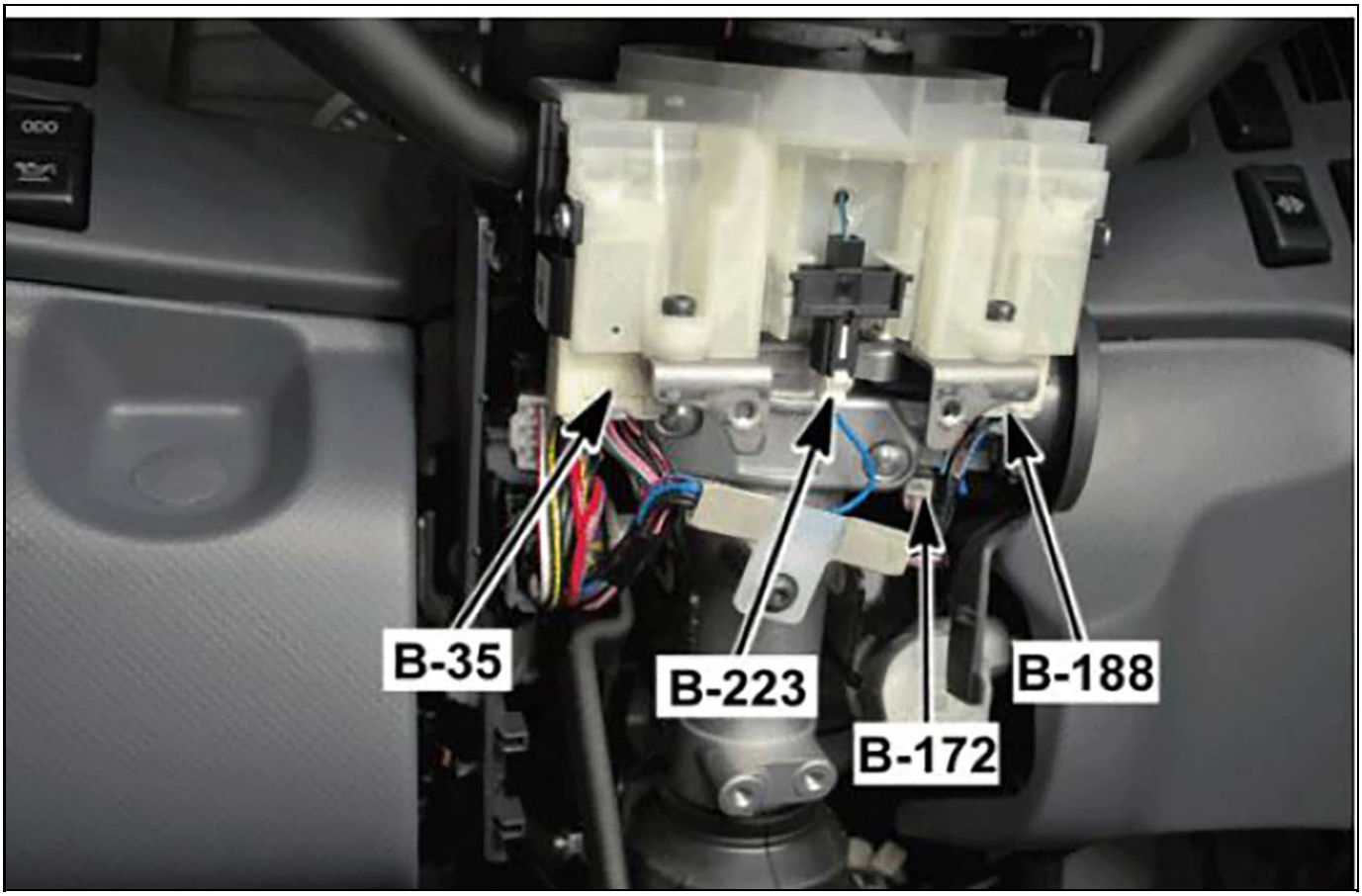

4895830

B-174 Heated Mirror Switch

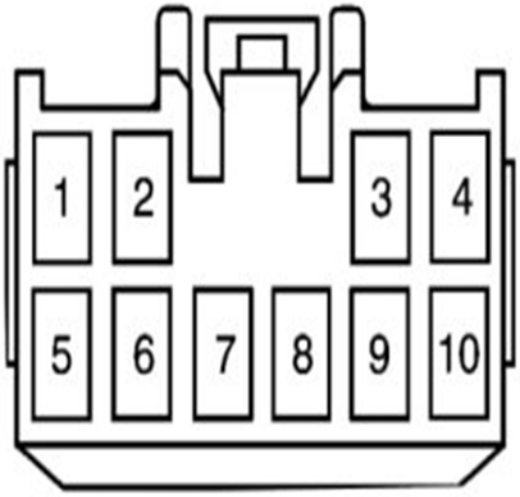

4895836

Connector Part Information		• 7383-1100-40 • 10-Way F (GRY)	
Pin	**Wire Color**	**Circuit Number**	**Function**
1	WHT/RED	WA015B	Fuse F-16 Supply Voltage from Fuse/Relay Center (Cab)
2	RED/YEL	WA021B	Mirror Heater (RH) Control
3	WHT/RED	WA004B	Fuse F-16 Supply Voltage from Fuse/Relay Center (Cab)
4	YEL	WA104B	Mirror Heater (LH) Control
5	BLK	WX007B	Ground to B-602 Splice Pack (B-51 Ground)
6	RED/YEL	WA018B	ON Indicator Supply Voltage
7	LT GRN/BLK	BA006B	Dimming Control to Dimming Control Switch
8	LT GRN/RED	BA012B	Fuse F-28 Voltage (Headlight Switch ON), Dimming Control
9–10	—	—	Not Used

In the Center of the I/P, On the Left Side of the HVAC Controls

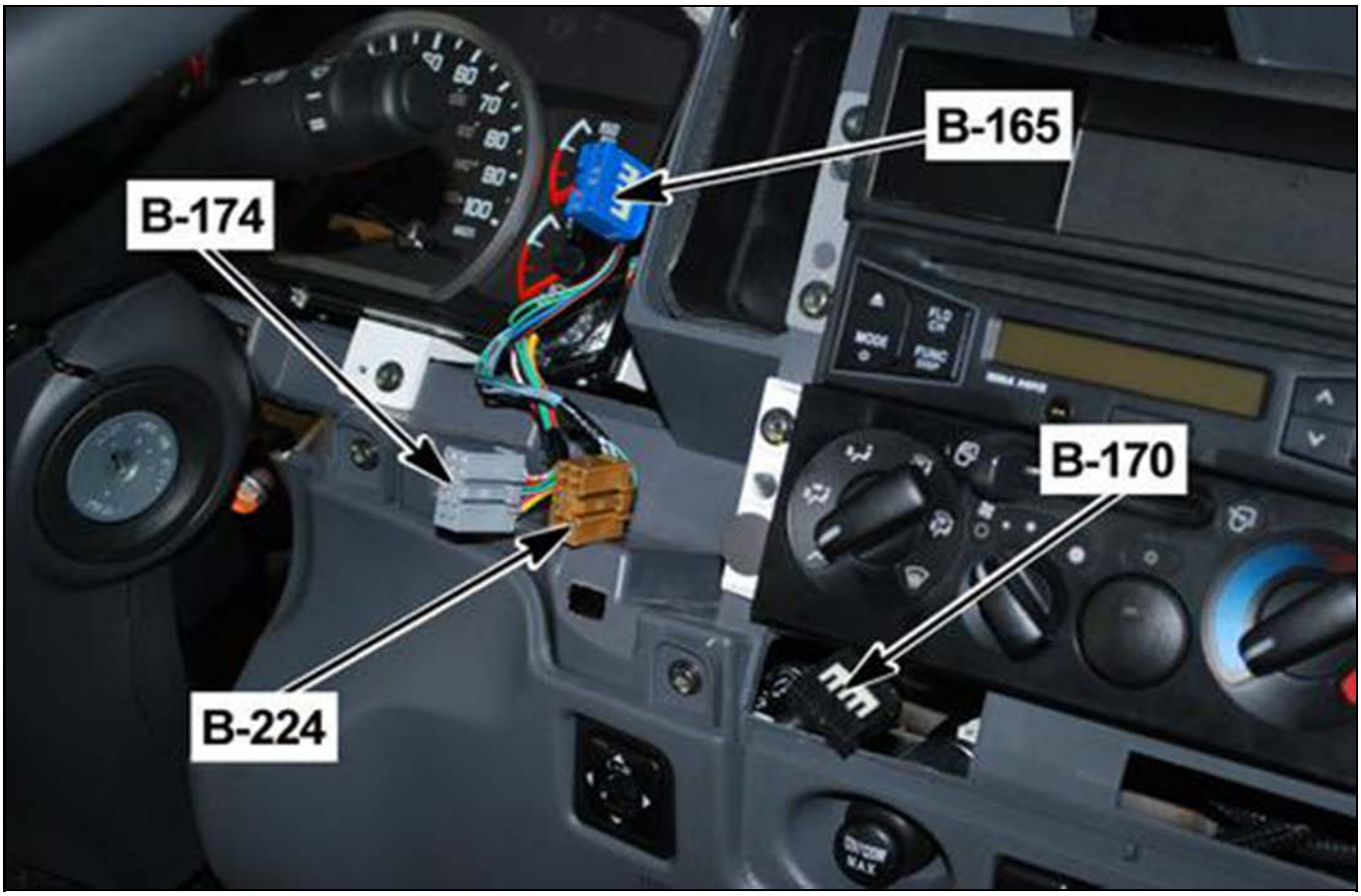

4895589

B-179 Power Mirror Switch

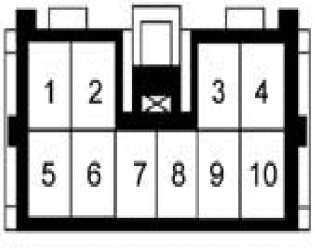

4895849

Connector Part Information		• 7323-8307 • 10-Way F (WHT)	
Pin	**Wire Color**	**Circuit Number**	**Function**
1	BLK/WHT	WA218B	Common Control for Mirror (LH) and Mirror (RH)
2–3	—	—	Not Used
4	RED/YEL	WA007B	Ignition Voltage from Fuse F-23
5	BLK/GRN	WA011B	Left/Right Control Mirror (RH)
6	—	—	Not Used
7	WHT/BLK	WA009B	Up/Down Control Mirror (RH)
8	WHT/BLK	WA008B	Up/Down Control Mirror (LH)
9	BLK	WX003B	Ground to B-49 Junction Block (B-52 and B-53 Ground)
10	BLK/GRN	WA010B	Left/Right Control Mirror (LH)

B-179 Center of the IP Left of the Fuse/Relay Center (Cab)

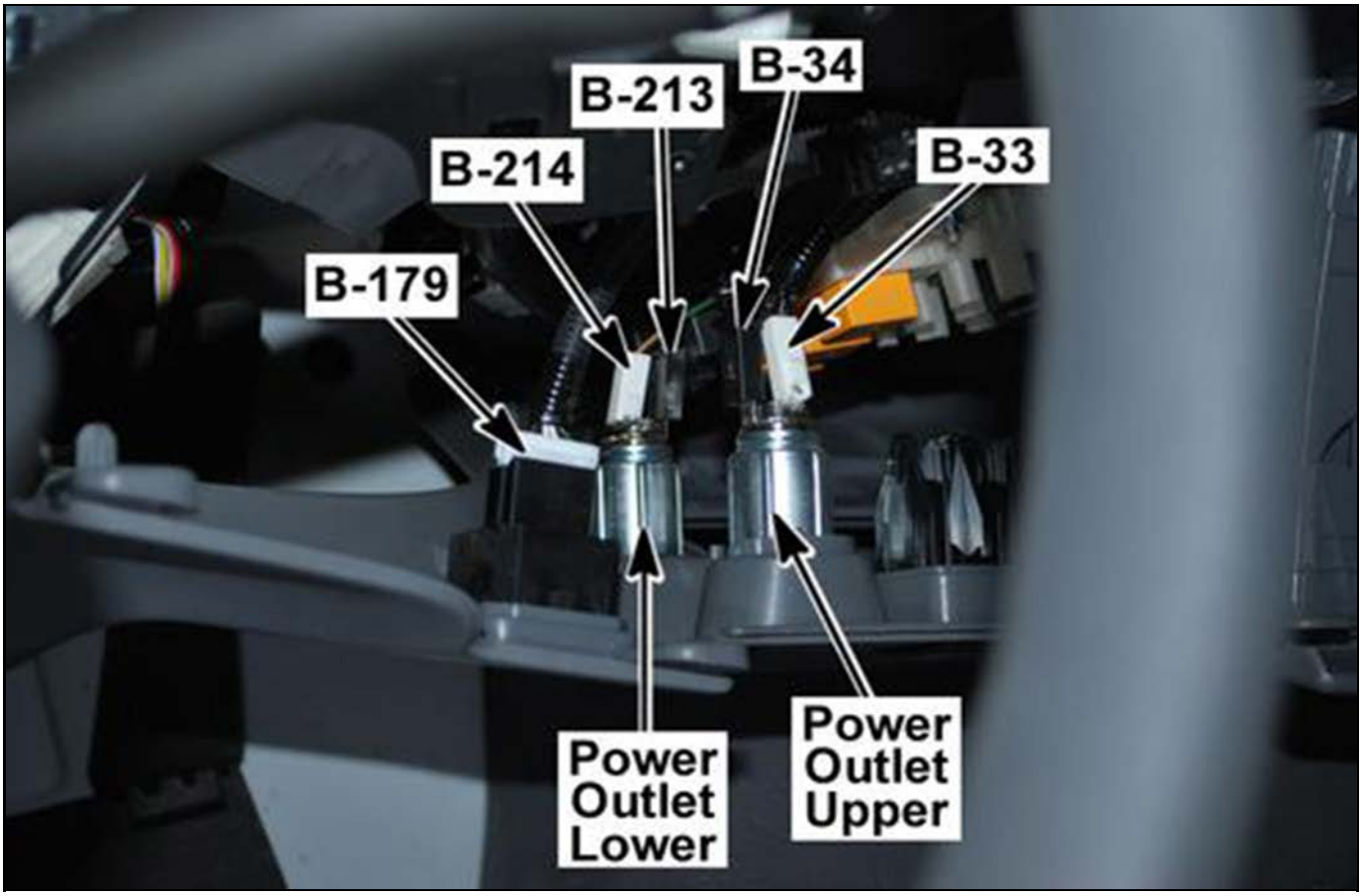

4895851

B-188 Wiper/Exhaust Brake Switch

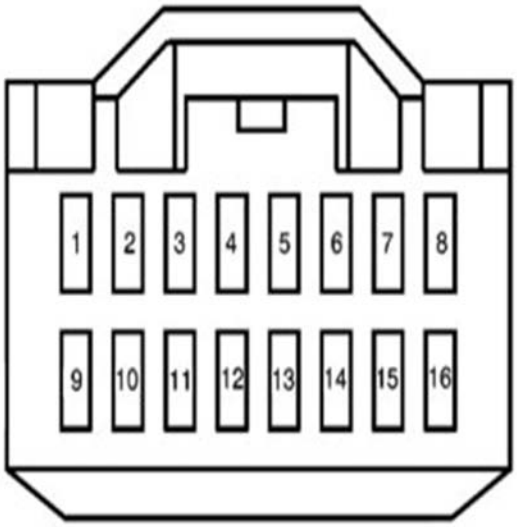

4895853

Connector Part Information		• 1318221-1 • 16-Way F (WHT)	
Pin	**Wire Color**	**Circuit Number**	**Function**
1–8	—	—	Not Used
9	BLK	FX002B	Ground to B-600 Splice Pack (B-51 Ground)
10	BLU/RED	FA020B	Low Speed/Park Control
11	—	—	Not Used
12	BLK/GRN	FA007B	Wiper High Low Relay Coil Control
13	BLK/ORN	IC045B	Ignition Voltage from Fuse F-20
14	BLK/BLU	FA008B	Intermittent Relay Control
15	LT GRN/RED	IC044B	Exhaust Brake Switch Signal Control to the ECM
16	BLU/BLK	FA011B	Washer Motor Control

B-188 In the Steering Column, Under the Steering Column Trim Panels

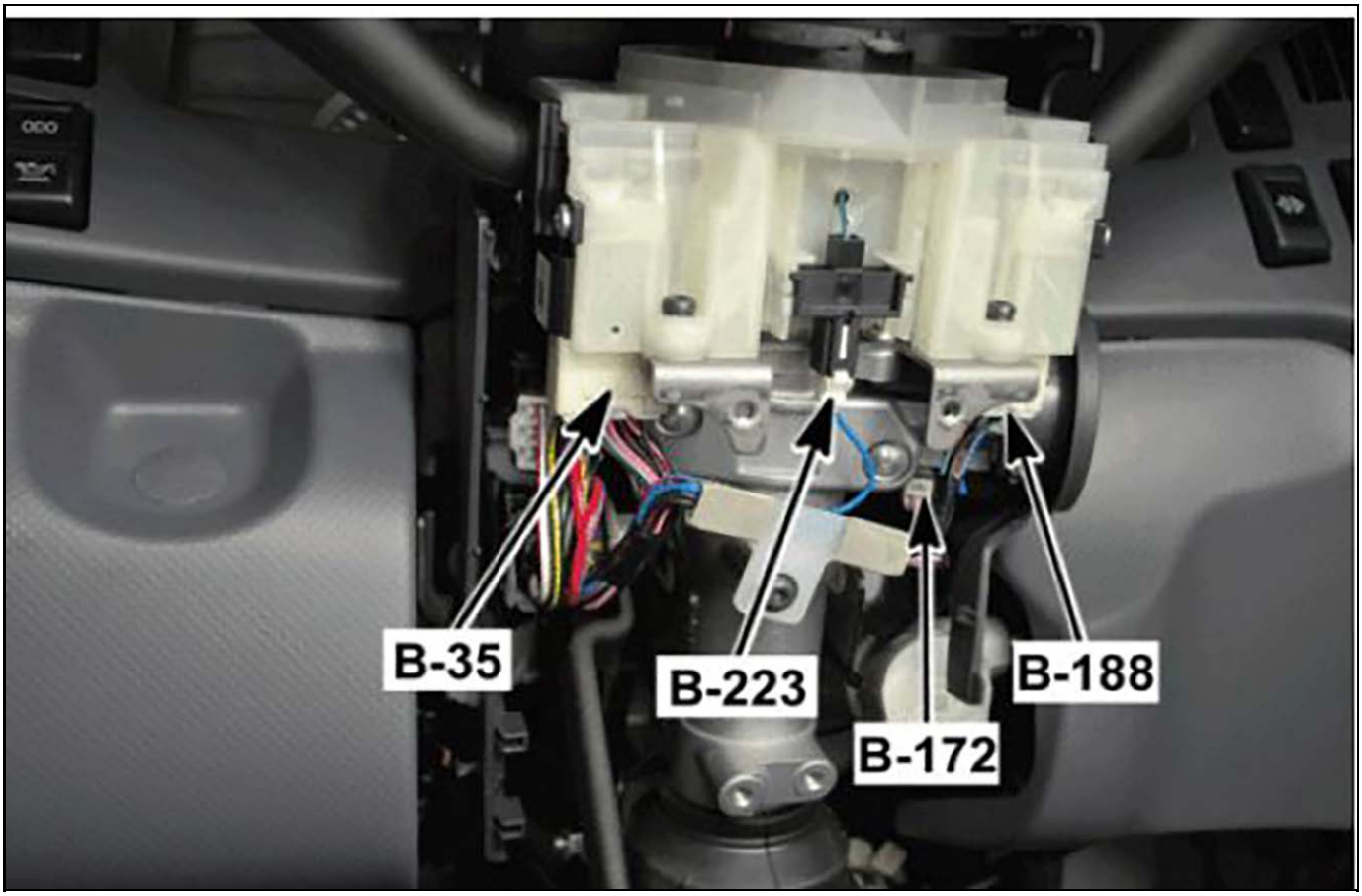

4895830

B-189 Electronic Thermostat

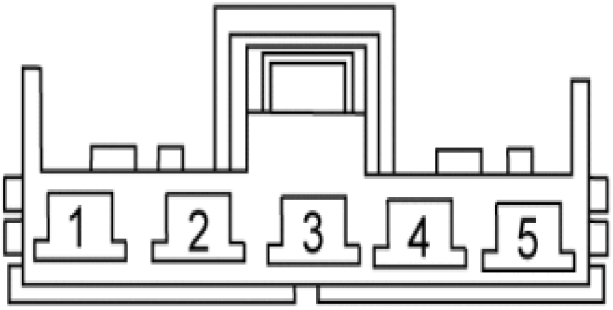

4895860

Connector Part Information		• 7383-6321-30 • 5-Way F (BLK)	
Pin	**Wire Color**	**Circuit Number**	**Function**
1–2	—	—	Not Used
3	GRY	HA010B	Compressor Clutch Relay Coil Control
4	BRN/RED	HA007B	A/C Switch Signal
5	BLK	HX007B	Ground to B-600 Splice Pack (B-51 Ground)

Behind the Center of the IP On the Left Side of the HVAC Housing

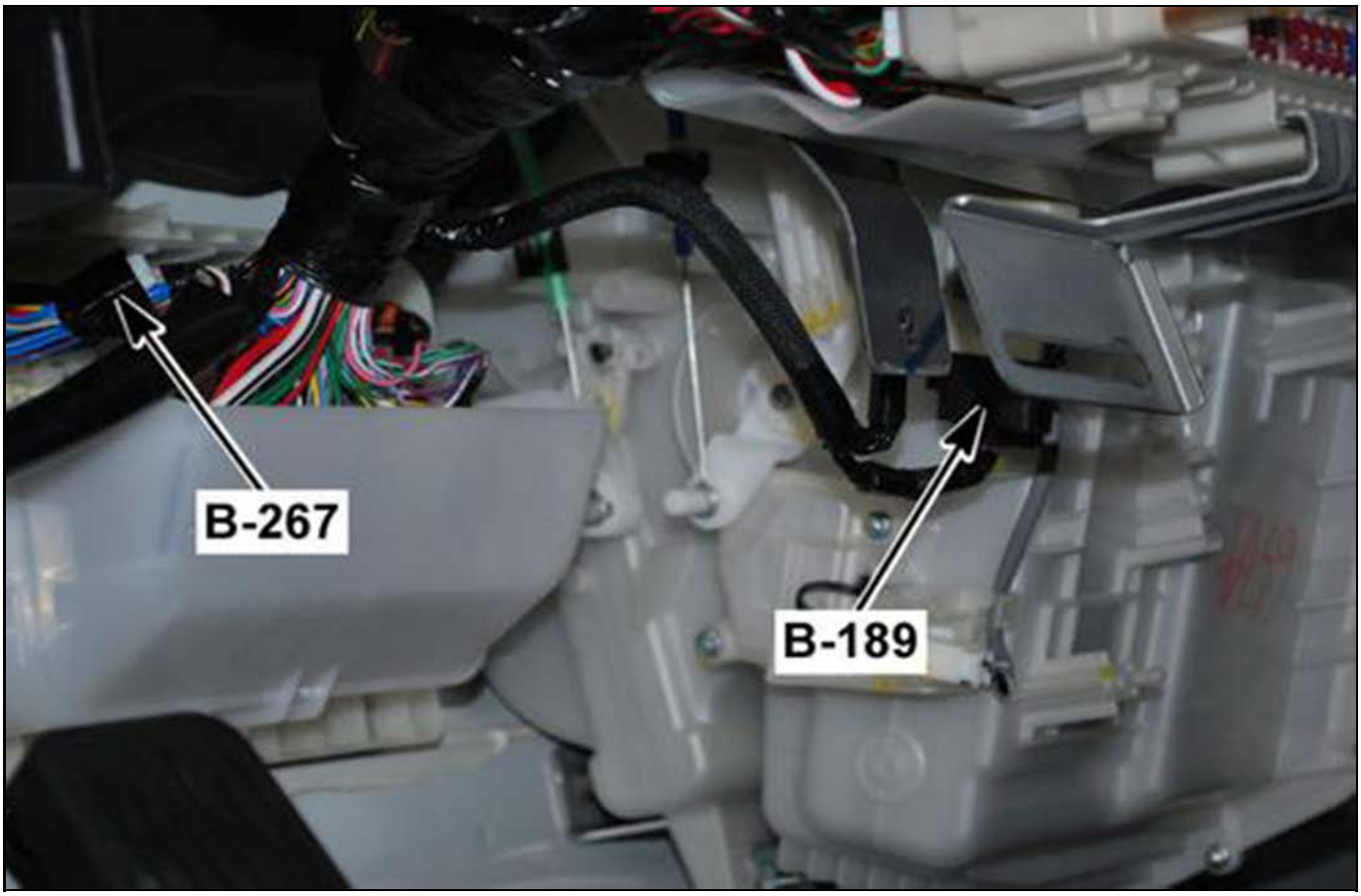

4895868

B-210 Intermittent Relay

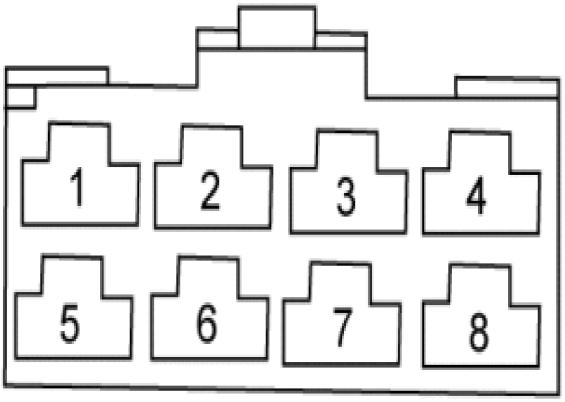

4895885

Connector Part Information		• 7323-2881 • 8-Way F (WHT)	
Pin	**Wire Color**	**Circuit Number**	**Function**
1	BLK	FX005B	Ground to J/B 2 (B-145 pin 6)(B-51 and B-53 Ground)
2	BLU/BLK	FA009B	Washer Motor Signal
3	RED/BLK	FA016B	Ignition Voltage from Fuse F-18, Fuse/Relay Center (Cab)
4	—	—	Not Used
5	BLU/ORN	FA022B	Park Position Signal (OFF Input)
6	BLK/BLU	FA008B	Intermittent Position Signal
7	BLU/RED	FA021B	Run/Park Input
8	—	—	Not Used

Right Side of the IP to the Right of the Blower Motor (Trim Panel is Removed)

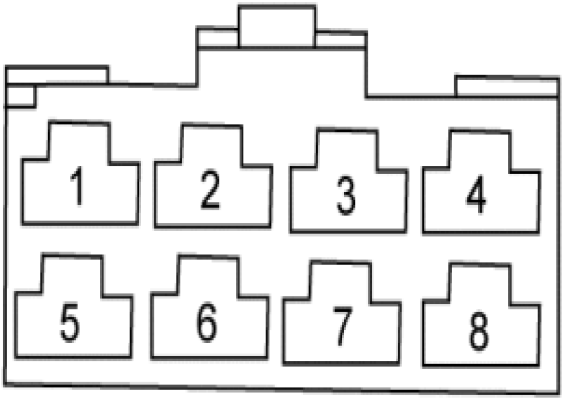

4895885

Connector Part Information		• 7323-2881 • 8-Way F (WHT)	
Pin	**Wire Color**	**Circuit Number**	**Function**
1	BLK	FX005B	Ground to J/B 2 (B-145 pin 6)(B-51 and B-53 Ground)
2	BLU/BLK	FA009B	Washer Motor Signal
3	RED/BLK	FA016B	Ignition Voltage from Fuse F-18, Fuse/Relay Center (Cab)
4	—	—	Not Used
5	BLU/ORN	FA022B	Park Position Signal (OFF Input)
6	BLK/BLU	FA008B	Intermittent Position Signal
7	BLU/RED	FA021B	Run/Park Input
8	—	—	Not Used

B-211 Stop Lamp Switch 1

4895931

Connector Part Information		• 6189-0239 • 2-Way F (BLK)	
Pin	**Wire Color**	**Circuit Number**	**Function**
1	GRN/WHT	CA003B	Stop Lamp Relay (Coil Control)
2	BLK	CX001B	Ground to B-602 Splice Pack (B-51 Ground)

Front of the Vehicle, Under the Hood

4895931

Connector Part Information		• 6189-0239 • 2-Way F (BLK)	
Pin	**Wire Color**	**Circuit Number**	**Function**
1	GRN/WHT	CA003B	Stop Lamp Relay (Coil Control)

Connector Part Information		• 6189-0239 • 2-Way F (BLK)	
Pin	**Wire Color**	**Circuit Number**	**Function**
2	BLK	CX001B	Ground to B-602 Splice Pack (B-51 Ground)

B-212 Power ACC Relay

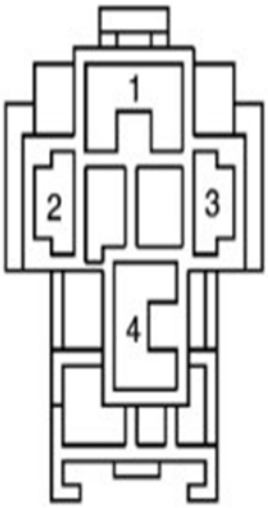

4895962

Connector Part Information		• 7323-6146-30 • 4-Way F (BLK)	
Pin	**Wire Color**	**Circuit Number**	**Function**
1	RED/BLK	PA010B	Battery Voltage from Fuse FL-3 (Input Voltage)
2	RED/YEL	SA041B	Ignition Voltage from Fuse F-24 (Coil Feed)
3	BLK	SX011B	Ground (Coil Control) to B-377 Splice Pack (B- 51 Ground)
4	BLK/RED	SA011B	Relay/Fuse Center (Cab) Fuses A-2 and A-3 Control Voltage (Switched Output Voltage)

In the Center of the IP Left Side of the Fuse Relay Center (Cab)

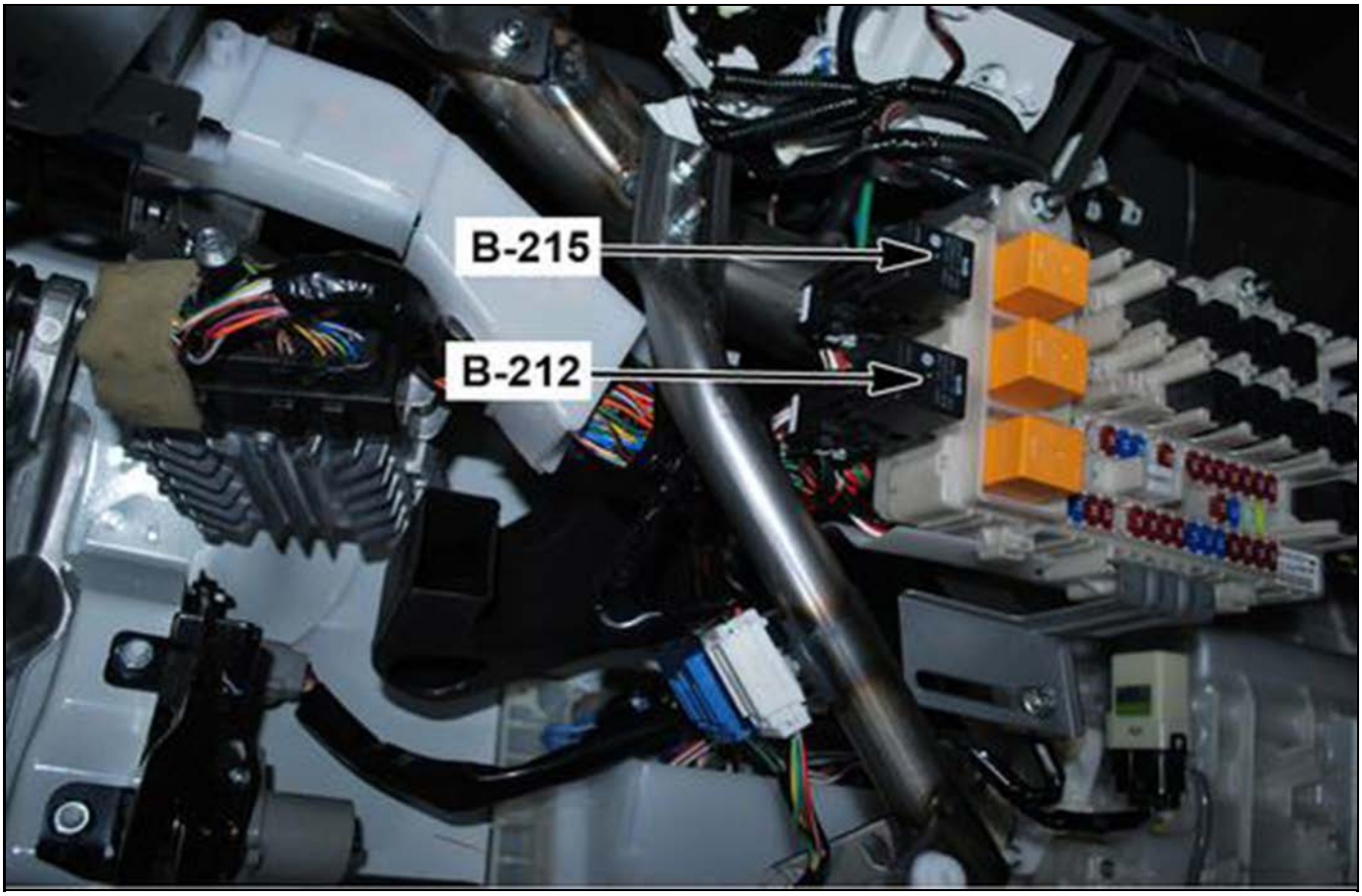

4895966

B213 Power Outlet Lower

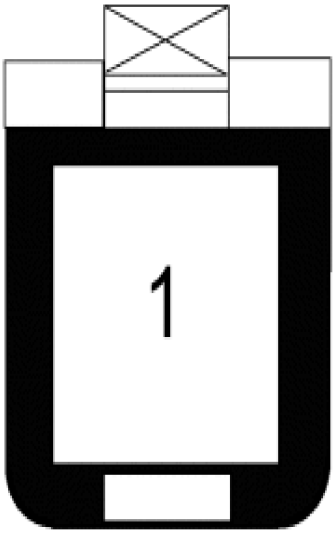

4895974

Connector Part Information		• 174090-2 • 1-Way F (BLK)	
Pin	**Wire Color**	**Circuit Number**	**Function**
1	BLK	SX005B	Ground to B-379 Splice Pack (B-60 and B-51 Ground)

Center of the IP Left of the Fuse Relay Center (Cab)

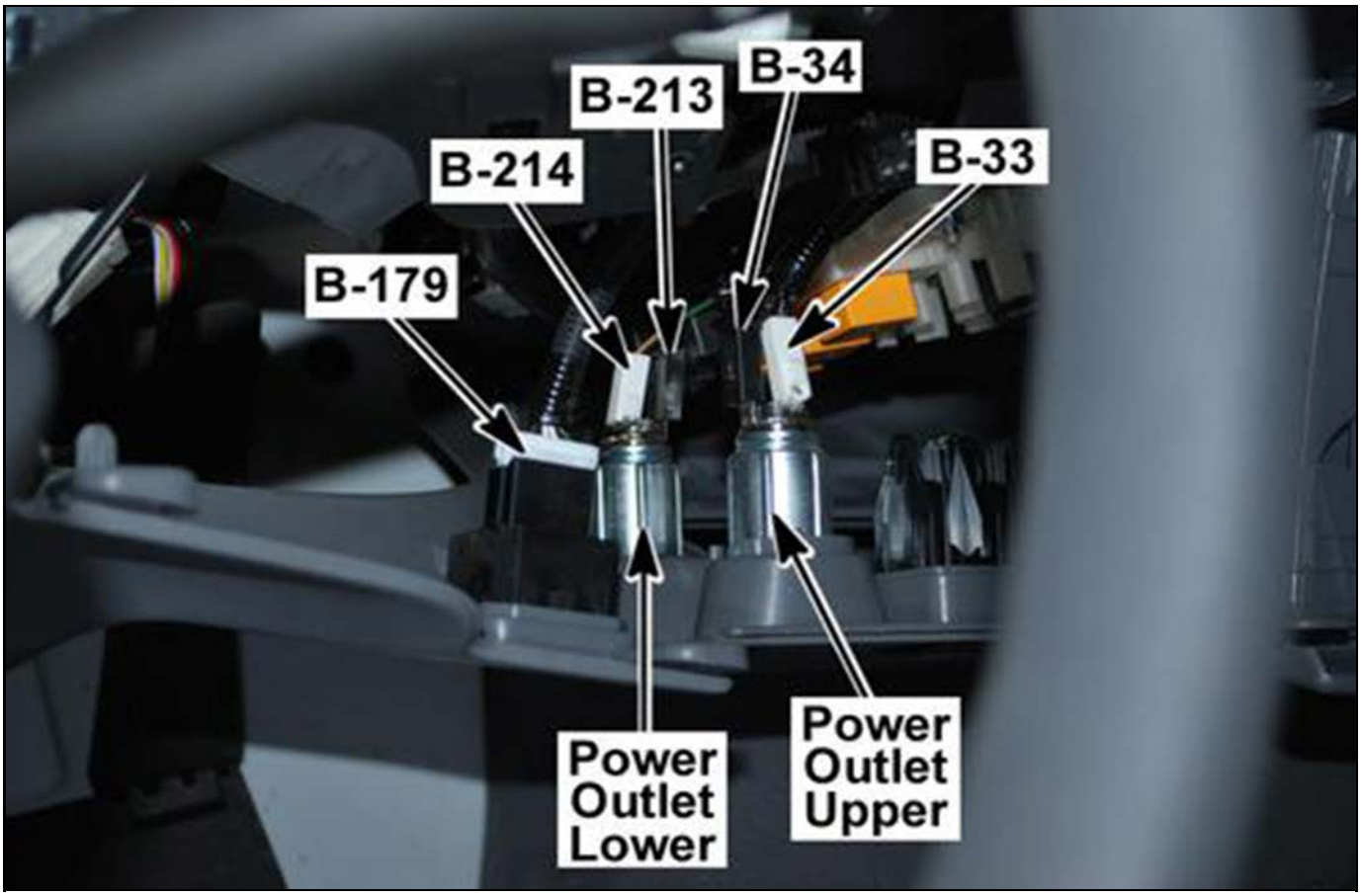

4895986

B-214 Power Outlet Lower

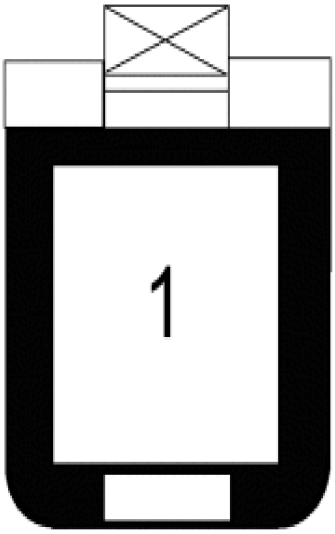

4895974

Connector Part Information		• 7323-8410 • 1-Way F (WHT)	
Pin	**Wire Color**	**Circuit Number**	**Function**
1	GRN/ORN	SA005B	Ignition Voltage from Fuse A-2

Center of the IP Left of the Fuse Relay Center (Cab)

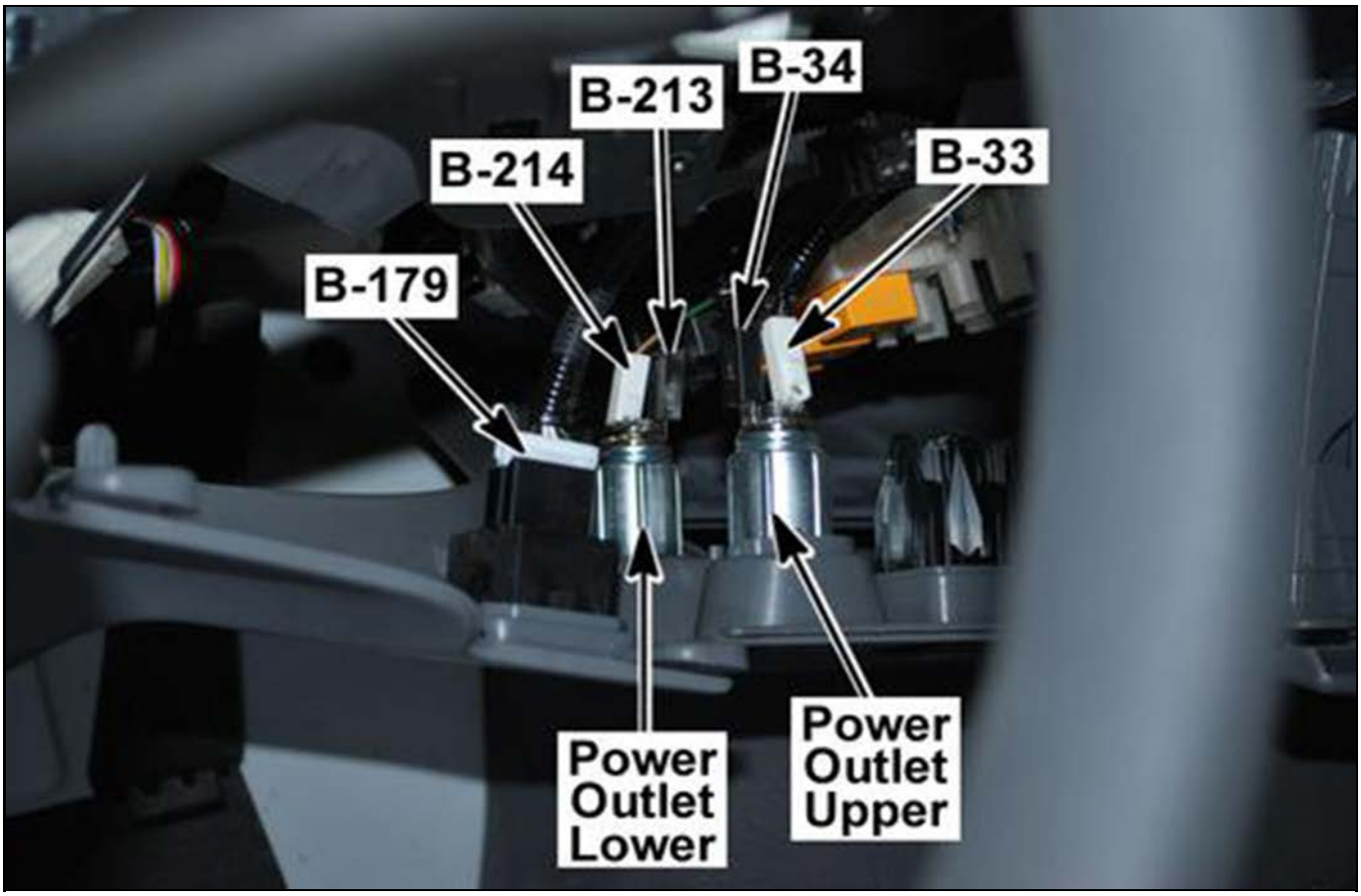

4895986

B-215 Blower Relay

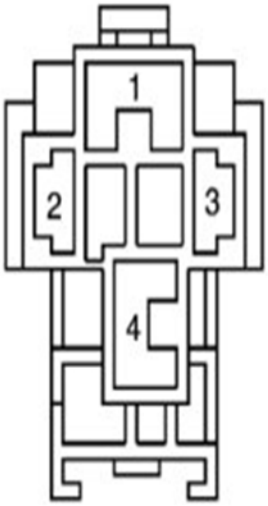

4896020

Connector Part Information		• 73236-6146-30 • 4-Way F (BLK)	
Pin	**Wire Color**	**Circuit Number**	**Function**
1	WHT/BLK	PA006B	Battery Voltage from Fuse FL-7 Supply Voltage (87 Input Voltage)
2	WHT/RED	HA027B	Fuse F-17 Supply Voltage (85 Coil Feed)
3	VIO/YEL	HA006B	Relay Control (86 Coil Control)
4	BRN	HA021B	Voltage to Splice 9 (Blower Motor and Fuse F- 30) (30 Switched Output Voltage)

In the Center of the IP Left Side of the Fuse Relay Center (Cab)

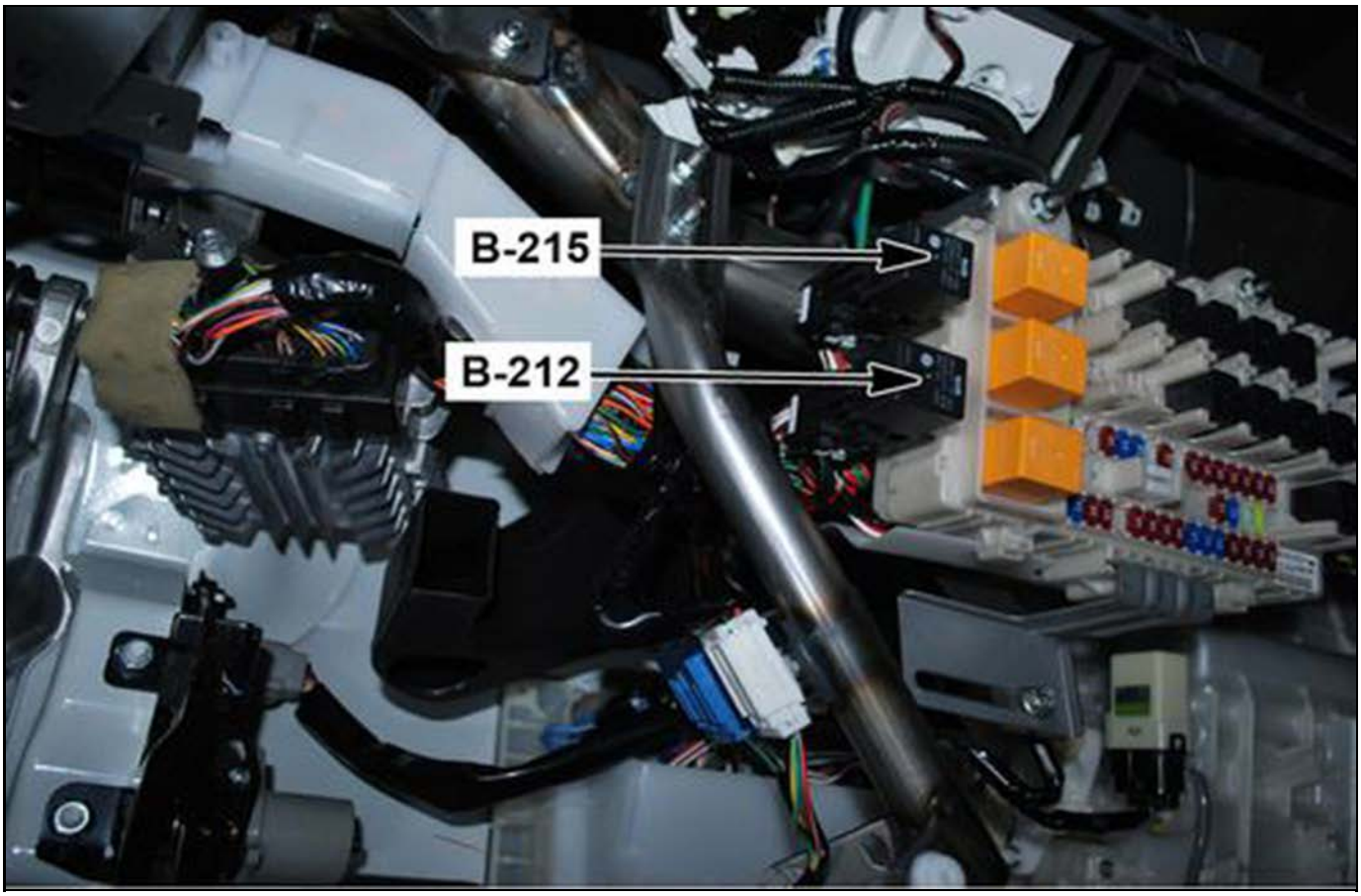

4895966

B-216 Flasher Module

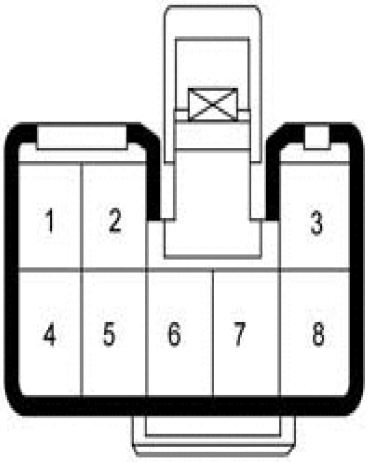

4896022

Connector Part Information		• 7383-1080-90 • 8-Way F (BLU)	
Pin	**Wire Color**	**Circuit Number**	**Function**
1	GRN/YEL	JA016B	Ignition Voltage from Fuse F-21
2	GRN/WHT	JA009B	Right Turn Signal Supply Voltage
3	GRN/BLK	JA008B	Left Turn Signal Supply Voltage
4	RED	JA001B	Battery Voltage from Fuse F-26
5	RED/BLK	JA003B	Left Turn Signal Switch Signal
6	RED/WHT	JA002B	Right Turn Signal Switch Signal
7	BLK	JX007B	Ground to B-377 Splice Pack (B-51 Ground)
8	RED/BLU	JA005B	Hazard Switch Signal

Under the Left Side of the IP Left of the Steering Column. Next to Connector B-249

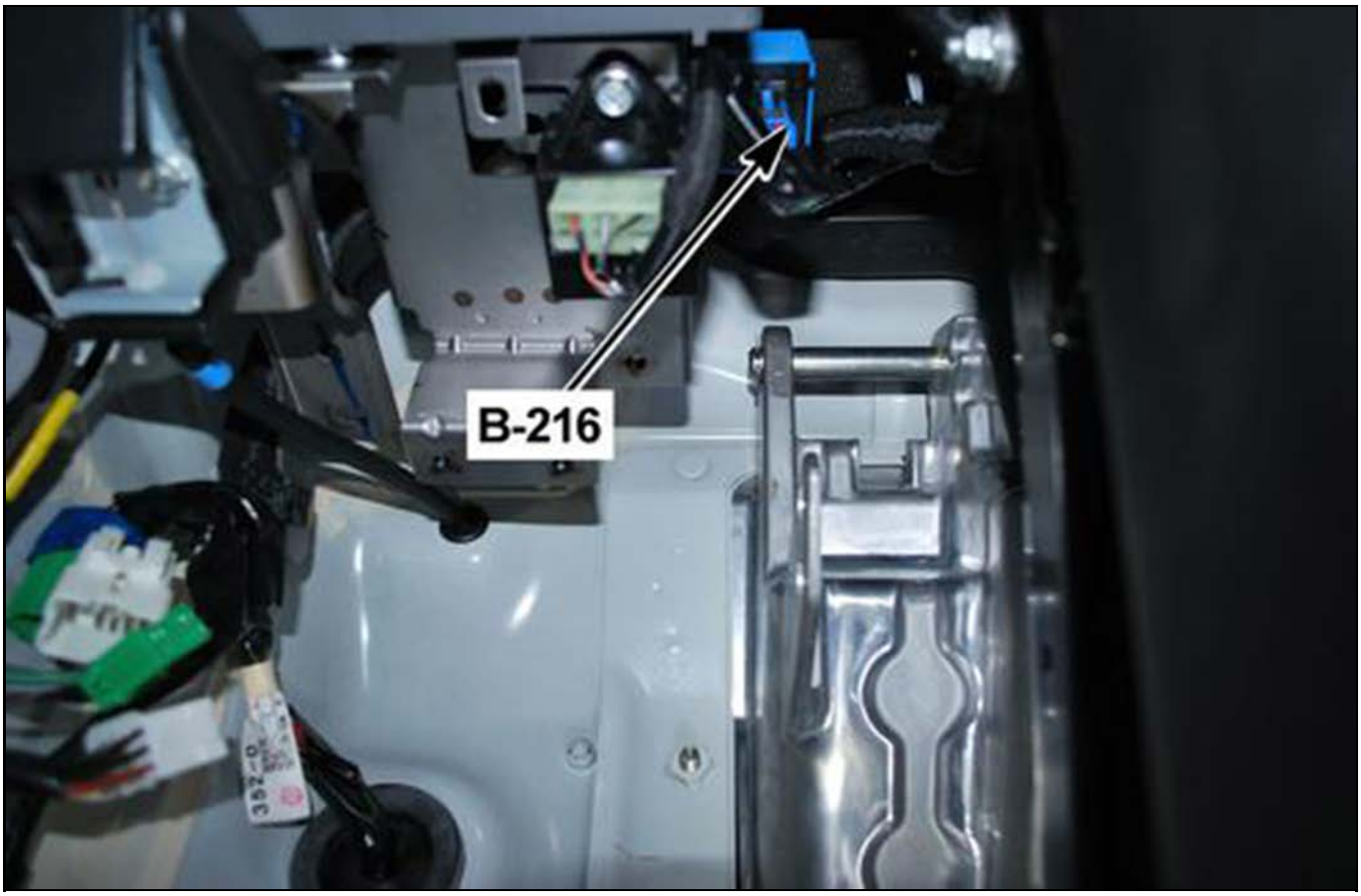

4896024

B-217 Fuse/Relay Center (Cab)

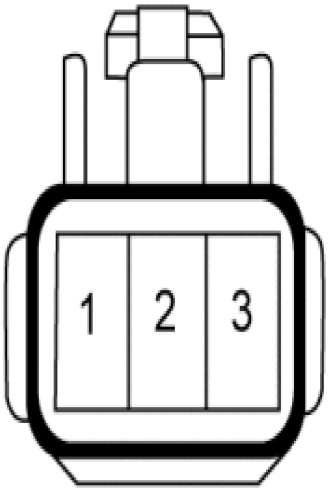

4896027

Connector Part Information		• 7383-3033 • 3-Way F (WHT)	
Pin	**Wire Color**	**Circuit Number**	**Function**
1	WHT/RED	AA042B	Battery Voltage from Fuse FL-8
2–3	—	—	Not Used

Behind the Center of the IP

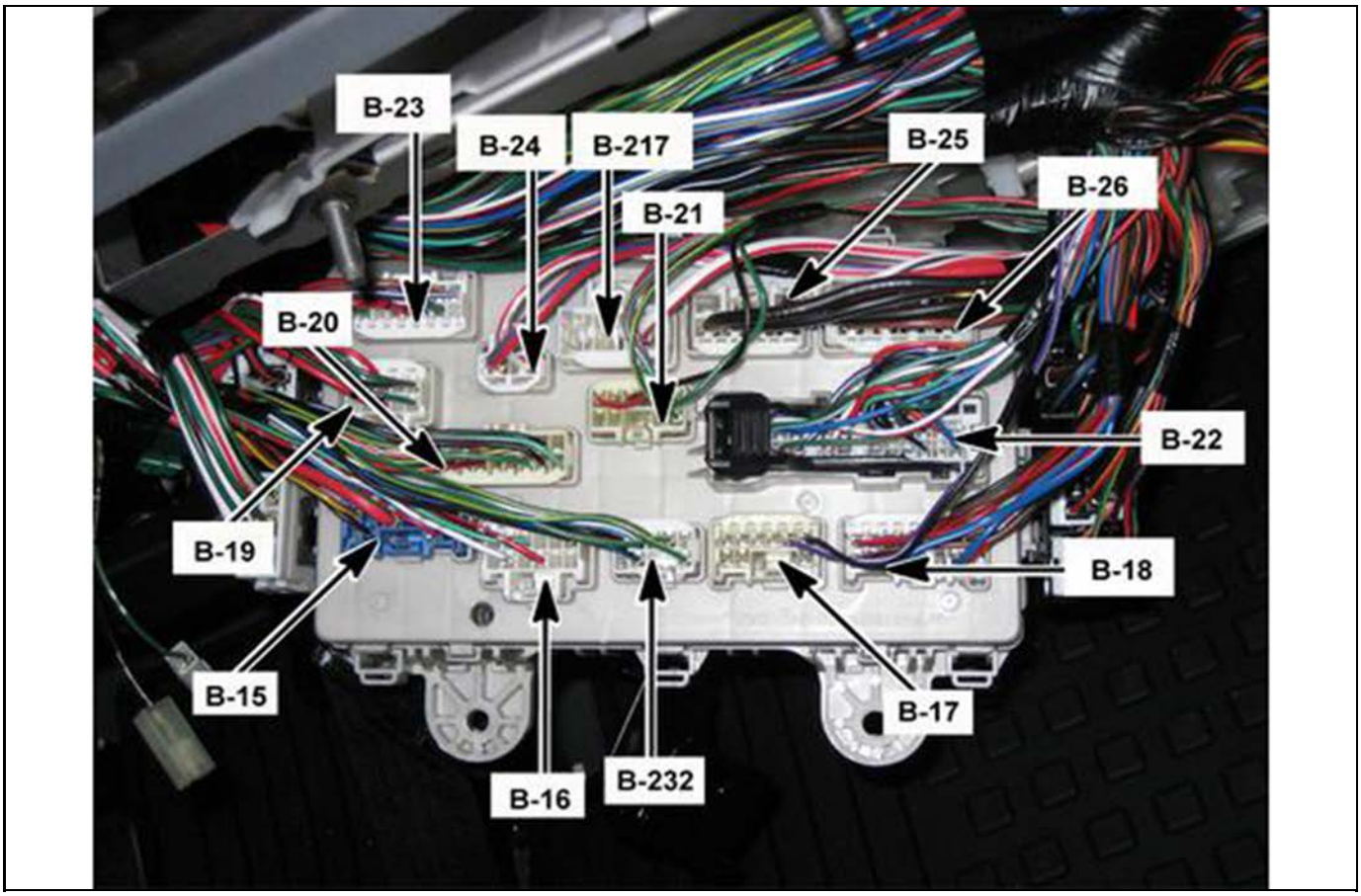

4896030

B-218 Condenser Fan Relay

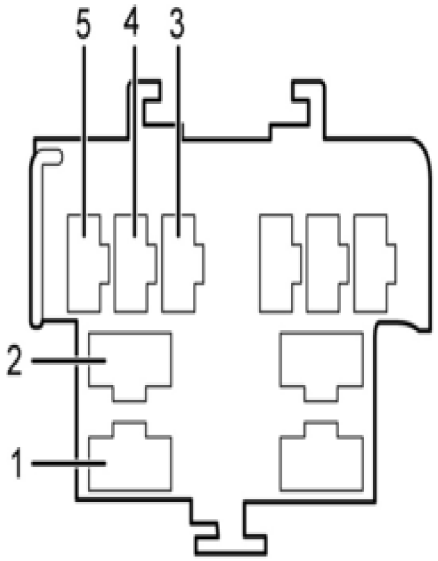

4896040

Connector Part Information		• 7354-5262 • 10-Way F (BLK)	
Pin	**Wire Color**	**Circuit Number**	**Function**
1	PNK	QA001B	Battery Voltage from Fuse F-37 (Input Voltage)
2	BLU/BLK	QA003B	Voltage to Condenser Fan (Switched Outlet Voltage)
3	BLU	HA054B	Switched Output Voltage from X-20 Compressor Clutch Relay (Coil Feed)
4	—	—	Not Used
5	BLK	HX006B	Ground (Coil Control) to J/B 2 (B-144 pin 16) (B-53 Ground)

Behind the Center of the IP Right of the Fuse Relay Center (Cab)

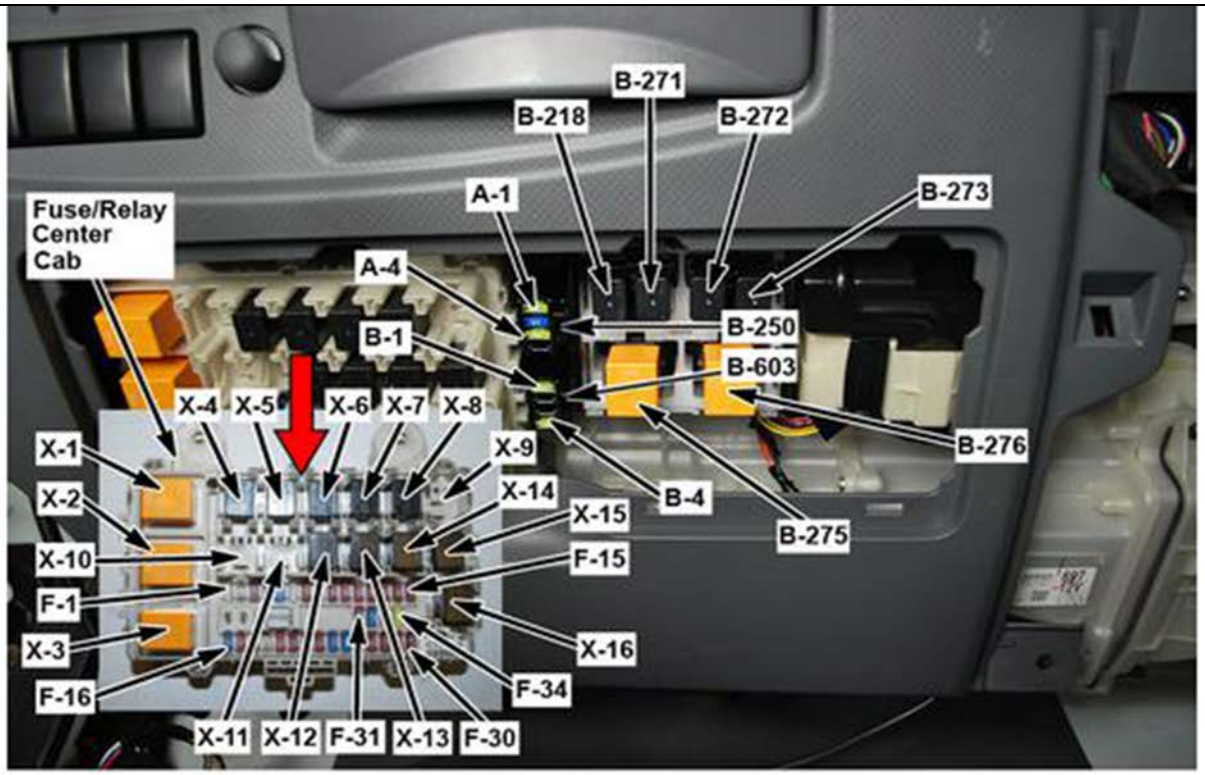

4896045

B-220 Power Source

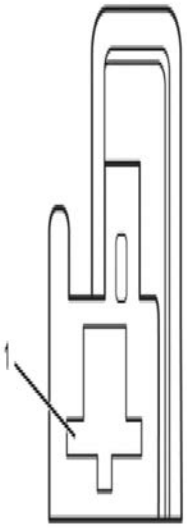

4896056

Connector Part Information		• 7323-6317 • 1-Way F (WHT)	
Pin	**Wire Color**	**Circuit Number**	**Function**
1	GRN/ORN	SA002B	Ignition Voltage from Fuse A-3

Center of the Instrument Panel, Below the Fuse/Relay Center (Cab)

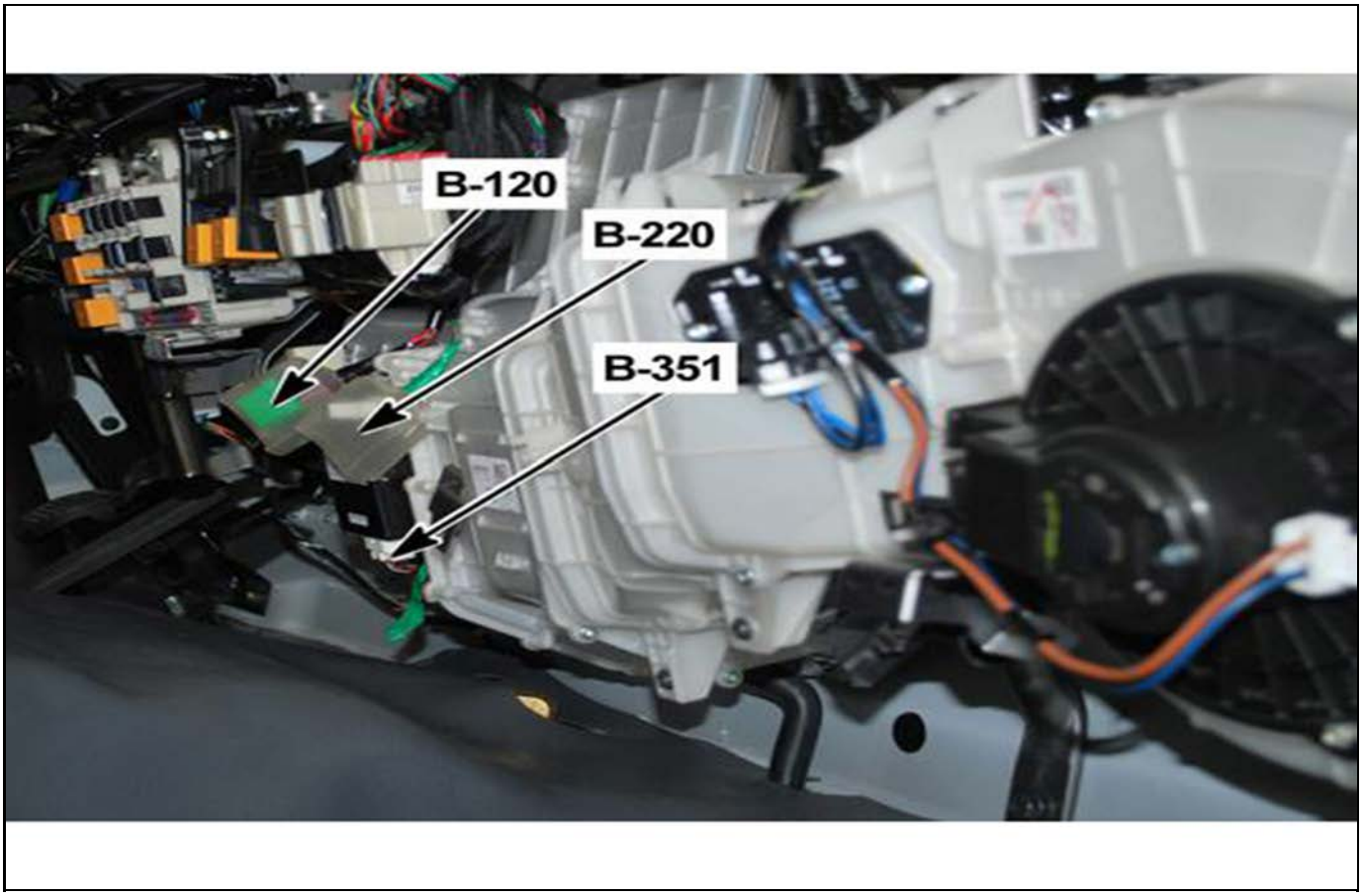

4896060

B-221 Ground

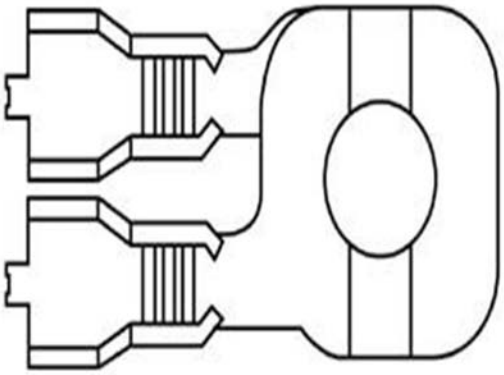

4894435

Connector Part Information		• 7009-1333 • 1-Way Eyelet	
Pin	**Wire Color**	**Circuit Number**	**Function**
—	BLK	ZZ042B	Ground to Splice 18

B-221 Left Inner Corner of the Cab, Across from the Lower Door Hinge

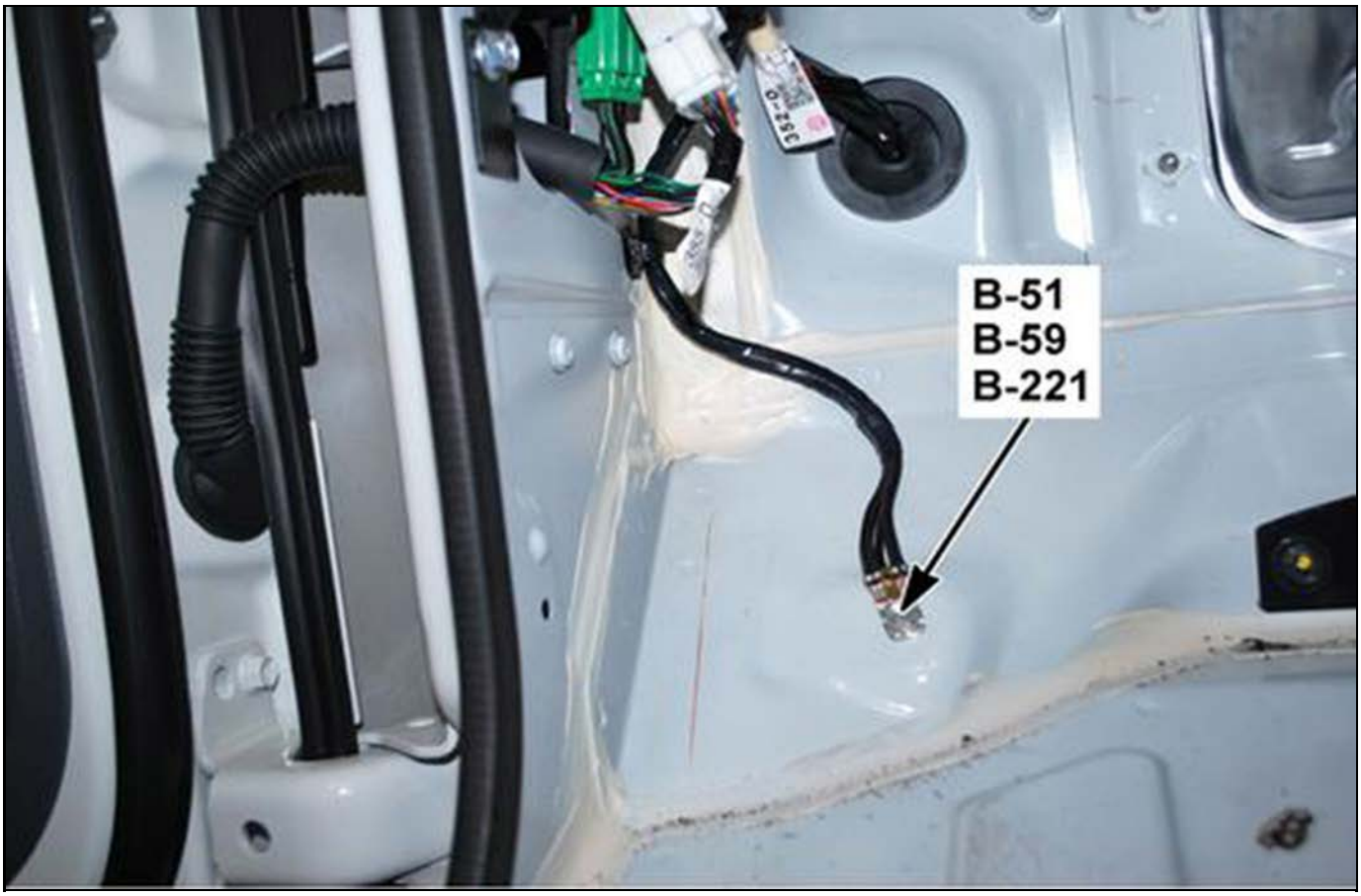

4896071

B-222 Rear Dome Lamp Switch

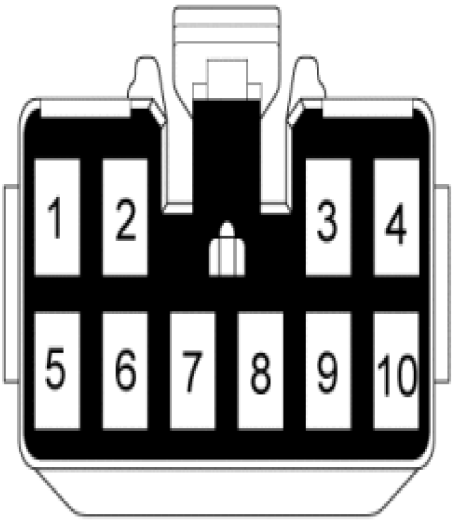

4896080

Connector Part Information		• 7383-1100-30 • 10-Way F (BLK)	
Pin	**Wire Color**	**Circuit Number**	**Function**
1	YEL	IA041B	Rear Dome Light Relay Coil Control
2	BLK	IX004B	Ground to B-377 Splice Pack (B-51 Ground)
3–4	—	—	Not Used
5	YEL	IA040B	Switch ON Indicator Supply Voltage
6	RED	IA020B	Battery Voltage from Fuse F-36
7	LT GRN/BLK	BA045B	Dimming Control to Dimming Control Switch
8	LT GRN/RED	BA039B	Fuse F-28 Voltage (Headlamp Switch ON), Dimming Control
9–10	—	—	Not Used

B-222 On the Left Side of the IP to the Left of the Steering Column

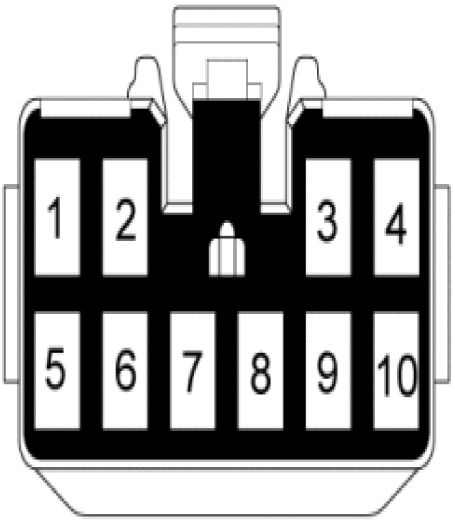

4896080

Connector Part Information		• 7383-1100-30 • 10-Way F (BLK)	
Pin	**Wire Color**	**Circuit Number**	**Function**
1	YEL	IA041B	Rear Dome Light Relay Coil Control
2	BLK	IX004B	Ground to B-377 Splice Pack (B-51 Ground)
3–4	—	—	Not Used
5	YEL	IA040B	Switch ON Indicator Supply Voltage
6	RED	IA020B	Battery Voltage from Fuse F-36
7	LT GRN/BLK	BA045B	Dimming Control to Dimming Control Switch
8	LT GRN/RED	BA039B	Fuse F-28 Voltage (Headlamp Switch ON), Dimming Control
9–10	—	—	Not Used

B-223 Horn Switch

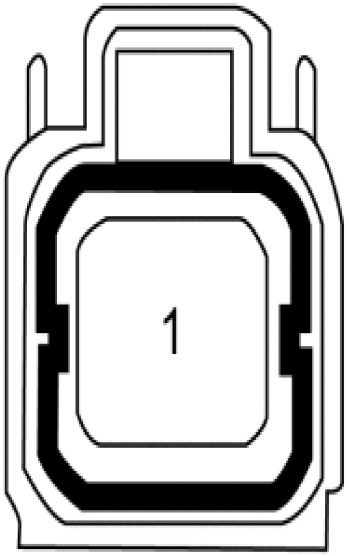

4896092

Connector Part Information		• 7383-2413 • 1-Way F (WHT)	
Pin	**Wire Color**	**Circuit Number**	**Function**
1	BLU	DA004B	Horn Relay Control

B223 In the Steering Column Under the Steering Column Trim Panels

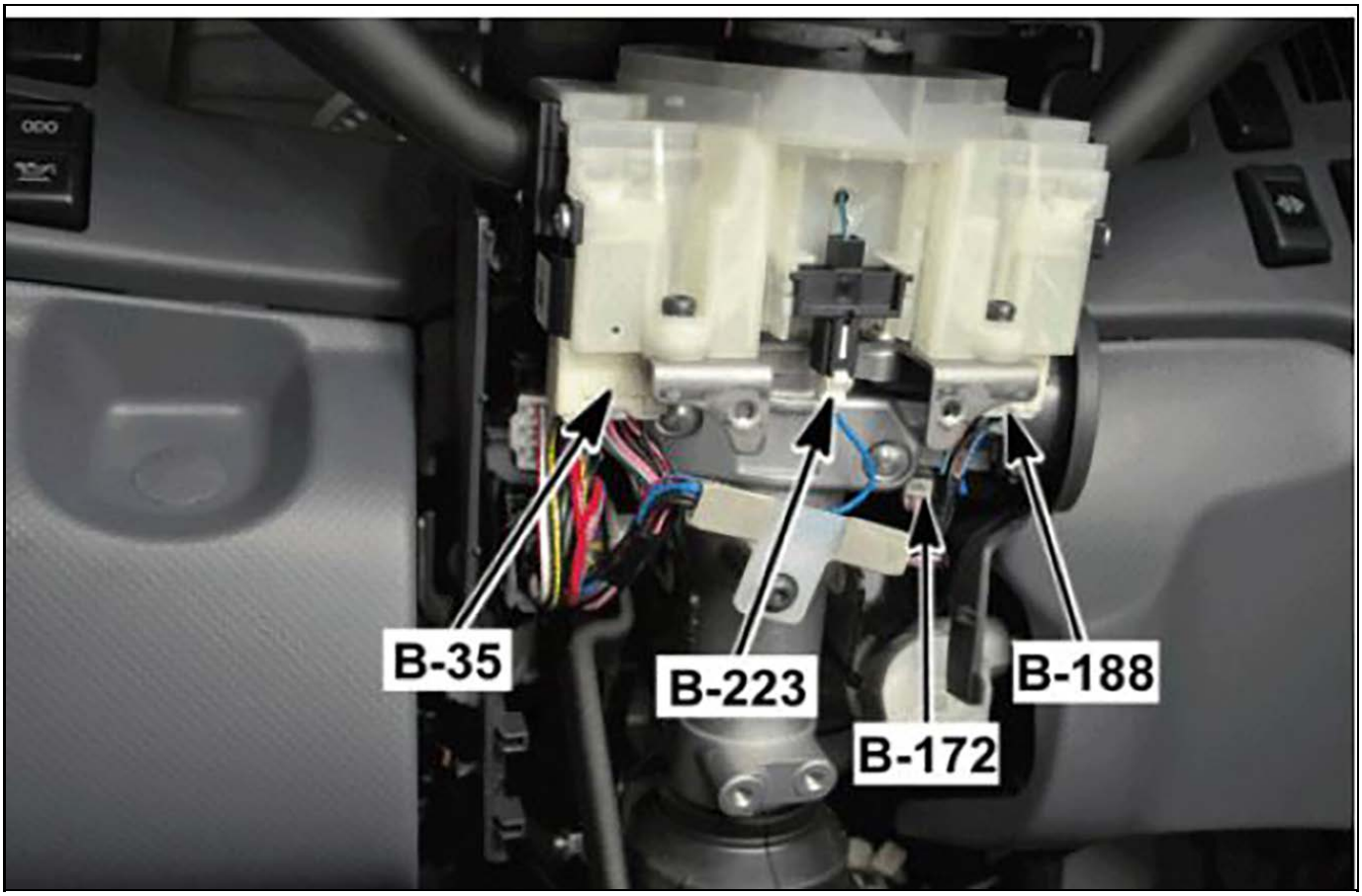

4895830

B-224 Cruise Main Switch

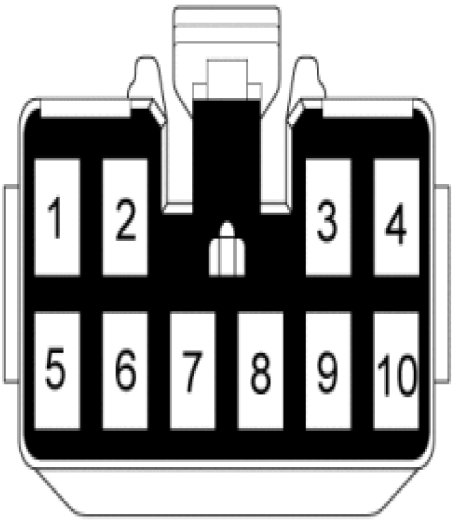

4896116

Connector Part Information		• 7383-1100-80 • 10-Way F (BRN)	
Pin	**Wire Color**	**Circuit Number**	**Function**
1–2	—	—	Not Used
3	GRY/BLU	IC178B	Ignition Voltage from Fuse F-20
4	GRY/BLU	IC158B	Switch Signal
5–6	—	—	Not Used
7	LT GRN/BLK	BA013B	Dimming Control to Dimming Control Switch
8	LT GRN/RED	BA014B	Fuse F-28 Voltage (Headlight Switch ON), Dimming Control
9–10	—	—	Not Used

In the Center of the I/P, On the Left Side of the HVAC Controls

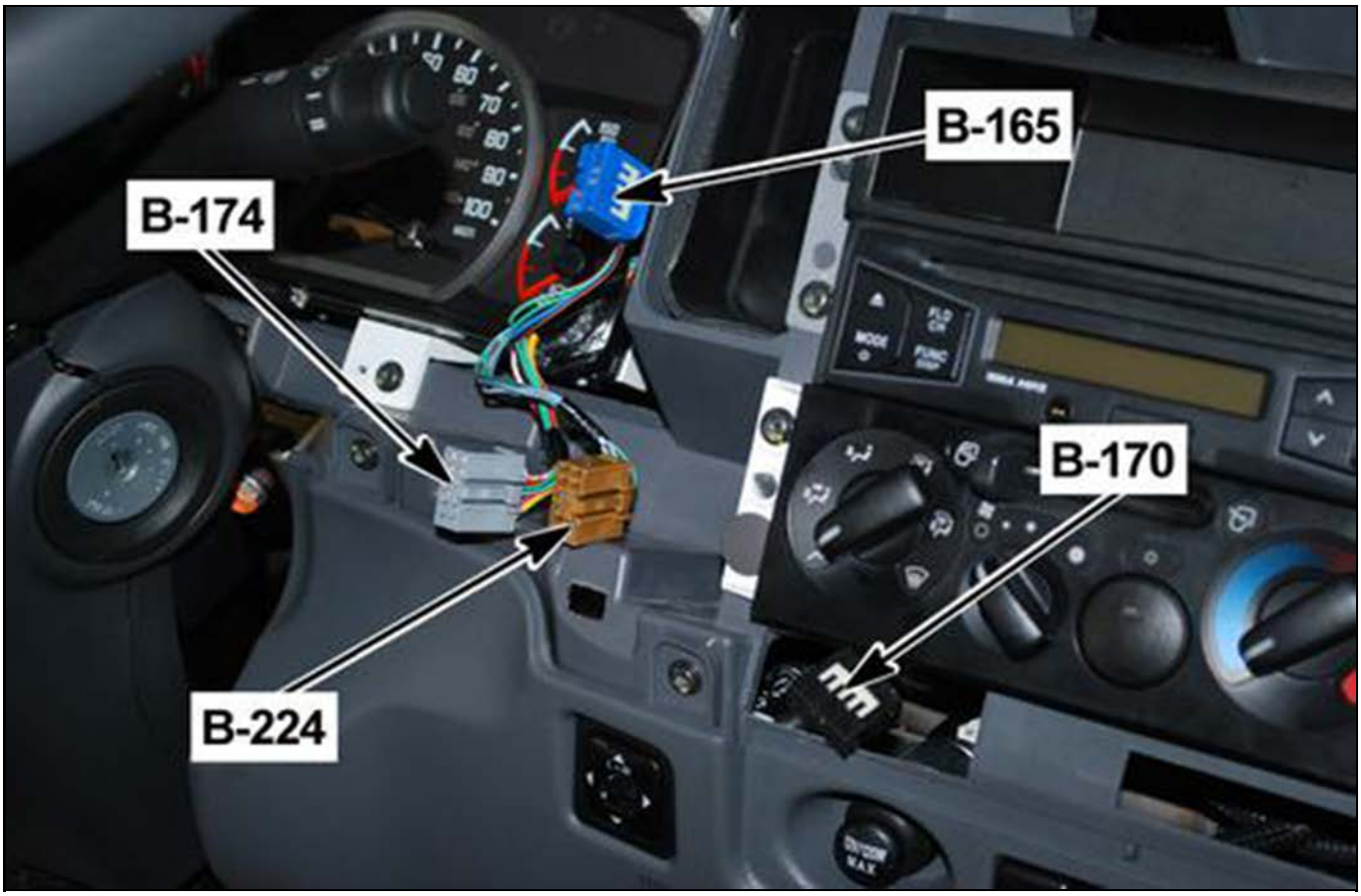

4896118

B-225 Daytime Running Lamp (DRL) Module

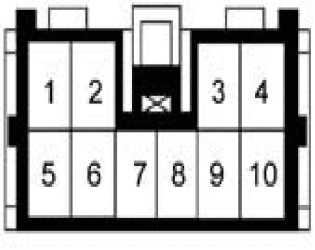

4896123

Connector Part Information		• 7323-8307-30 • 10-Way F (BLK)	
Pin	**Wire Color**	**Circuit Number**	**Function**
1	WHT/BLU	AA029B	Charge Indicator (Red) Signal
2	WHT/BLK	AA021B	Parking Brake Switch Signal from J/B 1 (B-138 pin 10)
3	—	—	Not Used
4	BLK	AX004B	Ground to B-48 Junction Block (B-53 Ground)
5–6	—	—	Not Used
7	RED/WHT	AA023B	Headlamp High Beam Signal
8	VIO/WHT	AA019B	Combination Switch Signal
9	RED/BLU	AA040B	X-2 DRL Relay Coil Control
10	YEL/GRN	AA036B	DRL Indicator (Green) Control

Right Side of the IP to the Right of the Blower Motor (Trim Panel is Removed)

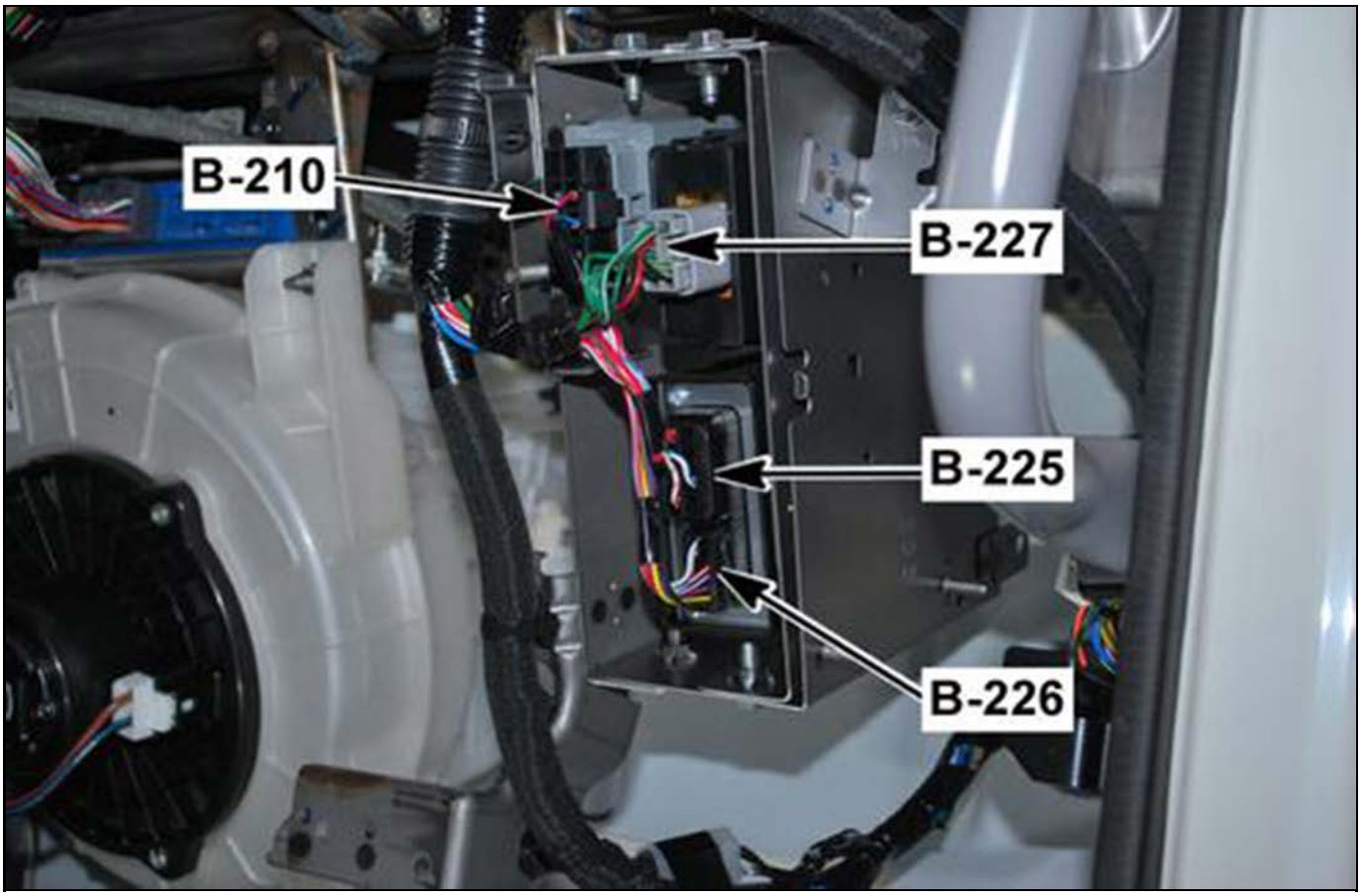

4896131

B-226 Daytime Running Lamp (DRL) Module

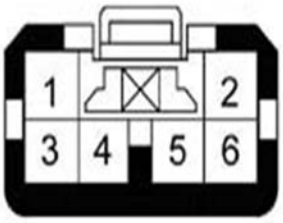

4896140

Connector Part Information		• 7383-1065-30 • 6-Way F (BLK)	
Pin	**Wire Color**	**Circuit Number**	**Function**
1	RED/GRN	AA041B	X-2 DRL Relay Voltage (Switched Output Voltage)
2	WHT/RED	AA045B	Low Beam Headlamp Signal (RH)
3–4	—	—	Not Used
5	WHT/BLU	AA044B	Low Beam Headlamp Signal (LH)
6	—	—	Not Used

Right Side of the IP to the Right of the Blower Motor (Trim Panel is Removed)

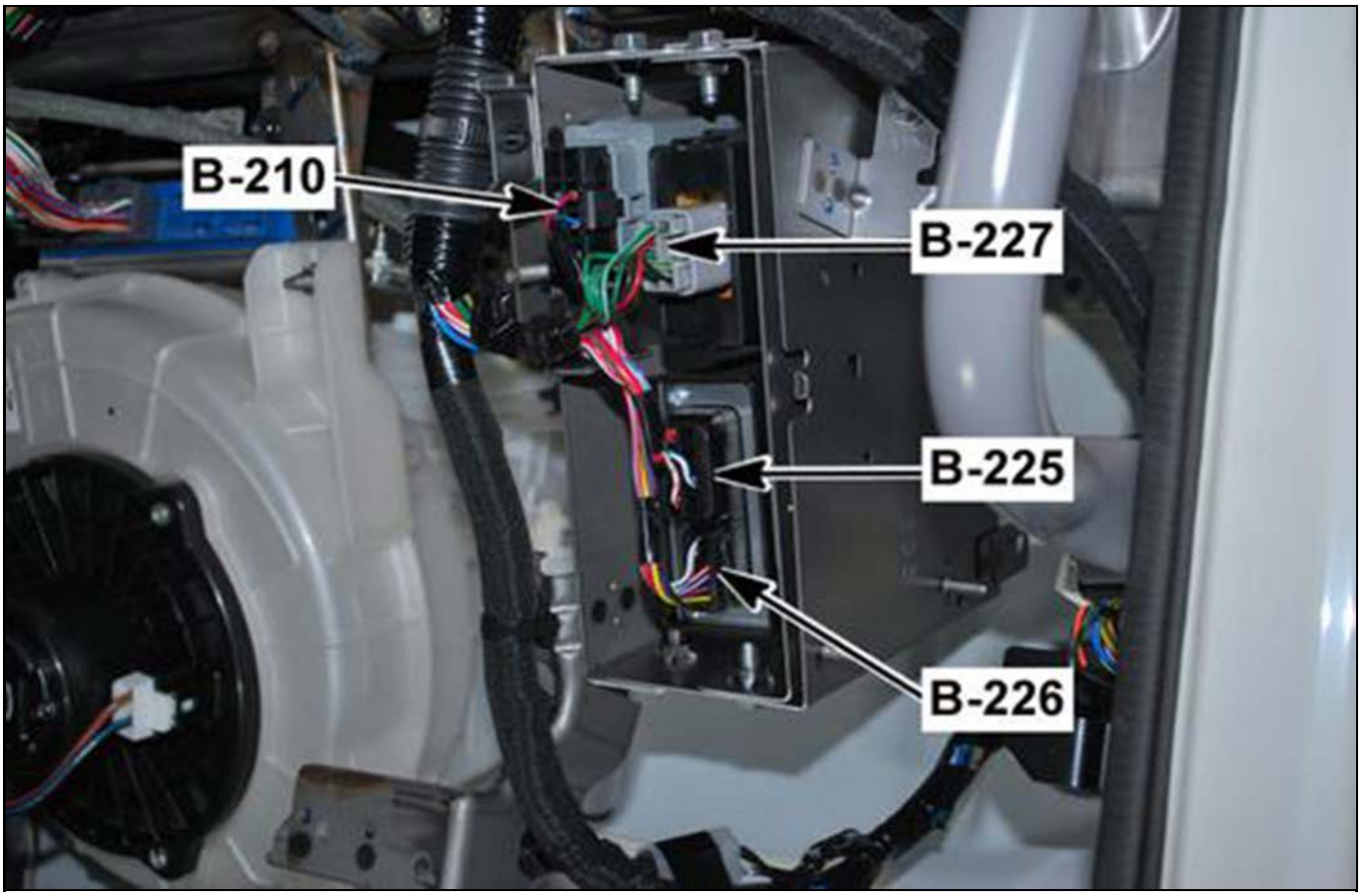

4896131

B-227 Door Lock Relay

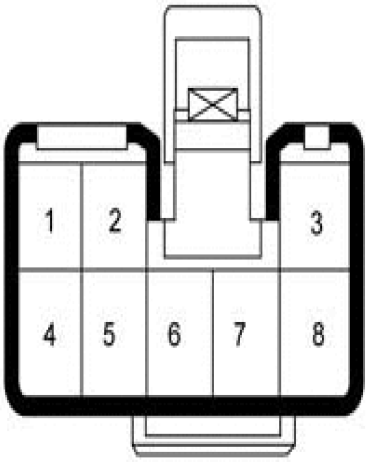

4896150

Connector Part Information		• 7383-1080-40 • 8-Way F (GRY)	
Pin	**Wire Color**	**Circuit Number**	**Function**
1	BLK	VX004B	Ground to J/B 2 (B-145 pin 5) (B-53 Ground)
2	GRN/YEL	VA016B	Lock Acutator Control
3	GRN/RED	VA017B	Unlock Actuator Control
4	BLK	VX006B	Ground to J/B 2 (B-144 pin 17) (B-53 Ground)
5	GRN/BLK	VA019B	Lock Switch Signal
6	GRN	VA018B	Battery Voltage from Fuse F-4 from J/B 2 (B- 143 pin 2)
7	RED/GRN	VA005B	Unlock Switch Signal
8	GRN/WHT	VA014B	Door Lock Switch Signal

Right Side of the IP to the Right of the Blower Motor (Trim Panel is Removed)

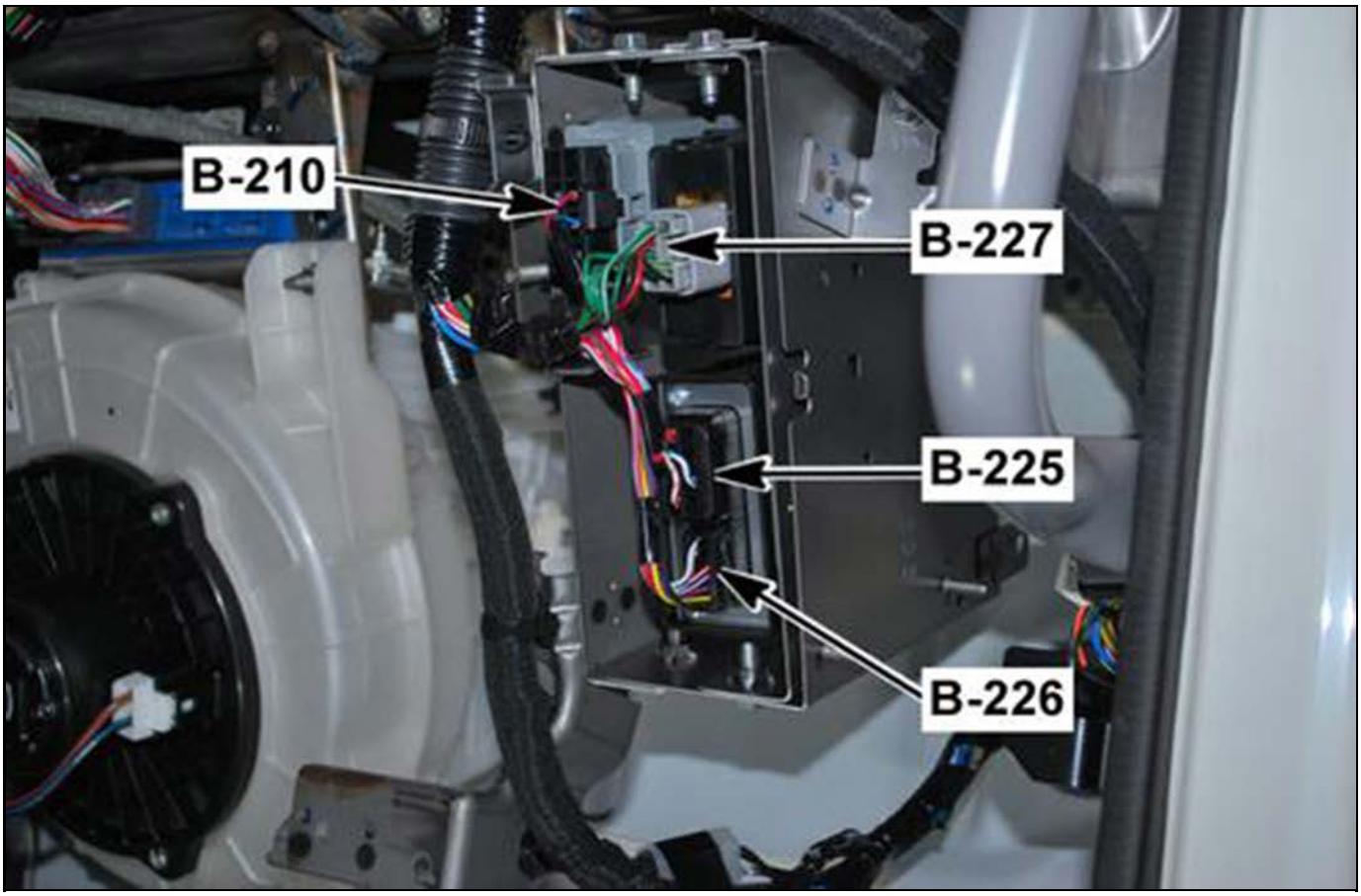

4896131

B-228 Transmission Control Module (TCM)

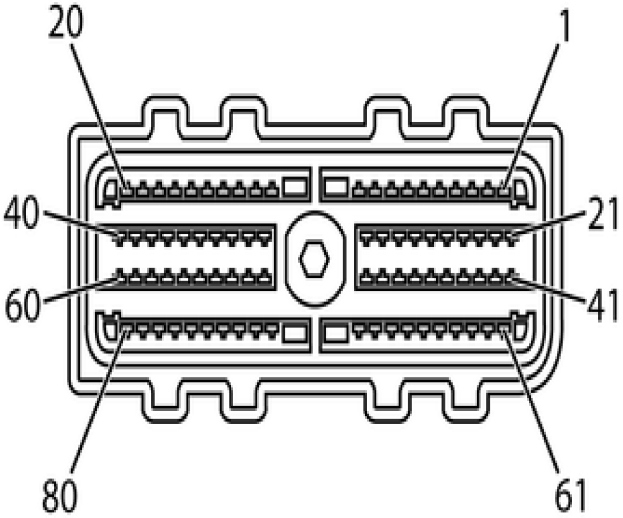

4896155

Connector Part Information		• 29543004 • 80-Way F (BLK)	
Pin	**Wire Color**	**Circuit Number**	**Function**
1	BRN	OA044B	Range Inhibitor Switch
2	—	—	Not Used
3	BLK	OA046B	Digital Return
4–5	—	—	Not Used
6	GRN/YEL	TF164B	CAN High to TCM (B-228 pin 26)
7	—	—	Not Used
8	BLU	TF038B	CAN 1 Low
9	BLK	OX006B	Ground to J/B 2 (B-145 pin 9) (B-53 Ground)
10	ORN	OA088B	Battery Voltage from Fuse F-35
11	YEL/BRN	OA082B	High Side Driver (HSD) 1 Output
12–13	—	—	Not Used
14	BLU/RED	OA071B	Internal Mode Switch "C" Signal
15–16	—	—	Not Used
17	GRN/BLK	OA067B	Pressure Switch 1 (PS1) Signal
18–19	—	—	Not Used
20	YEL	OA064B	Input Shaft Speed (ISS) Sensor 5-Volt Supply
21–22	—	—	Not Used
23	PNK	OA041B	Auto Neutral
24	BLK/ORN	OA057B	Range Inhibitor Switch to IPC
25	—	—	Not Used
26	GRN/YEL	TF164B	CAN High to TCM (B-228 pin 6)
27	GRN	TF032B	CAN 2 Low
28	BLU/WHT	TF037B	CAN 1 High
29	GRN/ORN	OA059B	Check Trans Indicator (Amber) Control
30	—	—	Not Used
31	BRN/YEL	OA097B	High Side Driver (HSD) 3 Voltage
32	—	—	Not Used
33	WHT/BLK	OA075B	Shift Solenoid 2 (SS 2) Valve Control
34	GRN/RED	OA069B	Internal Mode Switch "P" Signal
35	—	—	Not Used
36	WHT/BLU	OA077B	Pressure Control Solenoid 2 (PSC 2) Control
37	ORN	OA098B	Pressure Control Solenoid 3 (PSC 3) Control
38	GRN/WHT	OA070B	Internal Mode Switch "CE" Signal
39	BLK/RED	OA060B	Engine Speed Sensor Supply Voltage
40	BLK/BLU	OA062B	Output Shaft Speed (OSS) Sensor 5-Volt Reference
41–42	—	—	Not Used
43	WHT	OA051B	PTO Switch
44	—	—	Not Used
45	YEL	OA040B	Range Indicator
46–49	—	—	Not Used
50	LT BLU	OA047B	PTO Output
51	WHT	OA074B	Shift Solenoid 3 (SS 3) Valve Control
52	WHT/GRN	OA076B	Shift Solenoid 1 (SS 1) Valve Control
53	BLU	OA072B	Internal Mode Switch "B" Signal
54	YEL/RED	OA085B	Transmission Fluid Temperature Sensor Signal

Connector Part Information		• 29543004 • 80-Way F (BLK)	
Pin	**Wire Color**	**Circuit Number**	**Function**
55	YEL/BLK	OA081B	Pressure Control Solenoid 3 (PSC 3) Control
56	—	—	Not Used
57	GRN	OA066B	Pressure Switch 3 (PS3) Signal
58	BRN/GRN	OA086B	Analog Sensor Signal Return
59	WHT/RED	OA061B	Engine Speed Sensor Signal
60	WHT/BLU	OA063B	Output Shaft Speed (OSS) Sensor Signal
61–62	—	—	Not Used
63	BLK/ORN	OA087B	Ignition Voltage from Fuse F-20
64	GRY	OA056B	Trans Fluid Temperature Indicator (Red) Control
65	WHT/BLU	OA058B	Reverse Lamp Relay Coil Control
66	GRN/WHT	TF031B	CAN 2 High
67–68	—	—	Not Used
69	BLK	OX005B	Ground to J/B 2 (B-145 pin 8) (B-53 Ground)
70	ORN	OA089B	Battery Voltage from Fuse F-35
71	BRN/BLK	OA078B	High Side Driver (HSD) 2 Voltage
72	—	—	Not Used
73	BLU/YEL	OA073B	Internal Mode Switch "A" Signal
74	WHT/RED	OA079B	Main Modulator Solenoid Control
75–76	—	—	Not Used
77	YEL/GRN	OA083B	Pressure Switch 4 (PS4) Signal
78	BRN/WHT	OA080B	Torque Converter Clutch (TCC) Solenoid Control
79	GRN/YEL	OA068B	Pressure Switch 2 (PS2) Signal
80	BLU	OA065B	Input Shaft Speed (ISS) Sensor Signal

B228 Above the Accelerator Pedal

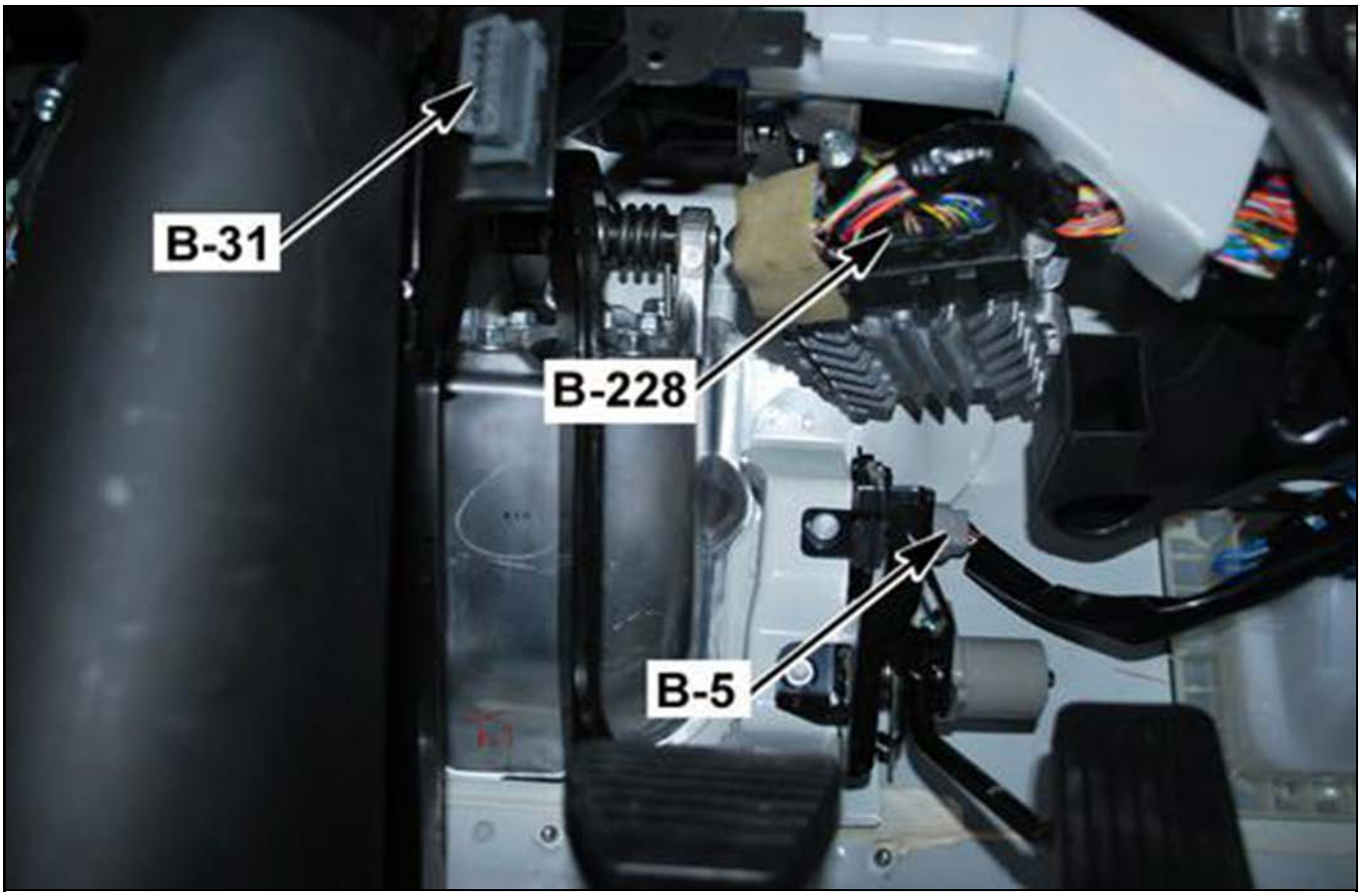

4896160

B235 Can 2 Splice Pack

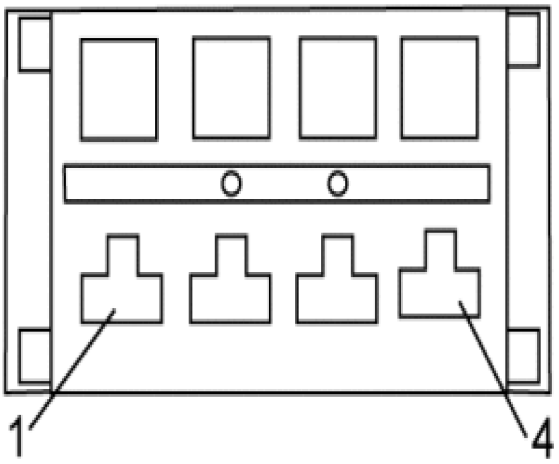

4896165

Connector Part Information		• 7383-3190 • 4-Way F (WHT)	
Pin	**Wire Color**	**Circuit Number**	**Function**
1	GRN	TF036B	ISO 15765 CAN Low Serial Data to EGR Valve, ECM, DEF Module, Particulate Matter Sensor
2	—	—	Not Used
3	GRN	TF044B	ISO 15765 CAN Low Serial Data to B-405 CAN 2 Splice Pack
4	GRN	TF041B	ISO 15765 CAN Low Serial Data to DLC

B235 Behind the Instrument Panel Cluster (IPC) (View with IPC Removed)

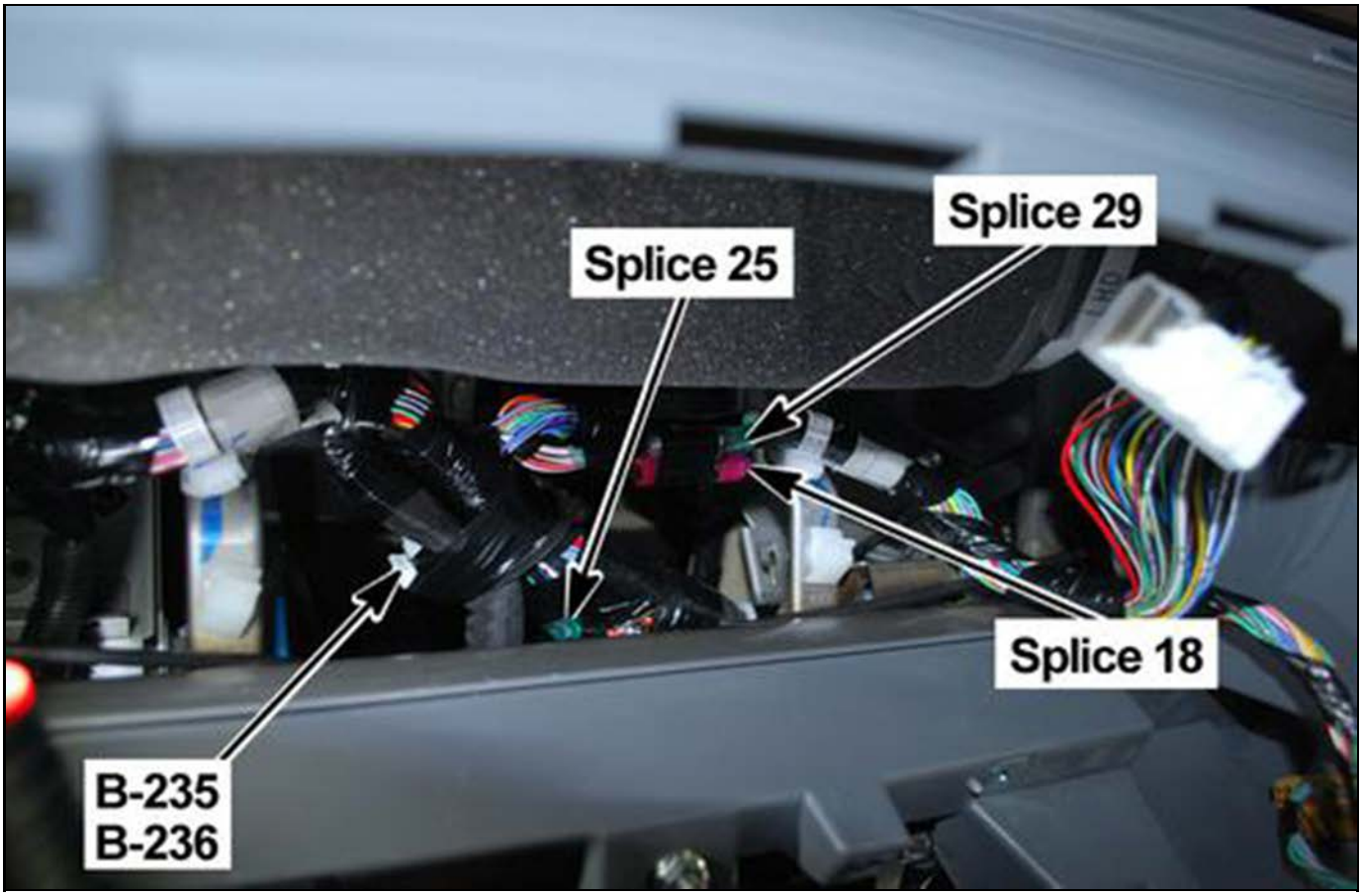

4896168

B-236 CAN 2 Splice Pack

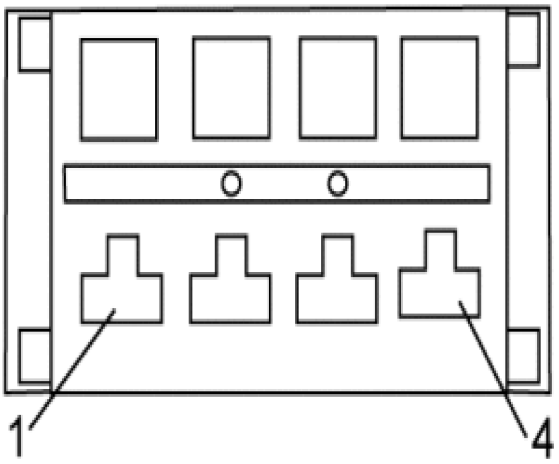

4896165

Connector Part Information		• 7383-3190 • 4-Way F (WHT)	
Pin	**Wire Color**	**Circuit Number**	**Function**
1	GRN/WHT	TF035B	ISO 15765 CAN High Serial Data to EGR Valve, ECM, DEF Module, Particulate Matter Sensor
2	—	—	Not Used
3	GRN/WHT	TF043B	ISO 15765 CAN High Serial Data to B-406 CAN 2 Splice Pack
4	GRN/WHT	TF042B	ISO 15765 CAN High Serial Data to DLC

B235 Behind the Instrument Panel Cluster (IPC) (View with IPC Removed)

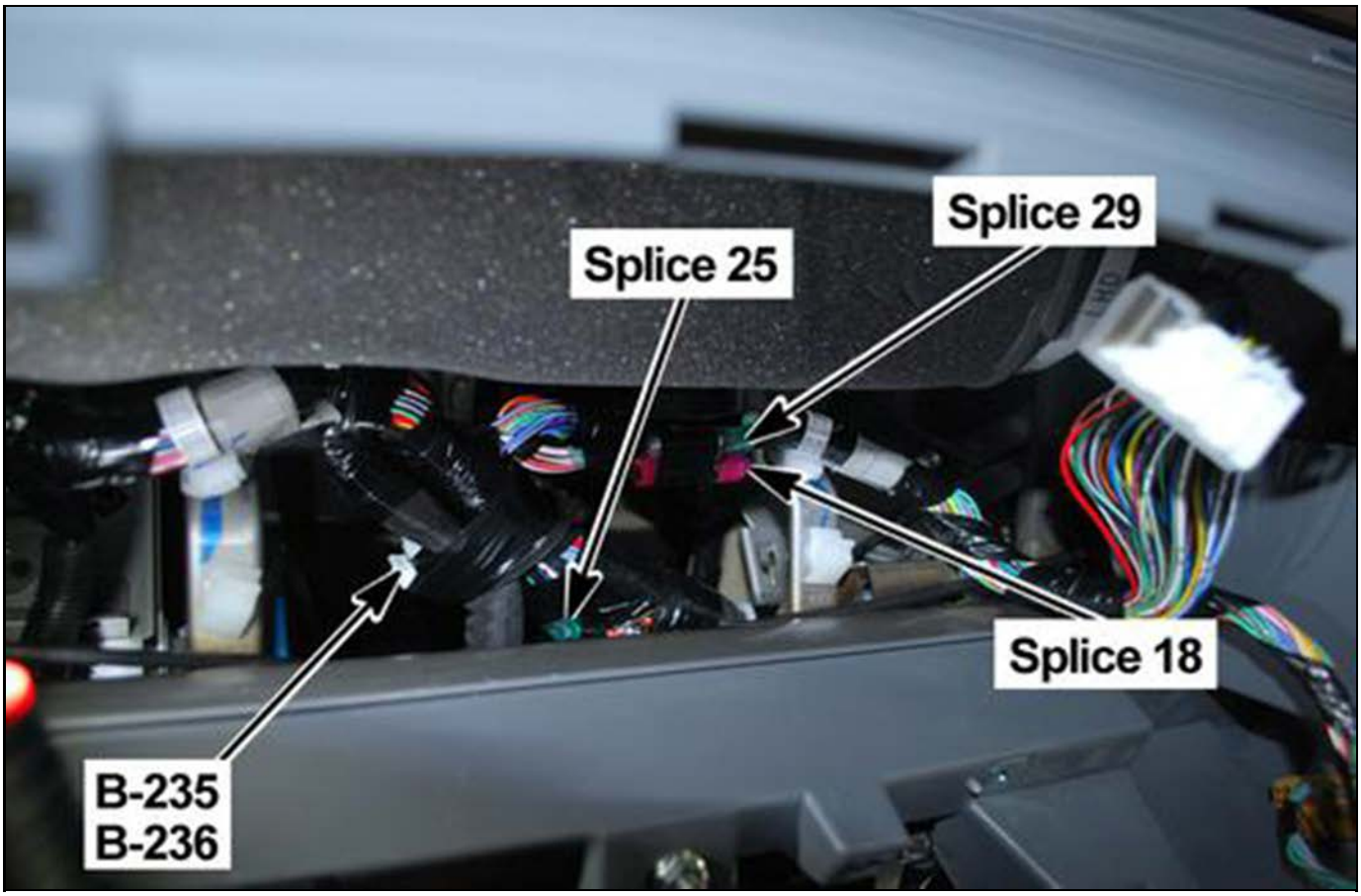

4896168

B-239 Miles/Oil Level Check Switch

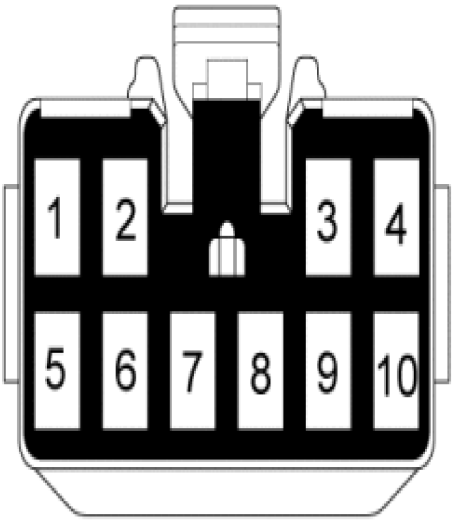

4896189

Connector Part Information		• 7383-1100-90 • 10-Way F (BLU)	
Pin	**Wire Color**	**Circuit Number**	**Function**
1	BLK/BLU	MA054B	Battery Voltage from Fuse F-22
2	WHT	MA056B	Oil Level Indicator Control
3	BLK/BLU	MA055B	Battery Voltage from Fuse F-22
4	BLU	MA053B	Miles Check Display Control
5–6	—	—	Not Used
7	LT GRN/BLK	BA020B	Dimming Control to Dimming Control Switch
8	LT GRN/RED	BA021B	Fuse F-28 Voltage (Headlight Switch ON), Dimming Control
9–10	—	—	Not Used

B239 On the Left Side of the IP to the Left of the Steering Column

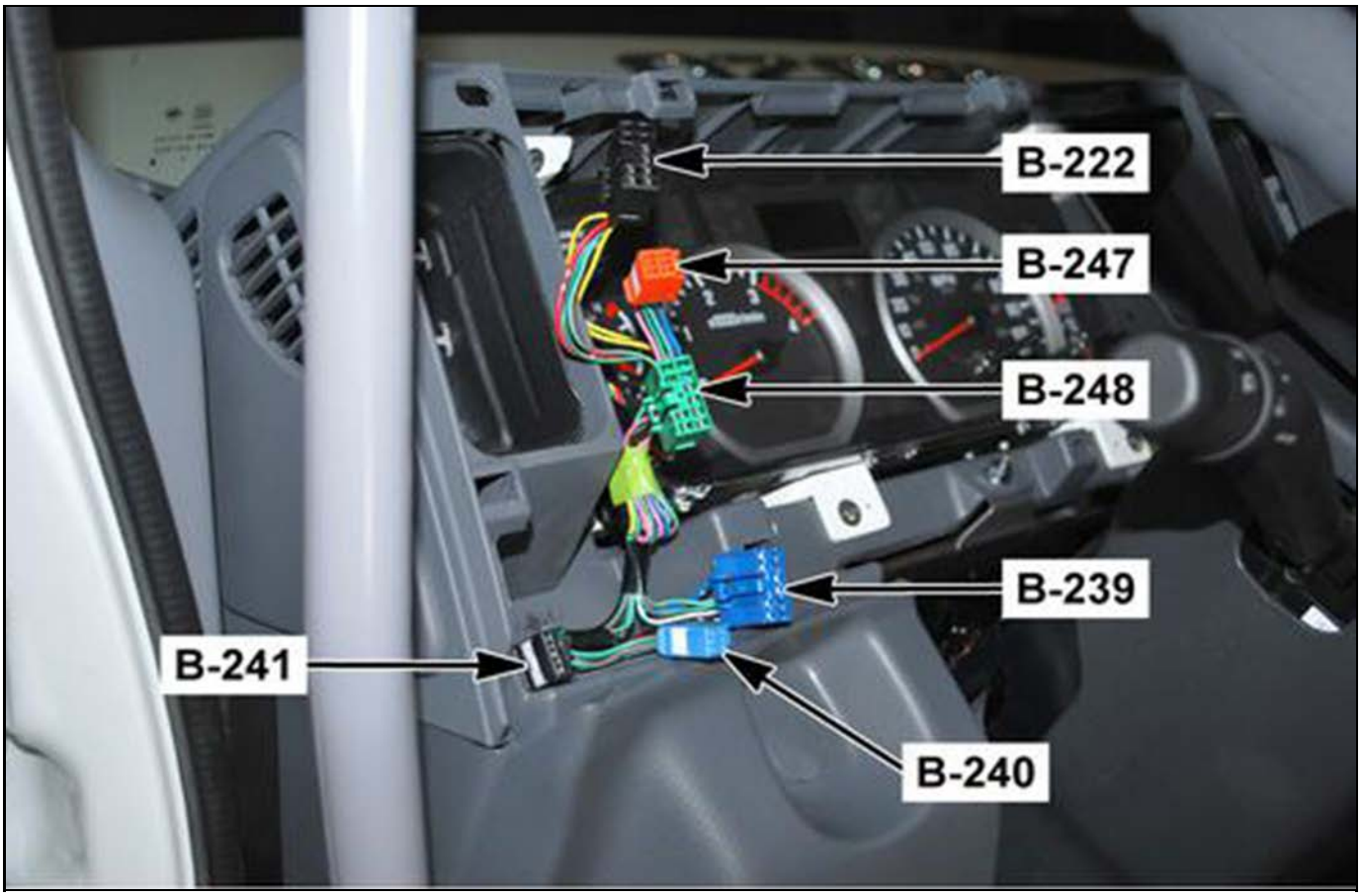

4896199

B240 Door Lock Switch

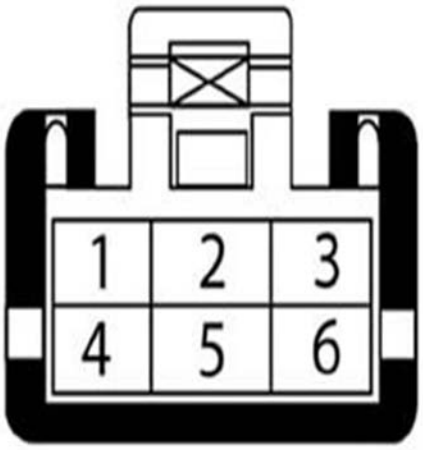

4896206

Connector Part Information		• 7383-5862-90 • 6-Way F (BLU)	
Pin	**Wire Color**	**Circuit Number**	**Function**
1	RED/GRN	VA015B	Unlock Signal
2	—	—	Not Used
3	GRN/WHT	VA020B	Lock Signal
4	BLK	VX005B	Ground to B-600 Splice Pack (B-51 Ground)
5	LT GRN/BLK	BX026B	Dimming Control to Dimming Control Switch
6	LT GRN/RED	BA042B	Fuse F-28 Voltage (Headlight Switch ON), Dimming Control

B239 On the Left Side of the IP to the Left of the Steering Column

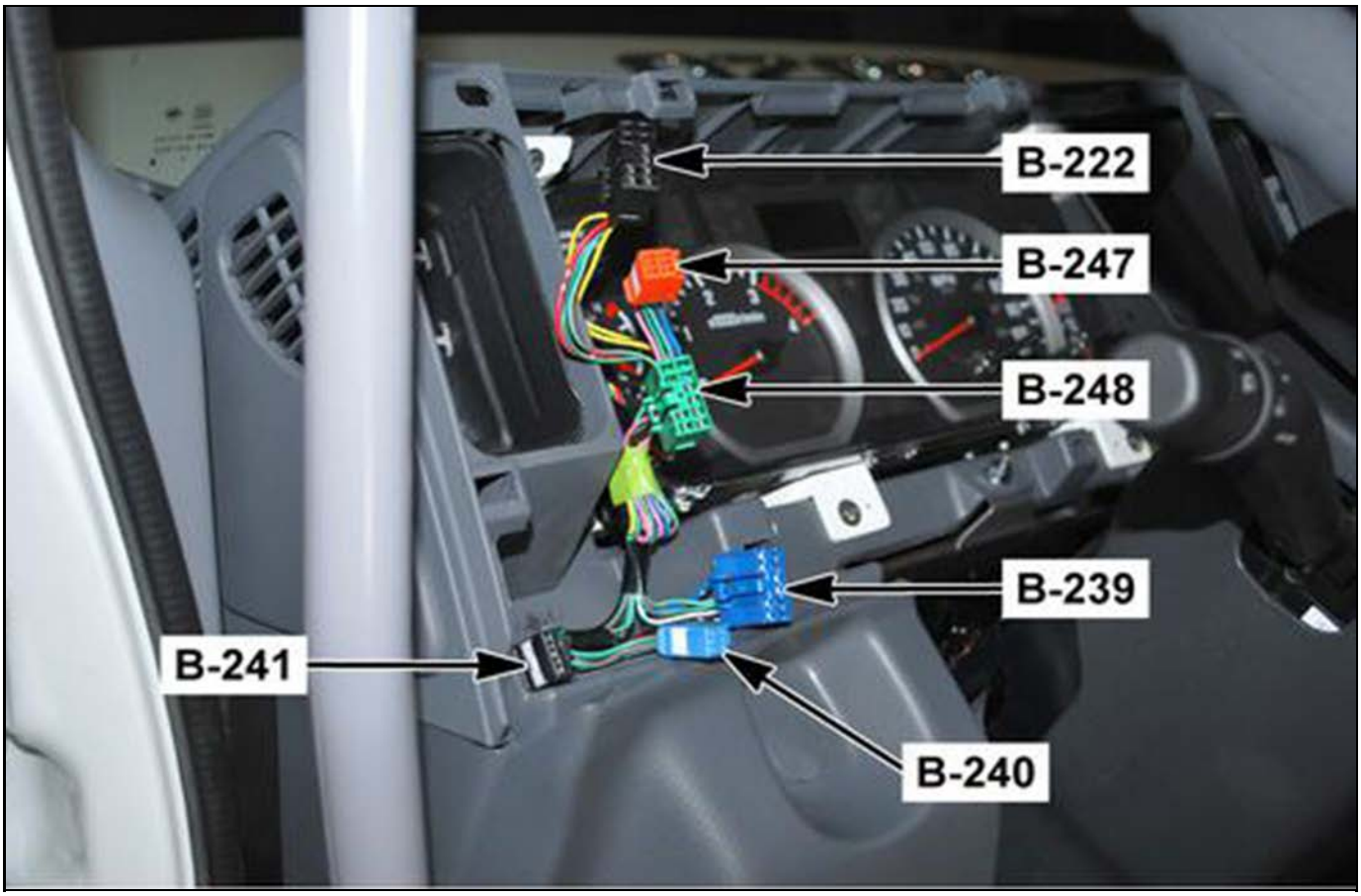

4896199

B241 Dimming Control Switch

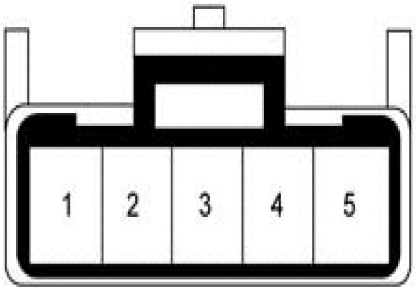

4896218

Connector Part Information		• 7383-5830-30 • 5-Way F (BLK)	
Pin	**Wire Color**	**Circuit Number**	**Function**
1	BLK	ZZ018B	Ground to B-49 Junction Block (B-52 Ground)
2	—	—	Not Used
3	LT GRN/BLK	BA051B	Dimming Control
4	—	—	Not Used
5	LT GRN/RED	BA049B	Fuse F-28 Voltage (Headlight Switch ON), Dimming Control

B239 On the Left Side of the IP to the Left of the Steering Column

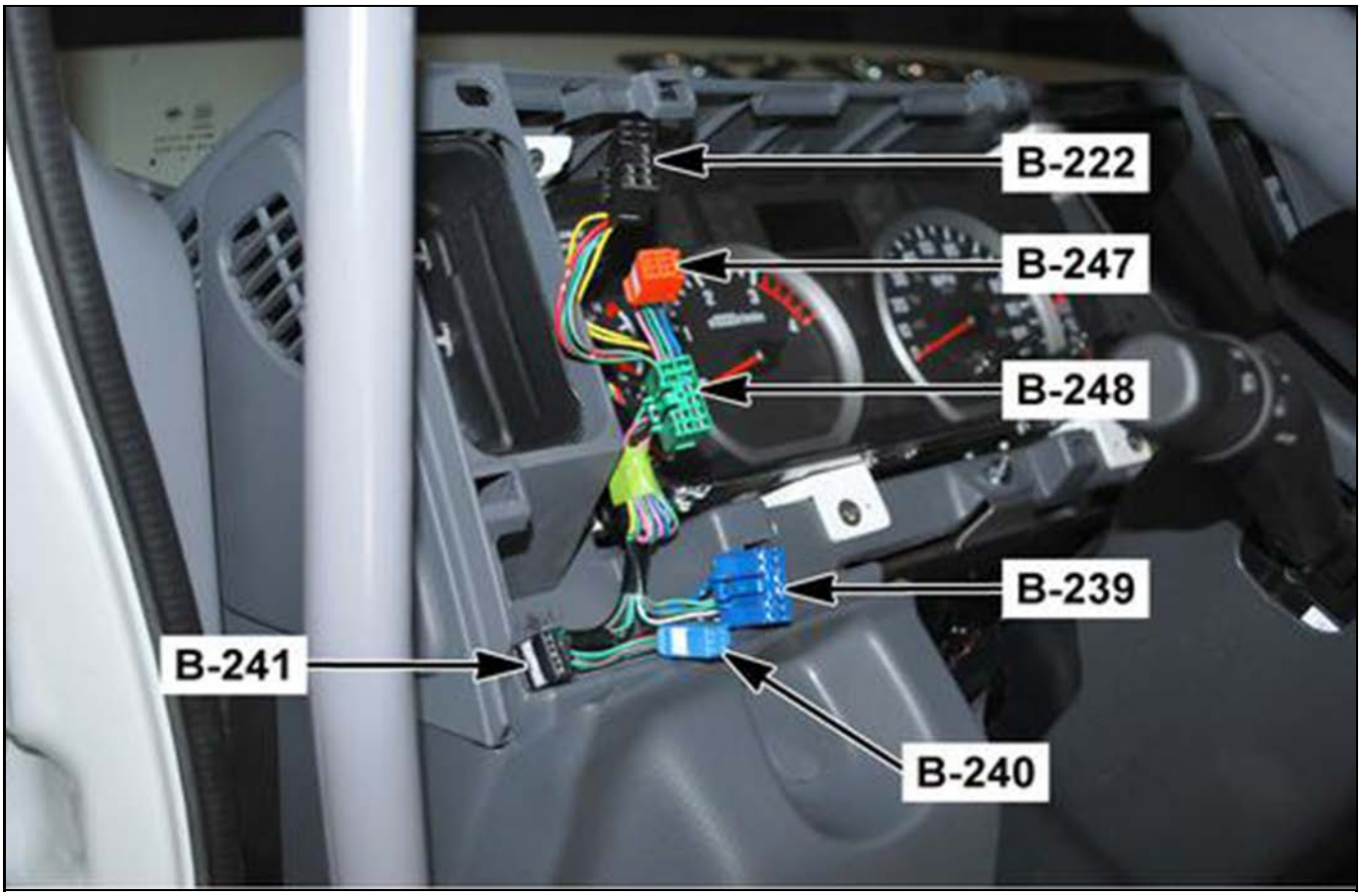

4896199

B244 Ground

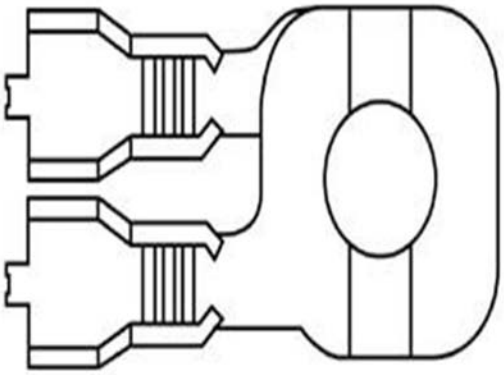

4894435

Connector Part Information		• 7009-9228-02 • 1-Way F Eyelet	
Pin	**Wire Color**	**Circuit Number**	**Function**
—	BLK	ZZ012B	Ground to B-56

B-244 Ground

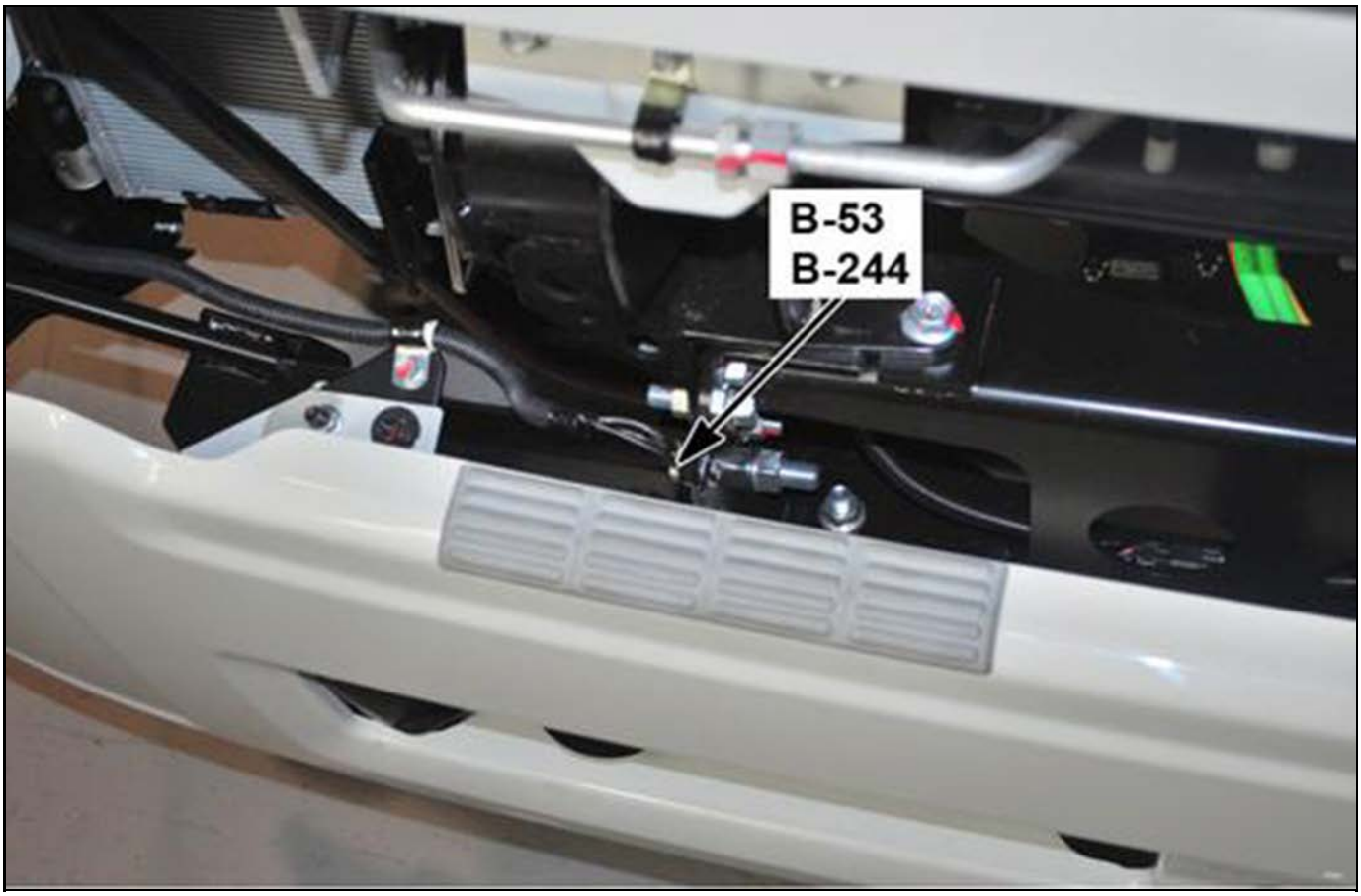

4894485

B245 Defroster Switch

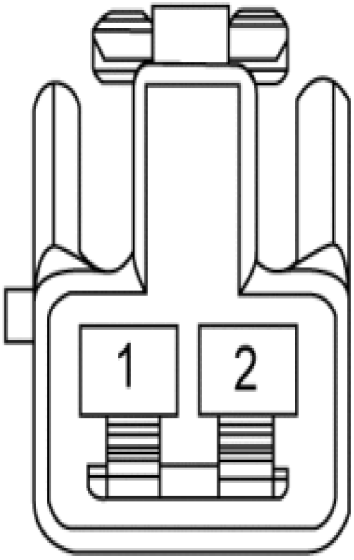

4896233

Connector Part Information		• 7383-2414 • 2-Way F (WHT)	
Pin	**Wire Color**	**Circuit Number**	**Function**
1	BRN/WHT	HA063B	Defrost Switch Signal to A/C Switch
2	BLK/RED	HA064B	Fuse F-30 Voltage (Fan Control Switch ON)

B245 In the Center of the IP Behind the HVAC Controls

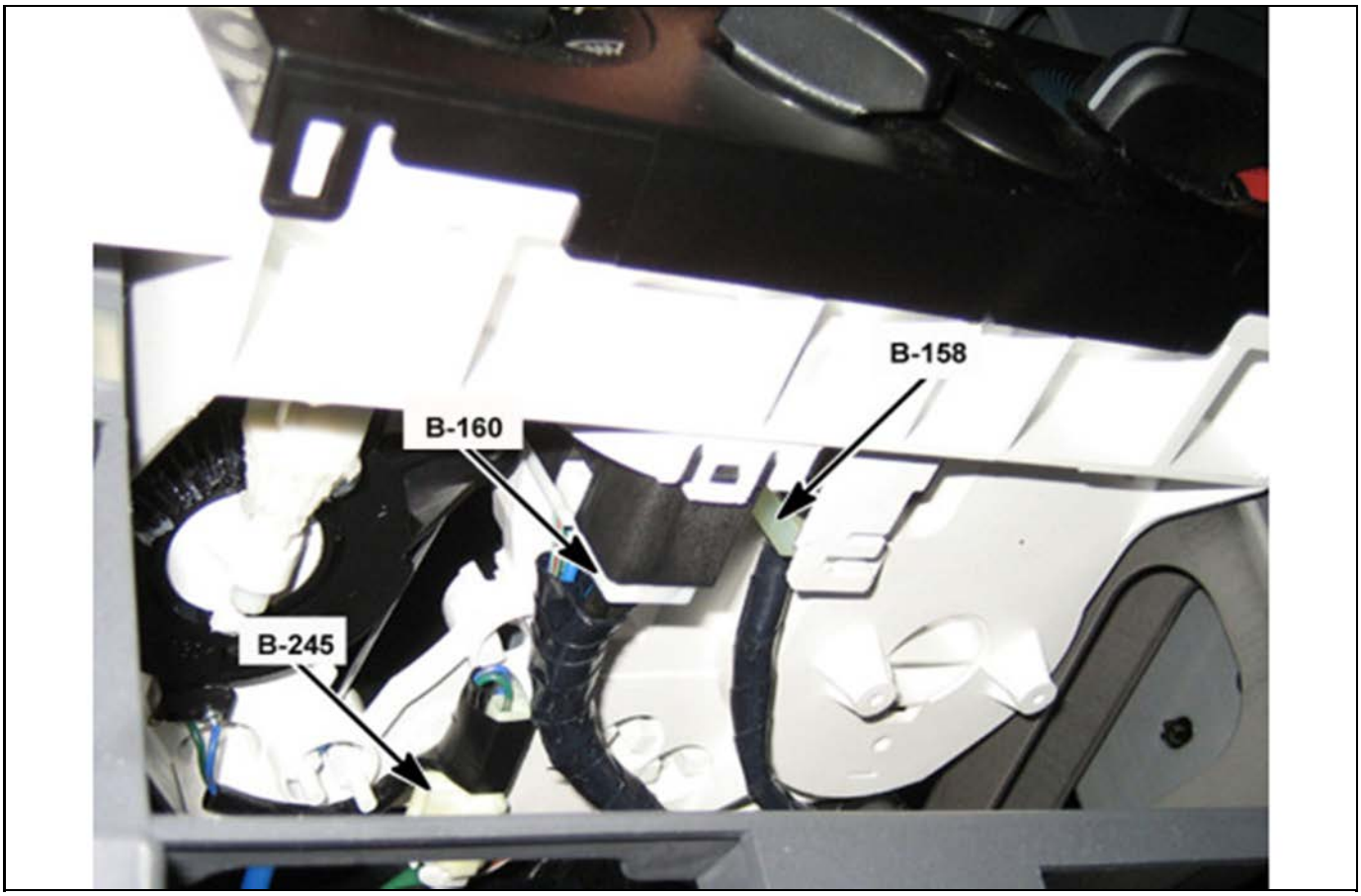

4896235

B247 PTO Up/Down Switch

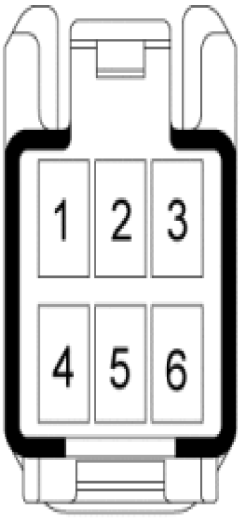

4896238

Connector Part Information		• 7383-5862-51 • 6-Way F (ORN)	
Pin	**Wire Color**	**Circuit Number**	**Function**
1	BLU/YEL	IC095B	PTO Set Switch Signal
2	—	—	Not Used
3	BLU/ORN	IC092B	PTO Resume Switch Signal
4	PNK	IC091B	Switch Ignition Voltage Feed from PTO Main Switch
5	LT GRN/BLK	IC094B	Dimming Control to Dimming Control Switch
6	LT GRN/RED	IC093B	Fuse F-28 Voltage (Headlight Switch ON), Dimming Control

B239 On the Left Side of the IP to the Left of the Steering Column

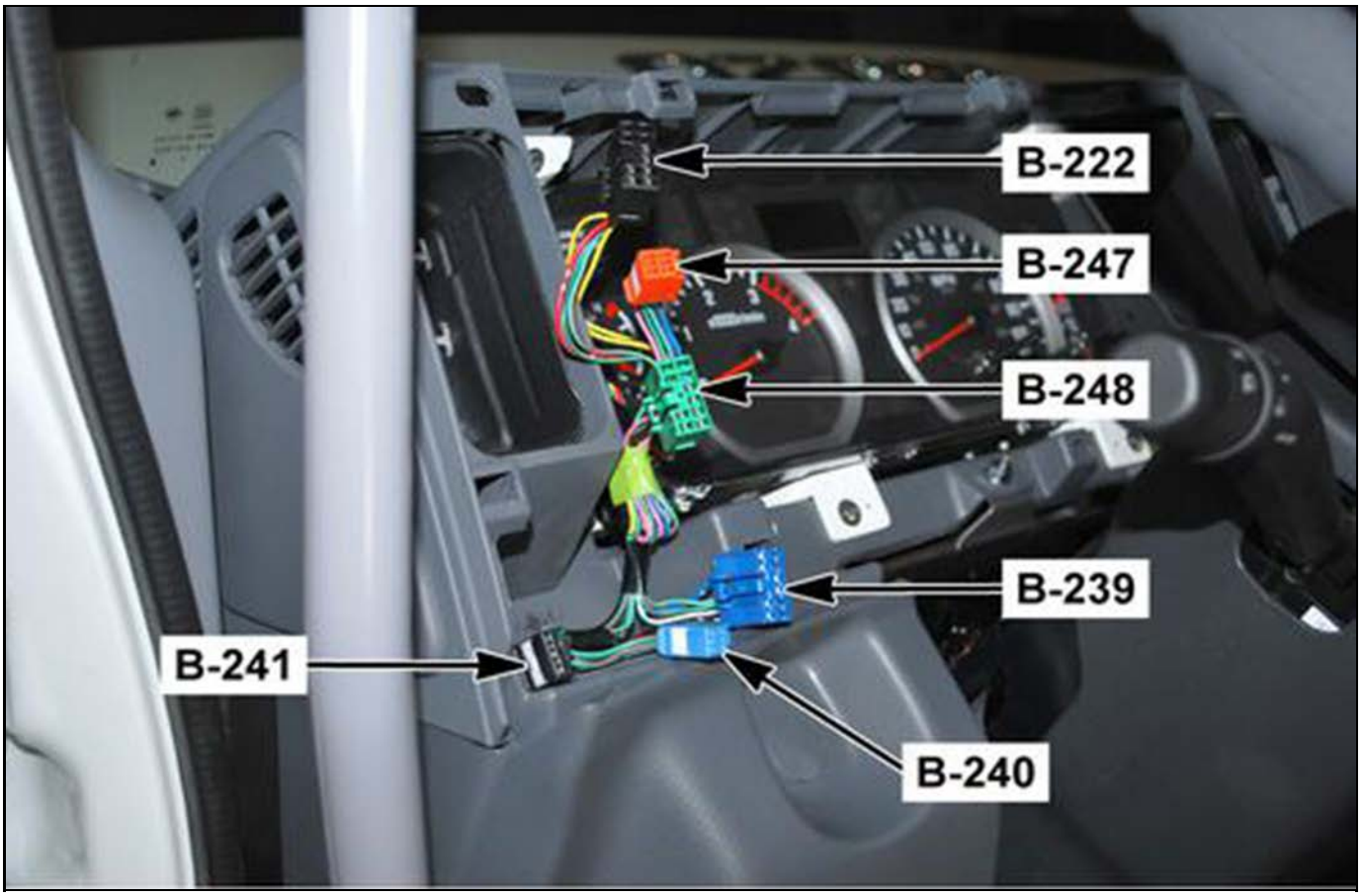

4896199

B248 PTO Switch

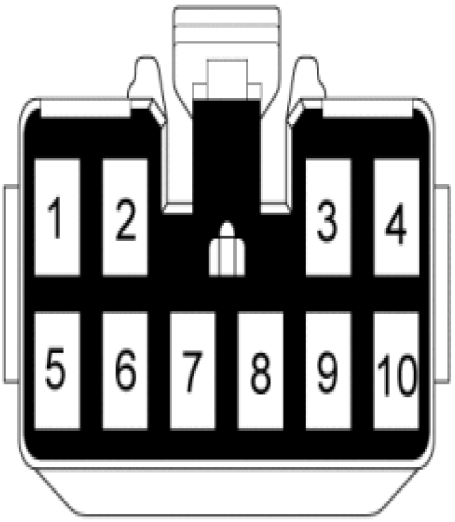

4896189

Connector Part Information		• 7383-1100-60 • 10-Way F (GRN)	
Pin	**Wire Color**	**Circuit Number**	**Function**
1	RED/BLK	IC196B	Fuse F-18 Voltage
2	PNK	IC089B	Switch Signal (Engage)
3–4	—	—	Not Used
5	BLK	IZ086B	Indicator Lamp Ground to B-601 Splice Pack (B-51 Ground)
6	PNK	IC099B	PTO Indicator Lamp Control
7	LT GRN/BLK	IC077B	Dimming Control to Dimming Control Switch
8	LT GRN/RED	IC074B	Fuse F-28 Voltage (Headlight Switch ON), Dimming Control
9–10	—	—	Not Used

B239 On the Left Side of the IP to the Left of the Steering Column

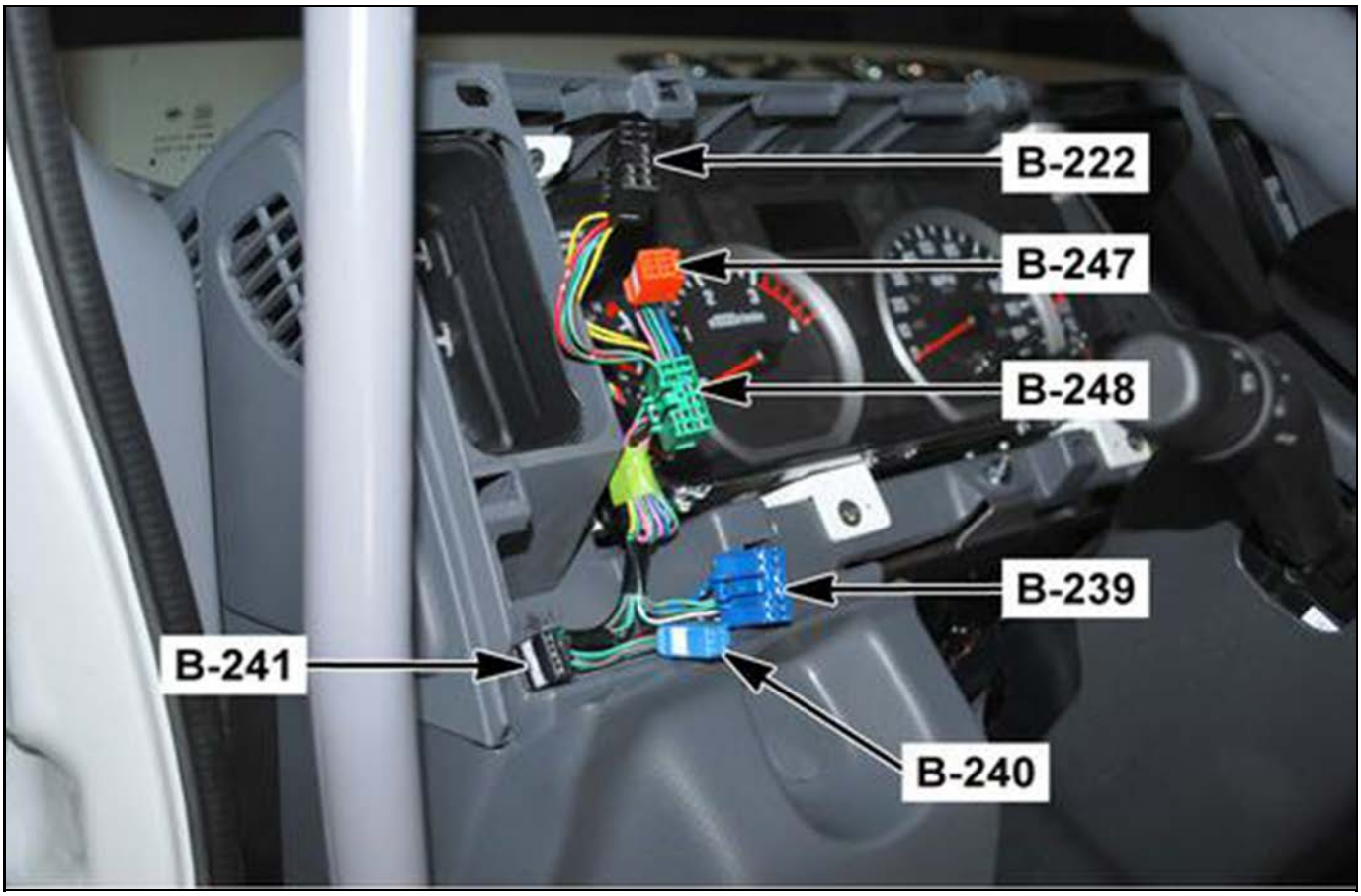

4896199

B249 Radiator Level Control Module

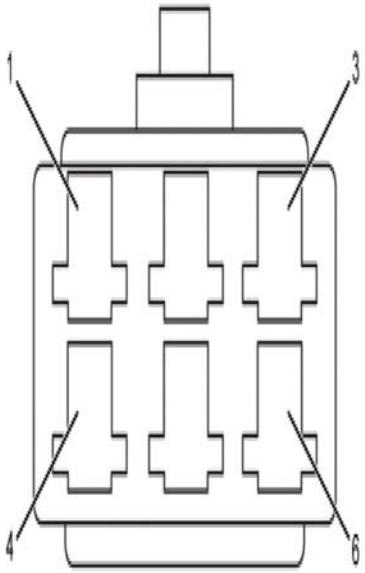

4896243

Connector Part Information		• 7323-2861 • 6-Way F (WHT)	
Pin	**Wire Color**	**Circuit Number**	**Function**
1	GRY/BLU	IC083B	Low Coolant Level Indicator Control
2–3	—	—	Not Used
4	BLK/ORN	IC084B	Ignition Voltage from Fuse F-20
5	GRY/BLK	IC088B	Low Coolant Level Switch Signal
6	BLK	IZ013B	Ground to B-602 Splice Pack (B-51 Ground)

B249 Radiator Level Control Module

4896247

B-250 Fuse/Relay Center (Cab)

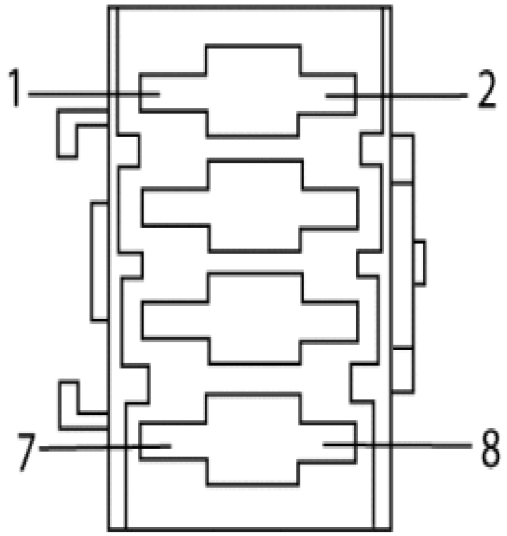

4890906

Connector Part Information		• 7354-5918-30 • 8-Way F (BLK)	
Pin	**Wire Color**	**Circuit Number**	**Function**
1	BLK/BLU	SA010B	Voltage from Cigar Lighter Relay (Switched Output Voltage)
2	RED/YEL	SA001B	Fuse A-1 Ignition Voltage to Power Outlet Upper
3	BLK/RED	SA011B	Power ACC Relay Output Voltage
4	GRN/ORN	SA005B	Fuse A-2 Ignition Voltage to Power Outlet Lower
5	—	—	Not Used
6	GRN/ORN	SA002B	Fuse A-3 Ignition Voltage to Power Source Connecto
7	RED/BLK	KA013B	Switched Output Voltage from the Starter Cut Relay
8	RED/BLK	KA015B	Fuse A-4 Voltage (In Reverse) to Rear Combination Lamp (LH) and Rear Combination Lamp (RH)

Behind the Center of the I/P, Right of the Fuse/Relay Center (Cab)

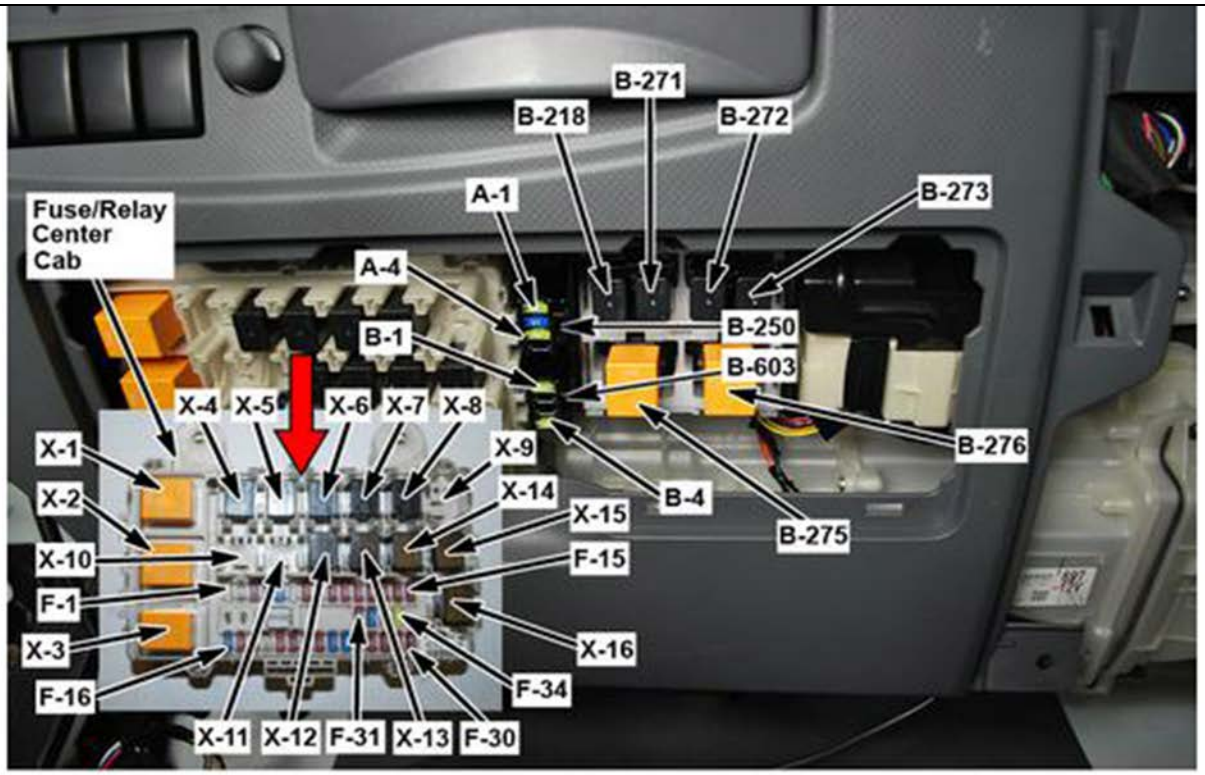

4890920

B-267 Splice Pack

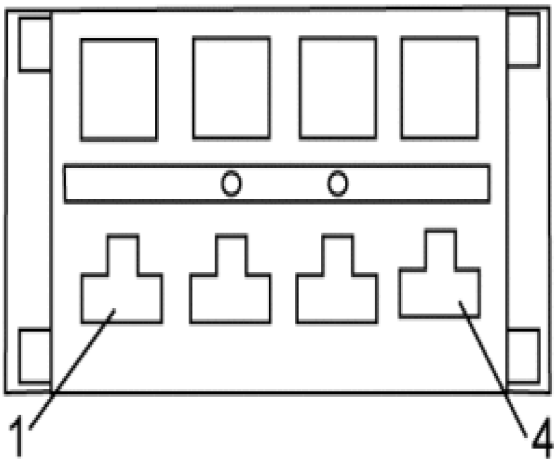

4890929

Connector Part Information		• 7383-3190 • 4-Way F (WHT)	
Pin	**Wire Color**	**Circuit Number**	**Function**
1	Shield	IZ033B	APP 2 Harness Shield
2	BLU	IC006B	APP 2 Low Reference
3	BLU/RED	IZ034B	APP 2 Shield
4	BLU	IC106B	APP 2 Low Reference

Between the Accelerator Pedal and the Bulkhead Pass Through

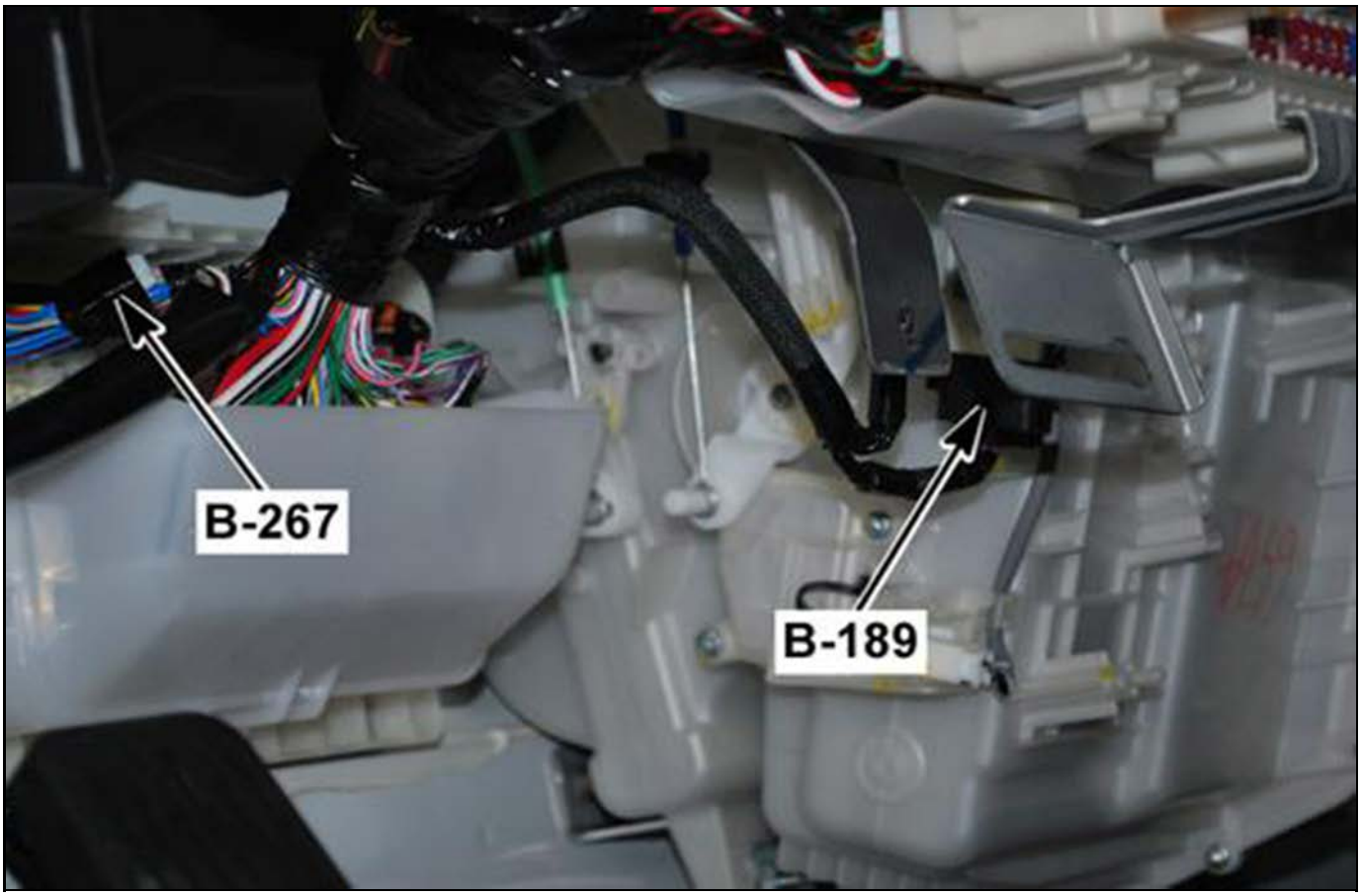

4890933

B-271 Stop Lamp Switch Relay

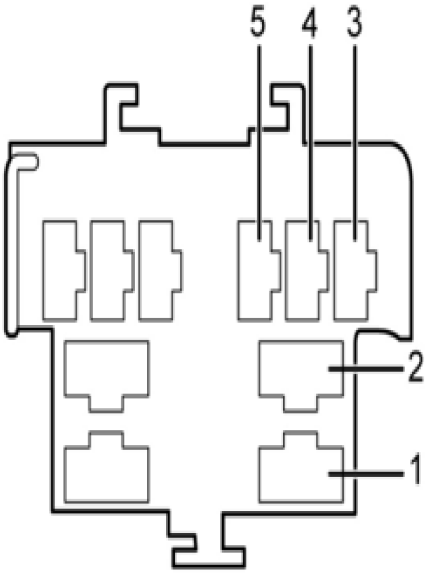

4890939

Connector Part Information		• 7354-5262 • 10-Way F (BLK)	
Pin	**Wire Color**	**Circuit Number**	**Function**
1	BLK/ORN	IC101B	Ignition Voltage from Fuse F-20 (Input Voltage)
2	—	—	Not Used
3	BLK/ORN	IC102B	Ignition Voltage from Fuse F-20 (Coil Feed)
4	RED/WHT	IC017B	Switched Output Voltage to ECM
5	GRY	IC103B	Coil Control to Stop Lamp Switch Diode

Behind the Center of the I/P, Right of the Fuse/Relay Center (Cab)

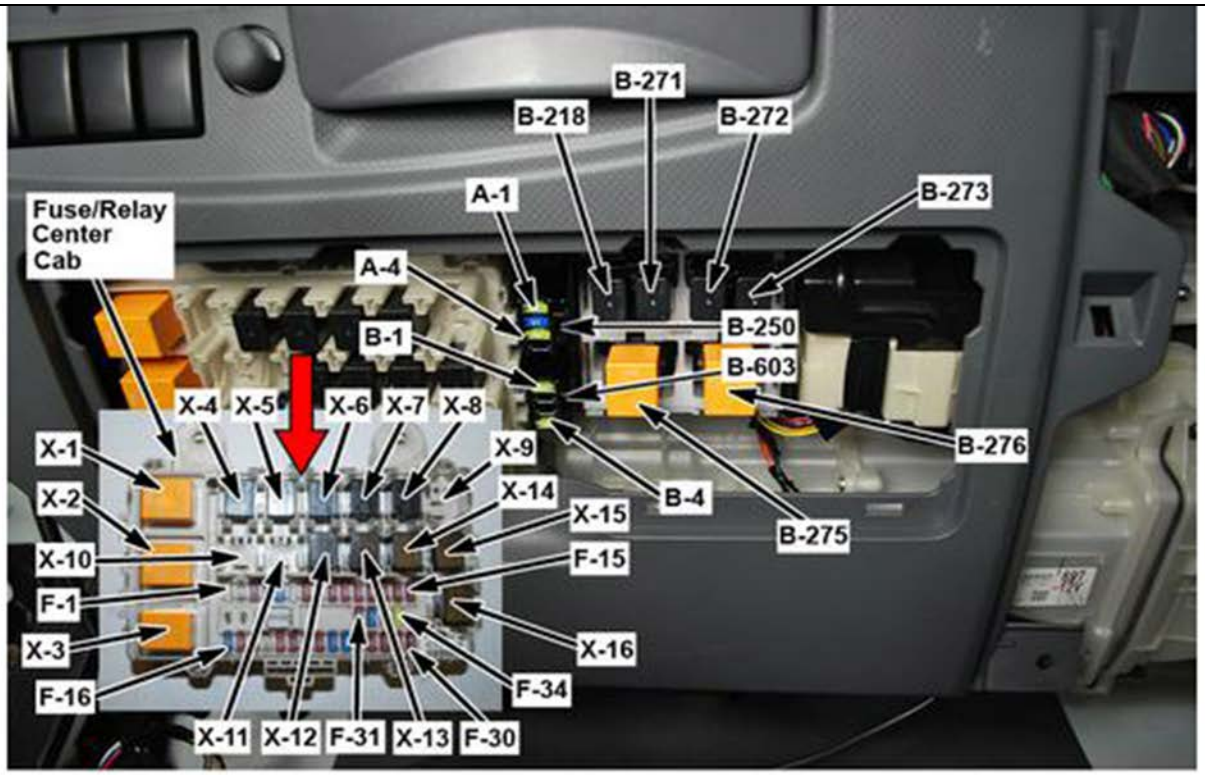

4890920

B-272 Cigar Lighter Relay

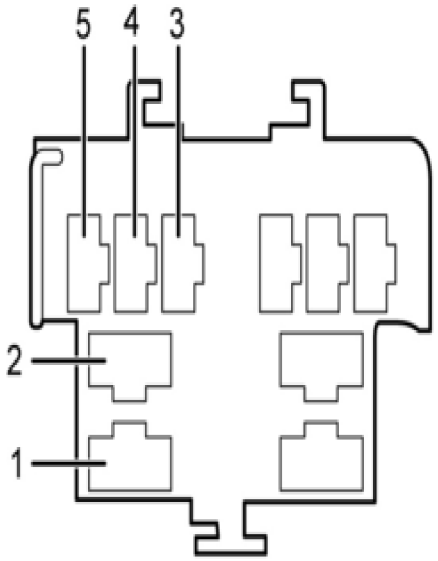

4890949

Connector Part Information		• 7354-5262 • 10-Way F (BLK)	
Pin	**Wire Color**	**Circuit Number**	**Function**
1	BLK/YEL	PA019B	Battery Voltage from Fuse FL-12 (Input Voltage)
2	BLK/BLU	SA010B	Voltage to Fuse A-1 (Switched Output Voltage)
3	RED/YEL	SA040B	Ignition Voltage from Fuse F-24 (Coil Feed)
4	—	—	Not Used
5	BLK	SX010B	Ground to B-600 Splice Pack (Coil Control) (B- 51 Ground)

Behind the Center of the I/P, Right of the Fuse/Relay Center (Cab)

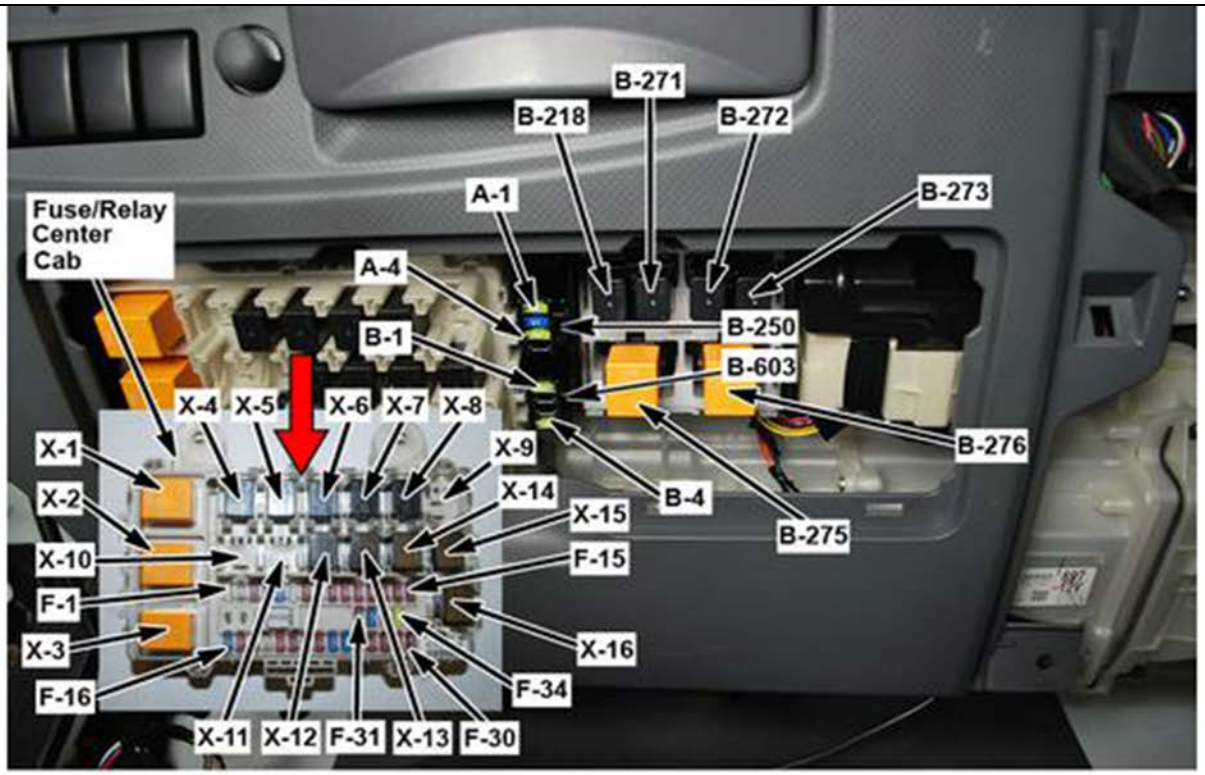

4890920

B-273 Reverse Lamp Relay

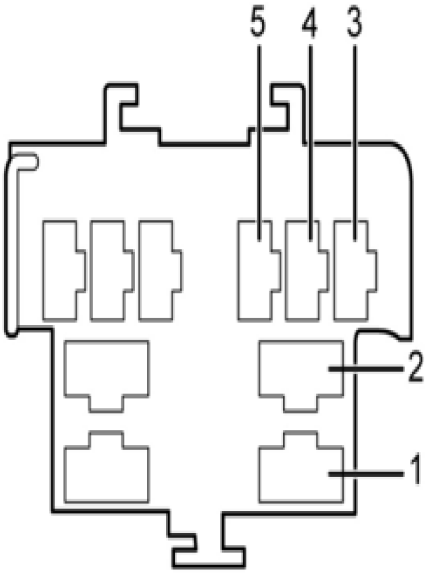

4890939

Connector Part Information		• 7354-5262 • 10-Way F (BLK)	
Pin	**Wire Color**	**Circuit Number**	**Function**
1	WHT/RED	KA011B	Start and ON Signal from the Ignition Switch
2	RED/BLK	KA012B	Voltage to Fuses A-4, B-2, B-3 Fuse/Relay Center (Cab)
3	RED/BLK	KA016B	Battery Voltage from Fuse F-18 (Coil Feed)
4	—	—	Not Used
5	WHT/BLU	OA058B	To TCM (Coil Control)

Behind the Center of the I/P, Right of the Fuse/Relay Center (Cab)

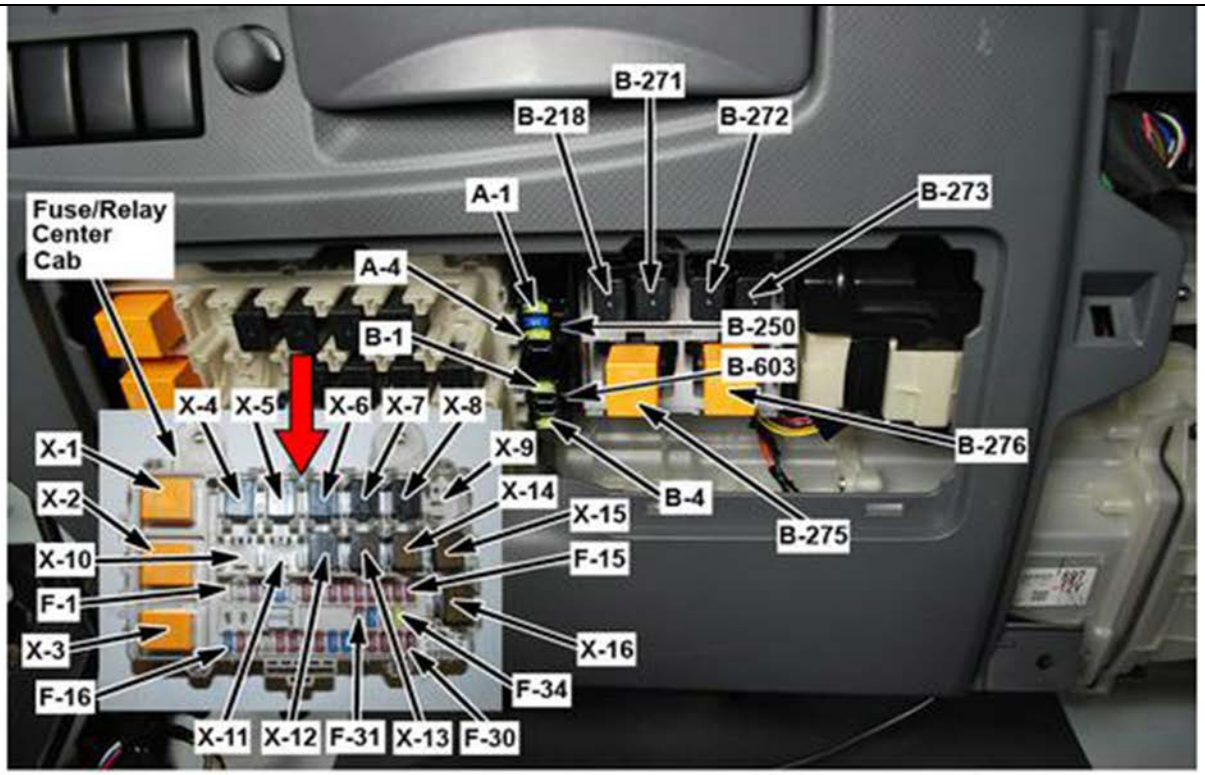

4890920

B-275 Mirror Heater Relay (RH)

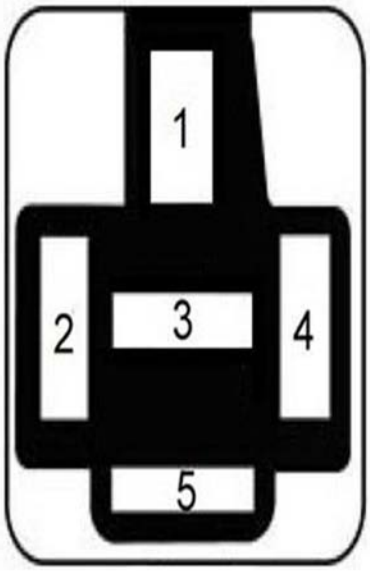

4890952

Connector Part Information		• 7323-6055-30 • 5-Way F (BLK)	
Pin	**Wire Color**	**Circuit Number**	**Function**
1	RED/YEL	WA027B	Mirror Heater (RH) Control (Switched Output Voltage)
2	YEL	WA103B	Heated Mirror Switch Signal (Coil Feed)
3	—	—	Not Used
4	BLK	WX106B	To J/B 2 (B-146 pin 8) (Coil Control)
5	RED/YEL	WA101B	Battery Voltage from Fuse B-4 (In-put Voltage)

Behind the Center of the I/P, Right of the Fuse/Relay Center (Cab)

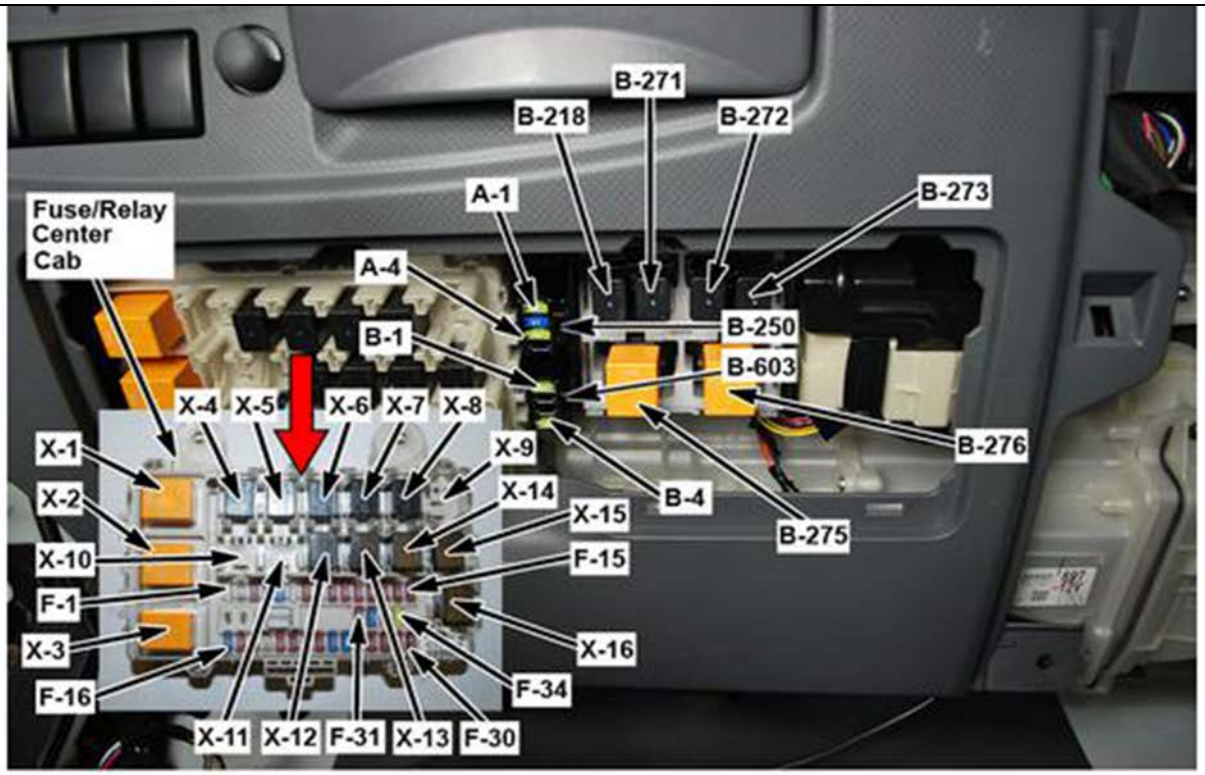

4890920

B-276 Mirror Heater Relay (LH)

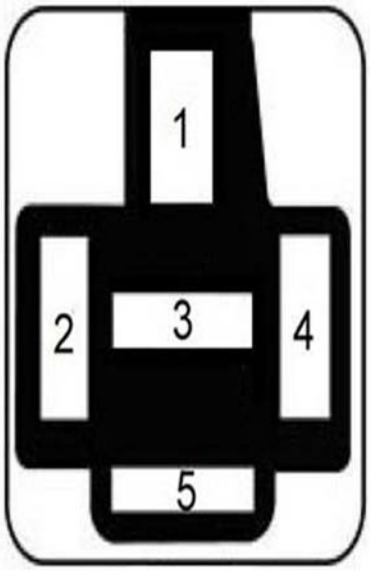

4890952

Connector Part Information		• 7323-6055-30 • 5-Way F (BLK)	
Pin	**Wire Color**	**Circuit Number**	**Function**
1	RED/YEL	WA026B	Mirror Heater (LH) Control (Switched Output Voltage)
2	YEL	WA104B	Heated Mirror Switch Signal (Coil Feed)
3	—	—	Not Used
4	BLK	WX101B	To J/B 2 (B-145 pin 10) (Coil Control)
5	RED	WA102B	Battery Voltage from Fuse B-1 (In-put Voltage)

Behind the Center of the I/P, Right of the Fuse/Relay Center (Cab)

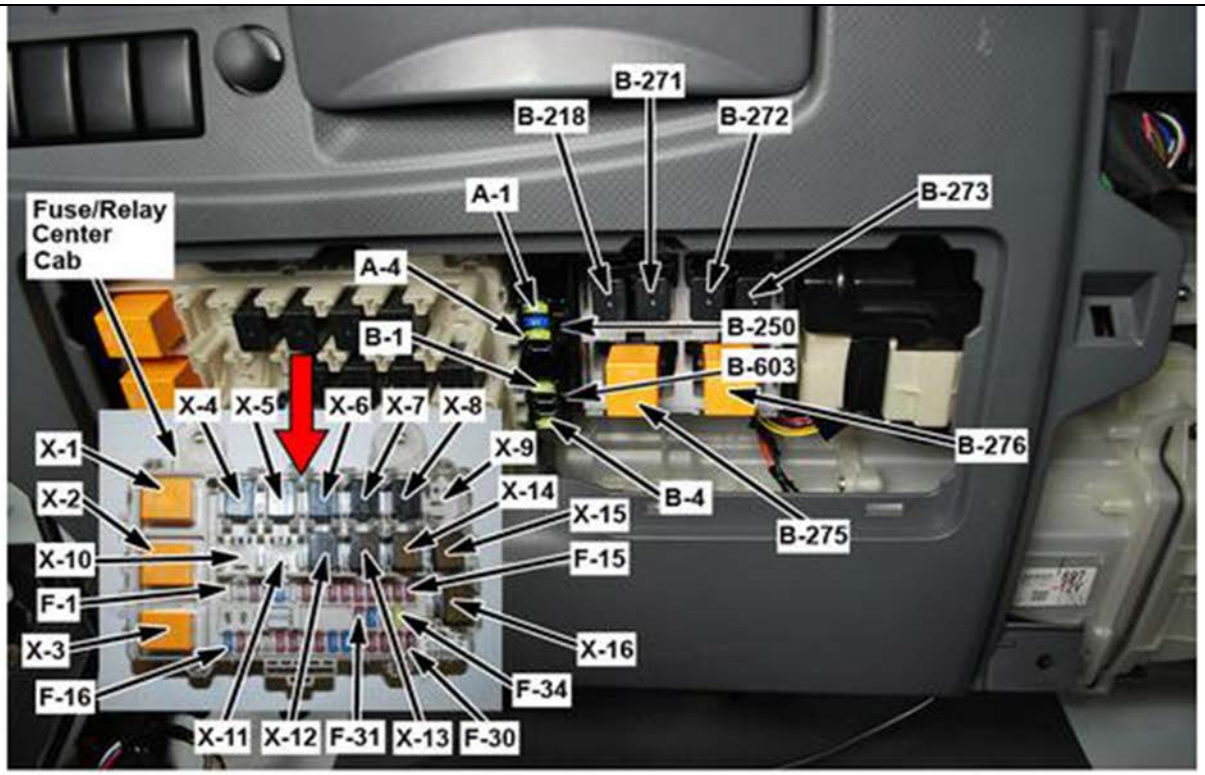

4890920

B-340 Stop Lamp Switch Diode

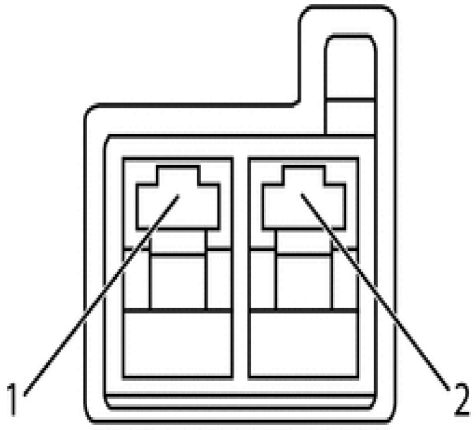

4890964

Connector Part Information		• 7323-9025-30 • 2-Way F (BLK)	
Pin	**Wire Color**	**Circuit Number**	**Function**
1	GRY	IC103B	Stop Lamp Switch Relay (Coil Control) (In)
2	GRN/WHT	IC013B	Stop Lamp Switch Relay (Coil Control) (Out)

In the Center of the I/P, Between the Blower Resistor and Junction Block 2. Taped in the Main Harness

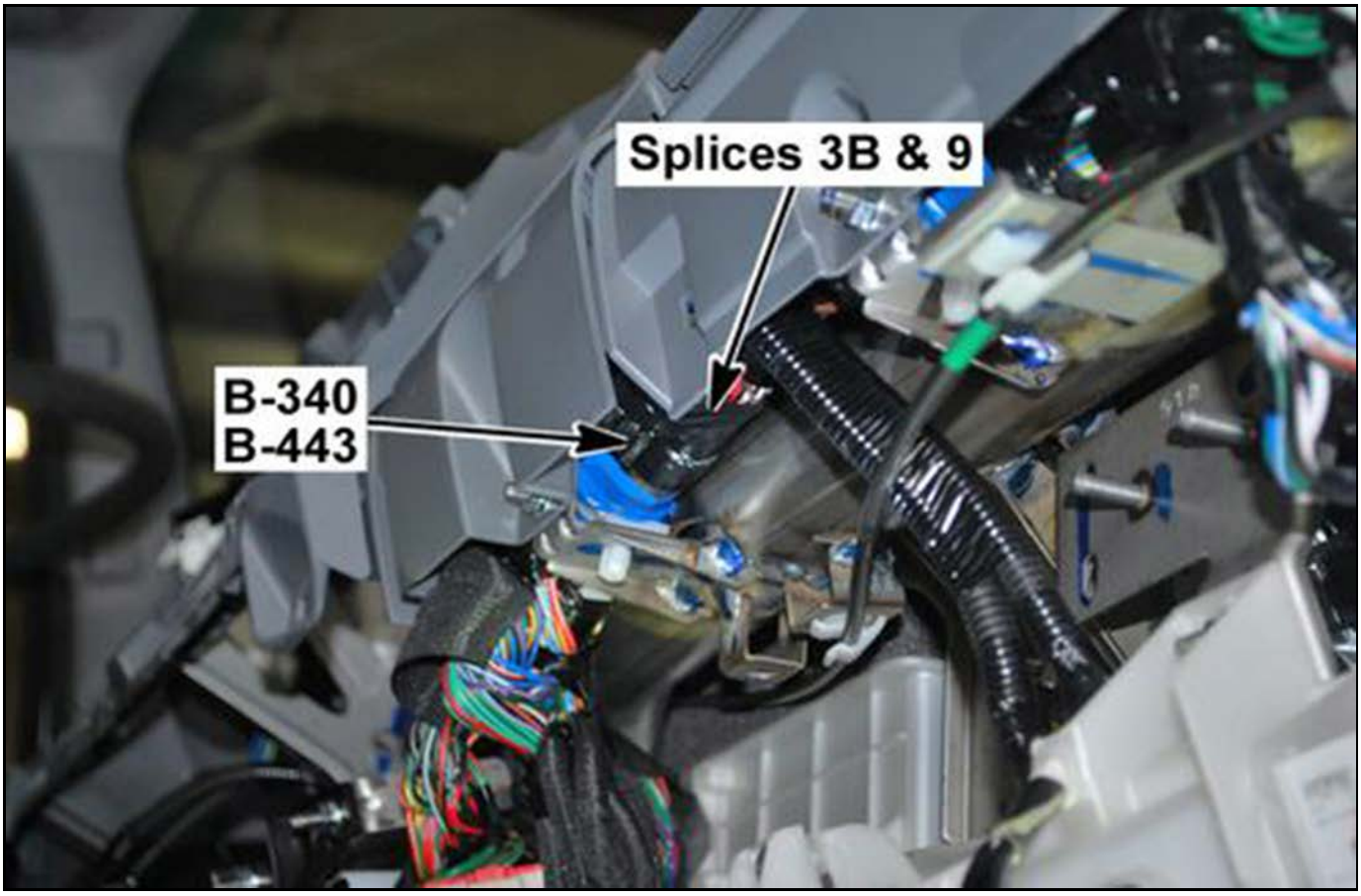

4890972

B-351 Remote Keyless Entry (RKE) Module

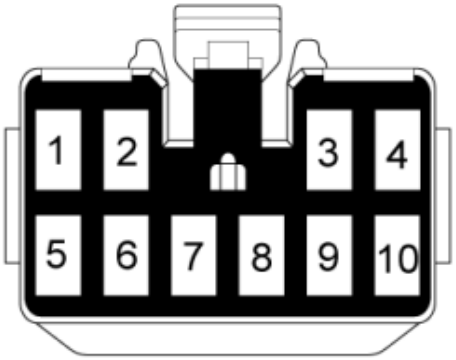

4563587

Connector Part Information		• 7383-1100 • 10-Way F (WHT)	
Pin	**Wire Color**	**Circuit Number**	**Function**
1	RED/BLU	HC004B	Flash Lights Command
2	—	—	Not Used
3	RED/GRN	HC005B	Door Unlock
4	GRN/WHT	HC007B	Door Lock
5	BLK	HZ001B	Ground to B-601 Splice Pack (B-51 Ground)
6	GRY	HC003B	Door Jamb Switch Signal
7	RED/BLK	HC001B	Ignition Voltage from Fuse F-18 from J/B 1 (B-131 pin 13)
8	PNK/BLU	FB005B	Key Reminder Switch Signal
9	RED/GRN	HC006B	Door Unlock Position Switch
10	GRN	HC002B	Battery Voltage from Fuse F-4 from J/B 2 (B-143 pin 10)

Center of the Instrument Panel, Below the Fuse/Relay Center (Cab)

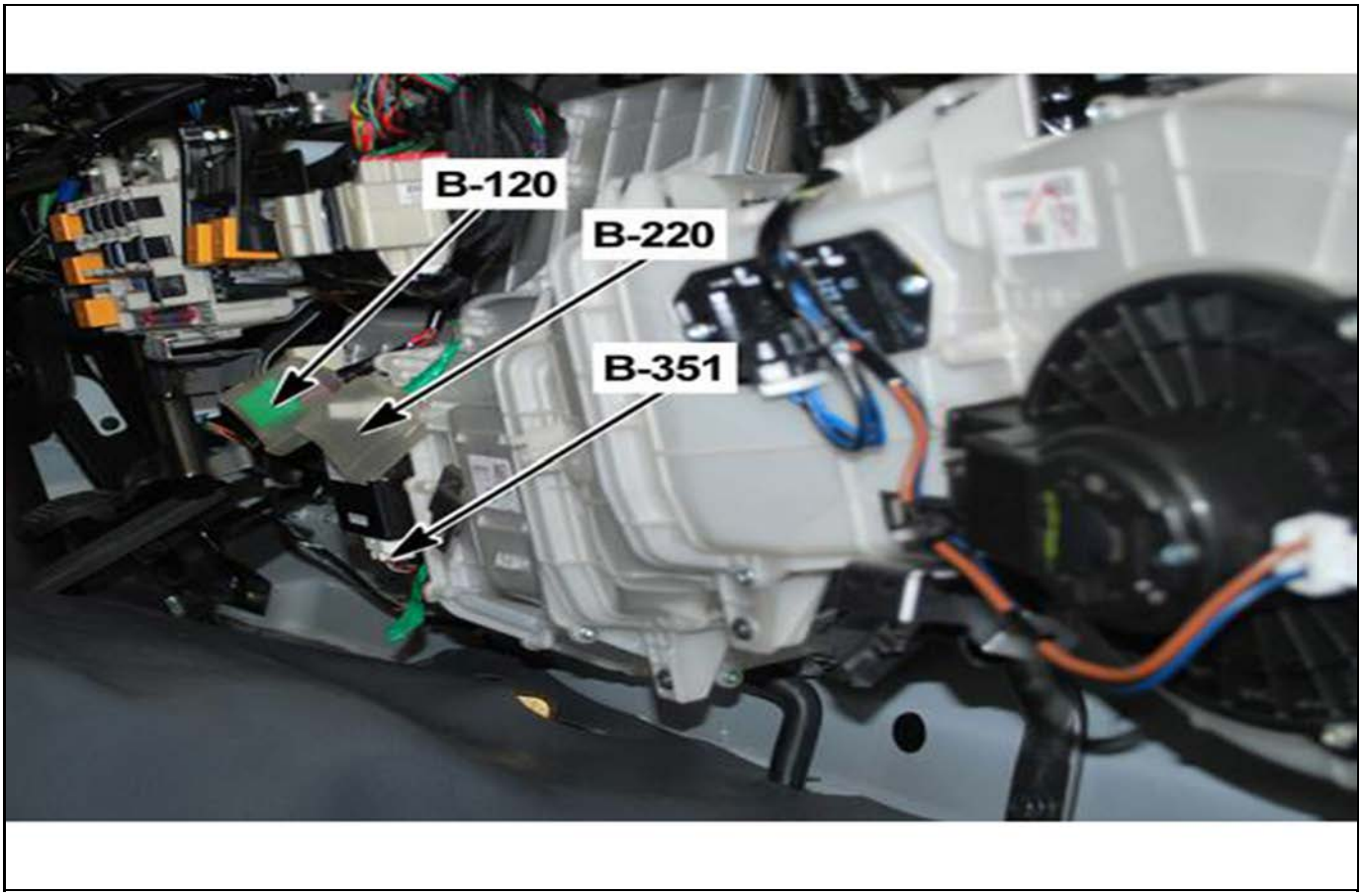

4890989

B-376 Splice Pack

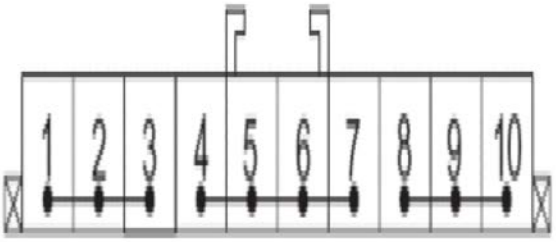

4891025

Connector Part Information		• 7387-3360 • 10-Way F (WHT)	
Pin	**Wire Color**	**Circuit Number**	**Function**
1	WHT/BLU	AA010B	Fuse F-9 Voltage (Headlamp Switch ON) from Fuse/ Relay Center (Cab) (B-16 pin 2)
2	WHT/BLU	AA044B	Fuse F-9 Voltage (Headlamp Switch ON) to DRL Module
3	WHT/BLU	AA064B	Fuse F-9 Voltage (Headlamp Switch ON) to Headlamp (LH)
4	ORN	OA088B	Battery Voltage from Fuse F-35 to TCM
5	ORN	OA089B	Battery Voltage from Fuse F-35 to TCM
6	ORN	OA090B	Battery Voltage from Fuse F-35 from Fuse/Relay Center
7	—	—	Not Used
8	WHT/RED	AA065B	Battery Voltage from Fuse F-11 to Headlamp (RH)
9	WHT/RED	AA045B	Battery Voltage from Fuse F-11 to DRL Module
10	WHT/RED	AA012B	Battery Voltage from Fuse F-11 from Fuse/Relay Center (Cab) (B-19 pin 7)

Right Side of the Steering column, Above the Data Link Connector (DLC)

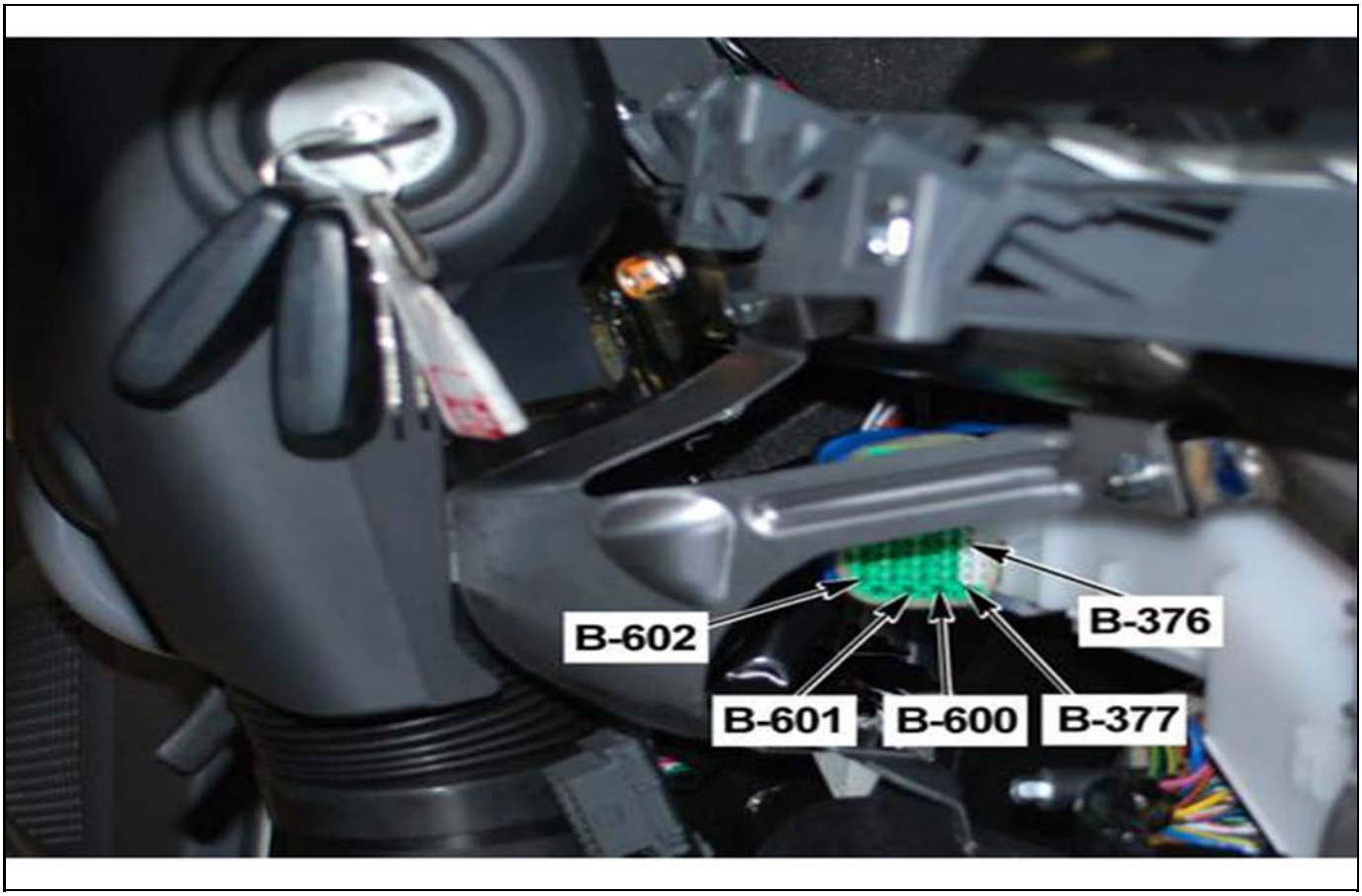

4891030

B-377 Splice Pack

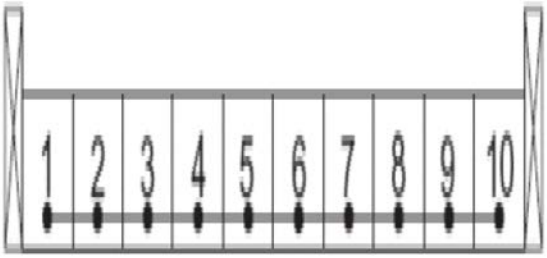

4891043

Connector Part Information		• 7387-3359-60 • 10-Way F (WHT)	
Pin	**Wire Color**	**Circuit Number**	**Function**
1	BLK	ZZ050B	Ground to B-600 Splice Pack (B-51 Ground)
2	BLK	SX011B	Ground from Power ACC Relay
3	BLK	AX003B	Ground from Combination Switch (Headlamps)
4	BLK	IX004B	Ground from Rear Dome Lamp Switch
5	BLK	RX001B	Ground from Radio
6	BLK	JX007B	Ground from Flasher Module
7	BLK	JX001B	Ground from Combination Switch (Turn Signals)
8	BLK	JX002B	Ground from Hazard Switch
9	BLK	JX004B	Ground from Side Turn Signal Lamp (LH)
10	BLK	FY001B	Ground from Key Minder Switch

Right Side of the Steering column, Above the Data Link Connector (DLC)

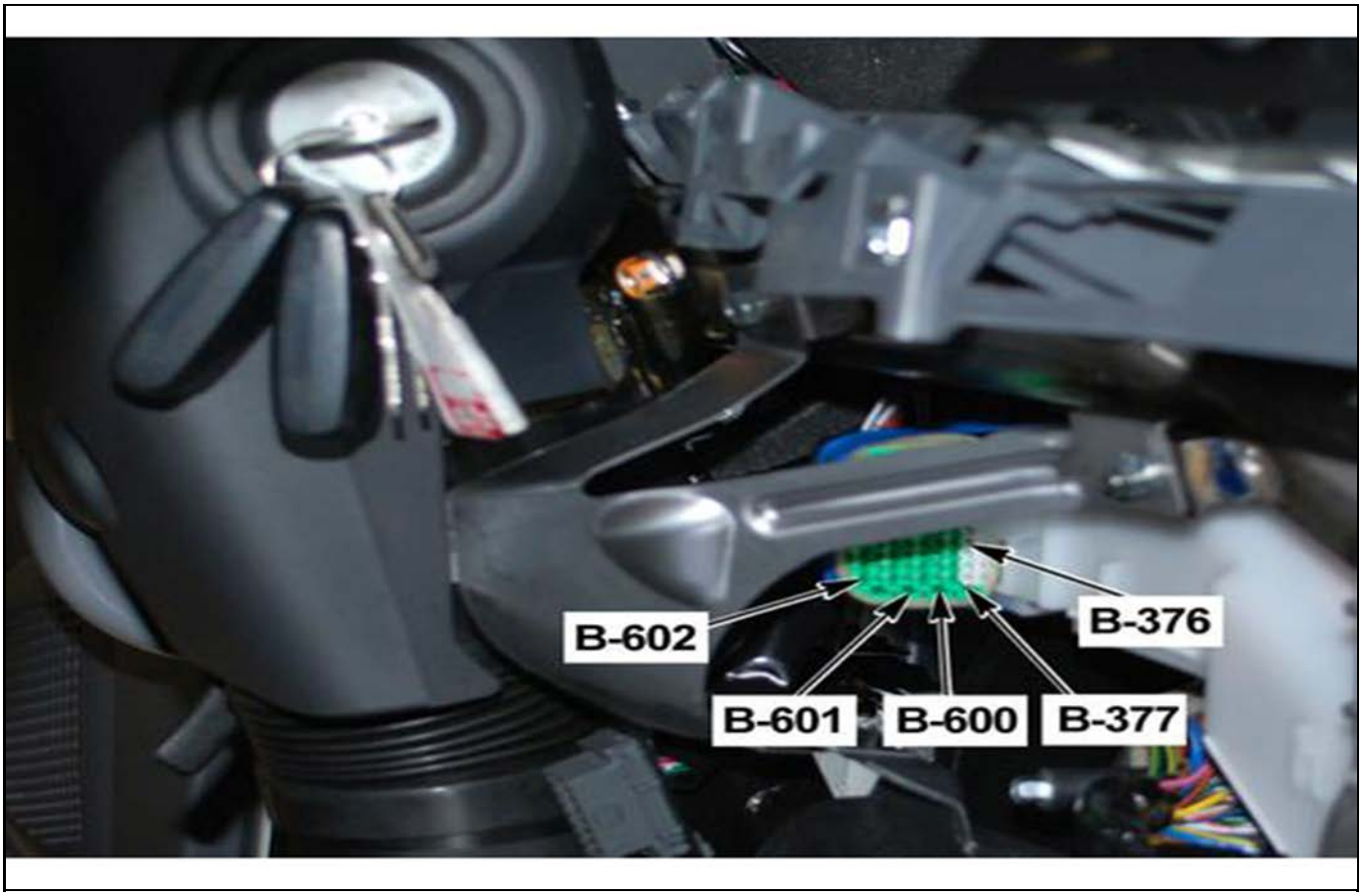

4891030

B-378 Splice Pack

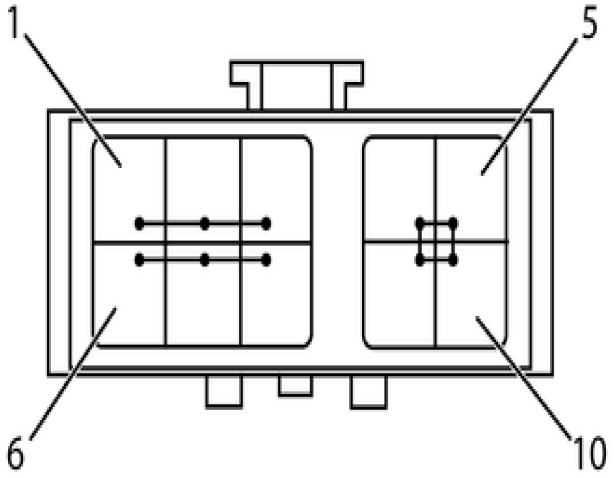

4891046

Connector Part Information		• 7323-7500 • 10-Way F (WHT)	
Pin	**Wire Color**	**Circuit Number**	**Function**
1	WHT/RED	PA018B	Battery Voltage from Fuse FL-8 to Fuse/Relay Center (Cab) (B-26 pin 5)
2	WHT/RED	AA042B	Battery Voltage from Fuse FL-8 to Fuse/Relay Center (B-217 pin 1)
3	WHT/RED	PA005B	Battery Voltage from Fuse FL-8 from Fuse/Relay Center
4	BLK/YEL	PA002B	Battery Voltage from Fuse FL-12 to Fuse/Relay Center
5	BLK/YEL	PA019B	Battery Voltage from Fuse FL-12 to Cigar Lighter Relay
6	GRN/BLK	PA067B	Battery Voltage from Fuse F-32 to Fuse/Relay Center (Cab) (B-26 pin 4)
7	GRN/BLK	PA017B	Battery Voltage from Fuse F-32 from Fuse/Relay Center
8	GRN/BLK	PA047B	Battery Voltage from Fuse F-32 from Fuse/Relay Center
9	—	—	Not Used
10	BLK/YEL	PA003B	Battery Voltage from Fuse FL-12 to Ignition Switch

In the Center of the I/P, Behind the HVAC Panel

4891049

B-379 Splice Pack

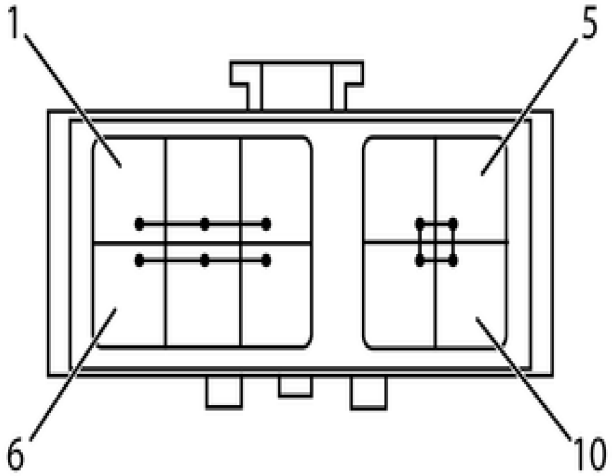

4891046

Connector Part Information		• 7323-7500 • 10-Way F (WHT)	
Pin	**Wire Color**	**Circuit Number**	**Function**
1	RED/YEL	WA026B	Mirror Heater Relay (LH) (Switched Output Voltage)
2	RED/YEL	WA016B	Mirror Heater Relay (LH) (Switched Output Voltage) to Lower Mirror Heater
3	YEL/RED	WA118B	Mirror Heater Relay (LH) (Switched Output Voltage) to Upper Mirror Heater
4	BLK	SX001B	Ground for Power Outlet Upper
5	BLK	ZZ040B	Ground to B-60
6	RED/YEL	WA027B	Mirror Heater Relay (RH) (Switched Output Voltage)
7	RED/YEL	WA017B	Mirror Heater Relay (RH) (Switched Output Voltage) to Lower Mirror Heater
8	YEL/RED	WA019B	Mirror Heater Relay (RH) (Switched Output Voltage) to Upper Mirror Heater
9	BLK	SX005B	Ground for Power Outlet Lower
10	BLK	ZZ053B	Ground to B-51

Under the Left Side of the Instrument Panel Cluster

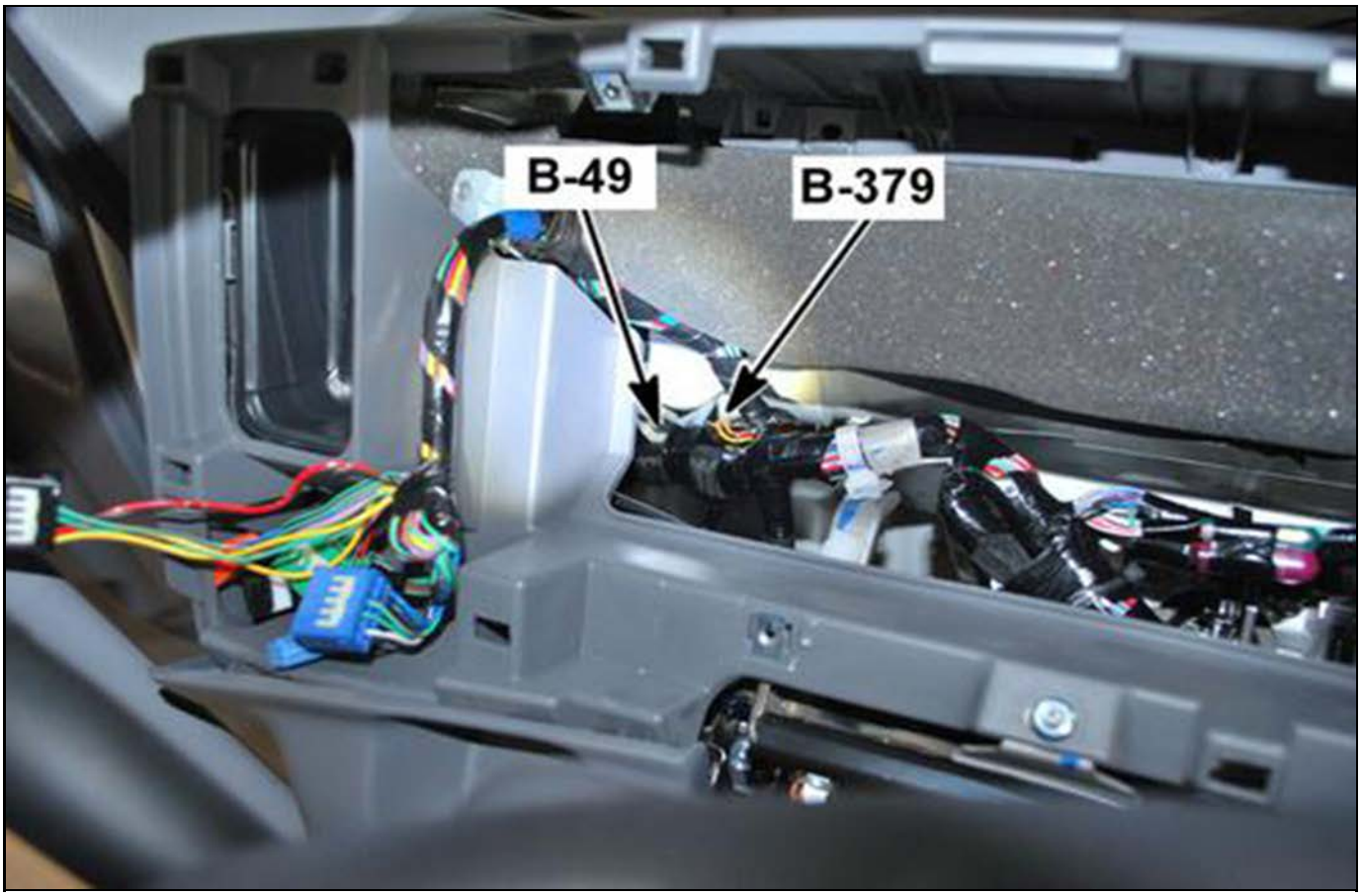

4891076

B-402 Mimamori Module

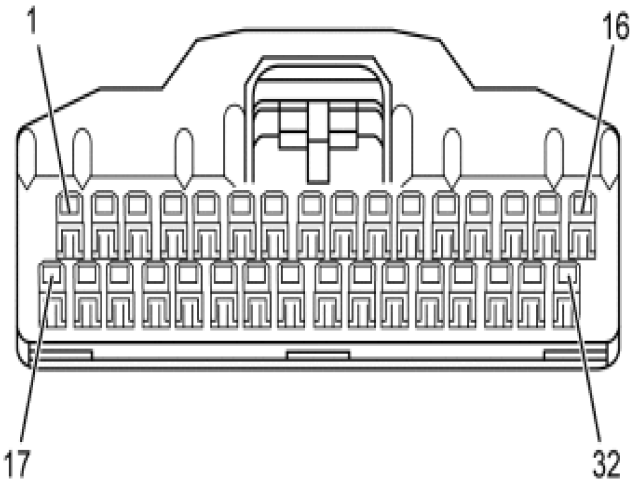

4891083

Connector Part Information		• MX34032SF-1 • 32-Way F (GRY)	
Pin	**Wire Color**	**Circuit Number**	**Function**
1	GRN/YEL	KF022B	Ignition Voltage from Fuse F-21
2	RED/YEL	KF007B	Key SD Signal
3	LT BLU	KF018B	ISO 14230 communication
4	GRN/WHT	TF045B	ISO 15765 CAN 2 Bus (High)
5	BLK	KU003B	Ground to J/B 2 (B-144 pin 7) (B-53 Ground)
6	BLU/WHT	TF027B	Vehicle CAN 1 Bus (High)
7–15	—	—	Not Used
16	BLK/BLU	KF021B	Battery Voltage from Fuse F-22
17	RED/YEL	KF003B	Ignition Voltage from Fuse F-24
18	RED/GRN	KF008B	Key RD Signal
19	RED/WHT	KF004B	Mode CN Signal
20	—	—	Not Used
21	GRN	TF046B	ISO 15765 CAN 2 Bus (Low)
22	—	—	Not Used
23	BLU	TF028B	Vehicle CAN 1 Bus (Low)
24–25	—	—	Not Used
26	RED	KF006B	Key CH Change
27–32	—	—	Not Used

Right Side of the I/P, Above the Blower Motor

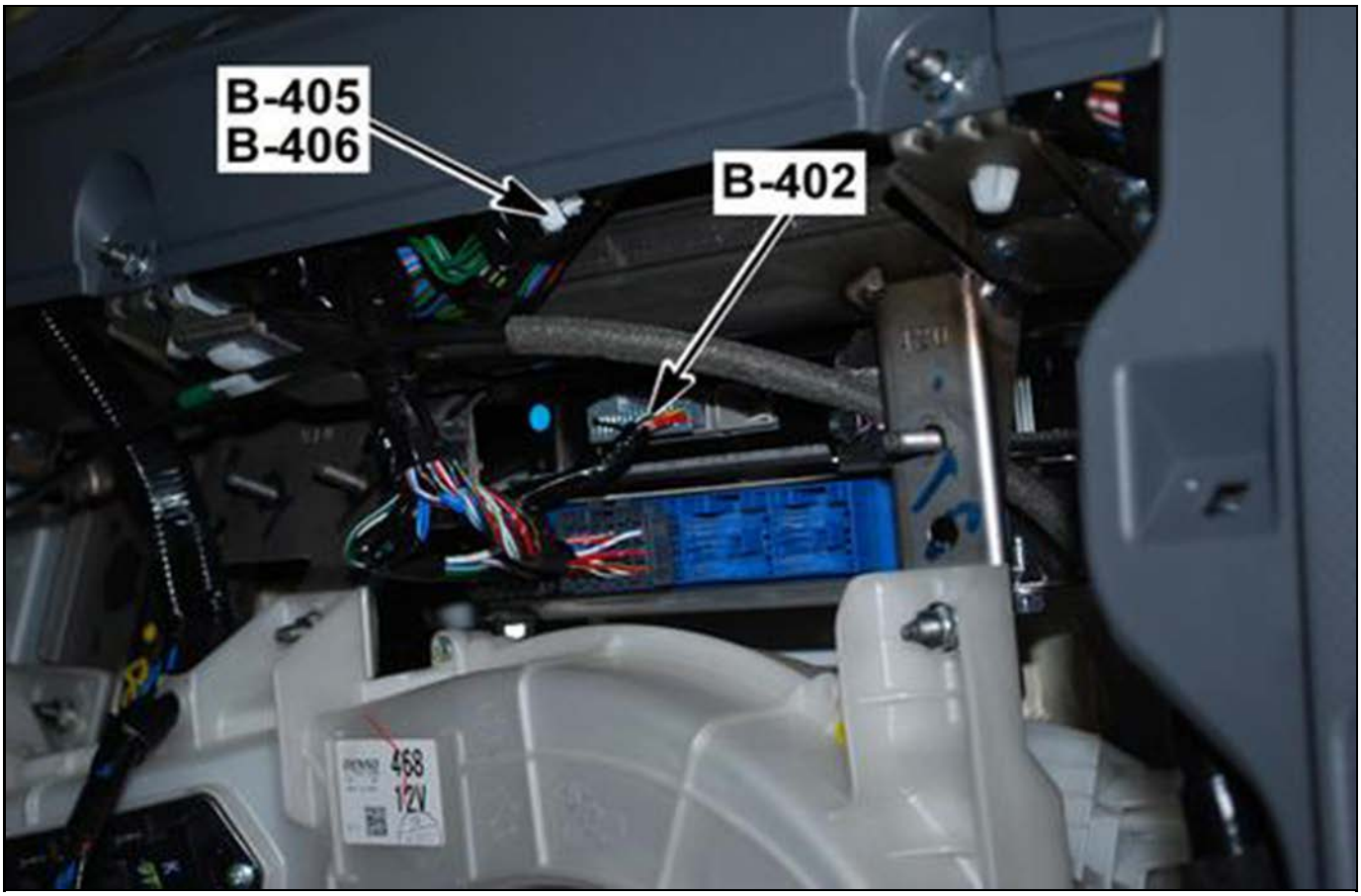

4891085

B-403 J1939 CAN 1 Low Splice Pack

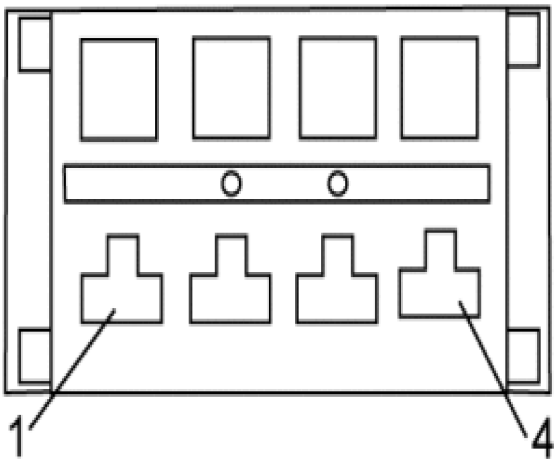

4890929

Connector Part Information		• 7383-3190 • 4-Way F (WHT)	
Pin	**Wire Color**	**Circuit Number**	**Function**
1	BLU	TF002B	J1939 CAN 1 Low Serial Data to B-459 Splice Pack
2	BLU	TF028B	J1939 CAN 1 Low Serial Data to Mimamori Module
3	BLU	TF034B	J1939 CAN 1 Low Serial Data to B-407 Splice Pack
4	BLU	TF141B	J1939 CAN 1 Low Serial Data to Isuzu Health Report RS232 Connector

Center of the I/P, Behind the Fuse/Relay Center (Cab)

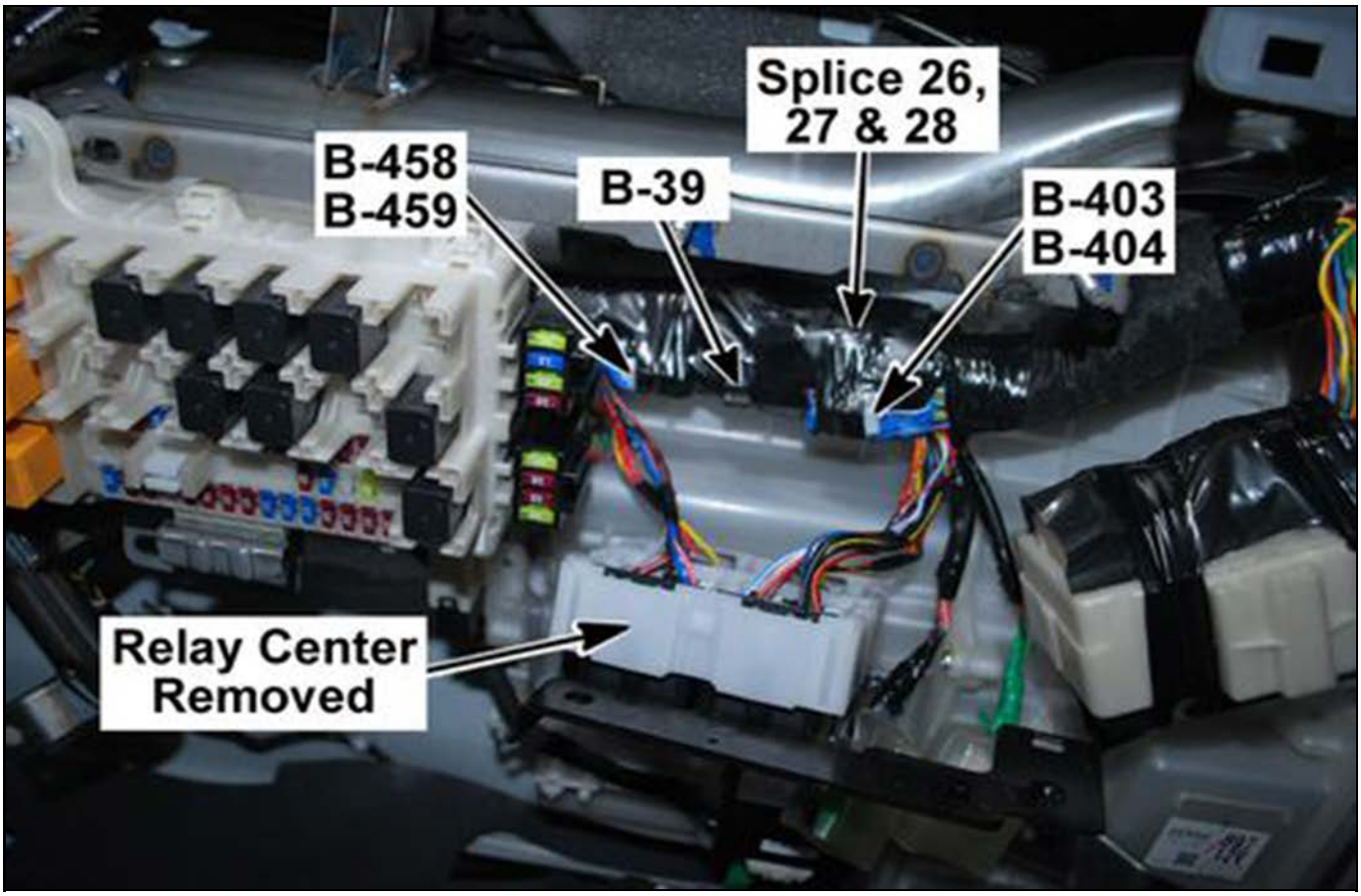

4891092

B-404 J1939 CAN 1 High Splice Pack

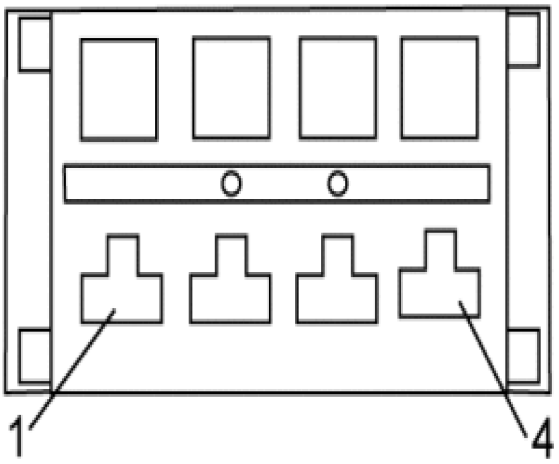

4890929

Connector Part Information		• 7383-3190 • 4-Way F (WHT)	
Pin	**Wire Color**	**Circuit Number**	**Function**
1	BLU/WHT	TF001B	J1939 CAN 1 High Serial Data to B-458 Splice Pack
2	BLU/WHT	TF027B	J1939 CAN 1 High Serial Data to Mimamori Module
3	BLU/WHT	TF033B	J1939 CAN 1 High Serial Data to B-408 Splice Pack
4	BLU/WHT	TF142B r	J1939 CAN 1 High Serial Data to Health Report RS232 Connector

Center of the I/P, Behind the Fuse/Relay Center (Cab)

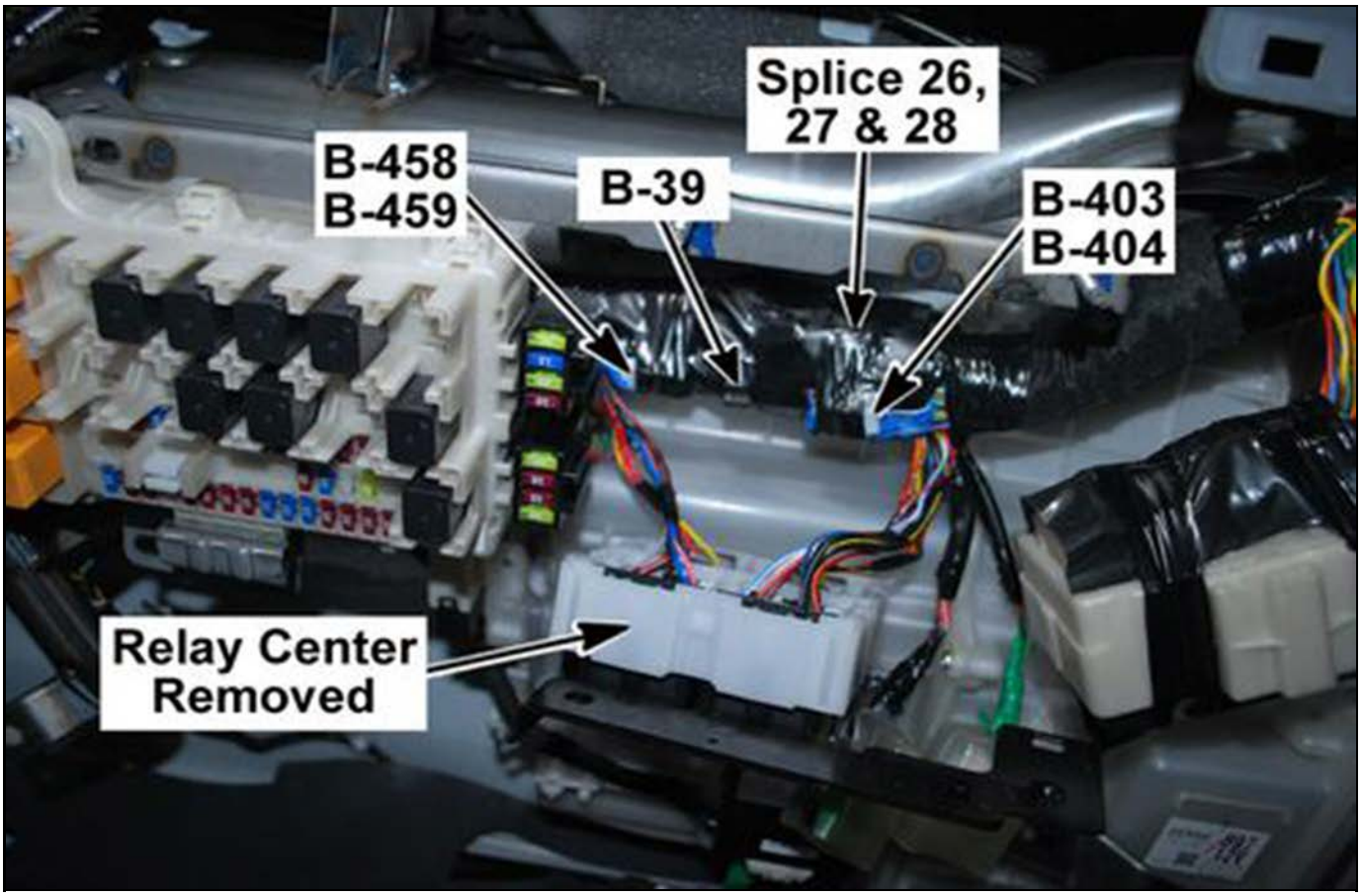

4891092

B-405 ISO 15765 CAN 2 Low Splice Pack

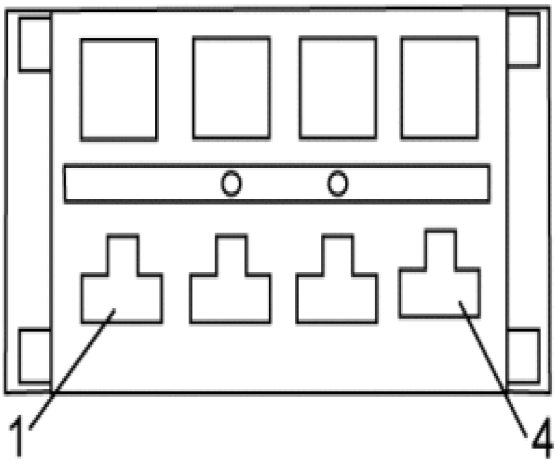

4890929

Connector Part Information		• 7383-3190 • 4-Way F (WHT)	
Pin	**Wire Color**	**Circuit Number**	**Function**
1	GRN	TF044B	ISO 15765 CAN Low Serial Data to B-235 CAN 2 Splice Pack
2	—	—	J1939 CAN 1 High Serial Data to Mimamori Module
3	GRN	TF032B	ISO 15765 CAN Low Serial Data to TCM
4	GRN	TF046B	ISO 15765 CAN Low Serial Data to Mimamori Module

Right Side of the I/P, Above the Blower Motor

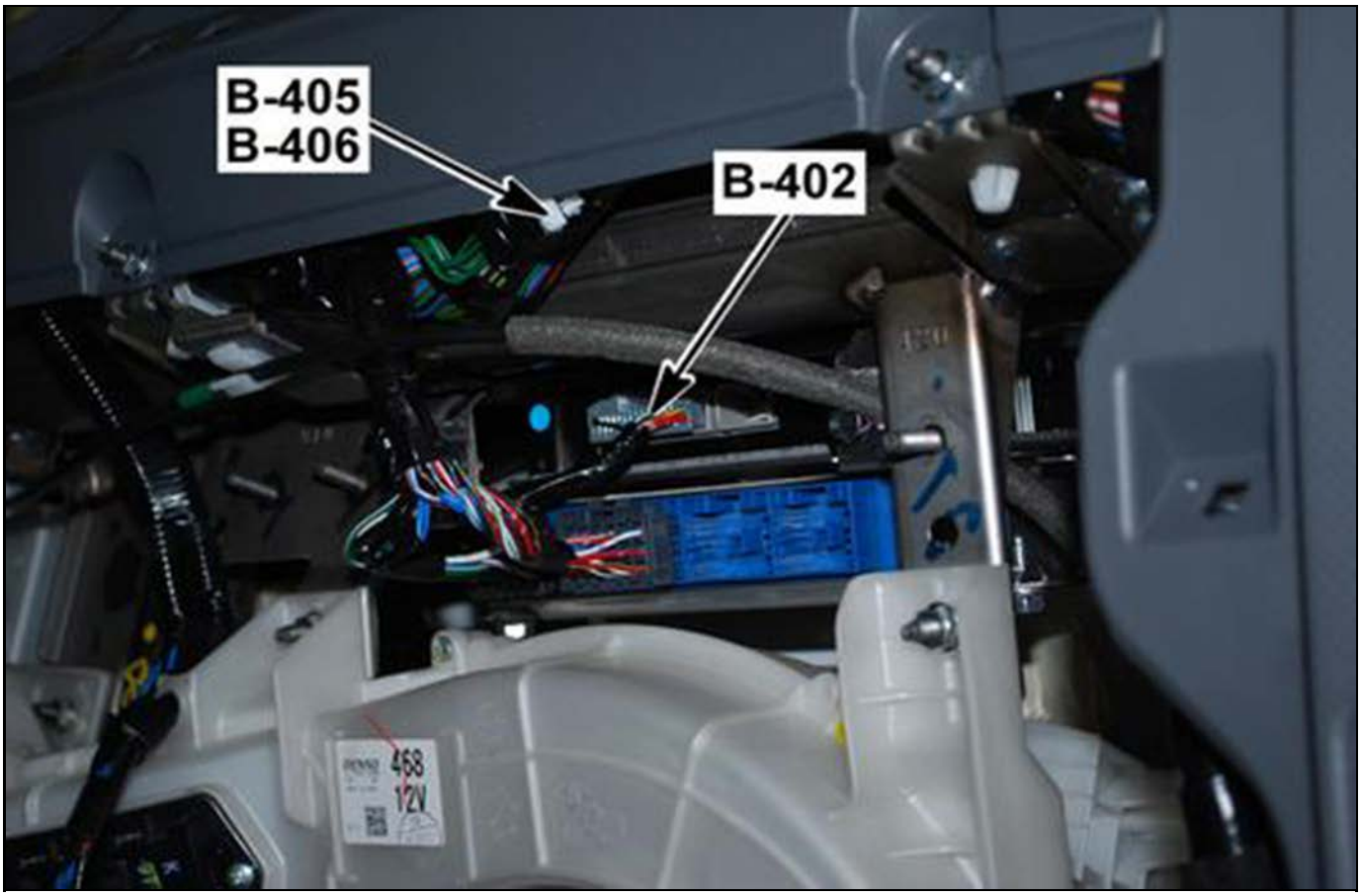

4891085

B-406 ISO 15765 CAN 2 High Splice Pack

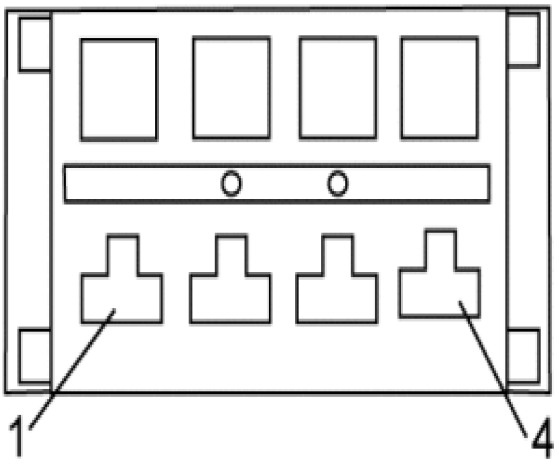

4890929

Connector Part Information		• 7383-3190 • 4-Way F (WHT)	
Pin	**Wire Color**	**Circuit Number**	**Function**
1	GRN/WHT	TF043B	ISO 15765 CAN High Serial Data to B-236 CAN 2 Splice Pack
2	—	—	Not Used
3	GRN/WHT	TF031B	ISO 15765 CAN High Serial Data to TCM
4	GRN/WHT	TF045B	ISO 15765 CAN High Serial Data to Mimamori Module

Right Side of the I/P, Above the Blower Motor

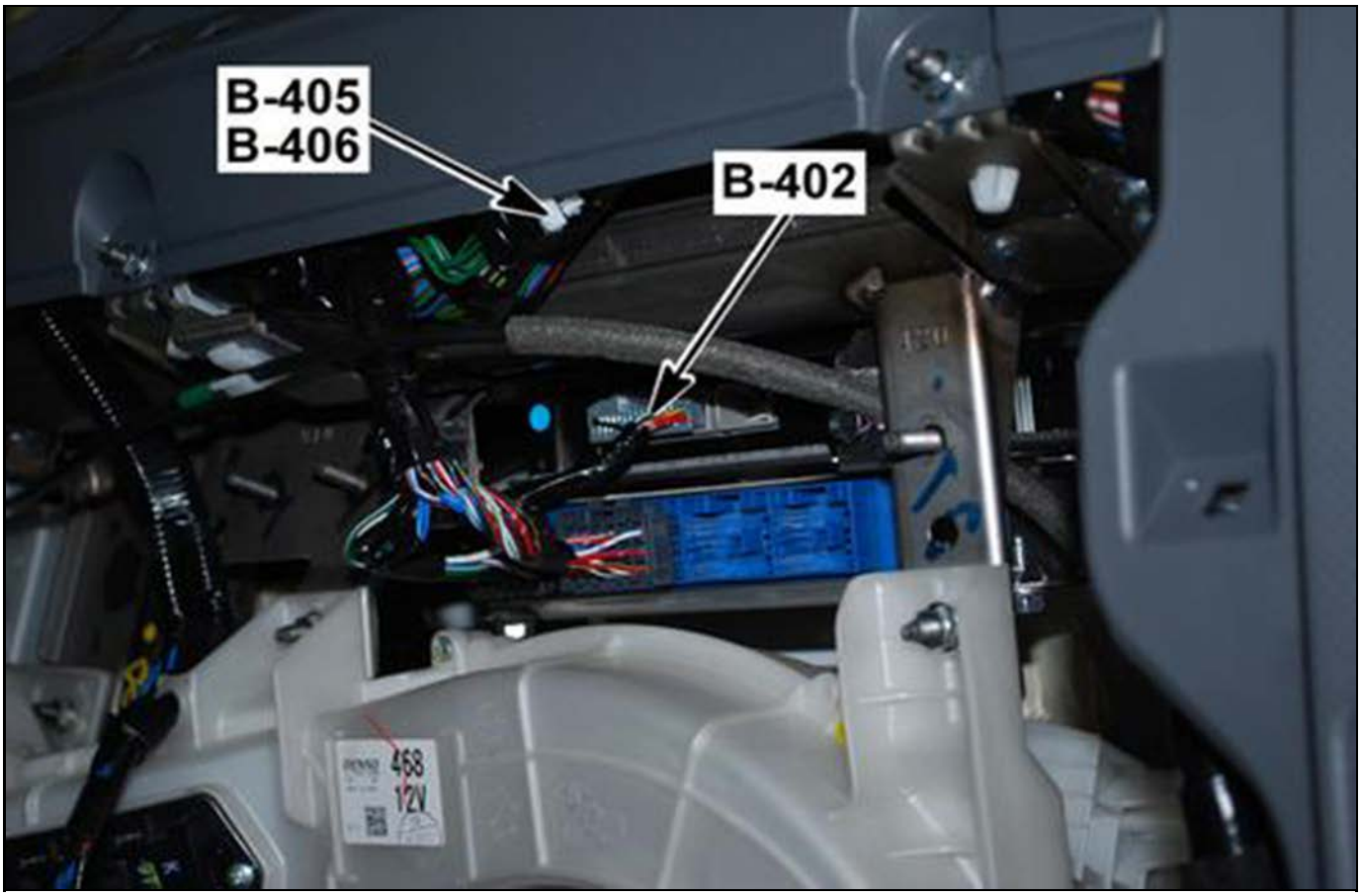

4891085

B-407 J1939 CAN 1 Low Splice Pack

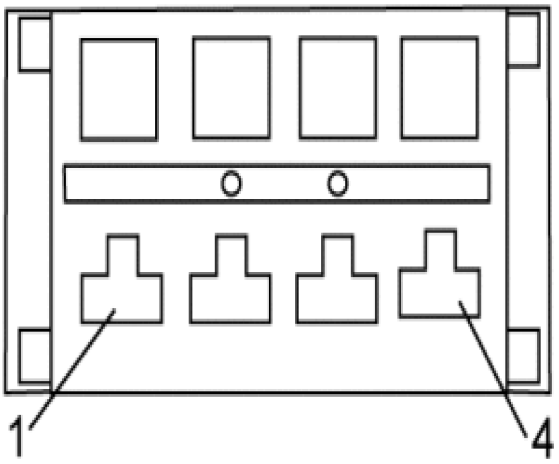

4890929

Connector Part Information		• 7383-3190 • 4-Way F (WHT)	
Pin	**Wire Color**	**Circuit Number**	**Function**
1	BLU	TF034B	J1939 CAN 1 Low Serial Data to B-403 Splice Pack
2	BLU	TF008B	J1939 CAN 1 Low Serial Data to IPC
3	BLU	TF038B	J1939 CAN 1 Low Serial Data to TCM
4	BLU	TF062B	J1939 CAN 1 Low Serial Data to FMS Module

To the Right of the Accelerator Pedal, to the Left of the Fuse/Relay Center (Cab)

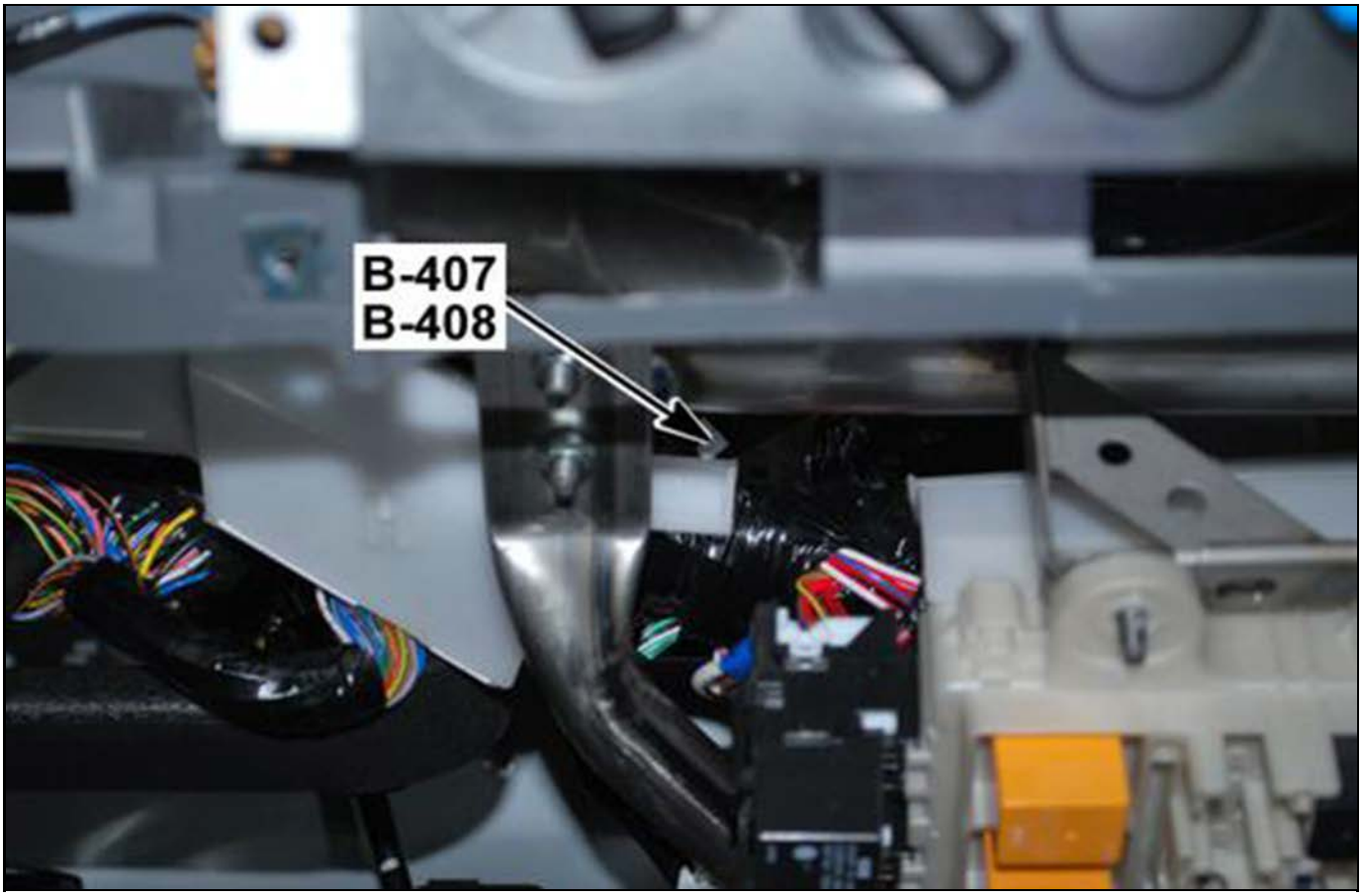

4891096

B-408 J1939 CAN 1 High Splice Pack

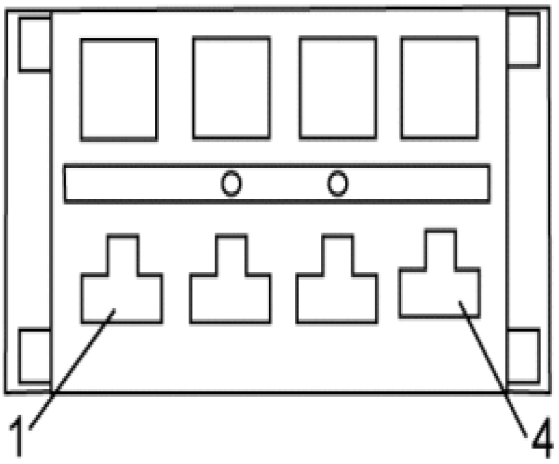

4890929

Connector Part Information		• 7383-3190 • 4-Way F (WHT)	
Pin	**Wire Color**	**Circuit Number**	**Function**
1	BLU/WHT	TF033B	J1939 CAN 1 High Serial Data to B-404 Splice Pack
2	BLU/WHT	TF007B	J1939 CAN 1 High Serial Data to IPC
3	BLU/WHT	TF037B	J1939 CAN 1 High Serial Data to TCM
4	BLU/WHT	TF061B	J1939 CAN 1 High Serial Data to FMS Module

To the Right of the Accelerator Pedal, to the Left of the Fuse/Relay Center (Cab)

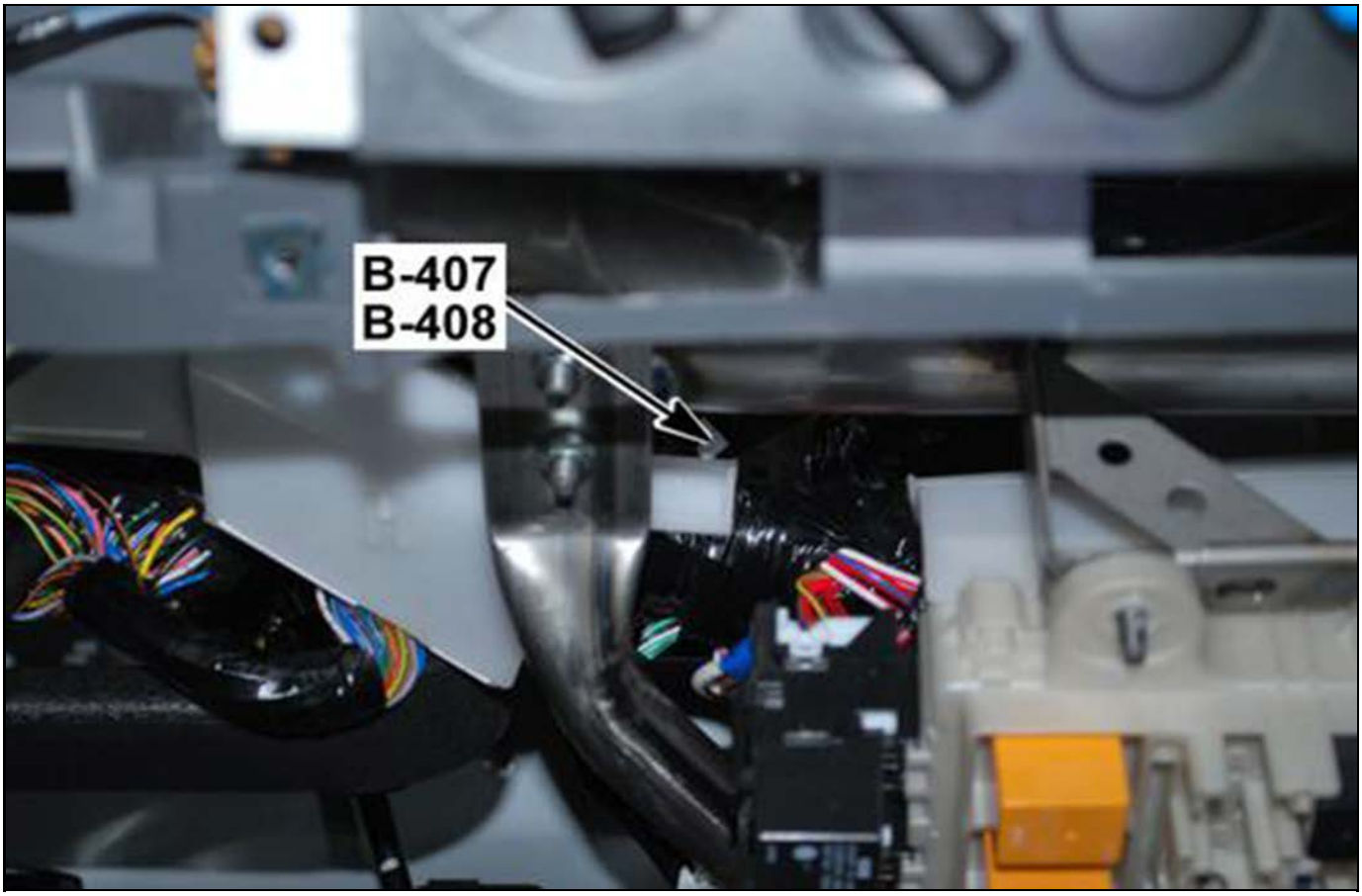

4891096

B-439 Electronic Brake Control Module (EBCM)

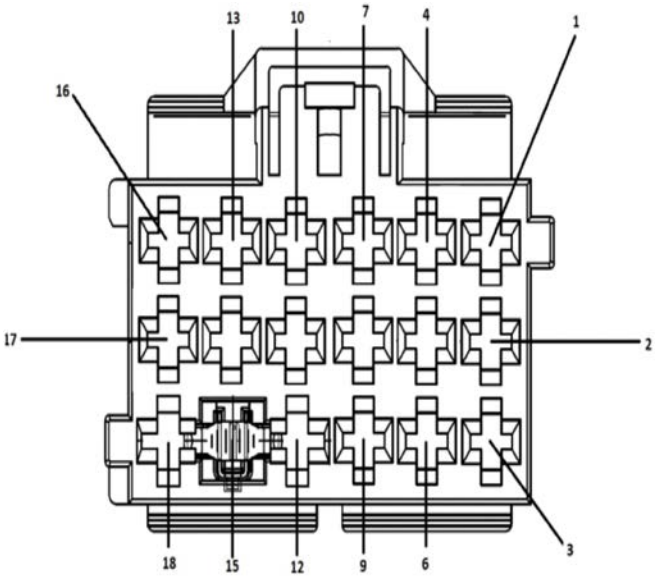

4891098

Connector Part Information		• 1718091-1 • 18-Way F (BLK)	
Pin	**Wire Color**	**Circuit Number**	**Function**
1	BLK	BY012B	Ground to Splice 2 (J-8 and J-11 Ground)
2	—	—	Not Used
3	GRN/WHT	BB100B	Ignition Voltage from F-7 Fuse, Fuse/Relay Center (Cab)
4–6	—	—	Not Used
7	BLU	TF006B	CAN 1 Low
8	BLU/WHT	TF005B	CAN 1 High
9	—	—	Not Used
10	GRN/WHT	BB121B	Right Rear Wheel Speed Sensor 5 Volt Reference
11	GRN	BB122B	Right Rear Wheel Speed Sensor Reference Signal
12	BLK	BY011B	Ground to Splice 2 (J-8 and J-11 Ground)
13–15	—	—	Not Used
16	WHT/BLU	BB101B	Battery Voltage from FL-11 Fuse, Fuse/Relay Center
17	—	—	Not Used
18	WHT/VIO	BB090B	Diagnostic Switch

Behind the Lower Right Side of the I/P

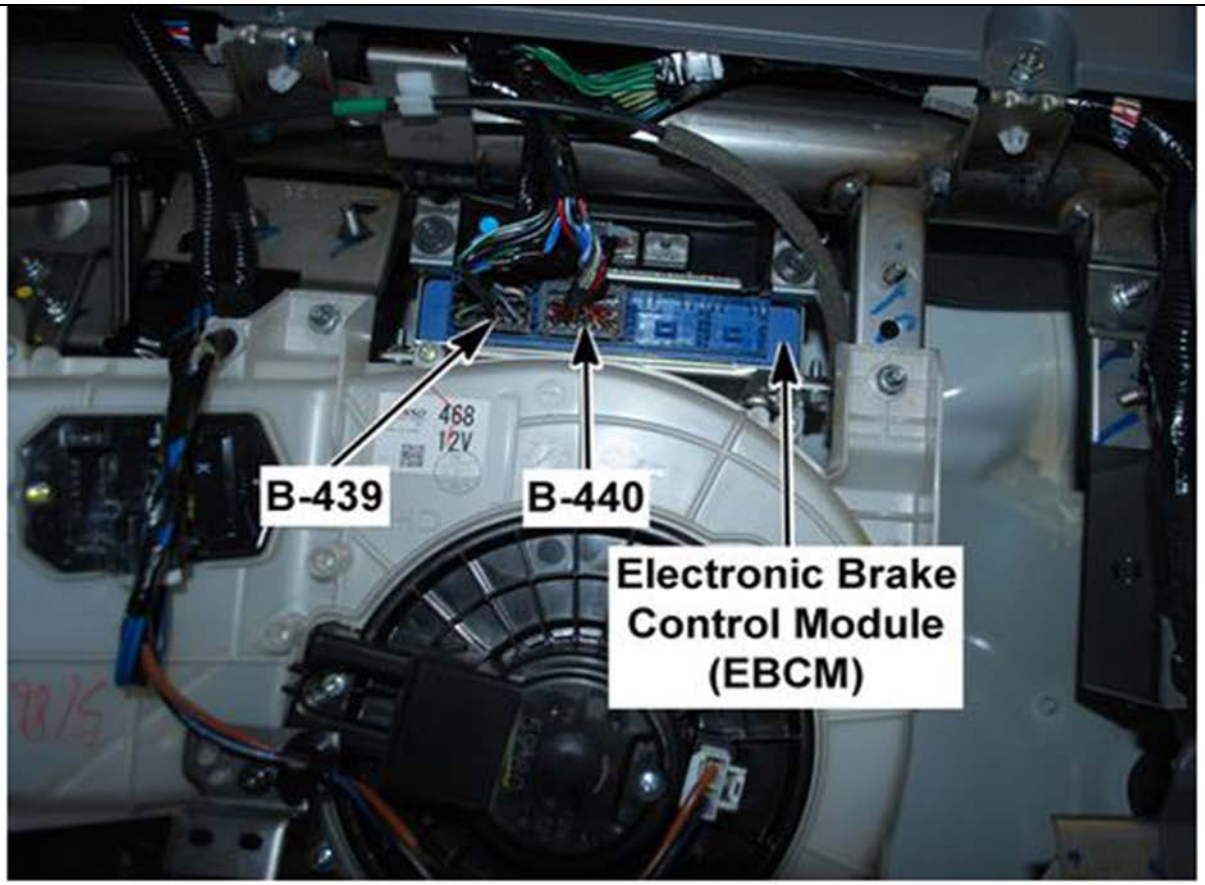

4891099

B-440 Electronic Brake Control Module (EBCM)

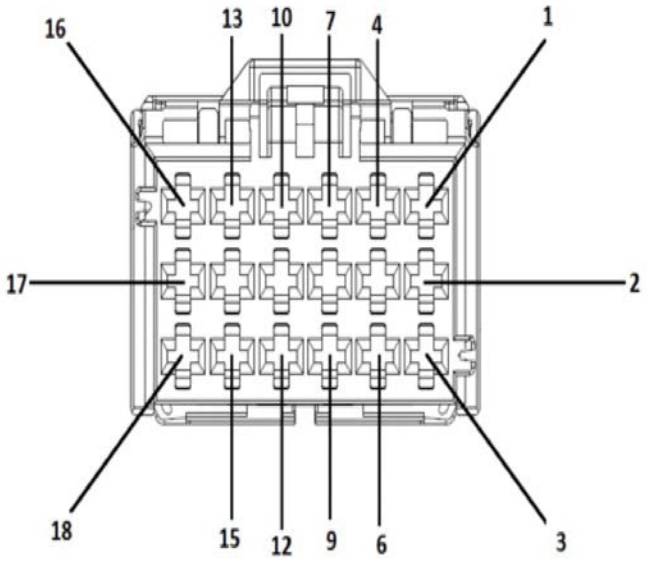

4891102

Connector Part Information		• 8-968974-1 • 18-Way F (GRY)	
Pin	**Wire Color**	**Circuit Number**	**Function**
1	GRN/WHT	BB103B	Left Front Pressure Modulator Valve Hold Control
2	RED	BB105B	Left Front Pressure Modulator Valve Release Control
3	BLK/RED	BB104B	Left Front Pressure Modulator Low Reference
4	WHT/RED	BB108B	Right Front Pressure Modulator Valve Hold Control
5	WHT/BLU	BB106B	Left Front Wheel Speed Sensor Signal
6	RED/BLK	BB109B	Right Front Pressure Modulator Low Reference
7	WHT/BLK	BB110B	Right Front Pressure Modulator Valve Release Control
8	BLK/BLU	BB107B	Left Front Wheel Speed Sensor 5 Volt Reference
9	BLK/ORN	BB119B	Right Rear Pressure Modulator Low Reference
10	WHT/GRN	BB118B	Right Rear Pressure Modulator Valve Release Control
11	BLU/WHT	BB111B	Right Front Wheel Speed Sensor Signal
12	BLK/WHT	BB114B	Left Rear Pressure Modulator Low Reference
13	RED/GRN	BB120B	Left Rear Pressure Modulator Valve Release Control
14	BLU	BB112B	Right Front Wheel Speed Sensor 5 Volt Reference
15	WHT/RED	BB116B	Left Rear Wheel Speed Sensor 5 Volt Reference
16	WHT/BLU	BB113B	Left Rear Pressure Modulator Valve Release Control
17	RED/BLU	BB115B	Left Rear Pressure Modulator Valve Release Control
18	ORN/BLK	BB117B	Left Rear Wheel Speed Sensor Signal

Behind the Lower Right Side of the I/P

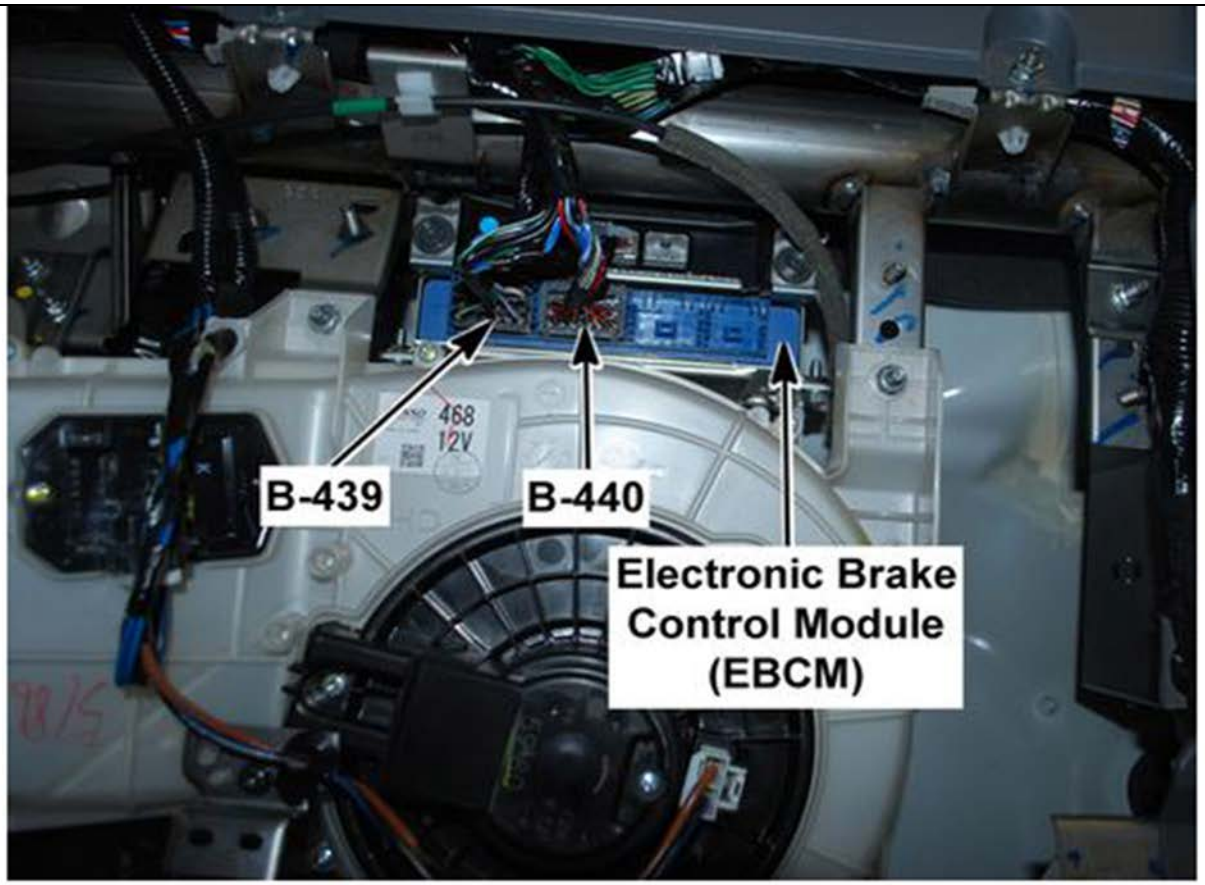

4891099

B-443 Door Lock Diode

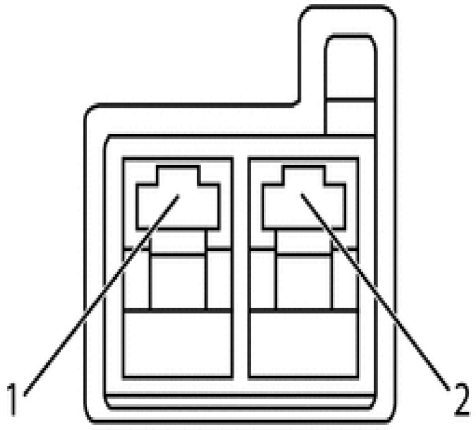

4890964

Connector Part Information		• 7323-9025-30 • 2-Way F (BLK)	
Pin	**Wire Color**	**Circuit Number**	**Function**
1	GRN/BLK	VA100B	Door Lock Signal (In) from J/B 1 (B-132 pin 4)
2	GRN/WHT	VA101B	Door Lock Signal (Out) to J/B 2 (B-144 pin 12)

In the Center of the I/P, Between the Blower Resistor and Junction Block 2. Taped in the Main Harness

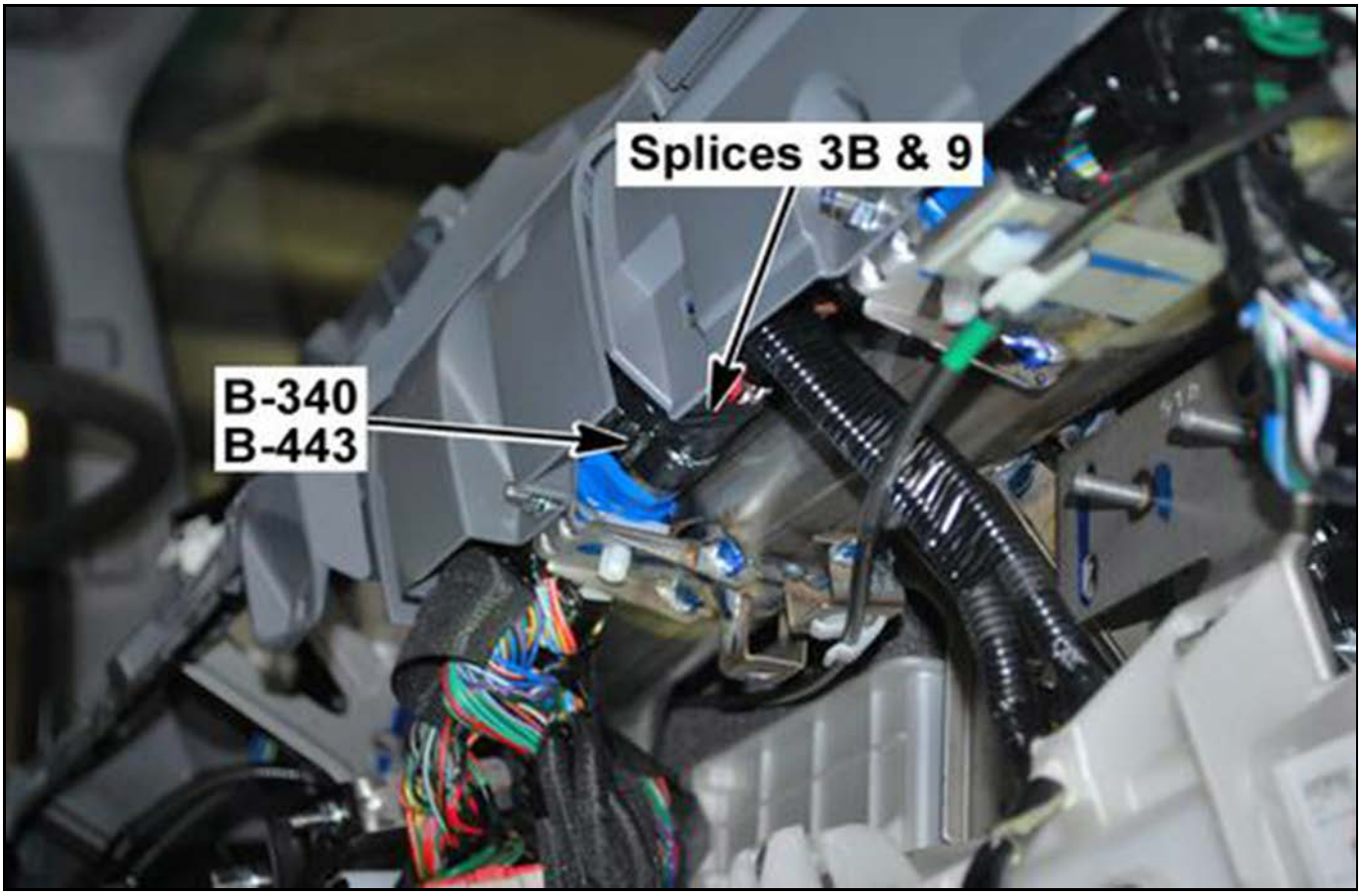

4890972

B-451 Fleet Management System (FMS) Module

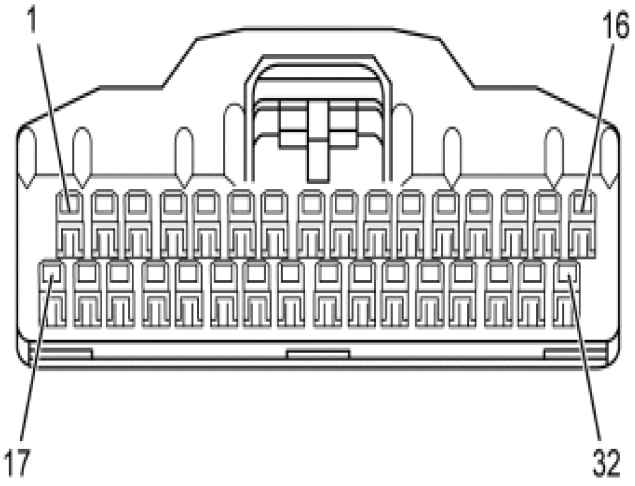

4891083

Connector Part Information		• MX34032SF1 • 32-Way F (GRY)	
Pin	**Wire Color**	**Circuit Number**	**Function**
1	RED	GG023	Battery Voltage from Fuse F-3
2	GRN/YEL	GG022	Ignition Voltage from Fuse F-21
3	LT BLU	GG004T	ISO 14230 communication
4	BRN/WHT	TF065	CAN 4 High Serial Data
5	BLK	GT016	Ground to B-453 Splice Pack (B-51 Ground)
6	BLU/WHT	TF061T	CAN 1 High Serial Data
7–15	—	—	Not Used
16	RED	GG003	Battery Voltage from Fuse F-3
17–20	—	—	Not Used
21	BRN	TF066	CAN 4 Low Serial Data
22	—	—	Not Used
23	BLU	TF062T	CAN 1 Low Serial Data
24–32	—	—	Not Used

Behind the Storage Compartment, Right Side of the Radio

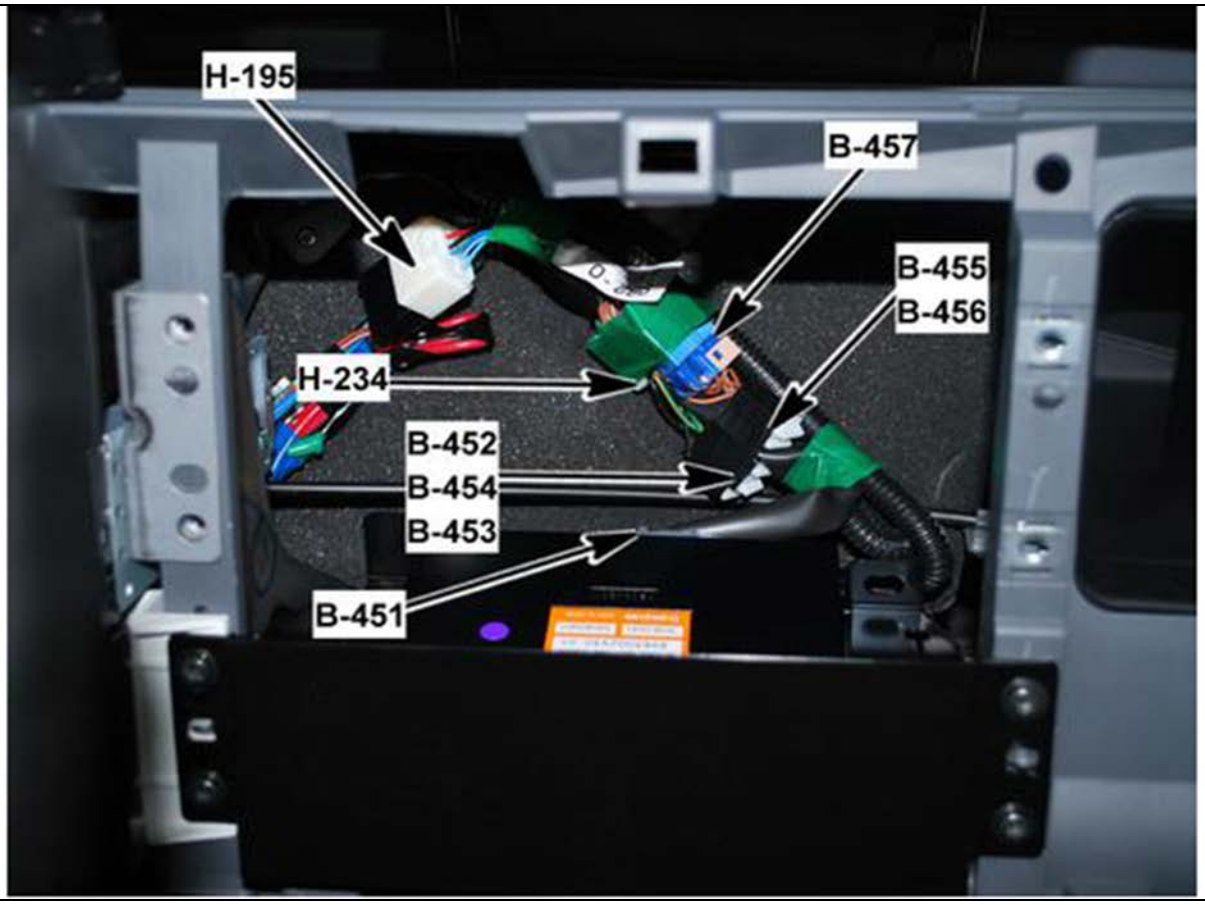

4891103

B-452 FMS Splice Pack

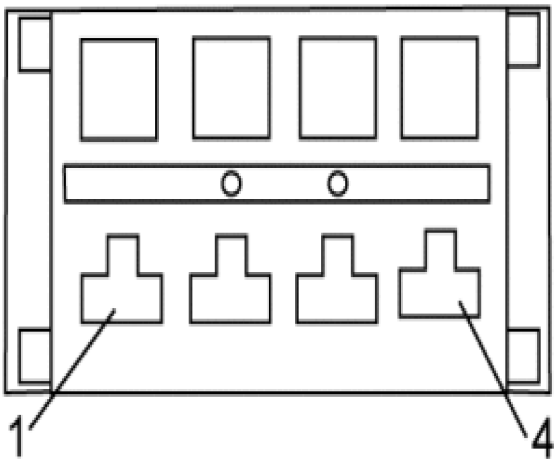

4890929

Connector Part Information		• 7383-3190 • 4-Way F (WHT)	
Pin	**Wire Color**	**Circuit Number**	**Function**
1	RED	GG013T	Battery Voltage from Fuse F-3 from J/B 2 (B- 146 pin 18)
2	RED	GG003	Battery Voltage from Fuse F-3 to Fleet Management System (FMS) Module
3	—	—	Not Used
4	RED	GG023	Battery Voltage from Fuse F-3 to Telematics Connector H-234

Behind the Storage Compartment, Right Side of the Radio

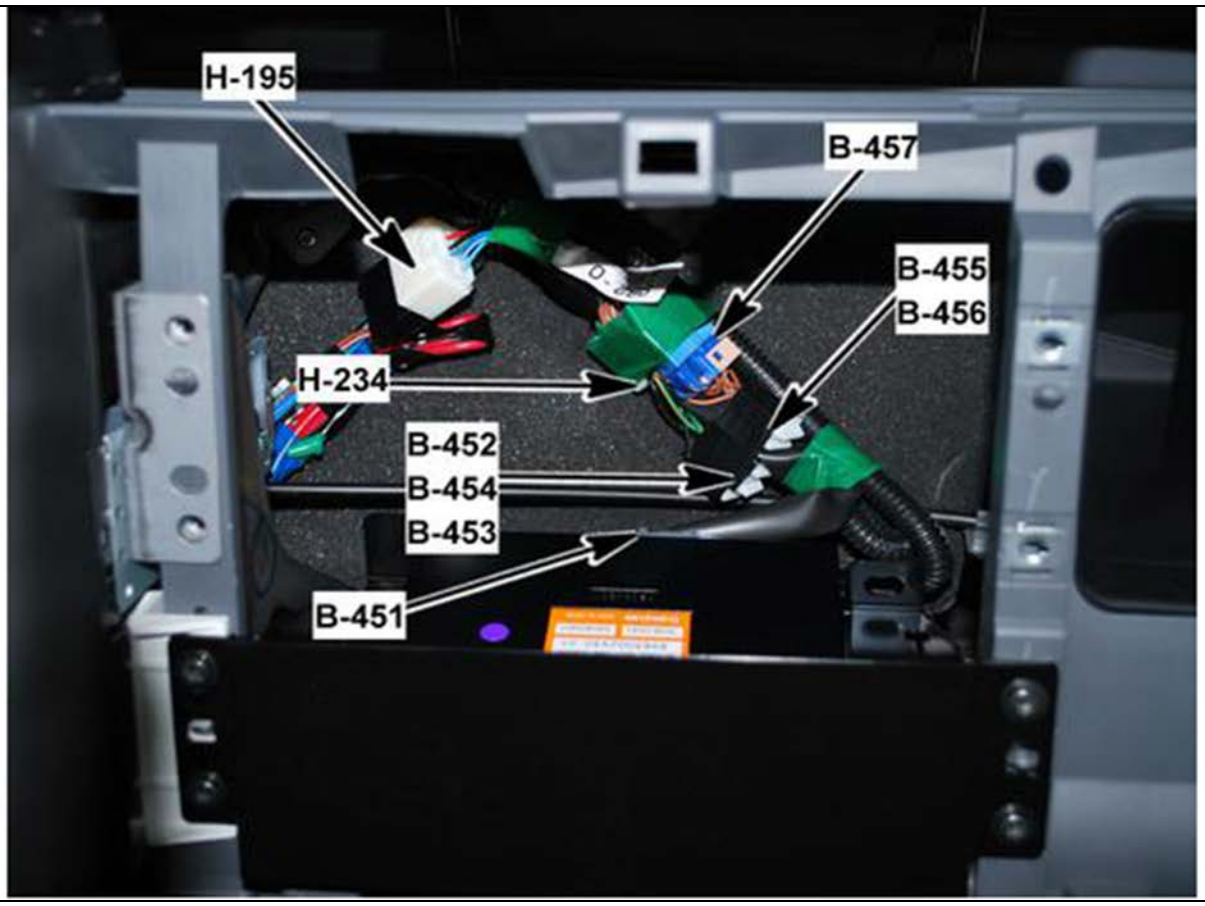

4891103

B-453 Ground Splice Pack

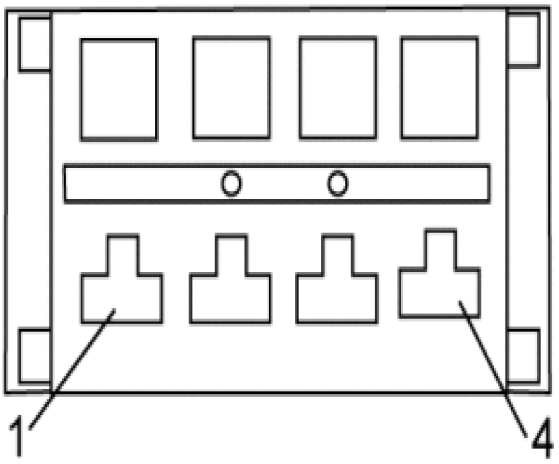

4890929

Connector Part Information		• 7383-3190 • 4-Way F (WHT)	
Pin	**Wire Color**	**Circuit Number**	**Function**
1	BLK	GT006T	Ground to B-601 Splice Pack (B-51 Ground)
2	BLK	GT026	Ground from Telematics Connector H-234
3	—	—	Not Used
4	BLK	GT016	Ground from FMS Module

Behind the Storage Compartment, Right Side of the Radio

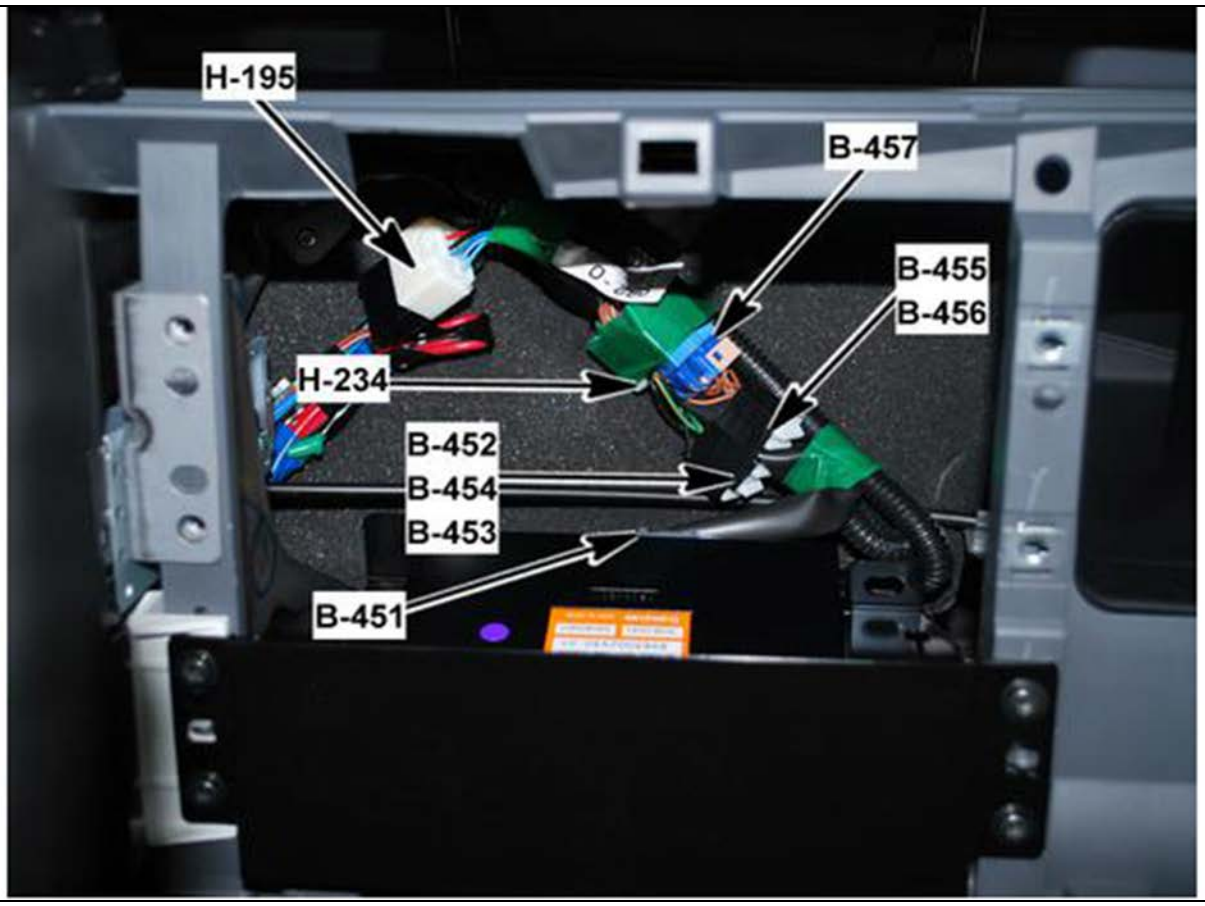

4891103

B-454 FMS Splice Pack

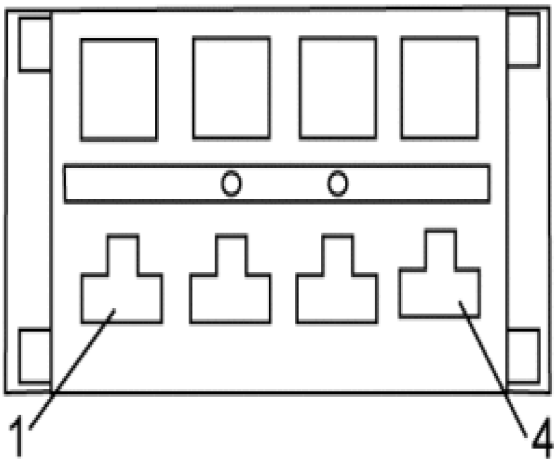

4890929

Connector Part Information		• 7383-3190 • 4-Way F (WHT)	
Pin	**Wire Color**	**Circuit Number**	**Function**
1	GRN/YEL	GG012T	Ignition Voltage from Fuse F-21, from J/B 2 (B- 140 pin 15)
2	GRN/YEL	GG002	Ignition Voltage from Fuse F-21 to FMS Module
3	—	—	Not Used
4	GRN/YEL	GG022	Ignition Voltage from Fuse F-21 Telematics Connector H-234

Behind the Storage Compartment, Right Side of the Radio

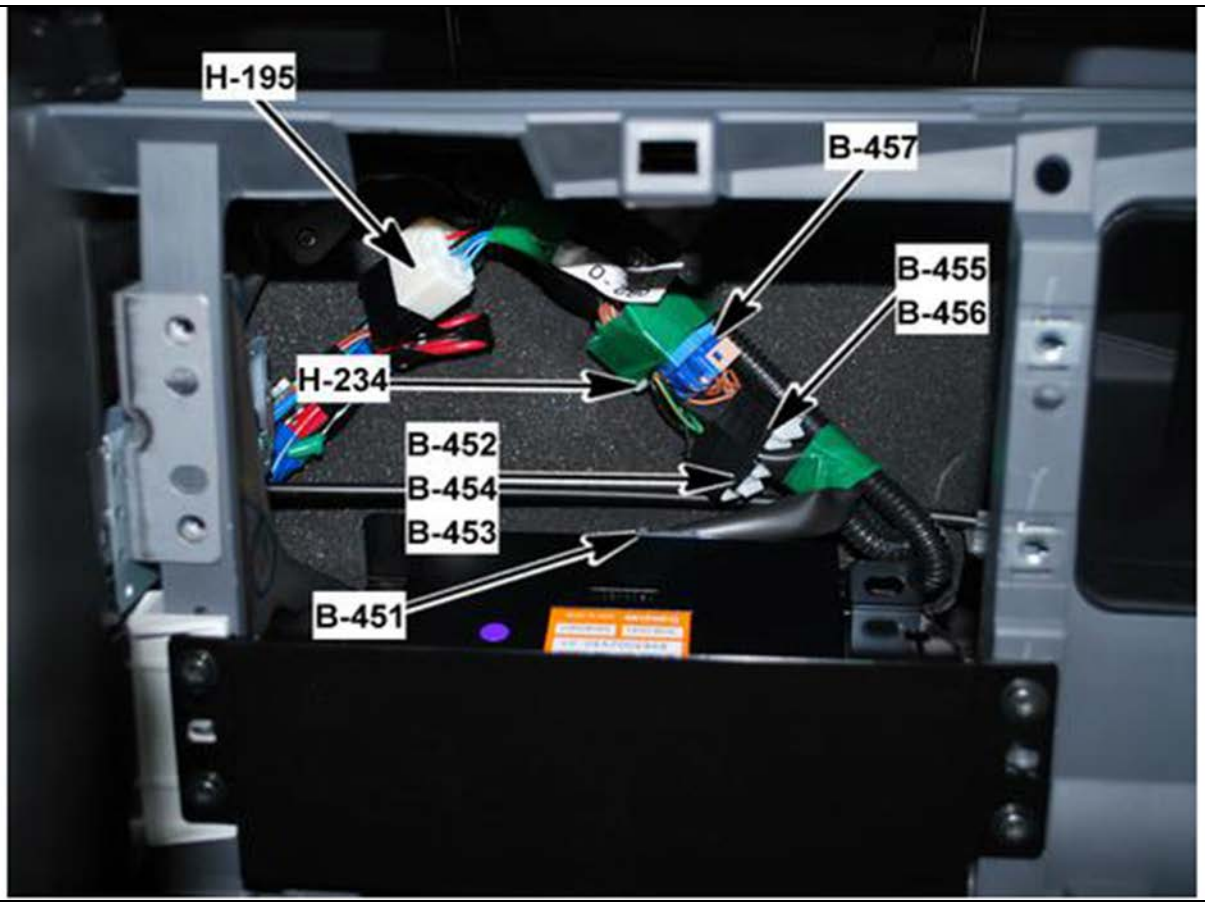

4891103

B-455 J1939 CAN 4 High Splice Pack

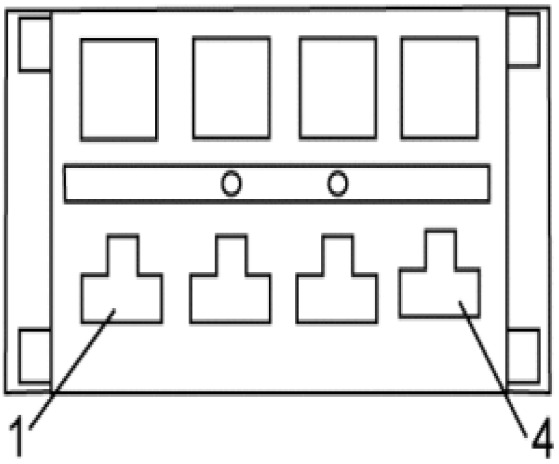

4890929

Connector Part Information		• 7383-3190 • 4-Way F (WHT)	
Pin	**Wire Color**	**Circuit Number**	**Function**
1	BRN/WHT	TF065	J1939 CAN 4 High to FMS Module
2	BRN/WHT	TF067	J1939 CAN 4 High to Resistor B-457
3	—	—	Not Used
4	BRN/WHT	TF069T	J1939 CAN 4 High to Telematics Connector B-234

Behind the Storage Compartment, Right Side of the Radio

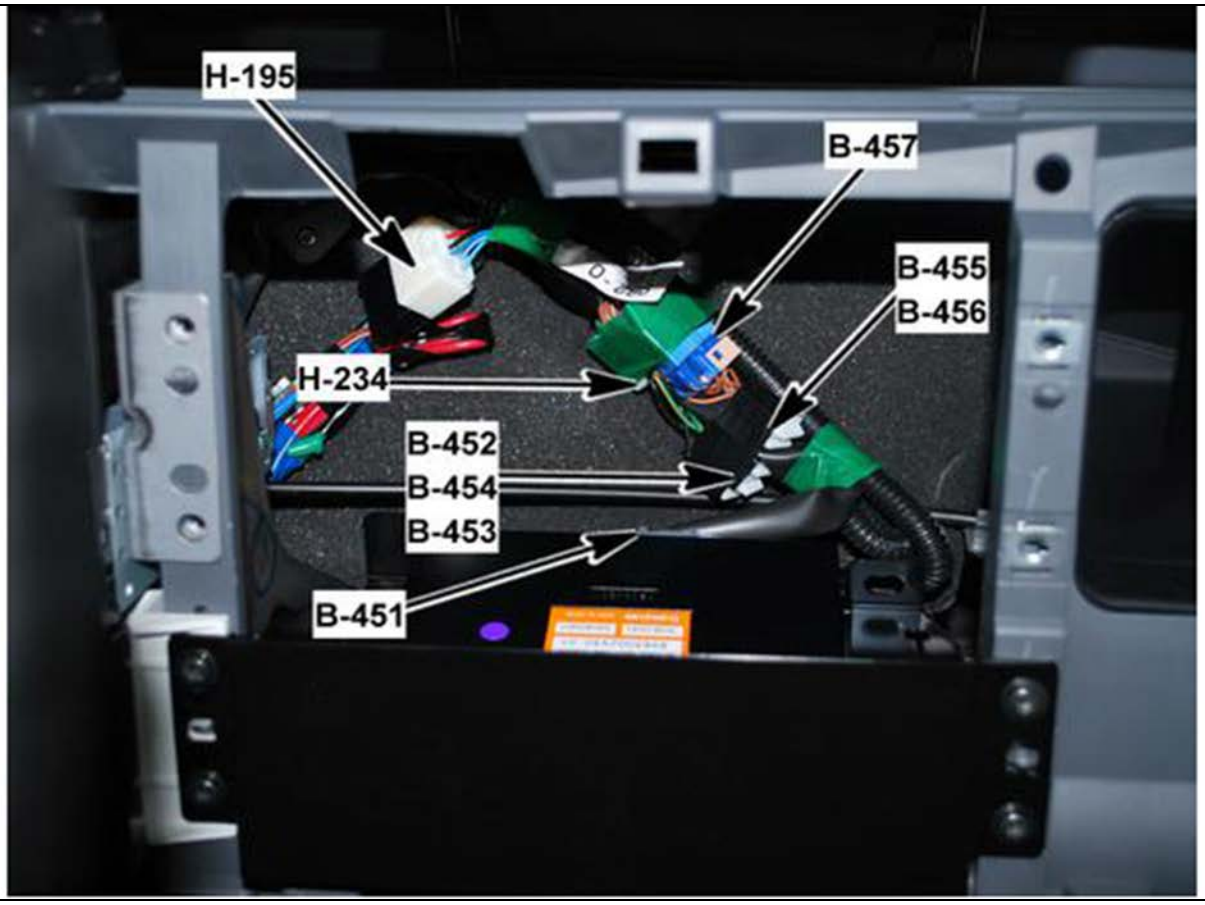

4891103

B-456 J1939 CAN 4 Low Splice Pack

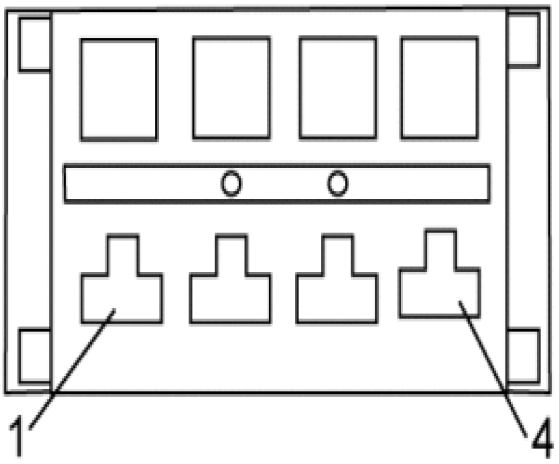

4890929

Connector Part Information		• 7383-3190 • 4-Way F (WHT)	
Pin	**Wire Color**	**Circuit Number**	**Function**
1	BRN	TF066	J1939 CAN 4 Low to FMS Module
2	BRN	TF068	J1939 CAN 4 Low to Resistor B-457
3	—	—	Not Used
4	BRN	TF070T	J1939 CAN 4 Low to Telematics Connector H-234

Behind the Storage Compartment, Right Side of the Radio

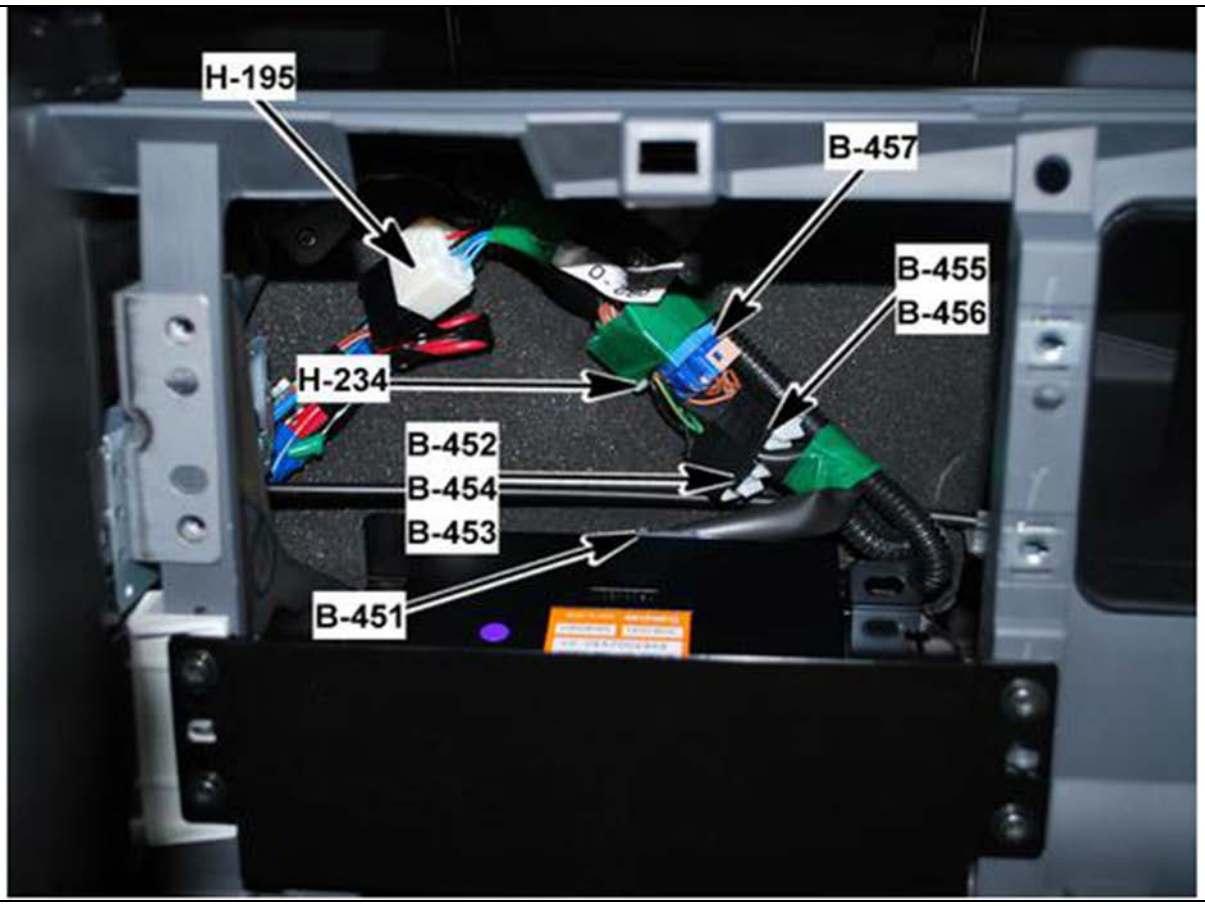

4891103

B-457 CAN 4 Resistor

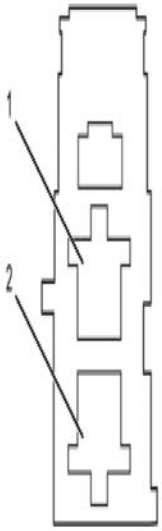

4891112

Connector Part Information		• 7323-6122-90 • 2-Way F (BLU) • 120 Ohms	
Pin	**Wire Color**	**Circuit Number**	**Function**
1	BRN	TF068	J1939 CAN 4 Low
2	BRN/WHT	TF067	J1939 CAN 4 High

Behind the Storage Compartment, Right Side of the Radio

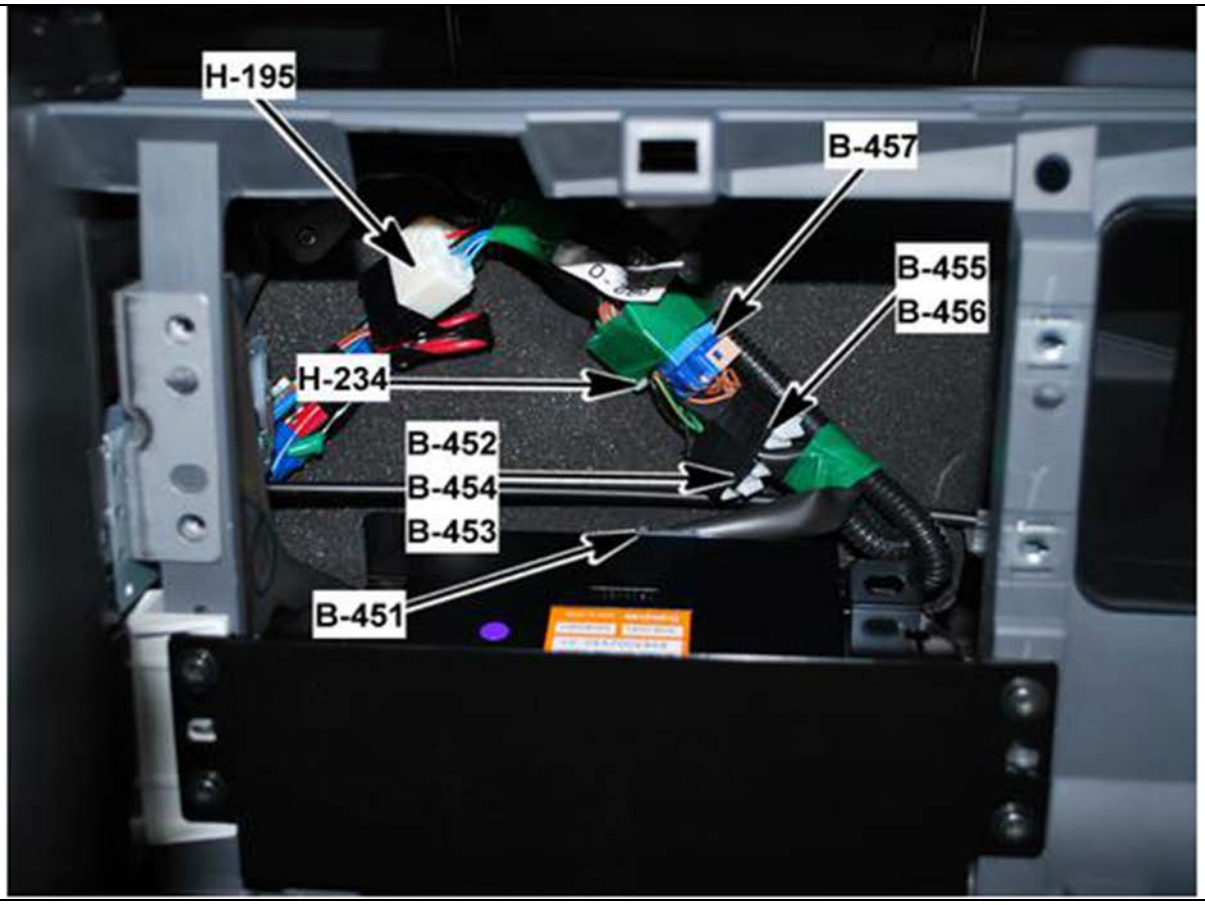

4891103

B-458 J1939 CAN 1 High Splice Pack

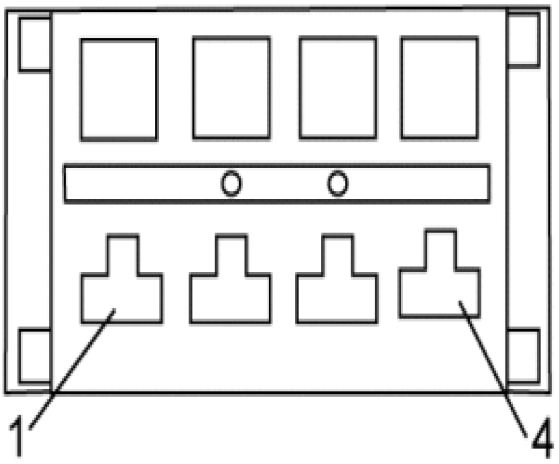

4890929

Connector Part Information		• 7383-3190 • 4-Way F (WHT)	
Pin	**Wire Color**	**Circuit Number**	**Function**
1	BLU/WHT	TF003B	J1939 CAN 1 High Serial Data to VNT Module and ECM
2	—	—	Not Used
3	BLU/WHT	TF001B	J1939 CAN 1 High Serial Data to B-404 Splice Pack
4	BLU/WHT	TF005B	J1939 CAN 1 High Serial Data to EBCM

Center of the I/P, Behind the Fuse/Relay Center (Cab)

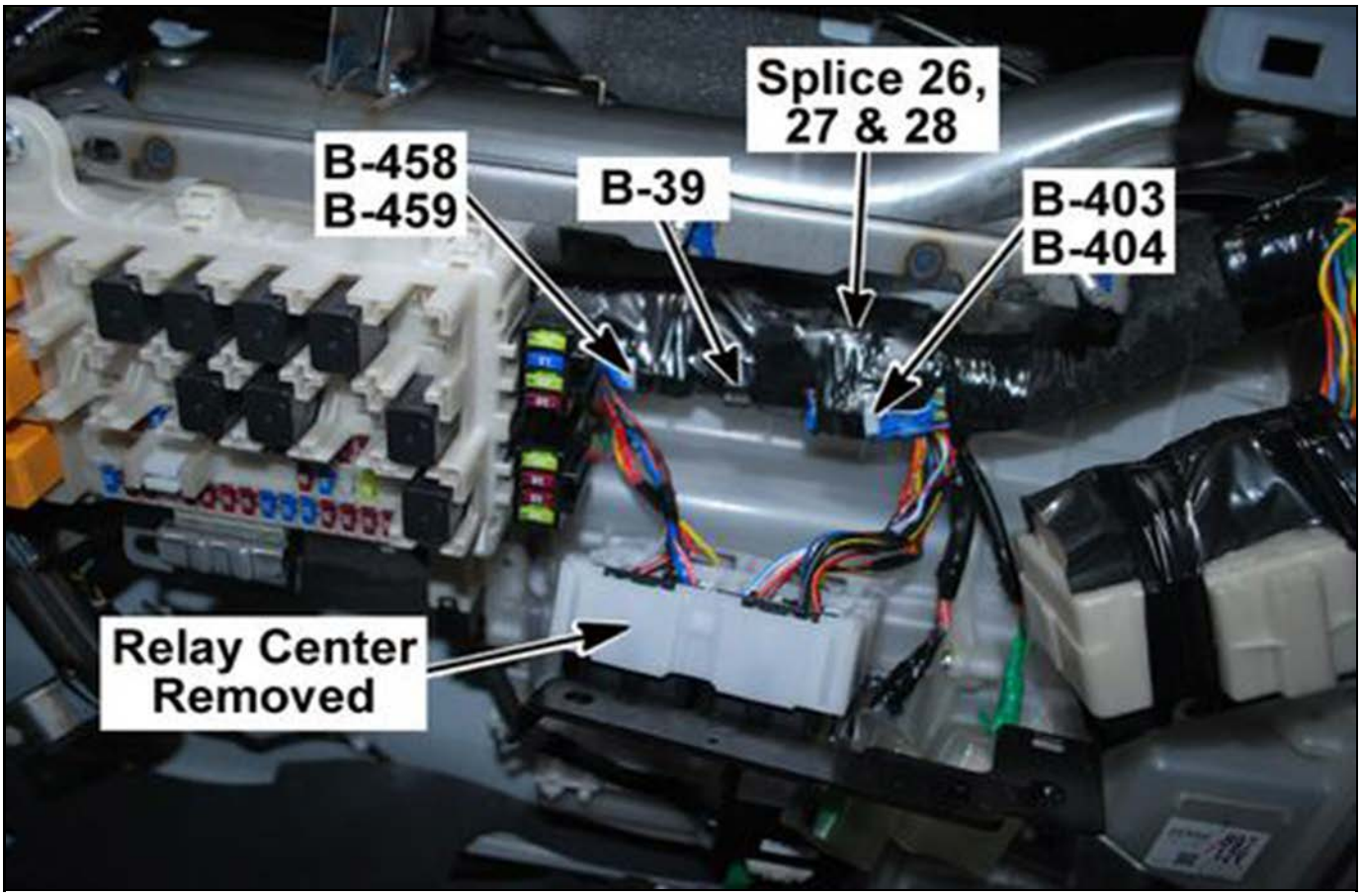

4891092

B-459 J1939 CAN 1 Low Splice Pack

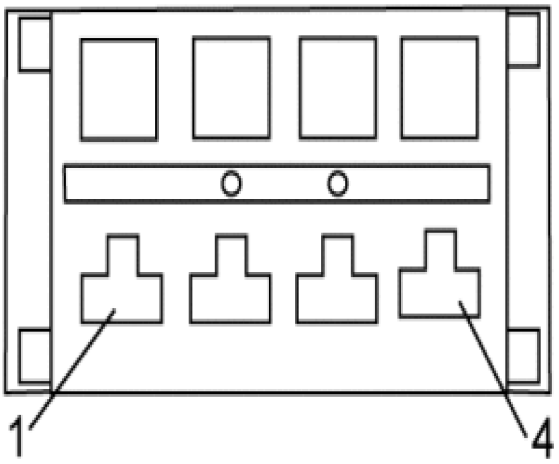

4890929

Connector Part Information		• 7383-3190 • 4-Way F (WHT)	
Pin	**Wire Color**	**Circuit Number**	**Function**
1	BLU	TF004B	J1939 CAN 1 Low Serial Data to VNT Module and ECM
2	—	—	Not Used
3	BLU	TF002B	J1939 CAN 1 Low Serial Data to B-403 Splice Pack
4	BLU	TF006B	J1939 CAN 1 Low Serial Data to EBCM

Center of the I/P, Behind the Fuse/Relay Center (Cab)

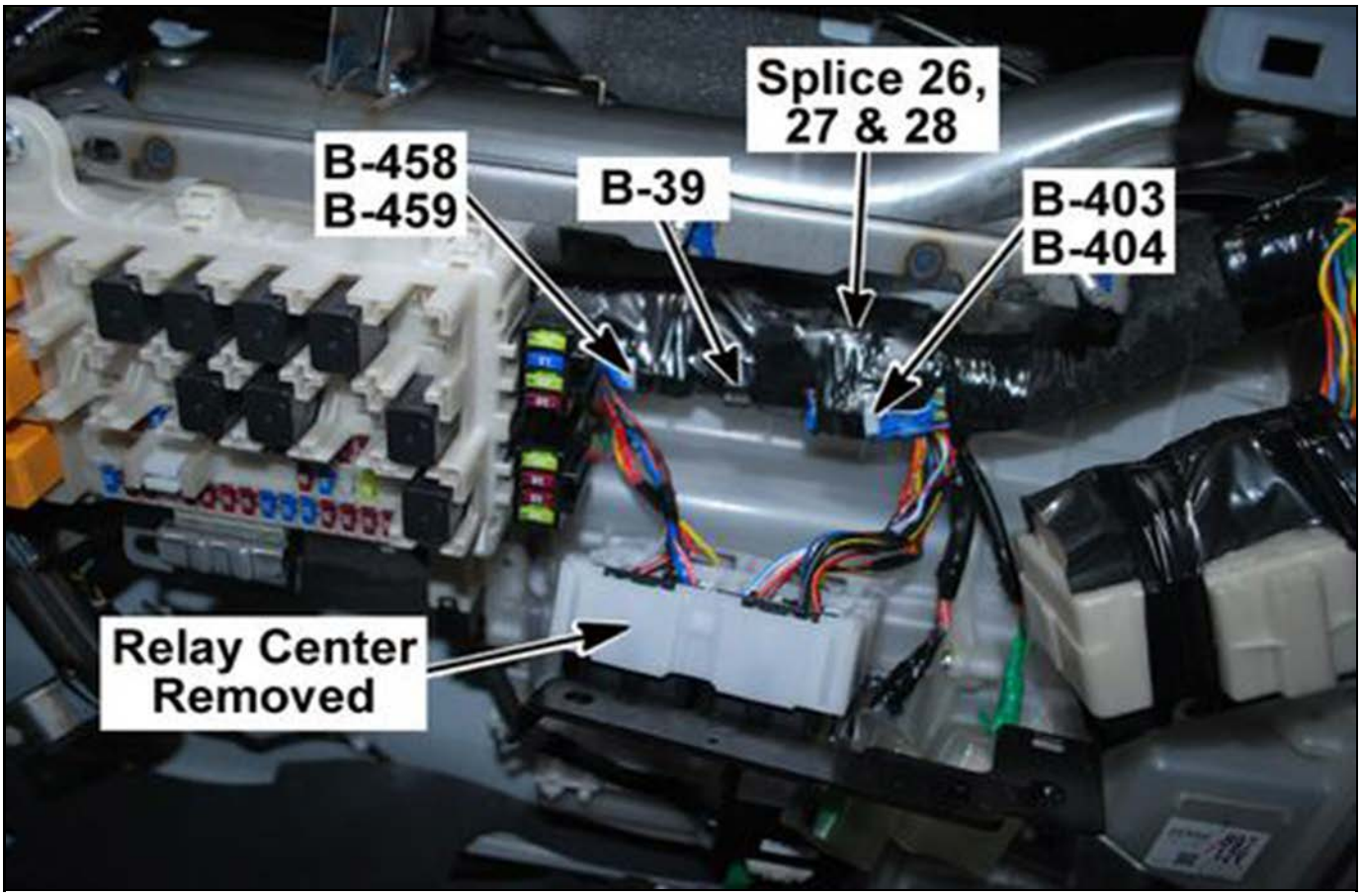

4891092

B-559 Key Lock Solenoid

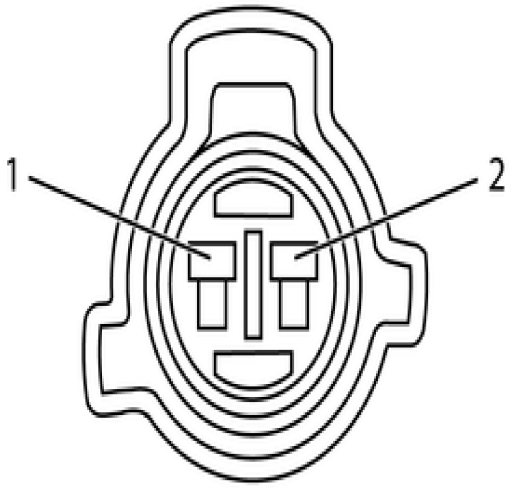

4891121

Connector Part Information		• PH845-02010 • 2-Way F (WHT)	
Pin	**Wire Color**	**Circuit Number**	**Function**
1	BLK	OX021B	Ground to Splice 18 (B-55 and B-221)
2	BLU/WHT	OA093B	Signal from Shift Lever

On the Left Sdie of the Steering Column, Under the Steering Column Trim Covers

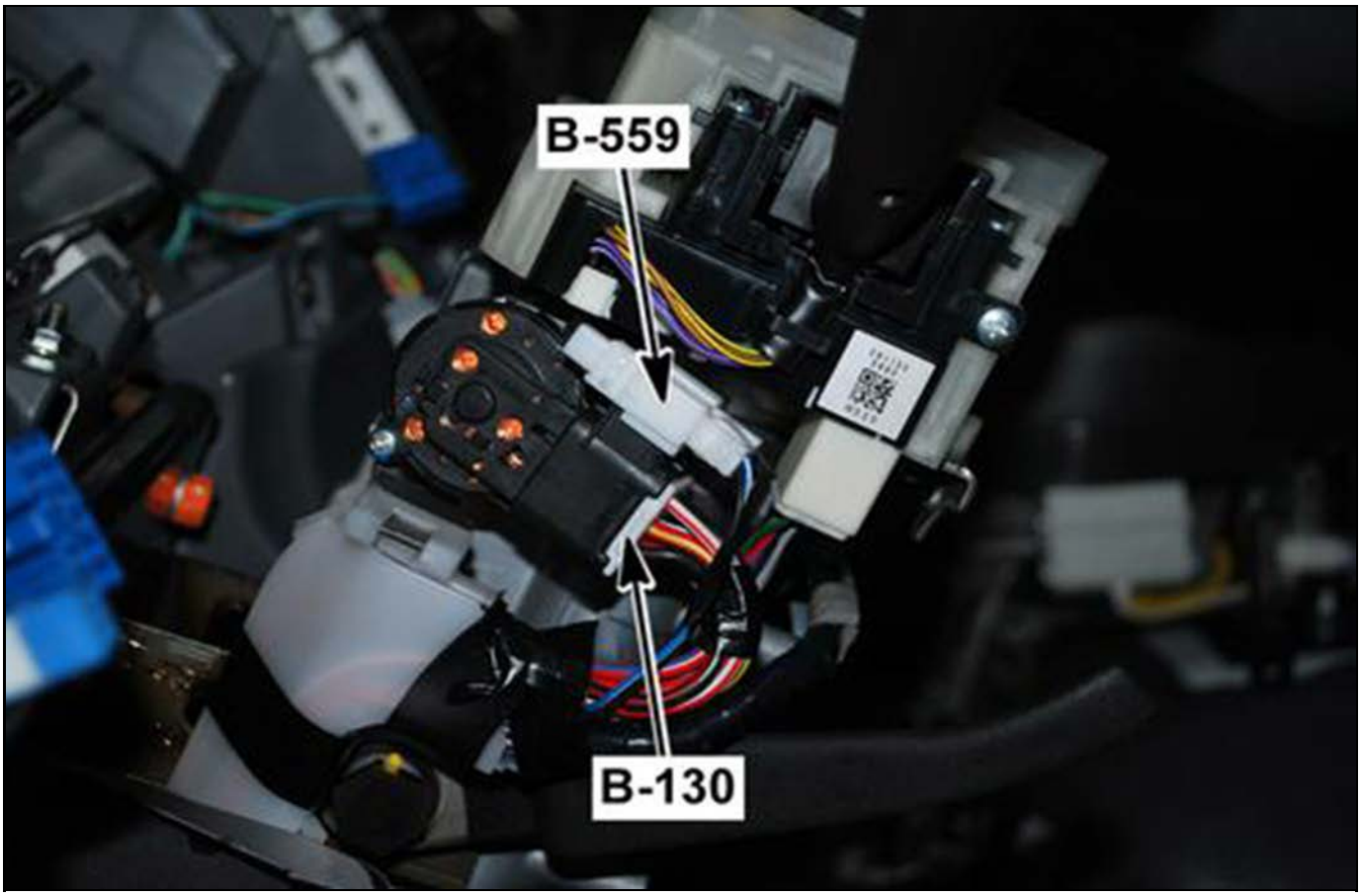

4891128

B-599 A/C Pressure Switch

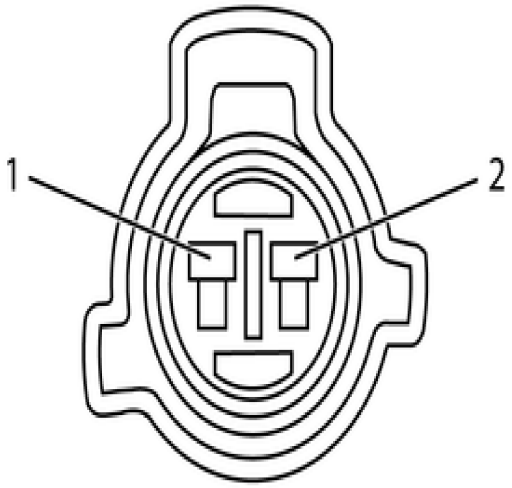

4891121

Connector Part Information		• 6189-0023 • 2-Way F (BRN)	
Pin	**Wire Color**	**Circuit Number**	**Function**
1	BLU	HA013B	Switched Output Voltage from X-20 Compressor Clutch Relay
2	BRN/YEL	HA012B	Voltage to Compressor Clutch

Right Front of Vehicle, Under Hood

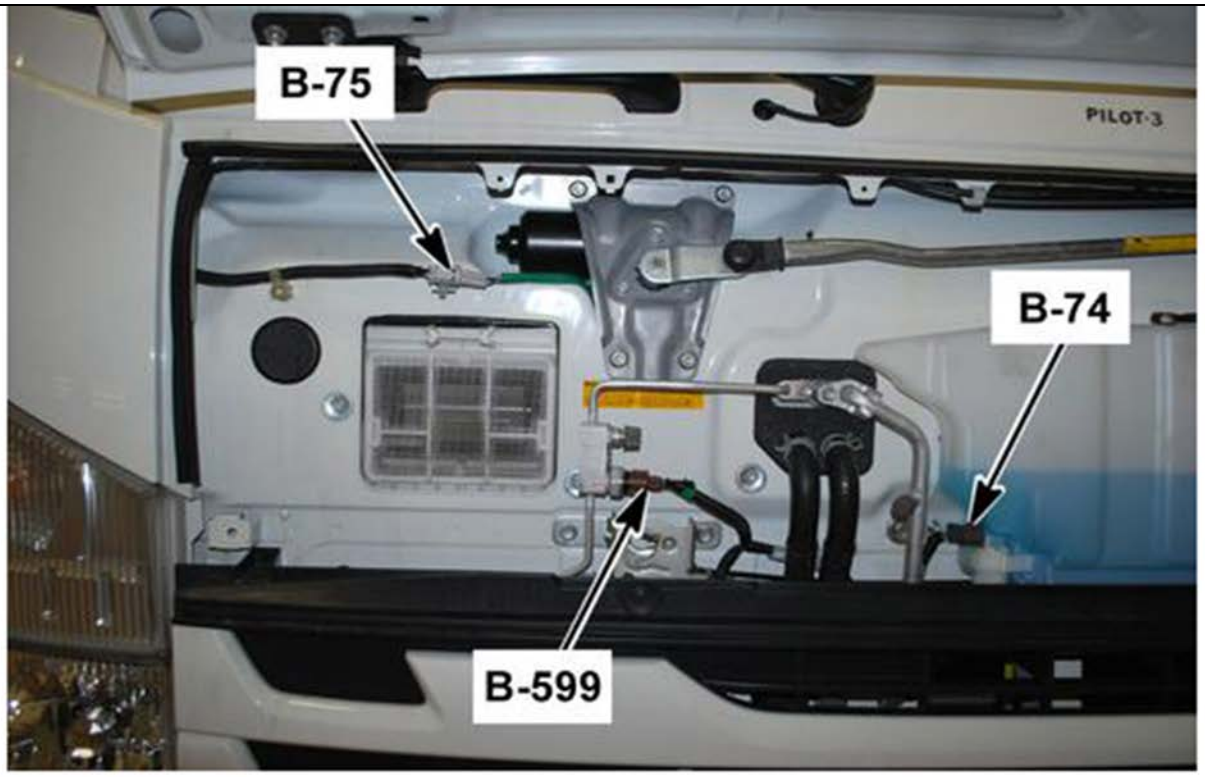

4891150

B-600 Ground Splice Pack

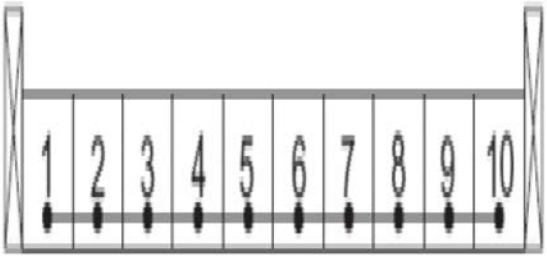

4891043

Connector Part Information		• 7387-3359-60 • 10-Way F (GRN)	
Pin	**Wire Color**	**Circuit Number**	**Function**
1	BLK	ZZ050B	Ground from B-377 Splice Pack
2	BLK	FX002B	Ground to Wiper/Exhaust Brake Switch
3	BLK	MX024B	Ground to Seat Belt Switch
4	BLK	SX010B	Ground to Cigar Lighter Relay
5	BLK	ZZ009B	Ground to Data Link Connector
6	BLK	HX007B	Ground to Electronic Thermostat
7	BLK	HX001B	Ground to A/C Switch
8	BLK	VX003B	Ground to Front Door Lock Motor (LH)
9	BLK	VX005B	Ground to Door Lock Switch
10	BLK	ZZ051B	Ground to B-601 Splice Pack (B-51 Ground)

Right Side of the Steering column, Above the Data Link Connector (DLC)

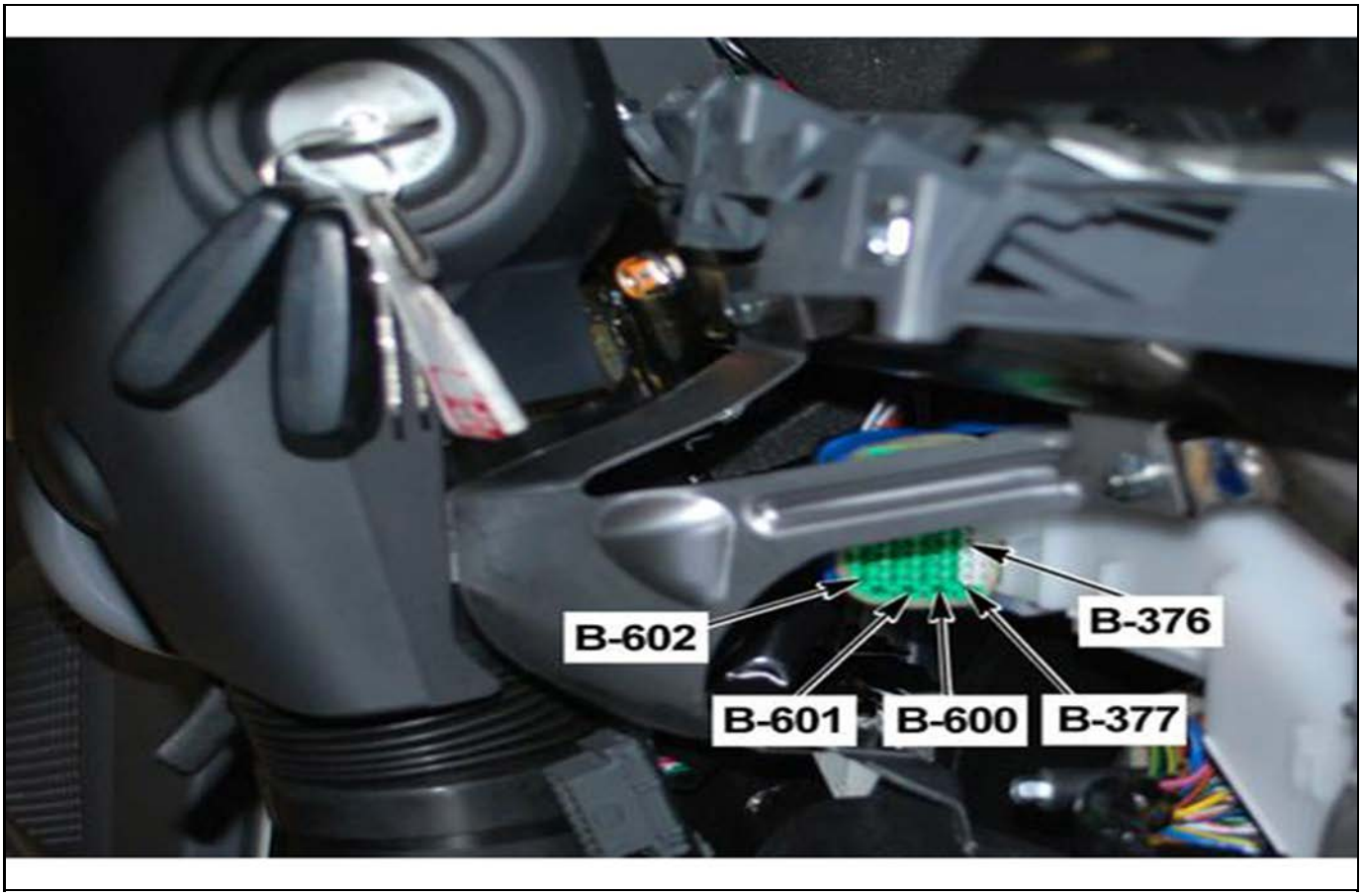

4891030

B-601 Ground Splice Pack

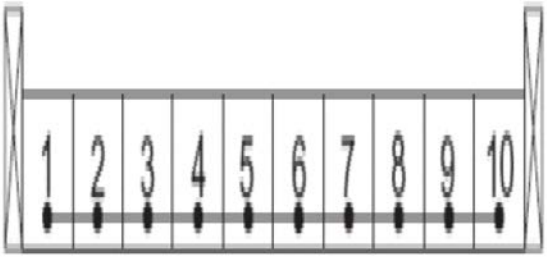

4891043

Connector Part Information		• 7387-3359-60 • 10-Way F (GRN)	
Pin	**Wire Color**	**Circuit Number**	**Function**
1	BLK	ZZ052B	Ground to B-602 Splice Pack
2	BLK	JX005B	Ground from Front Turn Signal Lamp (LH)
3	BLK	BX022B	Ground from Front Park Lamp (LH)
4	BLK	IZ086B	Ground from PTO Switch
5	BLK	UX002B	Ground from Power Window Relay
6	BLK	GT006B	Ground from B-453 Splice Pack
7	BLK	HZ001B	Ground from RKE Module
8	BLK	BX024B	Ground from Side Marker Lamp (LH)
9	BLK	MX116B	Ground from IPC
10	BLK	ZZ051B	Ground from B-600 Splice Pack

Right Side of the Steering column, Above the Data Link Connector (DLC)

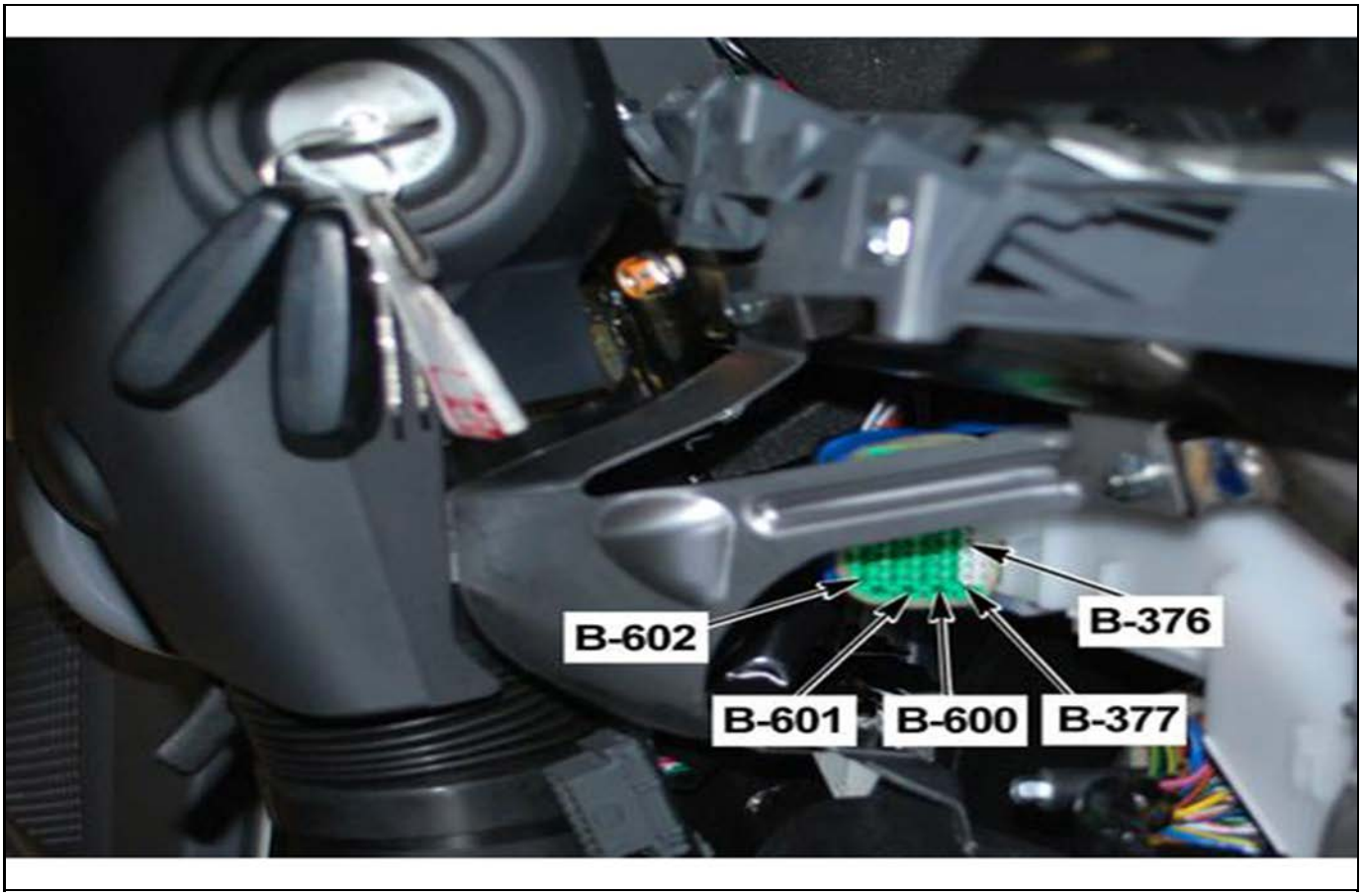

4891030

B-602 Ground Splice Pack

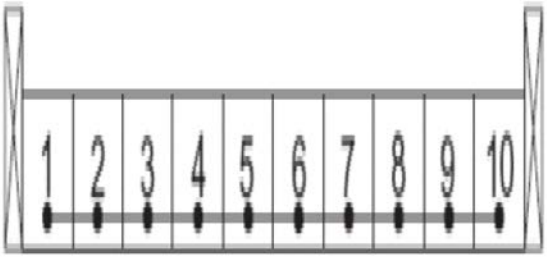

4891043

Connector Part Information		• 7387-3359-60 • 10-Way F (GRN)	
Pin	**Wire Color**	**Circuit Number**	**Function**
1	BLK	ZZ052B	Ground from B-601 Splice Pack
2	BLK	WX007B	Ground from Mirror Heater Switch
3	BLK	CX001B	Ground from Stop Lamp Switch 1
4	BLK	IZ013B	Ground from Radiator Level Control Module
5	BLK	ZZ003B	Ground to B-51
6–10	—	—	Not Used

Right Side of the Steering column, Above the Data Link Connector (DLC)

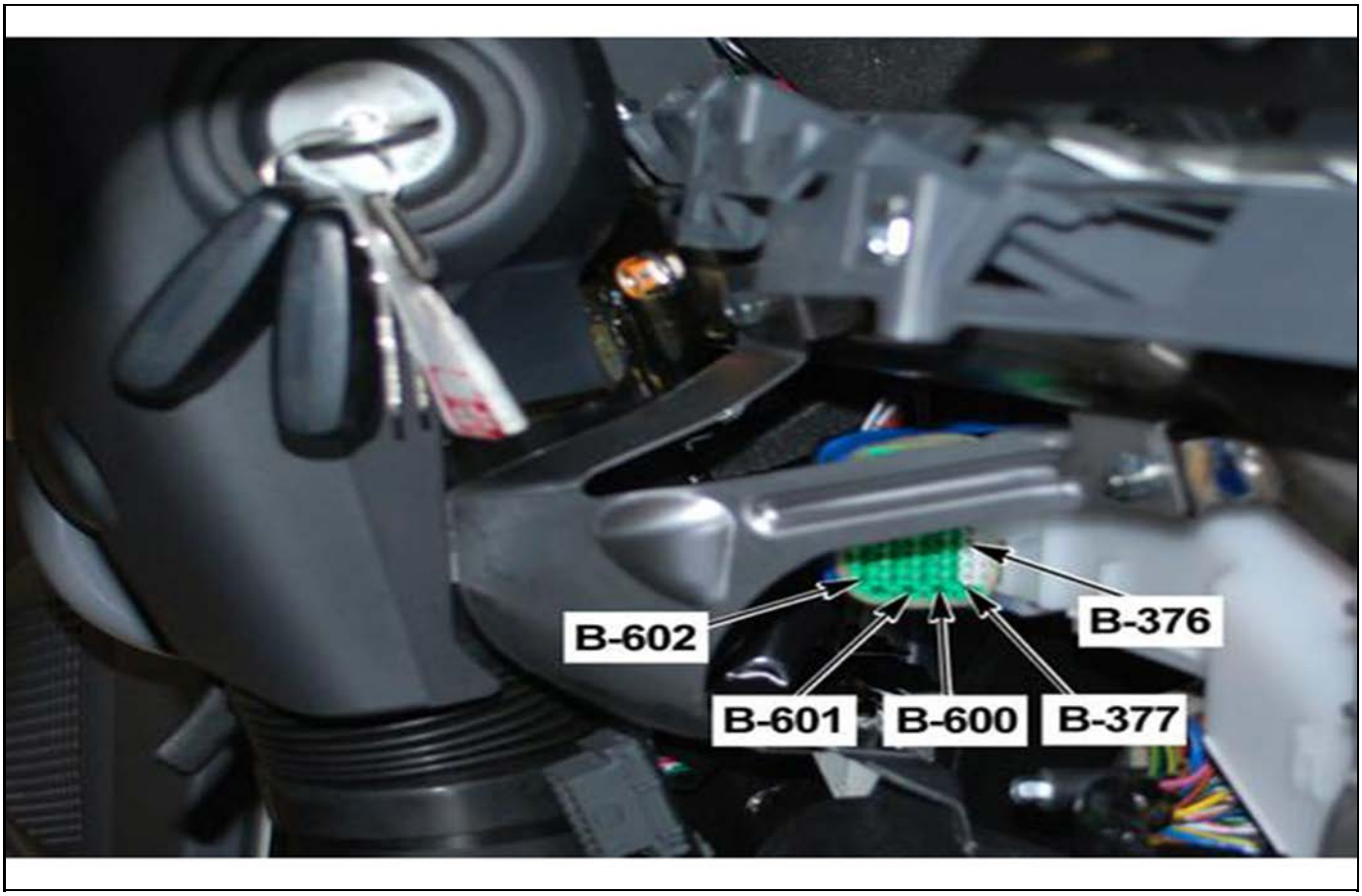

4891030

B-603 Fuse/Relay Center (Cab)

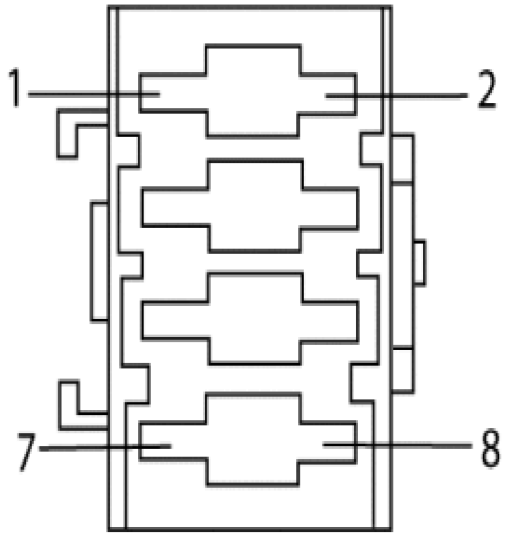

4890906

Connector Part Information		• 7354-5918-30 • 8-Way F (BLK)	
Pin	**Wire Color**	**Circuit Number**	**Function**
1	BLK/RED	WA112B	Battery Voltage from Splice 26 (Fuse FL-6)
2	RED	WA102B	Battery Voltage from Fuse B-1 to Mirror Heater Relay (RH)
3	RED/BLK	KA014B	Switched Output Voltage from the Starter Cut Relay
4	GRN	SA050B	Ignition Voltage from Fuse B-2 to Inline H-195 pin 10 (Not Used)
5	—	—	Not Used
6	GRN/YEL	RA007B	Ignition Voltage from Fuse B-3 to Radio
7	BLK/YEL	WA111B	Battery Voltage from Splice 27 (Fuse FL-5)
8	BLK/GRN	WA010B	Battery Voltage from Fuse B-4 to Mirror Heater Relay (LH)

Behind the Center of the I/P, Right of the Fuse/Relay Center (Cab)

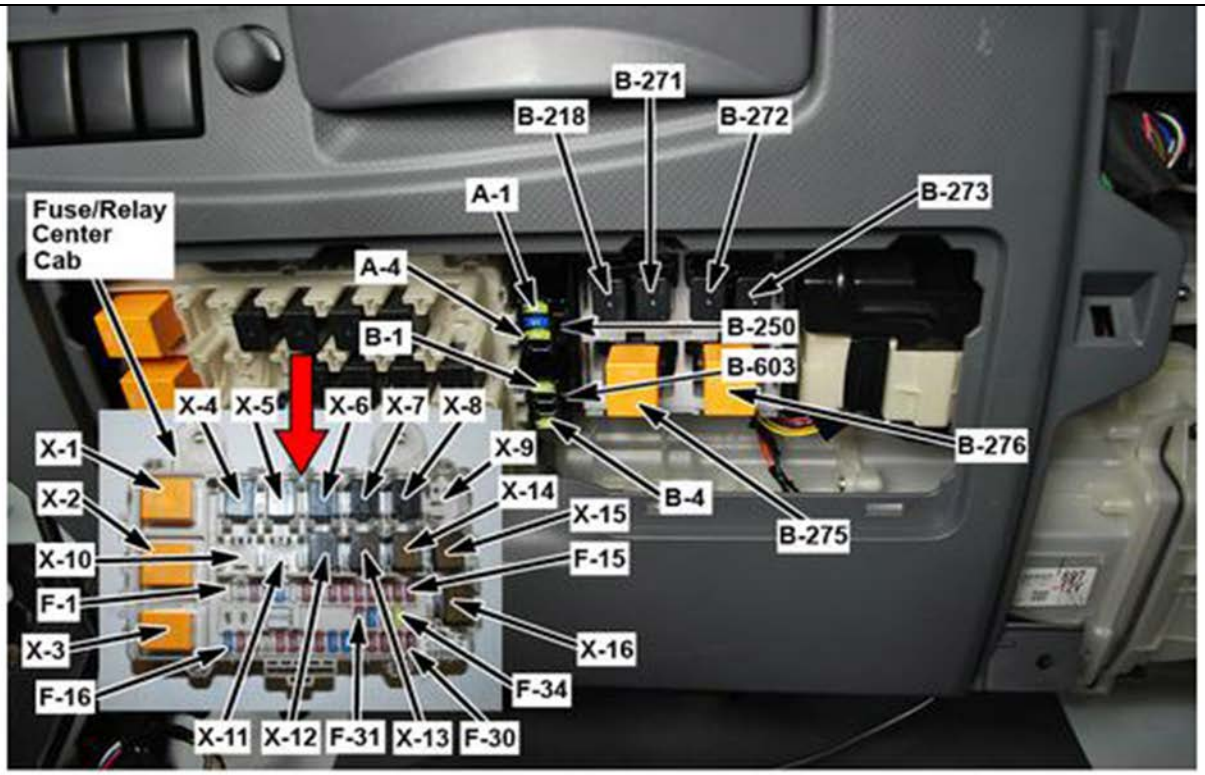

4890920

D-2 Front Cornering Lamp (LH)

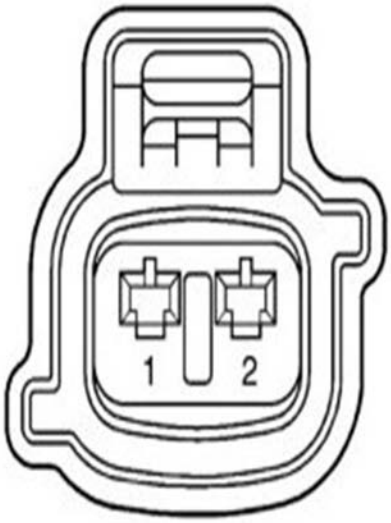

4891153

Connector Part Information		• 7323-8523-30 • 2-Way F (BLK)	
Pin	**Wire Color**	**Circuit Number**	**Function**
1	GRN/BLK	QB002B	Cornering Lamp (LH) Control to Combination Switch
2	BLK/RED	QB004B	X-5 Cornering Lamp Relay Switched Output Voltage from J/B 1 (B-138 pin 15)

Left Front Corner of the Vehicle

4891154

D-3 Front Cornering Lamp (RH)

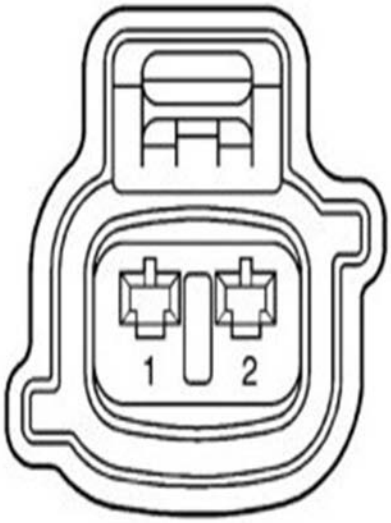

4891153

Connector Part Information		• 7323-8523-30 • 2-Way F (BLK)	
Pin	**Wire Color**	**Circuit Number**	**Function**
1	GRN/WHT	QB003B	X-5 Cornering Lamp Relay Switched Output Voltage from J/B 1 (B-138 pin 6)
2	BLK/RED	QB005B	Cornering Lamp (RH) Control to Combination Switch

Right Front Corner of the Vehicle

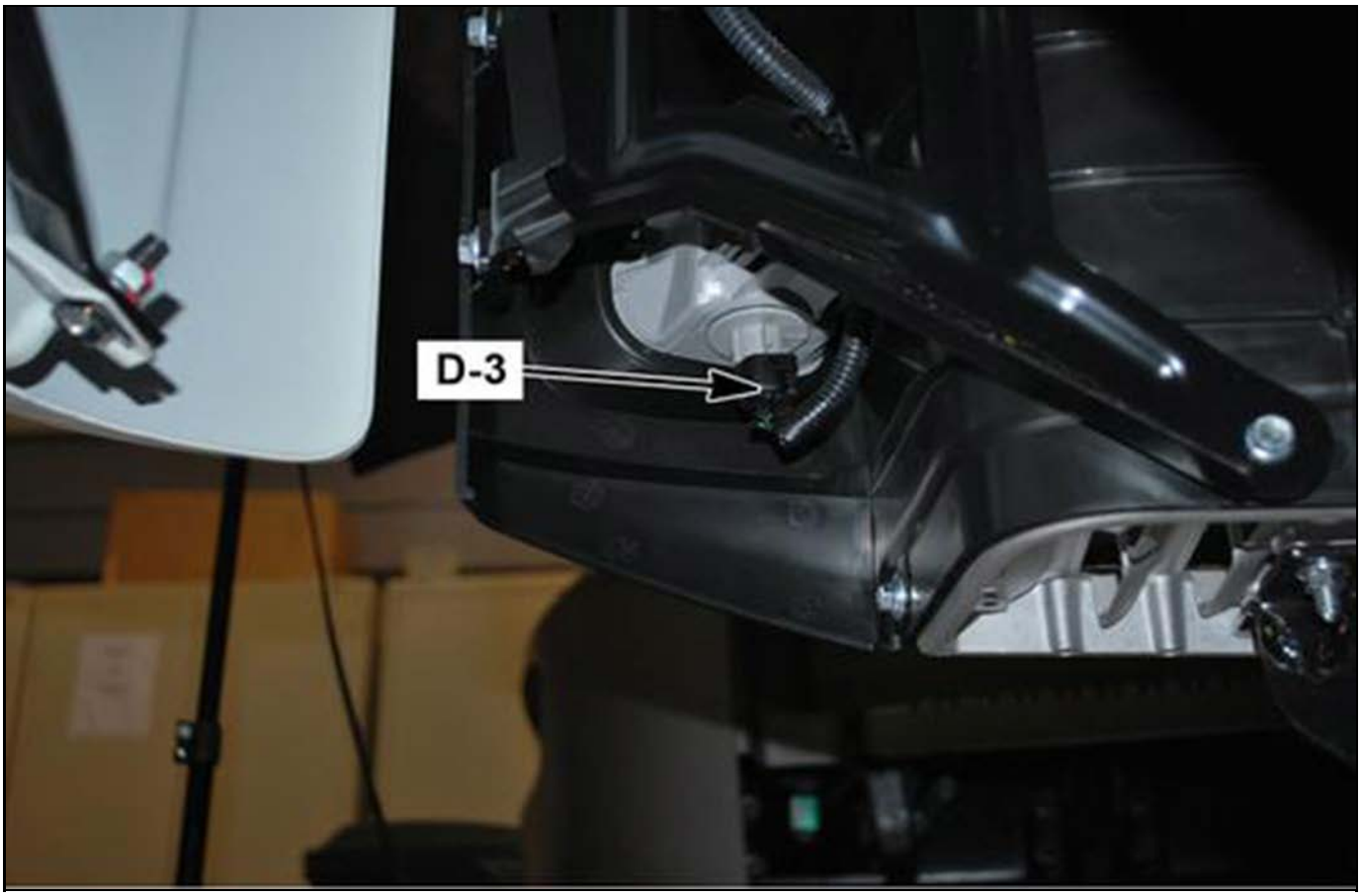

4891157

D-5 Front Door Lock Motor (LH)

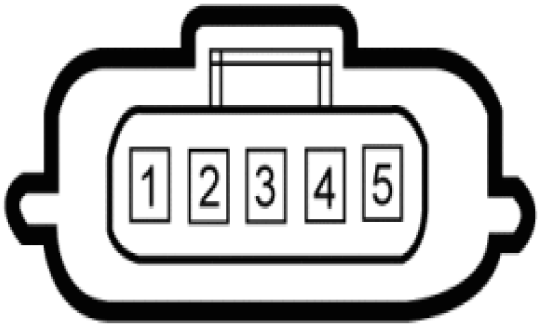

4891165

Connector Part Information		• 6098-0307 • 5-Way F (GRY)	
Pin	**Wire Color**	**Circuit Number**	**Function**
1	RED/GRN	VA105	Unlock Signal to RKE Module
2	GRN/YEL	VA107	Door Lock Motor Lock Control
3	GRN/RED	VA106	Door Lock Motor Unlock Control
4	GRN/BLK	VA104	Door Lock Switch Signal
5	BLK	VX103	Ground to B-600 Splice Pack (B-51 Ground)

In the Left Front Door, On the Door Lock Motor

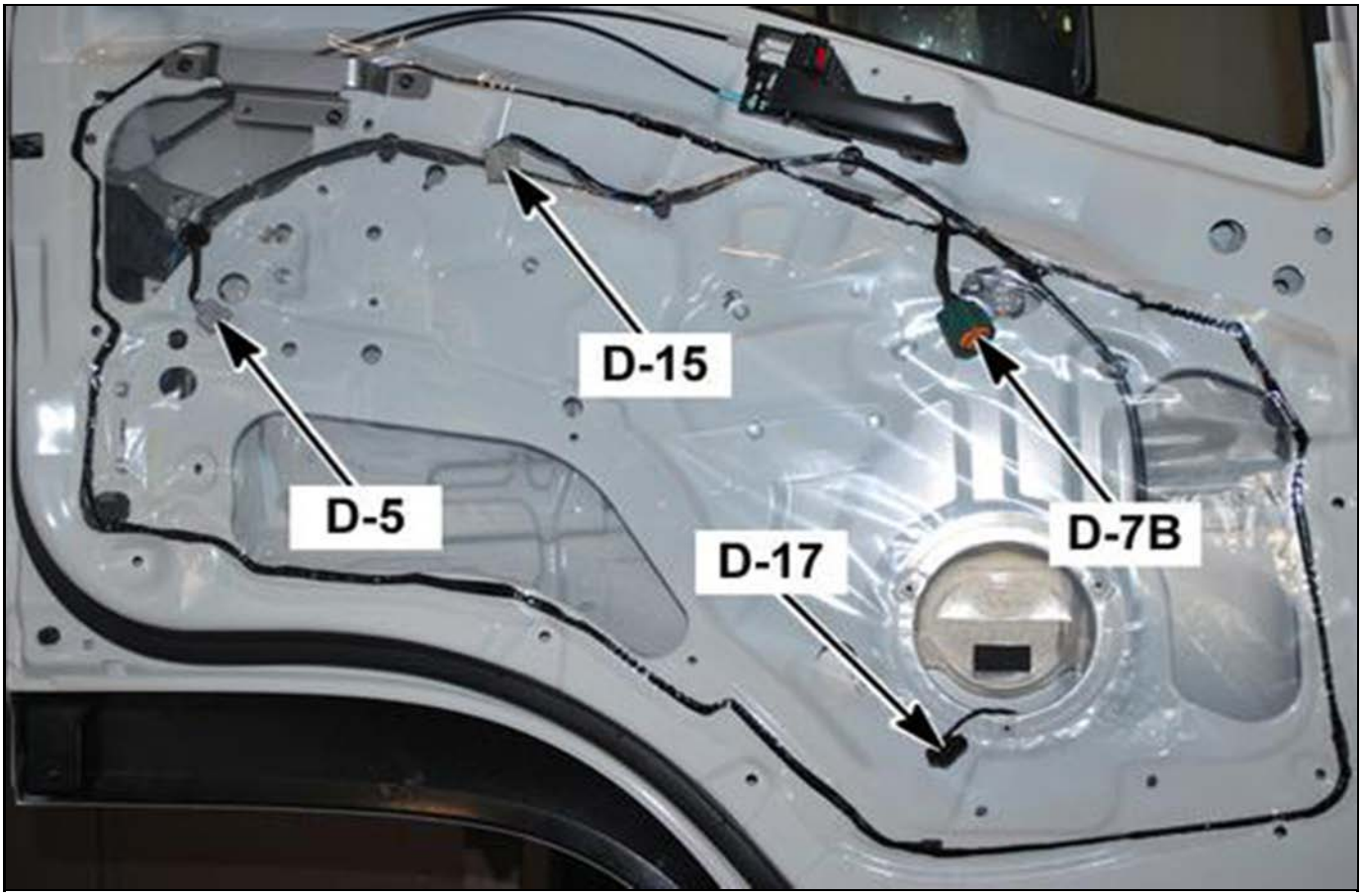

4891169

D-7A Front Door Lock Motor (RH)

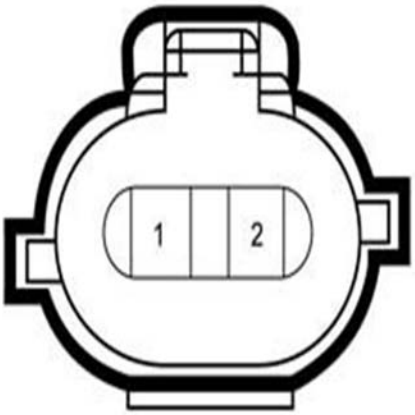

4891176

Connector Part Information		• 6189-0175 • 2-Way F (GRY)	
Pin	**Wire Color**	**Circuit Number**	**Function**
1	GRN/YEL	VA09	Door Lock Motor Lock Control
2	GRN/RED	VA08	Door Lock Motor Unlock Control

In the Right Front Door, On the Door Lock Motorq

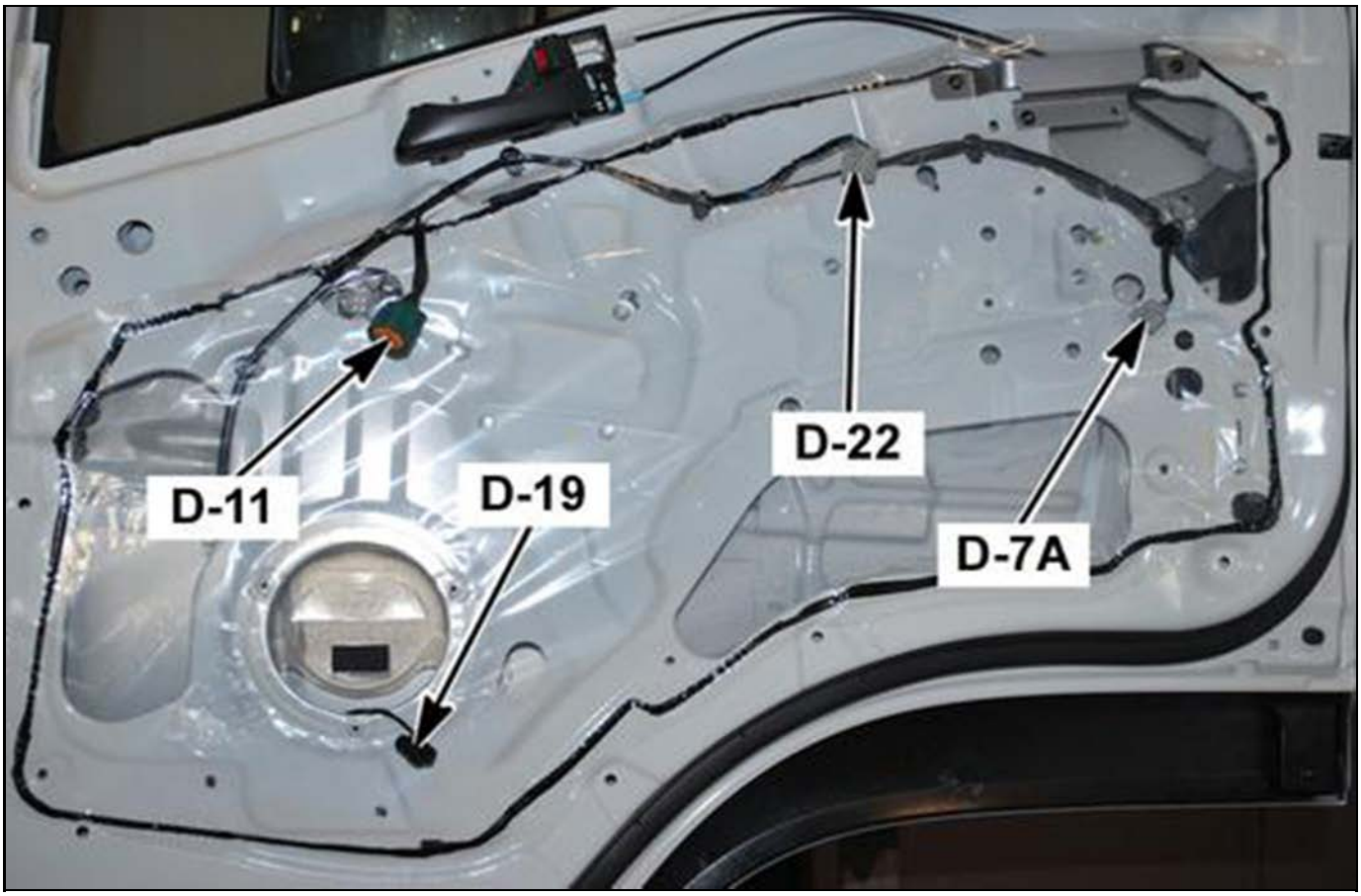

4891178

D-7B Front Power Window Motor (LH)

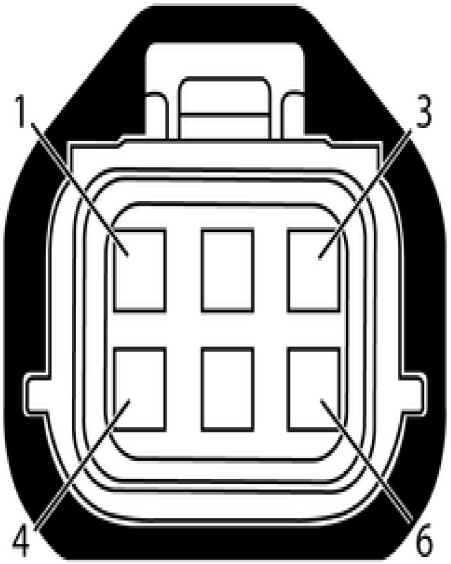

4891180

Connector Part Information		• 6189-0766 • 6-Way F (GRN)	
Pin	**Wire Color**	**Circuit Number**	**Function**
1	BLU/BLK	UA02	Up Motor Control
2	—	—	Not Used
3	BLU	UA01	Down Motor Control
4–6	—	—	Not Used

In the Left Front Door, On the Power Window Motor

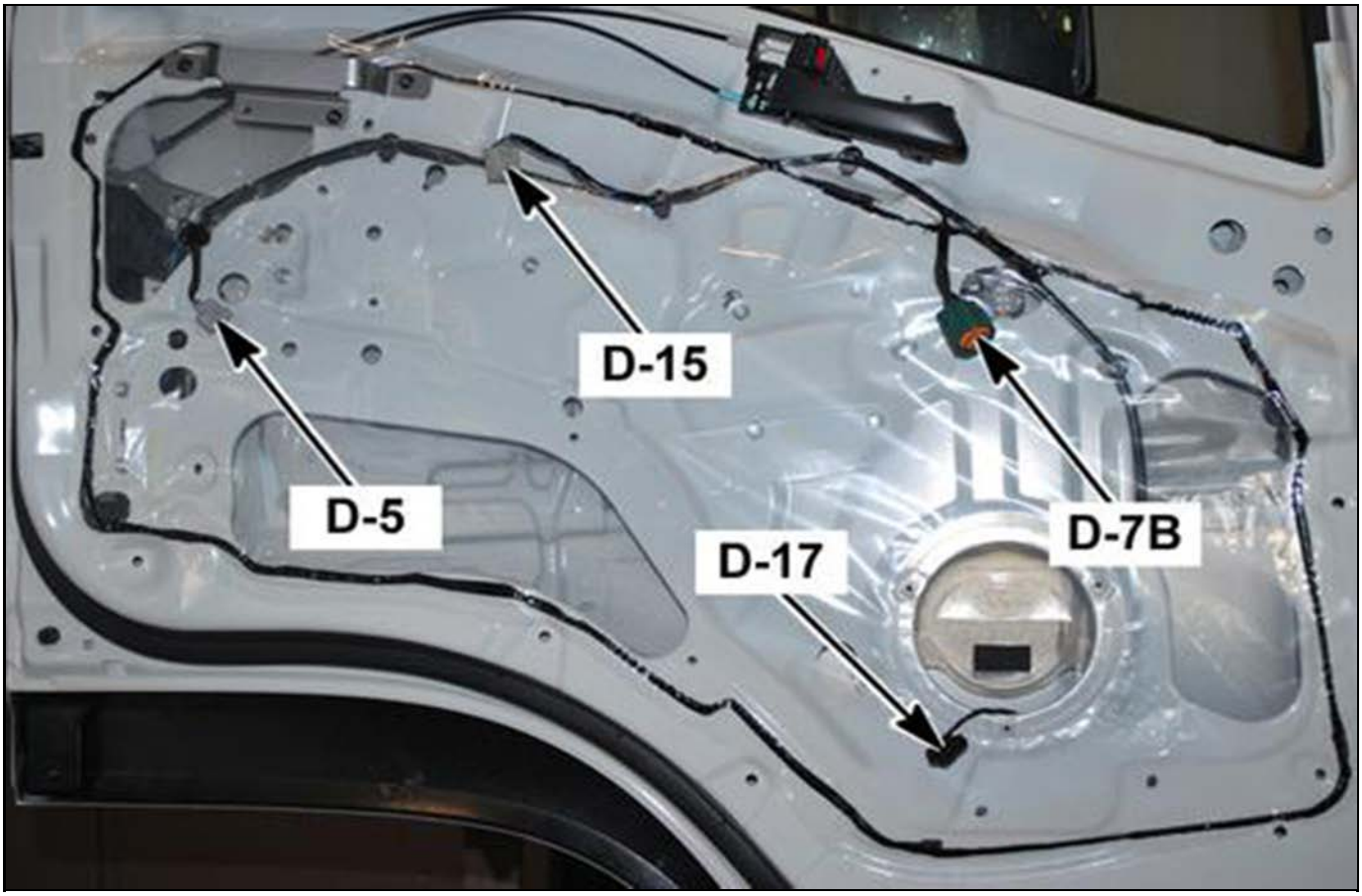

4891169

D-11 Front Power Window Motor (RH)

4891190

Connector Part Information		• 6189-0766 • 6-Way F (GRN)	
Pin	**Wire Color**	**Circuit Number**	**Function**
1	BLK/WHT	UA07	Window Motor DOWN Control
2	—	—	Not Used
3	BLK/RED	UA06	Window Motor UP Control
4–6	—	—	Not Used

In the Right Front Door, On the Power Window Motor

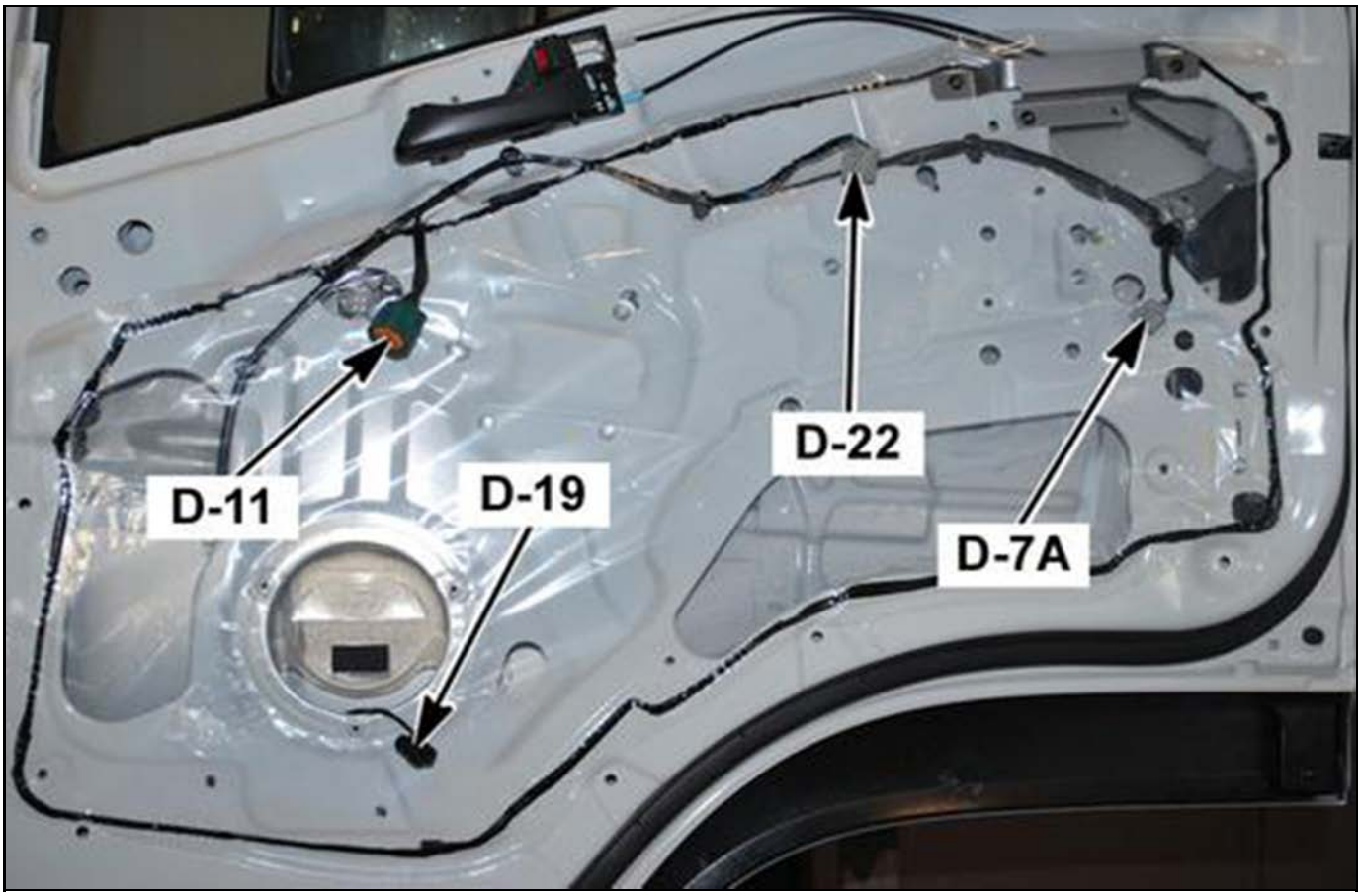

4891178

D-12 Side Turn Signal (LH)

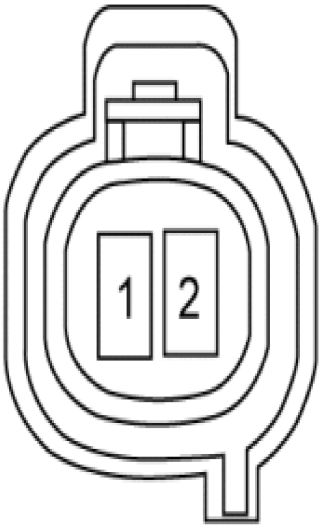

4891199

Connector Part Information		• 7323-8523-30 • 2-Way F (BLK)	
Pin	**Wire Color**	**Circuit Number**	**Function**
1	GRN/WHT	JA11	Side Turn Signal Control Voltage
2	BLK	JX03	Ground to B-377 Splice Pack (B-51 Ground)

Left Lower Door Panel

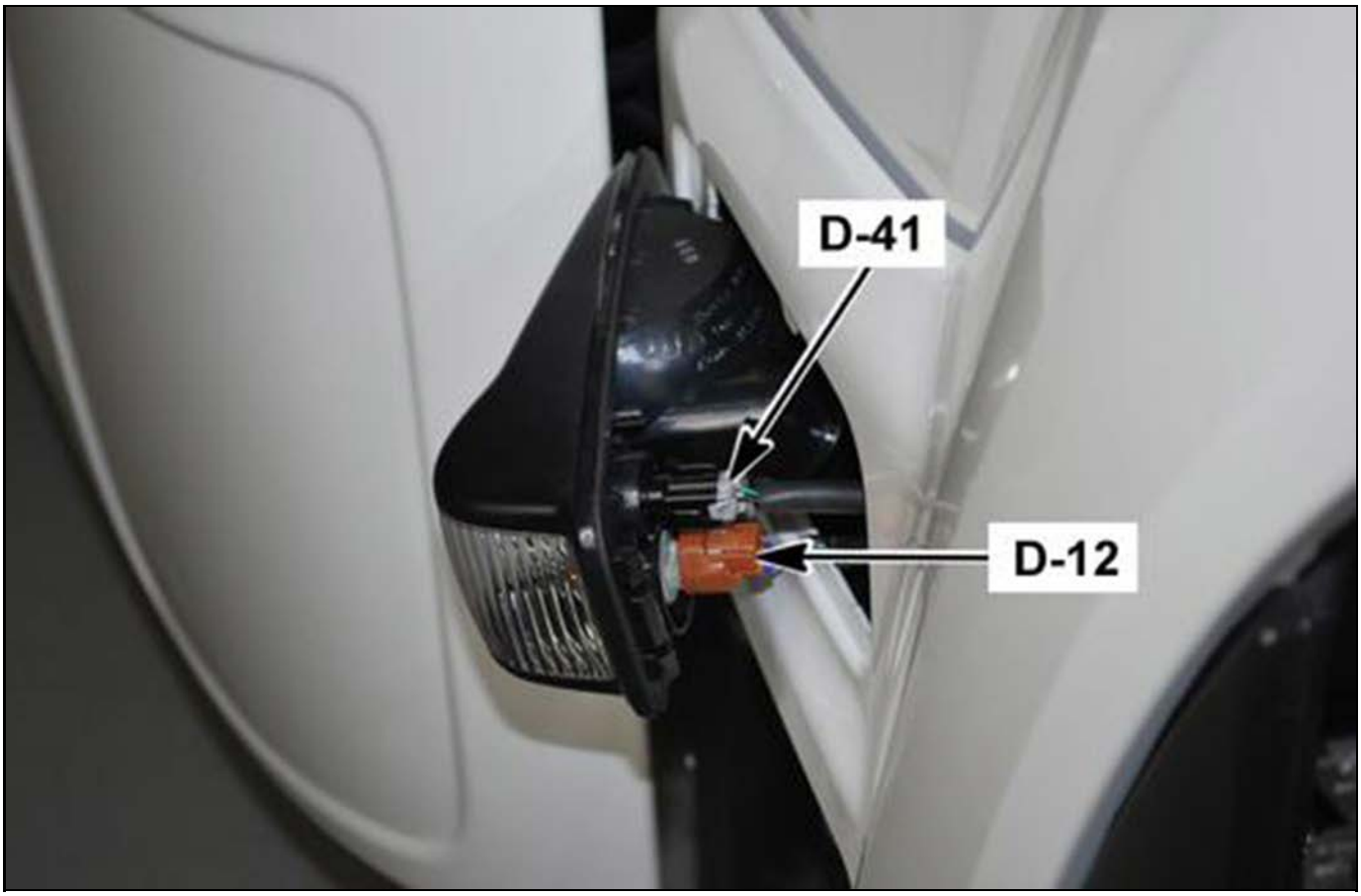

4891204

D-13 Side Turn Signal (RH)

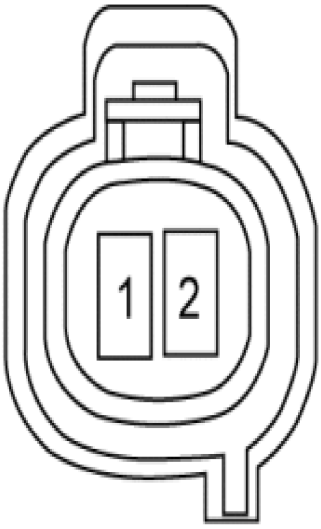

4891199

Connector Part Information		• 7323-8523-30 • 2-Way F (BLK)	
Pin	**Wire Color**	**Circuit Number**	**Function**
1	GRN/BLK	JA10	Side Turn Signal Control Voltage
2	BLK	JX04	Ground to J/B 2 (B-145 pin 7) (B-53 Ground)

Right Lower Door Panel

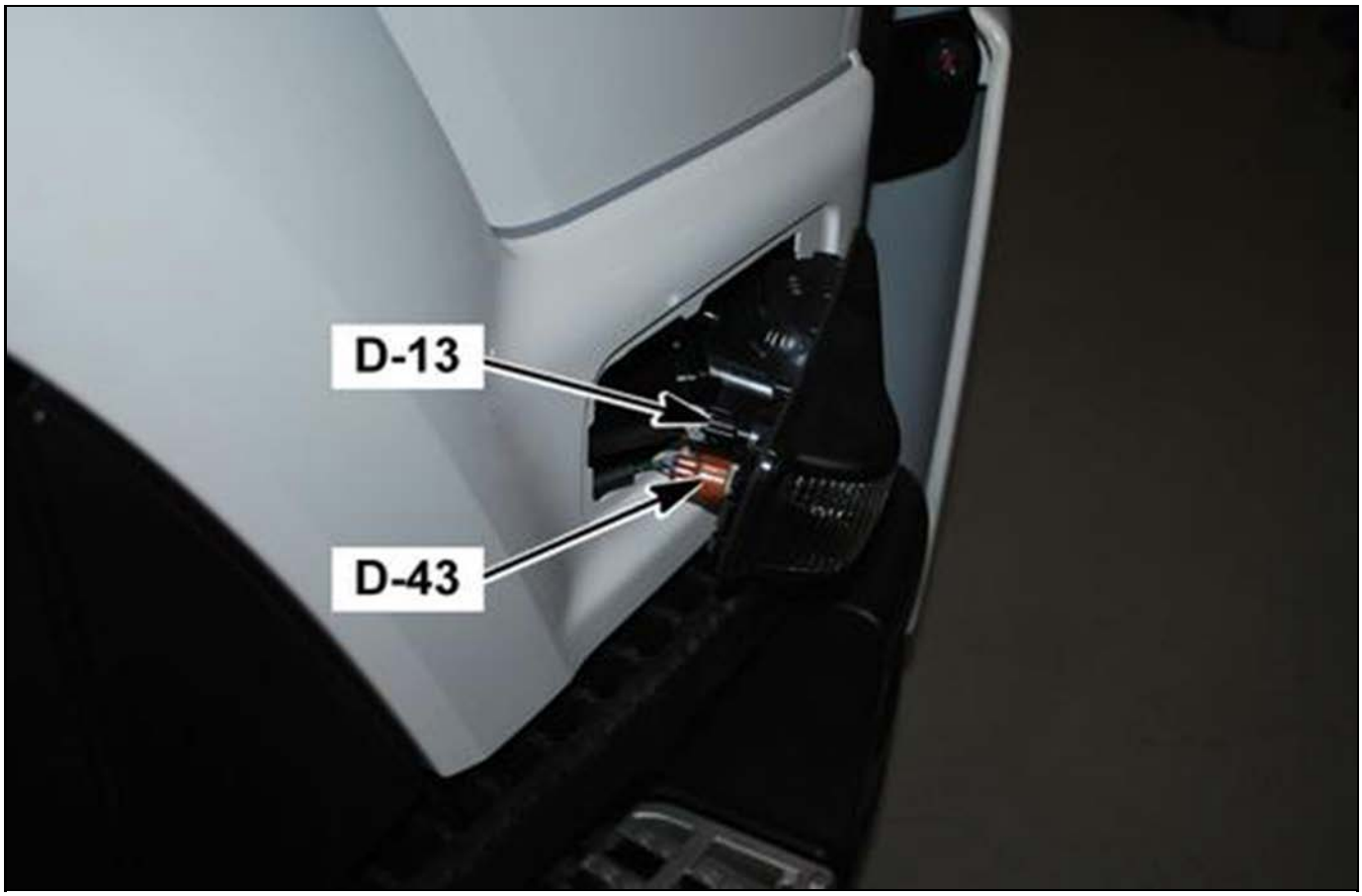

4891298

D-15 Front Power Window Switch (LH)

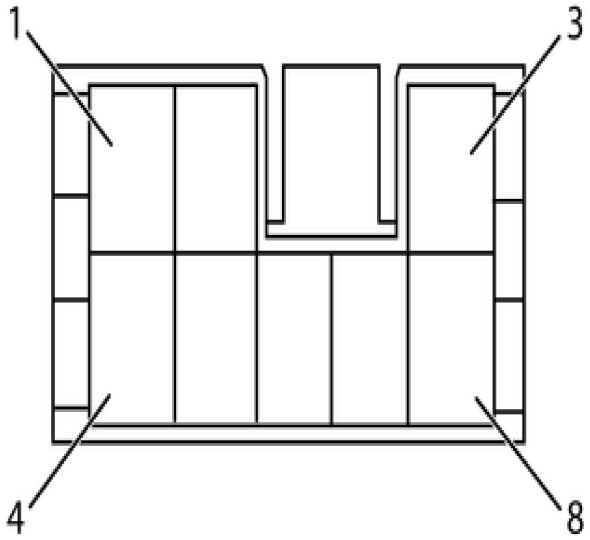

4891314

Connector Part Information		• 6240-5081 • 8-Way F (WHT)	
Pin	**Wire Color**	**Circuit Number**	**Function**
1	—	—	Not Used
2	BLU	UA01	Up Control to Front Power Window Motor (LH)
3	BLU/BLK	UA02	Down Control to Front Power Window Motor (LH)
4	BLK	UX01	Ground to B-49 Junction Block (B-52 Ground)
5	BLU/WHT	UA04	Up Control to the Front Power Window Switch (RH)
6	BLU/RED	UA05	Down Control to the Front Power Window Switch (RH)
7	BRN/YEL	UA03	Ignition Voltage from Fuse F-6
8	—	—	Not Used

In the Left Front Door, On the Front Power Window Switch

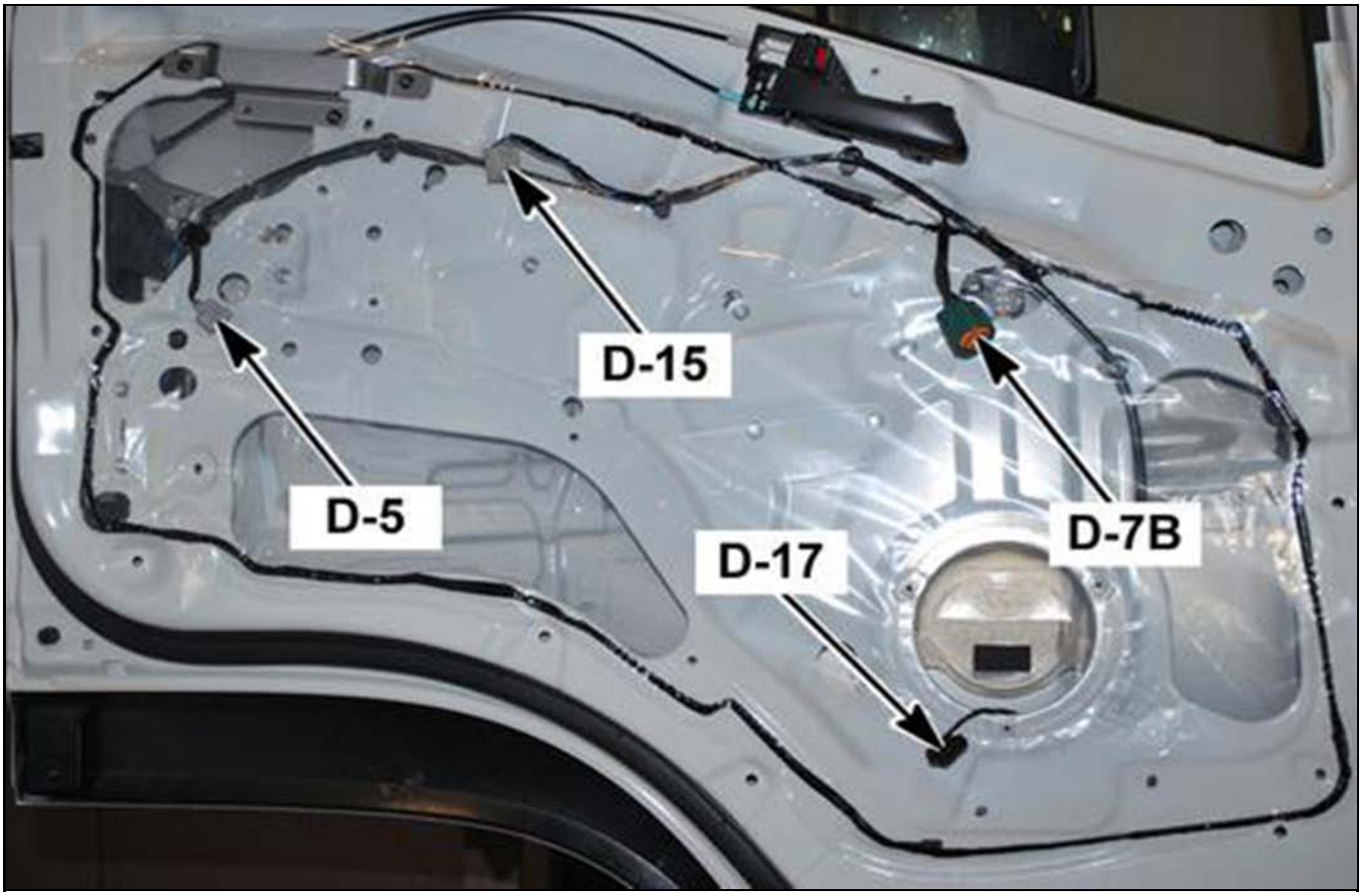

4891169

D-17 Speaker (LH)

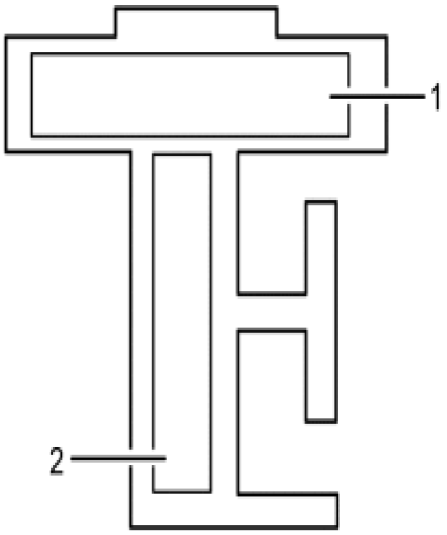

4891328

Connector Part Information		• 172434-2 • 2-Way F (BLK)	
Pin	**Wire Color**	**Circuit Number**	**Function**
1	GRY	RA06	Speaker Output (+)
2	GRN	RA05	Speaker Output (-)

In the Left Front Door, On the Back of the Speaker

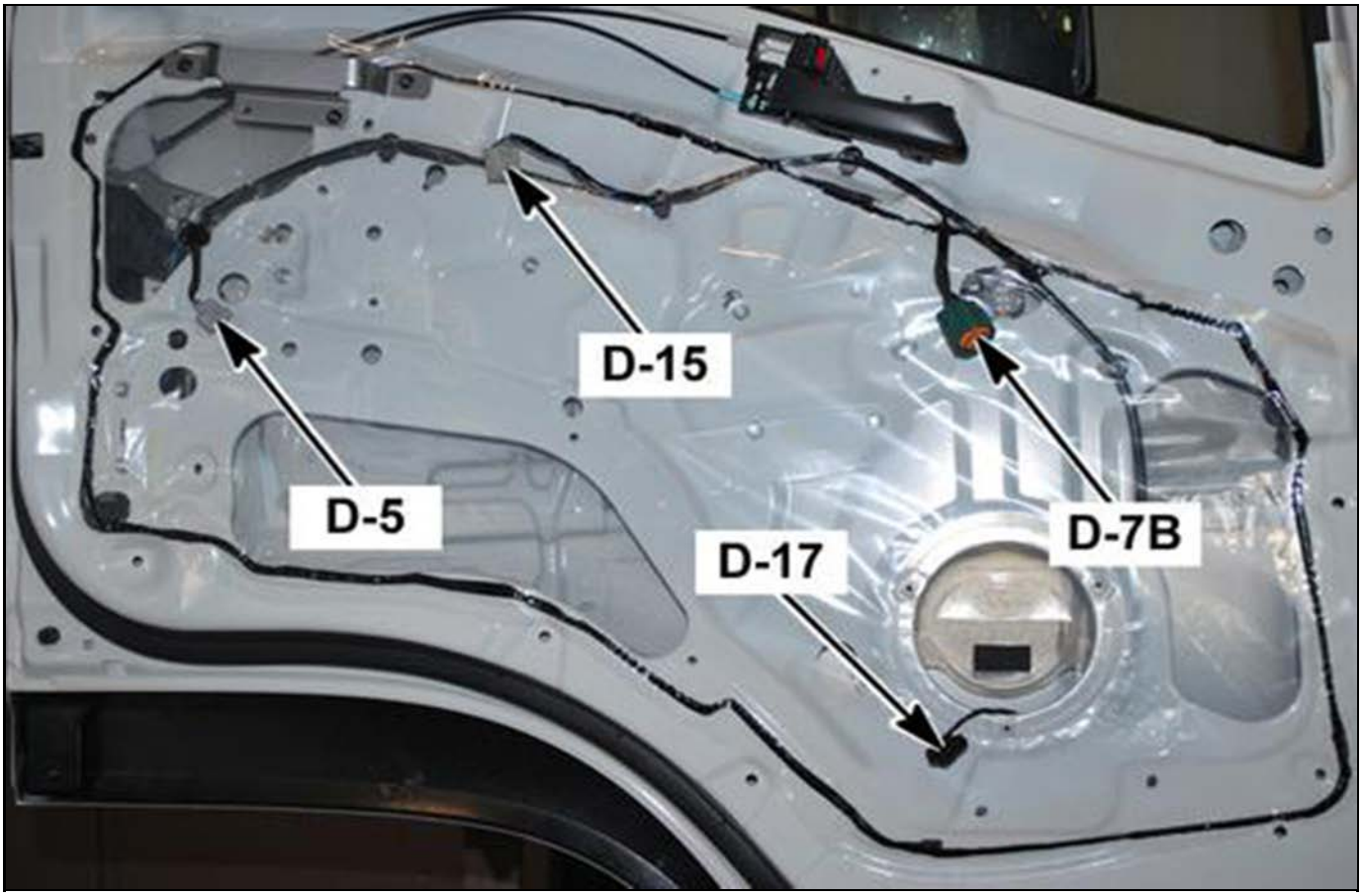

4891169

D-19 Speaker (RH)

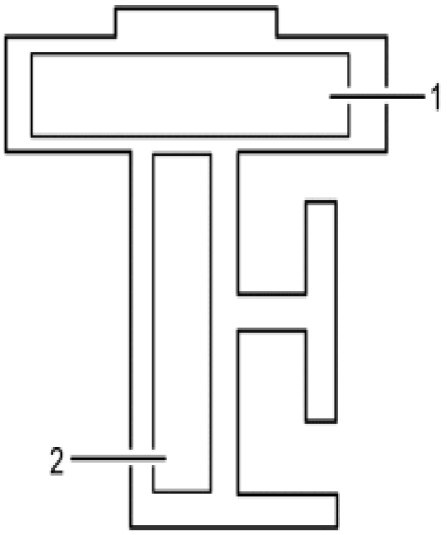

4891328

Connector Part Information		• 172434-2 • 2-Way F (BLK)	
Pin	**Wire Color**	**Circuit Number**	**Function**
1	ORN	RA04	Speaker Output (+)
2	BLK	RA03	Speaker Output (-)

In the Right Front Door, On the Back of the Speaker

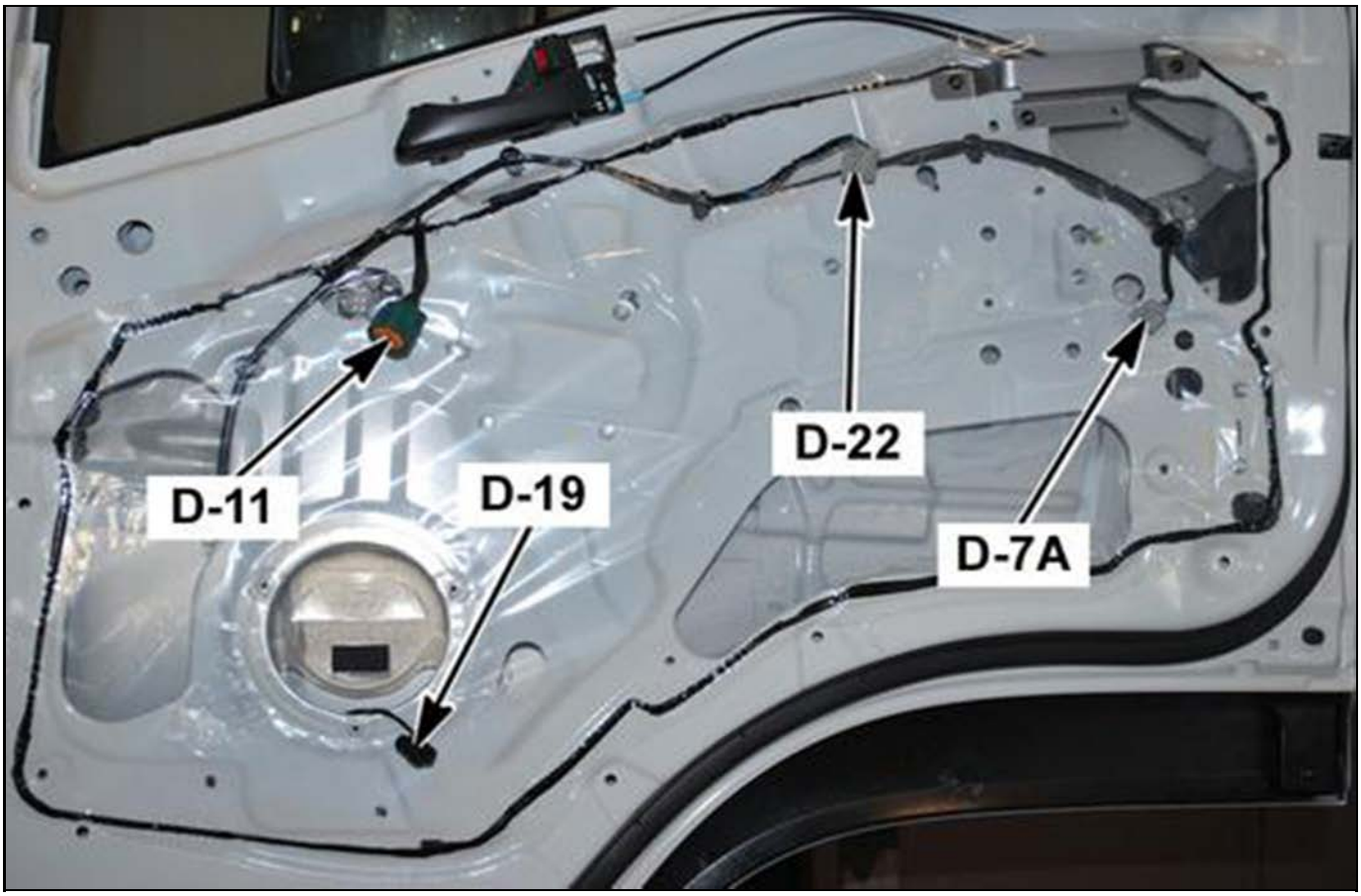

4891178

D-22 Front Power Window Switch (RH)

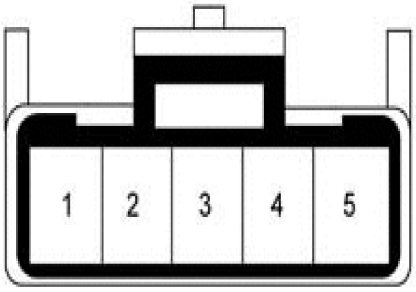

4891343

Connector Part Information		• 6098-0344 • 5-Way F (GRY)	
Pin	**Wire Color**	**Circuit Number**	**Function**
1	BLK/WHT	UA07	Window Motor DOWN Supply Voltage
2	BLU/RED	UA23	Window Motor DOWN Signal
3	BRN/YEL	UA16	Ignition Voltage from Fuse F-6
4	BLU/WHT	UA22	Window Motor UP Signal
5	BLK/RED	UA06	Window Motor UP Supply Voltage

In the Right Front Door, On the Front Power Window Switch

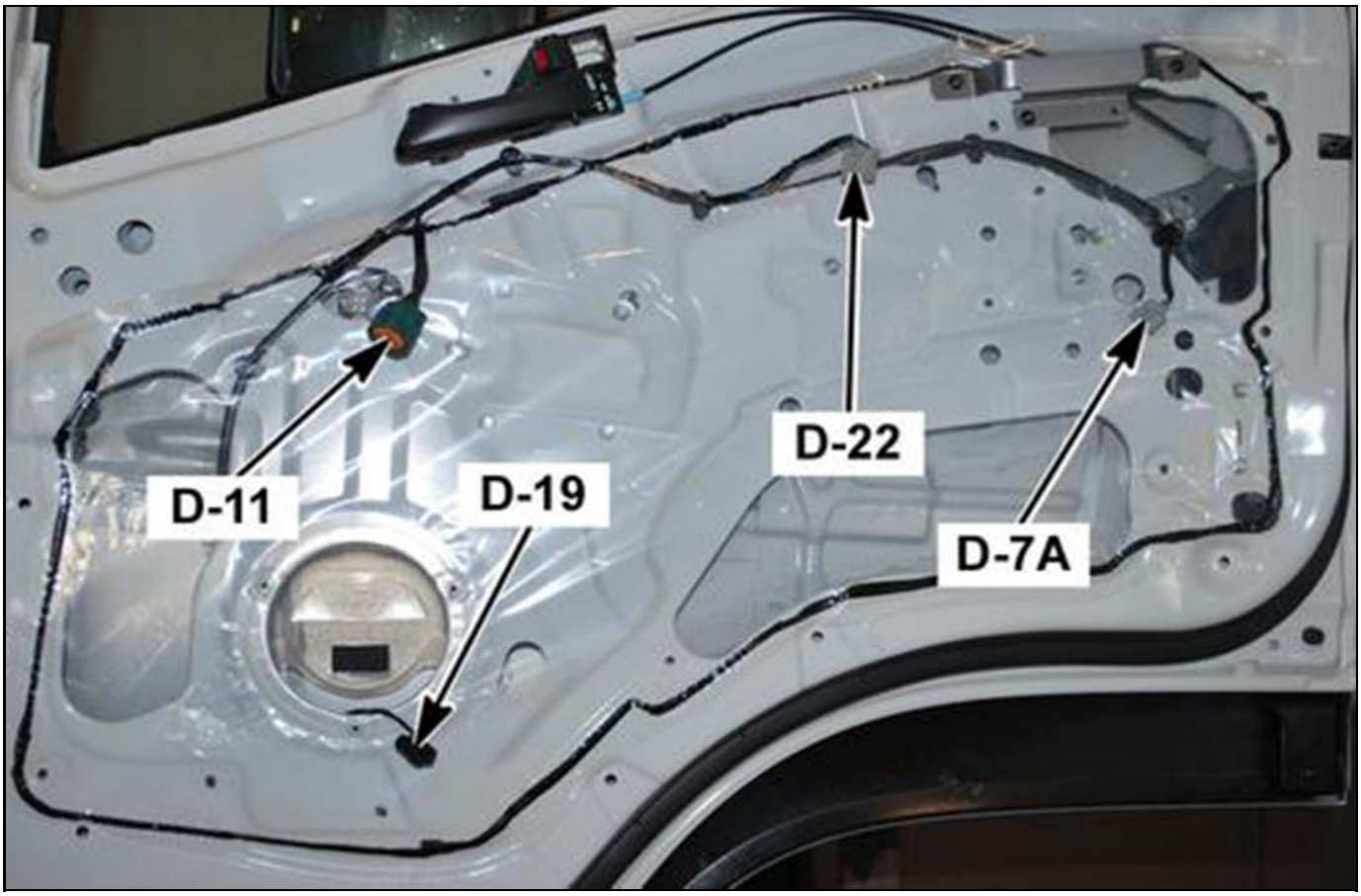

4891178

D-40 Heated Mirror (LH)

Connector Part Information		• 7383-7029-30 • 2-Way F (BLK)	
Pin	**Wire Color**	**Circuit Number**	**Function**
1	YEL/RED	WA11B	Mirror Heater Relay (LH) (Switched Output Voltage) to Upper Mirror Heater
2	BLK/RED	WX107	Ground to B-49 Junction Block (B-52 Ground)

D-41 Side Marker Lamp (LH)

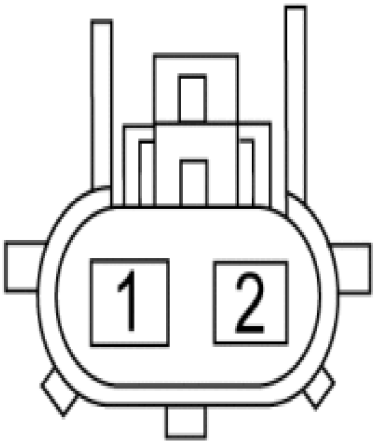

4891349

Connector Part Information		• 7323-6524-40 • 2-Way F (GRY)	
Pin	**Wire Color**	**Circuit Number**	**Function**
1	GRN/RED	BA40	Fuse F-27 Voltage (Headlamp Switch ON)
2	BLK	BX24	Ground to B-601 Splice Pack (B-51 Ground)

Left Lower Door Panel

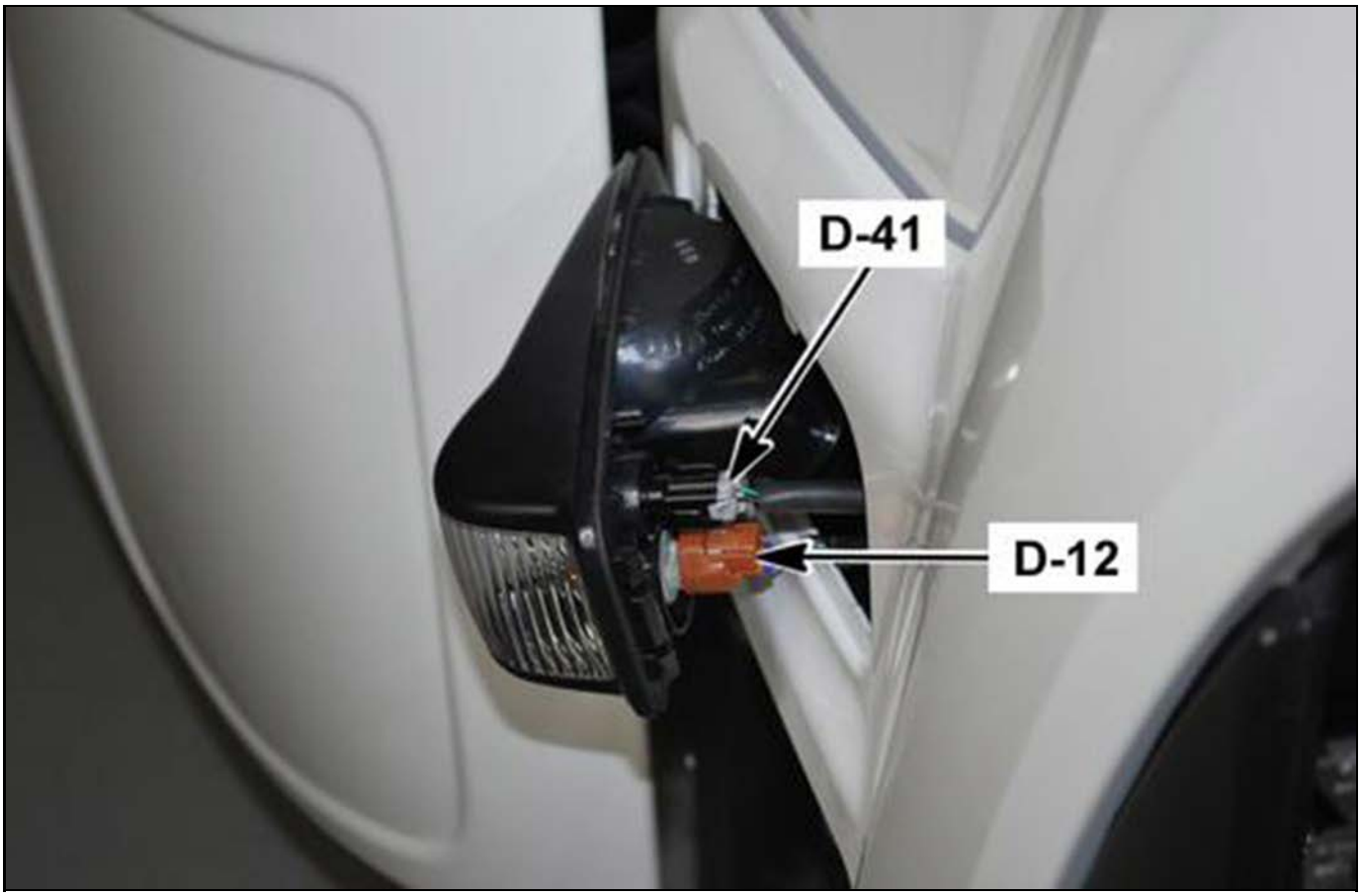

4891204

D-42 Heated Mirror (RH)

Connector Part Information		• 7383-7029-30 • 2-Way F (BLK)	
Pin	**Wire Color**	**Circuit Number**	**Function**
1	YEL/RED	WA11B	Mirror Heater Relay (RH) (Switched Output Voltage) to Upper Mirror Heater
2	BLK/RED	WX107	Ground to B-48 Junction Block (B-53 Ground)

D-43 Side Marker Lamp (RH)

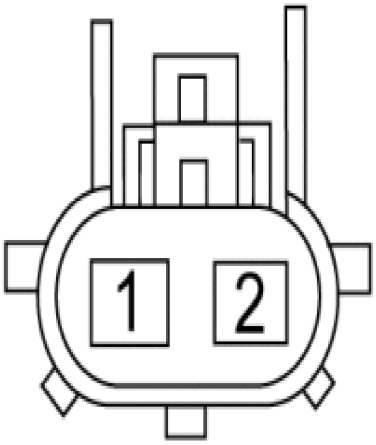

4891349

Connector Part Information		• 7323-6524-40 • 2-Way F (GRY)	
Pin	**Wire Color**	**Circuit Number**	**Function**
1	GRN/RED	BA41	Fuse F-27 Voltage (Headlamp Switch ON)
2	BLK	BX25	Ground to J/B 2 (B-144 pin 14) (B-53 Ground)

Right Lower Door Panel

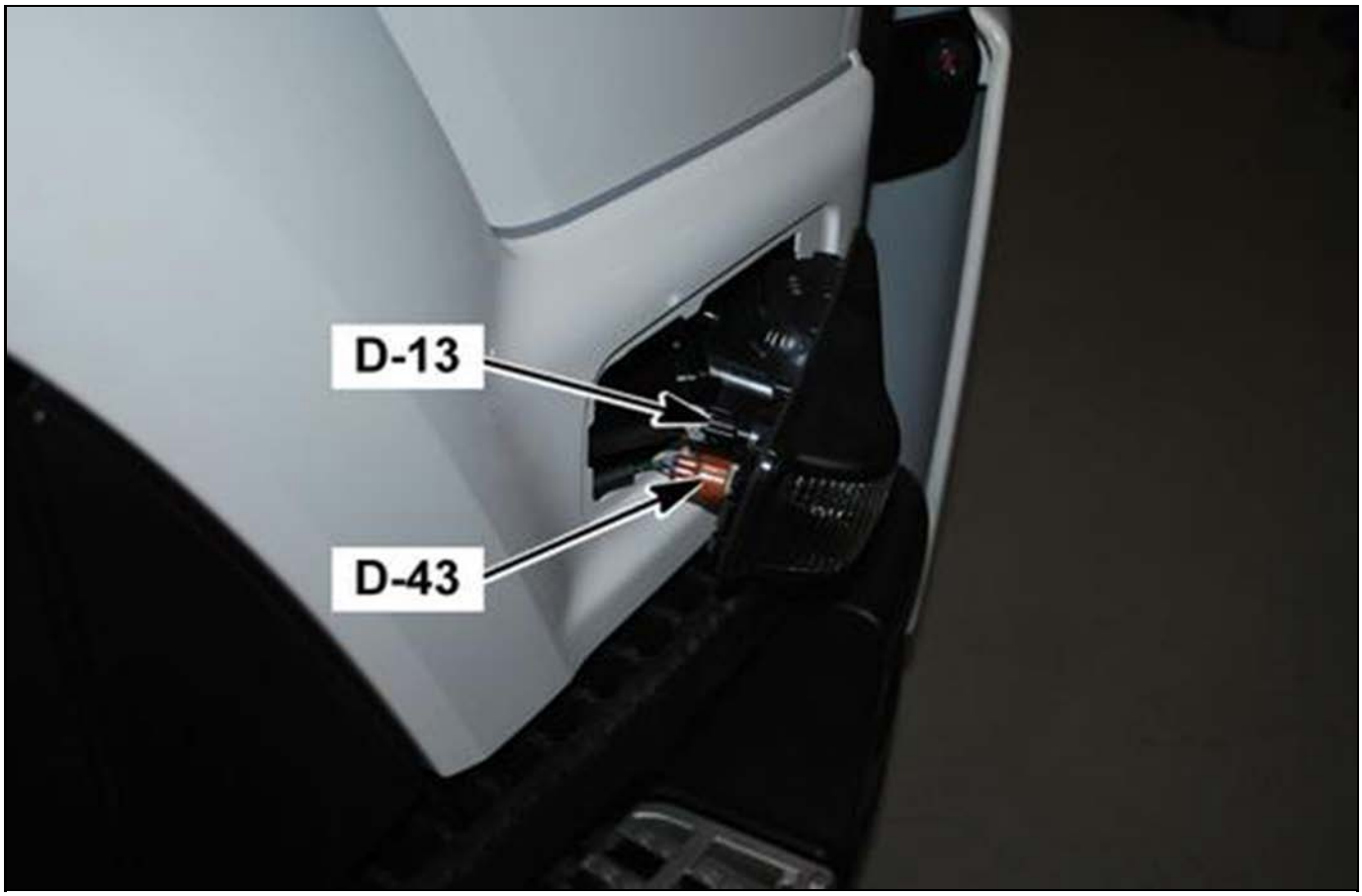

4891298

D-44 Power Mirror (LH)

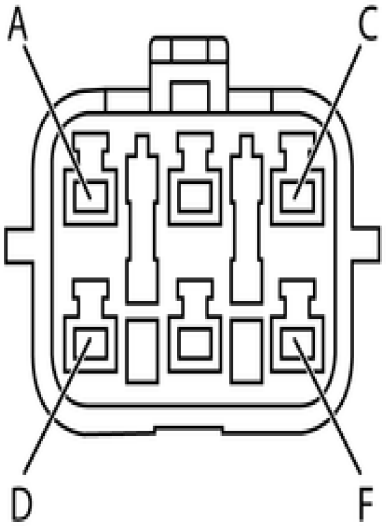

4891353

Connector Part Information		• 7323-7464-30 • 6-Way F (BLK)	
Pin	**Wire Color**	**Circuit Number**	**Function**
A	RED/YEL	WA16	Mirror Heater Relay (LH) (Switched Output Voltage) to Lower Mirror Heater
B	—	—	Not Used
C	BLK	WX05	Ground to B-48 Junction Block (B-53 Ground)
D	WHT/BLK	WA08	Up/Down Mirror Control
E	BLK/GRN	WA10	Left/Right Control
F	BLK/WHT	WA12	Common Control

Left Upper Mirror, Behind the Outer Cover

4891355

D-45 Power Mirror (RH)

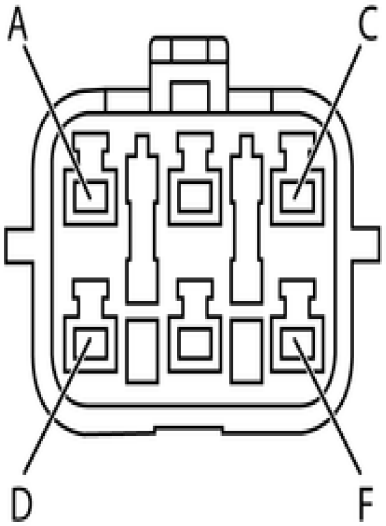

4891353

Connector Part Information		• 7323-7464-30 • 6-Way F (BLK)	
Pin	**Wire Color**	**Circuit Number**	**Function**
A	RED/YEL	WA16	Mirror Heater Relay (RH) (Switched Output Voltage) to Lower Mirror Heater
B	—	—	Left/Right Upper Mirror
C	BLK	WX05	Ground to B-48 Junction Block (B-53 Ground)
D	WHT/BLK	WA08	Up/Down Mirror Control
E	BLK/GRN	WA10	Left/Right Mirror Control
F	BLK/WHT	WA12	Common Mirror Control

Right Upper Mirror, Behind the Outer Coverq

4891361

E-3 A/C Compressor

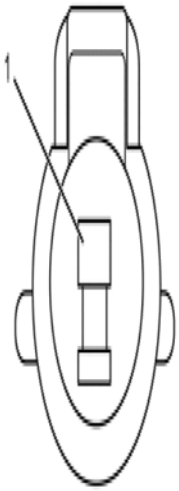

4891366

Connector Part Information		• 7323-7414-40 • 1-Way F (GRY)	
Pin	**Wire Color**	**Circuit Number**	**Function**
1	BRN/YEL	HA12	A/C Compressor Clutch Supply Voltage

Lower Left Front of Engine

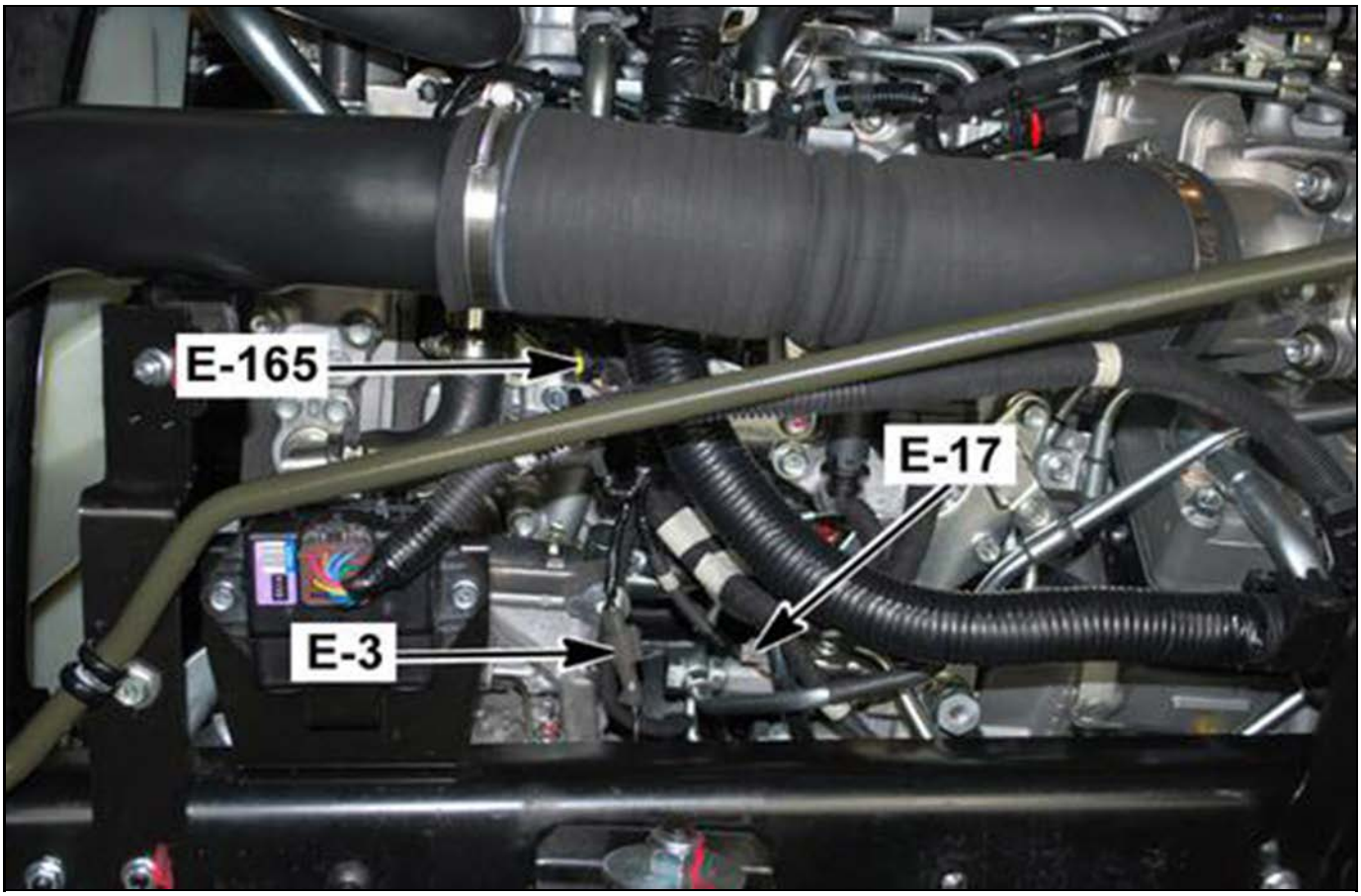

4891369

E-17 Fuel Rail Pressure (FRP) Regulator

4891386

Connector Part Information		• 6189-0039 • 2-Way F (GRY)	
Pin	**Wire Color**	**Circuit Number**	**Function**
1	WHT/BLU	IC110	Regulator Control High Side (PWM)
2	GRN/RED	IC112	Regulator Low Side

On the Lower Left Side of the Engine, On the Front of the Fuel Supply Pump

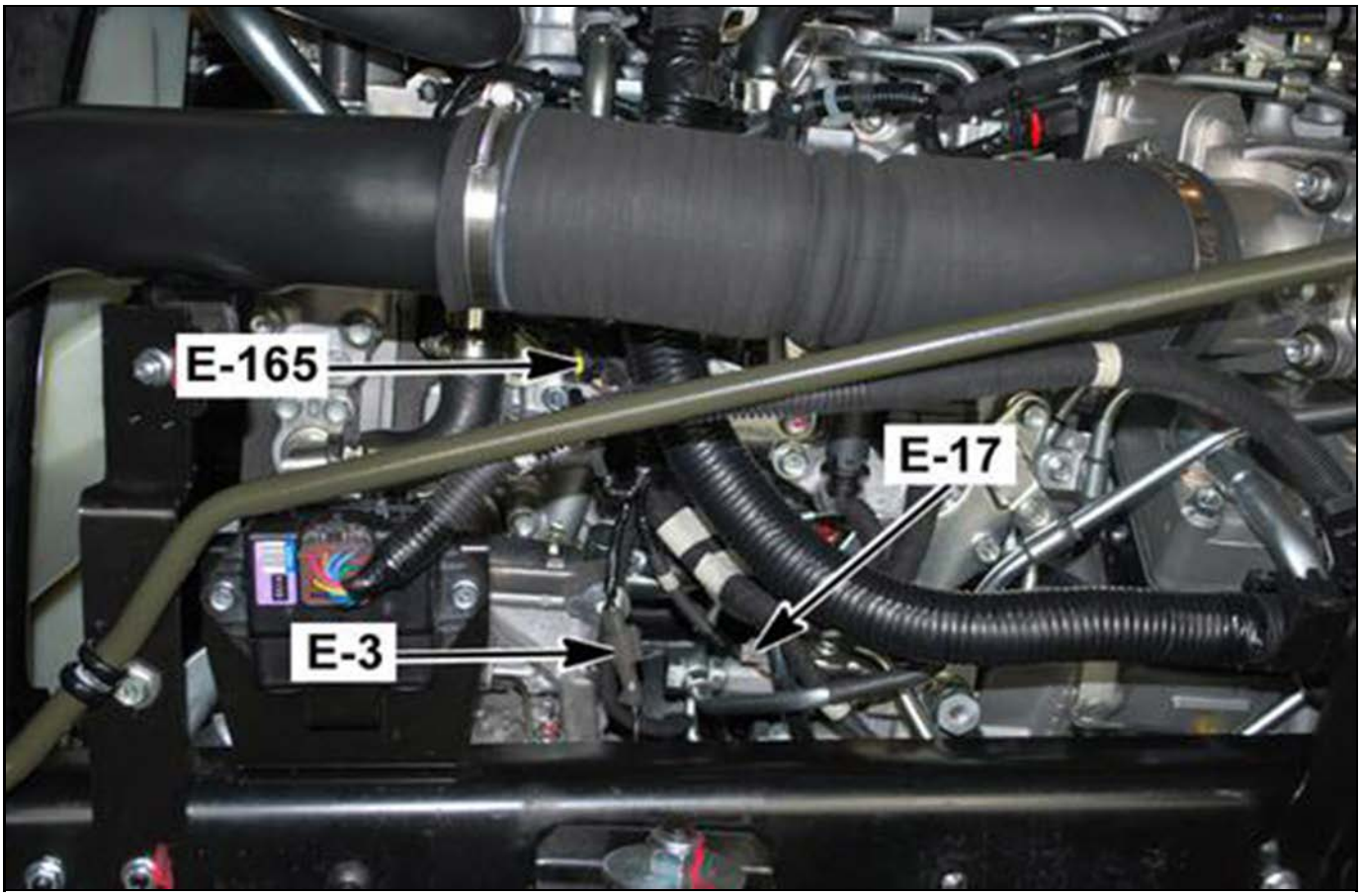

4891369

E-18 Camshaft Position (CMP) Sensor

4891406

Connector Part Information		• 6248-5317 • 3-Way F (BLK)	
Pin	**Wire Color**	**Circuit Number**	**Function**
1	BLU/WHT	IC128	Sensor Signal
2	BLU	IC129	Sensor Low Reference
3	BLU/RED	IC127	Sensor 5 Volt Reference 4

Back of the Cylinder Head

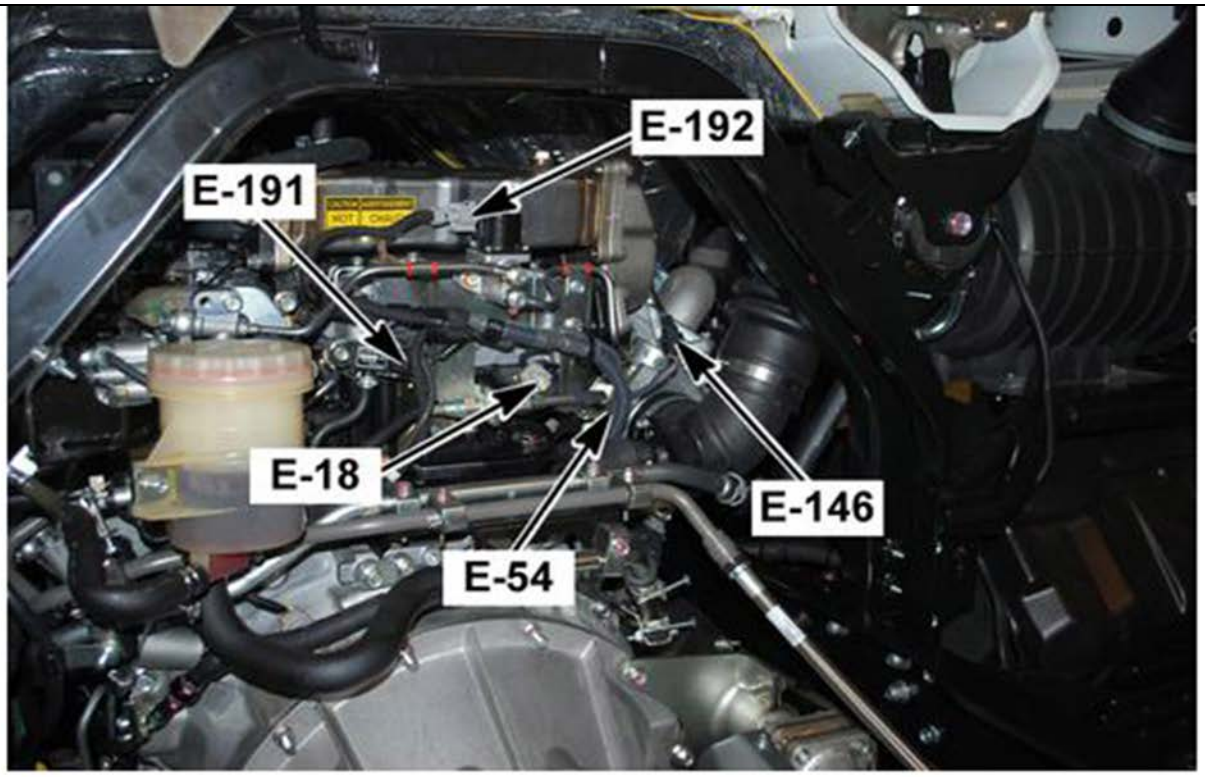

4891407

E-22 Fuel Temperature (FT) Sensor

4891413

Connector Part Information		• 178392-6 • 2-Way F (BLK)	
Pin	**Wire Color**	**Circuit Number**	**Function**
1	WHT/BLK	IC124	Sensor Low Reference
2	LT GRN/WHT	IC123	Sensor Signal

On the Lower Left Side of the Engine, Behind the Engine Mount, On the Side Fuel Supply Pump

4891415

E-25 Engine Coolant Temperature (ECT) Sensor

4891413

Connector Part Information		• 1-174347-4 • 2-Way F (GRN)	
Pin	**Wire Color**	**Circuit Number**	**Function**
1	GRN/YEL	IC125	Sensor Signal
2	BLK/BLU	IC126	Sensor Low Reference

On the Upper Left Side of the Engine, In the Cylinder Head, Below the Coolant Inlet

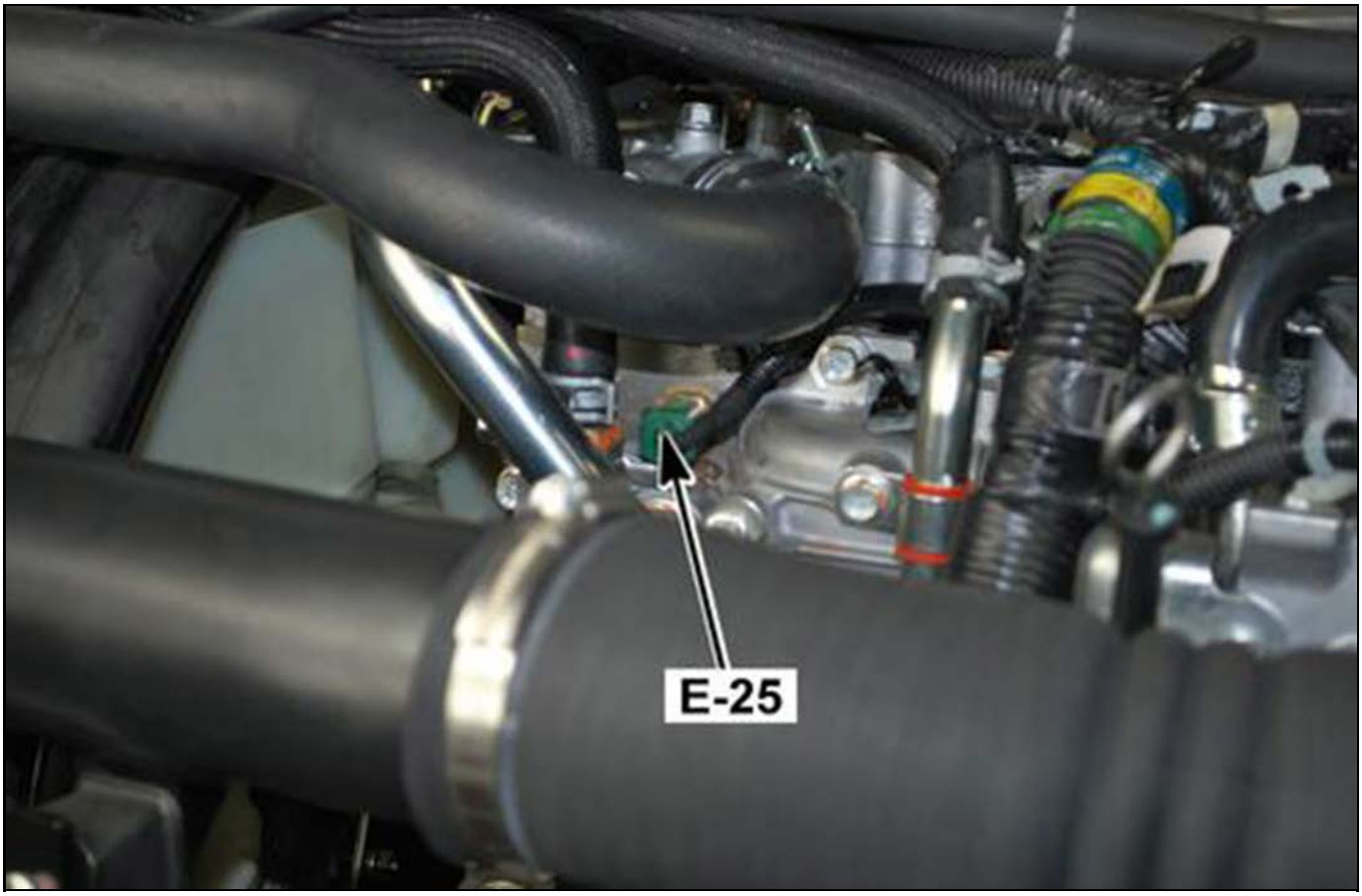

4891418

E-26 Starter Solenoid

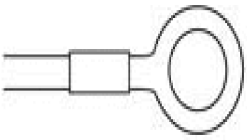

4891426

Connector Part Information		• 1-Way Eyelet	
Pin	**Wire Color**	**Circuit Number**	**Function**
—	BLK/WHT	LA02	Starter Solenoid Voltage from Starter Relay (X- 17)

Right Lower Side of the Engine

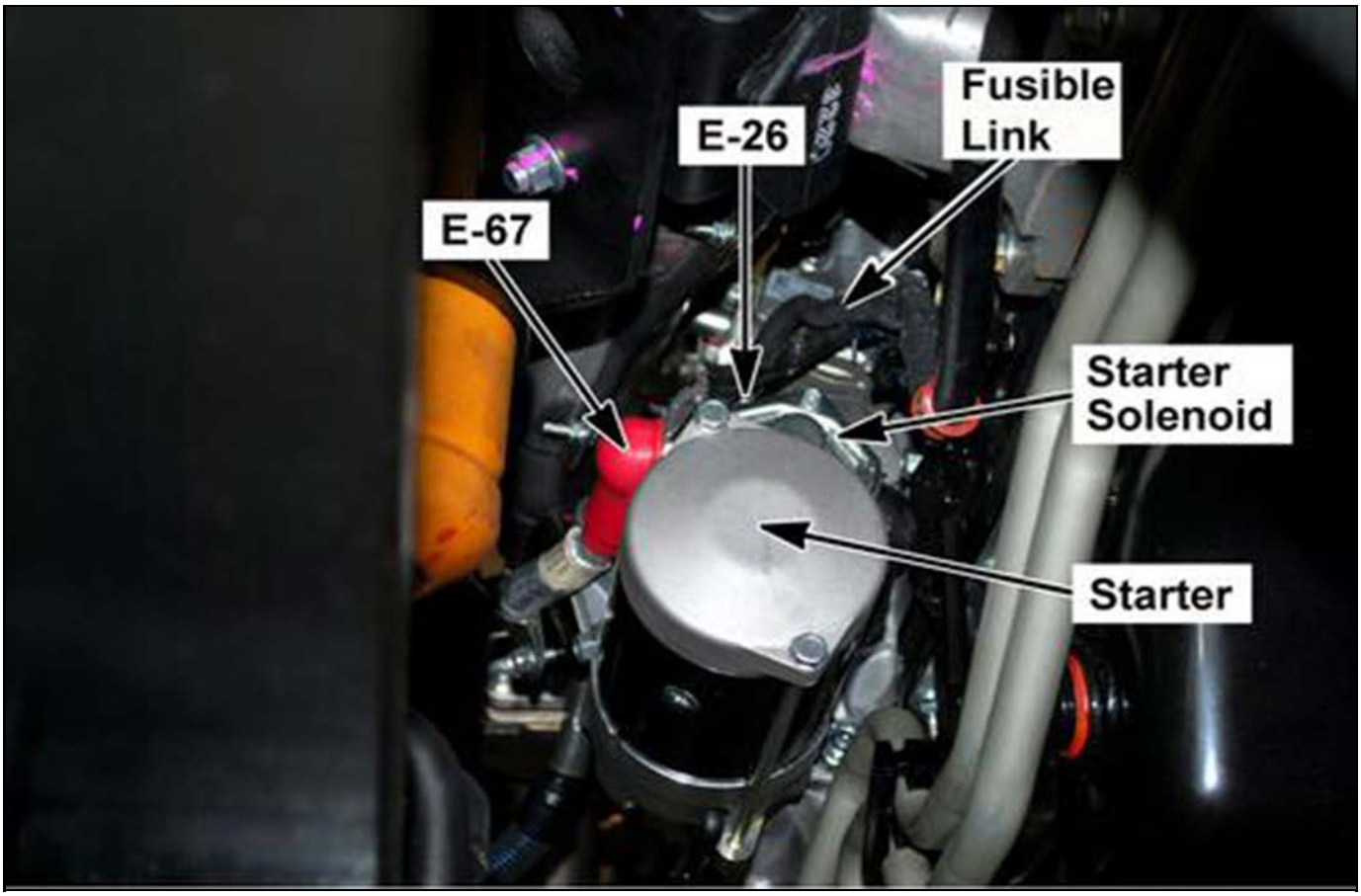

4891429

E-29 Engine Oil Level Switch

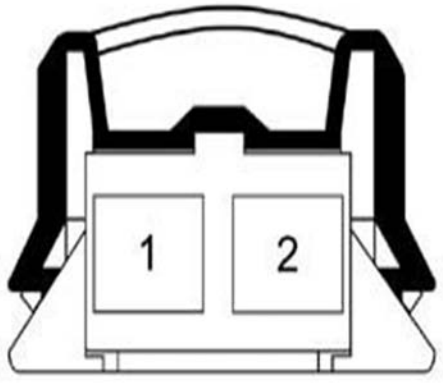

4891436

Connector Part Information		• 0-0282189-1 • 2-Way F (GRY)	
Pin	**Wire Color**	**Circuit Number**	**Function**
1	GRN/WHT	MA51	Oil Level Indicator Control (Closed When Oil Level is Low)
2	BLK	EE08A	Ground to E-74

On the Lower Left Side of the Engine, Near the Center, In the Oil Pan

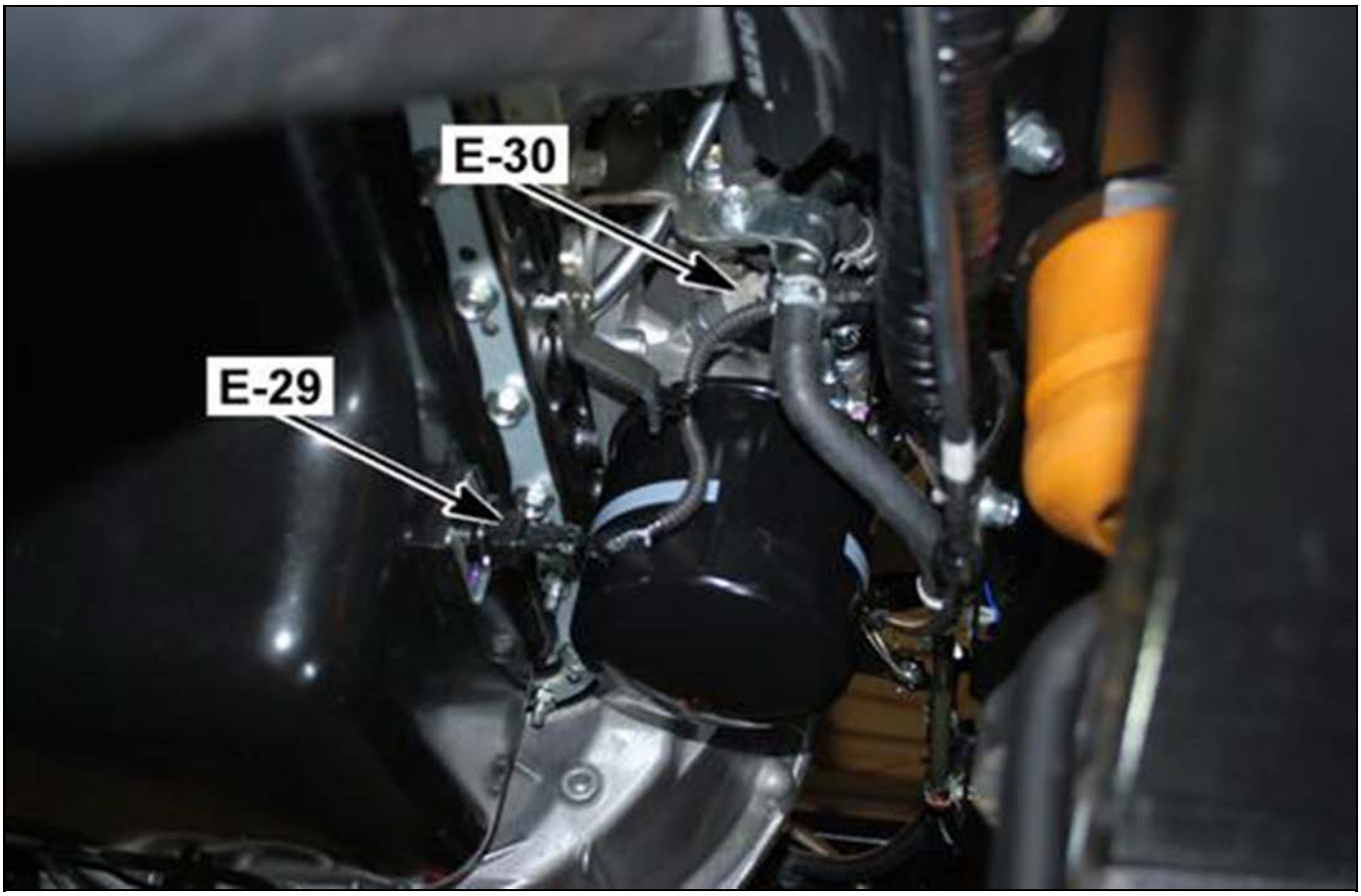

4891440

E-30 Engine Oil Pressure Switch

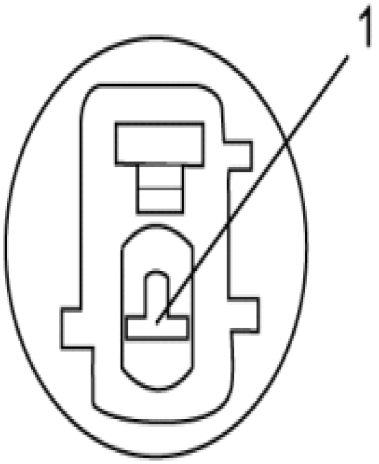

4891446

Connector Part Information		• 7283-1114-40 • 1-Way F (GRY)	
Pin	**Wire Color**	**Circuit Number**	**Function**
1	BLU/YEL	MA02	Engine Control Oil Pressure Indicator (Closed with Low Oil Pressure)

On the Lower Left Side of the Engine, Above the Oil Filter

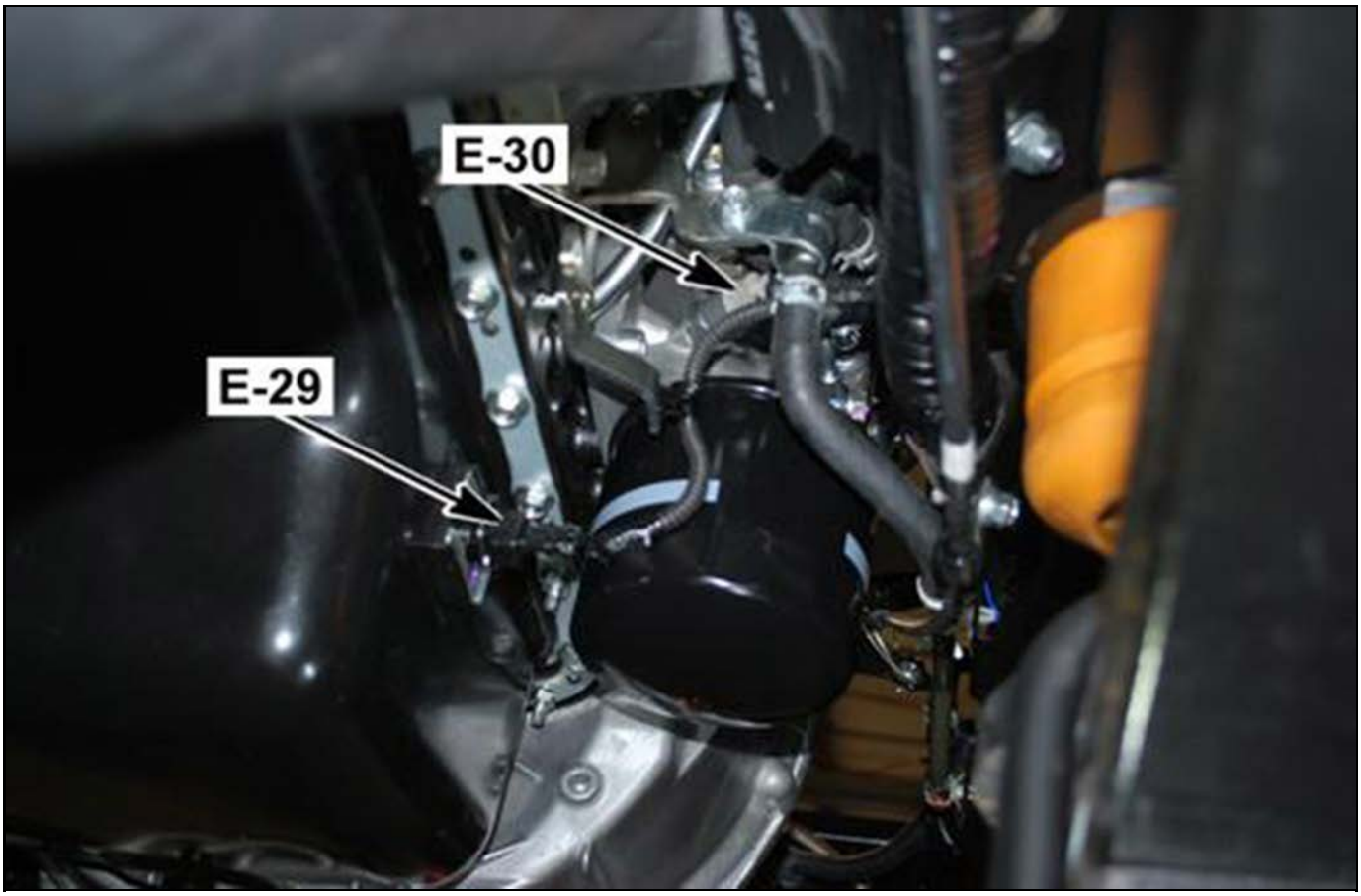

4891440

E-50 Generator

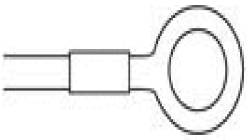

4891426

Connector Part Information		• 11300-5108 • 1-Way Eyelet	
Pin	**Wire Color**	**Circuit Number**	**Function**
—	WHT	PA13	Battery Voltage from Fusible Link
—	WHT	PA53	Battery Voltage from Fusible Link

On the Right Side of the Engine, on the Back of the Generator

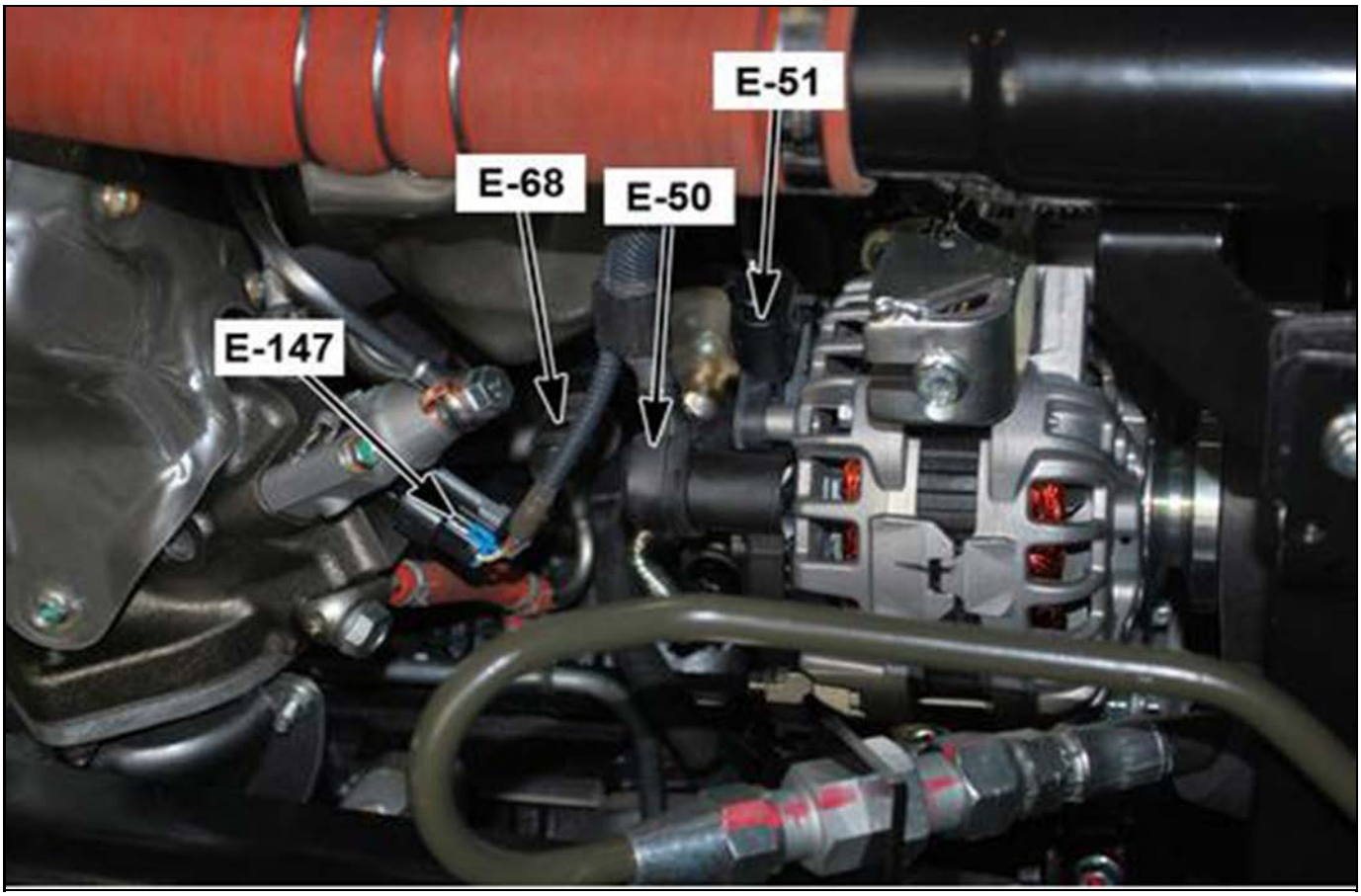

4891452

E-51 Generator

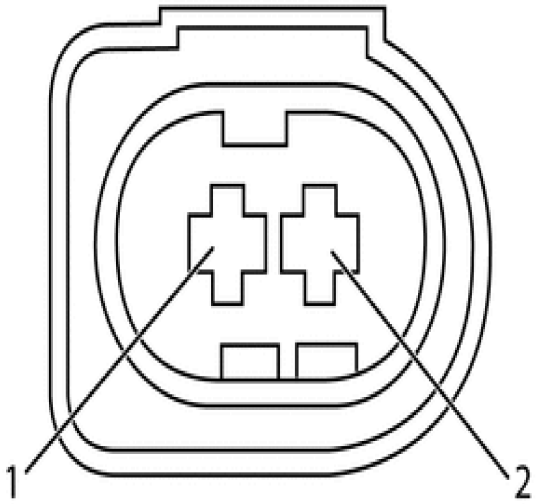

4891454

Connector Part Information		• 1-967412-2 AMP • 2-Way F (GRY)	
Pin	**Wire Color**	**Circuit Number**	**Function**
1	—	—	Not Used
2	WHT/BLU	PA21	Charge Indicator (Red) Control (L)

On the Right Side of the Engine, on the Back of the Generator

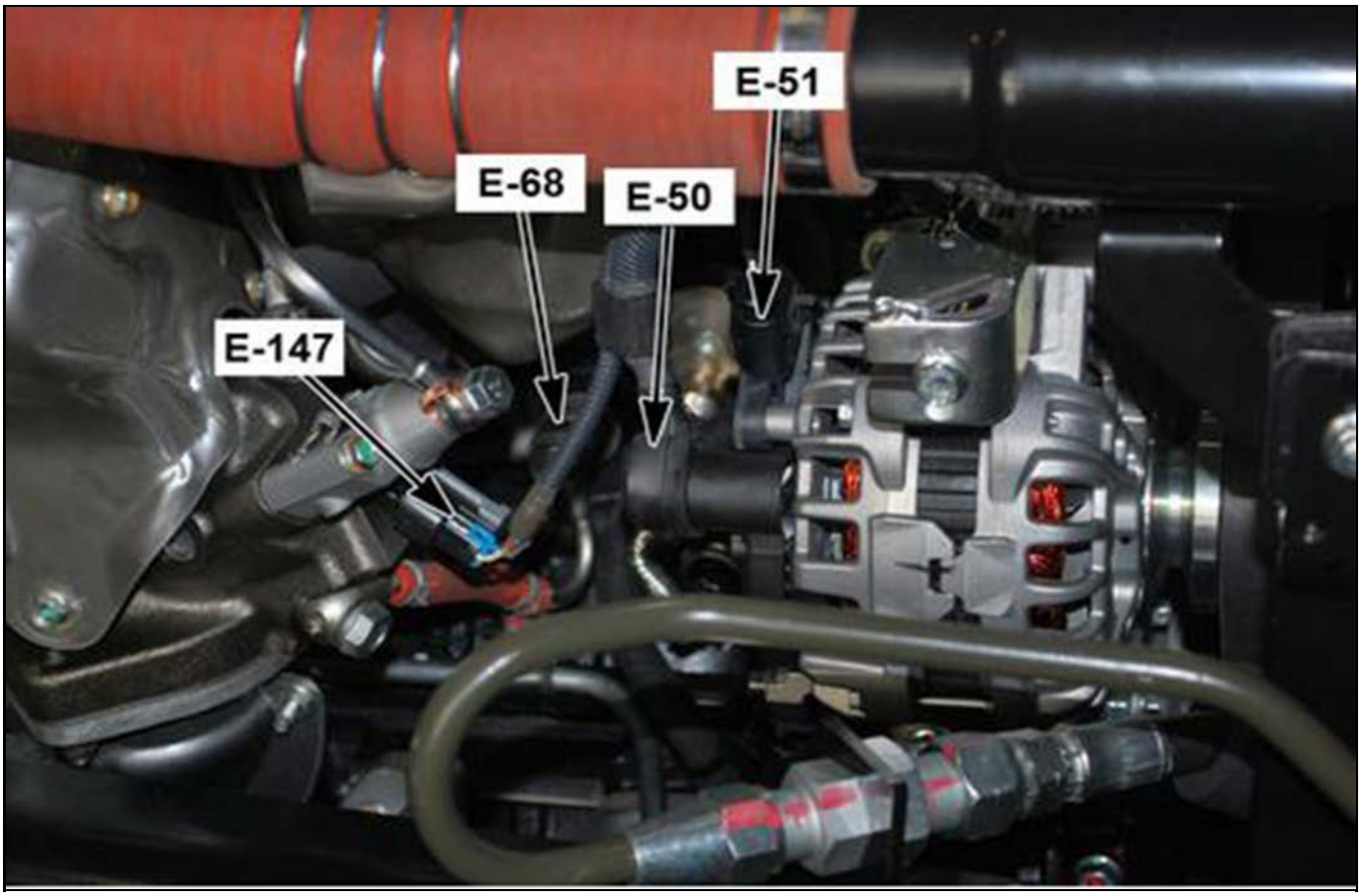

4891452

E-52 Low Coolant Level Sensor

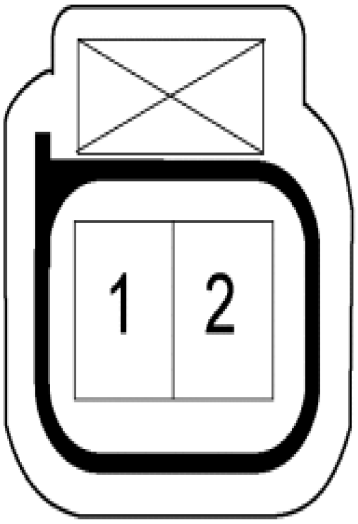

4891455

Connector Part Information		• 897364-4840 • 2-Way F (WHT)	
Pin	**Wire Color**	**Circuit Number**	**Function**
1	BLK	IZ133	Ground to E-74
2	GRY/BLK	IC88	Low Coolant Level Signal

Top Front of Engine, Next to the Valve Cover

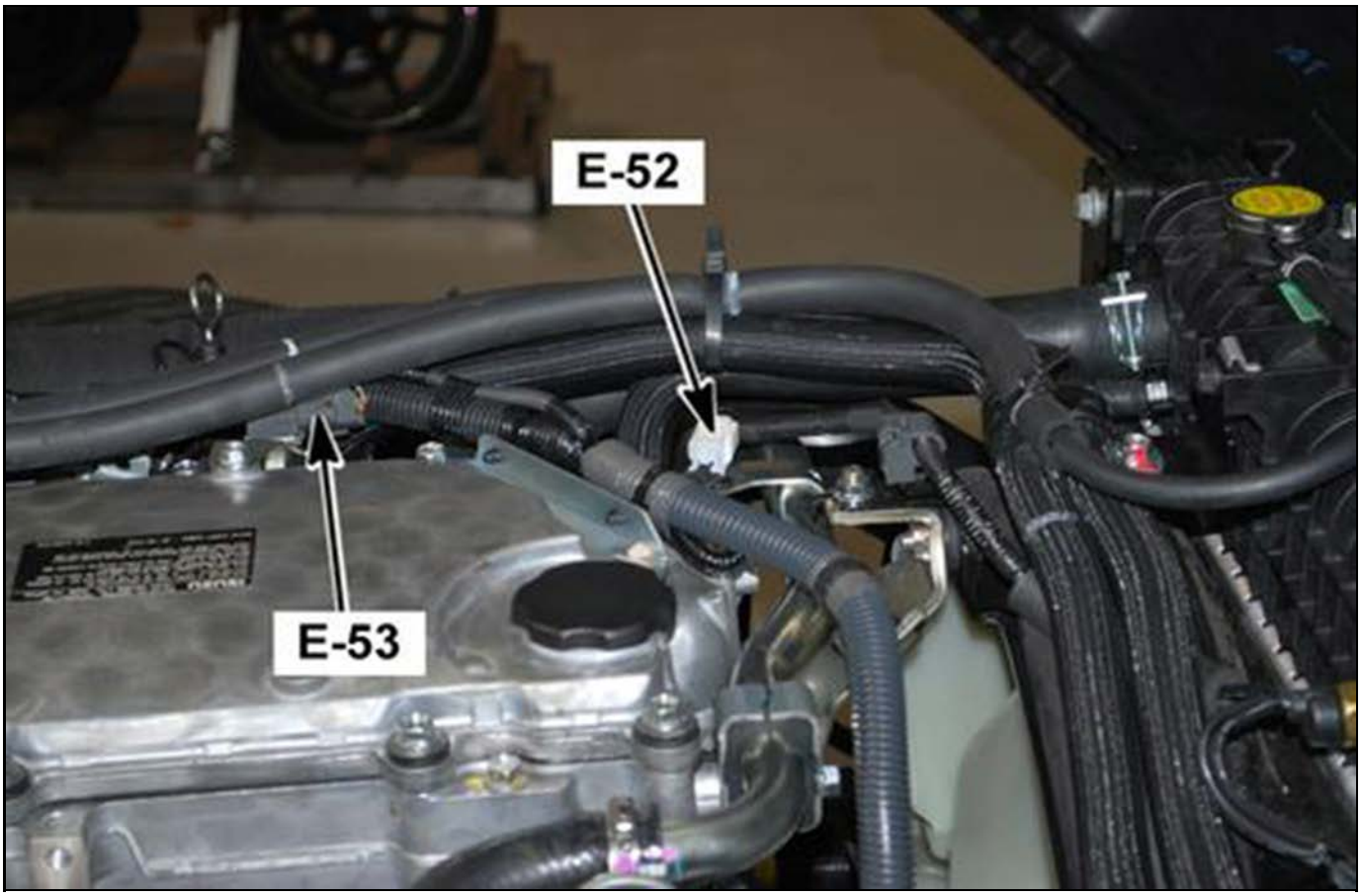

4891456

E-53 Intake Air Temperature (IAT) Sensor 2

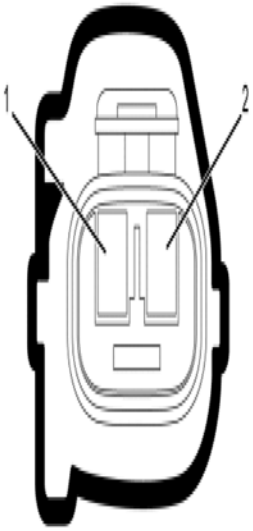

4891459

Connector Part Information		• 7283-7020-10 • 2-Way F (GRY)	
Pin	**Wire Color**	**Circuit Number**	**Function**
1	RED/BLU	IC161	Sensor Signal
2	BLU/YEL	IC162	Sensor Low Reference

Top Front of Engine, Next to the Valve Cover

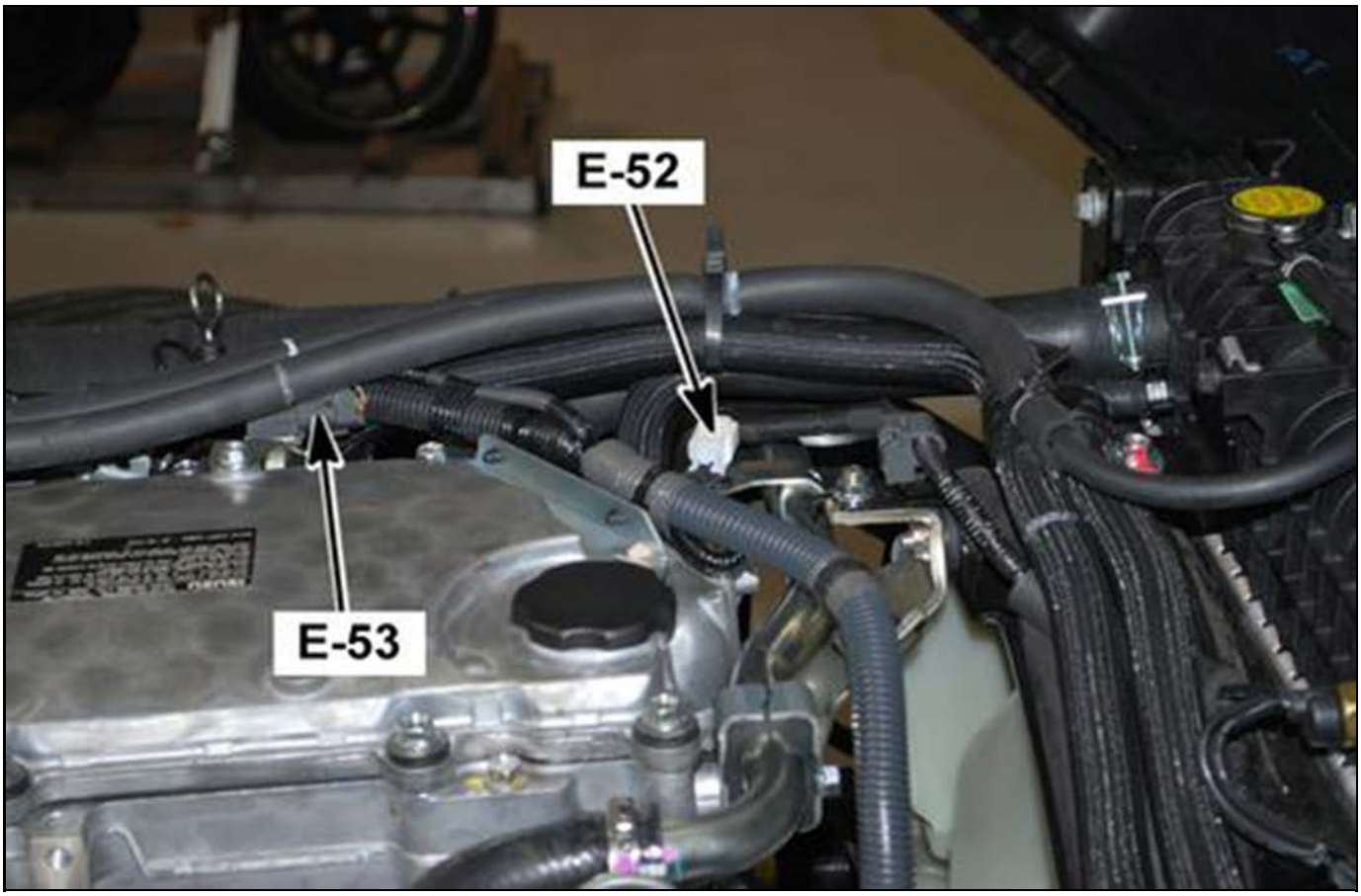

4891456

E-54 EGR Exhaust Gas Temperature (In) Sensor 1

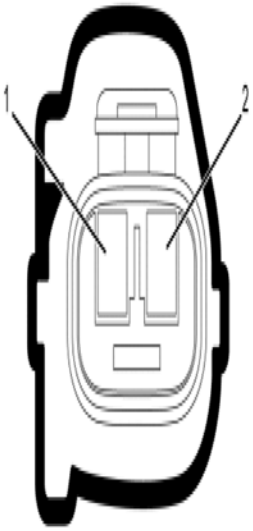

4891459

Connector Part Information		• 7383-7020-10 • 2-Way F (GRY)	
Pin	**Wire Color**	**Circuit Number**	**Function**
1	RED/GRN	IC156	Sensor Signal
2	BLU/WHT	IC157	Sensor Low Reference

Back of the Engine, Lower Right Corner

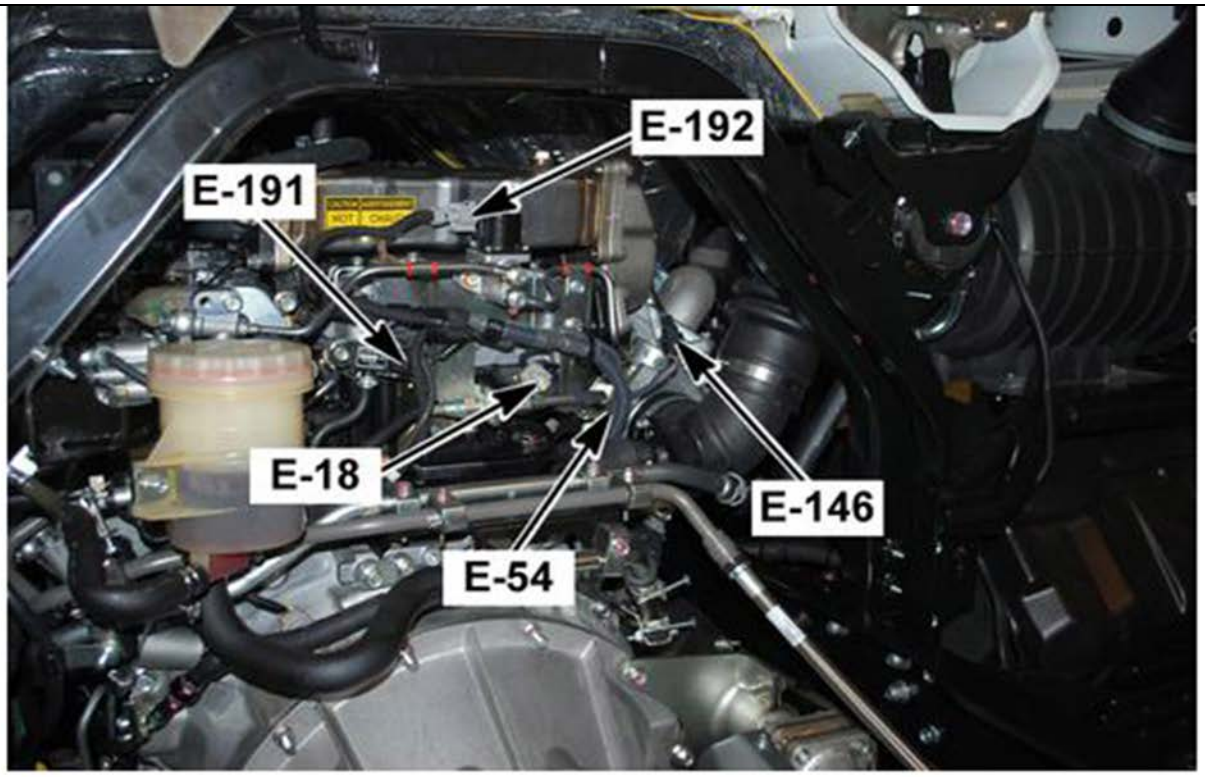

4891407

E-56 Glow Plug 1

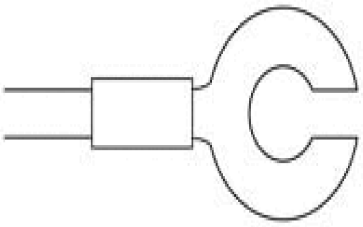

4891461

Connector Part Information		• 909550-1240 • 1-Way Open Eyelet	
Pin	**Wire Color**	**Circuit Number**	**Function**
1	RED	HB11	Glow Plug #1 Control

On the Upper Left Side of the Engine, In the Cylinder Head, At Cylinder 1

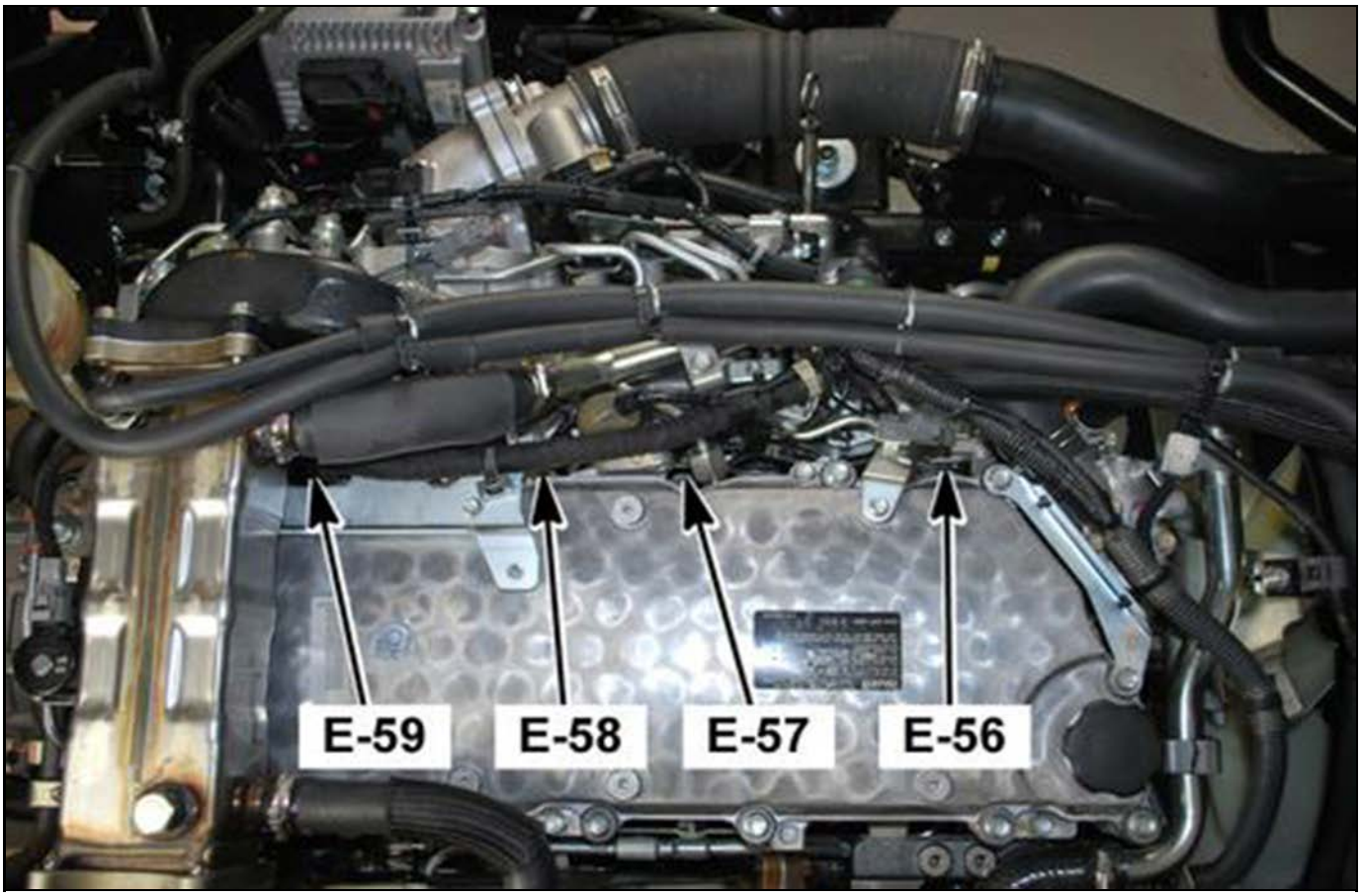

4891664

E-57 Glow Plug 2

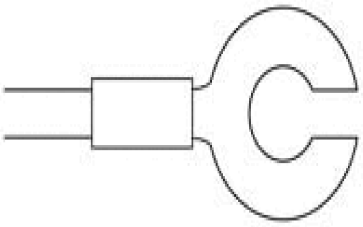

4891461

Connector Part Information		• 909550-1240 • 1-Way Open Eyelet	
Pin	**Wire Color**	**Circuit Number**	**Function**
1	GRN	HB12	Glow Plug #2 Control

On the Upper Left Side of the Engine, In the Cylinder Head, At Cylinder 2

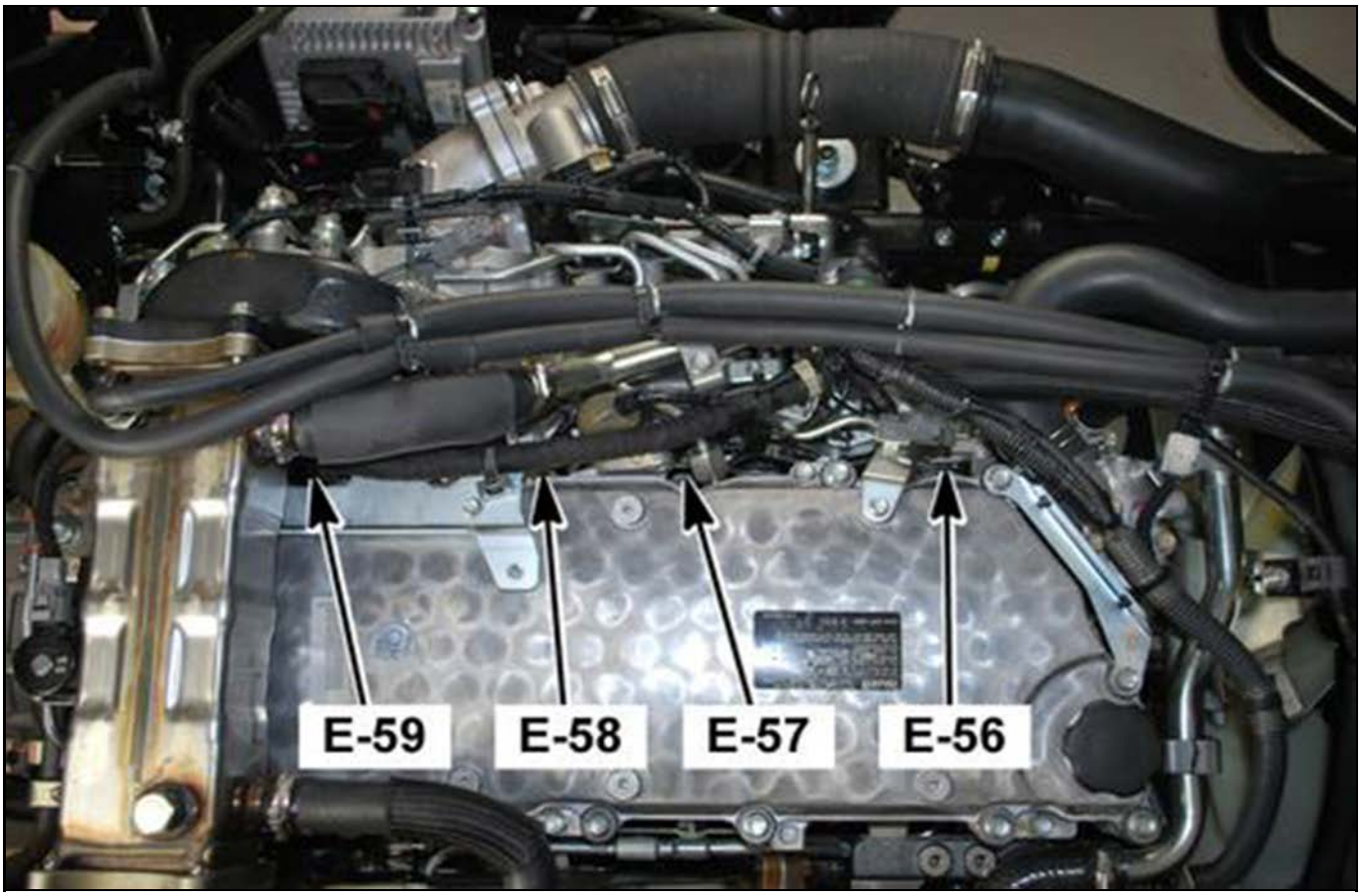

4891664

E-58 Glow Plug 3

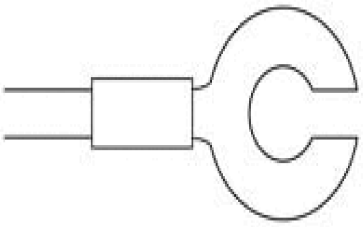

4891461

Connector Part Information		• 909550-1240 • 1-Way Open Eyelet	
Pin	**Wire Color**	**Circuit Number**	**Function**
1	PNK	HB13	Glow Plug #3 Control

On the Upper Left Side of the Engine, In the Cylinder Head, At Cylinder 3

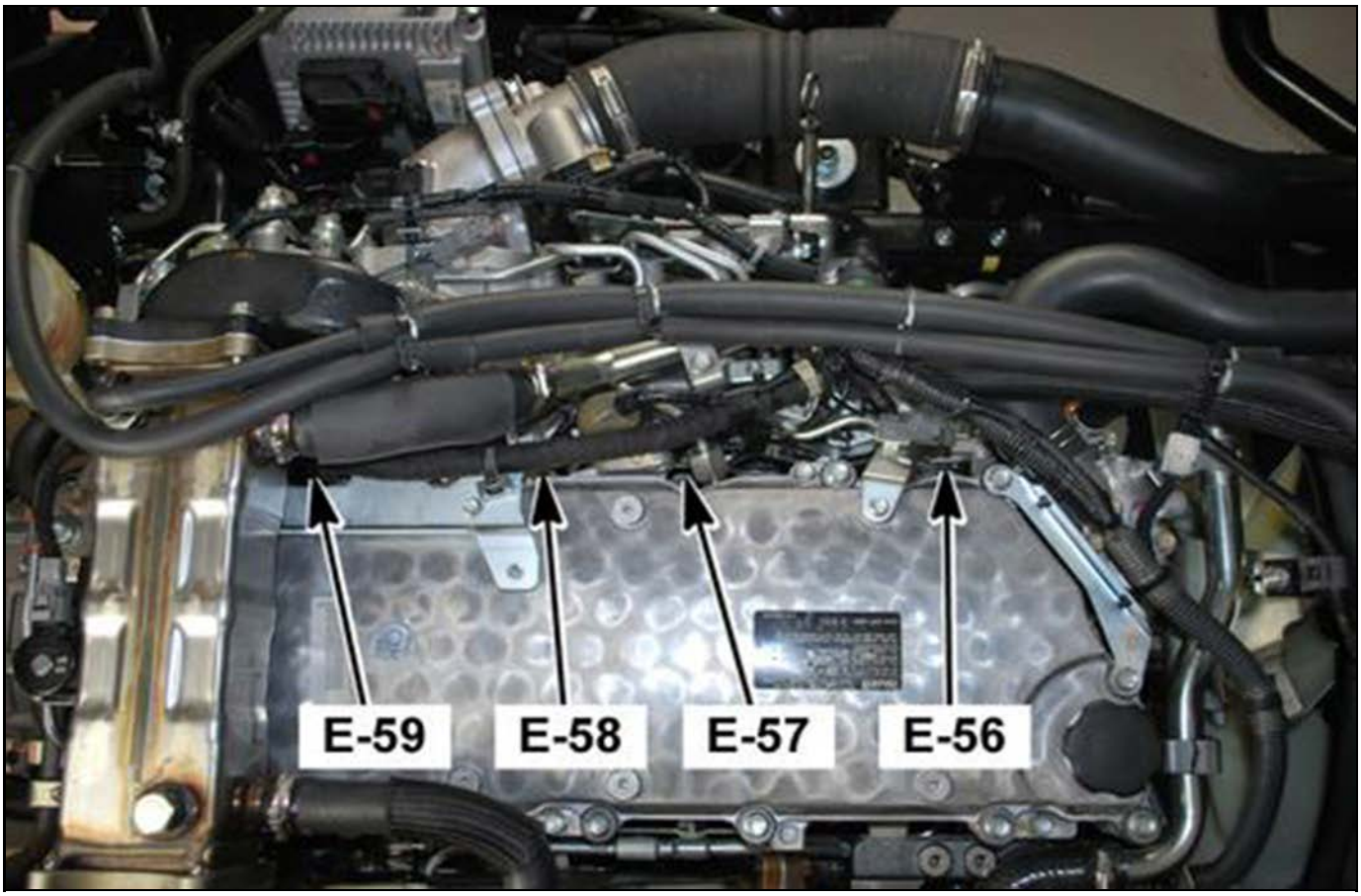

4891664

E-59 Glow Plug 4

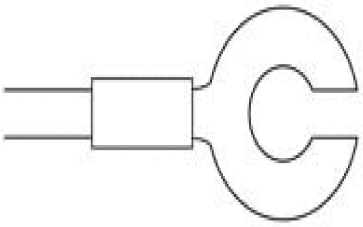

4891461

Connector Part Information		• 909550-1240 • 1-Way Open Eyelet	
Pin	**Wire Color**	**Circuit Number**	**Function**
1	BLU	HB14	Glow Plug #4 Control

On the Upper Left Side of the Engine, In the Cylinder Head, At Cylinder 4

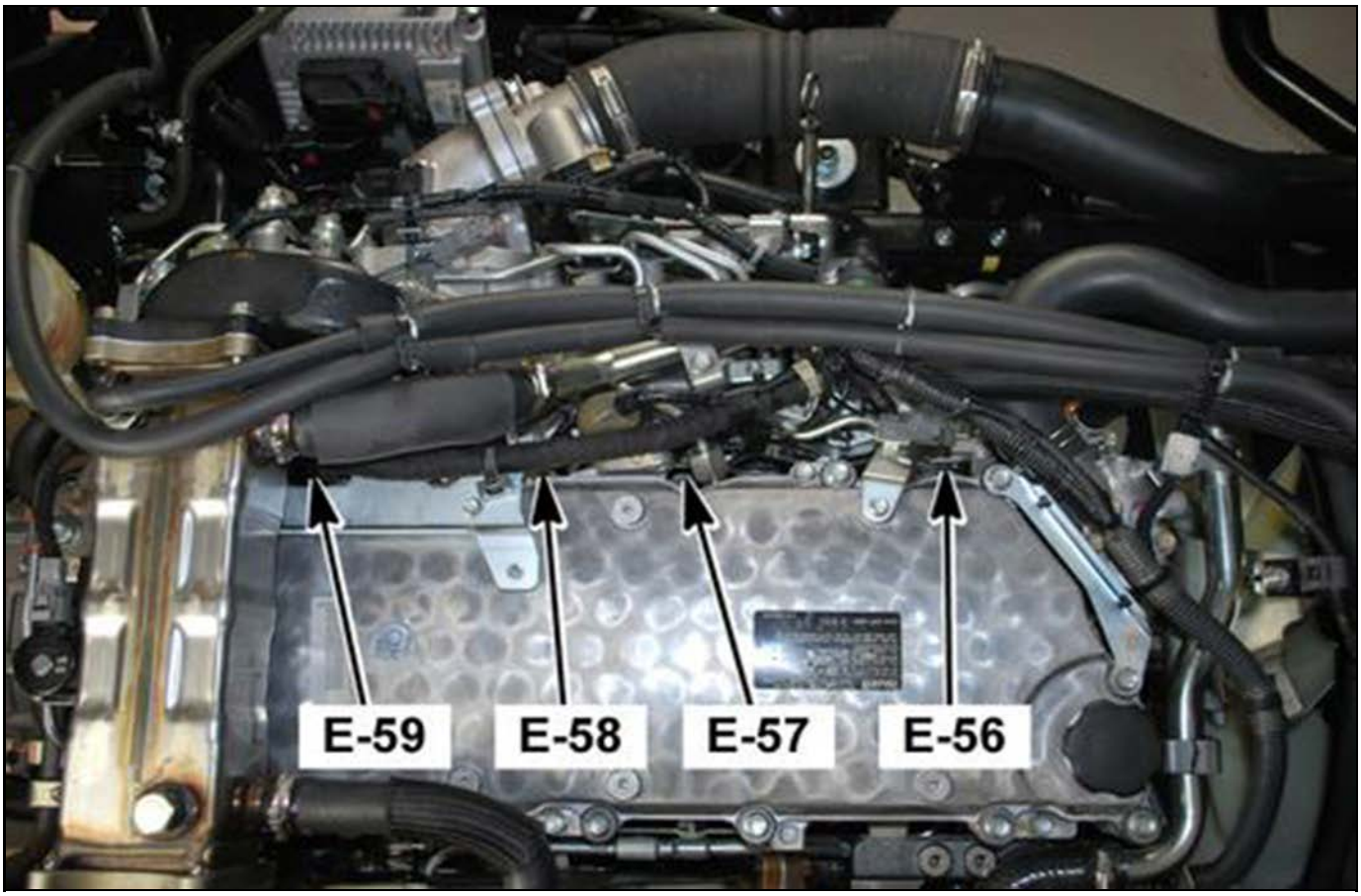

4891664

E-60 Diesel Particulate Filter Fuel Pressure Sensor

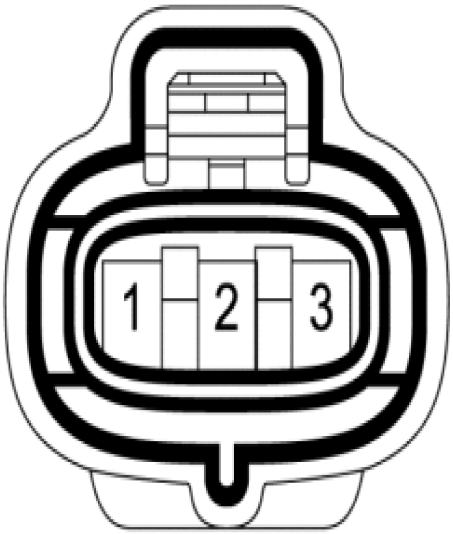

4891678

Connector Part Information		• 6189-0099 • 3-Way F (BLK)	
Pin	**Wire Color**	**Circuit Number**	**Function**
1	YEL/BLK	IC136	Sensor Low Reference
2	WHT/ORN	IC135	Sensor Signal
3	LT GRN	IC134	Sensor 5V Reference

Back of the Engine, Left Upper Corner

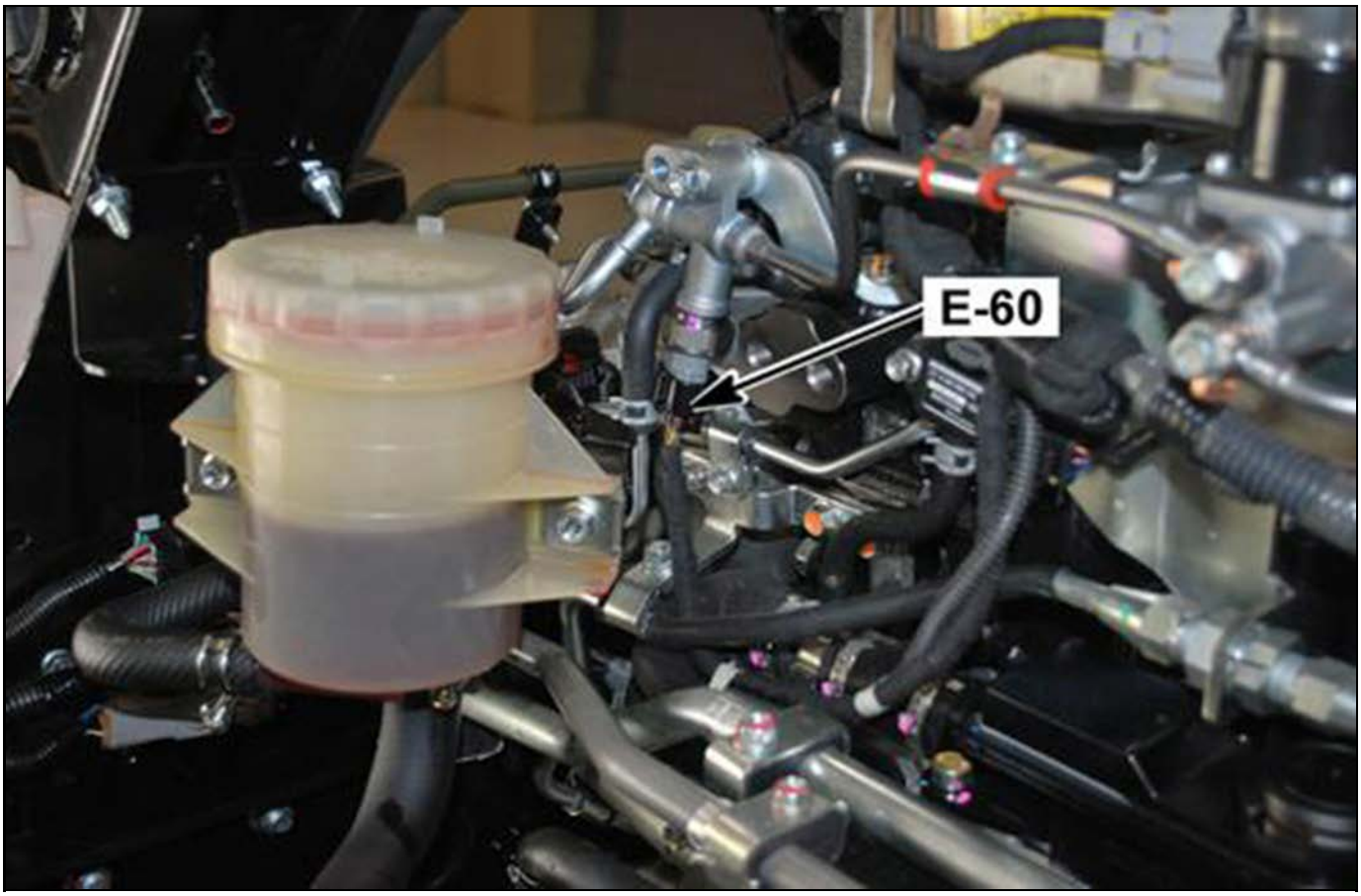

4891682

E-61 Intake Air Flow (IAF) Valve

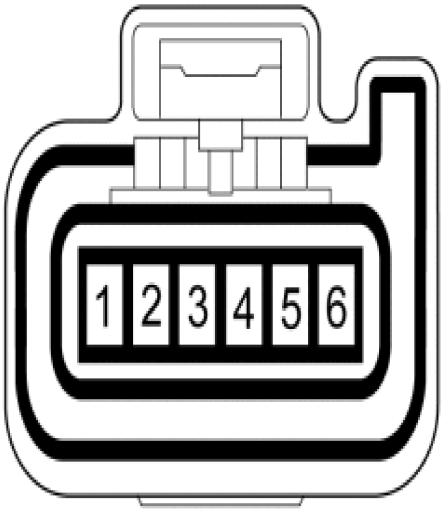

4891737

Connector Part Information		• 1-1438153-3 • 6-Way F (BLK)	
Pin	**Wire Color**	**Circuit Number**	**Function**
1	—	—	Not Used
2	YEL/RED	IC120	Position Sensor 5V Reference
3	BLU/BLK	IC122	Position Sensor Low Reference
4	VIO/WHT	IC121	Position Sensor Signal
5	GRN/WHT	IC109	Solenoid Control Low Side (PWM)
6	BLK/GRN	IC108	Solenoid Drive Voltage

Left Side of the Engine, On the Side of the Throttle Body

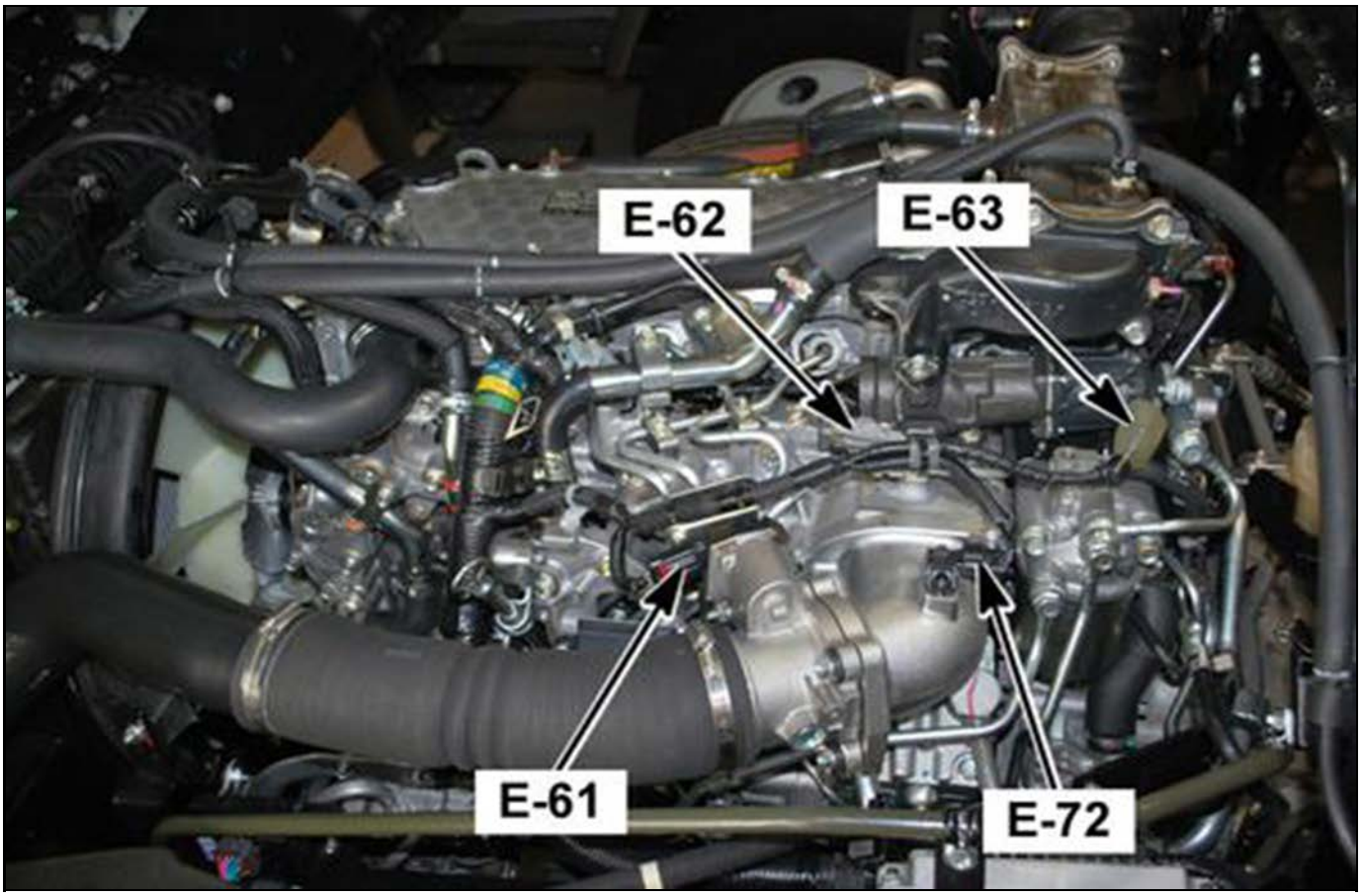

4891740

E-62 EGR Gas Temperature (Out) Sensor 2

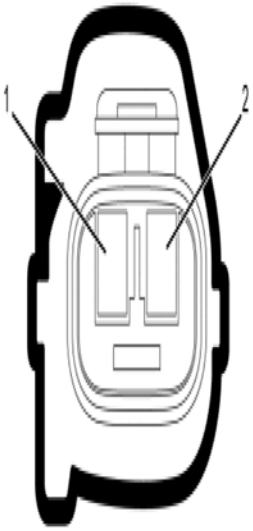

4891459

Connector Part Information		• 7283-7020-40 • 2-Way F (GRY)	
Pin	**Wire Color**	**Circuit Number**	**Function**
1	BLU/RED	IC160	Sensor Low Reference
2	RED/YEL	IC159	Sensor Signal

Left Upper Rear Corner of the Engine

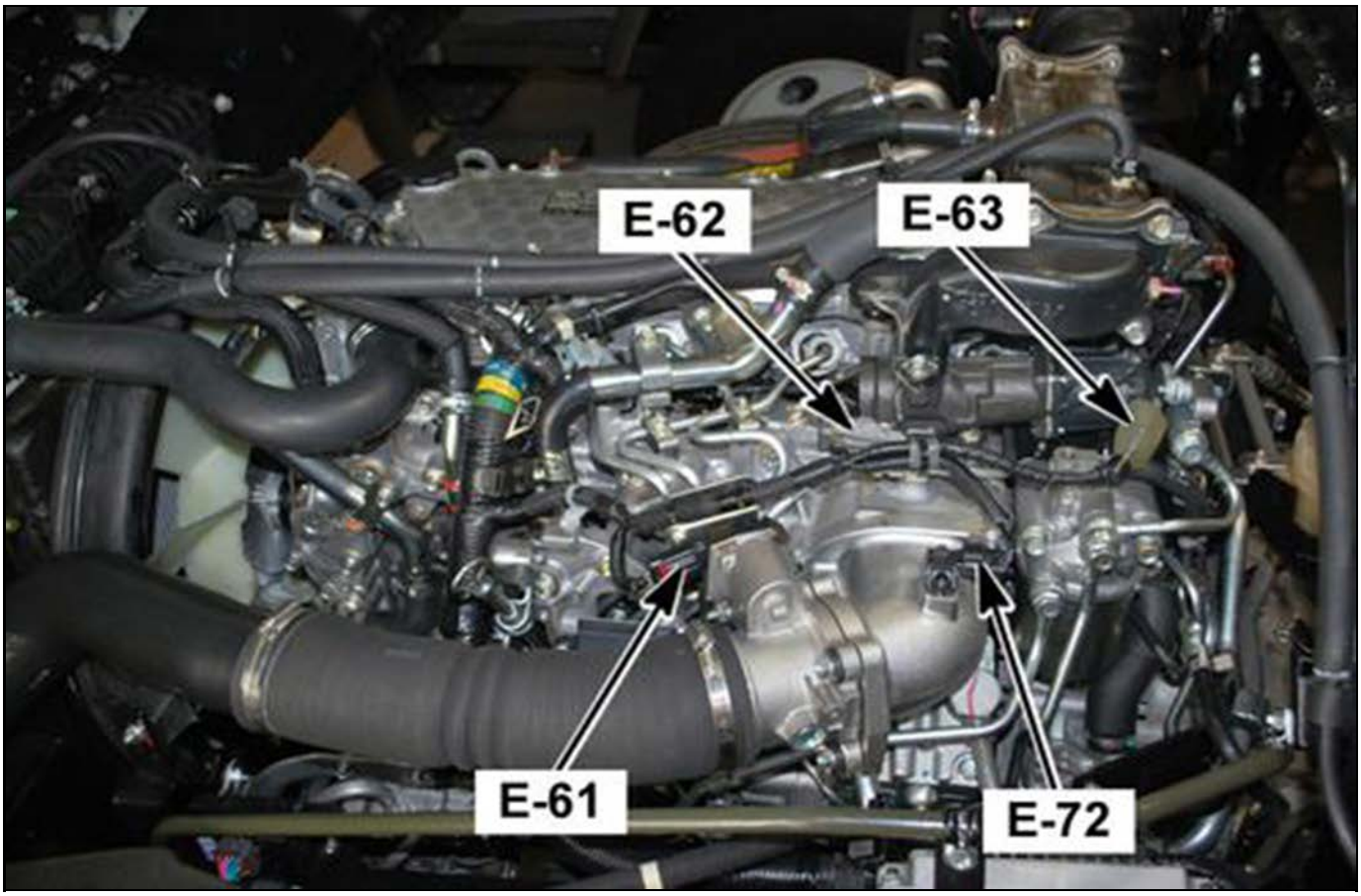

4891740

E-63 EGR Valve

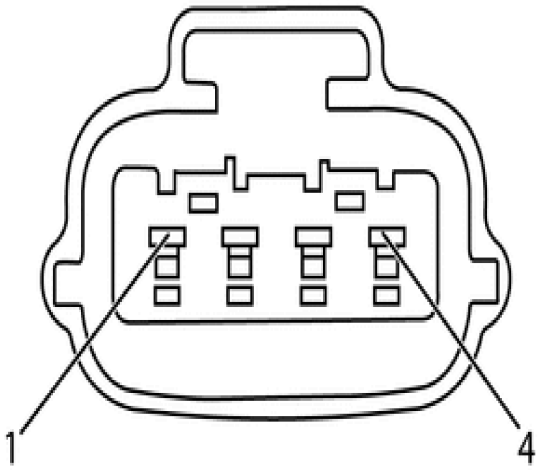

4891746

Connector Part Information		• 6195-0030 • 4-Way F (BLK)	
Pin	**Wire Color**	**Circuit Number**	**Function**
1	GRN	IC228	Ignition Voltage from Fuse F-35
2	BLK	IZ236	Ground to E-74
3	GRN	TF64	ISO 15765 CAN 2 Low
4	GRN/WHT	TF63	ISO 15765 CAN 2 High

Left Upper Rear Corner of the Engine

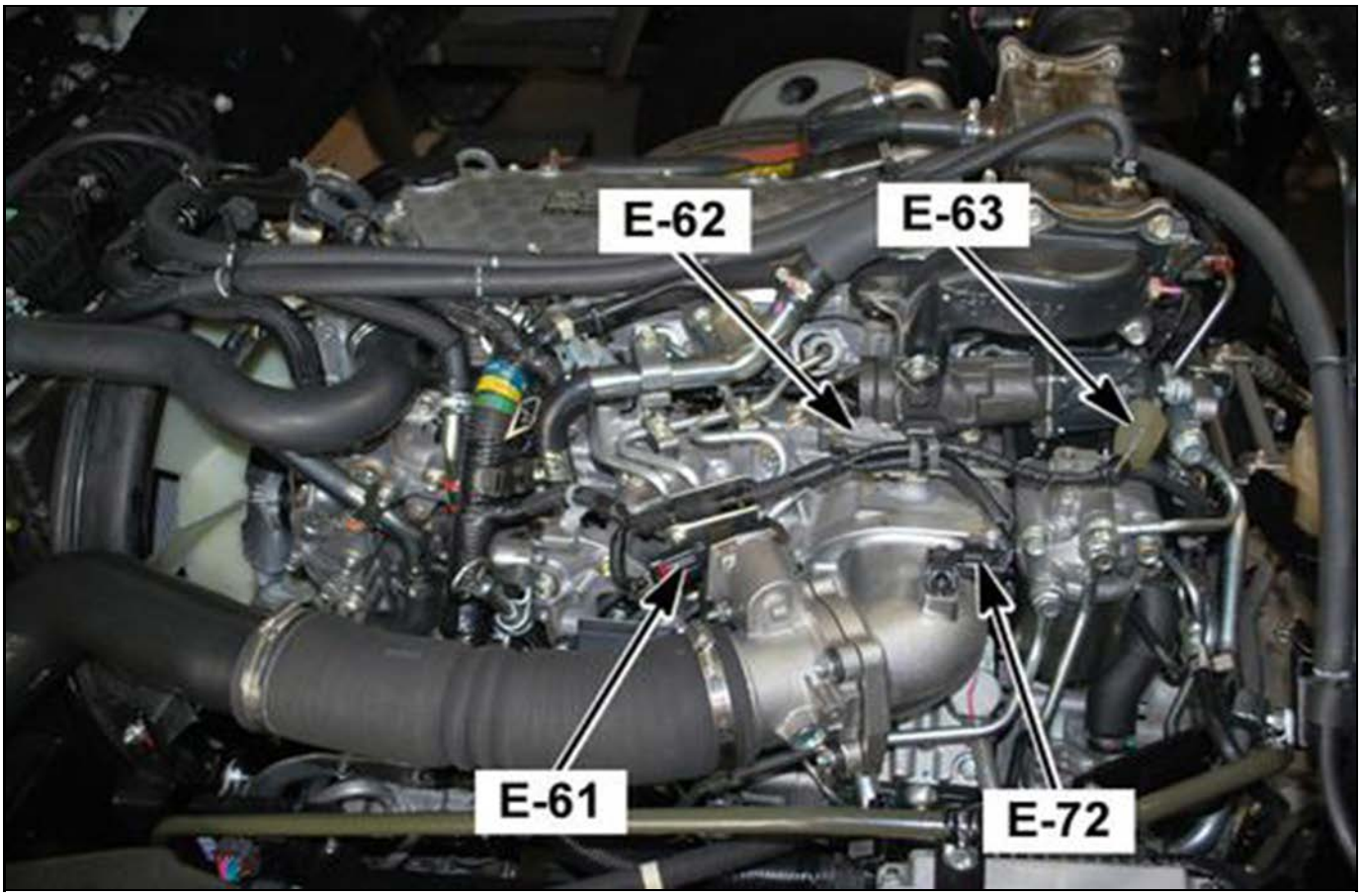

4891740

E-64 Glow Plug Control Module

4891747

Connector Part Information		• 09-4475-51 • 1-Way F (BLK)	
Pin	**Wire Color**	**Circuit Number**	**Function**
1	WHT/BLK	HB01	Battery Voltage from Fuse FL-4 Fuse/Relay Center

Left Side of the Engine, in Front of the Throttle Valve

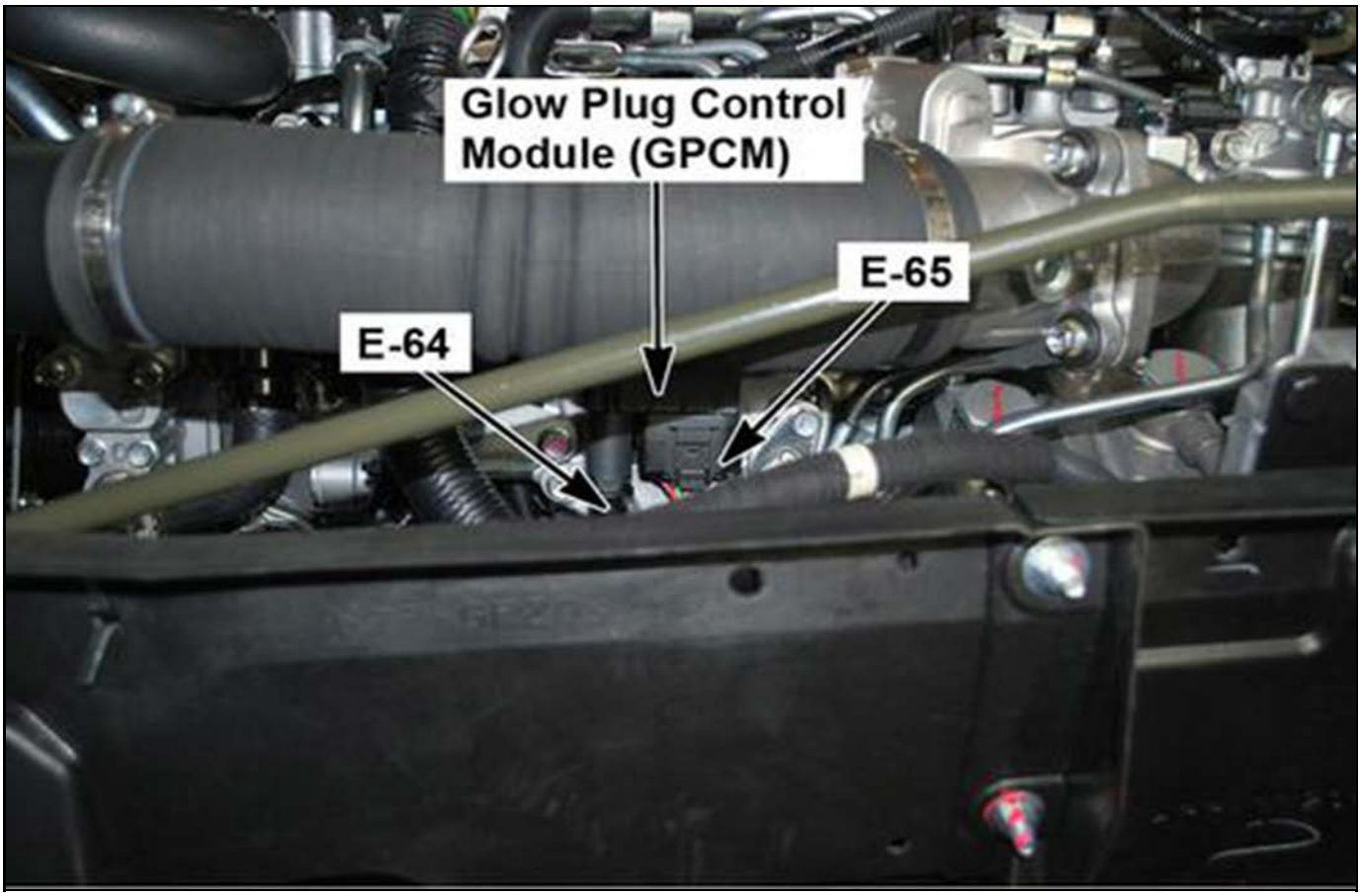

4891751

E-65 Glow Plug Control Module

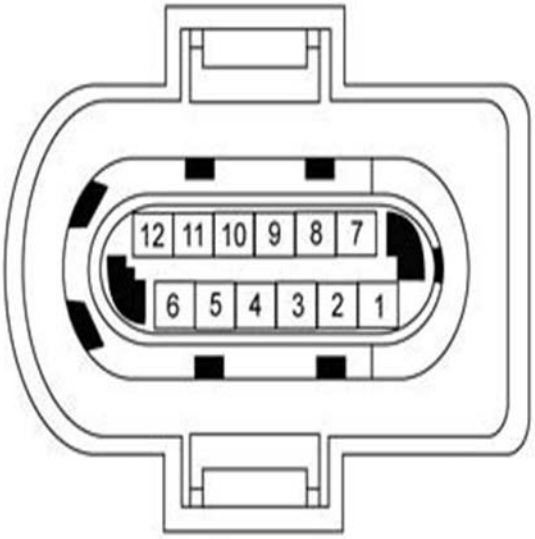

4891756

Connector Part Information		• 09-4474-01 • 12-Way F (BLK)	
Pin	**Wire Color**	**Circuit Number**	**Function**
1	RED	HB11	Cylinder #1 Glow Plug
2	GRN	HB12	Cylinder #2 Glow Plug
3	PNK	HB13	Cylinder #3 Glow Plug
4	BLU	HB14	Cylinder #4 Glow Plug
5	GRN/BLK	IC02	Glow Plug Control Module Voltage from X-18 ECM Main Relay
6	BLU	TF40	CAN Low
7–10	—	—	Not Used
11	BLK	HY01A	Ground to E-74
12	BLU/WHT	TF39	CAN High

Left Side of the Engine, in Front of the Throttle Valve

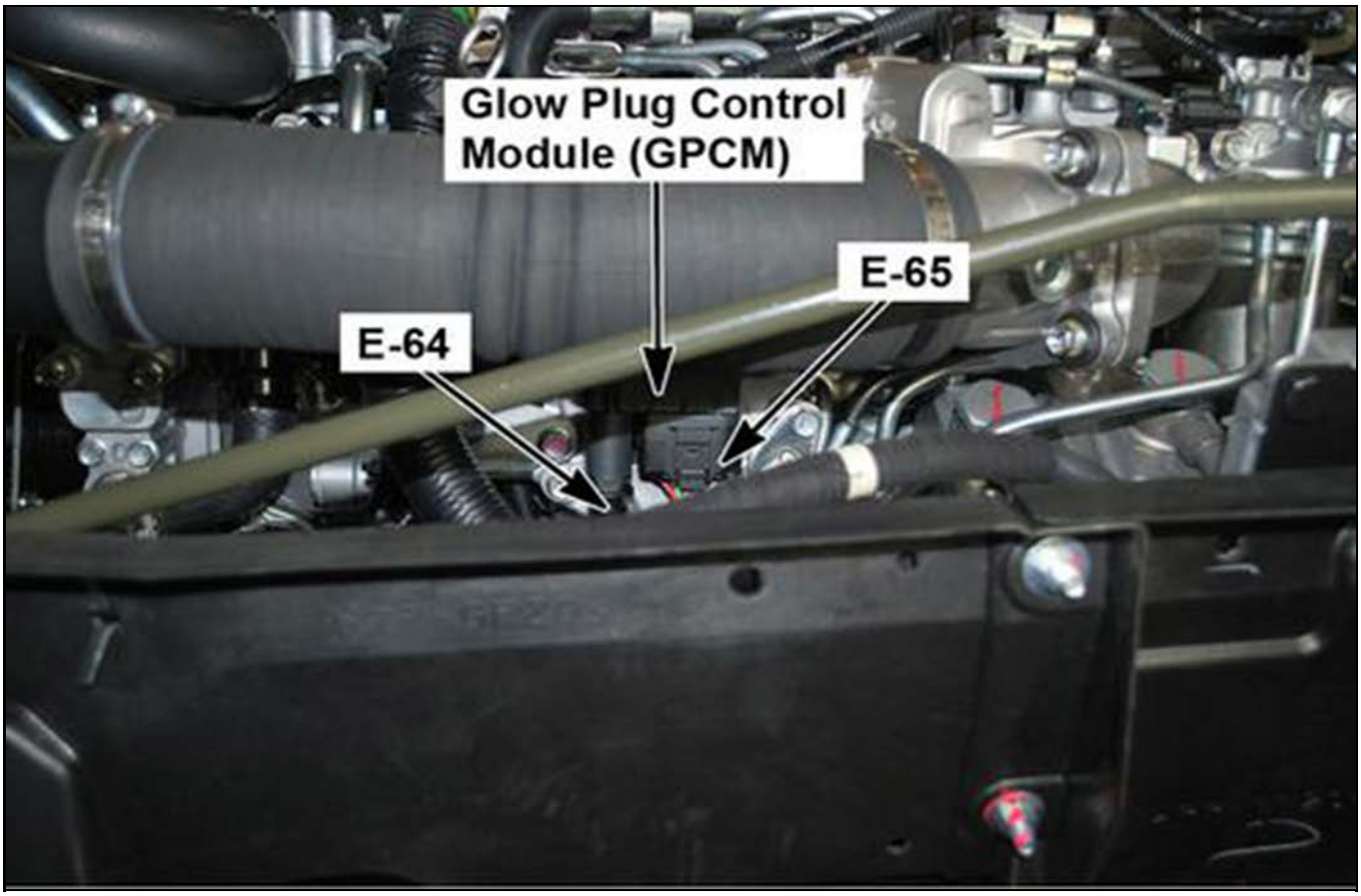

4891751

E-66 Variable Nozzle Turbocharger (VNT) Actuator/Sensor

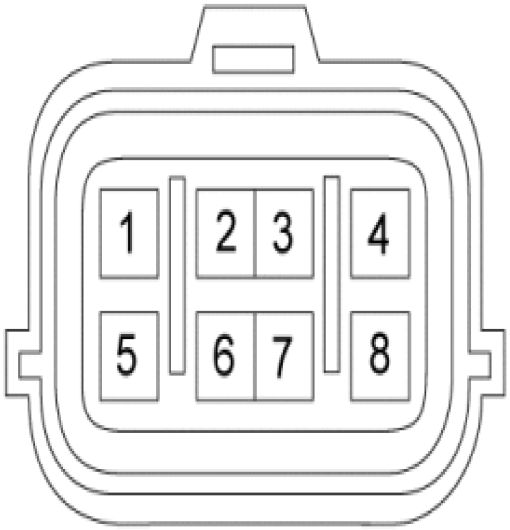

4891758

Connector Part Information		• 6195-0249 • 8-Way F (BLK)	
Pin	**Wire Color**	**Circuit Number**	**Function**
1	BRN	IC202	Position Sensor Reference Voltage
2	BRN	IC197	Position Sensor Signal 3
3	BLU/WHT	IC195	Position Sensor Signal 2
4	BLU	IC193	Position Sensor Signal 1
5	RED	IC192	Position Sensor Low Reference
6	YEL	IC201	VNT Motor 3
7	LT GRN	IC200	VNT Motor 2
8	VIO	IC199	VNT Motor 1

On the Right Side of the Engine, Under the Turbocharger

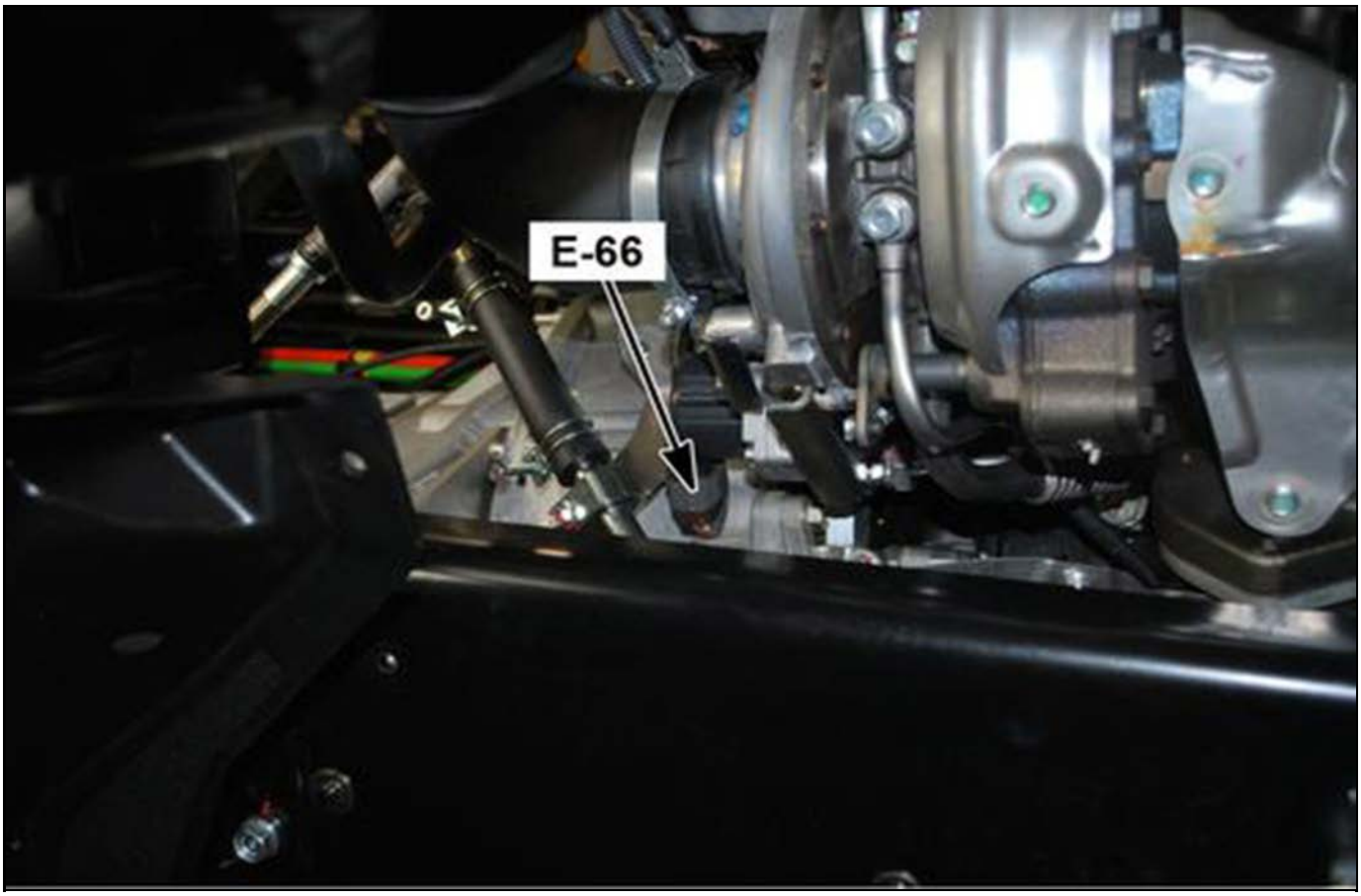

4891763

E-67 Starter

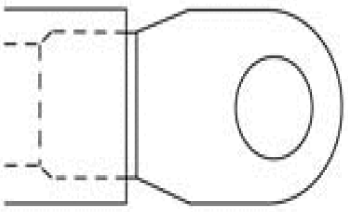

4891772

Connector Part Information		• 90955-11300 • 1-Way Eyelet	
Pin	**Wire Color**	**Circuit Number**	**Function**
—	BLU	PA11	Positive Battery Voltage to Fusible Link
—	BLU	PA10	Positive Battery Voltage to Fusible Link

Right Lower Side of the Engine

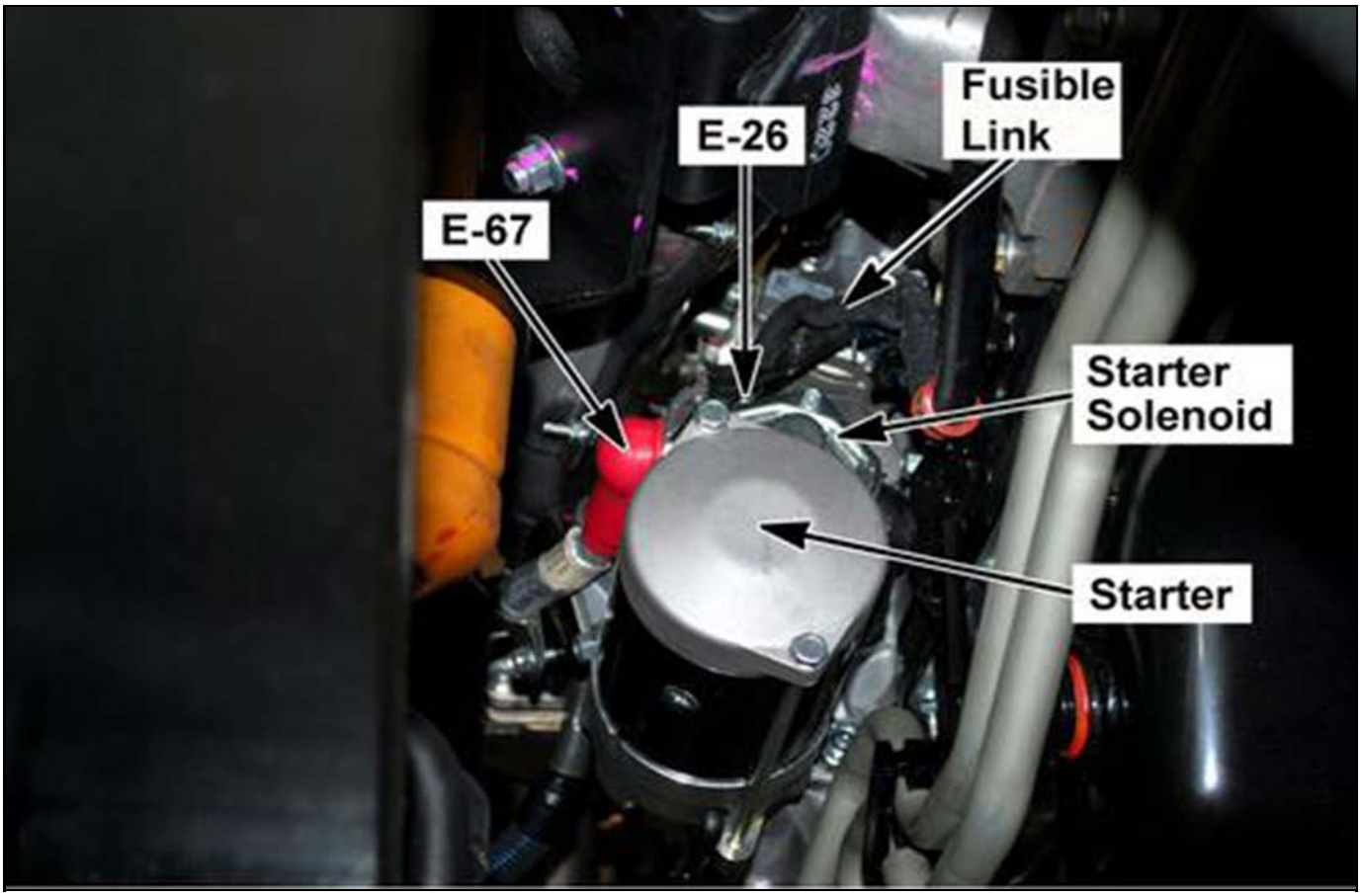

4891429

E-68 Engine Oil Pressure (EOP) Sensor

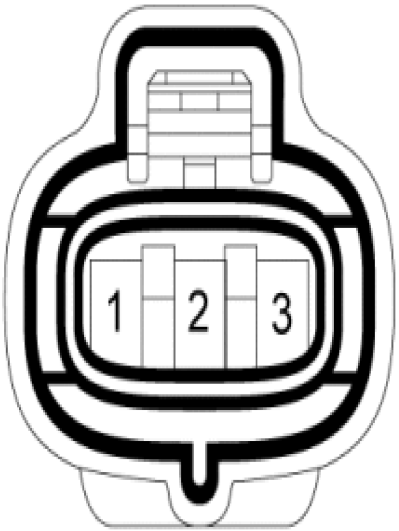

4891773

Connector Part Information		• 6189-0099 • 3-Way F (BLK)	
Pin	**Wire Color**	**Circuit Number**	**Function**
1	BLK	IC155	Sensor Low Reference
2	RED	IC154	Sensor Signal
3	WHT	IC153	Sensor 5V Reference

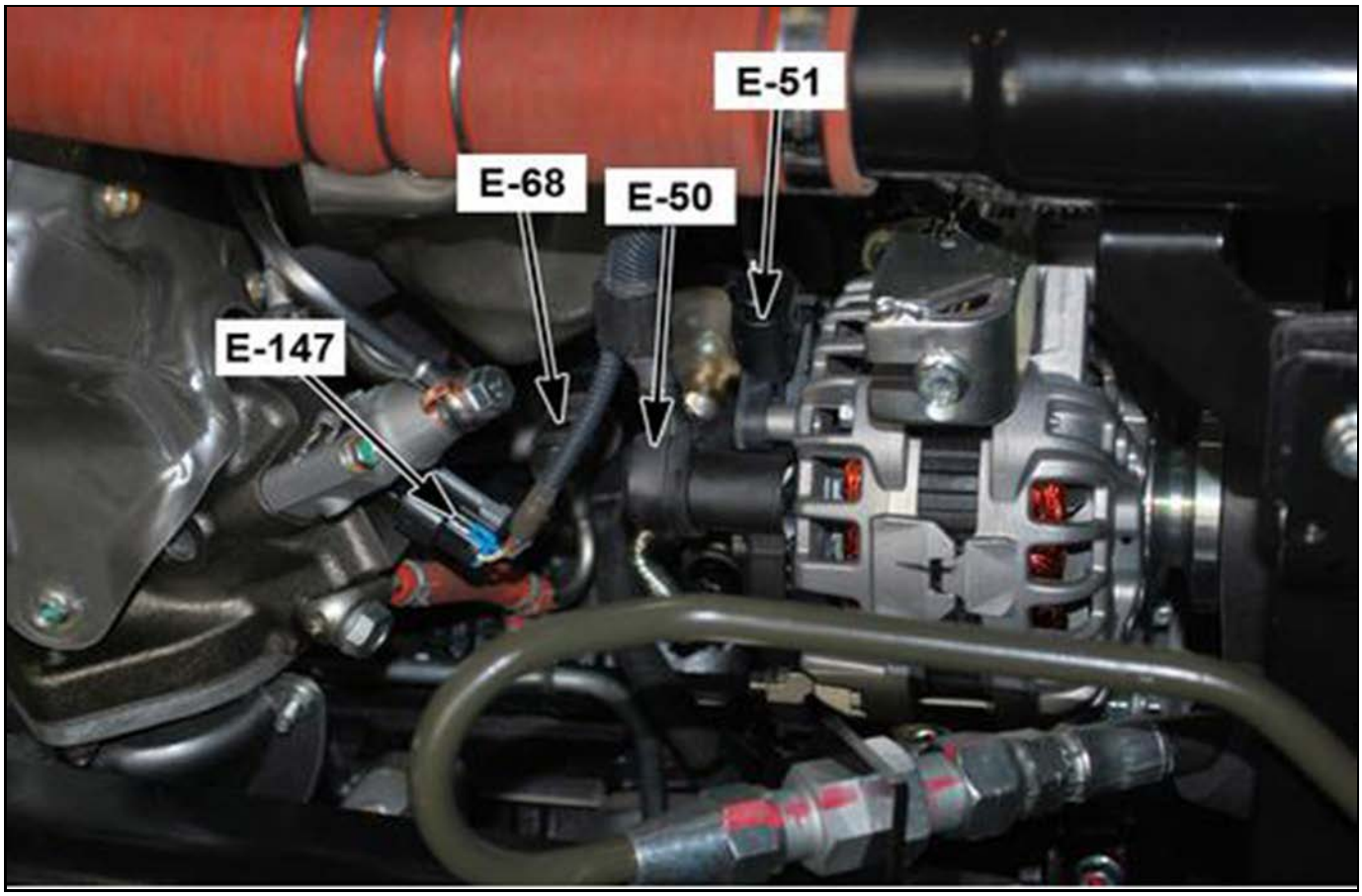

4891452

E-69 Crankshaft Position (CKP) Sensor

4891406

Connector Part Information		• 6248-5317 • 3-Way F (BLK)	
Pin	**Wire Color**	**Circuit Number**	**Function**
1	WHT	IC148	Sensor Signal
2	BLK	IC147	Sensor Low Reference
3	RED	IC114	Sensor 5 Volt Reference 3

Left Rear of the Engine Block

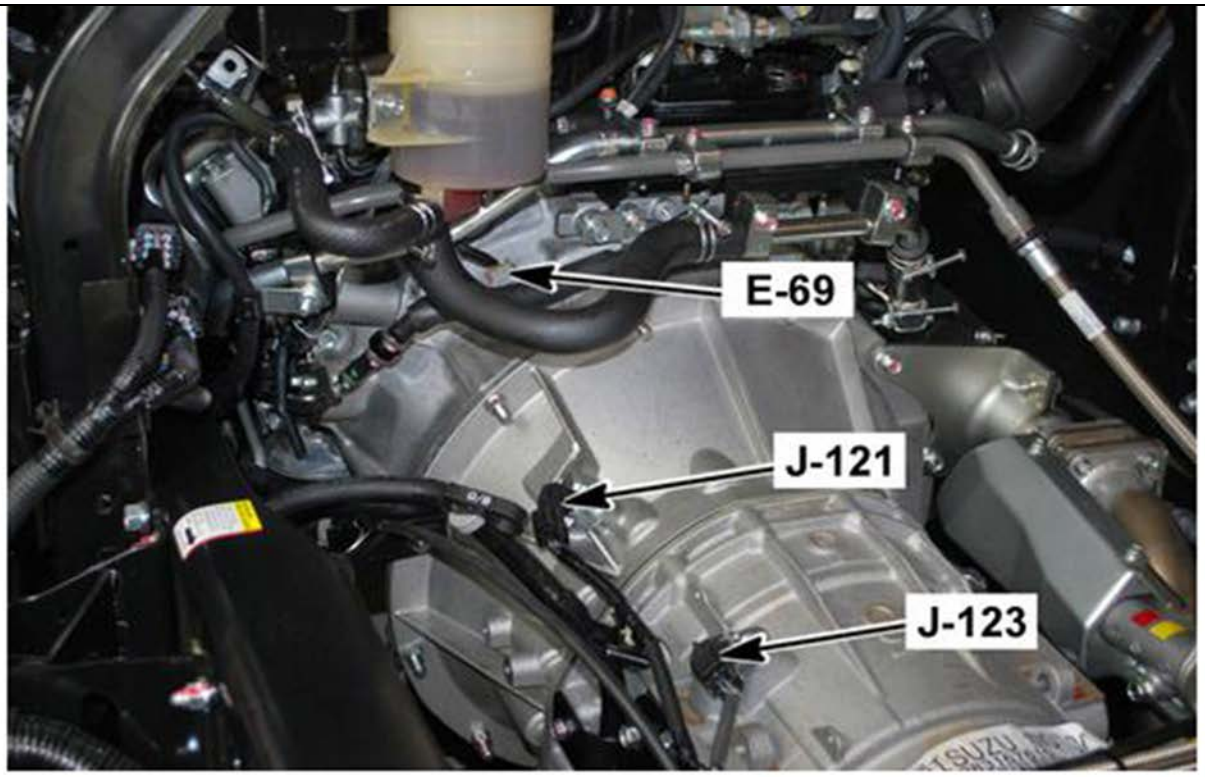

4891776

E-71 Variable Nozzle Turbocharger (VNT) Control Module

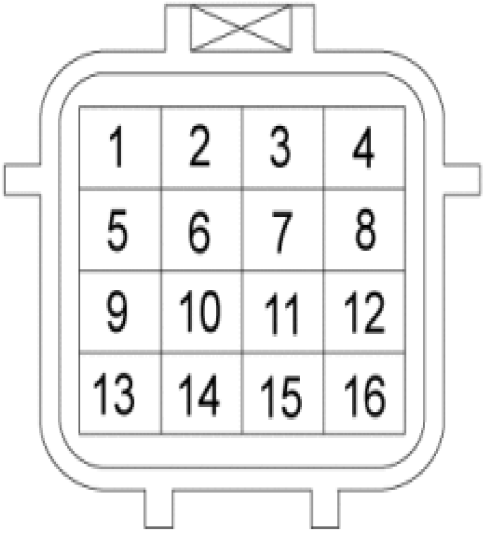

4891780

Connector Part Information		• 7123-7564-40 • 16-Way F (GRY)	
Pin	**Wire Color**	**Circuit Number**	**Function**
1	BLU	IC193	Position Sensor Signal 1
2	BLU/WHT	IC195	Position Sensor Signal 2
3	BRN	IC197	Position Sensor Signal 3
4	RED	IC192	Position Sensor Low Reference
5	GRN	IC194	Position Sensor Shield Ground
6–7	—	—	Not Used
8	BRN	IC202	Position Sensor Reference Voltage
9	—	—	Not Used
10	VIO	IC199	VNT Motor Control 1
11	LT GRN	IC200	VNT Motor Control 2
12	YEL	IC201	VNT Motor Control 3
13	GRN/BLK	IC203	Ignition Voltage Feed
14	BLK	IZ12	Ground to E-74
15	BLU/WHT	TF29	J1939 CAN 1 High Signal
16	BLU	TF30	J1939 CAN 1 Low Signal

Left Front Corner of the Engine Compartment

4891782

E-72 Boost Pressure Sensor

4891785

Connector Part Information		• 174357-2 • 3-Way F (BLK)	
Pin	**Wire Color**	**Circuit Number**	**Function**
1	GRN	IC118	Sensor Signal
2	RED	IC119	Sensor Low Reference
3	BLU	IC117	Sensor 5V Reference

On the Left Upper Side of the Engine, Behind the Throttle Valve

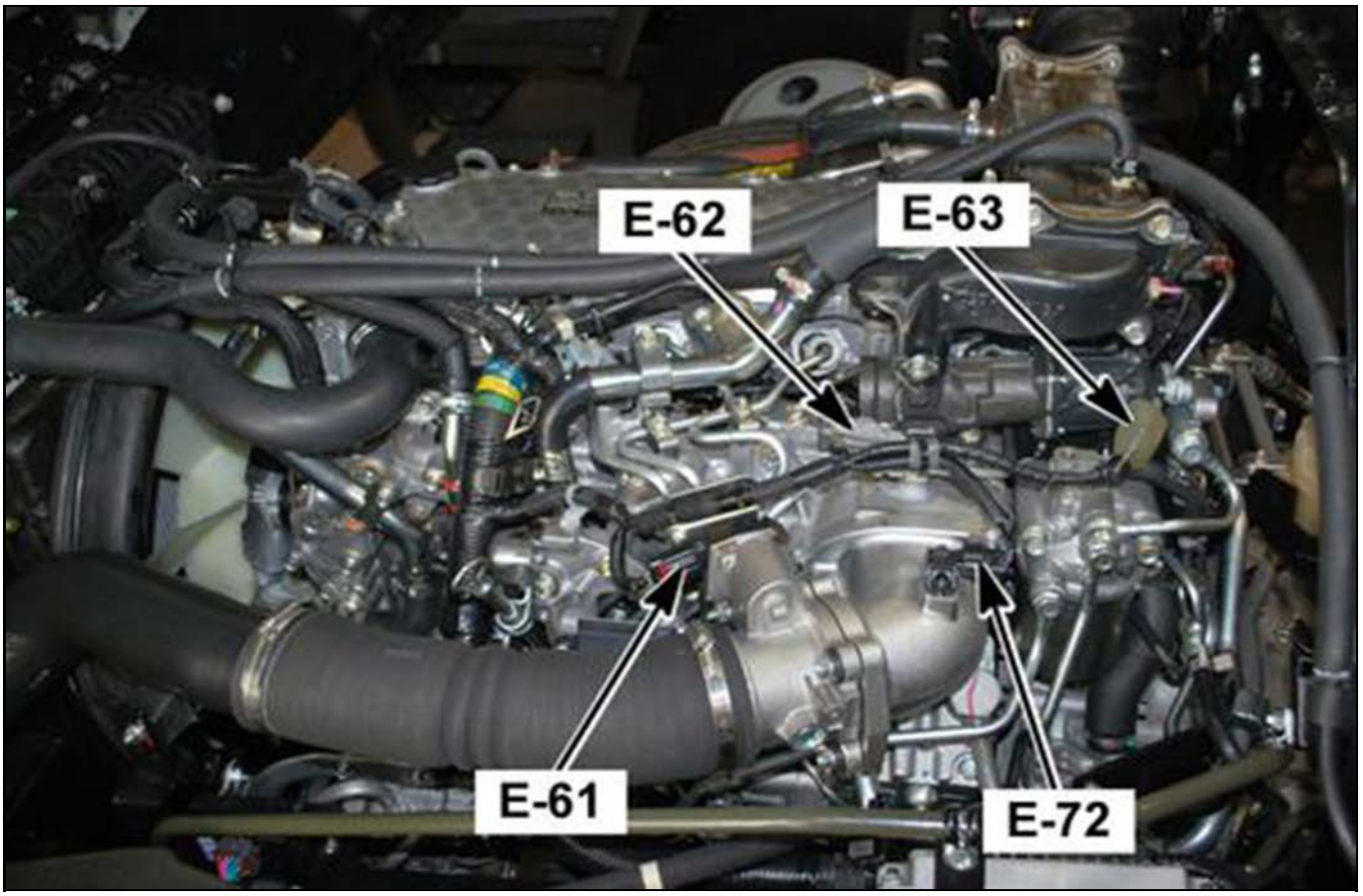

4891740

E-73 Engine Control Module (ECM)

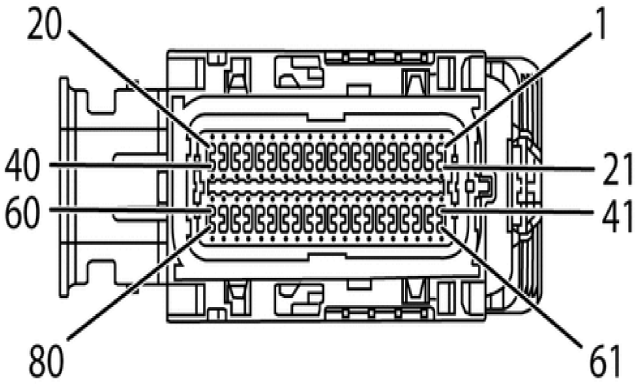

4891791

Connector Part Information		• 34566-1903 • 80-Way F (BLK)	
Pin	**Wire Color**	**Circuit Number**	**Function**
1	BLU	IC223A	DPF Fuel Injector Control (-)
2	WHT	IC222A	DPF Fuel Injector Control (+) (Charge Voltage)
3	GRN/RED	IC113	FRP Regulator Low Side
4	BLU/RED	IC160	EGR Gas Temperature Sensor 2 Low Reference
5	BLK/YEL	IC104	Cylinder #3 Fuel Injector Control
6	RED/WHT	IC149	Common 1 (Cylinder #2 & #3) Fuel Injector Charge Voltage
7	—	—	Not Used
8	GRN/BLK	IC105	Cylinder #2 Fuel Injector Control
9	WHT/BLU	IC110	FRP Regulator Control High Side (PWM)
10	—	—	Not Used
11	GRN/YEL	IC125	ECT Sensor Signal
12	LT GRN/WHT	IC123	FT Sensor Signal
13	GRN	IC118	Boost Pressure Sensor Signal
14	GRN/BLU	IC225	FRP Sensor 1 5 Volt Reference 1 Voltage
15–16	—	—	Not Used
17	WHT/RED	IC97	Common 1 (Cylinder #1 & #4) Fuel Injector Charge Voltage
18	GRN/RED	IC151	Cylinder #1 Fuel Injector Control
19	WHT/VIO	IC152	Cylinder #4 Fuel Injector Control
20–22	—	—	Not Used
23	GRN/RED	IC112	FRP Regulator Low Side
24	BLU/YEL	IC162	IAT Sensor 2 Low Reference
25	—	—	Not Used
26	VIO	IC503	Common 1 (Cylinder #2 & #3) Fuel Injector Charge Voltage
27–28	—	—	Not Used
29	WHT/BLU	IC111	FRP Regulator Control High Side (PWM)
30	—	—	Not Used
31	BLU	IC133A	FRP Sensor 2 Low Reference
32	YEL	IC131	FRP Sensor 2 Signal
33	—	—	Not Used
34	YEL/RED	IC995	Crankshaft Pressure Sensor 5 Volt Reference
35–36	—	—	Not Used
37	LT GRN	IC502	Common 1 (Cylinder #1 & #4) Fuel Injector Charge Voltage
38–40	—	—	Not Used
41	BLK/GRN	IC108	IAF Valve Motor Drive Voltage
42–44	—	—	Not Used
45	BLU	IC117	Boost Pressure Sensor 5 Volt Reference 4 Voltage
46	BLU/RED	IC127	CMP Sensor 5 Volt Reference 4 Voltage
47–48	—	—	Not Used
49	WHT/BLK	IC124	FT Sensor Low Reference
50	—	—	Not Used
51	RED/BLU	IC161	IAT Sensor 2 Signal
52	BLU/BLK	IC997	Crankshaft Pressure Sensor Signal

Connector Part Information		• 34566-1903 • 80-Way F (BLK)	
Pin	**Wire Color**	**Circuit Number**	**Function**
53	—	—	Not Used
54	WHT	IC148	CKP Sensor Signal
55	VIO/WHT	IC996	Crankshaft Pressure Sensor Low Reference
56	BLK/BLU	IC126	ECT Sensor Low Reference
57	BLU	IC129A	CMP Sensor Low Reference
58	BLU/WHT	IC128	CMP Sensor Signal
59	GRN	IC130	FRP Sensor 2 5 Volt Reference 2 Voltage
60	WHT	IC227A	FRP Sensor 1 Low Reference
61	GRN/WHT	IC109	IAF Valve Motor Control Low Side (PWM)
62–63	—	—	Not Used
64	BLU/WHT	IC157	EGR Gas Temperature Sensor 1 Low Reference
65	RED	IC114	CKP Sensor 5V Reference 3 Voltage
66	ORN	IC998	DPF Fuel Cut Solenoid Valve Control
67–69	—	—	Not Used
70	RED/GRN	IC156	EGR Gas Temperature Sensor 1 Signal
71–72	—	—	Not Used
73	RED/YEL	IC159	EGR Gas Temperature Sensor 2 Signal
74	—	—	Not Used
75	BLK	IC147A	CKP Sensor Low Reference
76	RED	IC119	Boost Pressure Sensor Low Reference
77	BLU	E04	CAN Serial Data Low, to Resistor and Glow Plug Control Module
78	BLU/WHT	E03	CAN Serial Data High, to Resistor and Glow Plug Control Module
79	BRN	IC226	FRP Sensor 1 Signal
80	—	—	Not Used

Left Side of the Engine, in Front of the Rear Cab Mount

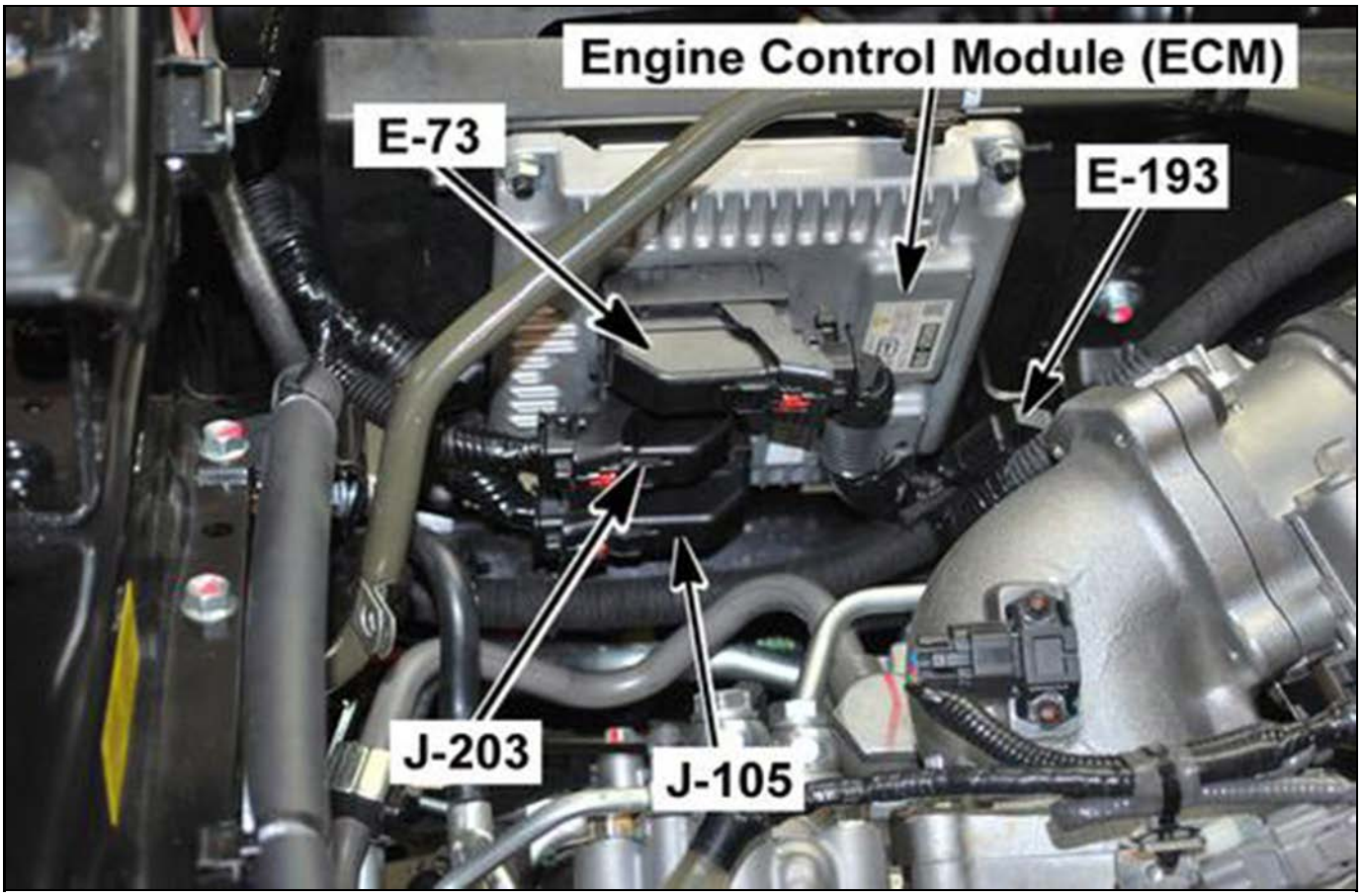

4891795

E-74 Ground

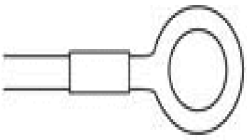

4891426

Connector Part Information		• LA 210 • 1-Way Eyelet	
Pin	**Wire Color**	**Circuit Number**	**Function**
—	BLK	HY01	Ground to Glow Plug Control Module, EGR Valve, VNT Control Module
—	BLK	EE08	Ground to Engine Oil Level Switch, Low Coolant Level Sensor

Left Side of the Engine, Above the Motor Mount

4891799

E-75 Fuel Injector No. 1

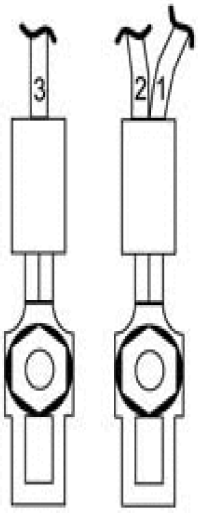

4891803

Connector Part Information		• 1-Way F	
Pin	**Wire Color**	**Circuit Number**	**Function**
1	WHT	2	Fuel Injector Supply Voltage
2	WHT	1	Fuel Injector Supply Voltage
3	GRN	3	Fuel Injector #1 Control

On the Upper Left Side of the Engine, In the Cylinder Head, Under the Valve Cover, At Cylinder 1

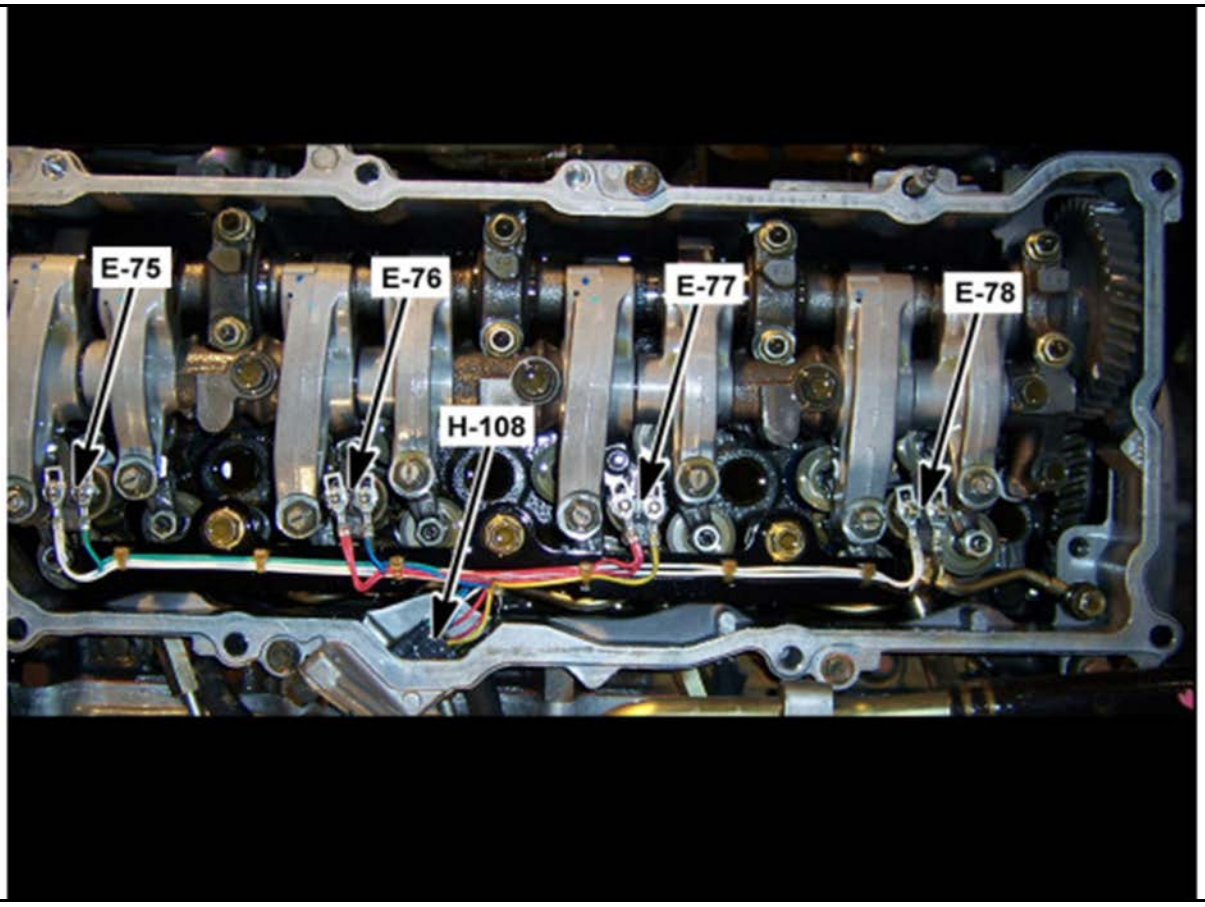

4891806

E-76 Fuel Injector No. 2

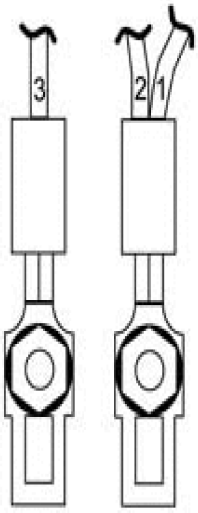

4891803

Connector Part Information		• 1-Way F	
Pin	**Wire Color**	**Circuit Number**	**Function**
1	RED	4	Fuel Injector Supply Voltage
2	RED	5	Fuel Injector Supply Voltage
3	BLU	6	Fuel Injector #2 Control

On the Upper Left Side of the Engine, In the Cylinder Head, Under the Valve Cover, At Cylinder 2

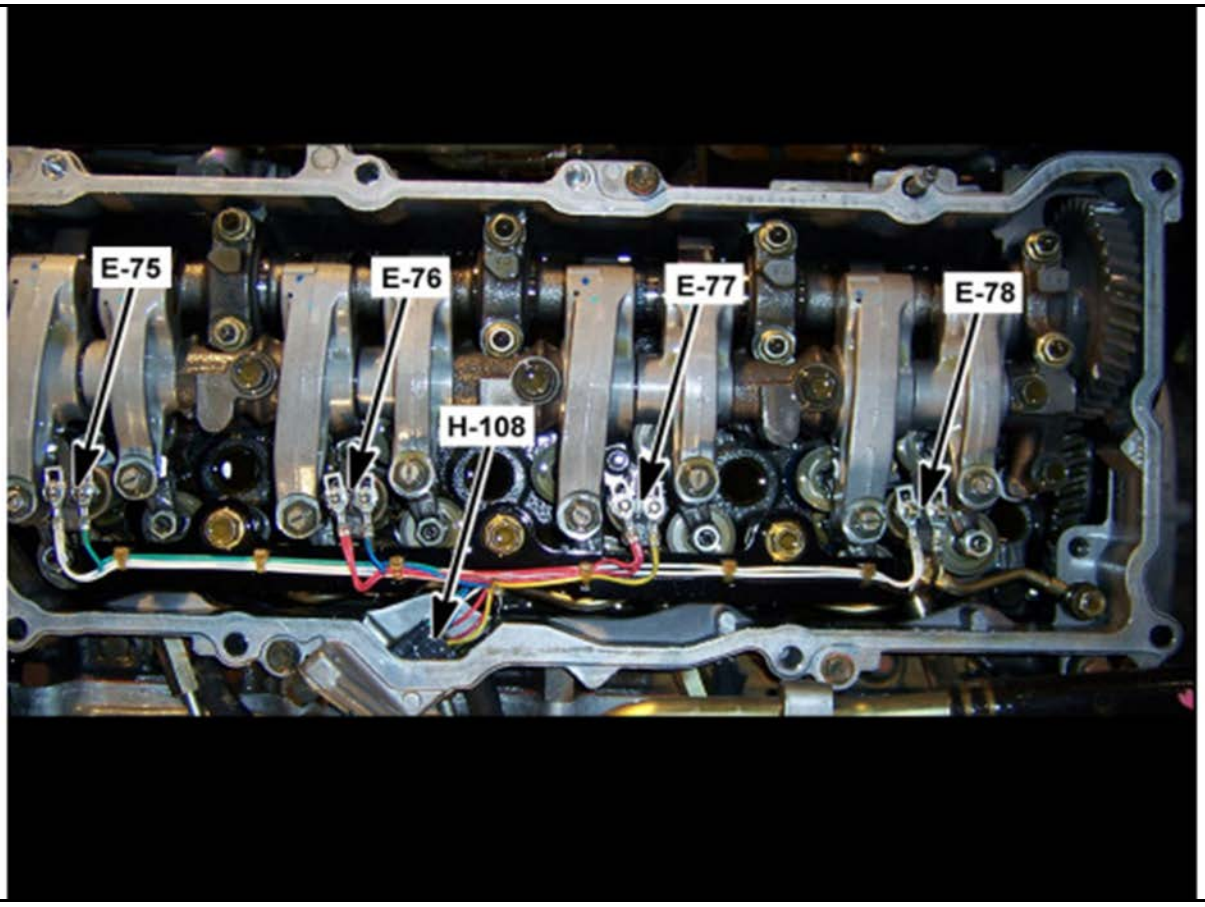

4891806

E-77 Fuel Injector No. 3

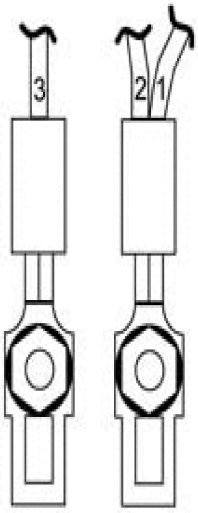

4891803

Connector Part Information		• 1-Way F	
Pin	**Wire Color**	**Circuit Number**	**Function**
1	RED	7	Fuel Injector Supply Voltage
2	RED	4	Fuel Injector Supply Voltage
3	YEL	8	Fuel Injector #3 Control

On the Upper Left Side of the Engine, In the Cylinder Head, Under the Valve Cover, At Cylinder 3

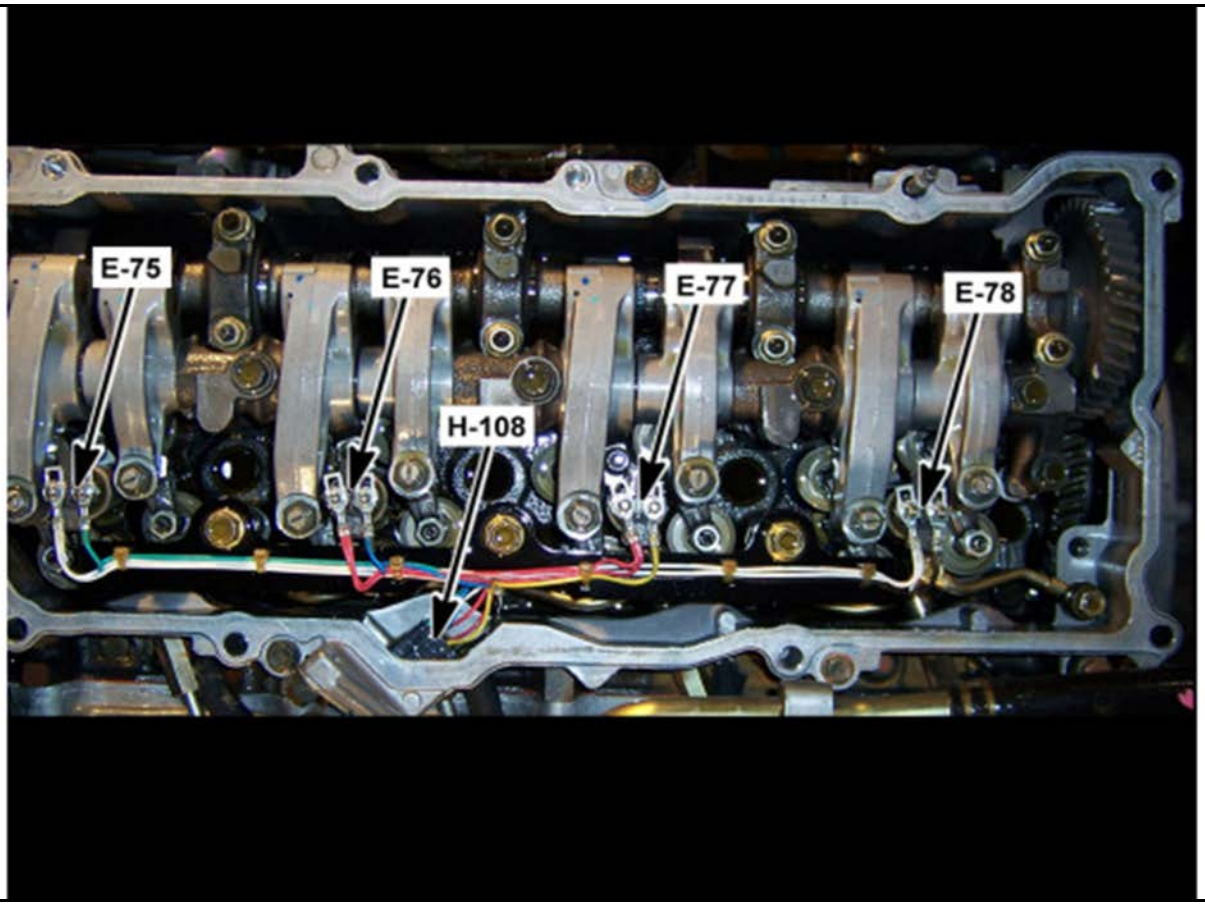

4891806

E-78 Fuel Injector No. 4

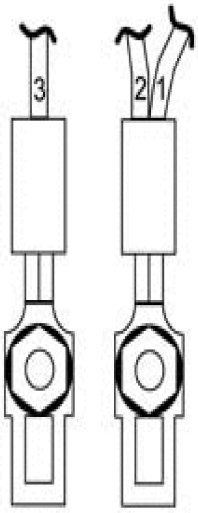

4891803

Connector Part Information		• 1-Way F	
Pin	**Wire Color**	**Circuit Number**	**Function**
1	WHT	9	Fuel Injector Supply Voltage
2	WHT	1	Fuel Injector Supply Voltage
3	BLK	10	Fuel Injector #4 Control

On the Upper Left Side of the Engine, In the Cylinder Head, Under the Valve Cover, At Cylinder 4

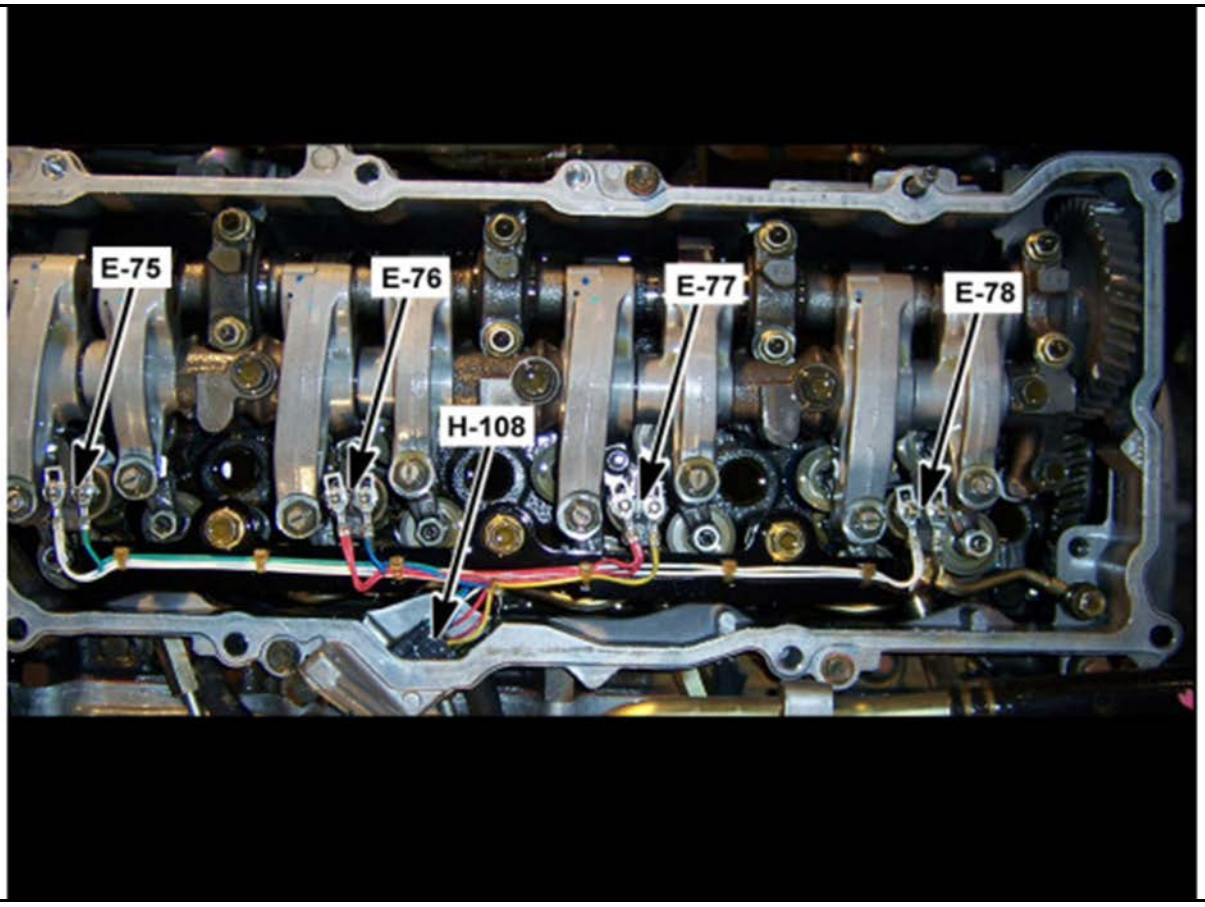

4891806

E-146 Turbocharger Outlet Air Temperature Sensor

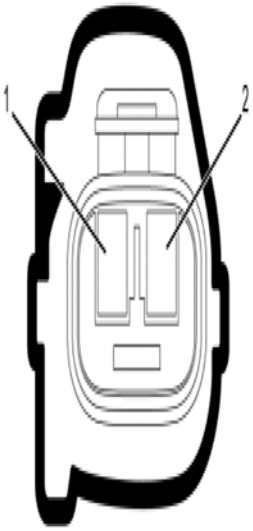

4891459

Connector Part Information		• 7383-7020-30 • 2-Way F (BLK)	
Pin	**Wire Color**	**Circuit Number**	**Function**
1	PNK	IC115	Sensor Signal
2	BRN	IC116	Sensor Low Reference

Right Rear of the Cylinder Head

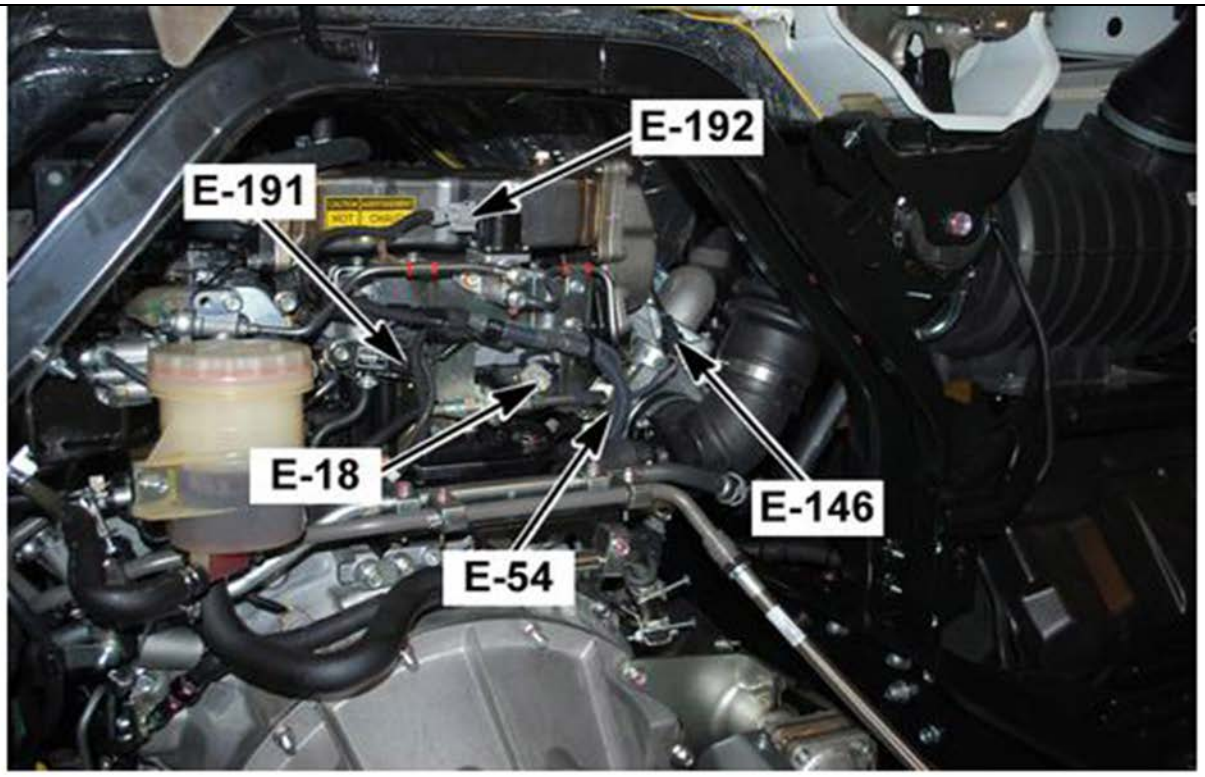

4891407

E-147 Diesel Particulate Filter (DPF) Fuel Injector

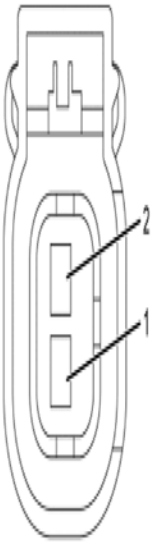

4891845

Connector Part Information		• 1530-5086 • 2-Way F (BLK)	
Pin	**Wire Color**	**Circuit Number**	**Function**
1	WHT	IC222	DPF Fuel Injector Charge Voltage
2	BLU	IC223	DPF Fuel Injector Control

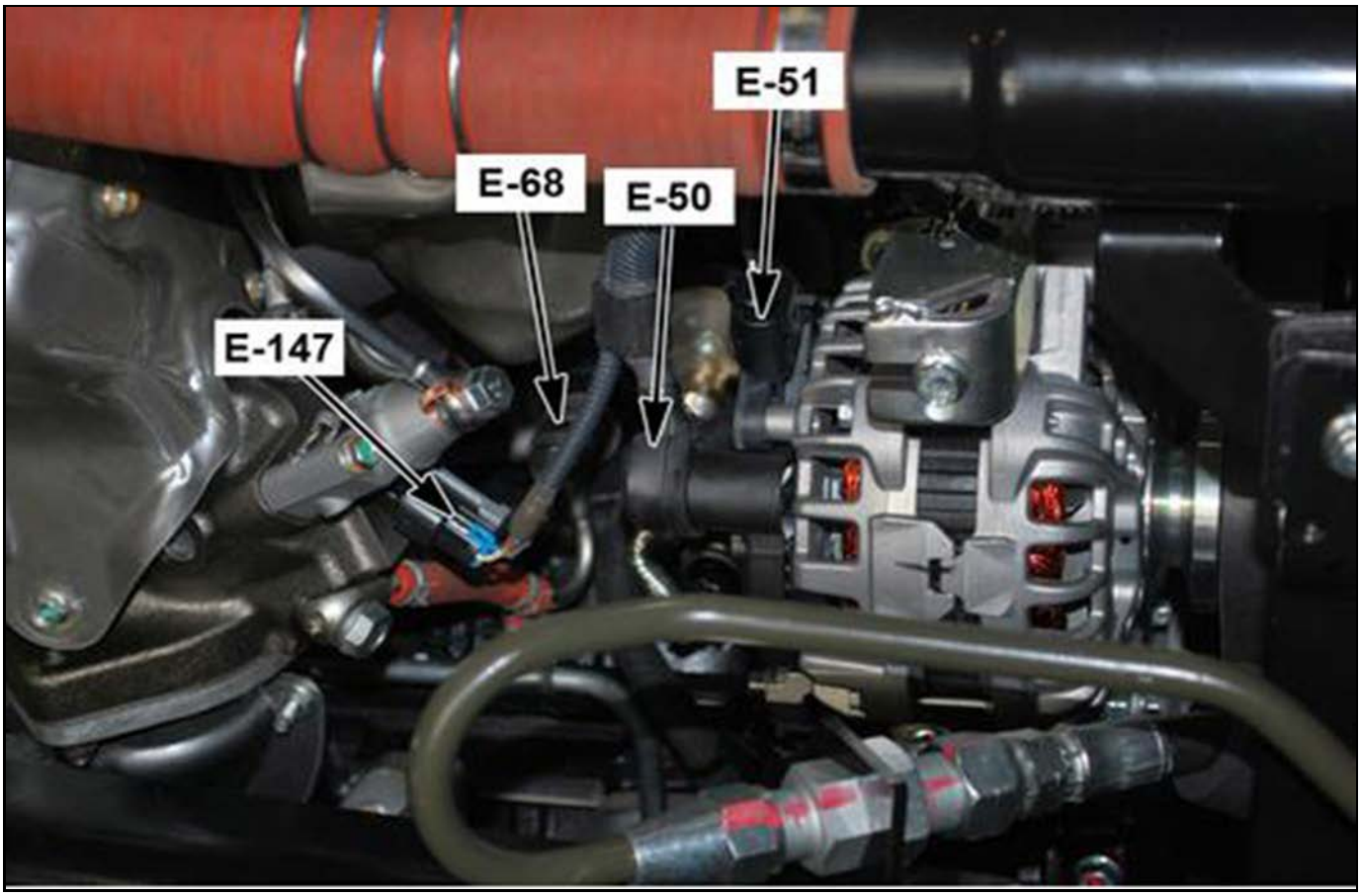

4891452

E-165 Fuel Rail Pressure (FRP) Sensor

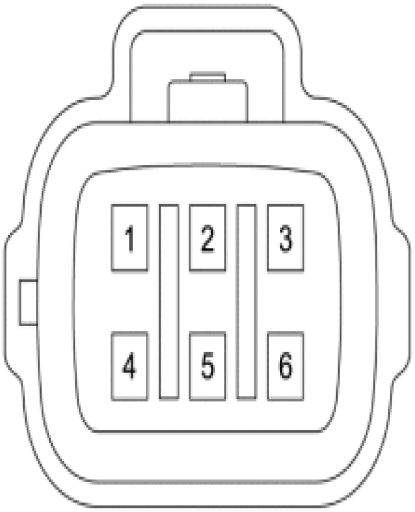

4891850

Connector Part Information		• 6189-0331 • 6-Way F (BLK)	
Pin	**Wire Color**	**Circuit Number**	**Function**
1	GRN/BLU	IC225	Sensor 1 5V Reference
2	BRN	IC226	Sensor 1 Signal
3	WHT	IC227	Sensor 1 Low Reference
4	BLU	IC133	Sensor 2 Low Reference
5	YEL	IC131	Sensor 2 Signal
6	GRN	IC130	Sensor 2 5V Reference

On the Left Side of the Engine, On the Front of the Fuel Rail

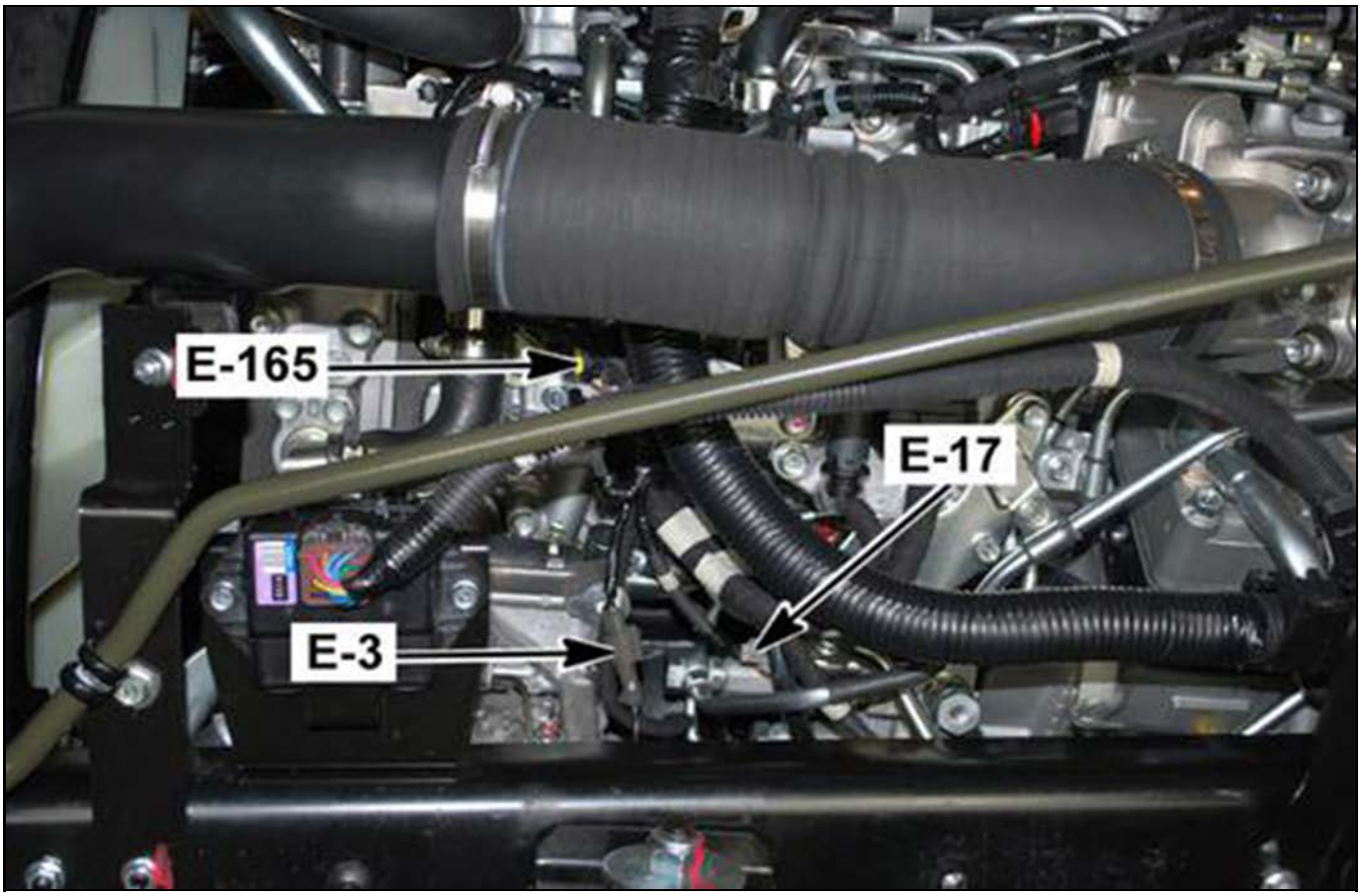

4891369

E-191 Crankcase Pressure Sensor

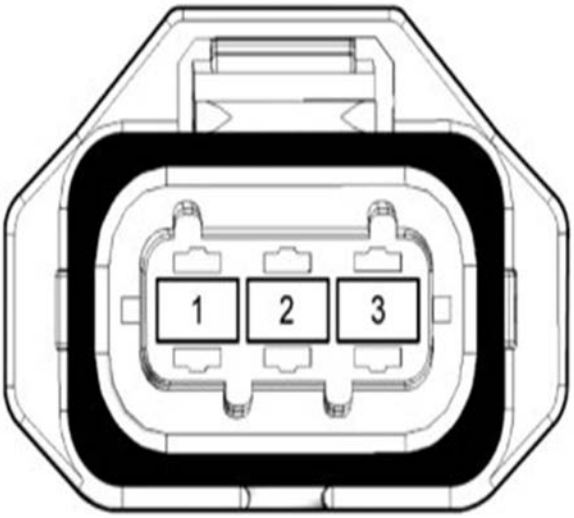

4891861

Connector Part Information		• 928-403-966 • 3-Way F (BLK)	
Pin	**Wire Color**	**Circuit Number**	**Function**
1	YEL/RED	IC995	Sensor 5V Reference
2	VIO/WHT	IC996	Sensor Low Reference
3	BLU/BLK	IC997	Sensor Signal

Back of the Cylinder Head

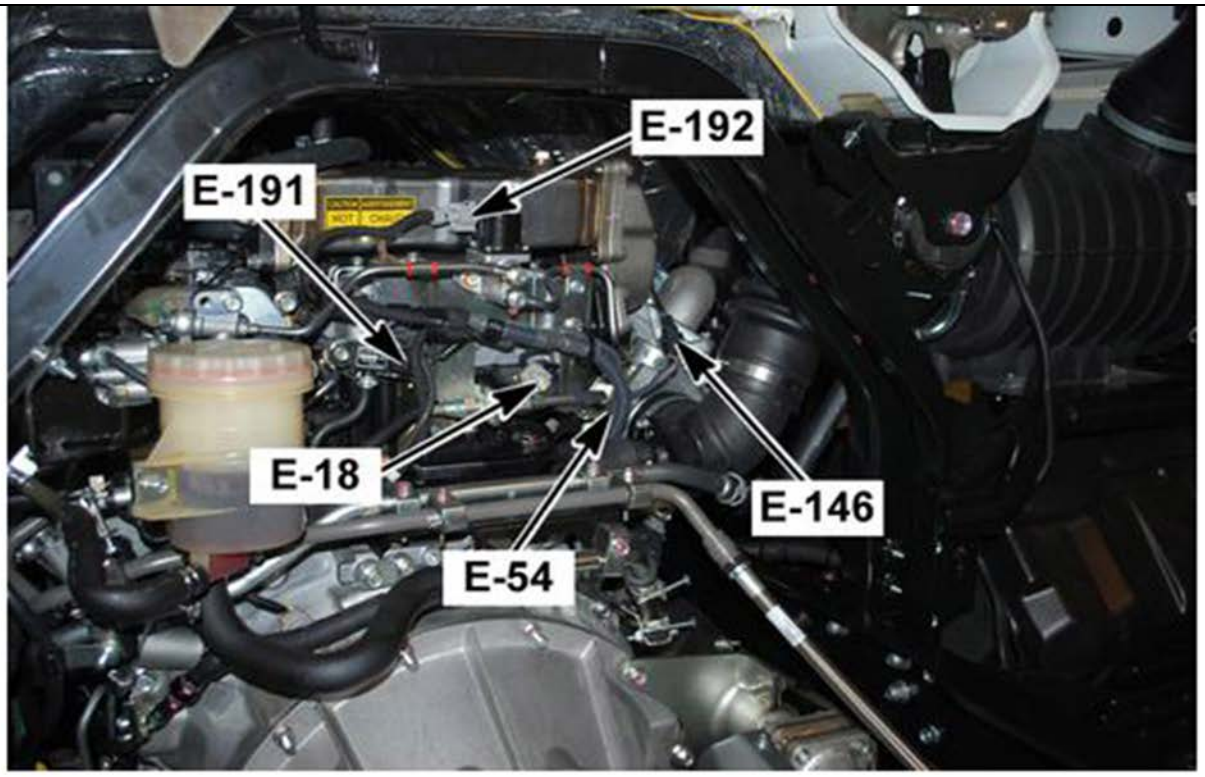

4891407

E-192 DPF Fuel Cut Solenoid Valve

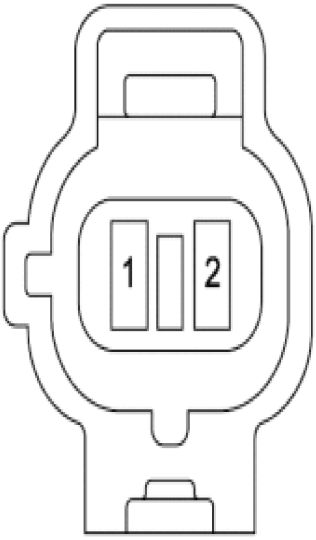

4891863

Connector Part Information		• 6189-0682 • 2-Way F (GRY)	
Pin	**Wire Color**	**Circuit Number**	**Function**
1	ORN	IC998	DPF Fuel Cut Solenoid Valve Solenoid Valve Control to ECM
2	RED/WHT	IC999E	DPF Fuel Cut Solenoid Valve Solenoid Valve Voltage from X-18 ECM Main Relay

Back of the Cylinder Head

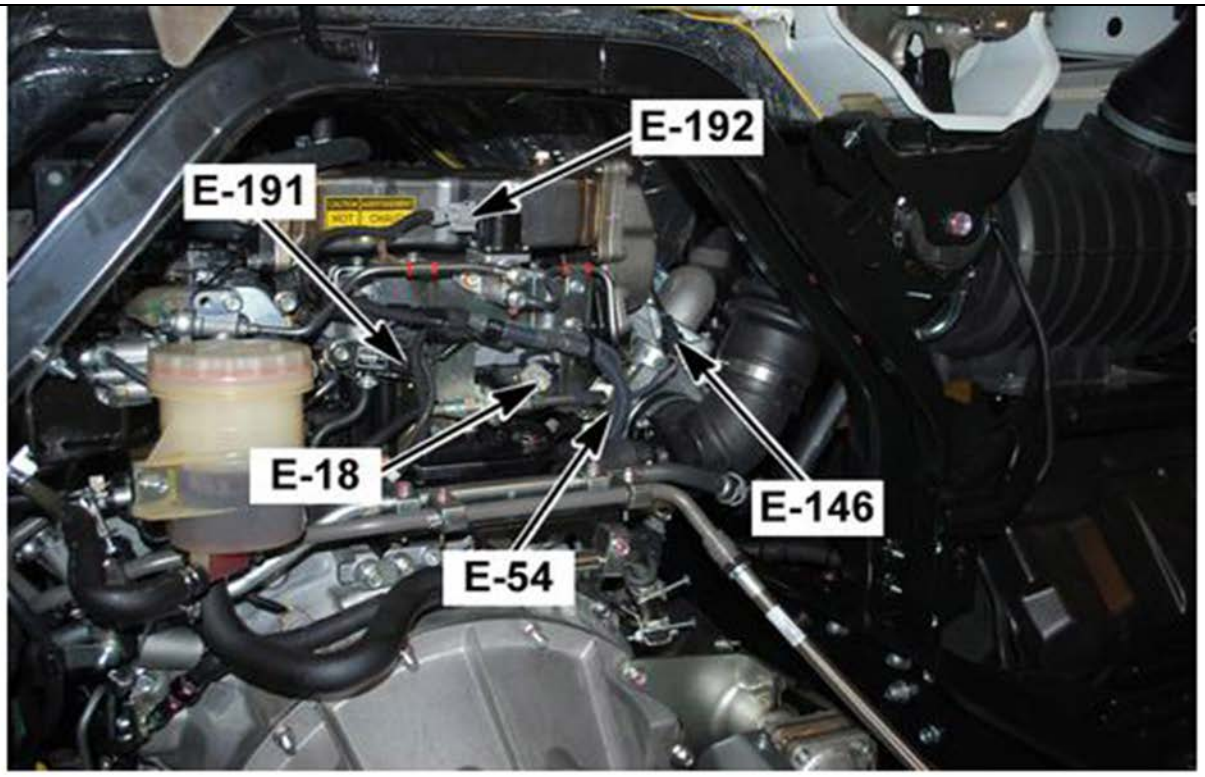

4891407

E-193 CAN Resistor

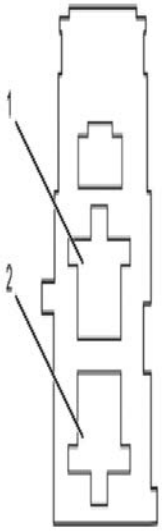

4891112

Connector Part Information		• 7323-6423-30 • 2-Way F (BLK)	
Pin	**Wire Color**	**Circuit Number**	**Function**
1	BLU/WHT	E01	CAN Serial Data High
2	BLU	E02	CAN Serial Data Low

Left Side of the Engine, Next to the Engine Control Module (ECM)

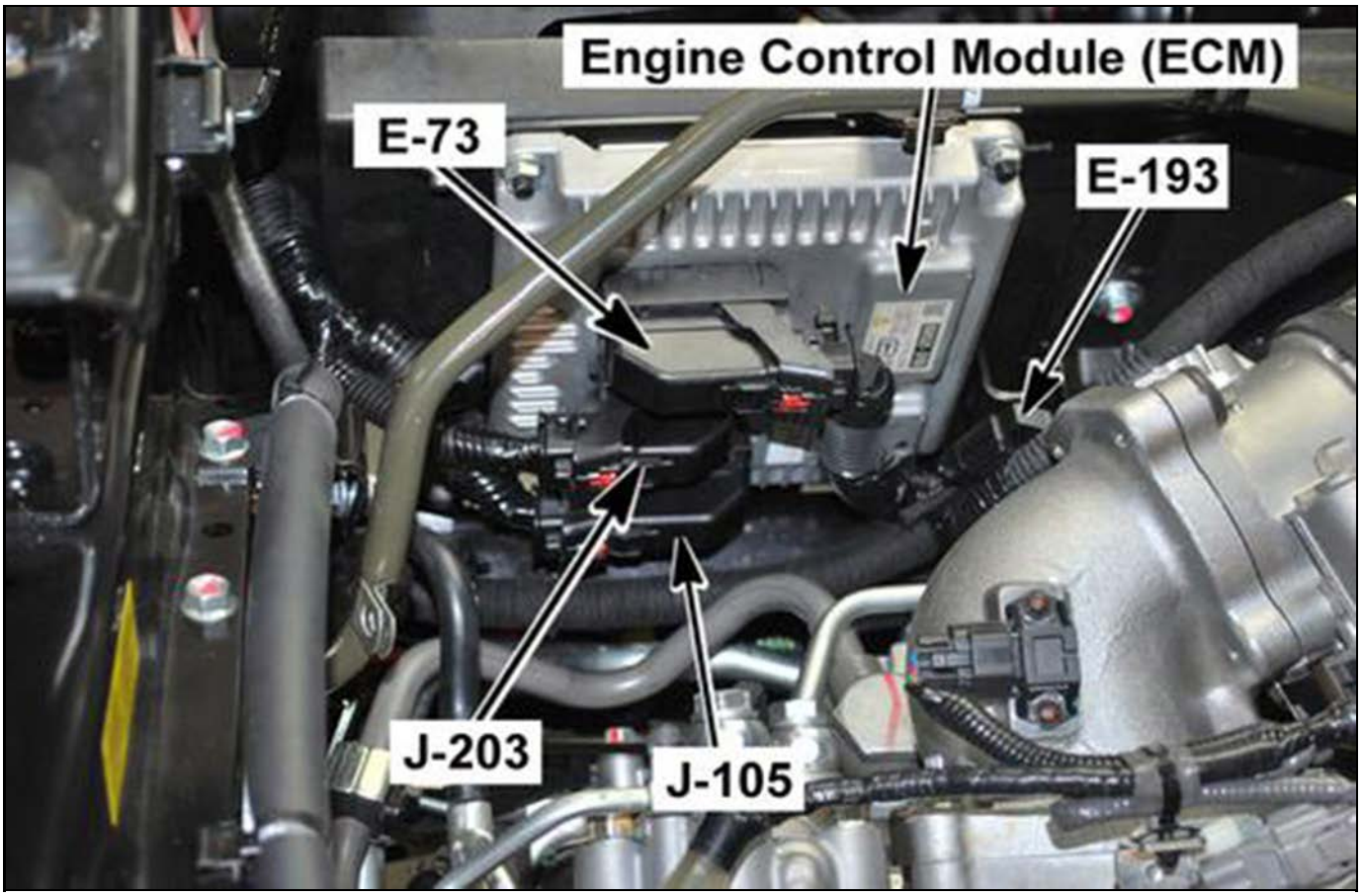

4891795

J-4 Condenser Fan

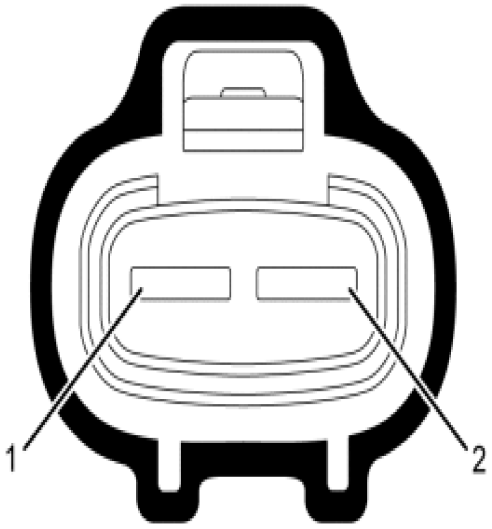

4892326

Connector Part Information		• 61761466 • 2-Way F (GRY)	
Pin	**Wire Color**	**Circuit Number**	**Function**
1	BLK	QX001B	Ground to B-48 Junction Block (B-53 Ground)
2	BLU/BLK	QA003B	Switch Output Voltage from Condenser Fan Relay

Under the Right Front of the Cab, In Front of the Front Mud Flap

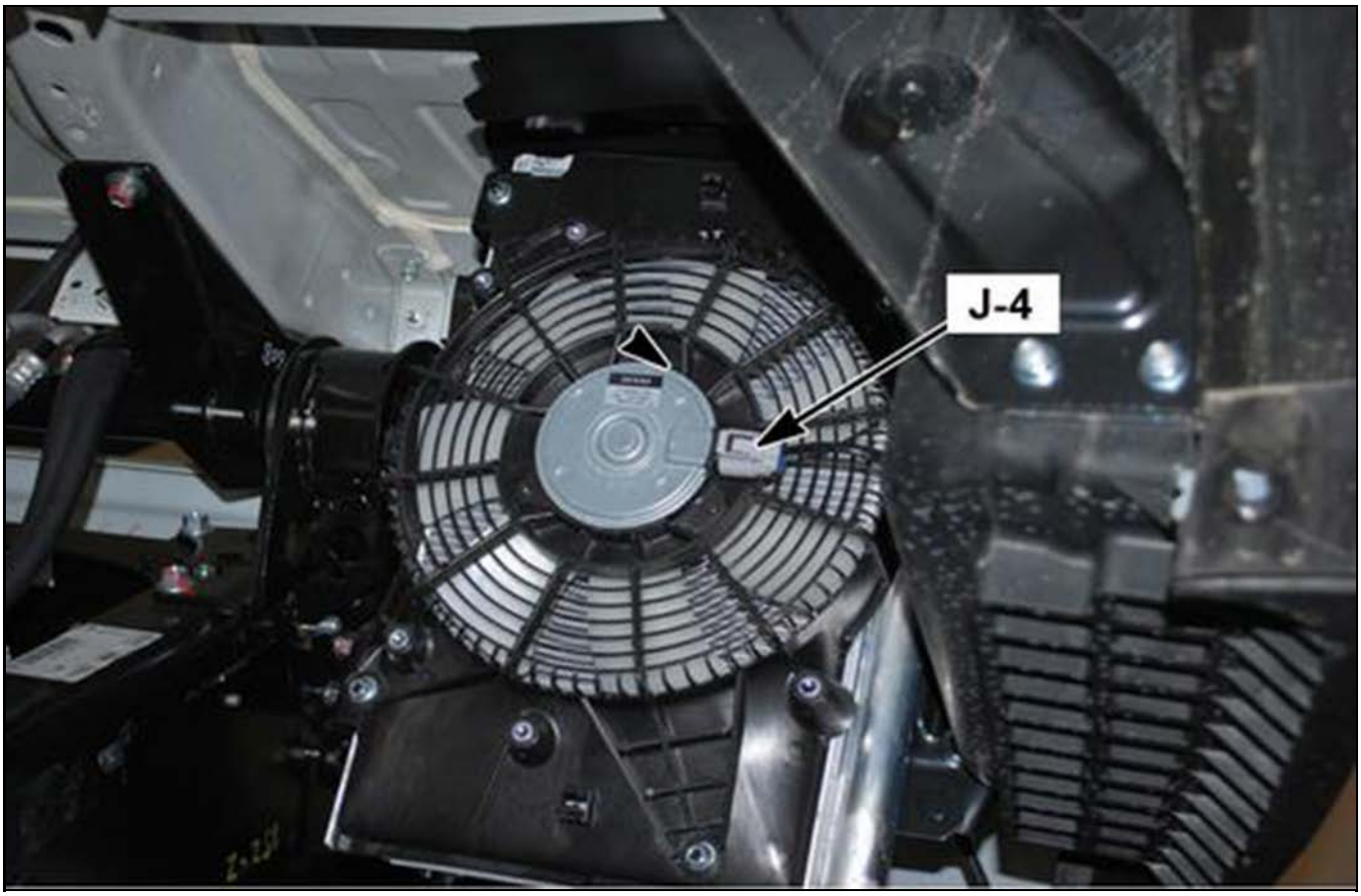

4892329

J-7 Ground

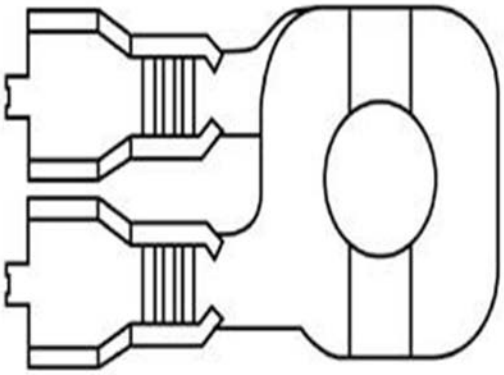

4892337

Connector Part Information		• LA-08-R1 • 1-Way Eyelet	
Pin	**Wire Color**	**Circuit Number**	**Function**
—	BLK	ZZ027C	Ground to Splice 5

Right Inner Frame Rail, Next to the Batteries

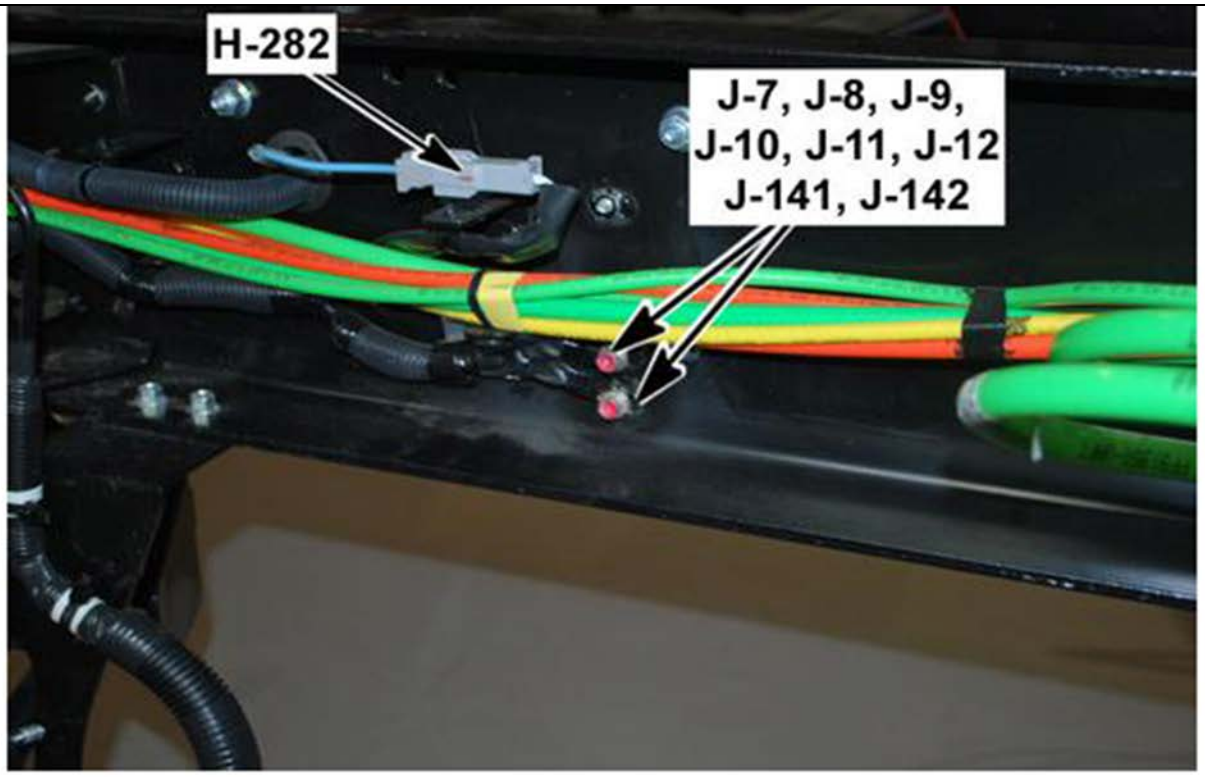

4892315

J-8 Ground

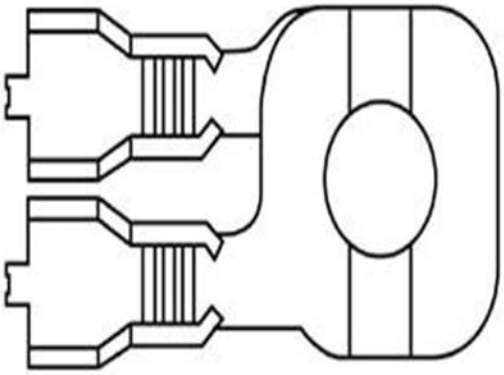

4892337

Connector Part Information		• LA-08-L1 • 1-Way Eyelet	
Pin	**Wire Color**	**Circuit Number**	**Function**
—	BLK	ZZ001C	Ground to Splice 2

Right Inner Frame Rail, Next to the Batteries

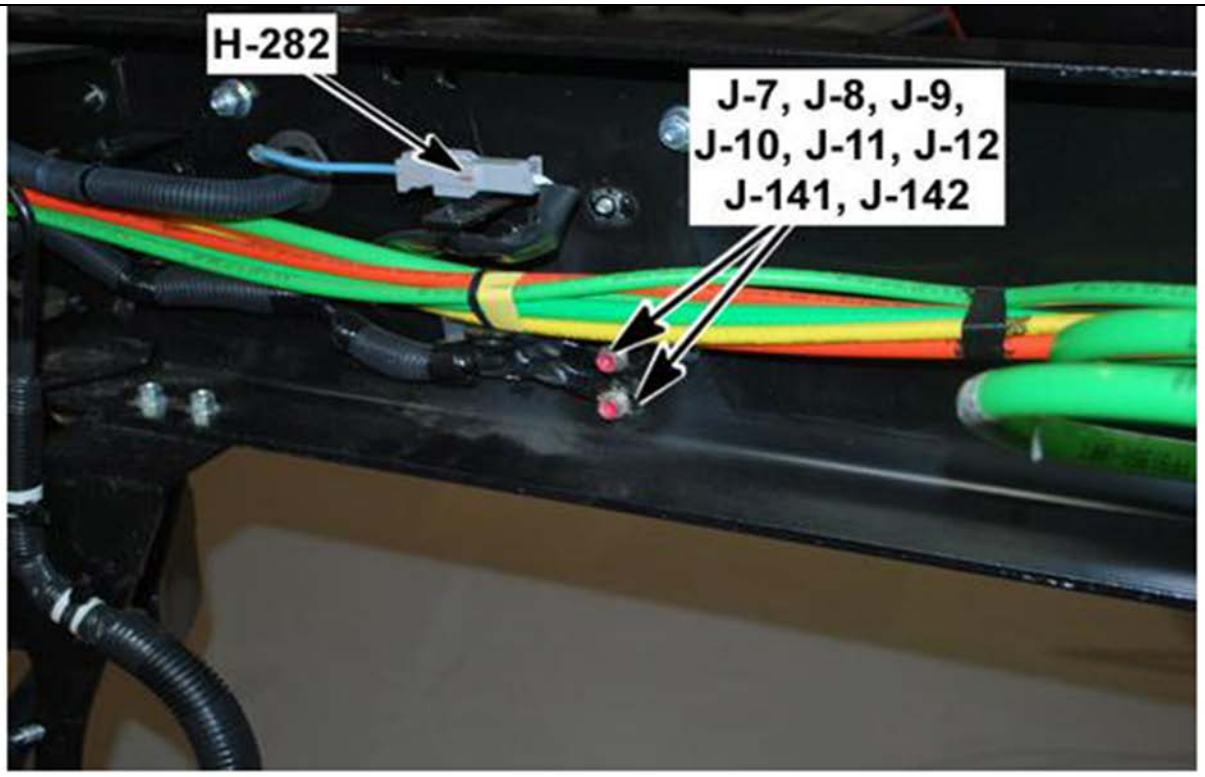

4892315

J-9 Ground

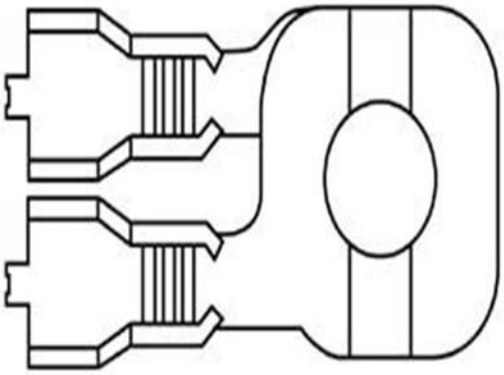

4892337

Connector Part Information		• LA-08-R1 • 1-Way Eyelet	
Pin	**Wire Color**	**Circuit Number**	**Function**
—	BLK	ZZ028C	Ground to Splice 5

Right Inner Frame Rail, Next to the Batteries

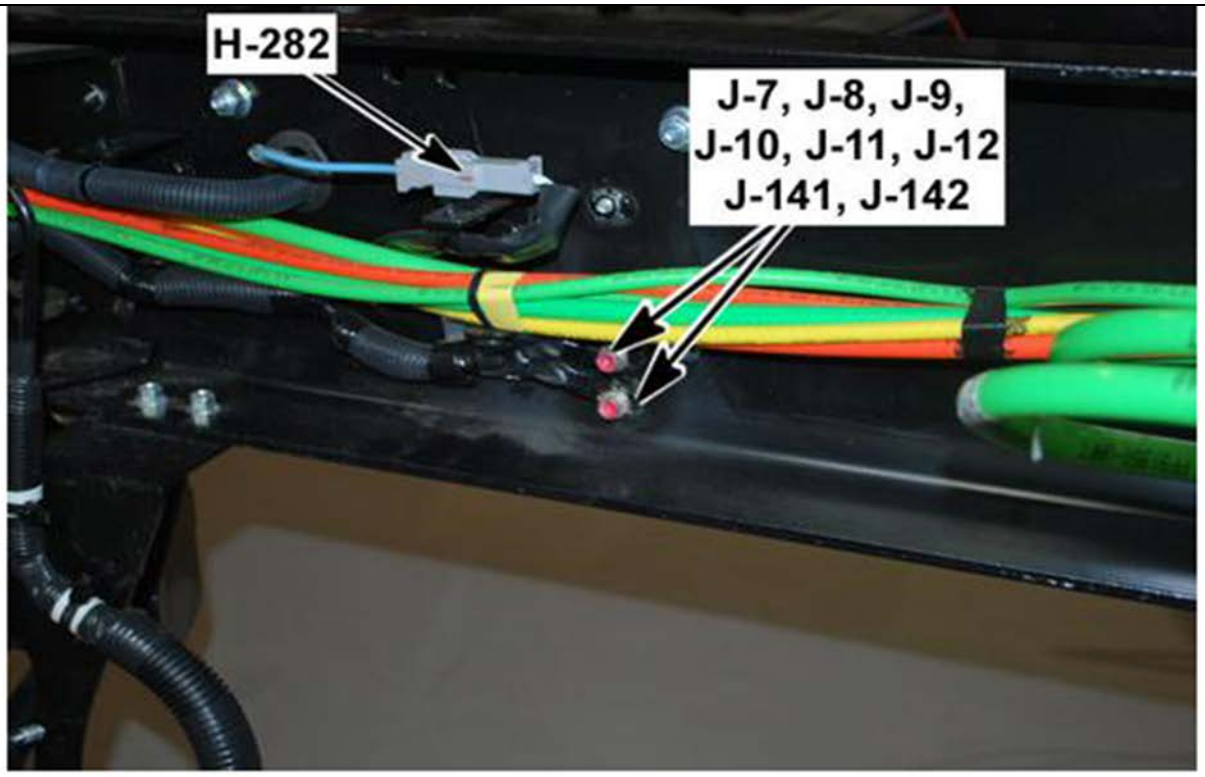

4892315

J-10 Ground

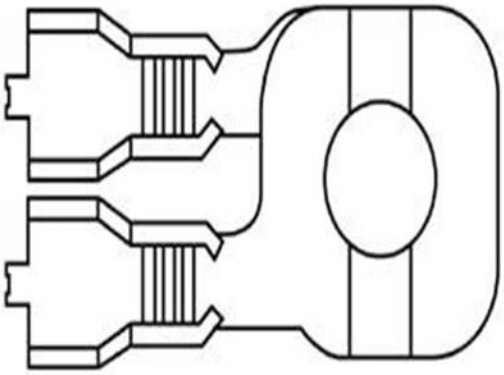

4892337

Connector Part Information		• LA-08-L1 • 1-Way Eyelet	
Pin	**Wire Color**	**Circuit Number**	**Function**
—	BLK	ZZ024C	Ground to Splice 7

Right Inner Frame Rail, Next to the Batteries

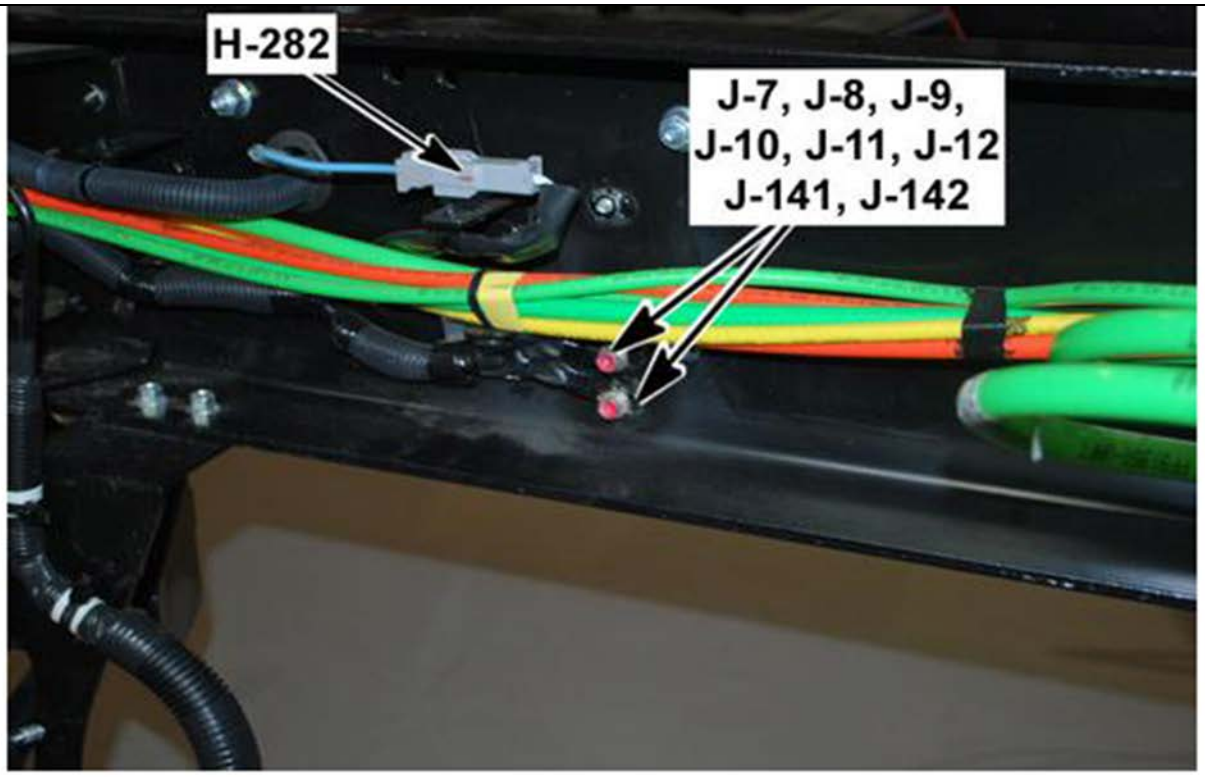

4892315

J-11 Ground

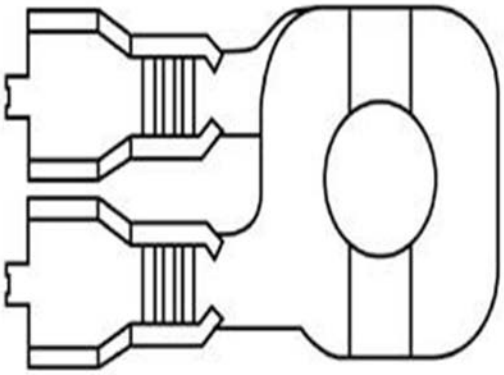

4892337

Connector Part Information		• LA-08-L1 • 1-Way Eyelet	
Pin	**Wire Color**	**Circuit Number**	**Function**
—	BLK	ZZ026C	Ground to Splice 2

Right Inner Frame Rail, Next to the Batteries

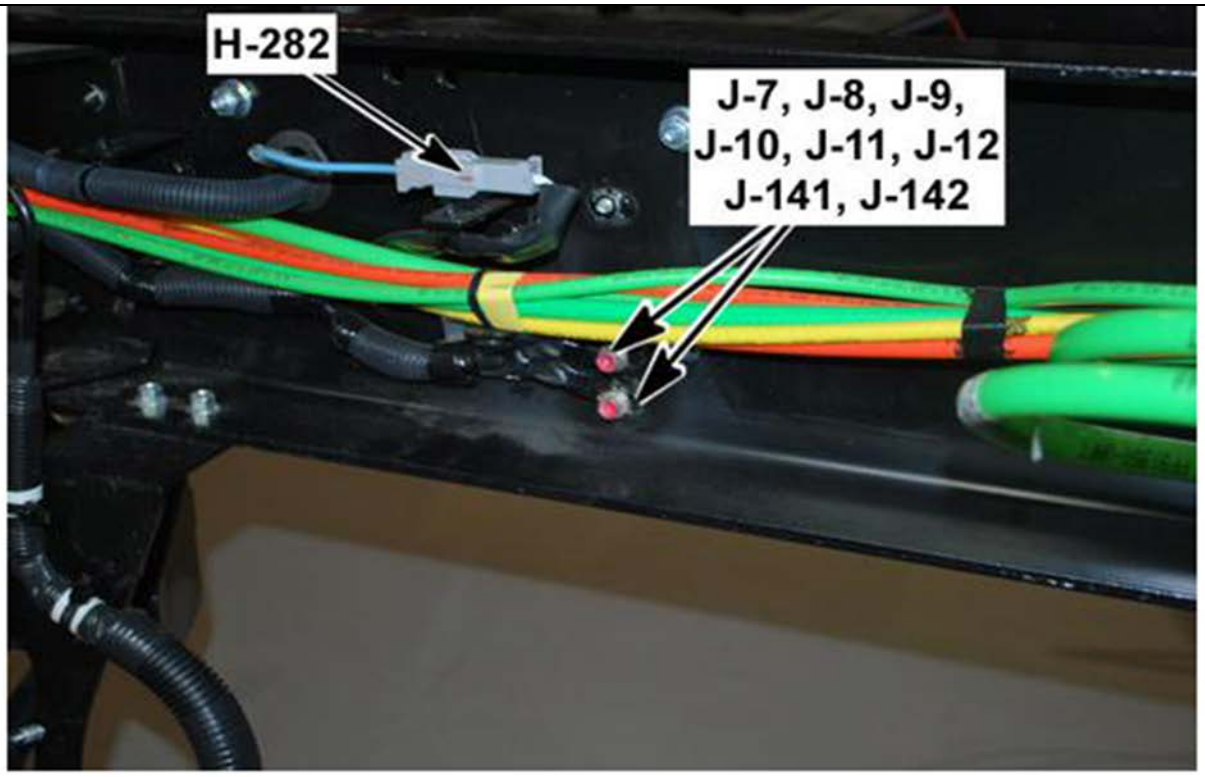

4892315

J-12 Ground

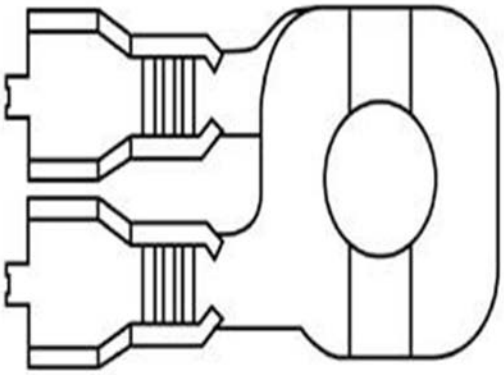

4892337

Connector Part Information		• LA-08-R1 • 1-Way Eyelet	
Pin	**Wire Color**	**Circuit Number**	**Function**
—	BLK	ZZ023C	Ground to Splice 7

Right Inner Frame Rail, Next to the Batteries

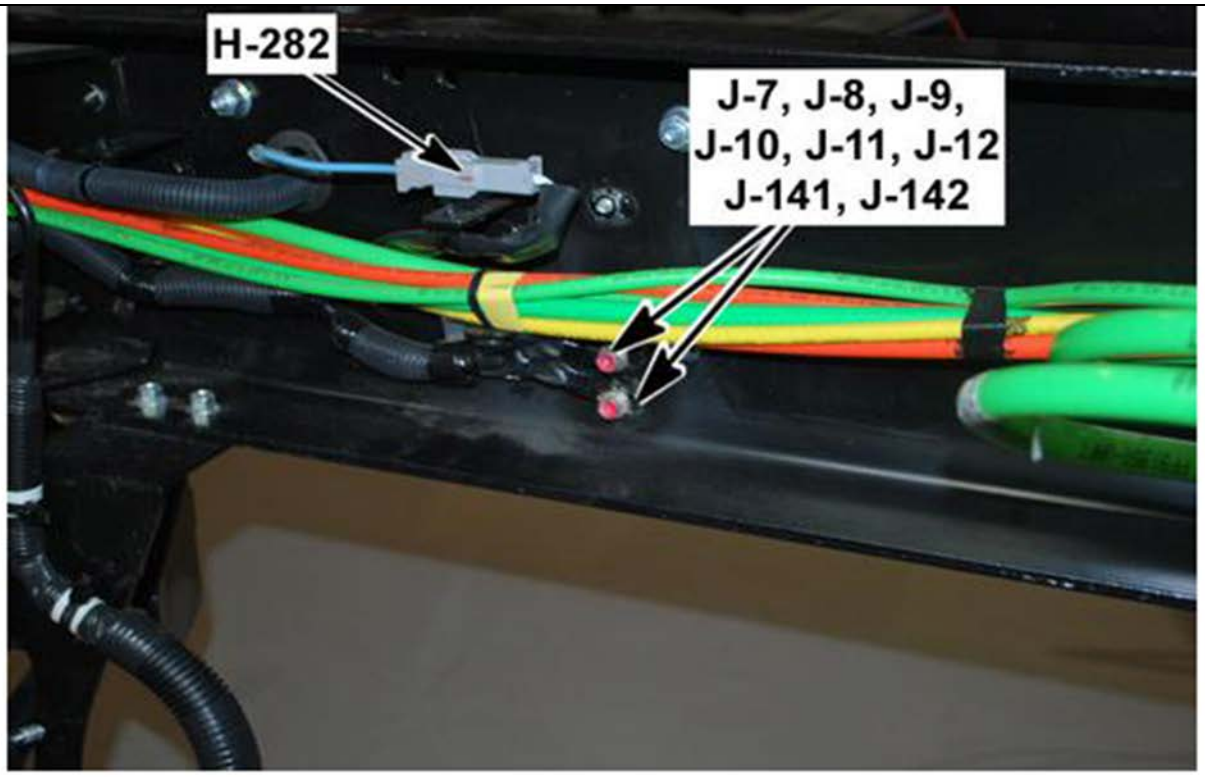

4892315

J-19 Horn (LH)

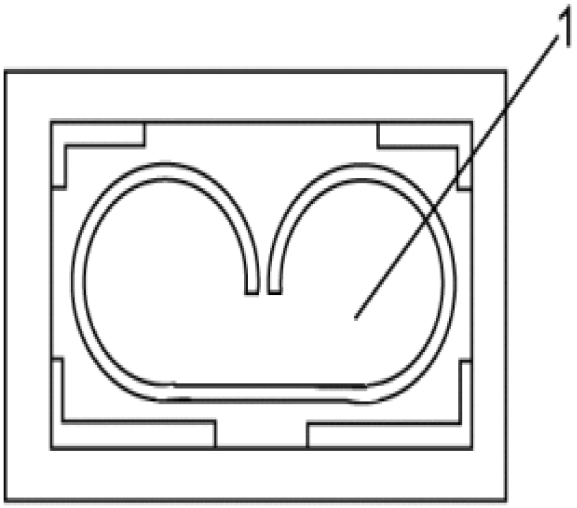

4892503

Connector Part Information		• 11506-1124 • 1-Way F (WHT)	
Pin	**Wire Color**	**Circuit Number**	**Function**
1	RED/BLK	DA002B	Horn Supply Voltage from Horn Relay X-7

Under the Left Front of the Cab, Left of the Steering Column

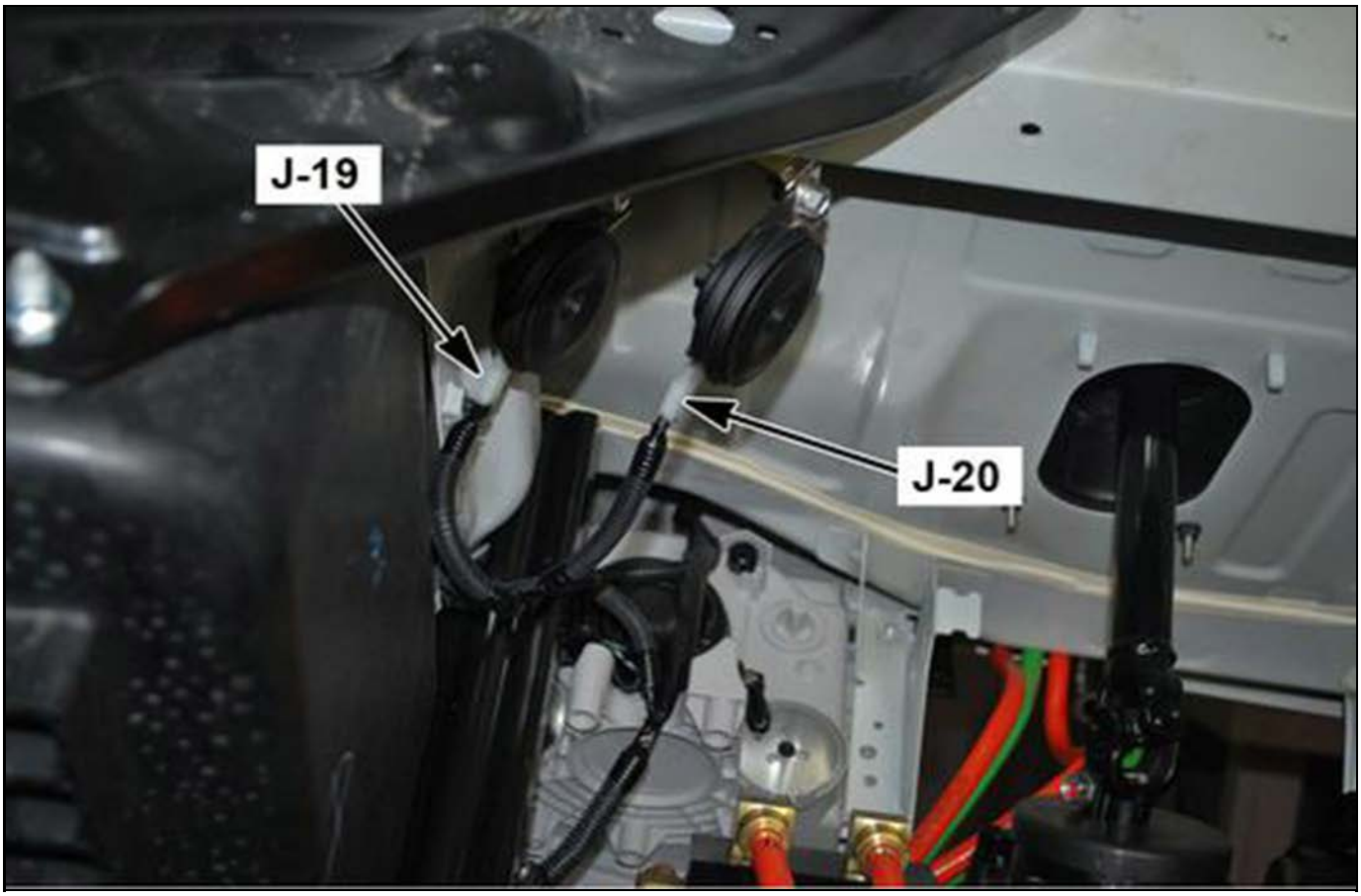

4892509

J-20 Horn (RH)

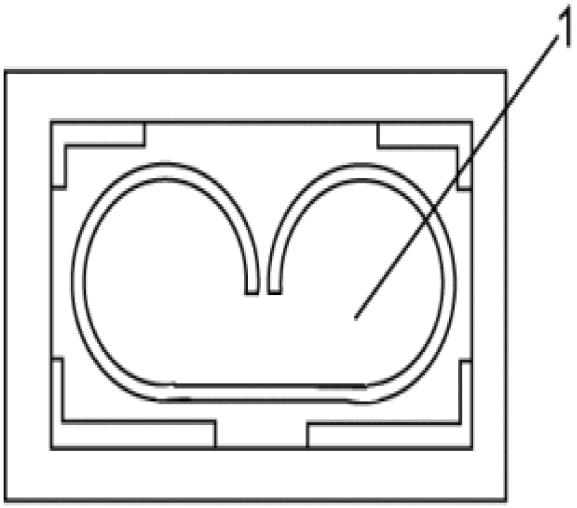

4892503

Connector Part Information		• 11506-1124 • 1-Way F (WHT)	
Pin	**Wire Color**	**Circuit Number**	**Function**
1	RED/BLK	DA003B	Horn Supply Voltage from Horn Relay X-7

Under the Left Front of the Cab, Left of the Steering Column

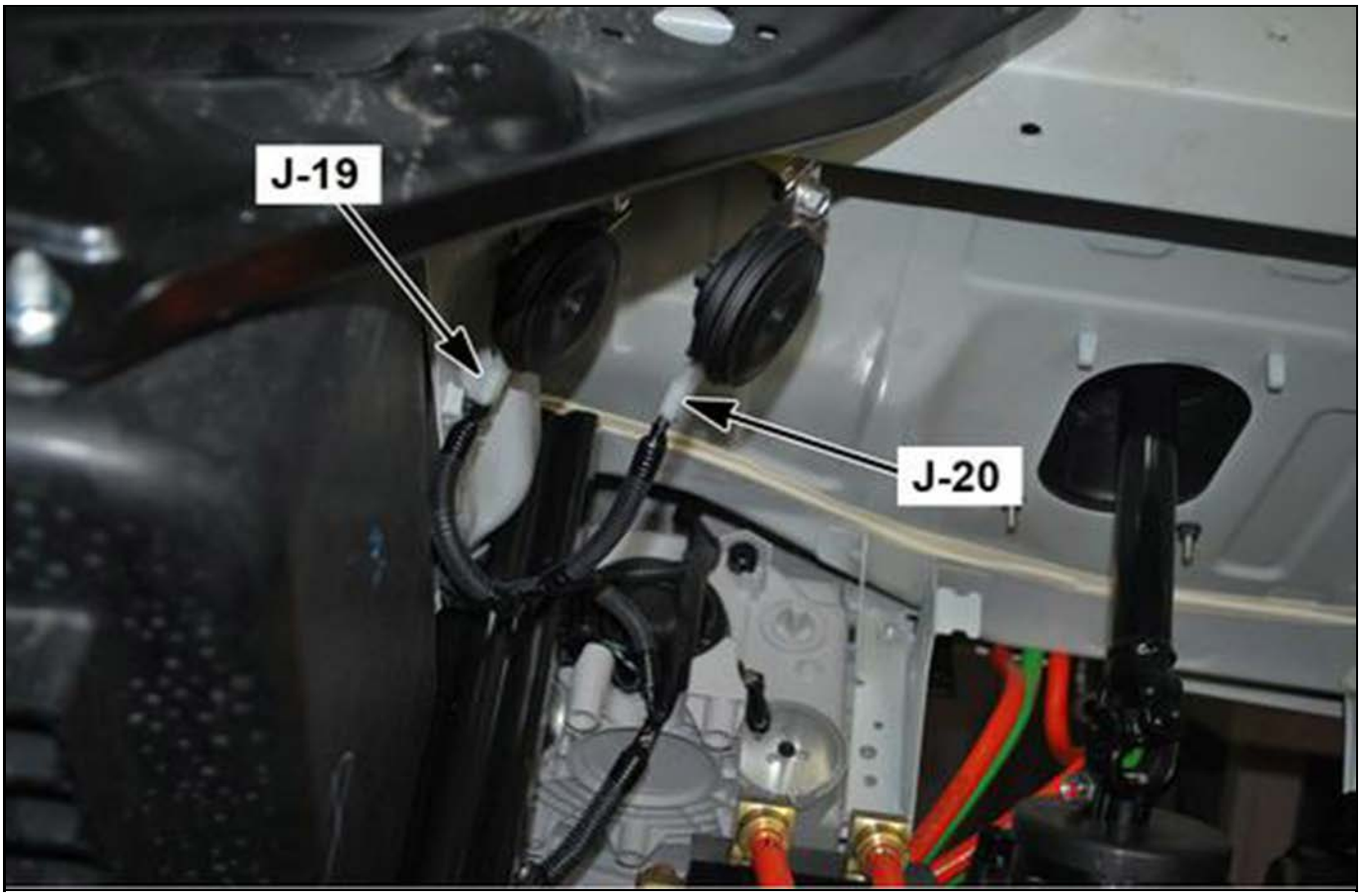

4892509

J-34 Exhaust Gas Temperature Sensor 2

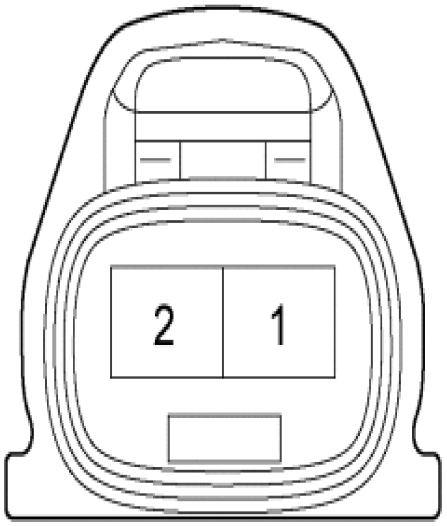

4892594

Connector Part Information		• 7382-7026-40 • 2-Way M (GRY)	
Pin	**Wire Color**	**Circuit Number**	**Function**
1	VIO/YEL	IC052I	Sensor Low Reference
2	RED	IC012I	Sensor Signal

Right Inner Frame Rail, Above the Front of the Diesel Particulate Filter (DPF)

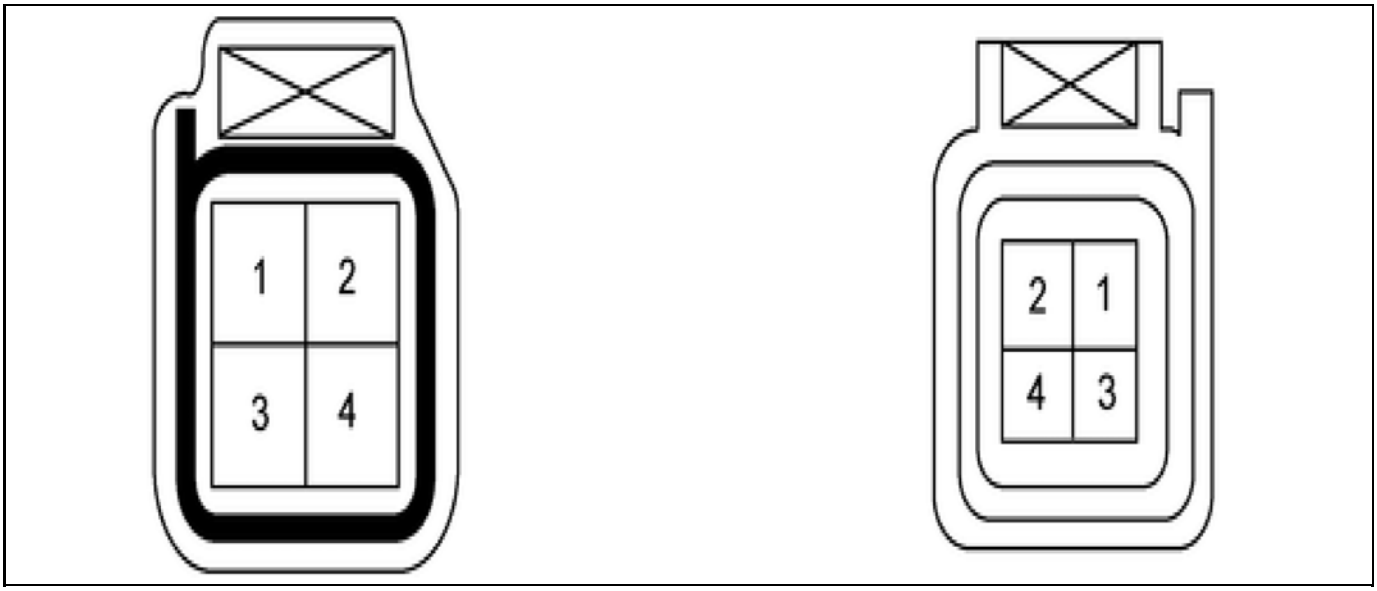

4892020

J-35 Exhaust Gas Temperature Sensor 1

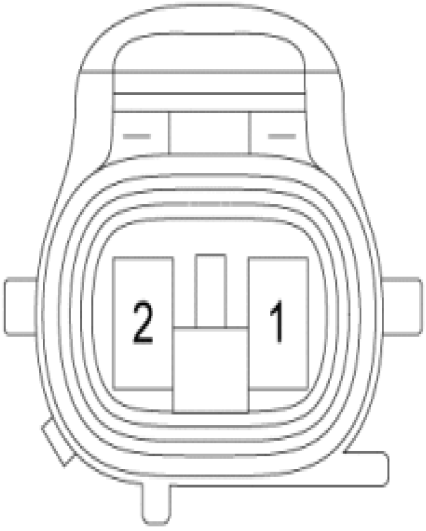

4892599

Connector Part Information		• 7382-7023-10 • 2-Way M (DK GRY)	
Pin	**Wire Color**	**Circuit Number**	**Function**
1	VIO/GRN	IC080I	Sensor Low Reference
2	YEL/RED	IC079I	Sensor Signal

Right Inner Frame Rail, Above the Front of the Diesel Particulate Filter (DPF)

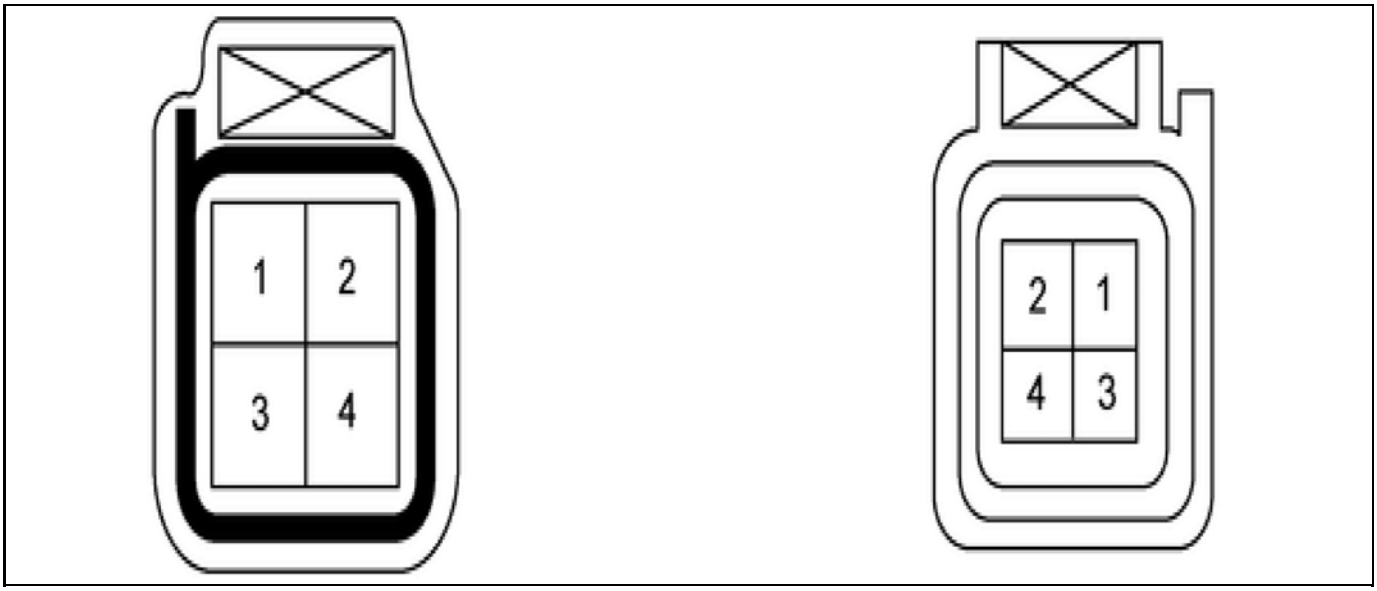

4892020

J-38 Mass Air Flow (MAF)/Intake Air Temperature (IAT) Sensor 1

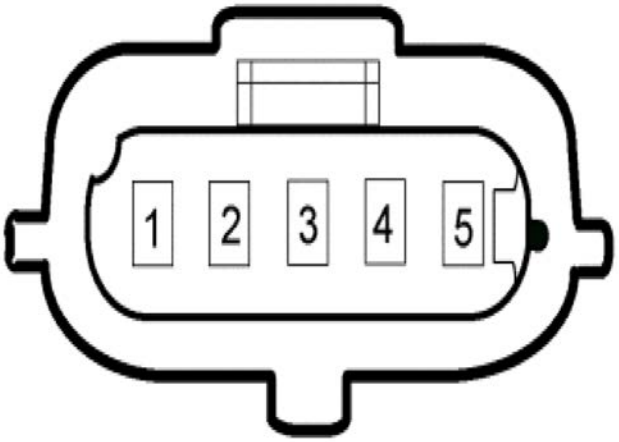

4892600

Connector Part Information		• 6189-1046 • 5-Way F (BLK)	
Pin	**Wire Color**	**Circuit Number**	**Function**
1	RED/WHT	IC034K	Battery Voltage from Fuse F-33
2	BLK	IC027K	MAF Sensor Low Reference
3	WHT	IC026K	MAF Sensor Signal
4	BLU/BLK	IC068K	IAT Sensor 1 Signal
5	BLU/RED	IC096K	IAT Sensor 1 Low Reference

Outlet Side of the Air Cleaner Housing

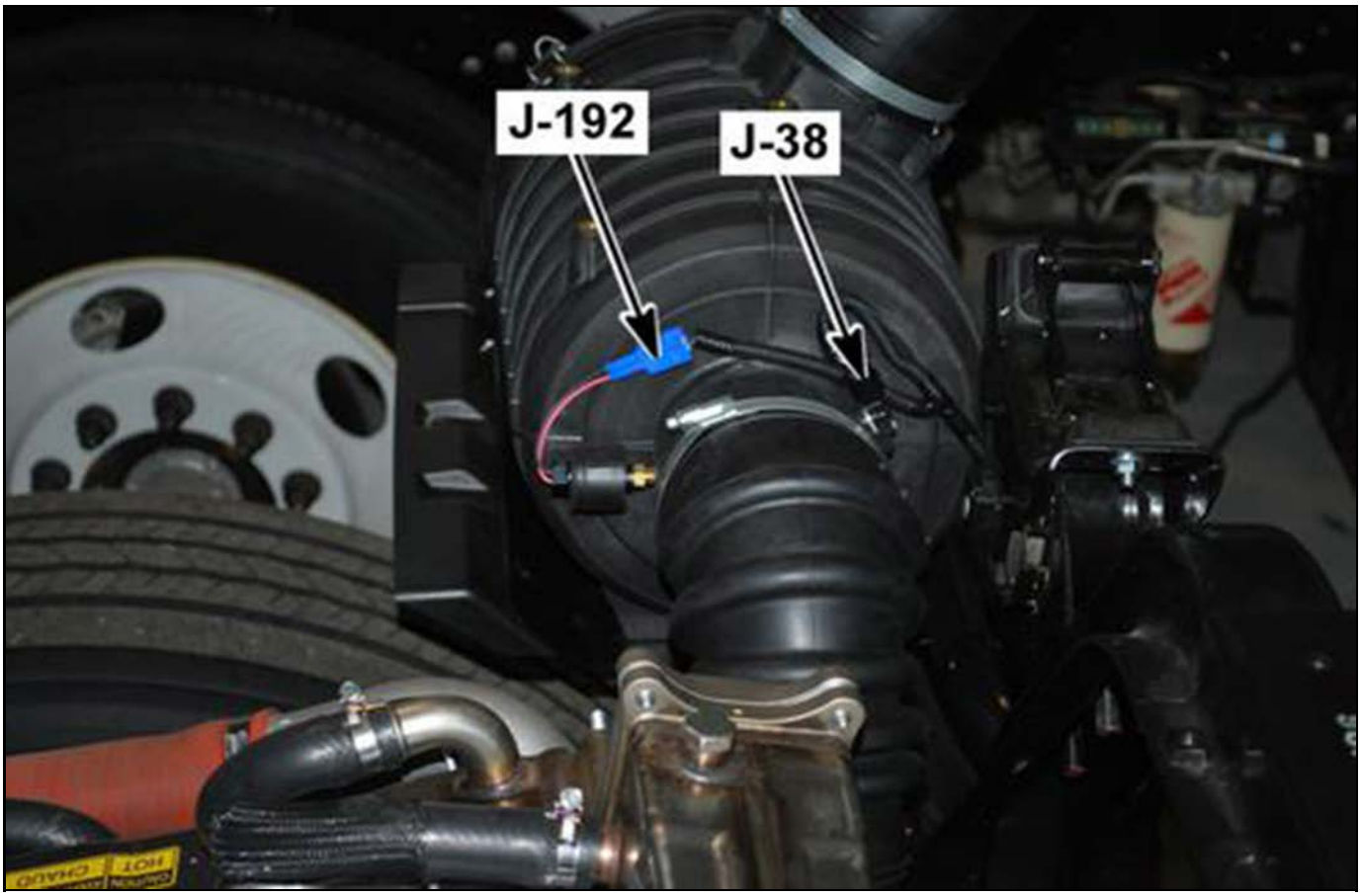

4892607

J-44 Wheel Speed Sensor Front (LH)

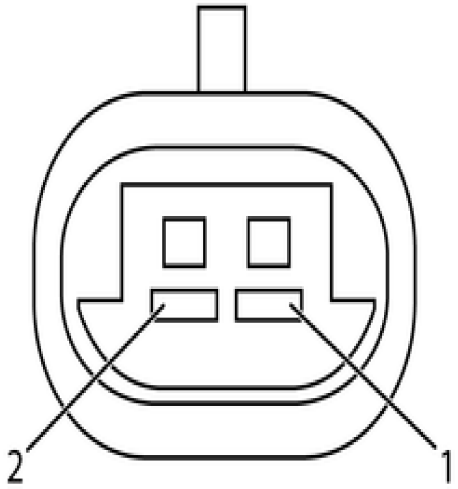

4892701

Connector Part Information		• 15355466 • 2-Way M (BLK)	
Pin	**Wire Color**	**Circuit Number**	**Function**
1	WHT/BLU	BB106C	Sensor Signal
2	BLK/BLU	BB107C	5 Volt Reference

Left Front Wheel Well, Top of the Shock

4892702

J-45 Wheel Speed Sensor Front (RH)

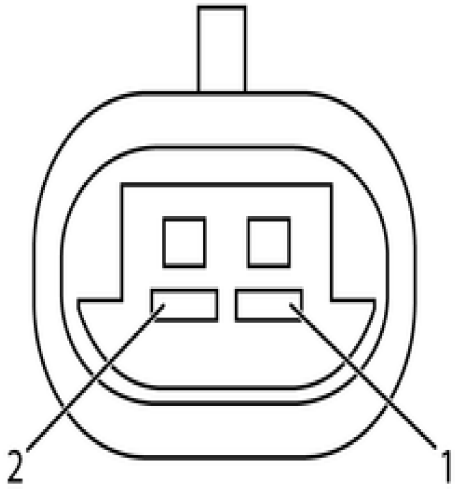

4892701

Connector Part Information		• 15355466 • 2-Way M (BLK)	
Pin	**Wire Color**	**Circuit Number**	**Function**
1	BLU/WHT	BB111L	Sensor Signal
2	BLU	BB112L	5 Volt Reference

Right Wheel Well, Top of the Shock

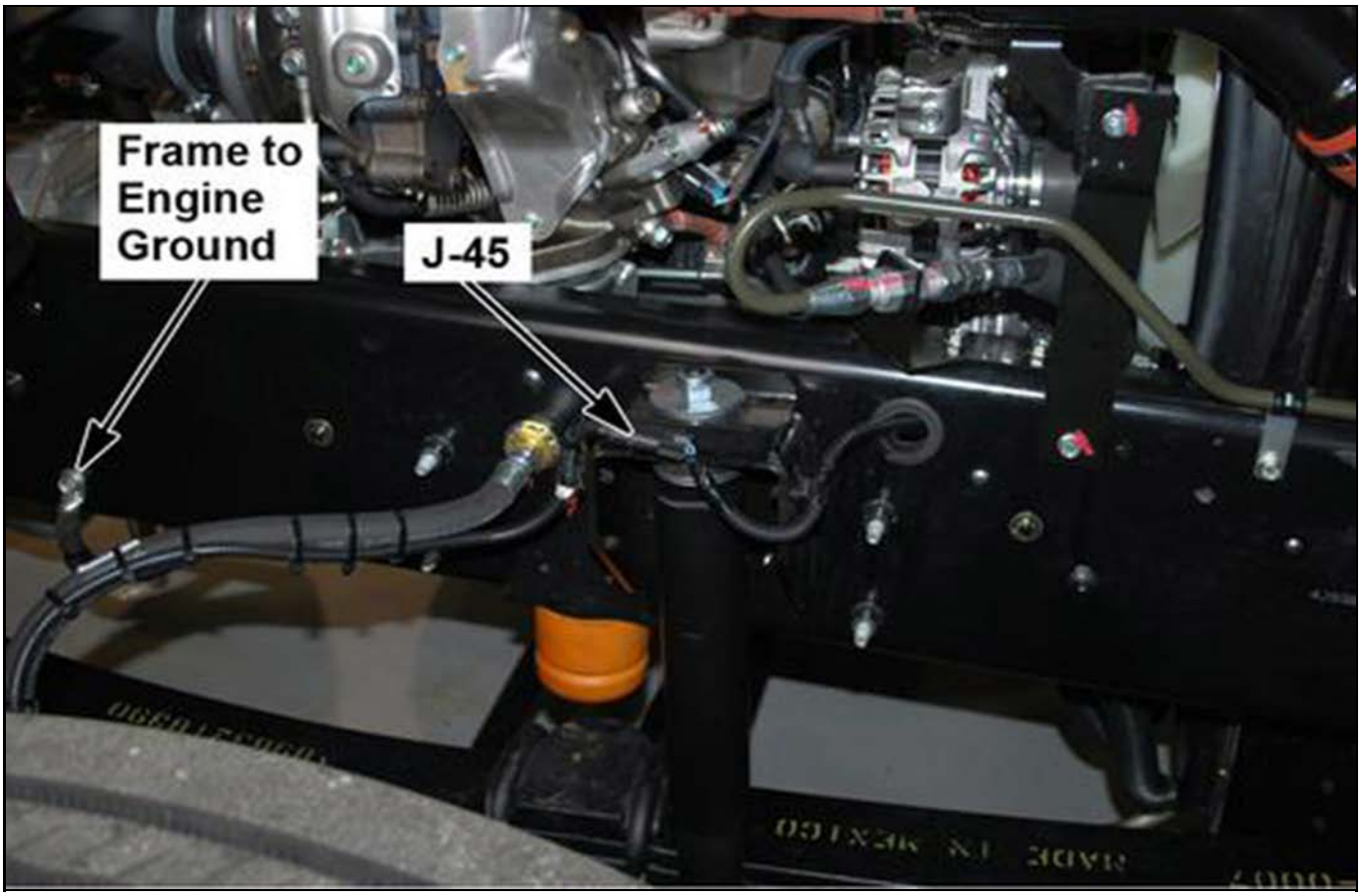

4892706

J-59 Exhaust Brake Solenoid Valve

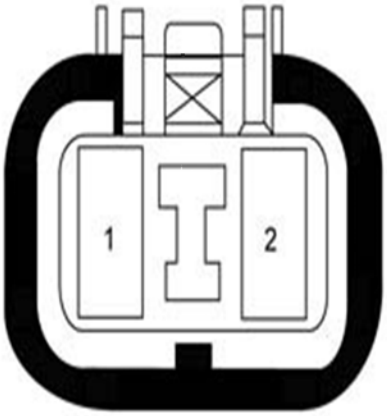

4892710

Connector Part Information		• 7323-8520-40 • 2-Way F (GRY)	
Pin	**Wire Color**	**Circuit Number**	**Function**
1	RED/WHT	IC031I	Ignition Voltage from Fuse F-33, Fuse/Relay Center
2	WHT/GRN	IC076I	Exhaust Brake Solenoid Valve Control to ECM

Right Inner Frame Rail, Above the Front of the Diesel Particulate Filter (DPF)

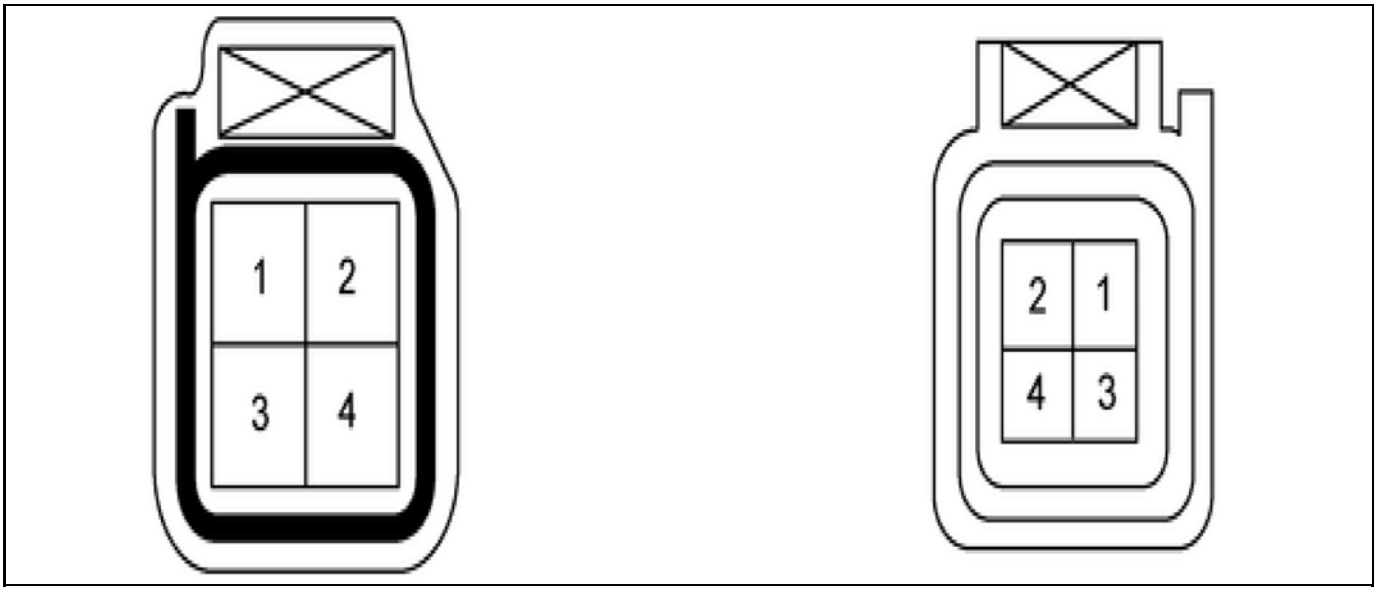

4892020

J-71 License Plate Lamp

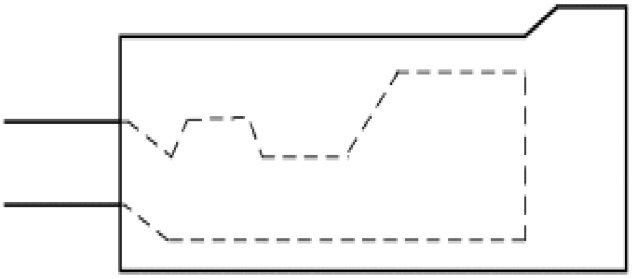

4892712

Connector Part Information		• 7320-1154 • 1-Way F (GRN)	
Pin	**Wire Color**	**Circuit Number**	**Function**
1	GRN/RED	BA04	Fuse F-27 Voltage (Headlamp Switch ON)

At the Rear of the Frame, Near the License Plate Frame

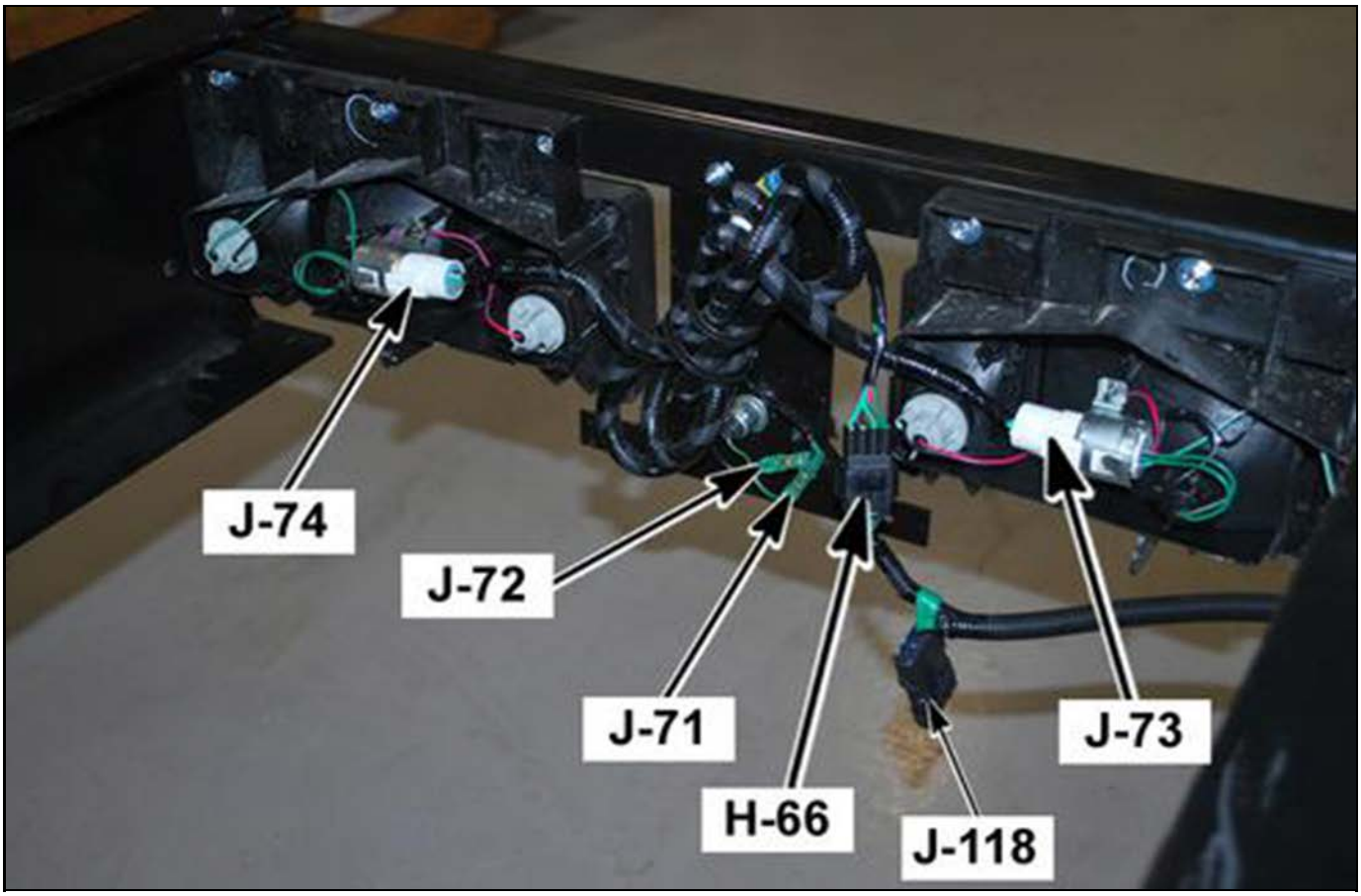

4891907

J-72 License Plate Lamp

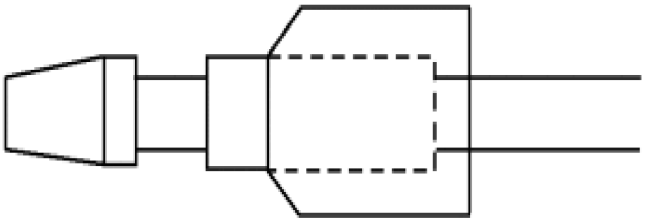

4892714

Connector Part Information		• 7320-8017 • 1-Way M (GRN)	
Pin	**Wire Color**	**Circuit Number**	**Function**
1	BLK	BX17	Ground to Splice 6 (J-9 and J-7 Ground)

At the Rear of the Frame, Near the License Plate Frame

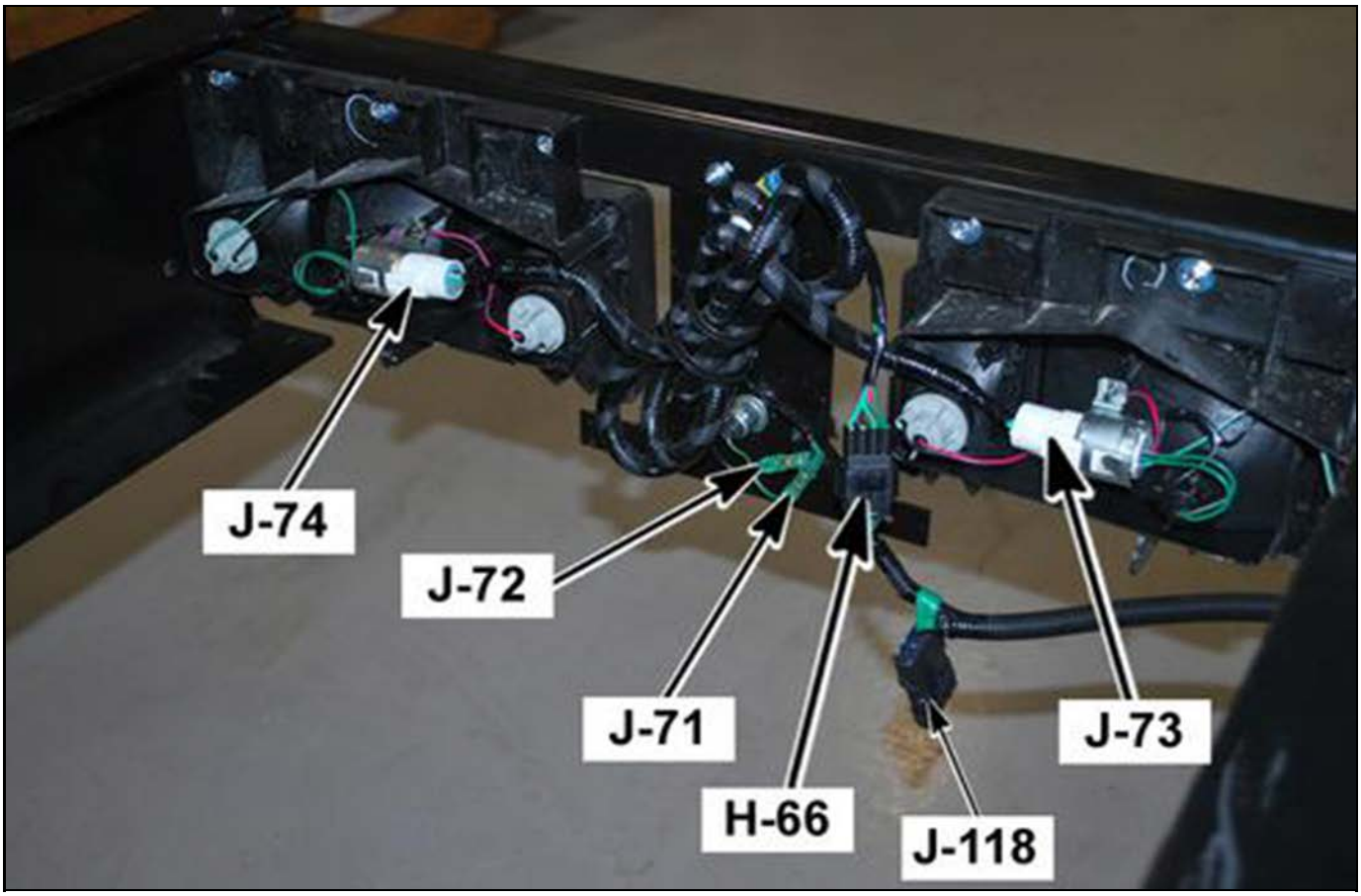

4891907

J-73 Rear Combination Lamp (LH)

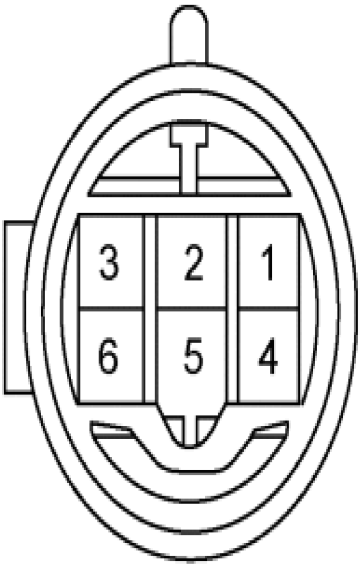

4892716

Connector Part Information		• 7118-3460 • 6-Way M (BLK)	
Pin	**Wire Color**	**Circuit Number**	**Function**
1	GRN/RED	BA02	Fuse F-27 Voltage (Headlamp Switch ON), Marker Lamp
2	GRN	CA02	Switched Output Voltage from X-1 Stop Lamp Relay
3	GRN/BLK	JA14	Turn Signal Lamp Supply Voltage
4	—	—	Not Used
5	RED/BLU	KA12	Backup Lamp Supply Voltage from Fuse A-4
6	BLK	BX02	Ground to Splice 6 (J-9 and J-7 Ground)

At the Rear of the Left Frame Rail, Under the Left Tail Lamp Assembly Cover

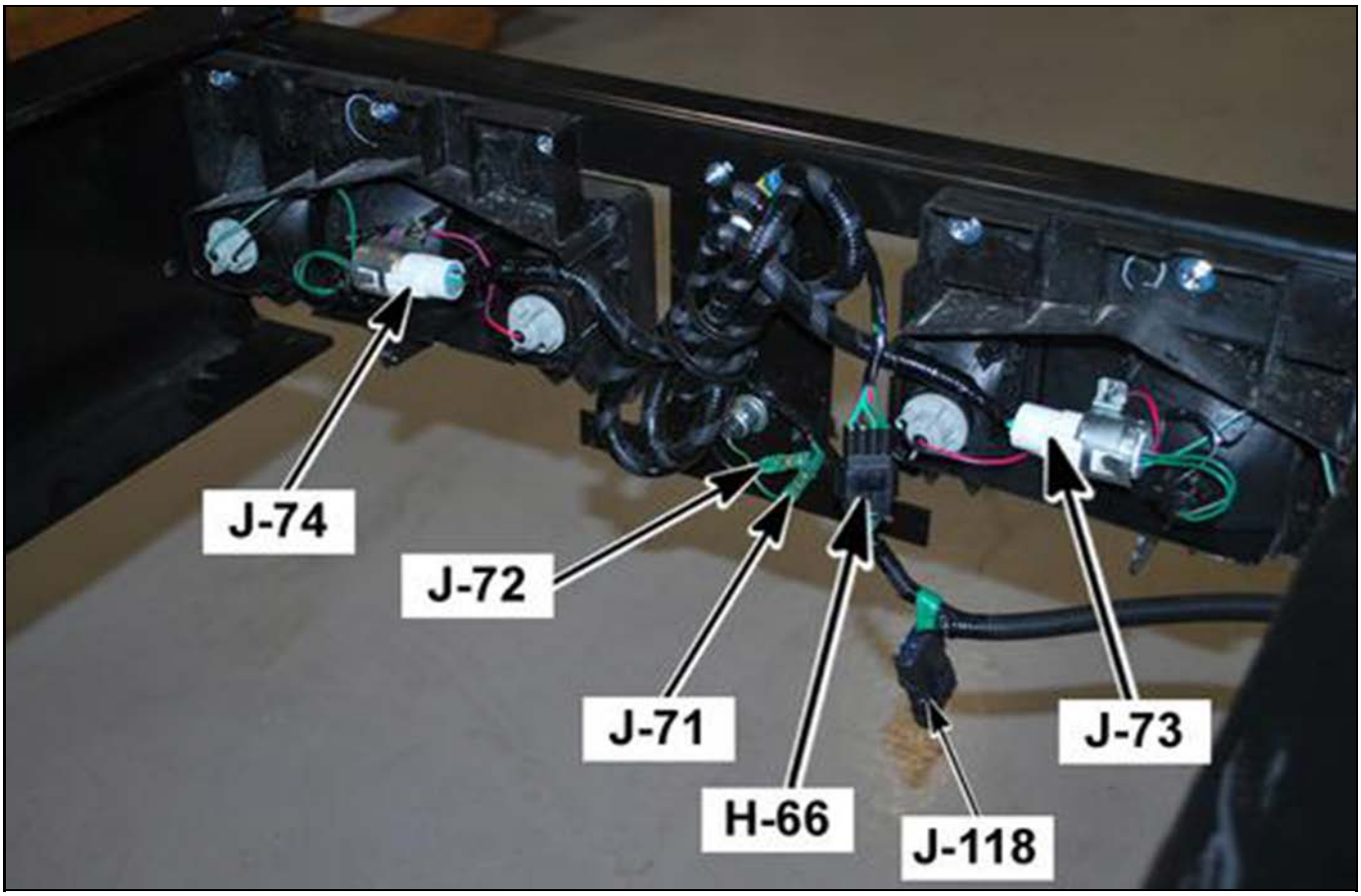

4891907

J-74 Rear Combination Lamp (RH)

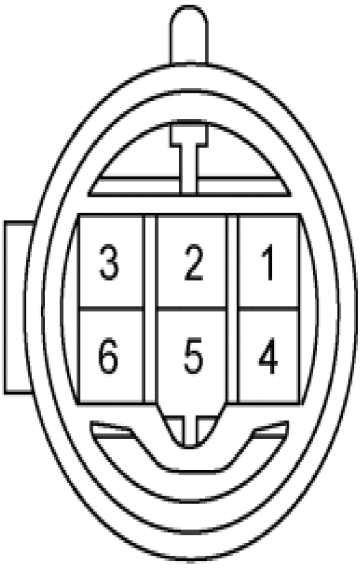

4892716

Connector Part Information		• 7118-3460 • 6-Way M (BLK)	
Pin	**Wire Color**	**Circuit Number**	**Function**
1	GRN/RED	BA01	Fuse F-27 Voltage (Headlamp Switch ON), Marker Lamp
2	GRN	CA01	Switched Output Voltage from X-1 Stop Lamp Relay
3	GRN/WHT	JA15	Turn Signal Lamp Supply Voltage
4	RED/BLU	KA07	Backup Alarm Supply Voltage from Fuse A-4
5	RED/BLU	KA08	Backup Lamp Supply Voltage from Fuse A-4
6	BLK	BX01	Ground to Splice 6 (J-9 and J-7 Ground)

At the Rear of the Right Frame Rail, Under the Right Tail Lamp Assembly Cover

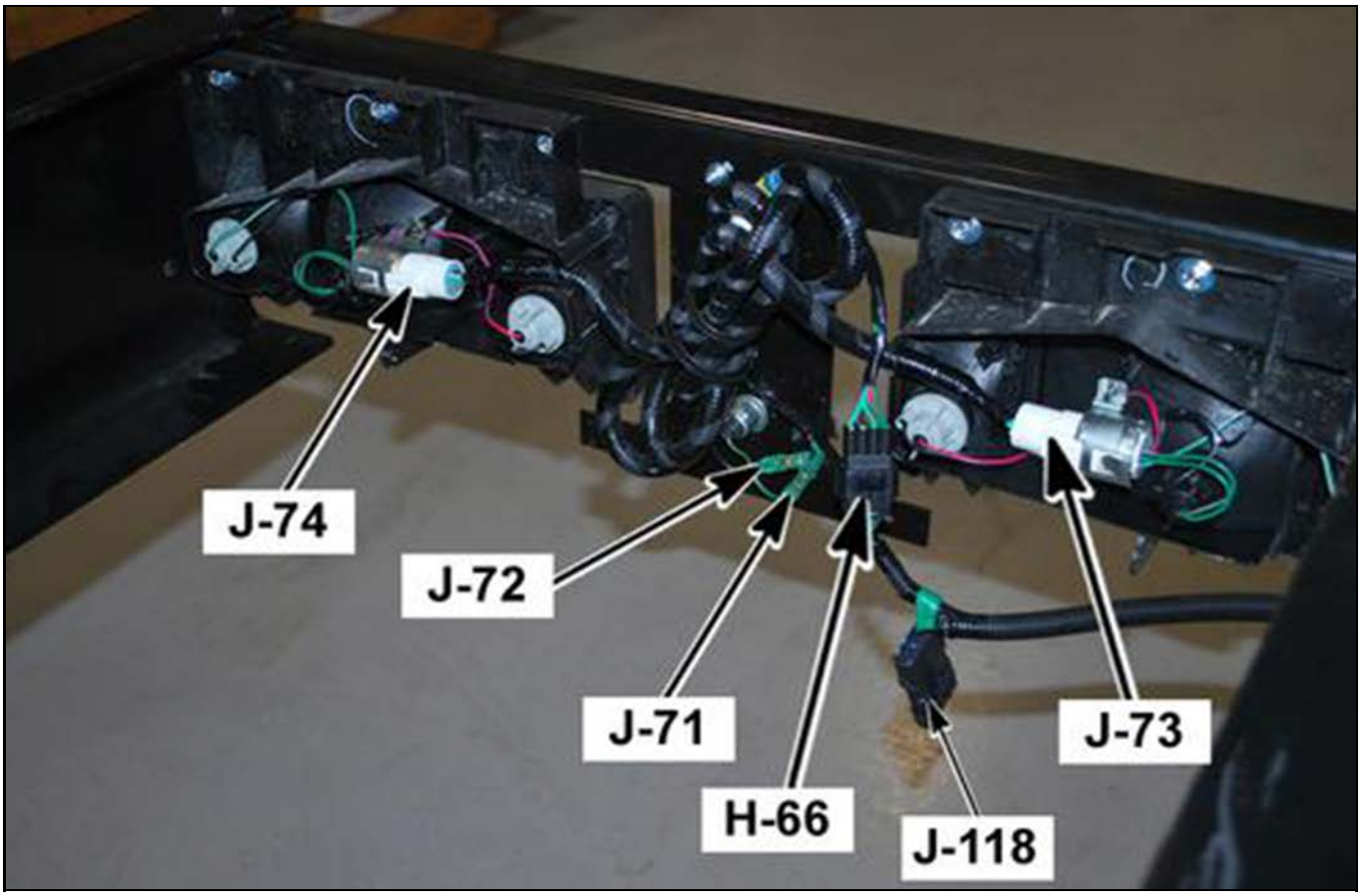

4891907

J-102 Exhaust Differential Pressure Sensor

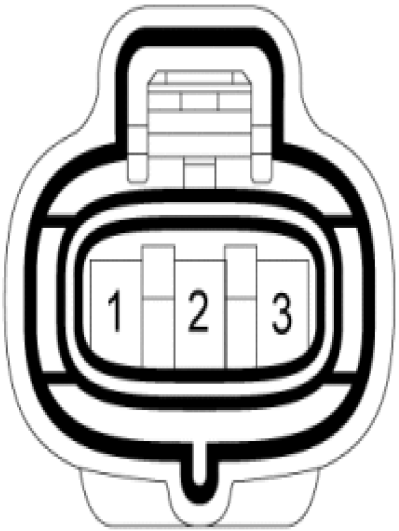

4891773

Connector Part Information		• 6189-0099 • 3-Way F (BLK)	
Pin	**Wire Color**	**Circuit Number**	**Function**
1	VIO/WHT	IC56	Sensor Low Reference
2	GRN/YEL	IC55	Sensor Signal
3	WHT/ORN	IC54	Sensor 5 Volt Reference 3

Right Inner Frame Rail, Above the Diesel Particulate Filter (DPF)

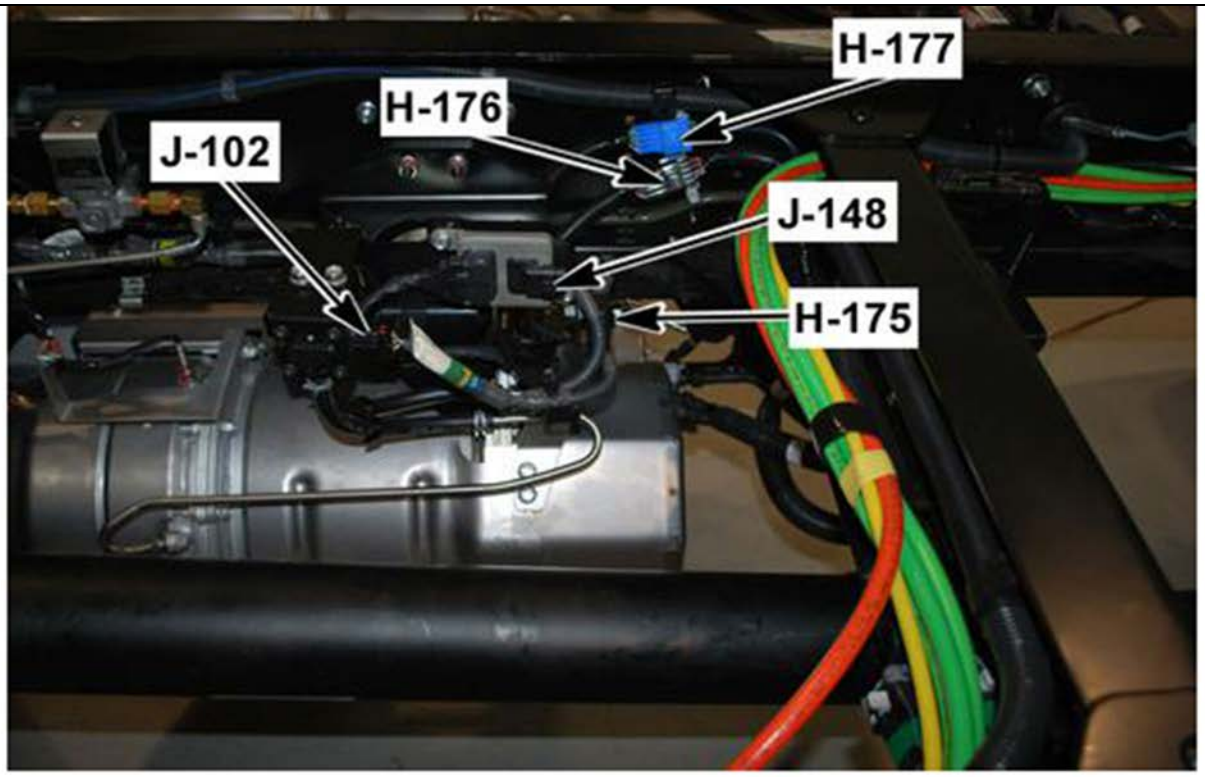

4892049

J-105 Engine Control Module (ECM)

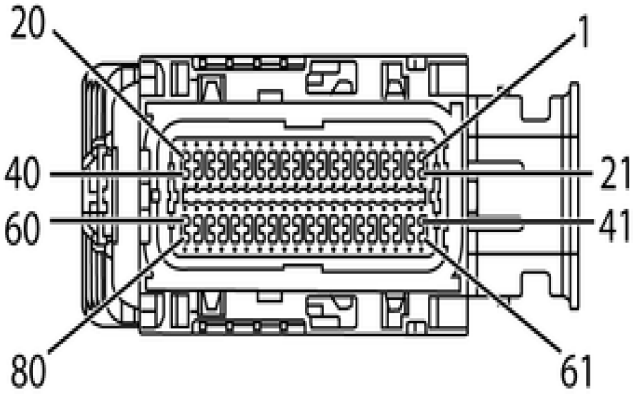

4892719

Connector Part Information		• 34566-0803 • 80-Way F (GRY)	
Pin	**Wire Color**	**Circuit Number**	**Function**
1	BLU	IC037C	PTO Remote Throttle Sensor 5 Volt Reference 3 Voltage
2–3	—	—	Not Used
4	WHT/BLK	IC019C	X-17 Starter Relay Coil Control
5	BRN	IC167C	PTO Cab Control Disable Switch Signal
6	—	—	Not Used
7	GRN	IC004C	APP Sensor 2 5 Volt Reference 2 Voltage
8	BRN	TF056C	Fuel Level Gauge Control
9	BLU	IC006C	APP Sensor 2 Low Reference
10	BLU/WHT	TF017C	CAN 1 High Signal (J1939)
11–12	—	—	Not Used
13	PNK/GRN	IC173C	PTO Engage Relay Control
14	YEL	IC055C	Exhaust Differential Pressure Sensor Signal
15–17	—	—	Not Used
18	BLK	IZ020C	Ground to Splice 7 (J-10 and J-12 Ground)
19	RED	IC023C	APP Sensor 1 Signal
20	BLK	IZ023C	Ground to Splice 7 (J-10 and J-12 Ground)
21	WHT	IC033C	APP Sensor 1 5 Volt Reference 1 Voltage
22	ORN	IC054C	Exhaust Differential Pressure Sensor 5 Volt Reference 3 Voltage
23–25	—	—	Not Used
26	GRY/BLU	IC083C	Low Coolant Level Signal from Low Coolant Level Control Module
27	BLU/RED	IC039C	PTO Remote Throttle Sensor Low Reference
28	GRN/WHT	TF055C	CAN 2 High
29	BRN	IC056C	Exhaust Differential Pressure Sensor Low Reference
30	BLU	TF018C	CAN 1 Low Signal (J1939)
31	BLK	IC032C	APP Sensor 1 Low Reference
32	—	—	Not Used
33	ORN/BLU	IC008C	Glow Plug Lamp Control
34	YEL	IC038C	PTO Remote Throttle Sensor Signal
35–36	—	—	Not Used
37	LT GRN/RED	IC044C	Exhaust Brake Switch Signal
38	BLK	IZ022C	Ground to Splice 7 (J-10 and J-12 Ground)
39	YEL	IC005C	APP Sensor 2 Signal
40	BLK	IZ025C	Ground to Splice 7 (J-10 and J-12 Ground)
41	—	—	Not Used
42	ORN	IC011C	Battery Voltage from Fuse F-22 Voltage (Battery) from Fuse/Relay Center
43–44	—	—	Not Used
45	RED/WHT	IC017C	Brake Switch Signal
46	BLK/ORN	IC001C	Ignition Voltage from Fuse F-20 in the Fuse/Relay Center
47	BLU/YEL	IC064C	ECM Main Relay Coil Control
48	GRN	IC016C	Stoplamp Switch Signal
49–50	—	—	Not Used
51	PNK	IC275C	PTO Engage Switch Signal

Connector Part Information		• 34566-0803 • 80-Way F (GRY)	
Pin	**Wire Color**	**Circuit Number**	**Function**
52	GRY/RED	IC165C	Remote PTO Set Speed A Switch Signal
53	RED/BLK	IC170C	Remote PTO Resume Switch Signal
54	BLU/WHT	IC140C	DPF Regeneration Switch Signal
55	—	—	Not Used
56	BLK	IZ031C	Ground to Splice 7 (J-10 and J-12 Ground)
57	GRY/BLU	IC158C	Cruise Main Switch Signal
58	RED/WHT	IC500C	Ignition Voltage from ECM Main Relay
59	—	—	Not Used
60	RED/WHT	IC063C	Ignition Voltage from ECM Main Relay
61	BLK	IZ024C	Ground to Splice 7 (J-10 and J-12 Ground)
62–64	—	—	Not Used
65	YEL/BLK	IC010C	MIL Lamp Control
66	BLK/ORN	IC501C	Ignition Voltage from Fuse F-20 in the Fuse/Relay Center
67	BLU/YEL	IC066C	ECM Main Relay Coil Control
68	BLK/WHT	IC069C	Start Signal from Ignition Switch
69	RED/GRN	IC168C	PTO Brake/Clutch Override Switch Signal
70	GRY	IC277C	Cruise Set/Coast Switch Signal
71	RED/BLU	IC166C	Remote PTO Set Speed B Switch Signal
72	PNK/BLU	IC276C	Cruise Resume/Accel Switch Signal
73	—	—	Not Used
74	BLK/WHT	IC172C	PTO Feedback Switch Signal
75	BRN/YEL	IC098C	A/C Signal
76	BLK	IZ021C	Ground to Splice 7 (J-10 and J-12 Ground)
77	RED/GRN	IC171C	Remote PTO Set Switch Signal
78	RED/WHT	IC062C	Ignition Voltage from ECM Main Relay
79	PNK/BLK	IC169C	PTO Engine Shutdown Switch Signal
80	RED/WHT	IC067C	Ignition Voltage from ECM Main Relay

Left Side of the Engine, in Front of the Rear Cab Mount

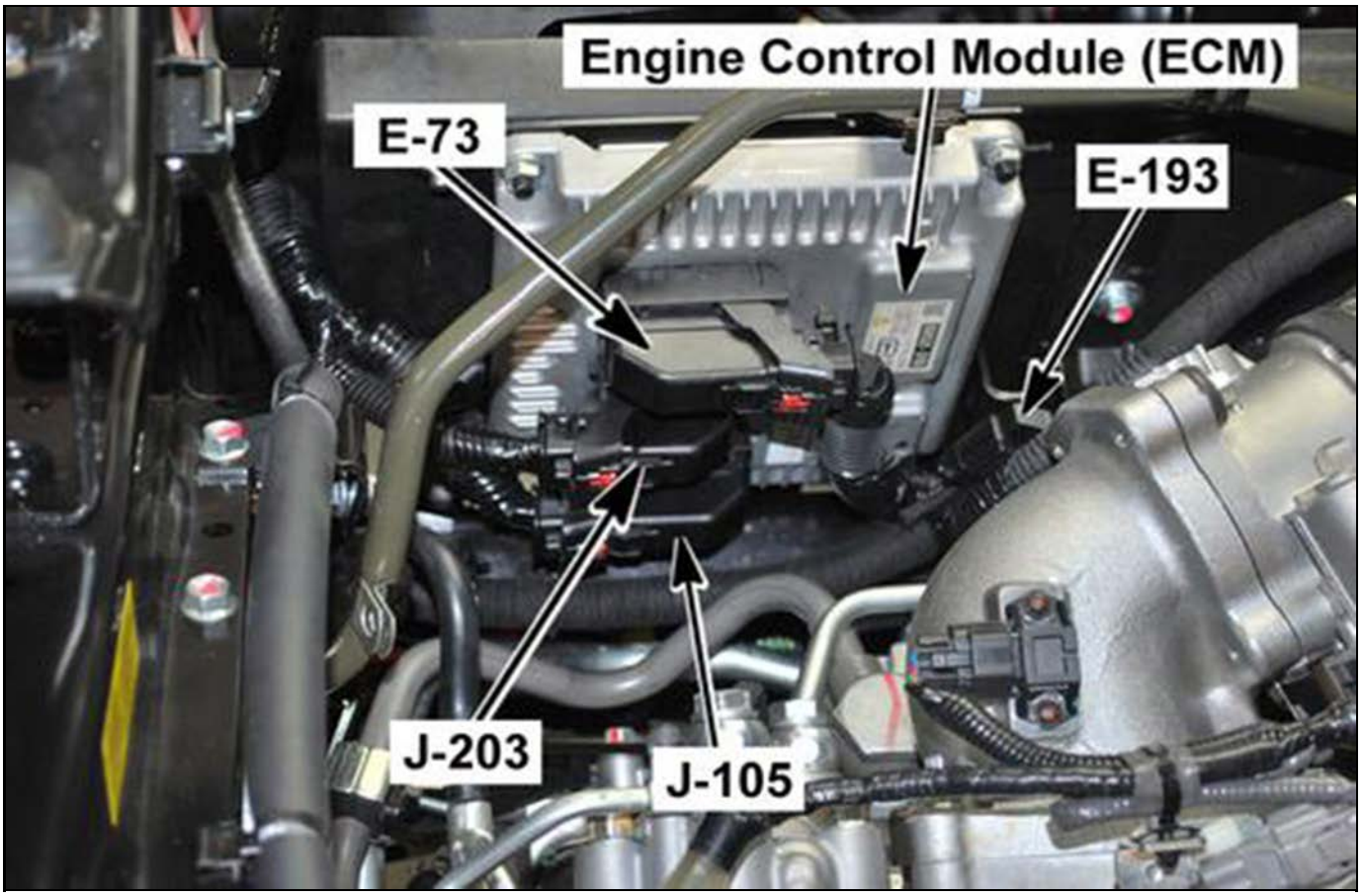

4891795

J-107 Rear Wheel Speed Sensor (RH)

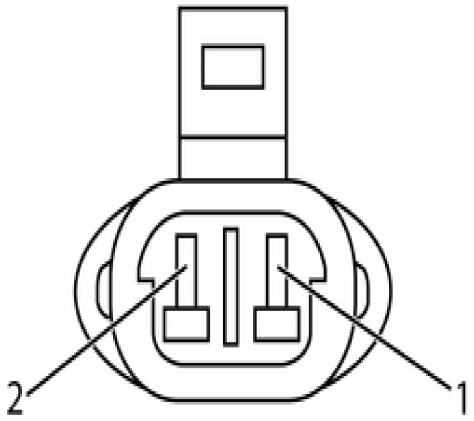

4892722

Connector Part Information		• 12162852 • 2-Way F (BLK)	
Pin	**Wire Color**	**Circuit Number**	**Function**
1	GRN/WHT	BB121D	Right Rear Wheel Speed Sensor 5 Volt Reference
2	GRN	BB122D	Right Rear Wheel Speed Sensor Signal

On the Frame Crossmember, in Front of the Rear Axle

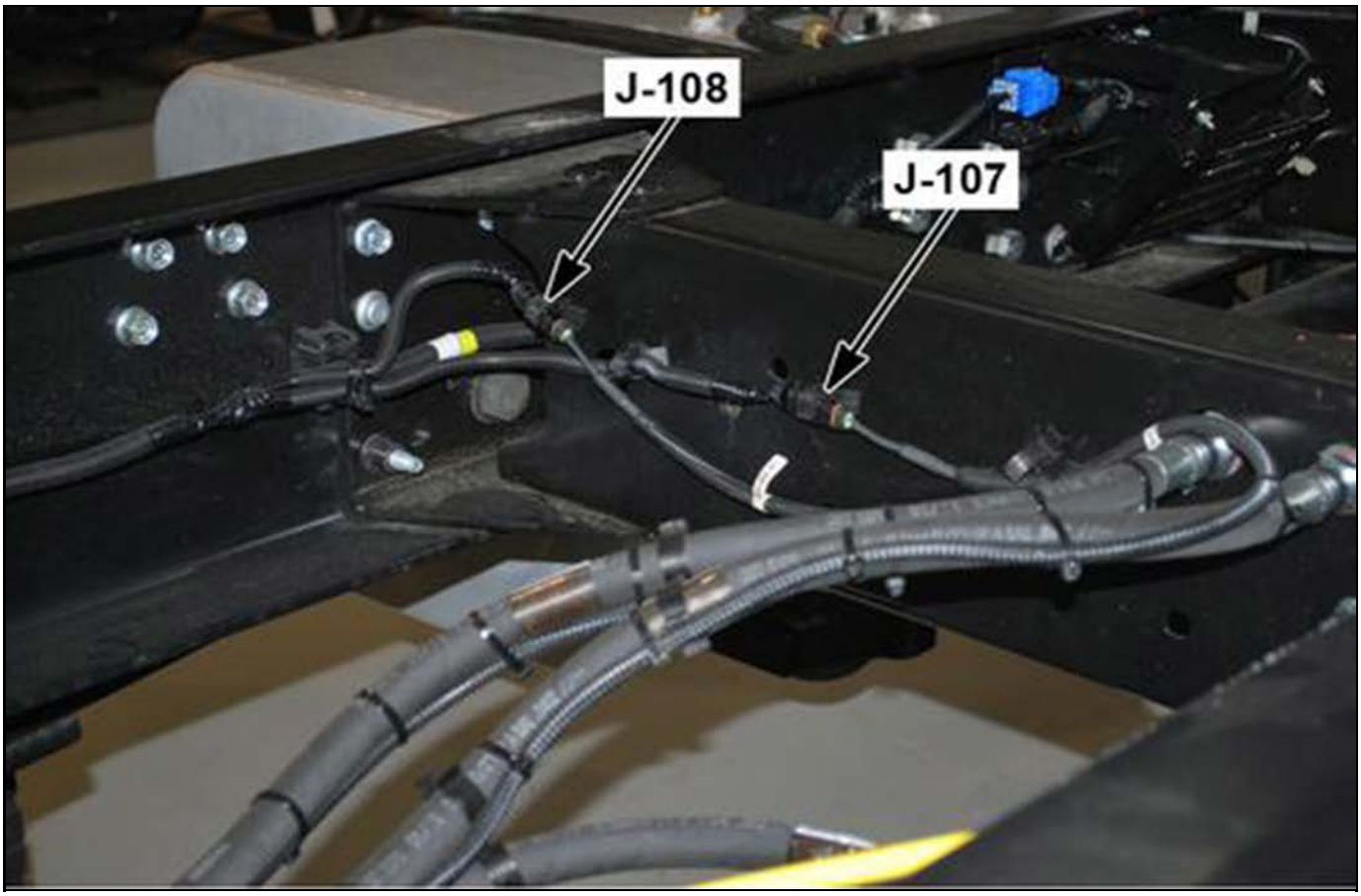

4892725

J-108 Rear Wheel Speed Sensor (LH)

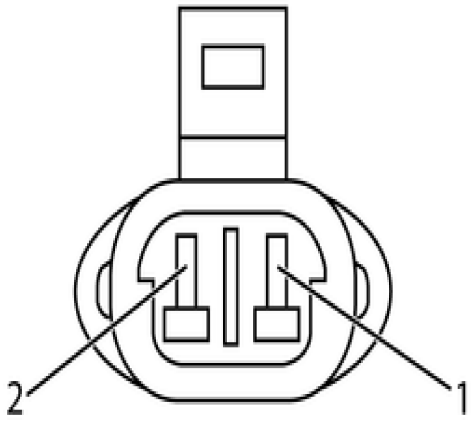

4892722

Connector Part Information		• 12162852 • 2-Way F (BLK)	
Pin	**Wire Color**	**Circuit Number**	**Function**
1	WHT/RED	BB116D	Left Rear Wheel Speed Sensor 5 Volt Reference
2	ORN/BLK	BB117D	Left Rear Wheel Speed Sensor Signal

On the Frame Crossmember, in Front of the Rear Axle

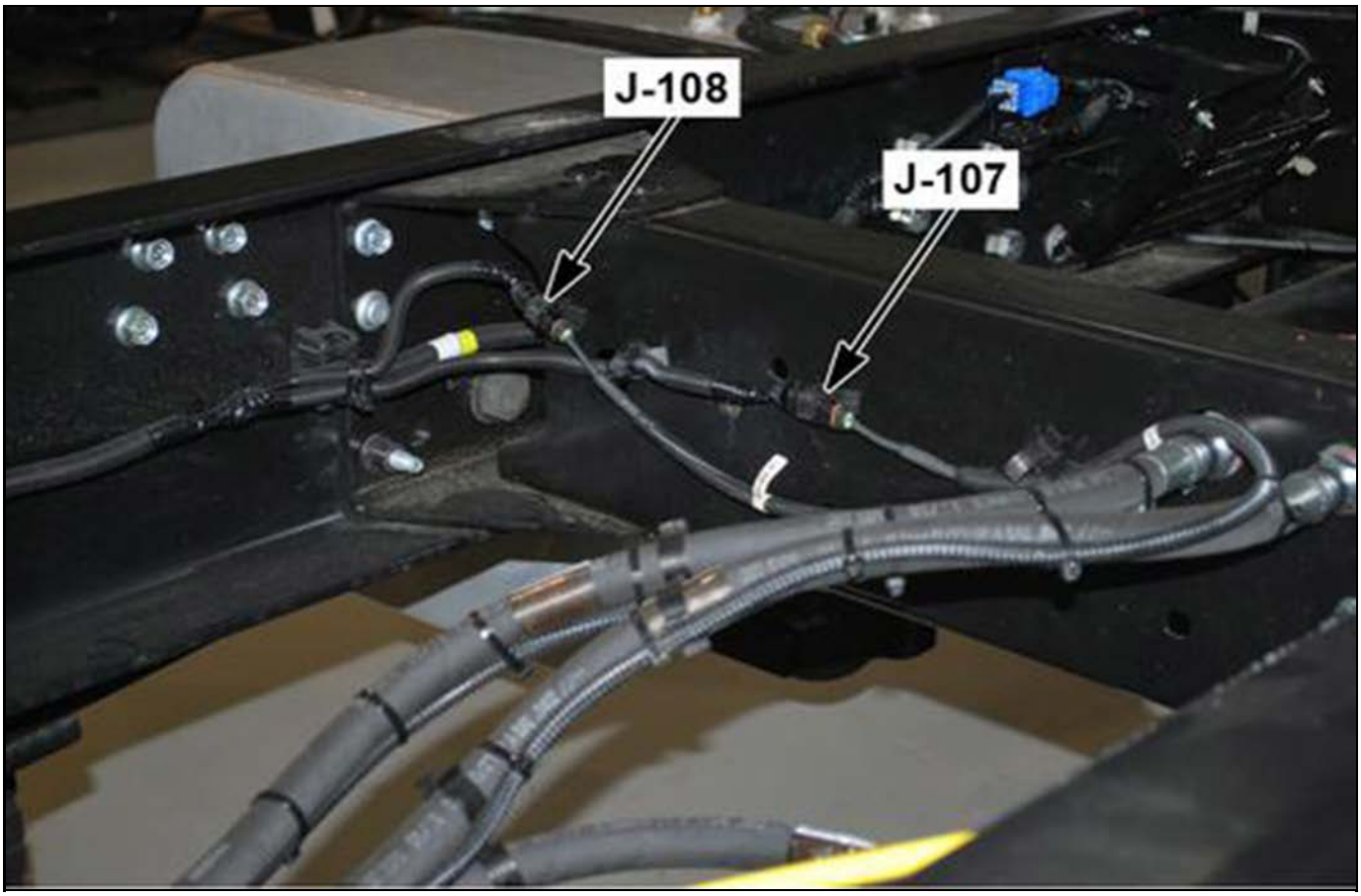

4892725

J-111 Backup Alarm

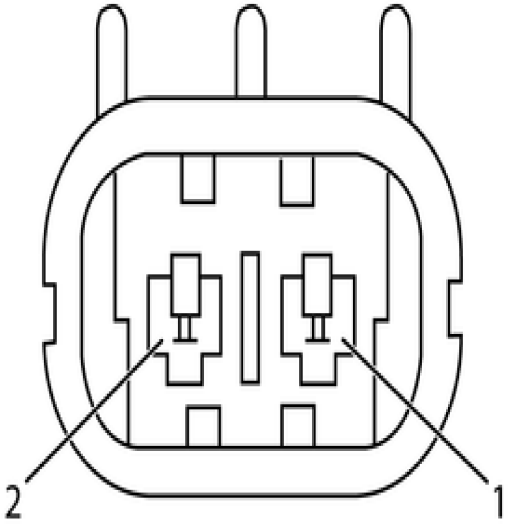

4892730

Connector Part Information		• 15300002 • 2-Way M (BLK)	
Pin	**Wire Color**	**Circuit Number**	**Function**
1	RED/BLU	KA023D	Voltage from Fuse A-4 (In Reverse) from Fuse/Relay Center (Cab) (B-250 pin 8)
2	BLK BLU	KX001D	Ground to Splice 5 (J-9 and J-7 Ground)

Left Rear Frame Rail, Behind the Rear Axle

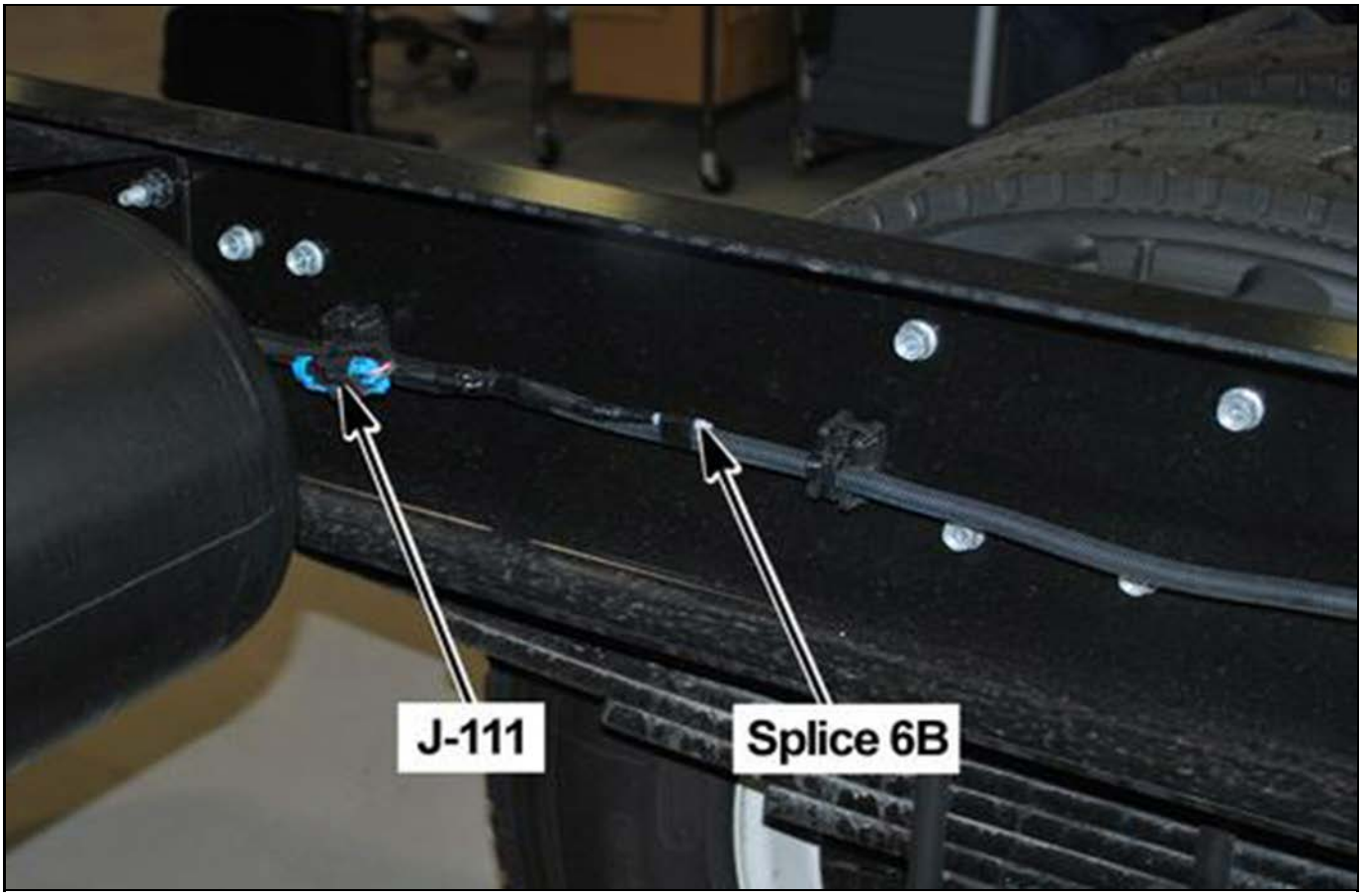

4892741

J-113 PTO Diode 1

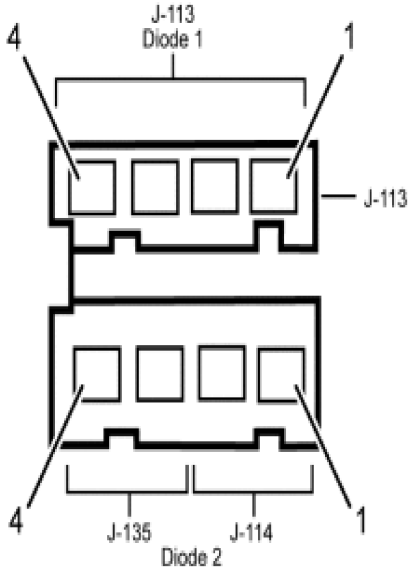

4892754

Connector Part Information		• 898030-7630 • Fuse/Relay Center	
Pin	**Wire Color**	**Circuit Number**	**Function**
1	BLU/YEL	IC095C	PTO Up/Down Switch Signal (In)
2	GRY	IC177C	PTO Up/Down Switch (Down - PTO Set) (Out)
3–4	—	—	Not Used

Left Outer Frame Rail, In the Fuse/Relay Center

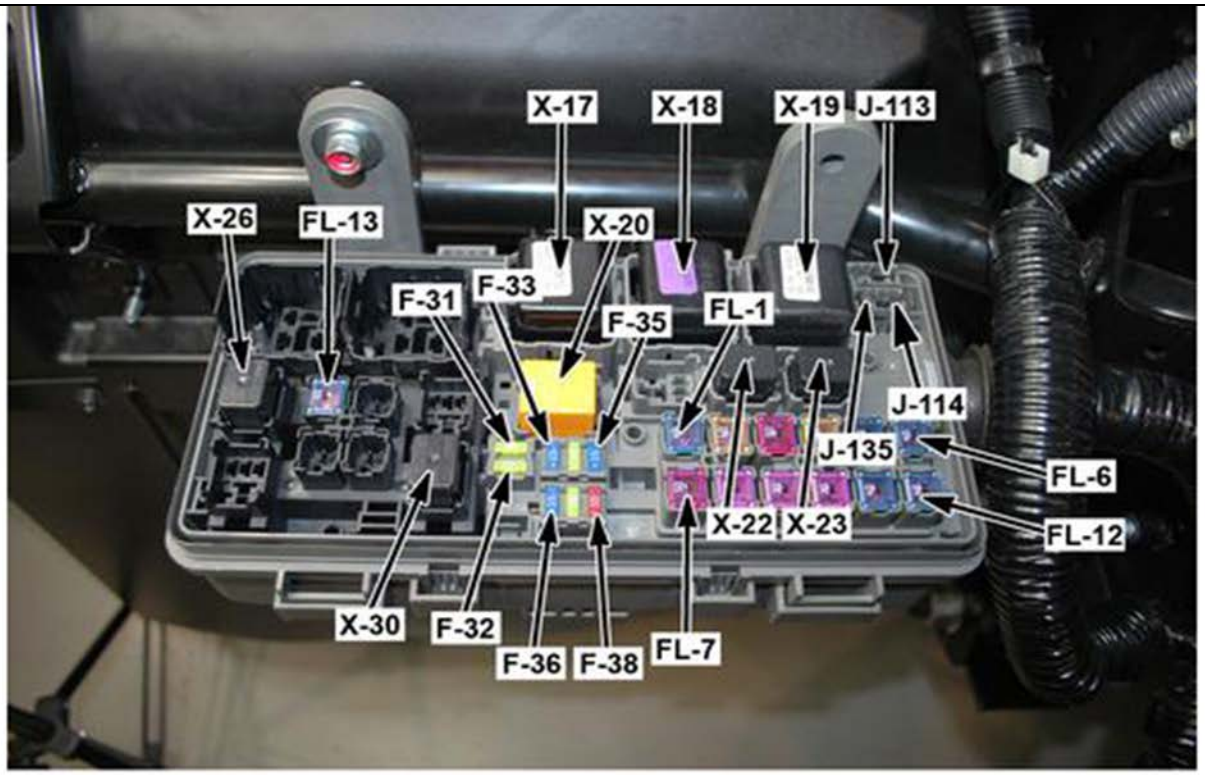

4892760

J-114 A/C Compressor Clutch Diode 2

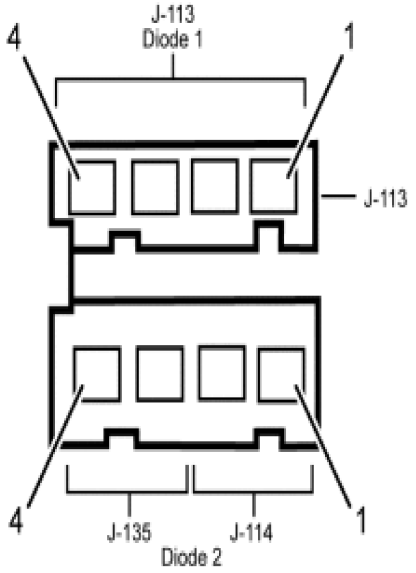

4892754

Connector Part Information		• 898030-7630 • Fuse/Relay Center	
Pin	**Wire Color**	**Circuit Number**	**Function**
1	BLK	HX005C	Ground to Splice 5 (J-7 and J-9 Ground)
2	BRN/YEL	HA068C	A/C Pressure Switch Signal
3–4	—	—	Not Used

Left Outer Frame Rail, In the Fuse/Relay Center

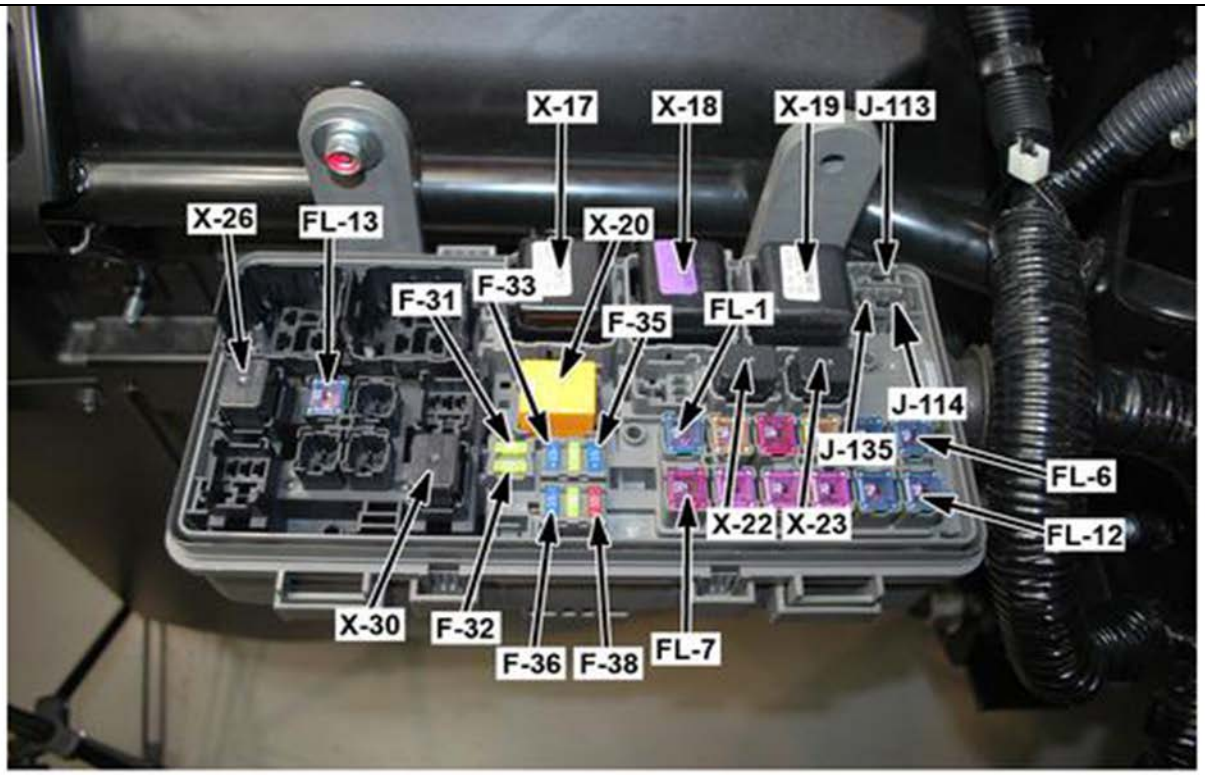

4892760

J-117 Fuel Tank Unit

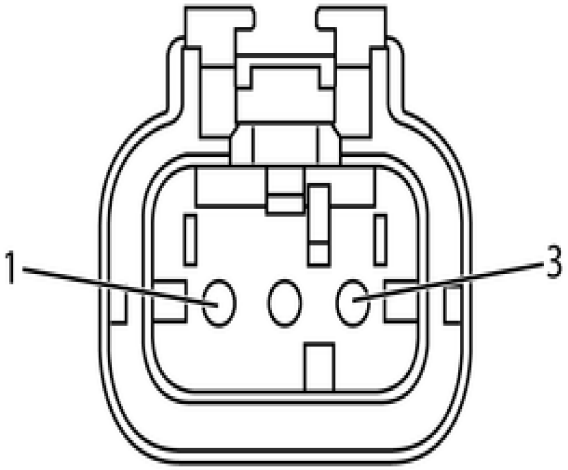

4892773

Connector Part Information		• 776429-1 • 3-Way F (BLK)	
Pin	**Wire Color**	**Circuit Number**	**Function**
1	LT GRN/WHT	MA019C	Fuel Tank Unit Sensor Signal
2	BLK	MX004C	Ground to J/B 2 (B-141 pin 6) (B-53 Ground)
3	—	—	Not Used

Left Outer Frame Rail, Next to the Fuel tank. (50 Gallon Tank Shown, 100 Gallon Tank Similar)

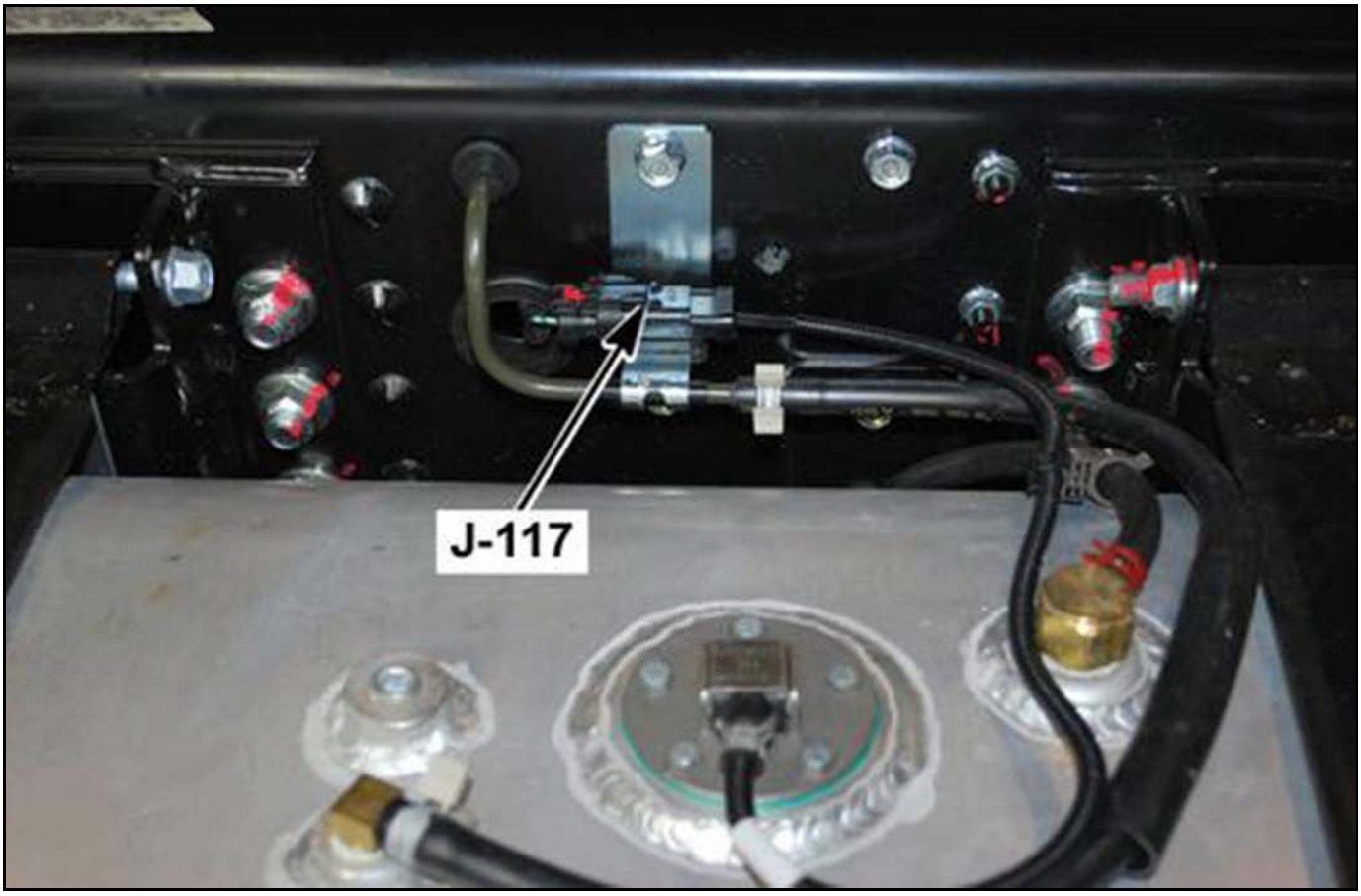

4892779

J-118 Rear Manufacture Connector

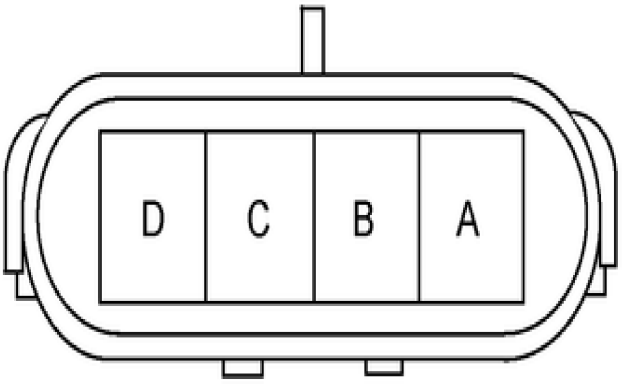

4892786

Connector Part Information		• 12015787 • 4-Way F • Body Builder Installed		Connector Part Information		• 12010974 • 4-Way M (BLU)	
Pin	**Wire Color**	**Circuit No**	**Function**	**Pin**	**Wire Color**	**Circuit No**	**Function**
A	—	—	—	A	LT GRN/BLK	BA048D	Switched Output Voltage from Marker Lamp Relay Relay
B	—	—	—	B	RED	IA027D	Battery Voltage from Fuse F36
C	—	—	—	C	WHT/BLK	IA028D	Switched Output Voltage from Rear Dome Lamp Relay
D	—	—	—	D	BLK/BLU	IX013D	Ground to J-298

At the Rear of the Frame, Near the Rear Combination Lamps

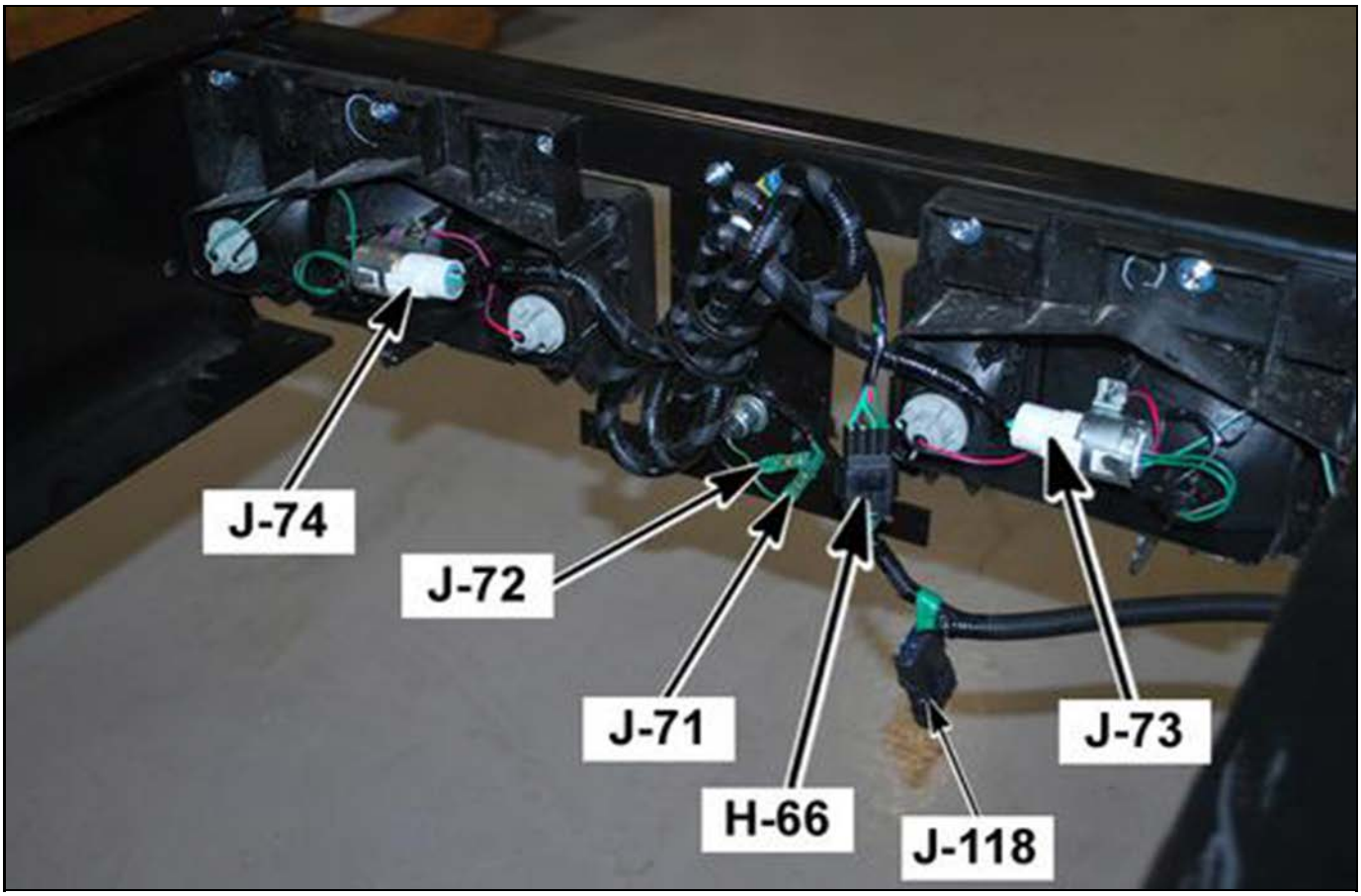

4891907

J-119 Transmission

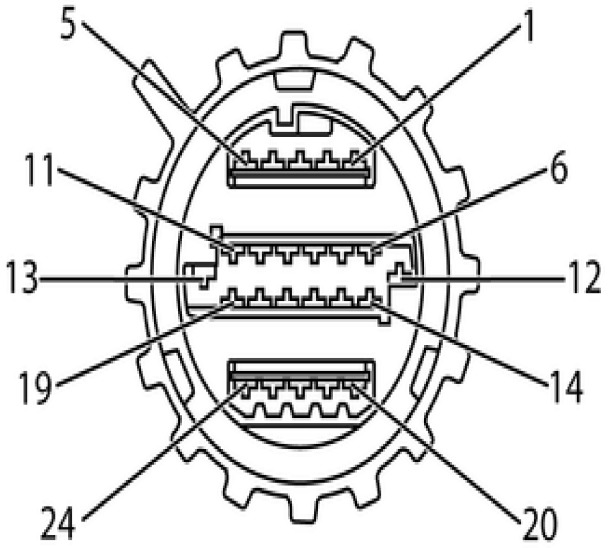

4892788

Connector Part Information		• R-62001-001) • 24-Way F (BRN	
Pin	**Wire Color**	**Circuit Number**	**Function**
1	WHT/GRN	OA076C	Shift Solenoid 1 (SS1) Control
2	WHT/BLK	OA075C	Shift Solenoid 2 (SS2) Control
3	WHT	OA074C	Shift Solenoid 3 (SS3) Control
4	GRN/BLK	OA067C	Pressure Switch 1 (PS1) Signal
5	—	—	Not Used
6	GRN	OA066C	Pressure Switch 3 (PS3) Signal
7	GRN/YEL	OA068C	Pressure Switch 2 (PS2) Signal
8	YEL/RED	OA085C	Fluid Temperature Sesnor
9	BLK	OA086C	Analog Sensor Signal Return
10	BRN/WHT	OA080C	Torque Converter Clutch (TCC) Solenoid Control
11	YEL/GRN	OA083C	Pressure Switch 4 (PS4) Signal
12	ORN	OA098C	Pressure Control Solenoid 3 (PCS 3) Control
13	BRN/YEL	OA097C	High Side Driver (HSD) 3 Voltage
14	YEL/BRN	OA082C	High Side Driver (HSD) 1 Voltage
15	YEL/BLK	OA081C	Pressure Control Solenoid 1 (PCS 1) Control
16	BRN/BLK	OA078C	High Side Driver (HSD) 2 Voltage
17	WHT/BLU	OA077C	Pressure Control Solenoid 2 (PCS 2) Control
18	GRN/WHT	OA070C	Internal Mode Switch Position "CE"
19	WHT/RED	OA079C	Main Modulator Solenoid Control
20	BLU/RED	OA071C	Internal Mode Switch Position "C"
21	BLU	OA072C	Internal Mode Switch Position "B"
22	BLU/YEL	OA073C	Internal Mode Switch Position "A"
23	GRN/RED	OA069C	Internal Mode Switch Position "P"
24	—	—	Not Used

Right Rear of the Transmission

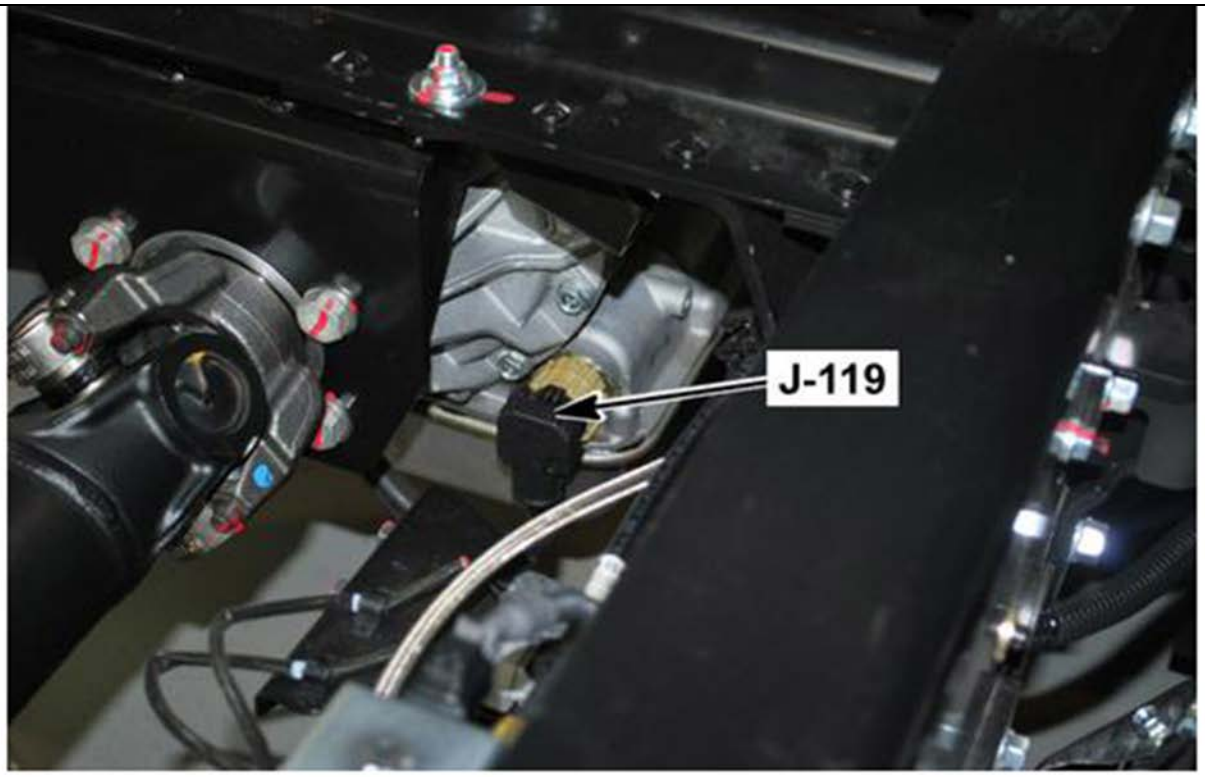

4892791

J-121 Engine Speed Sensor

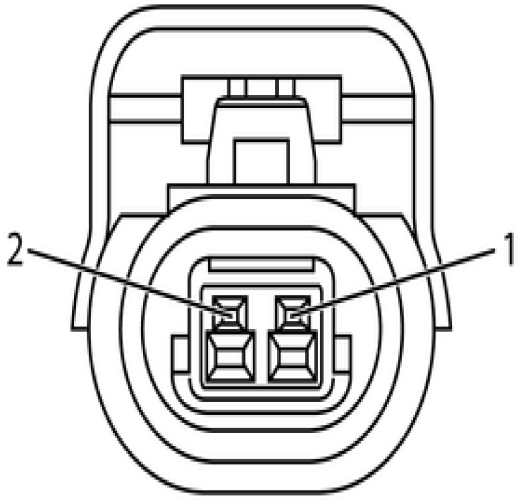

4892796

Connector Part Information		• 13520101 • 2-Way F (BLK)	
Pin	**Wire Color**	**Circuit Number**	**Function**
1	WHT/RED	OA061C	Engine Speed Sensor Signal
2	BLK/RED	OA060C	Engine Speed Sensor Supply Voltage

Left Upper Side of the Transmission Housing

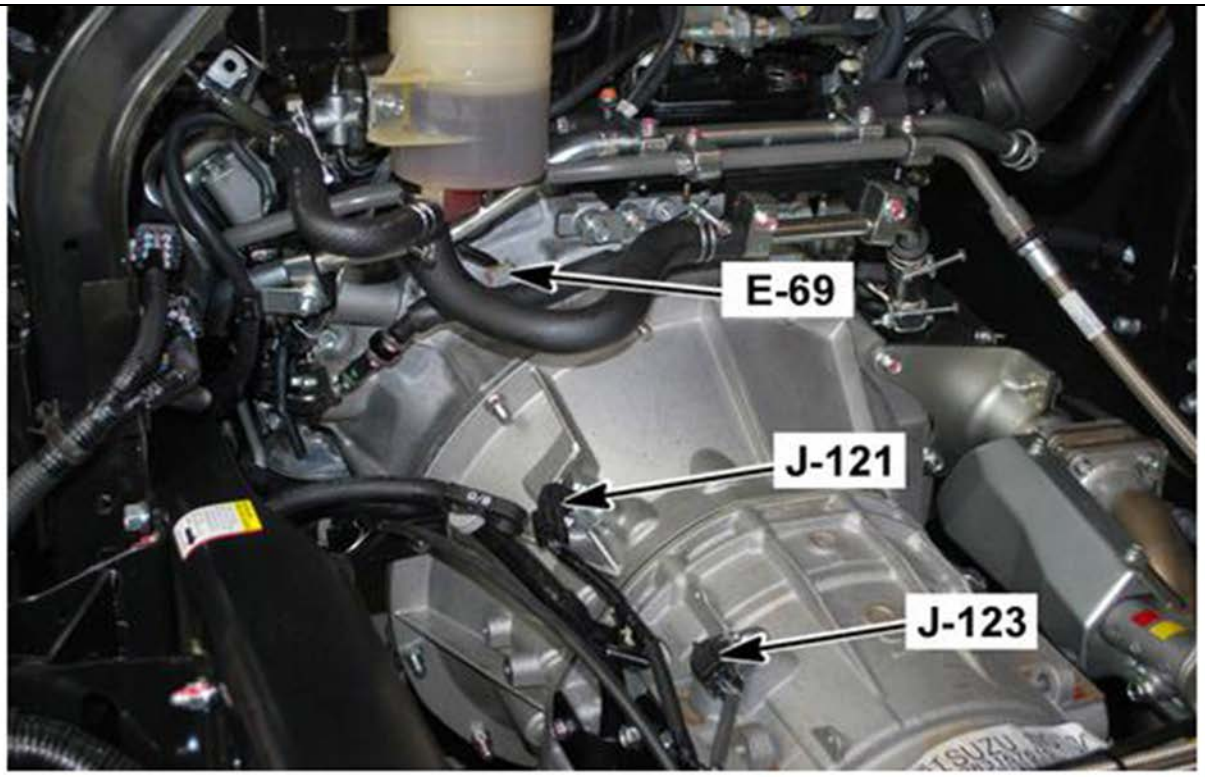

4891776

J-123 Input Shaft Speed (ISS) Sensor

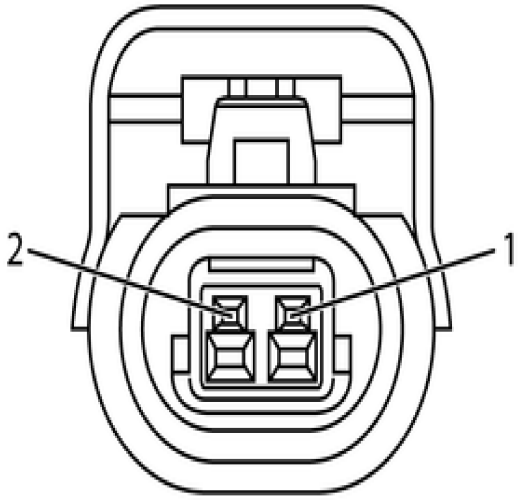

4892796

Connector Part Information		• 13520101 • 2-Way F (BLK)	
Pin	**Wire Color**	**Circuit Number**	**Function**
1	BLU	OA065C	Input Shaft Speed (ISS) Sensor Signal
2	YEL	OA064C	Input Shaft Speed (ISS) Sensor 5-Volt Supply

Left Upper Side of the Transmission Housing

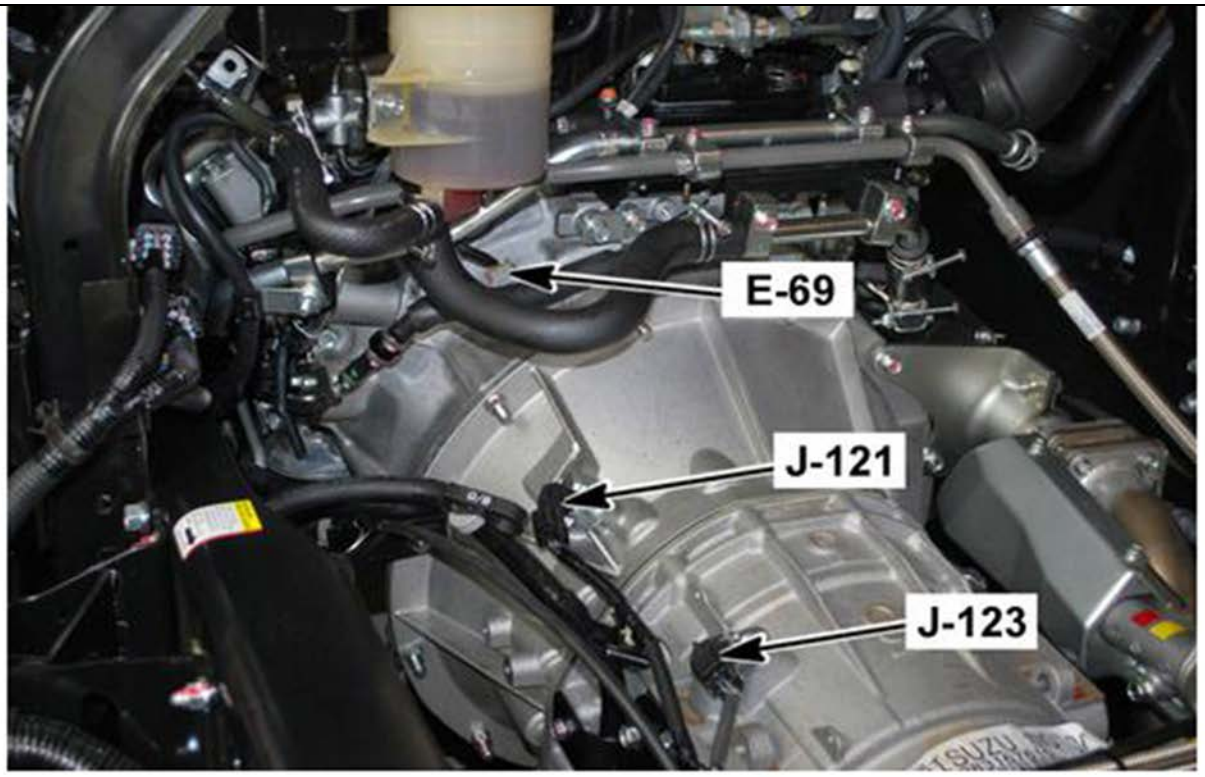

4891776

J-135 PTO Diode 2

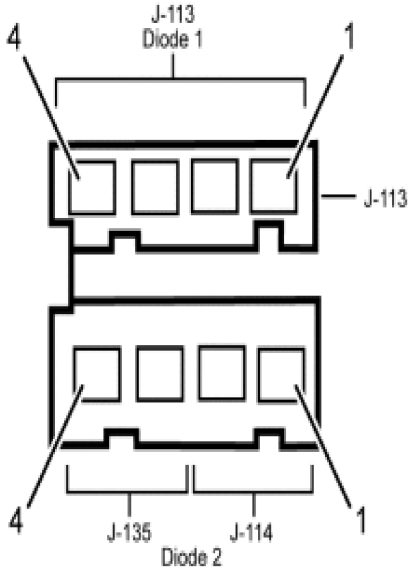

4892754

Connector Part Information		• 898030-7630 • Fuse/Relay Center	
Pin	**Wire Color**	**Circuit Number**	**Function**
1–2	—	—	Diode 2 J-114
3	BLU/ORN	IC092C	PTO Up/Down Switch (Up + PTO Resume) (In)
4	PNK/BLU	IC176C	PTO Up/Down Switch (Up + PTO Resume) (Out)

Left Outer Frame Rail, In the Fuse/Relay Center

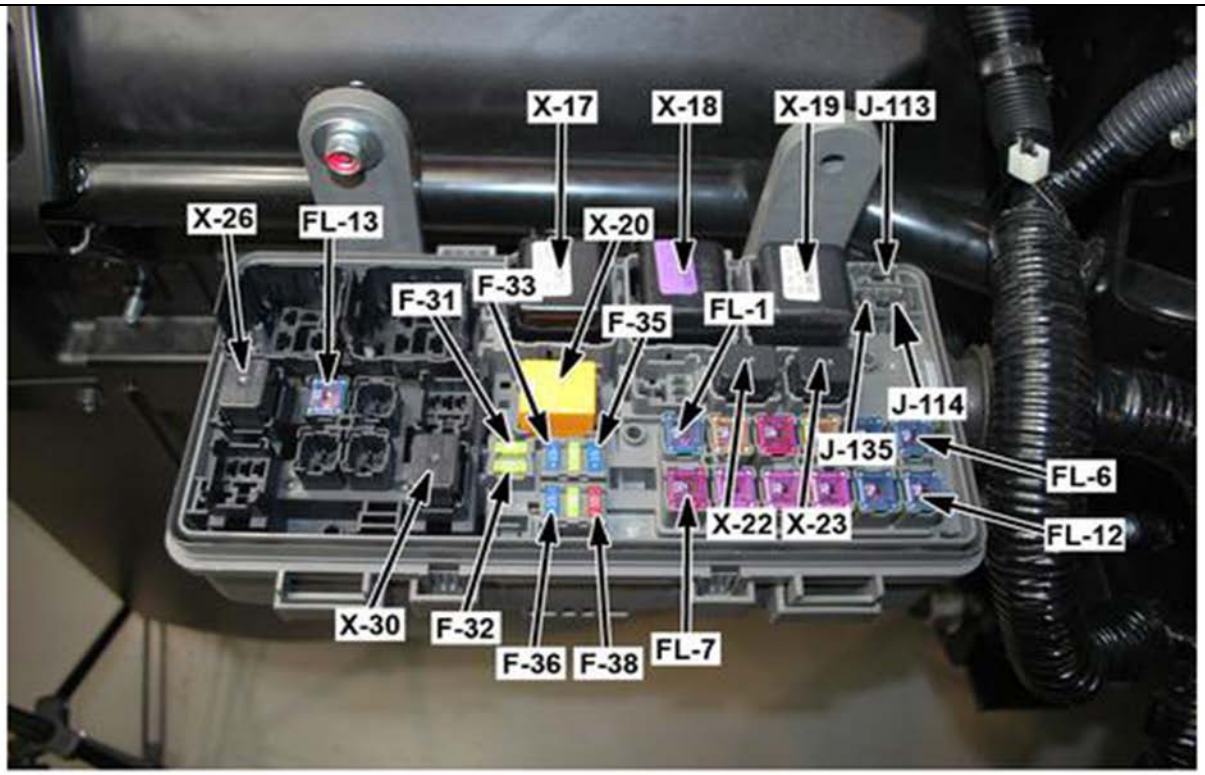

4892760

J-141 Ground

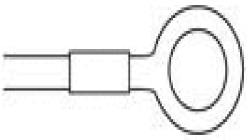

4891426

Connector Part Information		• LA-08 • 1-Way Eyelet	
Pin	**Wire Color**	**Circuit Number**	**Function**
—	BLK	FT006C	Ground to Splice 1

Right Inner Frame Rail, Next to the Batteries

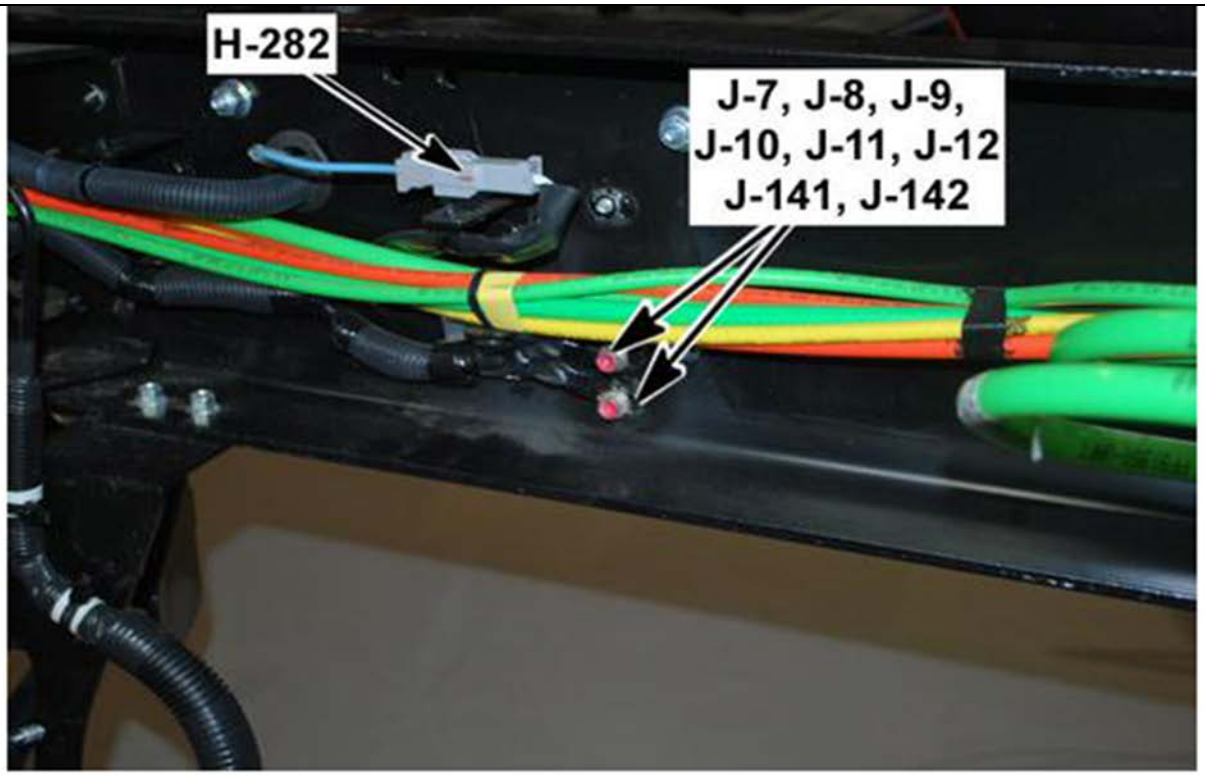

4892315

J-142 Ground

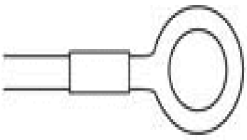

4891426

Connector Part Information		• LA-08 • 1-Way Eyelet	
Pin	**Wire Color**	**Circuit Number**	**Function**
—	BLK	FT007C	Ground to NOx Sensors 1 and 2
—	BLK	FT010C	Ground to DEF Tank Heater Coolant Control Valve

Right Inner Frame Rail, Next to the Batteries

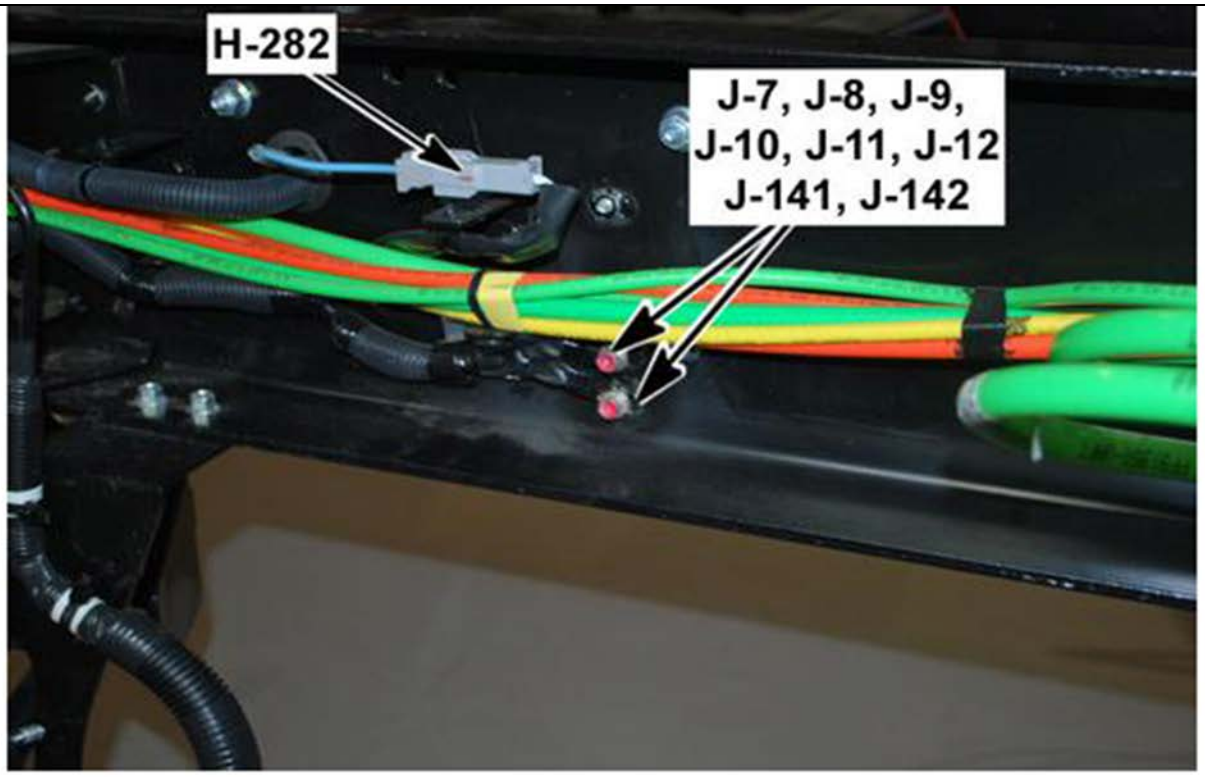

4892315

J-143 Diesel Exhaust Fluid (DEF) Module

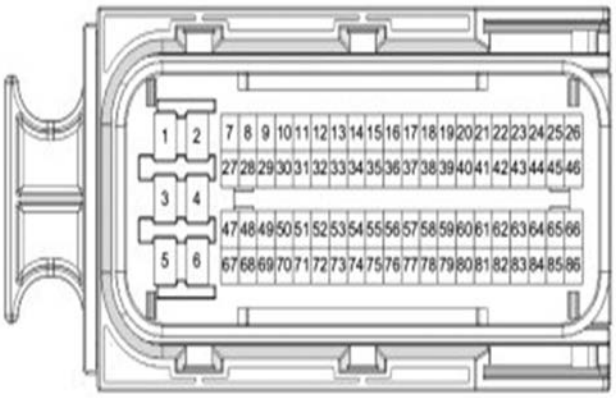

4892805

Connector Part Information		• A003-540-85-81 • 86-Way F (BLK)	
Pin	**Wire Color**	**Circuit Number**	**Function**
1	ORN	FG016C	NOx & DEF Sensor Relay Control
2–7	—	—	Not Used
8	GRY	FG013C	DEF Heater Valve Relay Control
9–11	—	—	Not Used
12	BLU	FG010C	DEF Injector Low Side
13–16	—	—	Not Used
17	PNK	FG032C	DEF Pump Pressure Sensor Signal
18	WHT/BLU	FG030C	DEF Pump Pressure Sensor Low Reference
19	VIO/YEL	FG031C	DEF Pump Pressure Sensor 5V Reference
20–23	—	—	Not Used
24	GRY	FG027C	DEF Pump Motor Control
25	—	—	Not Used
26	WHT/BLK	FG026C	DEF Pump Motor Valve Low Reference
27–31	—	—	Not Used
32	RED	FG009C	DEF Injector High Side
33	VIO	FG023C	EGT Sensor 3 Signal
34	VIO/WHT	FG024C	EGT Sensor 3 Low Reference
35–45	—	—	Not Used
46	RED/BLU	FG025C	DEF Pump Motor 12V Reference
47–64	—	—	Not Used
65	LT GRN	FG029C	DEF Pump Reverting Valve Control
66–84	—	—	Not Used
85	LT GRN	FG014C	Heater Valve Relay Control
86	RED	FG028C	DEF Pump Reverting Valve 12V Reference

Front Frame Area, Behind the Grille

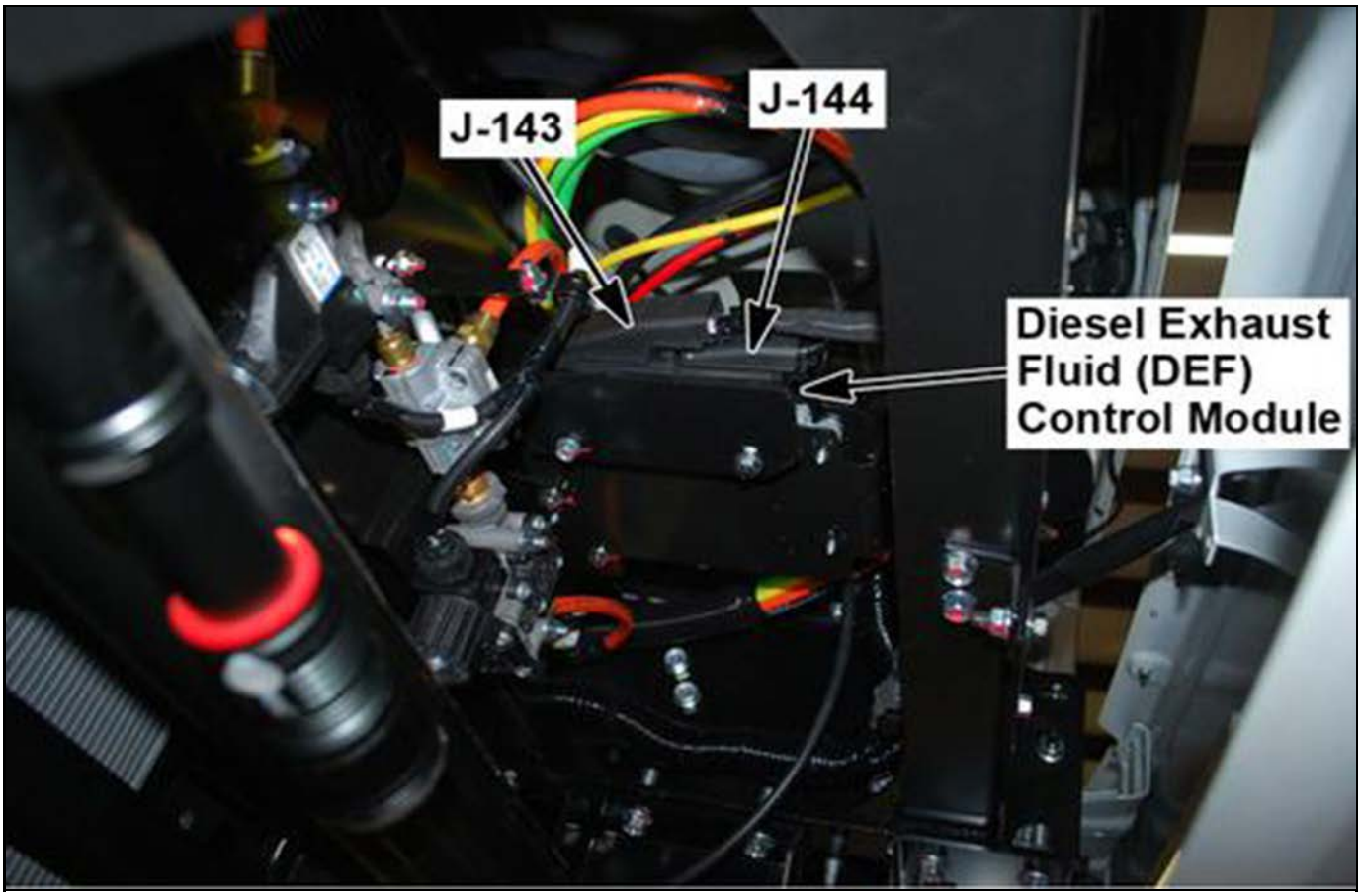

4892813

J-144 Diesel Exhaust Fluid (DEF) Control Module

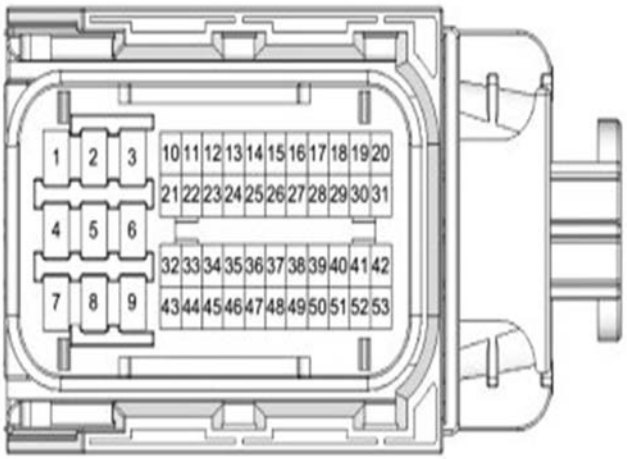

4892818

Connector Part Information		• A003540-87-81 • 53-Way F (BLK)	
Pin	**Wire Color**	**Circuit Number**	**Function**
1	BLK	FT001C	Ground to Splice 1 (J-141 Ground)
2	—	—	Not Used
3	BLK	FT003C	Ground to Splice 1 (J-141 Ground)
4	BLK	FT004C	Ground to Splice 1 (J-141 Ground)
5–6	—	—	Not Used
7	WHT	FG003C	Battery Voltage from Fuse F-34 Fuse/Relay Center
8	—	—	Not Used
9	WHT	FG005C	Battery Voltage from Fuse F-34 Fuse/Relay Center
10	—	—	Not Used
11	GRN/WHT	TF203C	ISO 15765 CAN 2 High
12	GRN	TF204C	ISO 15765 CAN 2 Low
13	—	—	Not Used
14	BLU/WHT	TF511C	CAN 3 Low
15	BLU	TF512C	CAN 3 High
16–45	—	—	Not Used
46	BLU/WHT	TF309C	Termination (Jumper) to Pin 47
47	BLU/WHT	TF309C	Termination (Jumper) to Pin 46
48	BLU	TF310C	Termination (Jumper) to Pin 49
49	BLU	TF310C	Termination (Jumper) to Pin 48
50–51	—	—	Not Used
52	BLK/ORN	FG107C	Ignition Voltage from Fuse F-20
54	—	—	Not Used

Front Frame Area, Behind the Grille

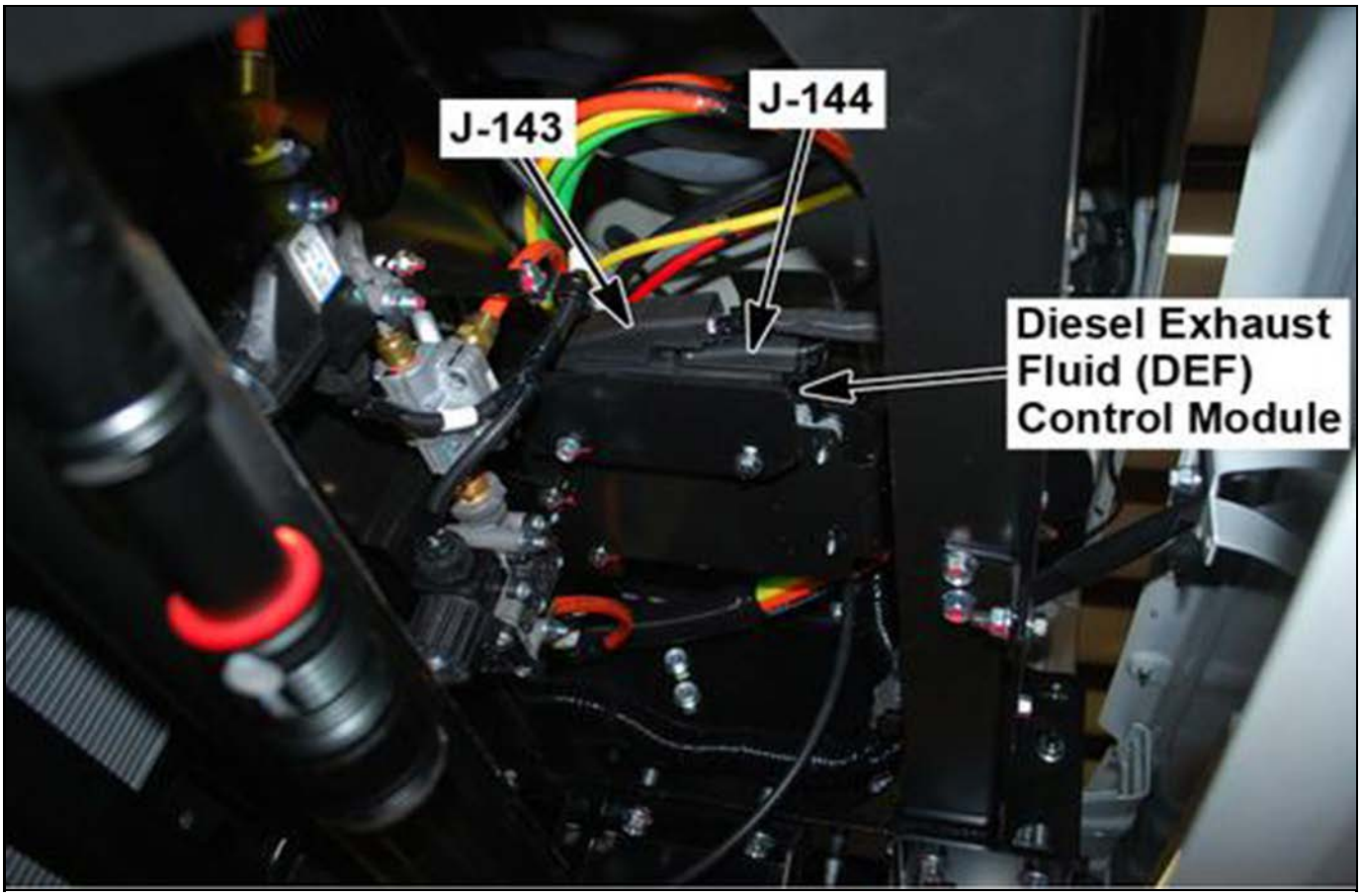

4892813

J-146 Charge Air Cooler (CAC) Temperature Sensor

4892842

Connector Part Information		• 7383-7020-10 • 2-Way F (DK GRY)	
Pin	**Wire Color**	**Circuit Number**	**Function**
1	WHT	IC216C	Sensor Signal
2	WHT/BLU	IC217C	Sensor Low Reference

Left Front of the Inner Cooler

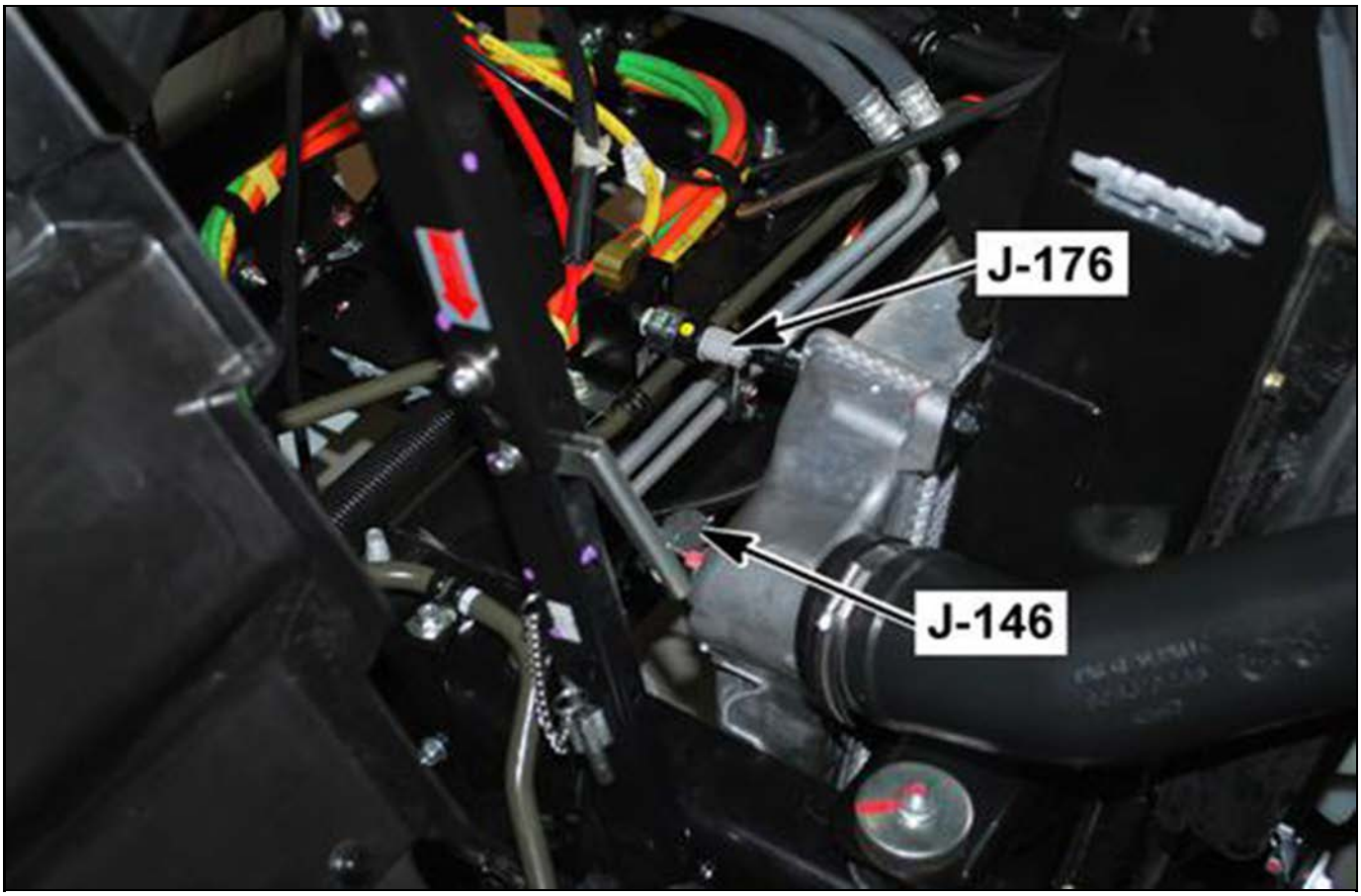

4892845

J-148 NOx Sensor 1

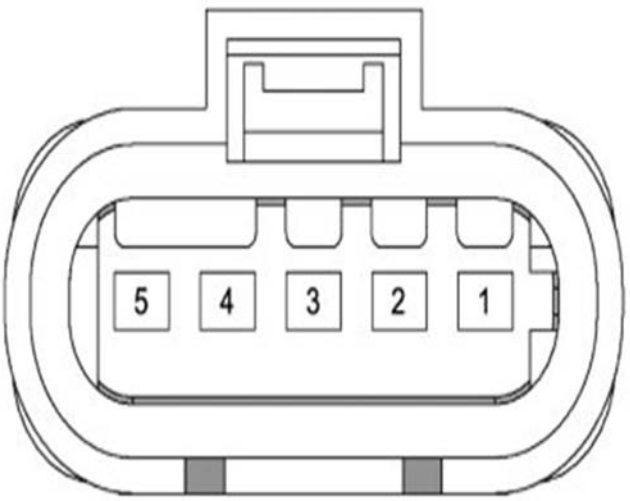

4892851

Connector Part Information		• 872-860-501 • 5-Way F (BLK)	
Pin	**Wire Color**	**Circuit Number**	**Function**
1	BLK/ORN	FG07	Voltage from NOx & DEF Sensor Relay (X-19) (Switched Output Voltage)
2	BLK	FT07	Ground to J-142
3	BLU	TF308	CAN 3 High
4	BLU/WHT	TF307	CAN 3 Low
5	BLK	FT08	Ground to J-142

Right Inner Frame Rail, Above the Diesel Particulate Filter (DPF)

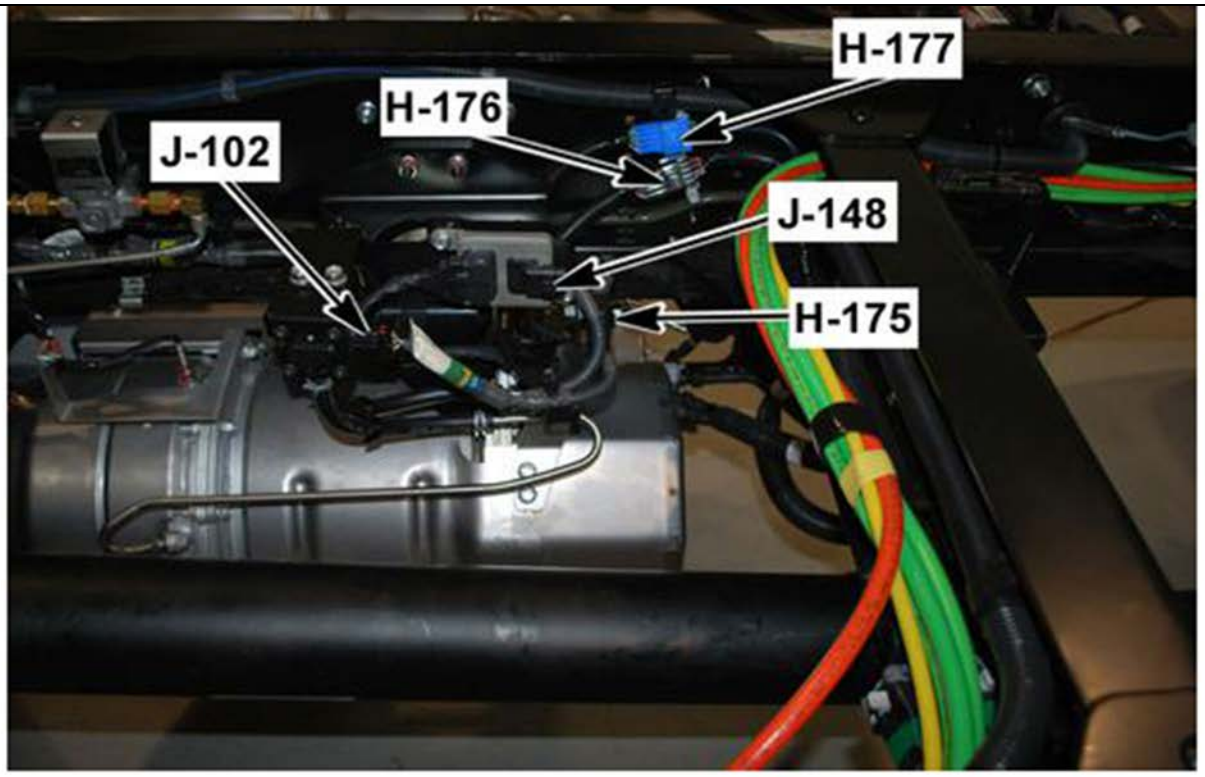

4892049

J-149 Diesel Exhaust Fluid (DEF) Injector

4892857

Connector Part Information		• 1-928-404-072 • 2-Way F (BLK)	
Pin	**Wire Color**	**Circuit Number**	**Function**
1	RED	FG009K	DEF Injector High Side
2	BLU	FG010K	DEF Injector Low Side

Right Outer Frame Rail, Behind the SCR Catalyst

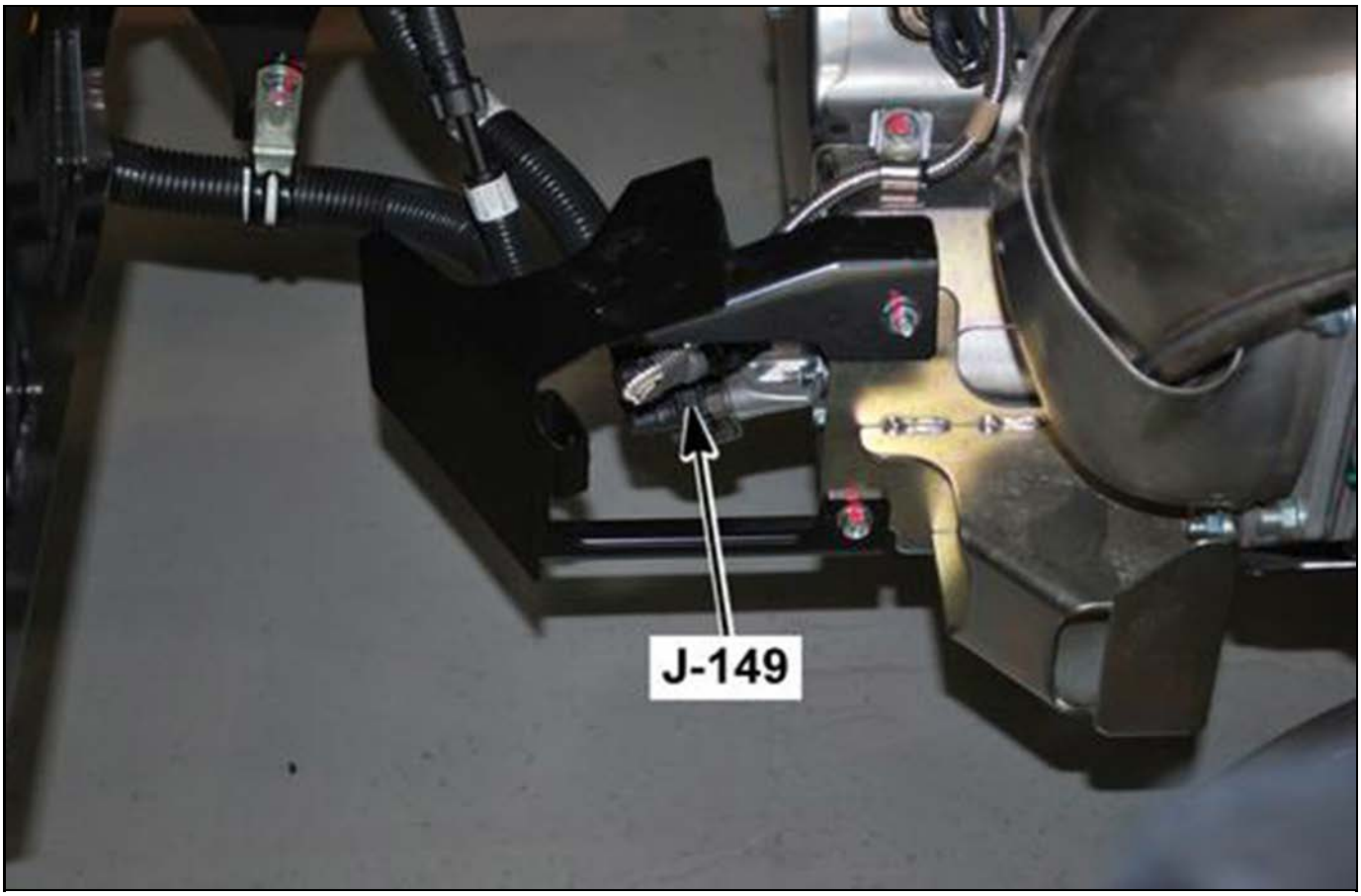

4892861

J-162 CAN 3 Resistor

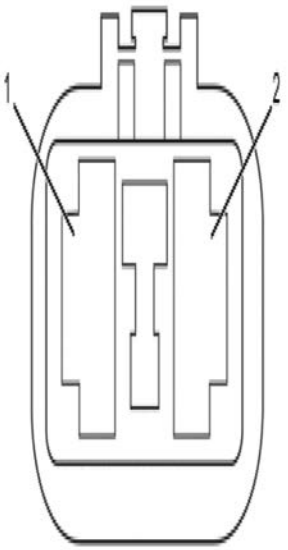

4892987

Connector Part Information		• 7323-6423-30 • 2-Way F (BLK)	
Pin	**Wire Color**	**Circuit Number**	**Function**
1	BLU/WHT	TF501I	CAN 3 Low
2	BLU	TF502I	CAN 3 High

Right Inner Frame Rail, Above the Front of the Diesel Particulate Filter (DPF)

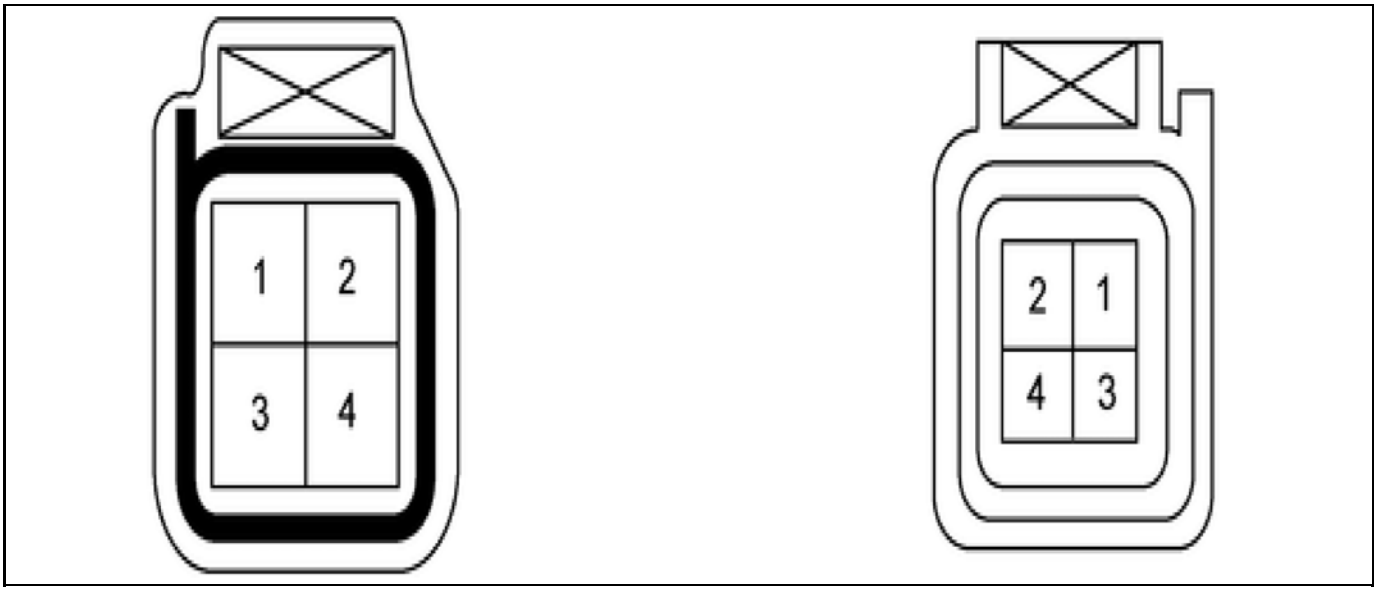

4892020

J-163 Exhaust Gas Temperature Sensor 3

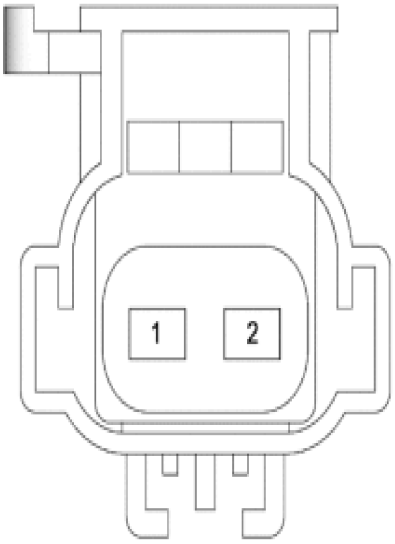

4893027

Connector Part Information		• 54200206 • 2-Way F (BLK)	
Pin	**Wire Color**	**Circuit Number**	**Function**
1	VIO/WHT	FG024K	EGT Sensor 3 Low Reference
2	VIO	FG023K	EGT Sensor 3 Signal

Right Outer Frame Rail, On the Front of the SCR Catalyst

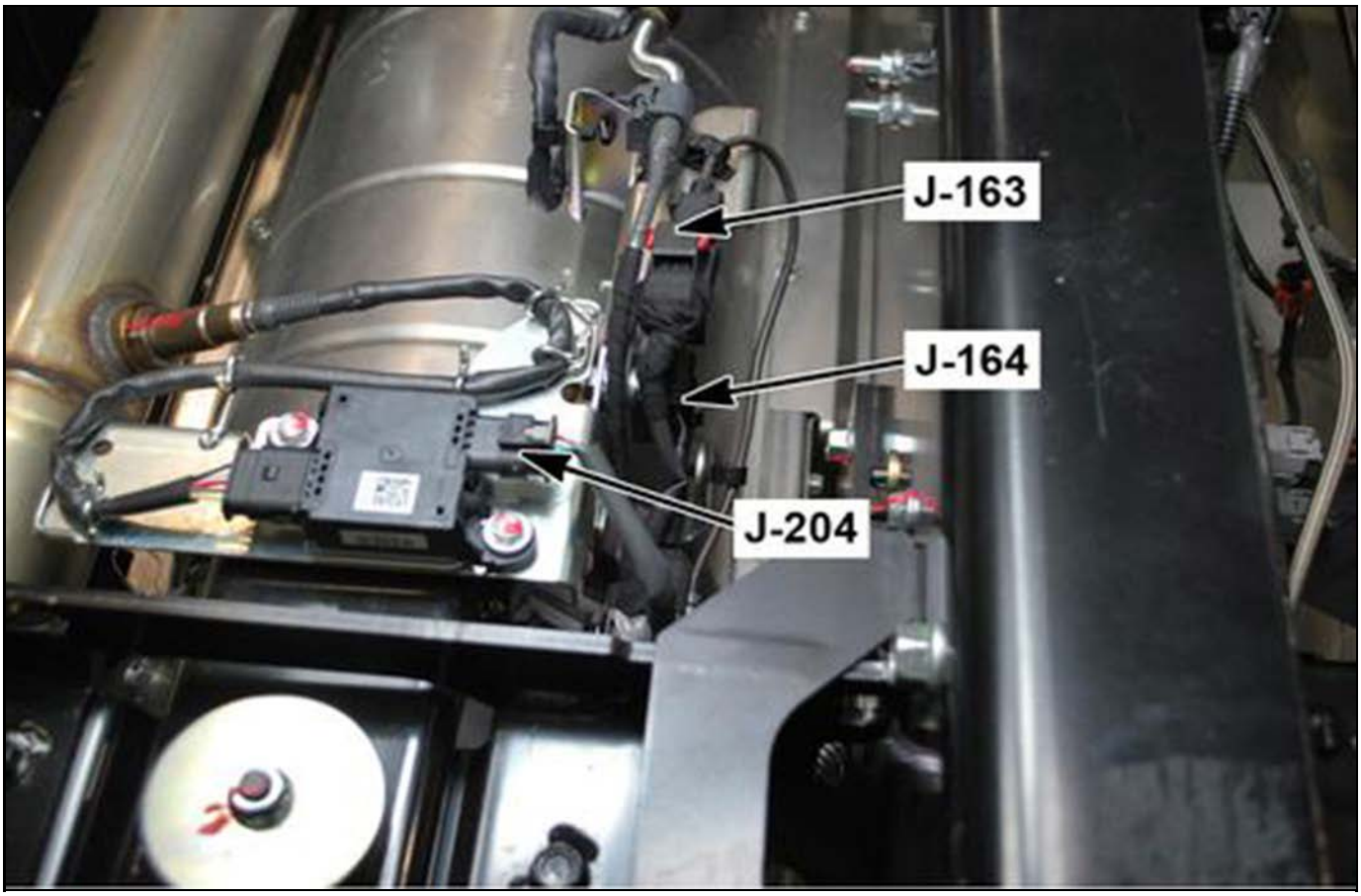

4893034

J-164 NOx Sensor 2

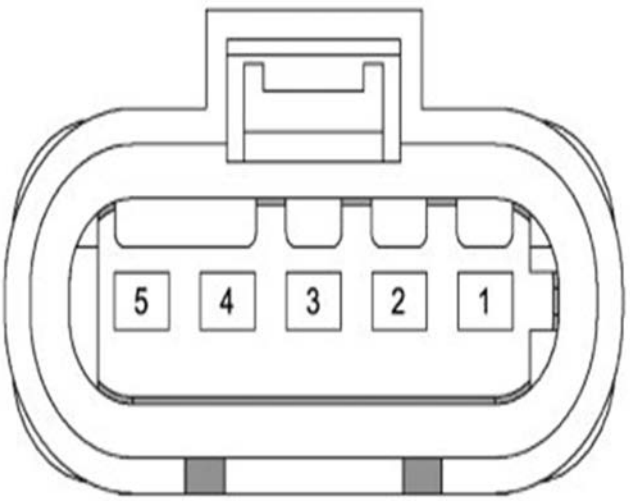

4892851

Connector Part Information		• 872-860-501 • 5-Way F (BLK)	
Pin	**Wire Color**	**Circuit Number**	**Function**
1	BLK/ORN	FG035K	Voltage from NOx & DEF Sensor Relay (X-19) (Switched Output Voltage)
2	BLK	FT009K	Ground to J-142
3	BLU	TF304K	CAN 3 High
4	BLU/WHT	TF303K	CAN 3 Low
5	—	—	Not Used

Right Outer Frame Rail, On the Front of the SCR Catalyst

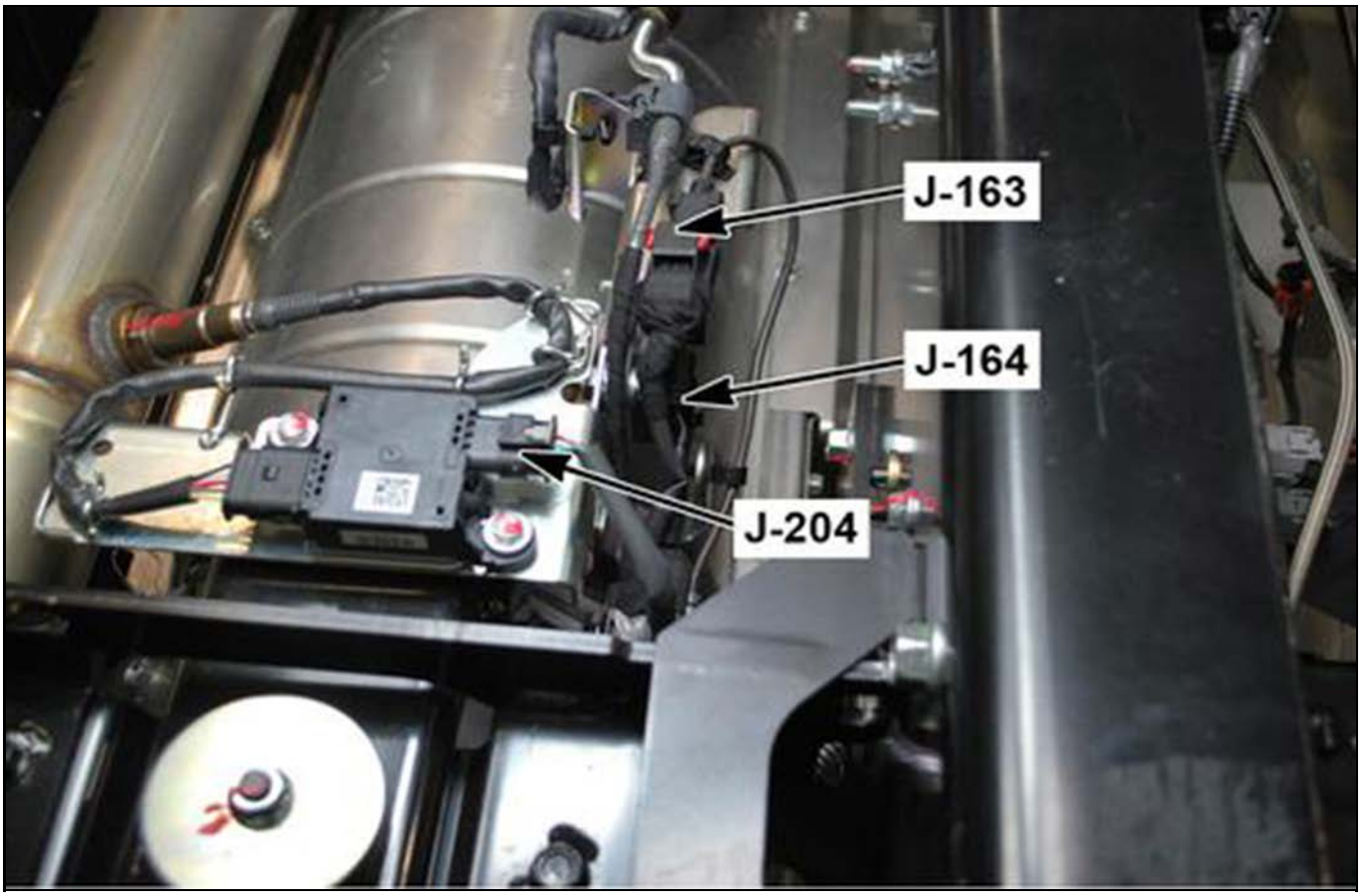

4893034

J-165 Diesel Exhaust Fluid Supply Pump

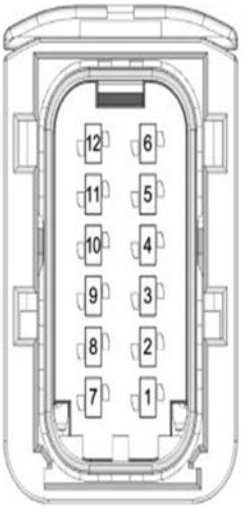

4893060

Connector Part Information		• 1-1703639-1 • 12-Way F (BLK)	
Pin	**Wire Color**	**Circuit Number**	**Function**
1	—	—	Not Used
2	VIO/YEL	FG31	DEF Supply Pump Pressure Sensor 5V Reference
3	PNK	FG32	DEF Supply Pump Pressure Sensor Signal
4	WHT/BLU	FG30	DEF Supply Pump Pressure Sensor Low Reference
5–7	—	—	Not Used
8	WHT/BLK	FG26	DEF Supply Pump Motor Valve Low Reference
9	RED/BLU	FG25	DEF Supply Pump Motor 12V Reference
10	GRY	FG27	DEF Supply Pump Motor Control
11	RED	FG28	DEF Supply Pump Reverting Valve 12V Reference
12	LT GRN	FG29	DEF Supply Pump Reverting Valve Control

Between the DEF tank and the Left Outer Frame Rail, Top Cover Has Been Removed

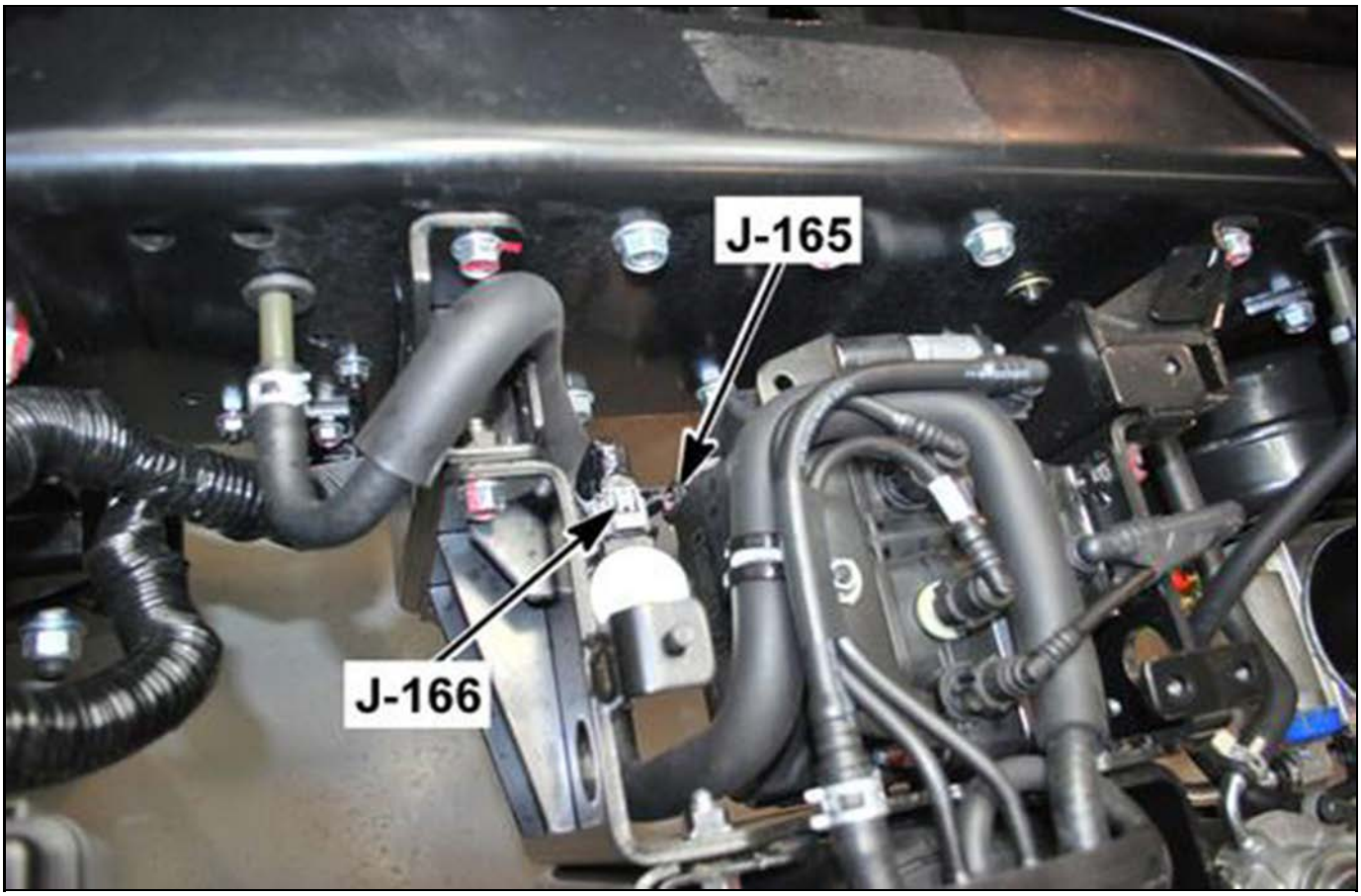

4893069

J-166 DEF Tank Heater Coolant Control Valve

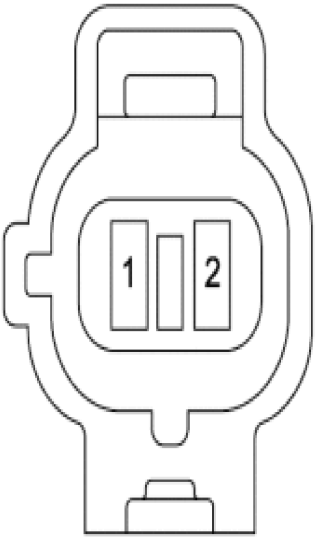

4891863

Connector Part Information		• 6189-0682 • 2-Way F (GRY)	
Pin	**Wire Color**	**Circuit Number**	**Function**
1	RED/WHT	FG11	Valve Control from DEF Heater Valve Relay (X- 23)
2	BLK	FT10	Low Reference Ground to J-142

Between the DEF tank and the Left Outer Frame Rail, Top Cover Has Been Removed

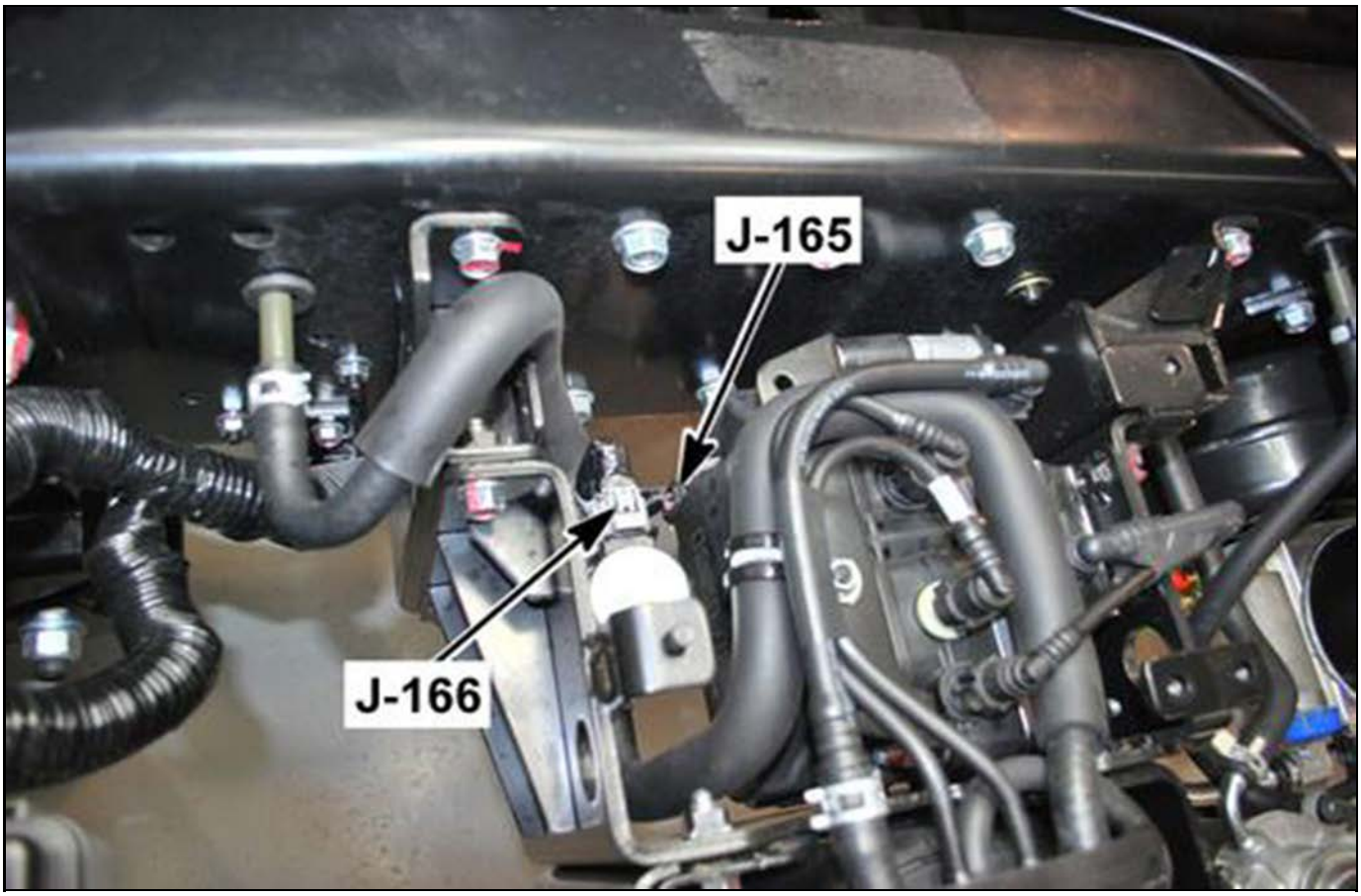

4893069

J-167 Diesel Exhaust Fluid Tank and Temperature Sensor

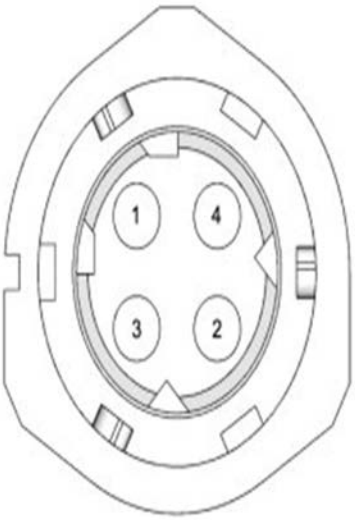

4893091

Connector Part Information		• 1-967325-1 • 4-Way F (BLK)	
Pin	**Wire Color**	**Circuit Number**	**Function**
1	BLU	TF306	CAN 3 High
2	BLU/WHT	TF305	CAN 3 Low
3	BLU/WHT	FG36	DEF Level & Temperature Sensor Voltage from NOx & DEF Sensor Relay X-19
4	PNK/WHT	FT37	DEF Level & Temperature Sensor Low Reference Ground to J-142

Left Outer Frame Rail, On Top of the DEF Tank

4893104

J-176 Parking Brake Switch

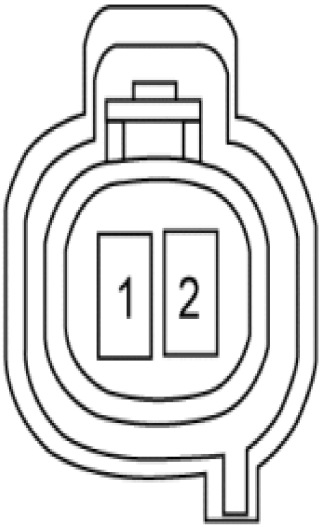

4891199

Connector Part Information		• 6189-0264 • 2-Way F (GRY)	
Pin	**Wire Color**	**Circuit Number**	**Function**
1	WHT/BLK	MA098C	Parking Brake Switch Signal to J/B 1 (B-133 pin 16)
2	BLK	MX069C	Parking Brake Switch Ground to Splice 2 (J-8 and J-11 Ground)

Front Frame Area, in Front of the Inner Cooler

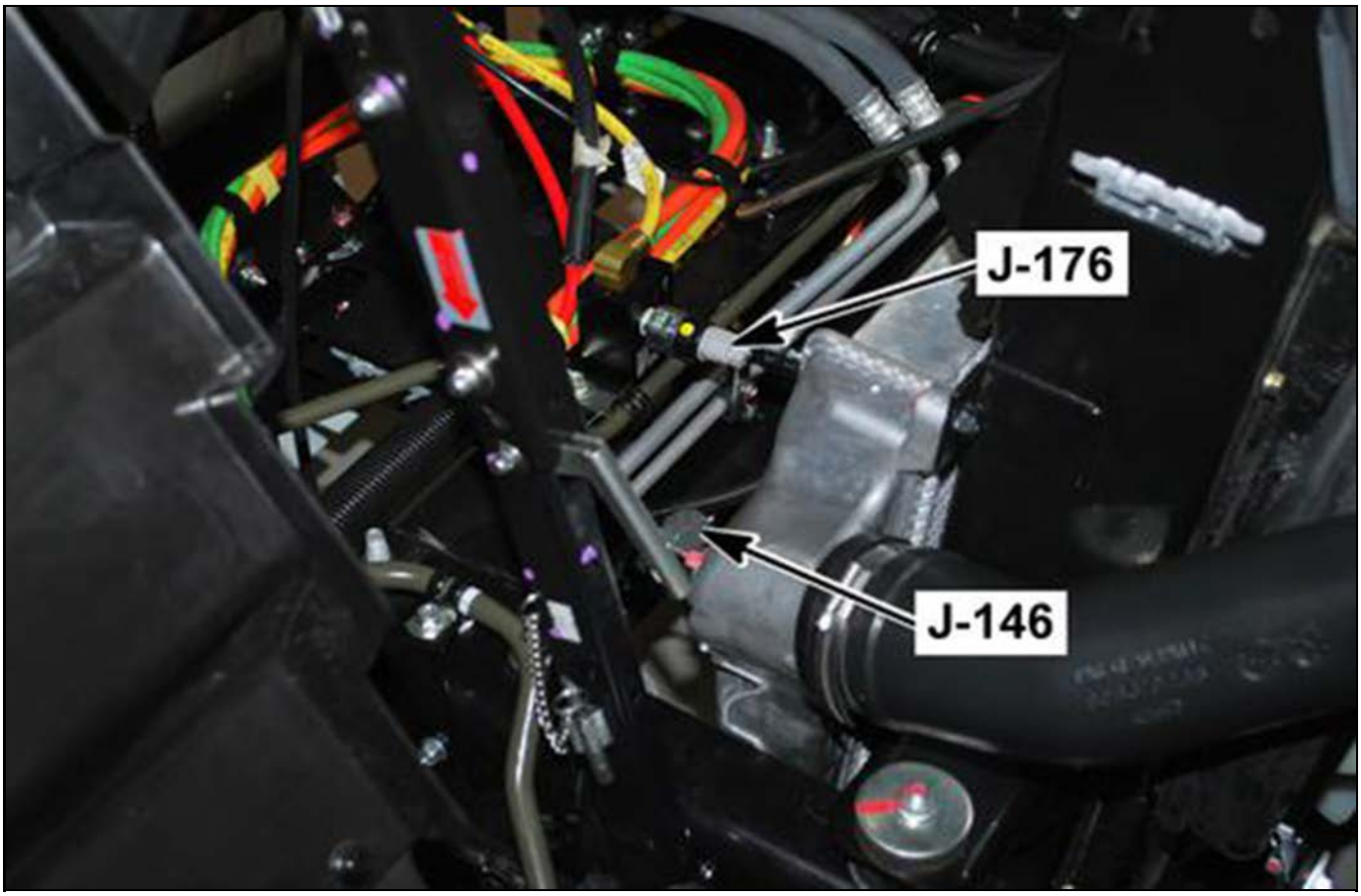

4892845

J-185 Pressure Modulator Valve (LF)

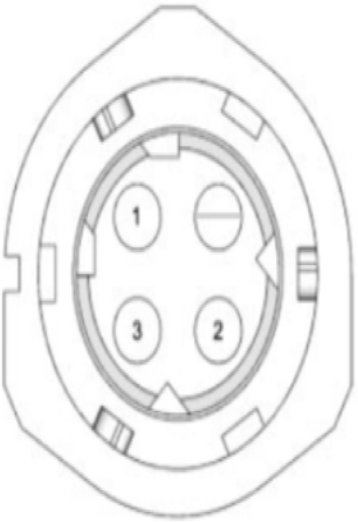

4893206

Connector Part Information		• 1-967325-2 • 3-Way F (BLK)	
Pin	**Wire Color**	**Circuit Number**	**Function**
1	RED	BB105L	Left Front Pressure Modulator Valve Release Control
2	BLK/RED	BB104L	Left Front Pressure Modulator Common (Low Reference)
3	GRN/WHT	BB103L	Left Front Pressure Modulator Valve Hold Control

Front Frame Area of the Vehicle, in Front of the Radiator

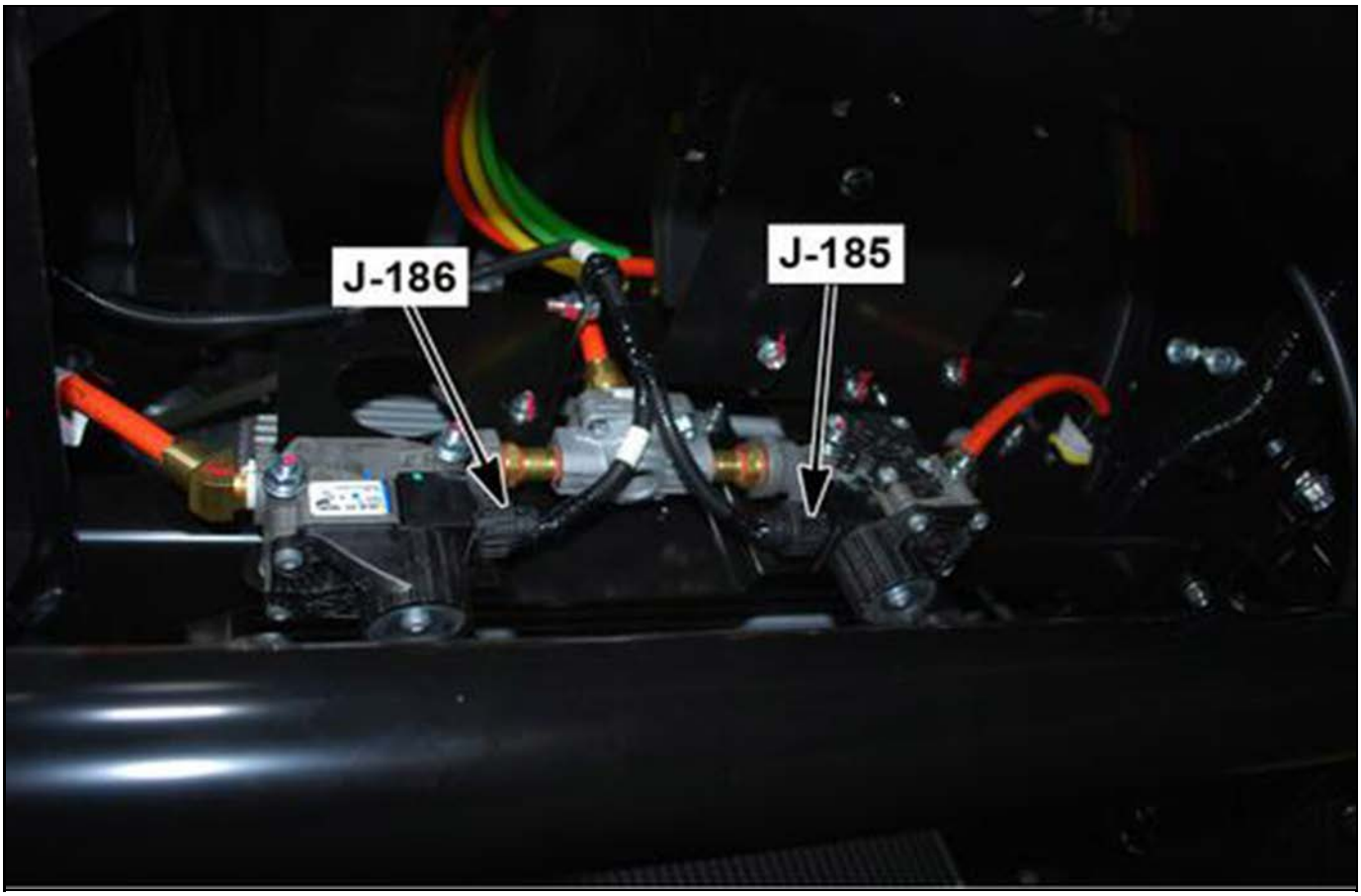

4893229

J-186 Pressure Modulator Valve (RF)

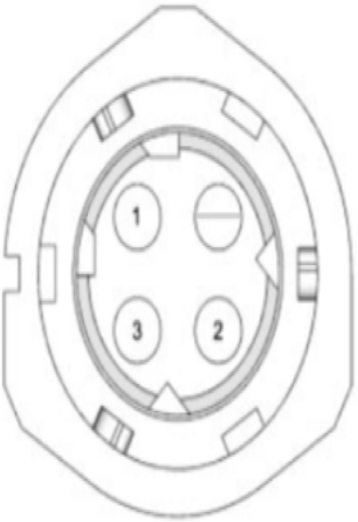

4893206

Connector Part Information		• 1-967325-2 • 3-Way F (BLK)	
Pin	**Wire Color**	**Circuit Number**	**Function**
1	WHT/BLK	BB110L	Right Front Pressure Modulator Valve Release Control
2	PNK/BLK	BB109L	Right Front Pressure Modulator Valve Common (Low Reference)
3	WHT/RED	BB108L	Right Front Pressure Modulator Valve Hold Control

Front Frame Area of the Vehicle, in Front of the Radiator

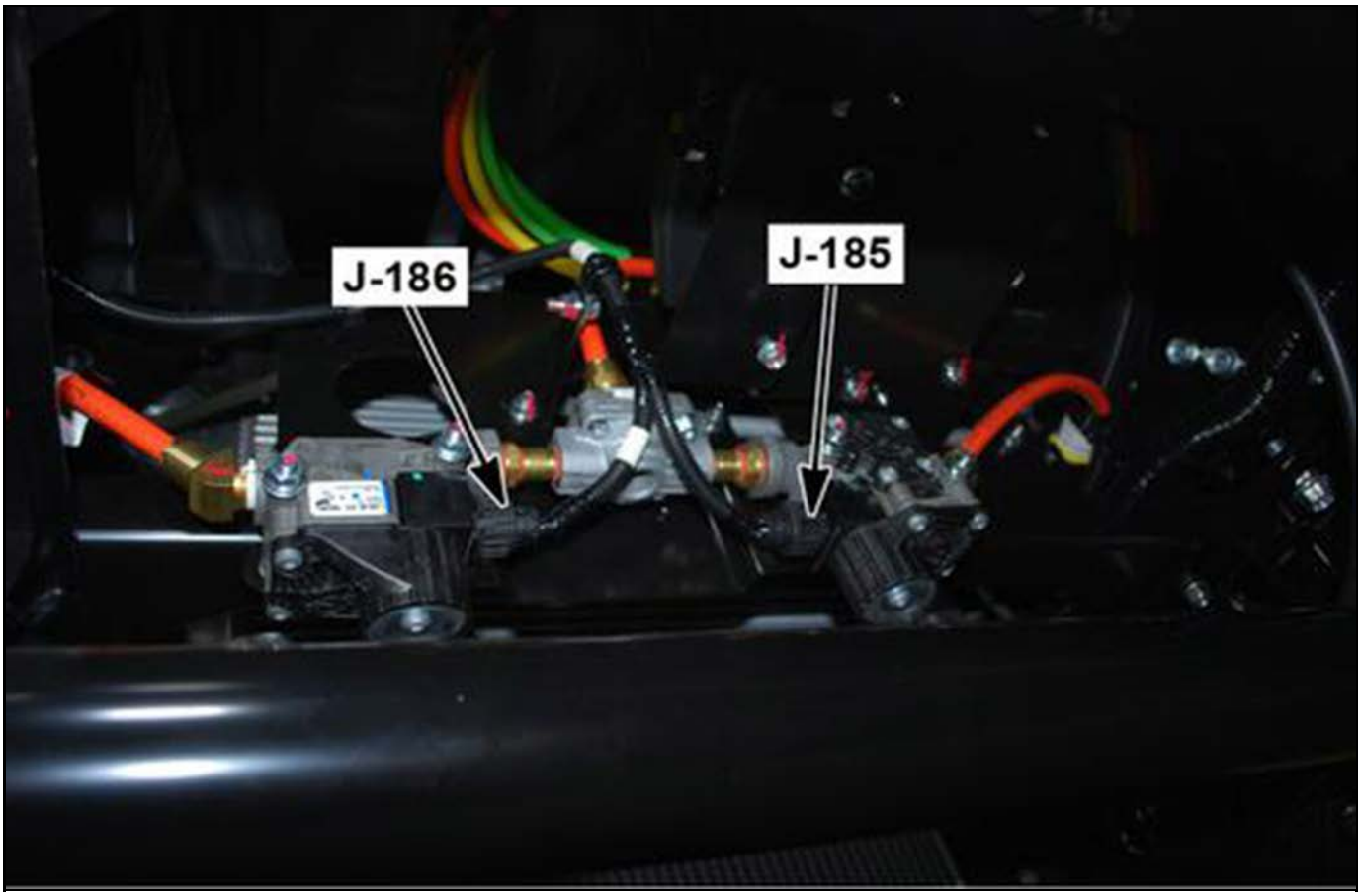

4893229

J-187 Pressure Modulator Valve (LR)

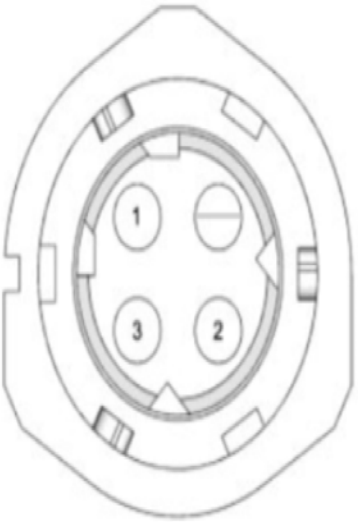

4893206

Connector Part Information		• 1-967325-2 • 3-Way F (BLK)	
Pin	**Wire Color**	**Circuit Number**	**Function**
1	RED/BLU	BB115D	Left Rear Pressure Modulator Valve Release Control
2	BLK/WHT	BB114D	Left Rear Pressure Modulator Common (Low Reference)
3	WHT/BLU	BB113D	Left Rear Pressure Modulator Valve Hold Control

Front Frame Area of the Vehicle, in Front of the Radiator

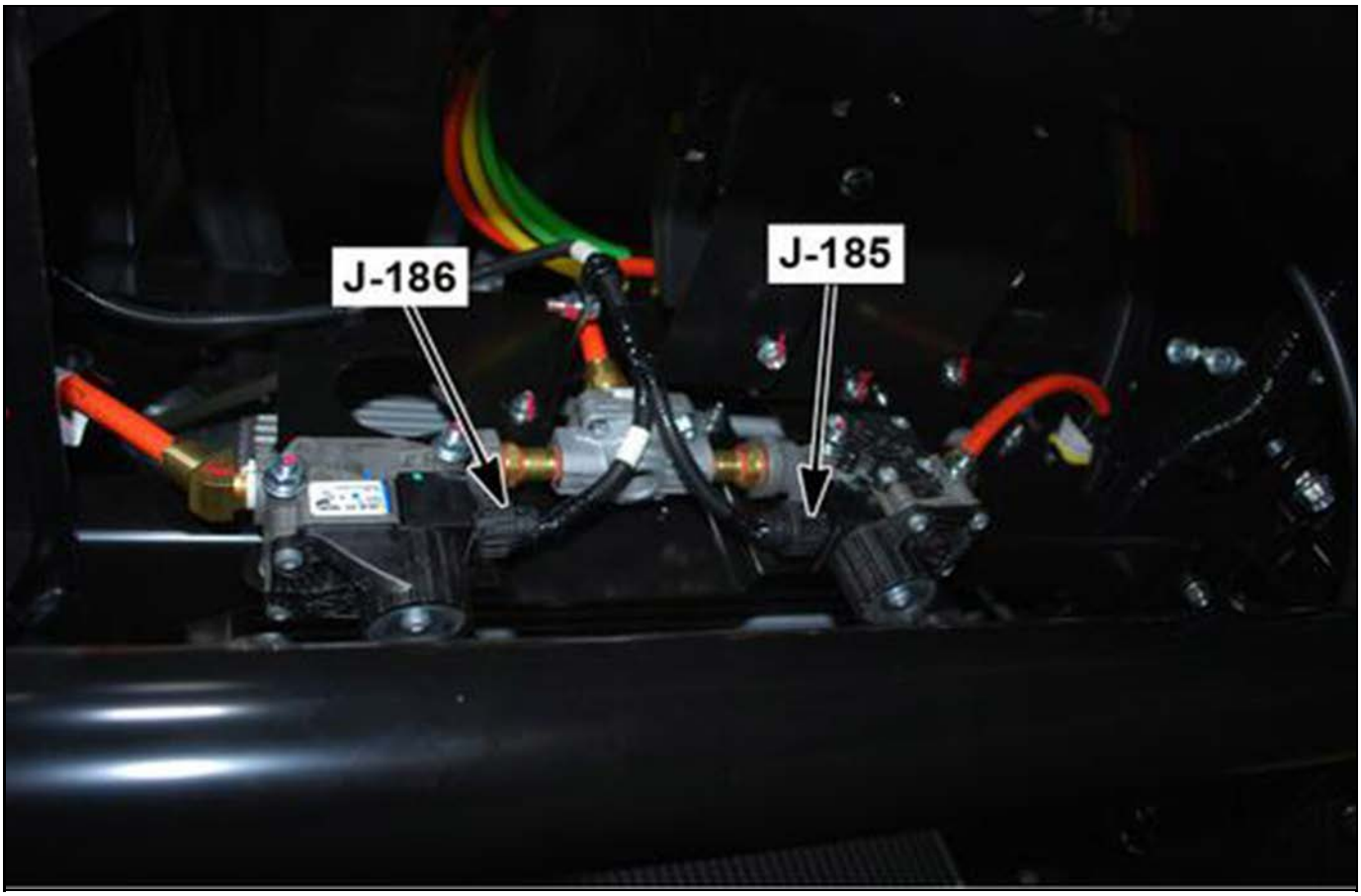

4893229

J-188 Pressure Modulator Valve (RR)

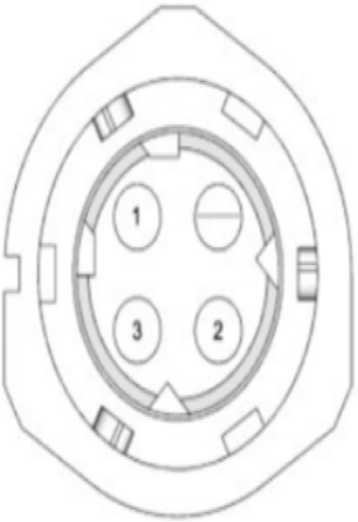

4893206

Connector Part Information		• 1-967325-2 • 3-Way F (BLK)	
Pin	**Wire Color**	**Circuit Number**	**Function**
1	RED/GRN	BB120D	Right Rear Pressure Modulator Valve Release Control
2	BLK/ORN	BB119D	Right Rear Pressure Modulator Common (Low Reference)
3	WHT/GRN	BB118D	Right Rear Pressure Modulator Valve Hold Control

Front Frame Area of the Vehicle, in Front of the Radiator

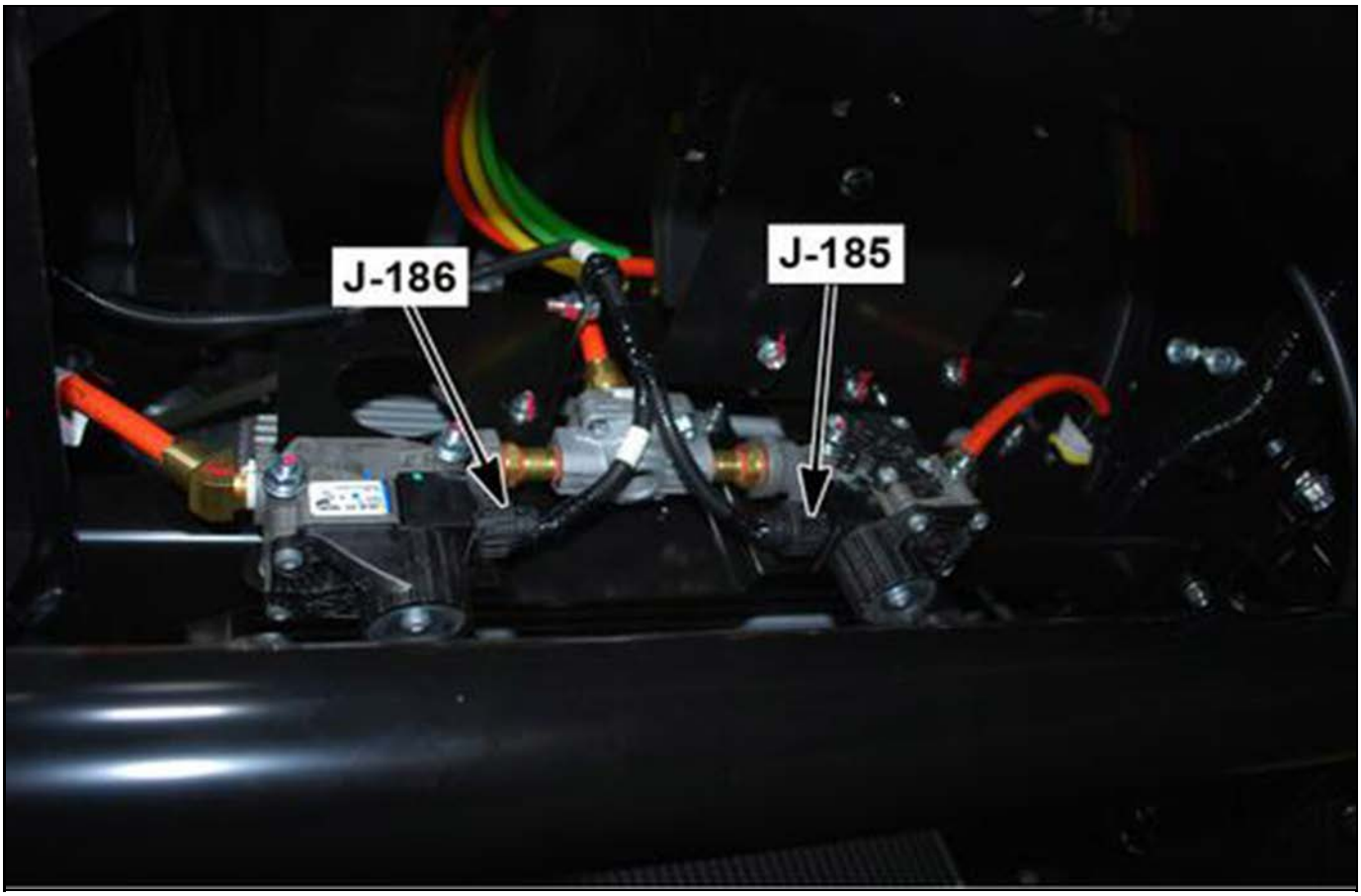

4893229

J-192 Air Filter Switch

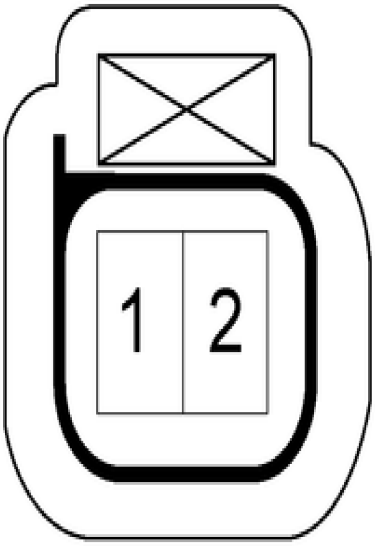

4893298

Connector Part Information		• X010326 • 2-Way F (BLU)	
Pin	**Wire Color**	**Circuit Number**	**Function**
1	BLU/YEL	MA015K	Air Filter Switch Signal
2	BLK	MX007K	Ground to Splice 7 (J-10 and J-12 Grounds)

Outlet Side of the Air Filter Housing

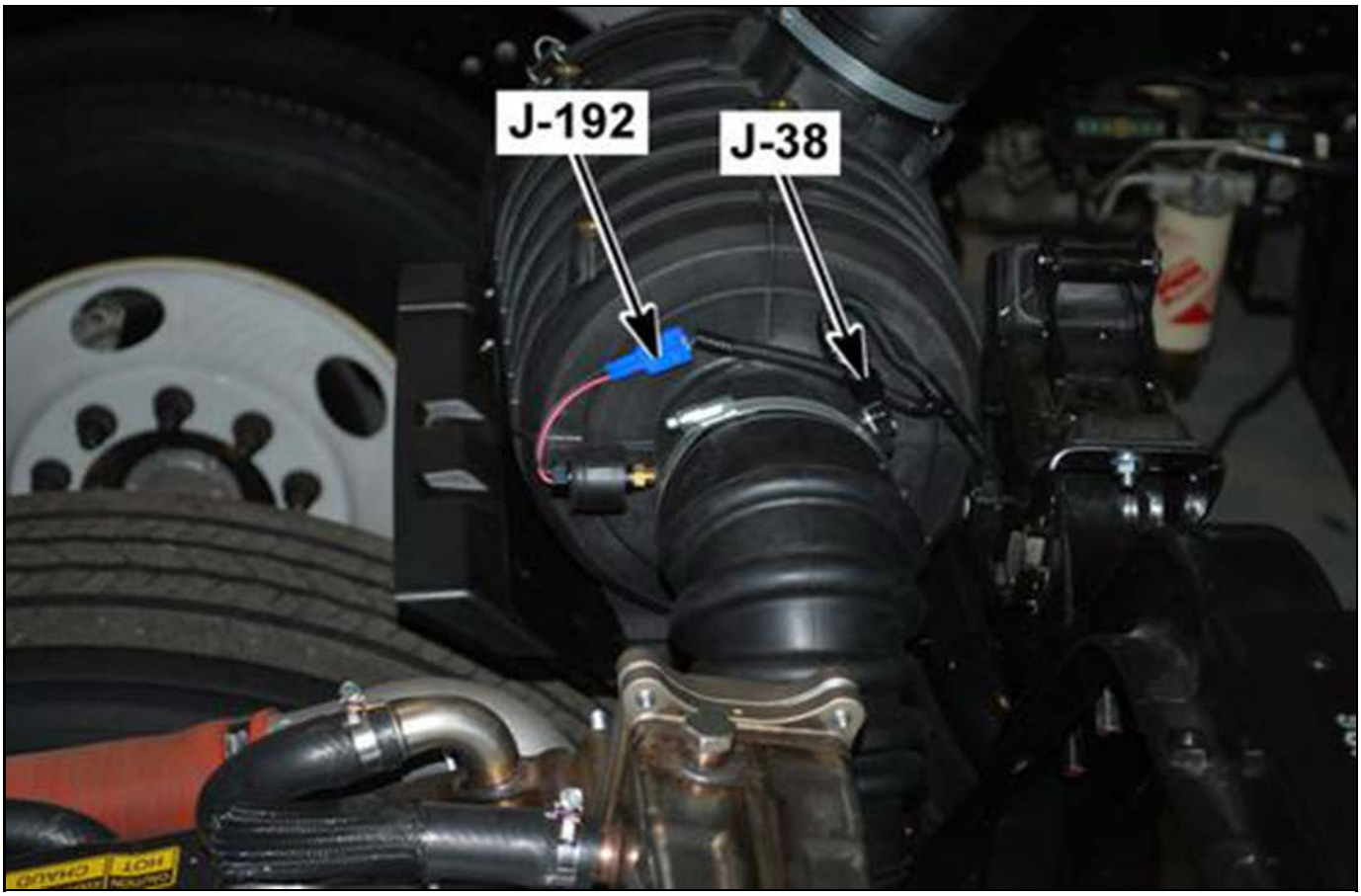

4892607

J-193 Air Pressure Sensor 1 (Primary)

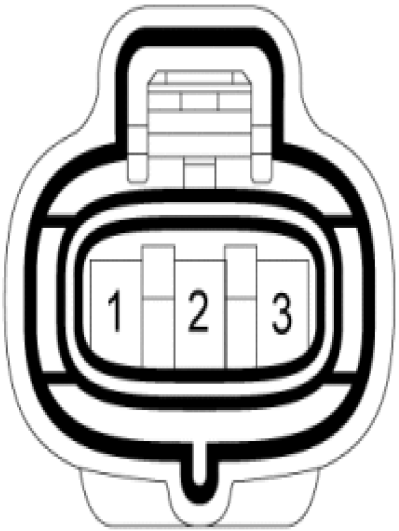

4891773

Connector Part Information		• 6189-0099 • 3-Way F (BLK)	
Pin	**Wire Color**	**Circuit Number**	**Function**
1	WHT	MA087C	Low Reference
2	WHT/GRN	MA083C	Sensor Signal (Output)
3	WHT/BLU	MA088C	Sensor Voltage

Under the Left Front of the Cab, Left of the Steering Column

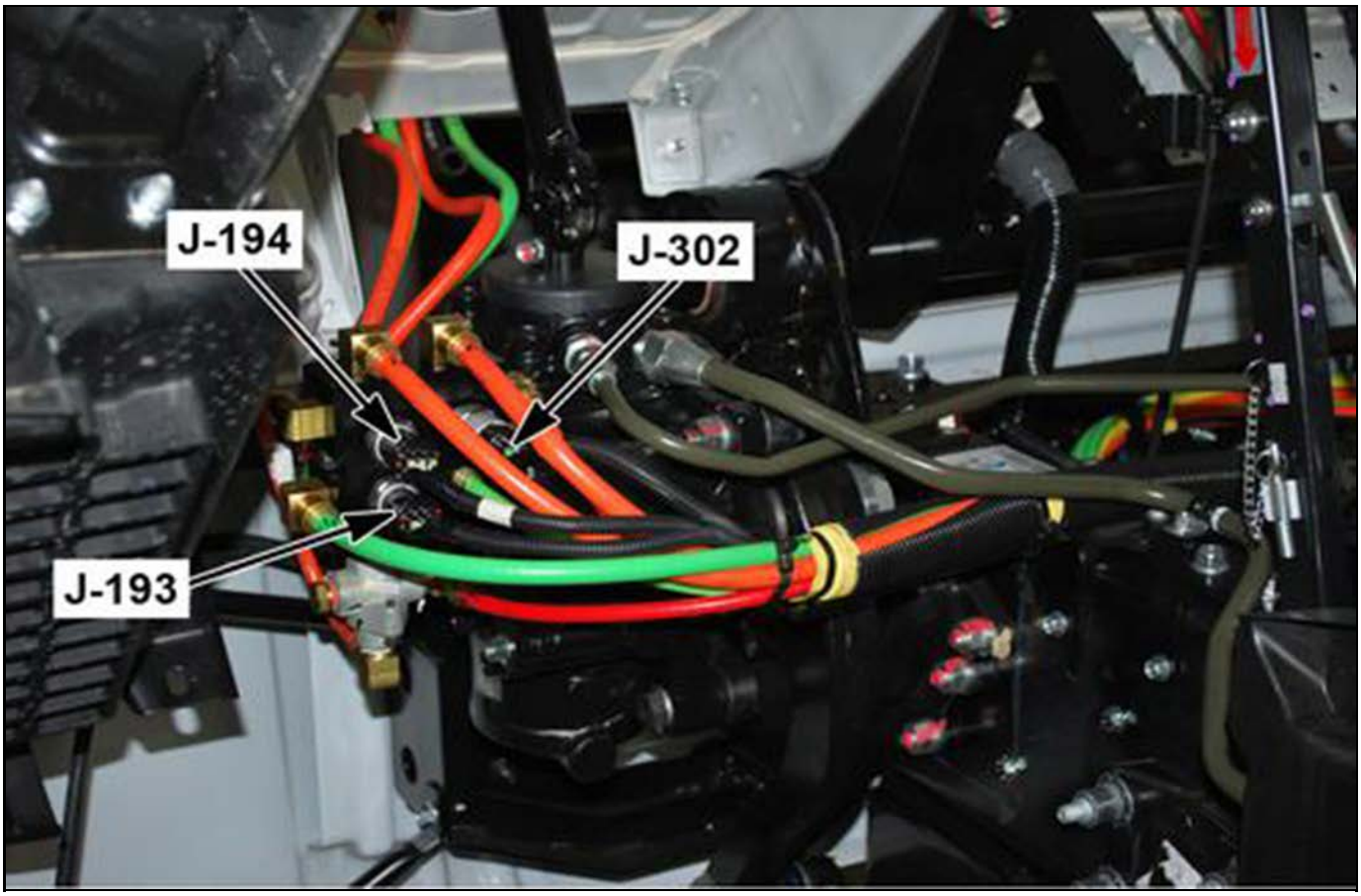

4893316

J-194 Air Pressure Sensor 2 (Secondary)

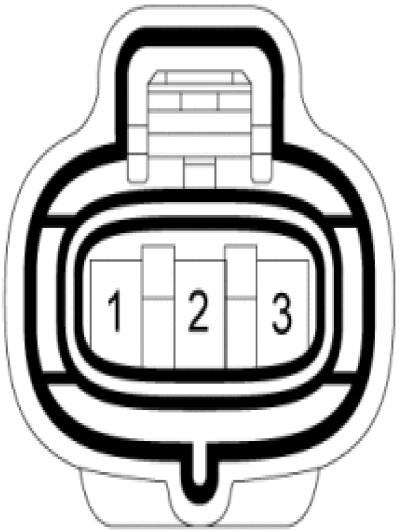

4891773

Connector Part Information		• 6189-0099 • 3-Way F (BLK)	
Pin	**Wire Color**	**Circuit Number**	**Function**
1	WHT	MA089C	Low Reference
2	WHT/RED	MA084C	Sensor Signal (Output)
3	WHT/BLU	MA090C	Sensor Voltage

Under the Left Front of the Cab, Left of the Steering Column

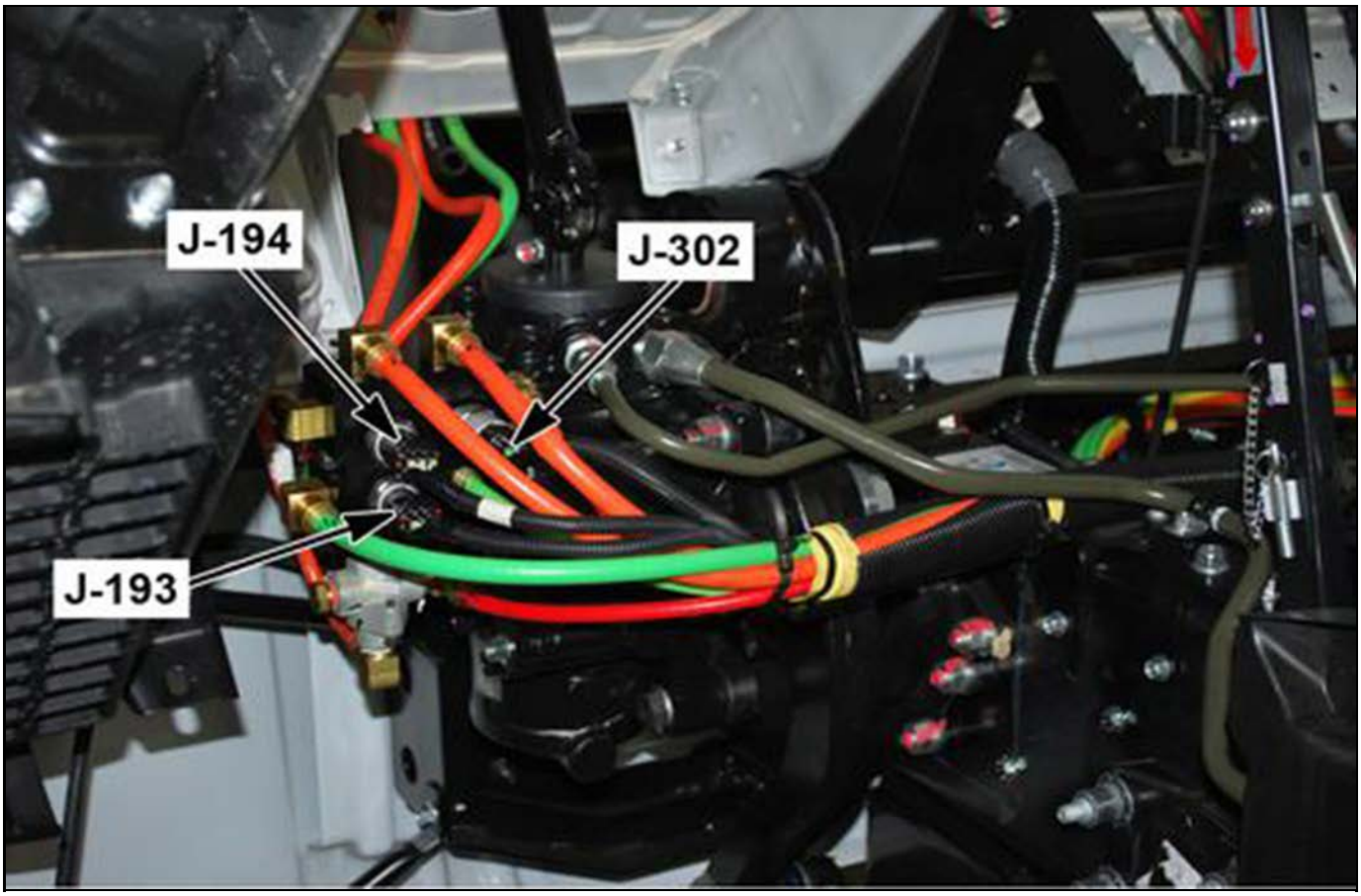

4893316

J-195 Air Dryer

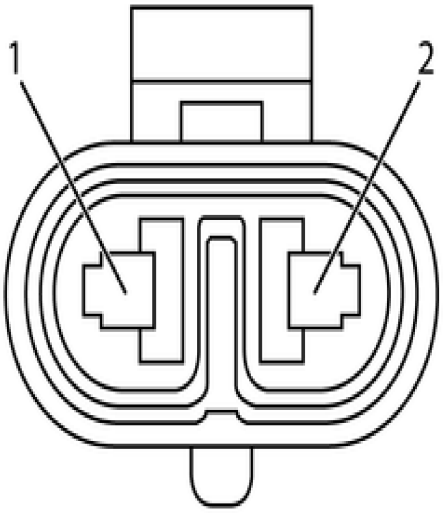

4893352

Connector Part Information		• 1202-0599 • 2-Way F (BLK)	
Pin	**Wire Color**	**Circuit Number**	**Function**
1	BLU/YEL	DA005C	Ignition Voltage from Fuse F-16 from Fuse/Relay Center (Cab)
2	BLK	DX001C	Ground to Splice S5 (J-7 and J-9 Ground)

Left Side of the Frame, on the Air Dryer

4893104

J-203 Engine Control Module (ECM)

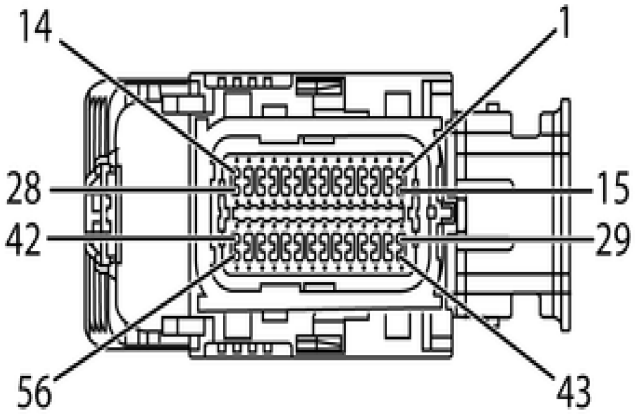

4893380

Connector Part Information		• 34576-0703 • 56-Way F (BLU)	
Pin	**Wire Color**	**Circuit Number**	**Function**
1–3	—	—	Not Used
4	BRN/WHT	IC154C	EOP Sensor Signal
5	BLU/ORN	IC115C	Turbocharger Outlet Air Temperature Sensor Signal
6–9	—	—	Not Used
10	BLU/BLK	IC068C	IAT Sensor 1 Signal
11	WHT	IC026C	MAF Sensor Signal
12	WHT/GRN	IC076C	Exhaust Brake Valve Solenoid Control
13	—	—	Not Used
14	BLK	IC027C	MAF Sensor Low Reference
15–16	—	—	Not Used
17	WHT	IC216C	CAC Temperature Sensor Signal
18	WHT/ORN	IC135C	DPF Fuel Pressure Sensor Signal
19	RED	IC012C	EGT Sensor 2 Signal
20	VIO/YEL	IC052C	EGT Sensor 2 Low Reference
21–23	—	—	Not Used
24	VIO/WHT	IC121C	IAF Valve Position Sensor Signal
25	—	—	Not Used
26	VIO/GRN	IC080C	EGT Sensor 1 Low Reference
27	YEL/RED	IC079C	EGT Sensor 1 Signal
28	—	—	Not Used
29	YEL/BRN	IC153C	EOP Sensor 5 Volt Reference 4 Voltage
30–33	—	—	Not Used
34	34 ORN	IC116C	Turbocharger Outlet Air Temperature Sensor Low Reference
35–40	—	—	Not Used
41	YEL/RED	IC120C	IAF Valve Position Sensor 5 Volt Reference 4 Voltage
42	—	—	Not Used

Connector Part Information		• 34576-0703 • 56-Way F (BLU)	
Pin	**Wire Color**	**Circuit Number**	**Function**
43	LT GRN	IC134C	DPF Fuel Pressure Sensor 5 Volt Reference 3 Voltage
44–45	—	—	Not Used
46	PNK	IC155C	EOP Sensor Low Reference
47	—	—	Not Used
48	YEL/BLK	IC136C	DPF Fuel Pressure Sensor Low Reference
49	BLU/RED	IC096C	IAT Sensor 1 Low Reference
50–51	—	—	Not Used
52	BLU/BLK	IC122C	IAF Valve Position Sensor Low Reference
53–55	—	—	Not Used
56	56 WHT/BLU	IC217C	CAC Temperature Sensor Low Reference

Left Side of the Engine, in Front of the Rear Cab Mount

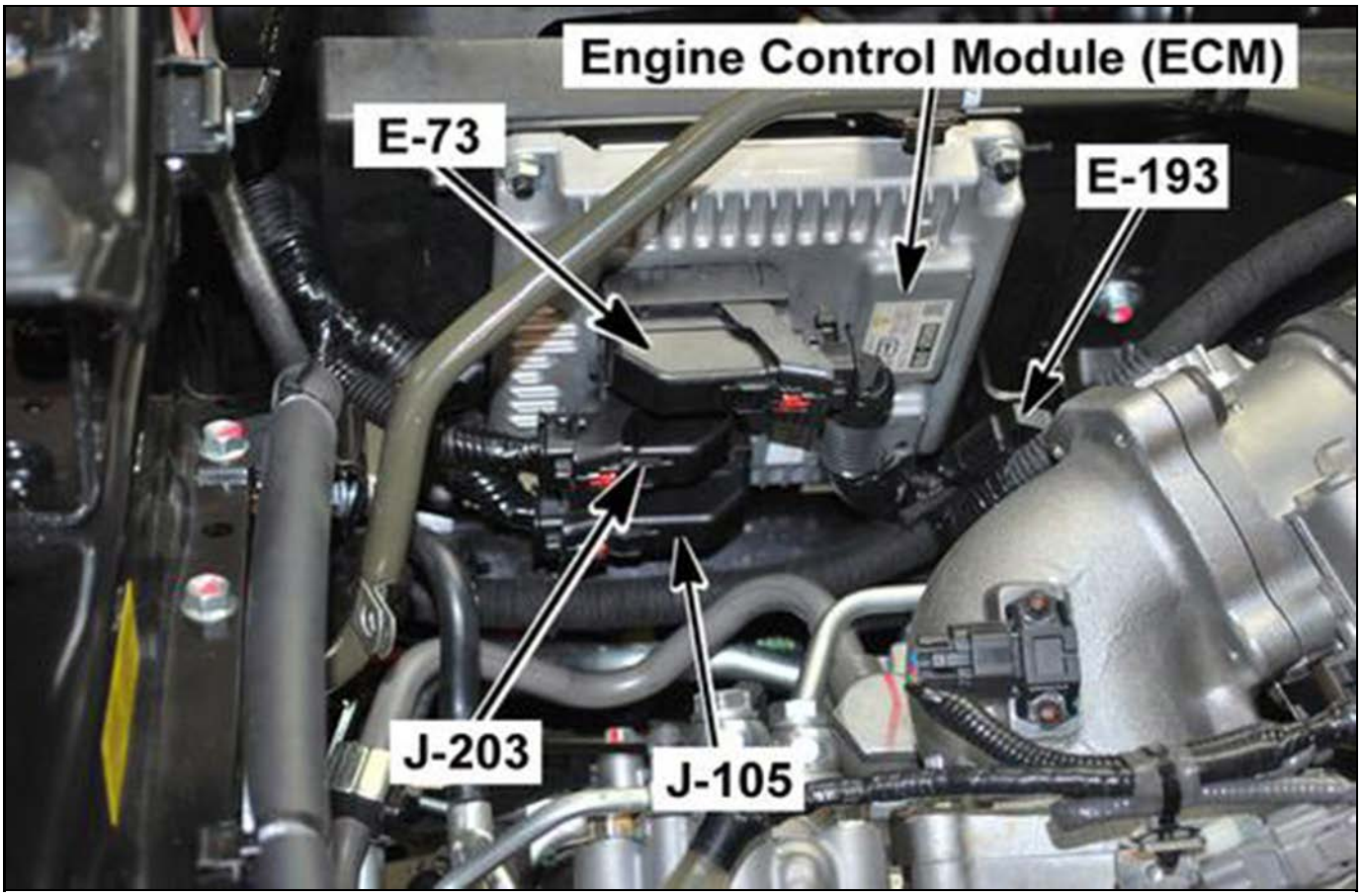

4891795

J-204 Particulate Matter Sensor

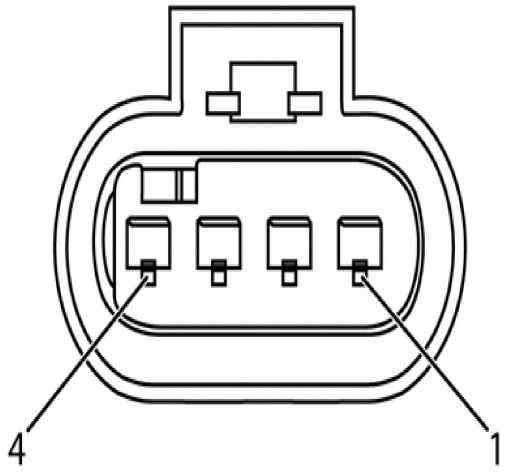

4893384

Connector Part Information		• 1-1718645-1 • 4-Way F (BLK)	
Pin	**Wire Color**	**Circuit Number**	**Function**
1	BLK	IZ018K	Ground to Splice 7 (J-10 and J-12)
2	GRN	TF054K	ISO 15765 CAN 2 Low
3	GRN/WHT	TF053K	ISO 15765 CAN 2 High
4	BLK/ORN	IC018K	Ignition Voltage from Fuse F-35

Right Outer Frame Rail, On the Front of the SCR Catalyst

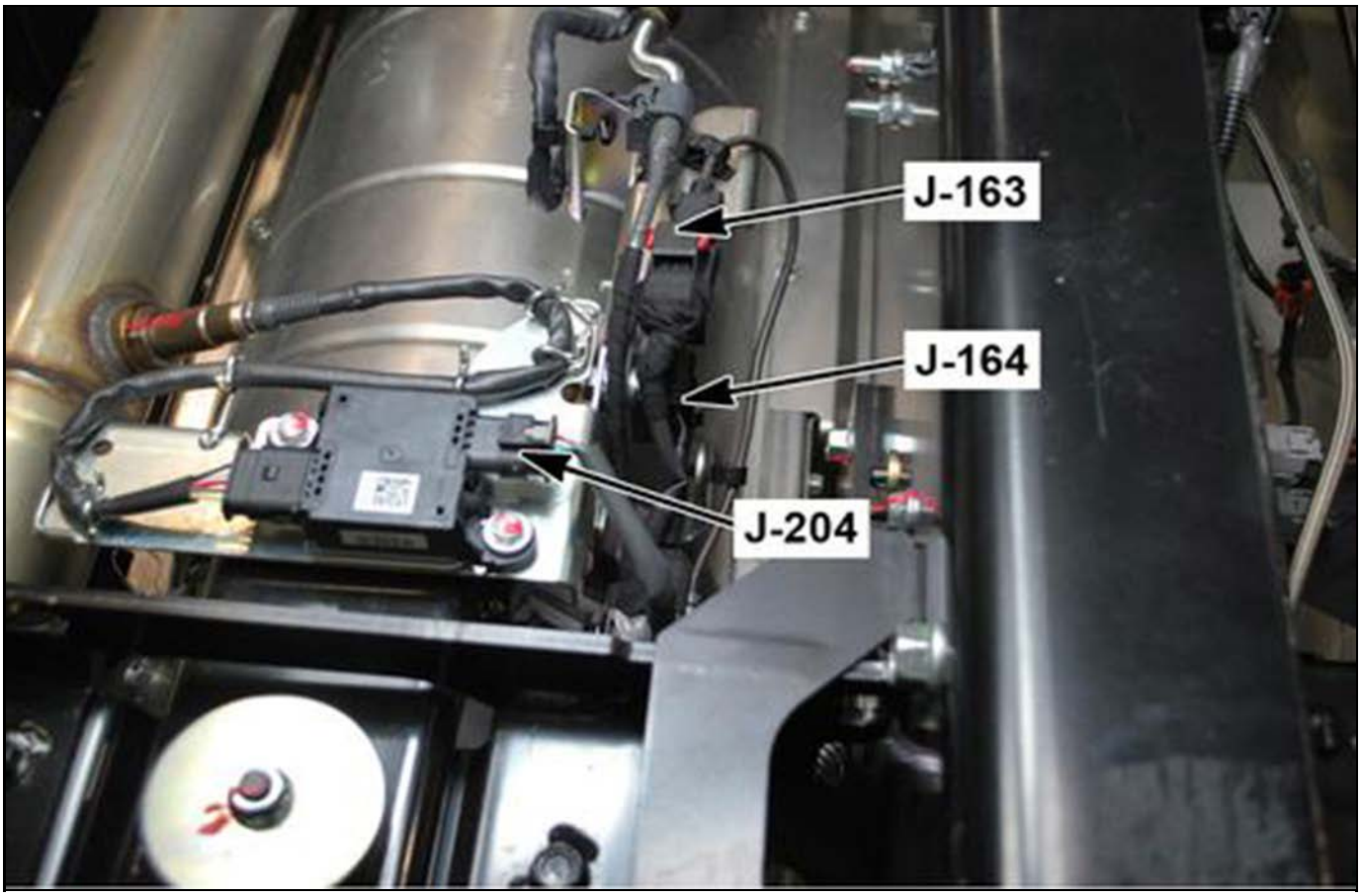

4893034

J-298 Ground

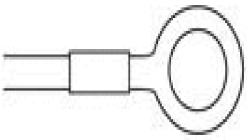

4891426

Connector Part Information		• 7009-1334 • 1-Way Eyelet	
Pin	**Wire Color**	**Circuit Number**	**Function**
—	BLK/BLU	IX013D	Ground for Rear Manufacture Connector

Left Rear Frame Rail, Behind the Rear Axle

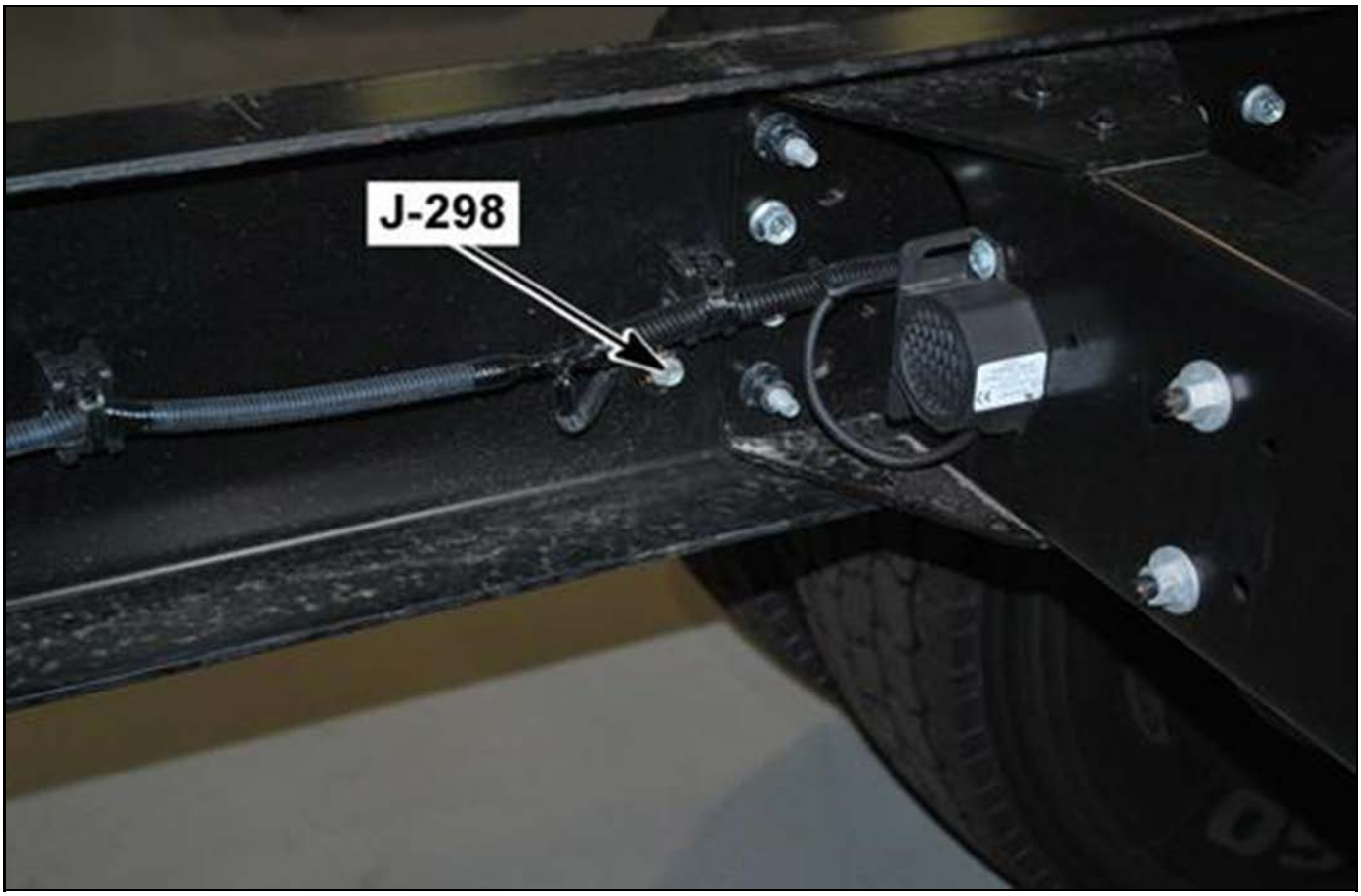

4893394

J-300 Fuel Sedimenter Switch

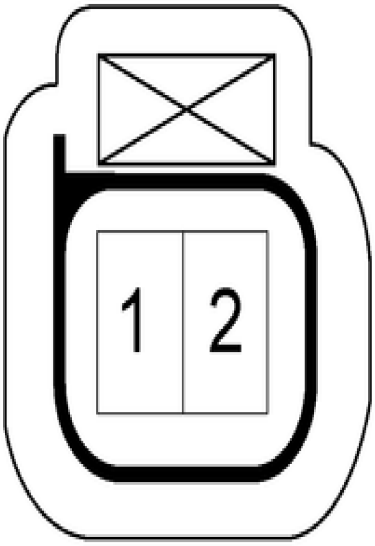

4893298

Connector Part Information		• X010325 • 2-Way F (BLK)	
Pin	**Wire Color**	**Circuit Number**	**Function**
1	BLK	MX009C	Ground to Splice 2 (J-8 and J-11 Ground)
2	BRN/WHT	MA009C	Water Separator Message Control

Side of the Fuel Filter Housing, Behind the DEF Tank

4892010

J-301 Output Shaft Speed (OSS) Sensor

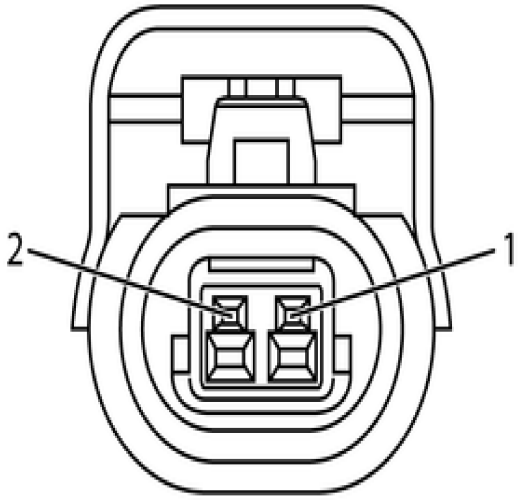

4892796

Connector Part Information		• 13520101 • 2-Way F (BLK)	
Pin	**Wire Color**	**Circuit Number**	**Function**
1	WHT/BLU	OA063C	Output Shaft Speed (OSS) Sensor Signal
2	BLK/BLU	OA062C	Output Shaft Speed (OSS) Sensor 5-Volt Supply

Left Rear of the Transmission

4893412

J-302 Stop Lamp Switch 2

4893428

Connector Part Information		• 6189-0239 • 2-Way F (BLK)	
Pin	**Wire Color**	**Circuit Number**	**Function**
1	GRN/WHT	IC190C	Stop Lamp Relay (Coil Control)
2	BLK	IZ040C	Ground to Splice 5 (J-9 and J-7 Ground)

Under the Left Front of the Cab, Left of the Steering Column

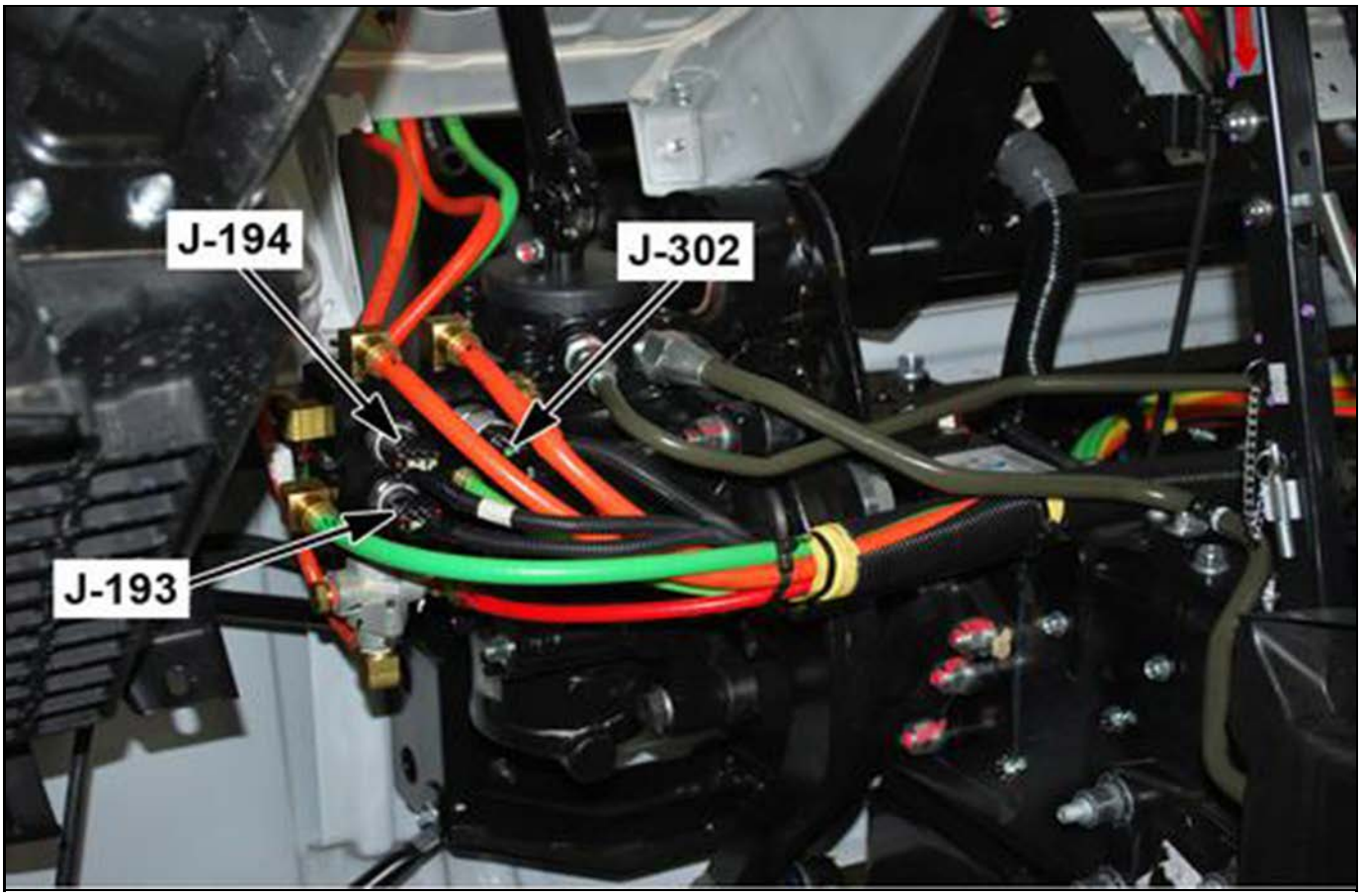

4893316

J-303 Fuel Heater

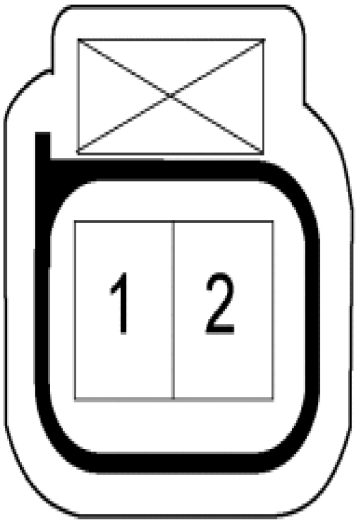

4891455

Connector Part Information		• X010325 • 2-Way F (BLK)	
Pin	**Wire Color**	**Circuit Number**	**Function**
1	BLK/RED	LB006C	Switched Output Voltage from the X-30 Fuel Heater Relay
2	BLK	LY003C	Ground to Splice 2 (J-11 and J-8 Ground)

Between the DEF tank and the Air Brakes Air Dryer, on the Left Side of the Frame

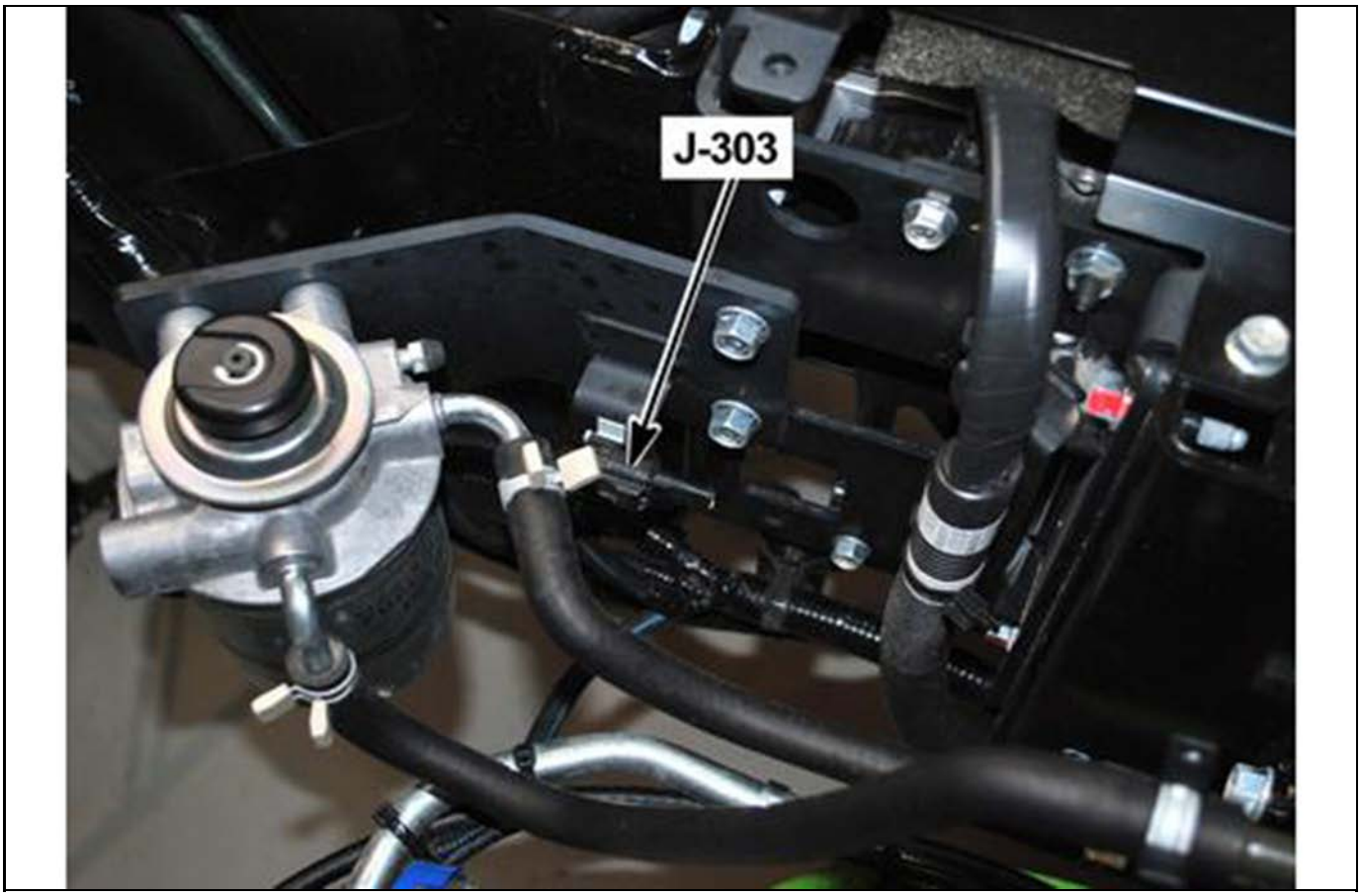

4893439

L-5 Dome Lamp

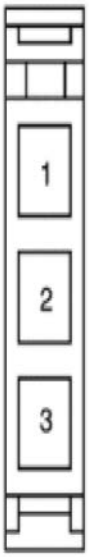

4893464

Connector Part Information		• 6430-3041 • 3-Way F (WHT)	
Pin	**Wire Color**	**Circuit Number**	**Function**
1	GRY/BLU	IA14	Dome Light Control
2	RED	IA04	Battery Voltage from Fuse F-3
3	—	—	Not Used

In the Interior Center of the Roof

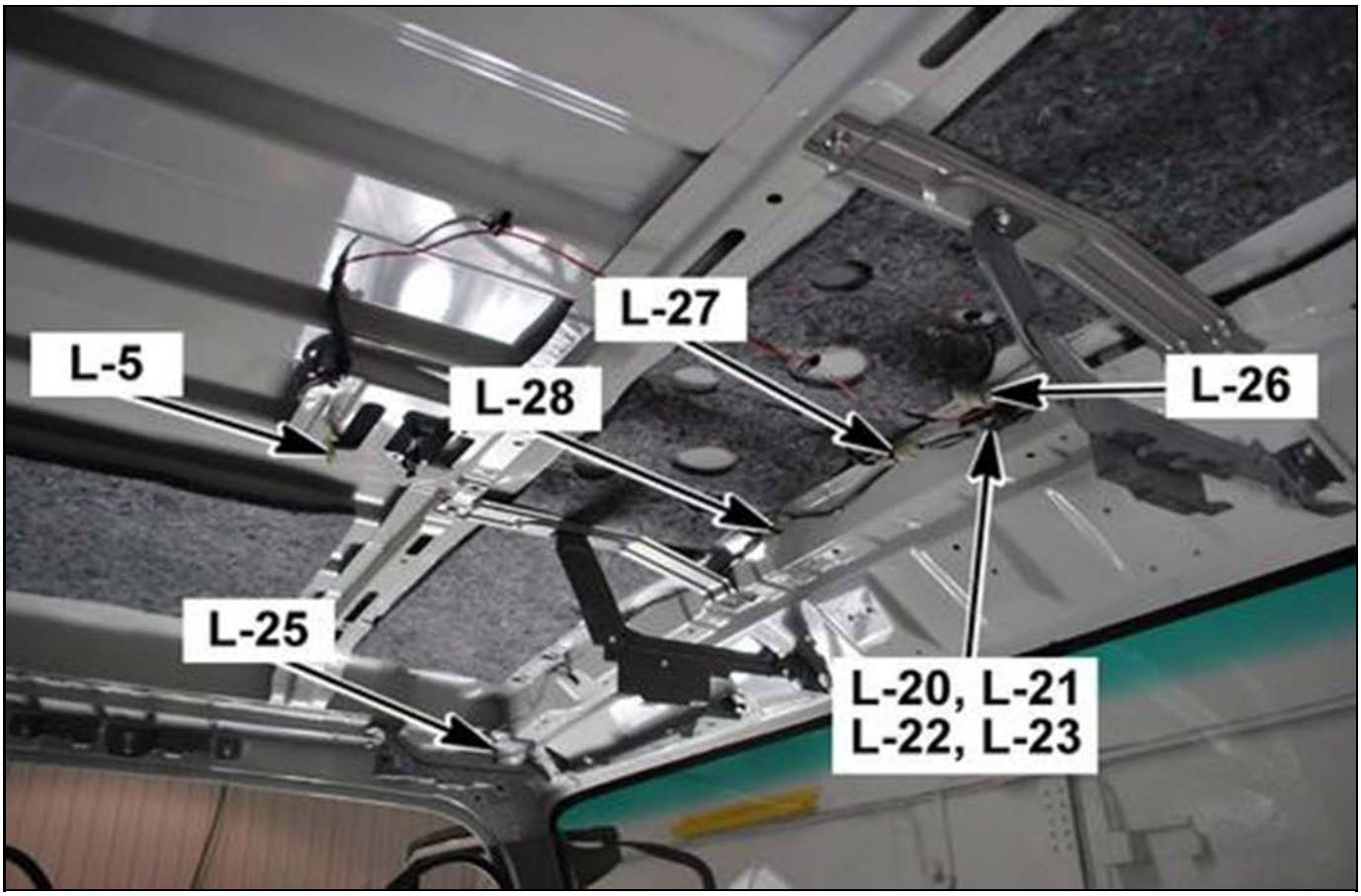

4893525

L-20 Splice Pack

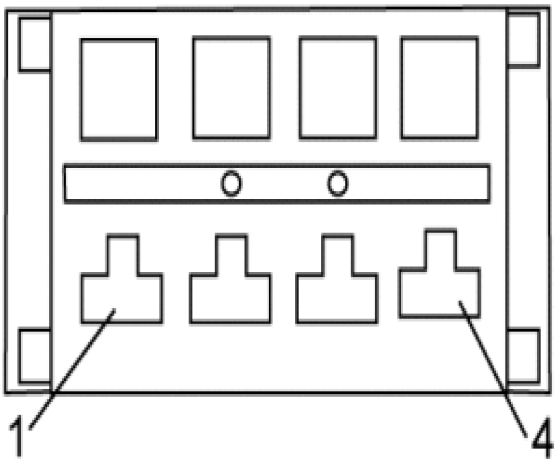

4890929

Connector Part Information		• 7383-3190 • 4-Way F (WHT)	
Pin	**Wire Color**	**Circuit Number**	**Function**
1	GRN/RED	BA55	Fuse F-27 Voltage (Headlamp Switch ON) to Clearance Lamp 3
2	GRN/RED	BA54	Fuse F-27 Voltage (Headlamp Switch ON) to Clearance Lamp 2
3	GRN/RED	BA56	Fuse F-27 Voltage (Headlamp Switch ON) to Marker Lamp 1
4	GRN/RED	BA58	Fuse F-27 Voltage (Headlamp Switch ON) from L-23 Splice Pack

In the Interior Center Front of the Roof

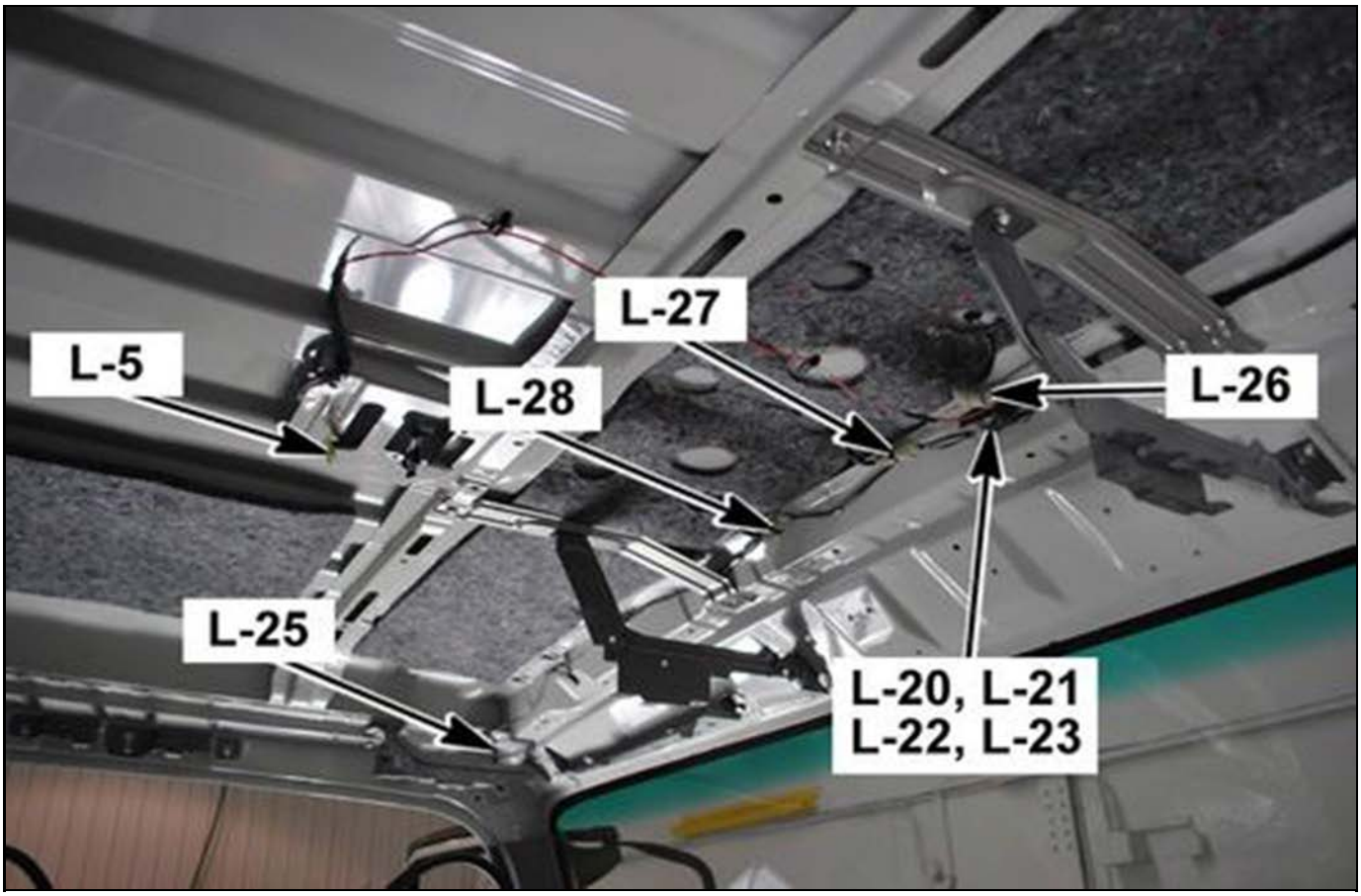

4893525

L-21 Splice Pack

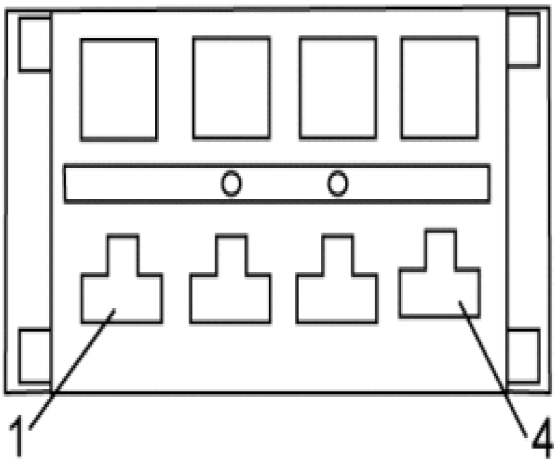

4890929

Connector Part Information		• 7383-3190 • 4-Way F (WHT)	
Pin	**Wire Color**	**Circuit Number**	**Function**
1	BLK	BX35	Ground to Clearance Lamp 3
2	BLK	BX34	Ground to Clearance Lamp 2
3	BLK	BX36	Ground to Marker Lamp 1
4	BLK	BX38	Ground to L-22 Splice Pack

In the Interior Center Front of the Roof

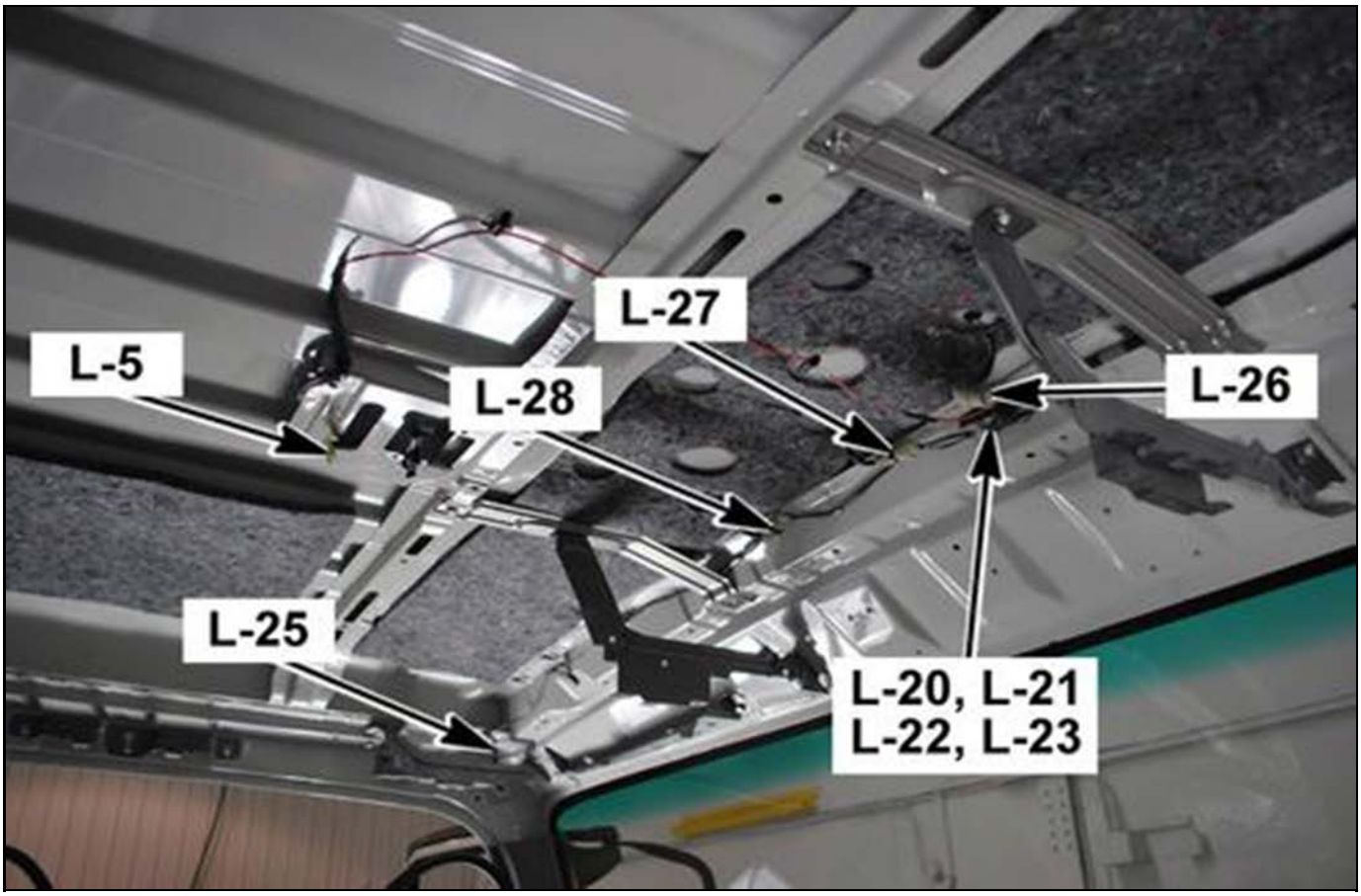

4893525

L-22 Splice Pack

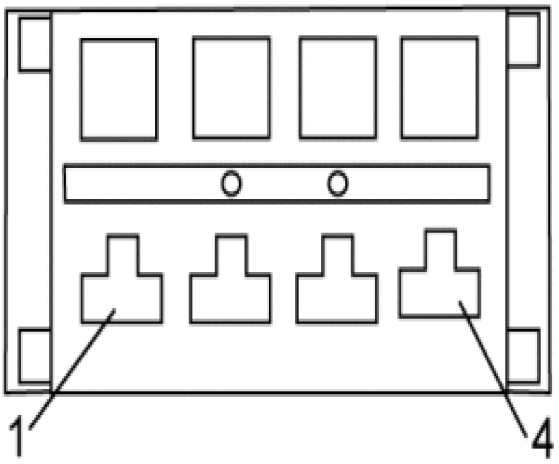

4890929

Connector Part Information		• 7383-3190 • 4-Way F (WHT)	
Pin	**Wire Color**	**Circuit Number**	**Function**
1	BLK	BX33	Ground to Clearance Lamp 1
2	BLK	BX32	Ground to Marker Lamp 2
3	BLK	BX38	Ground to Splice Pack L-21
4	BLK	BX37	Ground to J/B 2 (B-145 pin 15) (B-53 Ground)

In the Interior Center Front of the Roof

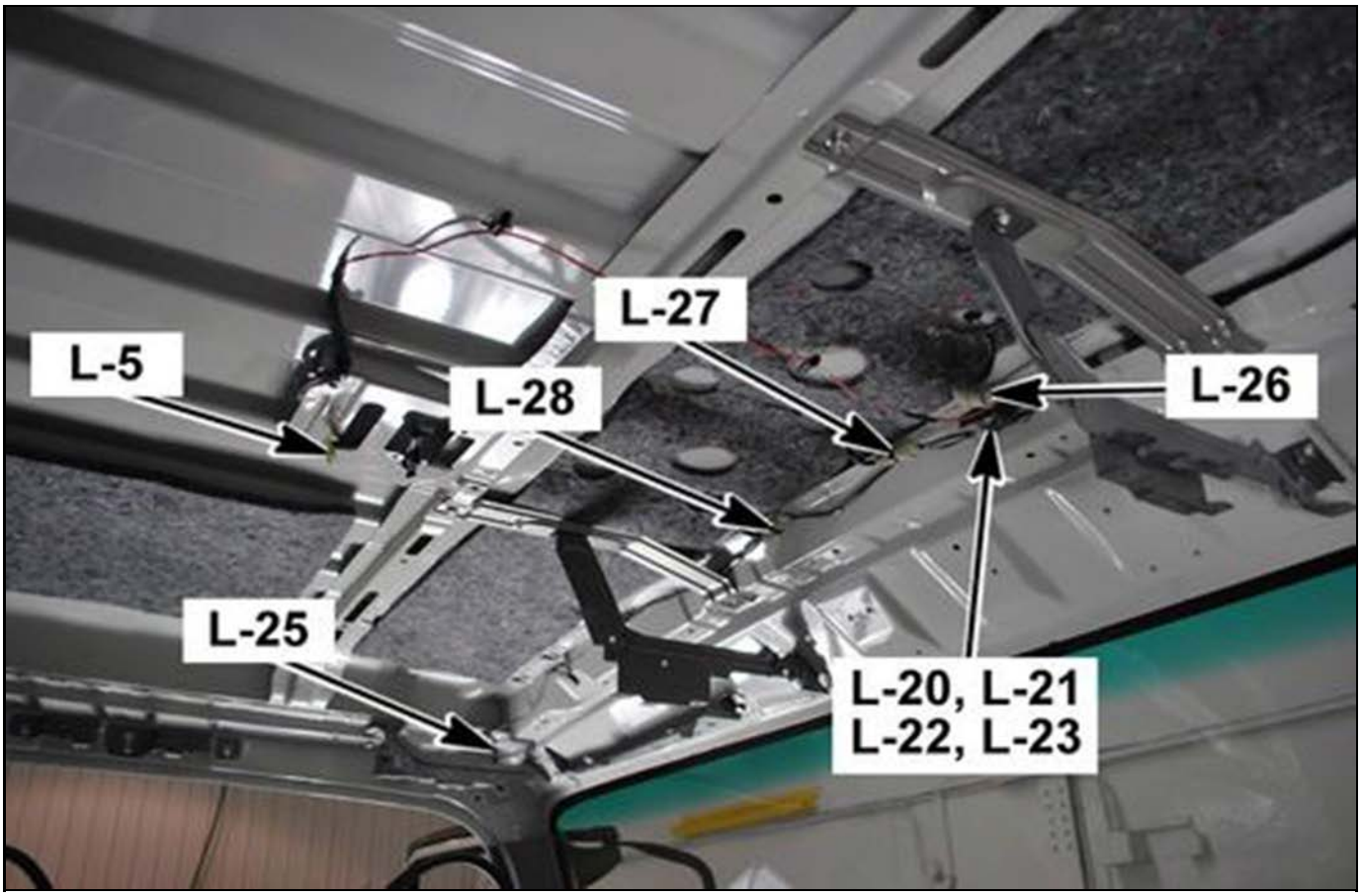

4893525

L-23 Splice Pack

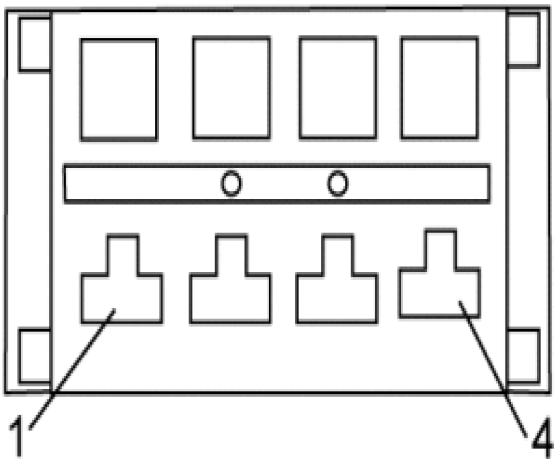

4890929

Connector Part Information		• 7383-3190 • 4-Way F (WHT)	
Pin	**Wire Color**	**Circuit Number**	**Function**
1	GRN/RED	BA53	Fuse F-27 Voltage (Headlamp Switch ON) to Clearance Lamp 1
2	GRN/RED	BA52	Fuse F-27 Voltage (Headlamp Switch ON) to Marker Lamp 2
3	GRN/RED	BA58	Fuse F-27 Voltage (Headlamp Switch ON) to L- 20 Splice Pack
4	GRN/RED	BA57	Fuse F-27 Voltage (Headlight Switch ON)

In the Interior Center Front of the Roof

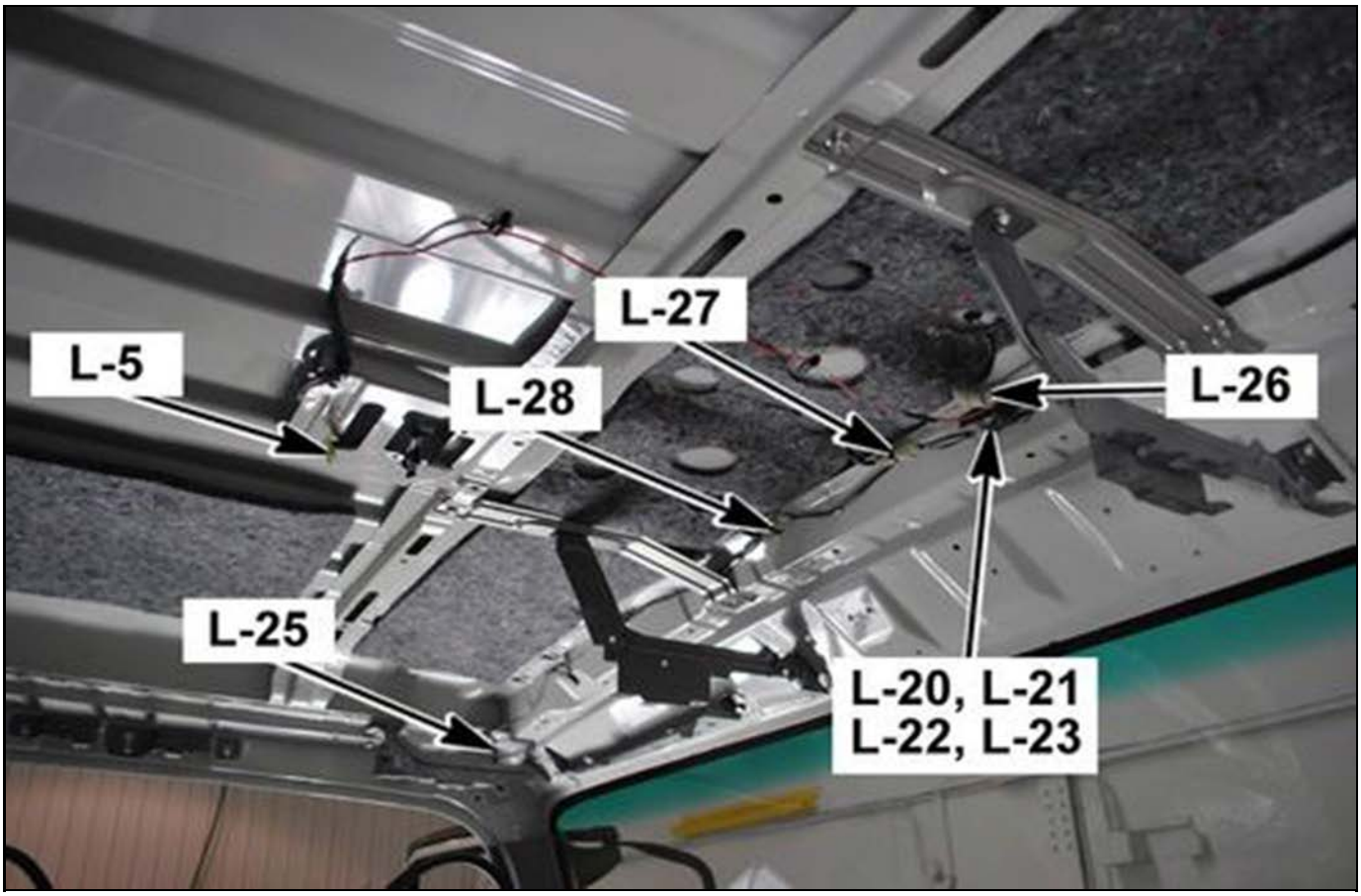

4893525

L-24 Marker Lamp 1

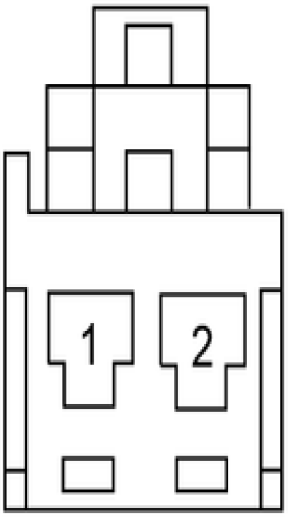

4893531

Connector Part Information		• 7382-5846 • 2-Way M (WHT)	
Pin	**Wire Color**	**Circuit Number**	**Function**
1	GRN/RED	BA56	Fuse F-27 Voltage (Headlamp Switch ON)
2	BLK	BX36	Ground to L-21 Splice Pack pin 3 (B-53 Ground)

On Top of the Roof, On the Forward Right Side of the Cab

4893533

L-25 Marker Lamp 2

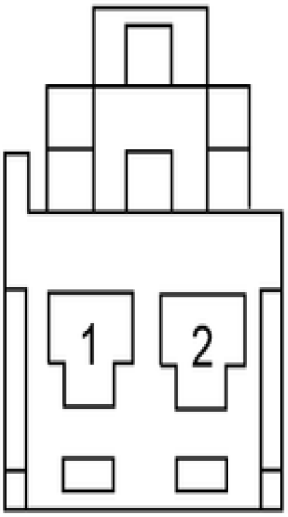

4893531

Connector Part Information		• 7382-5846 • 2-Way M (WHT)	
Pin	**Wire Color**	**Circuit Number**	**Function**
1	GRN/RED	BA52	Fuse F-27 Voltage (Headlamp Switch ON)
2	BLK	BX32	Ground to L-22 Splice Pack pin 2 (B-53 Ground)

On Top of the Roof, On the Forward Left Side of the Cab

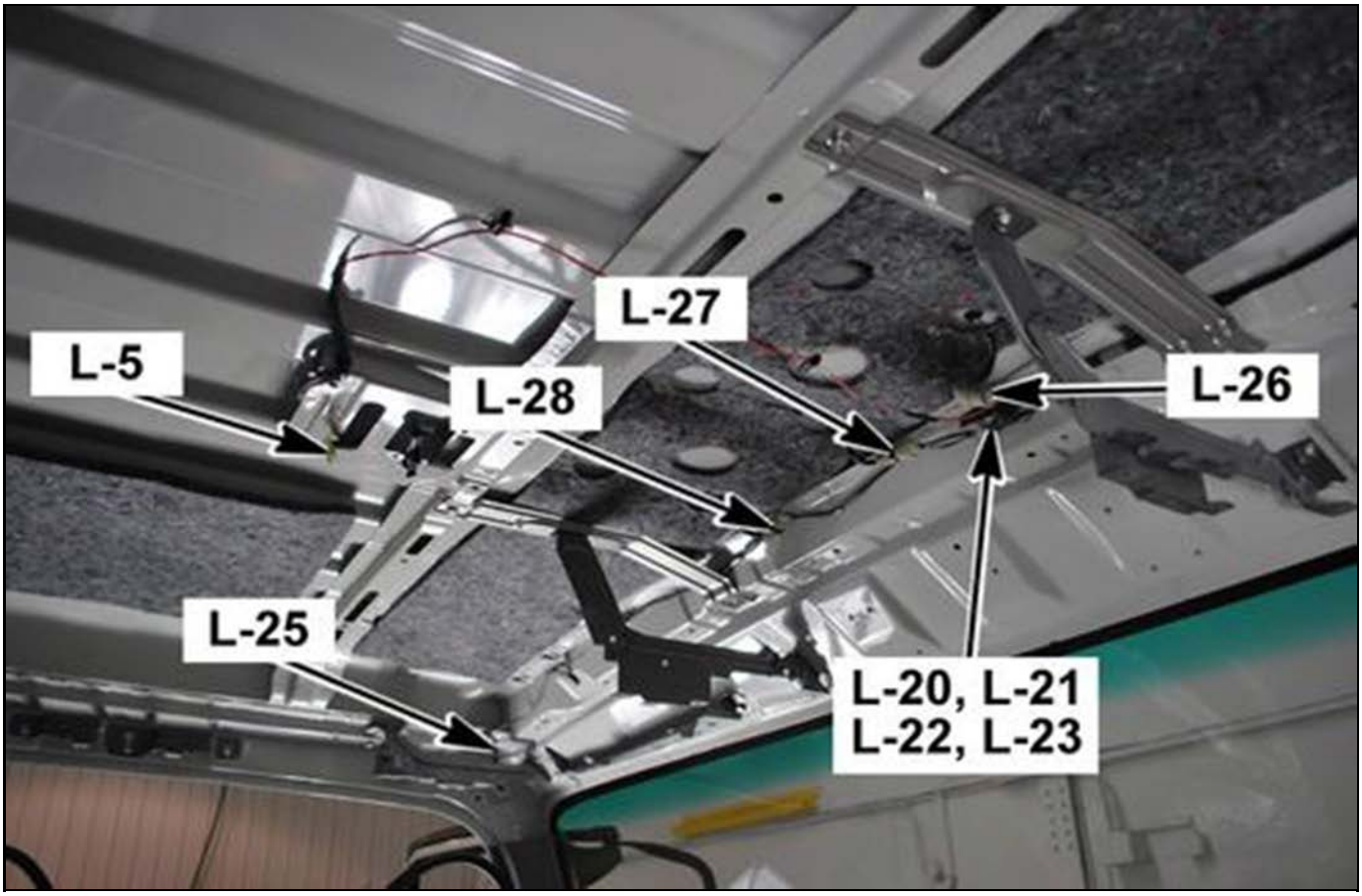

4893525

L-26 Clearance Lamp 1

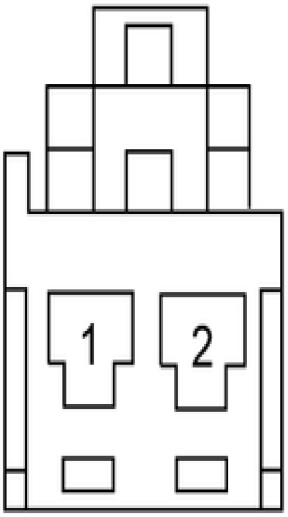

4893531

Connector Part Information		• 7382-5846 • 2-Way M (WHT)	
Pin	**Wire Color**	**Circuit Number**	**Function**
1	GRN/RED	BA53	Fuse F-27 Voltage (Headlamp Switch ON)
2	BLK	BX33	Ground to L-22 Splice Pack Pin 1 (B-53 Ground)

On Top of the Roof, On the Front of the Cab

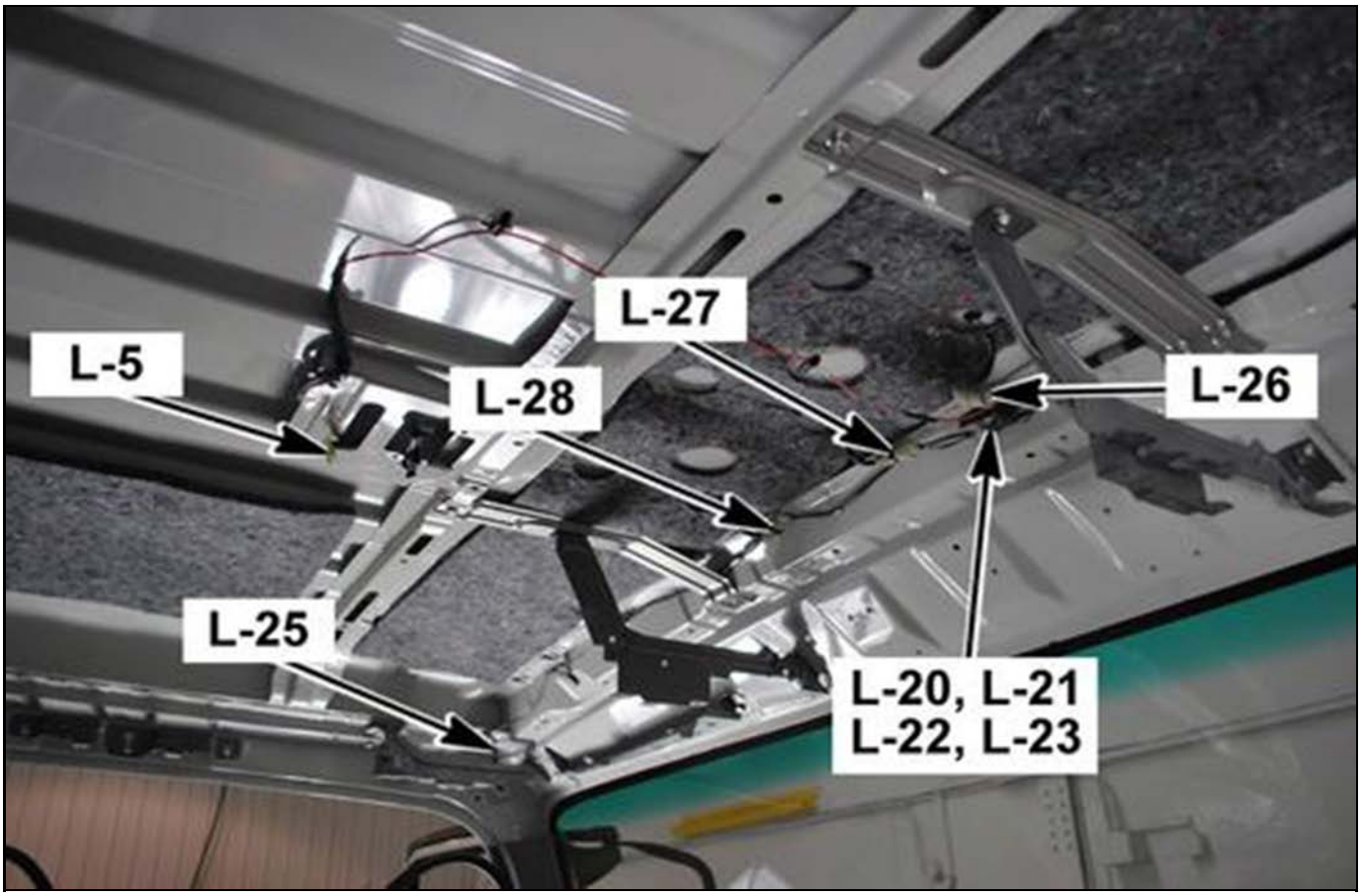

4893525

L-27 Clearance Lamp 2

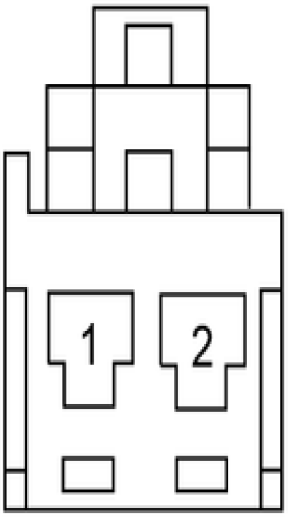

4893531

Connector Part Information		• 7382-5846 • 2-Way M (WHT)	
Pin	**Wire Color**	**Circuit Number**	**Function**
1	GRN/RED	BA54	Fuse F-27 Voltage (Headlamp Switch ON)
2	BLK	BX34	Ground to L-21 Splice Pack Pin 2 (B-53 Ground)

On Top of the Roof, On the Front of the Cab

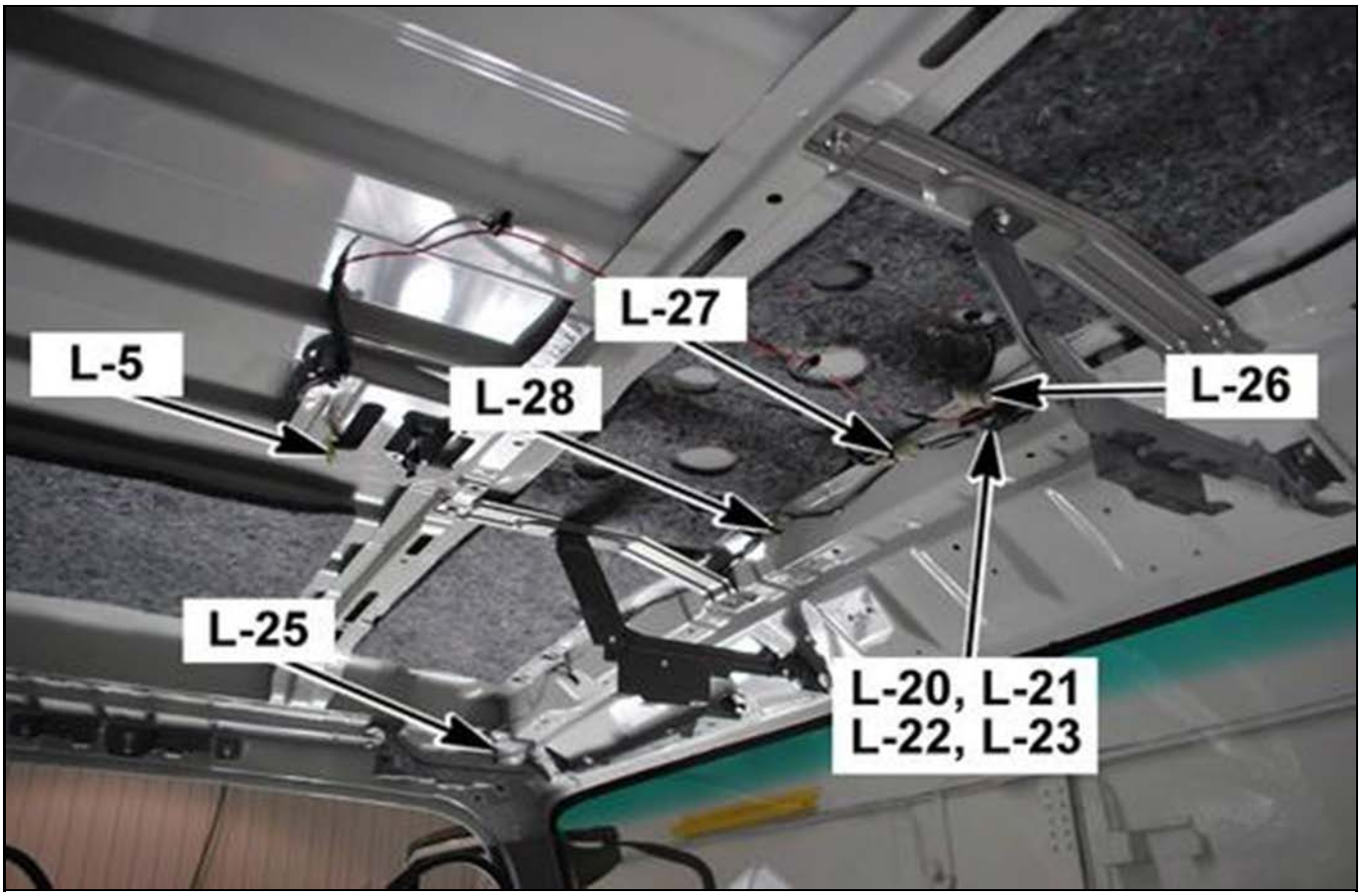

4893525

L-28 Clearance Lamp 3

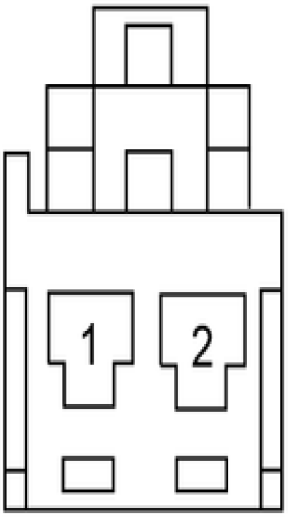

4893531

Connector Part Information		• 7382-5846 • 2-Way M (WHT)	
Pin	**Wire Color**	**Circuit Number**	**Function**
1	GRN/RED	BA55	Fuse F-27 Voltage (Headlamp Switch ON)
2	BLK	BX35	Ground to L-21 Splice Pack pin 1 (B-53 Ground)

On Top of the Roof, On the Front of the Cab

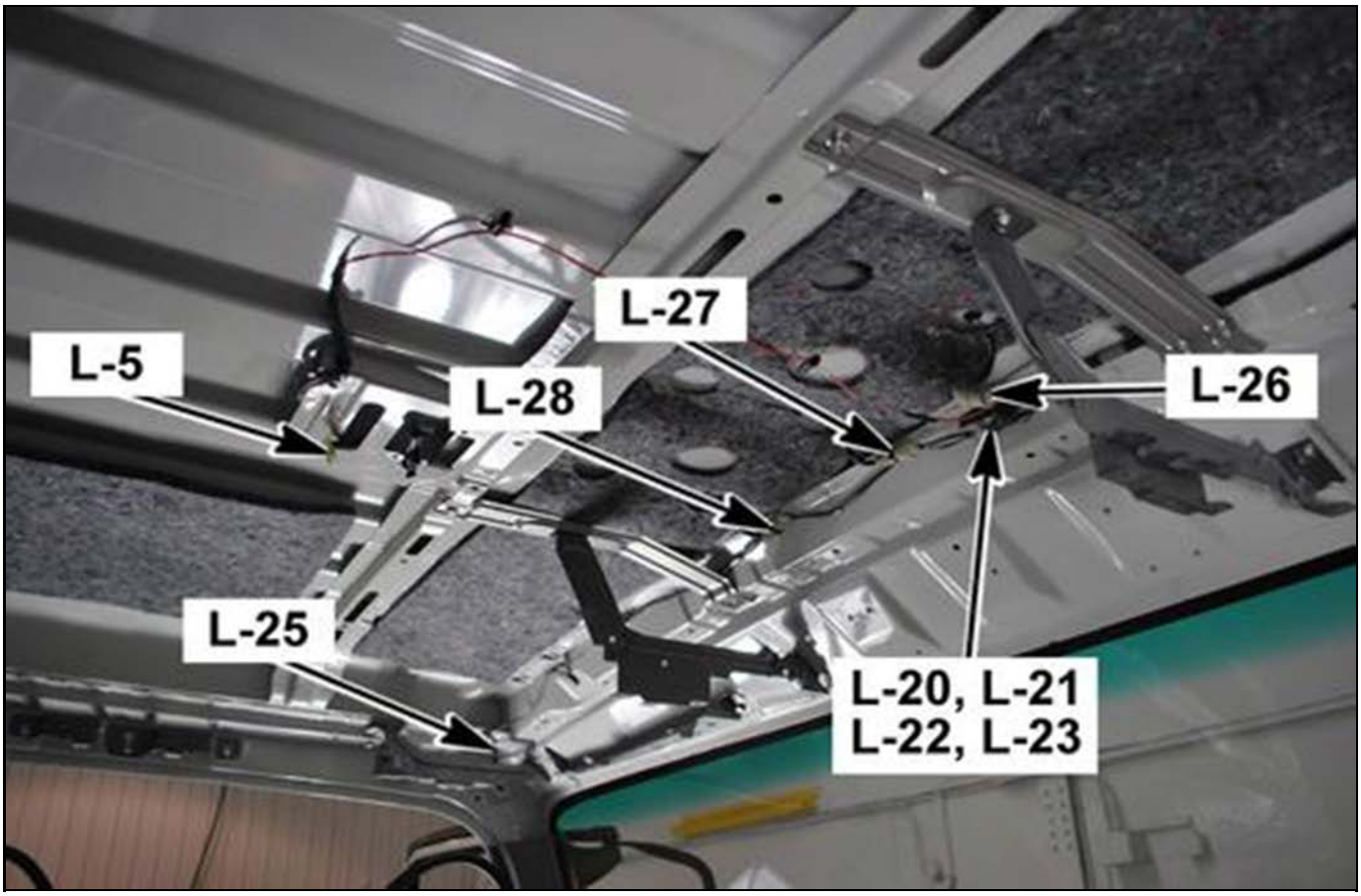

4893525

N-7 Door Switch (RH)

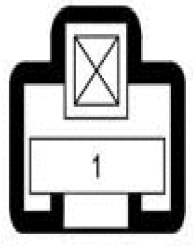

4893552

Connector Part Information		• 7383-2413 • 1-Way F (WHT)	
Pin	**Wire Color**	**Circuit Number**	**Function**
1	YEL/RED	IA10	Dome Lamp Signal

Right B-Pillar

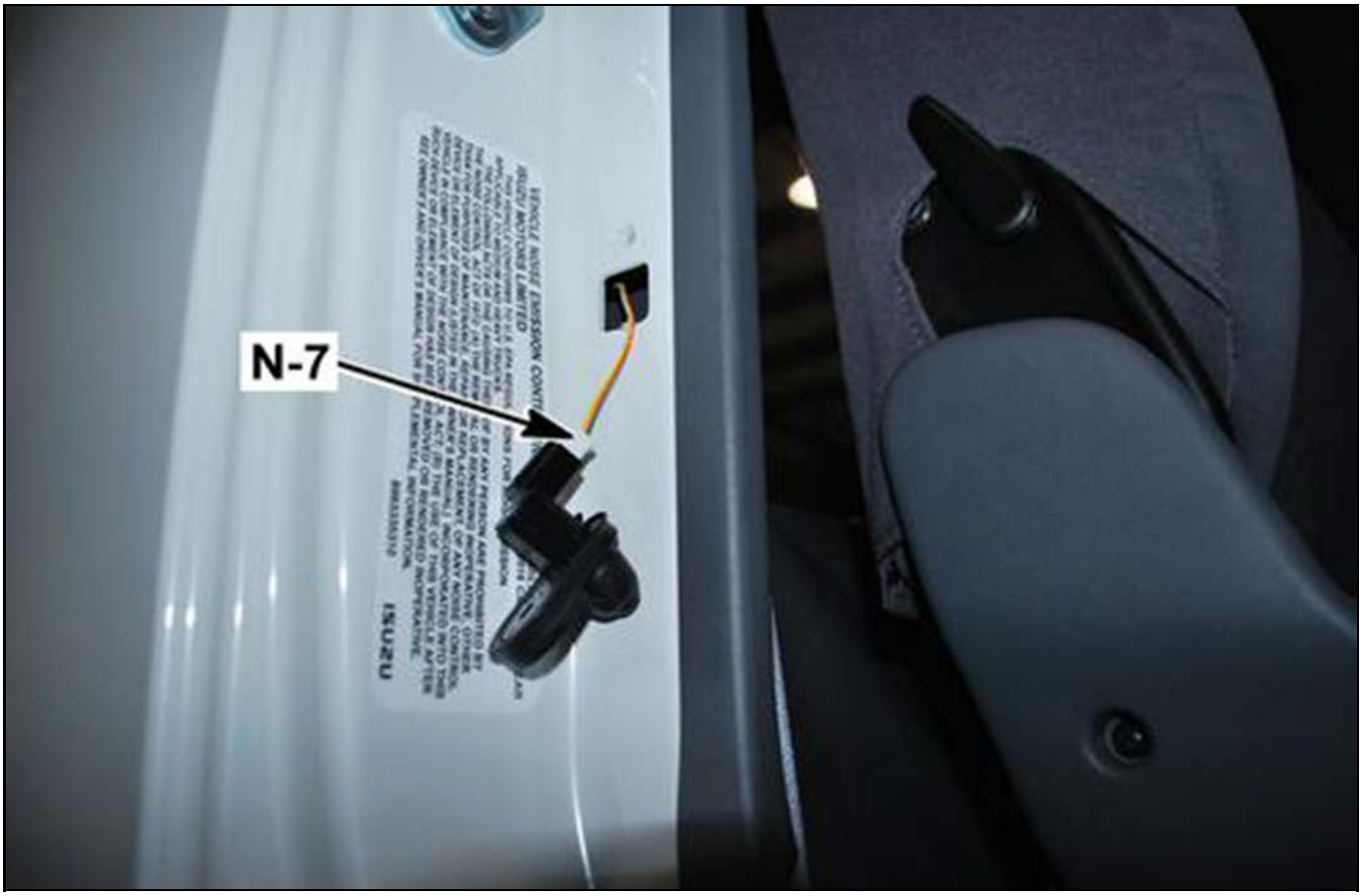

4893596

N-12 Door Switch (LH)

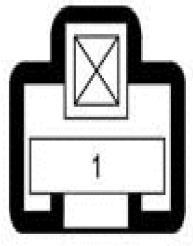

4893552

Connector Part Information		• 7383-2413 • 1-Way F (WHT)	
Pin	**Wire Color**	**Circuit Number**	**Function**
1	YEL/RED	IA11	Dome Lamp Signal

Left B-Pillar

4893608

N-15 Seat Belt Switch

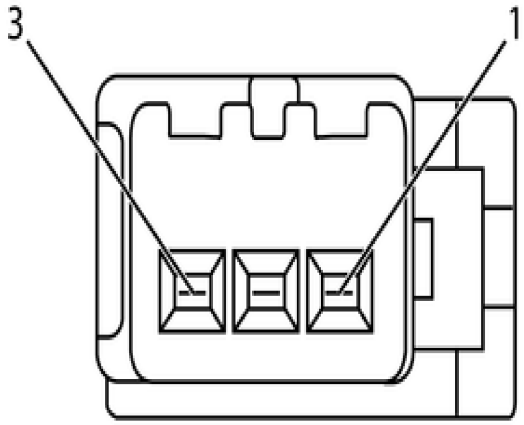

4893614

Connector Part Information		• 7383-8630 • 3-Way F (WHT)	
Pin	**Wire Color**	**Circuit Number**	**Function**
1	WHT/GRN	MA10	Seat Belt Switch Signal to IPC
2	BLK	MX06	Ground to B-600 Splice Pack (B-51 Ground)
3	—	—	Not Used

Behind the Mat, Between the Drivers Seat and the Console

4893617

N-16 Shift Lever

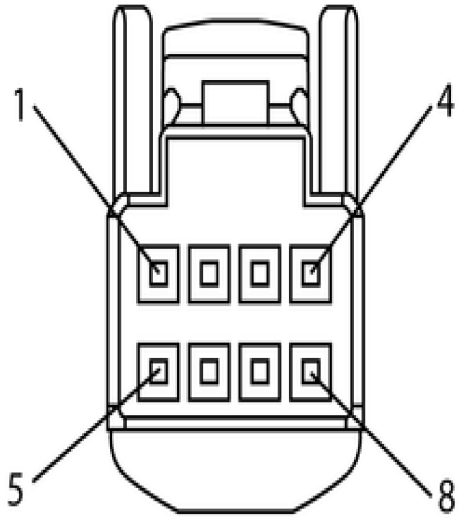

4893619

Connector Part Information		• 1376352-1 • 8-Way F (WHT)	
Pin	**Wire Color**	**Circuit Number**	**Function**
1	LT GRN/RED	BA61	Fuse F-28 Voltage (Headlamp Switch ON), Dimming Control
2	GRN	OA92	Switched Output Voltage from X-1 Stop Lamp Relay
3	LT GRN/RED	OA91	Ignition Voltage from Fuse F-18
4	RED/WHT	OA190	Ignition Voltage from Fuse F-24
5	LT GRN/BLK	BA64	Dimming Control to Dimming Control Switch
6	BLU/WHT	OA93	Key Lock Solenoid Control
7	—	—	Not Used
8	BLK	OX20	Ground to Splice 18 (B-55 and B-221)

Center of the Cab, Under the Shift Lever Trim Panels

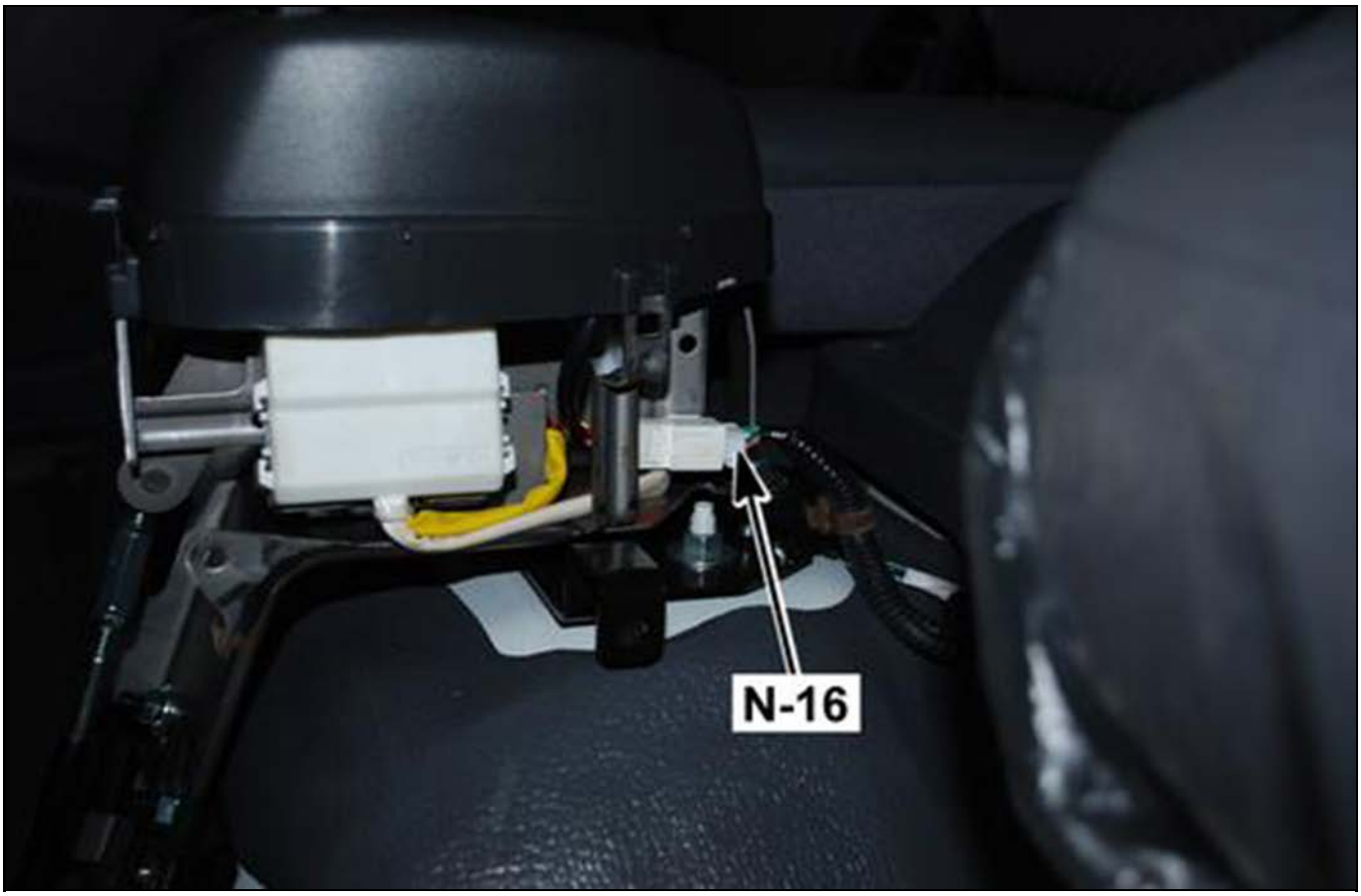

4893621

N-21 Splice Pack

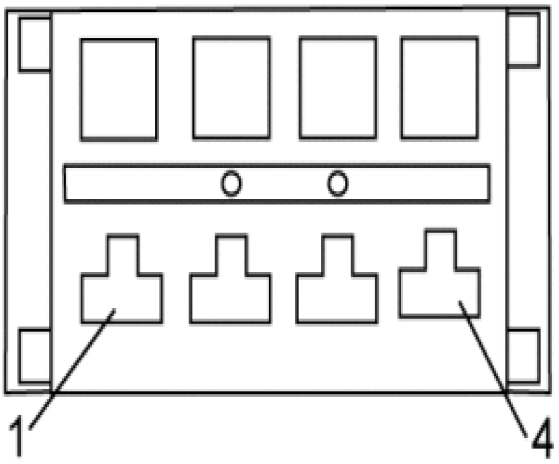

4890929

Connector Part Information		• 1376352-1 • 8-Way F (WHT)	
Pin	**Wire Color**	**Circuit Number**	**Function**
1	YEL/RED	IA11	Door Switch Signal (LH)
2	YEL/RED	IA10	Door Switch Signal (RH)
3	YEL/RED	IA14	Door Switch Signal to J/B 2 (B-146 pin 12)
4	—	—	Not Used

Under the Rear Mat, Behind the Console

4893626

P-1, P-2, P-3, P-4 Battery Terminals

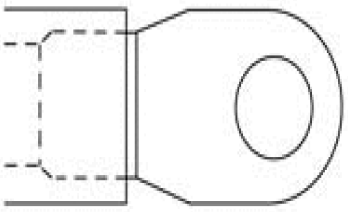

4891772

Connector Part Information		• 1 Way Eyelet	
Pin	**Wire Color**	**Circuit Number**	**Function**
P-1	BLK RED RED	—	Battery Voltage to H-282 Pin 1 Battery Positive To Positive Battery Battery To Starter Positive
P-2	BLK	—	Battery Negative To Battery Negative
P-3	RED	—	Battery Positive To Battery Positive
P-4	BLK BLK/YEL	—	Battery Negative To Battery Negative Battery To Ground P-5

Right Outer Frame Rail, On Top of the Batteries (Top Cover Removed)

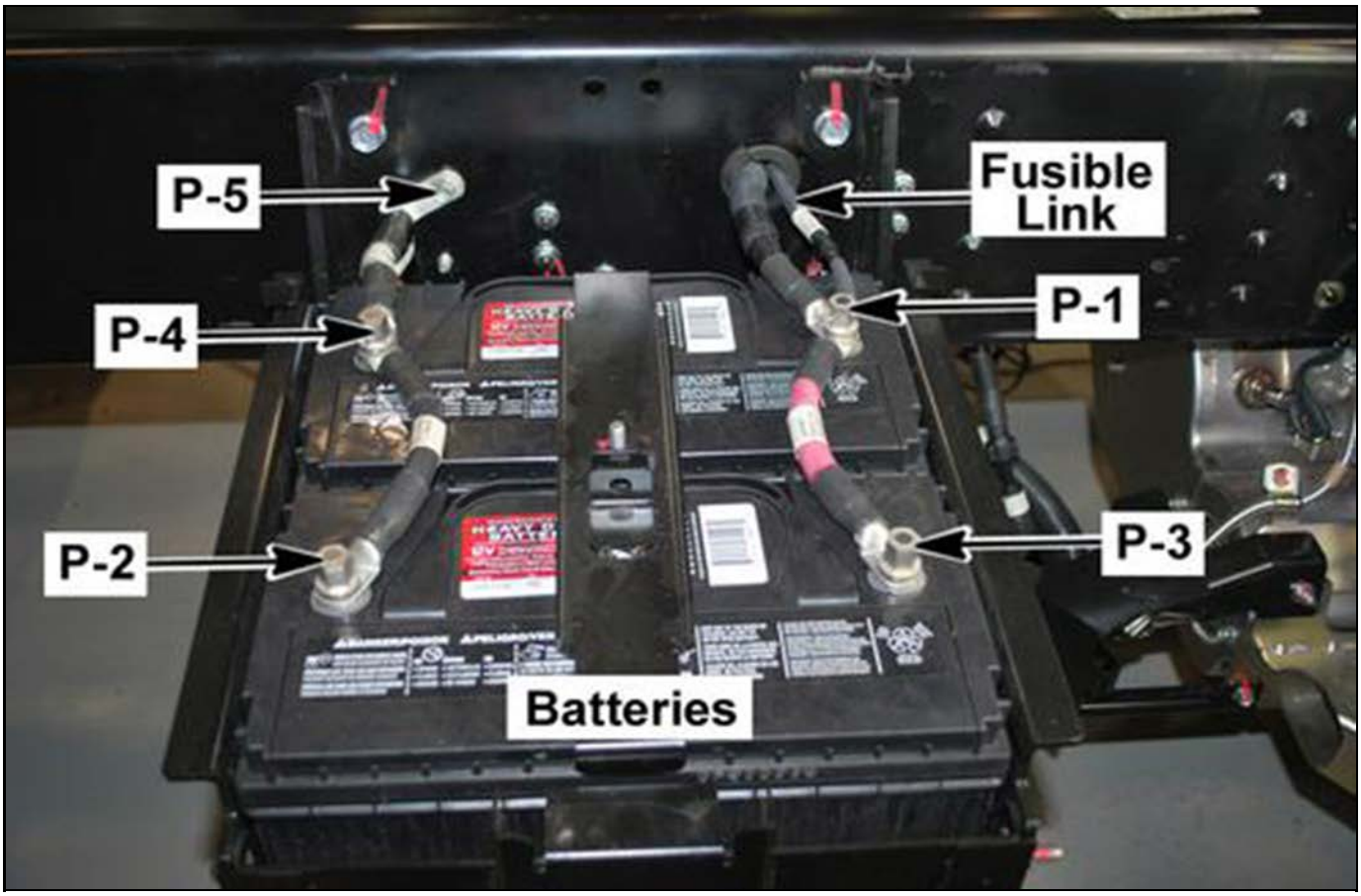

4893638

P-5 Ground

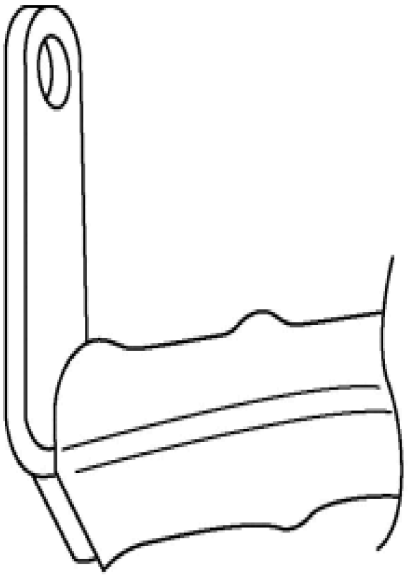

4893646

Connector Part Information		• 1 Way Eyelet	
Pin	**Wire Color**	**Circuit Number**	**Function**
—	BLK/YEL	—	Ground to Batteries

Left Outer Frame Rail, Next to the Batteries

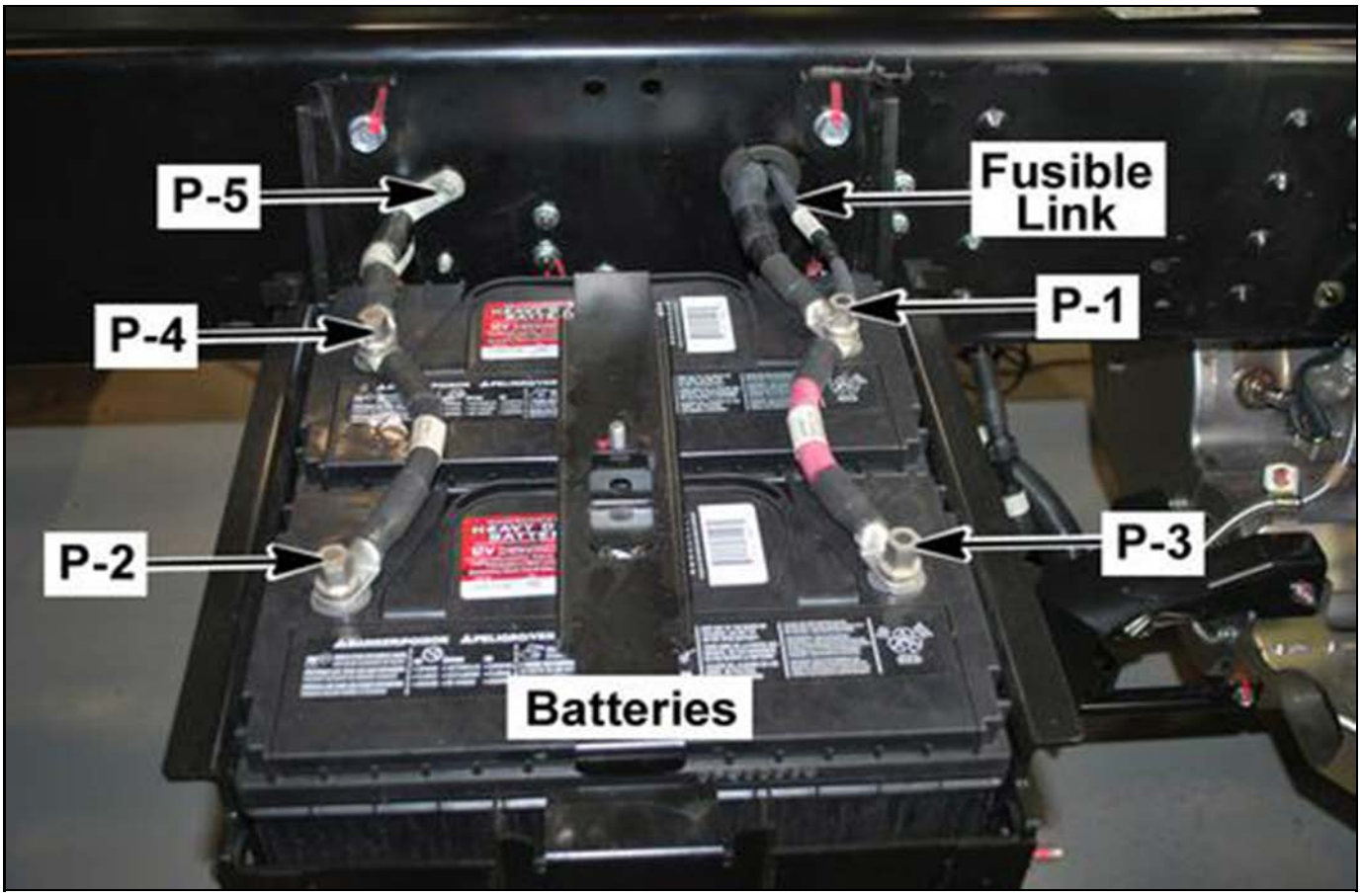

4893638

P-6 Ground

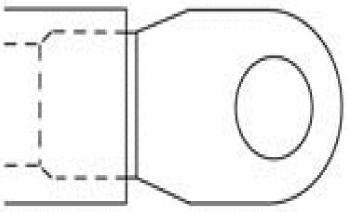

4891772

Connector Part Information		• 1 Way Eyelet	
Pin	**Wire Color**	**Circuit Number**	**Function**
—	BLK	—	Ground to Starter

Right Lower Side of the Engine, on the Starter

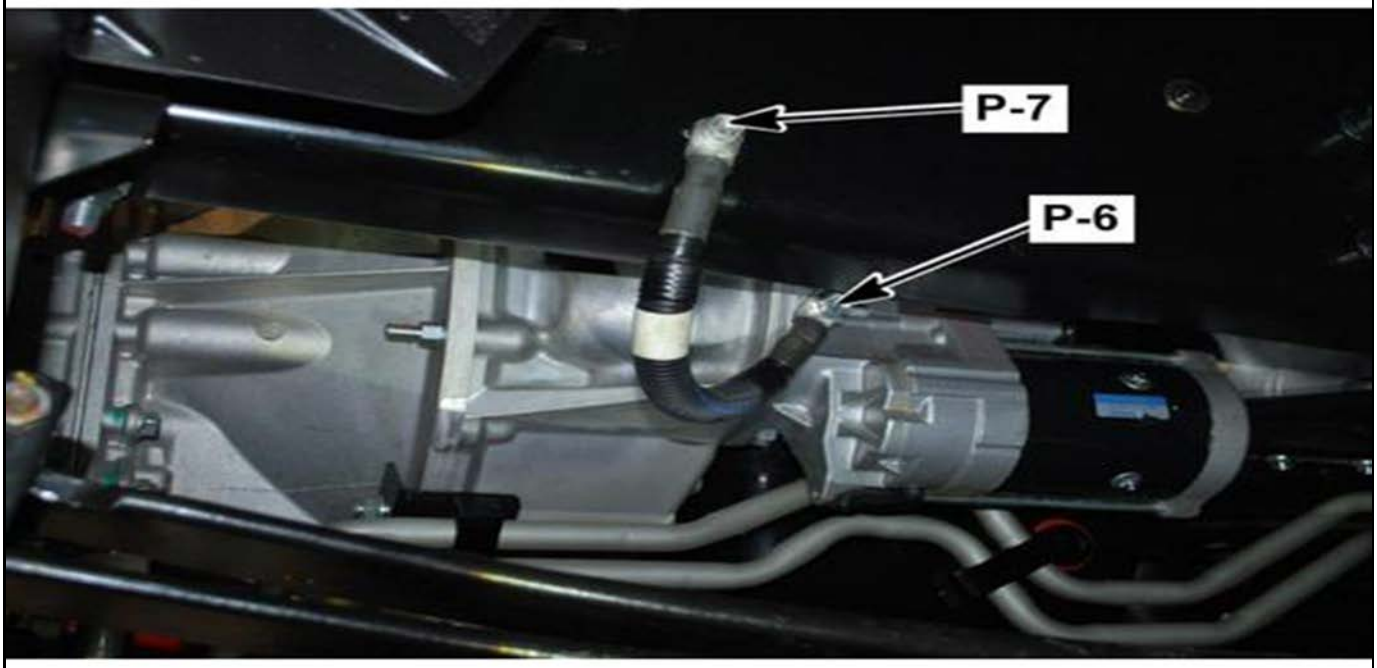

4893648

P-7 Ground

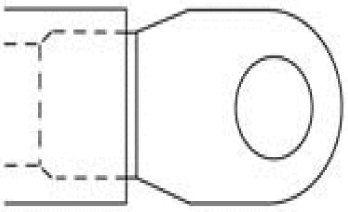

4891772

Connector Part Information		• 1 Way Eyelet	
Pin	**Wire Color**	**Circuit Number**	**Function**
—	BLK	—	Ground to Frame Rail

Right Front Inner Fender Well, on the Outer Frame Rail

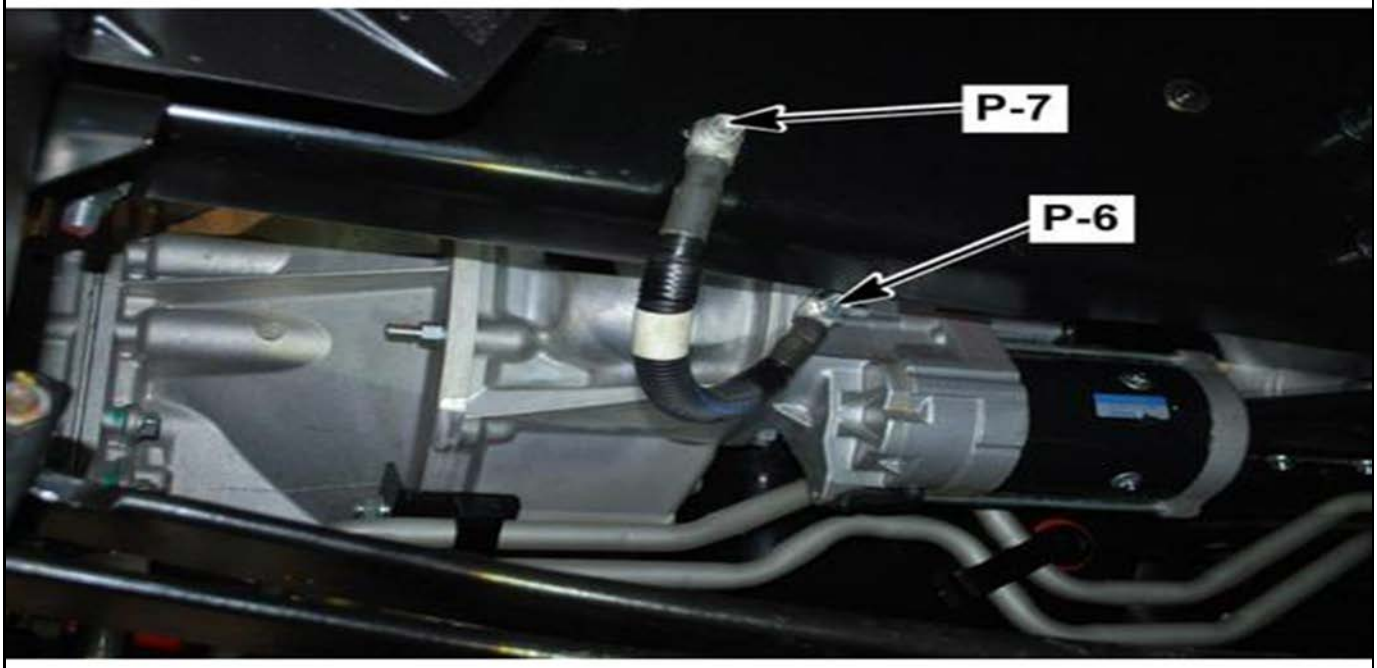

4893648

X-1 Stop Lamp Relay

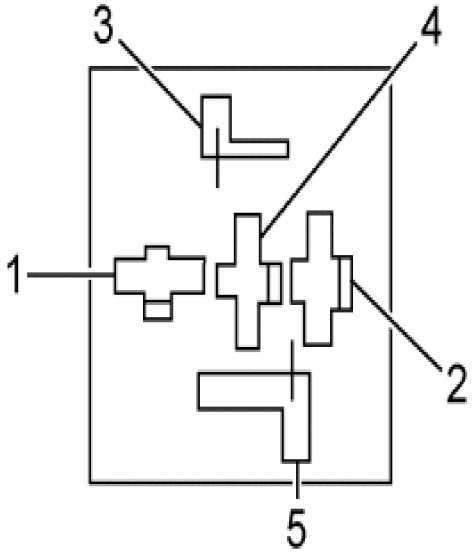

4893653

Connector Part Information		• 5-Way F Fuse/Relay Center (Cab)	
Pin	**Wire Color**	**Circuit Number**	**Function**
1	—	—	Stop Light Control (30 Switched Output Voltage)
2	—	—	Battery Voltage from Fuse F-12 (87 Input Voltage)
3	—	—	Battery Voltage from Fuse F-12 (86 Coil Feed)
4	—	—	Not Used (87a)
5	—	—	Stop Light Relay Control (85 Coil Control)

Behind the Center of the I/P, In the Fuse/Relay Center (Cab)

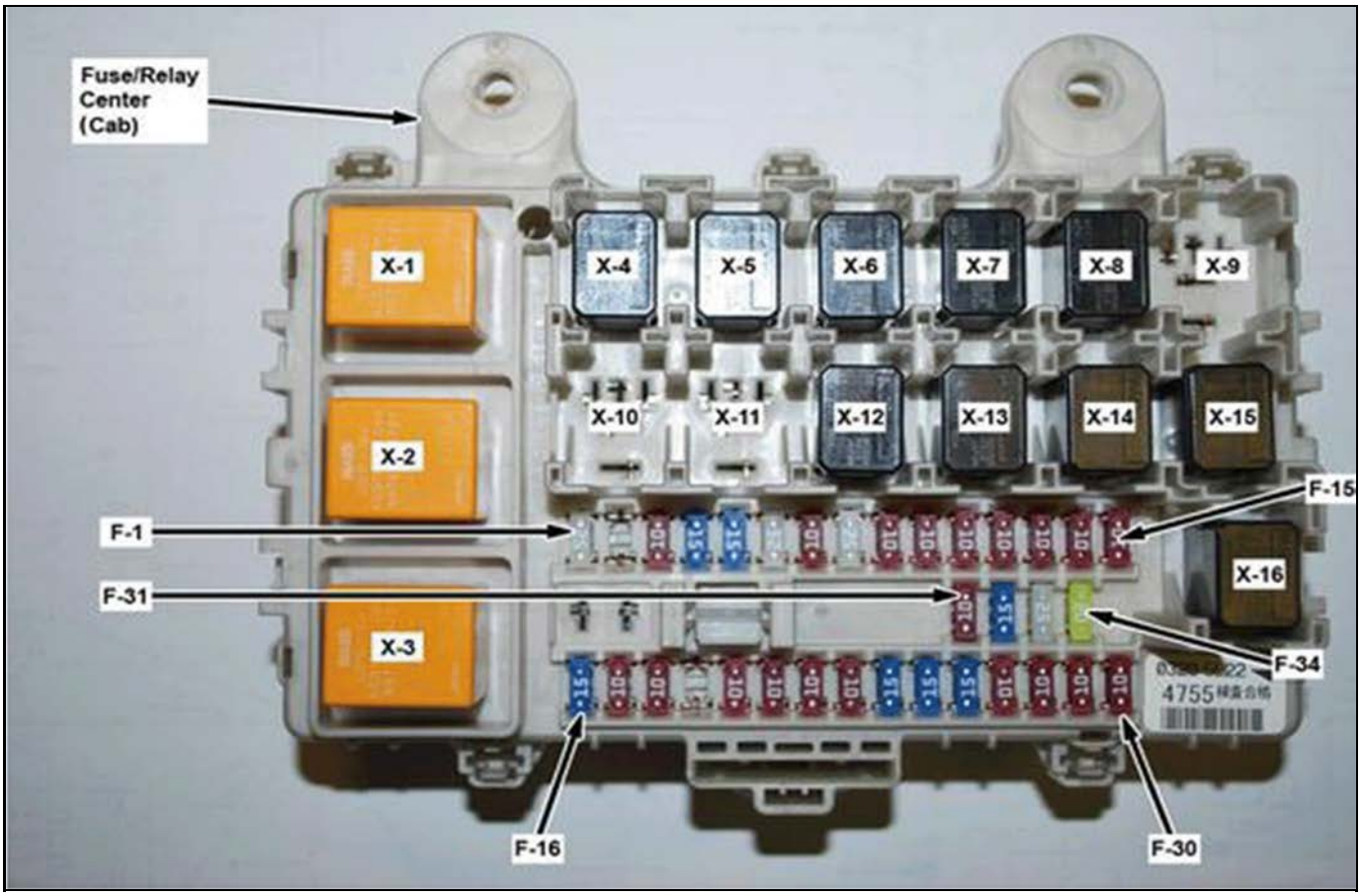

4895363

X-2 DRL Relay

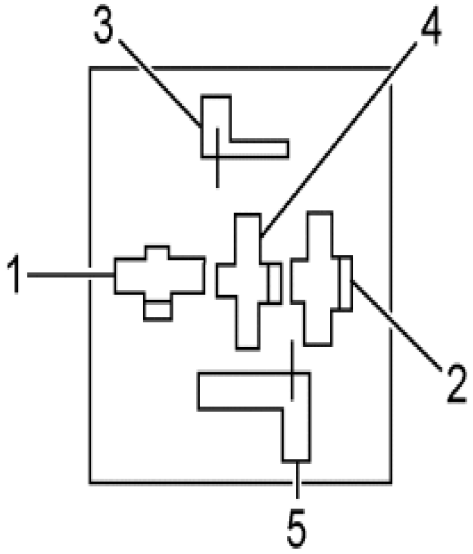

4893653

Connector Part Information		• 5-Way F Fuse/Relay Center (Cab)	
Pin	**Wire Color**	**Circuit Number**	**Function**
1	RED/GRN	AA041	To DRL Module (Switched Output Voltage)
2	WHT/RED	AA042	Battery Voltage from Fuse FL-8 (Input Voltage)
3	LT GRN	AA043	Battery Voltage from Fuse F-10 (Coil Feed)
4	—	—	Not Used (87a)
5	RED/BLK	AA090B	To DRL Module (Coil Control)

Behind the Center of the I/P, In the Fuse/Relay Center (Cab)

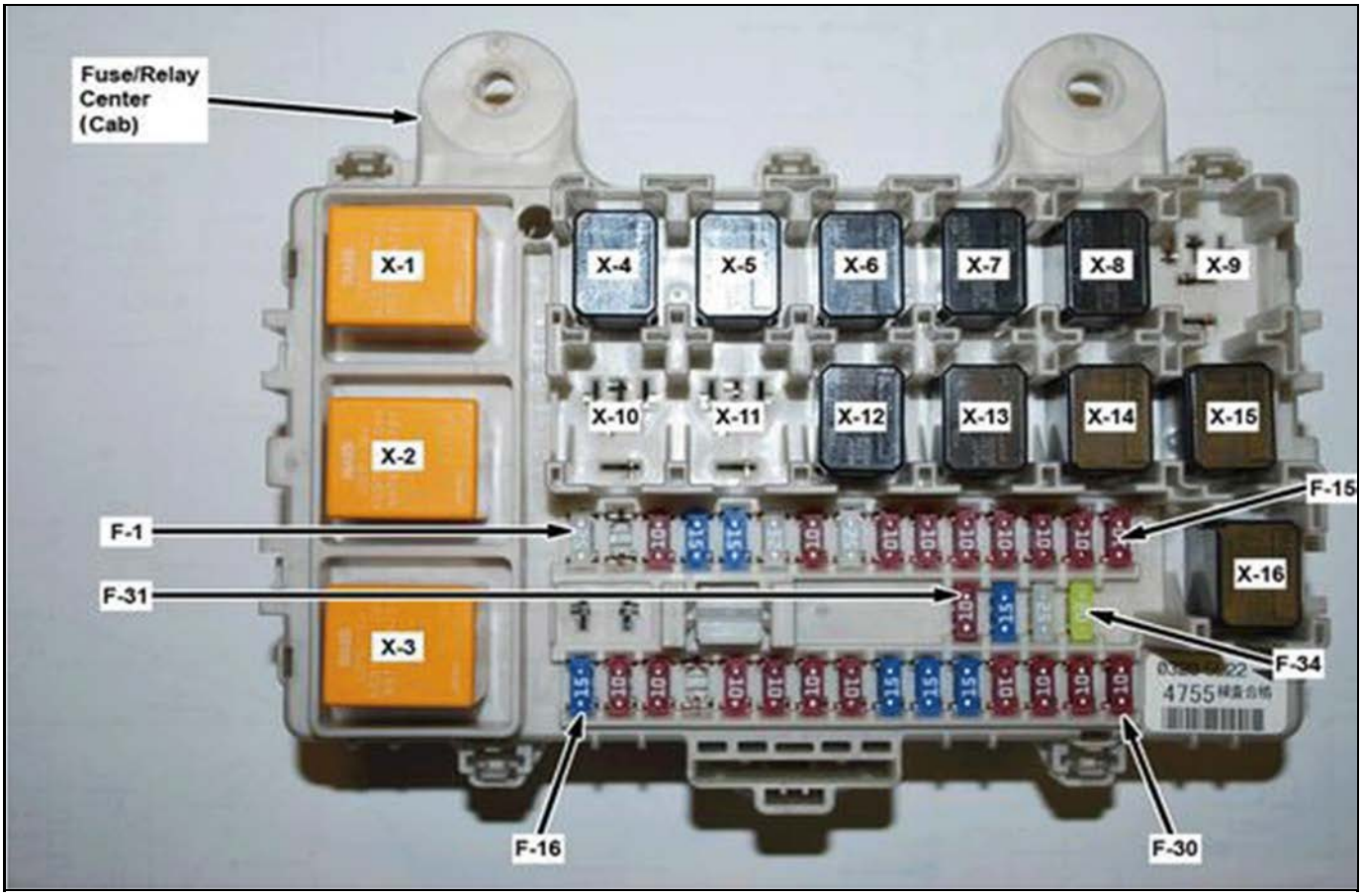

4895363

X-3 Key ON Relay

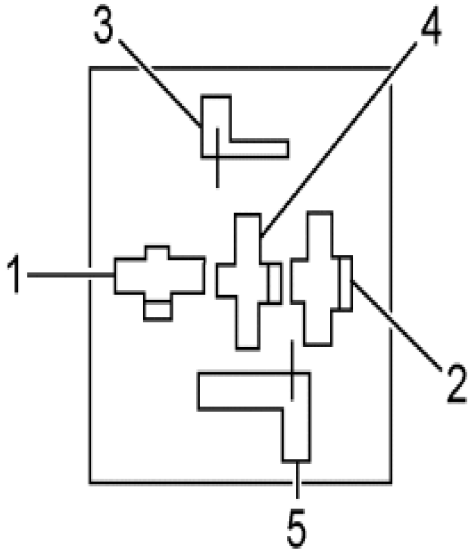

4893653

Connector Part Information		• 5-Way F Fuse/Relay Center (Cab)	
Pin	**Wire Color**	**Circuit Number**	**Function**
1	—	—	Fuse F-8 Control (30 Switched Output Voltage)
2	WHT/BLK	PA11	Battery Voltage from Fuse FL-10 (87 Input Voltage)
3	BLK	EY19	Ignition Voltage from Fuse F-21 (Coil Feed)
4	—	—	Not Used (87a)
5	—	—	Ground to J/B 2 (B-144 pin 5) (B-53 Ground) (86 Coil Control)

Behind the Center of the I/P, In the Fuse/Relay Center (Cab)

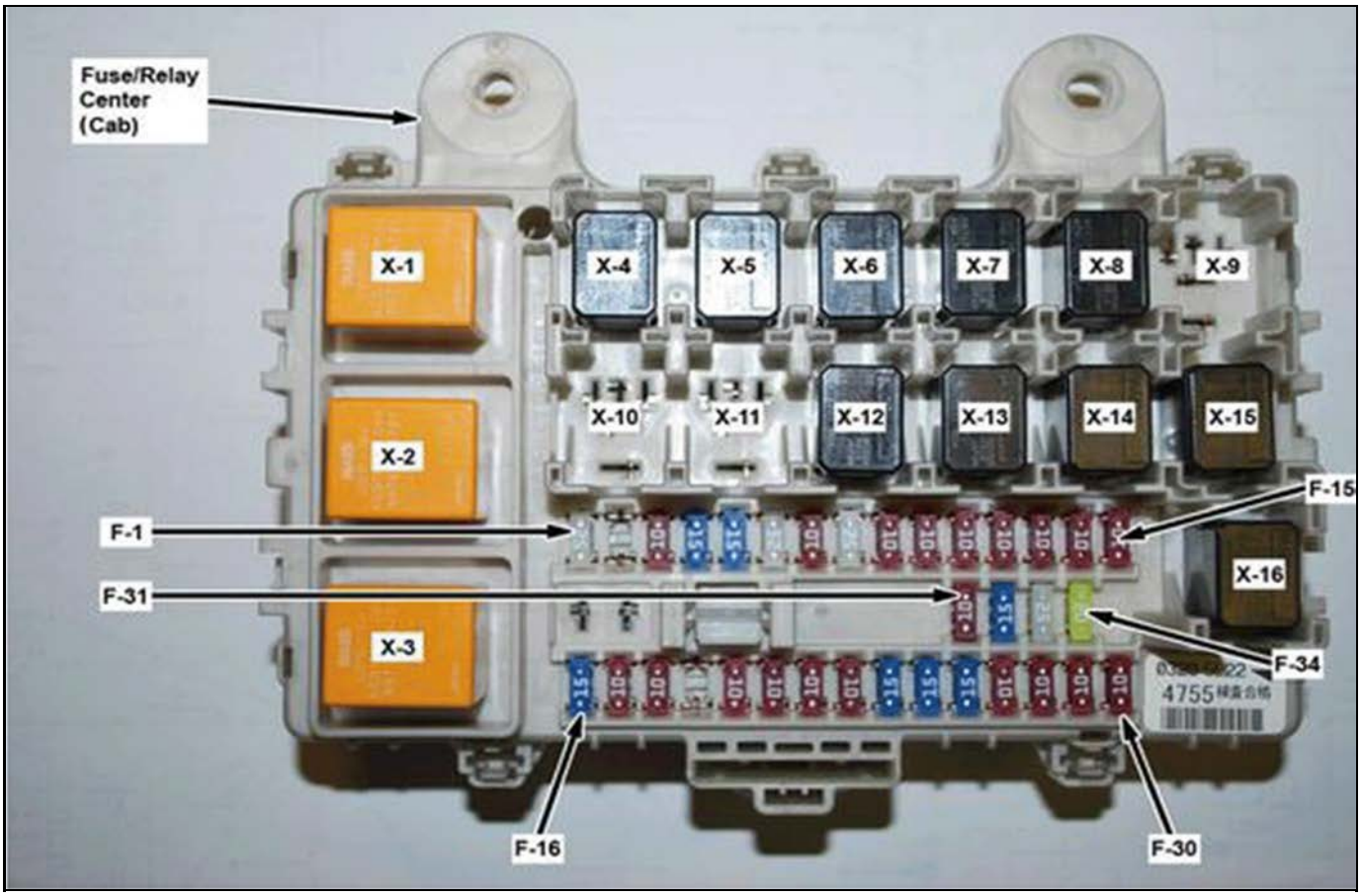

4895363

X-5 Cornering Lamp Relay

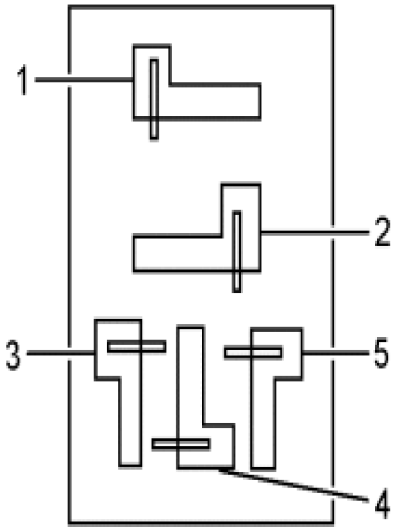

4893747

Connector Part Information		• 5-Way F Fuse/Relay Center (Cab)	
Pin	**Wire Color**	**Circuit Number**	**Function**
1	—	—	Fuse F-29 Voltage (Headlamp Switch ON) (Input Voltage)
2	LT GRN	OA052	To J/B 1 (B-136 pin 15)*(Switched Output Voltage)
3	VIO	OA057	Ignition Voltage from Fuse F-21 (86 Coil Feed)
4	—	—	Not Used (87a)
5	GRY	OX008	To Diode 3 (Coil Control)

Behind the Center of the I/P, In the Fuse/Relay Center (Cab)

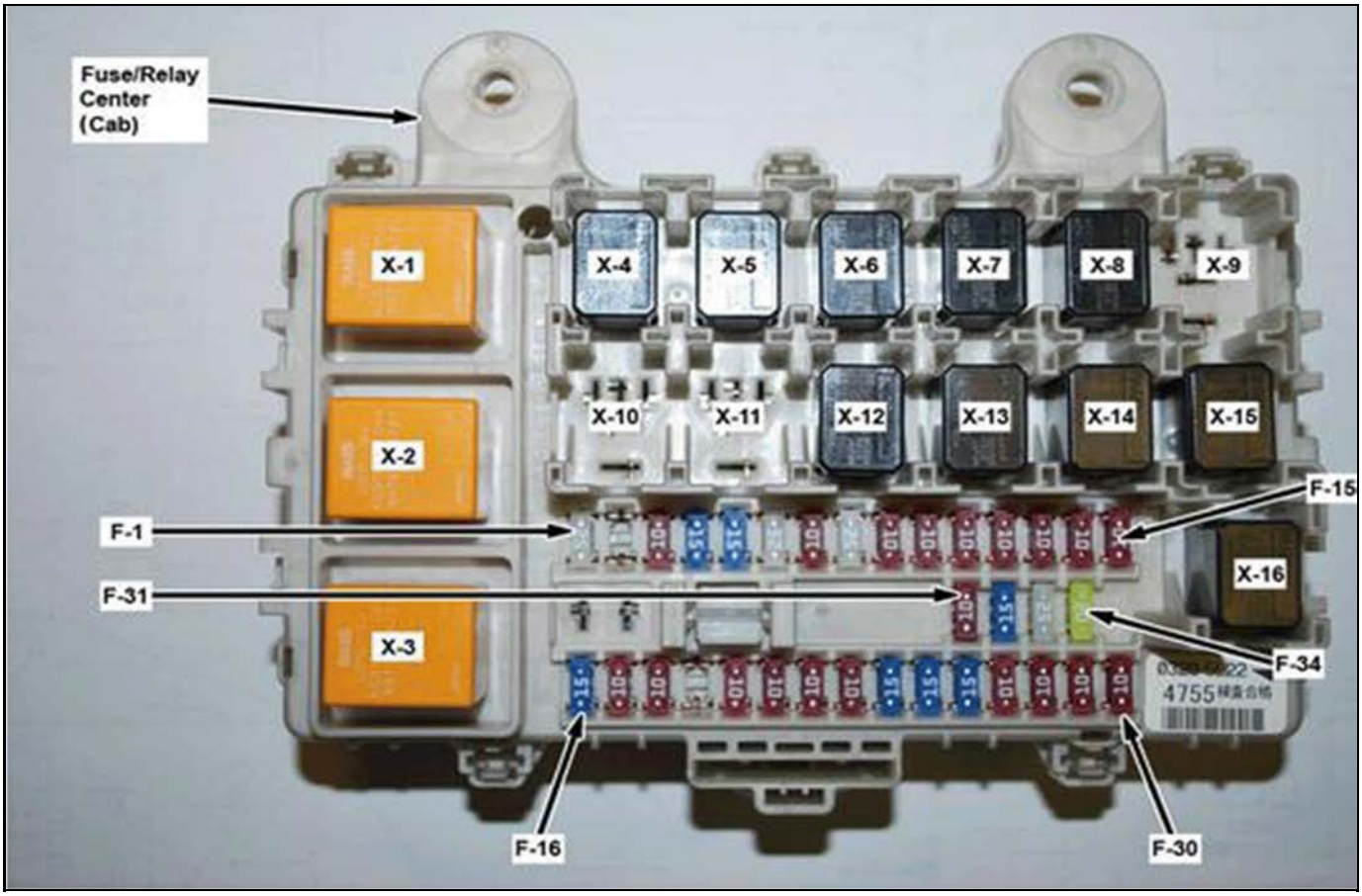

4895363

X-6 Wiper Main Relay

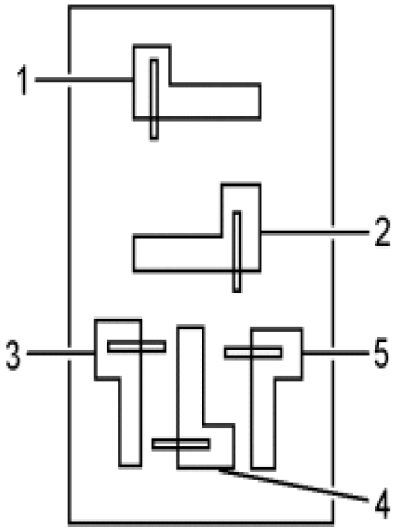

4893747

Connector Part Information		• 5-Way F Fuse/Relay Center (Cab)	
Pin	**Wire Color**	**Circuit Number**	**Function**
1	—	—	Wiper High Low Relay Control Voltage (30 Switched Output Voltage)
2	—	—	Fuse F-8 Supply Voltage (87 Input Voltage)
3	—	—	Fuse F-8 Supply Voltage (86 Coil Feed)
4	BLU/ORN	FA15	Wiper Motor Park Signal (87a Normally Closed Input Voltage)
5	BLU/RED	FA06	Wiper/Exhaust Brake Switch Voltage (85 Coil Control)

Behind the Center of the I/P, In the Fuse/Relay Center (Cab)

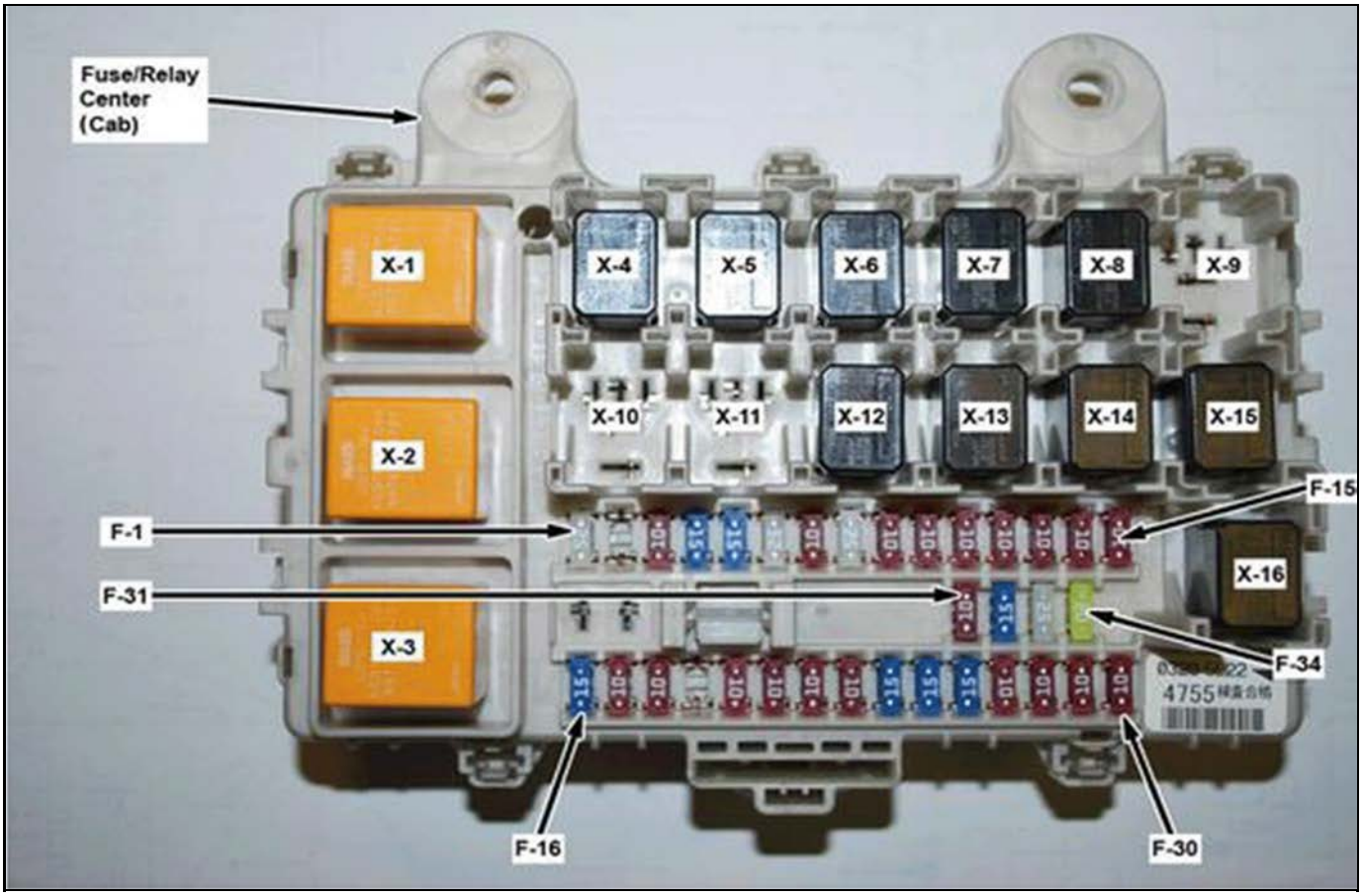

4895363

X-7 Horn Relay

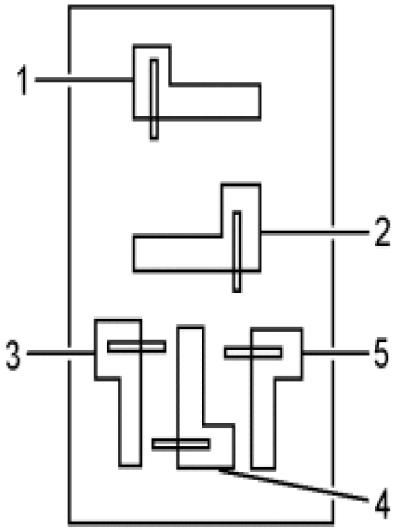

4893747

Connector Part Information		• 5-Way F Fuse/Relay Center (Cab)	
Pin	**Wire Color**	**Circuit Number**	**Function**
1	LT BLU	DA001B	Horn Control Voltage (Switched Output Voltage)
2	—	—	Ignition Voltage from Fuse F-25 (Coil Feed)
3	—	—	Ignition Voltage from Fuse F-25 (Input Voltage)
4	—	—	Not Used
5	BRN	DA004B	Horn Relay Control (Coil Control) to Horn Switch

Behind the Center of the I/P, In the Fuse/Relay Center (Cab)

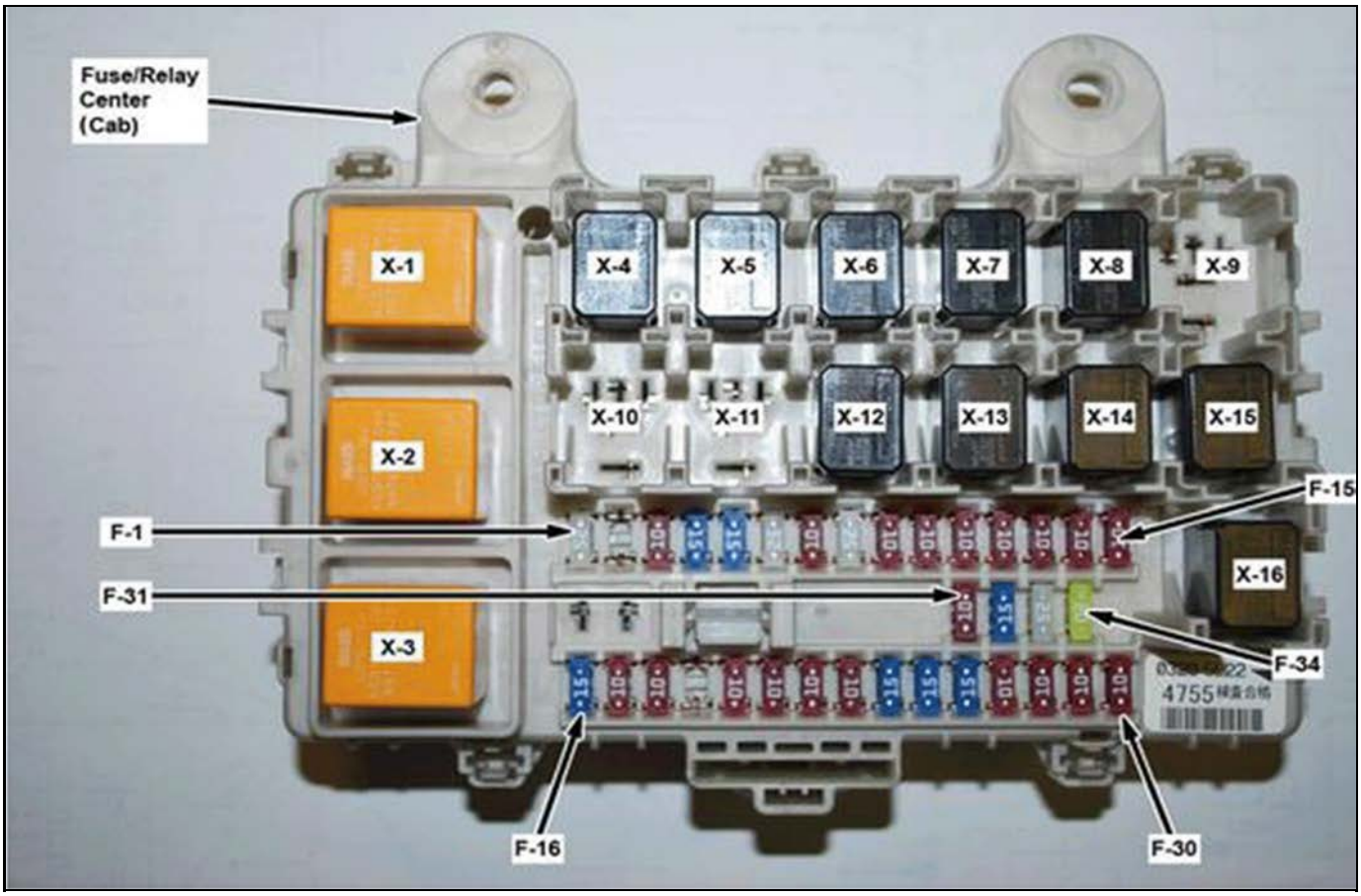

4895363

X-8 Wiper High/Low Relay

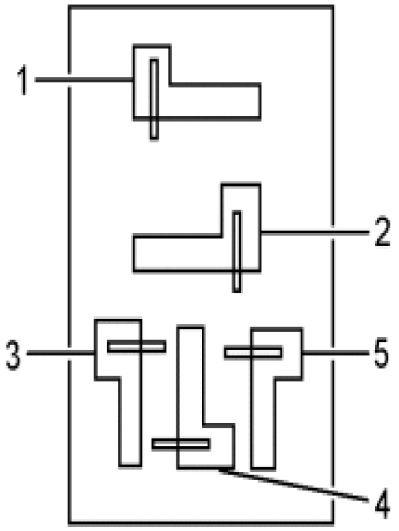

4893747

Connector Part Information		• 5-Way F Fuse/Relay Center (Cab)	
Pin	**Wire Color**	**Circuit Number**	**Function**
1	—	—	Wiper Main Relay Supply Voltage (30 Input Voltage)
2	BRN/BLK	FA02	Wiper Motor High Voltage (87 Switch Output Voltage)
3	BLK/GRN	FA07	Wiper High Low Relay Control (86 Coil Control)
4	BRN/WHT	FA01	Wiper Motor Low Voltage (87a Normally Closed Output Voltage)
5	—	—	Fuse F-8 Supply Voltage (85 Coil Feed)

Behind the Center of the I/P, In the Fuse/Relay Center (Cab)

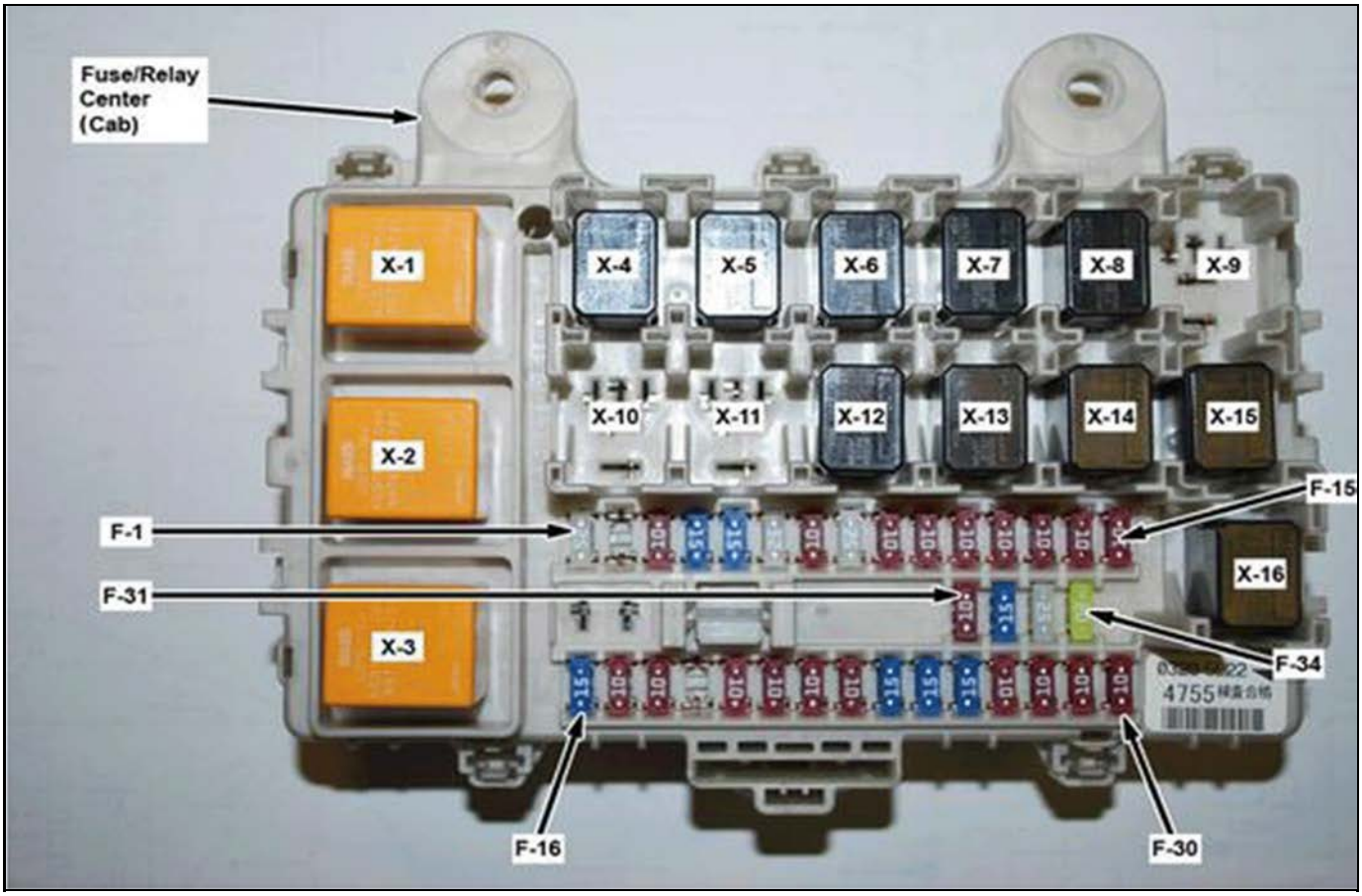

4895363

X-12 Power Window Relay

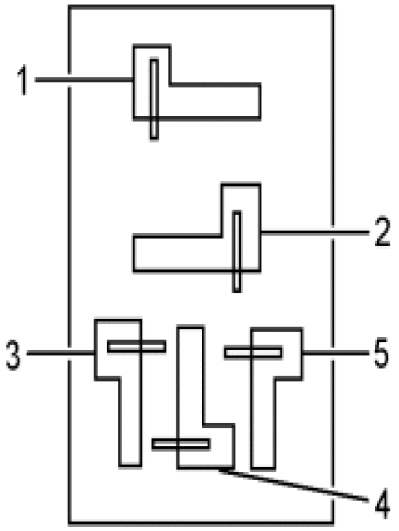

4893747

Connector Part Information		• 5-Way F Fuse/Relay Center (Cab)	
Pin	**Wire Color**	**Circuit Number**	**Function**
1	—	—	Fuse F-6 Control Voltage (30 Switched Output Voltage)
2	BLK/YEL	PA062	Battery Voltage from Fuse FL-12 (87 Input Voltage)
3	—	—	Fuse F-16 Supply Voltage (86 Coil Feed)
4	—	—	Not Used (87A)
5	GRY	UX002B	Ground to B-601 Splice Pack (85 Coil Control)

Behind the Center of the I/P, In the Fuse/Relay Center (Cab)

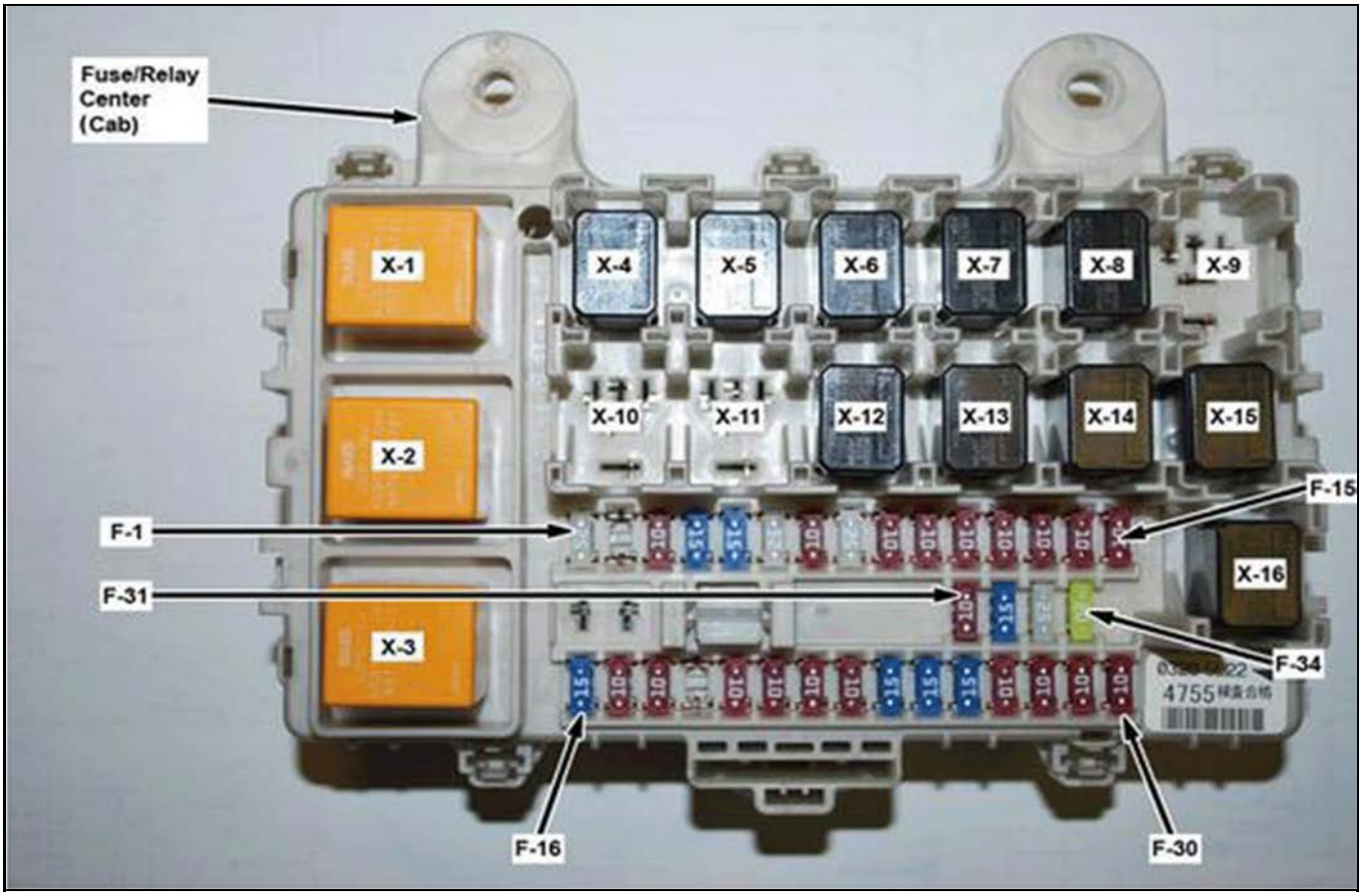

4895363

X-13 Headlamp Low Relay

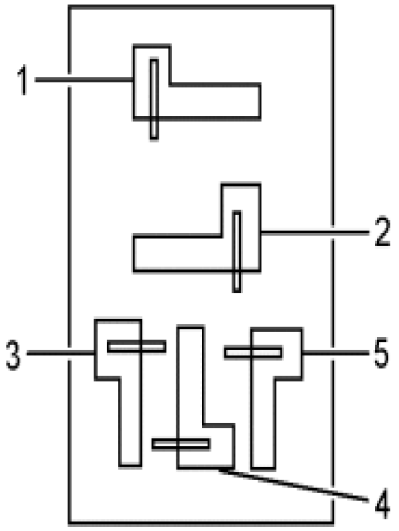

4893747

Connector Part Information		• 5-Way F Fuse/Relay Center (Cab)	
Pin	**Wire Color**	**Circuit Number**	**Function**
1	—	—	Control Voltage for Fuses F-9 and F-11 (30 Switched Output Voltage)
2	WHT/RED	PA18	Battery Voltage from Fuse FL-8 Supply Voltage (87 Input Voltage)
3	—	—	Battery Voltage from Fuse F-10 (86 Coil Feed)
4	—	—	Not Used (87a)
5	RED/BLU	AA003B	Headlamp Low Relay Control (85 Coil Control)

Behind the Center of the I/P, In the Fuse/Relay Center (Cab)

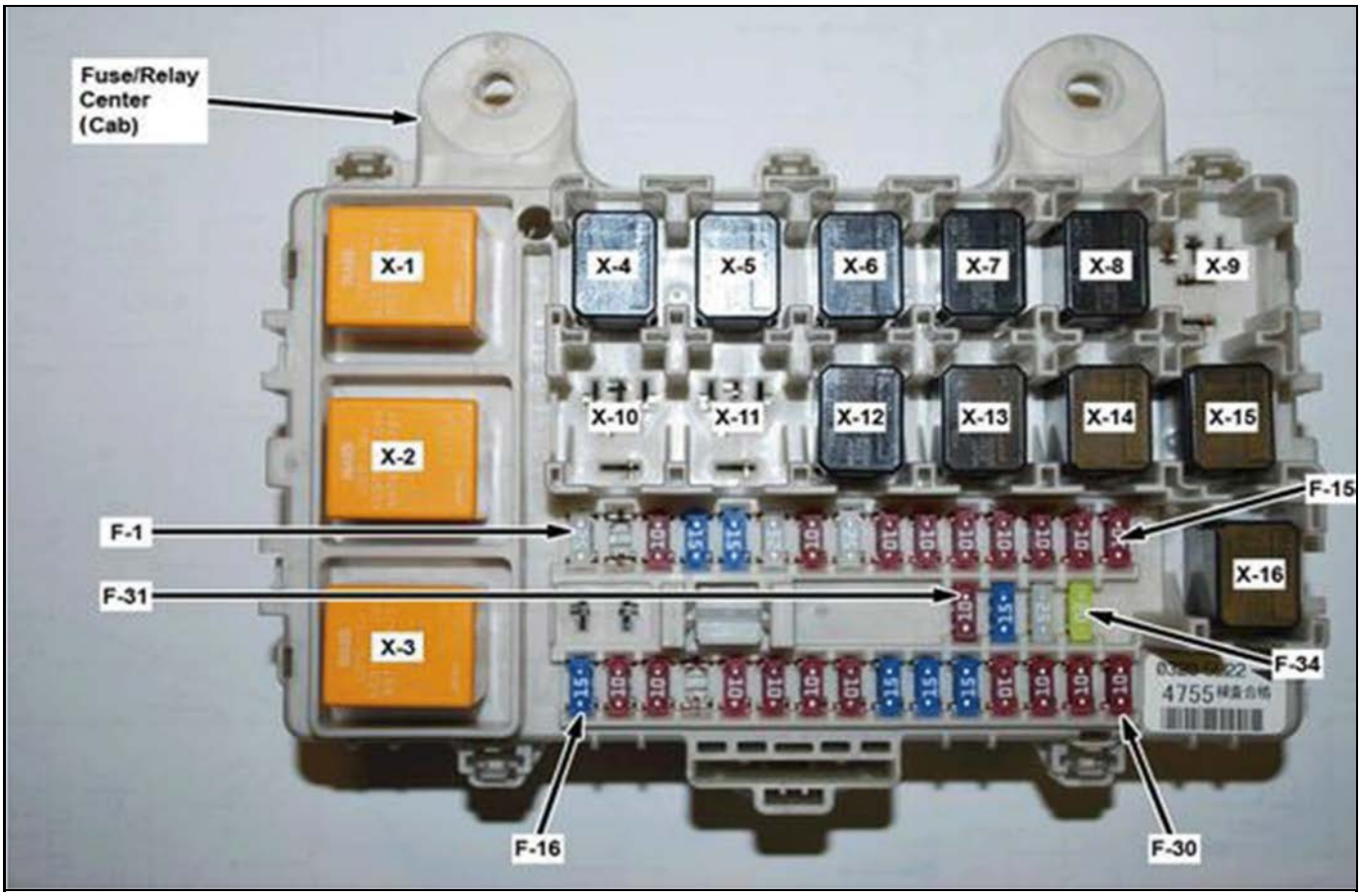

4895363

X-15 Headlamp High Relay

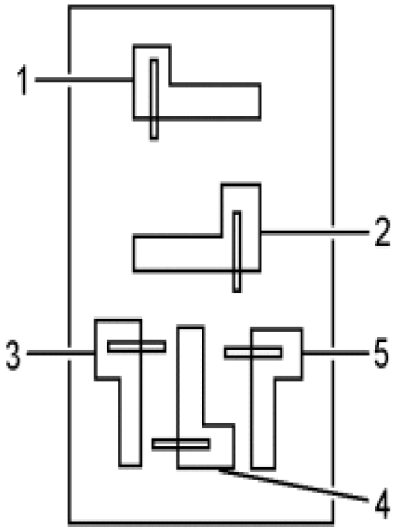

4893747

Connector Part Information		• 5-Way F Fuse/Relay Center (Cab)	
Pin	**Wire Color**	**Circuit Number**	**Function**
1	—	—	Supply Voltage to Fuses F-14, F-15 (30 Switched Output Voltage)
2	WHT/RED	PA18	Battery Voltage from Fuse FL-8 (87 Input Voltage)
3	—	—	Battery Voltage from Fuse F-10 (86 Coil Feed)
4	—	—	Not Used (87a)
5	RED/WHT	AA02	Headlamp High Relay Control (85 Coil Control)

Behind the Center of the I/P, In the Fuse/Relay Center (Cab)

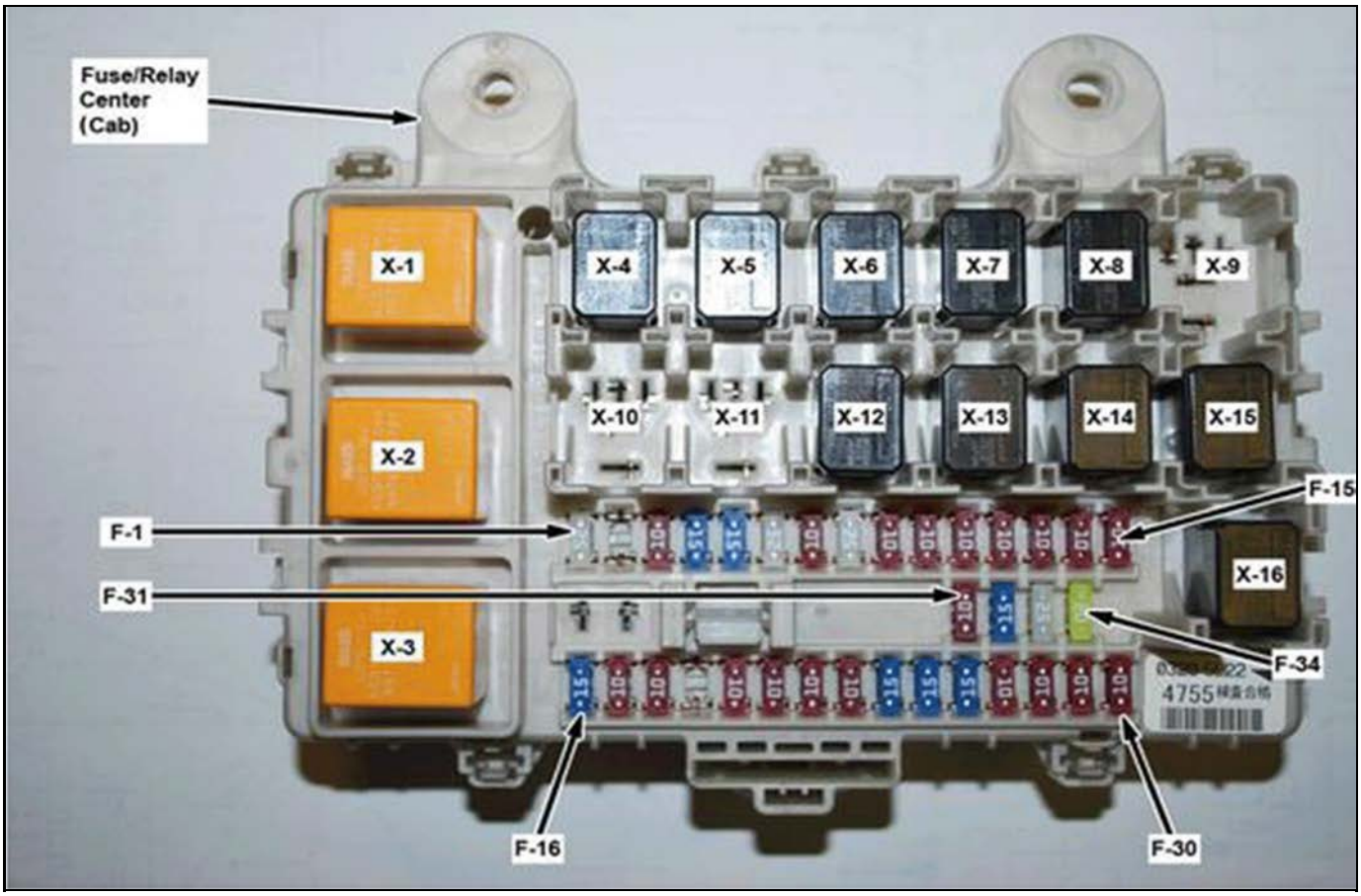

4895363

X-16 Tail Lamp Relay

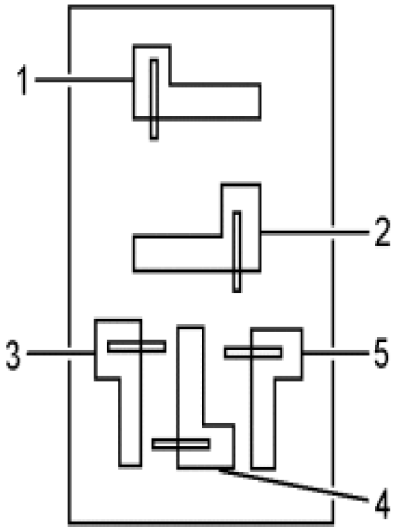

4893747

Connector Part Information		• 5-Way F Fuse/Relay Center (Cab)	
Pin	**Wire Color**	**Circuit Number**	**Function**
1	—	—	Fuse F-27, F-28, F-29 Control Voltage (30 Switched Output Voltage)
2	—	—	Battery Voltage from Fuse F-32 (87 Input Voltage)
3	—	—	Battery Voltage from Fuse F-10 (86 Coil Feed)
4	—	—	Not Used (87a)
5	—	—	Tail Lamp Relay Control (85 Coil Control) to Combination Switch

Behind the Center of the I/P, In the Fuse/Relay Center (Cab)

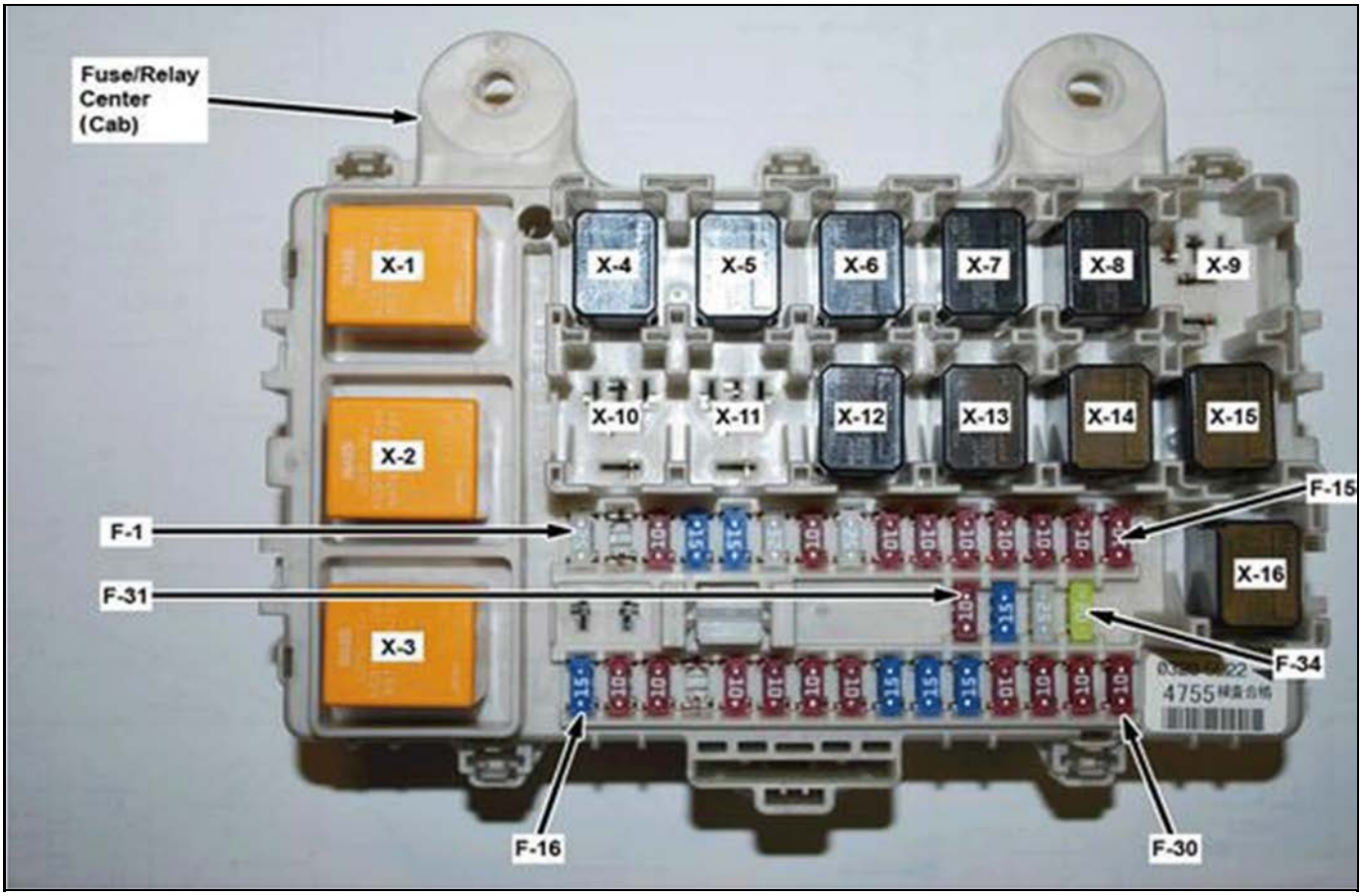

4895363

X-17 Starter Relay

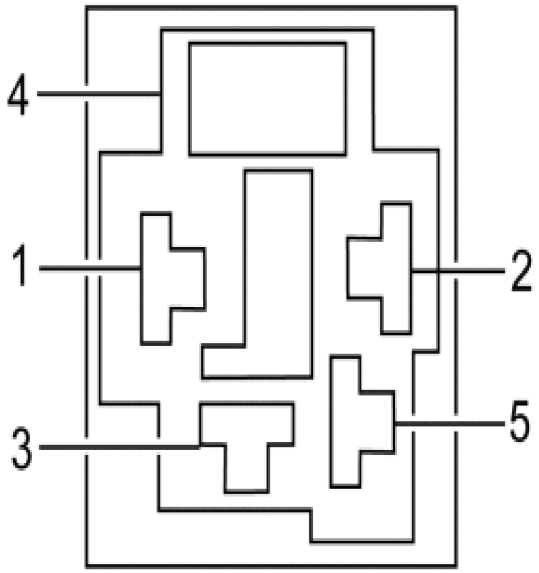

4893791

Connector Part Information		• Part of Fuse/Relay Center • 5-Way F Fuse/Relay Center	
Pin	**Wire Color**	**Circuit Number**	**Function**
1	WHT/BLK	LA001C	Battery Voltage from Fuse FL-2 (Input Voltage)
2	BLK/WHT	LA002C	Starter Solenoid Control (Switched Output Voltage)
3	BLK/WHT	LA013C	Ignition Voltage from Fuse F-13 (Coil Control)
4	—	—	Not Used
5	WHT/BLK	IC019C	Relay Control to ECM (Coil Control)

Left Outer Frame Rail, In the Fuse/Relay Center

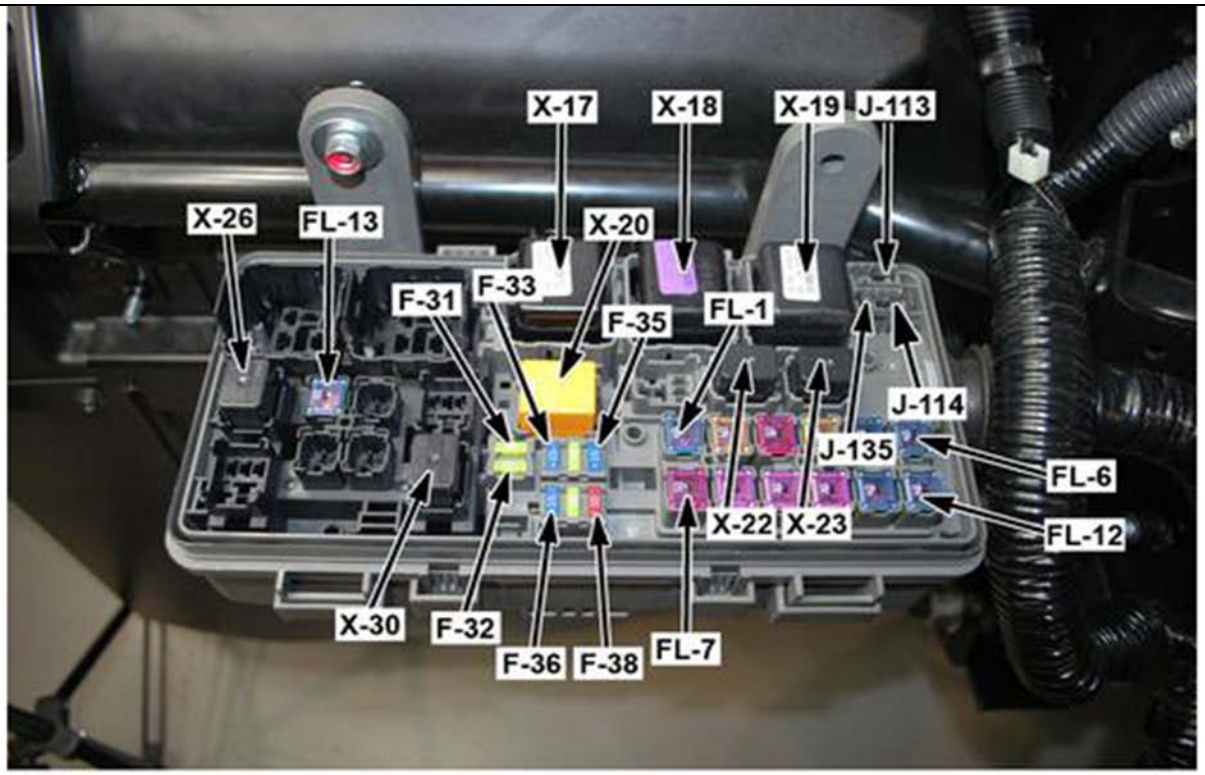

4892760

X-18 ECM Main Relay

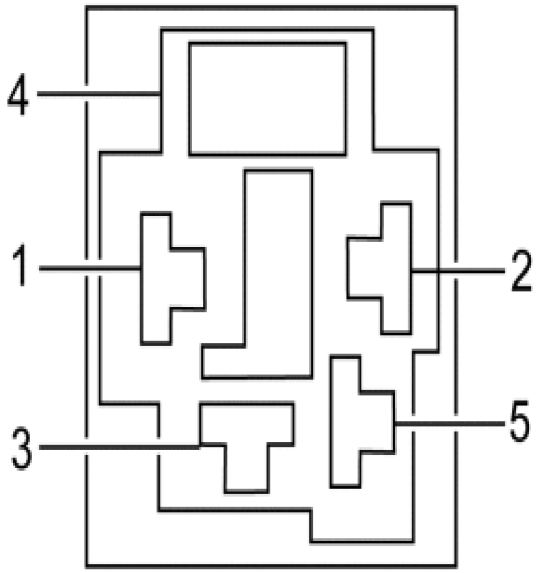

4893791

Connector Part Information		• Part of Fuse/Relay Center • 5-Way F Fuse/Relay Center	
Pin	**Wire Color**	**Circuit Number**	**Function**
1	WHT/GRN	IC082C	Battery Voltage from Fuse FL-1 (87 Input Voltage)
2	WHT/RED	IC053C	ECM Main Relay (30 Switched Output Voltage) to Splice 15
3	WHT/GRN	IC204C	Battery Voltage from Fuse FL-1 (86 Coil Feed)
4	—	—	Not Used (87a)
5	BLU/YEL	IC064C	ECM Main Relay (Coil Control) to ECM

Left Outer Frame Rail, In the Fuse/Relay Center

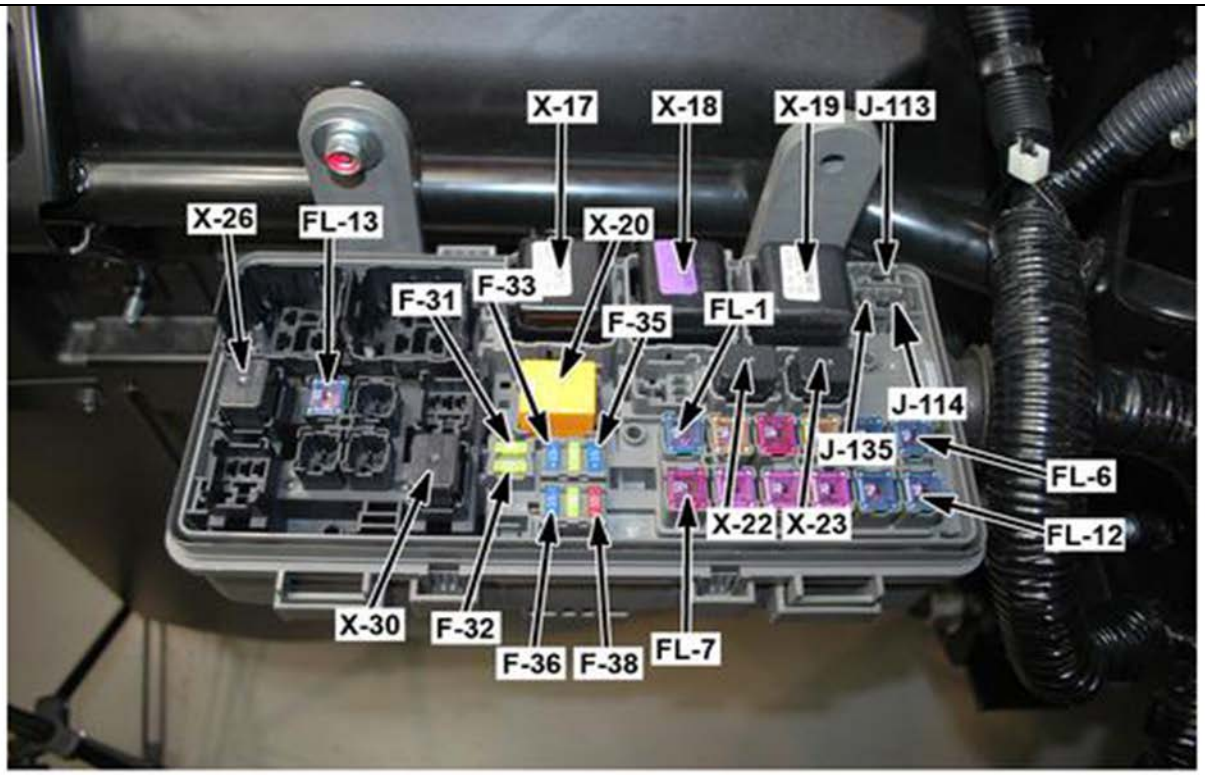

4892760

X-19 NOx and DEF Sensor Relay

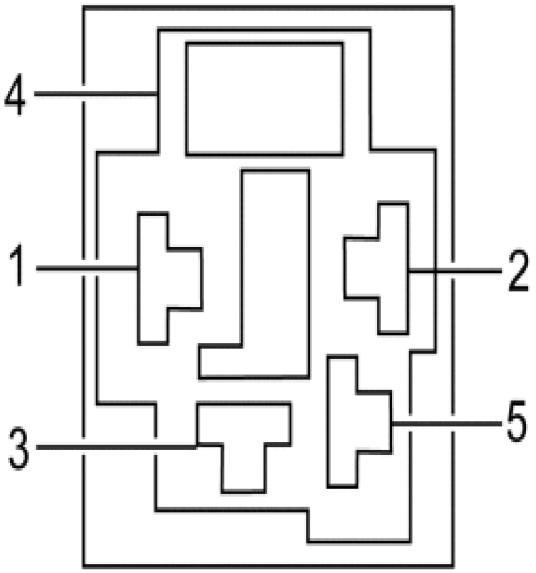

4893791

Connector Part Information		• Part of Fuse/Relay Center • 5-Way F Fuse/Relay Center	
Pin	**Wire Color**	**Circuit Number**	**Function**
1	WHT	FG001C	Battery Voltage from Fuse F-34 (Input Voltage)
2	BLK/ORN	FG007C FG046C	Diesel Exhaust Fluid (DEF) Tank and Temperature Sensor Control NOx Sensors 1 and 2 (Switch ed Output Voltage)
3	WHT	FG017C	Battery Voltage from Fuse F-34 (Coil Feed)
4	—	—	Not Used
5	ORN	FG016C	Relay Control to DEF Control Module (Coil Control)

Left Outer Frame Rail, In the Fuse/Relay Center

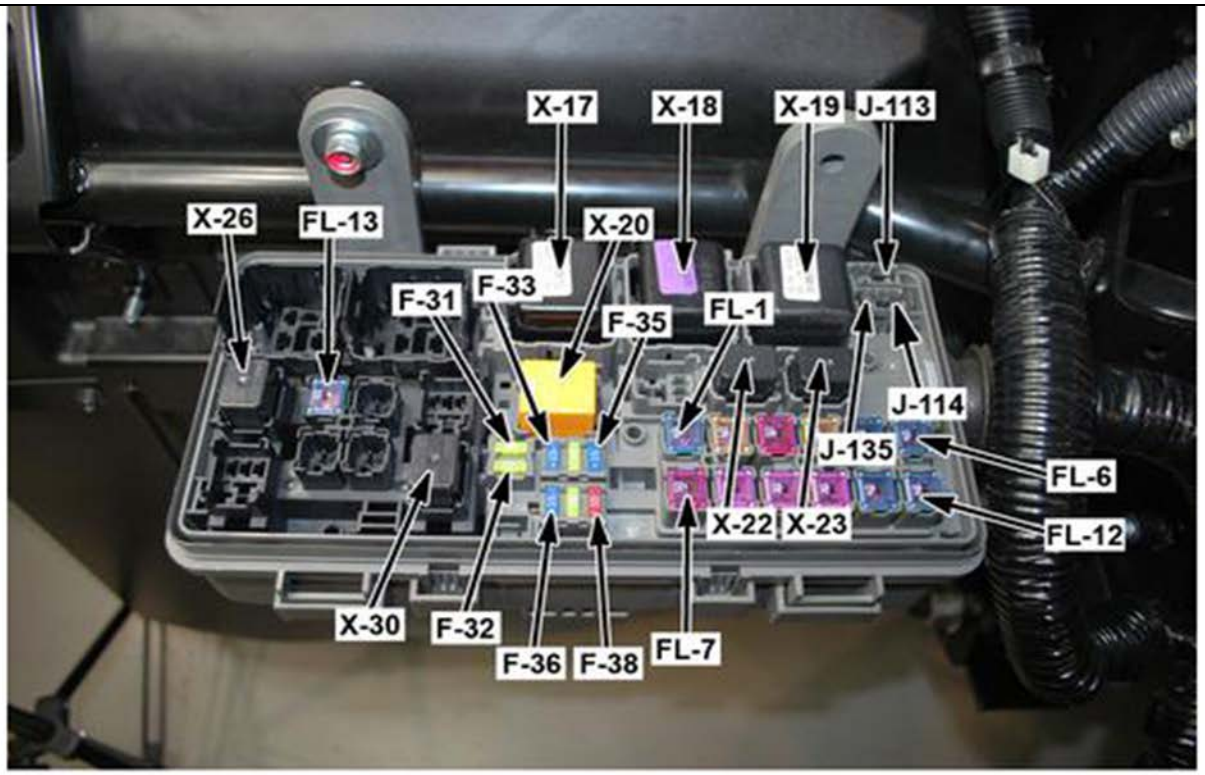

4892760

X-20 Compressor Clutch Relay

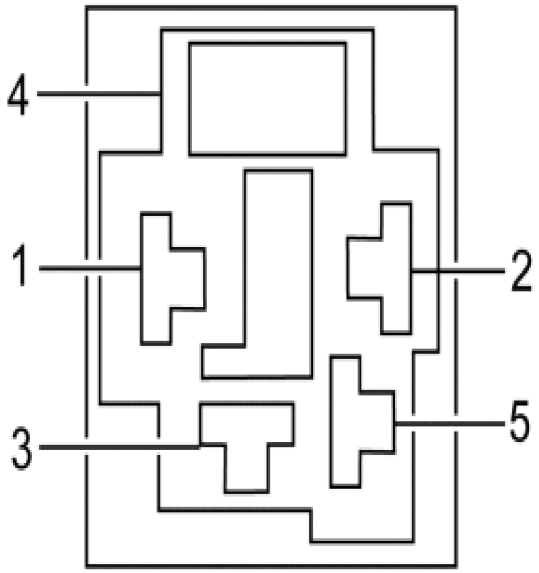

4893791

Connector Part Information		• Part of Fuse/Relay Center • 5-Way F Fuse/Relay Center	
Pin	**Wire Color**	**Circuit Number**	**Function**
1	PNK	HA029C	Battery Voltage from Fuse F-38 Supply (30 Input Voltage)
2	BLU	HA066C	Switched Output Voltage to J/B 1 (B-131 pin 9)
3	BLK/RED	HA062C	Fuse F-30 Voltage (Fan Control Switch ON) (Coil Feed)
4	—	—	Not Used (87a)
5	GRY	HA010C	Coil Control to Electronic Thermostat

Left Outer Frame Rail, In the Fuse/Relay Center

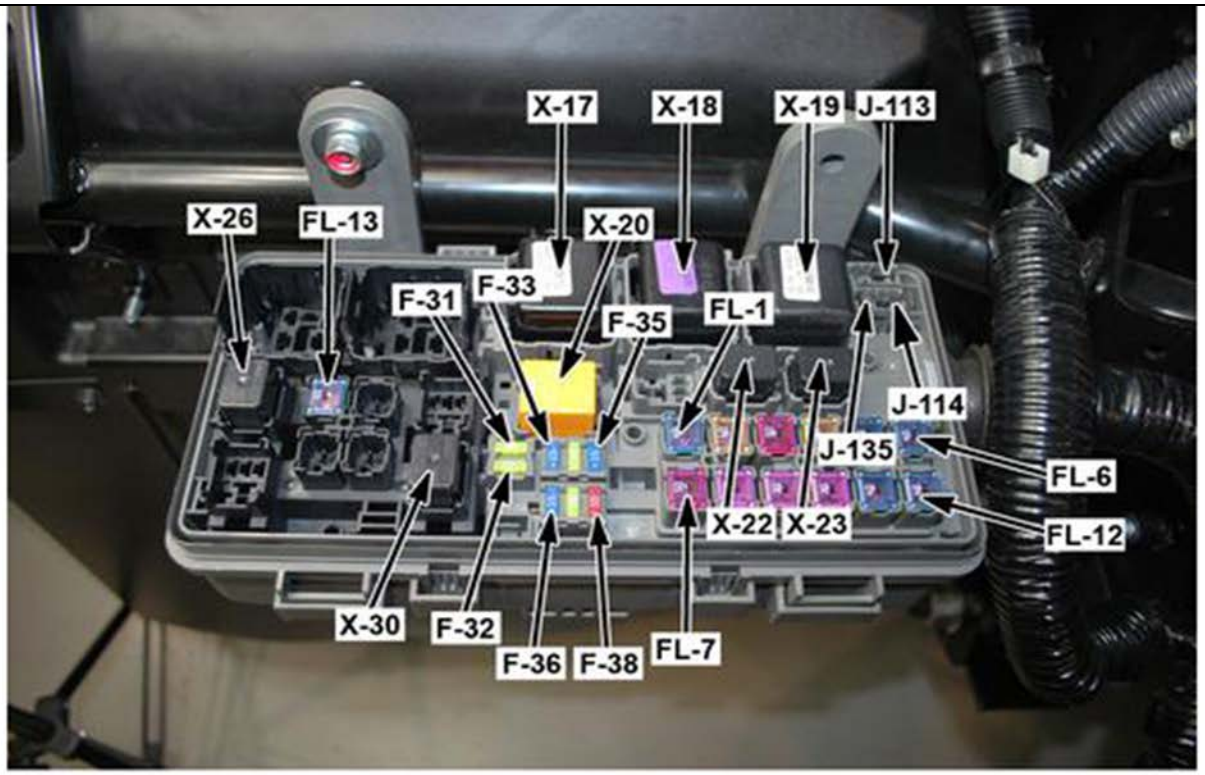

4892760

X-22 Rear Dome Lamp Relay

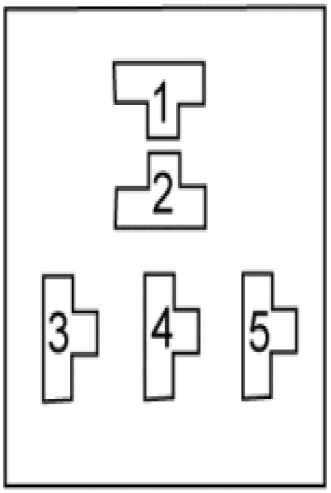

4893802

Connector Part Information		• Part of Fuse/Relay Center • 5-Way F Fuse/Relay Center	
Pin	**Wire Color**	**Circuit Number**	**Function**
1	WHT/BLK	IA028C	Rear Dome Lamp Relay Output Voltage to Rear Manufacturer Connector
2	WHT	IA021C	Battery Voltage from Fuse FL-9 (87 Input Voltage)
3	RED	IA022C	Battery Voltage from Fuse F-36 (86 Coil Feed)
4	—	—	Not Used (87a)
5	YEL	IA019C	Rear Dome Lamp Relay Control (85 Coil Control)

Left Outer Frame Rail, In the Fuse/Relay Center

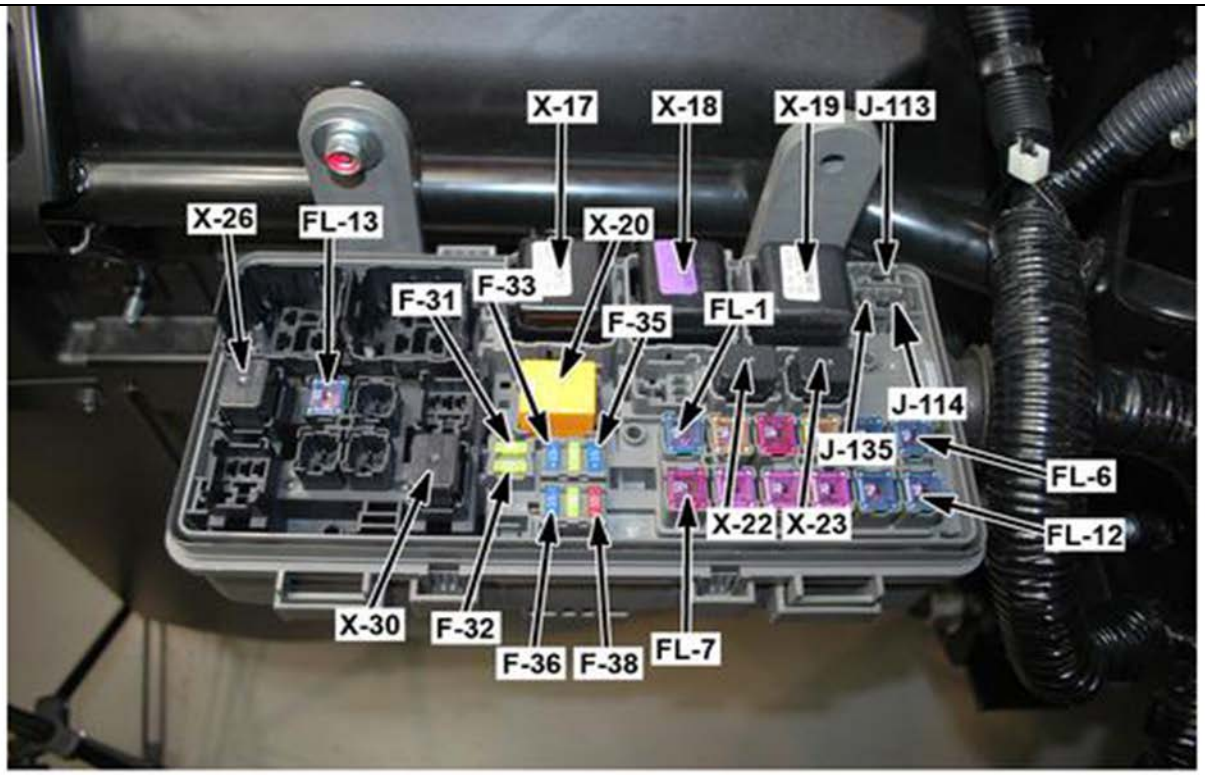

4892760

X-23 Heater Valve Relay (SCR)

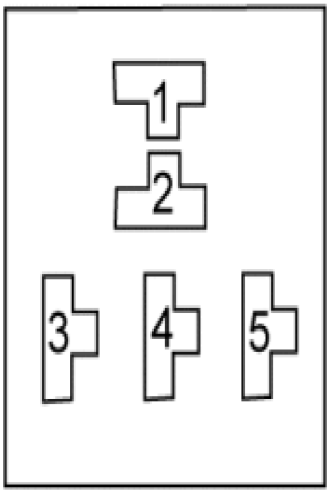

4893802

Connector Part Information		• Part of Fuse/Relay Center • 5-Way F Fuse/Relay Center	
Pin	**Wire Color**	**Circuit Number**	**Function**
1	RED/WHT	FG011C	DEF Tank Heater Coolant Control Valve Control (30 Switched Output Voltage)
2	WHT	FG015C	Fuse F34 Voltage Supply (87 Input Voltage)
3	LT GRN	FG014C	Relay Control (86 Coil Control)
4	—	—	Not Used (87a)
5	GRY	FG013C	Relay Control (85 Coil Feed)

Left Outer Frame Rail, In the Fuse/Relay Center

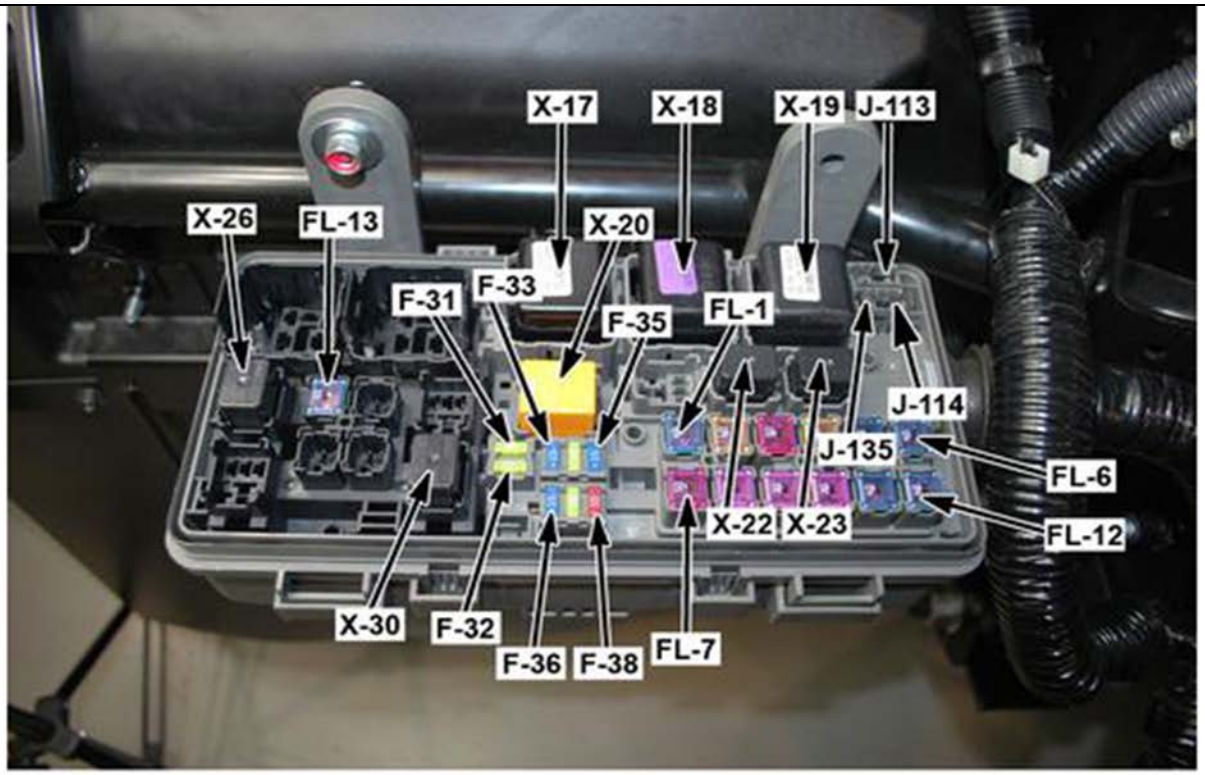

4892760

X-26 Marker Lamp Relay

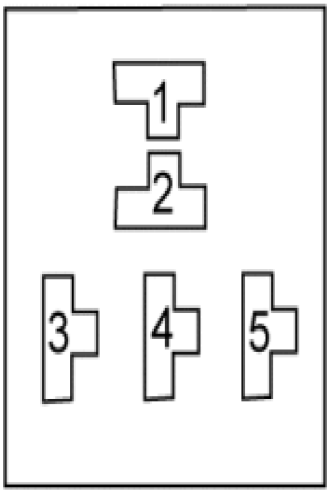

4893802

Connector Part Information		• Part of Fuse/Relay Center • 5-Way F Fuse/Relay Center	
Pin	**Wire Color**	**Circuit Number**	**Function**
1	LT GRN/BLK	BA048C	Marker Lamp Relay Output Voltage - Rear Manufacture Connector (30 Switched Output Voltage)
2	LT GRN	BA034C	Battery Voltage from Fuse F-31 (87 Input Voltage)
3	GRN/RED	BA029C	Fuse F-27 Voltage (HeadLamp Switch ON) (86 Coil Feed)
4	—	—	Not Used (87a)
5	BLK	BY003C	J-298 Ground (85 Coil Control)

Left Outer Frame Rail, In the Fuse/Relay Center

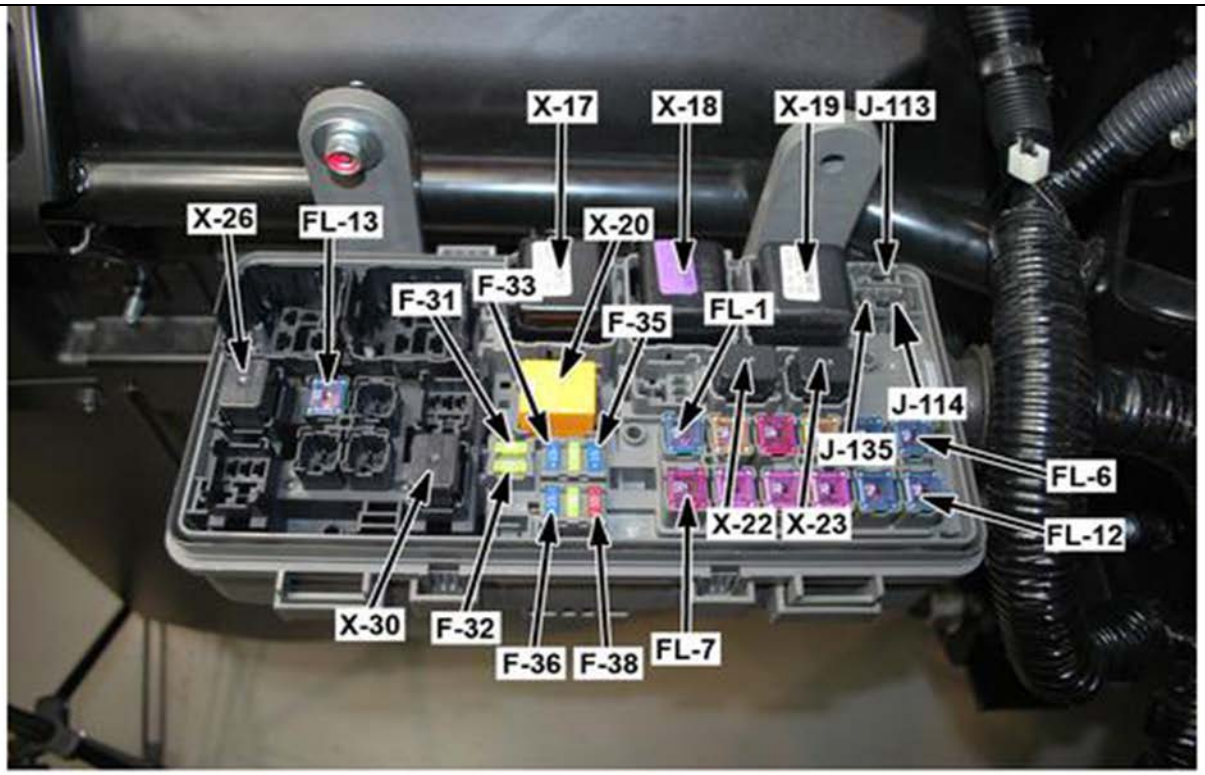

4892760

X-30 Fuel Heater Relay

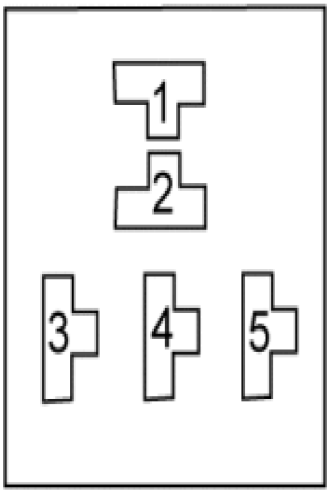

4893802

Connector Part Information		• Part of Fuse/Relay Center • 5-Way F Fuse/Relay Center	
Pin	**Wire Color**	**Circuit Number**	**Function**
1	BLK/RED	LB006C	Fuel Heater Control (30 Switched Output Voltage)
2	WHT	LB102C	Fuse F-33 Supply Voltage (87 Input Voltage)
3	WHT/BLU	LB001C	Relay Control (86 Coil Feed)
4	—	—	Not Used (87a)
5	BLK	LY001C	Ground to Splice 2 (J-11 and J-8 Ground) (85 Coil Control)

Left Outer Frame Rail, In the Fuse/Relay Center

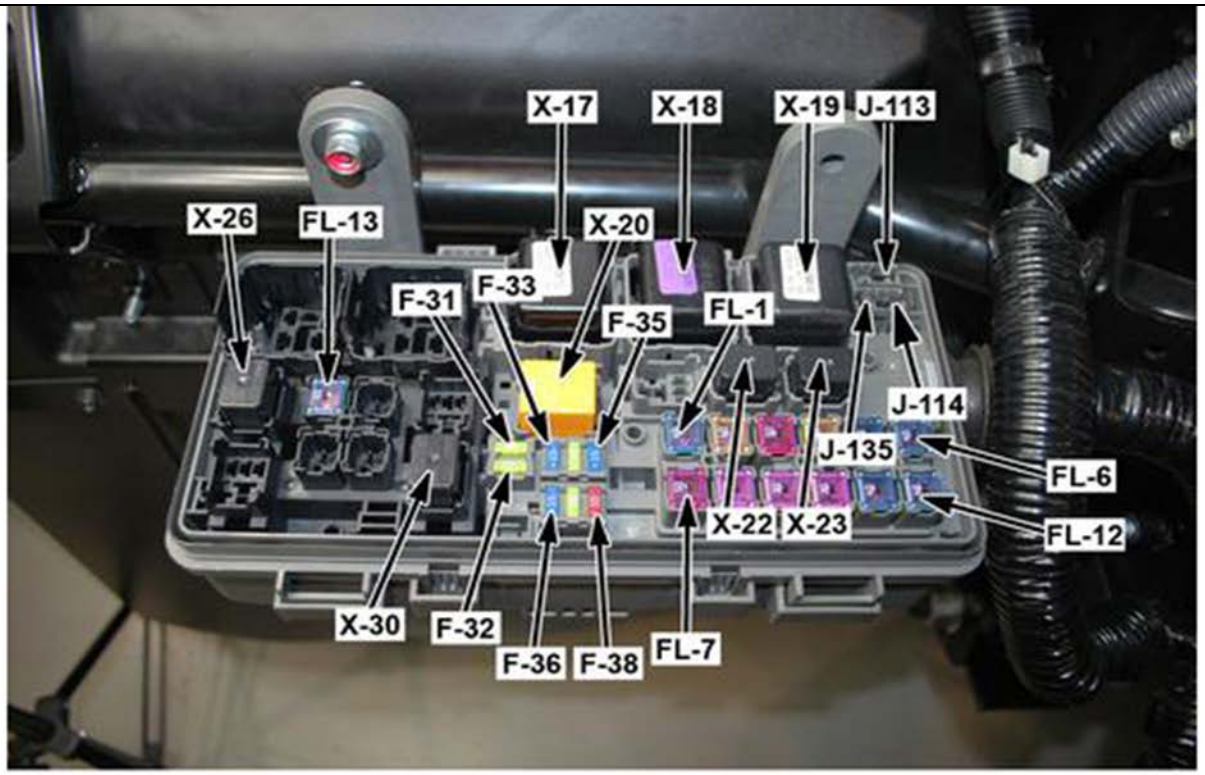

4892760

Visual Identification

Inline Harness Connector End Views

H-18 Front Chassis Harness to I/P Harness

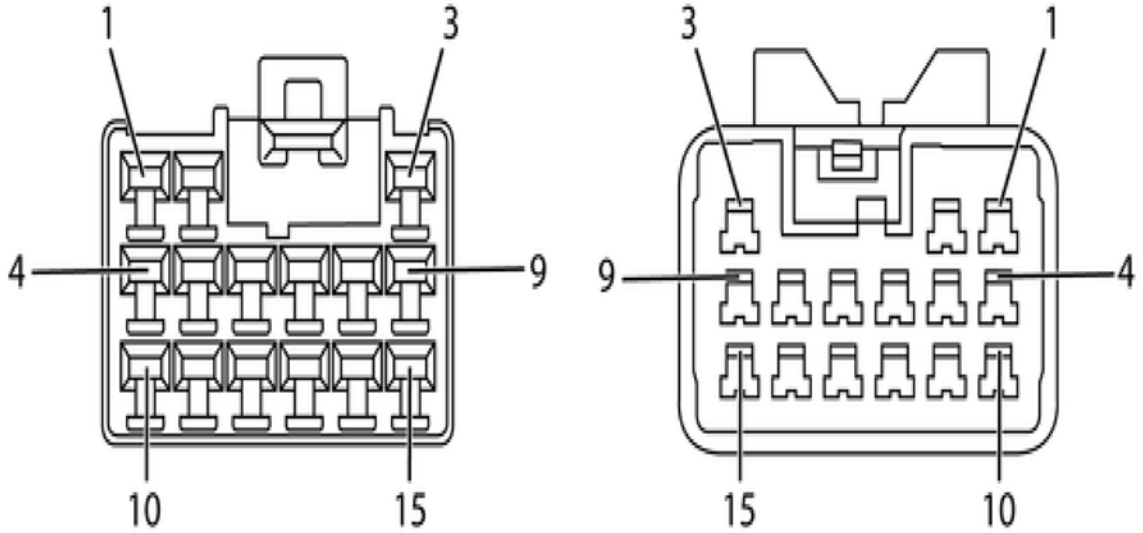

4891870

Connector Part Information		• 7383-1150-30 • 15-Way F (BLK)		Connector Part Information		• 7382-1150-30 • 15-Way M (BLK)	
Pin	**Wire Color**	**Circuit No**	**Function**	**Pin**	**Wire Color**	**Circuit No**	**Function**
1	BLU/YEL	MA002C	Engine Oil Pressure Switch Signal from Switch	1	BLU/YEL	MA002B	Engine Oil Pressure Switch Signal to IPC
2	GRN/WHT	MA051C	Oil Level Switch Signal from Switch	2	GRN/WHT	MA051B	Oil Level Switch Signal to IPC
3	—	—	Not Used	3	—	—	Not Used
4	YEL	OA040C	Range indicator to TCM	4	YEL	OA040B	Range indicator to B-246 Body Builder Connector
5	PNK	OA041C	Auto Neutral to TCM	5	PNK	OA041B	Auto Neutral to B-246 Body Builder Connector
6	—	—	Not Used	6	—	—	Not Used
7	BRN	OA044C	Range Inhibitor Switch to TCM	7	BRN	OA044B	Range Inhibitor Switch to B-246 Body Builder Connector
8–12	—	—	Not Used	8–12	—	—	Not Used
13	BLK	OA046C	Digital Return to TCM	13	BLK	OA046B	Digital Return to B-246 Body Builder
14	LT BLU	OA047C	PTO Output to TCM	14	LT BLU	OA047B	PTO Output to B-246 Body Builder Connector
15	—	—	Not Used	15	—	—	Not Used

Front of the Cab, Behind the Washer Fluid Reservoir

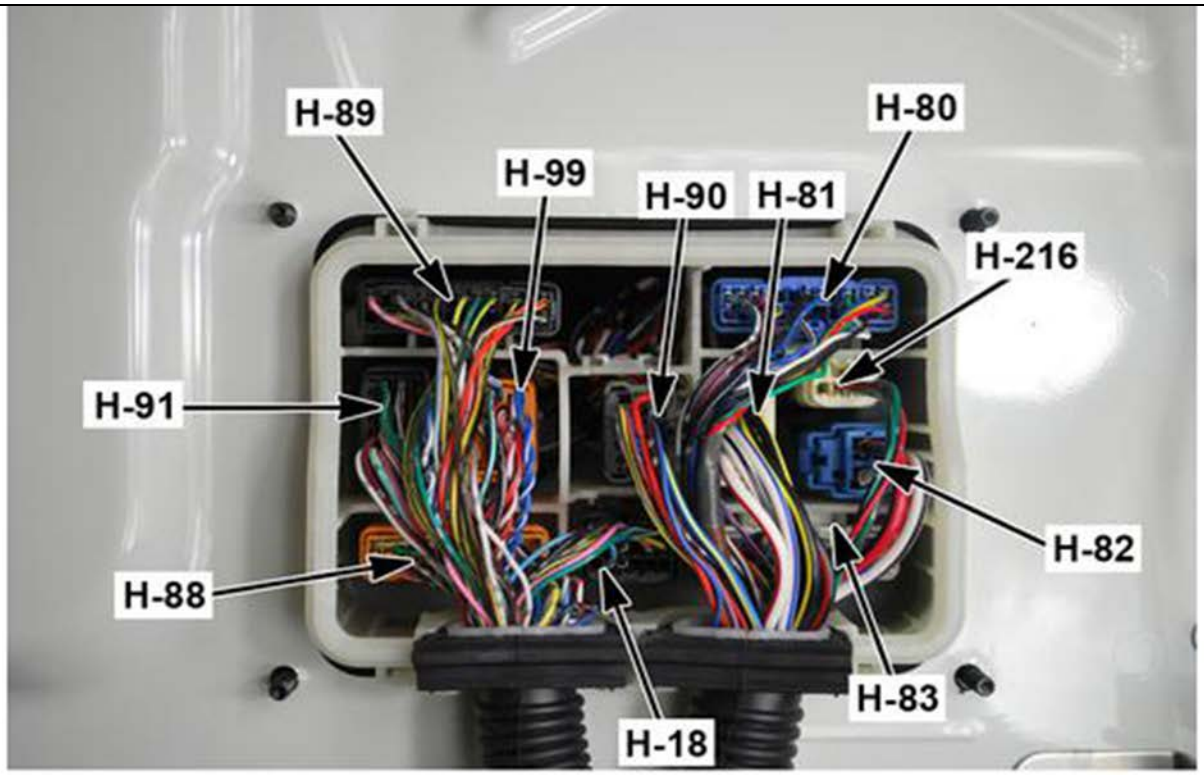

4891871

H-31 Door Harness (LH) to I/P Harness

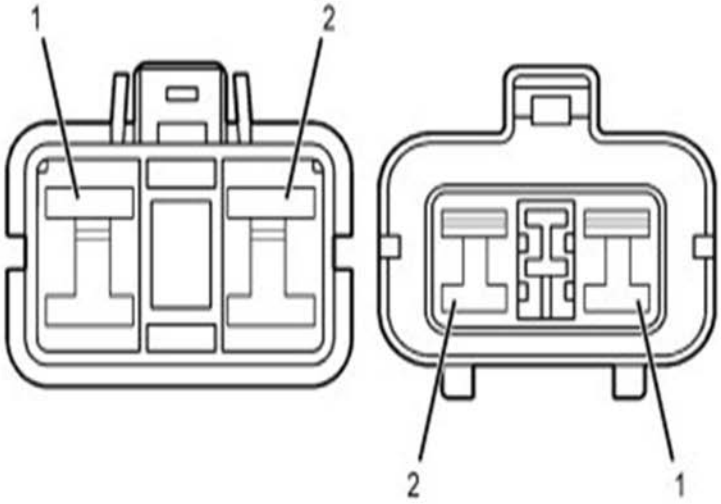

4891874

Connector Part Information		• 7323-8370-60 • 10-Way F (GRN)		Connector Part Information		• 7323-8370-60 • 10-Way M (GRN)	
Pin	**Wire Color**	**Circuit No**	**Function**	**Pin**	**Wire Color**	**Circuit No**	**Function**
1	—	—	Not Used	1	—	—	Not Used

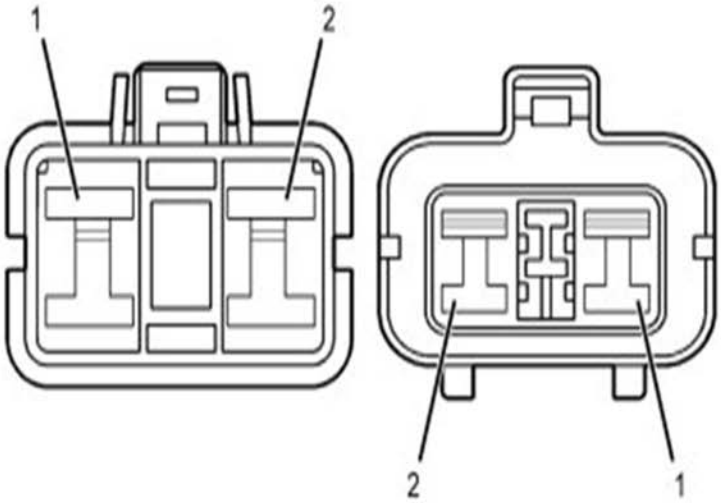

4891874

Connector Part Information		• 7323-8370-60 • 10-Way F (GRN)		Connector Part Information		• 7323-8370-60 • 10-Way M (GRN)	
Pin	**Wire Color**	**Circuit No**	**Function**	**Pin**	**Wire Color**	**Circuit No**	**Function**
2	BLK	JX03	Ground to B-377 Splice Pack (B-51 Ground) to Side Turn Signal Lamp (LH)	2	BLK	JX004B	Ground to B-377 Splice Pack (B-51 Ground)
3	GRN/WHT	JA11	Side Turn Signal (LH) Control Voltage to Lamp	3	GRN/BLK	JA010B	Side Turn Signal (LH) Control Voltage from Flasher Module
4	GRN/RED	BA40	Fuse F-27 Voltage (Headlamp Switch ON) to Side Marker Lamps (LH)	4	GRN/RED	BA040B	Fuse F-27 Voltage (Headlamp Switch ON) from J/B 1 (B-132 pin 8)
5	BLK	VX103	B-51 Ground to Front Door Lock Motor (LH)	5	BLK	VX003B	B-51 ground from B-600 Splice Pack
6	BLK	UX01	Ground to B-49 Junction Block (B-52 Ground)	6	BLK	UX001B	Ground to B-49 Junction Block (B-52 Ground) to Power Window Switch (LH)
7	GRY	RA06	Left Speaker Output (+) to Speaker	7	ORN	RA004B	Left Speaker Output (+) to Radio
8	—	—	Not Used	8	—	—	Not Used
9	GRN	RA05	Left Speaker Output (-) to Speaker	9	BLK	RA003B	Left Speaker Output (-) to Radio
10	BLK	BX24	Ground from B-601 Splice Pack (B-51 Ground)	10	BLK	BX024B	Ground to B-601 Splice Pack (B-51 Ground) to Side Marker Lamp (LH)

Behind the Left Side of the I/P, Next to the A-Piller

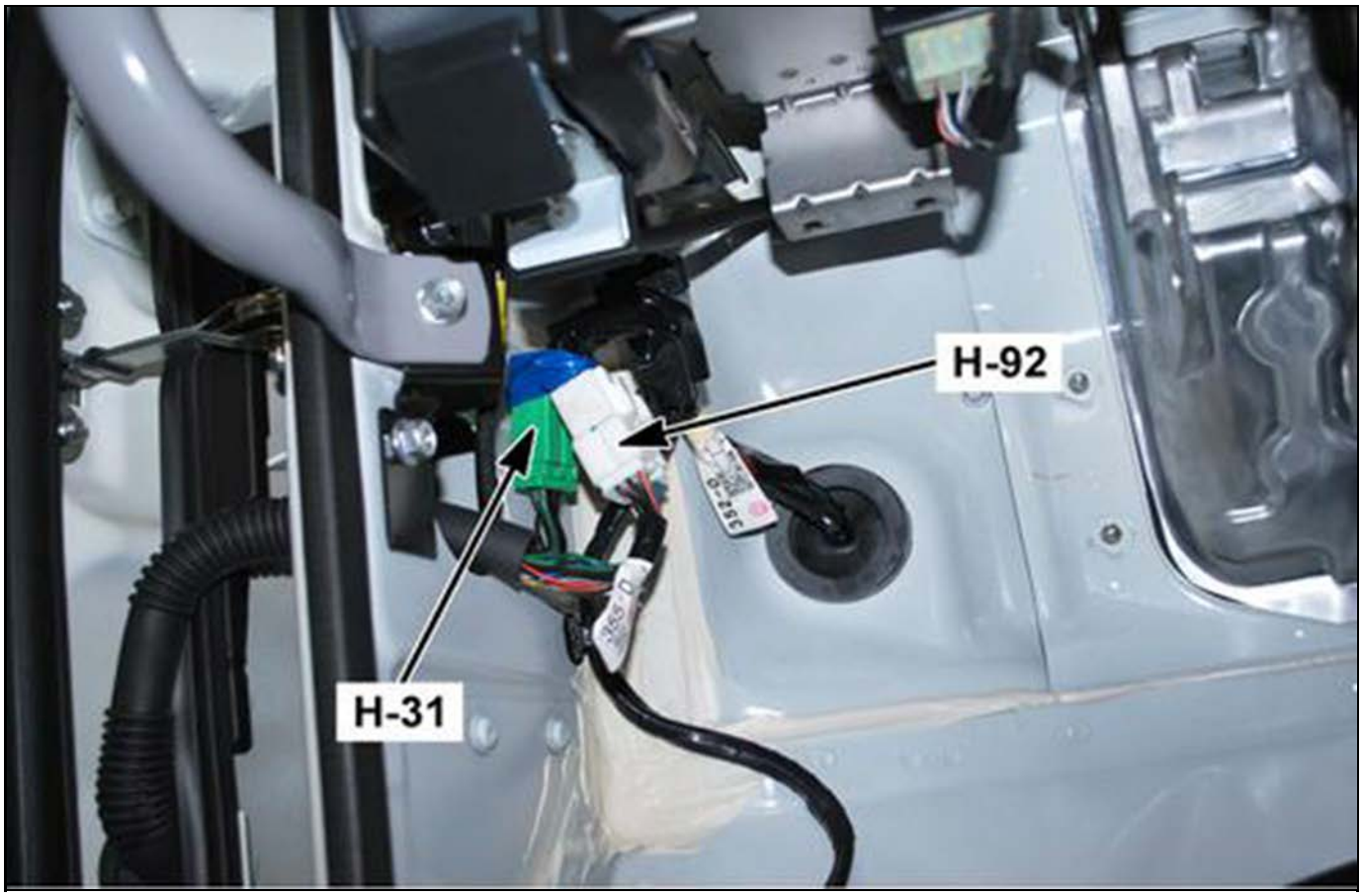

4891876

H-32 Door Harness (RH) to I/P Harness

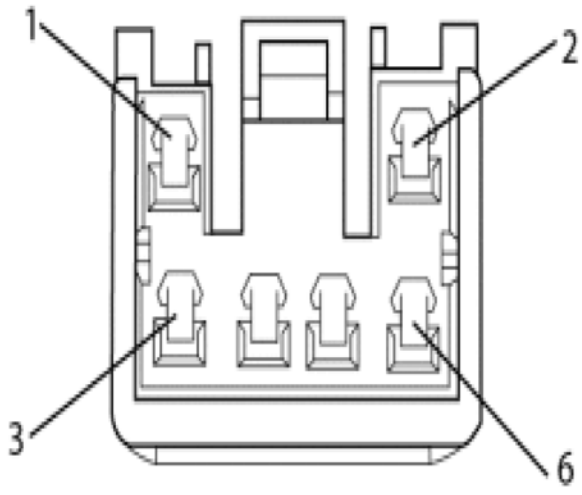

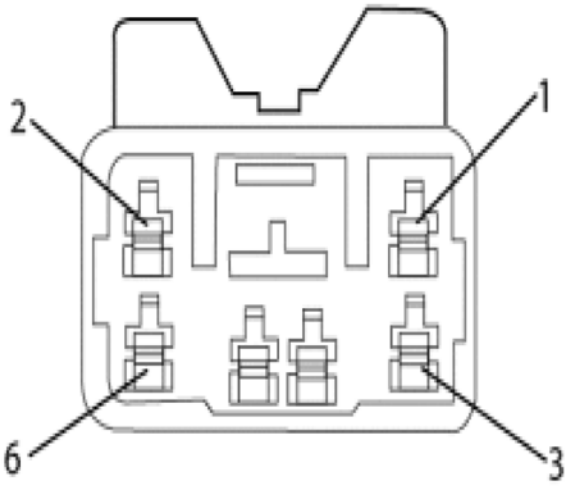

4891878

Connector Part Information		• 7323-8365 • 6-Way F (WHT)		Connector Part Information		• 7323-8365 • 6-Way M (WHT)	
Pin	**Wire Color**	**Circuit No**	**Function**	**Pin**	**Wire Color**	**Circuit No**	**Function**
1	BLK	JX04	Ground B221 and B-55 to Side Turn Signal (RH)	1	BLK	JX003B	Ground B221 and B-55 to Splice Pack 506

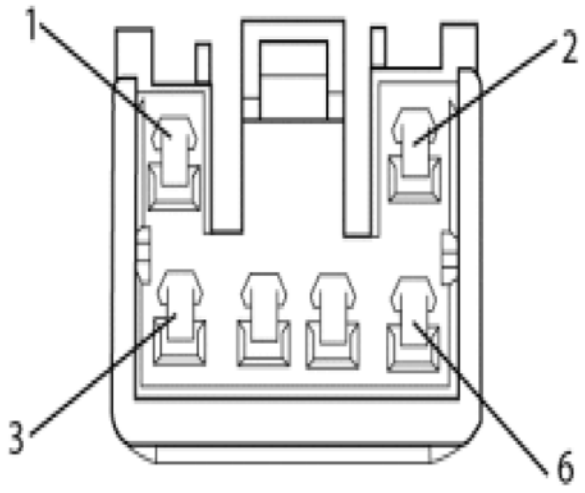

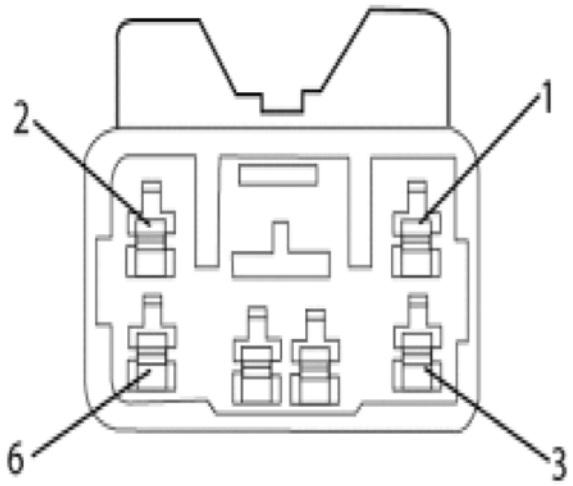

4891878

Connector Part Information		• 7323-8365 • 6-Way F (WHT)		Connector Part Information		• 7323-8365 • 6-Way M (WHT)	
Pin	**Wire Color**	**Circuit No**	**Function**	**Pin**	**Wire Color**	**Circuit No**	**Function**
2	GRN/BLK	JA10	Side Turn Signal (RH) Control Voltage from Flasher Module	2	GRN/WHT	JA011B	Side Turn Signal (RH) Control Voltage to Lamp
3	GRN/RED	BA41	Fuse F-27 Voltage (Headlamp Switch ON) to Side Marker Light (RH)	3	GRN/RED	BA041B	Fuse F-27 Voltage (Headlamp Switch ON) to J/B 1 (B-131 pin 8)
4	ORN	RA04	Speaker Output (+) to Speaker	4	GRY	RA006B	Speaker Output (+) to Radio
5	BLK	BX25	Front Cornering Light (RH) Ground Control to Lamp	5	BLK	BX025B	Front Cornering Light (RH) Ground Control to J/B 2 (B-144 pin 14)
6	BLK	RA03	Speaker Output (-) to Speaker	6	GRN	RA005B	Speaker Output (-) to Radio

Right Side of the I/P, at the A-Pillar (Trim Panel is Removed)

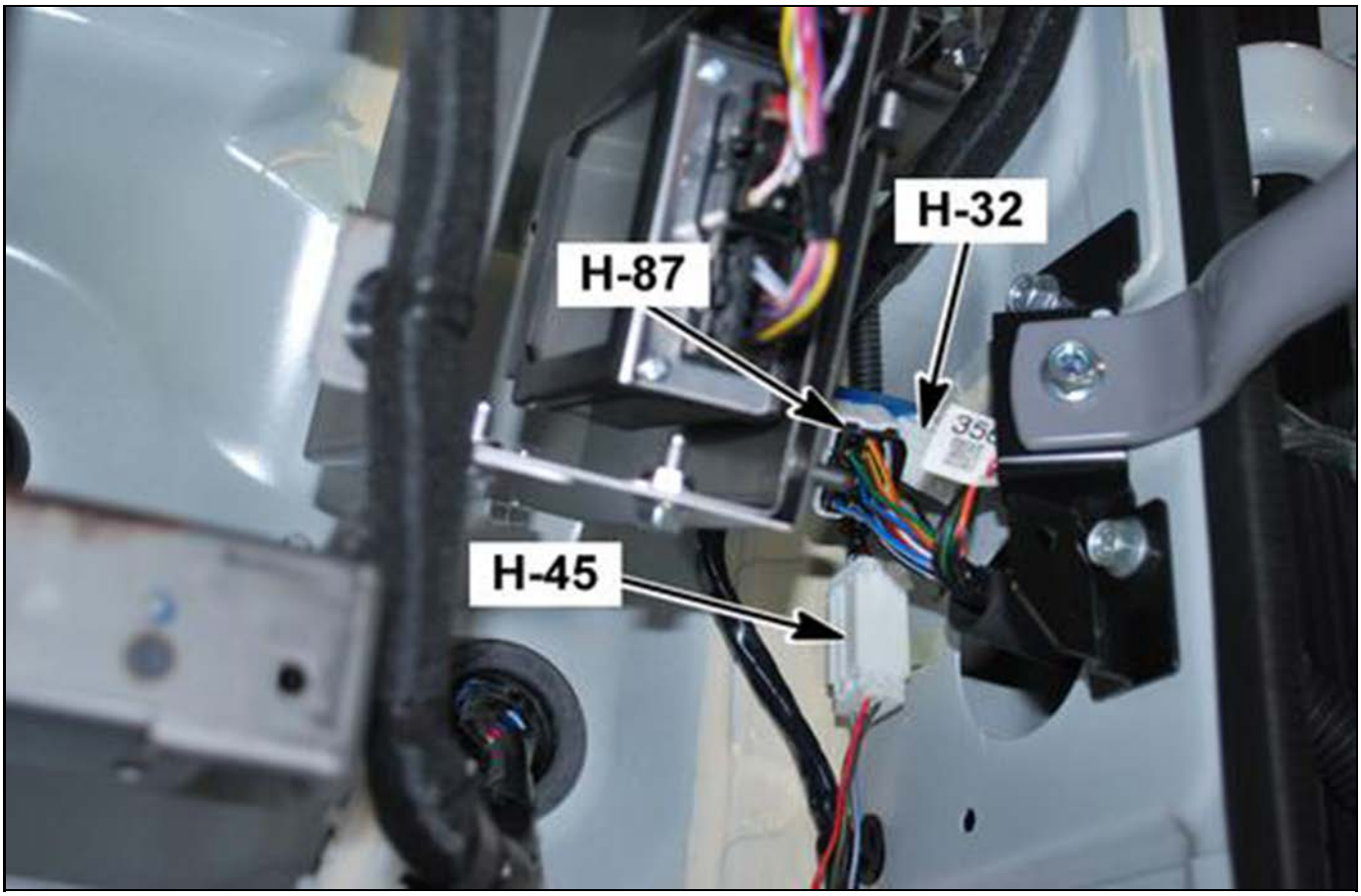

4891880

H-45 I/P Harness to the Roof Harness

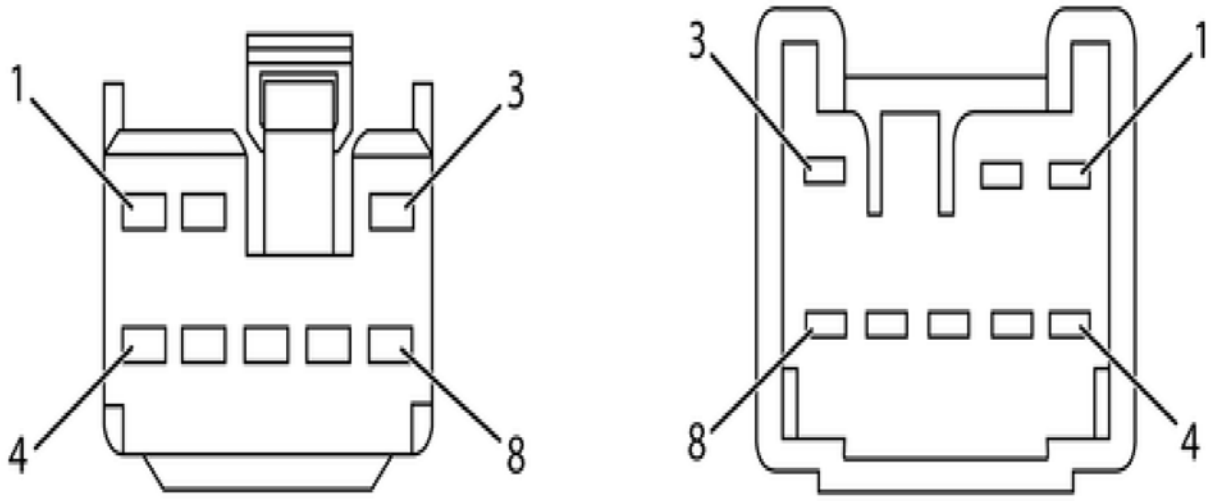

4891886

Connector Part Information		• 7323-8365 • 6-Way F (WHT)		Connector Part Information		• 7323-8365 • 6-Way M (WHT)	
Pin	**Wire Color**	**Circuit No**	**Function**	**Pin**	**Wire Color**	**Circuit No**	**Function**
1	—	—	Not Used	1	—	—	Not Used

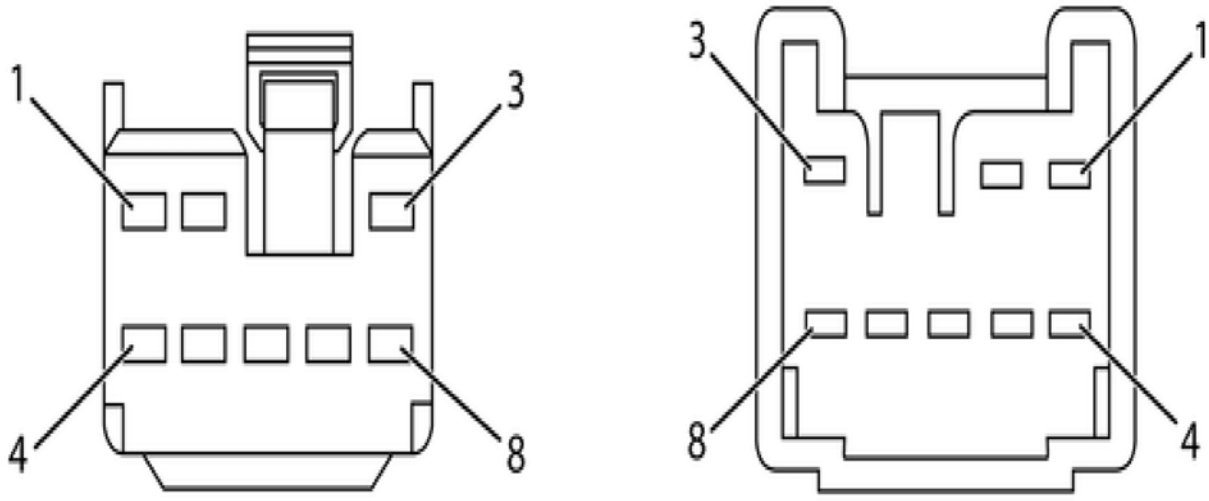

4891886

Connector Part Information		• 7323-8365 • 6-Way F (WHT)		Connector Part Information		• 7323-8365 • 6-Way M (WHT)	
Pin	**Wire Color**	**Circuit No**	**Function**	**Pin**	**Wire Color**	**Circuit No**	**Function**
2	RED	IA004B	Battery Voltage from Fuse F-3 from J/B 2 (B-144 pin 2)	2	RED	IA04	Battery Voltage from Fuse F-3 to Dome Lamp
3	GRY/BLU	IA140B	Door Switch Signal from Door Switches	3	GRY/BLU	IA14	Door Switch Signal to Dome Lamp
4	—	—	Not Used	4	—	—	Not Used
5	BLK	BX037B	Ground to J/B 2 (B-145 pin 15) (B-53 Ground)	5	BLK	BX37	Ground to L-22 Splice Pack
6–7	—	—	Not Used	6–7	—	—	Not Used
8	GRN/RED	BA057B	Fuse F-27 Voltage (Headlamp Switch ON) from Fuse/ Relay Center (Cab) (B-22 pin 9)	8	GRN/RED	BA57	Fuse F-27 Voltage (Headlamp Switch ON) to L-23 Splice Pack

Right Side of the I/P, at the A-Pillar (Trim Panel is Removed)

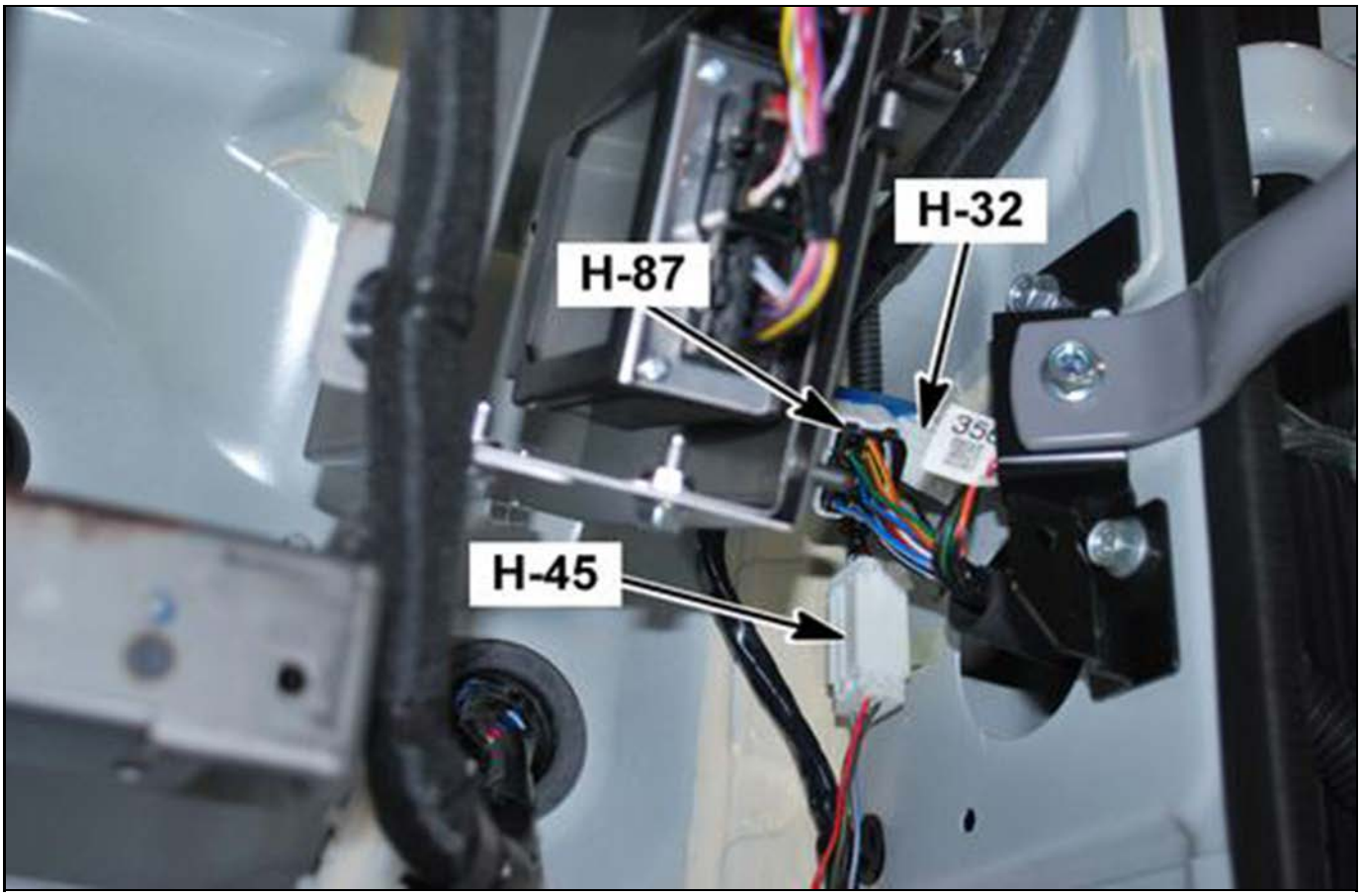

4891880

H-52 Front Chassis Harness to the Engine Harness

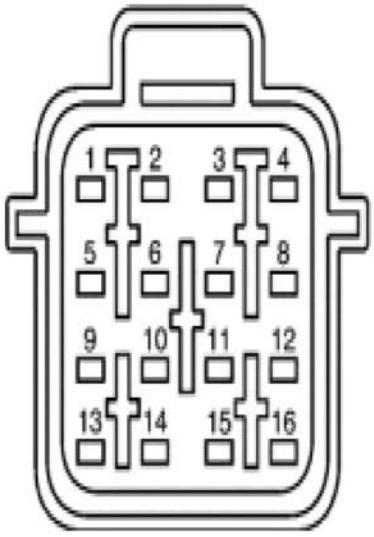

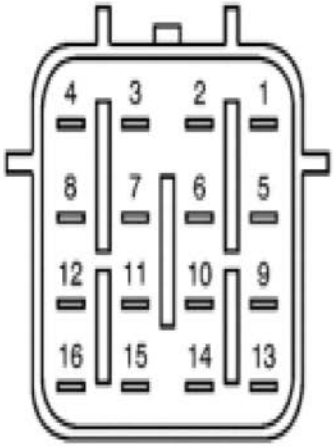

4891890

Connector Part Information		• X010418 • 16-Way F (BLK)		Connector Part Information		• 5BC-16M-8 • 16-Way M (BLK)	
Pin	**Wire Color**	**Circuit No**	**Function**	**Pin**	**Wire Color**	**Circuit No**	**Function**
1	BLU/YEL	MA002C	Engine Oil Pressure Switch Signal to IPC	1	BLU/YEL	MA02	Engine Oil Pressure Switch Signal from Switch

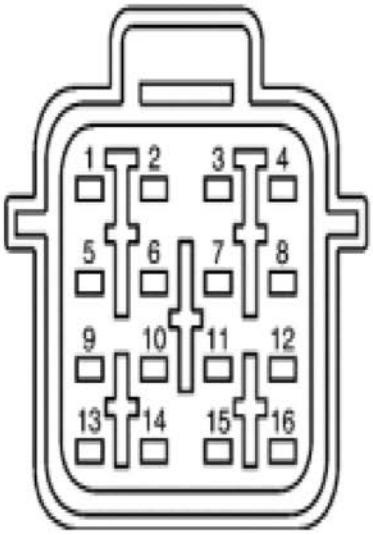

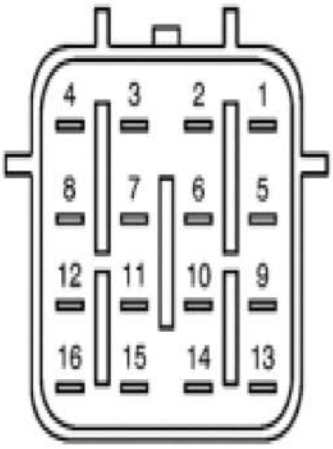

4891890

Connector Part Information		• X010418 • 16-Way F (BLK)		Connector Part Information		• 5BC-16M-8 • 16-Way M (BLK)	
Pin	**Wire Color**	**Circuit No**	**Function**	**Pin**	**Wire Color**	**Circuit No**	**Function**
2	GRN/WHT	MA051C	Oil Level Switch Signal to IPC	2	GRN/WHT	MA51	Oil Level Switch Signal from Switch
3	BRN/YEL	HA012C	A/C Compressor Clutch Voltage to A/C Pressure Switch	3	BRN/YEL	HA12	A/C Compressor Clutch Voltage to A/C Compressor
4	RED/WHT	IC002C	Switched Output Voltage from X-18 ECM Main Relay to Relay	4	GRN/BLK	IC02	Switched Output Voltage from X-18 ECM Main Relay to Glow Plug Control Module
5	BLU/WHT	TF017C	J1939 CAN 1 High Serial Data to ECM	5	BLU/WHT	TF17	J1939 CAN 1 High Serial Data to VNT Module and B-458 CAN 1 High Splice Pack
6	BLU	TF018C	J1939 CAN 1 Low Serial Data to ECM	6	BLU	TF18	J1939 CAN 1 Low Serial Data to VNT Module and B-458 CAN 1 Low Splice Pack
7	BLU/WHT	TF003C	J1939 CAN 1 High Serial Data to B- 458 Splice Pack	7	BLU/WHT	TF57	J1939 CAN 1 High Serial Data to VNT Module and ECM
8	BLU	TF004C	J1939 CAN 1 Low Serial Data to B- 459 Splice Pack	8	BLU	TF58	J1939 CAN 1 Low Serial Data to VNT Module and ECM
9	ORN	IC116C	Turbocharger Outlet Air Temperature Sensor	9	BRN	IC116	Turbocharger Outlet Air Temperature Sensor
10	BLU/ORN	IC115C	Turbocharger Outlet Air Temperature Sensor	10	PNK	IC115	Turbocharger Outlet Air Temperature Sensor
11	YEL/RED	IC120C	Intake Air Flow Valve 5 Volt Ref 4 Voltage to ECM	11	YEL/RED	IC120	Intake Air Flow Valve 5 Volt Ref 4 Voltage to Intake Air Flow Valve
12	VIO/WHT	IC121C	Intake Air Flow Valve Sensor Signal	12	VIO/WHT	IC121	Intake Air Flow Valve Sensor Signal

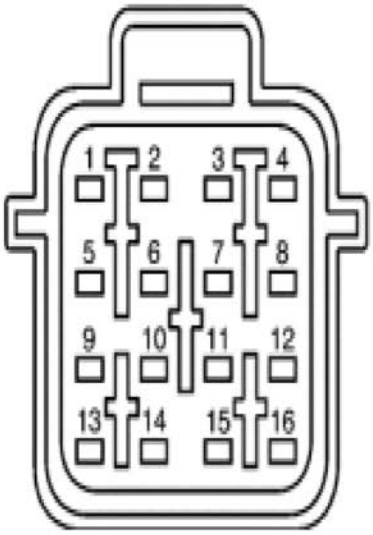

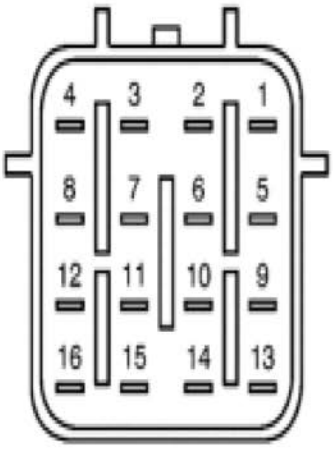

4891890

Connector Part Information		• X010418 • 16-Way F (BLK)		Connector Part Information		• 5BC-16M-8 • 16-Way M (BLK)	
Pin	**Wire Color**	**Circuit No**	**Function**	**Pin**	**Wire Color**	**Circuit No**	**Function**
13	BLK/ORN	IC203C	VNT Control Module from Fuse F-33 Fuse/Relay Center	13	GRN/BLK	IC203	VNT Control Module to VNT Control Module
14	BLU/BLK	IC122C	Intake Air Flow Valve Low Reference to ECM	14	BLU/BLK	IC122	Intake Air Flow Valve Low Reference to Intake Air Flow Valve
15	GRY/BLK	IC088C	Low Coolant Level Signal from Low Coolant Level Switch	15	GRY/BLK	IC88	Low Coolant Level Signal to Low Coolant Level Control Module
16	WHT/BLU	PA021C	Charge Indicator (Red) Control to J/B 1 (B-132 pin 5)	16	WHT/BLU	PA21	Charge Indicator (Red) Control from Generator

On the Left Side of the Rear Cab Support

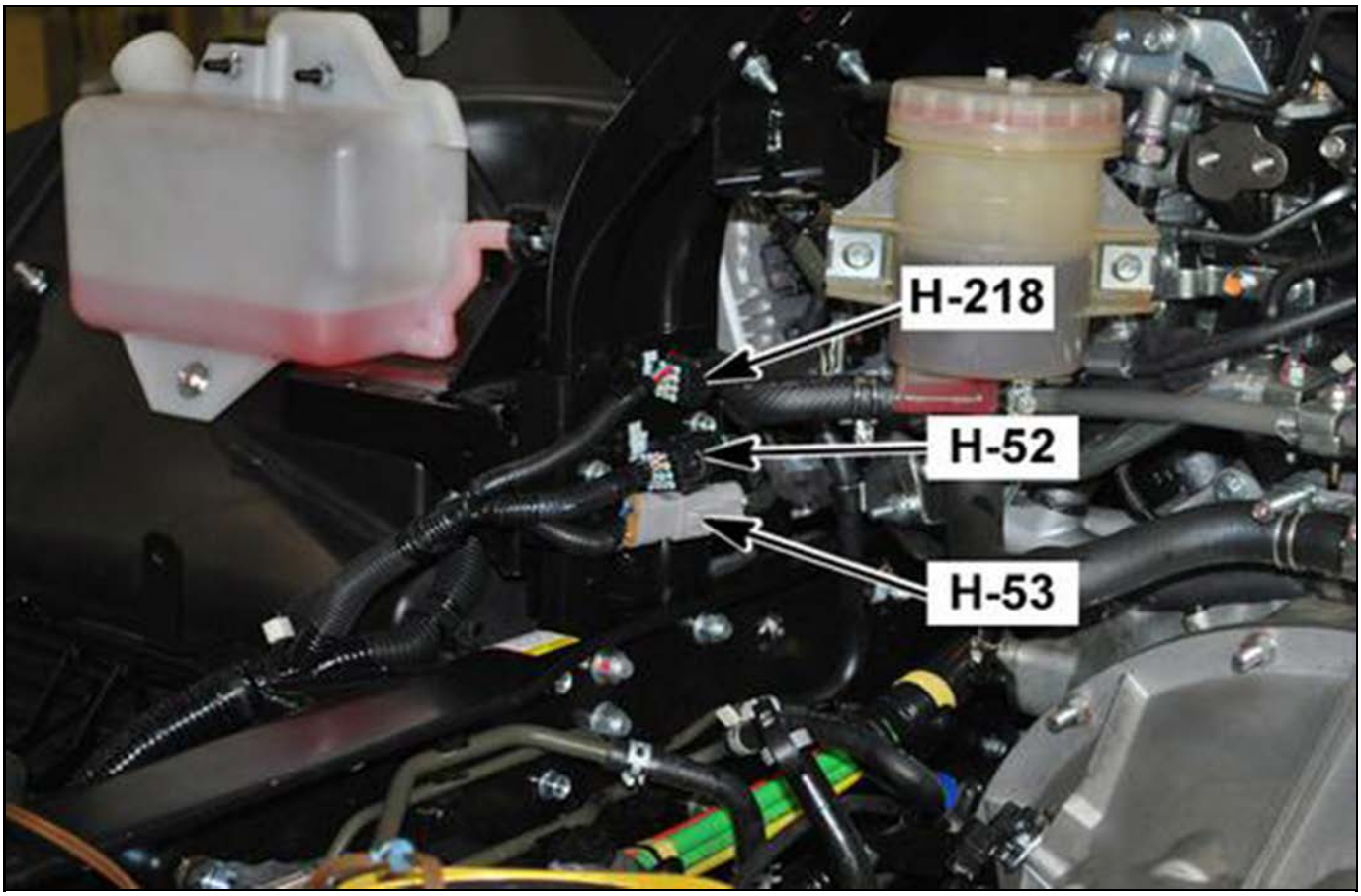

4891894

H-53 Front Chassis Harness to the Engine Harness

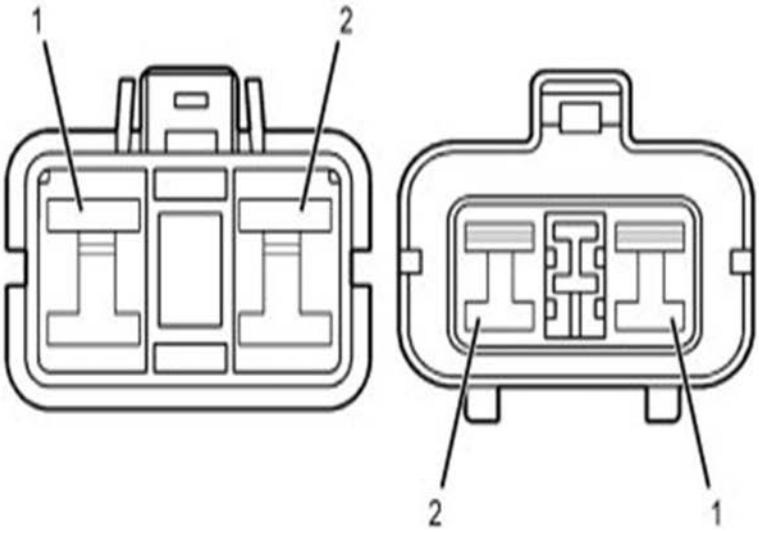

4891898

Connector Part Information		• 7323-4220-40 • 2-Way F (GRY)		Connector Part Information		• 7322-4220-40 • 2-Way M (LT GRY)	
Pin	**Wire Color**	**Circuit No**	**Function**	**Pin**	**Wire Color**	**Circuit No**	**Function**
1	WHT/BLK	HB01	Battery Voltage from Fuse FL-4 to Glow Plug Control Voltage	1	BLU/BLK	HB001C	Battery Voltage from Fuse FL-4 from Fuse/Relay Center

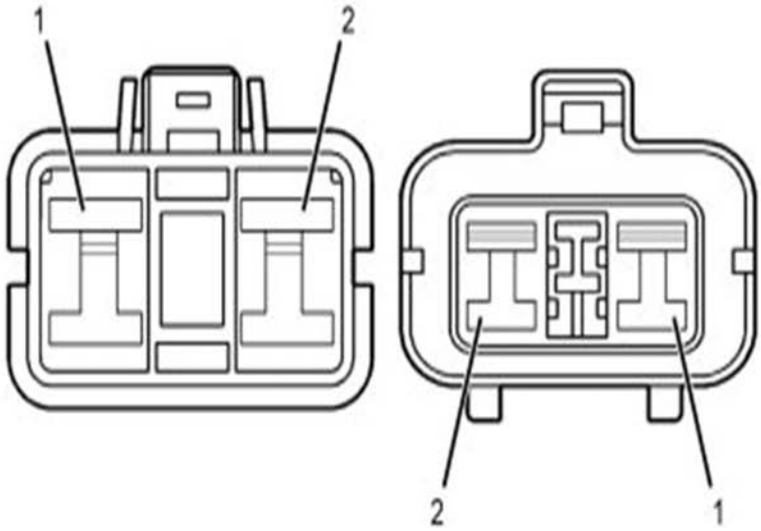

4891898

Connector Part Information		• 7323-4220-40 • 2-Way F (GRY)		Connector Part Information		• 7322-4220-40 • 2-Way M (LT GRY)	
Pin	**Wire Color**	**Circuit No**	**Function**	**Pin**	**Wire Color**	**Circuit No**	**Function**
2	BLK/WHT	LA02	Starter Solenoid Control to Starter Solenoid	2	BLK/WHT	LA002C	Starter Solenoid Control from Starter Relay (X- 17) Fuse/ Relay Center

On the Left Side of the Rear Cab Support

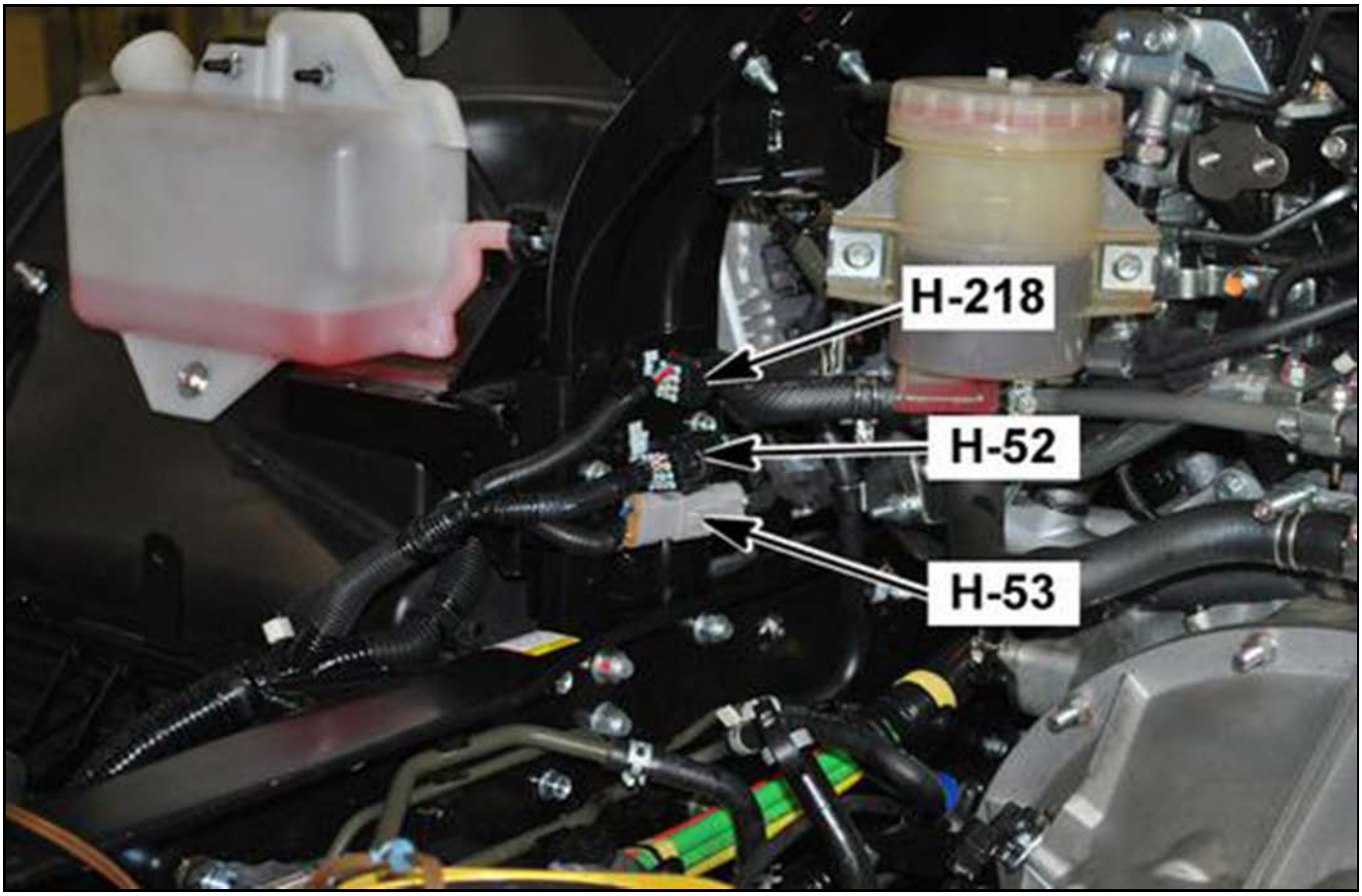

4891894

H-56 Front Chassis Harness to Rear Chassis Harness

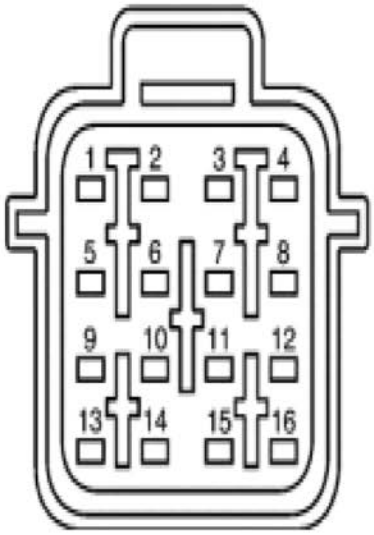

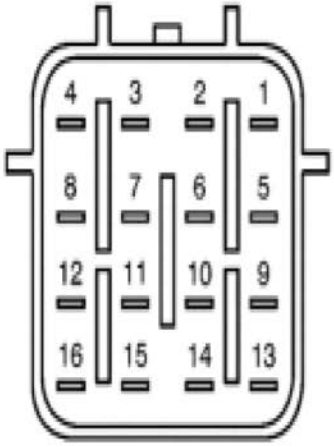

4891890

Connector Part Information		• X010418 • 16-Way F (BLK)		Connector Part Information		• X010423 • 16-Way M (BLK)	
Pin	**Wire Color**	**Circuit No**	**Function**	**Pin**	**Wire Color**	**Circuit No**	**Function**
1	GRN/RED	BA004C	Fuse F-27 Voltage (Headlamp Switch ON) from J/B 1 (B-132 pin 17)	1	GRN/RED	BA004D	Fuse F-27 Voltage (Headlamp Switch ON) to Rear Combination Lamps
2	LT GRN/BLK	BA048C	Switched Output Voltage from Marker Lamp Relay	2	LT GRN/BLK	BA048D	Switched Output Voltage to the Rear Manufacture Connector
3	GRN	CA021C	Switched Output Voltage from X-1 Stop Lamp Relay from J/B 2 (B-144 pin 11)	3	GRN	CA021D	Switched Output Voltage from X-1 Stop Lamp Relay to Rear Combination Lamps
4	—	—	Not Used	4	—	—	Not Used
5	RED	IA027C	Battery Voltage from Fuse F-36	5	RED	IA027D	Battery Voltage from Fuse F-36 to Rear Manufacture Connector
6	WHT/BLK	IA028C	Switched Output Voltage from Rear Dome Lamp Relay from Relay	6	WHT/BLK	IA028D	Switched Output Voltage from Rear Dome Lamp Relay to Rear Manufacture Connector
7	GRN/BLK	JA014C	Left Turn Signal Supply Voltage from Flasher Module	7	GRN/BLK	JA014D	Left Turn Signal Supply Voltage to Lamp
8	GRN/WHT	JA015C	Right Turn Signal Supply Voltage from Flasher Module	8	GRN/WHT	JA015D	Right Turn Signal Supply Voltage to Lamp
9	WHT/RED	BB116C	Left Rear Wheel Speed Sensor 5 Volt Reference to EBCM	9	WHT/RED	BB116D	Left Rear Wheel Speed Sensor 5 Volt Reference to Sensor
10	ORN/BLK	BB117C	Left Rear Wheel Speed Sensor Signal to EBCM	10	ORN/BLK	BB117D	Left Rear Wheel Speed Sensor Signal to Sensor

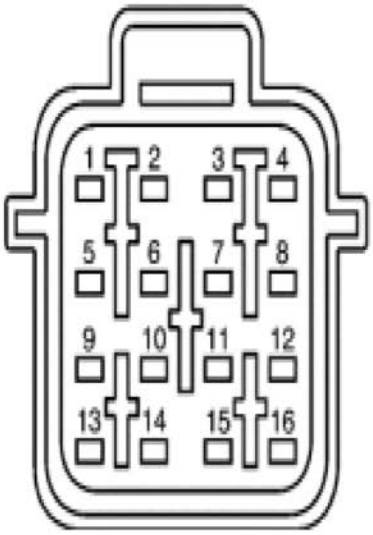

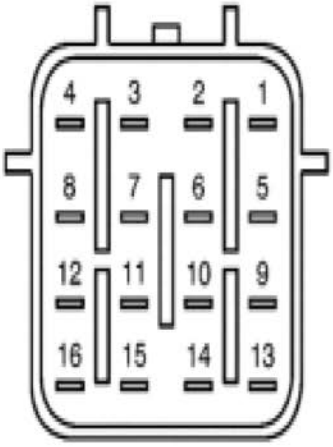

4891890

Connector Part Information		• X010418 • 16-Way F (BLK)		Connector Part Information		• X010423 • 16-Way M (BLK)	
Pin	**Wire Color**	**Circuit No**	**Function**	**Pin**	**Wire Color**	**Circuit No**	**Function**
11	GRN/WHT	BB121C	Right Rear Wheel Speed Sensor 5 Volt Reference to EBCM	11	GRN/WHT	BB121D	Right Rear Wheel Speed Sensor 5 Volt Reference to Sensor
12	GRN	BB122C	Right Rear Wheel Speed Sensor Reference Signal to EBCM	12	GRN	BB122D	Right Rear Wheel Speed Sensor Reference Signal to Sensor
13	BLK	ZZ030C	Ground to Splice 5 (J-9 and J-7 Ground)	13	BLK/BLU	ZZ030D	Ground to Splice 6 (J-9 and J-7 Ground)
14	—	—	Not Used	14	—	—	Not Used
15	RED/BLU	KA012C	Voltage from Fuse A-4 (In Reverse) from Fuse/Relay Center (Cab) (B- 250 pin 8)	15	RED/BLU	KA012D	Voltage from Fuse A-4 (In Reverse) to Rear Combination Lamps
16	—	—	Not Used	16	—	—	Not Used

Left Inner Frame Rail, Next to the Fuel Tank

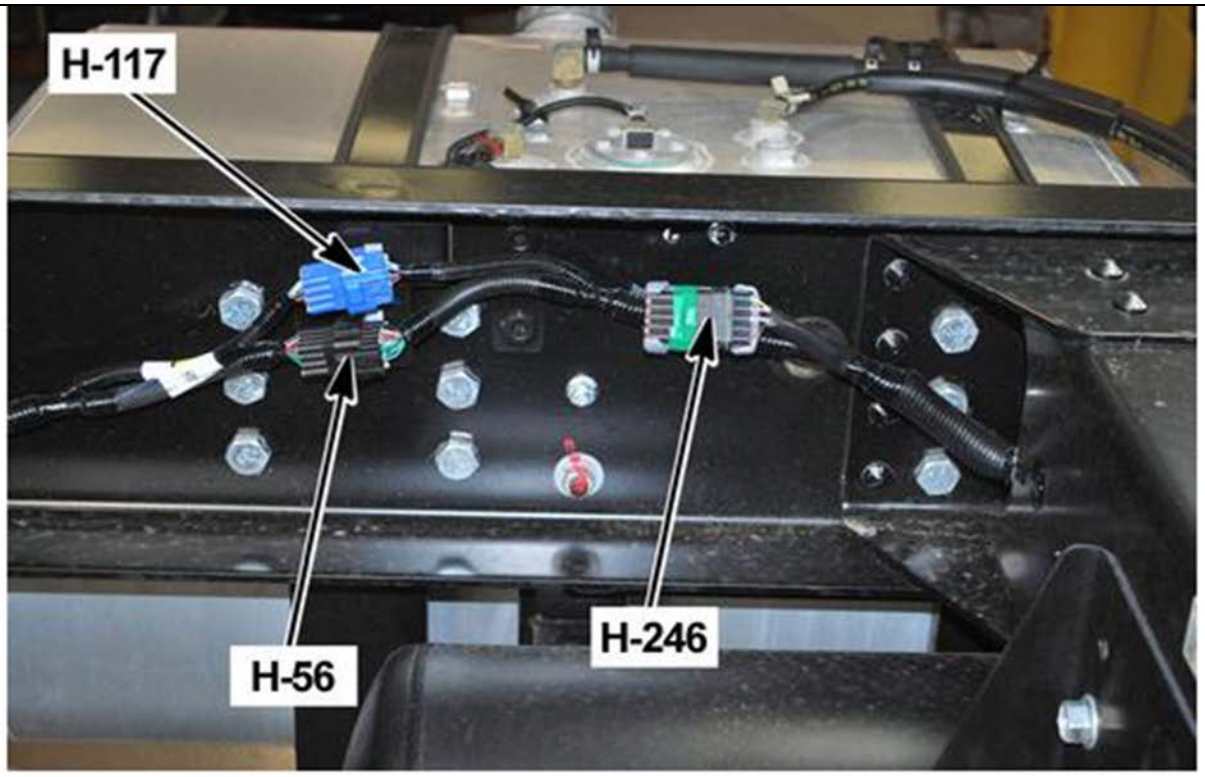

4891901

H-66 Rear Chassis Harness to Rear Lamp Harness

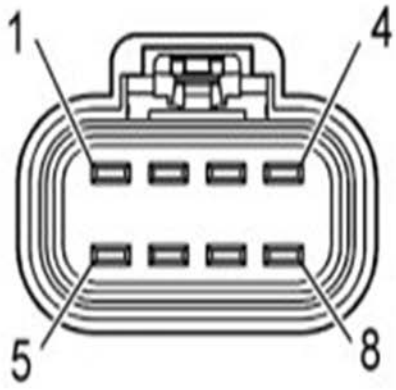

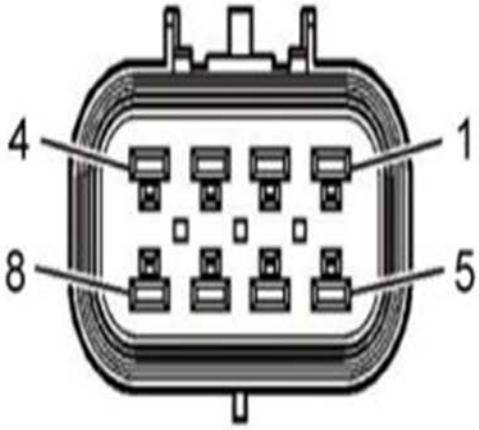

4891906

Connector Part Information		• X010369 • 8-Way F (BLK)		Connector Part Information		• X010371 • 8-Way M (BLK)	
Pin	**Wire Color**	**Circuit No**	**Function**	**Pin**	**Wire Color**	**Circuit No**	**Function**
1	GRN/BLK	JA014D	Left Turn Signal Supply Voltage from Flasher Module	1	GRN/BLK	JA14	Left Turn Signal Supply Voltage to Lamp

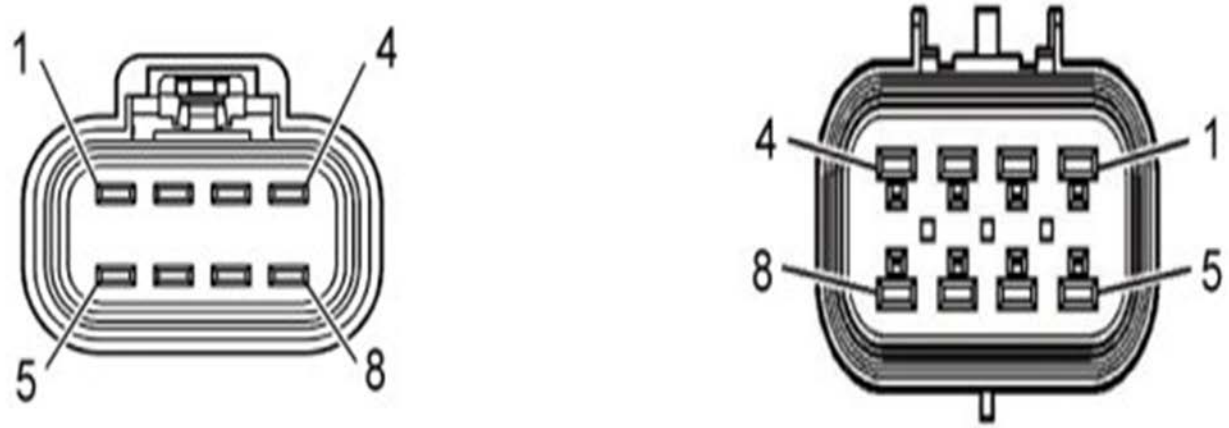

4891906

Connector Part Information		• X010369 • 8-Way F (BLK)		Connector Part Information		• X010371 • 8-Way M (BLK)	
Pin	**Wire Color**	**Circuit No**	**Function**	**Pin**	**Wire Color**	**Circuit No**	**Function**
2	GRN	CA021D	Switched Output Voltage from X-1 Stop Lamp Relay from J/B 2 (B-144 pin 11)	2	GRN	CA01	Switched Output Voltage from X-1 Stop Lamp Relay to Rear Combination Lamps
3–4	—	—	Not Used	3–4	—	—	Not Used
5	GRN/RED	BA004D	Fuse F-27 Voltage (Headlamp Switch ON) from J/B 1 (B-132 pin 17)	5	GRN/RED	BA04	Fuse F-27 Voltage (Headlamp Switch ON) to Rear Combination Lamps
6	RED/BLU	KA012D	Voltage from Fuse A-4 (In Reverse) Fuse/ Relay Center (Cab) (B-250 pin 8)	6	RED/BLU	KA12	Voltage from Fuse A-4 (In Reverse) to Rear Combination Lamps
7	BLK	BX001D	Ground to Splice 6 (J-9 and J-7 Ground)	7	BLK	BX01	Ground to Rear Combination Lights
8	GRN/WHT	JA015D	Right Turn Signal Supply Voltage from Flasher Module	8	GRN/WHT	JA15	Right Turn Signal Supply Voltage to Lamp

At the Rear of the Frame

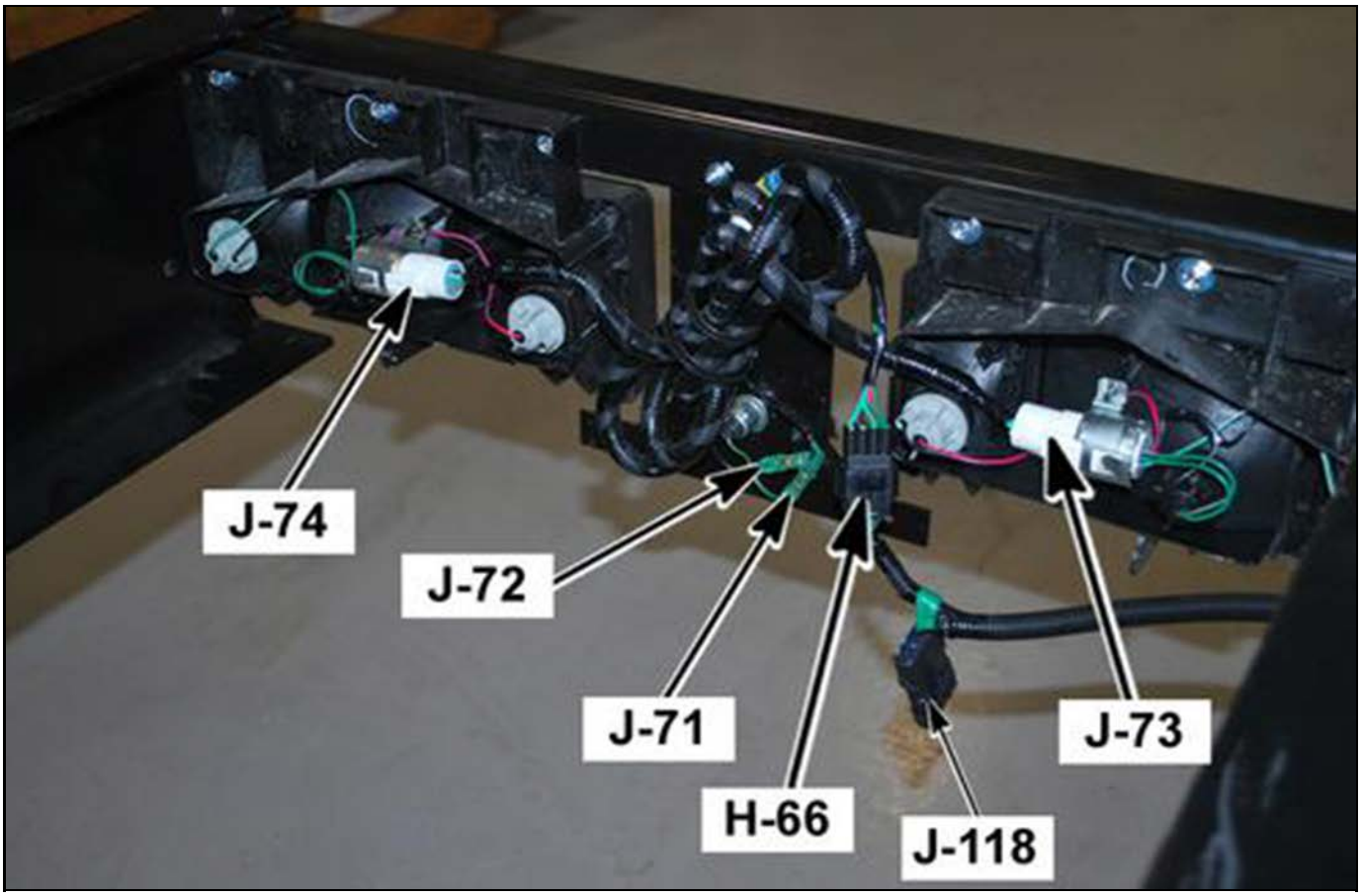

4891907

H-80 Front Chassis Harness to I/P Harness

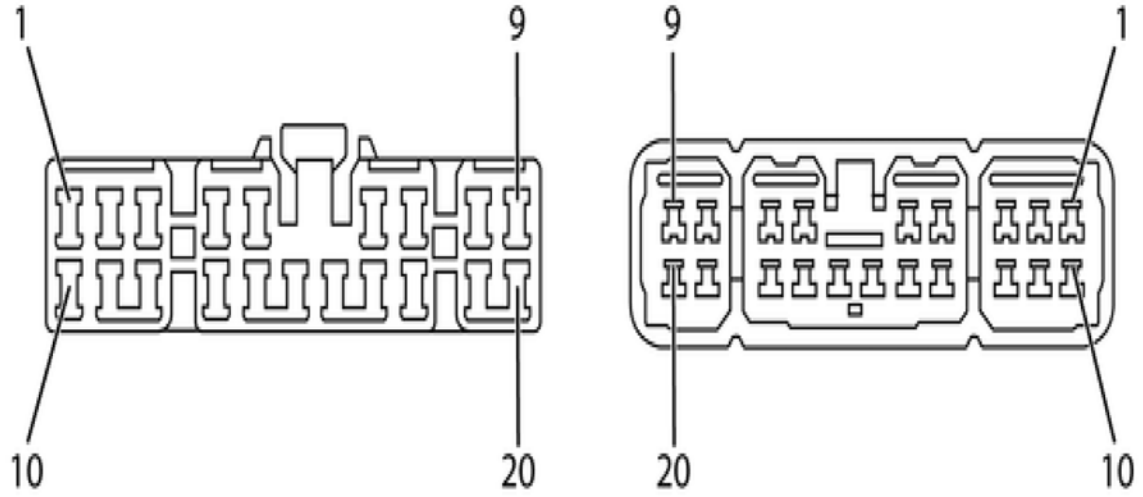

4891914

Connector Part Information		• 7383-1200-90 • 20-Way F (BLU)		Connector Part Information		• 7382-1200-90 • 20-Way M (BLU)	
Pin	**Wire Color**	**Circuit No**	**Function**	**Pin**	**Wire Color**	**Circuit No**	**Function**
1	BLU	TF004C	J1939 CAN 1 Low Serial Data to B- 458 Splice Pack	1	BLU	TF004B	J1939 CAN 1 Low Serial Data to VNT Module and ECM

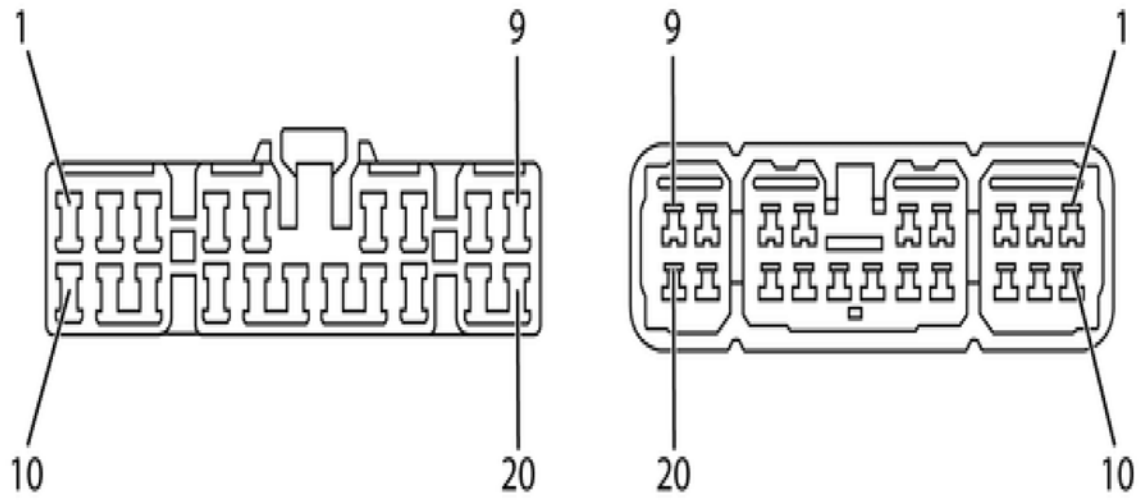

4891914

Connector Part Information		• 7383-1200-90 • 20-Way F (BLU)		Connector Part Information		• 7382-1200-90 • 20-Way M (BLU)	
Pin	**Wire Color**	**Circuit No**	**Function**	**Pin**	**Wire Color**	**Circuit No**	**Function**
2	BLU/WHT	TF003C	J1939 CAN 1 High Serial Data to B- 459 Splice Pack	2	BLU/WHT	TF003B	J1939 CAN 1 High Serial Data to VNT Module and ECM
3	PNK/BLU	IC176C	Cruise Resume/Set Switch Signal to Engine Control module (ECM)	3	PNK/BLU	IC176B	Cruise Resume/Set Switch Signal from Switch
4–6	—	—	Not Used	4–6	—	—	Not Used
7	WHT	IC033C	APP 1, 5 Volt Reference to ECM	7	WHT	IC033B	APP 1, 5 Volt Reference from APP
8	BLK	IC032C	APP 1 Low Reference to ECM	8	BLK	IC032B	APP 1 Low Reference from APP
9	RED	IC023C	APP 1 Sensor 1 Signal to ECM	9	RED	IC023B	APP 1 Sensor 1 Signal from APP
10	WHT/GRN	BB118C	Right Rear Pressure Modulator Valve Hold Control to Modulator	10	WHT/GRN	BB118B	Right Rear Pressure Modulator Valve Hold Control to EBCM
11	BLK/ORN	BB119C	Right Rear Pressure Modulator Low Reference to Modulator	11	BLK/ORN	BB119B	Right Rear Pressure Modulator Low Reference to EBCM
12	RED/GRN	BB120C	Left Rear Pressure Modulator Valve Release Control to Modulator	12	RED/GRN	BB120B	Left Rear Pressure Modulator Valve Release Control to EBCM
13–14	—	—	Not Used	13–14	—	—	Not Used
15	BLK	MX004C	Fuel Tank Unit Ground from Fuel Tank Unit	15	BLK	MX004B	Fuel Tank Unit Ground to J/B 2 (B-141 pin 6)
16	BLU	HA066C	Switched Output Voltage from X-20 Relay from Relay	16	BLU	HA066B	Switched Output Voltage from X-20 Compressor Clutch Relay to A/C Pressure Switch
17	SHIELD	IZ034C	APP Low Reference Shield	17	BLU/RED	IZ034B	APP Low Reference Shield from B-267 Splice Pack

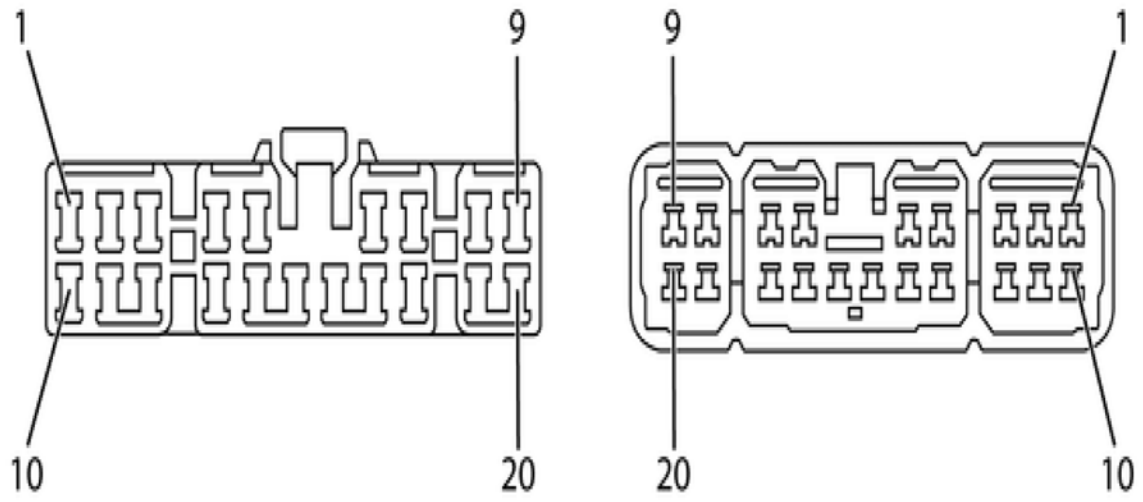

4891914

Connector Part Information		• 7383-1200-90 • 20-Way F (BLU)		Connector Part Information		• 7382-1200-90 • 20-Way M (BLU)	
Pin	**Wire Color**	**Circuit No**	**Function**	**Pin**	**Wire Color**	**Circuit No**	**Function**
18	GRN	IC004C	APP 2 5 Volt Reference to ECM	18	GRN	IC004B	APP 2 5 Volt Reference from APP
19	BLU	IC006C	APP 2 Low Reference to ECM	19	BLU	IC006B	APP 2 Low Reference from APP
20	YEL	IC005C	APP 1 Sensor 1 Signal to ECM	20	YEL	IC005B	APP 1 Sensor 1 Signal from APP

Front of the Cab, Behind the Washer Fluid Reservoir

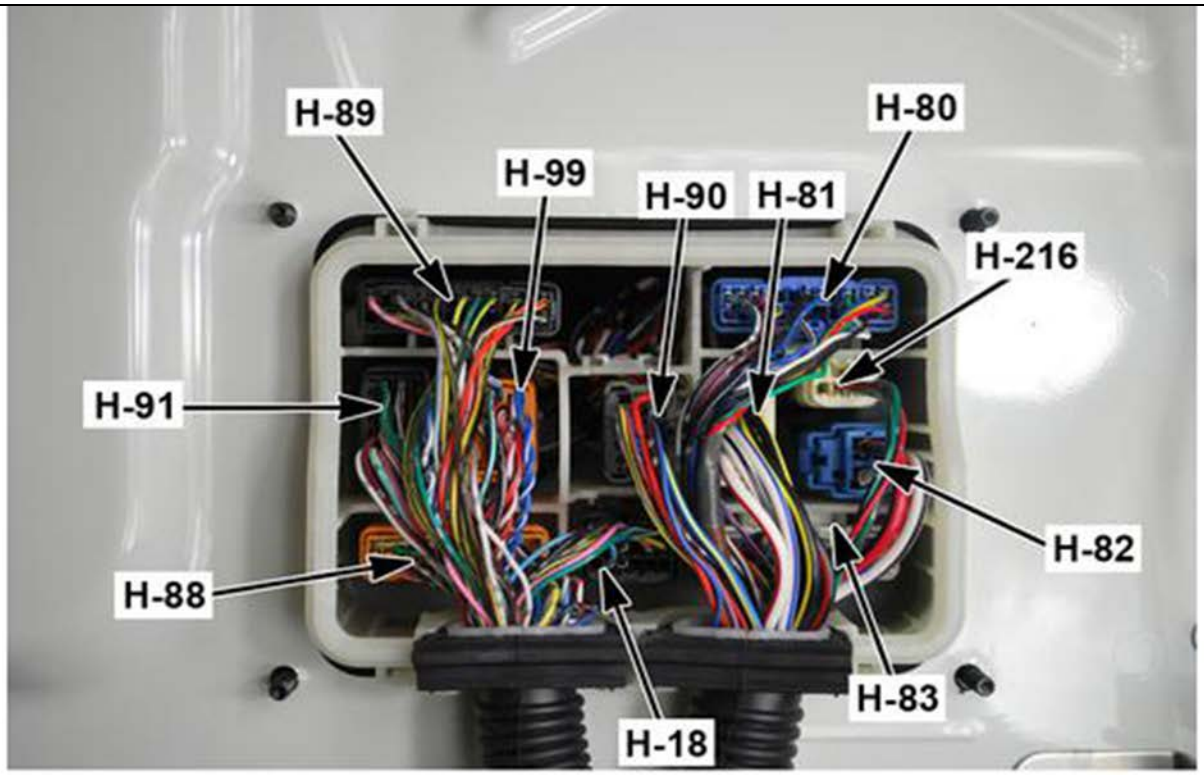

4891871

H-81 Front Chassis Harness to I/P Harness

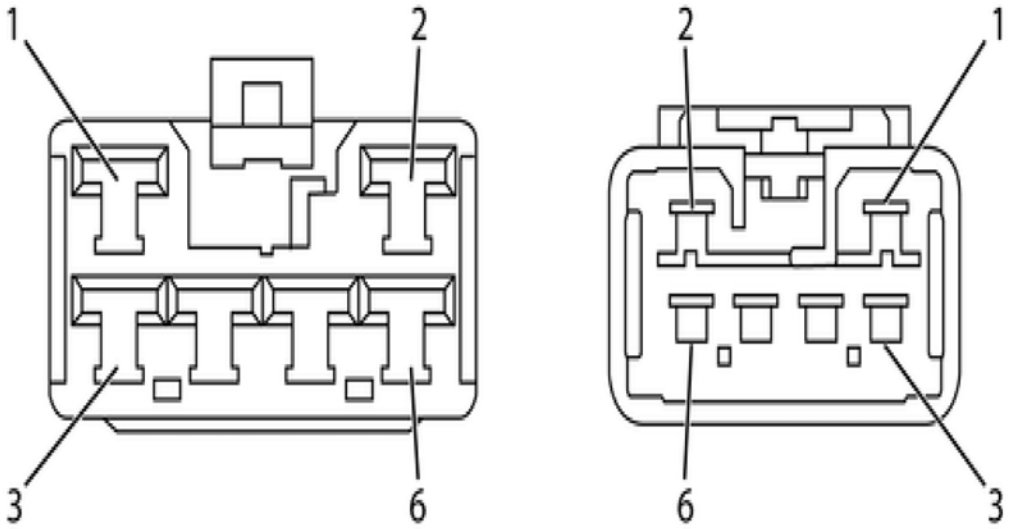

4891916

Connector Part Information		• 7383-1065 • 6-Way F (WHT)		Connector Part Information		• 7383-1065 • 6-Way M (WHT)	
Pin	**Wire Color**	**Circuit No**	**Function**	**Pin**	**Wire Color**	**Circuit No**	**Function**
1	BLK/YEL	PA062C	Battery Voltage from Fuse FL-5 Fuse/ Relay Center	1	BLK/YEL	PA062B	Battery Voltage from Fuse FL-5 to Splice 27

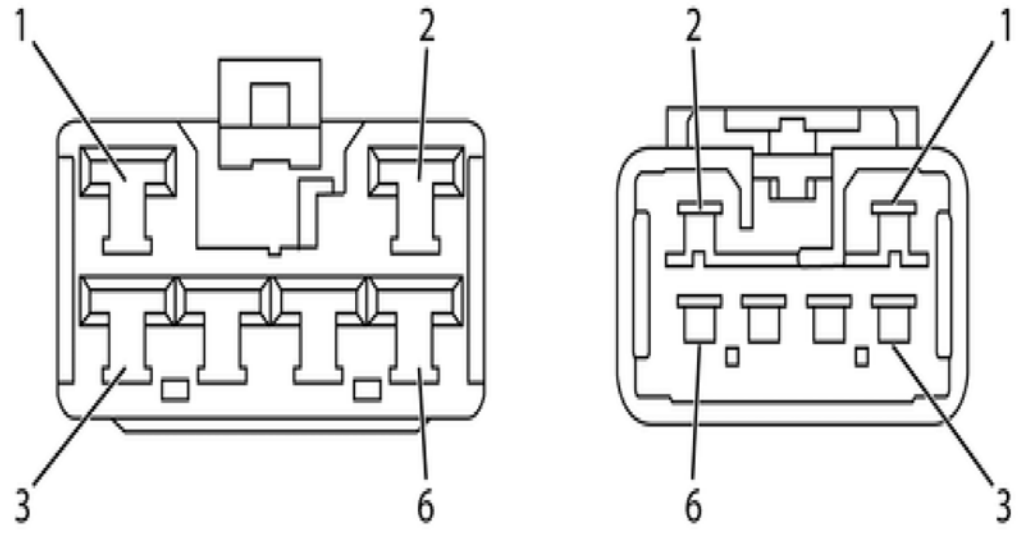

4891916

Connector Part Information		• 7383-1065 • 6-Way F (WHT)		Connector Part Information		• 7383-1065 • 6-Way M (WHT)	
Pin	**Wire Color**	**Circuit No**	**Function**	**Pin**	**Wire Color**	**Circuit No**	**Function**
2	WHT/BLK	PA011C	Battery Voltage from Fuse FL-10 from Fuse/Relay Center	2	WHT/BLK	PA011B	Battery Voltage from Fuse FL-10 to Fuse/ Relay Center (Cab) (B-26 pin 2)
3	BLK/YEL	PA002C	Battery Voltage from Fuse FL-12 from Fuse/Relay Center	3	BLK/YEL	PA002B	Battery Voltage from Fuse FL-12 to Cigar Lighter Relay and Ignition Switch
4	BLK/RED	PA004C	Battery Voltage from Fuse FL-6 from Fuse/Relay Center	4	BLK/RED	PA004B	Battery Voltage from Fuse FL-6 to Splice 26
5	WHT/BLU	BB101C	Battery Voltage from Fuse FL-11 from Fuse/Relay Center	5	WHT/BLU	BB101B	Battery Voltage from FL-11 Fuse to EBCM
6	WHT/RED	PA005C	Battery Voltage from Fuse FL-8 from Fuse/Relay Center	6	WHT/RED	PA005B	Battery Voltage from Fuse FL-8 to B-378 Splice Pack

Front of the Cab, Behind the Washer Fluid Reservoir

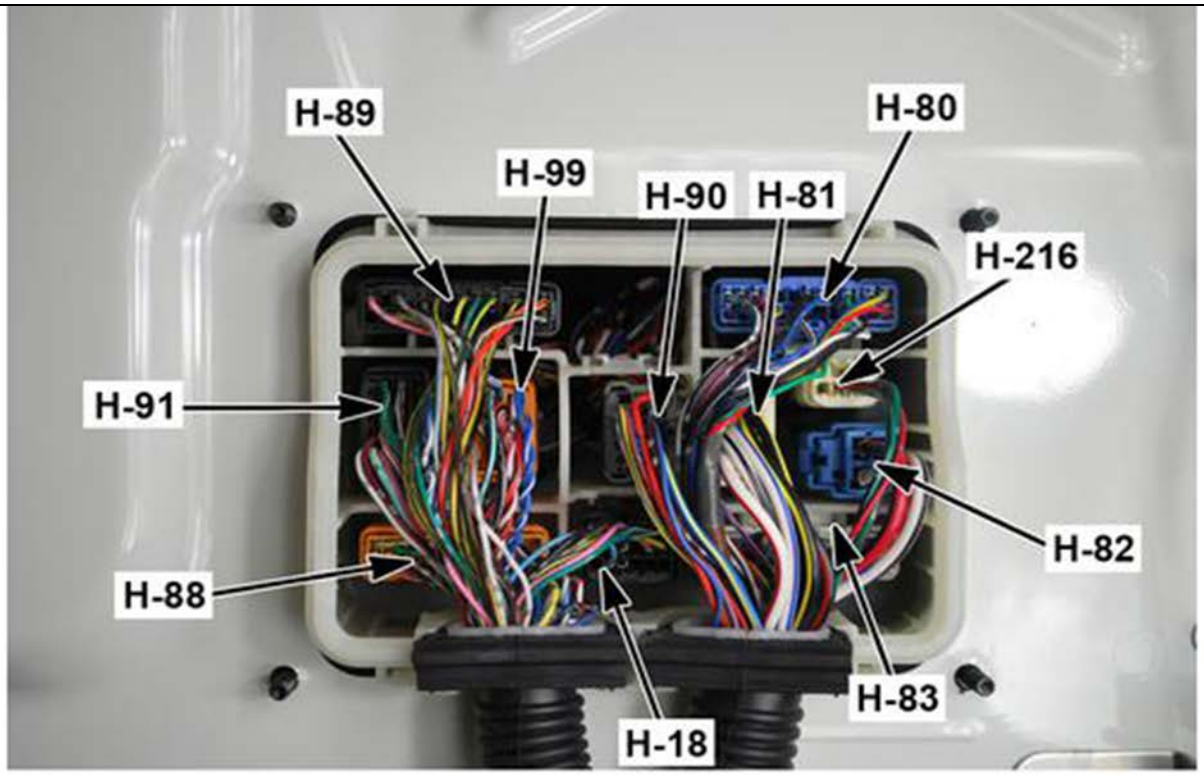

4891871

H-82 Front Chassis Harness to I/P Harness

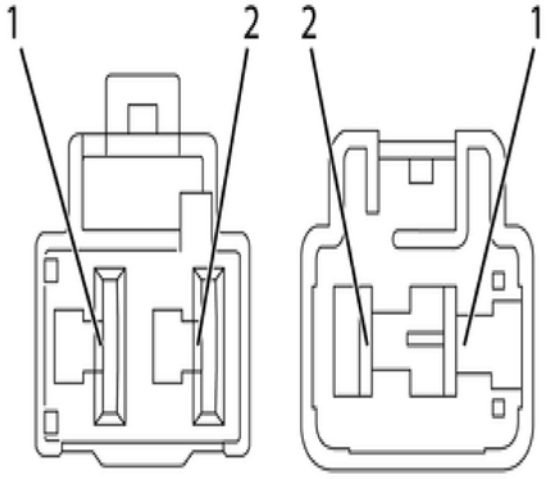

4891919

Connector Part Information		• 7383-3020-90 • 2-Way F (BLU)		Connector Part Information		• 7383-3020-90 • 2-Way M (BLU)	
Pin	**Wire Color**	**Circuit No**	**Function**	**Pin**	**Wire Color**	**Circuit No**	**Function**
1	RED/BLK	PA010C	Battery Voltage from Fuse FL-3 from Fuse/Relay Center	1	RED/BLK	PA010B	Battery Voltage from Fuse FL-3 to Power ACC Relay (Switch)

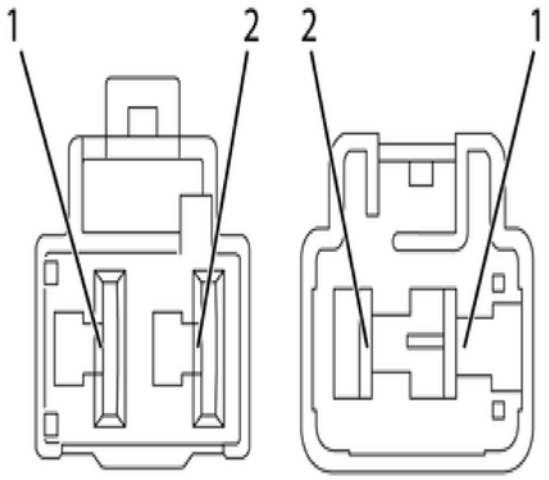

4891919

Connector Part Information		• 7383-3020-90 • 2-Way F (BLU)		Connector Part Information		• 7383-3020-90 • 2-Way M (BLU)	
Pin	**Wire Color**	**Circuit No**	**Function**	**Pin**	**Wire Color**	**Circuit No**	**Function**
2	WHT/BLK	PA006C	Battery Voltage from Fuse FL-7	2	WHT/BLK	PA006B	Battery Voltage from Fuse FL-7 to Blower Relay

Front of the Cab, Behind the Washer Fluid Reservoir

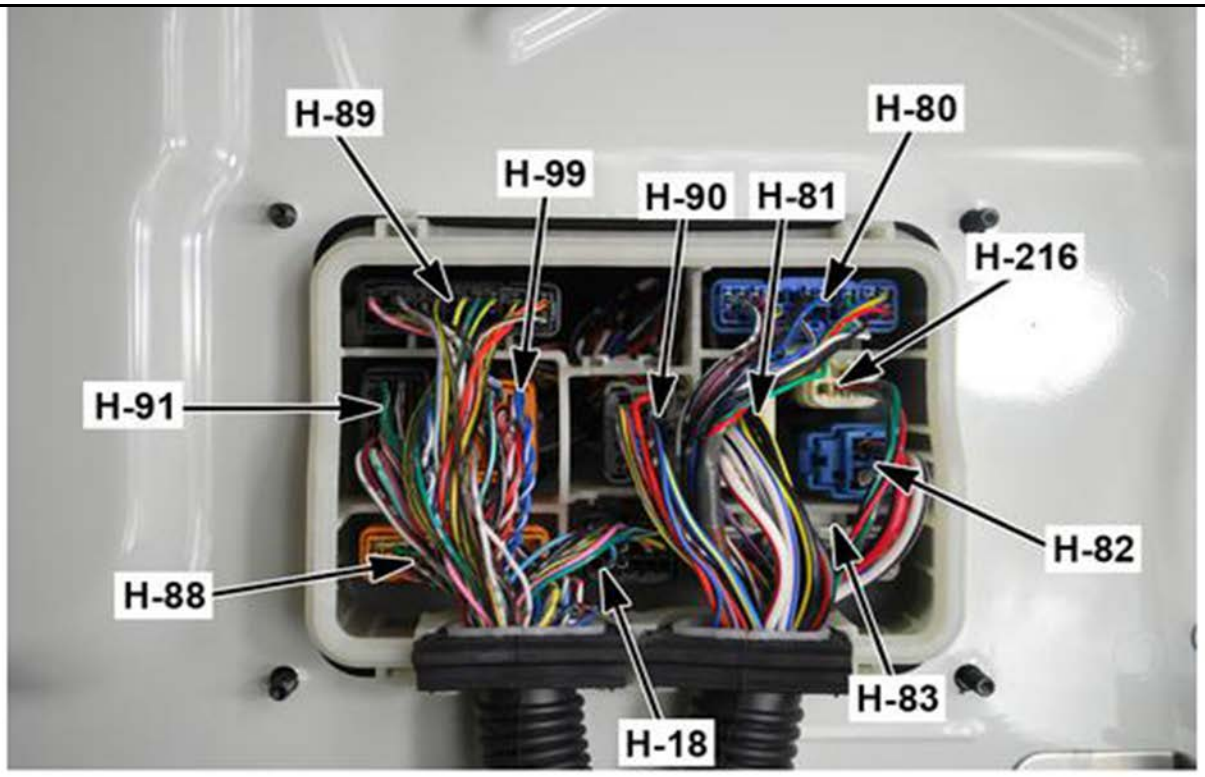

4891871

H-83 Front Chassis Harness to I/P Harness

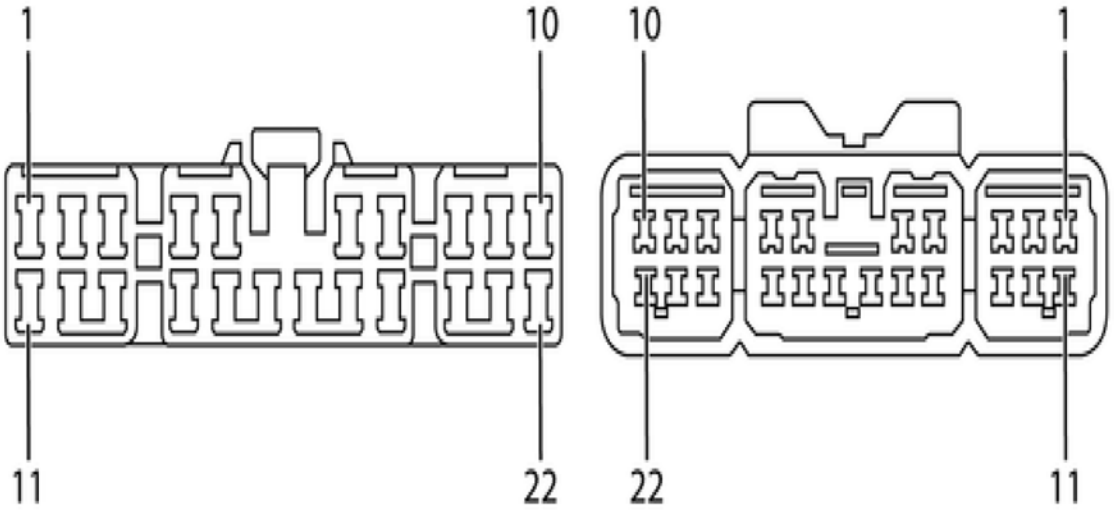

4891930

Connector Part Information		• 7383-1222 • 22-Way F (WHT)		Connector Part Information		• 7383-1222 • 22-Way M (WHT)	
Pin	**Wire Color**	**Circuit No**	**Function**	**Pin**	**Wire Color**	**Circuit No**	**Function**
1	BLK	BY011C	Ground to Splice 2 (J-11 and J-8 Ground)	1	BLK	BY011B	Ground from Splice 2 (J-11 and J-8 Ground) to EBCM
2	BLK	BY012C	Ground to Splice 2 (J-11 and J-8 Ground)	2	BLK	BY012B	Ground from Splice 2 (J-11 and J-8 Ground) to EBCM
3–4	—	—	Not Used	3–4	—	—	Not Used
5	GRN/WHT	IC190C	Stop Lamp Relay (Coil Control) to Stop Lamp Switch 2	5	GRN/WHT	IC190B	Stop Lamp Relay (Coil Control) from Stop Lamp Relay
6	GRY/BLU	IC158C	Cruise Main Switch Signal to Engine Control module (ECM)	6	GRY/BLU	IC158B	Cruise Main Switch Signal from Switch
7	GRN	CA021C	Switched Output Voltage from X-1 Stop Lamp Relay to Rear Combination Lamps	7	GRN	CA001B	Switched Output Voltage from X-1 Stop Lamp Relay to J/B 2 (B-144 pin 11)
8	BLK/ORN	IC001C	Ignition Voltage from Fuse F-20 to Engine Control Module (ECM) and DEF Module	8	BLK/ORN	IC001B	Ignition Voltage from Fuse F-20 from J/B 1 (B-131 pin 11)
9	WHT/BLU	PA021C	Charge Indicator (Red) Control to J/B 1 (B-132 pin 5)	9	WHT/BLU	PA021B	Charge Indicator (Red) Control from Generator
10	GRY	IC177C	Cruise Set/Coast Switch Signal to Engine Control Module (ECM)	10	GRY	IC177B	Cruise Set/Coast Switch Signal from Switch
11	GRN/WHT	JA015C	Left Turn Signal Supply Voltage to Lamp	11	GRN/WHT	JA015B	Left Turn Signal Supply Voltage from Flasher Module

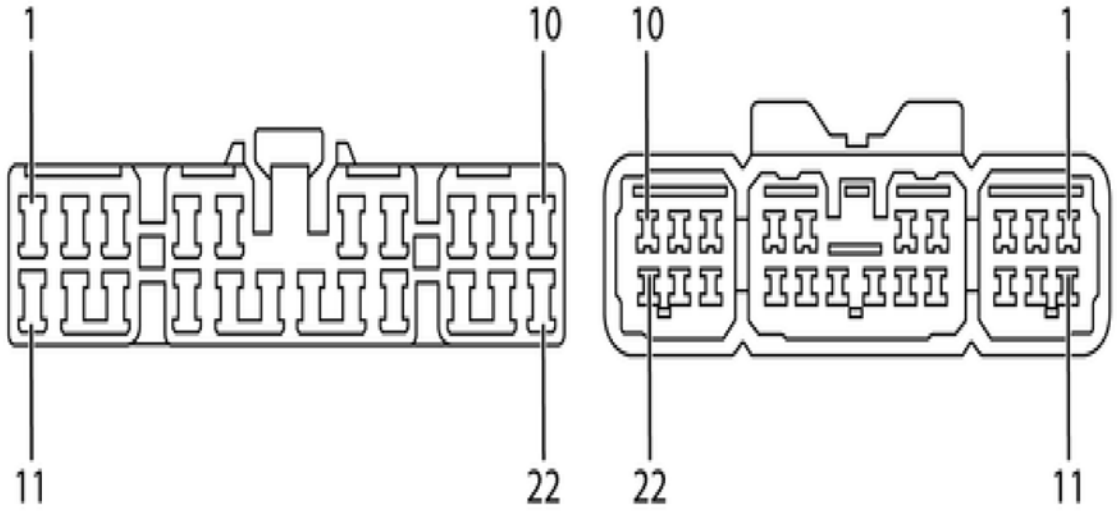

4891930

Connector Part Information		• 7383-1222 • 22-Way F (WHT)		Connector Part Information		• 7383-1222 • 22-Way M (WHT)	
Pin	**Wire Color**	**Circuit No**	**Function**	**Pin**	**Wire Color**	**Circuit No**	**Function**
12	BLK/WHT	LA013C	Ignition Voltage from Fuse F-13 to X-17 Starter Relay	12	BLK/WHT	LA003B	Ignition Voltage from Fuse F-13 from Fuse/Relay Center (Cab) (B-22 pin 17)
13	GRN/WHT	BB121C	Right Rear Wheel Speed Sensor 5 Volt Reference to Sensor	13	GRN/WHT	BB121B	Right Rear Wheel Speed Sensor 5 Volt Reference to EBCM
14	GRN	BB122C	Right Rear Wheel Speed Sensor Reference Signal to Sensor	14	GRN	BB122B	Right Rear Wheel Speed Sensor Reference Signal to EBCM
15	GRY/BLU	IC083C	Low Coolant Level Indicator Control to ECM	15	GRY/BLU	IC083B	Low Coolant Level Indicator Control to Radiator Level Control Module
16	GRY/BLK	IC088C	Low Coolant Level Switch Signal from Switch	16	GRY/BLU	IC088B	Low Coolant Level Switch Signal to Radiator Level Control Module
17	GRN/RED	BA004C	Fuse F-27 Voltage (Headlamp Switch ON) to Rear Combination Lamps and Marker Lamp Relay X-26	17	GRN/RED	BA004B	Fuse F-27 Voltage (Headlamp Switch ON) from J/B 1 (B-132 pin 17)
18	LT GRN/RED	IC044C	Exhaust Brake Switch Signal to ECM	18	LT GRN/RED	IC044B	Exhaust Brake Switch Signal from Switch
19	YEL	IA019C	X-22 Rear Dome Lamp Relay Coil Control from Relay	19	YEL	IA019B	X-22 Rear Dome Lamp Relay Coil Control to J/B 2 (B-146 14)
20	RED	IA020C	Battery Voltage from Fuse F-36	20	RED	IA020B	Battery Voltage from Fuse F-36 to Rear Dome Lamp Switch
21	BLU/WHT	IC140C	DPF Regeneration Switch Signal to ECM	21	BLU/WHT	IC140B	DPF Regeneration Switch Signal to Switch

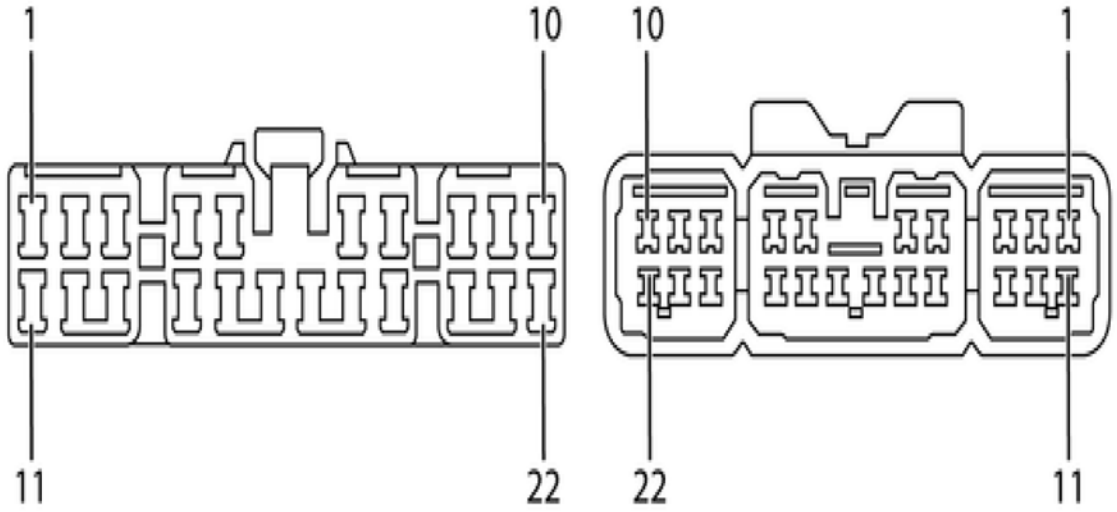

4891930

Connector Part Information		• 7383-1222 • 22-Way F (WHT)		Connector Part Information		• 7383-1222 • 22-Way M (WHT)	
Pin	**Wire Color**	**Circuit No**	**Function**	**Pin**	**Wire Color**	**Circuit No**	**Function**
22	GRN/BLK	JA014C	Right Turn Signal Supply Voltage to Lamp	22	GRN/BLK	JA014B	Right Turn Signal Supply Voltage from Flasher Module

Front of the Cab, Behind the Washer Fluid Reservoir

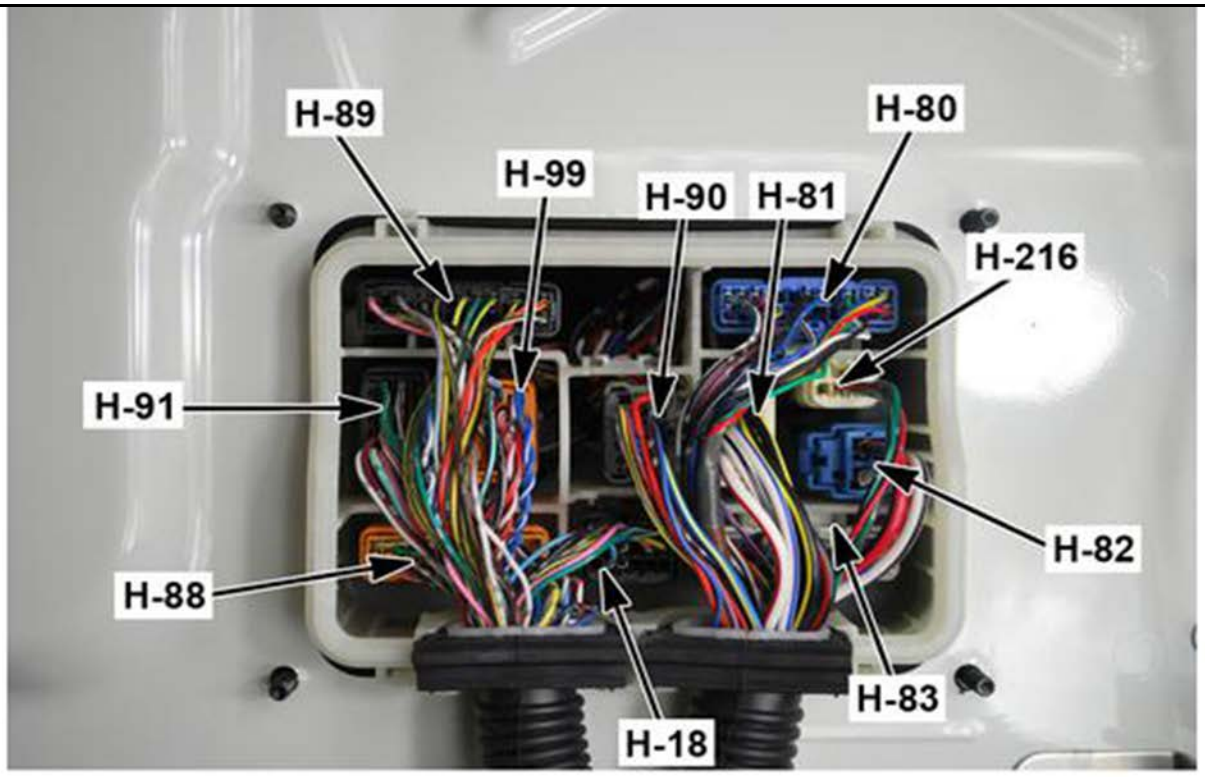

4891871

H-85 Floor Harness to I/P Harness

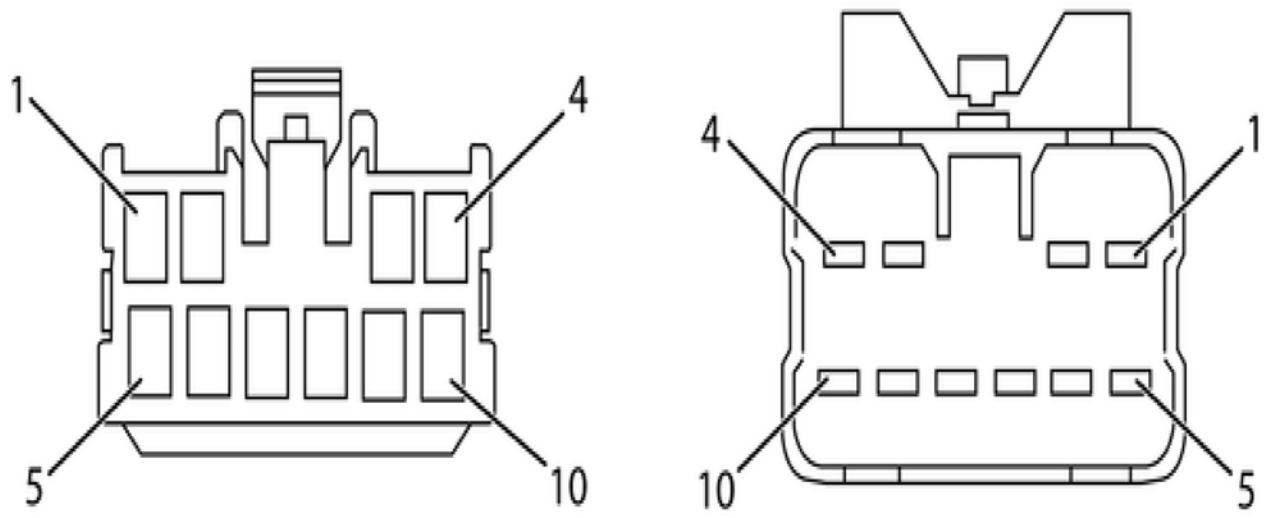

4891933

Connector Part Information		• 7323-8307 • 10-Way F (WHT)		Connector Part Information		• 7323-8307 • 10-Way M (WHT)	
Pin	**Wire Color**	**Circuit No**	**Function**	**Pin**	**Wire Color**	**Circuit No**	**Function**
1	BLK	MX06	Ground to B-600 Splice Pack (B-51 Ground) to Seat Belt Switch	1	BLK	MX024B	Ground to B-600 Splice Pack (B-51 Ground)
2	YEL/RED	IA14	Door Switch Signal from Door Switches	2	GRY	IA014B	Door Switch Signal to Dome Lamp
3–4	—	—	Not Used	3–4	—	—	Not Used
5	RED/WHT	OA190	Ignition Voltage from Fuse F-24 to Shift Lever	5	RED/YEL	OA190B	Ignition Voltage from Fuse F-24 from J/B 2 (B-145 pin 13)
6	LT GRN/RED	OA91	Ignition Voltage from Fuse F-18 to Shift Lever	6	LT GRN/RED	OA091B	Ignition Voltage from Fuse F-18 from J/B 1 (B-132 pin 13)
7	GRN	OA92	Switched Output Voltage from X-1 Stop Lamp Relay from Relay	7	GRN	OA092B	Switched Output Voltage from X-1 Stop Lamp Relay to Shift Lever
8	BLU/WHT	OA93	Key Lock Solenoid Control to Shift Lever	8	BLU/WHT	OA093B	Key Lock Solenoid Control to Key Lock Solenoid
9	BLK	OX20	Ground to Shift Lever	9	BLK	OX020B	Ground to Splice 18 (B-55 and B-221)
10	—	—	Not Used	10	—	—	Not Used

Center of the I/P, Above the Accelerator Pedal

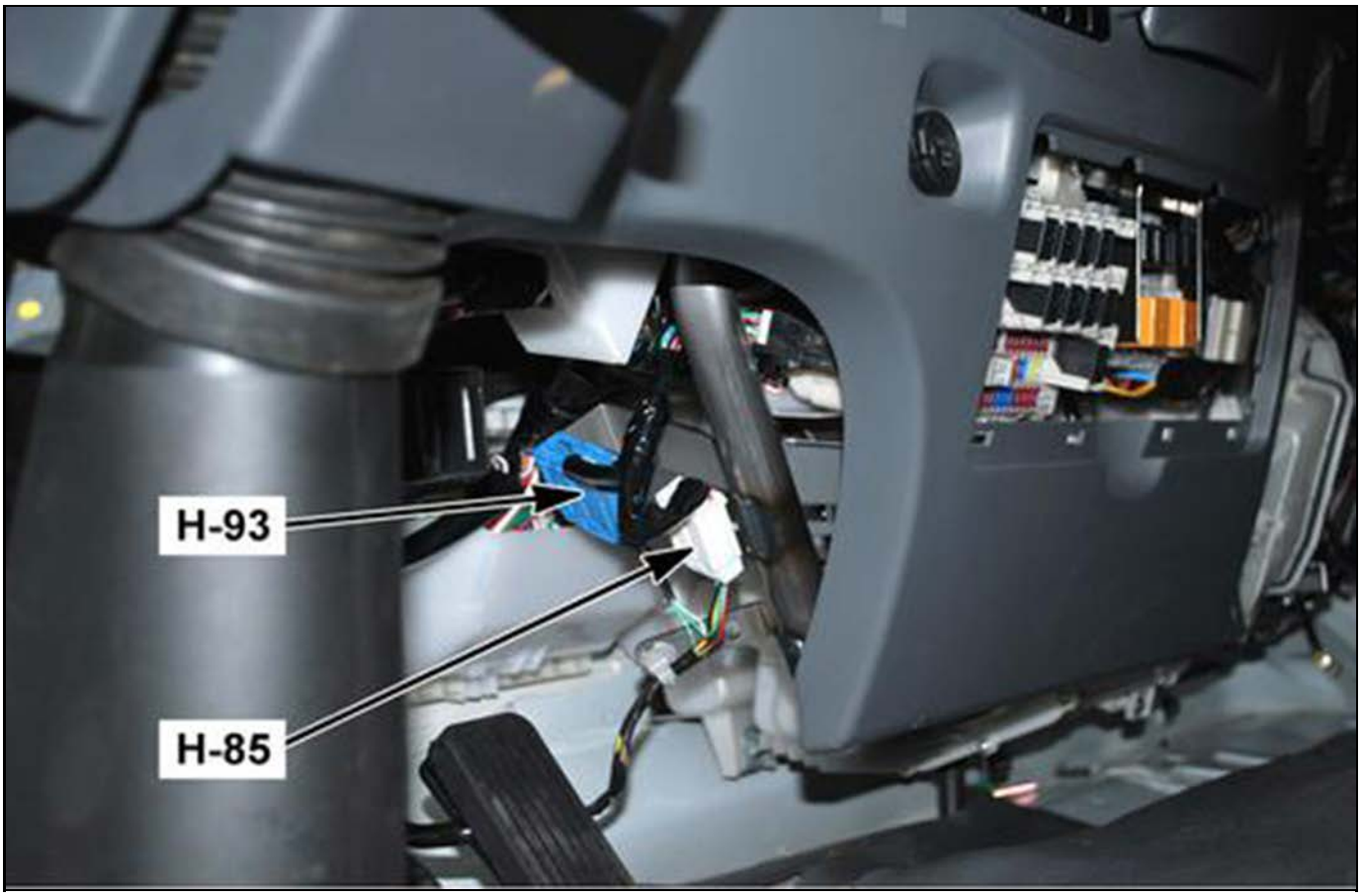

4891943

H-87 Door Harness (RH) to I/P Harness

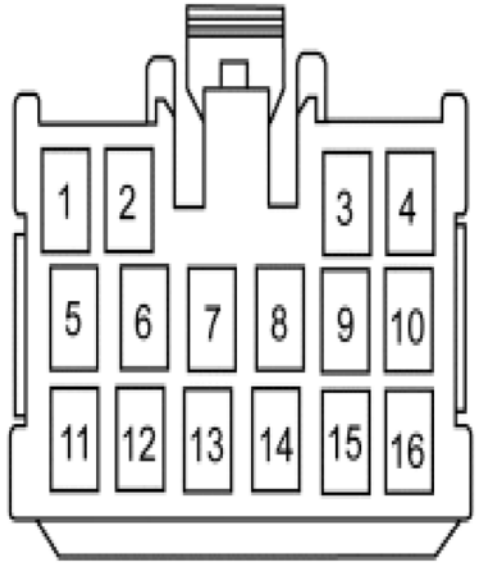

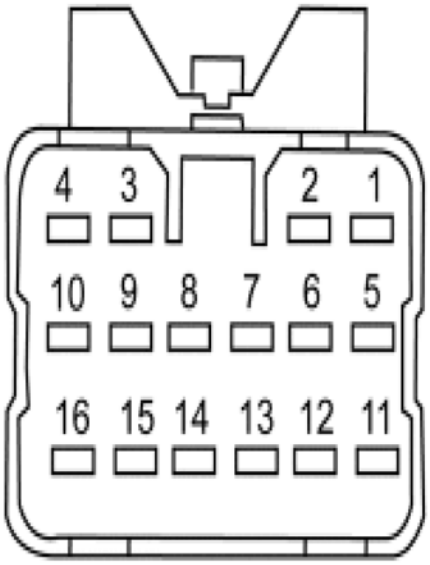

4891945

Connector Part Information		• 7383-1160-30 • 16-Way F (BLK)		Connector Part Information		• 7383-1160 • 16-Way M (WHT)	
Pin	**Wire Color**	**Circuit No**	**Function**	**Pin**	**Wire Color**	**Circuit No**	**Function**
1	RED/YEL	WA16	Mirror Heater Relay (RH) (Switched Output Voltage) to Lower Mirror Heater	1	RED/YEL	WA17	Mirror Heater Relay (RH) (Switched Output Voltage) to B-379 Splice Pack
2	YEL/RED	WA11B	Mirror Heater Relay (RH) (Switched Output Voltage) to Upper Mirror Heater	2	YEL/RED	WA19	Mirror Heater Relay (RH) (Switched Output Voltage) to B-379 Splice Pack
3	—	—	Not Used	3	—	—	Not Used
4	BLU/WHT	UA22	Power Window Up Voltage to Front Power Window Switch (RH)	4	BLU/WHT	UA004B	Power Window Up Voltage to Front Power Window Switch (LH)
5	YEL/RED	WA19	Mirror Heater Relay (RH) (Switched Output Voltage) to Upper Mirror Heater	5	YEL/RED	WA019B	Mirror Heater Relay (RH) (Switched Output Voltage) to B-379 Splice Pack
6	BRN/YEL	UA16	Battery Voltage from Fuse F-6 to Front Power Window Switch (RH)	6	BRN/YEL	UA016B	Battery Voltage from Fuse F-6 from Fuse/ Relay Center (Cab)
7	GRN/YEL	VA09	Front Door Lock Motor (RH) Lock Voltage to Front Door Lock Motor (RH)	7	GRN/YEL	VA009B	Front Door Lock Motor (RH) Lock Voltage to J/B 2 B-143 Pin 15
8	BLU/RED	UA23	Power Window Down Voltage to Front Power Window Switch (RH)	8	BLU/RED	UA005B	Power Window Down Voltage to Front Power Window Switch (LH)
9	—	—	Not Used	9	—	—	Not Used
10	BLK	WX08	Ground to B-48 Junction Block (B-53 Ground) to Mirror (RH)	10	BLK/WHT	WX008B	Ground to B-48 Junction Block (B-53 Ground)

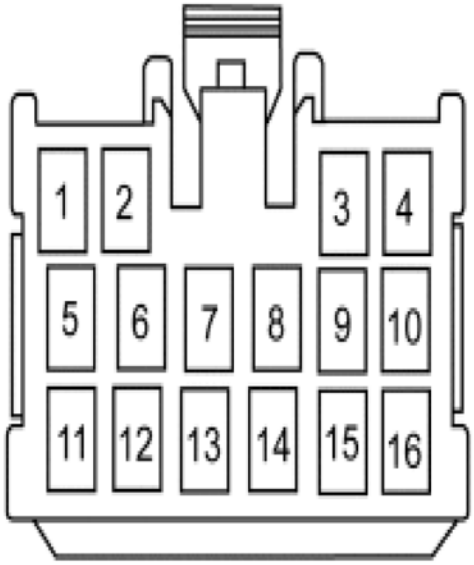

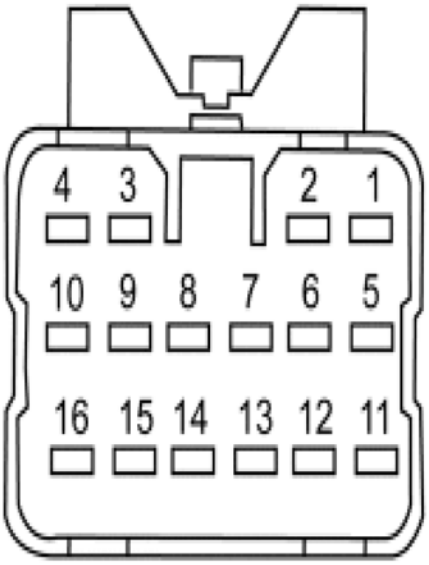

4891945

Connector Part Information		• 7383-1160-30 • 16-Way F (BLK)		Connector Part Information		• 7383-1160 • 16-Way M (WHT)	
Pin	**Wire Color**	**Circuit No**	**Function**	**Pin**	**Wire Color**	**Circuit No**	**Function**
11	WHT/BLK	WA09	Up/Down Mirror Control to Mirror	11	WHT/BLK	WA009B	Up/Down Mirror Control to Power Mirror Switch
12	BLK/GRN	WA11	Left/Right Mirror Control to Mirror	12	BLK/GRN	WA011B	Left/Right Mirror Control to Power Mirror Switch
13	BLK/WHT	WA13	Common Mirror Control to Mirror	13	BLK/WHT	WA013B	Common Mirror Control to Power Mirror Switch
14	RED/YEL	WA17	Mirror Heater Relay (RH) (Switched Output Voltage) to Lower Mirror Heater	14	RED/YEL	WA017B	Mirror Heater Relay (RH) (Switched Output Voltage) to B-379 Splice Pack
15	—	—	Not Used	15	—	—	Not Used
16	BLK	WX06	Ground to B-48 Junction Block (B-53 Ground) to Mirror (RH)	16	BLK	WX006B	Ground to B-48 Junction Block (B-53 Ground)

Right Side of the I/P, at the A-Pillar (Trim Panel is Removed)

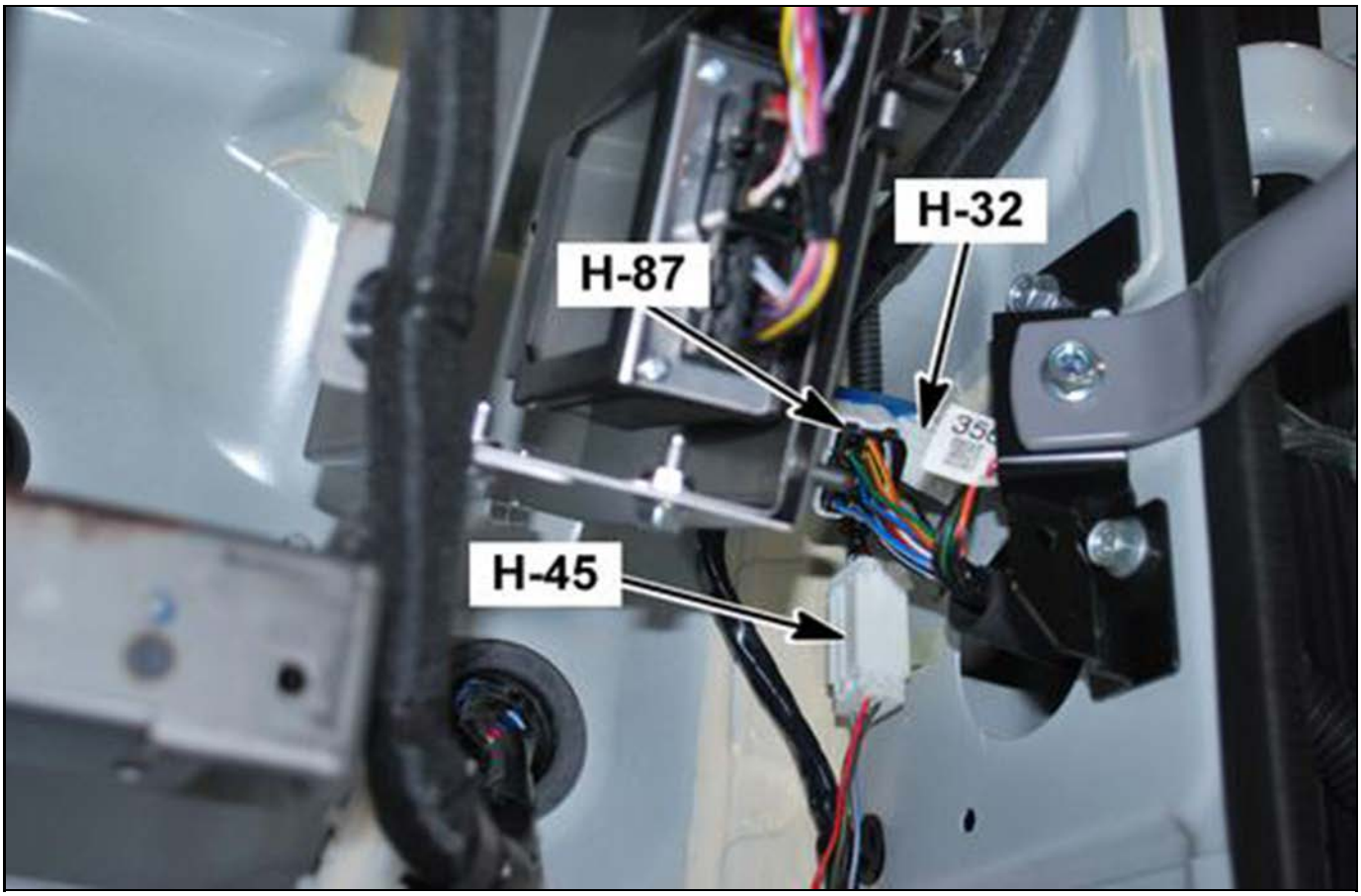

4891880

H-88 Front Chassis Harness to I/P Harness

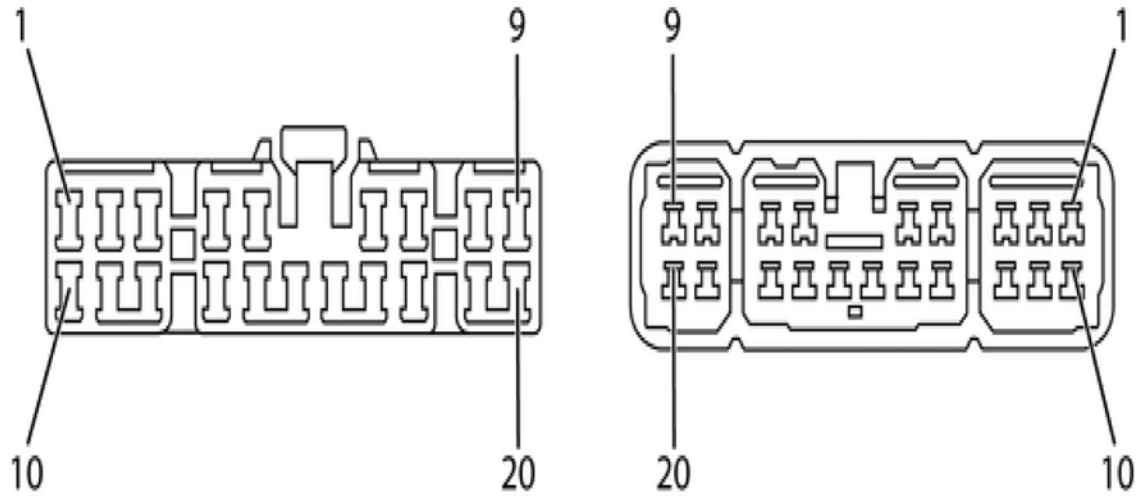

4891914

Connector Part Information		• 7383-1200-50 • 20-Way F (ORN)		Connector Part Information		• 7382-1200-50 • 20-Way M (ORN)	
Pin	**Wire Color**	**Circuit No**	**Function**	**Pin**	**Wire Color**	**Circuit No**	**Function**
1	BLK/RED	OA060C	Engine Speed Sensor Supply Voltage from Sensor	1	BLK/RED	OA060B	Engine Speed Sensor Supply Voltage to TCM

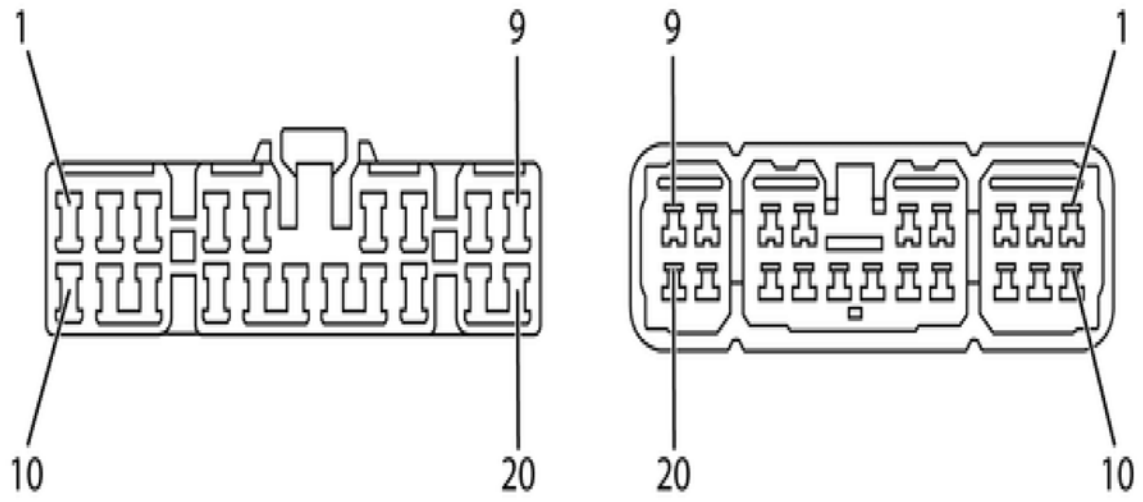

4891914

Connector Part Information		• 7383-1200-50 • 20-Way F (ORN)		Connector Part Information		• 7382-1200-50 • 20-Way M (ORN)	
Pin	**Wire Color**	**Circuit No**	**Function**	**Pin**	**Wire Color**	**Circuit No**	**Function**
2	WHT/RED	OA061C	Engine Speed Sensor Signal from Sensor	2	WHT/RED	OA061B	Engine Speed Sensor Signal to TCM
3	BLK/BLU	OA062C	Output Shaft Speed (OSS) Sensor 5-Volt Supply to Sensor	3	BLK/BLU	OA062B	Output Shaft Speed (OSS) Sensor Signal to TCM
4	WHT/BLU	OA063C	Output Shaft Speed (OSS) Sensor Signal to Sensor	4	WHT/BLU	OA063B	Output Shaft Speed (OSS) Sensor Signal to TCM
5	YEL	OA064C	Input Shaft Speed (ISS) Sensor 5-Volt Supply to Sensor	5	YEL	OA064B	Input Shaft Speed (ISS) Sensor 5-Volt Supply to TCM
6	BLU	OA065C	Input Shaft Speed (ISS) Sensor Signal to Sensor	6	BLU	OA065B	Input Shaft Speed (ISS) Sensor Signal to TCM
7	GRN	OA066C	Pressure Switch 3 (PS3) Signal from Transmission	7	GRN	OA066B	Pressure Switch 3 (PS3) Signal from TCM
8	GRN/BLK	OA067C	Pressure Switch 1 (PS1) Signal from Transmission	8	GRN/BLK	OA067B	Pressure Switch 1 (PS1) Signal from TCM
9	YEL/GRN	OA083C	Pressure Switch 4 (PS4) Signal from Transmission	9	YEL/GRN	OA083B	Pressure Switch 4 (PS4) Signal from TCM
10	—	—	Not Used	10	—	—	Not Used
11	GRN/WHT	OA070C	Internal Mode Switch "CE" Signal from Transmission	11	GRN/WHT	OA070B	Internal Mode Switch "CE" Signal to TCM
12	BLU/RED	OA071C	Internal Mode Switch "C" Signal from Transmission	12	BLU/RED	OA071B	Internal Mode Switch "C" Signal to TCM
13	BLU	OA072C	Internal Mode Switch "B" Signal from Transmission	13	BLU	OA072B	Internal Mode Switch "B" Signal to TCM
14	BLU/YEL	OA073C	Internal Mode Switch "A" Signal from Transmission	14	BLU/YEL	OA073B	Internal Mode Switch "A" Signal to TCM

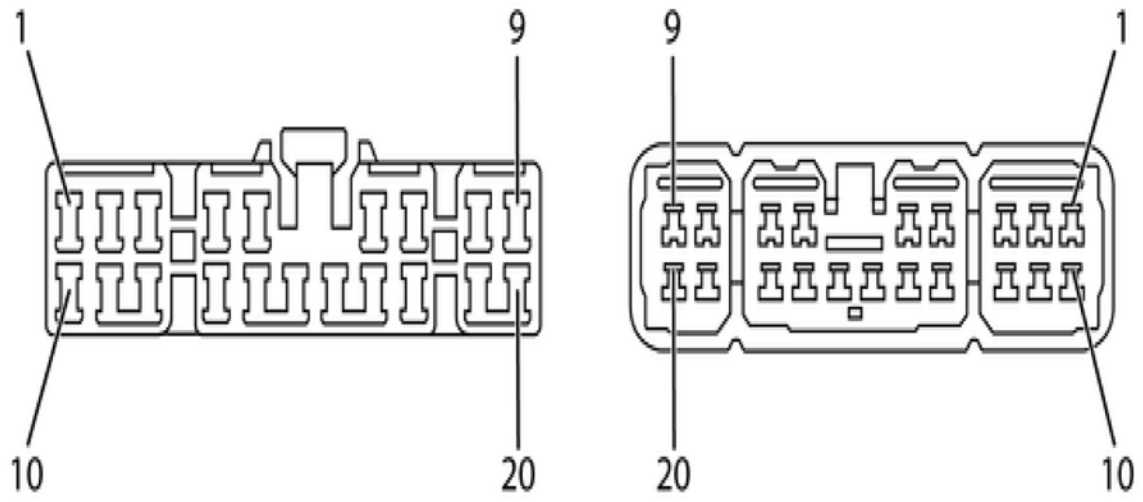

4891914

Connector Part Information		• 7383-1200-50 • 20-Way F (ORN)		Connector Part Information		• 7382-1200-50 • 20-Way M (ORN)	
Pin	**Wire Color**	**Circuit No**	**Function**	**Pin**	**Wire Color**	**Circuit No**	**Function**
15	WHT	OA074C	Shift Solenoid 3 (SS 3) Valve Control to Transmission	15	WHT	OA074B	Shift Solenoid 3 (SS 3) Valve Control to TCM
16	WHT/BLK	OA075C	Shift Solenoid 2 (SS 2) Valve Control to Transmission	16	WBT/BLK	OA075B	Shift Solenoid 2 (SS 2) Valve Control to TCM
17	WHT/GRN	OA076C	Shift Solenoid 1 (SS 1) Valve Control to Transmission	17	WHT/GRN	OA076B	Shift Solenoid 1 (SS 1) Valve Control to TCM
18	WHT/BLU	OA077C	Pressure Control Solenoid 2 (PCS2) Control from Transmission	18	WHT/BLU	OA077B	Pressure Control Solenoid 2 (PCS2) Control from TCM
19	BRN/BLK	OA078C	High Side Driver (HSD) 2 Voltage to Transmission	19	BRN/BLK	OA078B	High Side Driver (HSD) 2 Voltage to TCM
20	WHT/RED	OA079C	Main Modulator Solenoid Control from Transmission	20	WHT/RED	OA079B	Main Modulator Solenoid Control to TCM

Front of the Cab, Behind the Washer Fluid Reservoir

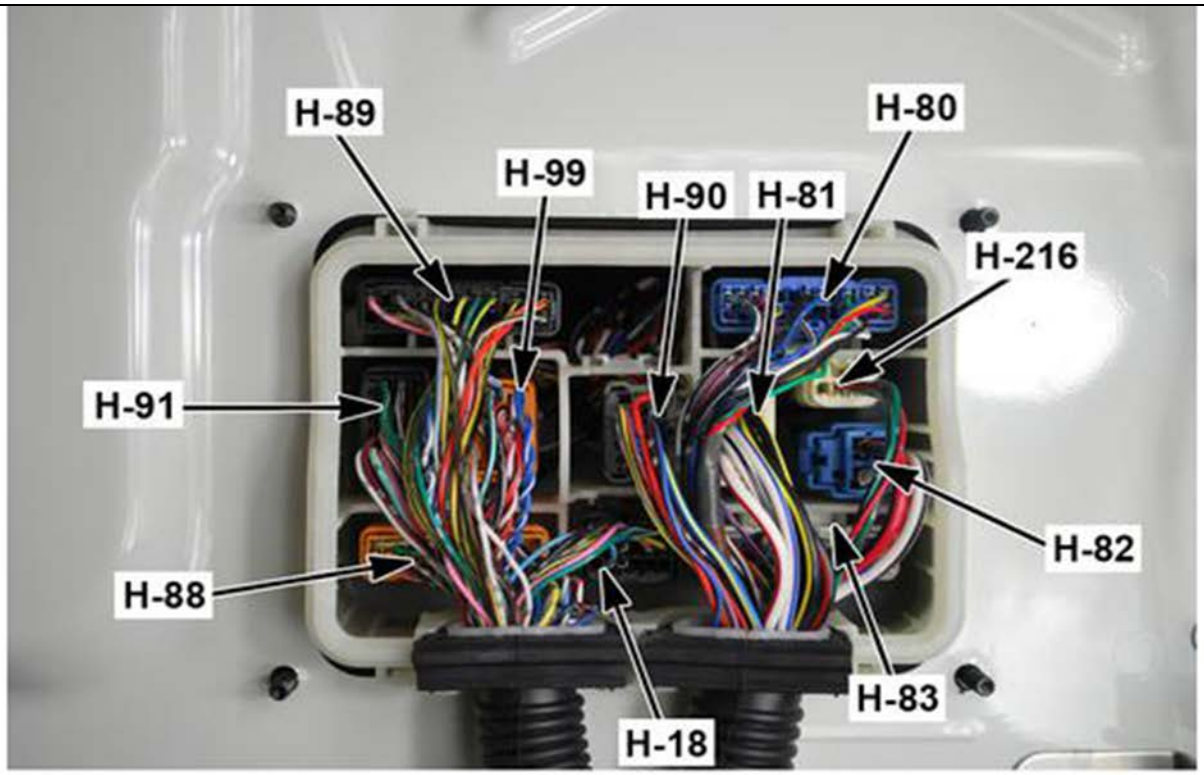

4891871

H-89 Front Chassis Harness to I/P Harness

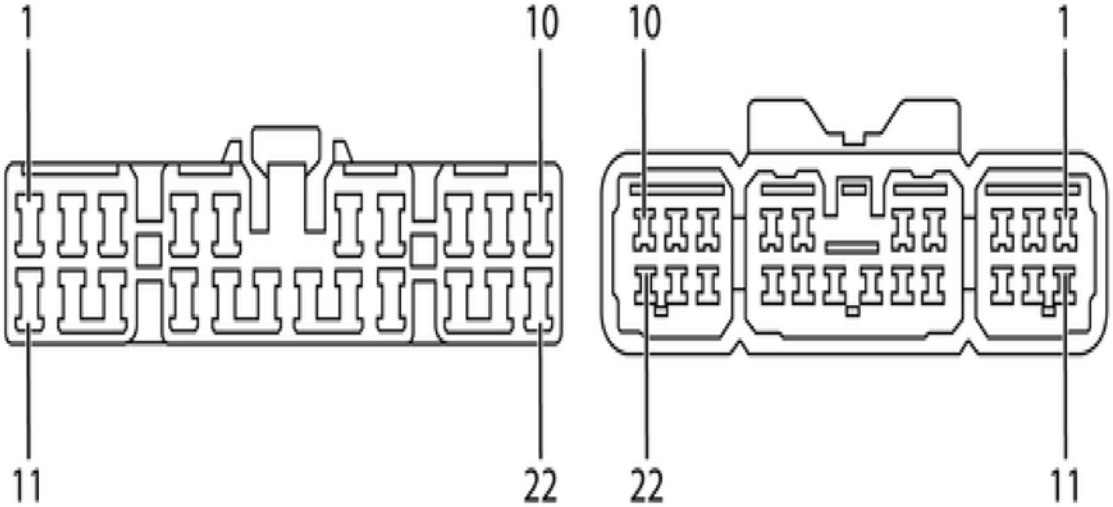

4891930

Connector Part Information		• 7383-1222-30 • 22-Way F (BLK)		Connector Part Information		• 7383-1222-30 • 22-Way M (BLK)	
Pin	**Wire Color**	**Circuit No**	**Function**	**Pin**	**Wire Color**	**Circuit No**	**Function**
1	—	—	Not Used	1	—	—	Not Used

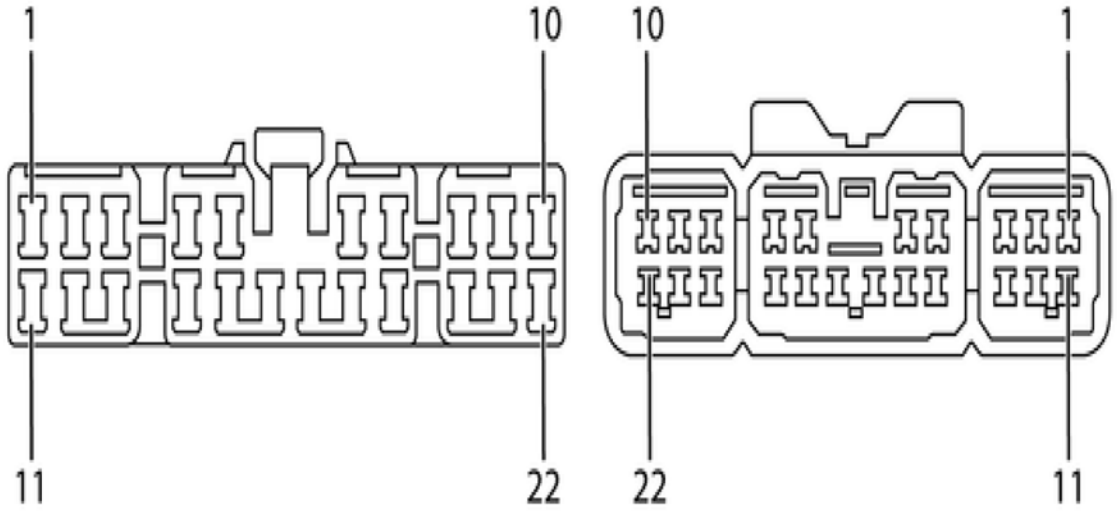

4891930

Connector Part Information		• 7383-1222-30 • 22-Way F (BLK)		Connector Part Information		• 7383-1222-30 • 22-Way M (BLK)	
Pin	**Wire Color**	**Circuit No**	**Function**	**Pin**	**Wire Color**	**Circuit No**	**Function**
2	YEL/BRN	OA082C	High Side Driver (HSD) 1 Voltage to Transmission	2	YEL/BRN	OA082B	High Side Driver (HSD) 1 Voltage from TCM
3	WHT	OA051C	PTO Switch to TCM	3	WHT	OA051B	PTO Switch to B-246 Body Builder Connector and H-104 PTO Connector
4	WHT	MA087C	Low Reference for Primary and Secondary Air Pressure Gauges from Sensors	4	WHT	MA086B	Low Reference for Primary and Secondary Air Pressure Gauges to IPC
5–9	—	—	Not Used	5–9	—	—	Not Used
10	BRN/WHT	OA080C	Torque Converter Clutch (TCC) Solenoid Control to Transmission	10	BRN/WHT	OA080B	Torque Converter Clutch (TCC) Solenoid Control to TCM
11	PNK	QA001C	Battery Voltage from Fuse F-37 from Fuse/Relay Center	11	PNK	QA001B	Battery Voltage from Fuse F-37 to Condenser Fan Relay
12	—	—	Not Used	12	—	—	Not Used
13	GRY	HA010C	X-20 Compressor Clutch Relay Coil Control from Relay	13	GRY	HA010B	X-20 Compressor Clutch Relay Coil Control to Electronic Thermostat
14	BLK	OA086C	Analog Signal Return to Transmission	14	BRN/GRN	OA086B	Analog Sensor Signal Return to TCM
15	BRN/YEL	HA012C	Voltage from A/C Pressure Switch to A/C Compressor	15	BRN/YEL	HA012B	Voltage from A/C Pressure Switch from Switch
16	—	—	Not Used	16	—	—	Not Used
17	YEL/BLK	OA081C	Pressure Control Solenoid 1 (PCS1) Control from Transmission	17	YEL/BLK	OA081B	Pressure Control Solenoid 1 (PCS1) Control from TCM

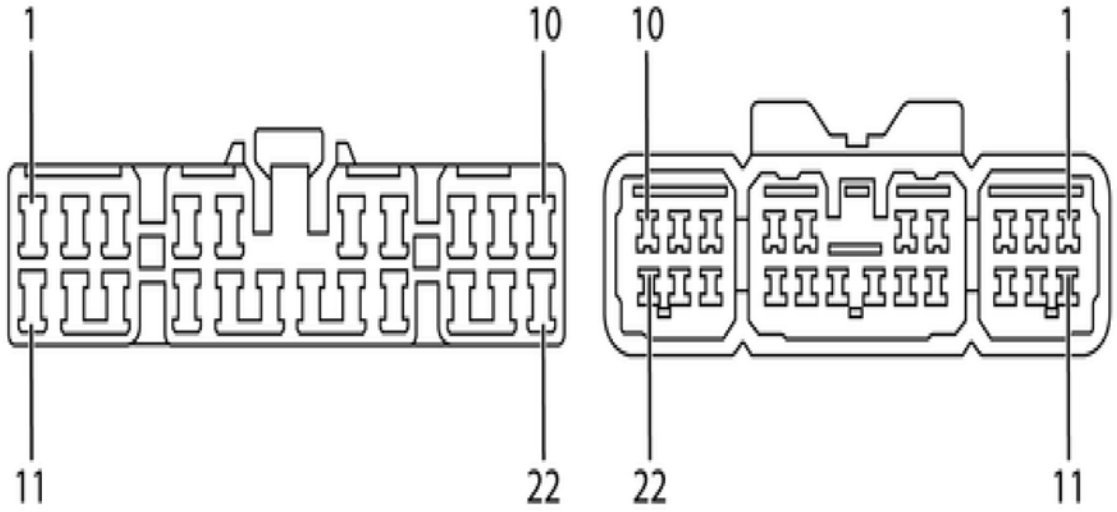

4891930

Connector Part Information		• 7383-1222-30 • 22-Way F (BLK)		Connector Part Information		• 7383-1222-30 • 22-Way M (BLK)	
Pin	**Wire Color**	**Circuit No**	**Function**	**Pin**	**Wire Color**	**Circuit No**	**Function**
18	GRN/RED	OA069C	Internal Mode Switch "P" Signal from Transmission	18	GRN/RED	OA069B	Internal Mode Switch "P" Signal from TCM
19	GRN/YEL	OA068C	Pressure Switch 2 (PS2) Signal from Transmission	19	GRN/YEL	OA068B	Pressure Switch 2 (PS2) Signal from TCM
20	BRN/YEL	OA097C	High Side Driver (HSD) 3 Voltage to Transmission	20	BRN/YEL	OA097B	High Side Driver (HSD) 3 Voltage to TCM
21	ORN	OA098C	Pressure Control Solenoid 3 (PCS3) Control from Transmission	21	ORN	OA098B	Pressure Control Solenoid 3 (PCS3) Control from TCM
22	YEL/RED	OA085C	Transmission Fluid Temperature Sensor Signal to Transmission	22	YEL/RED	OA085B	Transmission Fluid Temperature Sensor Signal to TCM

Front of the Cab, Behind the Washer Fluid Reservoir

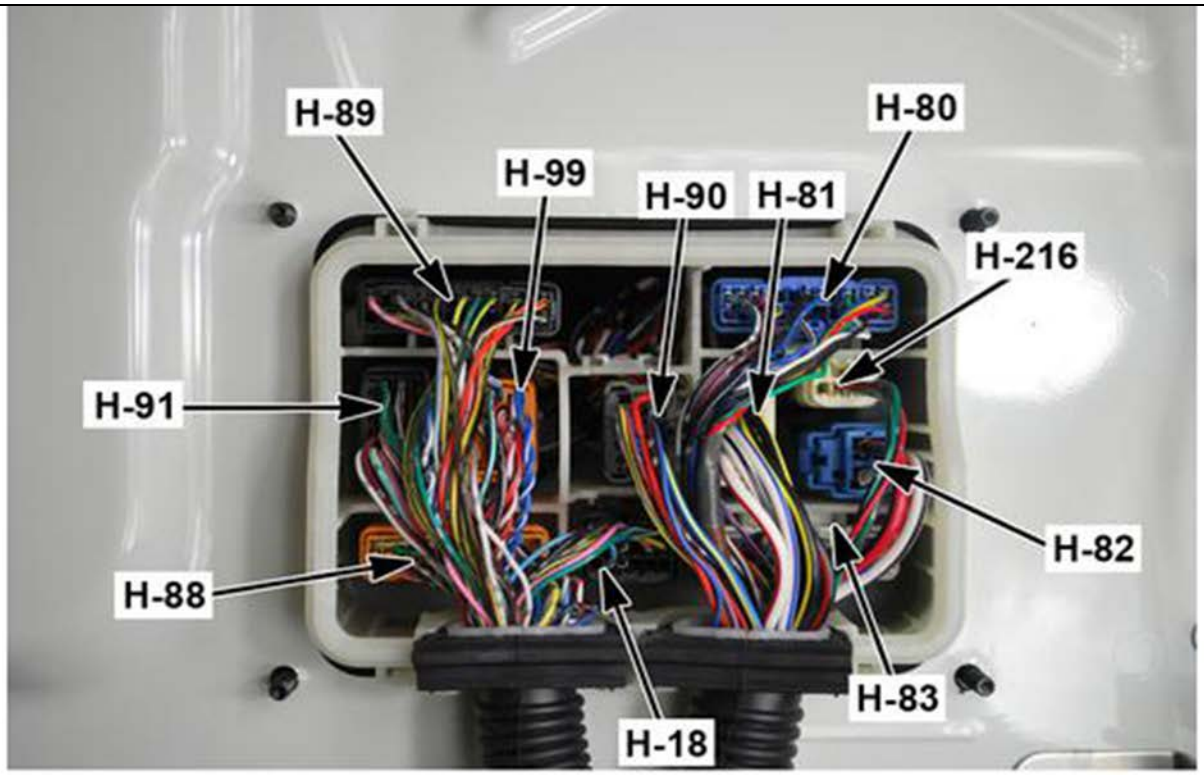

4891871

H-90 Front Chassis Harness to I/P Harness

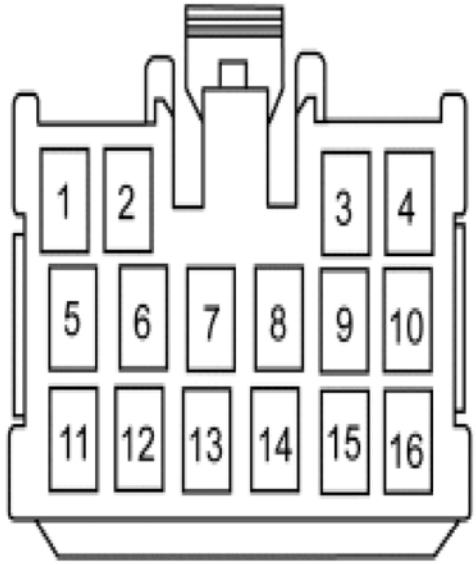

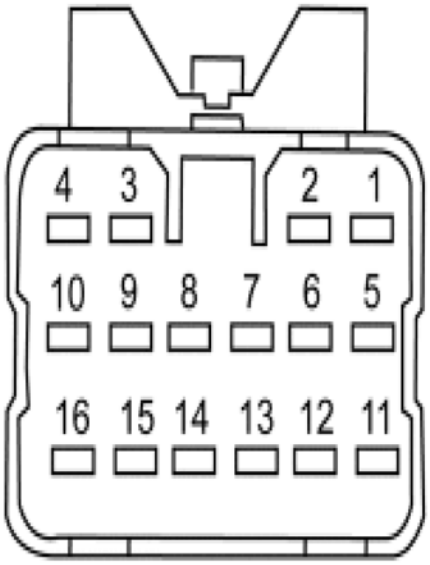

4891945

Connector Part Information		• 7383-1160-10 • 16-Way F (DK GRY)		Connector Part Information		• 7383-1160-10 • 16-Way M (DK GRY)	
Pin	**Wire Color**	**Circuit No**	**Function**	**Pin**	**Wire Color**	**Circuit No**	**Function**
1	BLU/YEL	IC095C	PTO Up/Down Switch (Down - PTO Set) from Switch	1	BLU/YEL	IC095B	PTO Up/Down Switch (Down - PTO Set) to J-133 Diode 1
2	BLU/ORN	IC092C	PTO Up/Down Switch (Up + PTO Resume) from Switch	2	BLU/ORN	IC092B	PTO Up/Down Switch (Up + PTO Resume) to J-135 Diode 2
3	—	—	Not Used	3	—	—	Not Used
4	ORN	PA045C	Battery Voltage from Fuse F-35 from Fuse/Relay Center	4	ORN	OA090B	Battery Voltage from Fuse F-35 to B-376 Splice Pack
5–9	—	—	Not Used	5–9	—	—	Not Used
10	BLK/RED	HA062C	Fuse F-30 Voltage (Fan Control Switch ON) to Compressor Clutch Relay X-20 (Coil Feed)	10	BLK/RED	HA062B	Fuse F-30 Voltage (Fan Control Switch ON) from J/B 2 (B-139 pin 2)
11	BLU/YEL	DA005C	Fuse F-16, Fuse/ Relay Center (Cab) to Air Dryer	11	BLU/YEL	DA005B	Voltage from Fuse F-16, Fuse/Relay Center (Cab)
12	BLU/YEL	MA015C	Air Filter Switch Signal from Switch	12	BLU/YEL	MA015B	Air Filter Switch Signal to IPC
13	RED/WHT	IC017C	Switched Output Voltage from Stop Lamp Switch Relay	13	RED/WHT	IC017B	Switched Output Voltage from Stop Lamp Switch Relay to ECM
14	YEL/BLK	IC010C	MIL Lamp Control from ECM	14	YEL/BLK	IC010B	MIL Lamp Control to IPC
15	ORN/BLU	IC008C	Glow Plug Indicator Control to ECM	15	ORN/BLU	IC008B	Glow Plug Indicator Control to IPC
16	—	—	Not Used	16	—	—	Not Used

Front of the Cab, Behind the Washer Fluid Reservoir

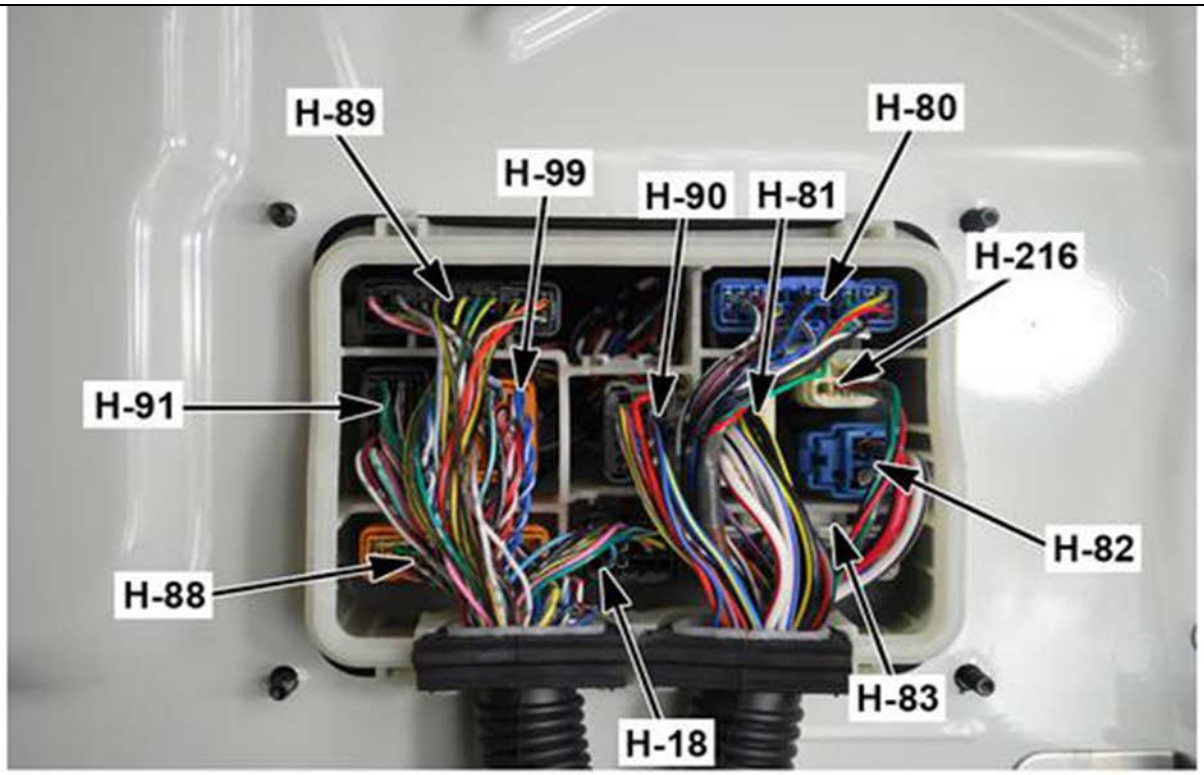

4891871

H-91 Front Chassis Harness to I/P Harness

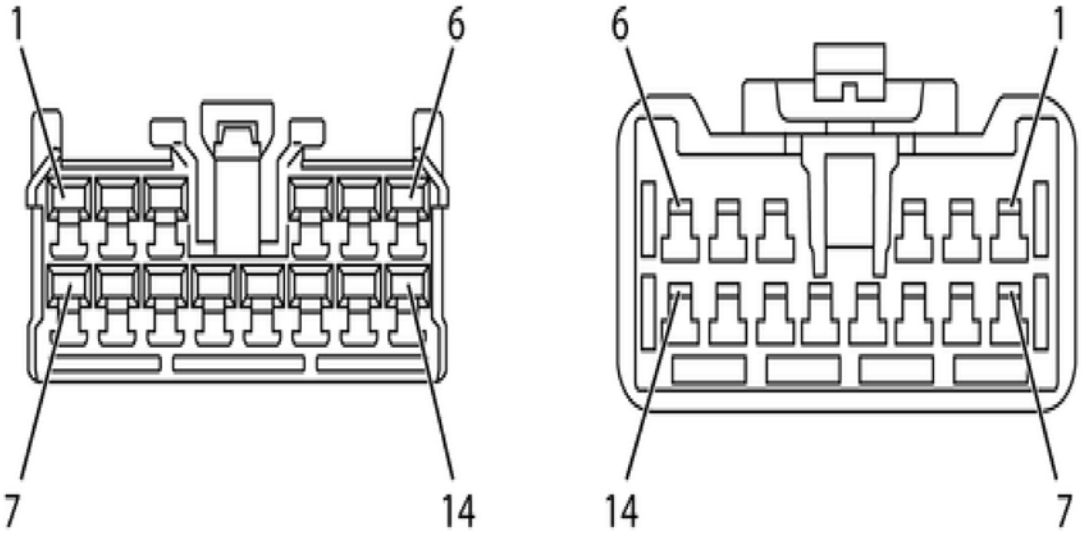

4891969

Connector Part Information		• 7383-4946-30 • 14-Way F (BLK)		Connector Part Information		• 7382-4946-30 • 14-Way M (BLK)	
Pin	**Wire Color**	**Circuit No**	**Function**	**Pin**	**Wire Color**	**Circuit No**	**Function**
1	PNK	IC181C	PTO Switch 2 Signal to ECM and Remote PTO Switch	1	PNK	IC181B	PTO Switch 2 Signal to J/B 2 B-142 pin 5

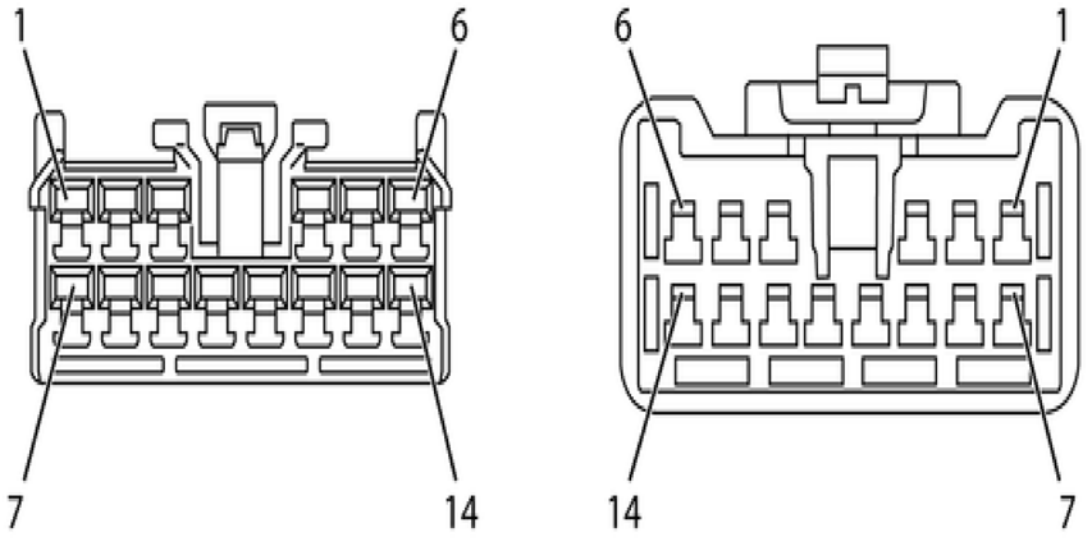

4891969

Connector Part Information		• 7383-4946-30 • 14-Way F (BLK)		Connector Part Information		• 7382-4946-30 • 14-Way M (BLK)	
Pin	**Wire Color**	**Circuit No**	**Function**	**Pin**	**Wire Color**	**Circuit No**	**Function**
2	WHT/BLU	MA088C	Voltage to Primary and Secondary Air Pressure Gauges to Sensors	2	WHT/BLU	MA085B	Voltage to Primary and Secondary Air Pressure Gauges to IPC
3	—	—	Not Used	3	—	—	Not Used
4	WHT/RED	MA084C	Secondary Air Pressure Gauge Signal to Sensors	4	VIO/RED	MA084B	Secondary Air Pressure Gauge Signal to IPC
5	BRN/WHT	MA009C	Water Separator Signal to IPC	5	BRN/WHT	MA009B	Water Separator Signal to Fuel Sedimenter Switch
6	WHT/BLK	MA098C	Parking Brake Switch Signal from Parking Brake Switch	6	WHT/BLK	MA098B	Parking Brake Switch Signal to J/B 1 (B-133 pin 16)
7	LT GRN/WHT	MA019C	Fuel Level Gauge Control from Fuel Tank Unit	7	LT GRN/WHT	MA019B	Fuel Level Gauge Control to IPC
8	WHT/GRN	MA083C	Primary Air Pressure Gauge Signal to Sensors	8	WHT/GRN	MA083B	Primary Air Pressure Gauge Signal to IPC
9	—	—	Not Used	9	—	—	Not Used
10	RED/BLU	KA012C	Voltage from Fuse A-4 (In Reverse) from Fuse/Relay Center (Cab) (B- 250 pin 8)	10	RED/BLK	KA015B	Voltage from Fuse A-4 (In Reverse) to Rear Combination Lamps
11–12	—	—	Not Used	11–12	—	—	Not Used
13	GRN	TF436C	ISO 15765 CAN 2 High to In-Line H-177 pin 14	13	GRN	TF036B	ISO 15765 CAN 2 Low to B-235 Splice Pack
14	GRN/WHT	TF435C	ISO 15765 CAN 2 High to In-Line H-177 pin 13	14	GRN/WHT	TF035B	ISO 15765 CAN 2 High to B-236 Splice Pack

Front of the Cab, Behind the Washer Fluid Reservoir

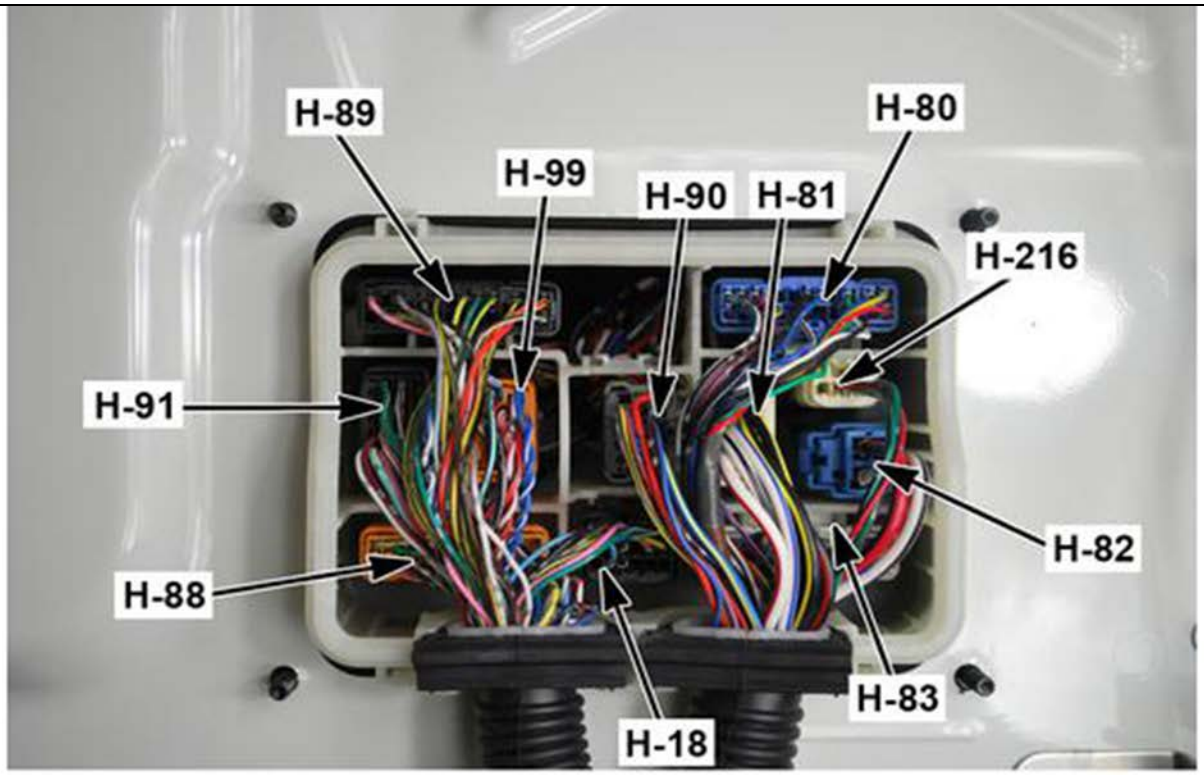

4891871

H-92 I/P Harness to the Door Harness (LH)

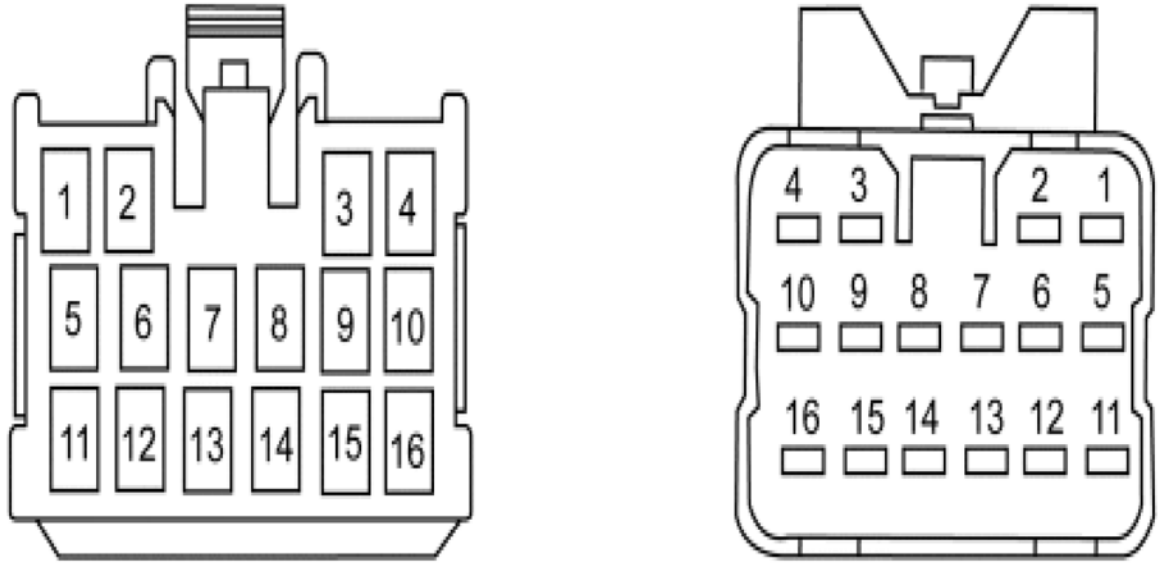

4891945

Connector Part Information		• 7383-1160 • 16-Way F (WHT)		Connector Part Information		• 7383-1160 • 16-Way M (WHT)	
Pin	**Wire Color**	**Circuit No**	**Function**	**Pin**	**Wire Color**	**Circuit No**	**Function**
1	BLU/RED	UA05	Power Window Down Voltage from Front Power Window Switch (LH)	1	BLU/RED	UA005B	Power Window Down Voltage from Front Power Window Switch (RH)
2	GRN/RED	VA106	Door Unlock Signal to Front Door Lock Motor (LH)	2	GRN/RED	VA006B	Door Unlock Signal from J/B 2 B-143 pin 6
3	BRN/YEL	UA03	Battery Voltage from Fuse F-6 to Front Power Window Switch (LH)	3	BRN/YEL	UA003B	Battery Voltage from Fuse F-6 from Fuse/ Relay Center (Cab)
4	RED/GRN	VA105	Door Unlock Signal to Front Door Lock Motor (LH)	4	RED/GRN	HC006B	Door Unlock Signal to RKE Module
5	YEL/RED	WA118	Mirror Heater Relay (LH) (Switched Output Voltage) to Upper Mirror Heater	5	YEL/RED	WA118B	Mirror Heater Relay (LH) (Switched Output Voltage) to B-379 Splice Pack
6	GRN/YEL	VA107	Door Lock Signal to Front Door Lock Motor (LH)	6	RED/YEL	VA007B	Door Lock Signal from J/B 2 B-143 pin 14
7	BLU/WHT	UA04	Power Window Up Voltage from Front Power Window Switch (LH)	7	BLU/WHT	UA004B	Power Window Up Voltage from Front Power Window Switch (RH)
8	GRN/BLK	VA104	Door Lock Signal to Front Door Lock Motor (LH)	8	GRN/BLK	VA004B	Door Lock Signal from J/B 2 (B-140 pin 12)
9	—	—	Not Used	9	—	—	Not Used
10	BLK	WX107	Ground to B-49 Junction Block (B-52 Ground) to Mirror (LH)	10	BLK/WHT	WX107B	Ground to B-49 Junction Block (B-52 Ground)
11	WHT/BLK	WA08	Up/Down Control Mirror (LH) to Mirror	11	WHT/BLK	WA008B	Up/Down Control Mirror (LH) to Power Mirror Switch

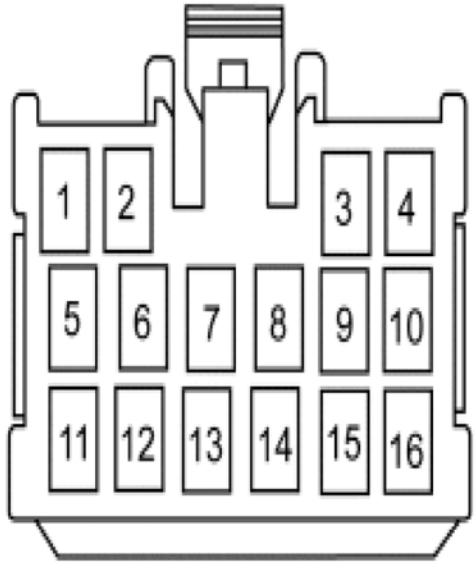

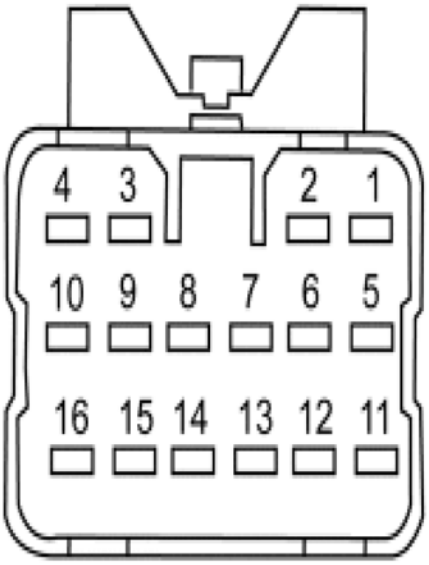

4891945

Connector Part Information		• 7383-1160 • 16-Way F (WHT)		Connector Part Information		• 7383-1160 • 16-Way M (WHT)	
Pin	**Wire Color**	**Circuit No**	**Function**	**Pin**	**Wire Color**	**Circuit No**	**Function**
12	BLK/GRN	WA10	Left/Right Control Mirror (LH) to Mirror	12	BLK/GRN	WA010B	Left/Right Control Mirror (LH) to Mirror to Power Mirror Switch
13	BLK/WHT	WA72 WA12	Common Control for Mirror (LH) and Mirror (RH) to Mirror	13	BLK/WHT	WA012B	Common Control for Mirror (LH) and Mirror (RH) to Power Window Switch
14	RED/YEL	WA16	Mirror Heater Relay (LH) (Switched Output Voltage) to Lower Mirror Heater	14	RED/YEL	WA016B	Mirror Heater Relay (LH) (Switched Output Voltage) to B-379 Splice Pack
15	—	—	Not Used	15	—	—	Not Used
16	BLK	WX05	Ground to B-49 Junction Block (B-52 Ground) to Mirror (LH)	16	BLK	WX005B	Ground to B-49 Junction Block (B-52 Ground)

Behind the Left Side of the I/P, Next to the A-Piller

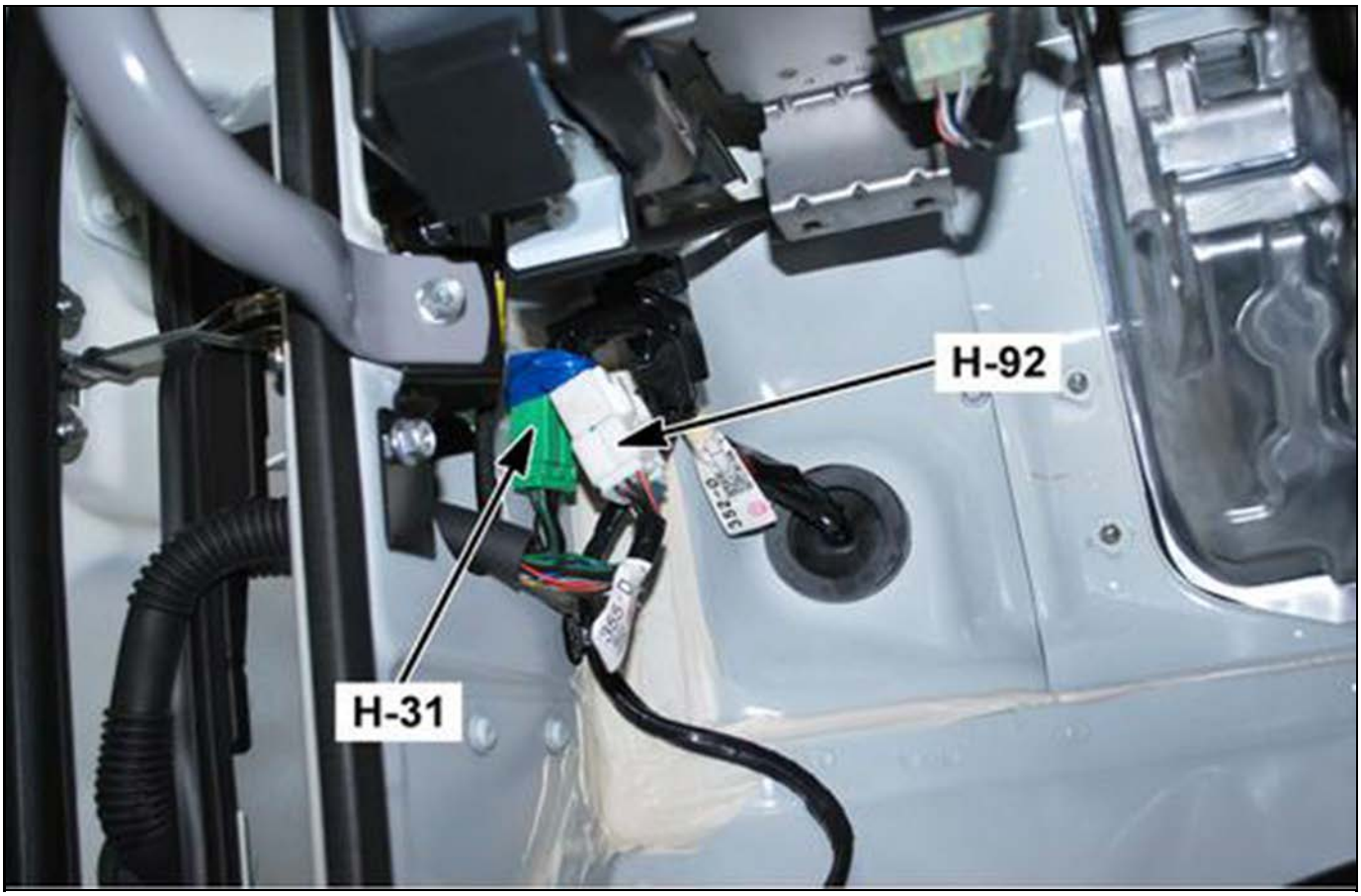

4891876

H-93 Floor Harness to I/P Harness

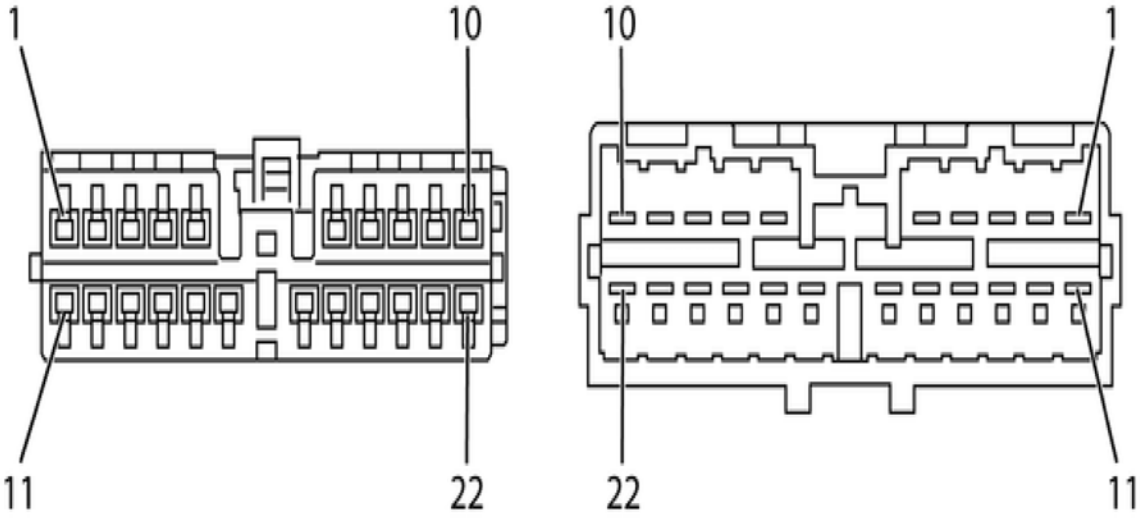

4891972

Connector Part Information		• 7323-8325-90 • 22-Way F (BLU)		Connector Part Information		• 7323-8325-90 • 22-Way M (BLU)	
Pin	**Wire Color**	**Circuit No**	**Function**	**Pin**	**Wire Color**	**Circuit No**	**Function**
1	LT GRN/RED	BA61	Fuse F-28 Voltage (Headlamp Switch ON) to Shift Lever	1	LT GRN/RED	BA061B	Fuse F-28 Voltage (Headlamp Switch ON) from J/B 1 (B-138 pin 17)
2	WHT/GRN	MA10	Seat Belt Indicator Control to IPC	2	WHT/GRN	MA010B	Seat Belt Indicator Control from Seat Belt Switch
3–21	—	—	Not Used	3–21	—	—	Not Used
22	LT GRN/BLK	BA64	Dimming Control to Shift Lever	22	LT GRN/BLK	BA063B	Dimming Control to Dimming Control Switch

Center of the I/P, Above the Accelerator Pedal

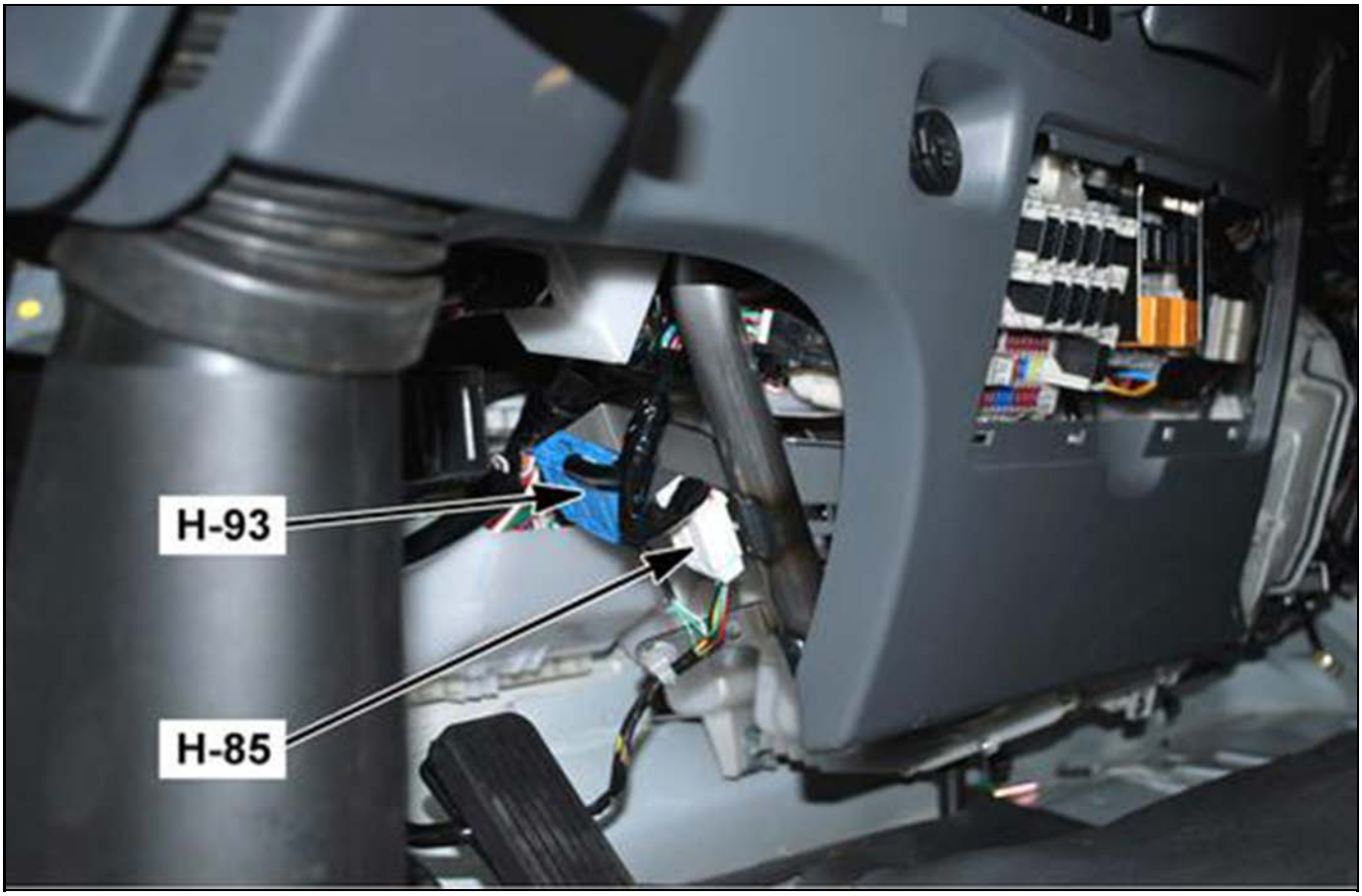

4891943

H-97 Mirror Harness to Door Harness (RH)

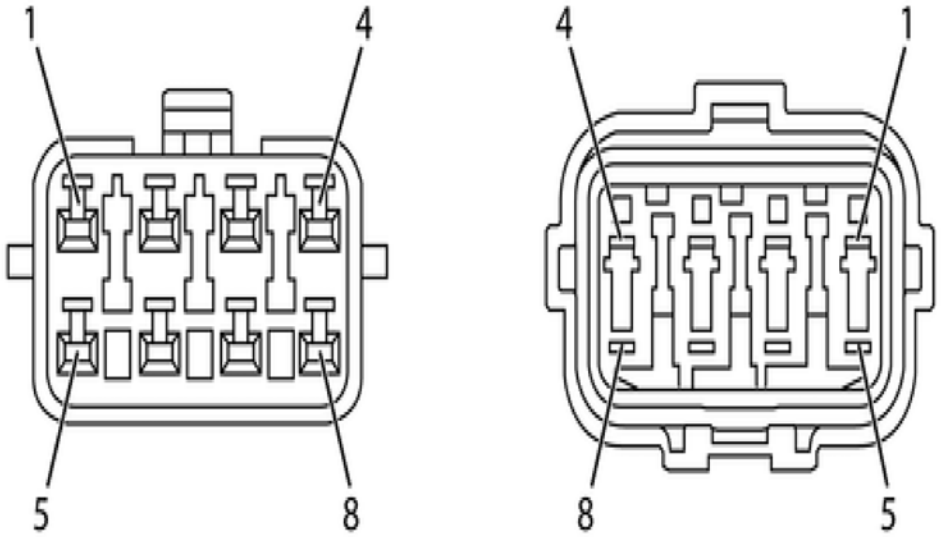

4891973

Connector Part Information		• 7323-7484-40 • 8-Way F (GRY)		Connector Part Information		• 7323-7484-40 • 8-Way M (GRY)	
Pin	**Wire Color**	**Circuit No**	**Function**	**Pin**	**Wire Color**	**Circuit No**	**Function**
1	RED/YEL	WA16	Mirror Heater Relay (RH) (Switched Output Voltage) to Lower Mirror Heater	1	RED/YEL	WA17	Mirror Heater Relay (RH) (Switched Output Voltage) to B-379 Splice Pack
2	YEL/RED	WA118B	Mirror Heater Relay (RH) (Switched Output Voltage) to Upper Mirror Heater	2	YEL/RED	WA19	Mirror Heater Relay (RH) (Switched Output Voltage) to B-379 Splice Pack
3	BLK	WX05	Ground to B-48 Junction Block (B-53 Ground) to Mirror (RH)	3	BLK	WX06	Ground to B-48 Junction Block (B-53 Ground)
4	BLK/RED	WX107	Ground to B-48 Junction Block (B-53 Ground) to Mirror (RH)	4	BLK	WX08	Ground to B-48 Junction Block (B-53 Ground)
5	WHT/BLK	WA08	Up/Down Mirror Control to Mirror	5	WHT/BLK	WA09	Up/Down Mirror Control to Power Mirror Switch
6	BLK/GRN	WA10	Left/Right Mirror Control to Mirror	6	BLK/GRN	WA11	Left/Right Mirror Control to Power Mirror Switch
7	BLK/WHT	WA12	Common Mirror Control to Mirror	7	BLK/WHT	WA13	Common Mirror Control to Power Mirror Switch
8	—	—	Not Used	8	—	—	Not Used

Right Front Door, Behind the Lower Mirror Arm Trim

4891974

H-98 Mirror Harness to Door Harness (LH)

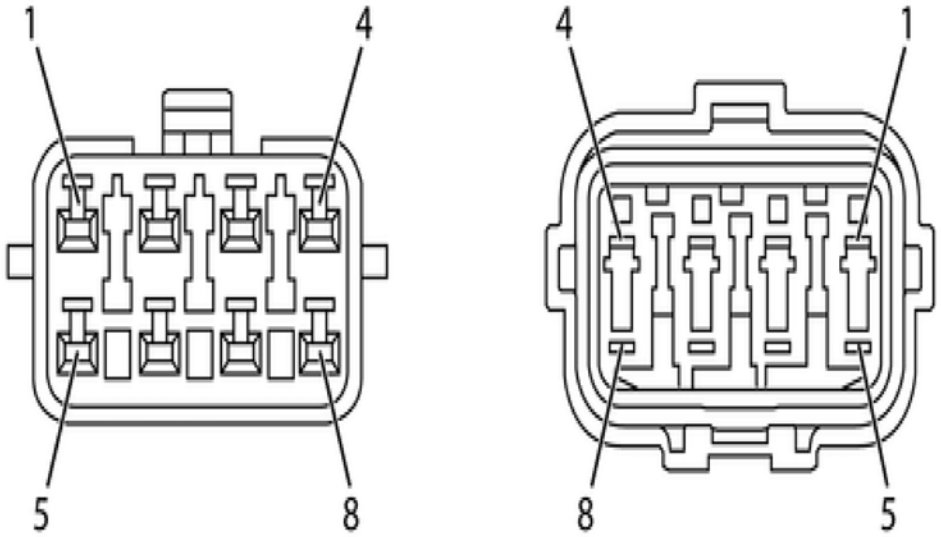

4891973

Connector Part Information		• 7323-7484-40 • 8-Way F (GRY)		Connector Part Information		• 7323-7484-40 • 8-Way M (GRY)	
Pin	**Wire Color**	**Circuit No**	**Function**	**Pin**	**Wire Color**	**Circuit No**	**Function**
1	RED/YEL	WA16	Mirror Heater Relay (LH) (Switched Output Voltage) to Splice Pack B-379	1	RED/YEL	WA16	Mirror Heater Relay (LH) (Switched Output Voltage) to Lower Mirror Heater
2	YEL/RED	WA118B	Mirror Heater Relay (LH) (Switched Output Voltage) to Splice Pack B-379	2	YEL/RED	WA118	Mirror Heater Relay (LH) (Switched Output Voltage) to Upper Mirror Heater
3	BLK	WX05	Ground to B-49 Junction Block (B-52 Ground) to Mirror (LH)	3	BLK	WX05	Ground to B-49 Junction Block (B-52 Ground)
4	BLK/RED	WX107	Ground to B-49 Junction Block (B-52 Ground) to Mirror (LH)	4	BLK	WX107	Ground to B-49 Junction Block (B-52 Ground)
5	WHT/BLK	WA08	Up/Down Control Mirror (LH) to Mirror	5	WHT/BLK	WA08	Up/Down Control Mirror (LH) to Power Mirror Switch
6	BLK/GRN	WA10	Left/Right Control Mirror (LH) to Mirror	6	BLK/GRN	WA10	Left/Right Control Mirror (LH) to Power Mirror Switch
7	BLK/WHT	WA12	Common Control for Mirror (LH) and Mirror (RH) to Mirror	7	BLK/WHT	WA12	Common Control for Mirror (LH) and Mirror (RH) to Power Mirror Switch
8	—	—	Not Used	8	—	—	Not Used

Left Front Door, Behind the Lower Mirror Arm Trim

4891979

H-99 Front Chassis Harness to I/P Harness

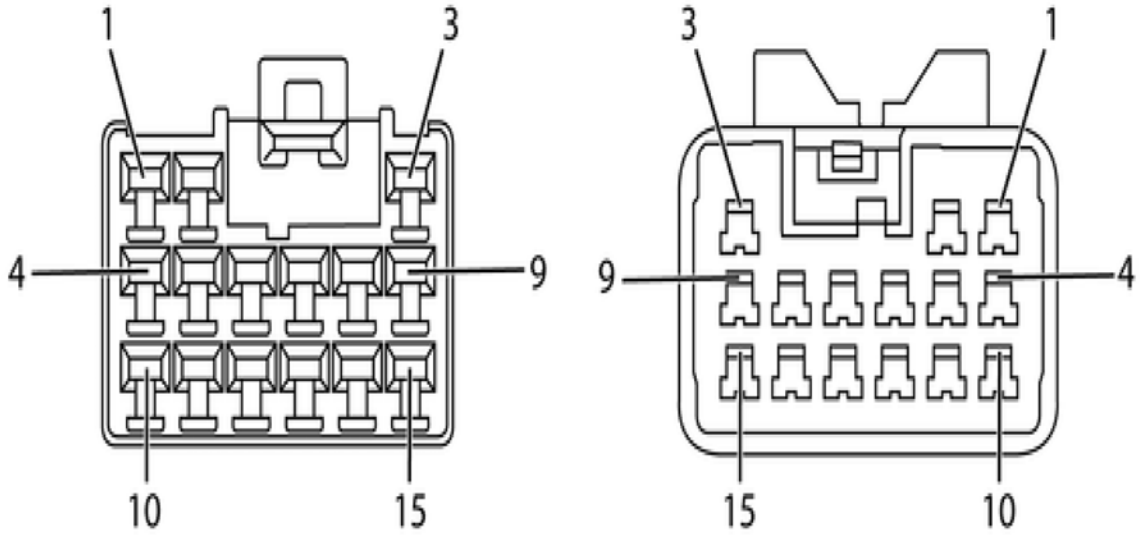

4891870

Connector Part Information		• 7383-1150-50 • 15-Way F (ORN)		Connector Part Information		• 7383-1150-50 • 15-Way M (ORN)	
Pin	**Wire Color**	**Circuit No**	**Function**	**Pin**	**Wire Color**	**Circuit No**	**Function**
1	GRN/WHT	BB103C	Left Front Pressure Modulator Valve Hold Control to Modulator	1	GRN/WHT	BB103B	Left Front Pressure Modulator Valve Hold Control to EBCM
2	BLK/RED	BB104C	Left Front Pressure Modulator Low Reference to Modulator	2	BLK/RED	BB104B	Left Front Pressure Modulator Low Reference to EBCM
3	RED	BB105C	Left Front Pressure Modulator Valve Release Control to Modulator	3	RED	BB105B	Left Front Pressure Modulator Valve Release Control to EBCM
4	WHT/BLU	BB106C	Left Front Wheel Speed Sensor Signal to Sensor	4	WHT/BLU	BB106B	Left Front Wheel Speed Sensor Signal to EBCM
5	BLK/BLU	BB107C	Left Front Wheel Speed Sensor 5 Volt Reference to Sensor	5	BLK/BLU	BB107B	Left Front Wheel Speed Sensor 5 Volt Reference to EBCM
6	WHT/RED	BB108C	Right Front Pressure Modulator Valve Hold Control to Modulator	6	WHT/RED	BB108B	Right Front Pressure Modulator Valve Hold Control to EBCM
7	RED/BLK	BB109C	Right Front Pressure Modulator Low Reference to Modulator	7	RED/BLK	BB109B	Right Front Pressure Modulator Low Reference to EBCM
8	WHT/BLK	BB110C	Right Front Pressure Modulator Valve Release Control to Modulator	8	WHT/BLK	BB110B	Right Front Pressure Modulator Valve Release Control to EBCM
9	BLU/WHT	BB111C	Right Front Wheel Speed Sensor Signal to Sensor	9	BLU/WHT	BB111B	Right Front Wheel Speed Sensor Signal to EBCM
10	BLU	BB112C	Right Front Wheel Speed Sensor 5 Volt Reference to Sensor	10	BLU	BB112B	Right Front Wheel Speed Sensor 5 Volt Reference to EBCM

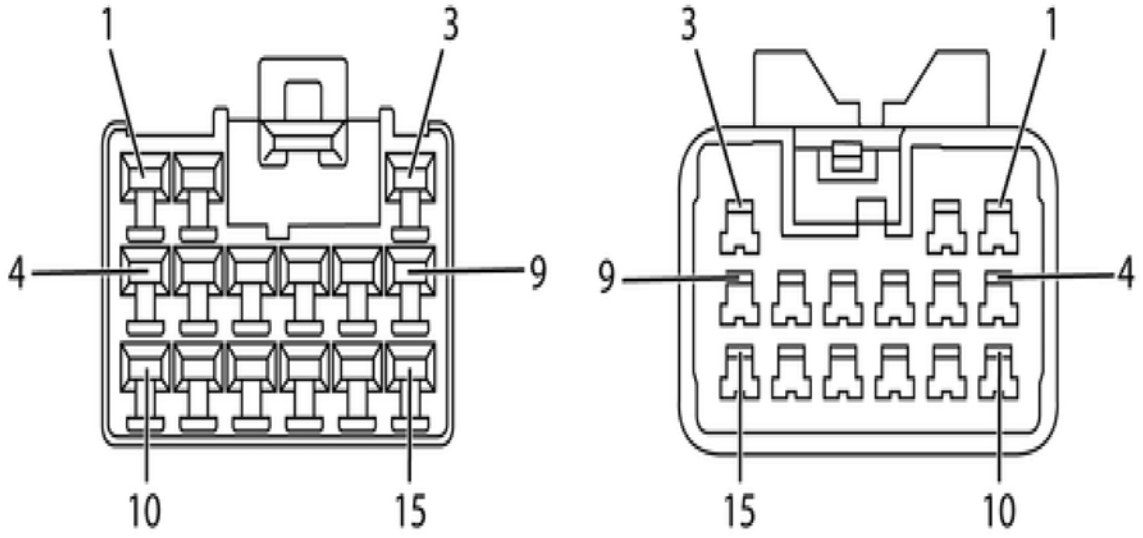

4891870

Connector Part Information		• 7383-1150-50 • 15-Way F (ORN)		Connector Part Information		• 7383-1150-50 • 15-Way M (ORN)	
Pin	**Wire Color**	**Circuit No**	**Function**	**Pin**	**Wire Color**	**Circuit No**	**Function**
11	WHT/BLU	BB113C	Left Rear Pressure Modulator Valve Hold Control to Modulator	11	WH/BLU	BB113B	Left Rear Pressure Modulator Valve Hold Control to EBCM
12	BLK/WHT	BB114C	Left Rear Pressure Modulator Low Reference to Modulator	12	BLK/WHT	BB114B	Left Rear Pressure Modulator Low Reference to EBCM
13	RED/BLU	BB115C	Left Rear Pressure Modulator Valve Release Control to Modulator	13	RED/BLU	BB115B	Left Rear Pressure Modulator Valve Release Control to EBCM
14	WHT/RED	BB116C	Left Rear Wheel Speed Sensor 5 Volt Reference to Sensor	14	WHT/RED	BB116B	Left Rear Wheel Speed Sensor 5 Volt Reference to EBCM
15	ORN/BLK	BB117C	Left Rear Wheel Speed Sensor Signal to Sensor	15	ORN/BLK	BB117B	Left Rear Wheel Speed Sensor Signal to EBCM

Front of the Cab, Behind the Washer Fluid Reservoir

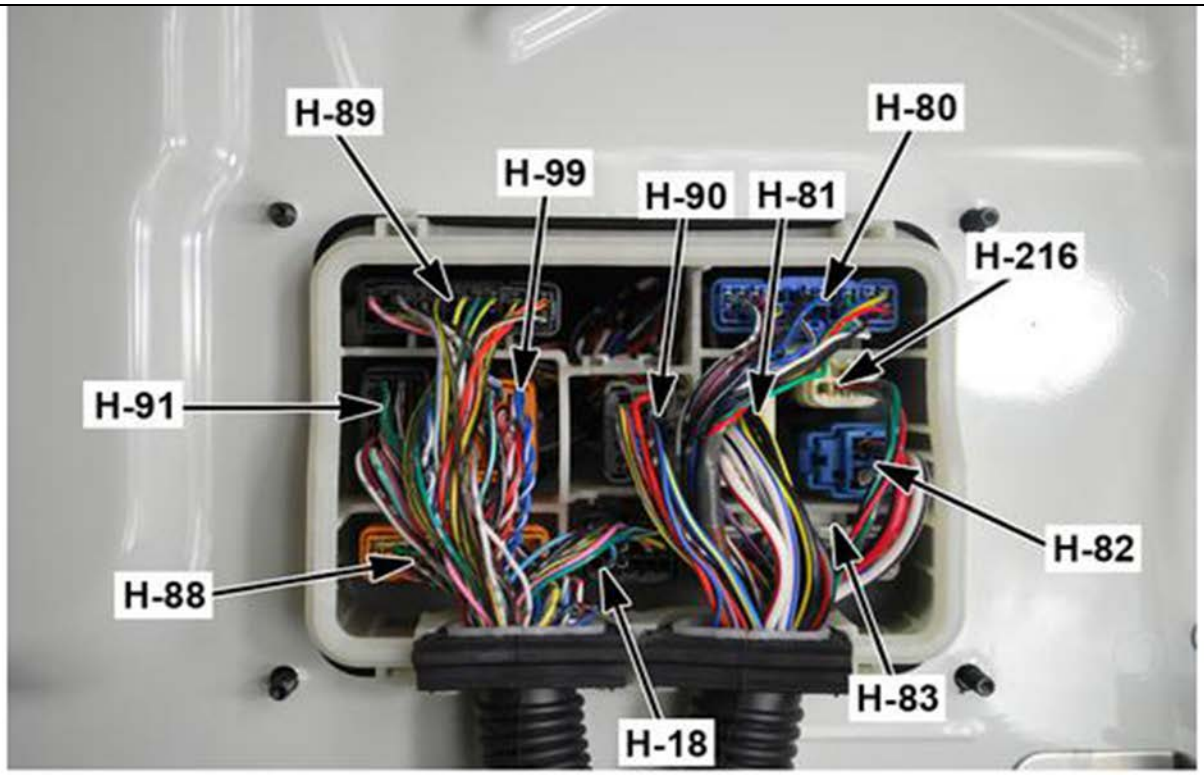

4891871

H-104 Rear Frame Harness to the PTO Harness

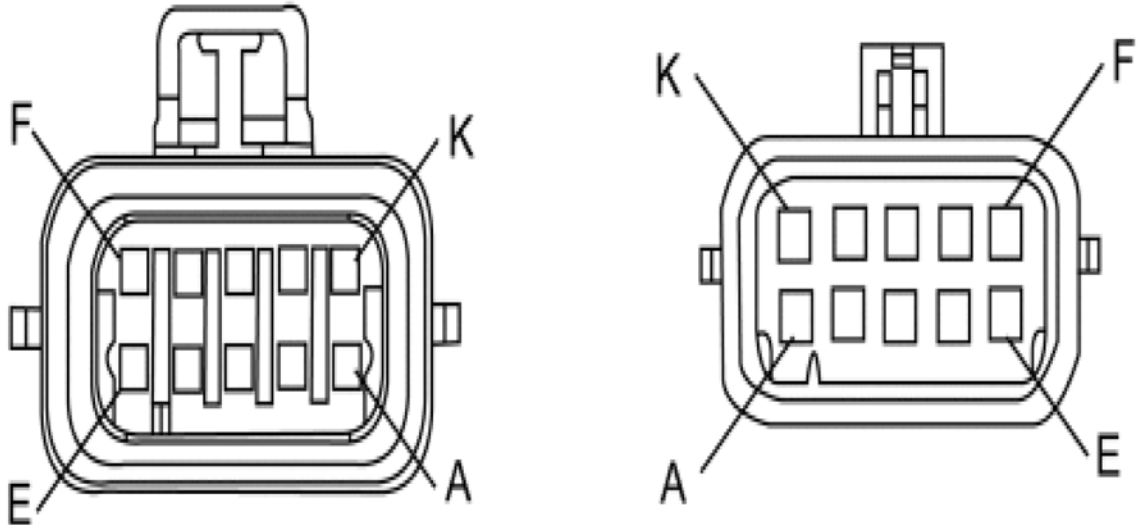

4891984

Connector Part Information		• 12065425 • 10-Way F (BLK)		Connector Part Information		• 12045808 • 10-Way M (BLK) • Body Builder Installed	
Pin	**Wire Color**	**Circuit No**	**Function**	**Pin**	**Wire Color**	**Circuit No**	**Function**
A	RED/BLK	IC180C	Ignition Voltage from Fuse F-18	A	—	—	—

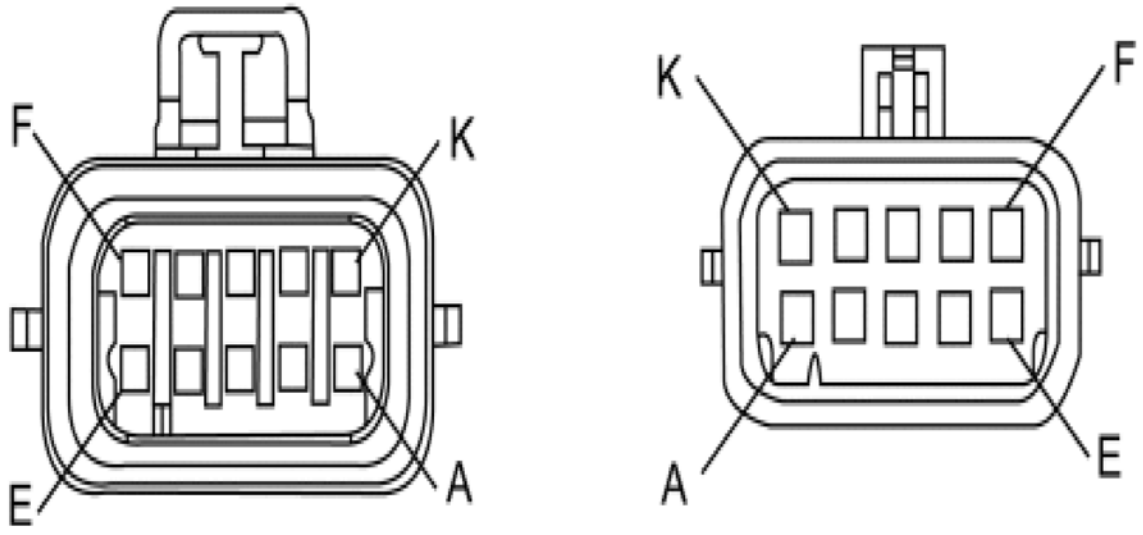

4891984

Connector Part Information		• 12065425 • 10-Way F (BLK)		Connector Part Information		• 12045808 • 10-Way M (BLK) • Body Builder Installed	
Pin	**Wire Color**	**Circuit No**	**Function**	**Pin**	**Wire Color**	**Circuit No**	**Function**
B	RED/GRN	IC168C	PTO Brake/Clutch Override Switch Signal	B	—	—	—
C	RED/BLU	IC166C	Remote PTO Set Speed B Switch Signal	C	—	—	—
D	GRY/RED	IC165C	Remote PTO Set Speed A Switch Signal	D	—	—	—
E	BRN	IC167C	PTO Cab Control Disable Switch Signal	E	—	—	—
F	PNK/BLK	IC169C	PTO Shut Down Switch Signal	F	—	—	—
G	WHT	WB051C	PTO Switch Signal to TCM	G	—	—	—
H	BLK	IZ007C	Ground to Splice 5 (J-7 and J-9)	H	—	—	—
J	RED/GRN	IC171C	Remote PTO Set Switch Signal	J	—	—	—
K	RED/BLK	IC170C	Remote PTO Resume Switch Signal	K	—	—	—

Between the Frame Rails on the Crossmember, Next to the Diesel Particulate Filter (DPF)

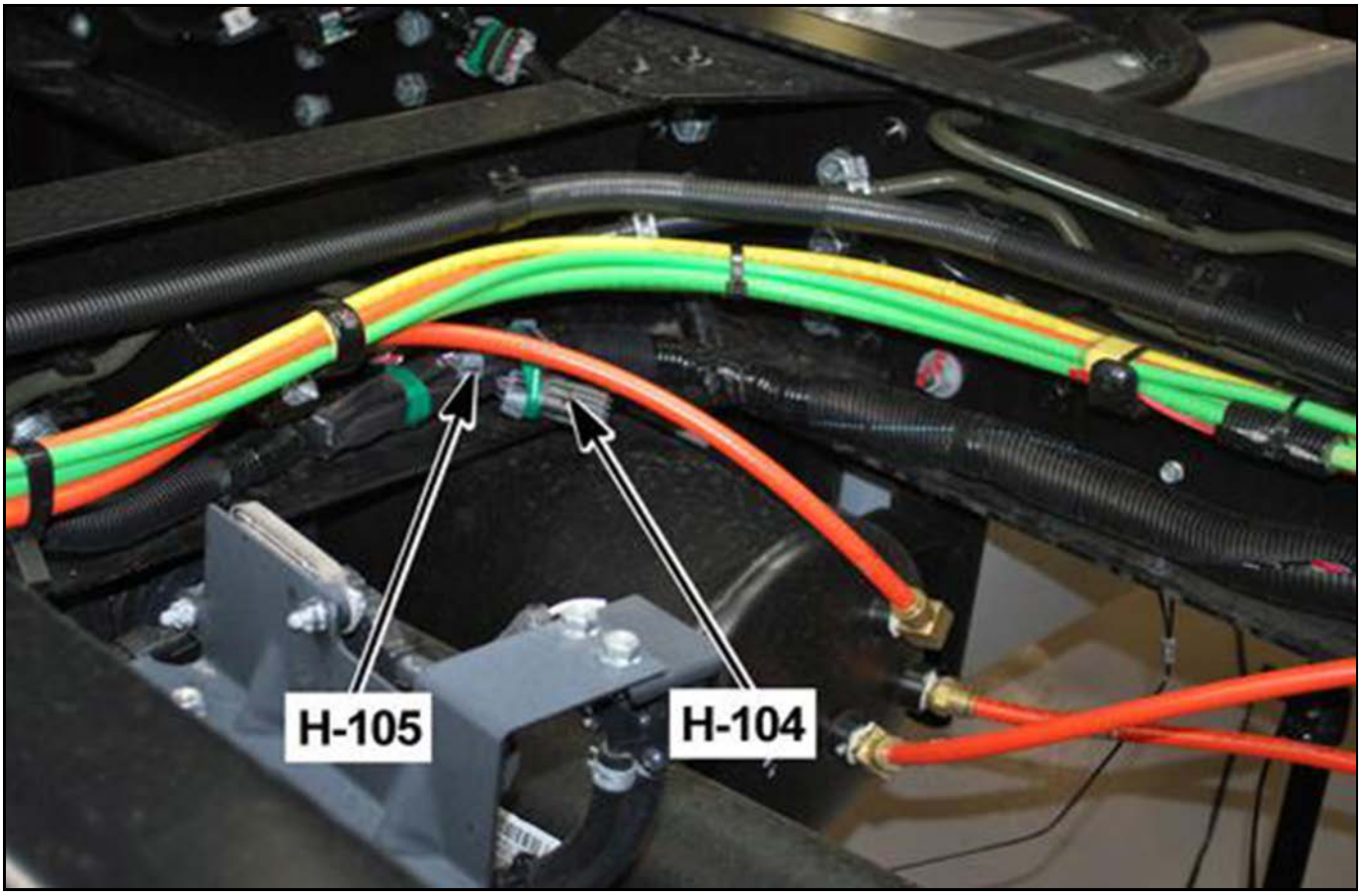

4891986

H-105 Rear Frame Harness to the PTO Harness

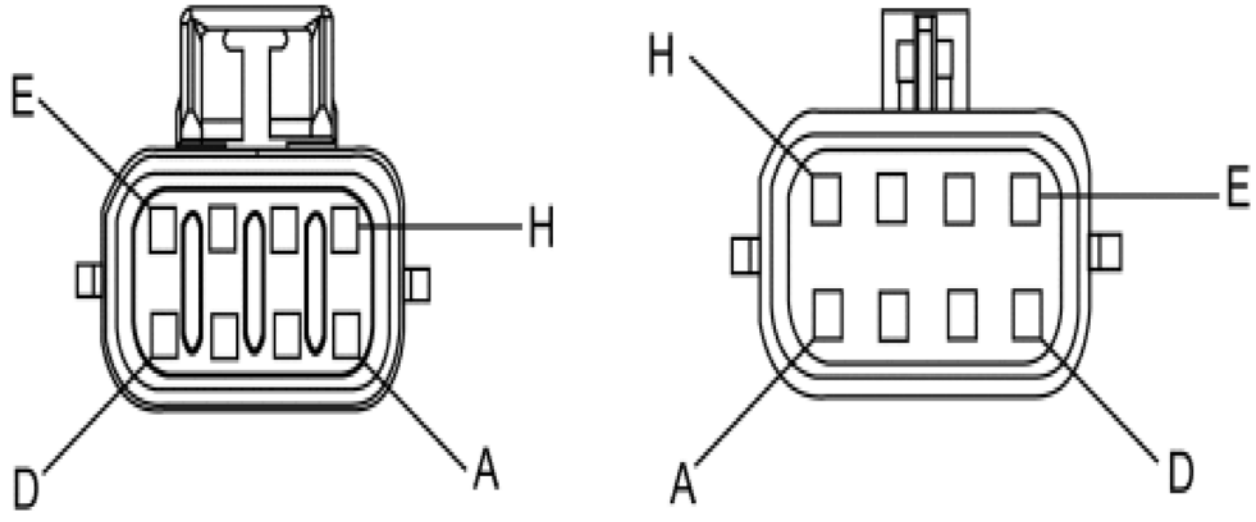

4891993

Connector Part Information		• 12047937 • 8-Way F (BLK)		Connector Part Information		• 12047937 • 8-Way M (BLK) • Body Builder Installed	
Pin	**Wire Color**	**Circuit No**	**Function**	**Pin**	**Wire Color**	**Circuit No**	**Function**
A	BLK/WHT	IC172C	PTO Enable Relay Signal	A	—	—	—
B	PNK/GRN	IC173C	PTO Enable Relay Control	B	—	—	—
C	PNK	IC181C	PTO Engage Switch Signal	C	—	—	—
D	BLU/YEL	IC188C	Remote PTO Set Switch	D	—	—	—
E	BLU	IC037C	PTO Throttle Sensor Reference Voltage	E	—	—	—
F	YEL	IC038C	PTO Throttle Sensor Signal	F	—	—	—
G	BLU/RED	IC039C	PTO Throttle Sensor Low Reference	G	—	—	—
H	BLU/ORN	IC187C	Remote PTO Resume Switch	H	—	—	—

Between the Frame Rails on the Crossmember, Next to the Diesel Particulate Filter (DPF)

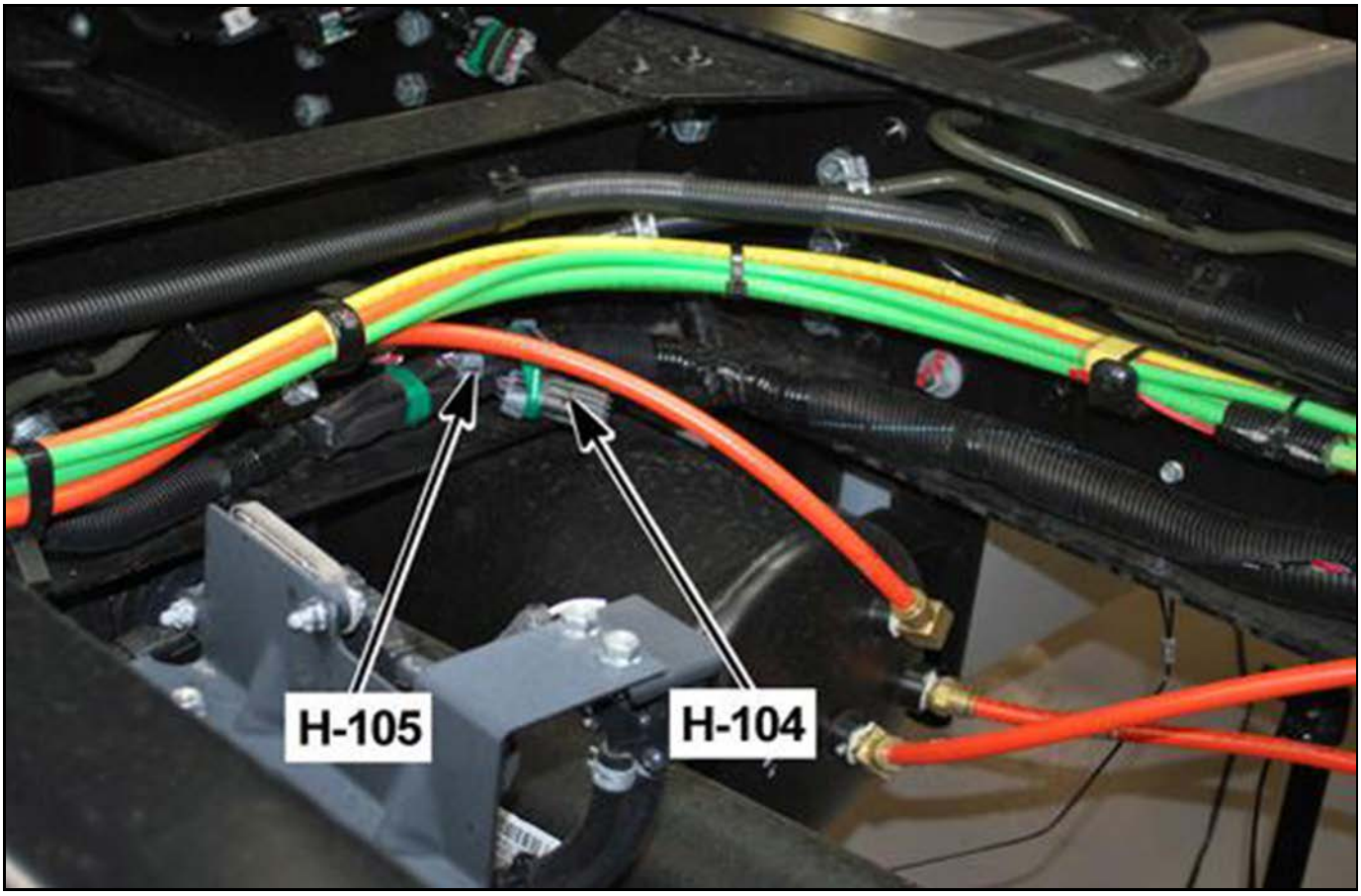

4891986

H-107 Engine Harness to Cylinder Head Pass-Through

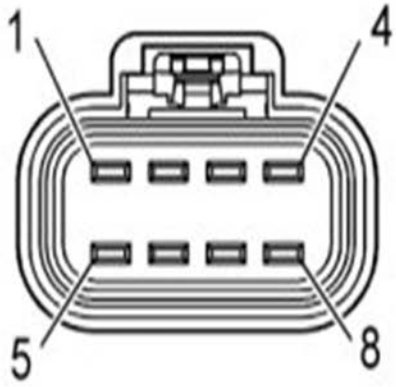

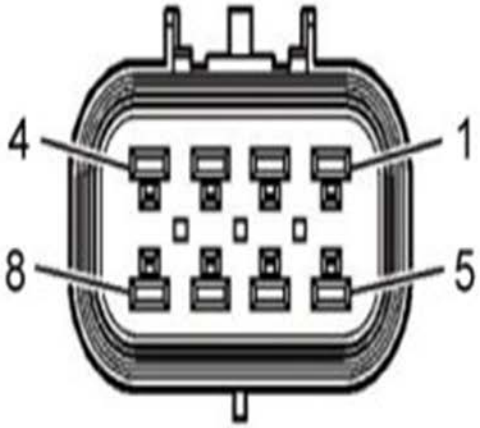

4891906

Connector Part Information		• 7283-1364-40 • 8-Way F (BRN)		Connector Part Information		• Cylinder Head Pass Through	
Pin	**Wire Color**	**Circuit No**	**Function**	**Pin**	**Wire Color**	**Circuit No**	**Function**
1	WHT/RED	IC97	#1 & 4 Injector Voltage	1	—	—	#1 & 4 Injector Voltage
2	RED/WHT	IC149	#2 & 3 Injector Voltage	2	—	—	#2 & 3 Injector Voltage
3	VIO	IC503	#2 & 3 Injector Voltage	3	—	—	#2 & 3 Injector Voltage
4	LT GRN	IC502	#1 & 4 Injector Voltage	4	—	—	#1 & 4 Injector Voltage
5	GRN/RED	IC151	#1 Injector Control	5	—	—	#1 Injector Control
6	GRN/BLK	IC105	#2 Injector Control	6	—	—	#2 Injector Control
7	BLK/YEL	IC104	#3 Injector Control	7	—	—	#3 Injector Control
8	WHT/VIO	IC152	#4 Injector Control	8	—	—	#4 Injector Control

On the Upper Left Side of the Cylinder Head Between Injector 2 and 3

4891999

H-108 Engine Harness to the Engine/Injector Harness Connector

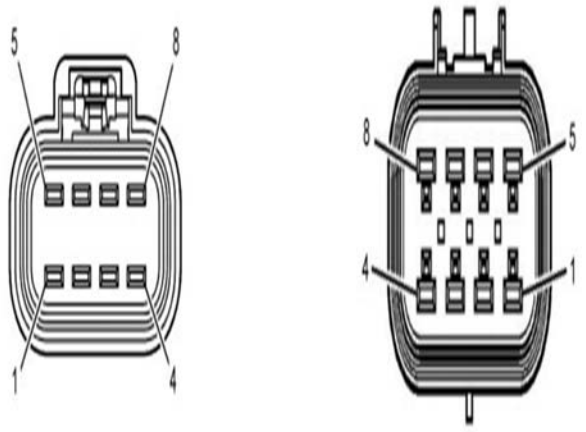

4892003

Connector Part Information		• 894391-4761 • 8-Way F (DK GRY)		Connector Part Information		• Cylinder Head Pass Through	
Pin	**Wire Color**	**Circuit No**	**Function**	**Pin**	**Wire Color**	**Circuit No**	**Function**
1	WHT	2	#1 Injector Voltage	1	—	—	#1 Injector Voltage
2	RED	5	#2 Injector Voltage	2	—	—	#2 Injector Voltage
3	RED	7	#3 Injector Voltage	3	—	—	#3 Injector Voltage
4	WHT	9	#4 Injector Voltage	4	—	—	#4 Injector Voltage
5	GRN	3	#1 Injector Control	5	—	—	#1 Injector Voltage
6	BLU	6	#2 Injector Control	6	—	—	#2 Injector Voltage
7	YEL	8	#3 Injector Control	7	—	—	#3 Injector Voltage
8	BLK	10	#4 Injector Control	8	—	—	#4 Injector Voltage

On the Upper Left Side of the Cylinder Head Between Injector 2 and 3

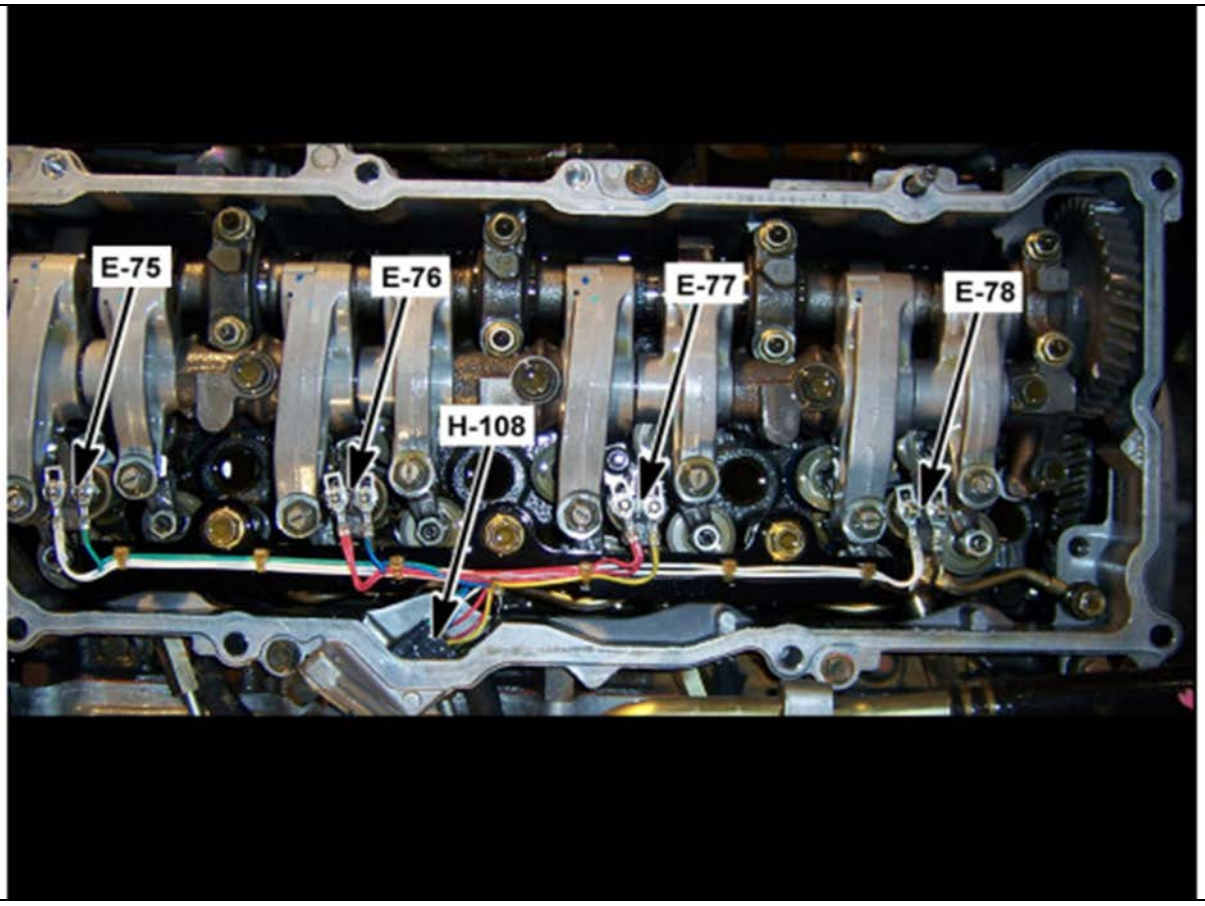

4891806

H-115 Front Chassis Harness to Front Chassis Extension Harness

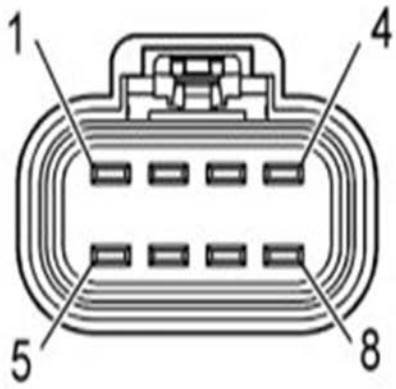

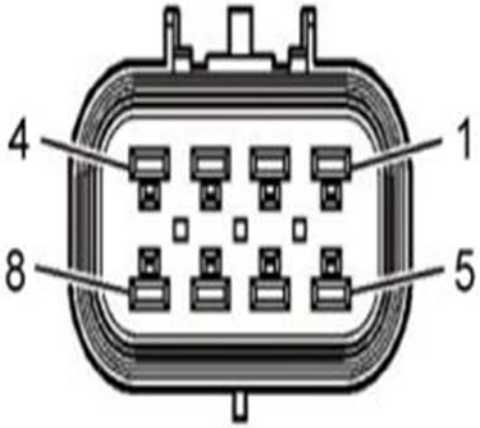

4891906

Connector Part Information		• X010369 • 8-Way F (BLK)		Connector Part Information		• X010371 • 8-Way M (BLK)	
Pin	**Wire Color**	**Circuit No**	**Function**	**Pin**	**Wire Color**	**Circuit No**	**Function**
1	GRN/WHT	BB103C	Left Front Pressure Modulator Valve Hold Control to EBCM	1	GRN/WHT	BB103L	Left Front Pressure Modulator Valve Hold Control to Modulator
2	BLK/RED	BB104C	Left Front Pressure Modulator Low Reference to EBCM	2	BLK/RED	BB104L	Left Front Pressure Modulator Low Reference to Modulator
3	RED	BB105C	Left Front Pressure Modulator Valve Release Control to EBCM	3	RED	BB105L	Left Front Pressure Modulator Valve Release Control to Modulator
4	WHT/RED	BB108C	Right Front Pressure Modulator Valve Hold Control to EBCM	4	WHT/RED	BB108L	Right Front Pressure Modulator Valve Hold Control to Modulator
5	RED/BLK	BB109C	Right Front Pressure Modulator Low Reference to EBCM	5	PNK/BLK	BB109L	Right Front Pressure Modulator Low Reference to Modulator
6	WHT/BLK	BB110C	Right Front Pressure Modulator Valve Release Control to EBCM	6	WHT/BLK	BB110L	Right Front Pressure Modulator Valve Release Control to Modulator
7	BLU/WHT	BB111C	Right Front Wheel Speed Sensor Signal to Sensor	7	BLU/WHT	BB111L	Right Front Wheel Speed Sensor Signal to EBCM
8	BLU	BB112C	Right Front Wheel Speed Sensor 5 Volt Reference to Sensor	8	BLU	BB112L	Right Front Wheel Speed Sensor 5 Volt Reference to EBCM

Right Front Frame Area, Behind the Front Bumper

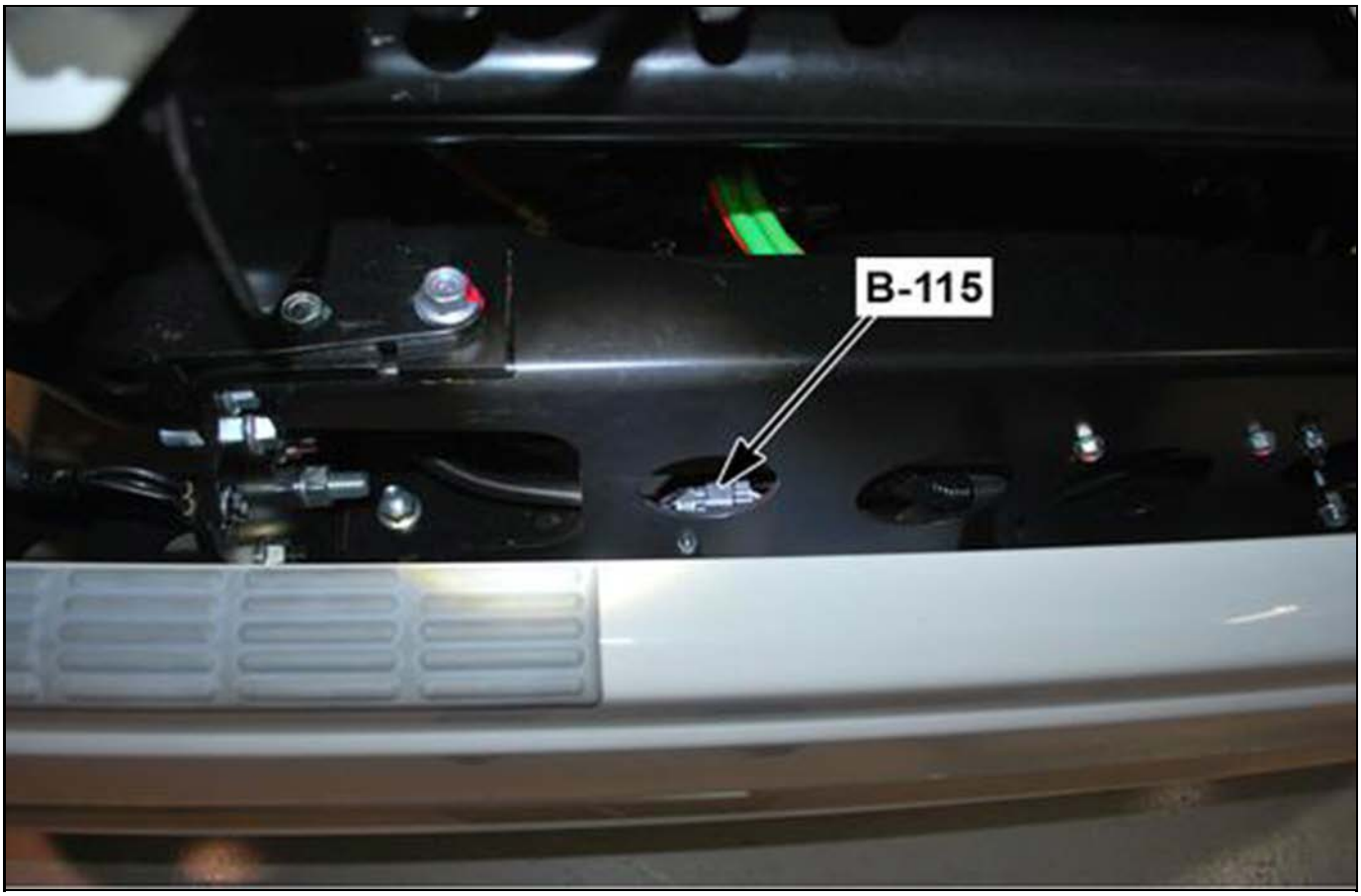

4892005

H-117 Front Chassis Harness to Rear Chassis Harness

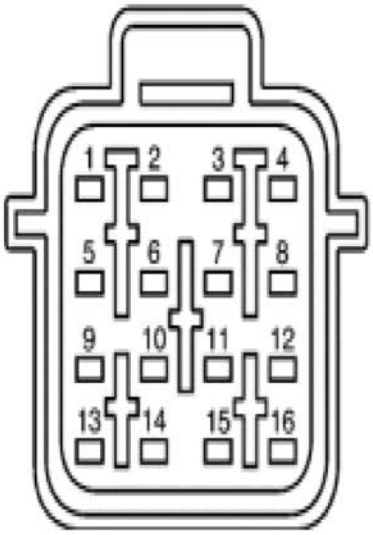

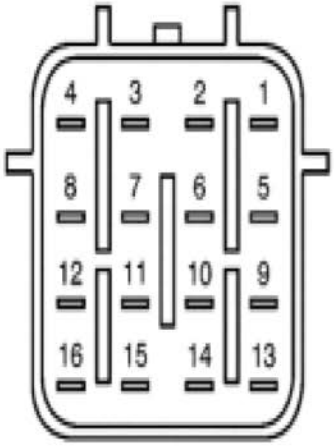

4891890

Connector Part Information		• X010419 • 16-Way F (BLU)		Connector Part Information		• X010424 • 16-Way M (BLU)	
Pin	**Wire Color**	**Circuit No**	**Function**	**Pin**	**Wire Color**	**Circuit No**	**Function**
1	WHT/BLU	BB113C	Left Rear Pressure Modulator Valve Hold Control to EBCM	1	WHT/BLU	BB113D	Left Rear Pressure Modulator Valve Hold Control to Modulator
2	BLK/WHT	BB114C	Left Rear Pressure Modulator Common (Low Reference) to EBCM	2	BLK/WHT	BB114D	Left Rear Pressure Modulator Common (Low Reference) to Modulator
3	RED/BLU	BB115C	Left Rear Pressure Modulator Valve Release Control to EBCM	3	RED/BLU	BB115D	Left Rear Pressure Modulator Valve Release Control to Modulator
4	—	—	Not Used	4	—	—	Not Used
5	WHT/GRN	BB118C	Right Rear Pressure Modulator Valve Hold Control to EBCM	5	WHT/GRN	BB118D	Right Rear Pressure Modulator Valve Hold Control to Modulator
6	BLK/ORN	BB119C	Right Rear Pressure Modulator Common (Low Reference) to EBCM	6	BLK/ORN	BB119D	Right Rear Pressure Modulator Common (Low Reference) to Modulator
7	RED/GRN	BB120C	Left Rear Pressure Modulator Valve Release Control to EBCM	7	RED/GRN	BB120D	Left Rear Pressure Modulator Valve Release Control to Modulator
8–16	—	—	Not Used	8–16	—	—	Not Used

Left Inner Frame Rail, Next to the Fuel Tank

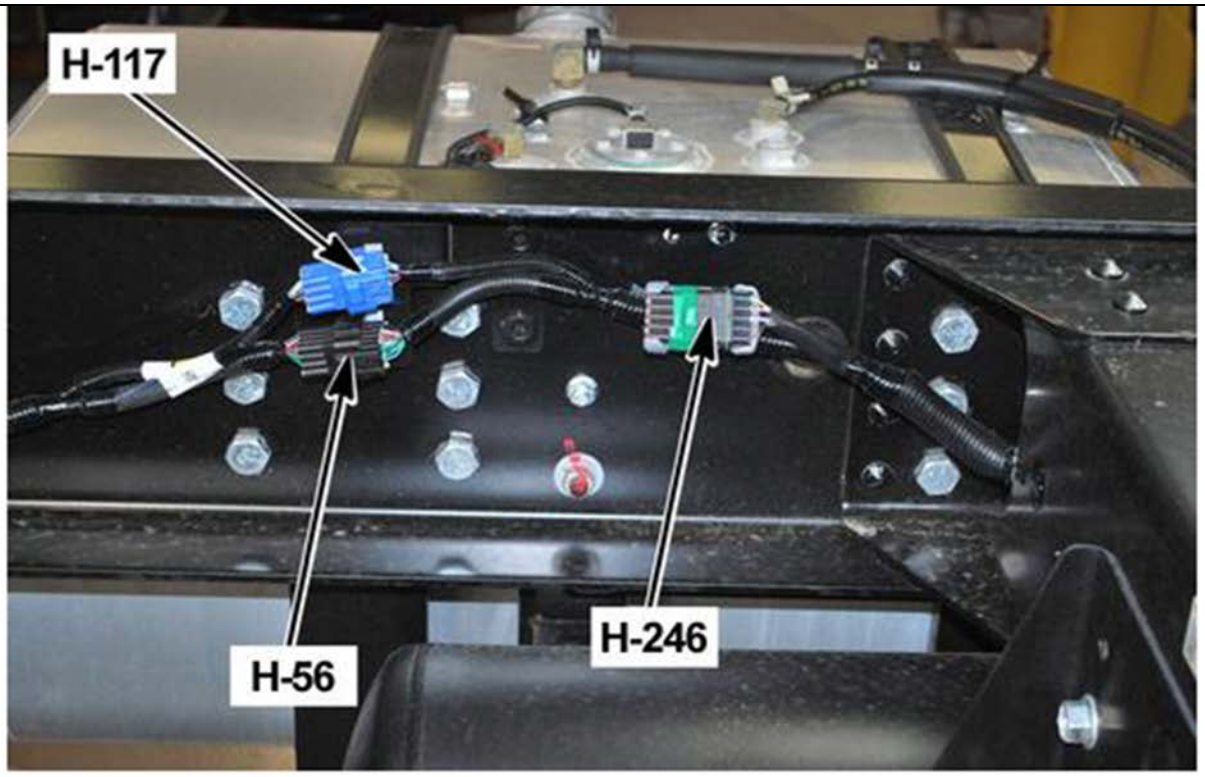

4891901

H-171 Front Chassis Harness to DEF Supply Module and DEF Level Sensor

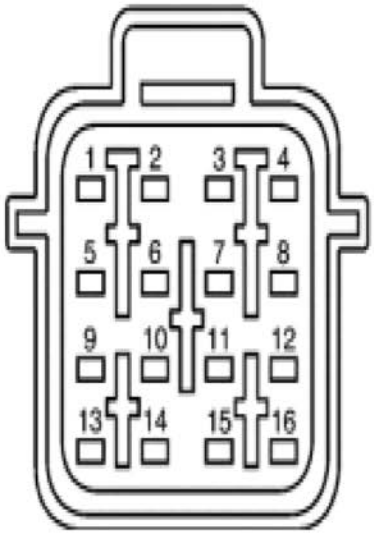

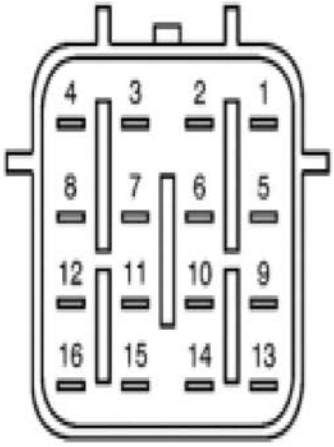

4891890

Connector Part Information		• X010418 • 16-Way F (BLK)		Connector Part Information		• X010423 • 16-Way M (BLK)	
Pin	**Wire Color**	**Circuit No**	**Function**	**Pin**	**Wire Color**	**Circuit No**	**Function**
1	RED/BLU	FG25	Diesel Exhaust Fluid (DEF) Fluid Supply Pump Motor Voltage to DEF Pump	1	RED/BLU	FG025C	Diesel Exhaust Fluid (DEF) Fluid Supply Pump Motor Voltage to DEF Module
2	WHT/BLK	FG26	DEF Fluid Supply Pump Motor Low Reference to DEF Pump	2	WHT/BLK	FG026C	DEF Fluid Supply Pump Motor Low Reference to DEF Module
3	GRY	FG27	DEF Fluid Supply Pump Motor Control to DEF Pump	3	GRY	FG027C	DEF Fluid Supply Pump Motor Control to DEF Module
4	RED	FG28	DEF Fluid Supply Pump Reverting Valve Voltage to DEF Pump	4	RED	FG028C	DEF Fluid Supply Pump Reverting Valve Voltage to DEF Module
5	LT GRN	FG29	DEF Fluid Supply Pump Reverting Valve Control to DEF Pump	5	LT GRN	FG029C	DEF Fluid Supply Pump Reverting Valve Control to DEF Module
6	WHT/BLU	FG30	DEF Fluid Supply Pump Pressure Sensor Low Reference to DEF Pump	6	WHT/BLU	FG030C	DEF Fluid Supply Pump Pressure Sensor Low Reference to DEF Module
7	VIO/YEL	FG31	DEF Fluid Supply Pump Pressure Sensor 5V to DEF Pump	7	VIO/YEL	FG031C	DEF Fluid Supply Pump Pressure Sensor 5V to DEF Module
8	PNK	FG32	DEF Fluid Supply Pump Pressure Sensor Signal to DEF Pump	8	PNK	FG032C	DEF Fluid Supply Pump Pressure Sensor Signal to DEF Module
9	BLU/WHT	TF301	CAN 3 Low to Diesel Exhaust Fluid (DEF) Tank & Level sensor, DEF Control Module	9	BLU/WHT	TF301C	CAN 3 Low to NOx Sensors 1 and 2

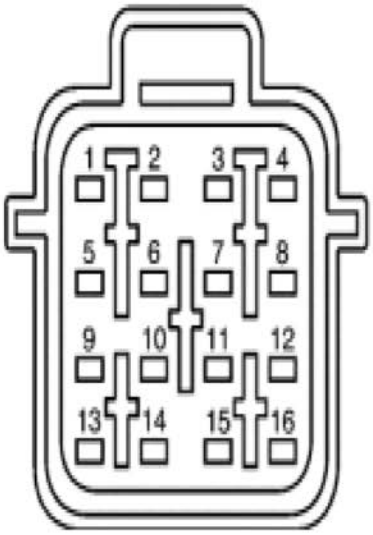

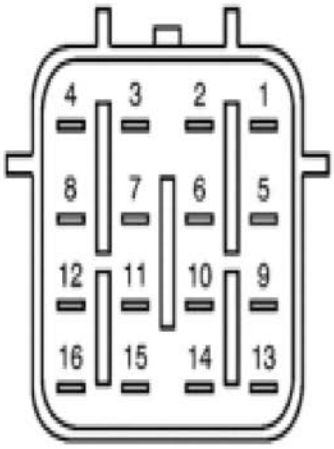

4891890

Connector Part Information		• X010418 • 16-Way F (BLK)		Connector Part Information		• X010423 • 16-Way M (BLK)	
Pin	**Wire Color**	**Circuit No**	**Function**	**Pin**	**Wire Color**	**Circuit No**	**Function**
10	BLU/WHT	TF405	CAN 3 Low to DEF Control Module	10	BLU/WHT	TF511C	CAN 3 Low to DEF Level & Temperature Sensor, NOx Sensors 1 and 2
11	BLU/WHT	FG36	DEF Tank and Temperature Sensor Voltage to Sensor	11	BLK/ORN	FG046C	DEF Tank and Temperature Sensor Voltage from X-19 NOx & DEF Sensor Relay (Switched Output Voltage)
12	PNK/WHT	FT37	DEF Tank and Temperature Sensor Low Reference to Ground J-142	12	BLK	FT037C	DEF Tank and Temperature Sensor Low Reference to DEF Tank Level Sensor
13	BLU	TF406	CAN 3 High to DEF Control module	13	BLU	TF512C	CAN 3 High to DEF Level & Temperature Sensor, NOx 1 and NOx 2 Sensors
14	BLU	TF302	CAN 3 High to Diesel Exhaust Fluid (DEF) Tank & Level Sensor, DEF Control Module	14	BLU	TF302C	CAN 3 High to NOx Sensors 1 and 2
15	RED/WHT	FG11	DEF Tank Heater Coolant Control Valve Voltage to DEF Tank Heater Control Valve	15	RED/WHT	FG011C	DEF Tank Heater Coolant Control Valve Voltage to DEF Heater Valve Relay
16	BLK	FT10	DEF Tank Heater Coolant Control Valve Ground to DEF Tank Heater Control Valve	16	BLU/WHT	FT010C	DEF Tank Heater Coolant Control Valve Ground to J- 142

Side of the Fuel Filter Housing, Behind the DEF Tank

4892010

H-173 DPF Extension Harness to SCR Extension Harness

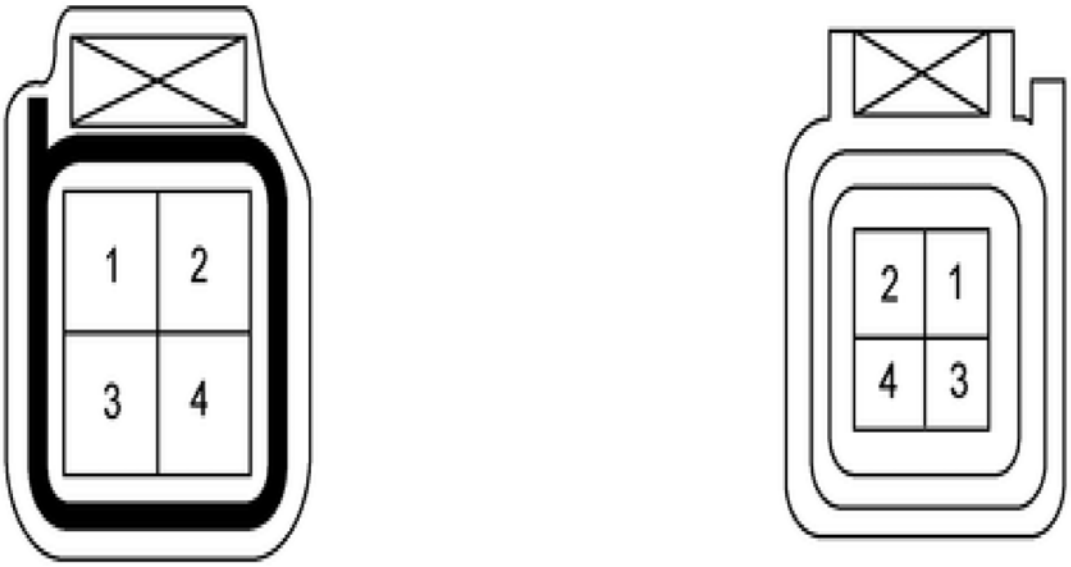

4892020

Connector Part Information		• X010352 • 4-Way F (BLK)		Connector Part Information		• X010357 • 4-Way M (BLK)	
Pin	**Wire Color**	**Circuit No**	**Function**	**Pin**	**Wire Color**	**Circuit No**	**Function**
1	BLK/ORN	IC018I	Ignition Voltage from Fuse F-33	1	BLK/ORN	IC018K	Ignition Voltage from Fuse F-33 to Particulate Matter Sensor
2	BLK	IZ018I	Ground J-10 and J-12 from Splice 7	2	BLK	IZ018K	Ground J-10 and J-12 to Particulate Matter Sensor
3	GRN/WHT	TF053I	ISO 15765 CAN 2 High	3	GRN/WHT	TF053K	ISO 15765 CAN 2 High to Particulate Matter Sensor
4	GRN	TF054I	ISO 15765 CAN 2 Low	4	GRN	TF054K	ISO 15765 CAN 2 Low to Particulate Matter Sensor

Right Inner Frame Rail, Above the Front of the Diesel Particulate Filter (DPF)

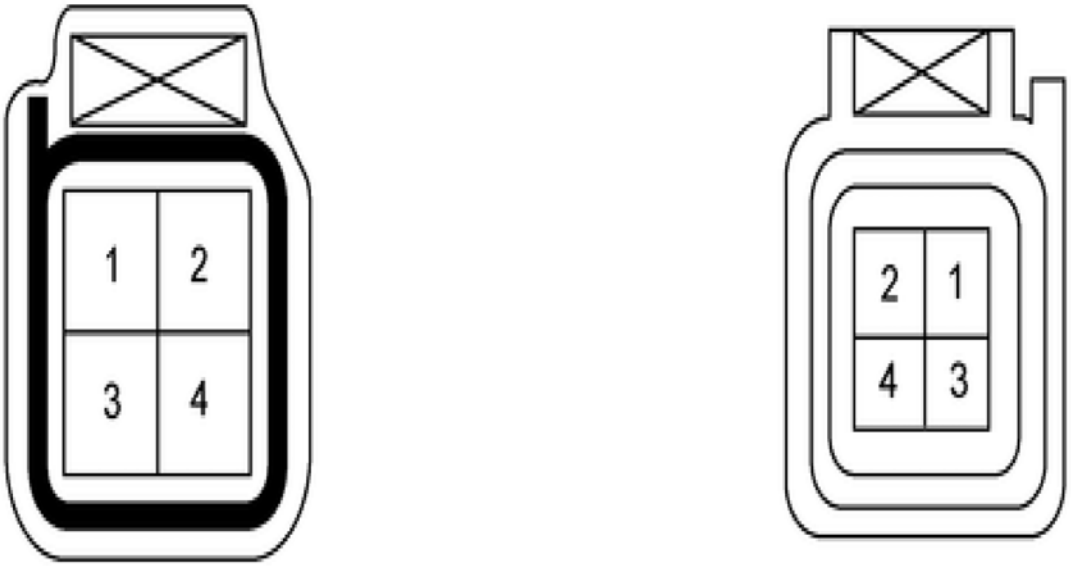

4892020

H-174 DPF Extension Harness to SCR Extension Harness

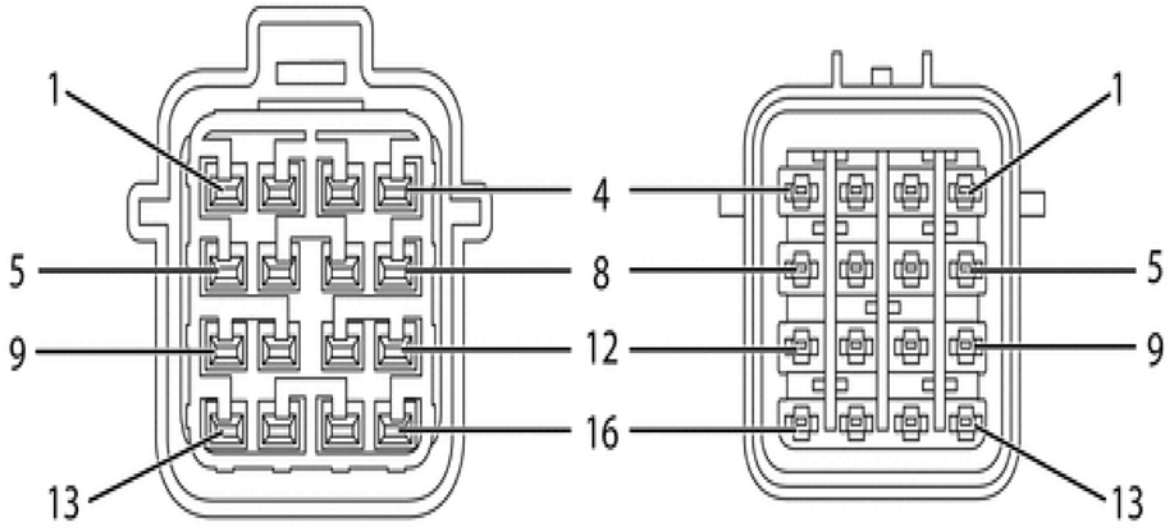

4892036

Connector Part Information		• X010418 • 16-Way F (BLK)		Connector Part Information		• X010423 • 16-Way M (BLK)	
Pin	**Wire Color**	**Circuit No**	**Function**	**Pin**	**Wire Color**	**Circuit No**	**Function**
1	VIO/WHT	FG024I	Exhaust Temperature Sensor 3 Low Reference to DEF Control Module	1	VIO/WHT	FG024K	Exhaust Temperature Sensor 3 Low Reference to Exhaust Temperature Sensor 3
2	VIO	FG023I	Exhaust Temperature Sensor 3 Signal to DEF Control Module	2	VIO	FG023K	Exhaust Temperature Sensor 3 Signal to Exhaust Temperature Sensor 3
3	BLK/ORN	FG035I	NOx & DEF Sensor Relay (Switched Output Voltage) from Relay	3	BLK/ORN	FG035K	NOx & DEF Sensor Relay (Switched Output Voltage) to NOx Sensor 2
4	BLK	FT009I	NOx Sensor 2 Ground to NOx Sensor 2	4	BLK	FT009K	NOx Sensor 2 Ground to J-142
5	RED	FG009I	DEF Injector High Side to DEF Control Module	5	RED	FG009K	DEF Injector High Side to DEF Injector
6	BLU	FG010I	DEF Injector Low Side to DEF Control Module	6	BLU	FG010K	DEF Injector Low Side to DEF Injector
7	WHT	IC026I	MAF Sensor Signal to ECM	7	WHT	IC026K	MAF Sensor Signal from Sensor
8	BLK	IC027I	MAF Sensor Low Reference to ECM	8	BLK	IC027K	MAF Sensor Low Reference from Sensor
9	RED/WHT	IC034I	Battery Voltage from Fuse F-33 from Fuse/Relay Center	9	RED/WHT	IC034K	Battery Voltage from Fuse F-33 to MAF & IAT 1 Sensor
10	BLU/BLK	IC068I	IAT Sensor 5 Volt Reference from ECM	10	BLU/BLK	IC068K	IAT Sensor 5 Volt Reference to Sensor

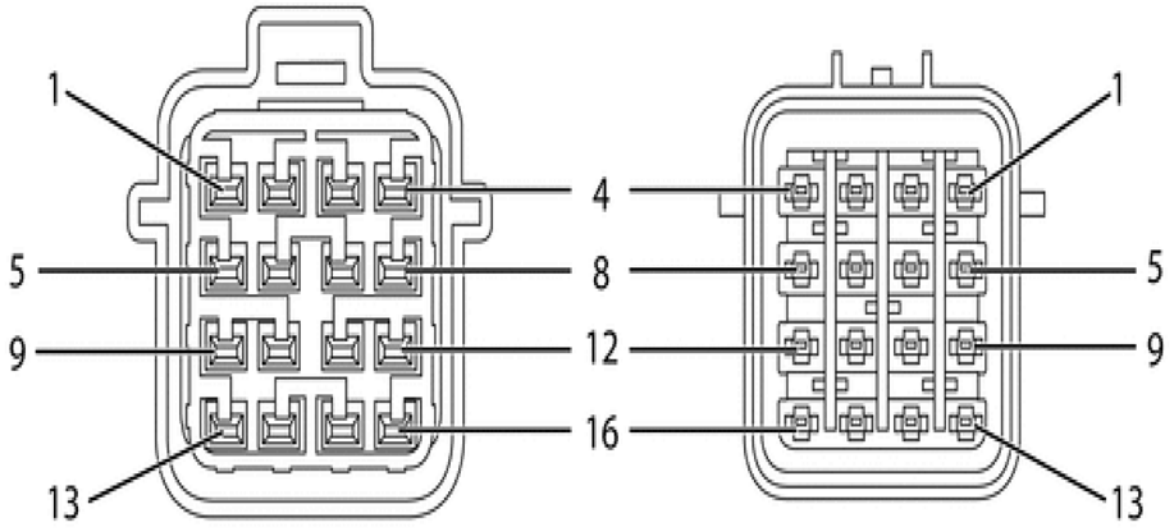

4892036

Connector Part Information		• X010418 • 16-Way F (BLK)		Connector Part Information		• X010423 • 16-Way M (BLK)	
Pin	**Wire Color**	**Circuit No**	**Function**	**Pin**	**Wire Color**	**Circuit No**	**Function**
11	BLU/RED	IC096I	IAT Sensor Low Reference from ECM	11	BLU/RED	IC096K	IAT Sensor Low Reference to Sesnor
12	BLU/YEL	MA015I	Air Filter Switch Signal to IPC	12	BLU/YEL	MA015K	Air Filter Switch Signal from Switch
13	BLK	MX007I	Ground to Splice 7 (J-10 and J-12 Ground)	13	BLK	MX007K	Ground to Air Filter Switch
14	BLU/WHT	TF303I	CAN 3 Low	14	BLU/WHT	TF303K	CAN 3 Low to NOx Sensor 2
15	BLU	TF304I	CAN 3 High	15	BLU	TF304K	CAN 3 High to NOx Sensor 2
16	—	—	Not Used	16	—	—	Not Used

Right Inner Frame Rail, Above the Front of the Diesel Particulate Filter (DPF)

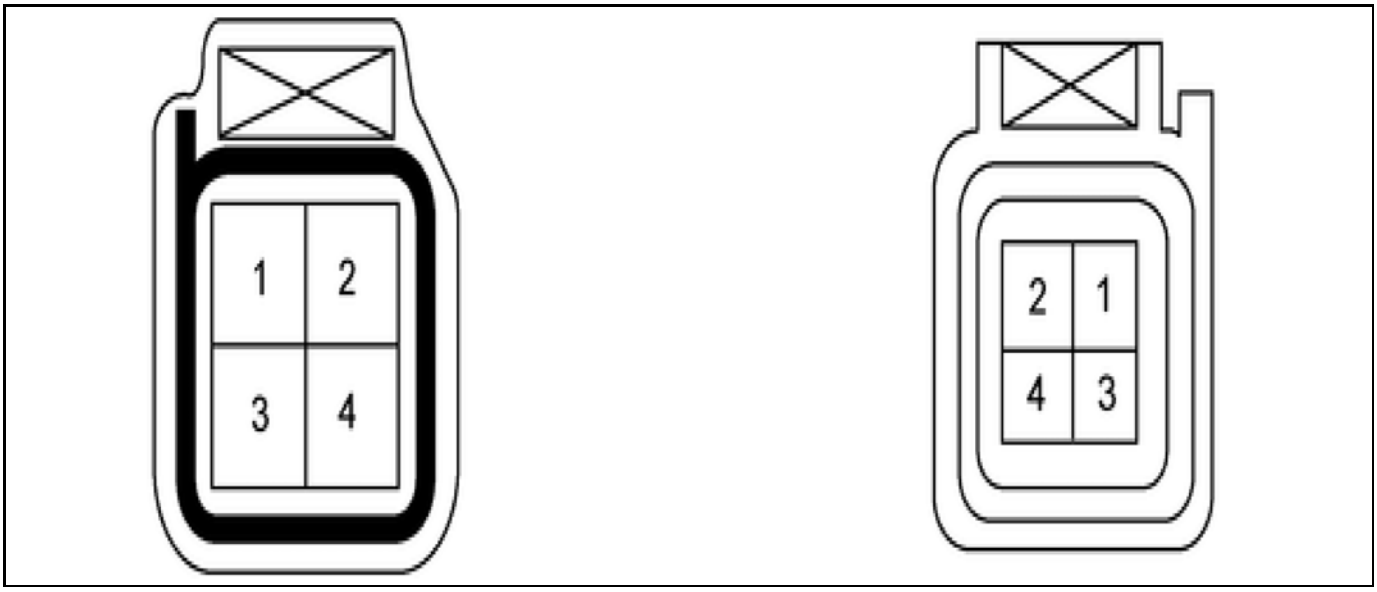

4892020

H-175 DPF Extension Harness to DPF Harness

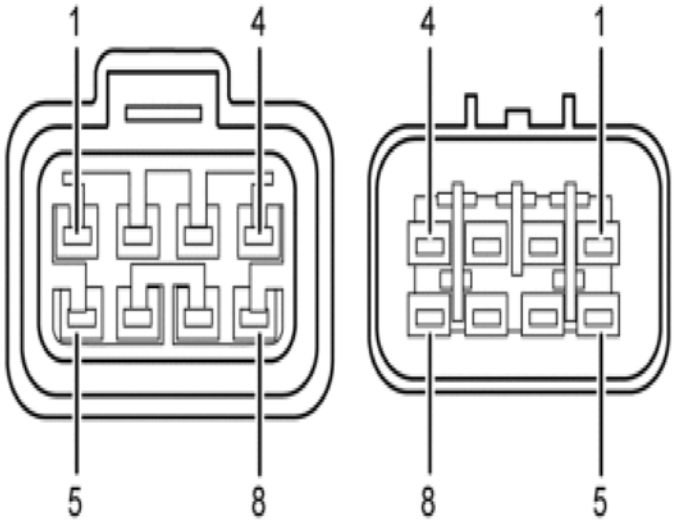

4892045

Connector Part Information		• X010369 • 8-Way F (BLK)		Connector Part Information		• X010371 • 8-Way M (BLK)	
Pin	**Wire Color**	**Circuit No**	**Function**	**Pin**	**Wire Color**	**Circuit No**	**Function**
1	VIO/WHT	IC056I	Exhaust Differential Pressure Sensor Low Reference from ECM	1	VIO/WHT	IC56	Exhaust Differential Pressure Sensor Low Reference to Sensor
2	GRN/YEL	IC055I	Exhaust Differential Pressure Sensor Signal to ECM	2	GRN/YEL	IC55	Exhaust Differential Pressure Sensor from Sensor
3	WHT/ORN	IC054I	Exhaust Differential Pressure Sensor 5 Volt Reference from ECM	3	WHT/ORN	IC54	Exhaust Differential Pressure Sensor 5 Volt Reference to Sensor
4	BLK/ORN	FG007I	NOx & DEF Sensor Relay (Switched Output Voltage) From Relay	4	BLK/ORN	FG07	NOx & DEF Sensor Relay (Switched Output Voltage) to NOx Sensor 1
5	BLK	FT007I	NOx Sensor 1 Ground to NOx Sensor 1	5	BLK	FT07	NOx Sensor 1 Ground to Ground J-142
6	BLU	TF308I	CAN 3 High to Diesel Exhaust Fluid (DEF) Tank & Level Sensor, DEF Control Module, NOx Sensor 2	6	BLU	TF308	CAN 3 High to NOx Sensor 1
7	BLU/WHT	TF307I	CAN 3 Low to Diesel Exhaust Fluid (DEF) Tank & Level Sensor, DEF Control Module, NOx Sensor 2	7	BLU/WHT	TF307	CAN 3 Low to NOx Sensor 1
8	—	—	Not Used	8	—	—	Not Used

Right Inner Frame Rail, Above the Diesel Particulate Filter (DPF)

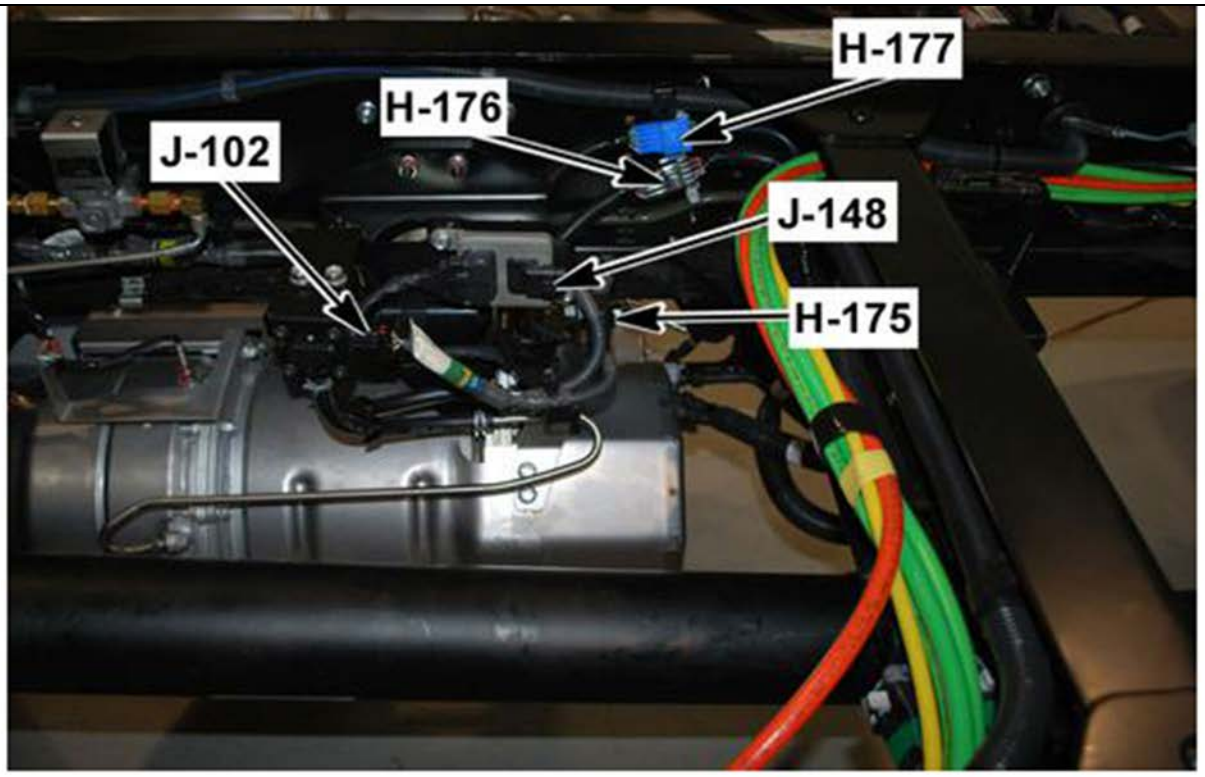

4892049

H-176 Front Chassis Harness to DPF Extension Harness

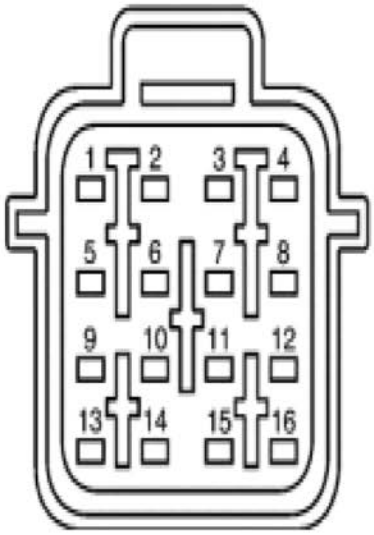

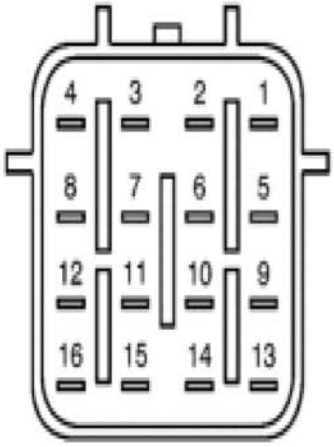

4891890

Connector Part Information		• X010418 • 16-Way F (BLK)		Connector Part Information		• X010423 • 16-Way M (BLK)	
Pin	**Wire Color**	**Circuit No**	**Function**	**Pin**	**Wire Color**	**Circuit No**	**Function**
1	BLK/ORN	FG035C	NOx & DEF Sensor Relay (Switched Output Voltage) from Relay	1	BLK/ORN	FG035I	NOx & DEF Sensor Relay (Switched Output Voltage) to NOx Sensor 1
2	RED	IC012C	EGT Sensor 2 Signal to ECM	2	RED	IC012I	EGT Sensor 2 Signal from Sensor
3	WHT	IC026C	MAF Sensor Signal to ECM	3	WHT	IC026I	MAF Sensor Signal from Sensor
4	BLK/ORN	FG007C	NOx & DEF Sensor Relay (Switched Output Voltage) from Relay	4	BLK/ORN	FG007I	NOx & DEF Sensor Relay (Switched Output Voltage) to NOx Sensor 2
5	BLK	FT007C	NOx 1 and NOx 2 Grounds to Sensors	5	BLK	FT007I	NOx 1 and NOx 2 Grounds to Ground J-142
6	VIO	FG023C	Exhaust Temperature Sensor 3 Signal to DEF Control Module	6	VIO	FG023I	Exhaust Temperature Sensor 3 Signal to Exhaust Temperature Sensor 3
7	VIO/WHT	FG024C	Exhaust Temperature Sensor 3 Low Reference to DEF Control Module	7	VIO/WHT	FG024I	Exhaust Temperature Sensor 3 Low Reference to Exhaust Temperature Sensor 3
8	BLK	IC027C	MAF Sensor Low Reference from ECM	8	BLK	IC027I	MAF Sensor Low Reference to Sensor
9	RED	FG009C	DEF Injector High Side to DEF Control Module	9	RED	FG009I	DEF Injector High Side to DEF Injector
10	BLU	FG010C	DEF Injector Low Side to DEF Control Module	10	BLU	FG010I	DEF Injector Low Side to DEF Injector

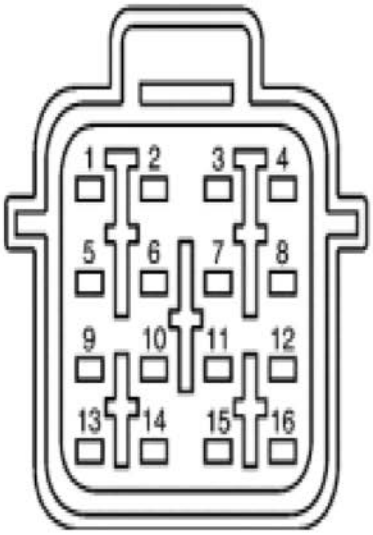

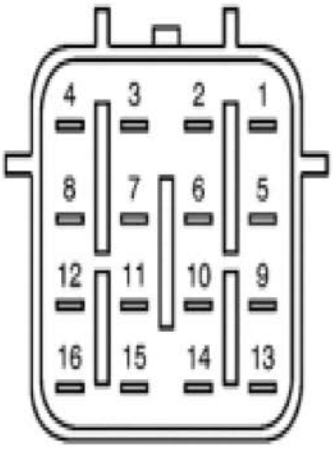

4891890

Connector Part Information		• X010418 • 16-Way F (BLK)		Connector Part Information		• X010423 • 16-Way M (BLK)	
Pin	**Wire Color**	**Circuit No**	**Function**	**Pin**	**Wire Color**	**Circuit No**	**Function**
11	BLK/ORN	IC031C	Ignition Voltage from Fuse F-33	11	RED/WHT	IC031I	Ignition Voltage from Fuse F-33 to Exhaust Brake Solenoid Valve
12	BLK/ORN	IC003C	Battery Voltage from Fuse F-33 from Fuse/Relay Center	12	RED/WHT	IC034I	Battery Voltage from Fuse F-33 to MAF & IAT 1 Sensor
13	VIO/YEL	IC052C	EGT Sensor 2 Low Reference to ECM	13	VIO/YEL	IC052I	EGT Sensor 2 Low Reference from Sensor
14	ORN	IC054C	Exhaust Differential Pressure Sensor 5 Volt Reference from ECM	14	WHT/ORN	IC054I	Exhaust Differential Pressure Sensor 5 Volt Reference to Sensor
15	YEL	IC055C	Exhaust Differential Pressure Sensor Signal to ECM	15	GRN/YEL	IC055I	Exhaust Differential Pressure Sensor from Sensor
16	BRN	IC056C	Exhaust Differential Pressure Sensor Low Reference from ECM	16	VIO/WHT	IC056I	Exhaust Differential Pressure Sensor Low Reference to Sensor

Right Inner Frame Rail, Next to the Diesel Particulate Filter (DPF)

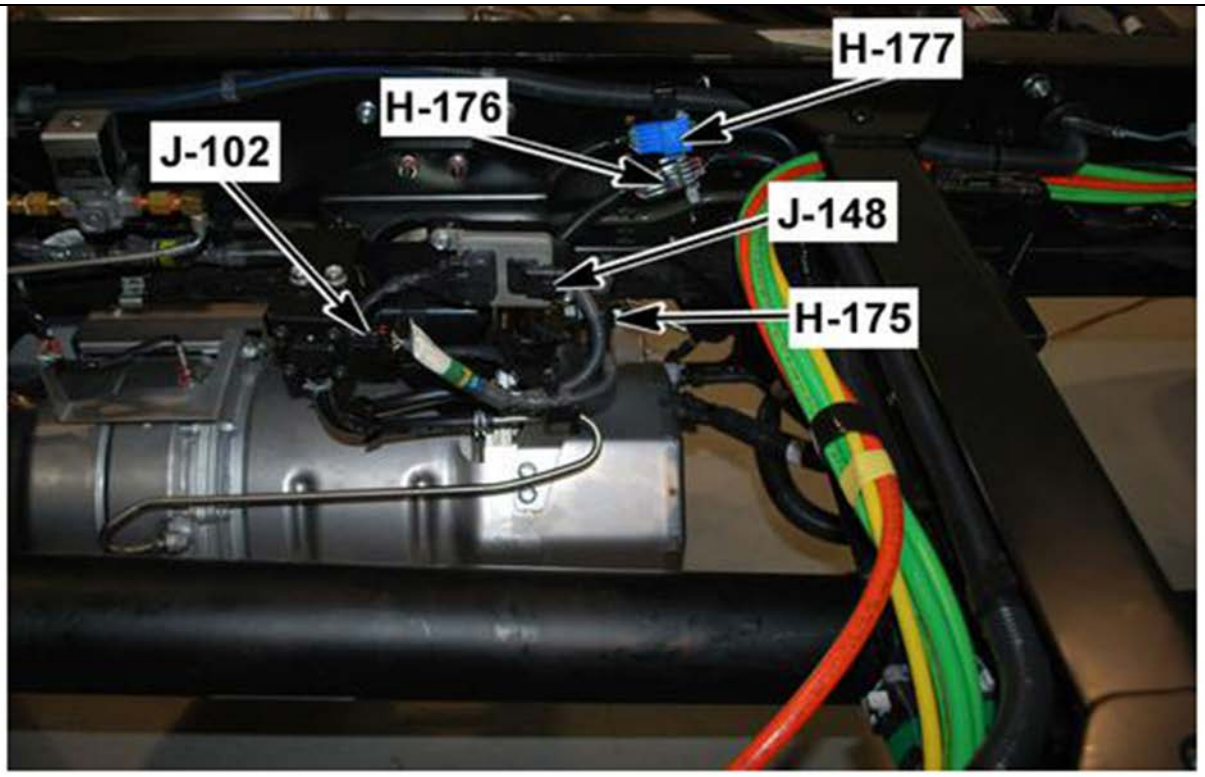

4892049

H-177 Front Chassis Harness to DPF Extension Harness

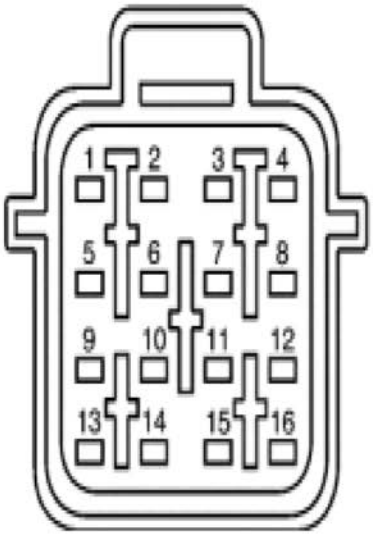

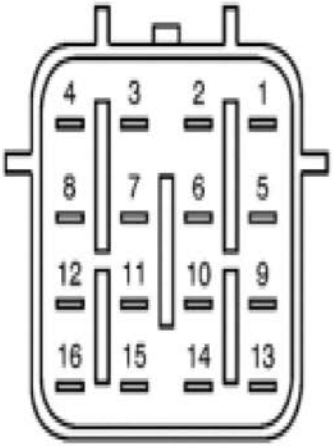

4891890

Connector Part Information		• X010419 • 16-Way F (BLU)		Connector Part Information		• X010424 • 16-Way M (BLU)	
Pin	**Wire Color**	**Circuit No**	**Function**	**Pin**	**Wire Color**	**Circuit No**	**Function**
1	BLU/WHT	TF301C	CAN 3 Low Serial Data	1	BLU/WHT	TF301I	CAN 3 Low Serial Data

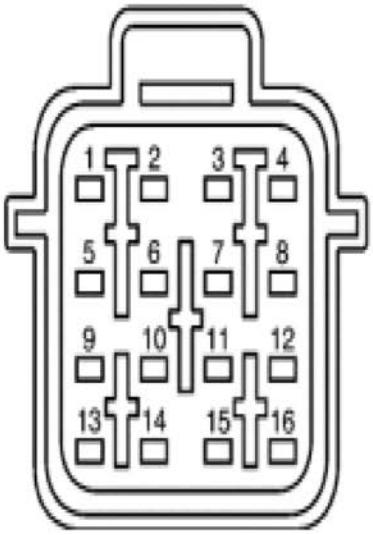

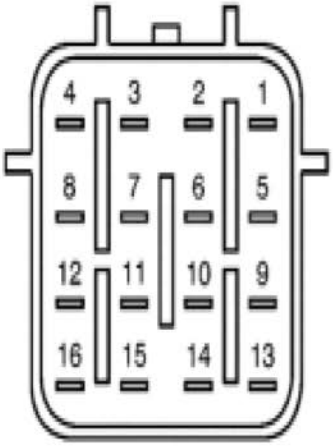

4891890

Connector Part Information		• X010419 • 16-Way F (BLU)		Connector Part Information		• X010424 • 16-Way M (BLU)	
Pin	**Wire Color**	**Circuit No**	**Function**	**Pin**	**Wire Color**	**Circuit No**	**Function**
2	BLU	TF302C	CAN 3 High Serial Data	2	BLU	TF302I	CAN 3 High Serial Data
3	—	—	Not Used	3	—	—	Not Used
4	—	—	Not Used	4	—	—	Not Used
5	BLU/BLK	IC068C	IAT Sensor Signal to ECM	5	BLU/BLK	IC068I	IAT Sensor Signal from Sensor
6	WHT/GRN	IC076C	Exhaust Brake Solenoid Valve Control to ECM	6	WHT/GRN	IC076I	Exhaust Brake Solenoid Valve Control from Valve
7	YEL/RED	IC079C	EGT Sensor 1 Signal to ECM	7	YEL/RED	IC079I	EGT Sensor 1 Signal from Sensor
8	VIO/GRN	IC080C	EGT Sensor 1 Signal Low Reference from ECM	8	VIO/GRN	IC080I	EGT Sensor 1 Signal Low Reference to Sensor
9	BLU/RED	IC096C	IAT Sensor Signal Low Reference from ECM	9	BLU/RED	IC096I	IAT Sensor Signal Low Reference to Sensor
10	BLU/YEL	MA015C	Air Filter Switch Signal to IPC	10	BLU/YEL	MA015I	Air Filter Switch Signal from Switch
11	BLK	IZ018C	Ground to Splice 7 (J-10 and J-12 Grounds)	11	BLK	IZ018I	Ground to Air Filter Switch and PM Sensor
12	BLK/ORN	IC018C	Ignition Voltage from Fuse F-33 from Fuse/Relay Center	12	BLK/ORN	IC018I	Ignition Voltage from Fuse F-33 to Particulate Matter Sensor
13	GRN/WHT	TF435C	ISO 15765 CAN 2 High Serial Data	13	GRN/WHT	TF435I	ISO 15765 CAN 2 High Serial Data
14	GRN	TF436C	ISO 15765 CAN 2 Low Serial Data	14	GRN	TF436I	ISO 15765 CAN 2 Low Serial Data
15	GRN/WHT	TF437C	ISO 15765 CAN 2 High Serial Data	15	GRN/WHT	TF437I	ISO 15765 CAN 2 High Serial Data
16	GRN	TF438C	ISO 15765 CAN 2 Low Serial Data	16	GRN	TF438I	ISO 15765 CAN 2 Low Serial Data

Right Inner Frame Rail, Next to the Diesel Particulate Filter (DPF)

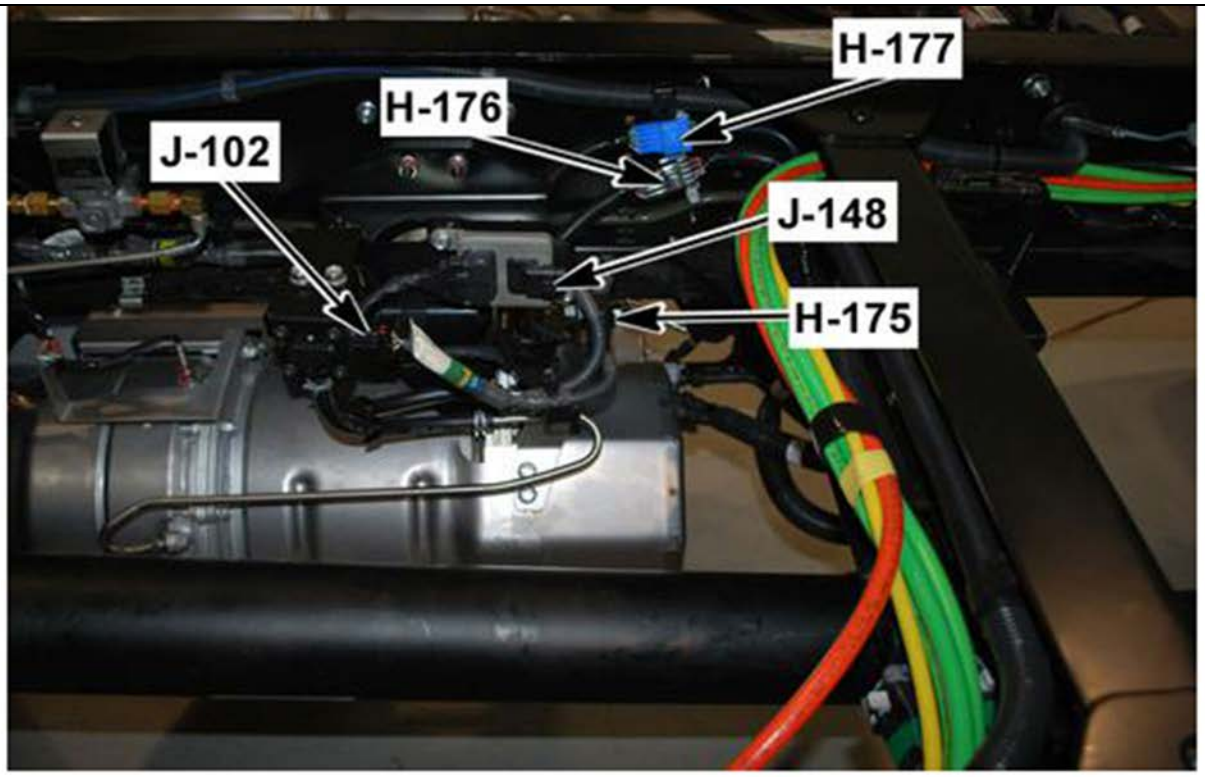

4892049

H-195 FMS Harness to Chassis Harness

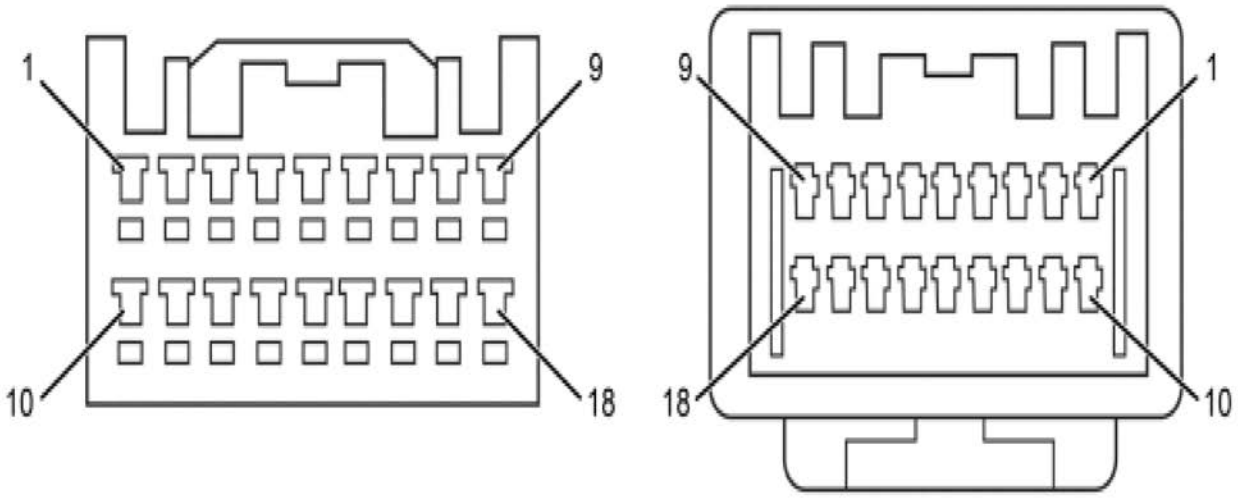

4892055

Connector Part Information		• 7383-5833 • 18-Way F (WHT)		Connector Part Information		• 7382-5833 • 18-Way M (WHT)	
Pin	**Wire Color**	**Circuit No**	**Function**	**Pin**	**Wire Color**	**Circuit No**	**Function**
1–2	—	—	Not Used	1–2	—	—	Not Used

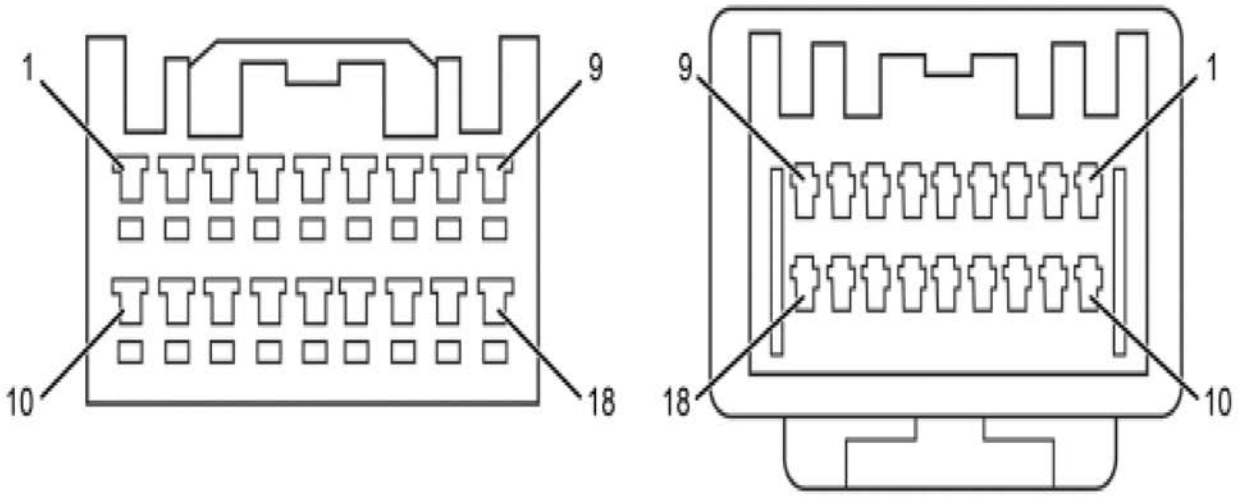

4892055

Connector Part Information		• 7383-5833 • 18-Way F (WHT)		Connector Part Information		• 7382-5833 • 18-Way M (WHT)	
Pin	**Wire Color**	**Circuit No**	**Function**	**Pin**	**Wire Color**	**Circuit No**	**Function**
3	RED	GG013T	Battery Voltage from Fuse F-3 to B- 452 Splice Pack	3	RED	GG013B	Battery Voltage from Fuse F-3 from J/B 2 (B-146 pin 18)
4	—	—	Not Used	4	—	—	Not Used
5	BLK	GT006T	Ground to B-601 Splice Pack (B-51 Ground)	5	BLK	GT006B	Ground from B-453 Splice Pack
6	BLU	TF062T	J1939 CAN 1 Low to FMS Module	6	BLU	TF062B	J1939 CAN 1 Low to B-459 CAN 1 Splice Pack
7–9	—	—	Not Used	7–9	—	—	Not Used
10	—	—	Not Used	10	GRN	SA050B	Ignition Voltage from Fuse B-2
11–12	—	—	Not Used	11–12	—	—	Not Used
13	GRN/YEL	GG012T	Ignition Voltage from Fuse F-21 to FMS Module	13	GRN/YEL	GG012B	Ignition Voltage from Fuse F-21 from J/B 2 (B-140 pin 15)
14	—	—	Not Used	14	—	—	Not Used
15	BLU/WHT	TF061T	J1939 CAN 1 High to FMS Module	15	BLU/WHT	TF061B	J1939 CAN 1 High to B-458 CAN 1 Splice Pack
16	—	—	Not Used	16	—	—	Not Used
17	LT BLU	GG004T	ISO 14230 Communication to FMS Module	17	LT BLU	GG004B	ISO 14230 Communication to J/B 2 (B-139 pin 15)
18	—	—	Not Used	18	—	—	Not Used

Behind the Storage Compartment, Right Side of the Radio

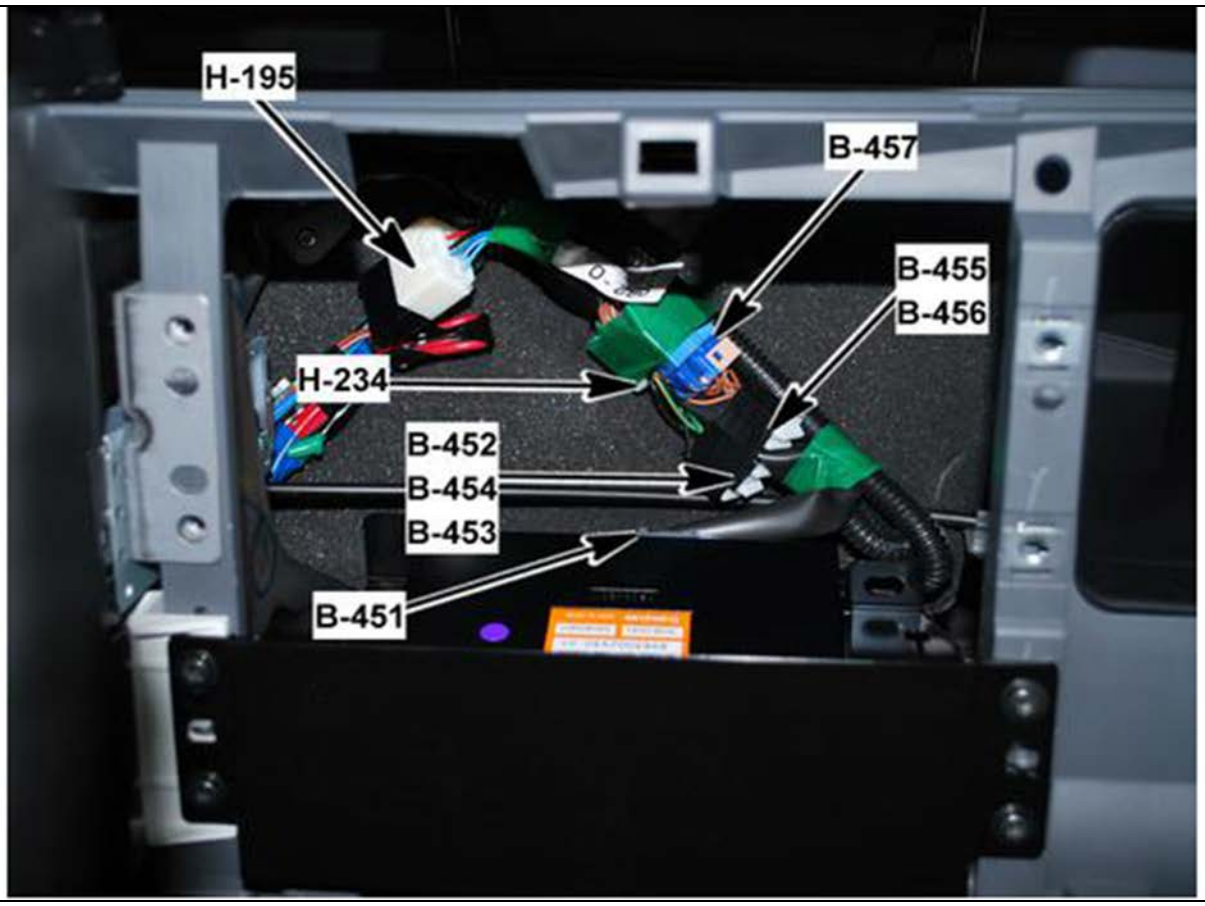

4891103

H-216 Front Chassis Harness to I/P Harness

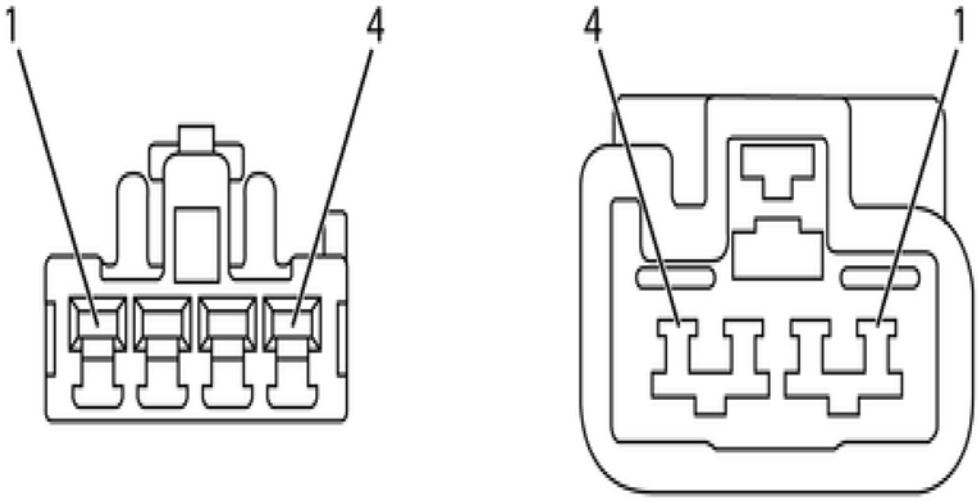

4892090

Connector Part Information		• 7383-1044 • 4-Way F (WHT)		Connector Part Information		• 7382-1044 • 4-Way M (WHT)	
Pin	**Wire Color**	**Circuit No**	**Function**	**Pin**	**Wire Color**	**Circuit No**	**Function**
1	GRN/BLK	PA047C	Battery Voltage from Fuse F-32	1	GRN/BLK	PA047B	Battery Voltage from Fuse F-32 to B-378 Splice Pack

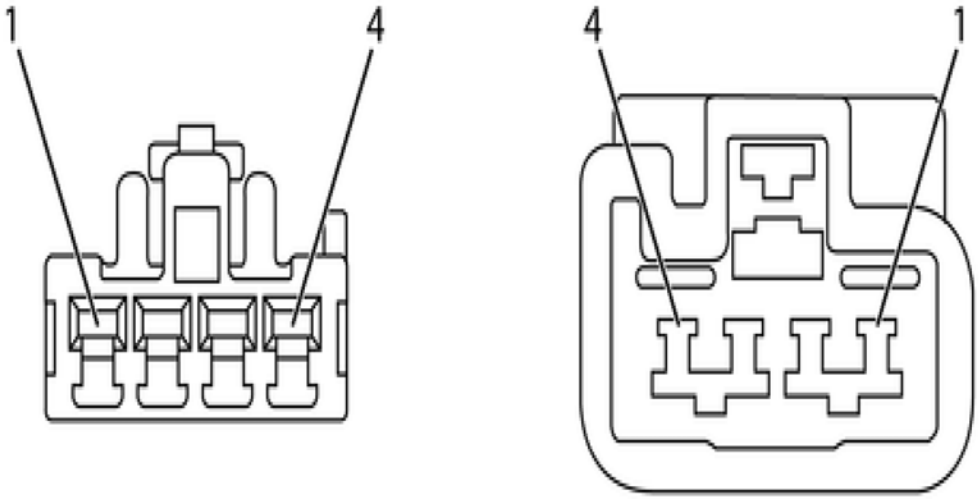

4892090

Connector Part Information		• 7383-1044 • 4-Way F (WHT)		Connector Part Information		• 7382-1044 • 4-Way M (WHT)	
Pin	**Wire Color**	**Circuit No**	**Function**	**Pin**	**Wire Color**	**Circuit No**	**Function**
2	GRN/BLK	PA017C	Battery Voltage from Fuse F-32	2	GRN/BLK	PA017B	Battery Voltage from Fuse F-32 to B-378 Splice Pack
3	RED/BLK	IC180C	Fuse F-18 Voltage to Upfitter Connector (H-104 pin A)	3	RED/BLK	IC180B	Fuse F-18 Voltage from J/B 1 (B-131 pin 18)
4	—	—	Not Used	4	—	—	Not Used

Front of the Cab, Behind the Washer Fluid Reservoir

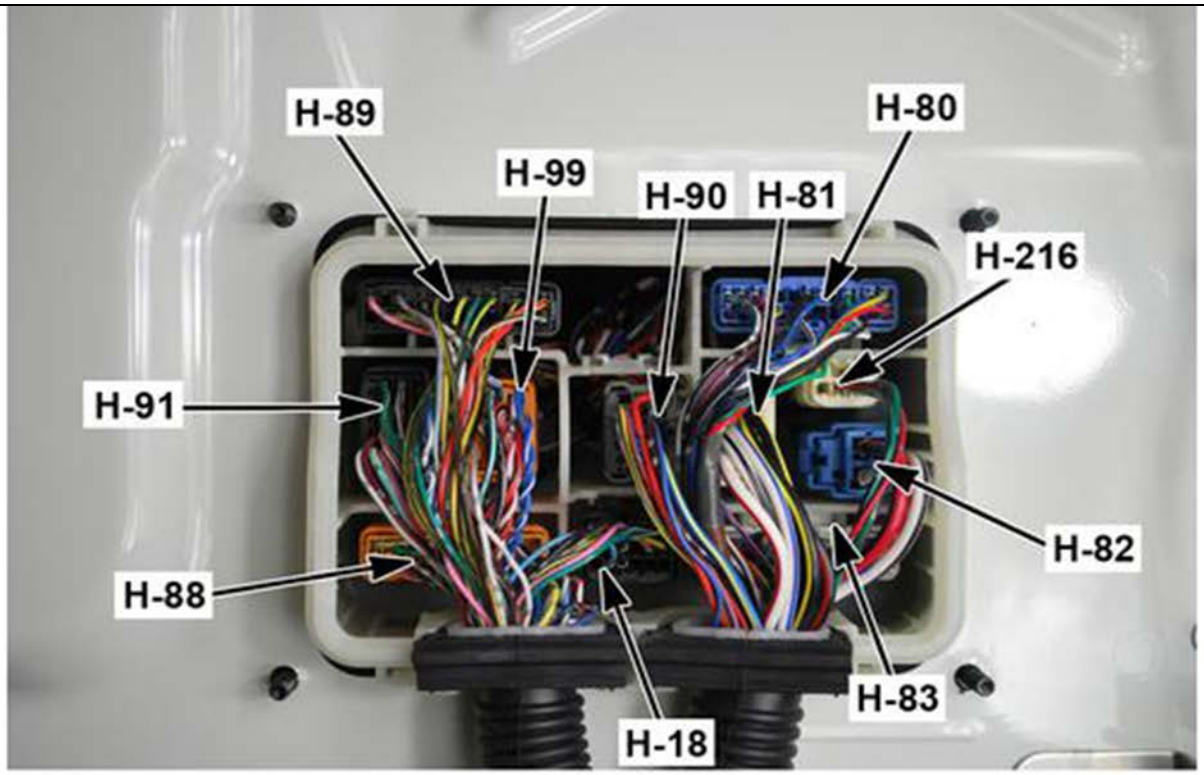

4891871

H-218 Front Chassis Harness to the Engine Harness

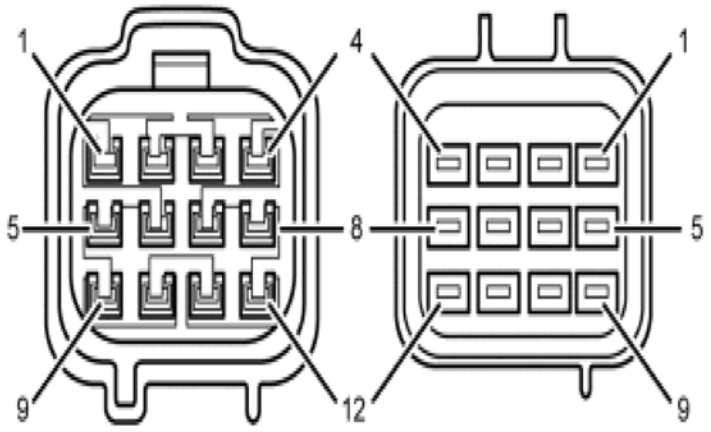

4892091

Connector Part Information		• X010408 • 12-Way F (BLK)		Connector Part Information		• 897364-5450 • 12-Way M (BLK)	
Pin	**Wire Color**	**Circuit No**	**Function**	**Pin**	**Wire Color**	**Circuit No**	**Function**
1	LT GRN	IC134C	DPF Fuel Pressure Sensor 5 Volt Reference 3 Voltage from ECM	1	LT GRN	IC134	DPF Fuel Pressure Sensor 5 Volt Reference 3 Voltage to Sensor
2	WHT/ORN	IC135C	DPF Fuel Pressure Sensor Signal to ECM	2	WHT/ORN	IC135	DPF Fuel Pressure Sensor Signal from Sensor
3	YEL/BLK	IC136C	DPF Fuel Pressure Sensor Low Reference from ECM	3	YEL/BLK	IC136	DPF Fuel Pressure Sensor Low Reference to Sensor
4	BLK/ORN	IC228C	Ignition Voltage from Fuse F-35 Voltage from Fuse/Relay Center	4	GRN	IC228	Ignition Voltage from Fuse F-35 Voltage to EGR Valve
5	YEL/BRN	IC153C	EOP Sensor 5 Volt Reference 4 Voltage to ECM	5	WHT	IC153A	EOP Sensor 5 Volt Reference 4 Voltage to Engine Oil Pressure Sensor
6	BRN/WHT	IC154C	EOP Sensor Signal to ECM	6	RED	IC154A	EOP Sensor Signal from Engine Oil Pressure Sensor
7	PNK	IC155C	EOP Sensor Low Reference to ECM	7	BLK	IC155A	EOP Sensor Low Reference to Engine Oil Pressure Sensor
8	RED/WHT	IC999C	ECM Main Relay (Switched Output Voltage) to splice 15	8	RED/WHT	IC999E	ECM Main Relay (Switched Output Voltage) to DPF Fuel Cut Solenoid Valve
9	GRN/WHT	TF035C	ISO 15765 CAN 2 High Serial Data	9	GRN/WHT	TF535	ISO 15765 CAN 2 High Serial Data
10	GRN	TF036C	ISO 15765 CAN 2 Low Serial Data	10	GRN	TF536	ISO 15765 CAN 2 Low Serial Data
11	GRN/WHT	TF437C	ISO 15765 CAN 2 High Serial Data	11	GRN/WHT	TF735	ISO 15765 CAN 2 High Serial Data

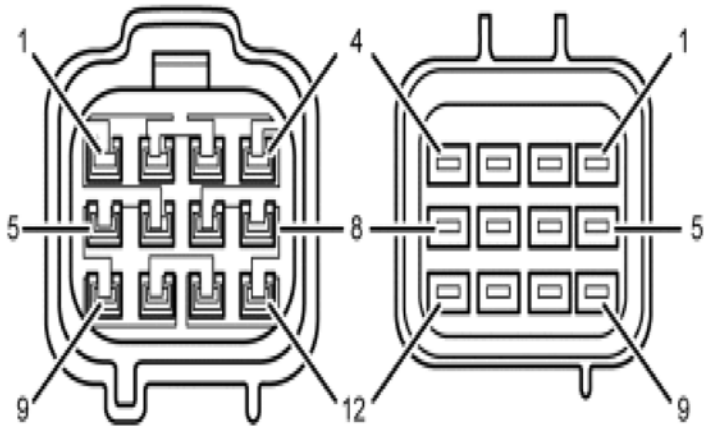

4892091

Connector Part Information		• X010408 • 12-Way F (BLK)		Connector Part Information		• 897364-5450 • 12-Way M (BLK)	
Pin	**Wire Color**	**Circuit No**	**Function**	**Pin**	**Wire Color**	**Circuit No**	**Function**
12	GRN	TF438C	ISO 15765 CAN 2 Low Serial Data	12	GRN	TF736	ISO 15765 CAN 2 Low Serial Data

On the Left Side of the Rear Cab Support

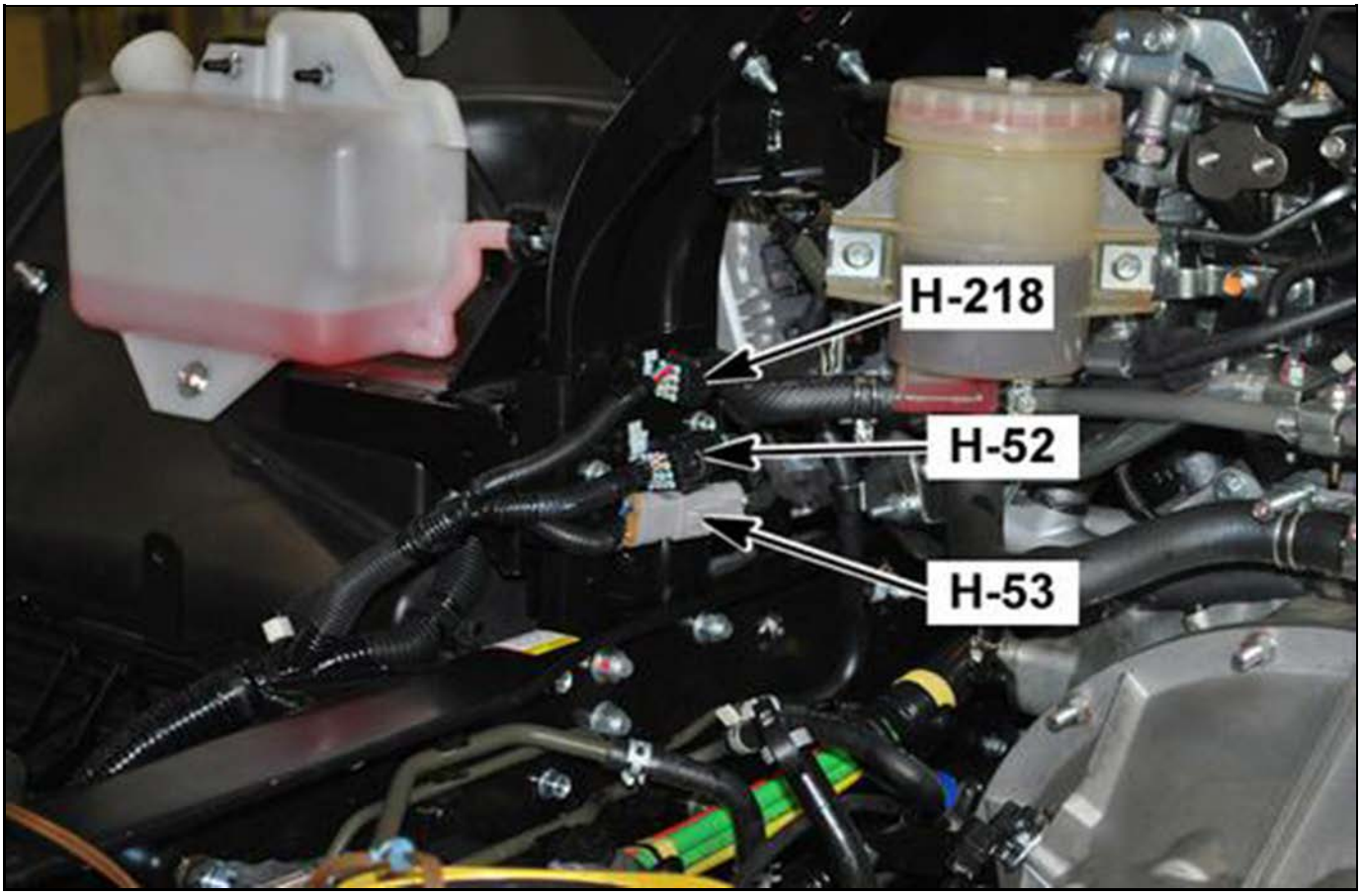

4891894

H-234 Telematics Connector to Interface Harness

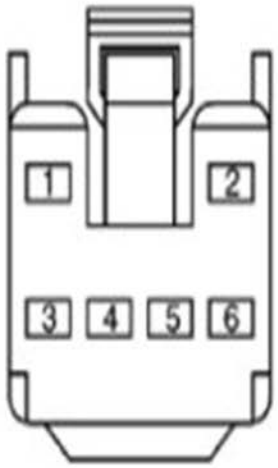

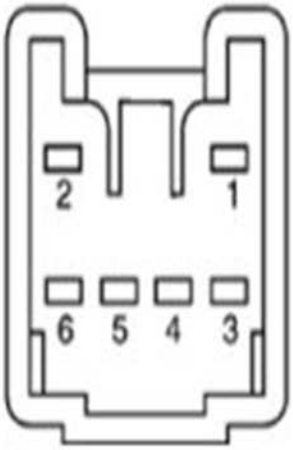

4892093

Connector Part Information		• 7323-8365 • 6-Way F (WHT)		Connector Part Information		• Not Available • 6-Way M (N/A) • Body Builder Installed	
Pin	**Wire Color**	**Circuit No**	**Function**	**Pin**	**Wire Color**	**Circuit No**	**Function**
1	RED	GG023	Battery Voltage from Fuse F-3	1	—	—	Battery Voltage from Fuse F-3
2	GRN/YEL	GG022	Ignition Voltage from Fuse F-21	2	—	—	Ignition Voltage from Fuse F-21
3	—	—	Not Used	3	—	—	Not Used
4	BLK	GT026	Ground to B-453 Splice Pack (B-51 Ground)	4	—	—	Ground to B-453 Splice Pack (B-51 Ground)
5	BRN	TF070T	CAN 4 Low	5	—	—	CAN 4 Low
6	BRN/WHT	TF069T	CAN 4 High	6	—	—	CAN 4 High

Behind the Storage Compartment, Right Side of the Radio

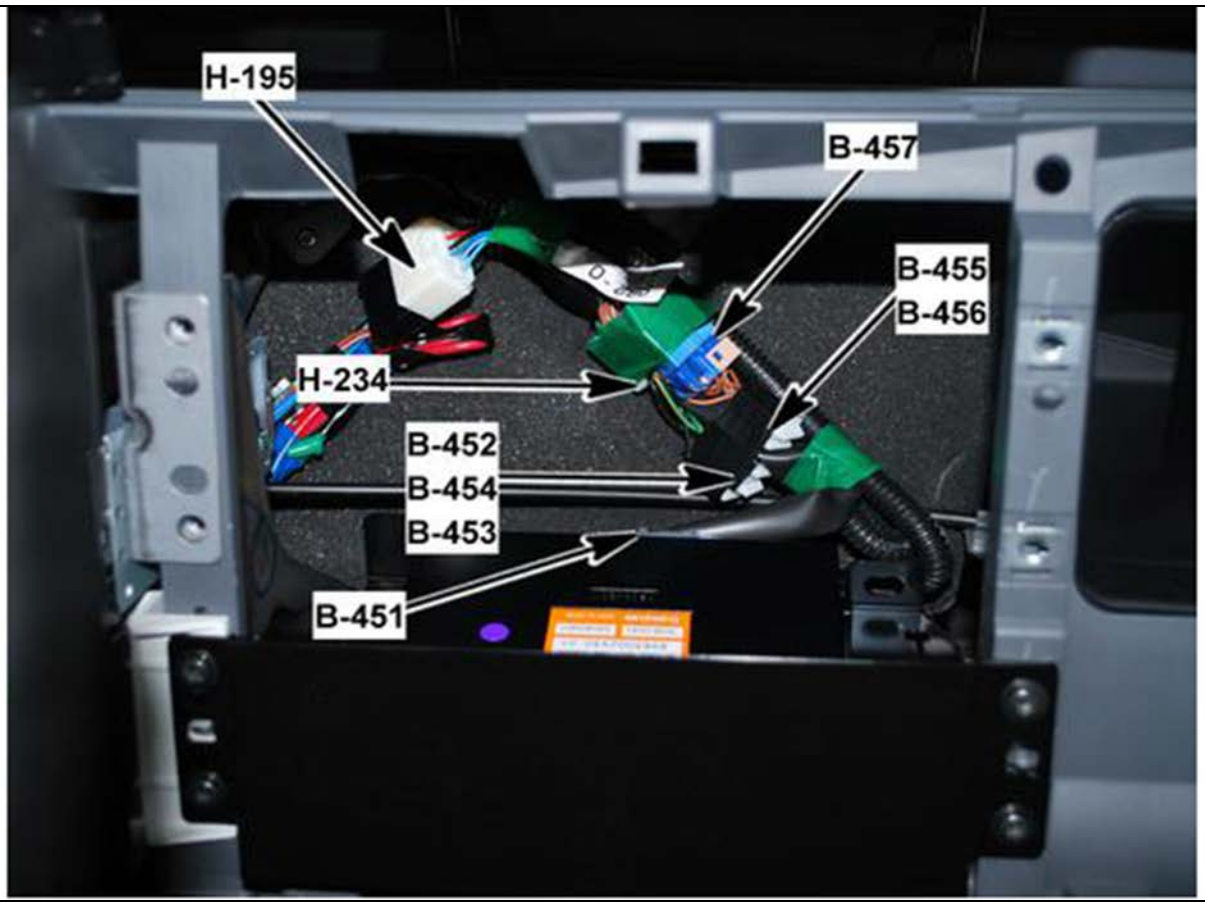

4891103

H-246 Body Builder Connector

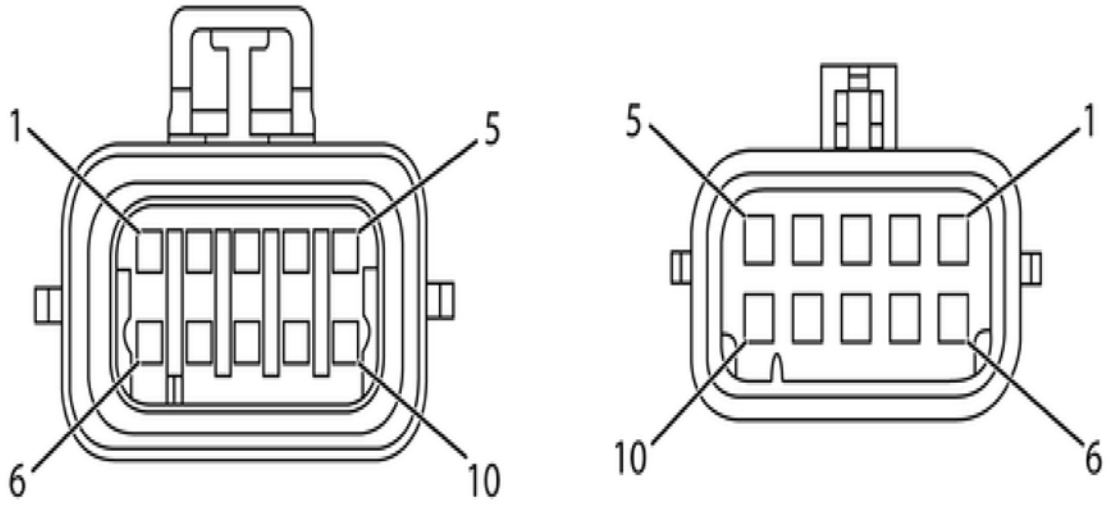

4892095

Connector Part Information		• 12177081 • 10-Way F (BLK)		Connector Part Information		• 12045808 • 10-Way M • Body Builder Installed	
Pin	**Wire Color**	**Circuit No**	**Function**	**Pin**	**Wire Color**	**Circuit No**	**Function**
1	BRN	OA044C	Range Inhibitor Switch to TCM	1	—	—	—

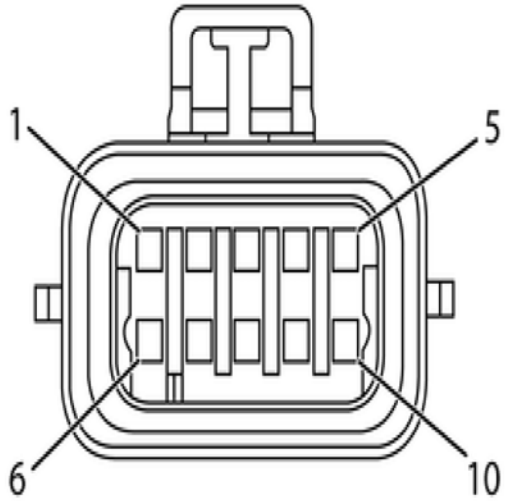

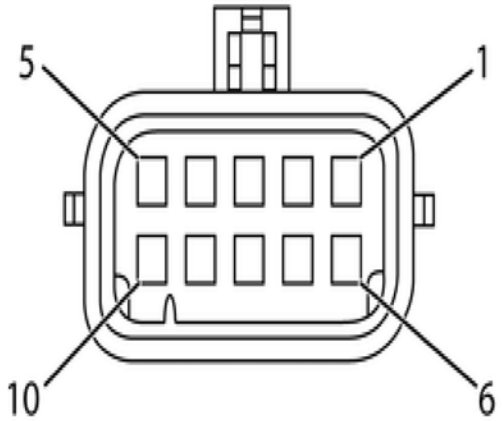

4892095

Connector Part Information		• 12177081 • 10-Way F (BLK)		Connector Part Information		• 12045808 • 10-Way M • Body Builder Installed	
Pin	**Wire Color**	**Circuit No**	**Function**	**Pin**	**Wire Color**	**Circuit No**	**Function**
2	—	—	Not Used	2	—	—	—
3	BLK	OA045C	Analog Sensor Signal Return to TCM	3	—	—	—
4	BLK	OA046C	Digital Return to TCM	4	—	—	—
5	LT BLU	OA047C	PTO Output to TCM	5	—	—	—
6	—	—	Not Used	6	—	—	—
7	—	—	Not Used	7	—	—	—
8	WHT	OA051C	PTO Switch to TCM and H-104 PTO Connector	8	—	—	—
9	PNK	OA041C	Auto Neutral to TCM	9	—	—	—
10	YEL	OA040C	Range Indicator to TCM	10	—	—	—

Left Inner Frame Rail, Next to the Fuel Tank

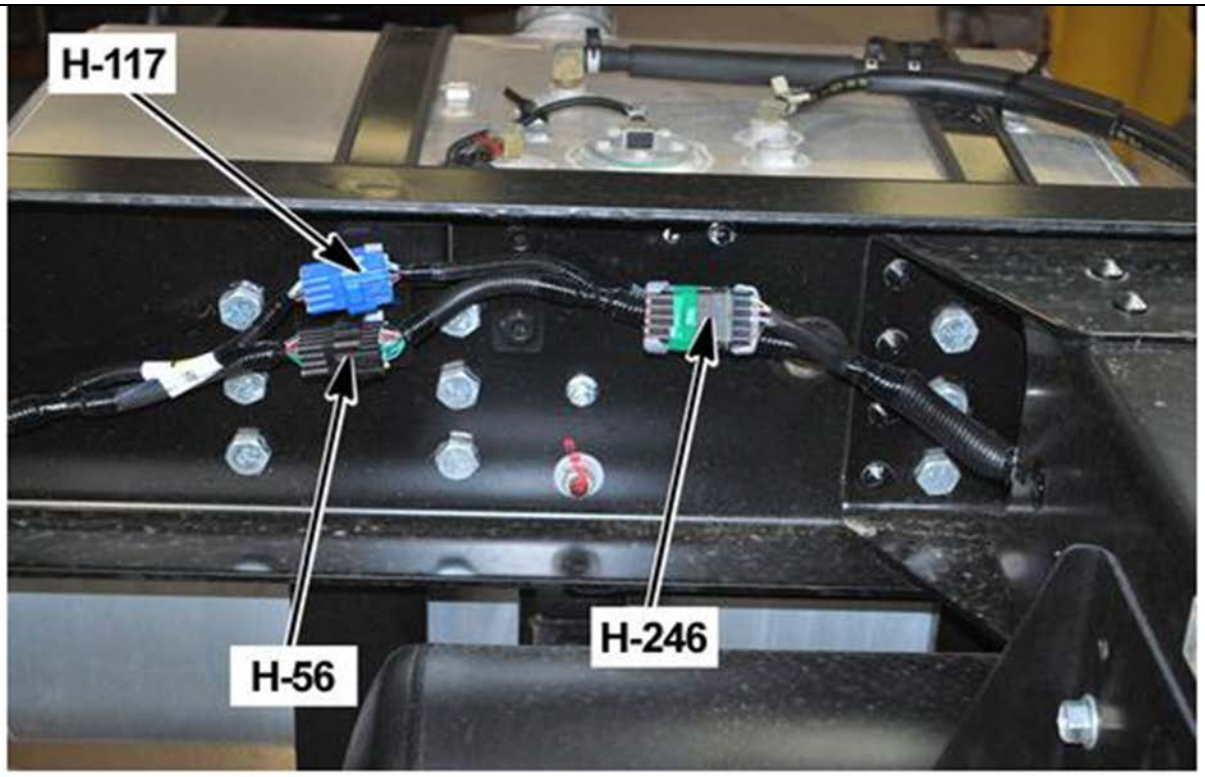

4891901

H-282 Battery Positive Cable to Front Chassis Harness

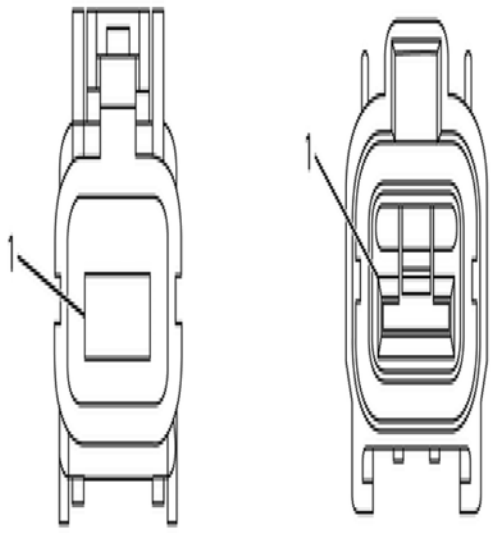

4892307

Connector Part Information		• 7123-4210-40 • 1-Way F (GRY)		Connector Part Information		• 7322-4210-40 • 1-Way M (GRY)	
Pin	**Wire Color**	**Circuit No**	**Function**	**Pin**	**Wire Color**	**Circuit No**	**Function**
1	Blue	—	Fusible Link	1	WHT	PA001C	Voltage Feed for Fuse/Relay Center (Battery Bus)

Right Inner Frame Rail, Next to the Batteries

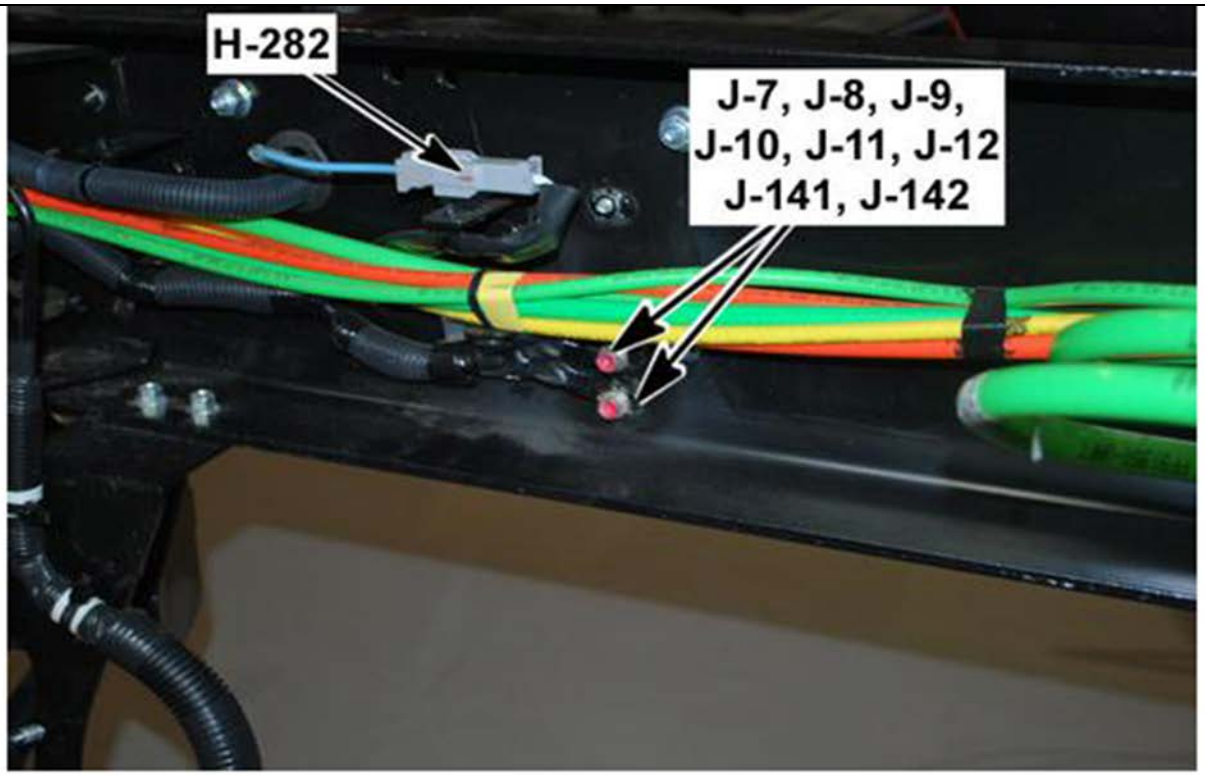

4892315

Component Locator

Diode Location

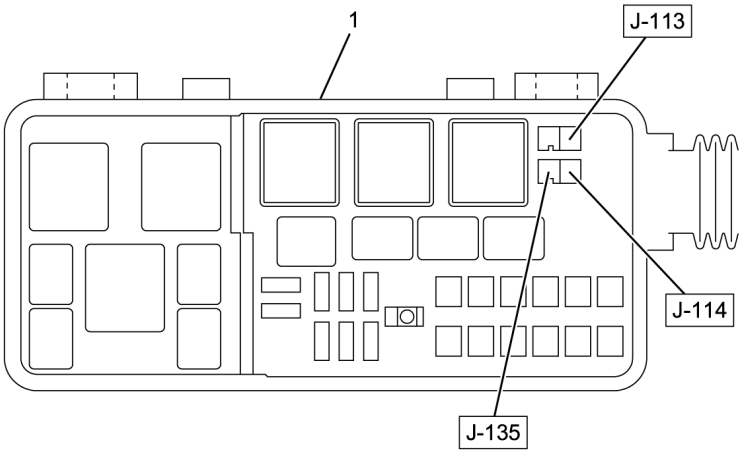

Connector No.	Usage
J-113	ECM
J-114	A/C
J-135	ECM

LNWA8DSF000101

4495937

Legend

(1) Relay Box

Fuse, Fusible Link, and Slow-Blow Fuse Location

Reference Table of Fuse

Fuse No.	Capacity	Indication on Label	Main Parts(Load)
F-1	—	—	—
F-2	—	—	—
F-3	10A	ROOM LAMP,AUDIO	Audio, Data Link Connector, Dome Light, Rear Dome Light
F-4	15A	DOOR LOCK	Door Lock Relay
F-5	15A	TRAILER BRAKE	Trailer Stop Relay
F-6	25A	P/WINDOW	Front Power Window RH Switch, Front Power Window LH Switch
F-7	10A	ABS	Electronic Hydraulic Control Unit (EHCU)
F-8	25A	WIPER	Wiper Main Relay, Wiper High Low Relay, Front Wiper Motor Front Washer Motor
F-9	10A	H/LAMP LO (LH)	Headlight LH, DRL Control Unit
F-10	10A	LMAPS (BATT)	DRL Relay, Headlight High Relay, Headlight Low Relay, Tail Relay
F-11	10A	H/LAMP LO (RH)	Headlight RH, DRL Control Unit
F-12	10A	BRAKE LAMPS	Stoplight Relay
F-13	10A	STARTER	P/N Start Relay
F-14	10A	H/LAMP HI (LH)	IP Cluster, Headlight LH, Headlight High Relay
F-15	10A	H/LAMP HI (RH)	Headlight RH, Headlight High Relay
F-16	15A	MIRROR HEATER	Blower Relay, Power Window Relay, Mirror Heater Switch
F-17	—	—	—
F-18	10A	IGNITION1	PTO Enable Relay, Intermittent Relay, Vacuum Pump Relay, Inhibitor Switch, Keyless Entry Control Unit
F-19	—	—	—
F-20	10A	ECM	Engine Control Module (ECM), Cruise Main Switch, Combination Switch Stoplight Switch
F-21	10A	METER	IP Cluster, Key On Relay, P/N Start Relay, TCM Relay Vacuum Pump Relay, Vehicle Speed Sensor, Flasher Unit Electronic Hydraulic Control Unit (EHCU), Cornering Light Relay PTO Switch 2
F-22	10A	ECU (BATT)	IP Cluster, Check Miles and Check Oil Level Switch, TCM Relay Transmission Control Module (TCM), Engine Control Module (ECM)
F-23	10A	MIRROR	Rear Body Switch, Rear Body Connector, Mimamori
F-24	15A	AUDIO, ACC	Audio, Cigarette Lighter Relay, Power ACC Relay
F-25	15A	HORN	Horn Relay
F-26	15A	TURN, HAZARD	Flasher Unit
F-27	10A	TAIL LAMPS	ID 1, ID 2, ID 3, Marker 1, Marker 2, Marker Light Relay Side Marker RH, Side Marker LH,
F-28	10A	ILLUMINATIONS	Check Miles and Check Oil Level Switch, Door Lock Switch, Audio Cigarette Illumination, Cruise Main Switch, Rear Dome Light Switch1 DPF Regeneration Switch, PTO Engine Speed Control Switch Mirror Heater Switch, Illumination Control Switch, Overdrive Off Switch IP Cluster, Hazard Switch, PTO Switch 2
F-29	10A	CORNERING LAMPS	Cornering Light Relay
F-30	10A	AIR CONDITIONER	Blower Relay, Blower Motor, Magnetic Clutch Relay Defroster Switch, A/C Switch
F-31	20A	MARKER LAMP	Marker Light Relay
F-32	20A	TAIL MAIN	Tail Relay

Reference Table of Fuse (cont'd)

Fuse No.	Capacity	Indication on Label	Main Parts(Load)
F-33	10A	ECM MAIN	ECM Main Relay, Engine Control Module, Exhaust Brake Cut Relay MAF and IAT 1 Sensor, VNT Control Module
F-33	—	—	—
F-34	20A	SCR	Diesel Exhaust Fluid (DEF) Control Module, Heater Valve Relay, NOx and Diesel Exhaust Fluid (DEF) Sensor Relay
F-35	15A	PM SENSOR	PM Sensor, Glow Plug Control Module
F-36	15A	RR DOME LIGHT	Rear Manufacture Connector
F-37	20A	CONDENSER FAN	Condenser Fan Relay
F-38	10A	AIR CONDITIONER	Magnetic Clutch Relay
F-39 (D-1)	20A	CIGAR	Rear Heater, Cigarette Lighter
F-40 (D-2)	15A	ACCESSORIES SOCKET	ACC Socket
F-41 (D-3)	20A	POWER SOURCE	Power Source

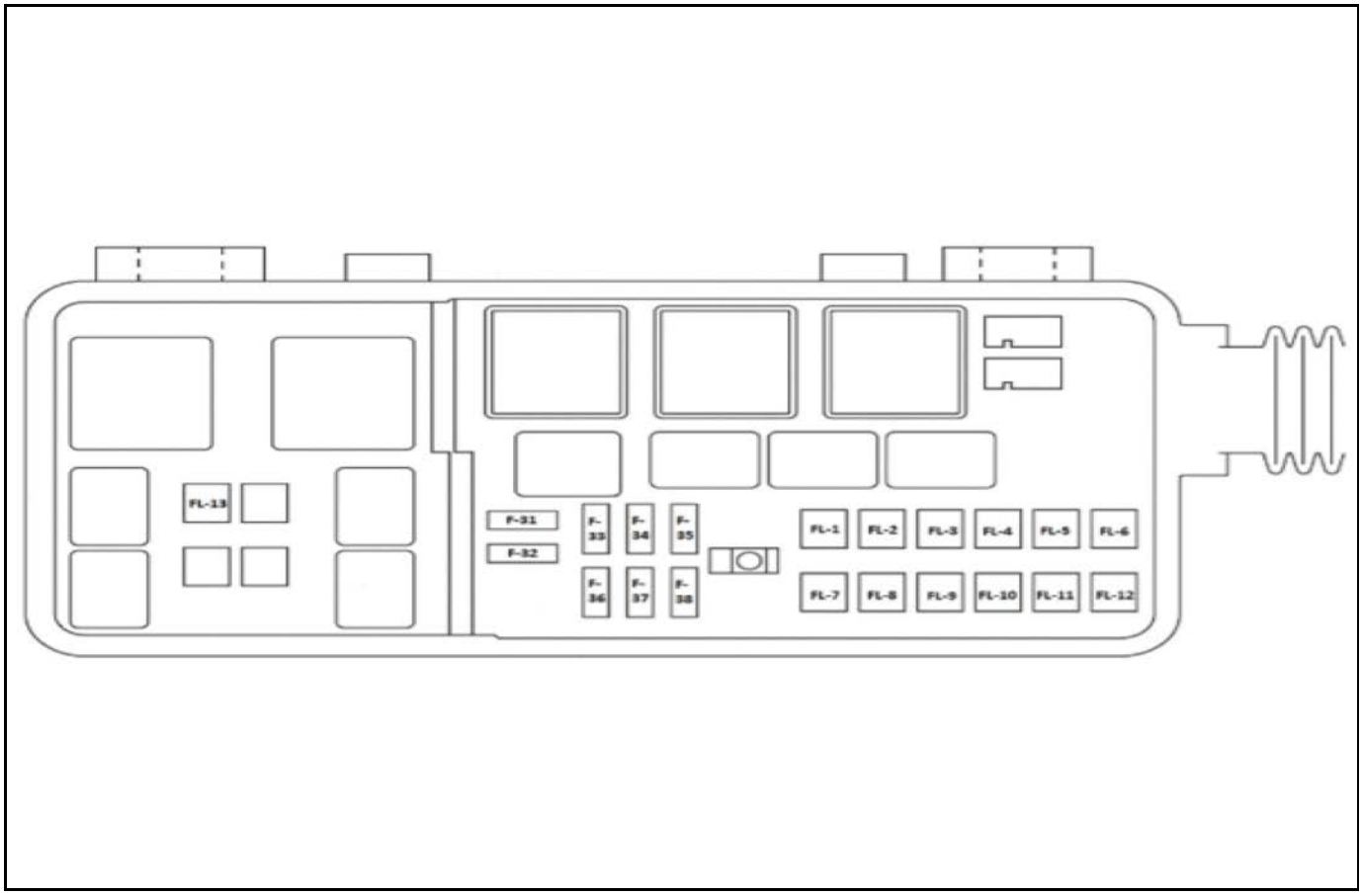

4894066

Fuse/Relay Center

Fuse No.	Capacity	Fuse Name	Main Parts(Load)
FL-1	40A	ECM	To splice S3A (ECM Main Relay, Fuse F-35)
FL-2	60A	Starter	Starter Relay X-17
FL-3	50A	Power ACC	Power ACC Relay B-212
FL-4	60A	Glow	Glow Plug Control Module (GPCM)

Fuse/Relay Center (cont'd)

Fuse No.	Capacity	Fuse Name	Main Parts(Load)
FL-5	40A	Mirror Heater	To Splice S27
FL-6	40A	AM1	To Splice S26
FL-7	50A	HVAC	Blower Relay B-215
FL-8	30A	Headlamps	To B-378 Splice Pack
FL-9	30A	Rear Dome Lamp	Rear Dome Lamp Relay X-22
FL-10	30A	Wiper	Key ON Relay X-3, F-25 and F-26 Fuses in the Fuse/Relay Center (Cab)
FL-11	40A	ABS	Electronic Brake Control Module (EBCM)
FL-12	40A	AM2	To B-378 Splice Pack
FL-13	20A	Fuel Heater	Fuel Heater Relay X-30
F-31	20A	Marker Lamp	Marker Lamp Relay
F-32	20A	Tail Main	B-378 Splice Pack
F-33	15A	ECM Main	Exhaust Brake Solenoid Valve, Particulate Matter Sensor, MAF and IAT 1 Sensor, Variable Nozzle Turbocharger (VNT) Control Module, Exhaust Gas Recirculation (EGR) Valve
F-34	20A	SCR	NOx and DEF Sensor Relay X-19, Diesel Exhaust Fluid Control Module, Heater Valve Relay (SCR) X-23
F-35	15A	TCM	B-376 Splice Pack, Engine Control Module (ECM)
F-36	15A	Power Source	To Splice S6A
F-37	20A	Condenser Fan	Condenser Fan Relay B-218
F-38	10A	Air Conditioner	Compressor Clutch Relay X-20

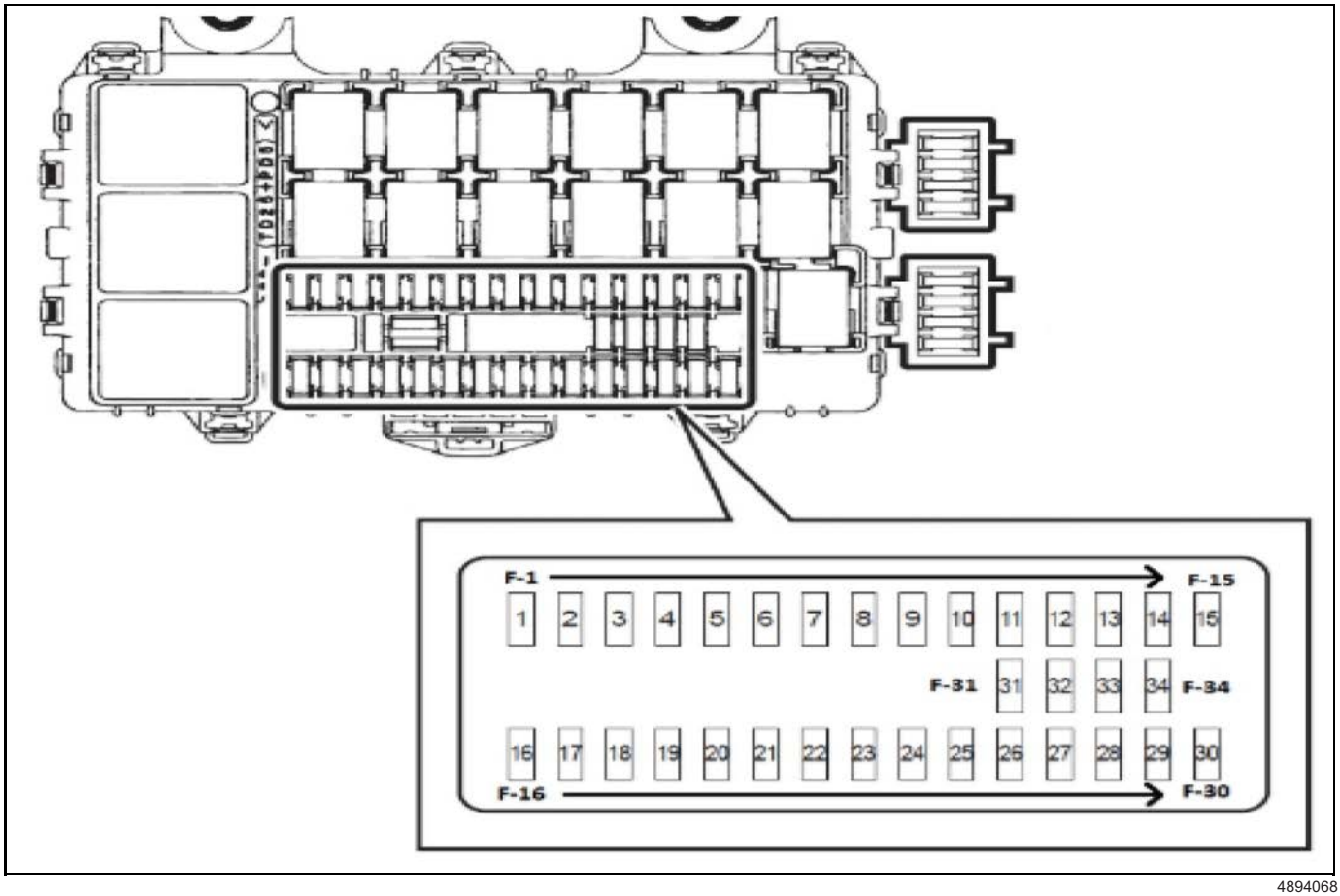

4894068

Fuse/Relay Center (Cab) "F" Fuses

Fuse No.	Capacity	Indication on Label	Main Parts(Load)
F-1	25A	—	—
F-2	—	—	—
F-3	10A	ROOM LAMP,AUDIO	Radio, Data Link Connector (DLC), Dome Lamp, Fleet Management System (FMS), Telematics Connector H-234
F-4	15A	DOOR LOCK	Door Lock Relay B-227, Remote Keyless Entry (RKE) Module
F-5	15A	—	—
F-6	25A	P/WINDOW	Front Power Window RH Switch, Front Power Window LH Switch
F-7	10A	ABS	Electronic Brake Control Module (EBCM)
F-8	25A	WIPER	Wiper Main Relay X-6, Wiper High/Low Relay X-8, Front Wiper Motor, Front Washer Motor
F-9	10A	H/LAMP LO (LH)	Headlamp LH, Daytime Running Lamp (DRL) Module
F-10	10A	LAMPS (BATT)	Daytime Running Lamp (DRL) Module Relay X-2, Headlamp High Relay X-15, Headlamp Low Relay X-13, Tail Lamp Relay X-16
F-11	10A	H/LAMP LO (RH)	Headlamp RH, Daytime Running Lamp (DRL) Module
F-12	10A	BRAKE LAMPS	Stop Lamp Relay X-1
F-13	10A	STARTER	Starter Relay X-17
F-14	10A	H/LAMP HI (LH)	Instrument Panel Cluster (IPC), Headlamp LH
F-15	10A	H/LAMP HI (RH)	Headlamp RH
F-16	15A	MIRROR HEATER	Air Dryer, Power Window Relay, Mirror Heater Switch
F-17	10A	IGNITION 2	Blower Relay B-215
F-18	10A	IGNITION 1	PTO Switch, Upfitter Connector (Remote PTO Switch), Intermittent Wiper Relay B-210, Health Report RS232 Connector, Shift Lever, Remote Keyless Entry (RKE) Module, Reverse Lamp Relay B-273
F-19	—	—	—
F-20	10A	ECM	Reverse Lamp Relay B-271, Wiper/Exhaust Brake Switch, Cruise Control Switch, Combination switch, Transmission Control Module (TCM), Radiator Level Control, DPF Regen Switch, Engine Control Module (ECM), Diesel Exhaust Fluid (DEF) Control Module
F-21	10A	METER	Instrument Panel Cluster (IPC), Key ON Relay, Cornering Lamp Relay, Flasher Module, Fleet Management System (FMS) Module, Telematics Connector H-234, Mimamori Module
F-22	10A	ECU (BATT)	Instrument Panel Cluster (IPC), Health Report RS232 Connector, Miles/Oil Level Check Switch, Mimamori Module
F-23	10A	MIRROR	Mimamori Module, Power Mirror Switch
F-24	15A	ACC	Radio, Cigar Lighter Relay B-272, Power ACC Relay B-212, Shift Lever
F-25	15A	HORN	Horn Relay X-7
F-26	15A	TURN, HAZARD	Flasher Module
F-27	10A	TAIL LAMPS	Front Park Lamp (RH) and (LH), Side Marker Lamp (LH) and (RH), Marker Lamps 1 and 2, Clearance Lamps 1, 2 and 3, Marker Lamp Relay X-26, Rear Combination Lamps (LH) and (RH), License Plate Lamp
F-28	10A	ILLUMINATIONS	PTO Up/Down Switch, HVAC Control Panel, Instrument Panel Cluster (IPC), PTO Switch, Miles/Oil Level Check Switch, Radio, DPF Regen Switch, Cruise Main Switch, Rear Dome Lamp Switch, Hazard Switch, Door Lock Switch, Shift Lever, Dimmer Control, Heated Mirror Switch
F-29	10A	CORNERING LAMPS	Cornering Light Relay X-5
F-30	10A	AIR CONDITIONER	Compressor Clutch Relay, Defroster Switch, A/C Switch, Cornering Lamp Relay X-5

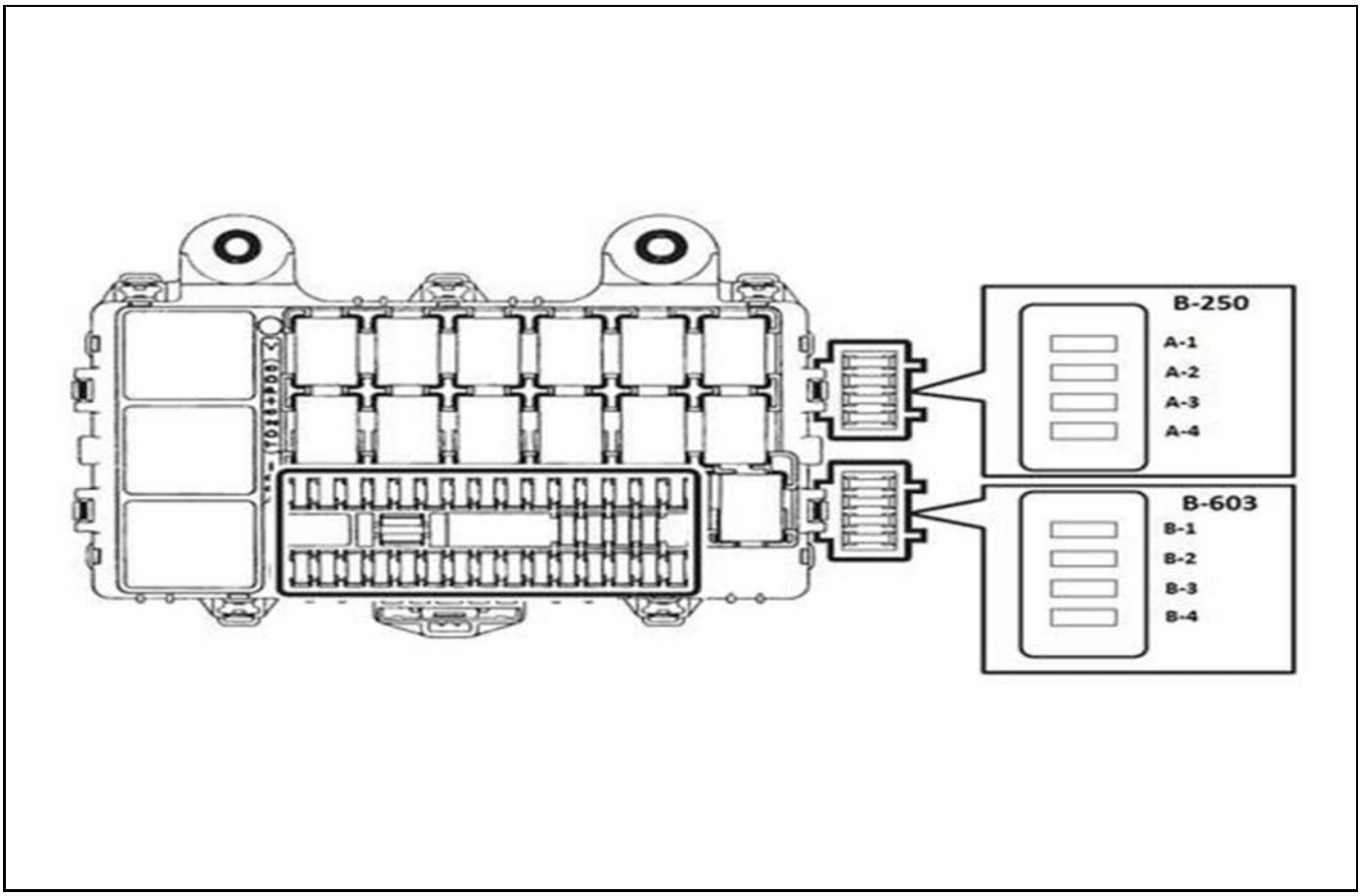

4894071

Fuse/Relay Center (Cab) "A" Fuses

Fuse No.	Capacity	Indication on Label	Main Parts(Load)
A-1	20A	CIGAR	Power Outlet Upper
A-2	15A	ACCESSORIES SOCKET	Power Outlet Lower
A-3	20A	POWER SOURCE	Power Source Connector B-220
A-4	10A	POWER SOURCE	Rear Combination Lamps (LH) and (RH)

Fuse/Relay Center (Cab) "B" Fuses

Fuse No.	Capacity	Indication on Label	Main Parts(Load)
B-1	20A	MIRROR HEATER DR	Mirror Heater Relay (LH) B-276
B-2	10A	SERVICE/REVERSE	NOT USED, Stops at inline H-195
B-3	10A	AUDIO/REVERSE	Radio
B-4	20A	MIRROR HEATER AS	Mirror Heater Relay (RH) B-275

Relay Location

Fuse/Relay Center, Left Outer Frame Rail Behind Front Tire

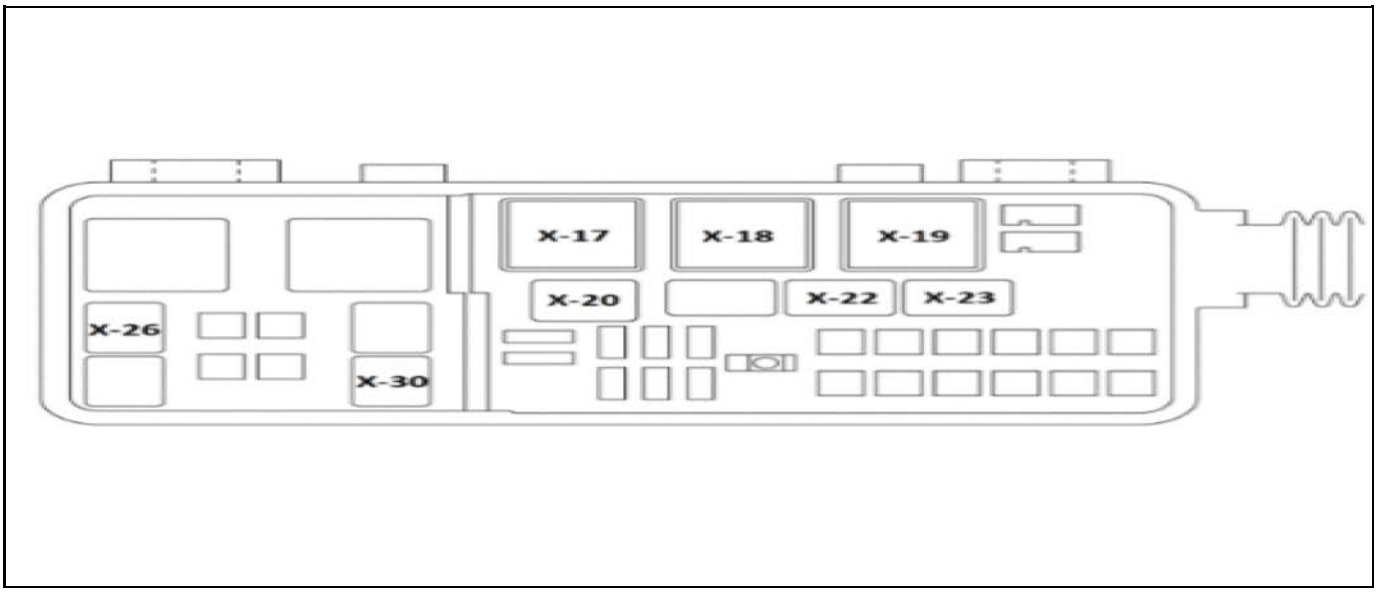

4894189

In the Center of the I/P, Left Side of the Fuse/Relay Center (Cab)

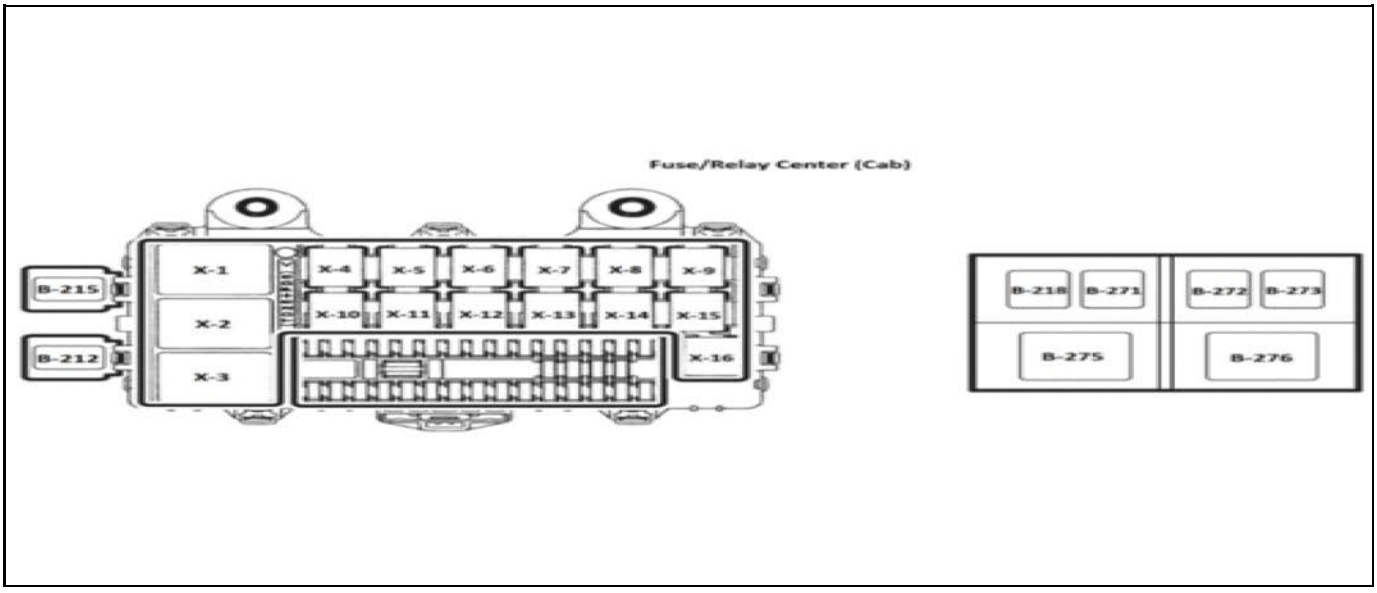

4894191

Relay List

Connector No.	Relay Name
X-1	Stop Lamp
X-2	Daytime Running Light
X-3	Key On
X-4	—
X-5	Cornering Lamp
X-6	Wiper Main
X-7	Horn
X-8	Wiper High/ Low

Relay List (cont'd)

Connector No.	Relay Name
X-9	—
X-10	—
X-11	—
X-12	Front Power Window
X-13	Headlight(Low)
X-14	—
X-15	Headlight(High)
X-16	Taillight
X-17	Starter

Relay List (cont'd)

Connector No.	Relay Name
X-18	ECM Main
X-19	NOx and Diesel Exhaust Fluid (DEF) Sensor
X-20	Compressor Clutch
X-21	—
X-22	Rear Dome Light
X-23	Heater Valve (SCR)
X-26	Marker Lamp
X-30	Fuel Heater
B-212	Power ACC
B-215	Blower Motor
B-218	Condenser Fan
B-271	Stop Lamp Switch
	Cornering Light
B-272	Cigar Lighter
B-273	Reverse Lamp
	Starter Cut
B-275	Mirror Heater (RH)
B-276	Mirror Heater (LH)

Diagnostic Information and Procedures

Instrumentation and Driver Information Diagnosis Introduction

Warning Light and Indicator Light (Led) Display Test

The instrument panel cluster verifies if the system functions properly when the ignition switch is ON.

When normal, the warning lights and indicator lights (LED) illuminate or flash for a certain period of time as follows:

ABS Warning Light

It illuminates for 2 seconds, and then turns OFF.

Check Engine Warning Light

It will turn OFF after illuminating for 5 seconds or after the engine is started.

Cruise Control Main Indicator Light

It will illuminate for 5 seconds, and then turn OFF.

Cruise Control Set Indicator Light

It will illuminate for 5 seconds, and then turn OFF.

Brake System Warning Light

It turns off after the engine starts.

Oil Pressure Warning Light

It turns off after the engine starts.

Generator Warning Light

It turns off after the engine starts.

Multi-Information Display Test

When the ignition switch is turned ON, the instrument panel cluster verifies if the system functions properly.

If normal, the multi-information display alternately displays the DPF automatic regeneration in progress indicator and the DPF manual regeneration in progress indicator for 30 seconds or until the engine starts.

Electrical Schematic Symbols

Symbol	Meaning of Symbol	Symbol	Meaning of Symbol
	Fuse		Bulb
	Slow blow fuse		Double filament bulb
	Fusible link wire	M	Motor
	Switch (Normal open type)		Variable register Rheostat
	Switch		Coil (inductor), solenoid, magnetic valve
	Switch (Normal close type)		Relay (Normal open type)
	Contact wiring		Relay (Normal close type)
B A	Selection of harness. It displays selecting shared.		
+ −	Battery		Light emitting diode
	Diode		Reed switch
	Electronic Parts		Condenser
	Resistor		Horn
	Speaker		Vacuum switching valve
	Buzzer	A A	Arrow shows circuit continues to the deferent page
	Circuit breaker	1 1	Arrow shows circuit continues in the same page
	Twist Pair		Shield

LNW780XF002201

4497539

Symbol	Description
4894272	Circuits or Wires Within The Same Connector
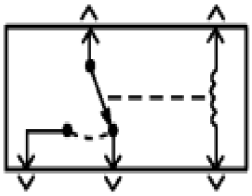 4894325	Single Pole Double Throw Relay
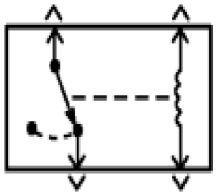 4894329	Single Pole Single Throw Relay

Symbol	Description
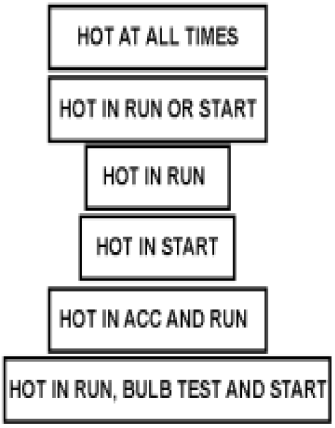 4894335	Voltage Indicator Boxes These Boxes Are Used On Schematics To Indicate When Voltage Is Present At A Fuse
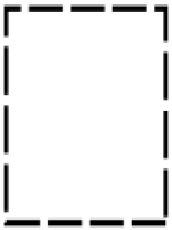 4894339	Partial Component When A Component Is Represented In A Dashed Box, The Component Or Its Wiring Is Not Shown In Its Entirety
4894343	Entire Component When A Component Is Represented In A Solid Box The Component Or Its Wiring Is Shown In Its Entirety

Symbol	Description
4894349	Fuse
4894354	Circuit Breaker
4894358	Fusible Link

Symbol	Description
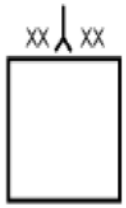 4894361	Connector Attached To Component
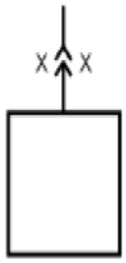 4894365	Pigtail Connector
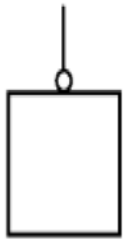 4894368	Bold On Or Screw On Eyelet Terminal

Symbol	Description
4894370	Inline Harness Connector
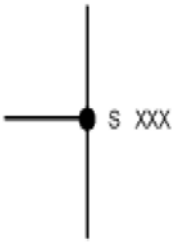 4894371	External Harness Splice
4894372	Internal Harness Splice

Symbol	Description
4894373	Chassis Ground
4894375	Case Ground
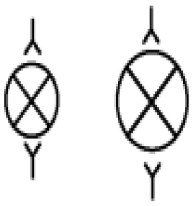 4894376	Single Filament Light Bulbs

Symbol	Description
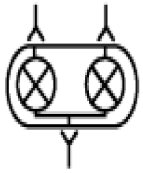 4894380	Double Filament Light Bulb
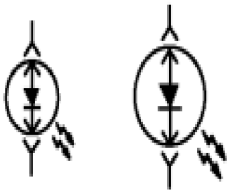 4894387	Light Emitting Diodes
4894389	Capacitor

Symbol	Description
4894392	Battery
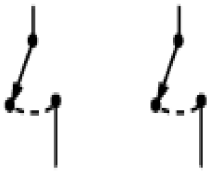 4894397	Switches
4894412	Resistor

Symbol	Description
4894419	Variable Resistor
4894424	Position Sensor
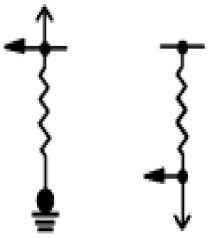 4894429	I/O Resistors

Symbol	Description
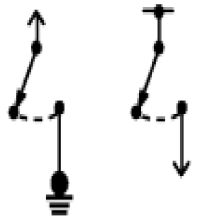 4894432	I/O Switches
4894437	Diode
4894442	Shielded Circuit

Symbol	Description
4894443	Heating Elements
4894447	Motor
4894451	Solenoid

Symbol	Description
4894454	Coil

Schematic and Routing Diagrams

Selective Catalyst Reduction (SCR) Schematics (DEF Module Power, Ground, and Communication)

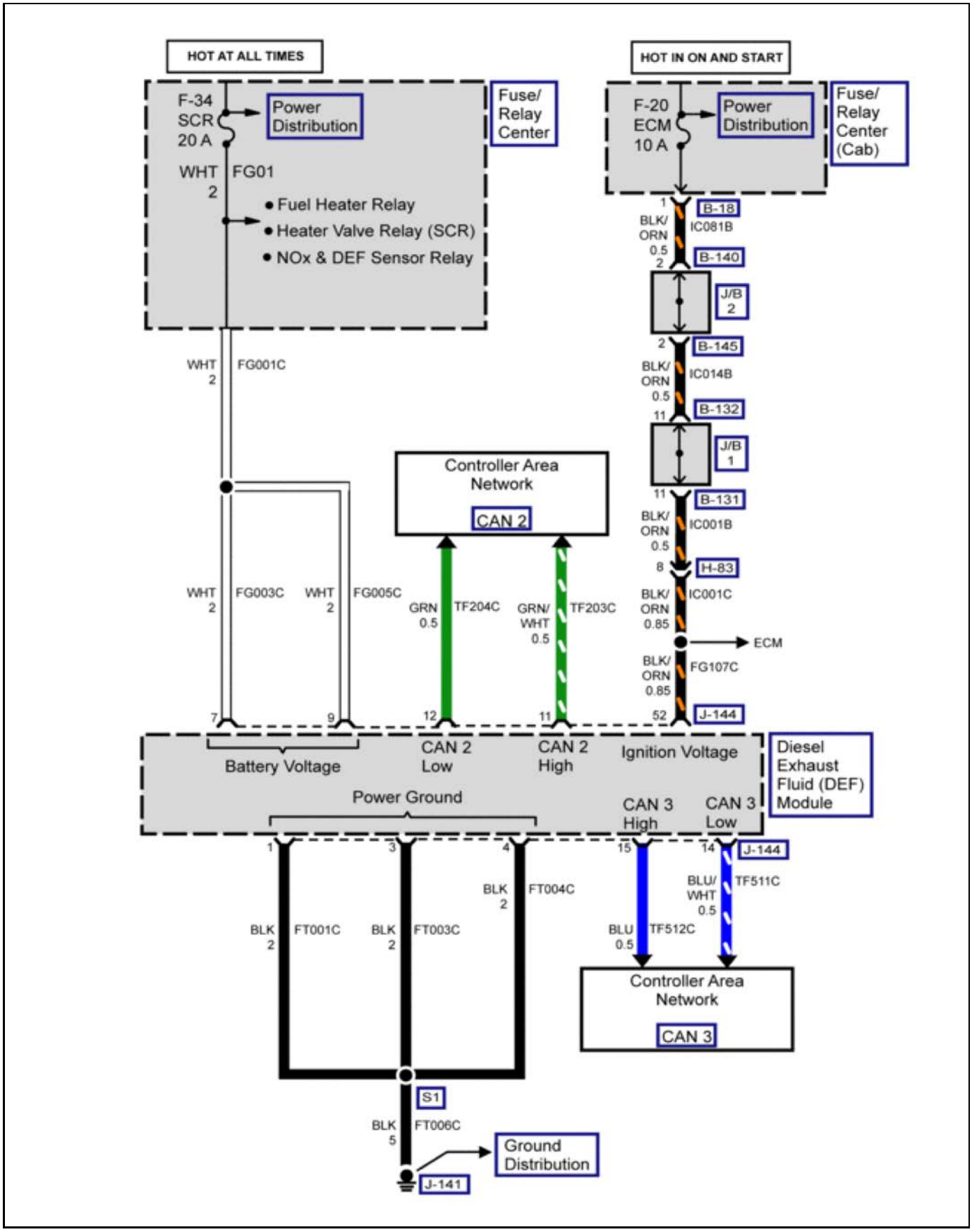

4892713

Selective Catalyst Reduction (SCR) Schematics (DEF Supply Pump)

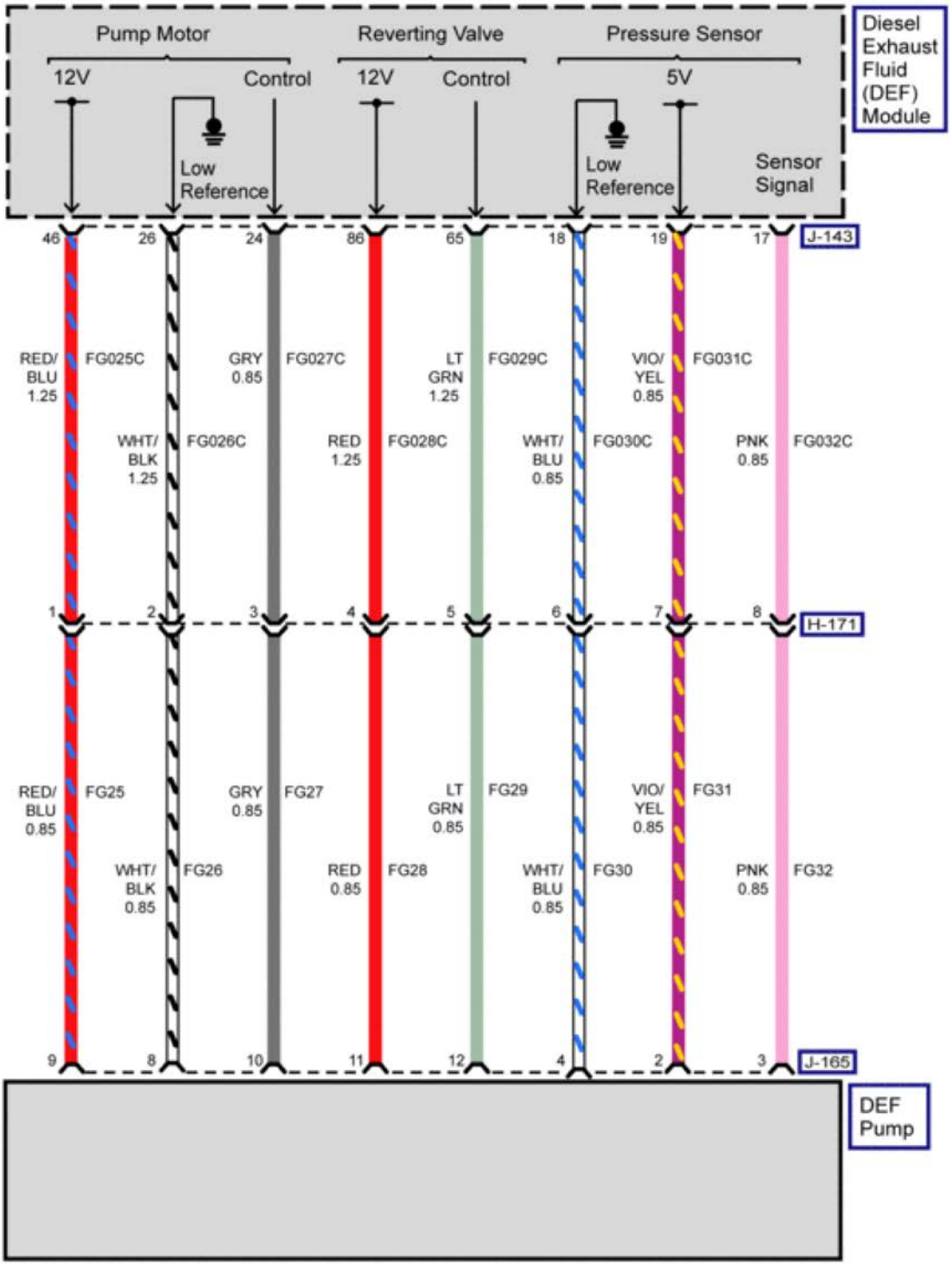

4892717

Selective Catalyst Reduction (SCR) Schematics (DEF Injector and EGT Sensor 3)

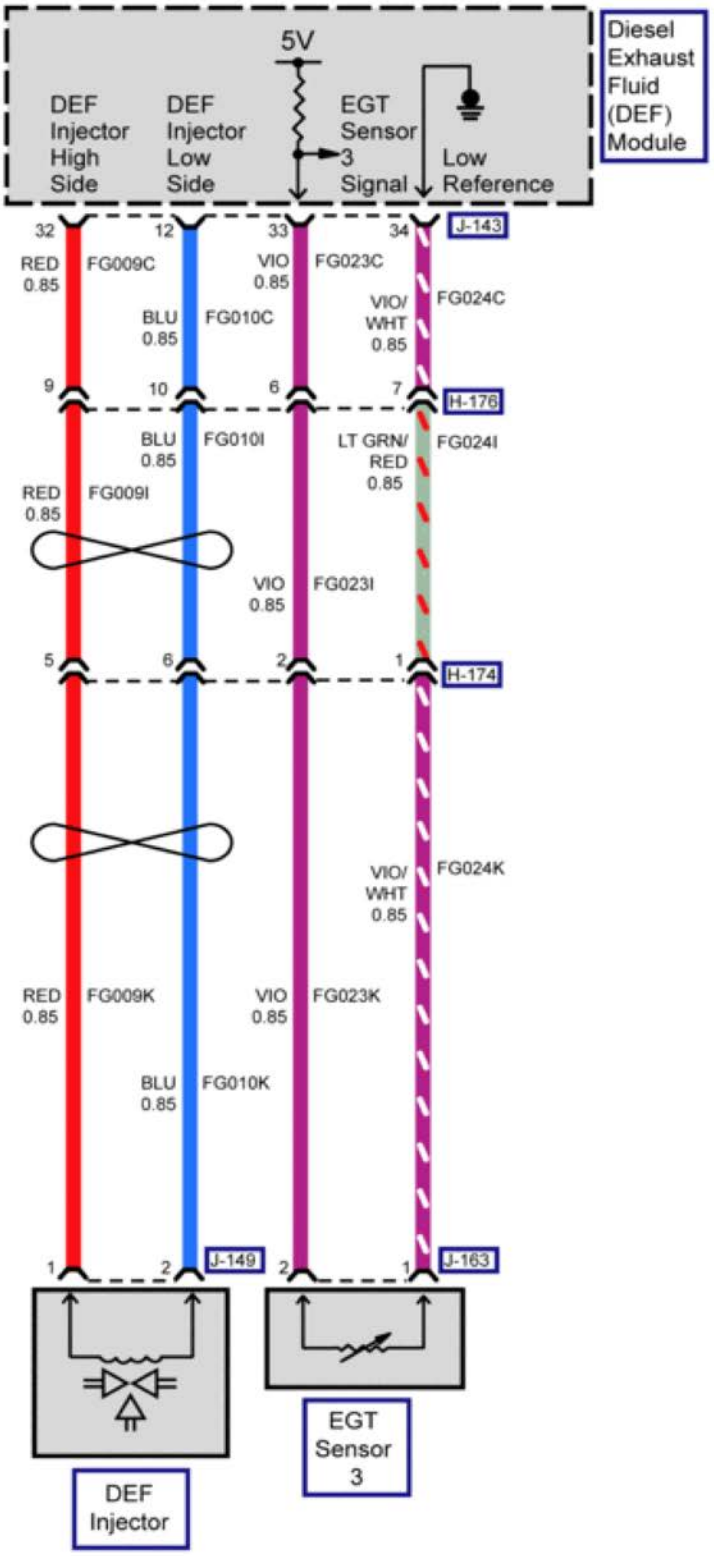

4892724

Selective Catalyst Reduction (SCR) Schematics (DEF Tank Heater Coolant Control Valve)

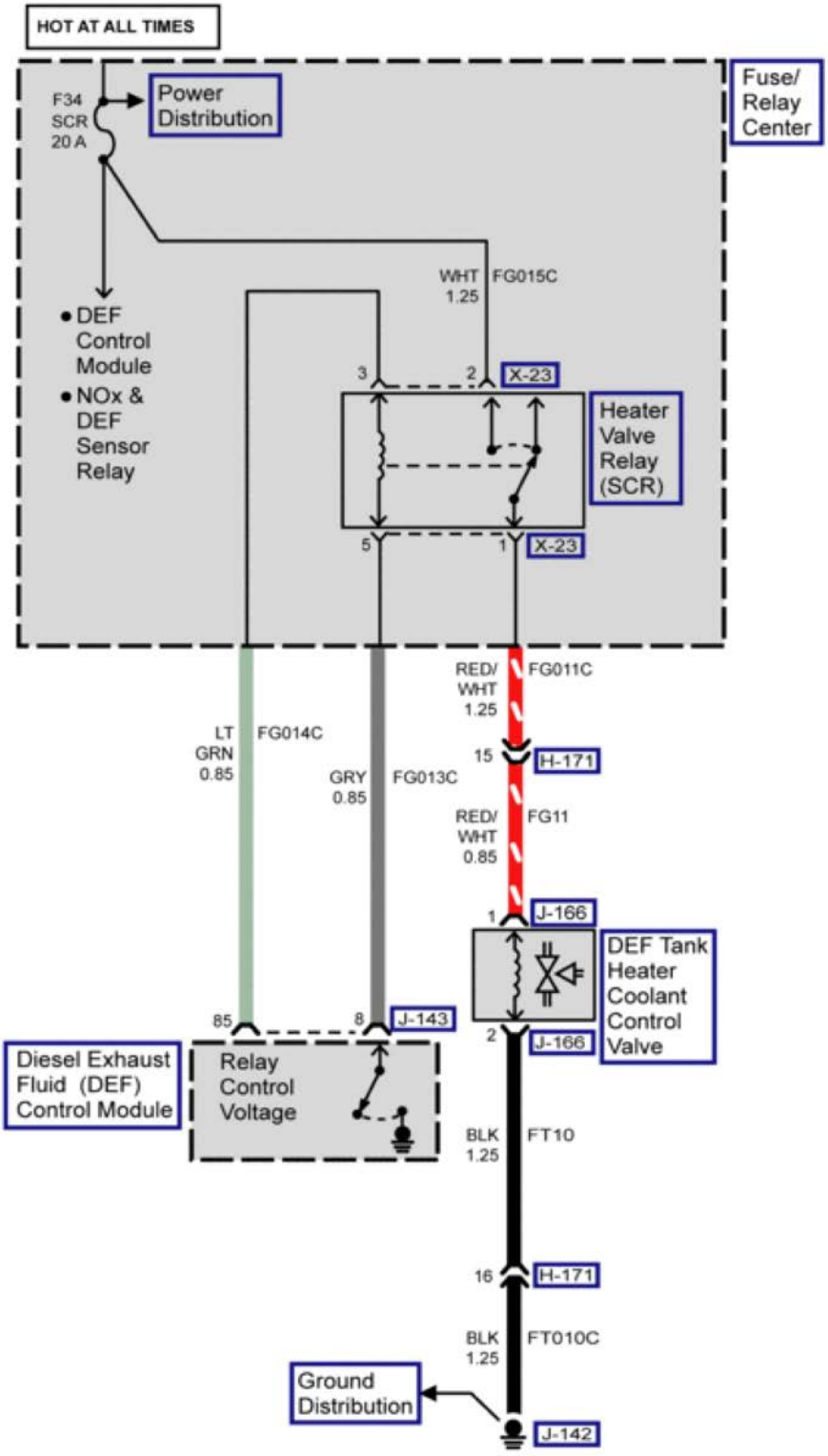

4892739

Selective Catalyst Reduction (SCR) Schematics (DEF Tank Sensor)

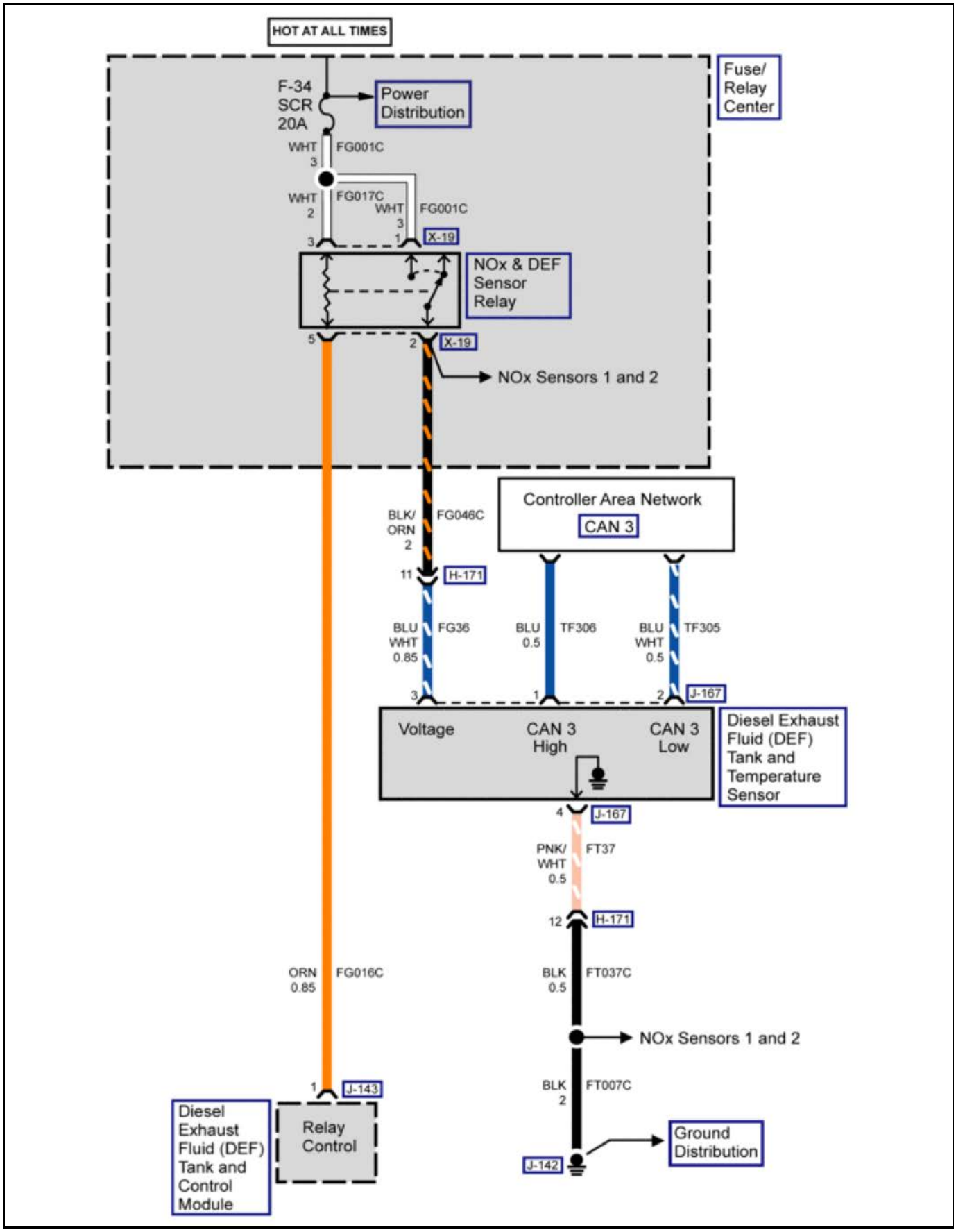

4892747

Selective Catalyst Reduction (SCR) Schematics (NOx Sensors)

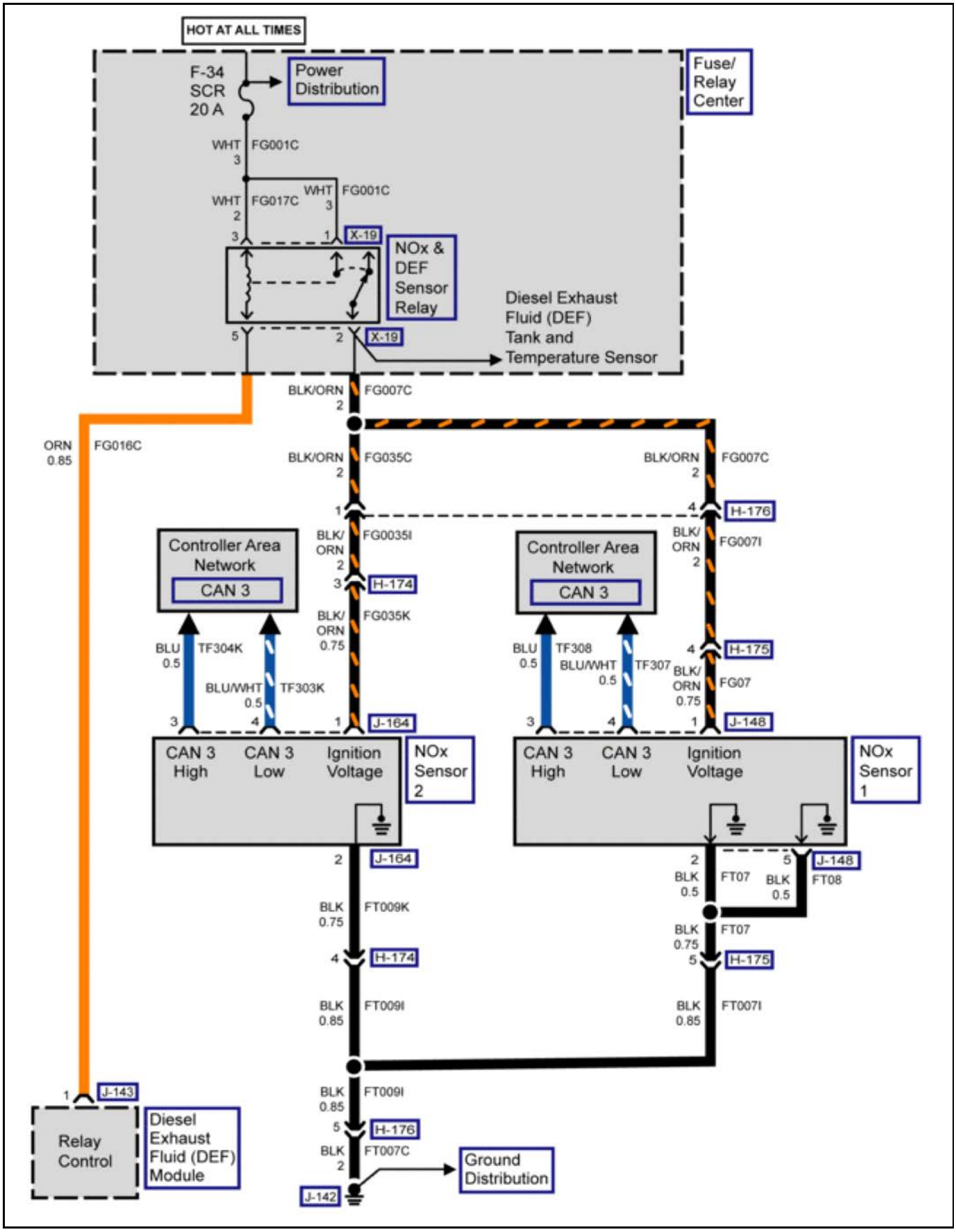

4892757

Exterior Lights Schematics (Headlamps/Daytime Running Lamps Module Powers and Grounds)

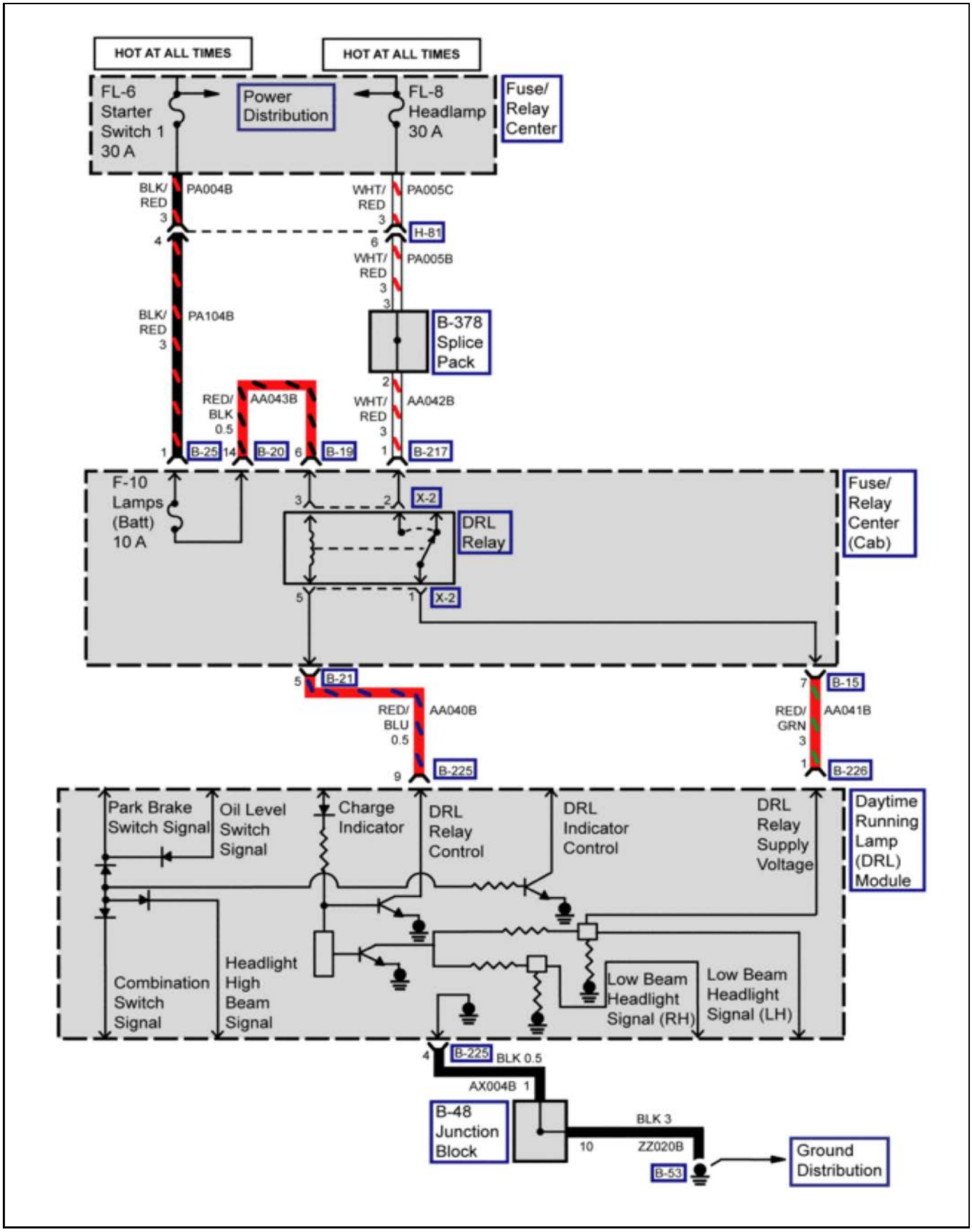

4892104

Exterior Lights Schematics (DRL and Charge Indicators)

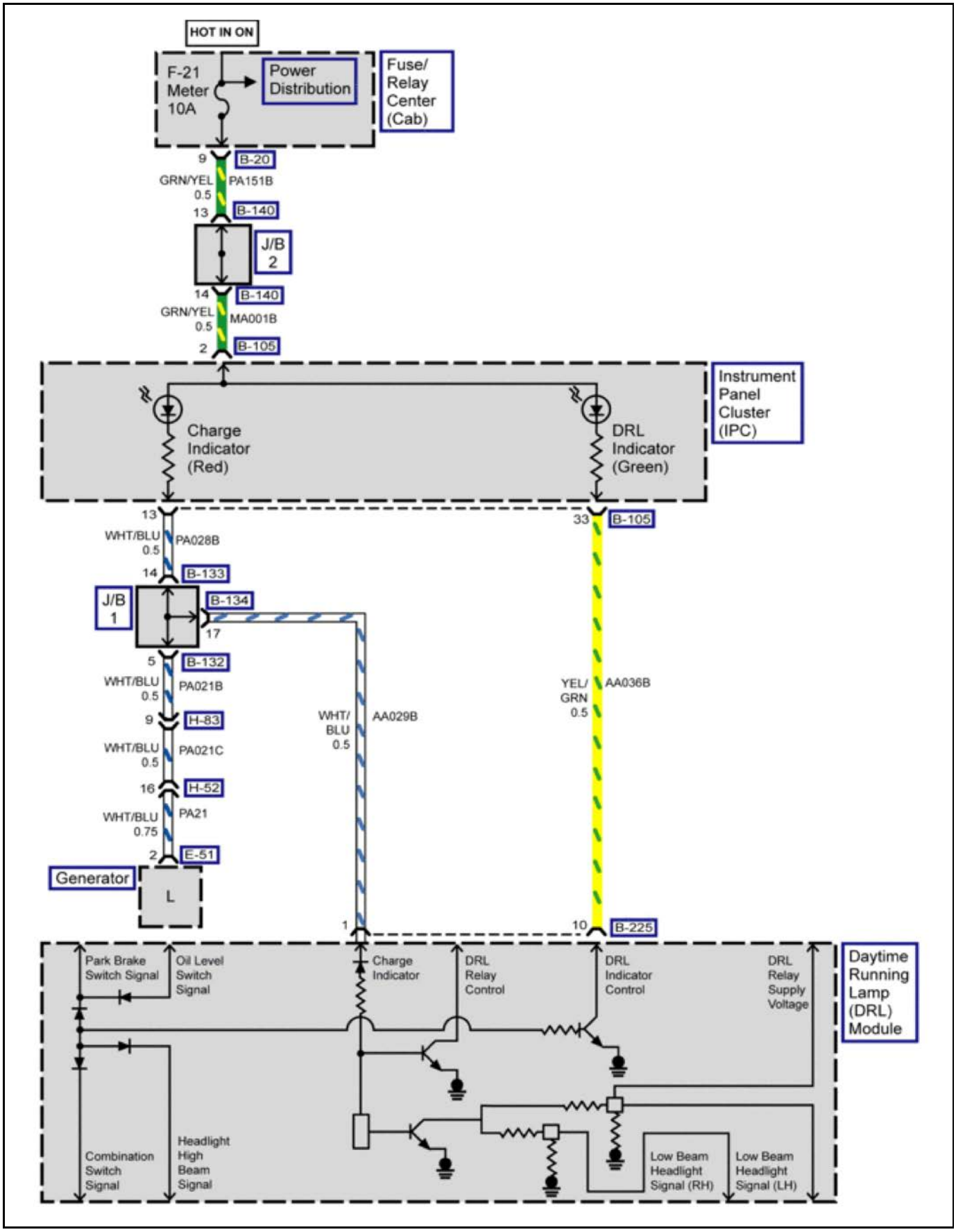

4892106

Exterior Lights Schematics (Headlamps)

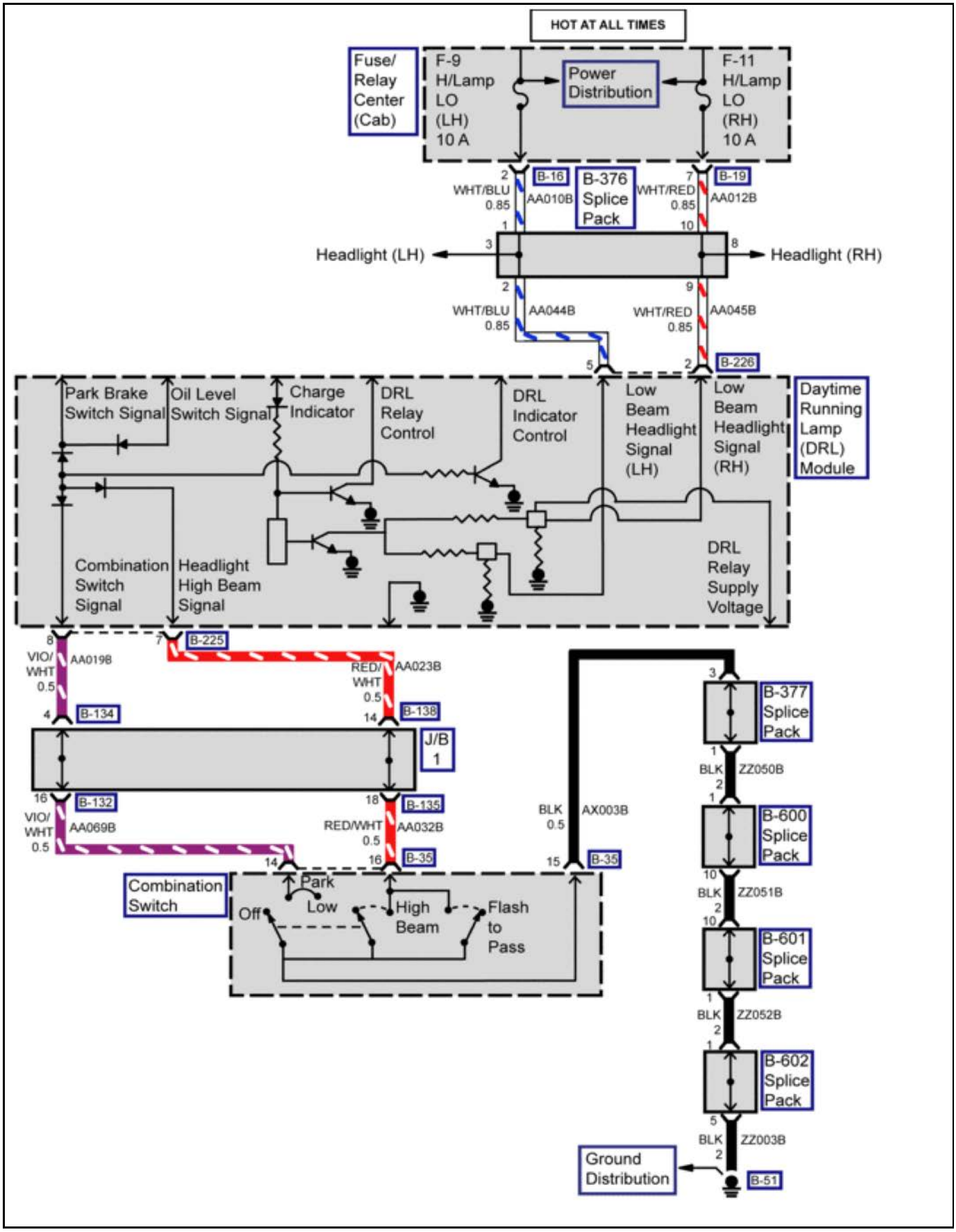

4892108

Exterior Lights Schematics (Park Brake)

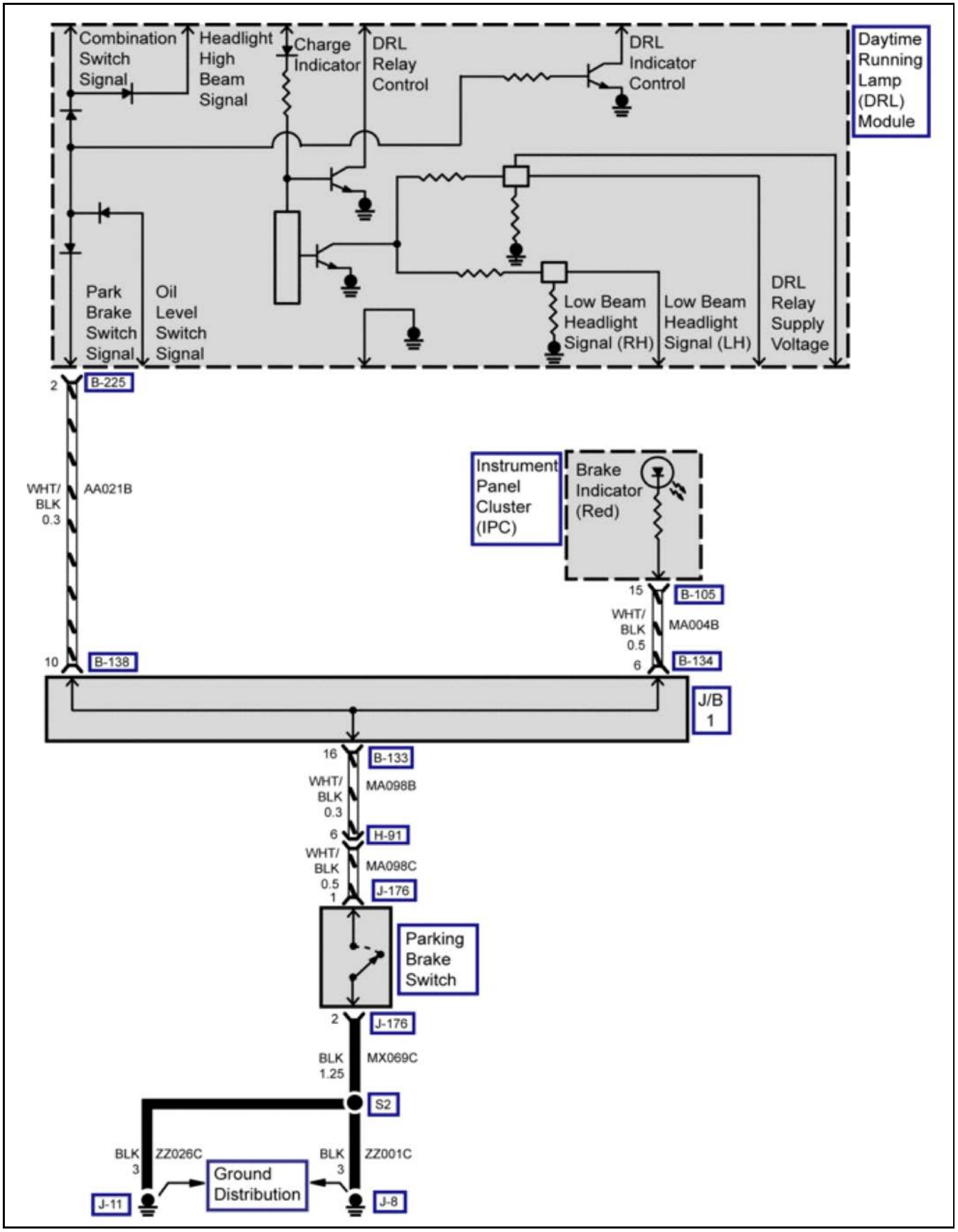

4892110

Exterior Lights Schematics (Headlamps Low Beams)

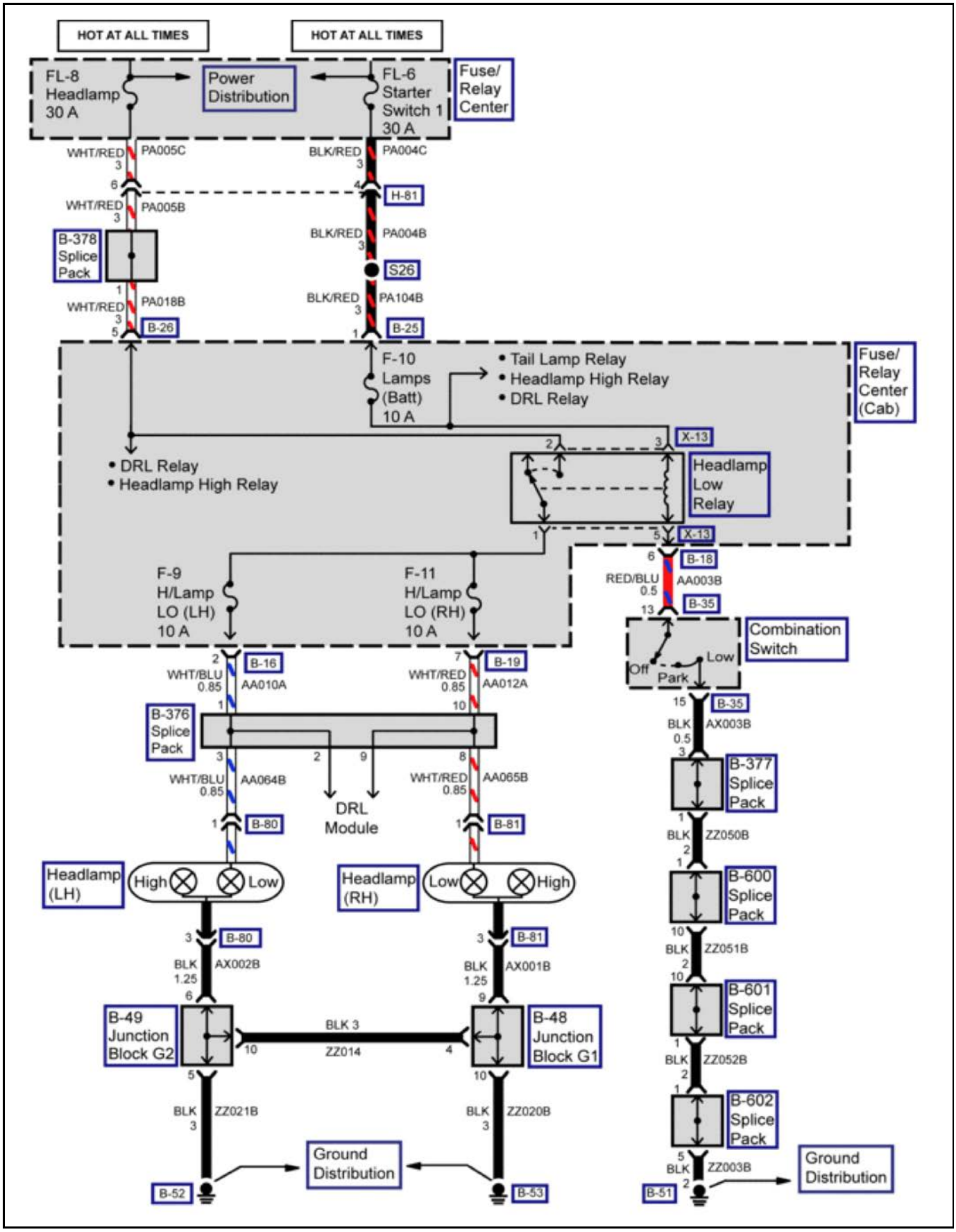

4892113

Exterior Lights Schematics (Headlamps High Beams)

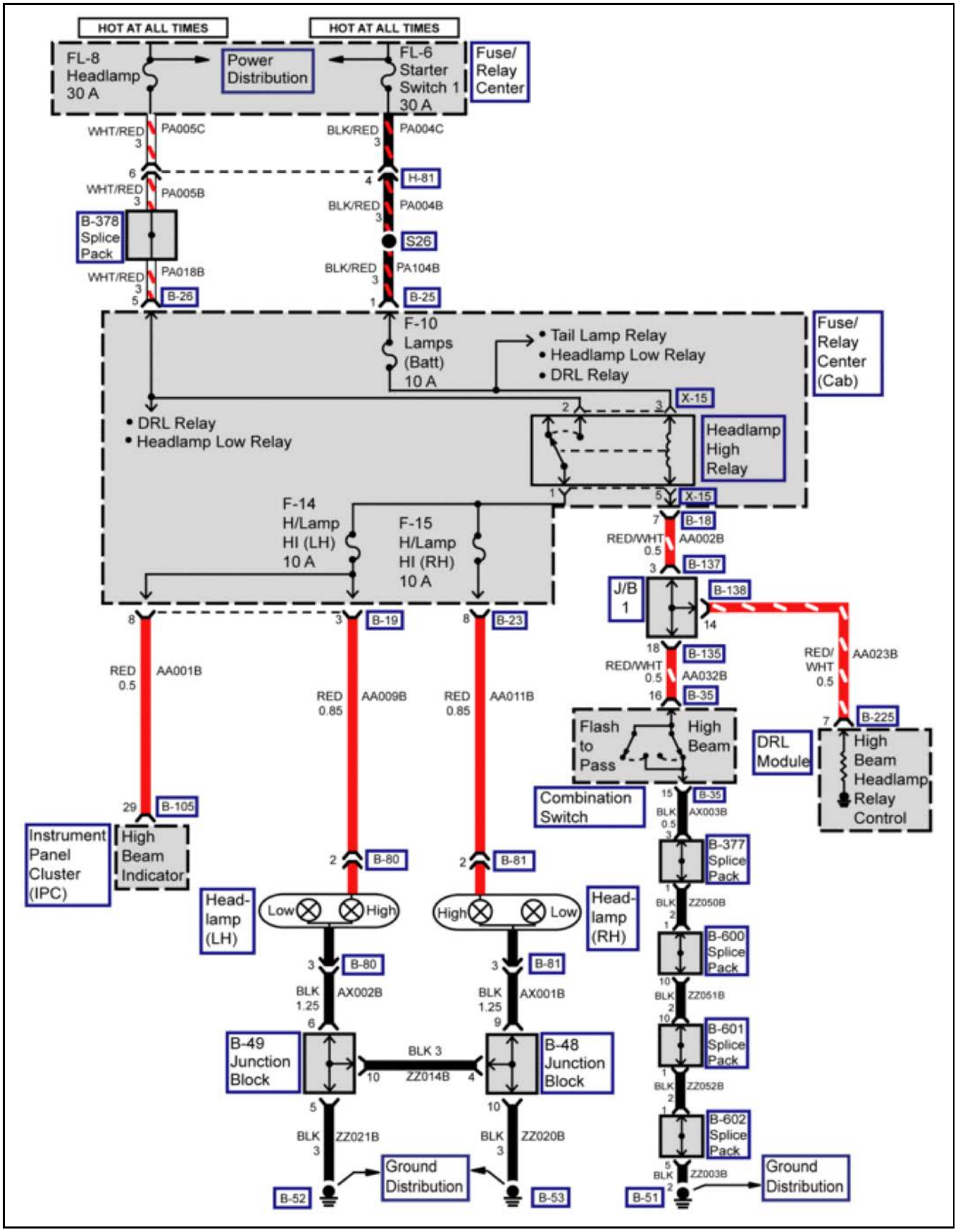

4892180

Exterior Lights Schematics (Turn Signal/Hazard Switch and Flasher Module)

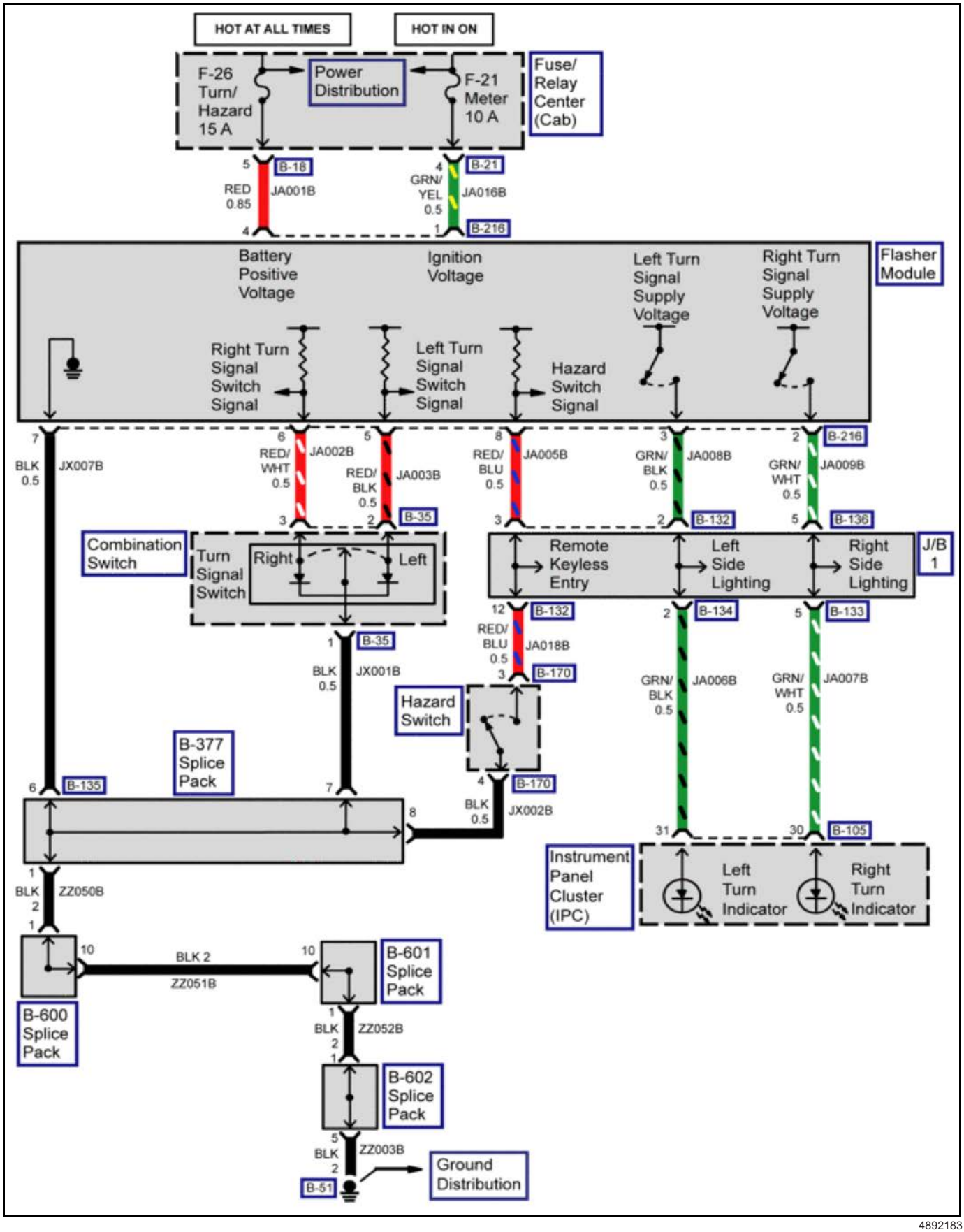

4892183

Exterior Lights Schematics (Turn Signals – Front)

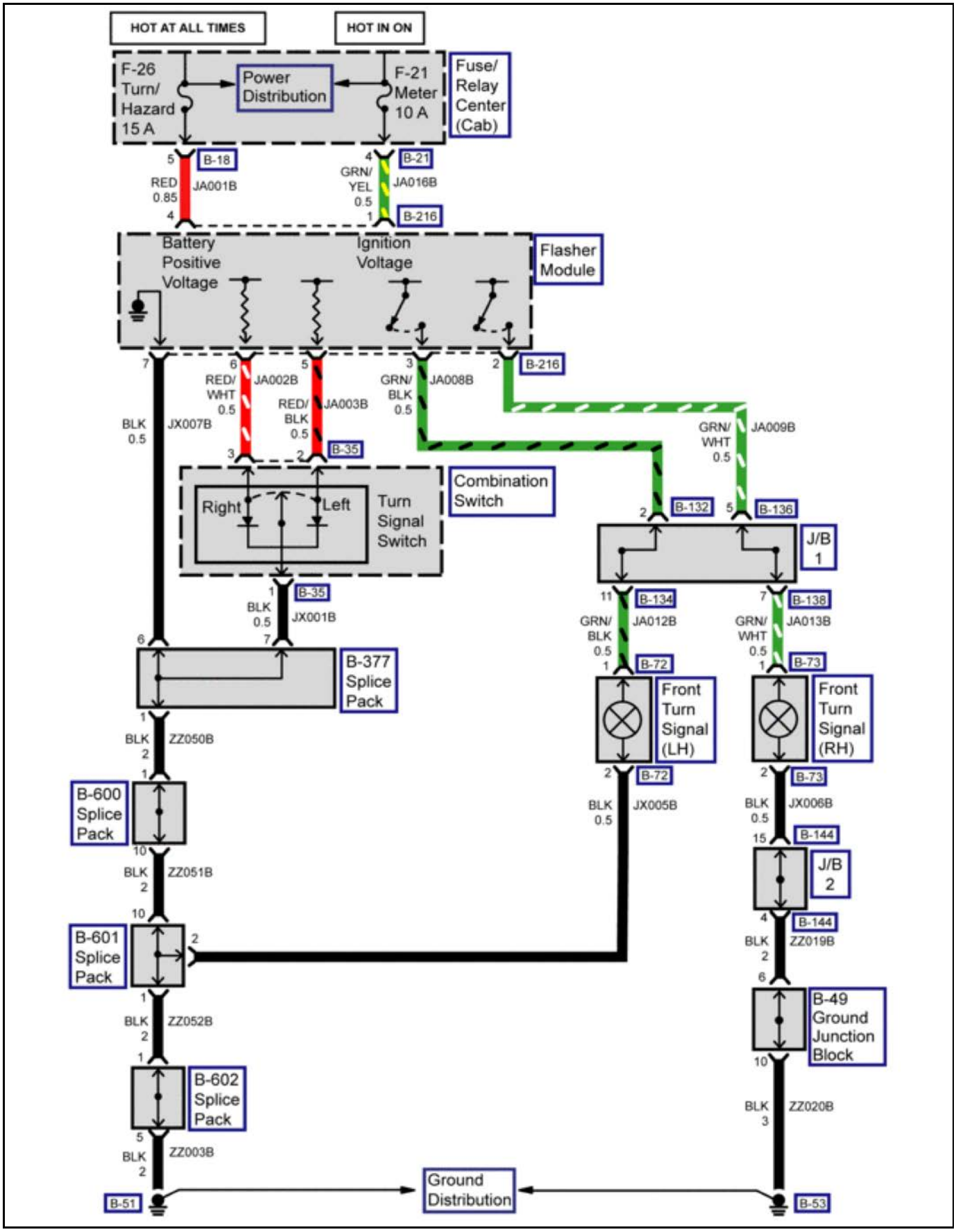

4892185

Exterior Lights Schematics (Turn Signals – Side)

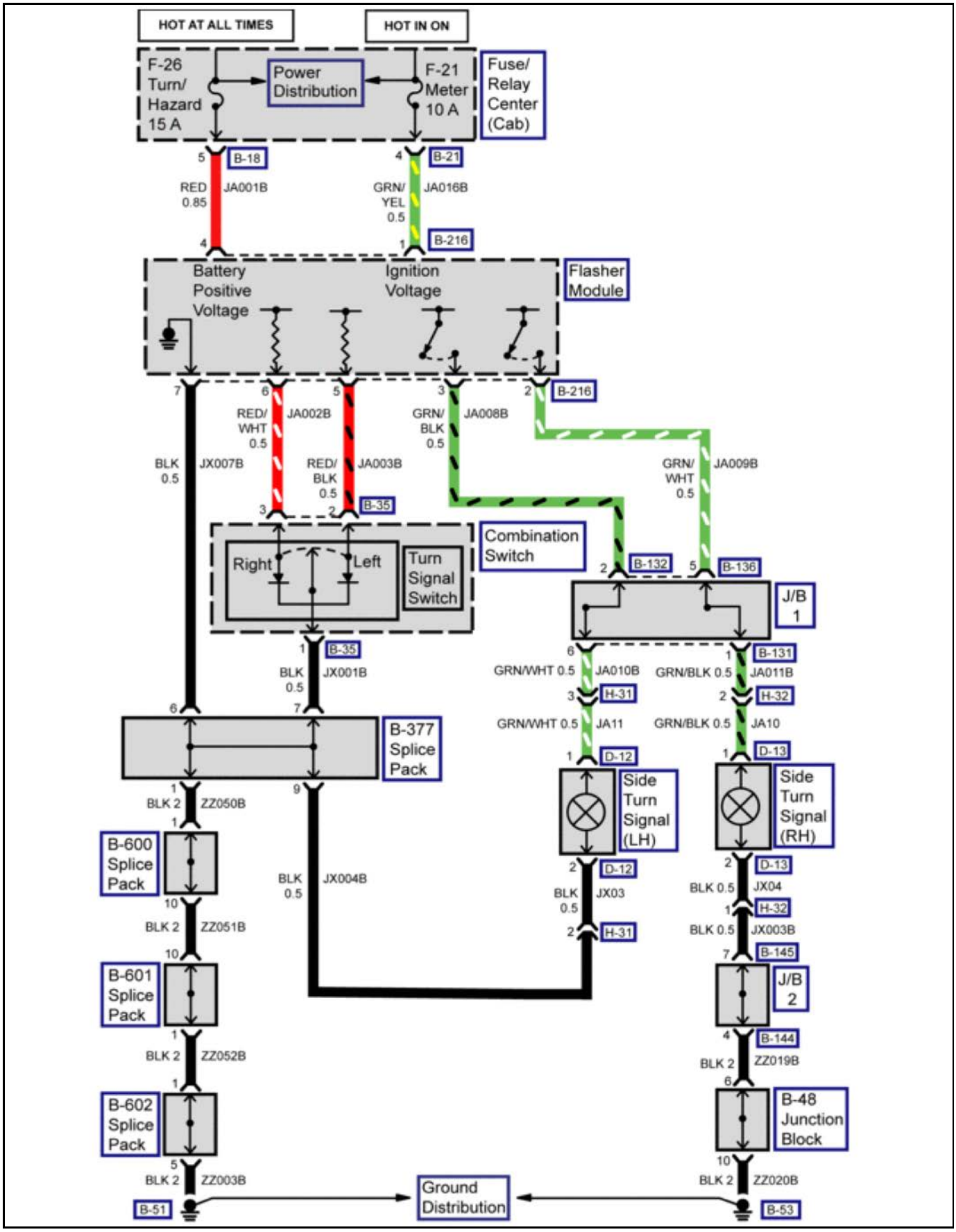

4892187

Exterior Lights Schematics (Turn Signals – Rear)

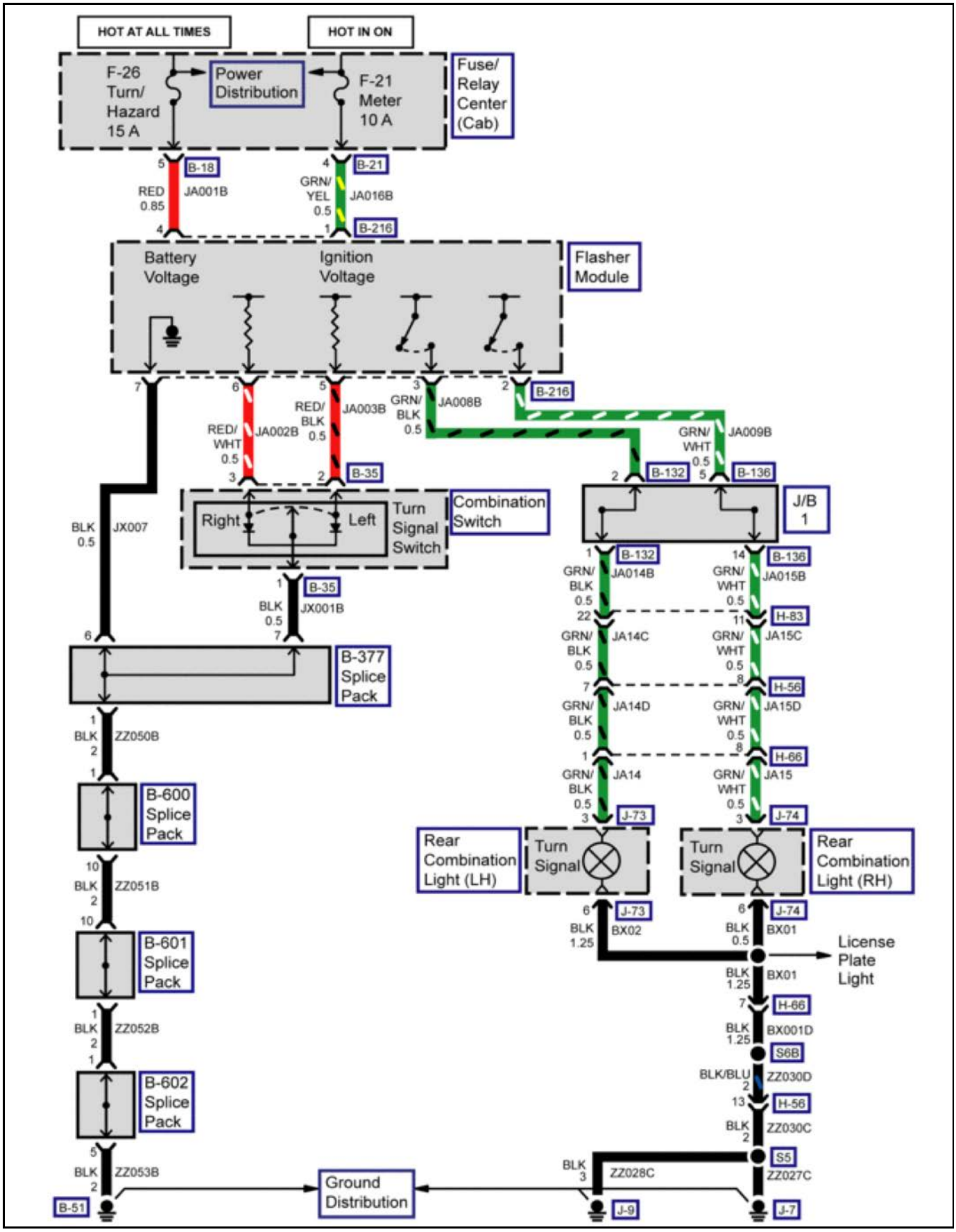

4892191

Exterior Lights Schematics (Cornering Lamps)

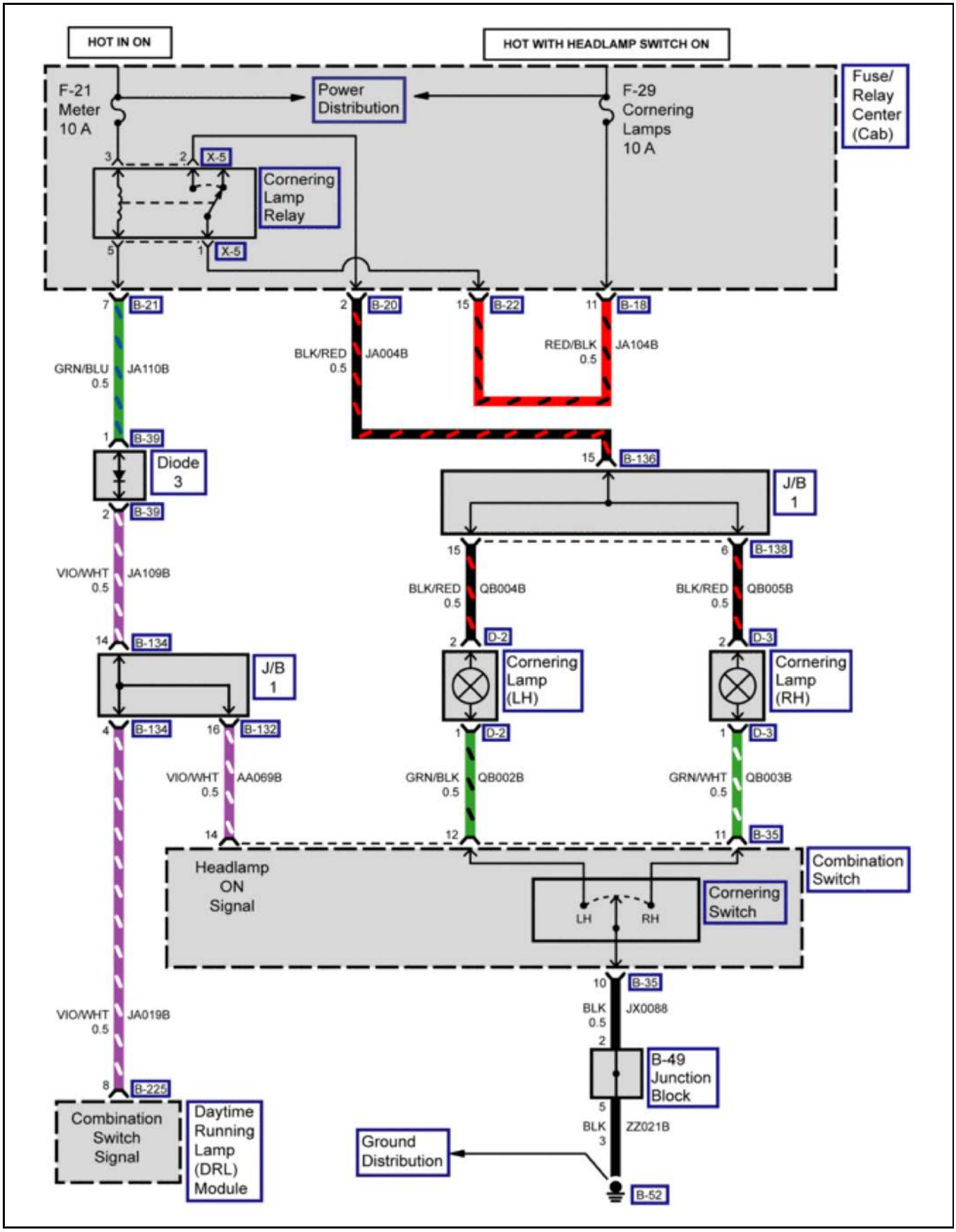

4892201

Exterior Lights Schematics (Stop Lamps Controls)

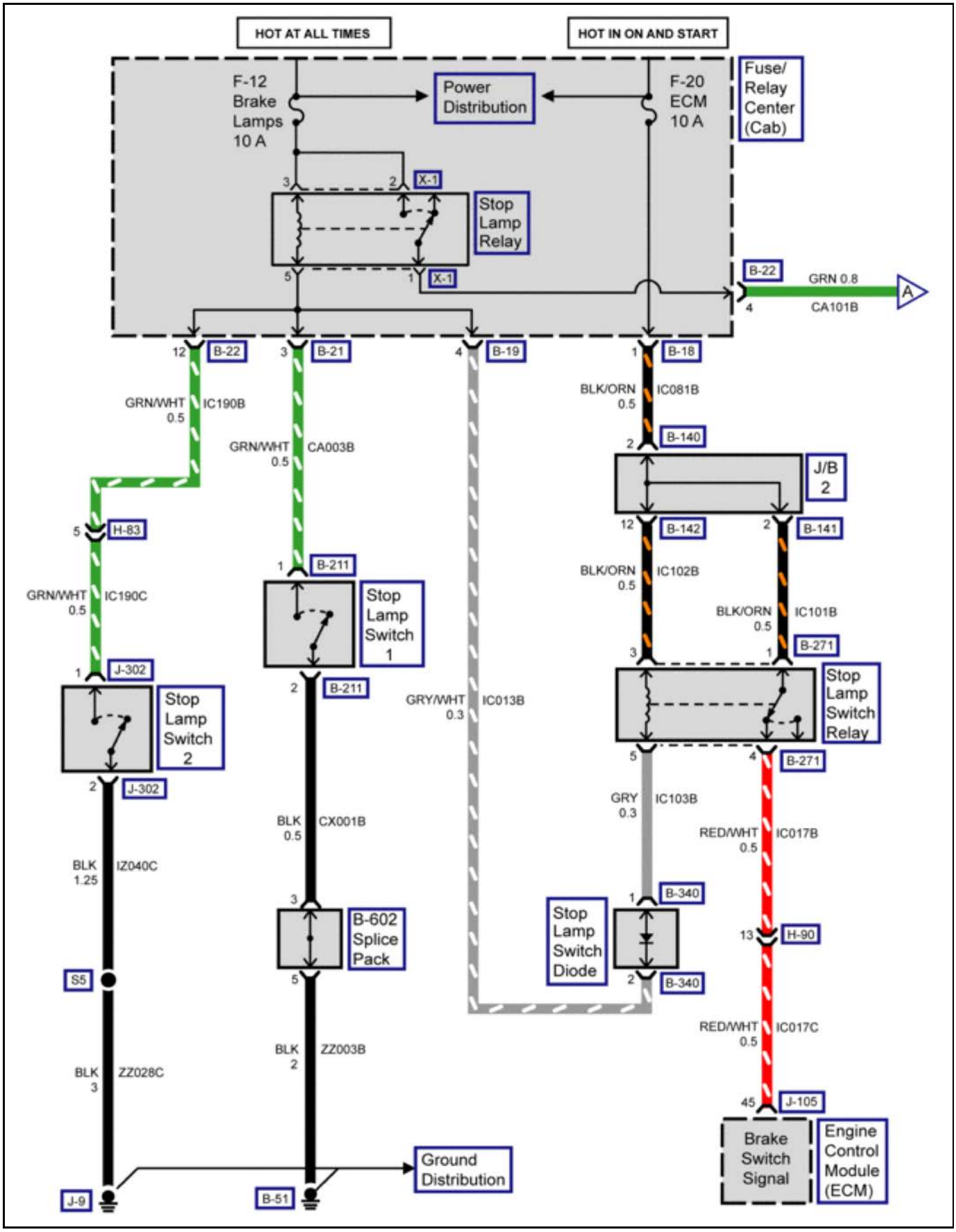

4892213

Exterior Lights Schematics (Stop Lamps)

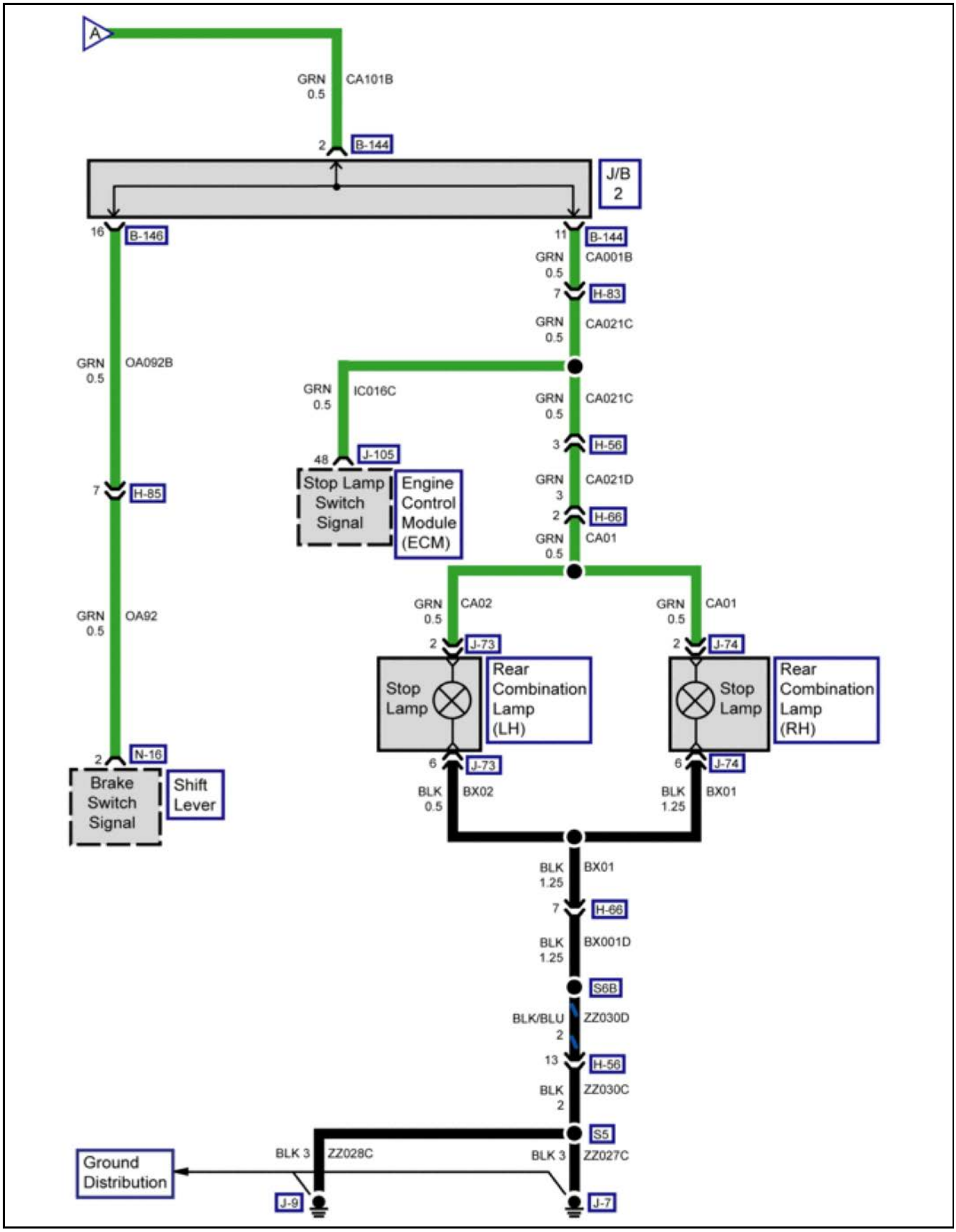

4892218

Exterior Lights Schematics (Taillamps and License Plate Lamps)

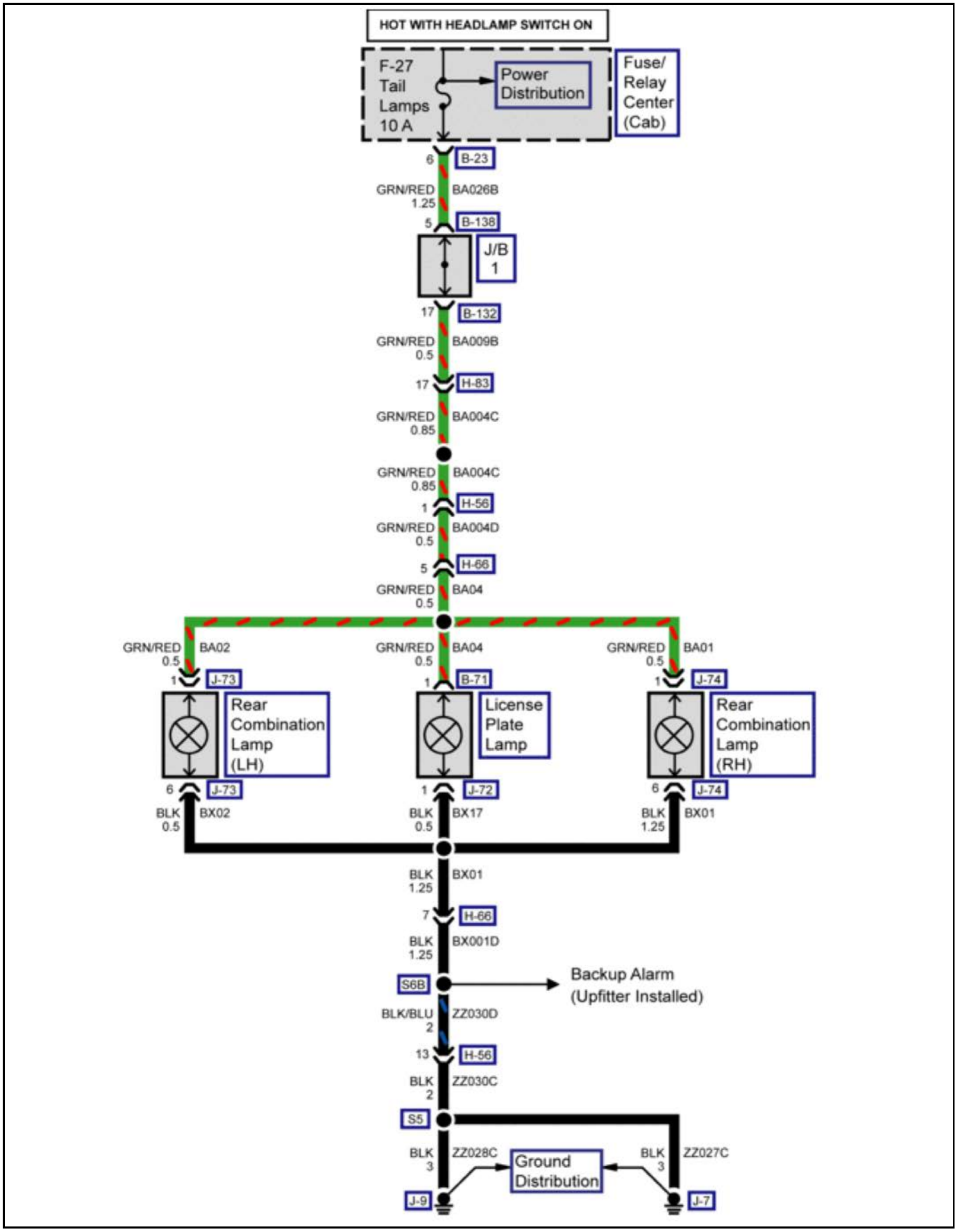

4892227

Interior Lights Schematics (Dome Lamp)

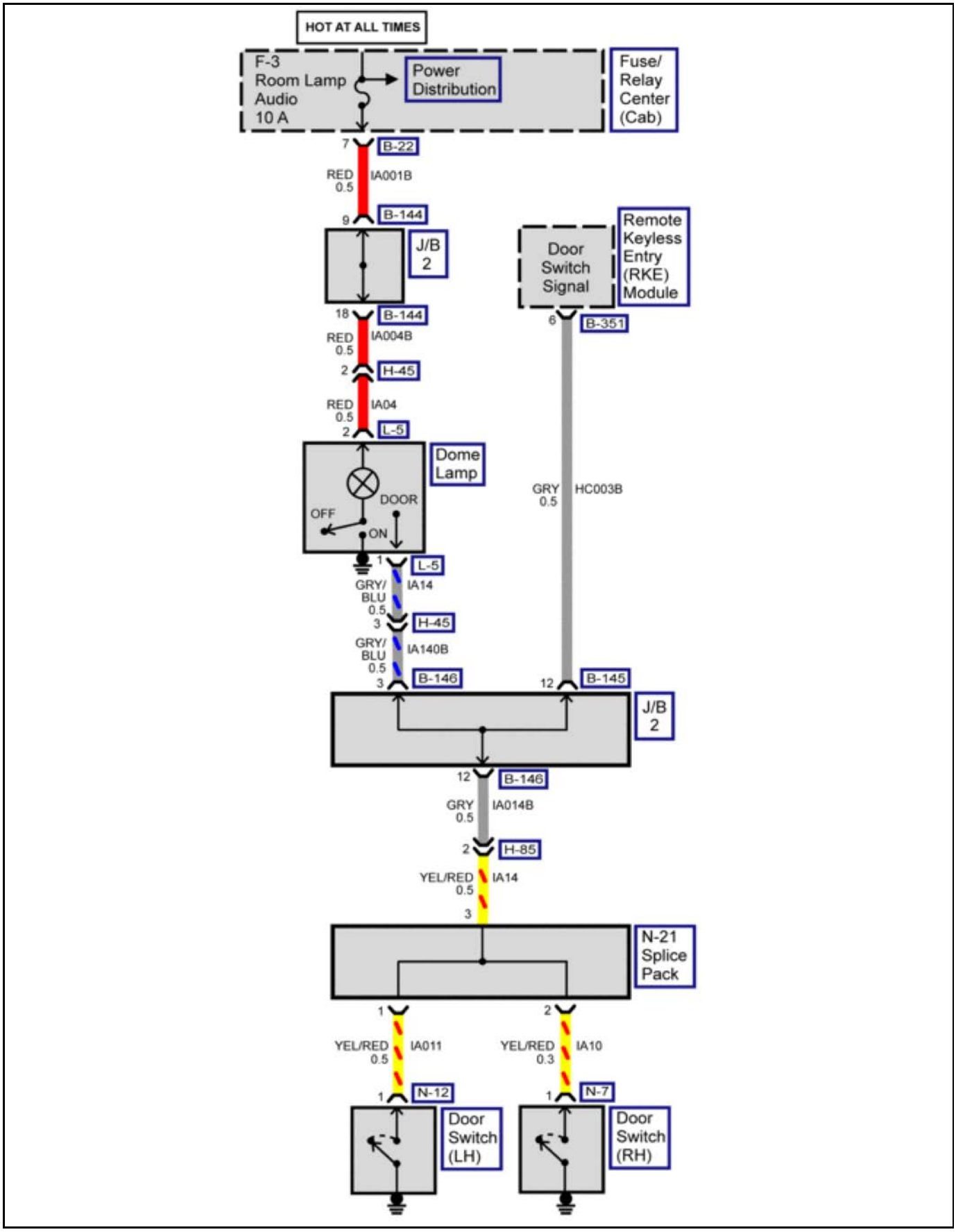

4892269

Interior Lights Schematics (Instrument Panel Illumination Dimming)

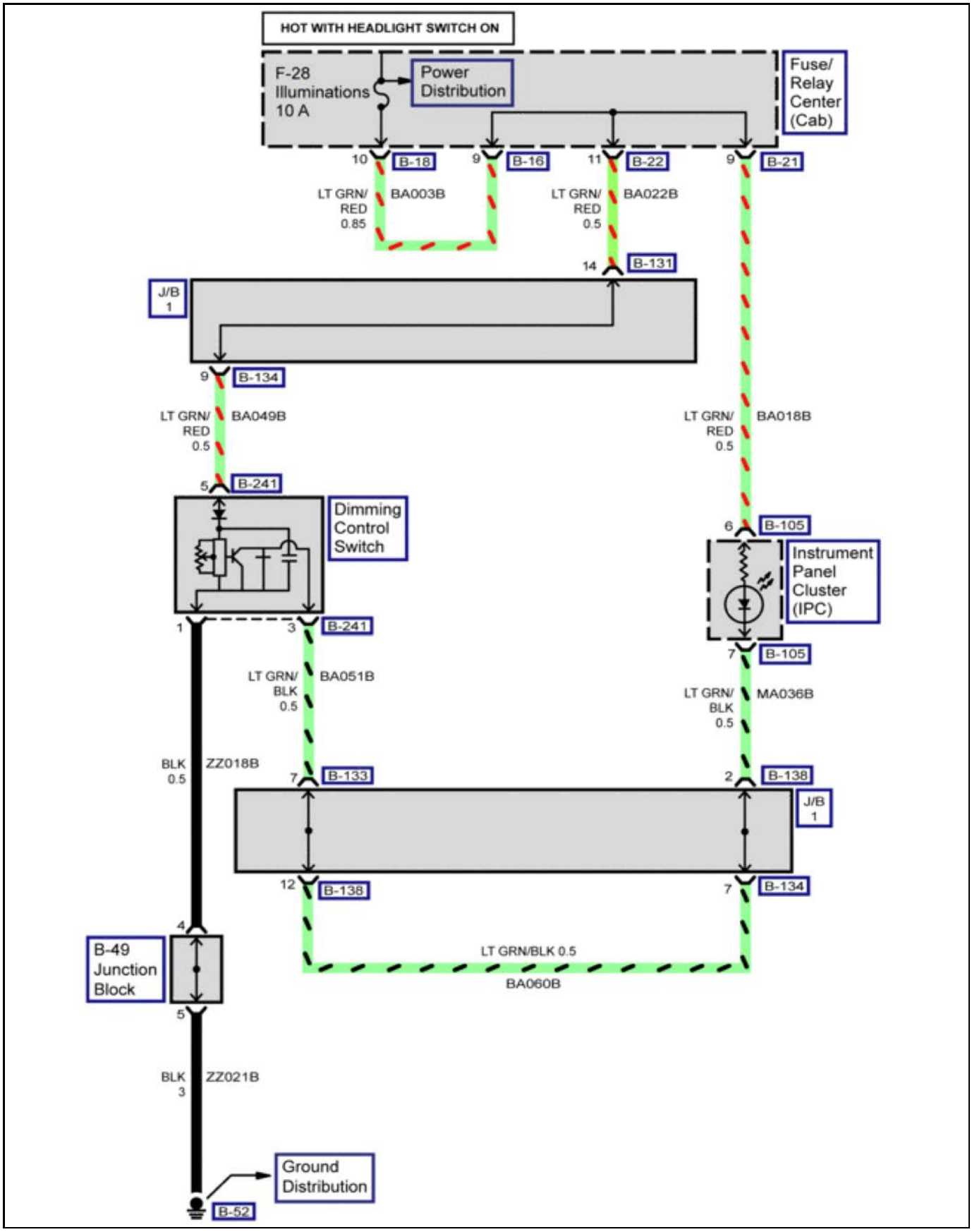

4892273

Interior Lights Schematics (DPF, Cruise Main and Rear Dome Lamp Switch)

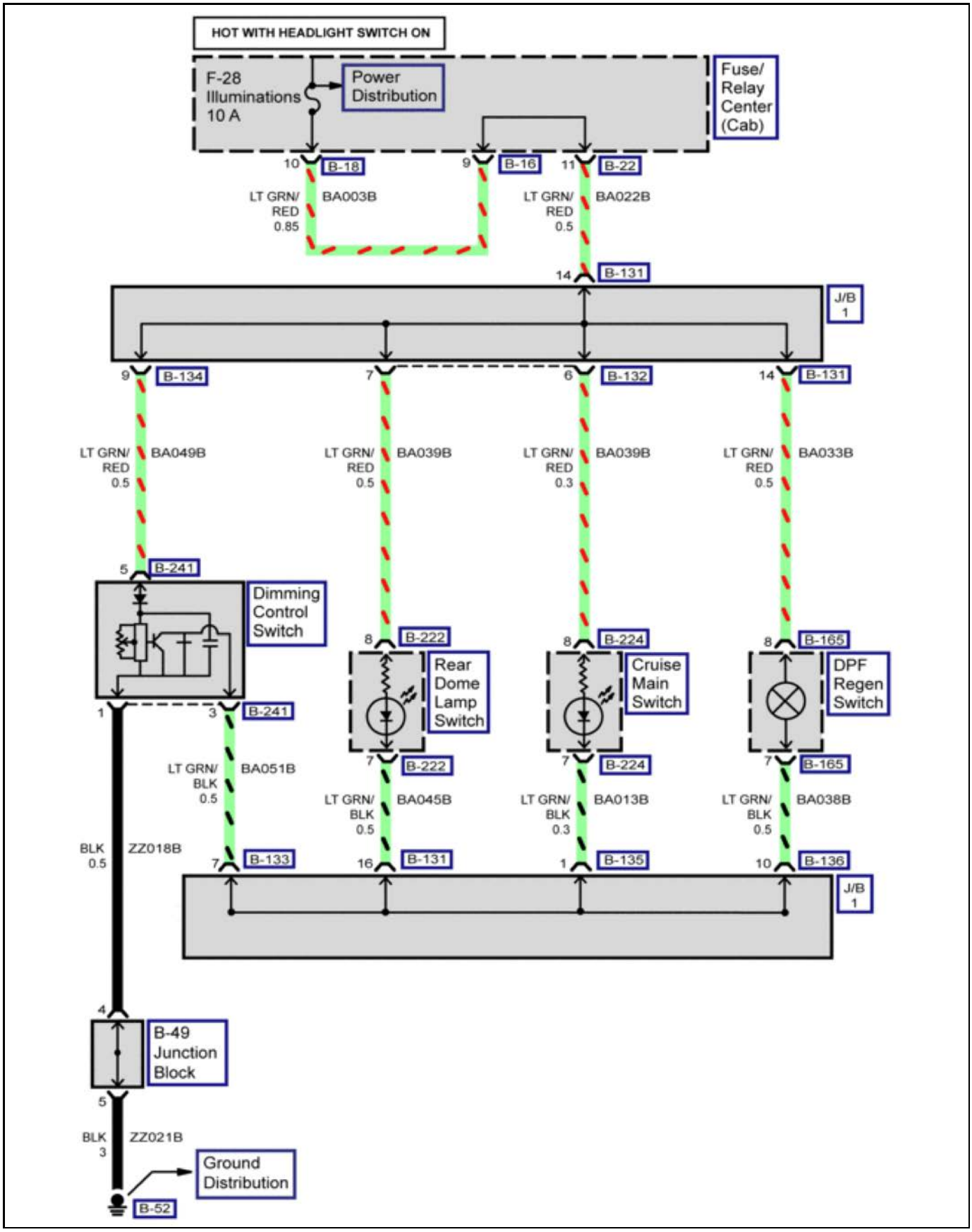

4892275

Interior Lights Schematics (Hazard, Heated Mirror and Door Lock Switch)

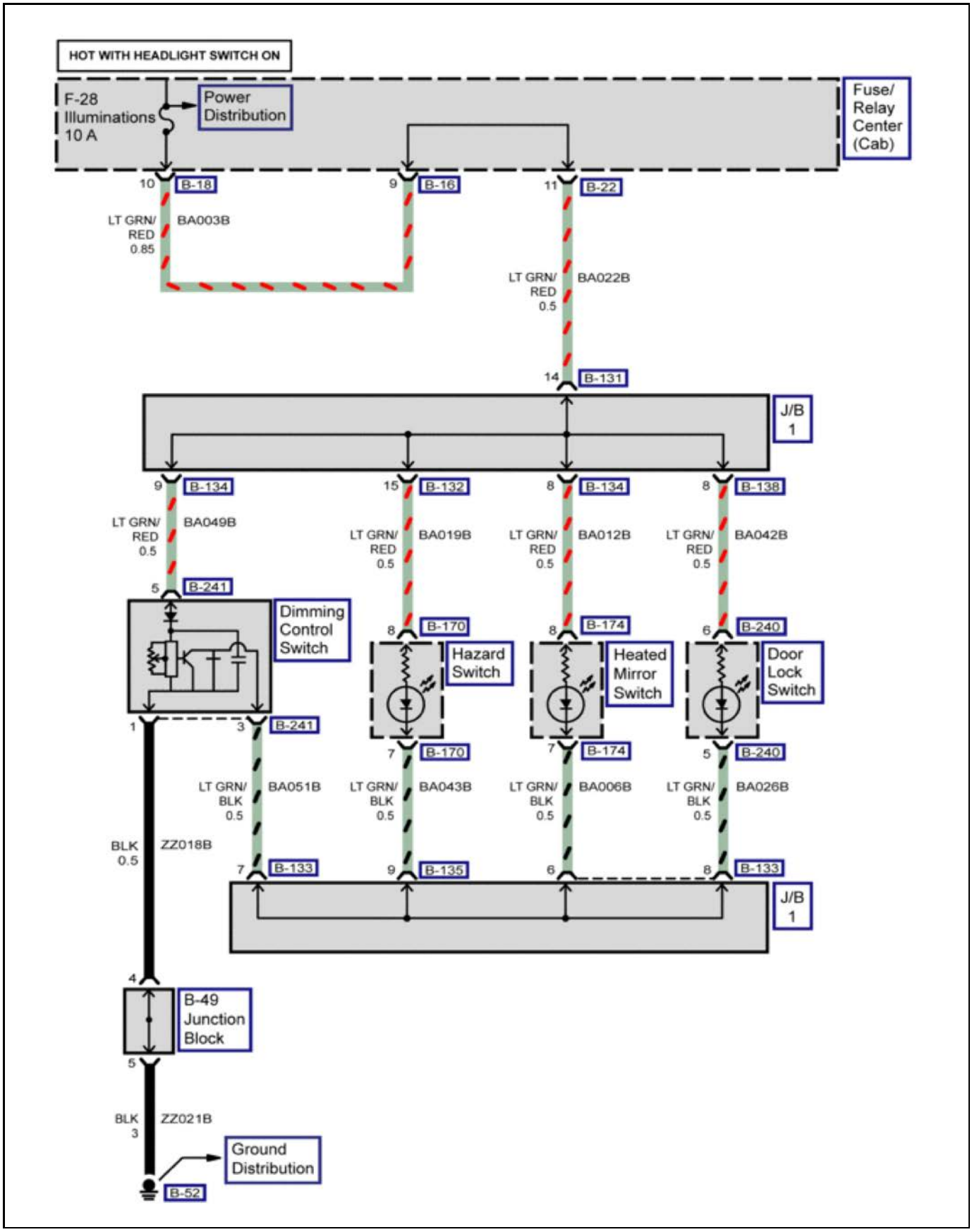

4892280

Interior Lights Schematics (PTO Up/Down and PTO Switch)

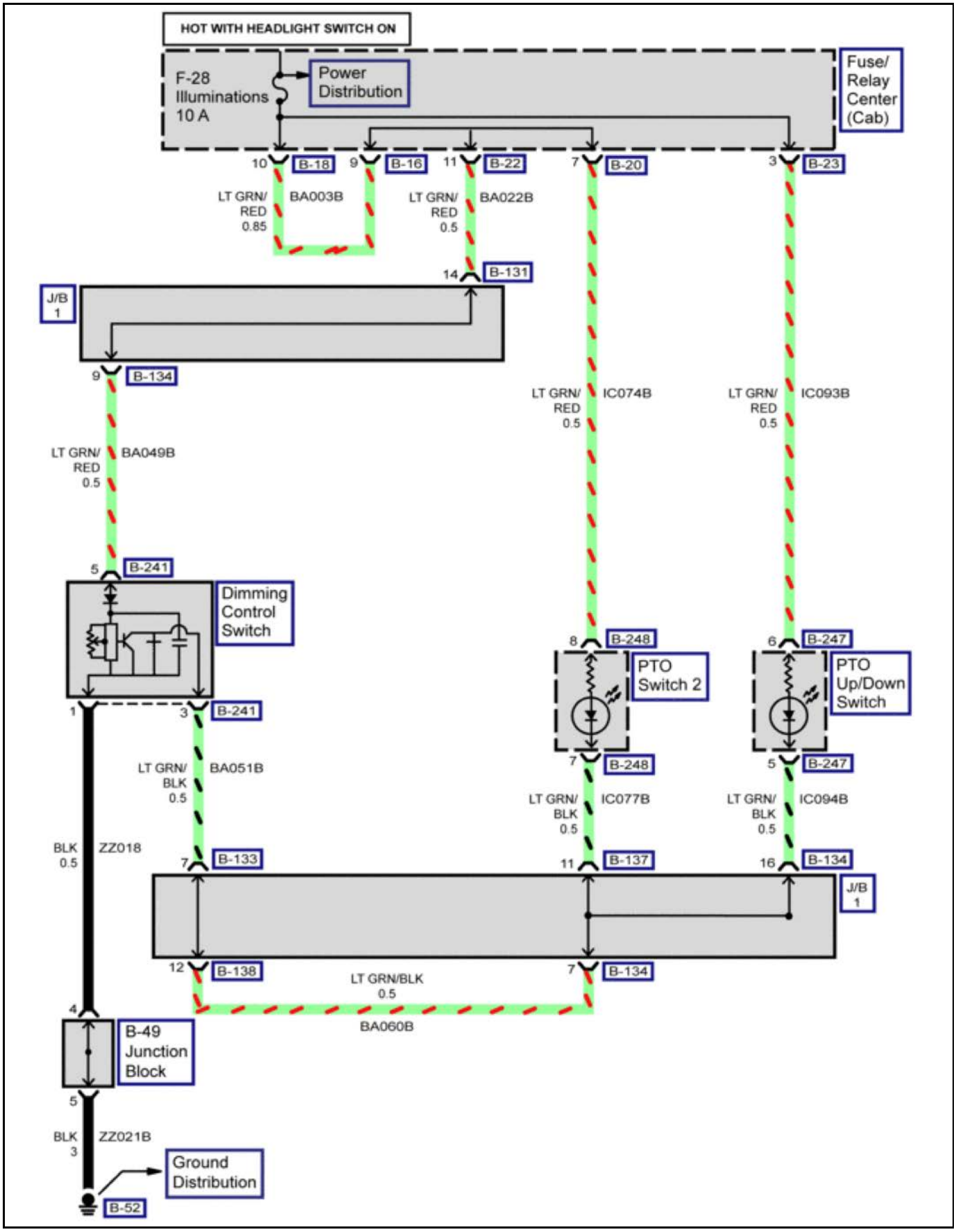

4892286

Interior Lights Schematics (Miles/Oil Level Check Switch and Radio)

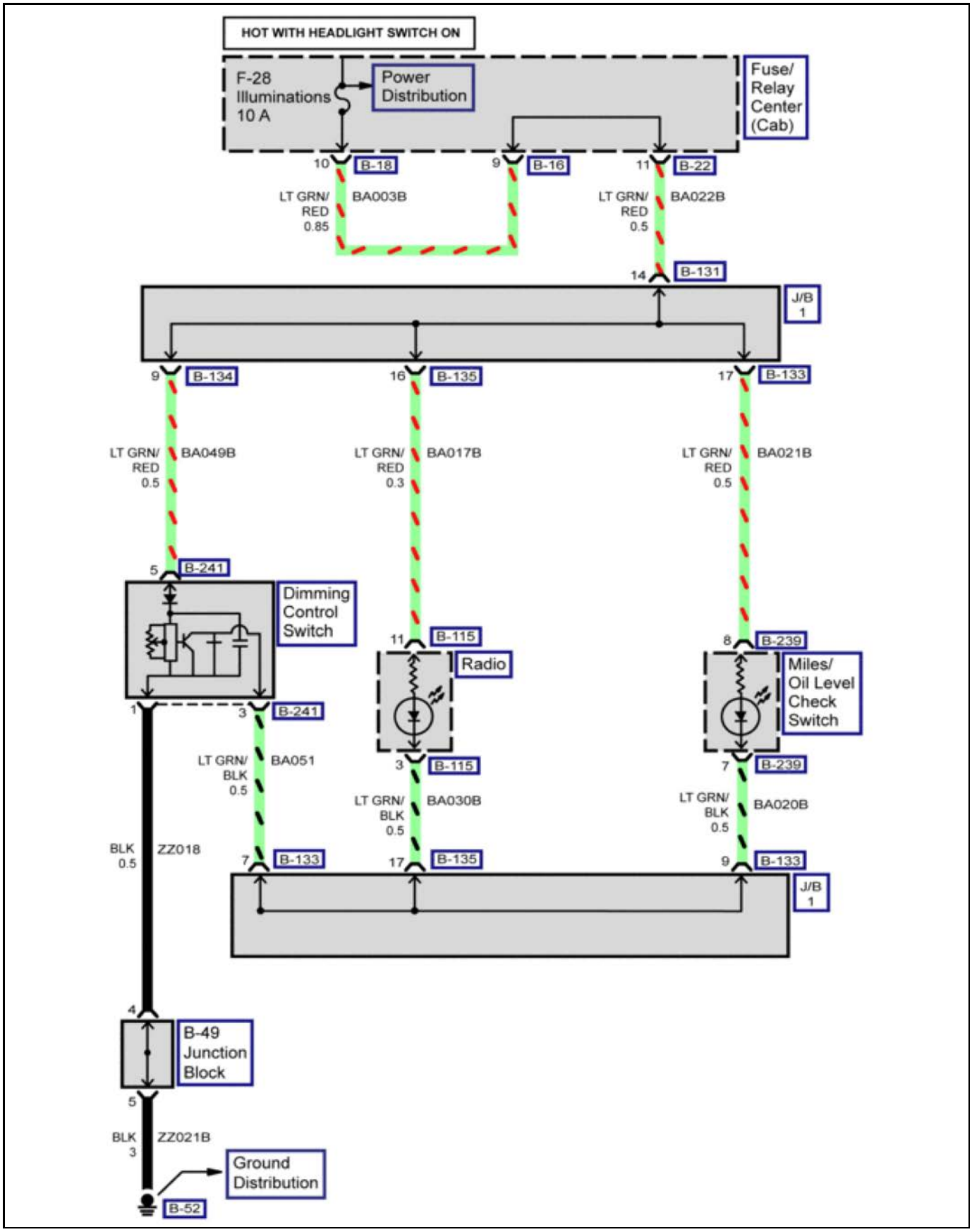

4892289

Interior Lights Schematics (HVAC Control Panel and Shift Lever)

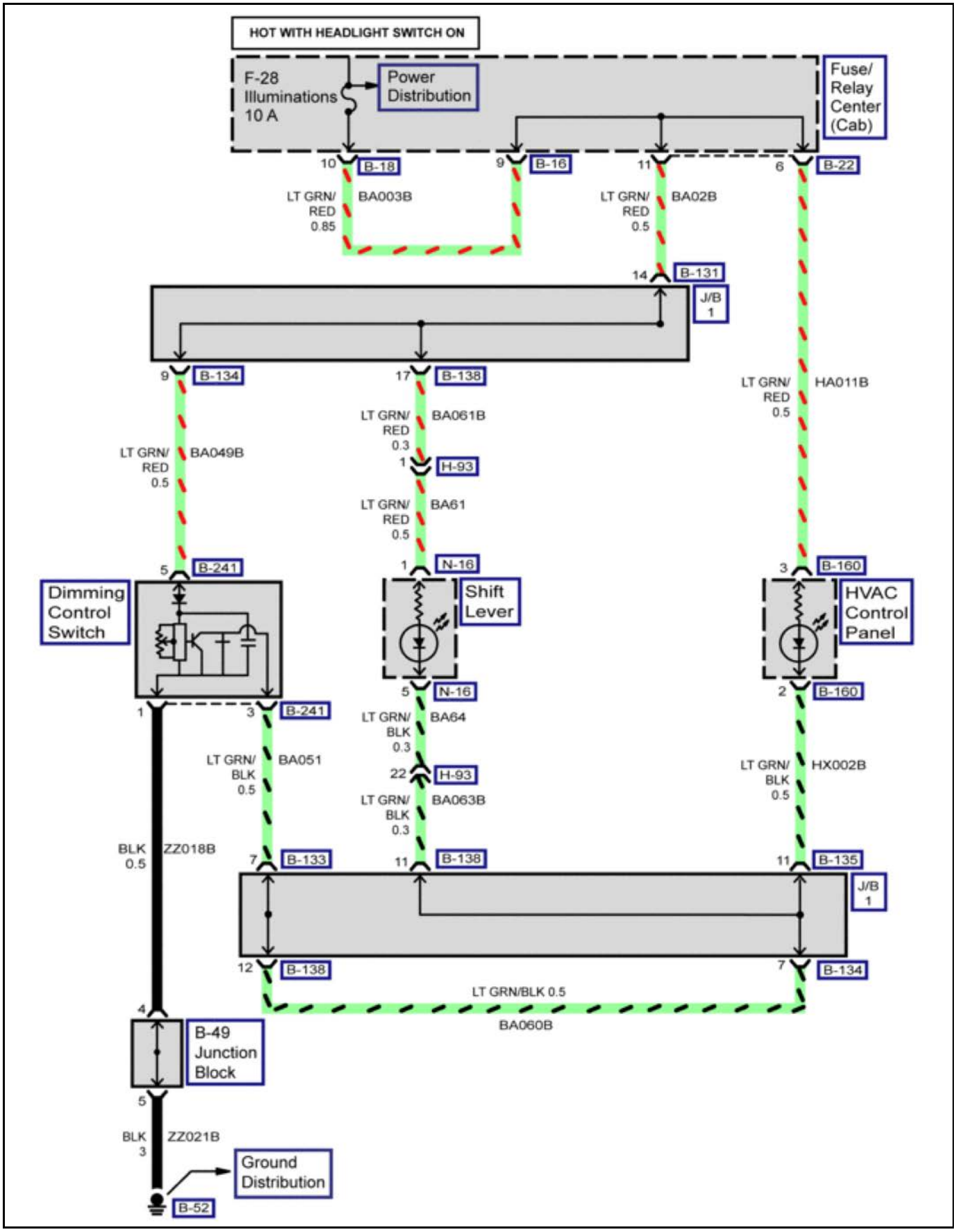

4892294

Wiper/Washer Schematics (Washers)

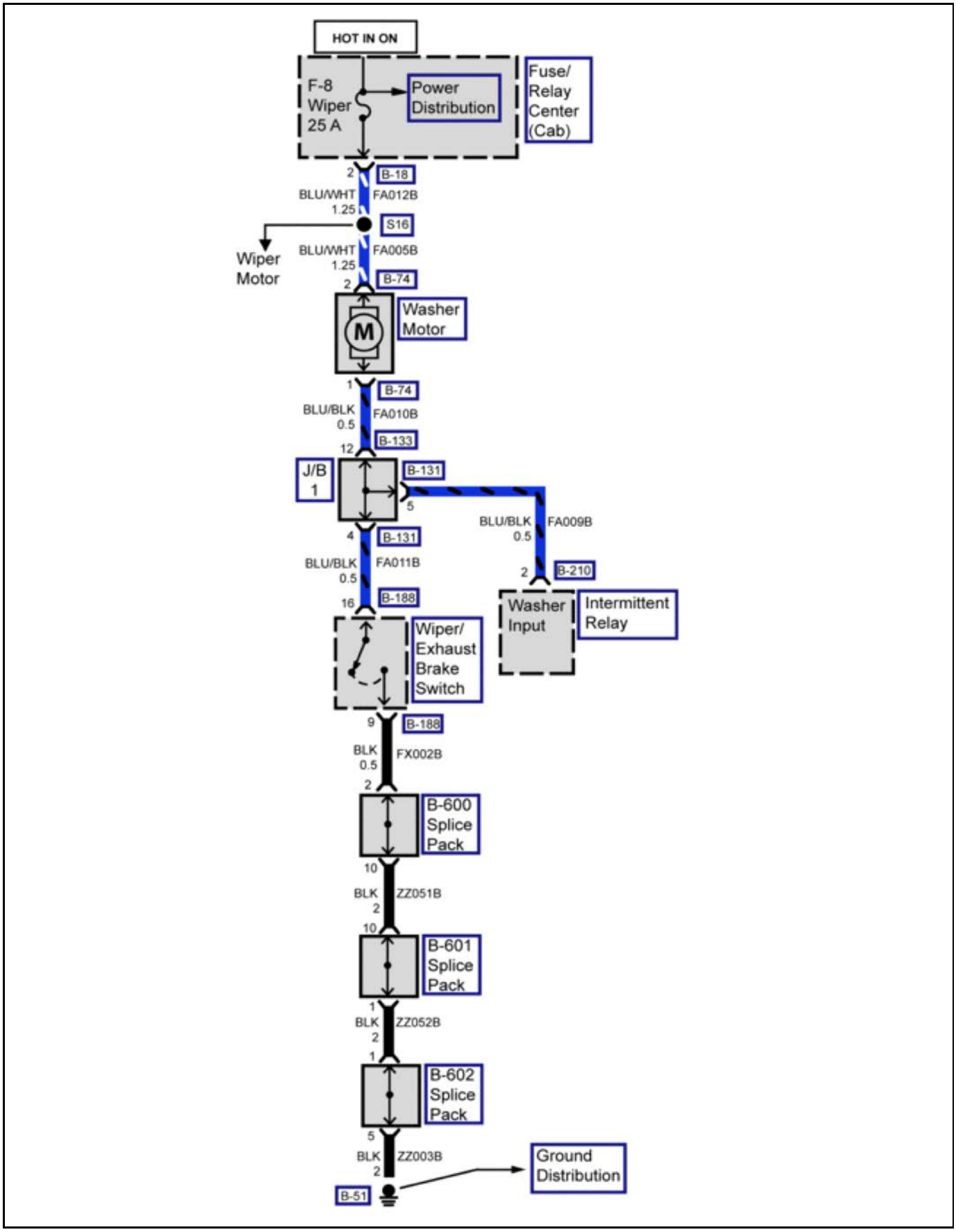

4892391

Wiper/Washer Schematics (Wipers)

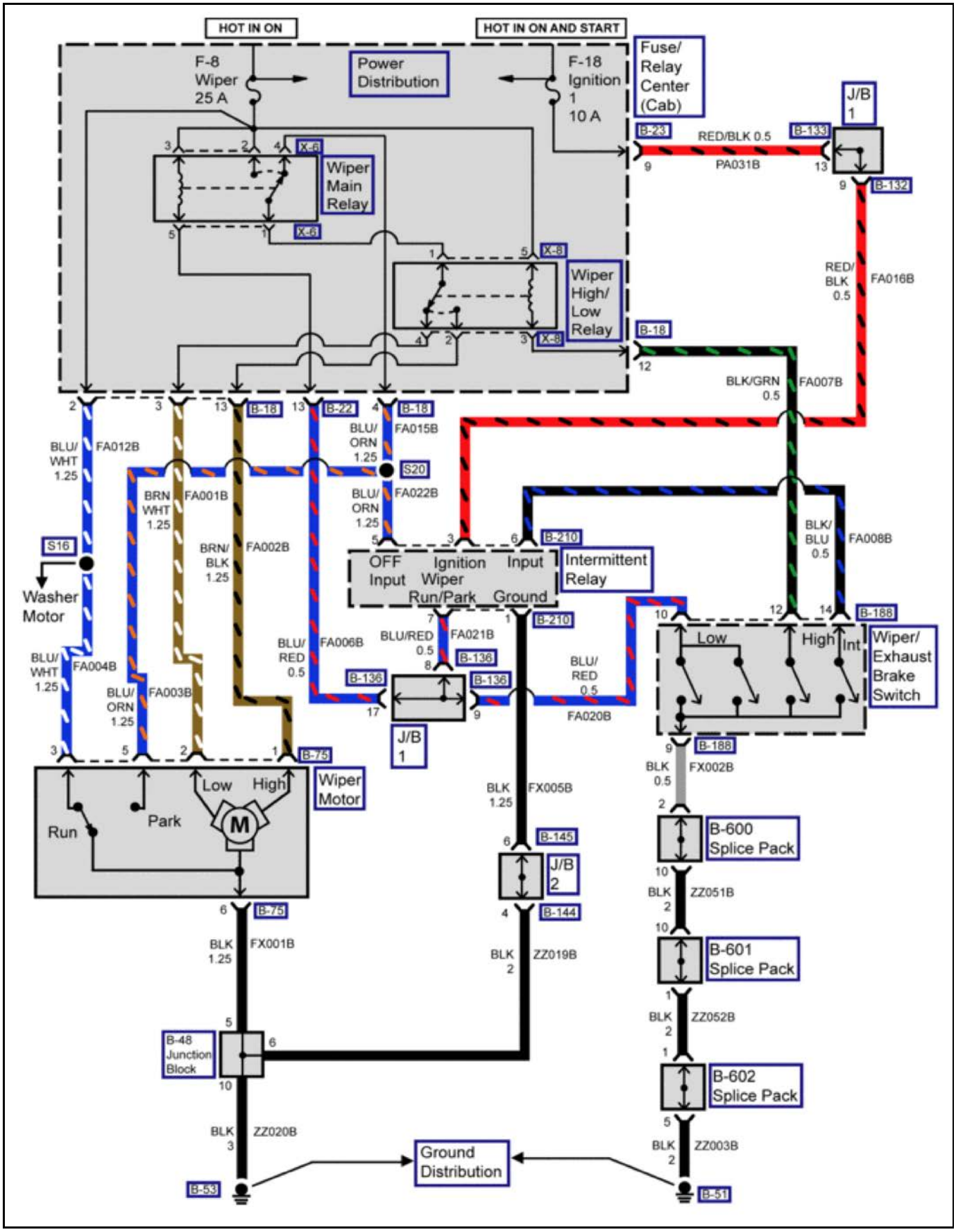

4892398

Horn Schematics

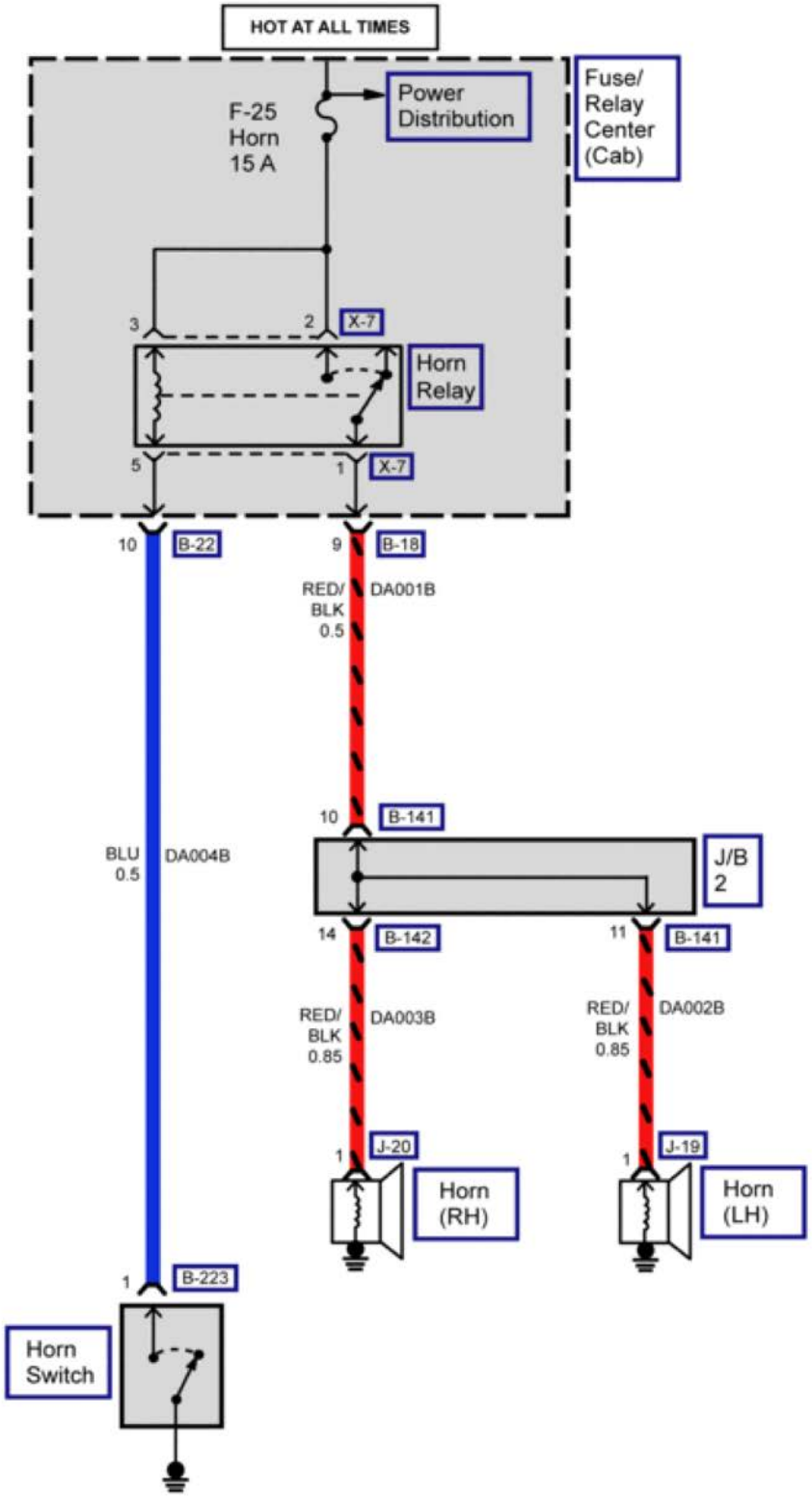

4891991

Radio and Cigarette Lighter Schematics (Power and Ground)

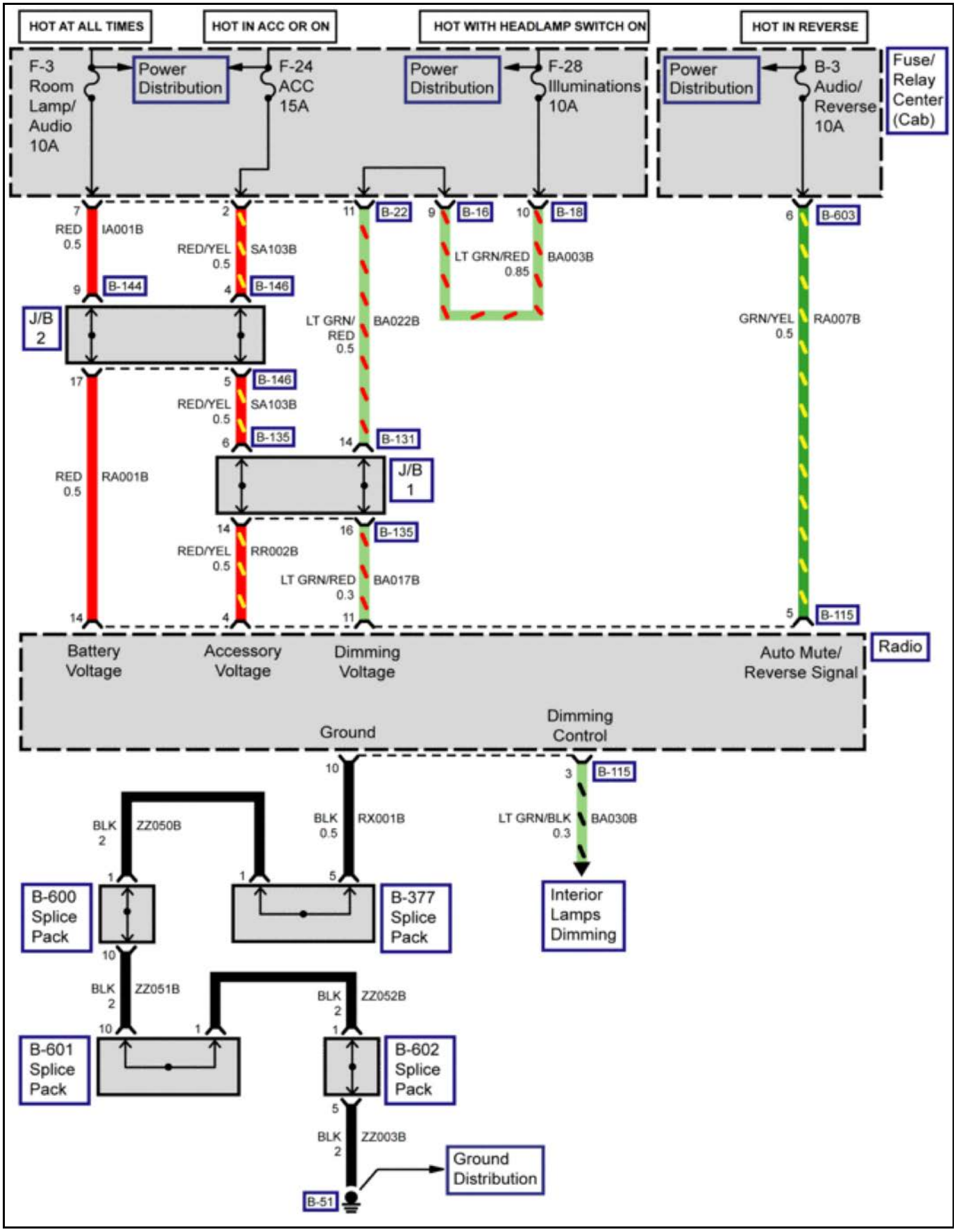

4891765

Radio and Cigarette Lighter Schematics (Speakers)

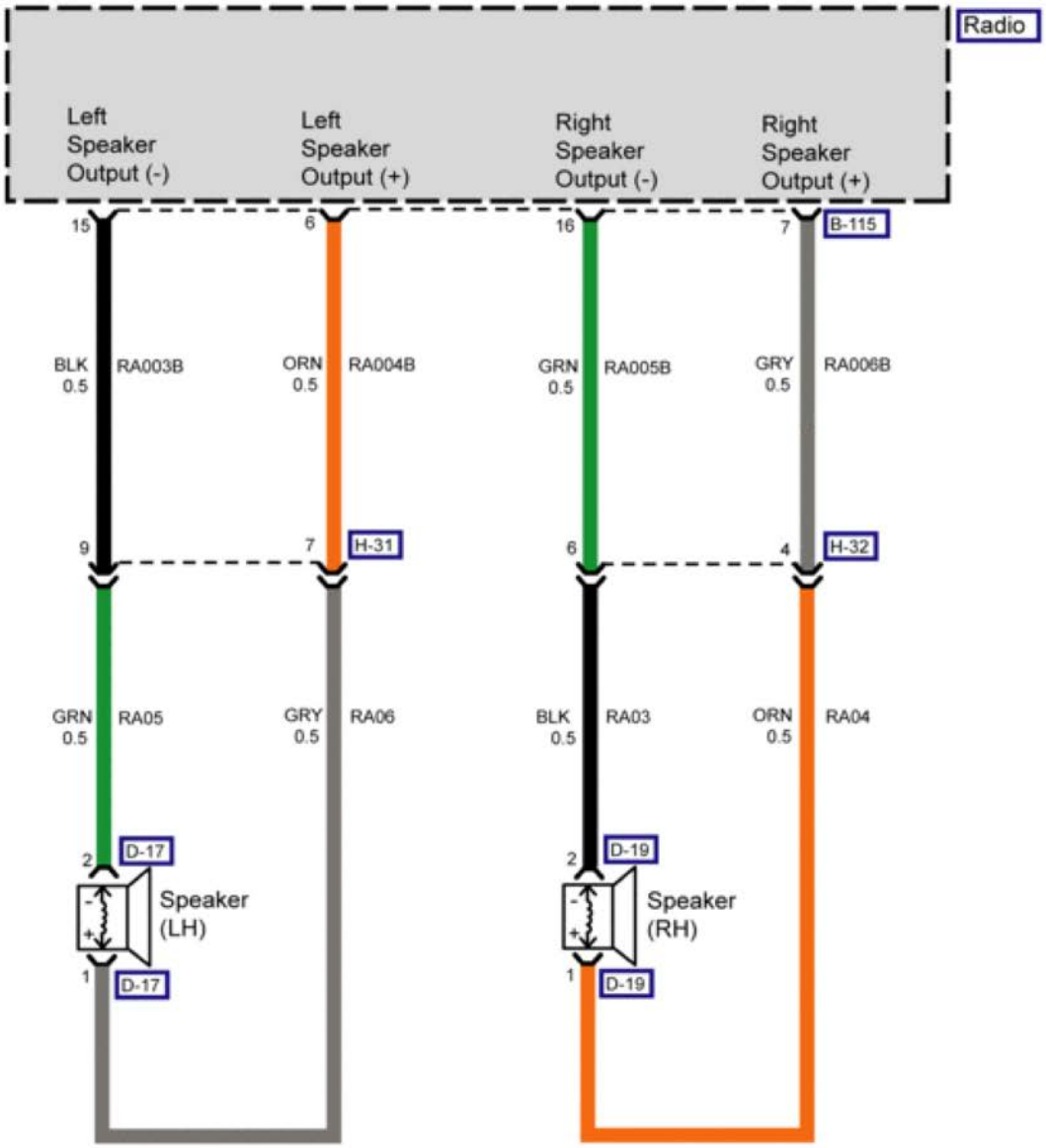

4891768

Instrument Cluster Schematics (Power, Ground and Communication)

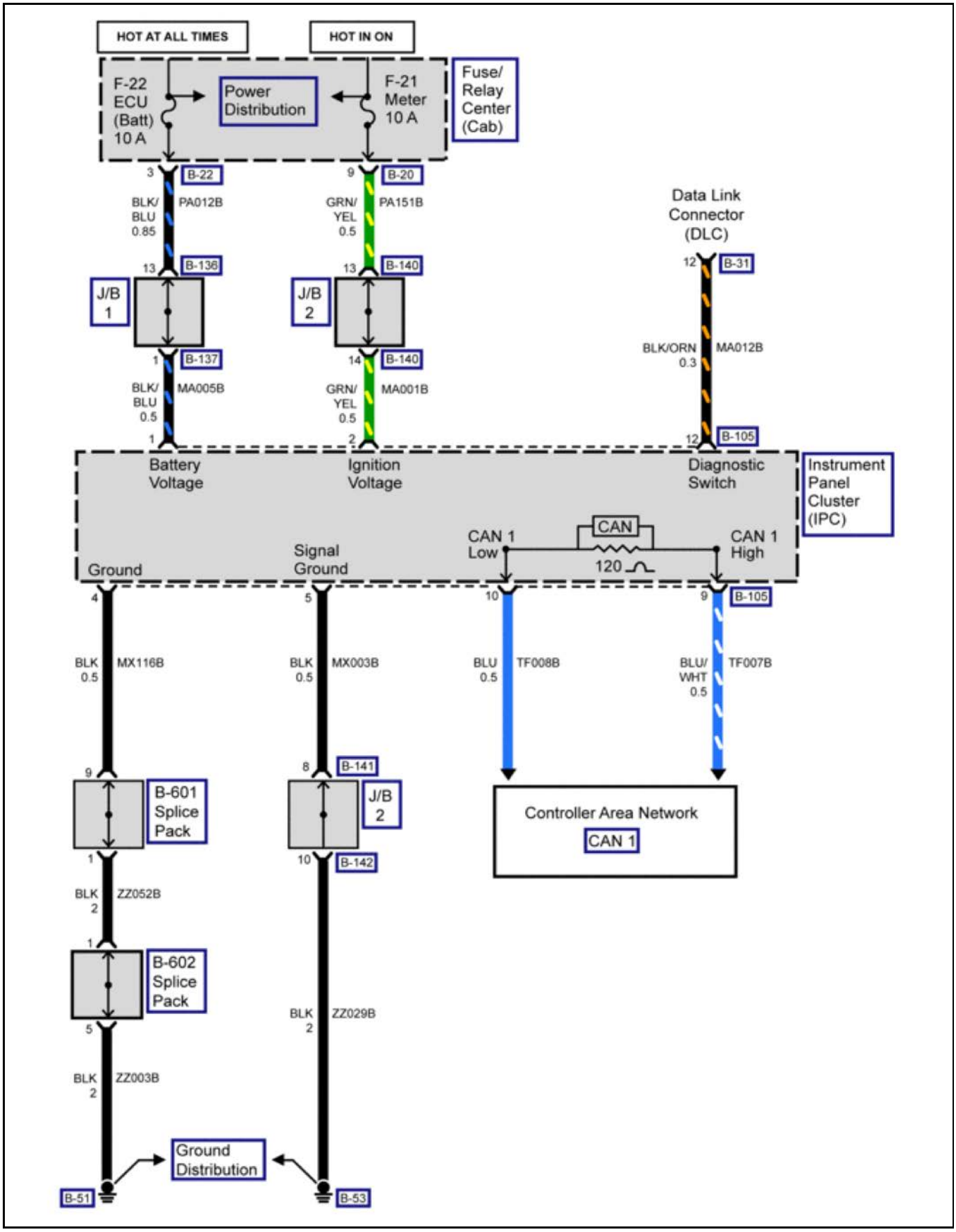

4892012

Instrument Cluster Schematics (Air Pressure Gauge)

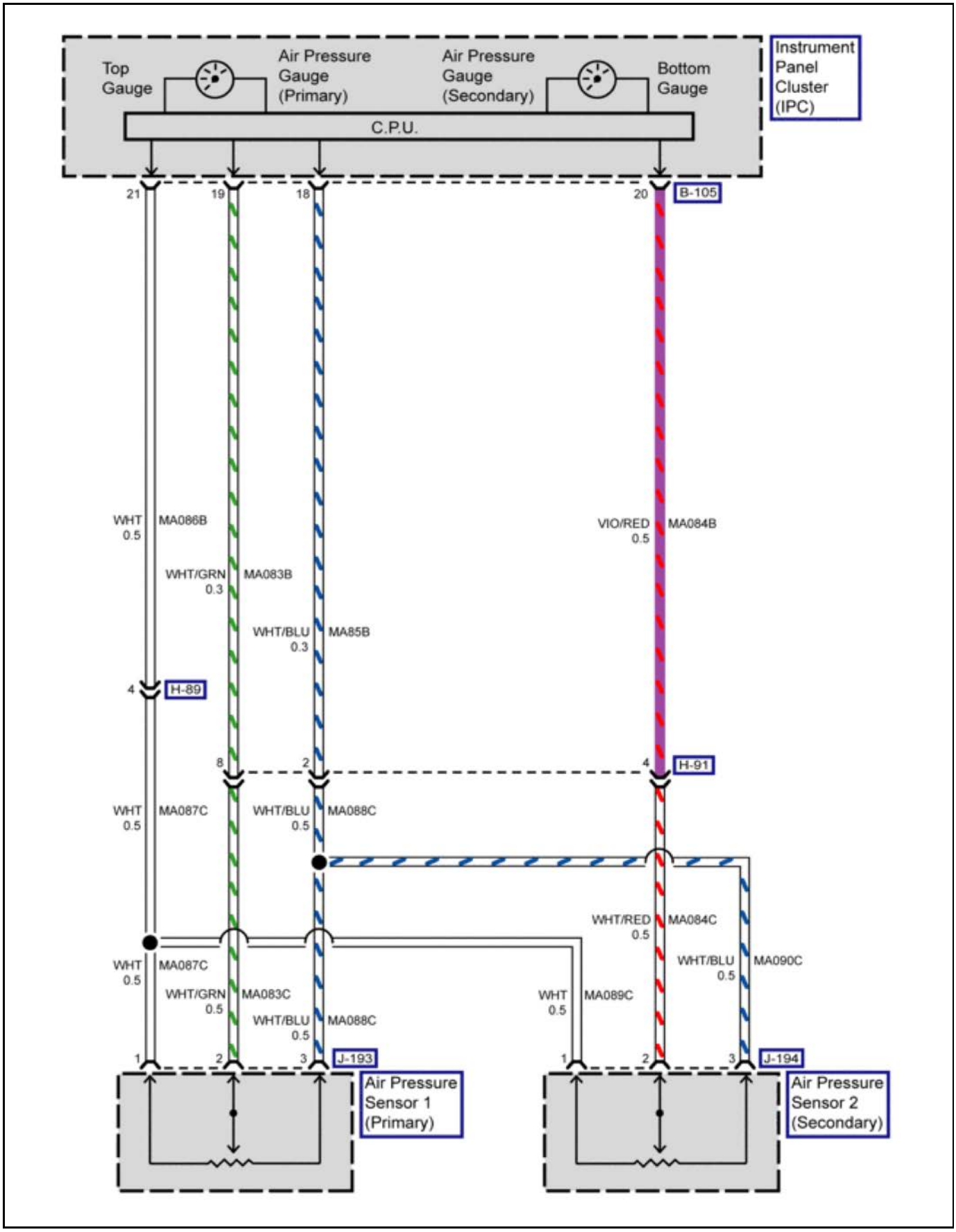

4892015

Instrument Cluster Schematics (Engine Coolant Temperature Gauge)

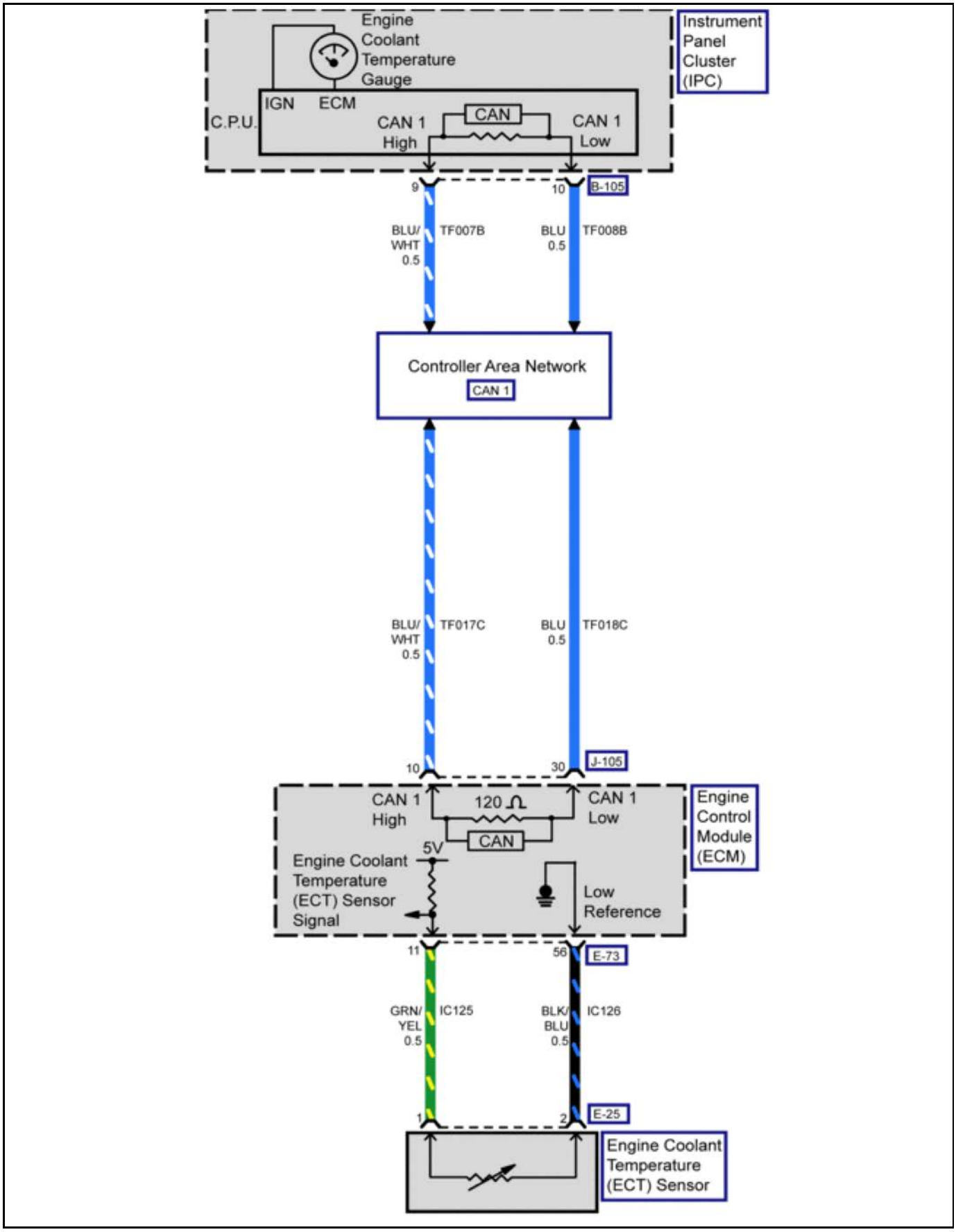

4892017

Instrument Cluster Schematics (Fuel Level Gauge)

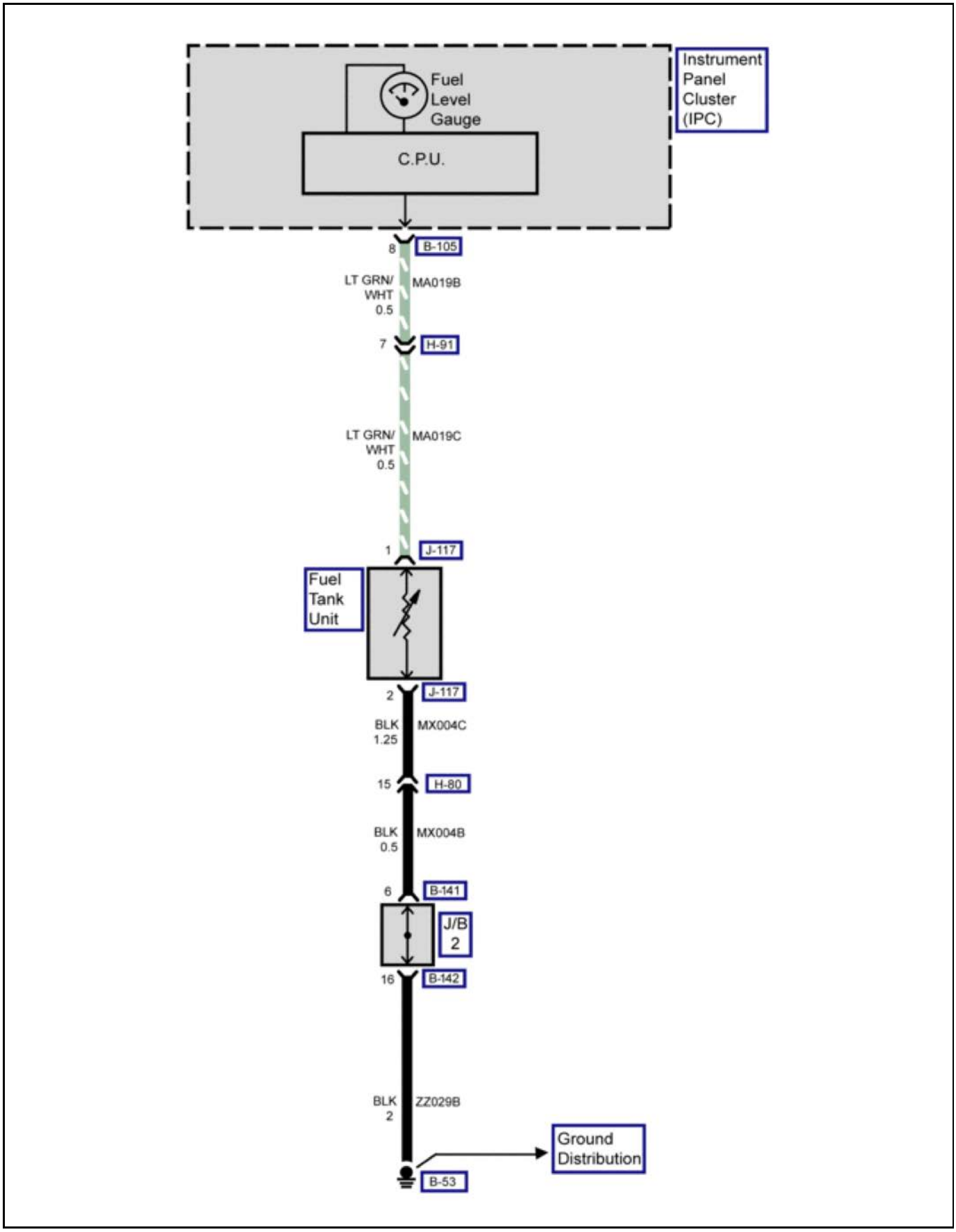

4892034

Instrument Cluster Schematics (Speedometer Gauge)

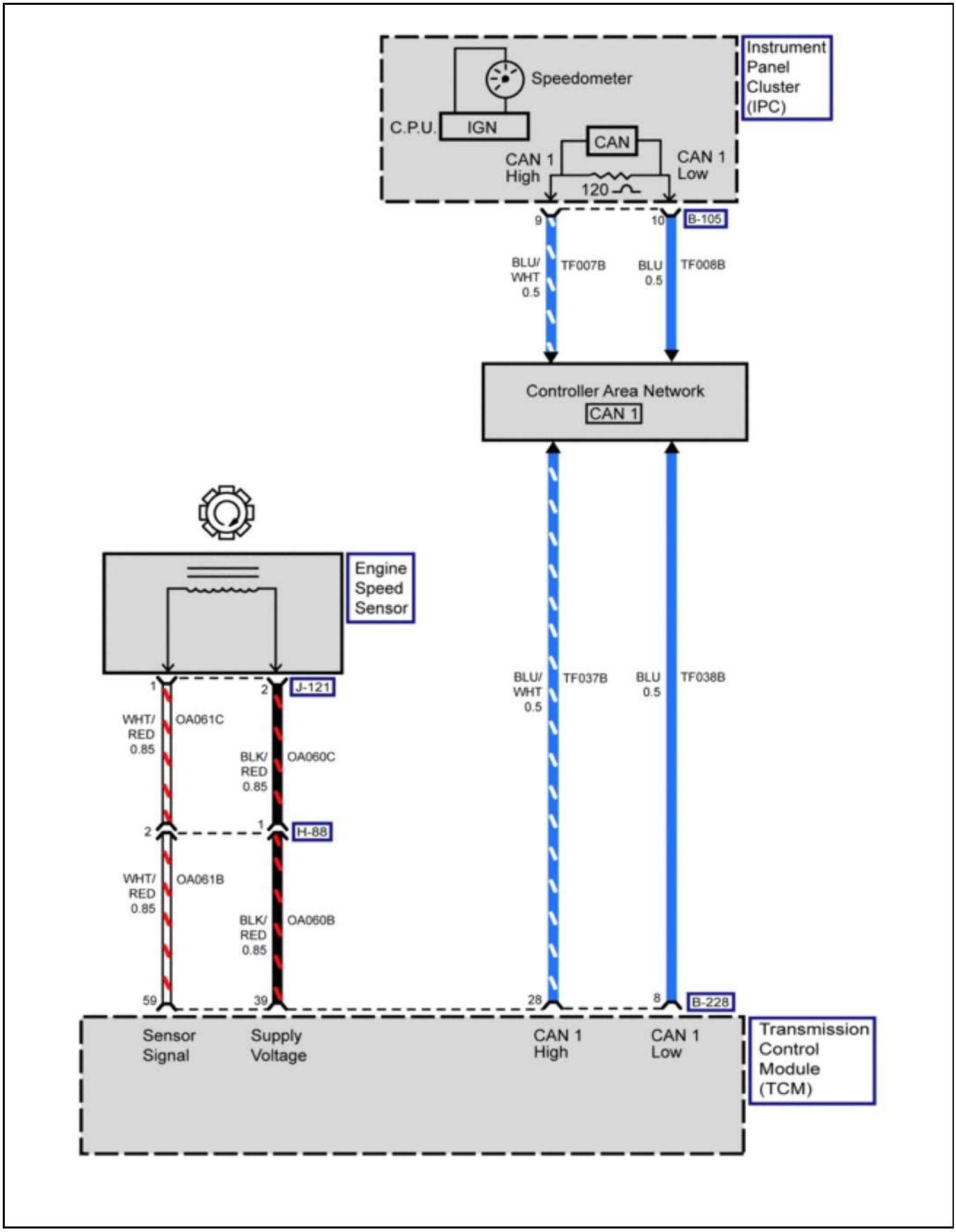

4892039

Instrument Cluster Schematics (Tachometer Gauge)

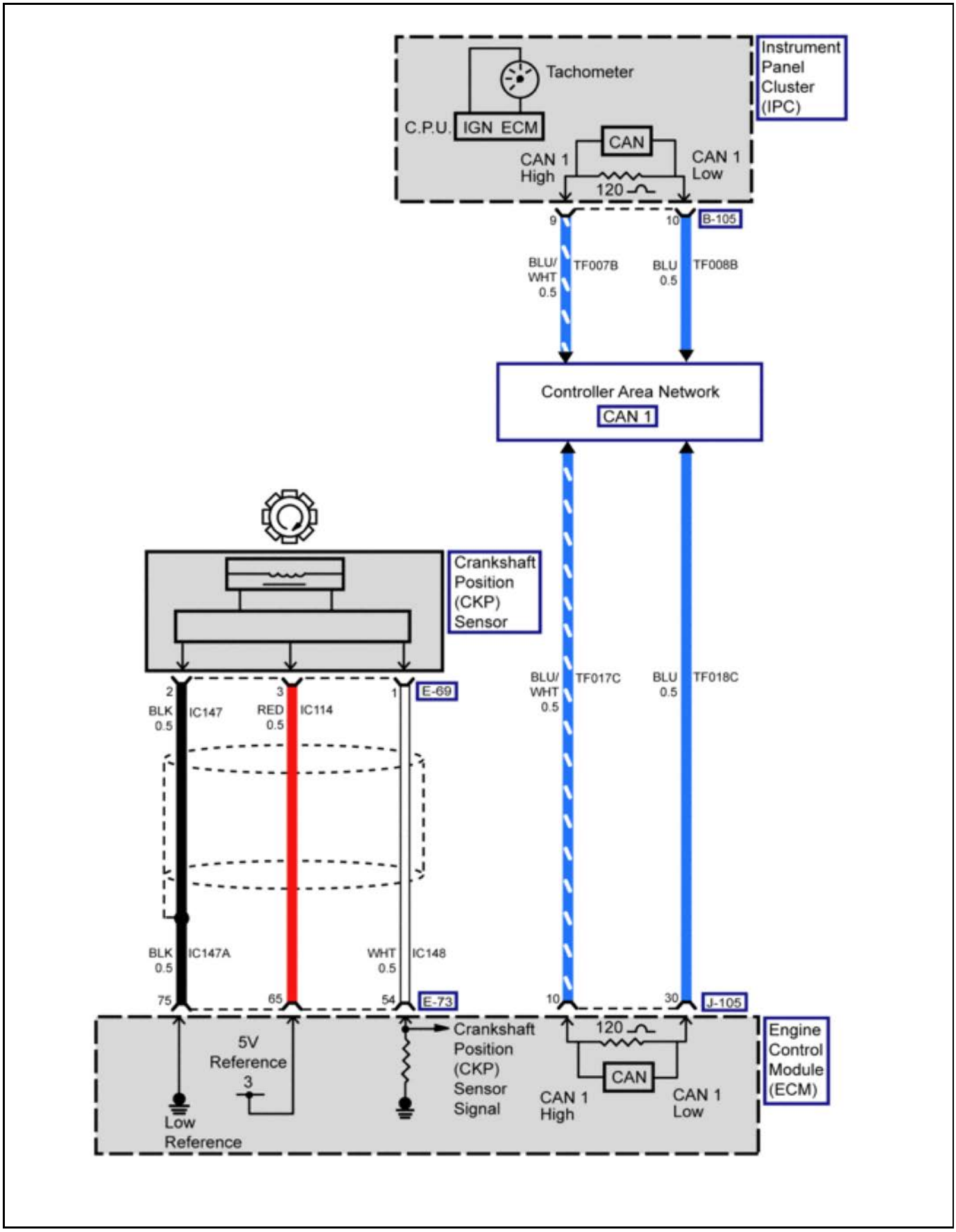

4892044

Instrument Cluster Schematics (ABS Indicator)

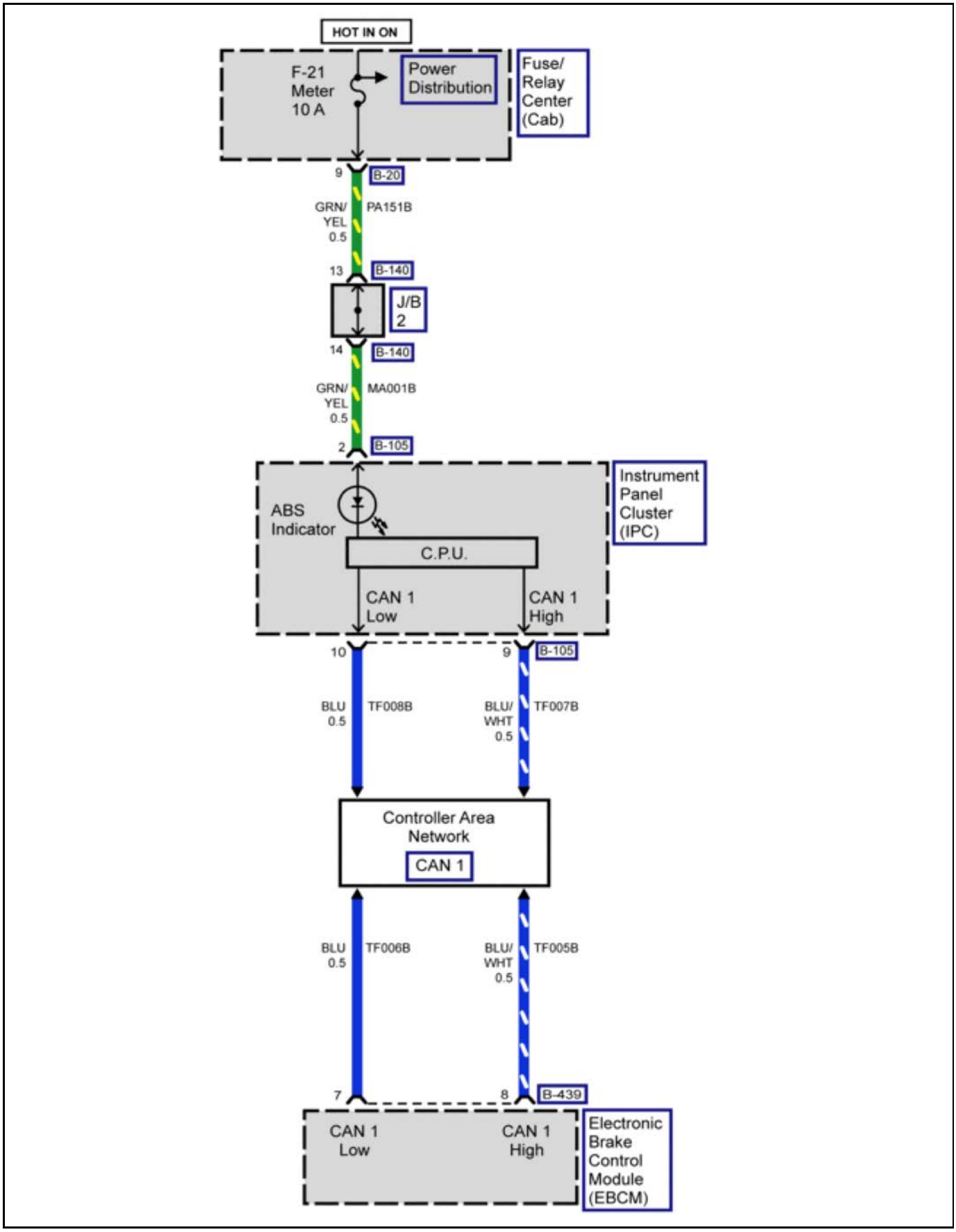

4892047

Instrument Cluster Schematics (Air Filter Indicator)

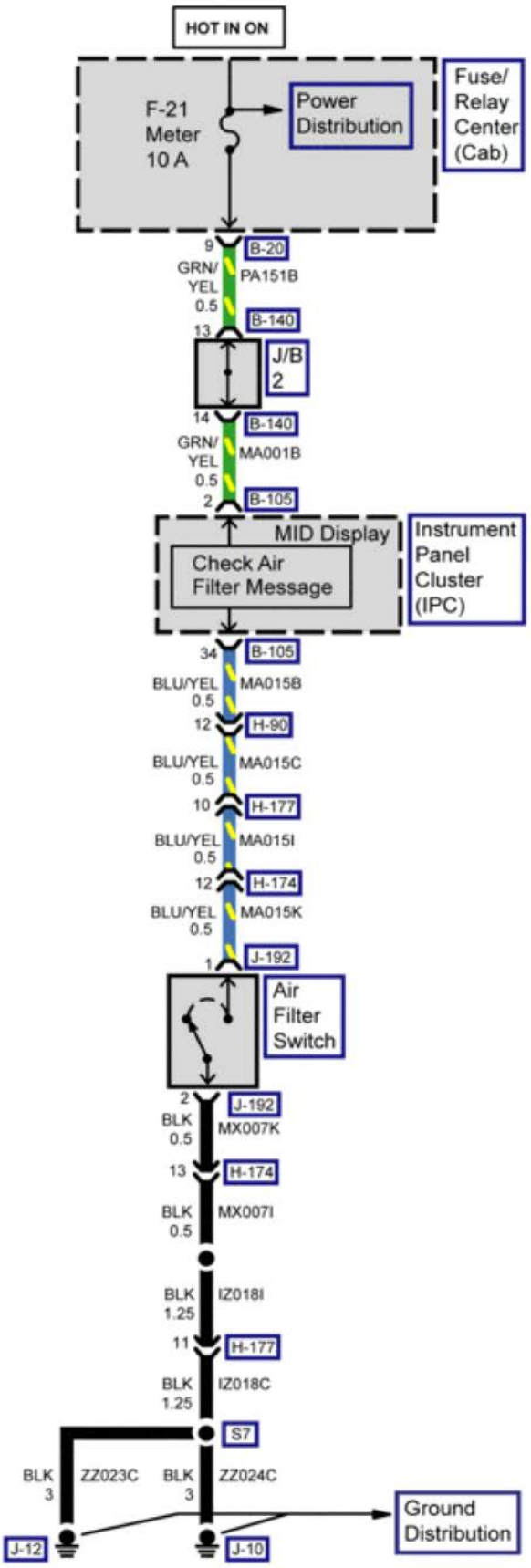

4892052

Instrument Cluster Schematics (Charge Indicator)

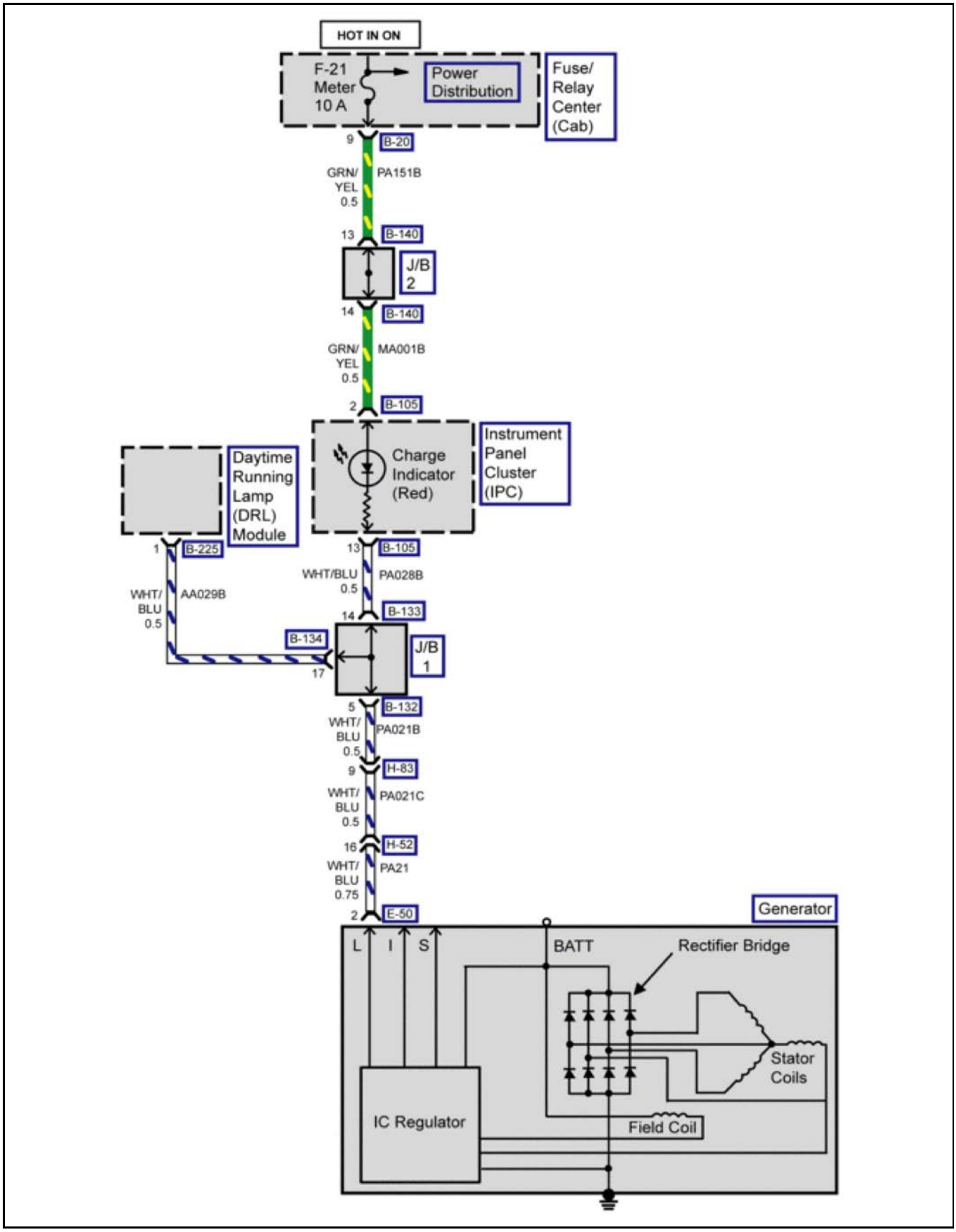

4892057

Instrument Cluster Schematics (Check Transmission and Transmission Fluid Overtemperature)

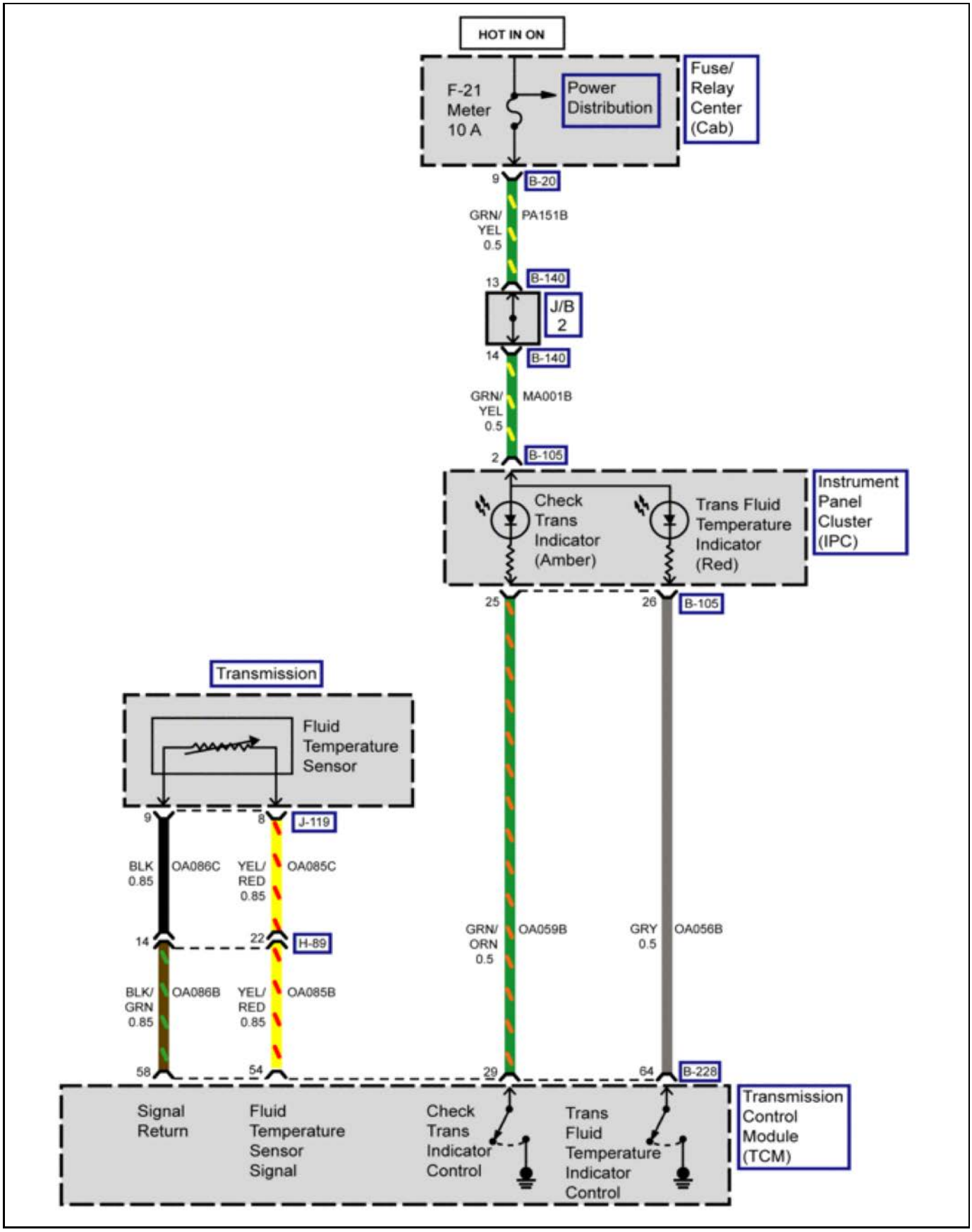

4892065

Instrument Cluster Schematics (DRL Indicator)

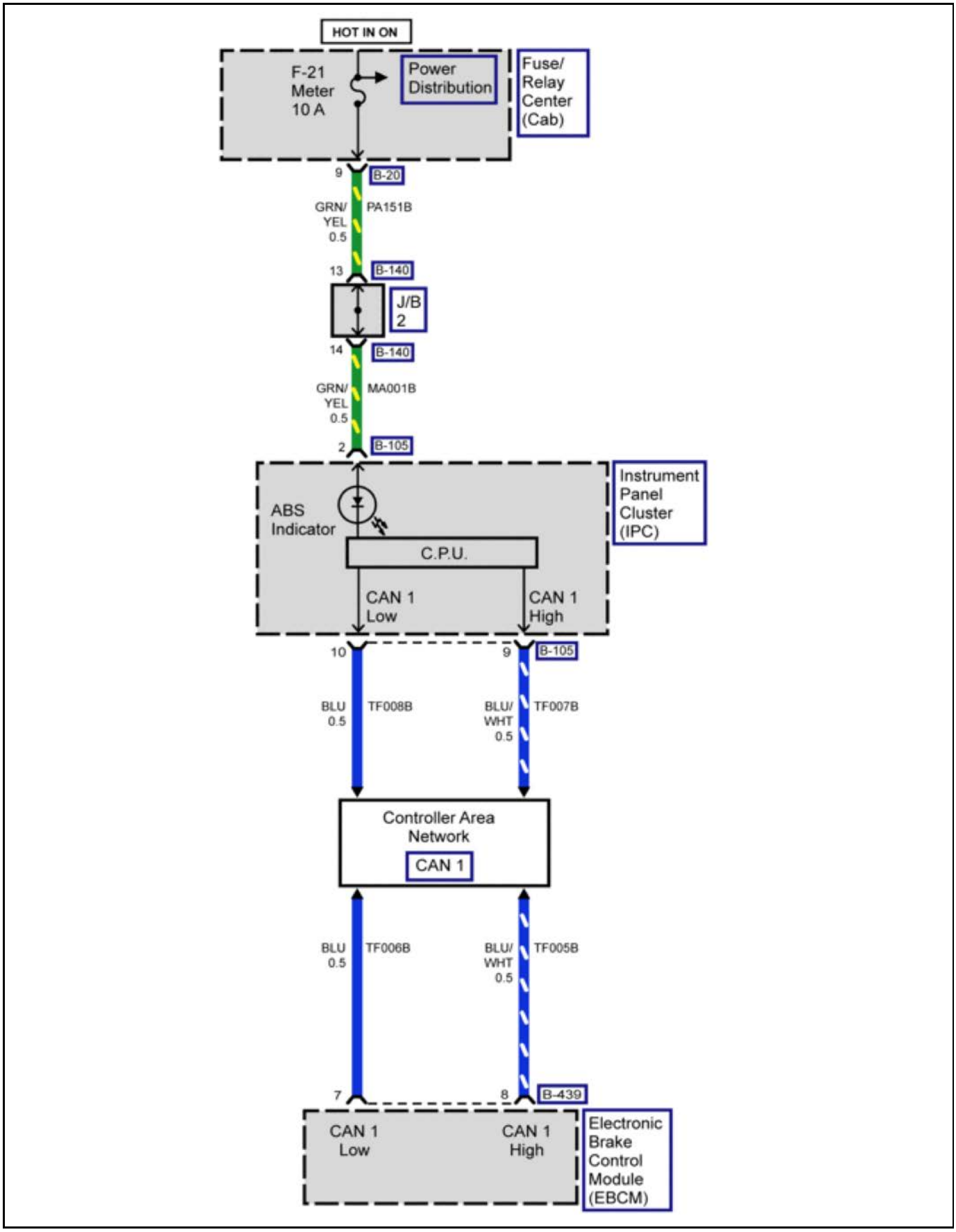

4892072

Instrument Cluster Schematics (Fuel Sedimenter Indicator)

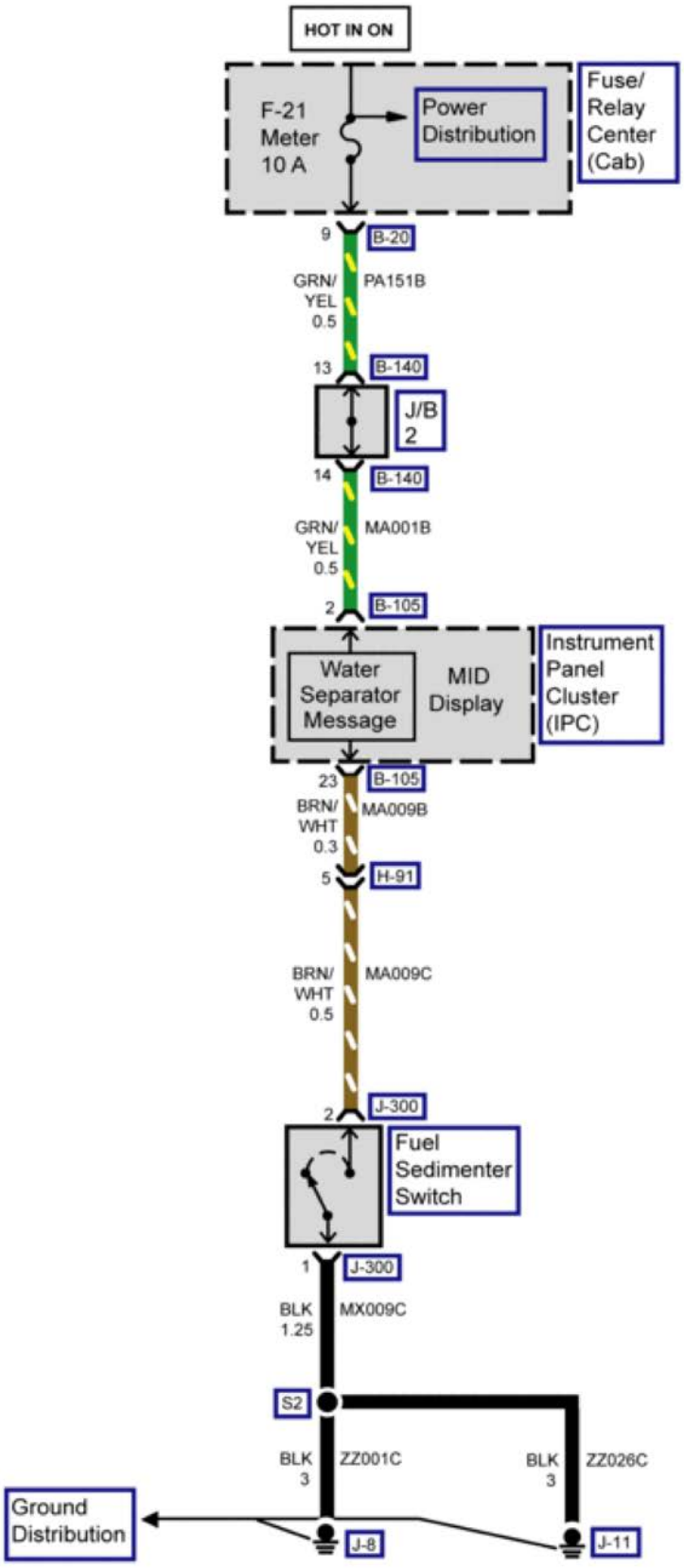

4892079

Instrument Cluster Schematics (High Beam Indicator)

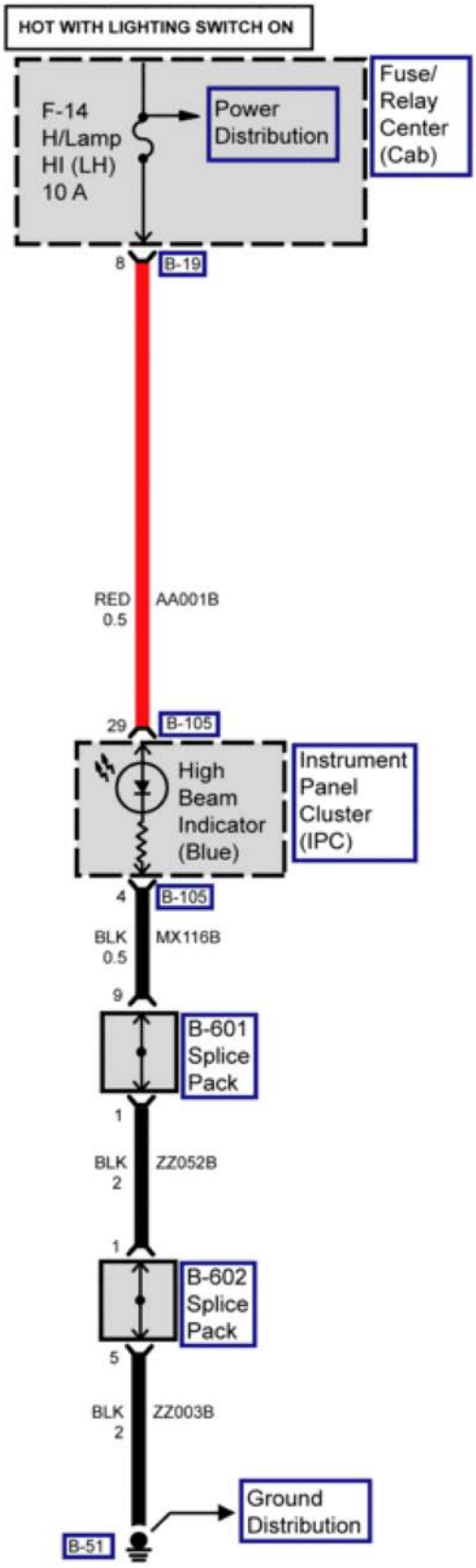

4892084

Instrument Cluster Schematics (Malfunction Indicator Lamp and Glow Plug)

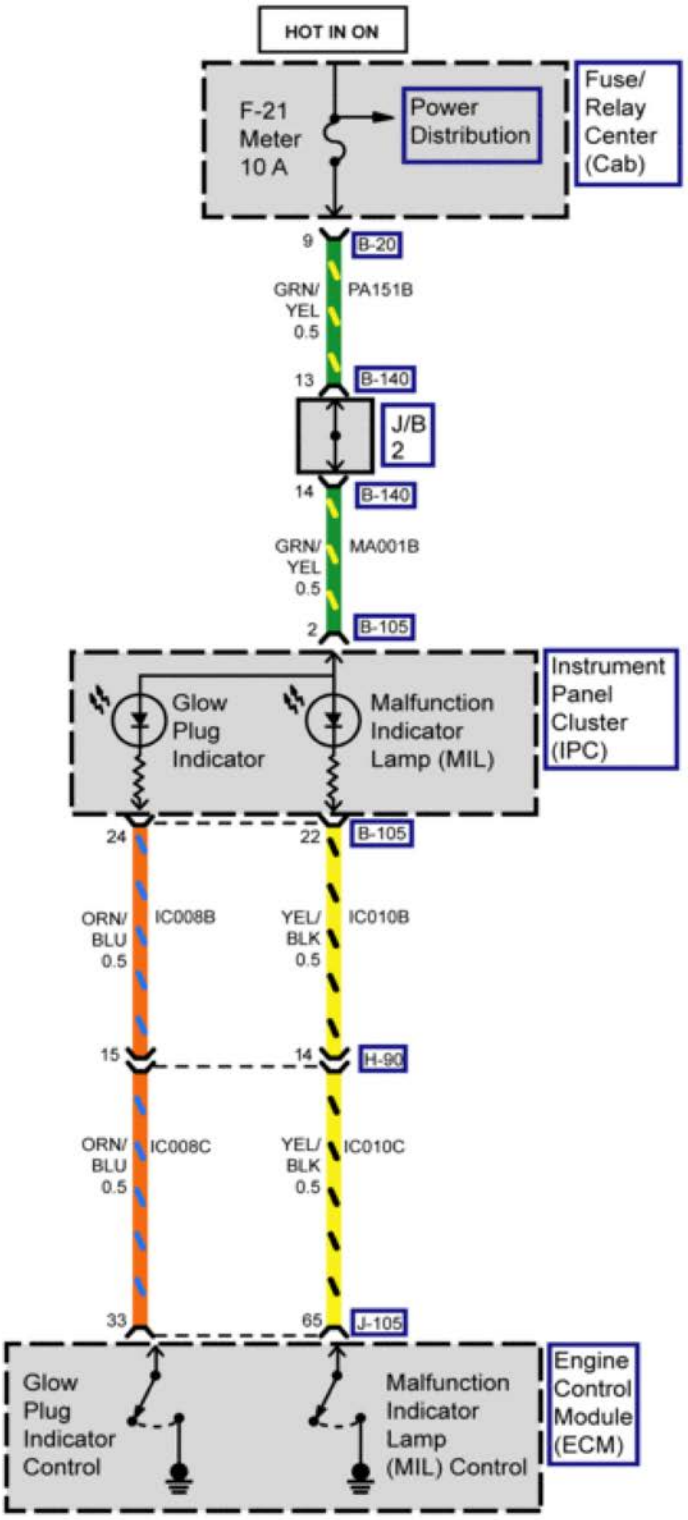

4892086

Instrument Cluster Schematics (Miles Check Switch)

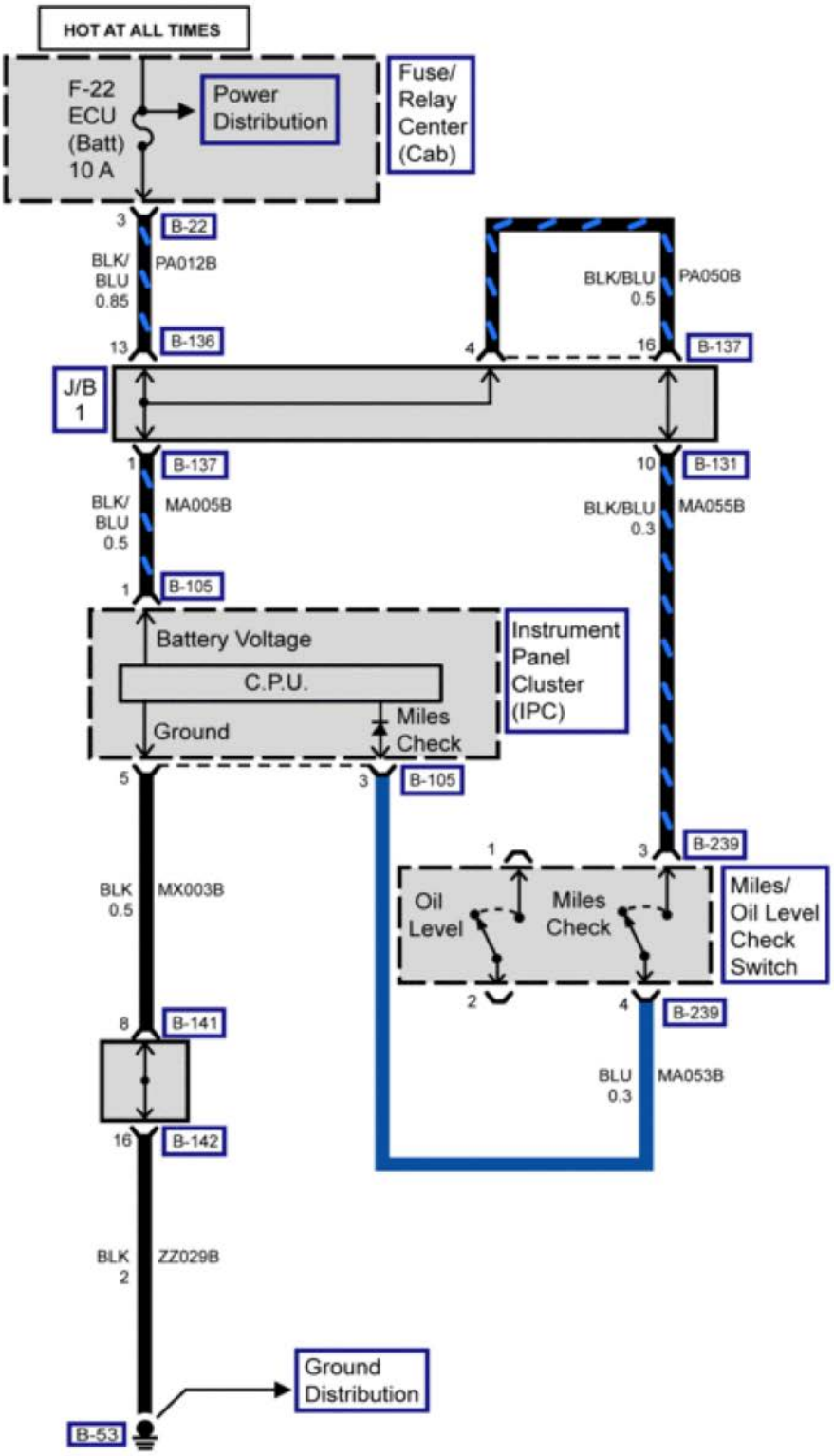

4892088

Instrument Cluster Schematics (Oil Level and Oil Pressure)

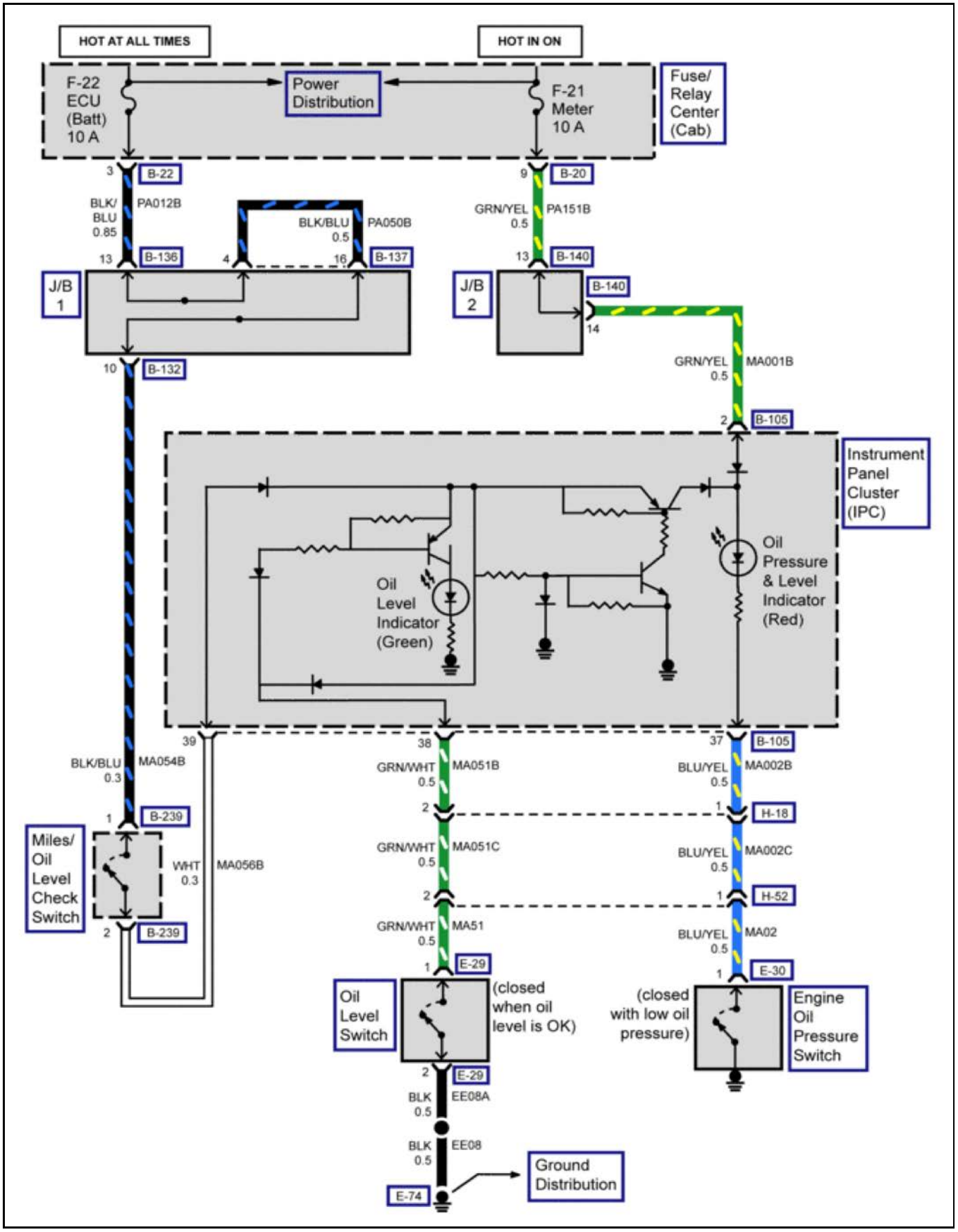

4892092

Instrument Cluster Schematics (Park Brake Indicator)

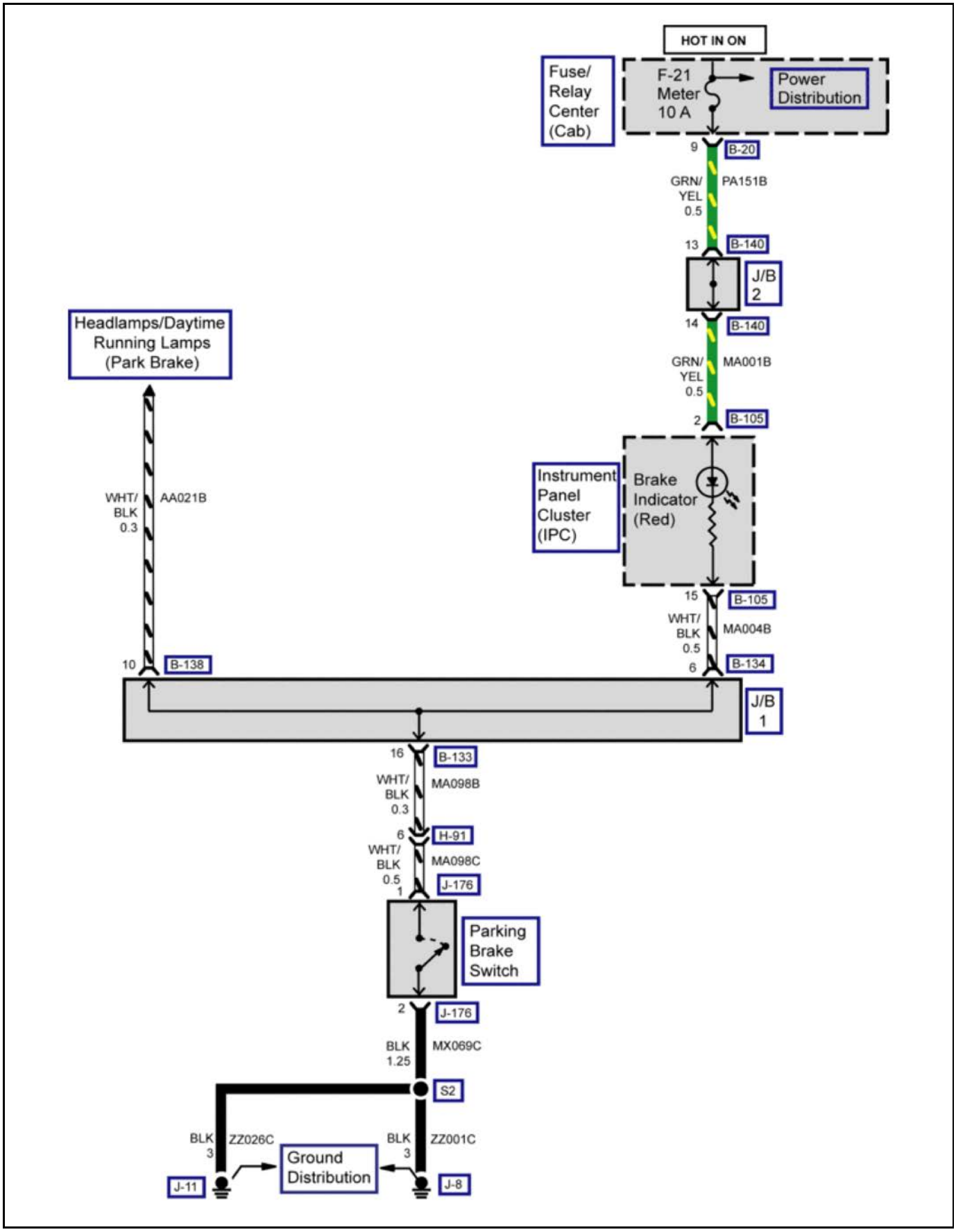

4892096

Instrument Cluster Schematics (Seat Belt Indicator)

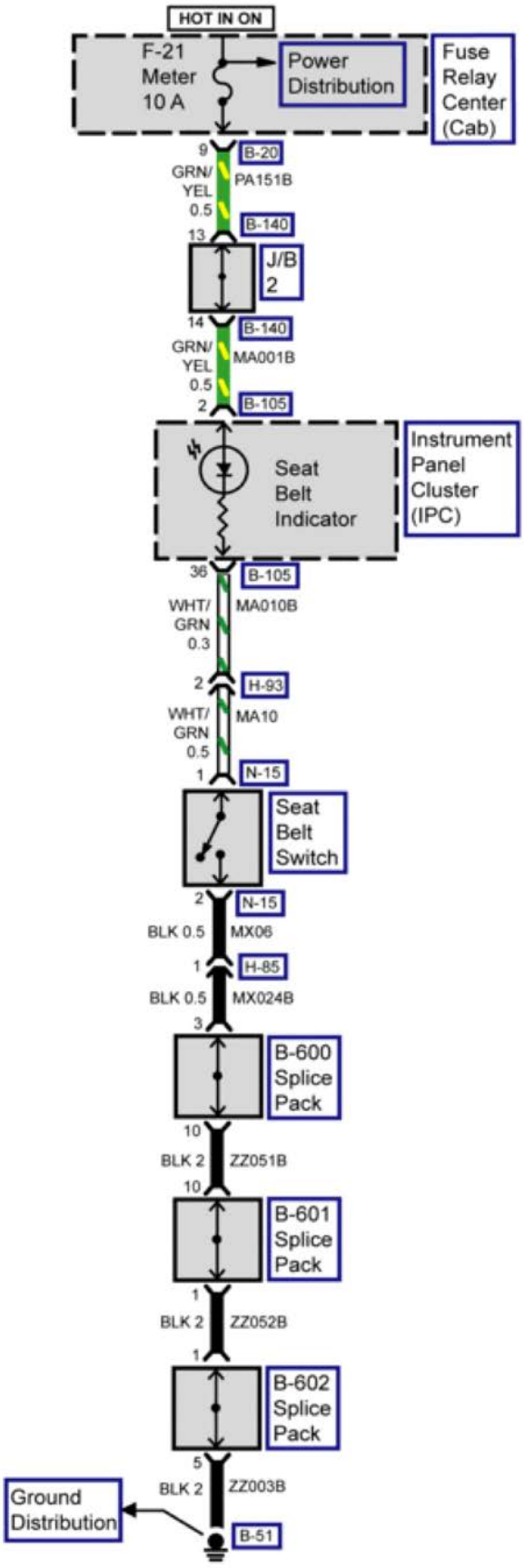

4892098

Instrument Cluster Schematics (Transmission Range Switch Indicator)

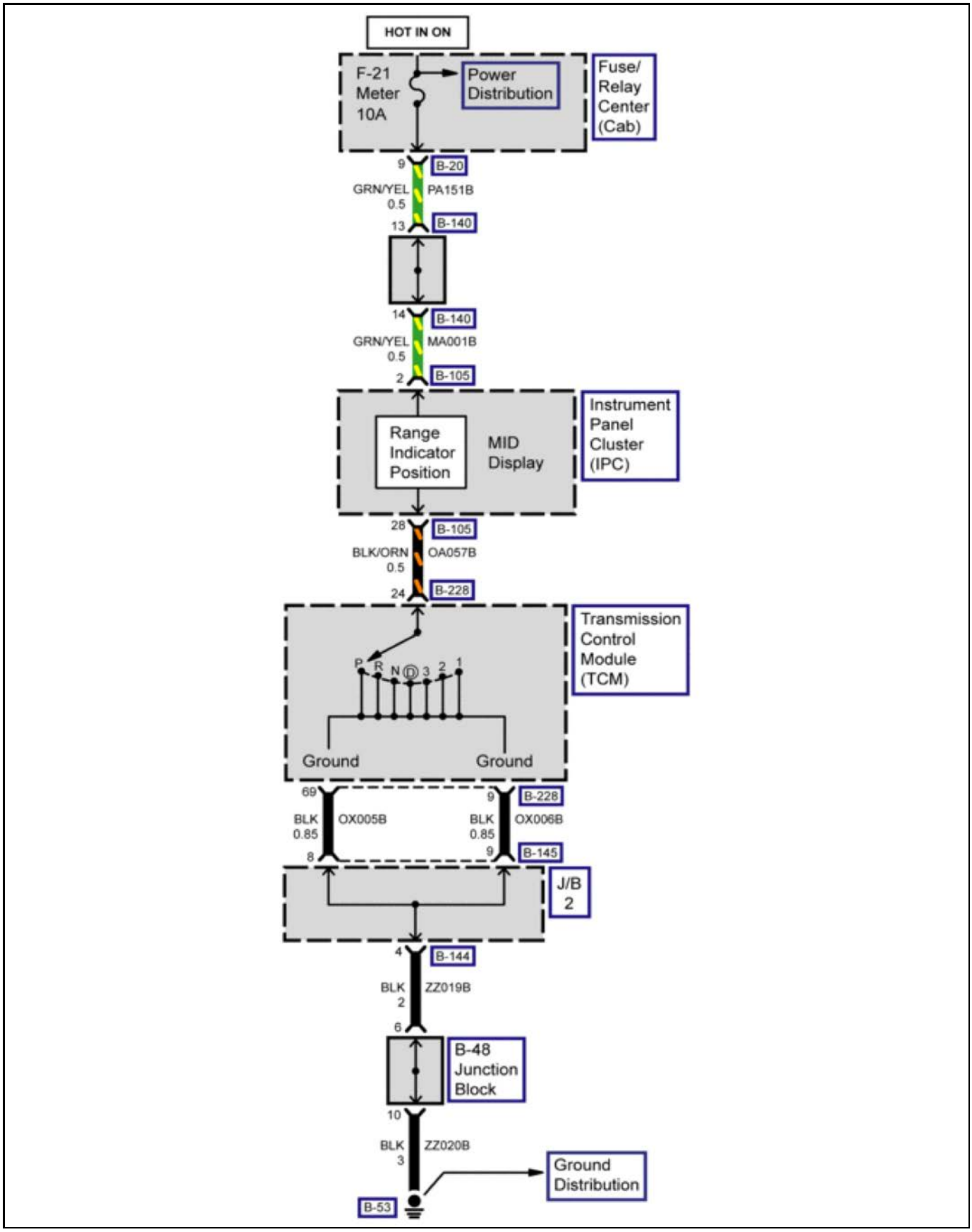

4892100

Instrument Cluster Schematics (Turn Signals)

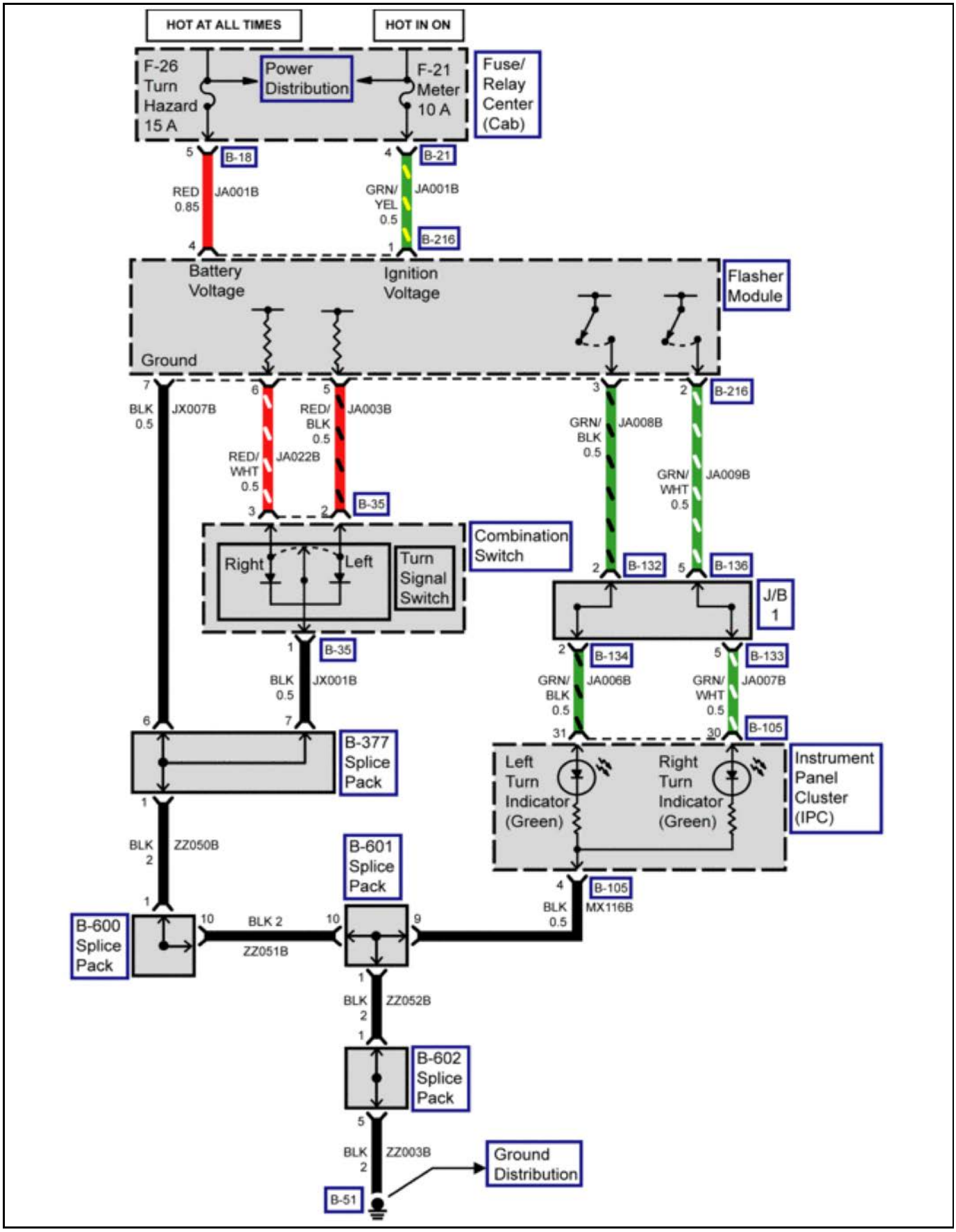

4892102

Keyless Entry Schematics (Module Power, Ground, and Key Switch)

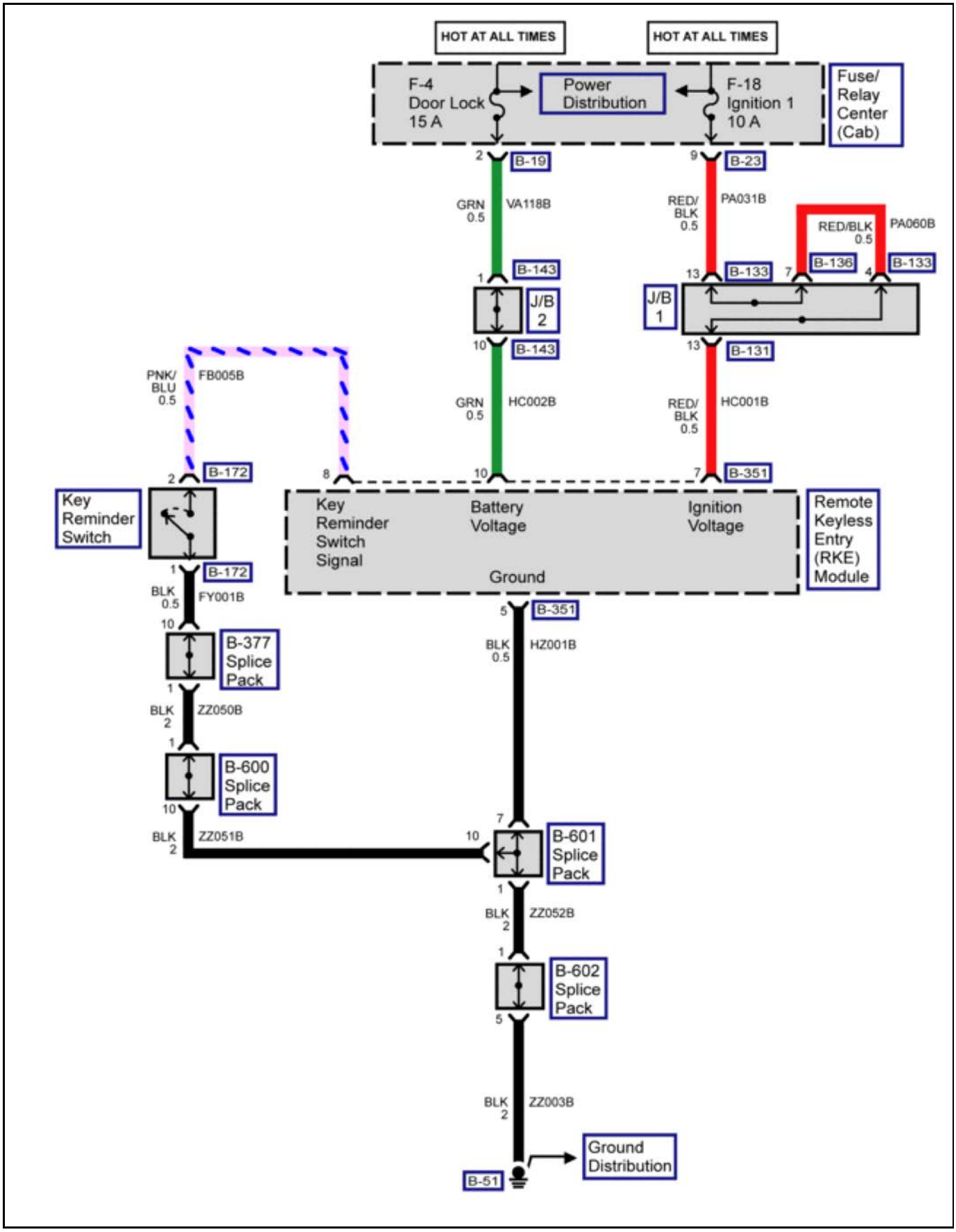

4892387

HVAC Schematics (Blower Motor Controls)

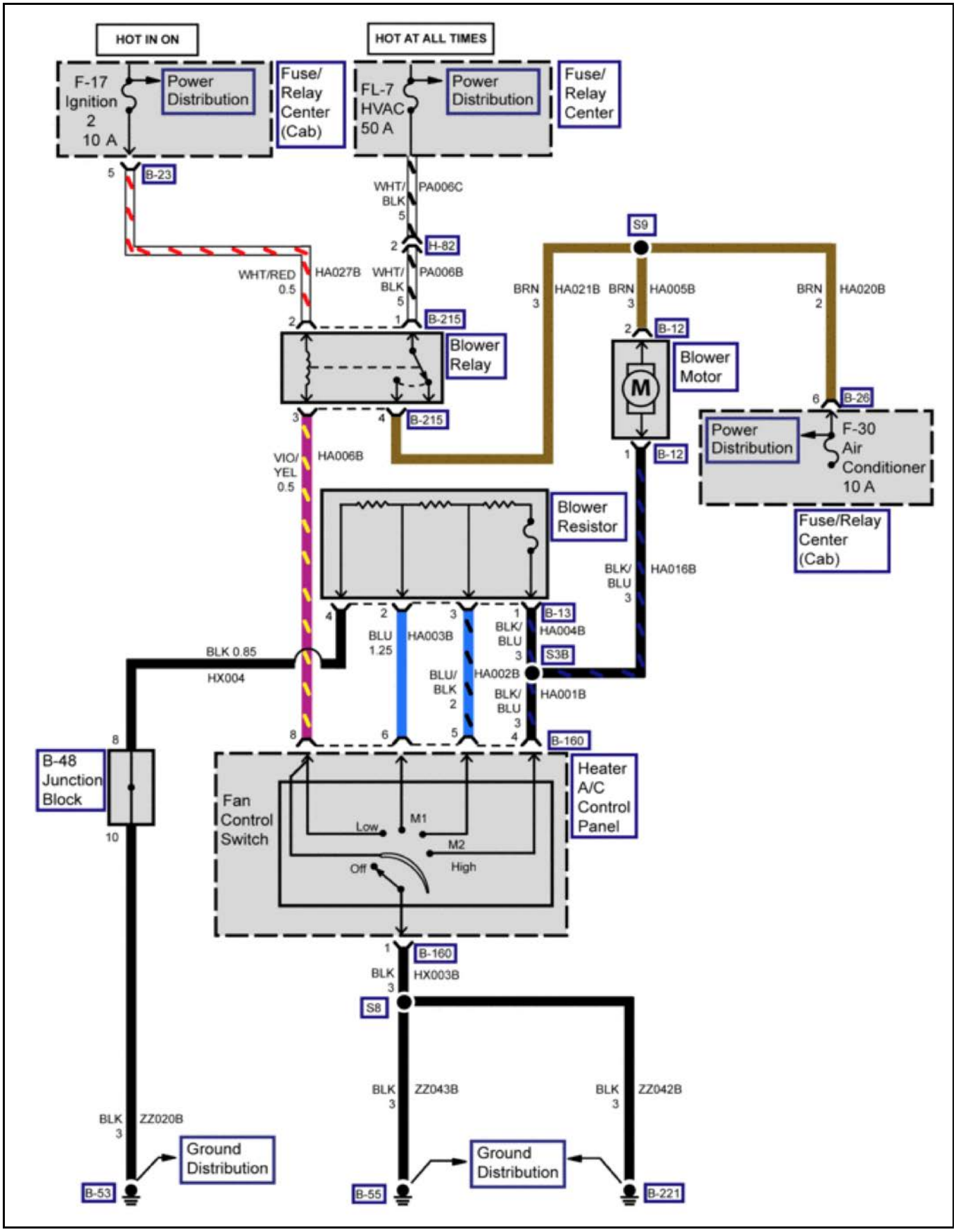

4893958

HVAC Schematics (A/C Switch Controls)

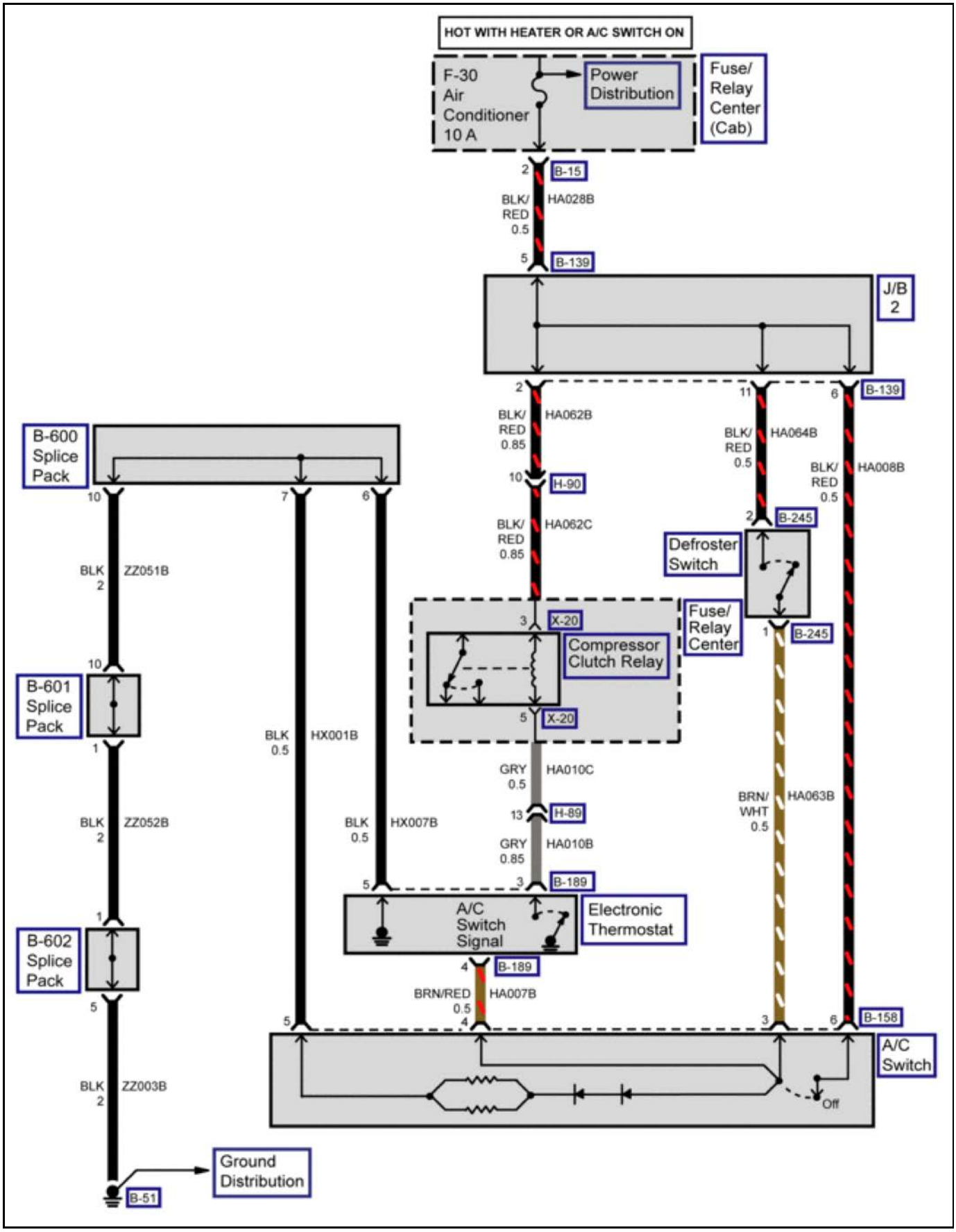

4893961

HVAC Schematics (A/C Compressor Controls)

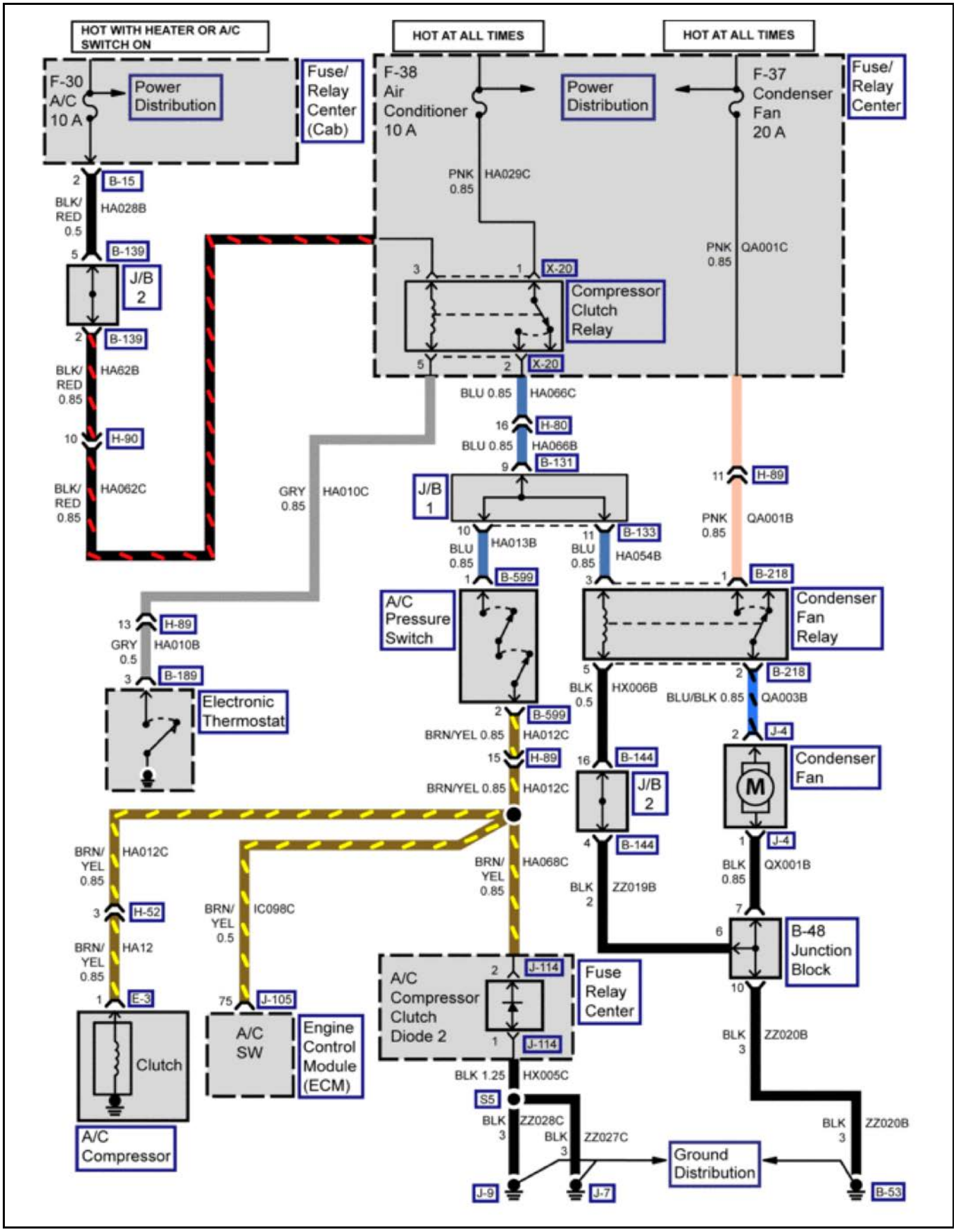

4893963

Power Window Schematics

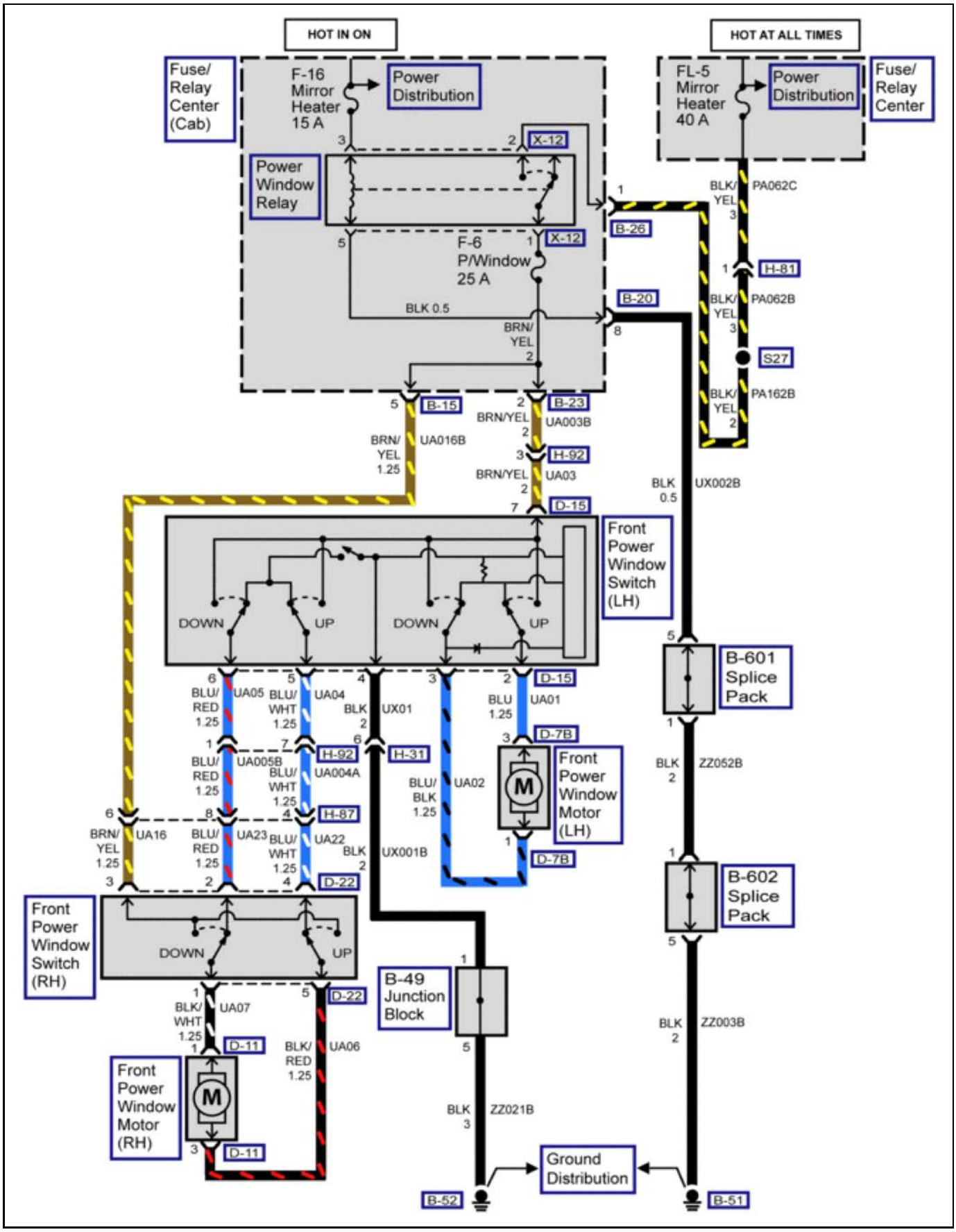

4891923

Power Door Lock Schematics (Door Lock Controls)

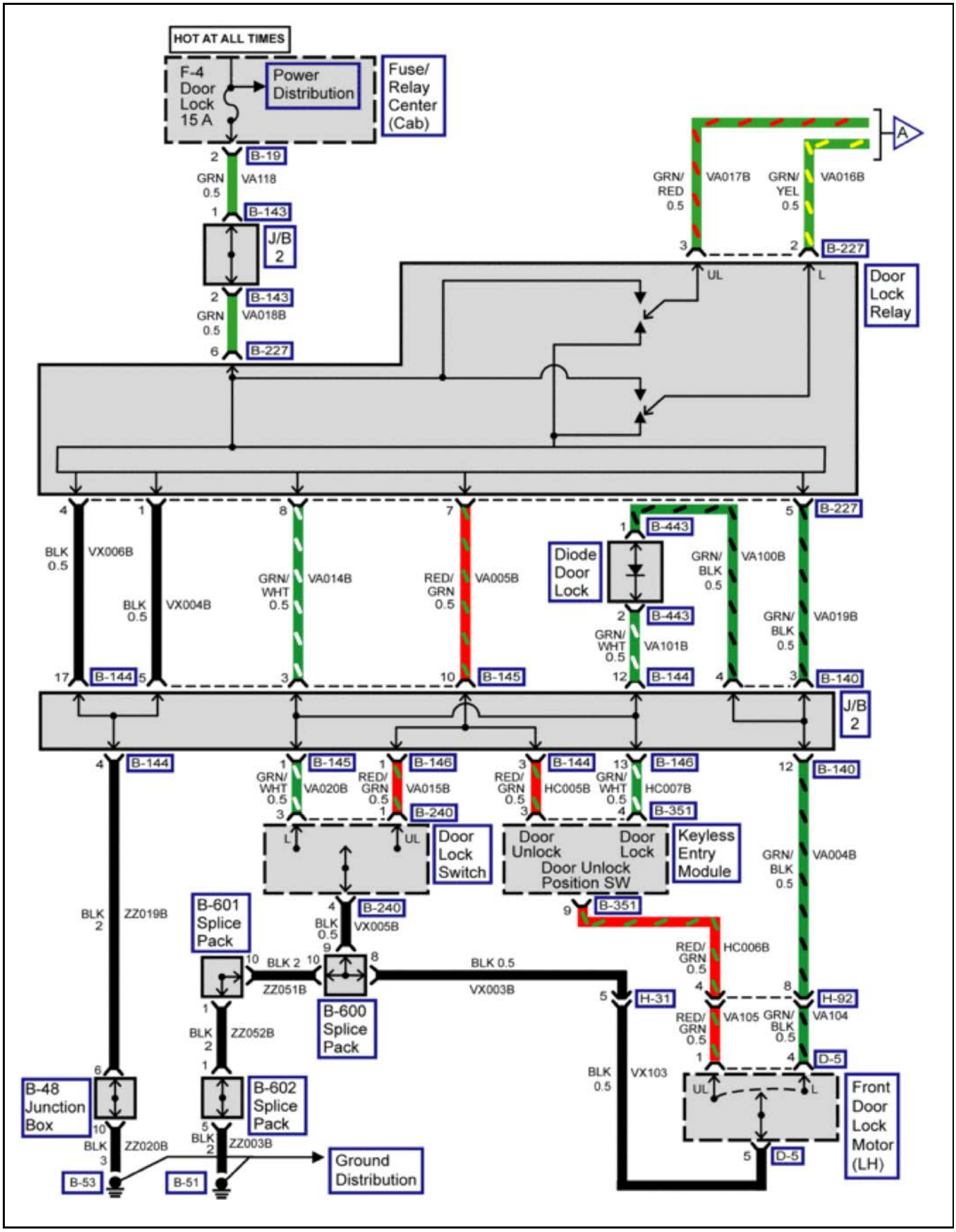

4891892

Power Door Lock Schematics (Door Lock Motors)

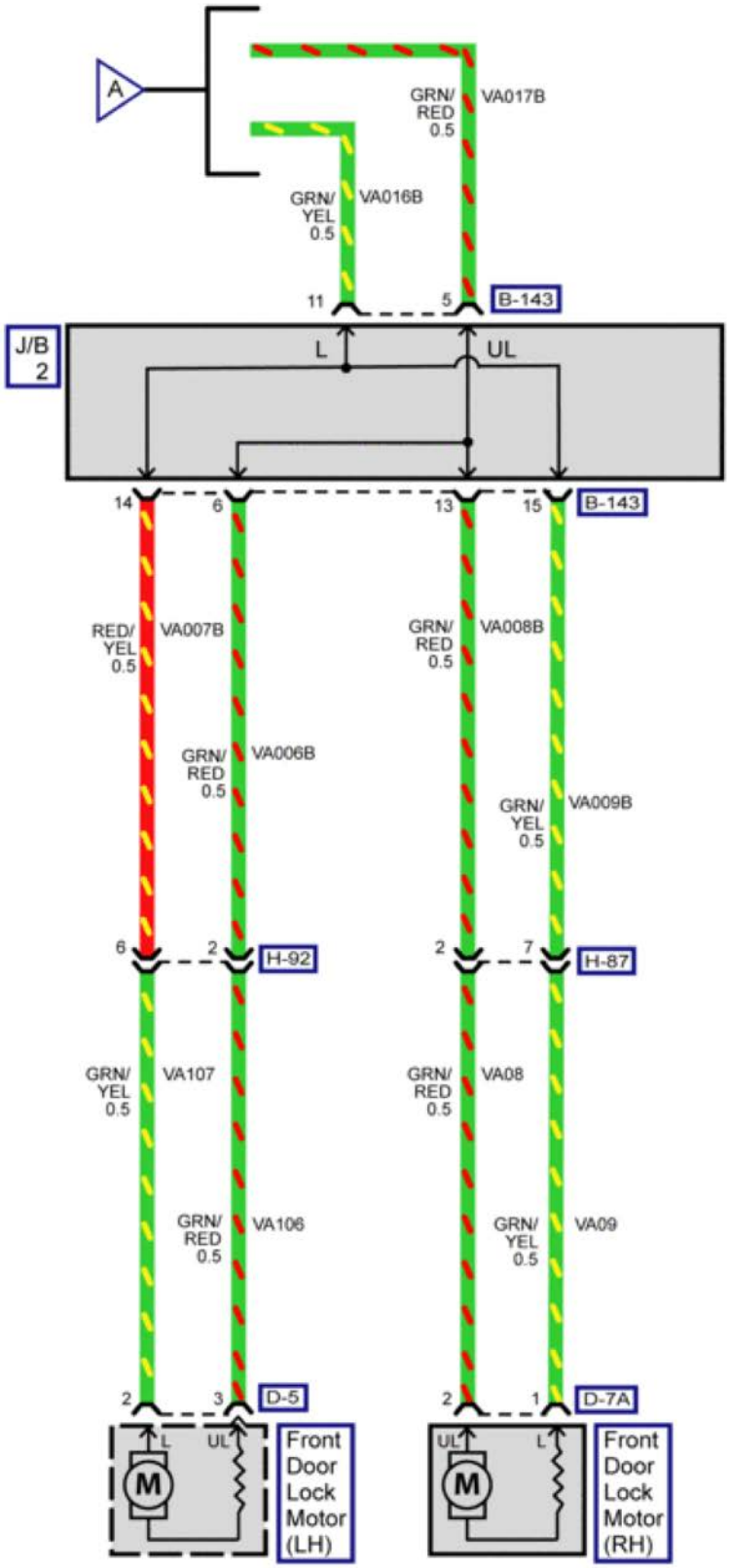

4891897

Backup Alarm System Schematics (Reverse Lamps/Backup Alarm Controls)

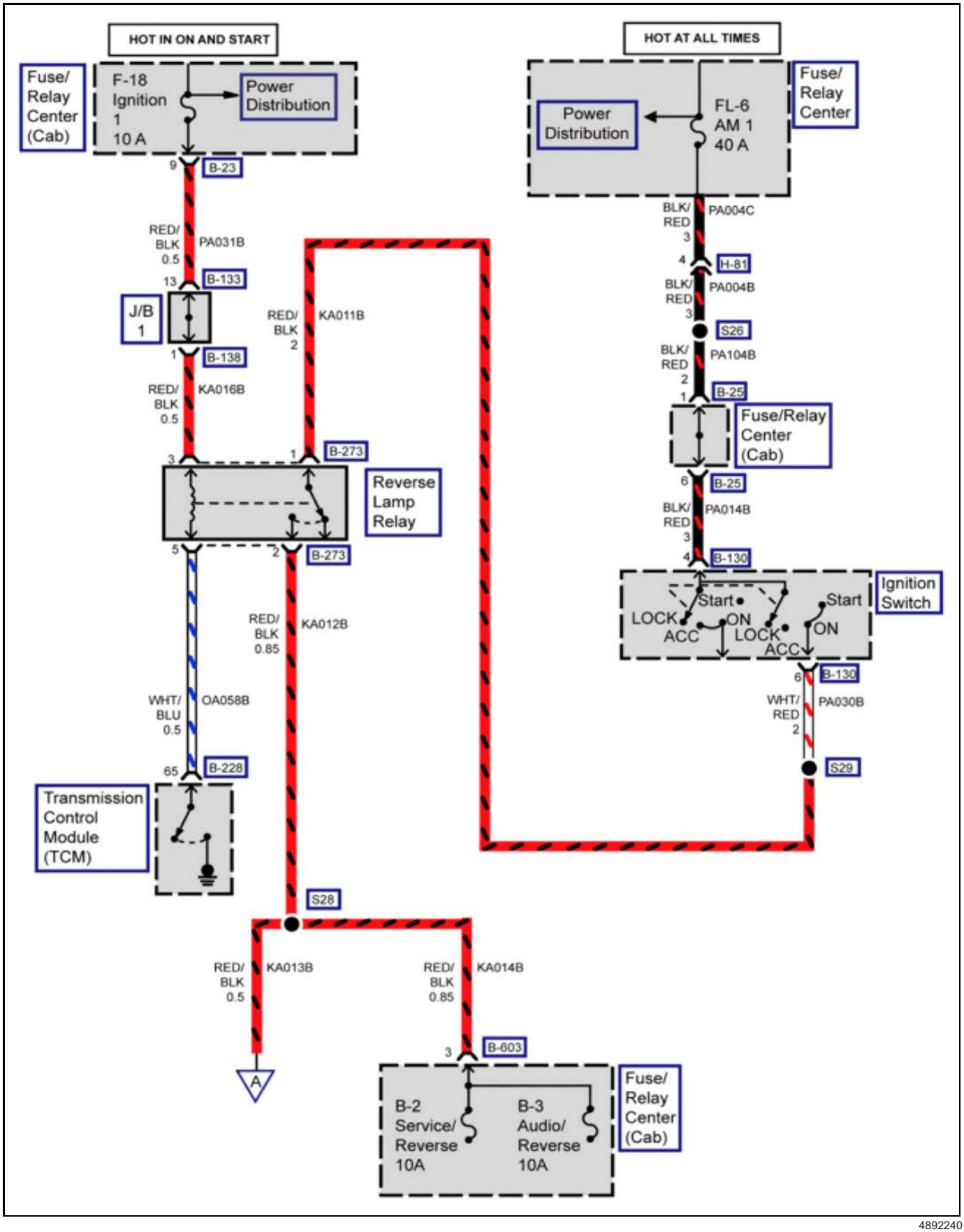

4892240

Backup Alarm System Schematics (Lamps/Alarm)

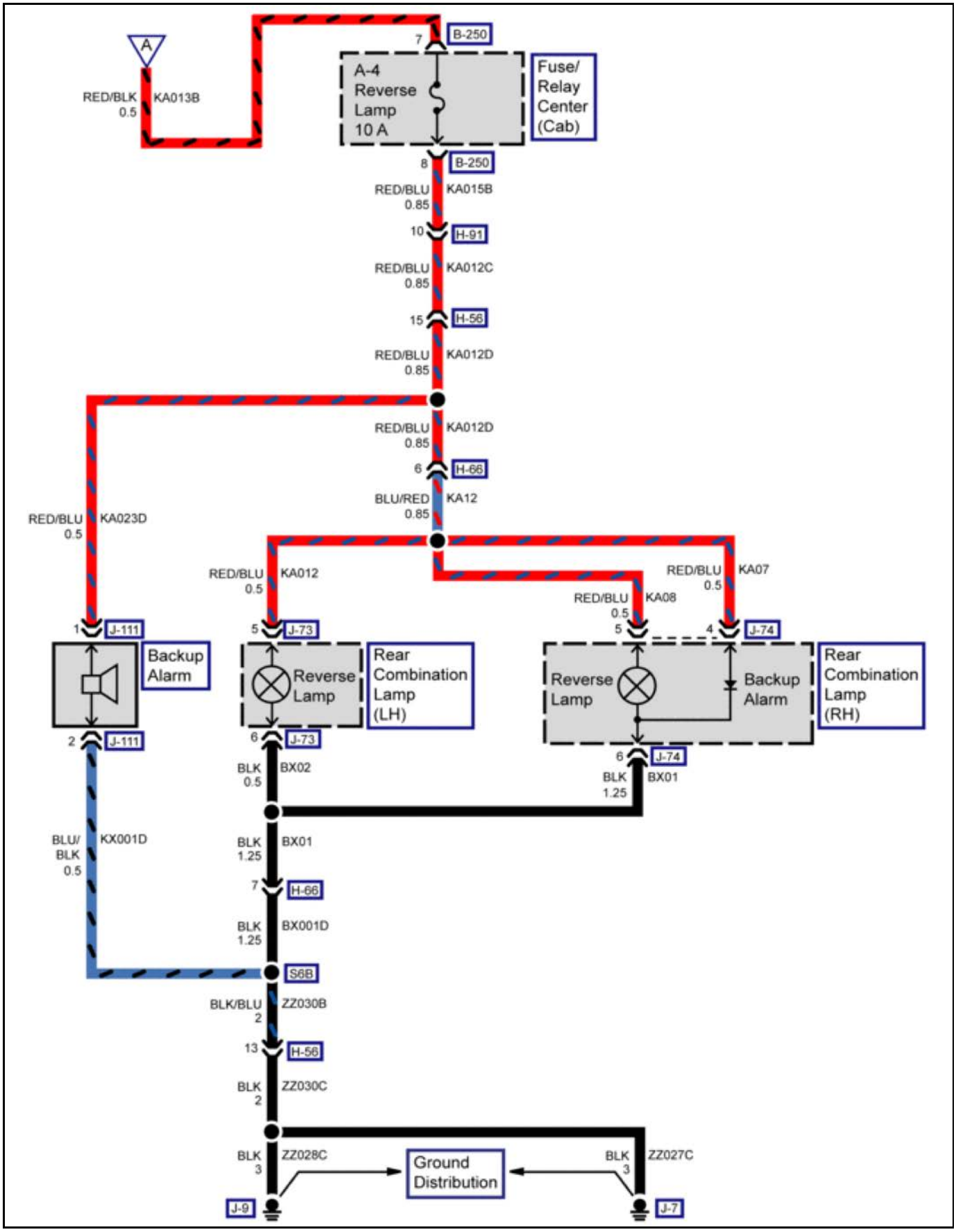

4892254

Backup Alarm System Schematics (Park Lamps – Front)

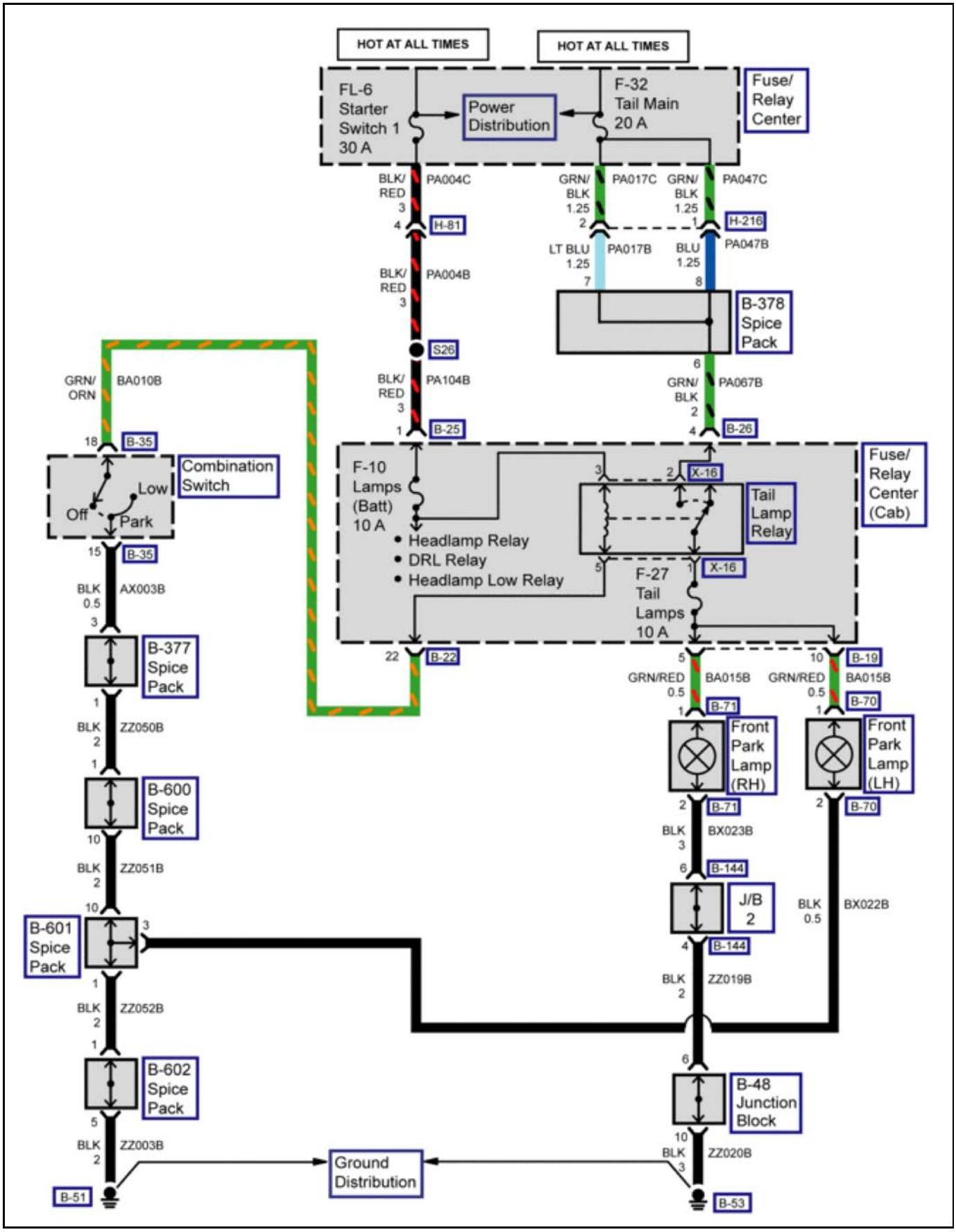

4892258

Backup Alarm System Schematics (Side Marker Lamps)

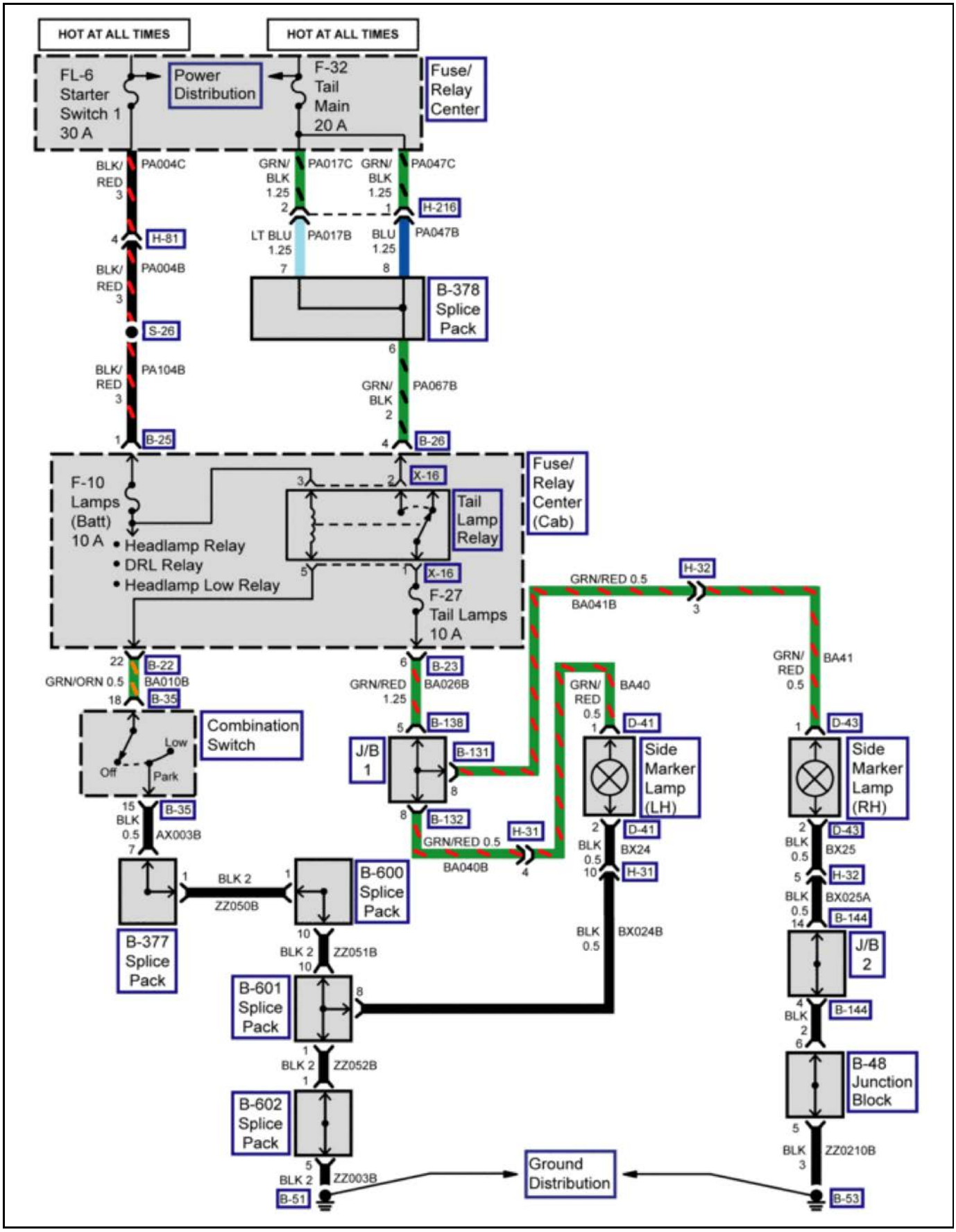

4892260

Backup Alarm System Schematics (Roof Marker Lamps)

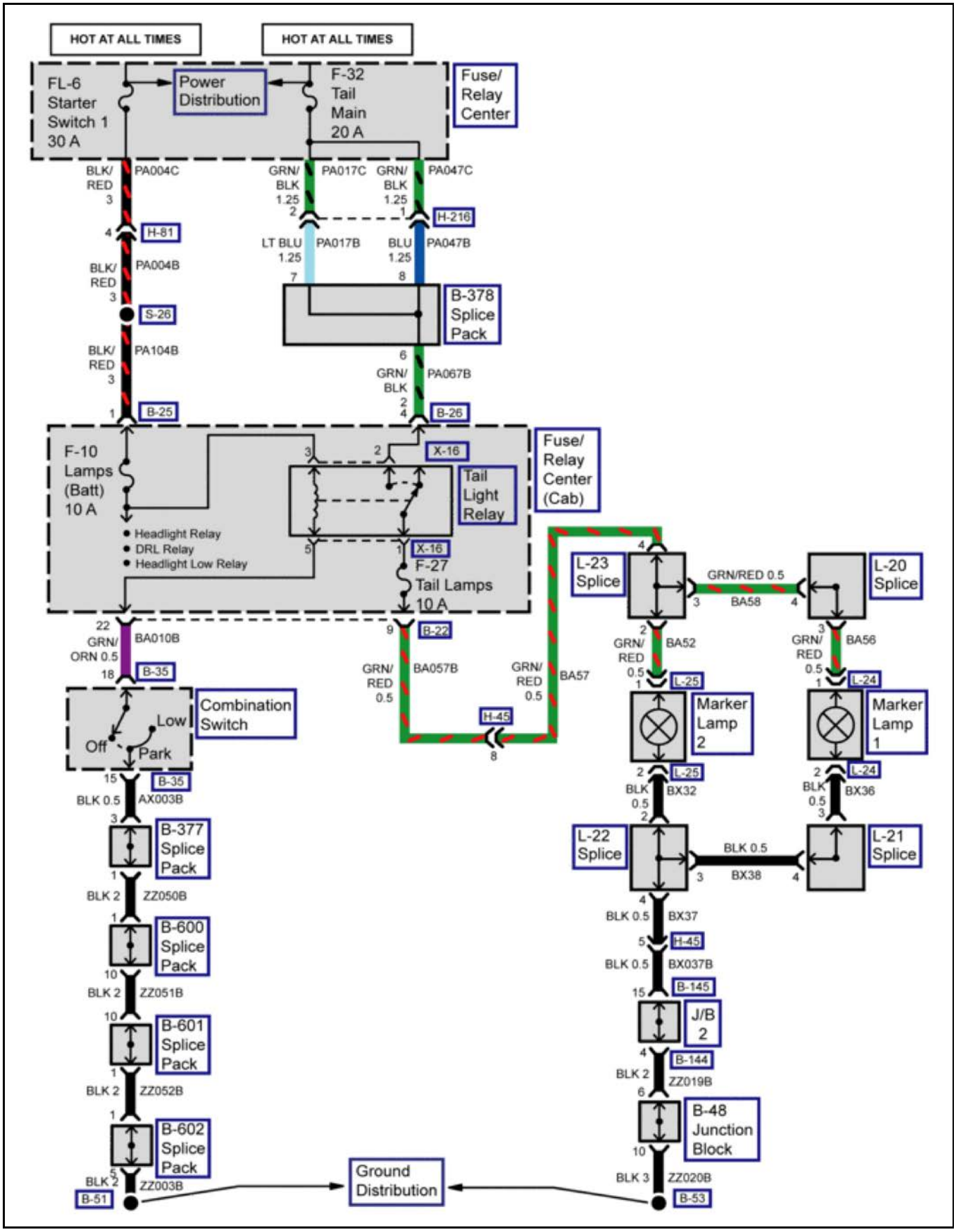

4892263

Backup Alarm System Schematics (Roof Clearance Lamps)

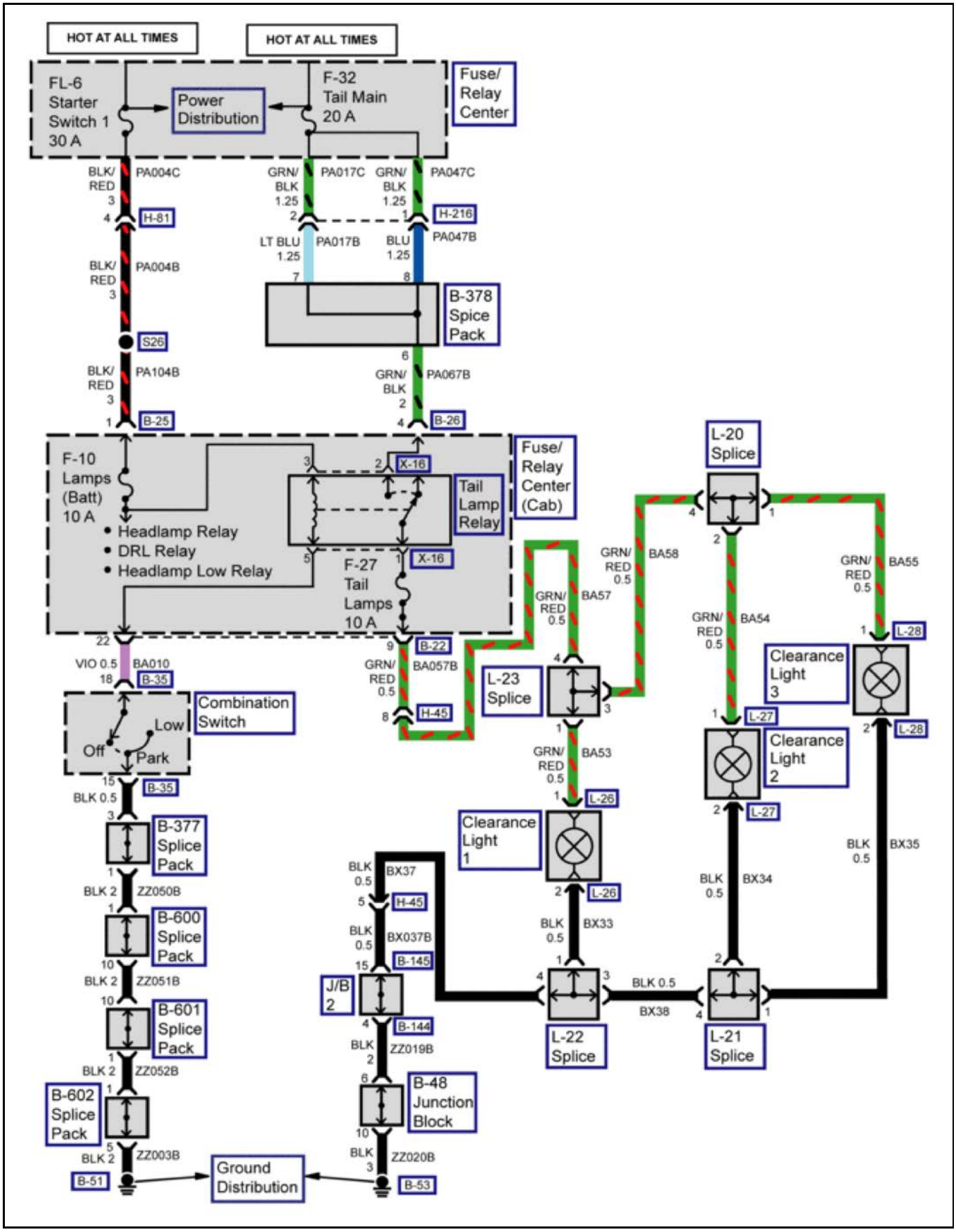

4892265

Description and Operation

Lighting Systems Description

Halogen Headlight System

This circuit comprises the headlights, cornering lights, DRL control unit, ignition switch, combination switch, high beam indicator light, and relays. When the lighting switch is turned ON in the headlight position, the headlight relay will be activated and the headlights will be illuminated. When the headlights are illuminated, the optical axis of the headlight can be faced upward and downward alternately using the lighting switch.

The optical axis of the passing switch will face upward only when the switch lever is being pulled up, regardless of the headlight switch position.

If the parking brake is released with the engine started, the headlights will illuminate at approximately 70% as daytime running lights. When the lighting switch is turned ON in the headlight position, the headlights will illuminate at 100%.

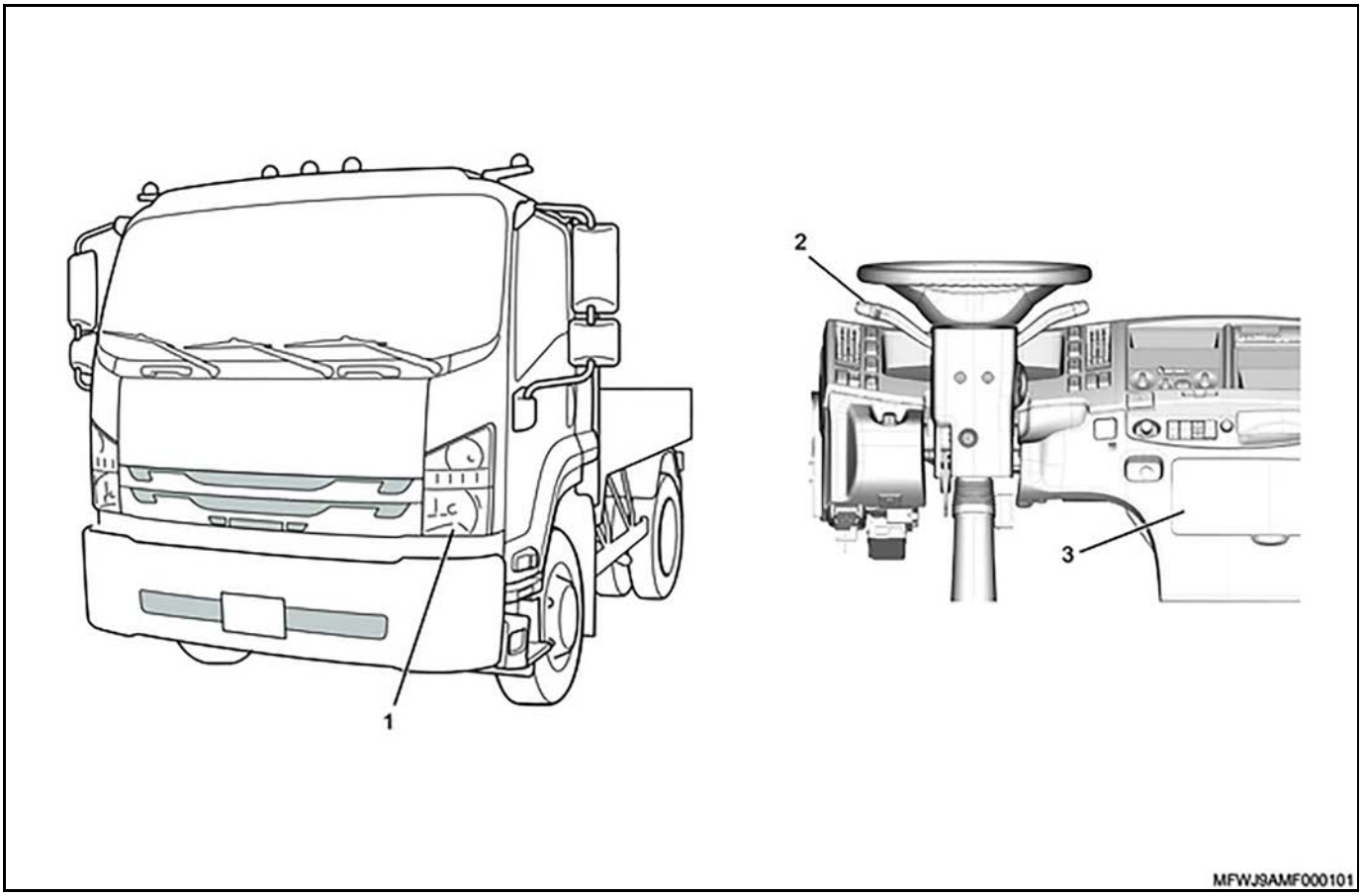

4873537

Legend

(1) Headlight
(2) Combination Switch
(3) Relay Box

Clearance Light System

This circuit comprises the clearance lights, ignition switch, combination switch, and relays. When the lighting switch is turned ON in the headlight or the taillight position, the taillight relay will be activated and the clearance lights will be illuminated.

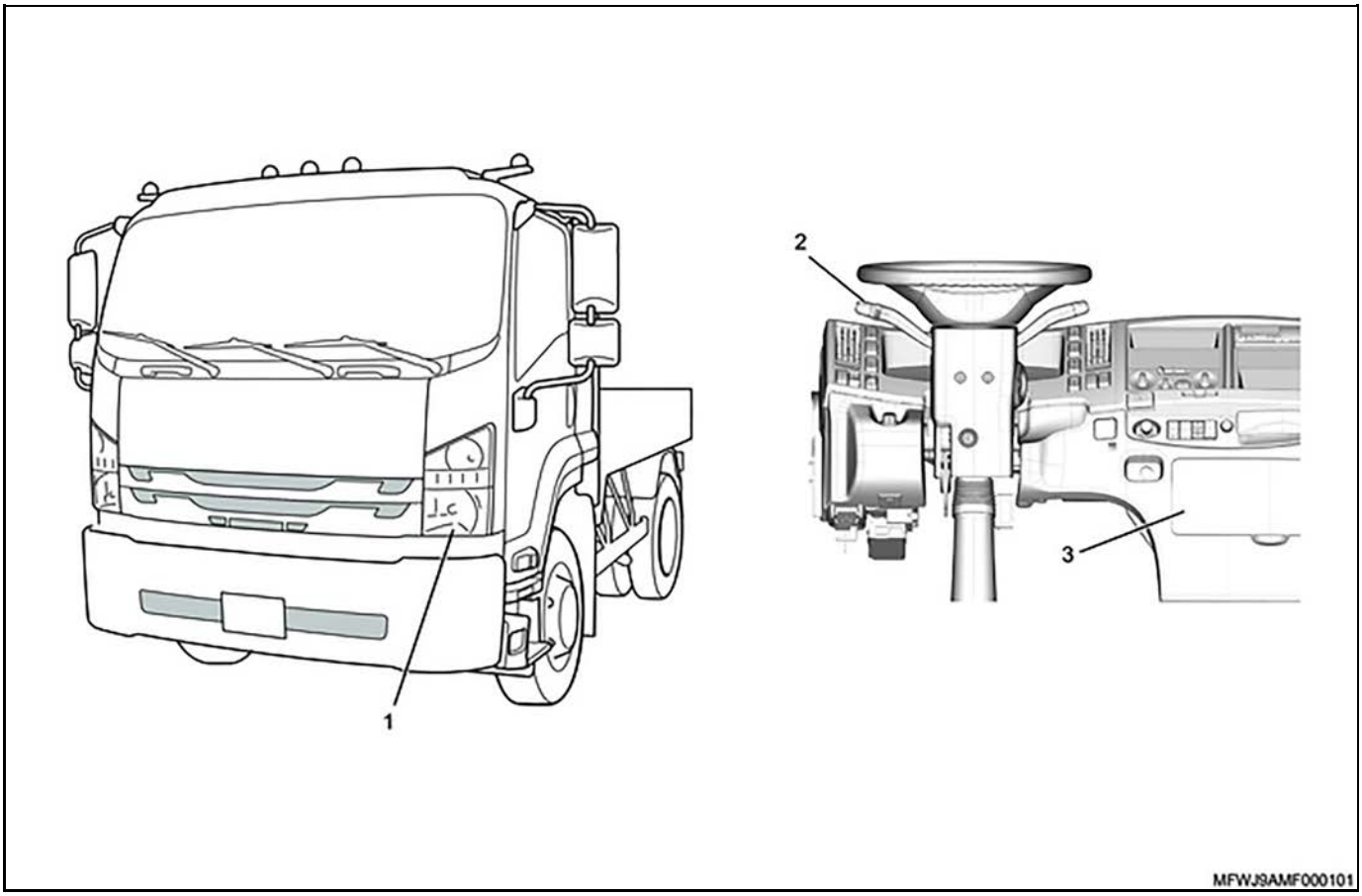

4873537

Legend

(1)	Clearance Light	(3)	Ignition Switch
(2)	Combination Switch	(4)	Relay Box

Turn Signal Light and Hazard Light System

This circuit comprises the turn signal lights, ignition switch, combination switch, flasher unit, hazard warning flasher switch. When the turn signal switch or the hazard warning flasher switch is turned ON, the flasher unit will be activated and the turn signal lights will be illuminated. The turn signal lights are also illuminated by the answer-back function of the keyless entry system.

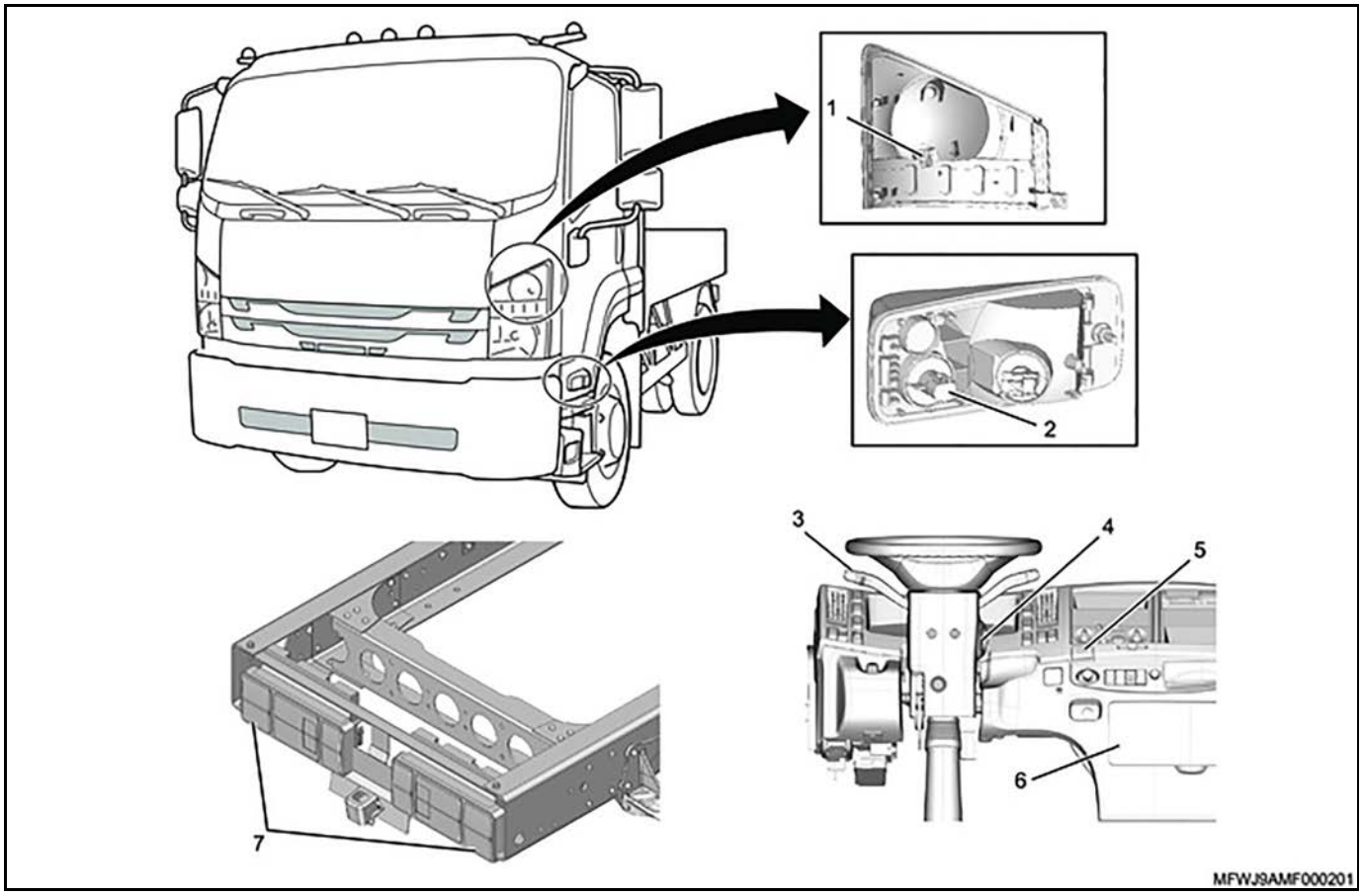

4873547

Legend

(1) Front Turn Signal Light
(2) Side Turn Signal Light
(3) Combination Switch
(4) Ignition Switch
(5) Hazard Warning Flasher Switch
(6) Relay Box
(7) Rear Turn Signal Light

Dome Light System

This circuit comprises the dome light, door switches, key reminder switch, keyless entry control unit, relays, etc. When the switch on the dome light body is in the center position, the keyless entry control unit illuminates the dome light if the door switch is turned ON. Also, when the key is removed from the key cylinder, the keyless entry control unit will illuminate the dome light.

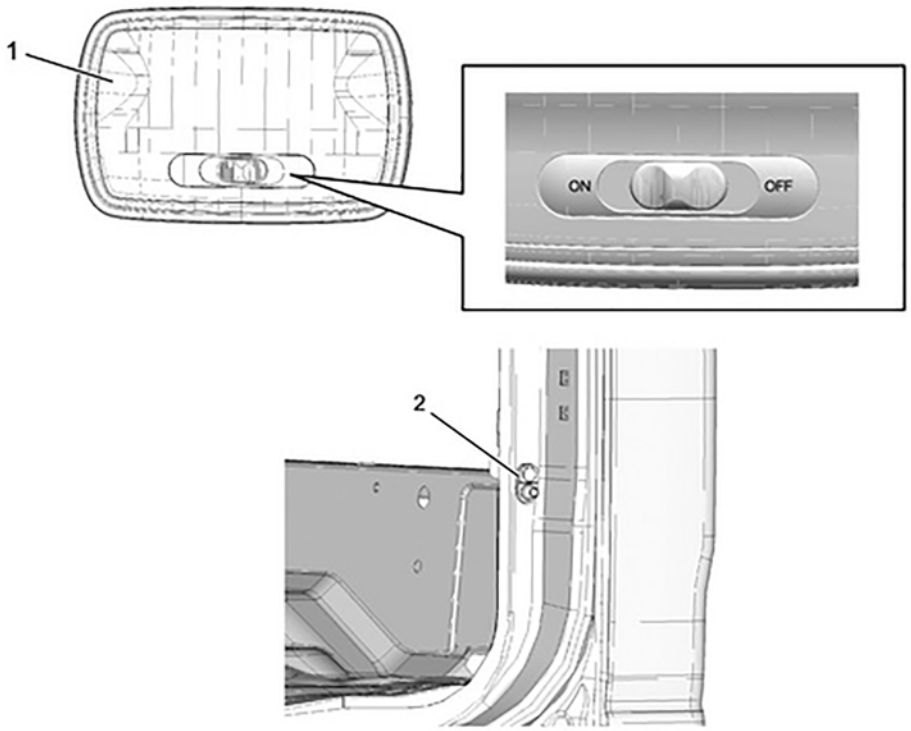

MFW89ALF000501

4873549

Legend

(1) Dome Light

(2) Door Switch

Taillight and Stoplight System

This circuit comprises the taillights, stoplights, ignition switch, combination switch, stoplight switch, and relays. When the lighting switch is turned ON in the headlight or taillight position, the taillight relay will be activated and the taillights will be illuminated. The stoplights illuminate according to the operation of the stoplight switch.

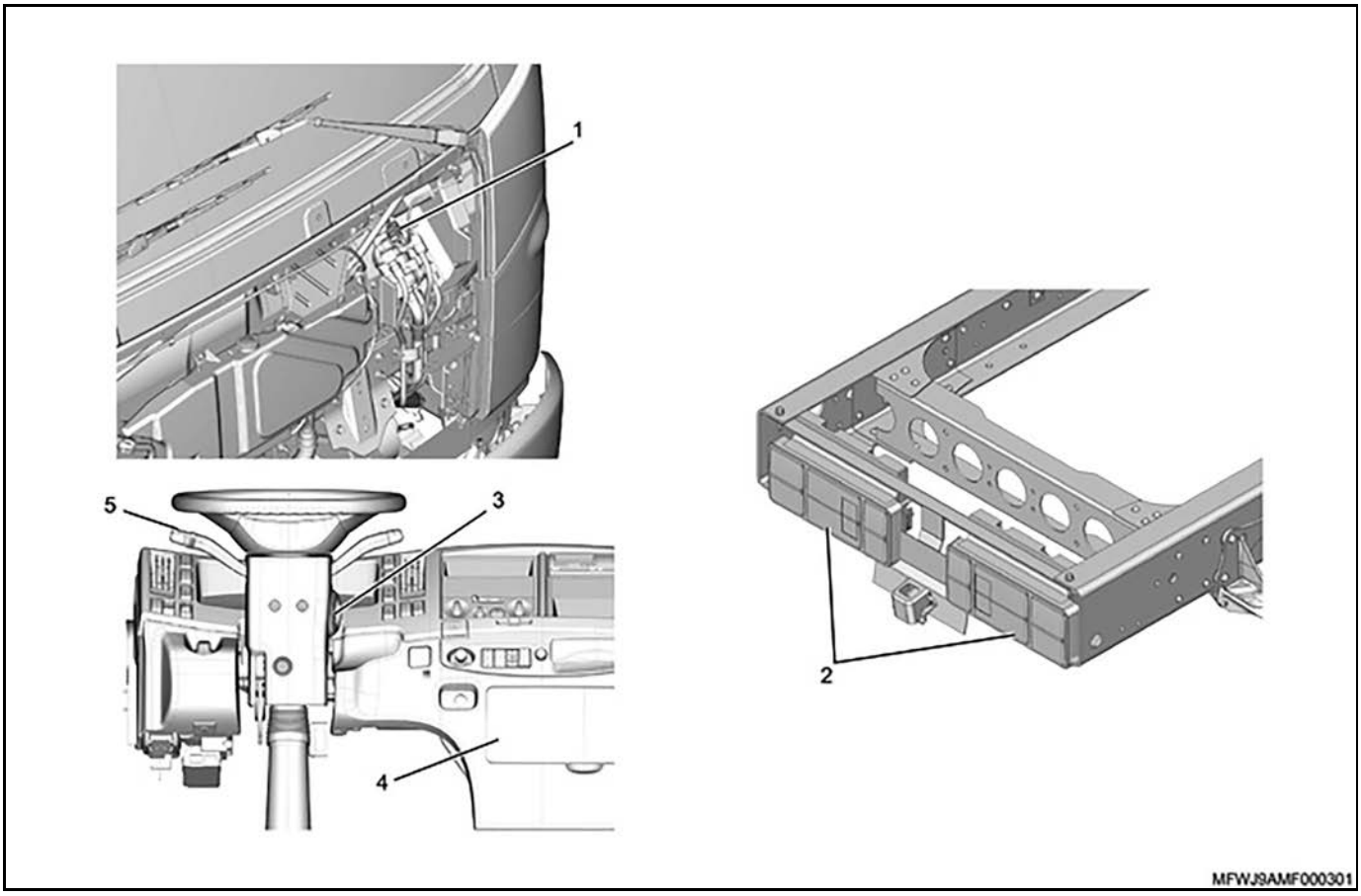

4873552

Legend

(1) Stoplight Switch
(2) Taillight And Stoplight
(3) Ignition Switch
(4) Relay Box
(5) Combination Switch

License Plate Light System

This circuit comprises the license plate light, ignition switch, combination switch, and relays. When the lighting switch is turned ON in the headlight or taillight position, the taillight relay will be activated and the license plate lights will be illuminated.

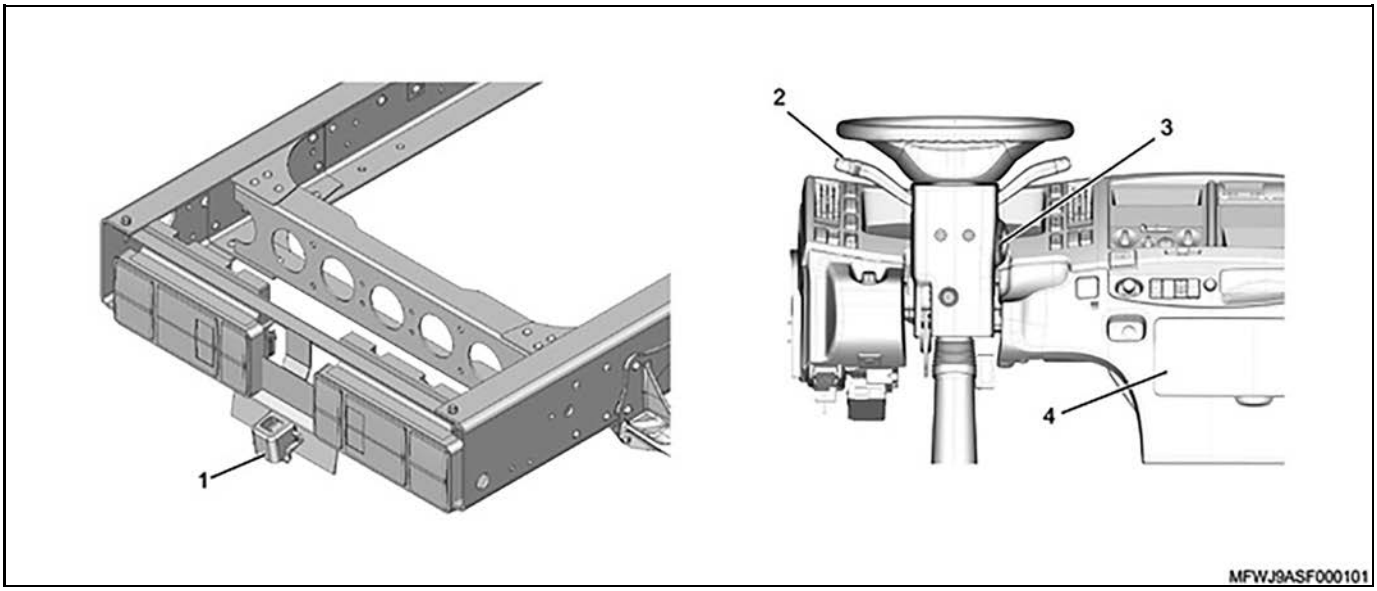

4873554

Legend

(1)	License Plate Light	(3)	Ignition Switch
(2)	Combination Switch	(4)	Relay Box

Illumination Light System

This circuit comprises the illumination lights, ignition switch, combination switch, and relays. When the lighting switch is turned ON in the headlight or taillight position, the taillight relay will be activated and the illumination lights will be illuminated.

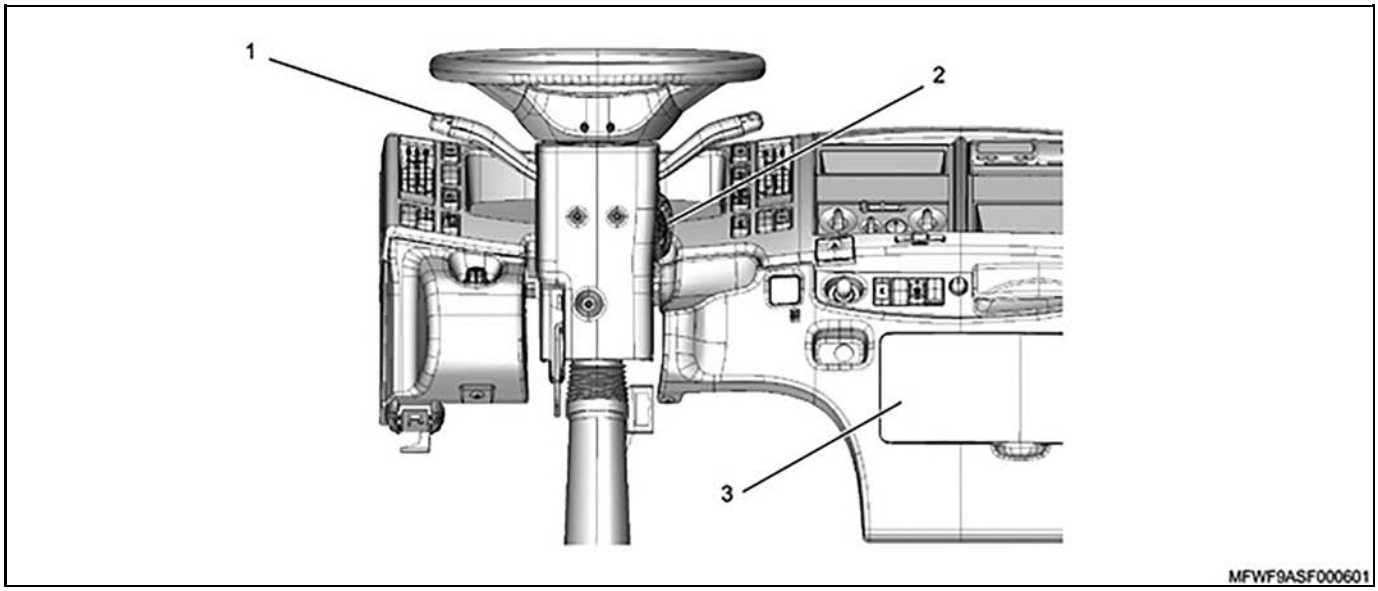

4873556

Legend

(1) Combination Switch
(2) Ignition Switch
(3) Relay Box

1. LED type
   - Instrument panel cluster
   - Cruise control main switch
   - DPF switch
   - Rear body interior light switch
   - PTO engine speed control switch
   - PTO main switch
   - Illumination control switch
   - Odometer check switch
   - Engine oil level check switch
   - Mirror heater switch
   - Hazard warning flasher switch
2. Bulb type
   - A/C panel of manual A/C
   - Power supply
   - Radio and audio

Backup Light System

This circuit comprises the backup lights and the backup light switch. When the backup light switch installed to the transmission is turned ON, the backup lights will illuminate.

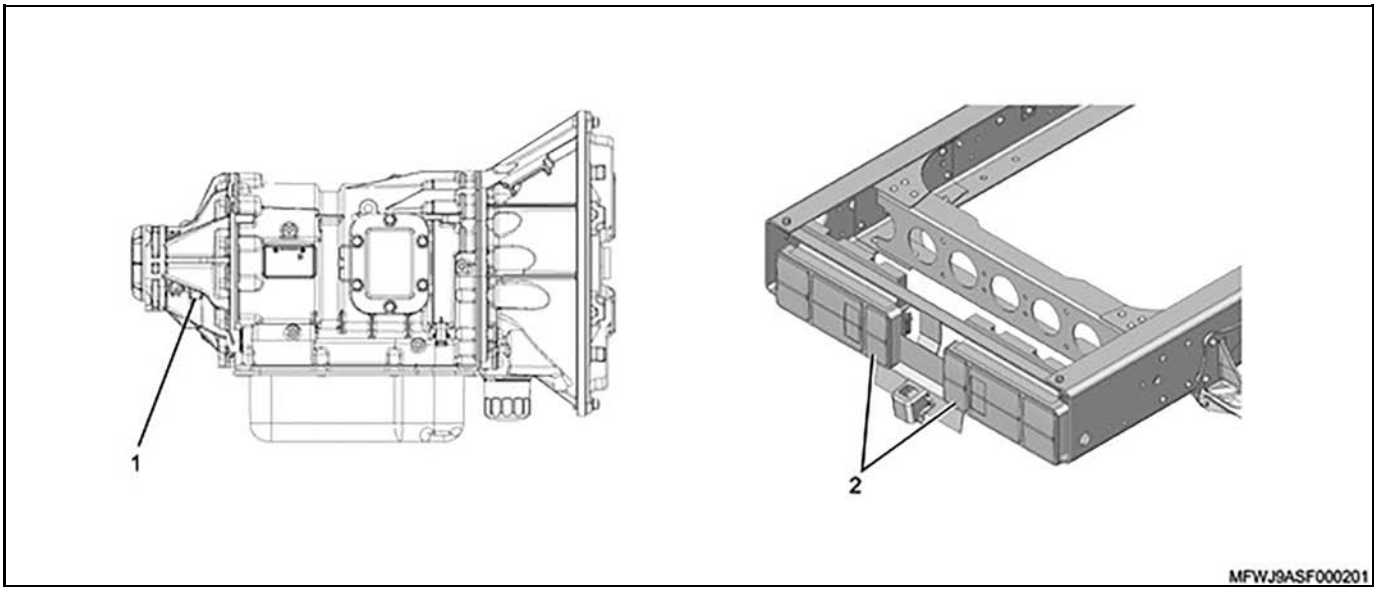

4873558

Legend

(1) Backup Light Switch

(2) Backup Light

Wiper/Washer Systems Description

The wiper and washer system comprise the following units. The system is activated when the ignition switch is in the ON position.

- Wiper/washer switch
- Wiper relay
- Wiper motor
- Washer motor
- Washer nozzle
- Washer tank
- Wiper arm and blade
- Link rod

Note: The wiper relay controls the wiper intermittent drive and the windshield washer interlock drive of the wiper motor. The washer motor and high speed operation are controlled directly by the wiper switch and washer switch.

Windshield Washer

When the windshield washer switch is turned ON, the washer motor will operate. The wiper relay activates the wiper main relay slightly later to drive the wiper motor at a low speed.

Wiper Intermittent Drive

When the wiper switch is at the INT position, the wiper relay activates the wiper main relay at fixed intervals to drive the wiper motor intermittently at low speed.

Wiper Low-Speed Drive

When the wiper switch is at the LO position, the wiper main relay is activated to drive the wiper motor at low speed.

Wiper High-Speed Drive

When the wiper switch is in the HI position, the wiper main relay and wiper high low relay are activated to drive the wiper motor at high speed.

Ignition Switch Description

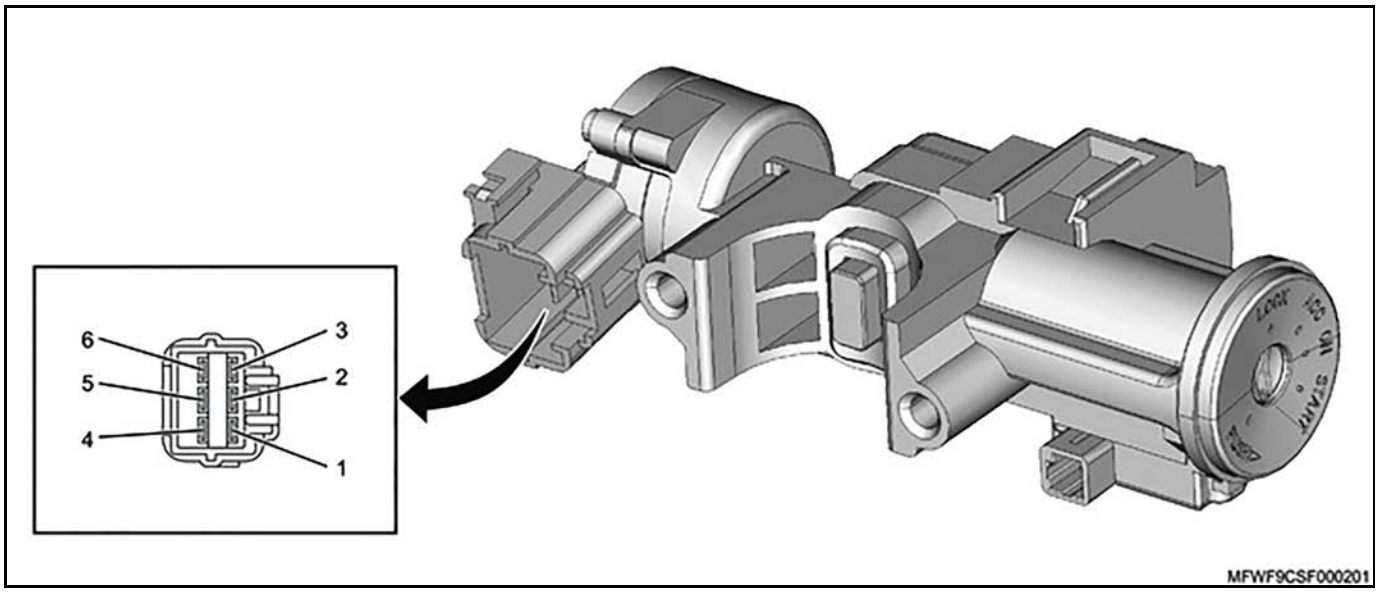

4873562

Legend

(1)	IG2	(4)	B1
(2)	ST	(5)	ACC
(3)	B2	(6)	IG1

Driver Information Description

Meter System

The following gauges and various warning lights and indicator lights are assembled to the meter.

- Speedometer
- Tachometer
- Fuel gauge
- Engine coolant temperature gauge
- Air pressure gauge
- Odometer and trip meter
- Multi-information display

Note: These components cannot be replaced separately because they are integrated with the instrument panel cluster. Also, they communicate with the control units such as the ECM and TCM via CAN.

Speedometer

The speedometer displays the vehicle speed based on the vehicle speed signal output from the ECM. The vehicle speed signal corrected by the ECM is input to the speedometer via CAN communication.

Tachometer

The tachometer indicates the engine speed based on the engine speed signal outputted from the ECM. The ECM detects the engine speed signal from the CKP sensor, and the signal is input to the tachometer via CAN communication.

Fuel Gauge

The fuel gauge displays the remaining fuel level based on the signal output from the fuel tank unit. The fuel gauge displays the remaining fuel level as low when the resistance detected by the fuel tank unit is high. The fuel gauge displays the remaining fuel level as high when the resistance detected by the fuel tank unit is low.

Engine Coolant Temperature Gauge

The engine coolant temperature gauge displays the engine coolant temperature based on the engine coolant temperature signal output from the ECM. The ECM detects the engine coolant temperature signal from the engine coolant temperature sensor, and the signal is input to the engine coolant temperature gauge via CAN communication.

Air Pressure Gauge (Primary)

The air pressure gauge displays the pressure inside the primary side air tank based on the air pressure signal output from air pressure sensor 1.

Air Pressure Gauge (Secondary)

The air pressure gauge displays the pressure inside the secondary side air tank based on the air pressure signal output from air pressure sensor 2.

Odometer and Trip Meter

The odometer and trip meter display the mileage count or the traveled distance between locations from calculation of mileage based on the vehicle speed signal output from the vehicle speed sensor. The display is switched by operating the select/reset knob. The odometer and trip meter will be displayed for 5 minutes after the ignition switch is turned OFF.

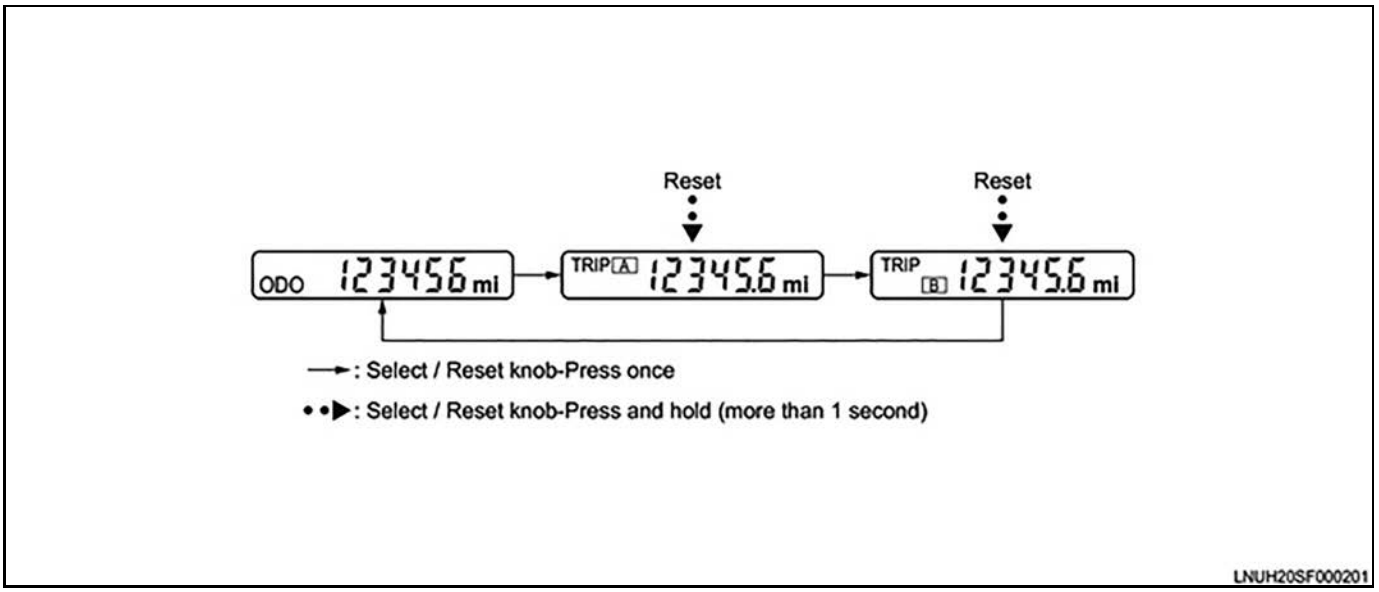

4873565

Multi-Information Display Specification Display Switchover

Multi-information Display

The multi-information display has the ability to display information, warning lights, indicator lights, and maintenance information.

Information Display

The following information is displayed on the multi-information display.

- Overall fuel efficiency
- Sectional fuel efficiency
- Instantaneous fuel efficiency

Fuel efficiency display is requested to the information module and the data obtained via CAN communication will be displayed.

99.9 MPG is displayed when the overall or the sectional fuel efficiency data is 99.9 MPG or more.

If no information on overall fuel efficiency, sectional fuel efficiency, and instantaneous fuel efficiency is obtained via CAN communication, ERROR is displayed on each display.

In order to reset the overall fuel efficiency display, the data in the information module must be reset.

The sectional fuel efficiency is reset simultaneously when trip B is reset.

The instantaneous fuel efficiency is the fuel consumption at any given moment while operating the vehicle.

Hour Meter

The accumulated operation hours of the engine is displayed. The engine operating time is connected with engine operation, and is calculated by the information module with information obtained via CAN communication. If no information is obtained through CAN communication, ERROR will be displayed.

DPF Regeneration Progress and Accumulation

The ECM calculates the DPF display and obtains the DPF regeneration status signal via CAN communication. Regeneration progress is displayed when DPF regeneration is in progress, and PM accumulation is displayed when DPF regeneration is not in progress. If no information is obtained through CAN communication, ERROR will be displayed.

The DPF regeneration progress is displayed in 6 levels. Progress in the information display decreases as the regeneration progresses.

The PM accumulation is displayed in 6 levels. Accumulation in the information display increases as the accumulation volume increases.

Voltmeter

The battery voltage is displayed in a scale of 9 levels.

Calendar and Clock

A calendar or a clock can be displayed.

Warning Light and Indicator Light Display

The following warning lights and indicator lights are displayed on the multi-information display.

- Air cleaner inspection

  If the intake pressure drops to 6.2 kPa or less after the engine starts, the pressure switch installed on the air cleaner turns ON and the instrument panel cluster receives signals from the clogging switch and displays the notification of the element cleaning period.
- Engine oil level inspection

  It is displayed when the oil level signal is received from the ECM and the engine oil level has decreased.
- DPF automatic regeneration is in progress.

  It is displayed during DPF automatic regeneration.
- DPF optional regeneration verification is in progress.

  It is displayed while verifying if DPF optional manual regeneration is possible.
- Press the DPF switch.

It is displayed when DPF manual regeneration must be performed. The buzzer also sounds.

- DPF manual regeneration is in progress.

  It is displayed during DPF manual regeneration.
- Fuel filling

  It is displayed when the fuel level decreases.
- Water separator (fuel filter) warning

  It is displayed when water is in the fuel filter and needs to be drained.
- Engine has overheated

  It is displayed if the engine overheats. If the engine overheats, the engine coolant temperature gauge enters the red zone and the warning buzzer sounds at the same time.
- PTO operation display

  It is displayed when the PTO is operated.
- Cab tilt

  It is displayed when the ignition switch is in the ON position and the cab lock is not locked securely.
- Communication system malfunction

  It is displayed when there is a communication failure between the instrument panel cluster and the instrument panel cluster peripheral systems.
- Voltage malfunction

  It is displayed when the battery voltage is too high or too low.
- Diagnostic display

  When pins 12 and 4 or 5 of the DLC are short-circuited with the ignition switch ON, the diagnosis codes of the ISS are displayed.

  – SCR system-related warning light

  – Restart is inhibited (Abnormal urea fluid quality)

  – Restart is inhibited (Urea fluid filling)

  – Abnormal urea fluid quality

  – Urea fluid filling

  – Abnormal urea fluid injection

Maintenance Indications

For each maintenance item, the running distance or the number of times remaining until the next maintenance preset timing is counted down on the display. The exceeded mileage or the exceeded number of times will be displayed as a negative value. When the maintenance timing is approaching, the background color of the indicator light will change from green to amber. If no information is obtained through CAN communication, ERROR will be displayed.

If the display shows other items when the maintenance timing is approaching, it forcibly changes to show the item that requires maintenance when the vehicle speed drops to 25 km/h or less. The display will remain until the 3-mode switch is short pressed or when the vehicle speed exceeds 25 km/h. Also, after the ignition switch is turned ON, the item that needs maintenance will be forcibly displayed, even when there is a warning.

There are the following 5 display items:

- Engine oil and filter
- T/M oil and differential oil
- Fuel filter
- Power steering fluid
- Tire rotation

Multi-Information Display Main Routine

The multi-information display in the meter panel is divided into 3 parts, which displays the following. Select the display or functions with the 3-mode switch:

- Warning light and warning light display
- Information display
- DPF and urea SCR display
- Maintenance indications
- ERROR display

Maintenance Display and Reset Function

Engine Oil and Filter Inspection

The remaining life data of the engine oil is input from the ECM via CAN communication and the running distance remaining until the next inspection timing is counted down on the multi-information display. In addition, the exceeded mileage will be displayed as a negative value. Operate the 3-mode switch to display and inspect the engine oil and filter.

Note: If replacement is done, set and reset the engine oil and filter display.

Engine Oil and Filter Display Set/Reset

By performing the set/reset operation, the engine oil and filter replacement period can be reset to 10,000 miles (16,000 km). Press and hold the 3-mode switch on the engine oil and filter display screen, and after the set/reset screen is displayed, decid e the distance by turning the 3- mode switch right or left, then press and hold the 3-mode switch.

Transmission Oil and Differential Oil Inspection

Based on the data calculated from the accumulated distance, the running distance remaining until the next inspection timing is counted down on the multi-information display. In addition, the exceeded mileage will be displayed as a negative value. Operate the 3-mode switch to display and inspect the T/M oil and differential oil.

Note: If replacement is done, reset the T/M oil and differential oil display.

T/M Oil and Differential Oil Display Reset

By performing the reset operation, the T/M oil and differential oil replacement period can be reset to 30,000 miles (48,000 km). Press and hold the 3-mode switch on the T/M oil and differential oil display screen, and after the set/reset screen is displayed, decide the distance by turning the 3-mode switch right or left, then press and hold the 3-mode switch.

Fuel Filter Inspection

Based on the data calculated from the accumulated distance, the running distance remaining until the next inspection timing is counted down on the multi-information display. In addition, the exceeded mileage will be displayed as a negative value. Operate the 3-mode switch to display and inspect the fuel filter.

Note: If replacement is done, reset the fuel filter display.

Fuel Filter Display Reset

By performing the reset operation, the fuel filter display is reset to 15,000 miles (24,000 km).

Press and hold the 3-mode switch on the mileage display screen, and after the reset screen is displayed, press and hold the 3-mode switch.

Power Steering Fluid Inspection

Based on the data calculated from the accumulated distance, the running distance remaining until the next inspection timing is counted down on the multi-information display. In addition, the exceeded mileage will be displayed as a negative value. Operate the 3-mode switch to display and inspect the power steering fluid.

Note: If replacement is done, reset the power steering fluid display.

Power Steering Fluid Display Reset

By performing the reset operation, the power steering fluid replacement period can be reset to 30,000 miles (48,000 km). Press and hold the 3-mode switch on the mileage display screen, and after the set/reset screen is displayed, decide the d istance by turning the 3-mode switch right or left, then press and hold the 3-mode switch.

Inspection at Tire Rotation Timing

Based on the data calculated from the accumulated distance, the running distance remaining until the next tire rotation timing set by the driver is counted down on the multi-information display. In addition, the exceeded mileage will be displayed as a negative value. Operate the 3-mode switch to display and inspect the tire rotation.

Tire Rotation Display Set/Reset

The tire rotation timing can be reset to any time by performing the set/reset operation.

Press and hold the 3-mode switch on the tire rotation display screen, and after the mile age set/reset screen is displayed, turn the 3-mode switch to the right to increase the distance or to the left to decrease the distance. The tire rotation display can be reset to any value by pressing and holding the 3-mode switch.

Multi-Information Display Operation Procedures

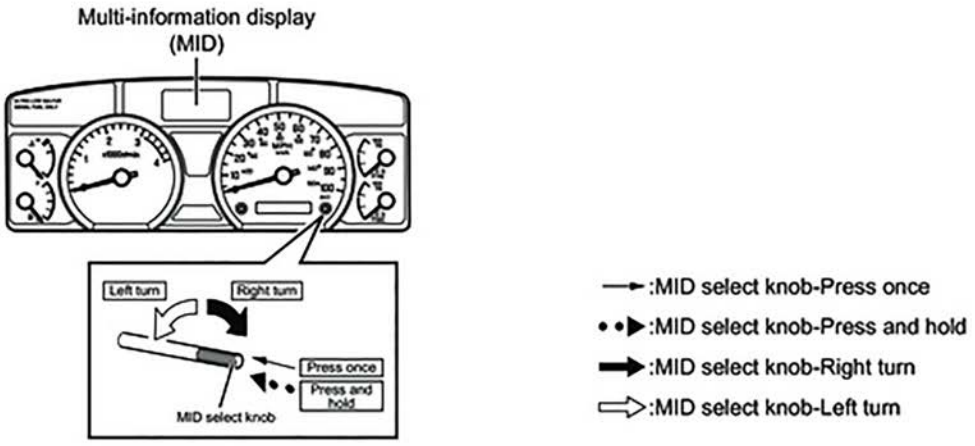

4873567

Instrument Panel Cluster System Components Location Diagram

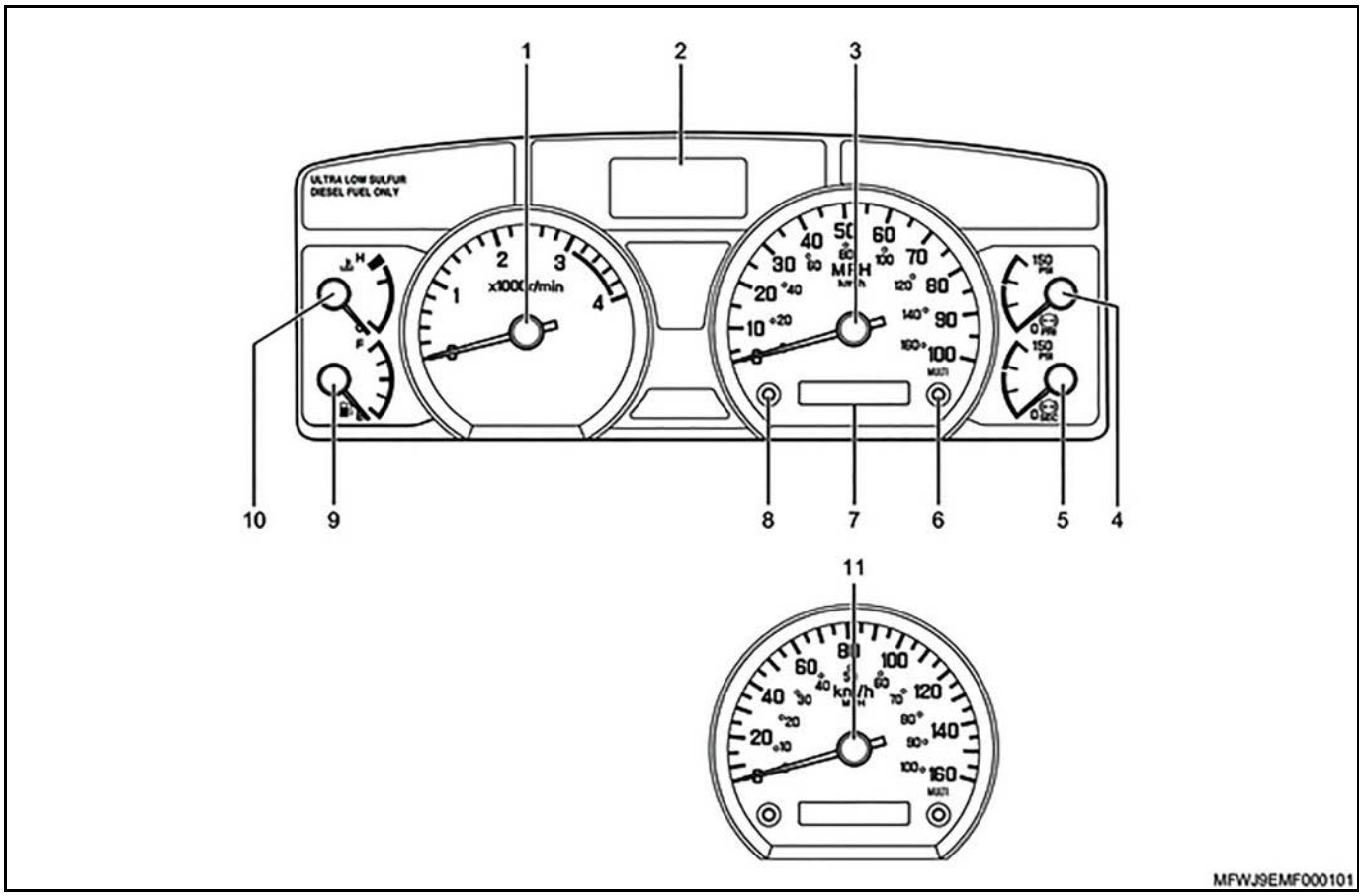

4873570

Legend

(1)	Tachometer	(7)	Odometer And Trip Meter
(2)	Multi-Information Display	(8)	Select/Reset Knob
(3)	Speedometer (MPH)	(9)	Fuel Gauge
(4)	Air Pressure Gauge (Primary)	(10)	Engine Coolant Temperature Gauge
(5)	Air Pressure Gauge (Secondary)	(11)	Speedometer (km/h)
(6)	3-Mode Switch		

Indicator Light and Warning Light Location Diagram

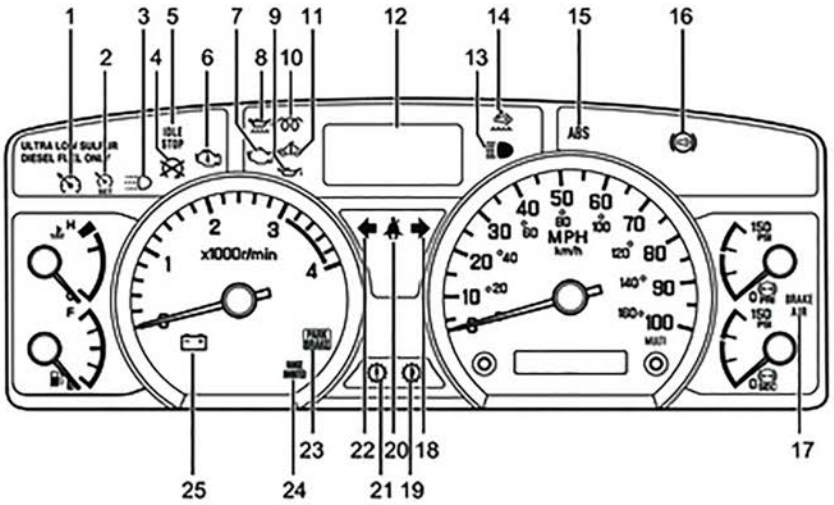

MFUJ20MF000201

4873572

Legend

(1) Cruise Main Indicator Light
(2) Cruise Set Indicator Light
(3) Daytime Running Lights (DRL) Indicator Light
(4) Engine Alarm (Shutdown) Warning Light
(5) Idling Stop Indicator Light
(6) Reduced Engine Power Indicator Light
(7) Check Engine Malfunction Indicator Light
(8) Engine Oil Level Indicator Light
(9) Engine Oil Pressure Warning Light
(10) Glow Plug Indicator Light
(11) Service Vehicle Soon (SVS) Indicator Light
(12) Multi-Information Display (MID)
(13) Headlights High Beam Indicator Light
(14) Diesel Exhaust Fluid (DEF) Indicator Light
(15) Abs Warning Light
(16) Exhaust Brake Indicator Light
(17) Brake System Warning Light
(18) Turn Signal And Hazard Warning Indicator Light - Right
(19) Automatic Transmission Fluid (ATF) Temperature Warning Light
(20) Seat Belt Warning Light
(21) Check Transmission Warning Light
(22) Turn Signal And Hazard Warning Indicator Light - Left
(23) Overdrive Off Indicator Light
(24) Parking Brake Indicator Light
(25) Range Inhibited Warning Light
(26) Battery Discharge Warning Light

Multi-Information Display Indication

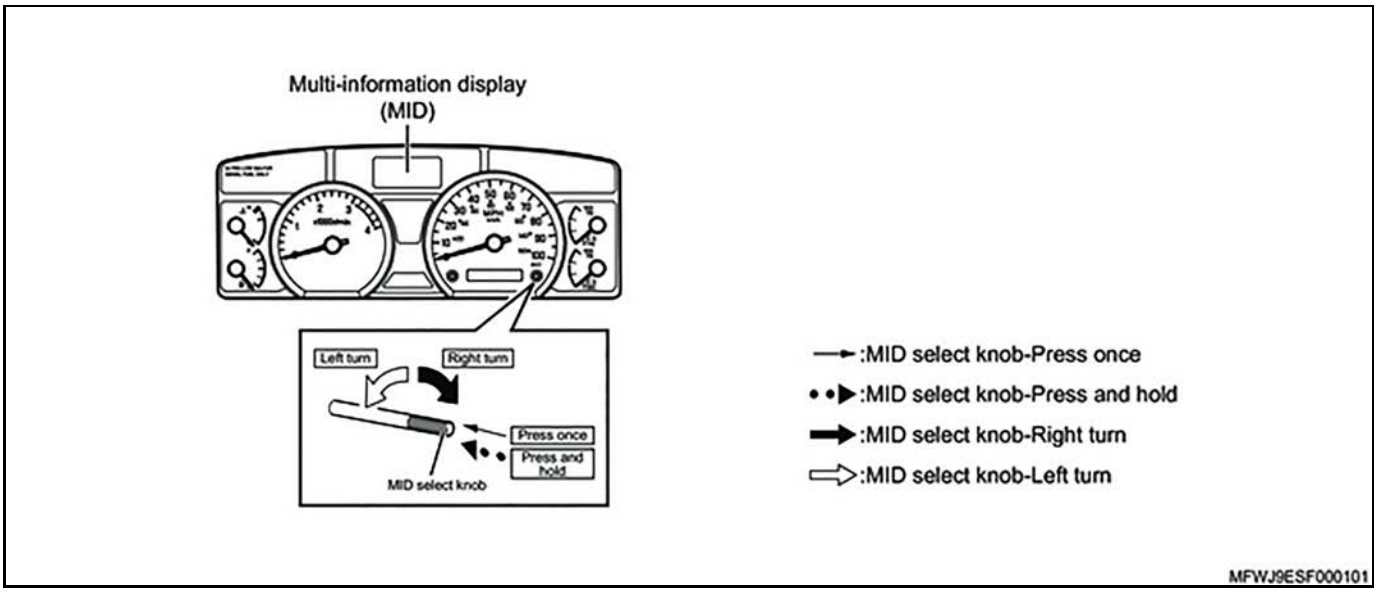

4873567

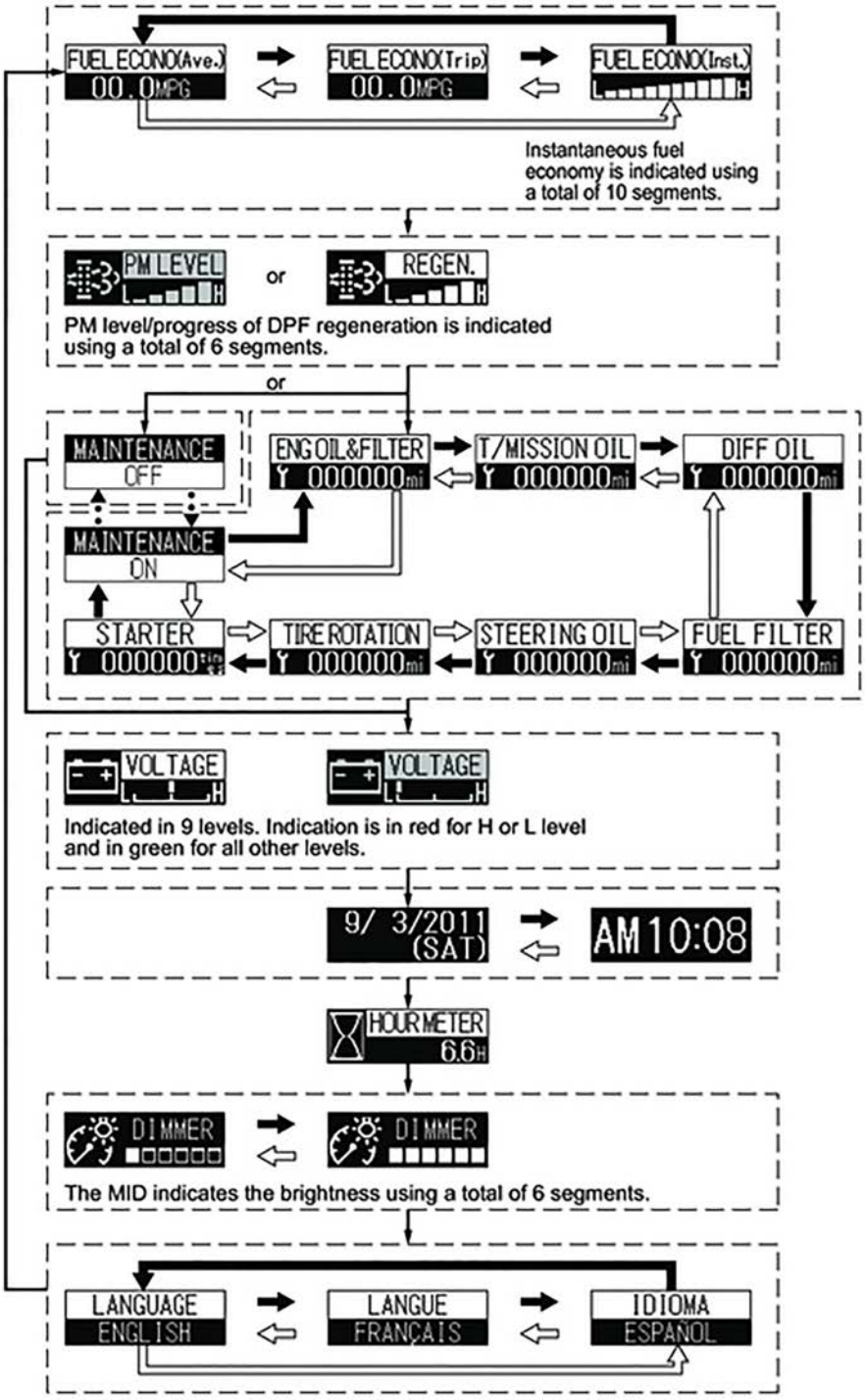

MFUJ20XF000101

4873581

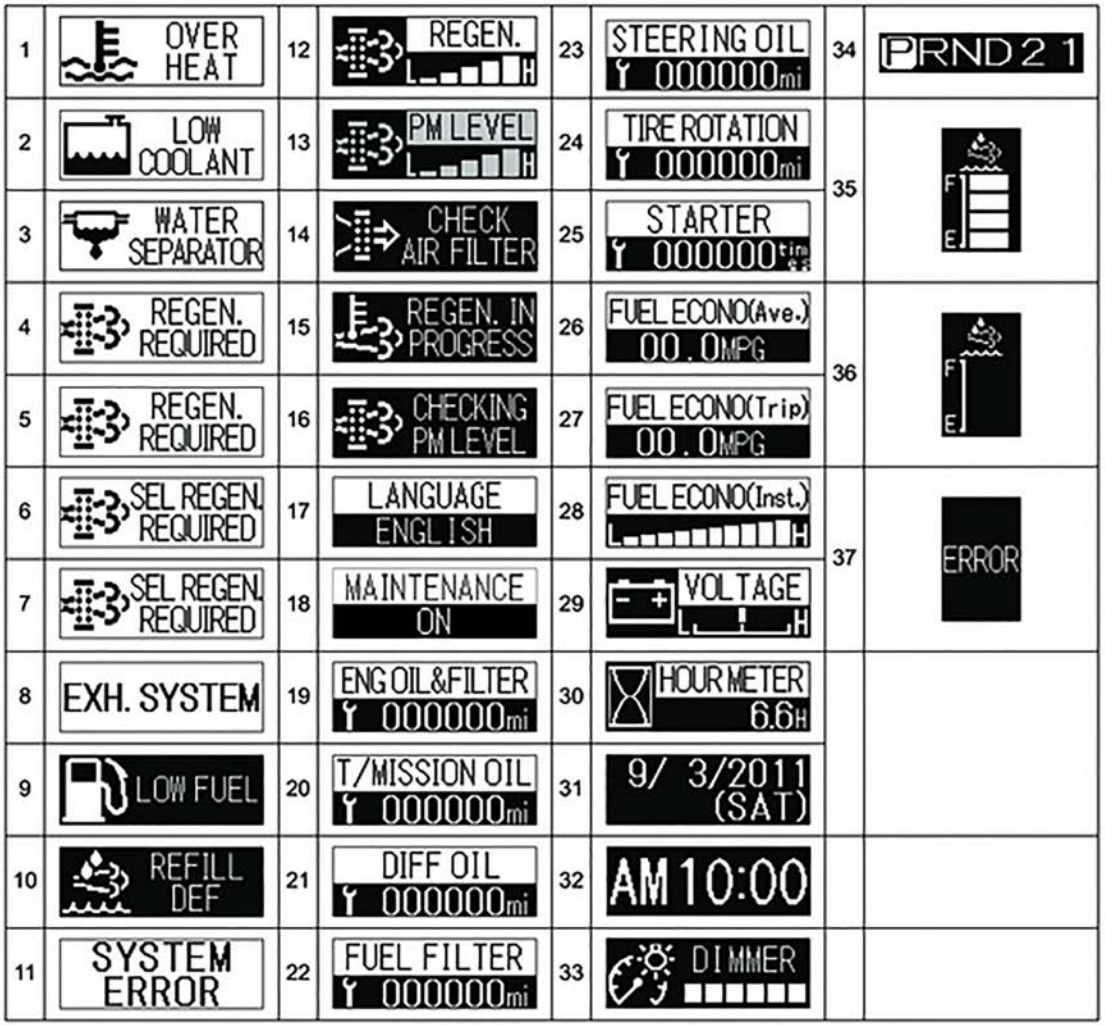

4873587

Legend

(1) Engine overheat warning light
(2) Low coolant warning light
(3) Water separator (fuel filter) warning light
(4) Regeneration required warning light (Red)
(5) Regeneration required warning light (Amber)
(6) Selectable regeneration required warning light (Red)
(7) Selectable regeneration required warning light (Amber)
(8) Exhaust system warning light
(9) Low fuel warning light
(10) Refill diesel exhaust fluid (DEF) warning light
(11) System error
(12) DPF regeneration status
(13) DPF PM accumulation level
(14) Air cleaner indicator light
(15) Regeneration in progress indicator light
(16) Checking PM level indicator light
(17) Displayed language
(18) Maintenance indicator light
(19) Engine oil and filter indicator light
(20) Transmission and oil indicator light
(21) Differential gear oil indicator light
(22) Fuel filter indicator light
(23) Power steering fluid indicator light
(24) Tire rotation indicator light
(25) Starter indicator light
(26) Average fuel economy
(27) Per trip fuel economy
(28) Instantaneous fuel economy
(29) Voltmeter
(30) Hour meter
(31) Calendar
(32) Clock
(33) Dimmer
(34) Automatic transmission shift indicator
(35) Diesel exhaust fluid (DEF) gauge

(36) Diesel exhaust fluid (DEF) gauge (empty)/Diesel exhaust fluid (DEF) tank level error

(37) Meter error

Alarm Buzzer

Alarm Contents	Alarm Sound	Operating Conditions
Brake alarm	One continuous beep	The ignition switch is in the ON position.
		The brake fluid switch or over stroke switch is in the ON position.
		The parking brake switch is in the OFF position.
Low brake air pressure alarm	One continuous beep	The ignition switch is in the ON position.
		The low air pressure switch is in the ON position.
		The brake air pressure is decreasing (Determination by sensor).
		The parking brake switch is in the OFF position.
Overheat alarm	One continuous beep	The ignition switch is in the ON position.
		The engine coolant temperature is high.
		The overheat warning light is illuminated.
Back buzzer alarm	A series of long beeps	The ignition switch is in the ON position.
		The reverse switch is in the ON position.
Accessory air low pressure alarm	One continuous beep	Air pressure is below the minimum level
DPF manual regeneration warning	A series of long beeps	The ignition switch is in the ON position.
		The DPF buzzer requests (CAN communication) are received from the ECM.

Air Pressure Gauge

The air pressure gauges are installed on the right side of the instrument panel cluster, and display the pressures on the primary and secondary sides of the air tank. The air pressure gauge on the primary side detects the signals from air pressure sensor 1, and that on the secondary side detects the signals from air pressure sensor 2.

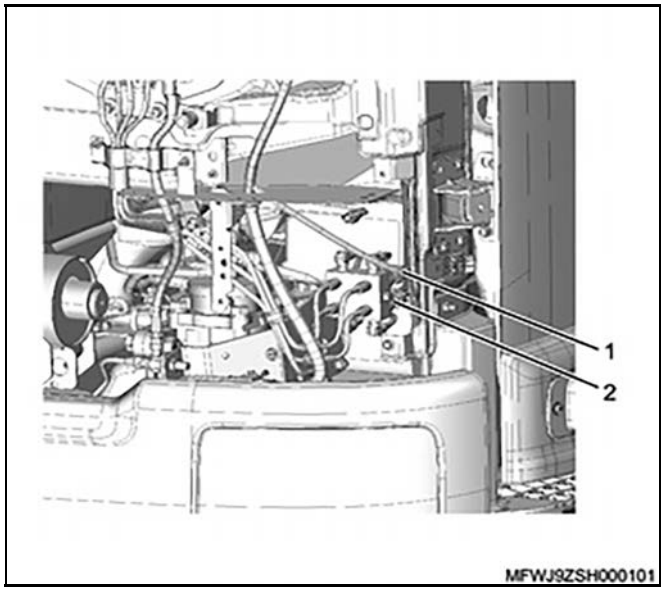

4873589

Legend

(1) Air Pressure Sensor 1

(2) Air Pressure Sensor 2

Battery Description

Maintenance Precautions of Battery

Description

The battery has three main functions. It provides a source of energy for cranking the engine, acts as a voltage stabilizer for the electrical system and, for a limited time, can provide energy when the electrical load exceeds the output of the generator. Refer to Specifications at the end of this section for specific application.

Water never needs to be added to the sealed battery so there are no filler caps on the cover. The special chemical composition inside the battery reduces gassing to a very small amount at normal charging voltages. There are small vent holes in the cover to allow what little gas is produced inside the battery to escape. The special chemistry is also designed to greatly reduce the possibility of overcharge damage.

Since there are vent holes in the cover, the battery should always be kept in an upright position. A small amount of electrolyte may leak from the top of the battery if it is tipped at an angle of more than 45 degrees.

Do not tip the battery more than 45 degrees when carrying or installing it.

Evidence of electrolyte leakage does not necessarily mean that the battery is defective.

Ratings

A battery generally has two classifications of ratings:

- A reserve capacity rating at 27°C (80°F).
- A cold rating at -18°C (0°F), which indicates the cranking load capacity.

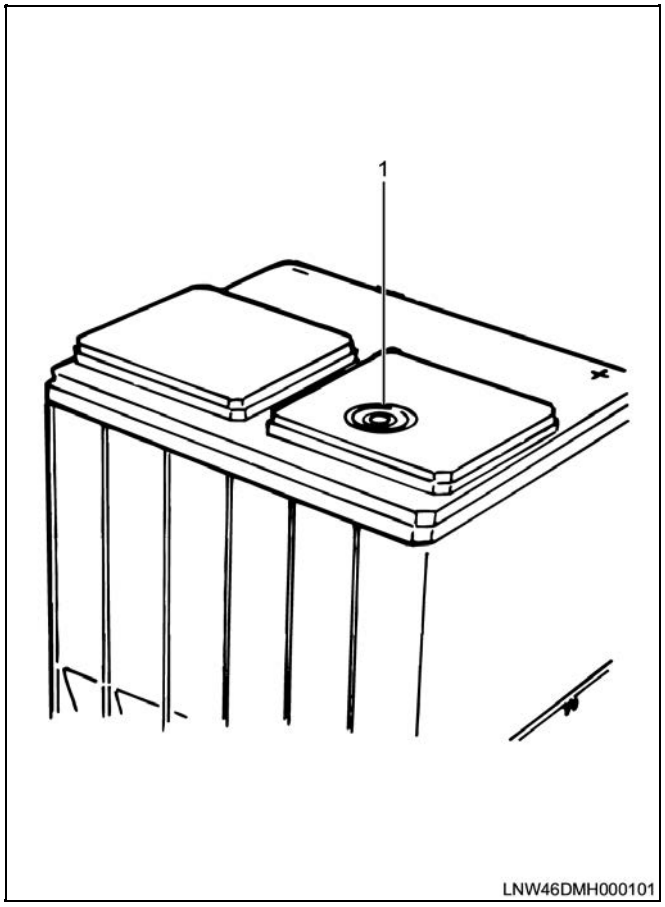

4495901

Legend

(1) Built-In Hydrometer

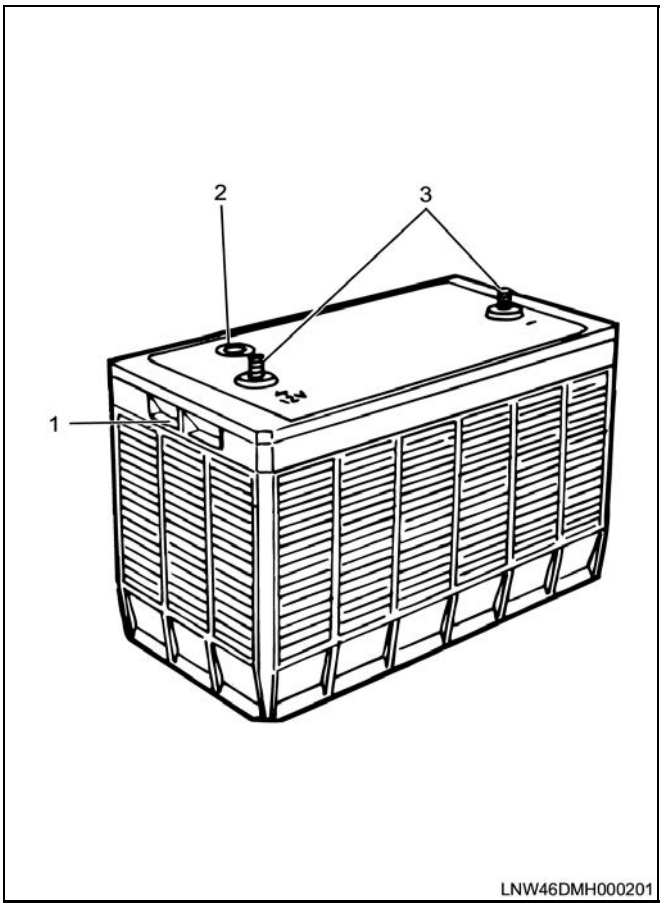

4495903

Legend

(1) Finger Grip Handles
(2) Built-In Hydrometer
(3) Terminals

Built-in Hydrometer

The sealed battery has a special temperature compensated hydrometer built into the cover to show the battery's state of charge.

The hydrometer has a green ball within a cage that is attached to a clear plastic rod. The green ball floats at a predetermined specific gravity of the electrolyte representing about a 65 percent state of charge. When the green ball floats, it rises within the cage and positions itself under the rod. A green dot then can be seen in the center of the hydrometer. The built-in hydrometer provides a guide for battery testing and charging. In testing, a visible green dot means the battery is charged enough for testing. If the green dot is not visible, it means the battery must be charged before the test procedure is performed.

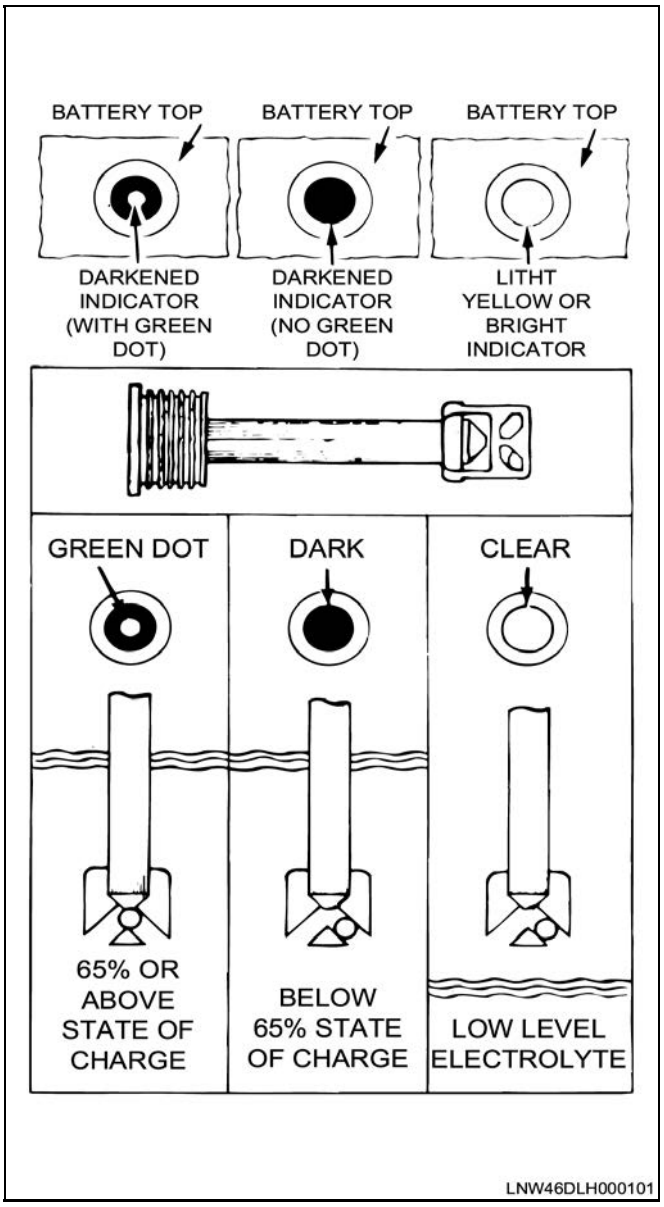

4495906

In charging, the appearance of the green dot means that the battery is sufficiently charged. Charging can then be stopped to prevent overcharging.

The hydrometer on some batteries may be clear or light yellow. This means the fluid level is below the bottom of the rod and attached cage.

This may have been caused by excessive or prolonged charging, a broken case, excessive tipping or normal battery wear-out.

If a cranking complaint exists, and the hydrometer is clear or light yellow, replace the battery – do not charge, test or jump start the battery.

In order to properly observe the hydrometer, the top of the battery should be clean. A light may also be required when working in a poorly lit area.

Common Causes of Failure

If tests show that a battery is good, yet it does not perform well in service, one of the following conditions may be the problem:

- Vehicle accessories left on for an extended period of time.
- Problem in the charging system, such as a slipping fan belt, high wiring resistance, or a faulty generator or regulator.
- A vehicle electrical load exceeding the generator capacity, with the addition of electrical devices such as radio equipment, air conditioning, window defoggers, or light systems.
- Problems in the electrical system, such as shorted or pinched wires.
- Extended slow-speed driving with many accessories turned on.
- Loose or poor battery cable-to-post connections, previous improper charging or run down battery, or loose hold downs.
- High-resistance connections or other problems in the cranking system.

Electrolyte Freezing

The freezing point of electrolyte depends on its specific gravity. Since freezing may ruin a battery, it should be protected against freezing by keeping it in a charged condition.

Carrier and Hold-Down

The battery carrier and hold-down should be clean and free from corrosion before installation. The carrier should be in a sound mechanical condition so that it will support the battery securely and keep it level. Be certain there are no foreign objects in the carrier before installation. To prevent the battery from shaking in its carrier, the hold-down bolts should be tight. However, the bolts should not be tightened to the point where the battery case or cover will be placed under a severe strain.

Connector Description

The connector pin shape (1) determines whether the connector is male (2) or female (3).

The connector housing configuration does not determine whether a connector is male or female.

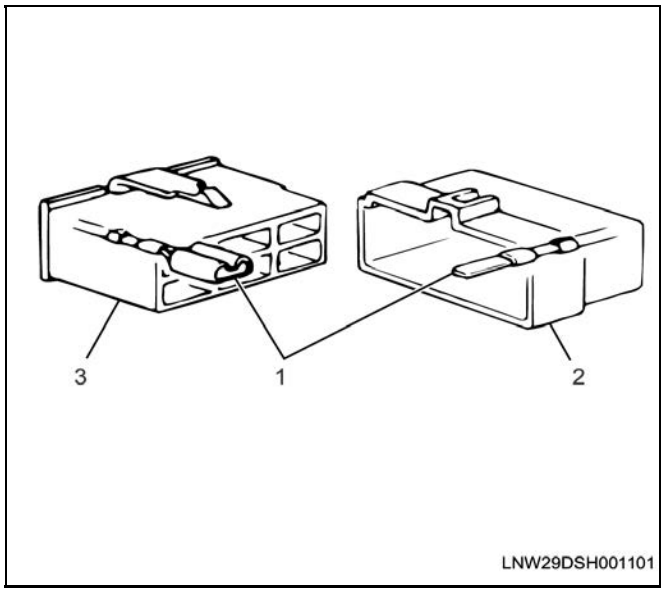

4495847

The symbol illustrated in the figure is used as connector, In the circuit of this section.

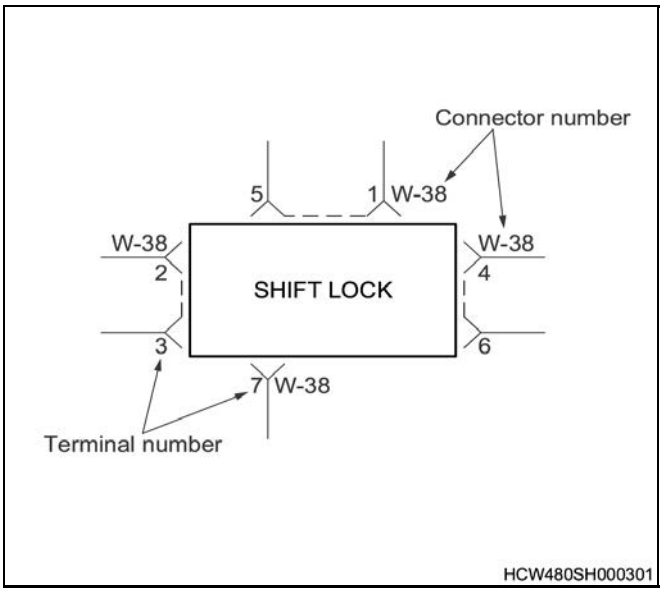

4495856

The applicable terminal number is shown for each connector.

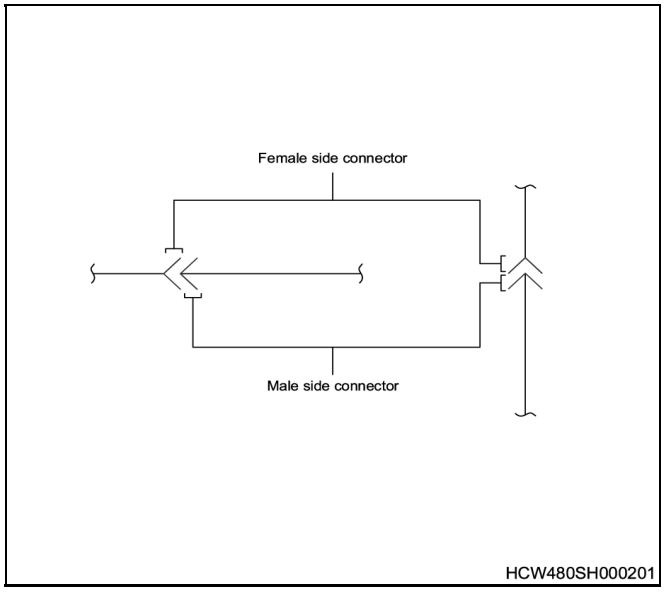

4495853

Connector is identified with a number.

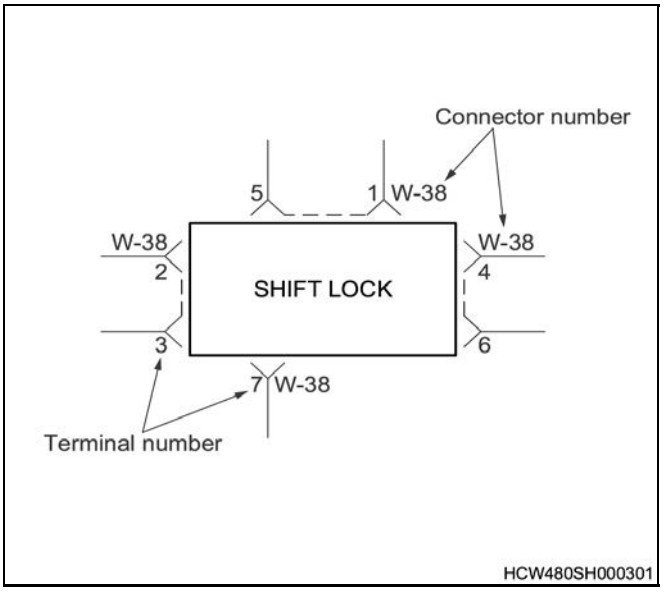

4495856

Connector terminal numbers (5) are clearly shown.

Male side connector (2) terminal numbers are in sequence from upper right to lower left.

Female side connector (3) terminal numbers are in sequence from upper left to lower right.

Do lock part (6) of the connector up in any case and lock from the opening.

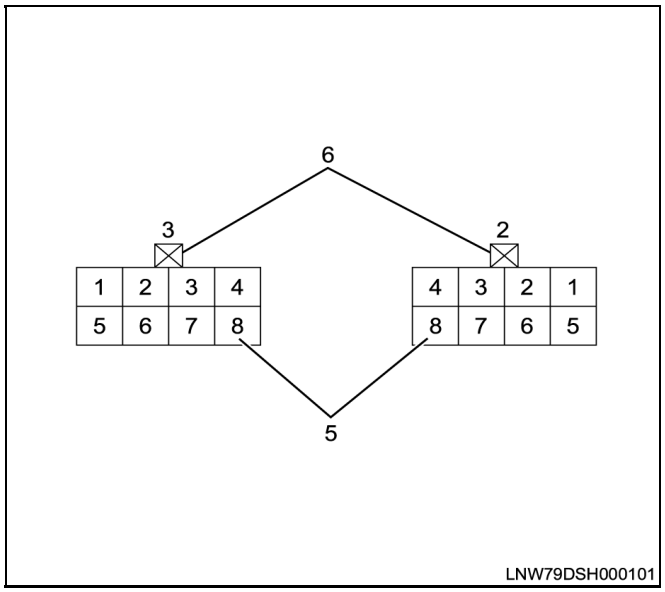

4495860

Note: For those connectors on which specific terminal numbers or symbols are shown (such as ECM), the terminal numbers or symbols are used in the circuit diagram, irrespective of the above rule.

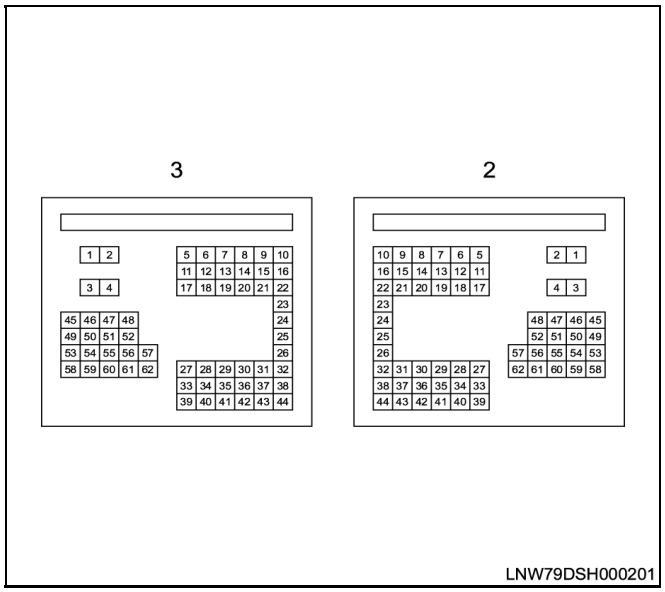

4495870

The connectors used for relays have their own terminal number assignment, irrespective of the above rule.

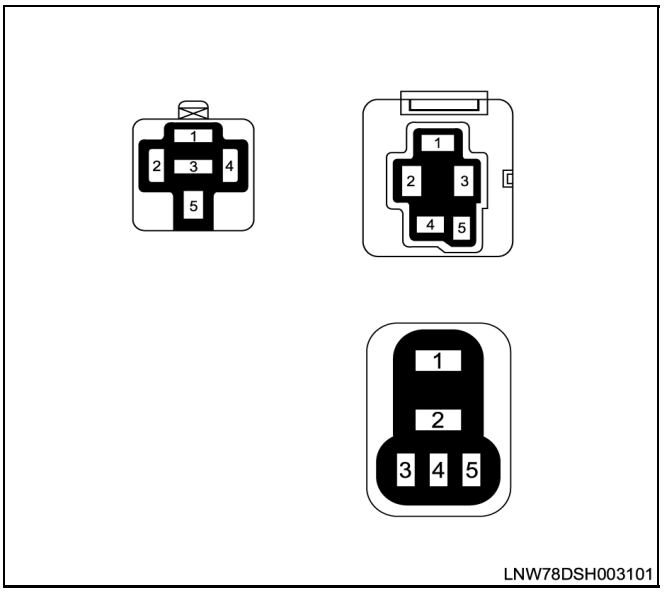

4495865

Reading the Circuit Diagram

In this manual, each system has its own parts location illustration, circuit diagram and connector configuration used in the circuit diagram.

Fuse, Fusible Link, and Slow-Blow Fuse Description

Fuse

Fuses are the most common form of circuit protection used in vehicle wiring. A fuse is a thin piece of wire or strip of metal encases in a glass or plastic housing. It is wired in series with the circuit it protects. When there is an overload of current in a circuit, such as a short of a ground, the wire or metal strip is designed to burn out and interrupt the flow of current. This prevents a surge of high current from reaching and damaging other components in the circuit.

Determine the cause of the overloaded before replacing the fuse.

The replacement fuse must have the same amperage specifications as the original fuse.

Never replace a blown fuse with a fuse of a different amperage specification.

Doing so can result in an electrical fire or other serious circuit damage. A blown fuse is easily identified.

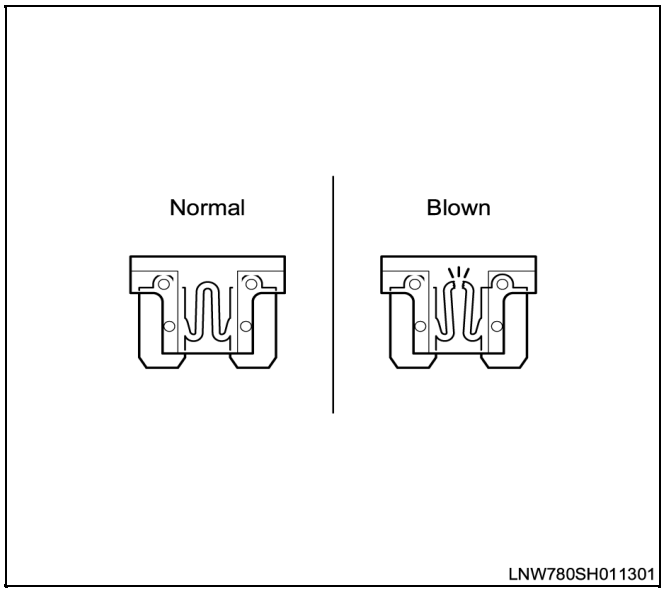

4495744

Fusible Link

The fusible link is primarily used to protect circuits where high amounts of current flow and where it would not be practical to use a fuse. For example, the starter circuit. When a current overload occurs, the fusible link melts open and interrupts the flow of current so as to prevent the rest of the wiring harness from burning.

Determine the cause of the overload before replacing the fusible link. The replacement fusible link must have the same amperage specification as the original fusible link.

Never replace a blown fusible link with fusible link of a different amperage specification. Doing so can result in an electrical fire or other serious circuit damage.

A blown fusible link is easily identified.

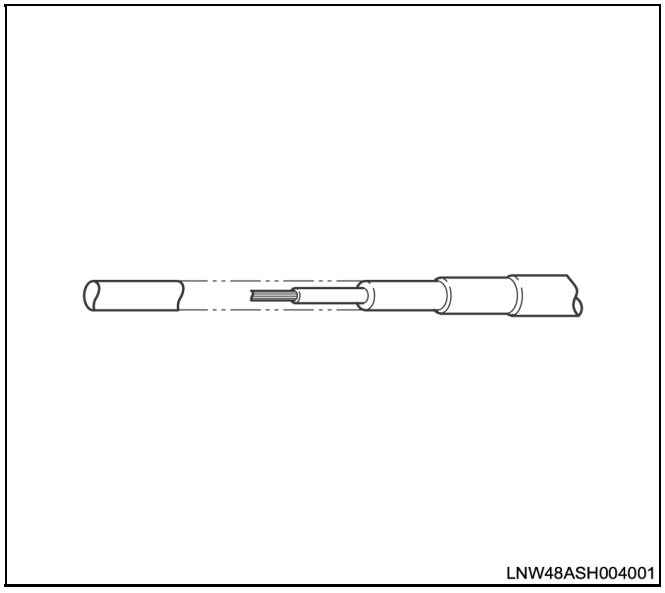

4495745

Slow-Blow Fuse

A slow-blow fuse is used in a circuit having a very high current flow (starter) or in an area where an ordinary fuse would be impractical.

Excessive current flow causes the fusible link inside the fuse to melt. Current flow is interrupted. Circuit damage caused by fire or heat is prevented.

Before replacing a fuse, determine the cause of the excessive current.

Always replace the burnt-out fuse with a new fuse of the same amperage rating. Replacing the fuse with one having a higher rating can result in a serious and expensive electrical fire.

Figure 1 shows a normal slow-blow fuse. Figure 2 shows a burnt-out fuse. it is easy to distinguish between the 2 fuses.

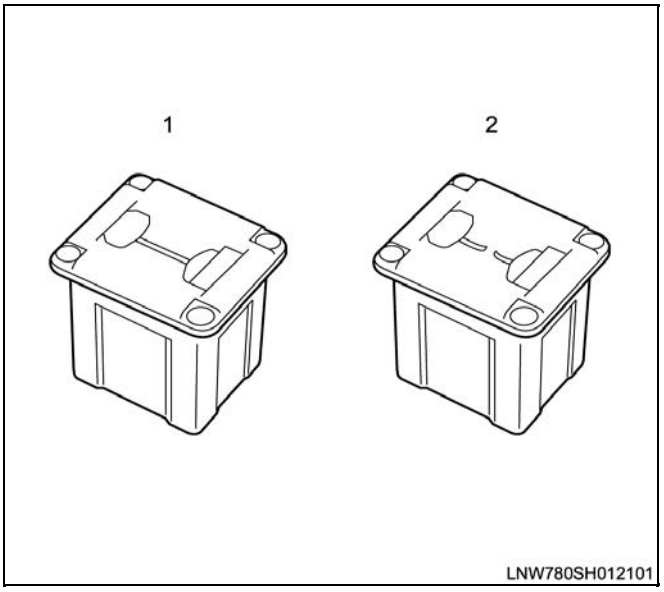

4495747

Slow Blow Fuse Specifications

Type	Rating	Case Color	Maximum Circuit Current (A)
Connector	30A	Pink	15
Connector	40A	Green	20
Connector	50A	Red	25
Connector	60A	Yellow	30

Relay Description

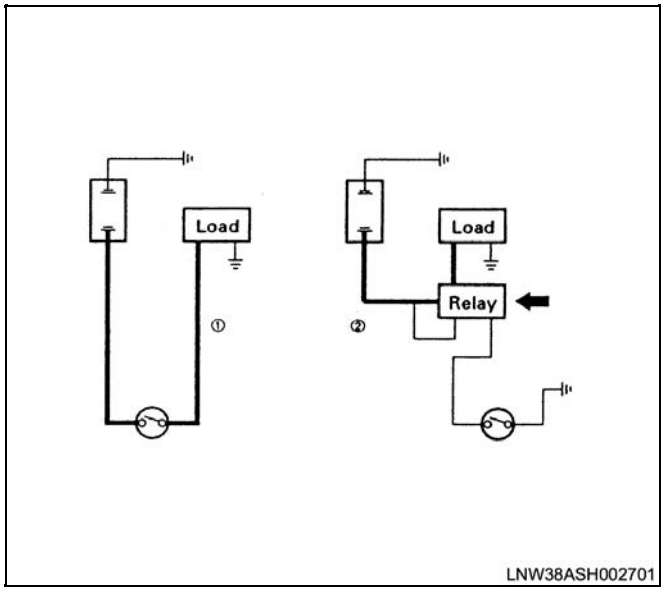

4495750

Battery and load location may require that a switch be placed some distance from either component. This means a longer wire and a higher voltage drop (1). The installation the battery and the load reduces the voltage drop (2).

Because the switch controls the relay, amperage through the switch can be reduced.

Relay Specification and Configuration

Name/Color	Rated Voltage/Coil Resistance	Internal Circuit
ACB 12201/ Orange	12V/ Approx. 103Ω Minimum operating voltage: 7V at 20°C (68°F)	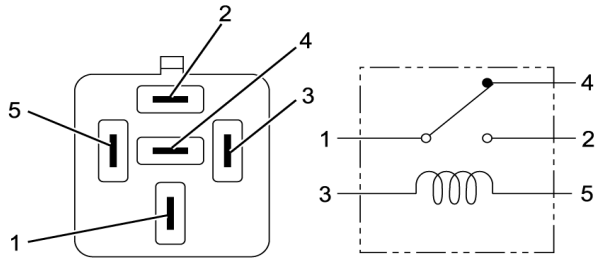 LNW780SH011401 4496532
MR82C/ White Label	12V/ Approx. 23Ω Minimum operating voltage: 7V at 25°C (77°F)	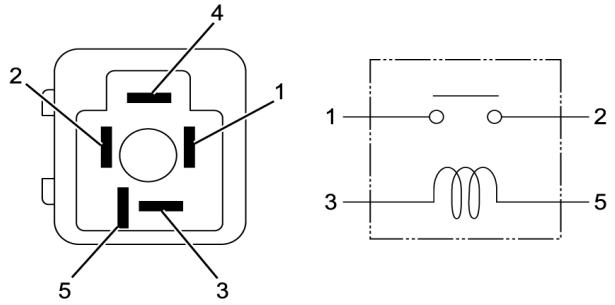 LNW780SH011501 4495836

Relay Specification and Configuration (cont'd)

Name/Color	Rated Voltage/Coil Resistance	Internal Circuit
ACM12221 Black	12V/ Approx. 120Ω Minimum operating voltage: 7V at 25°C (77°F)	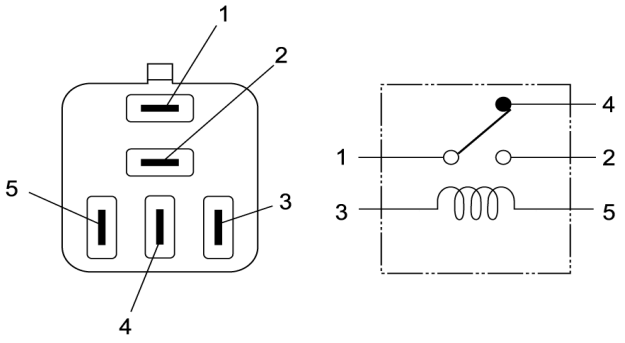 RTW78ASH002701 4496680

Relay Exchange Method

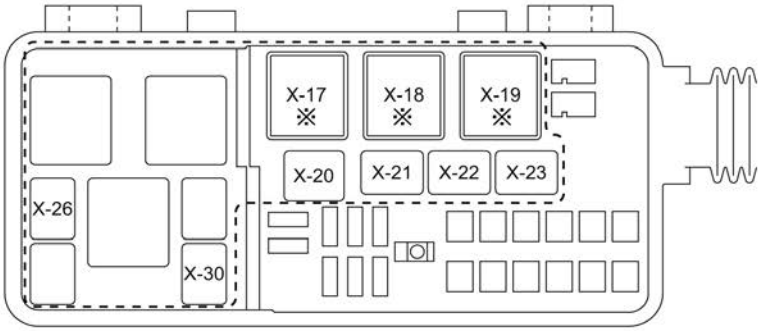

When detaching the ※ marked relays, carry out work in accordance with the below procedures.

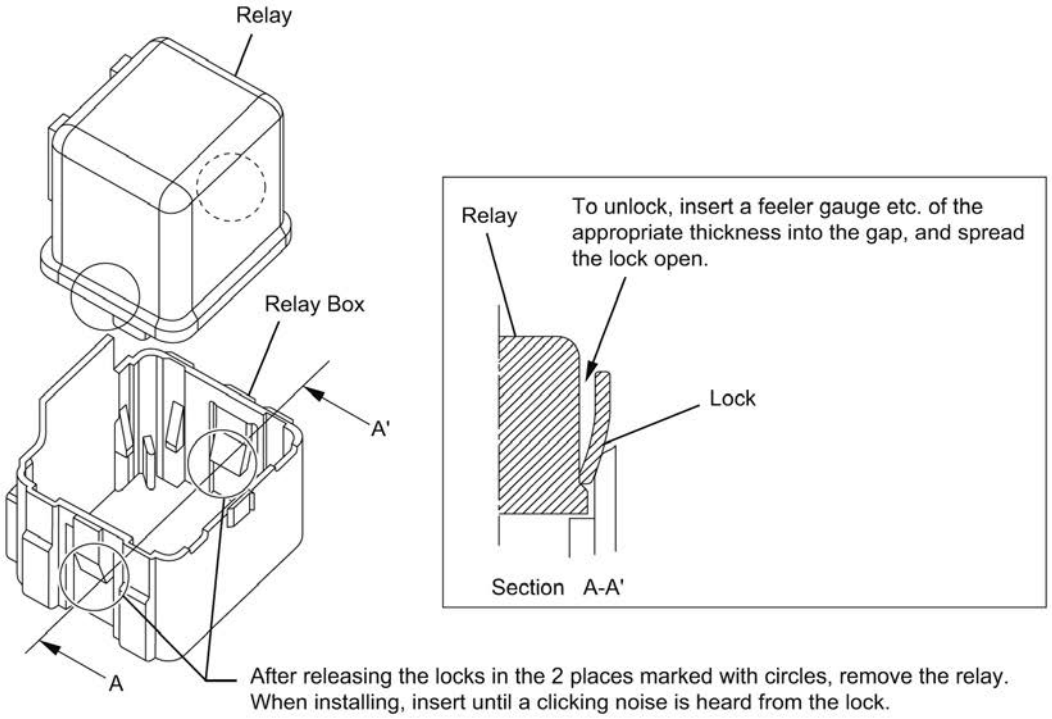

LNWG80LF000401
4495840

Wiring Description

Wire Color

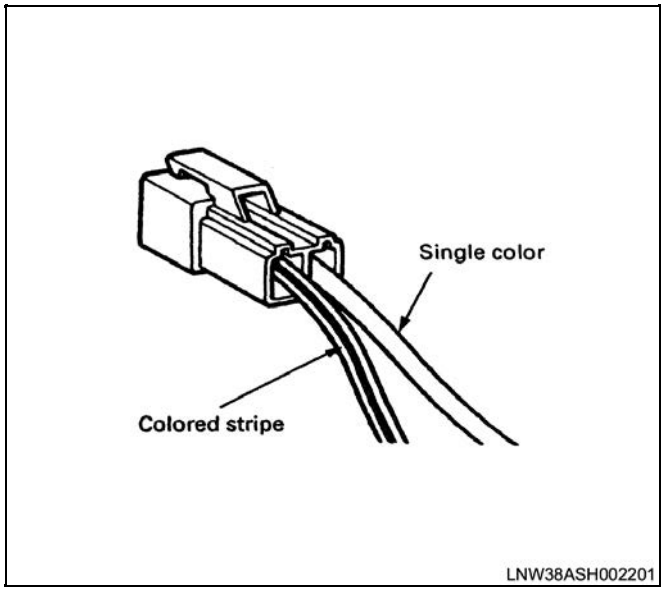

4497541

All wires have color-coded insulation.

Wires belonging to a system's main harness will have a single color. Wires belonging to a system's sub-circuits will have a colored stripe. Striped wires use the following code to show wire size and colors.

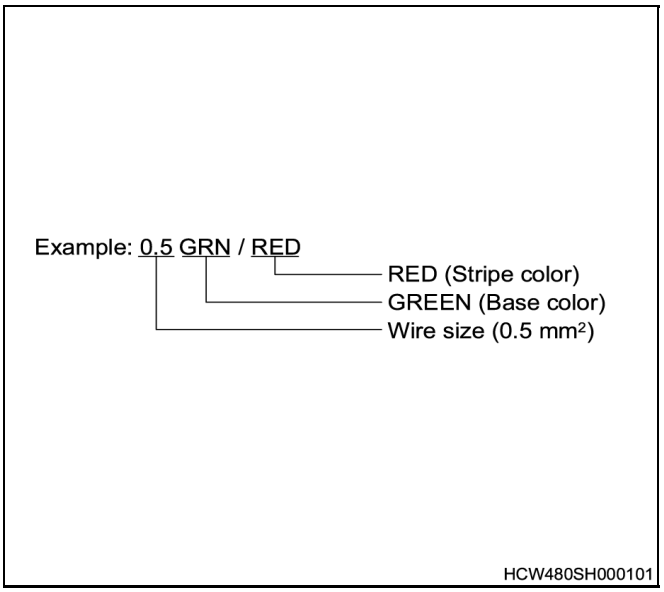

4497542

Abbreviations are used to indicate wire color within a circuit diagram.

Refer to the following table.

Wire Color Coding

Color-Coding	Meaning	Color-Coding	Meaning
BLK	Black	BRN	Brown
WHT	White	LT GRN	Light Green
RED	Red	GRY	Gray
GRN	Green	PNK	Pink
YEL	Yellow	LT BLU	Light Blue
BLU	Blue	VIO	Violet
ORN	Orange	BEI	Beige
DK	Dark (Modifier)	LT	Light (Modifier)

Distinction of Circuit by Wire Base Color

Base Color	Circuits	Base Color	Circuits
BLK	Starter circuit	YEL	Instrument Circuit
WHT	Charging circuit	BLU, ORN, BRN, LT GRN, GRY, PNK, LT BLU, VIO, BEI	Other Circuit
RED	Lighting circuit		
GRN	Signal circuits		

Wire Size

The size of wire used in a circuit is determined by the amount of current (amperage), the length of the circuit, and the voltage drop allowed. The following wire size and load capacity, shown below, are specified by AWG (American Wire Gauge) (Nominal size means approximate cross sectional area).

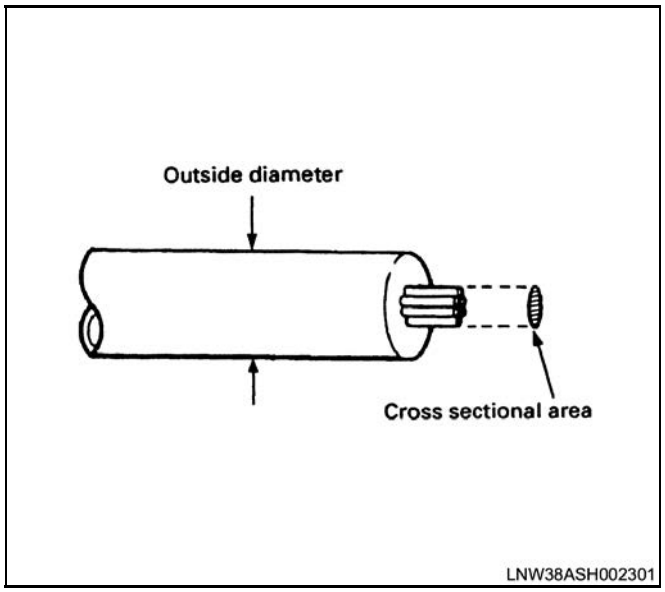

4497543

Wire Size Table

Nominal Size	Cross Sectional Area (mm^2)	Outside Diameter (mm)	Allowable Current (A)	AWG Size (Cross Reference)
0.3	0.372	1.8	9	22
0.5	0.563	2.0	12	20
0.85	0.885	2.2	16	18
1.25	1.287	2.5	21	16
2	2.091	2.9	28	14
3	3.296	3.6	37.5	12
5	5.227	4.4	53	10
8	7.952	5.5	67	8
15	13.36	7.0	75	6
20	20.61	8.2	97	4

Vehicle Control (FMS CAN Interface)

Schematic and Routing Diagrams

FMS CAN Interface Schematics

general circuit diagram

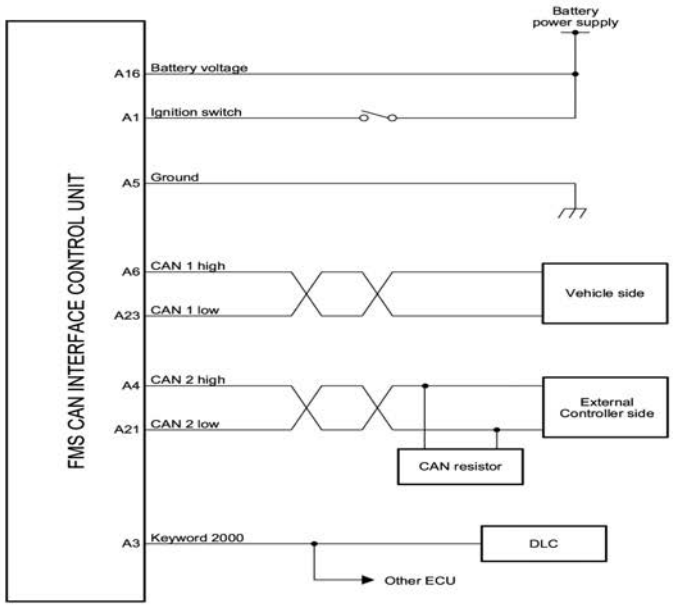

LNWD8KLF000101

4499044

Component Locator

FMS CAN Interface Controls Component Views

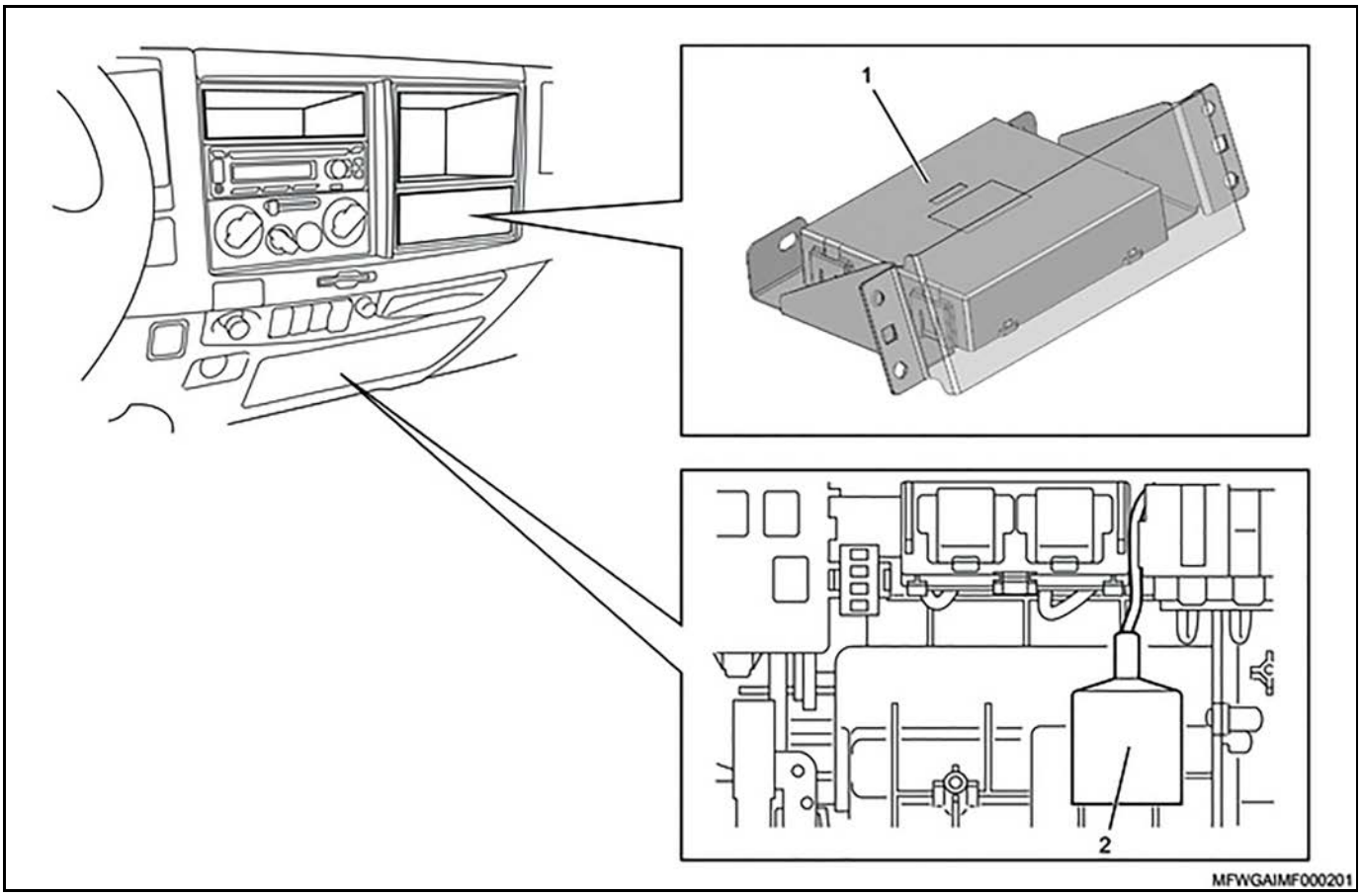

4874011

Legend

(1) FMS CAN interface control unit 2.

(2) FMS CAN interface external connector

Visual Identification

Connector End Views

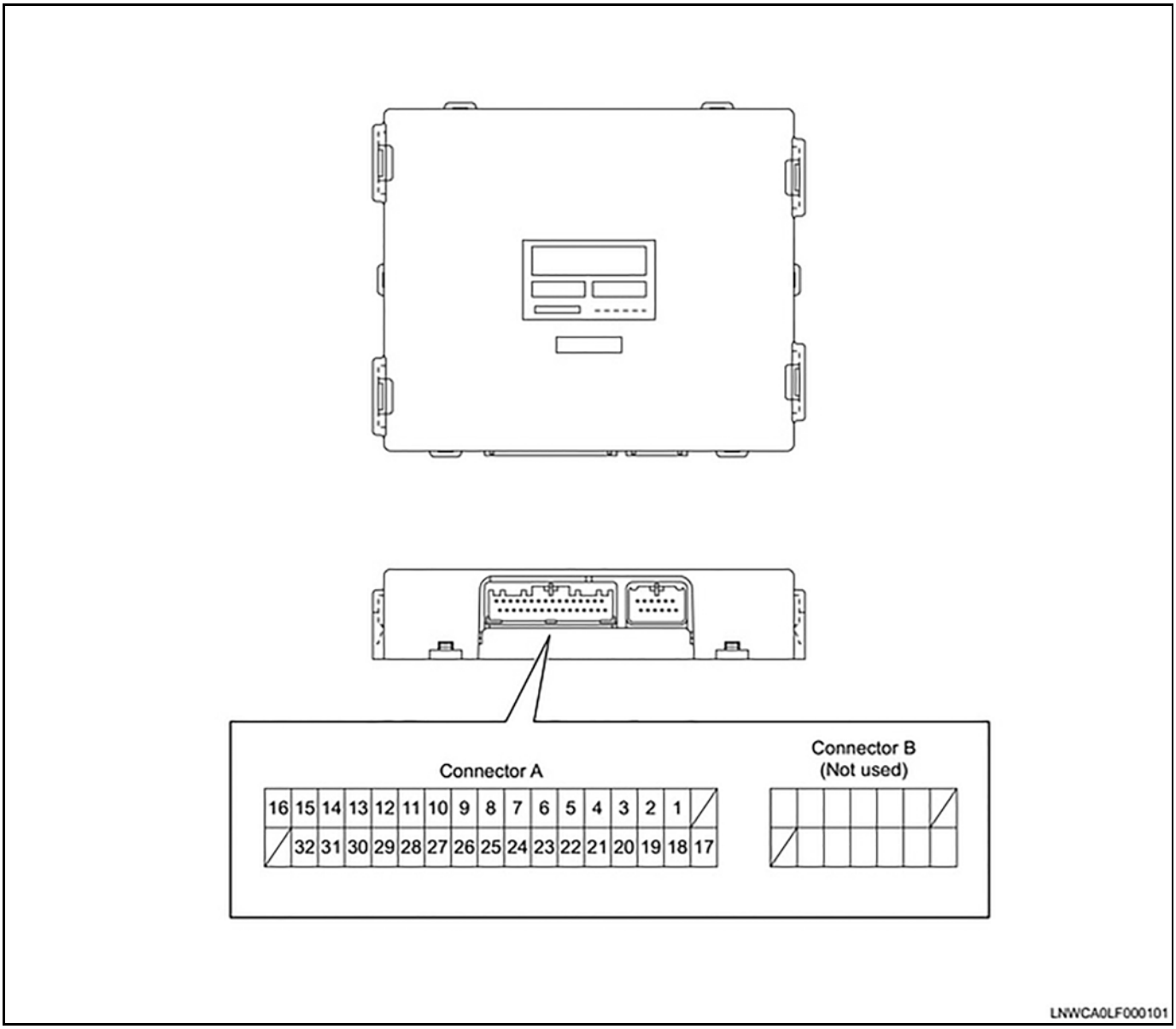

4874014

Connector A

PIN No.	Pin Function
1	Ignition Voltage
2	—
3	Keyword 2000 Serial Data (ISO 14230)
4	CAN 2 High Signal (J-1939)
5	Ground
6	CAN 1 High Signal (J-1939)
7	—
8	—
9	—
10	—
11	—

Connector A (cont'd)

PIN No.	Pin Function
12	—
13	—
14	—
15	—
16	Battery Voltage
17	—
18	—
19	—
20	—
21	CAN 2 Low Signal (J-1939)
22	—

Connector A (cont'd)

PIN No.	Pin Function
23	CAN 1 Low Signal (J-1939)
24	—
25	—
26	—
27	—
28	—

Connector A (cont'd)

PIN No.	Pin Function
29	—
30	—
31	—
32	—

Vehicle Control (MIMAMORI)

Schematic and Routing Diagrams

MIMAMORI Schematics

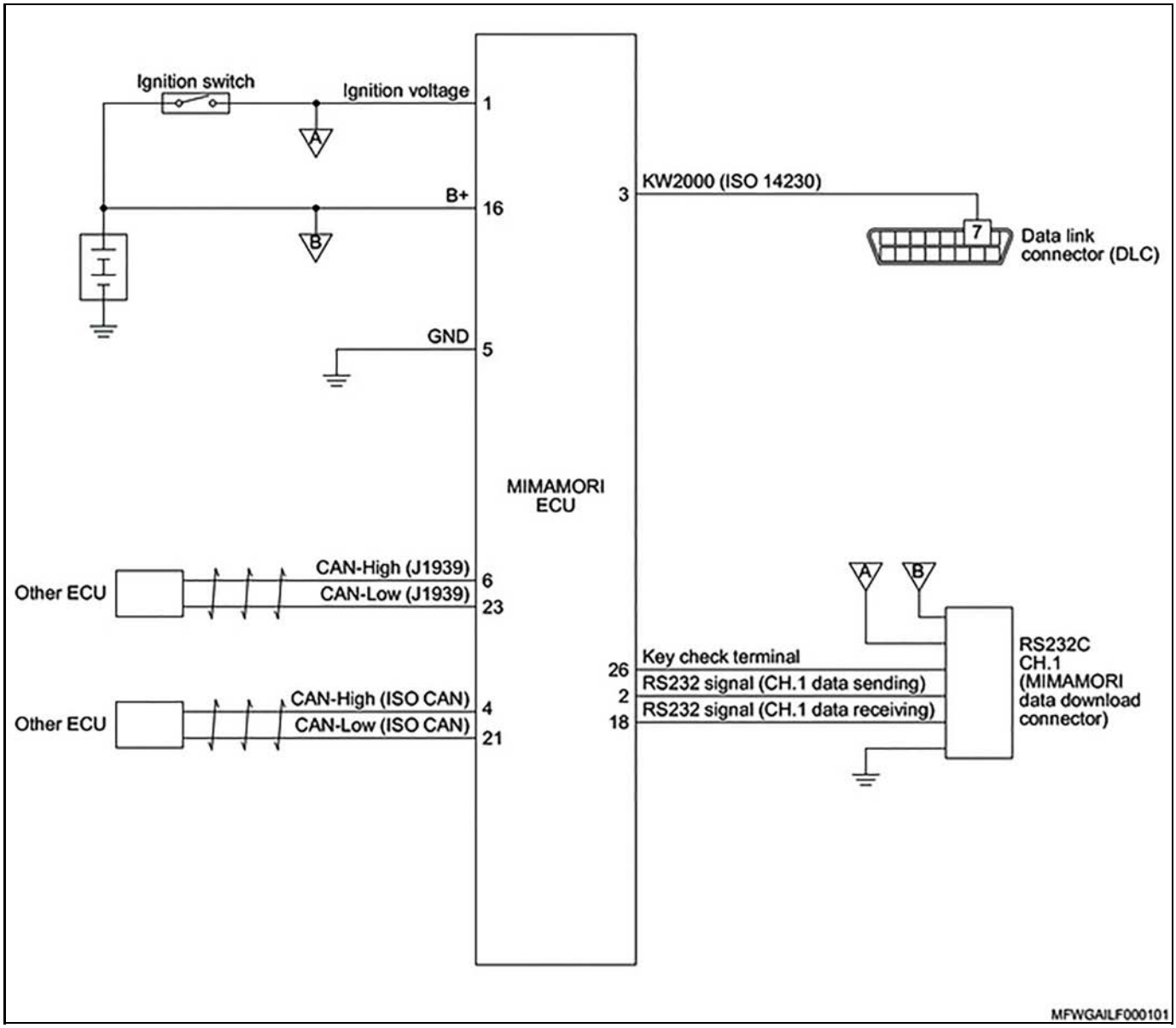

4874022

Component Locator

MIMAMORI Controls Component Views

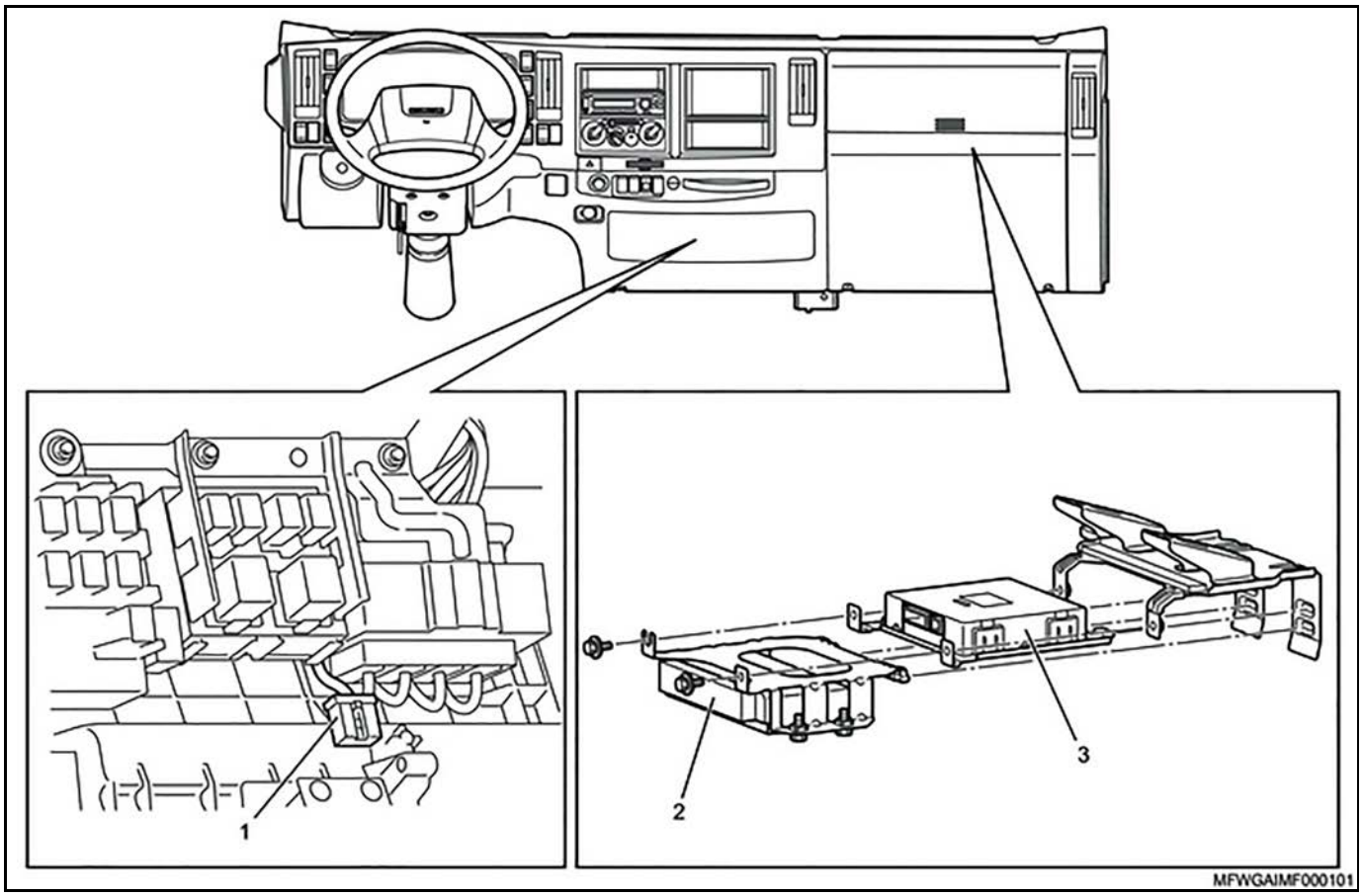

4874020

Legend

(1) MIMAMORI data download connector
(2) ABS control unit
(3) MIMAMORI ECU

Visual Identification

Connector End Views

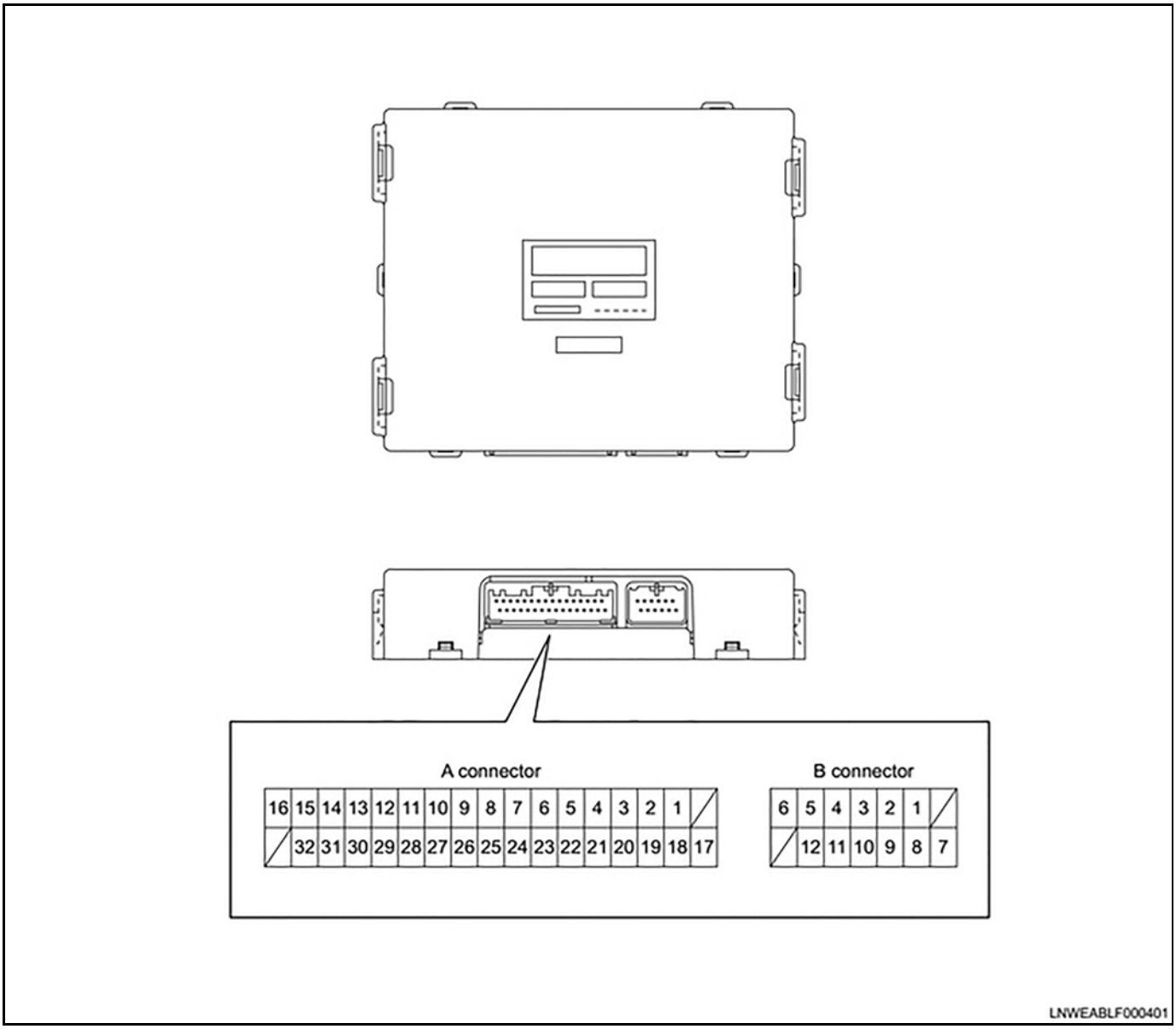

4874024

A connector (32 pin)

PIN No.	Pin Function
1	Ignition Voltage
2	RS232 signal for data download (CH1 data sending)
3	Keyword 2000 Serial Data
4	ISO CAN (High)
5	Ground
6	J-1939 CAN (High)
7	—
8	—
9	—
10	—

A connector (32 pin) (cont'd)

PIN No.	Pin Function
11	—
12	—
13	—
14	—
15	—
16	Battery Voltage
17	—
18	RS232 signal for data download (CH1 data receiving)
19	—
20	—
21	ISO CAN (Low)

A connector (32 pin) (cont'd)

PIN No.	Pin Function
22	—
23	J-1939 CAN (Low)
24	—
25	—
26	Key check terminal for data download
27	—
28	—

A connector (32 pin) (cont'd)

PIN No.	Pin Function
29	—
30	—
31	—
32	—

Note: Do not use the B connector (12 pin).

C

Component Connector End Views 2-105
Component Views
FMS CAN Interface Controls 2-884
MIMAMORI Controls 2-888

D

Driver Information
Description 2-862

E

Engine Identification 1-8

I

Identification, Vehicle 1-5
Ignition Switch
Description 2-862
Instrumentation and Driver Information
Diagnosis Introduction 2-775

L

Lighting Systems
Description 2-854

M

Model Identification 1-5

R

RPO Code List 1-6

S

Schematics
Body Builder Connector 2-74
Engine Heating/Cooling 2-87
Exhaust System 2-87
Power Outlet/Power Source 2-78
Power Take-Off System 2-80
Rear Manufacture Connector 2-76

V

Vehicle Identification 1-5

W

Wiper/Washer
Systems Description 2-861

BLANK