Table of Contents

General Information 1-1
General Information 1-3

Body Systems 2-1
Fixed and Moveable Windows 2-3
Horns and Pedestrian Alerts 2-11
Lighting 2-14
Mirrors 2-31
Trailering Systems 2-36
Vehicle Access 2-46

Driver Information and Entertainment 3-1
Image Display Cameras 3-3

Engine/Propulsion 4-1
12 V Starting and Charging 4-3

HVAC 5-1
HVAC - Automatic 5-3
HVAC - Manual 5-12

Power and Signal Distribution 6-1
Data Communications 6-3
Electrical Component and Inline Harness Connector End Views 6-25
Power Outlets 6-604
Wiring Systems and Power Management 6-608

Safety and Security 7-1
Immobilizer 7-3
Parking Assistance Systems 7-7
Remote Functions 7-12
Seat Belts 7-16

Transmission 8-1
Shift Lock Control 8-3

INDEX INDEX-1

BLANK

Section 1

General Information

General Information 1-3
Introduction 1-3
Vehicle, Engine and Transmission ID and VIN Location, Derivative and Usage 1-3
Vehicle Certification, Tire Placard, and Anti-Theft Label 1-5
RPO Code List 1-7

BLANK

General Information

Introduction

Vehicle, Engine and Transmission ID and VIN Location, Derivative and Usage

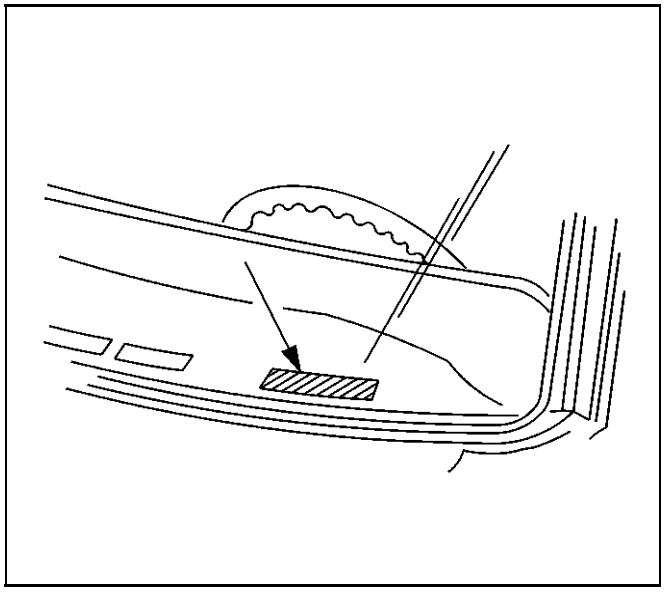

153729

The VIN plate is the legal identifier of the vehicle. The VIN plate is located on the upper left corner of the instrument panel (I/P) and can be seen through the windshield from the outside of the vehicle:

Vehicle Identification Number (VIN) System

Position	Definition	Character	Description
1	Country of Origin	1	United States
2	Manufacturer	G	General Motors
3	Vehicle Brand/Type	B	Chevrolet Incomplete Truck
		C	Chevrolet Truck
		D	GMC Incomplete Truck
		T	GMC Truck
4	GVWR/Brake System/Body Style	G	5001–6000/Hydraulic – Crew Cab
		H	5001–6000/Hydraulic – Extended Cab
		P	6001–7000/Hydraulic – CrewCab
		R	6001–7000/Hydraulic – Extended Cab

Vehicle Identification Number (VIN) System (cont'd)

Position	Definition	Character	Description
5–6	Chassis/Series	S/A	Chevrolet Colorado, Base 2WD
		S/B	Chevrolet Colorado, Work Truck 2WD
		S/C	Chevrolet Colorado, LT 2WD
		S/D	Chevrolet Colorado, Z71 2WD
		S/9	Chevrolet Colorado 2WD, (Non-US, Non-Canada)
		T/B	Chevrolet Colorado, Work Truck 4WD
		T/C	Chevrolet Colorado, LT 4WD
		T/D	Chevrolet Colorado, Z71 4WD
		T/E	Chevrolet Colorado, ZR2 4WD
		T/9	Chevrolet Colorado 4WD, (Non-US, Non-Canada)
		5/B	GMC Canyon, Elevation 2WD
		5/C	GMC Canyon, High Elevation 2WD
		5/D	GMC Canyon, SLT 2WD
		5/E	GMC Canyon, Denali 2WD
		6/B	GMC Canyon, Elevation 4WD
		6/C	GMC Canyon, High Elevation 4WD
		6/D	GMC Canyon, SLT 4WD
		6/E	GMC Canyon, Denali 4WD
		6/F	GMC Canyon, AT4 4WD
7	Restraint System	E	RPO AY0 – Active Manual Belts, Airbags – Driver and Passenger - Front (1st row), Front Seat Side (1st row), Roof Side (All seating rows)
8	Engine Type	A	RPO LCV, Engine Gas, 4 Cylinder, 2.5L, L4, SIDI, DOHC, DCVCP, VVT, E85 MAX, E0–E100, Aluminum
		N	RPO LGZ, Engine Gas, 6 Cylinder, 3.6L, V6, DI, DOHC, VVT, Aluminum, VAR2, GEN 2
		1	RPO LWN, Engine Diesel, 2.8L, DI, L4, DOHC, Turbo, XLDE
9	Check Digit	—	Check Digit
10	Model Year	M	2021
11	Plant Location	1	Wentzville, MO
12–17	Plant Sequence Number	—	Plant Sequence Number

2.5L (LCV) Engine ID and VIN Derivative Location

Engine Identification

2.8L (LWN) Diesel Engine ID and VIN Derivative Location

Engine Identification

3.6L (LGZ) Engine ID and VIN Derivative Location

Engine Identification

6L50 (MYB) Transmission ID and VIN Derivative Location

Transmission Identification Information

8L45 (M5T) Transmission ID and VIN Derivative Location

Transmission Identification Information

Vehicle Certification, Tire Placard, and Anti-Theft Label

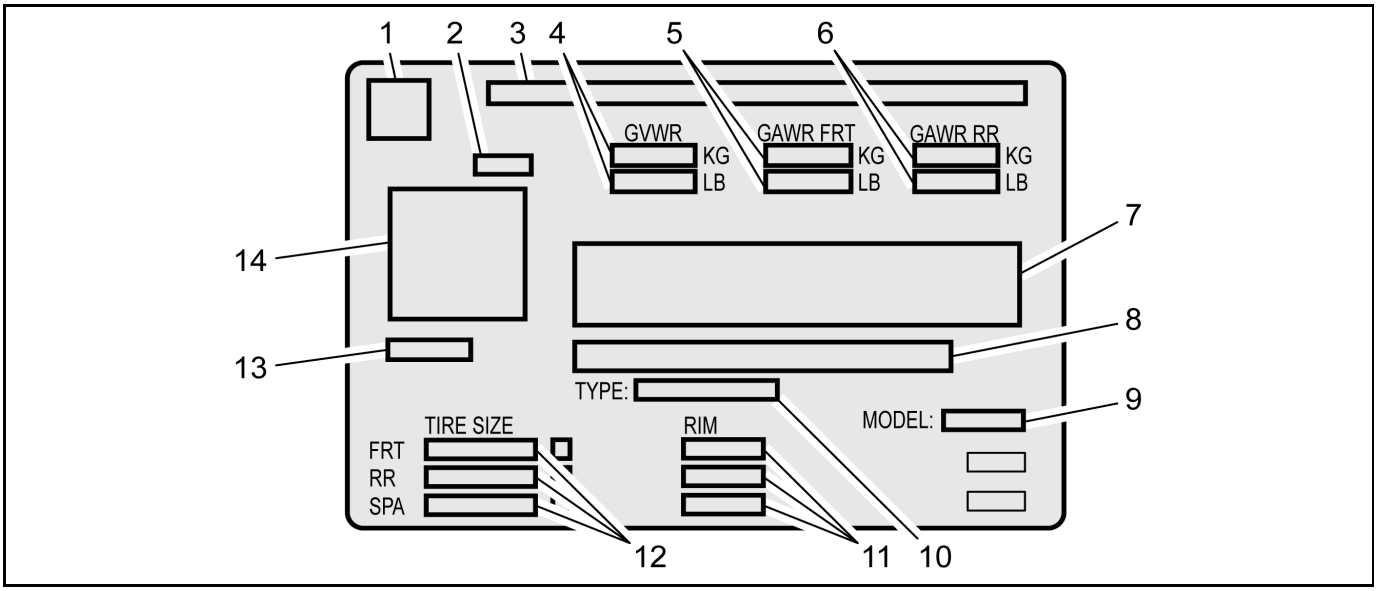

4992823

Vehicle Certification Label

Callout	Description
A vehicle-specific Certification label is attached to the vehicle's center pillar (B-pillar) and displays the following assessments:	
1	Logo
2	Final Date of Manufacture (Month and Year MM/YY) Date of manufacture is to reflect the date that the vehicle is counted as built. In those cases where a replacement label is needed, the replacement label should reflect the actual build date not the date of replacement.
3	Name of Manufacturer
4	Maximum Gross Vehicle Weight Rating (GVWR)
5	Maximum Gross Axle Weight Rating (GAWR) - Front
6	Maximum Gross Axle Weight Rating (GAWR) - Rear
7	Certification Statement
8	Vehicle Identification Number (VIN)
9	Engineering Model Number
10	Vehicle Class Type (Pass Car, etc.)
11	Original Equipment Rim Size
12	Original Equipment Tire Size
13	Paint Code
14	QR Code Once the QR code is scanned, the information will appear in this order on your smartphone or laptop: VIN, Model Year, Model, Build Month, Year, Engineering Book, Vehicle Order Number, 3 Digit RPO Codes sorted alphanumerically and the Paint Code (same code appears the lower left of the QR code)

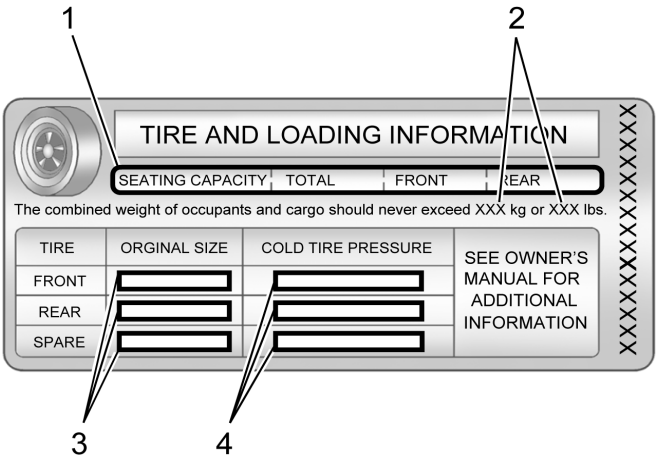

4962282

Tire Placard

Callout	Description
A vehicle-specific Tire and Loading Information label is attached to the vehicle's center pillar (B-pillar) and displays the following assessments:	
1	Specified Occupant Seating Positions
2	Maximum Vehicle Capacity Weight
3	Original Equipment Tire Size
4	Tire Pressure, Front, Rear, and Spare (Cold)

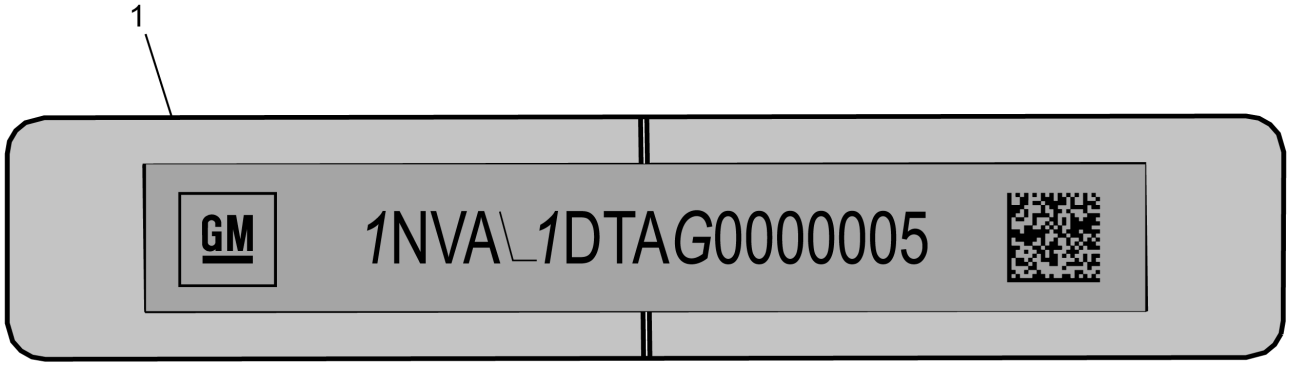

4962289

Anti-Theft Label

Callout	Description
This legal identifier is in the front corner of the instrument panel, on the driver side of the vehicle. It can be seen through the windshield from outside. The Vehicle Identification Number (VIN) also appears on the Vehicle Certification and certificates of title and registration.	
1	Vehicle Identification Number (VIN)

RPO Code List

The following table provides the description of the Regular Production Option (RPO) codes that are available on the vehicle. The vehicle's RPO list is printed on the Service Parts Identification Label.

RPO	Description
01U	PRIMARY COLOR-EXTERIOR, SPECIAL (02)
4AA	INTERIOR TRIM-JET BLACK
4D7	INTERIOR TRIM-JET BLACK/DK ASH
4EE	INTERIOR TRIM-JET BLACK/DK GALVANIZED WITH ICED BLUE ACCENT
4EZ	INTERIOR TRIM-COCOA / DARK ATMOSPHERE
4F2	INTERIOR TRIM-JET BLACK / KALAHARI
5GD	CALIBRATION-TURN ON TOW/ HAUL MODE
5H1	KEY-SINGLE KEY SYSTEM, 2 SPARE KEYS
5JY	ACCESSORY-TONNEAU - RR COMPT - SOFT FOLDING
5K2	ACCESSORY-DECAL PACKAGE - BODY SIDE, DESIGN 1
5VF	ACCESSORY-EXHAUST TIP - DESIGN 3
5VI	ACCESSORY-TIE DOWN RINGS - CARGO AREA
5VQ	ACCESSORY-PUBX BEDLINER - W/ INTEGRAL STORAGE COMPARTMENTS
5W7	ACCESSORY-AIR FILTER - PERFORMANCE
5WI	ACCESSORY-TIE DOWN RINGS - CARGO AREA, MOVEABLE
5WL	ACCESSORY-LOCK - SPARE WHEEL
5Y4	ACCESSORY-COVER - TRAILER HITCH TOW BALL
5YN	ACCESSORY-BADGE - INTERIOR TRIM, DESIGN 1
5ZB	ACCESSORY-CENTER CAP - WHEEL - DESIGN 5
62G	ACCESSORY-ACCENT LIGHTING - FRONT EXTERIOR
65C	LABEL, WARNING-CALIFORNIA, PROP 65 COMPLIANT
8E1	FUEL-ADDITIONAL - 3 GALLONS
8S3	ALARM B/U-ELECTRICAL, 97 DECIBELS (SEO)
8X1	VEHICLE-LABEL, FASTEN SEAT BELTS
9B7	MIRROR AUX-O/S SPOT, CONVEX

RPO	Description
9H3	FUEL TANK-76L, 20 GAL
9J4	BUMPER RR-(NONE)
9M4	DECAL-ENDGATE - NONE (SE0)
9V5	COLOR-WOODLAND GREEN (SEO)
9V9	COLOR-DOESKIN TAN
9W3	COLOR-WHEATLAND YELLOW, LEAD FREE (SEO)
9W4	COLOR-TANGIER ORANGE, LEAD FREE (SEO)
A28	WINDOW RR-FULL WIDTH, SLIDING, MANUAL
A91	LOCK CONTROL RR CMPT-TAILGATE, REM CONT ELEC OPEN/CLOSE
A9R	SALES PACKAGE-SPORT PACK 2
AAK	ACCESSORY-FLOOR LINER - CONTOURED - ALT DESIGN 1
AAQ	ADJUSTER PASS ST-POWER, 4 WAY (DO NOT USE ON NEW PROGRAMS AFTER MY18)
ACO	IDENTIFICATION-ACCESSORY CATALOG OFFERING
AG1	ADJUSTER FRT ST-POWER, MULTI-DIRECTIONAL, DRIVER (DO NOT USE ON NEW PROGRAMS AFTER MY18)
AH6	ADJUSTER FRT ST-SEAT, POWER, 4 WAY, VERT, DRIVER (DO NOT USE ON NEW PROGRAMS AFTER MY18)
AJ2	SEAT RR-FOLDING, JUMPSEAT
AKJ	WINDSHIELD STYLE-SHADE BAND
AL9	LUMBAR DRIVER-SEAT, POWER, 2 WAY
AM7	SEAT RR-FOLDING
AR7	SEAT-FRT BKT, STANDARD
AT9	LUMBAR PASSENGER-SEAT, POWER, 2 WAY
ATG	LOCK CONTROL, ENTRY-REMOTE ENTRY, STANDARD RANGE
ATZ	SEAT RR-NONE
AXG	WINDOW REG DRVR DR-POWER OPERATED, EXPRESS UP/DOWN (DO NOT USE NEXT NEW MAJOR)
AY0	RESTRAINT SYSTEM-SEAT, INFLATABLE, DRIVER & PASS FRT, SEAT SIDE, ROOF SIDE
B30	COVERING FLOOR-CARPET
B34	COVERING FRT-FLOOR MATS, CARPETED INSERT
B35	COVERING REAR-FLOOR MATS, CARPETED INSERT

RPO	Description
B38	COVERING FLOOR-VINYL, FRT & RR, FULL WIDTH
B7O	MOLDING WHL OPENING-FRT & RR, COLORED
BAE	EQUIPMENT-SECURITY SYSTEM, IMMOBILIZATION
BAG	PARTS PKG-EXPORT
BAY	APPEARANCE PACKAGE-GMC "AT4"
BJA	PARTS PKG-TRUCK APPLICATION VAR.1
BPH	APPEARANCE PACKAGE-CHEVROLET "OFF ROAD"
BTV	REMOTE START-VEHICLE
BW4	MOLDING B/S (OPEL)-EXTR, MLDG, SIDE WINDOW REVEAL, CHROME
BW5	MOLDING B/S (OPEL)-EXTR, MLDG, SIDE WINDOW REVEAL, BLACK
BW7	ORNAMENTATION-EXTR, PLR APLQ
BWN	STEPS-CORNER ASSIST, BUMPER
BYH	FOOT REST-DRIVER
C49	DEFOGGER-RR WINDOW, ELECTRIC
C67	HVAC SYSTEM-AIR CONDITIONER FRT, ELECTRONIC CONTROLS
C68	HVAC SYSTEM-AIR CONDITIONER FRT, AUTO, ELECTRONIC CONTROLS
C74	LAMP-INTR, ROOF, DUAL READING
CG6	ORNAMENTATION-EXTR, NAMEPLATE, VAR 1
CGN	LINER-PUBX, SPRAY ON
CPX	COVERING FRT-FLOOR MATS, CONTOURED
CPY	COVERING REAR-FLOOR MATS, CONTOURED
CTT	HITCH ASSIST-GUIDELINES
CV3	COUNTRY-MEXICO
CW1	COUNTRY-KOREA
D07	CONSOLE-FRT COMPT, FLOOR, CUSTOM
D31	MIRROR I/S R/V-TILT
D72	HANDLE O/S DOOR-BLACK
D75	HANDLE O/S DOOR-BODY COLOR
D87	HANDLE, REAR CLOSURE-O/S, L/GATE, R/CMPT, BLACK
DBI	MIRROR O/S-LH & RH, MANUAL CONTROL, MANUAL FOLDING
DD8	MIRROR I/S R/V-LT SENSITIVE
DEG	SUNSHADE-DRIVER, MIRROR, COVER, ILLUM, SLIDING, PASS, MIRROR, COVER, ILLUM, SLIDING
DG6	MIRROR O/S-LH & RH, REMOTE CONTROL, ELECTRIC, MANUAL FOLDING,HEATED, COLOR
DK6	CONSOLE ROOF-INTERIOR

RPO	Description
DL6	MIRROR O/S-LH & RH, REMOTE CONTROL, ELECTRIC, MANUAL FOLDING,COLOR
DL9	MIRROR O/S-LH & RH, REMOTE CONTROL, ELECTRIC, HEATED, CHROME
DLU	SUNSHADE-DRIVER, PASS, MIRROR, CVR
DNS	EQUIPMENT-SUPPLIER INSTALLED
E15	STEPS-ASSIST, CHROME
E20	HANDLE O/S DOOR-CHROME
E25	ACCESSORY-ASSIST STEPS - TUBULAR - CHROME
E33	HANDLE-I/S, DR, GLOSSY CHROME
E49	HANDLE-I/S, DR, JET BLACK
E63	BODY EQUIPMENT-FLEETSIDE PICK-UP BOX
EF7	COUNTRY-UNITED STATES OF AMERICA (USA)
EN5	END GATE–LOCKING-
FE9	CERTIFICATION-EMISSION, FEDERAL
FHX	VEHICLE FUEL-DIESEL B20
FJW	VEHICLE FUEL-GASOLINE E15
FX3	RIDE AND HANDLING-AUTOMATIC ELECTRONIC CONTROLLED
G16	PRIMARY COLOR-EXTERIOR, CRUSH-1 (413C)
G80	AXLE POSITRACTION-LIMITED SLIP
G93	AXLE-FRT ELECTRONIC LOCKING DIFFERENTIAL, DRIVER SELECT
G94	AXLE-RR ELECTRONIC LOCKING DIFFERENTIAL, DRIVER SELECT
G9K	PRIMARY COLOR-EXTERIOR, SATIN STEEL GRAY MET-3 (464C)
GAZ	PRIMARY COLOR-EXTERIOR, SUMMIT WHITE (G) 8624
GBA	PRIMARY COLOR-EXTERIOR, BLACK (G) 8555
GED	PRIMARY COLOR-EXTERIOR, WILDER MET-1 (244F)
GLT	PRIMARY COLOR-EXTERIOR, POW ZINGA MET-1 (327E)
GSK	PRIMARY COLOR-EXTERIOR, CHERRY BOMB TINT-1 (252F)
GT5	AXLE REAR-4.10 RATIO
GTL	PRIMARY COLOR-EXTERIOR, SAND DUNE MET-1 (661G)
GU6	AXLE REAR-3.42 RATIO
H0U	INTERIOR TRIM CONFIG-CLOTH, LEVEL 2, JET BLACK
H2Q	INTERIOR TRIM CONFIG-VINYL, LEVEL 1, JET BLACK /DK ASH
H2R	INTERIOR TRIM CONFIG-CLOTH, LEVEL 1, JET BLACK/ DK ASH
H2U	INTERIOR TRIM CONFIG-LEATHER, LEVEL 3, JET BLACK

RPO	Description
H2X	INTERIOR TRIM CONFIG-LEATHER, LEVEL 4, JET BLACK
H4V	INTERIOR TRIM CONFIG-CLOTH, LEVEL 1, JET BLACK/KALAHARI
H4W	INTERIOR TRIM CONFIG-LEATHER, LEVEL 4, COCOA / DARK ATMOSPHERE
HH1	INTERIOR TRIM CONFIG-CLOTH, LEVEL 4, JET BLACK / DK GALVANIZED WITH ICED BLUE ACCENT
HH3	INTERIOR TRIM CONFIG-LEATHER, LEVEL 1, JET BLACK / DK GALVANIZED WITH ICED BLUE ACCENT
HVD	INTERIOR TRIM CONFIG-LEATHER, LEVEL 2, JET BLACK/KALAHARI
IOR	RADIO-INFOTAINMENT SYSTEM - 3.X LOW HMI, MIDLEVEL CONNECTIVITY 3.X
IOS	RADIO-INFOTAINMENT SYSTEM - 3.X MID/ HIGH HMI, ENHANCED CONNECTIVITY, VOICE RECOGNITION, MID SD NAV CAPABLE
IOU	RADIO-INFOTAINMENT SYSTEM - 3.X MID/ HIGH HMI, ENHANCED CONNECTIVITY, VOICE RECOGNITION, MID SD NAV
J21	ENGINEERING YEAR-2021
JHD	BRK APL CTRL FEATURE-HILL DESCENT, GEAR HOLD
JL1	BRK APL CTRL FEATURE-INTEGRATED TRAILER BRAKE
JL9	BRAKE SYSTEM-PWR, FRT & RR DISC, ANTILOCK, FRT & RR WHL (DNU NEXT NEW MAJOR!)
K05	HEATER ENG-BLOCK
K34	CRUISE CONTROL-AUTOMATIC, ELECTRONIC
K40	ENGINE BRAKE-EXHAUST
K4C	CHARGER-INDUCTIVE PORTABLE WIRELESS DEVICE
K6H	ORNAMENTATION-R TAILGATE EMBLEM, DELETE
KA1	HEATER SEAT FRT-DRVR & PASS
KG4	GENERATOR-150 AMP
KG9	GENERATOR-140 AMP
KU1	VENTILATED SEAT DRVR-FRONT
KU3	VENTILATED SEAT PASS-FRONT
LCV	ENGINE-GAS, 4 CYL, 2.5L, L4, SIDI, DOHC, DCVCP, VVT, E85 MAX, E0-E100, ALUM
LGZ	ENGINE-GAS, 6CYL, 3.6L, V6, DI, DOHC, VVT, ALUM, VAR2, GEN 2
LHD	VEHICLE DRIVE-LEFTHAND DRIVE
LWN	ENGINE-DIESEL, 2.8L, DI, L4, DOHC, TURBO, XLDE
M5T	TRANSMISSION-AUTO 8 SPD, 8L45
MCR	RECEPTACLE-MEMORY CARD (DO NOT USE NEXT NEW MAJOR)
MYB	TRANSMISSION-AUTO 6 SPD, 6L50
N2K	OWNERS MANUAL-KOREAN LANGUAGE

RPO	Description
N30	STEERING WHEEL-DELUXE
N33	STEERING COLUMN-TILT TYPE
N37	STEERING COLUMN-TILT, TELESCOPING
NAA	ACCESSORY-ROCKER GUARD - TUBULAR
NE1	CERTIFICATION-EMISSION, GEOGRAPHICALLY RESTRICTED REGISTRATION
NE8	EVAPORATIVE SYSTEM-LEVEL 3 EMISSIONS
NEK	EVAPORATIVE SYSTEM-KOREA LEV3 EMISSIONS
NP5	STEERING WHEEL-LEATHER WRAPPED
NQ6	TRANSFER CASE-2 SPD, ACTIVE, PART TIME 4WD, L/H DROP, LOW RATIO 2.72:1
NQ7	TRANSFER CASE-2 SPD, SWITCH ACTIVATED, PART TIME 4WD, L/H DROP, LOW RATIO 2.72:1
NTB	EMISSION SYSTEM-FEDERAL, TIER 3
NUC	EMISSION SYSTEM-CALIFORNIA, ULEV50
NUF	EMISSION SYSTEM-CALIFORNIA, ULEV125
NUH	EMISSION SYSTEM-KOREAN, ULEV70
NW9	TRACTION CONTROL-ELECTRONIC
NY7	SHIELD-TRANSFER CASE
PPA	EQUIPMENT-ASSIST, OPEN & CLOSE, TAILGATE
PZ9	PLATE-SKID, FUEL TANK
PZG	PLATE-SKID FRT
PZL	PLATE-SKID RR DIFFERENTIAL
PZN	PLATE-SKID TRANSFER CASE
Q5U	WHEEL-17 X 8.0, J, ALUMINUM, DESIGN 2
QDC	TIRE SPARE-T175/90D18 LL 111M BW SPR
QHE	TIRE ALL-255/65R17 SL 110T BW AT
QHR	TIRE ALL-255/65R17 SL 110T BW ALS
QIA	TIRE ALL-265/60R18 SL 110T BW AL2
QJ2	TIRE ALL-265/65R17 SL 112S BW AT VAR1
QQD	TIRE ALL-P255/55R20 SL 107H BW AL3
R1U	WHEEL-17 X 8.0, J, ALUMINUM, DESIGN 3
R34	WHEEL-17 X 8.0, J, ALUMINUM, DESIGN 5
R88	ACCESSORY-ILLUMINATED EMBLEM - EXTERIOR - DESIGN 2
RAP	WHEEL-17 X 8.0, J, STEEL, DESIGN 1
RCV	WHEEL-18 X 8.5, J, ALUMINUM, DESIGN 4
RCW	WHEEL-18 X 8.5, J, ALUMINUM, DESIGN 5
RDI	ACCESSORY-KEYLESS ENTRY
RGO	ACCESSORY TIRE-TIRE ALL - 265/65R17 SL 112S BSL MT VAR 1
RIA	ACCESSORY-FLOOR LINER - CONTOURED
RIF	WHEEL-17 X 8.0, J, ALUMINUM, DESIGN 7

RPO	Description
RIG	WHEEL-17 X 8.0, J, ALUMINUM, DESIGN 8
RIK	ACCESSORY-BADGE - EXTERIOR, PACKAGE, DESIGN 1
RIM	WHEEL-17 X 8.0, J, ALUMINUM, DESIGN 9
RM7	WHEEL SPARE-17 X 8.0, J, STEEL, DESIGN 1
RN2	ACCESSORY-ILLUMINATED EMBLEM - EXTERIOR - DESIGN 1
RQ9	WHEEL-20 X 8.5, J, ALUMINUM, DESIGN 1
RSZ	WHEEL-18 X 7.5, J, ALUMINUM, DESIGN 1
RTX	WHEEL SPARE-18 X 4.5, B, ALUMINUM, DESIGN 1
RVG	ACCESSORY-ADAPTER - TRAILER HARNESS
RVP	ACCESSORY-ASSIST STEPS - REMOVABLE
RVS	ACCESSORY-ASSIST STEPS - TUBULAR - ROUND - BLACK
RVY	ACCESSORY-PUBX CARGO DIVIDER
RW2	ACCESSORY-BED RAILS - BLACK
RW6	ACCESSORY-BED STORAGE BOX - FIXED FULL WIDTH - METAL
RWI	ACCESSORY-BODY SIDE MOLDINGS - CHROME
RWK	ACCESSORY-BODY SIDE MOLDINGS - PAINTED
RWR	ACCESSORY-CAMERA - REAR VISION
RWS	ACCESSORY-FLOOR MATS - CARPET
RXH	ACCESSORY-CENTER CAP - WHEEL - DESIGN 1
RXJ	ACCESSORY-CENTER CAP - WHEEL - DESIGN 2
RXQ	ACCESSORY-CONVENIENCE NET - BED MOUNTED
RYT	ACCESSORY-FIRST AID KIT
RZO	ACCESSORY-WHEEL - 20" - ALUMINUM - DESIGN 9
RZR	ACCESSORY-WHEEL - 20" - ALUMINUM - DESIGN 8
RZW	ACCESSORY-HARNESS - TRAILER HITCH
S08	ACCESSORY-HIGHWAY SAFETY KIT
S0Y	ACCESSORY-LAMPS - CARGO AREA
S3U	ACCESSORY-LAMP KIT - FRONT FOG
S3X	ACCESSORY-LAMPS - FRONT ROOF MOUNTED - OFF-ROAD
S42	ACCESSORY-LOAD STOPS - UTILITY RACK
S47	ACCESSORY-LUG NUTS
S4M	WHEEL SPARE-17 X 8.0, J, ALUMINUM, DESIGN 2
S4P	WHEEL SPARE-17 X 8.0, J, ALUMINUM, DESIGN 1
S53	ACCESSORY-MOLDING - UPPER ACCENT

RPO	Description
S6L	ACCESSORY-PROTECTOR - ROCKER PANEL
S6P	ACCESSORY-REMOTE START KIT
S6W	ACCESSORY-SEAT COVER - MUDDER (PROTECTIVE)
S6Z	ACCESSORY-SEAT COVER - TAILORED - ALTERNATE MATERIAL
SA5	ACCESSORY-SHIELD - UNDERBODY
SAM	ACCESSORY-SKID PLATES
SAO	ACCESSORY-SMOKERS PACKAGE
SAS	ACCESSORY-SPARE TIRE CARRIER - REAR
SB7	ACCESSORY-DECAL PACKAGE - DESIGN 1
SB8	ACCESSORY-SPOILER/MOLDING/ PROTECTOR - TAILGATE
SB9	ACCESSORY-DECAL PACKAGE - DESIGN 2
SBY	ACCESSORY-SPORT BAR - BED MOUNTED - DESIGN 1
SCU	ACCESSORY-SPORT BAR - BED MOUNTED - DESIGN 2
SCZ	ACCESSORY-TAILGATE HANDLE - ALTERNATE FINISH - CHROME
SD5	ACCESSORY-TIRE PRESSURE MONITOR
SDE	ACCESSORY-TRAILER HITCH - REMOVABLE
SDI	ACCESSORY-TRIANGLE - REFLECTIVE
SDS	ACCESSORY-WEATHER DEFLECTORS - SIDE WINDOW - SMOKED
SE0	ACCESSORY-WHEEL - 17" - ALUMINUM - DESIGN 1
SE4	ACCESSORY-WHEEL - 18" - ALUMINUM - DESIGN 1
SE5	ACCESSORY-WHEEL - 18" - ALUMINUM - DESIGN 2
SE6	ACCESSORY-WHEEL - 18" - ALUMINUM - DESIGN 3
SE7	ACCESSORY-WHEEL - 18" - ALUMINUM - DESIGN 4
SF5	ACCESSORY-WHEEL FLARES - ALTERNATE DESIGN - MOLDED COLOR
SF6	ACCESSORY-WHEEL FLARES - ALTERNATE DESIGN - PAINTED
SFE	ACCESSORY-WHEEL LOCKS
SFW	CALIBRATION-BACK UP ELECTRICAL ALARM (SEO)
SG1	ACCESSORY-EMBLEM - EXTERIOR - DESIGN 2
SIE	ACCESSORY-PUBX TIERED STORAGE
SIF	ACCESSORY-RSE - PORTABLE MEDIA CONNECTIVITY PACKAGE
SIQ	ACCESSORY-SKID PLATES - FRONT DESIGN 1

RPO	Description
SIR	ACCESSORY-SKID PLATES - REAR DESIGN 1
SIT	ACCESSORY-SKID PLATES - REAR DESIGN 2
SIZ	ACCESSORY-PUBX CARGO DIVIDER - ALTERNATE DESIGN
SJ8	ACCESSORY-ILLUMINATION PACKAGE - INTERIOR AMBIENT
SKY	ACCESSORY-WHEEL - 18 X 8.5 - J - ALUMINUM - DESIGN 1
SKZ	ACCESSORY-WHEEL - 18 X 8.5 - J - ALUMINUM - DESIGN 2
SL7	ACCESSORY-PUBX LADDER / UTILITY RACK STANCHIONS
SMG	ACCESSORY-NAMEPLATE- EXTERIOR - RR FASCIA - DESIGN 1
SMY	ACCESSORY-WHEEL - 17 X 8.0 - J - ALUMINUM - DESIGN 1
SPY	ACCESSORY-LUG NUTS - ALT FINISH
SPZ	ACCESSORY-WHEEL LOCKS - ALT FINISH
SQS	ACCESSORY-SUSPENSION LEVELING KIT
SVH	ACCESSORY-REAR FASCIA / BUMPER - ALTERNATE FINISH 1
SXL	EQUIPMENT-SLX SALES PACKAGE
T3C	HEADLAMP FUNCTION-PROJECTOR, LOW/HIGH BEAM (DO NOT USE AFTER '09 MAJOR PROGRAMS, USE HDL&HDL CONT&VCS FAM AS NEEDED)
T3U	LAMP FRT FOG-FRT FOG
T4A	HEADLAMPS-HALOGEN
T4Z	SEAT BELT SAFETY SYS-SHIFTER INTERLOCK, GEN 1, NON-CUSTOMIZABLE
T7Z	SEAT BELT SAFETY SYS-SHIFTER INTERLOCK, GEN 2, TEEN DRIVER ACTIVE
TCA	LAMP-DOME, CENTER
TCK	DEFLECTOR-RR TIRE, AIR
TDM	MODE-TEEN DRIVER SETTINGS
TGK	COLOR COMBINATION-SOLID, SPECIAL PAINT
TR0	LAMP-INTR, ROOF, RR, COURTESY & DUAL READING
U19	SPEEDOMETER-INST, KILO & MILES, KILO ODOMETER
U2K	DIGITAL AUDIO SYSTEM-S-BAND
U2L	RECEPTION-HD
U73	ANTENNA-FIXED, RADIO
U80	DISPLAY-COMPASS
UD7	PARK ASSIST-REAR
UDC	DISPLAY INSTRUMENT-DRIVER INFO ENHANCED (ONE COLOR GRAPHIC)

RPO	Description
UDD	DISPLAY INSTRUMENT-DRIVER INFO ENHANCED (MULTI COLOR STANDARD GRAPHIC)
UE1	COMMUNICATION SYSTEM-VEHICLE, ONSTAR
UEU	SENSOR INDICATOR-FORWARD COLLISION ALERT
UF2	LAMP-CARGO
UFL	LANE ACTIVE SAFETY-DEPARTURE WARNING
UG0	LAMP-CARGO, BED RAIL
UGA	HOOK-TOW, RED
UHN	WHEEL-18 X 8.5, J, ALUMINUM, DESIGN 3
UHY	COLL IMMINENT BRK-LOW SPEED, VEH FWD MOVEMENT, BRAKE PREFILL, INTEGRATED BRAKE ASSIST
UIJ	INFOTAINMENT DISPLAY-NORMALLY BLACK COLOR (TFT), 8", WVGA 800X480P
UIK	INFOTAINMENT DISPLAY-NORMALLY BLACK COLOR (TFT), 8", WXGA 1280X768P
UIR	INFOTAINMENT DISPLAY-NORMALLY BLACK COLOR (TFT), 7", WVGA 800X480P
UJN	TIRE PRESS INDICATOR-AUTO LEARN
ULV	MERCHANDISED PKG-CHEVROLET BISON
UMN	SPEEDOMETER-INST, MILES & KILO, MILES ODOMETER
UQ3	SPEAKER SYSTEM-ENHANCED AUDIO
UQA	SPEAKER SYSTEM-PREMIUM AUDIO, BRANDED AMPLIFIER
USS	RECEPTACLE-USB CHARGE PORT (DO NOT USE NEXT NEW MAJOR, SEE BFO)
UST	RECEPTACLE-DUAL USB, SINGLE AUX (DO NOT USE NEXT NEW MAJOR, SEE BFO)
UTJ	THEFT DETERENT-ELECTRICAL, UNAUTHORIZED ENTRY
UVB	VISION-REAR VIEW, MONO, HD DIGITAL
UVC	VISION-REAR VIEW, MONO, ANALOG
UVD	STEERING WHEEL HEAT-MANUAL
V3L	GRILLE-RADIATOR, BRIGHT CHROME
V8X	ACCESSORY-SILL PLATES - ALTERNATE DESIGN 2
V8Y	VEHICLE STATEMENT-VEHICLE LABEL CONTENT - KOREA - FTA (U.S. BUILT VEHICLES ONLY)
VAV	ACCESSORY-FLOOR MATS - ALL WEATHER
VBR	ACCESSORY-PUBX RUBBER MAT
VGP	PROTECTOR-IMPACT, PEDESTRIAN
VHU	BUMPER FRT-SPORT
VJG	BUMPER RR-BLACK
VJH	BUMPER RR-CHROME
VJQ	HOOK-TOW, FRT

RPO	Description
VK3	LICENSE PLATE FRONT-FRT MOUNTING PKG
VKU	ACCESSORY-MIRROR CAPS - CHROME
VKY	ACCESSORY-DOOR HANDLES - ALTERNATE FINISH - CHROME
VMA	LICENSE PLATE FRONT-FRT MOUNTING PKG, KOREA
VPB	ACCESSORY-TONNEAU - RR COMPT - VINYL W/ INTEGRAL CROSSBOW SUPPORTS
VPH	VEHICLE PREPARATION-OVERSEAS DELIVERY
VQH	BUMPER-RR, VAR 1
VQK	ACCESSORY-SPLASH GUARDS - CUSTOM MOLDED
VQY	ACCESSORY-TOW HOOKS - CHROME
VQZ	ACCESSORY-EXHAUST TIP - DESIGN 1
VST	ACCESSORY-SILL PLATES - ALTERNATE DESIGN 1
VT5	BUMPER RR-COLOR KEYED
VT7	OWNERS MANUAL-ENGLISH LANGUAGE
VTA	ACCESSORY-EXHAUST TIP - DESIGN 2
VTG	ACCESSORY-INTERIOR TRIM KIT
VUK	ACCESSORY-TAILGATE LINER - PUBX
VUZ	ACCESSORY-EXHAUST PIPE
VV4	COMMUNICATION EQUIP-MOBILE INTERNET CONNECTIVITY
VW9	ACCESSORY-CENTER CAP - WHEEL - DESIGN 3
VWD	ACCESSORY-CENTER CAP - WHEEL - DESIGN 4
VYQ	ACCESSORY-STRIPE PACKAGE - HOOD AND FENDER - BLACK
VZX	ACCESSORY-PUBX BEDLINER
W0H	ACCESSORY-TOW HOOKS - ALT FINISH
W1Y	CONTROL-STEERING WHEEL, RADIO, REDUNDANT CONTROLS
WA3	SALES PACKAGE-SPORT PACK 3
WBC	ACCESSORY-EXHAUST UPGRADE
WC3	APPEARANCE PACKAGE-CHEVY "CHROME"
WEN	PLANT CODE-WENTZVILLE, MO, USA
WFY	SALES PACKAGE-SPORT PACK I
WGQ	SALES PACKAGE-REDLINE
WGV	APPEARANCE PACKAGE-CHEVY "CUSTOM"
WJP	SALES PACKAGE-MIDNIGHT EDITION
WMU	VIN MODEL YEAR-2021
WOJ	ACCESSORY-DOOR COVER - PET PROTECTOR - DESIGN 1
WPD	SALES PACKAGE-SAFETY
X88	MARKET BRAND-CHEVROLET

RPO	Description
XAE	ACCESSORY TIRE-TIRE ALL-P255/55R20 SL 107H BW AL3 VAR 1
XAJ	ACCESSORY TIRE-TIRE-265/60R18 SL 110T BW AL2 - VAR1
XL8	FREQUENCIES RATING-433 MHZ
Y91	MERCHANDISED PKG-LUXURY EDITION
YF5	CERTIFICATION-EMISSION, CALIFORNIA
YK6	IDENTIFICATION-(SEO)
YM8	IDENTIFICATION-LIMITED PERSONALIZATION OPTION (LPO)
Z49	COUNTRY-CANADA
Z71	CHASSIS PACKAGE-"OFF ROAD"
Z82	TRAILER PROVISIONS-SPECIAL EQUIPMENT, H.D.
Z85	CHASSIS PACKAGE-INCREASED CAPACITY
Z88	MARKET BRAND-GMC
ZAH	TIRE SPARE-255/65R17 SL 110T BW AT
ZAO	TIRE SPARE-255/65R17 SL 110T BW ALS
ZJP	TIRE SPARE-265/65R17 SL 112S BW AT VAR1
ZQ9	APPEARANCE PACKAGE-EXTERIOR TRIM, BLACK OUT
ZR2	CHASSIS PACKAGE-HIGH WIDER PERFORMANCE, 4 X 4 SPORT
ZW9	BODY EQUIPMENT-BASE BODY OR CHASSIS
ZY1	COLOR COMBINATION-SOLID

Section 2

Body Systems

Fixed and Moveable Windows 2-3
Schematic and Routing Diagrams 2-3
Moveable Window Schematics 2-4
Defogger Schematics 2-7
Description and Operation 2-8
Power Windows Description and Operation 2-8
Rear Window Defogger Description and Operation 2-9

Horns and Pedestrian Alerts 2-11
Schematic and Routing Diagrams 2-11
Horn Schematics 2-12
Description and Operation 2-13
Horns System Description and Operation 2-13

Lighting 2-14
Schematic and Routing Diagrams 2-14
Headlights/Daytime Running Lights (DRL) Schematics 2-15
Fog Lights Schematics 2-17
Exterior Lights Schematics 2-19
Interior Lights Schematics 2-23
Interior Lights Dimming Schematics 2-25
Description and Operation 2-28
Exterior Lighting Systems Description and Operation 2-28
Interior Lighting Systems Description and Operation 2-29

Mirrors 2-31
Schematic and Routing Diagrams 2-31
Inside Rearview Mirror Schematics 2-32
Outside Rearview Mirror Schematics 2-33
Description and Operation 2-35
Automatic Day-Night Mirror Description and Operation 2-35

Trailering Systems 2-36
Schematic and Routing Diagrams 2-36
Trailering Systems Schematics 2-37
Description and Operation 2-41
Trailering Description and Operation 2-41

Vehicle Access 2-46
Schematic and Routing Diagrams 2-46
Door Lock/Indicator Schematics 2-47
Hood Latch Schematics 2-51
Description and Operation 2-52
Door Ajar Indicator Description and Operation 2-52
Hood Ajar Indicator Description and Operation 2-54
Power Door Locks Description and Operation 2-55

BLANK

Fixed and Moveable Windows

Schematic and Routing Diagrams

Moveable Window Schematics (Driver Door)

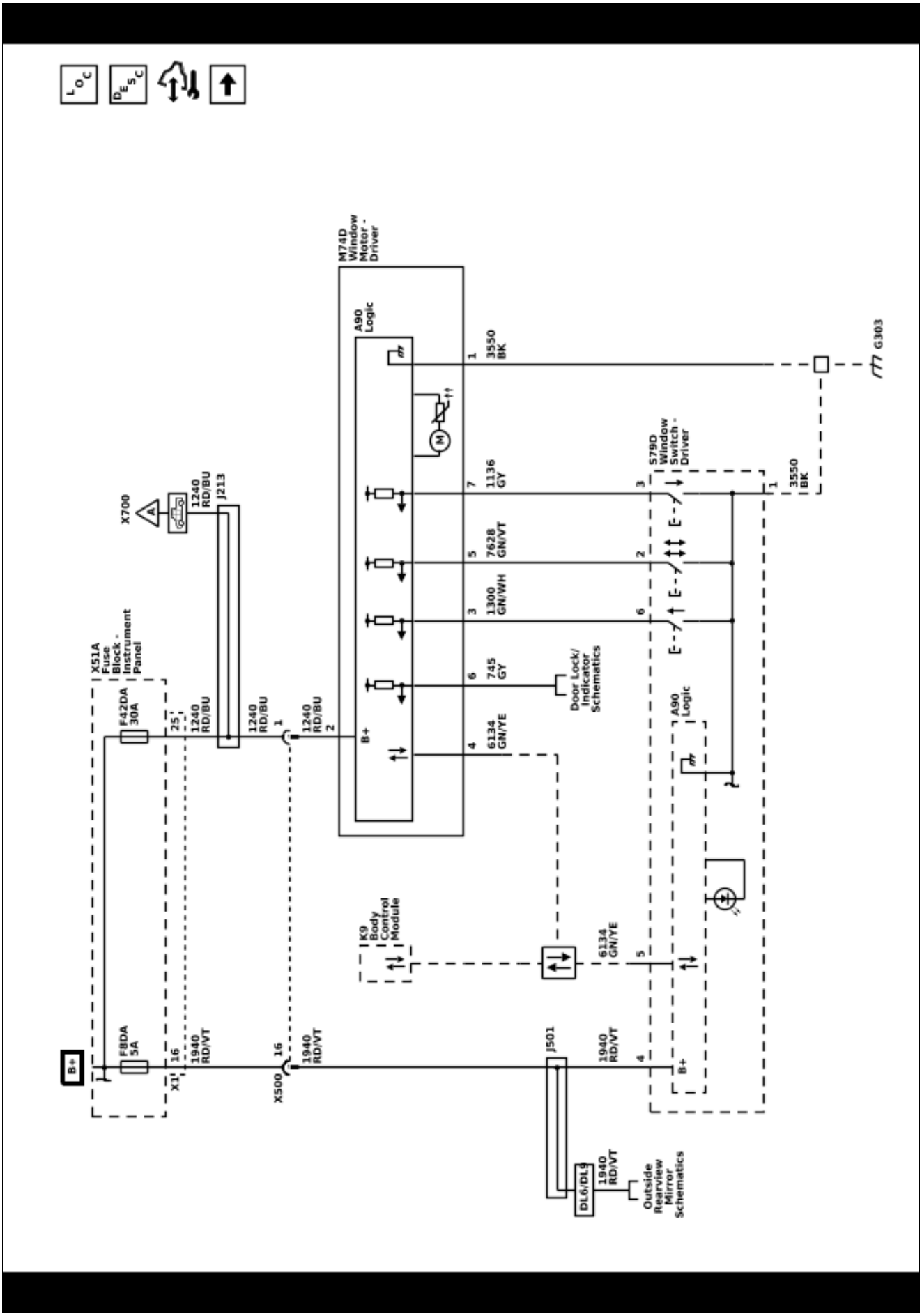

5681587

Moveable Window Schematics (Passenger Door)

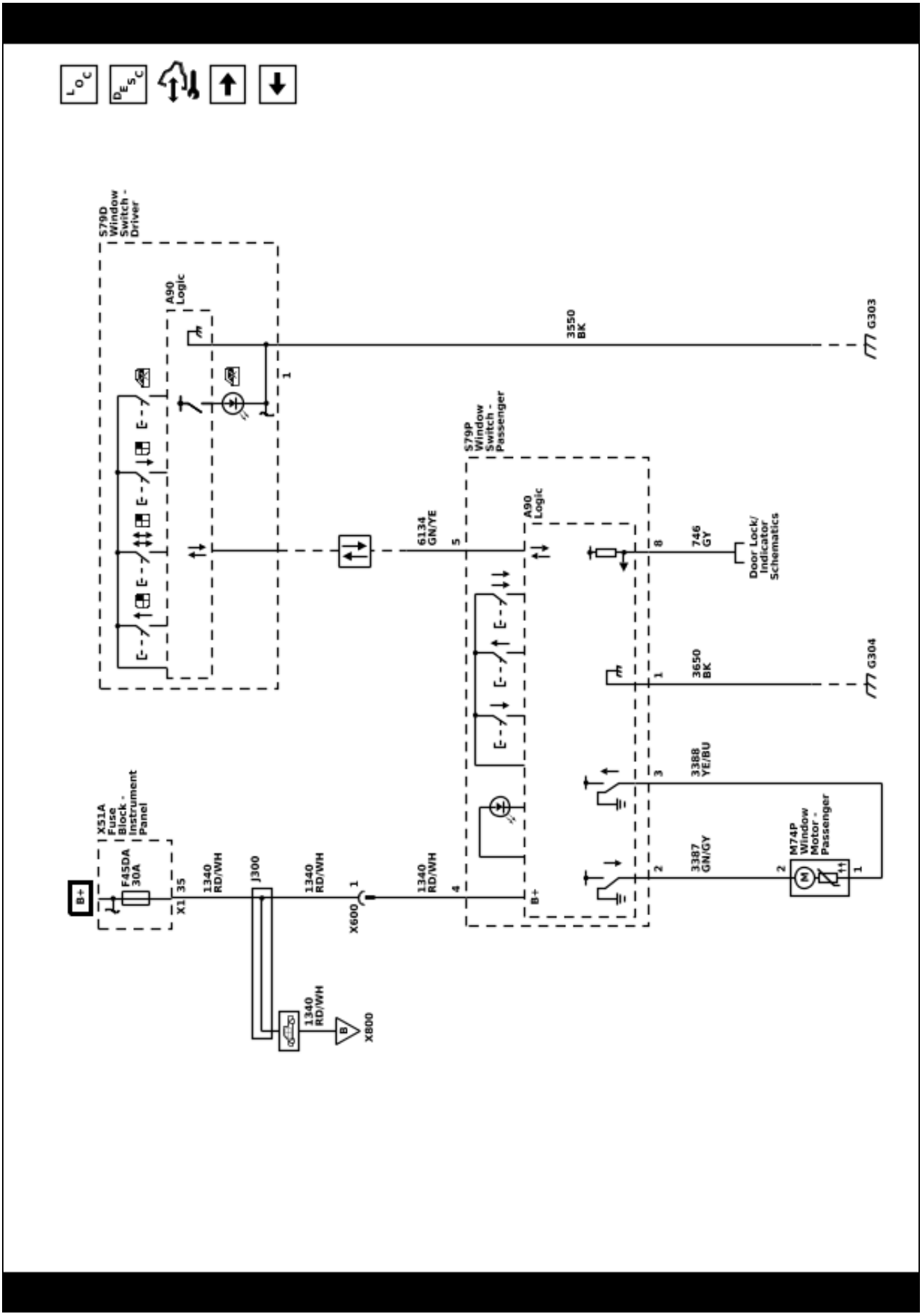

Moveable Window Schematics (Rear Doors)

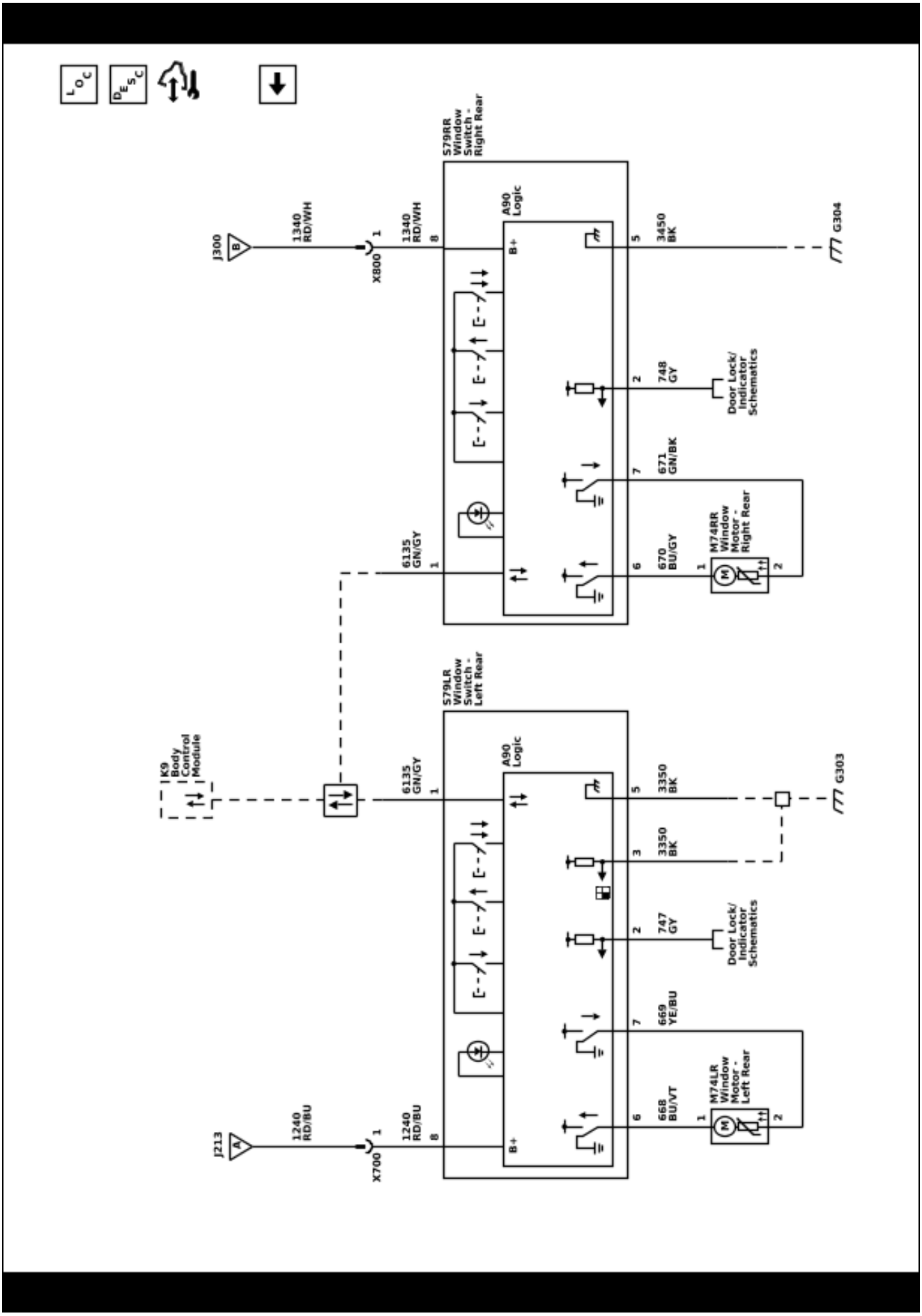

5681586

Defogger Schematics (Defogger (C49))

Description and Operation

Power Windows Description and Operation

Power Windows System Components

The power window system consists of the following components:

- Driver window switch
- Passenger window switch
- Left rear window switch
- Right rear window switch
- Window motors in each of the doors
- 30A Fuse
- Body control module (BCM)

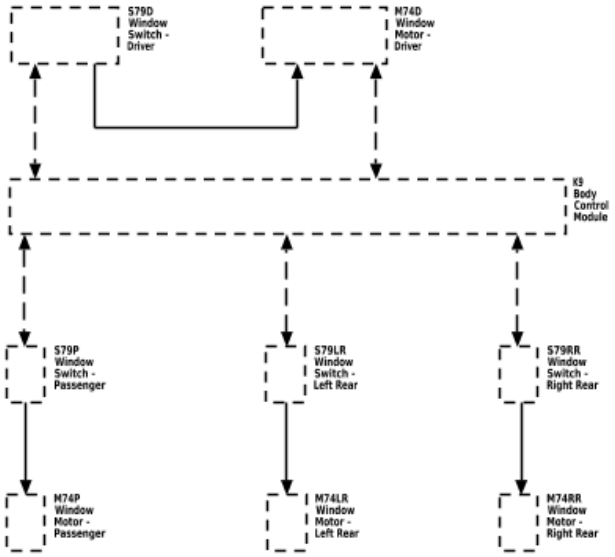

3461357

Driver Express Up and Express Down Power Window Motor

The driver door contains a window motor is smart motor that will detect excessive resistance while performing the express up function and automatically reverse direction to prevent injury to any occupants that may become trapped between the closing window and the door frame. The automatic reverse safety feature can be overridden by pulling and holding the window switch.

The logic circuit within the window motor monitors the up, down and express signal circuits which are normally equal to B+ voltage. When a switch is used on the driver window switch, the contacts close causing a voltage drop within the appropriate signal circuit. The driver window motor will detect the voltage drop and will command the window to move in the direction requested.

Passenger, Left Rear and Right Rear Express Down Window Motors

For the passenger, right rear and left rear doors, when their window switch is pressed in the down position, battery positive voltage is applied to their respective window motor control circuit and ground to the other window motor control circuit causing that window to open. When the individual window switch is pulled in the up position, voltage and ground is applied to the window motor in the opposite direction causing that

window to close. The return path to ground is supplied through the inactive control circuit being normally grounded through the window switch.

Each passenger and rear window switch communicates to the BCM by a serial data circuit. When the driver wishes to control the passenger, left rear or right rear window, the driver will use the appropriate switch on the driver window switch. When this switch is used, a serial data message is sent to the BCM requesting a window motor command, the BCM will then send a serial data message to the appropriate door window switch which will then command that window to move in the direction requested.

Lockout Switch Feature

The driver window switch contains a window lockout switch, when the driver presses the window lockout switch, a serial data message is sent to the BCM which will send a disable command to the rear window switches, the rear window switches will then ignore all functions when a passenger uses the rear window switch. The rear window motor commands will still function normally when the driver uses the appropriate switches on the driver window switch.

Rear Window Defogger Description and Operation

Rear Window Defogger System Components

The rear window defogger system consists of the following components:

- HVAC control module
- Rear defogger relay
- Rear defogger grid
- 40A fuse

Rear Window Defogger Block Diagram

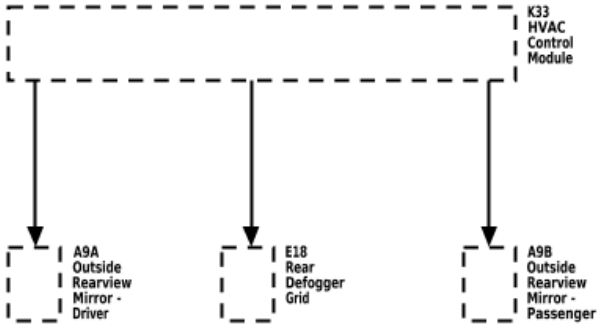

3270437

Rear Window Defogger Operation

The rear defog control system utilizes a single zone backlight design, driven with a single relay configuration. Additionally, up to two outside rear view mirrors can be heated if equipped. A switch for the customer to control the system is provided within the HVAC control module, also included in the HVAC control module is an indicator to inform the customer with the current state of the system. The system is only operational when engine is running or during remote start or the vehicle is ON/RUN (Hybrid/EV).

Pressing the heated rear window switch on the HVAC control module causes the HVAC control module to provide voltage to the coil side of the rear defogger relay, this will energize the relay causing the relay switch contacts to close allowing B+ voltage to flow through the rear defogger grid control circuit to the rear defogger grid.

When the rear heated rear window switch is pressed and the engine is running or the vehicle is ON/RUN (Hybrid/EV), the rear window defogger grid will activate and will turn off automatically depending upon the vehicle speed (refer to owner’s manual for rear window defogger operation cycles)

Horns and Pedestrian Alerts

Schematic and Routing Diagrams

Horn Schematics (Horns)

5681590

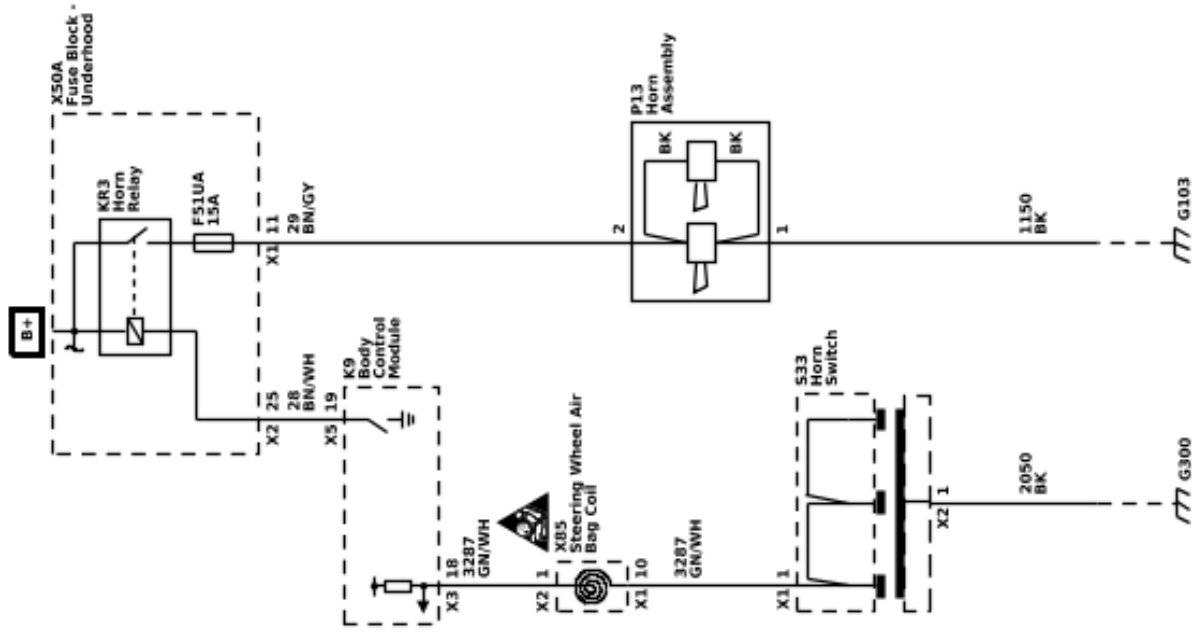

Description and Operation

Horns System Description and Operation

System Description

The horn system consists of the following components:

- HORN fuse
- Underhood fuse block (Contains PCB horn relay)
- Horn switch
- Horn assembly
- Body control module (BCM)

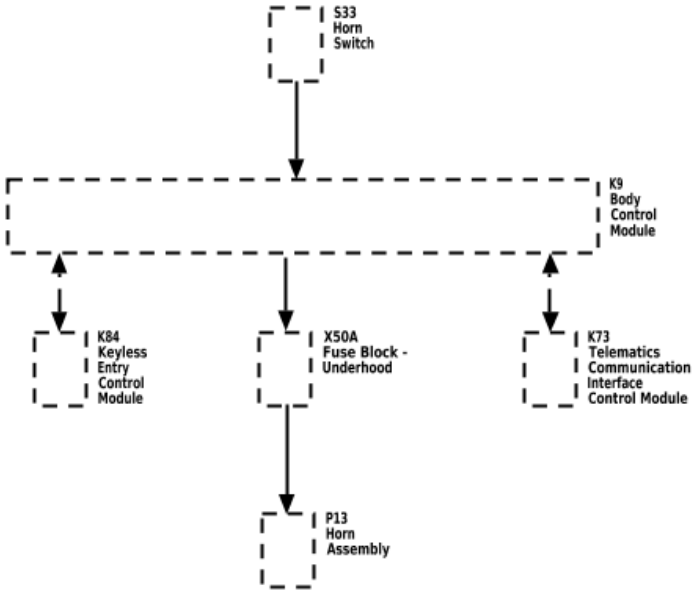

3270443

System Operation

The vehicle horn system is activated under the following conditions:

- When the horn switch is depressed
- The BCM commands the horns ON under any of the following conditions:
  - When the content theft deterrent system detects a vehicle intrusion—For further information refer to Theft Systems Description and Operation.
  - When the panic button is depressed on the remote control door lock transmitter—For further information refer to *Keyless Entry System Description and Operation on page 7-14*.
  - When the keyless entry system is used to lock the vehicle, a horn chirp may sound to notify the driver that the vehicle has been locked. The notification feature may be enabled or disabled through personalization. For further information refer to *Keyless Entry System Description and Operation on page 7-14*.
  - When the OnStar® system is used to sound the horns if equipped—For further information, refer to OnStar Description and Operation.

Circuit Operation

Battery positive voltage is applied at all times to the horn relay coil and the horn relay switch. Pressing either of the horn switches applies ground to the horn relay control circuit. The BCM may also apply ground to the horn relay control circuit as described above. When the horn relay control circuit is grounded, the horn relay is energized and battery positive voltage is applied to the horns through the horn control circuit. The horns sound as long as ground is applied to the horn relay control circuit.

Lighting

Schematic and Routing Diagrams

Headlights/Daytime Running Lights (DRL) Schematics (Controls)

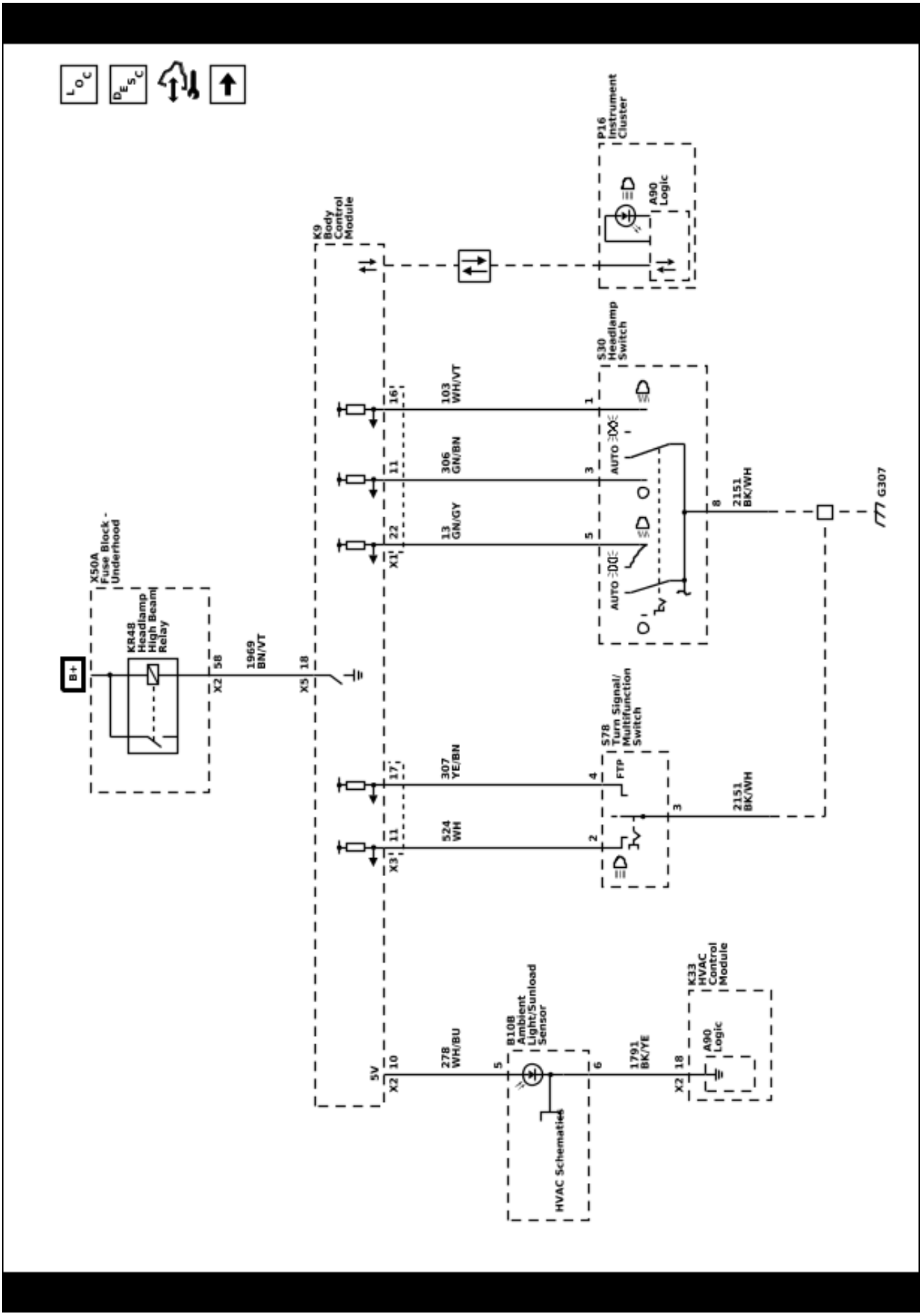

5681591

Headlights/Daytime Running Lights (DRL) Schematics (Headlamps)

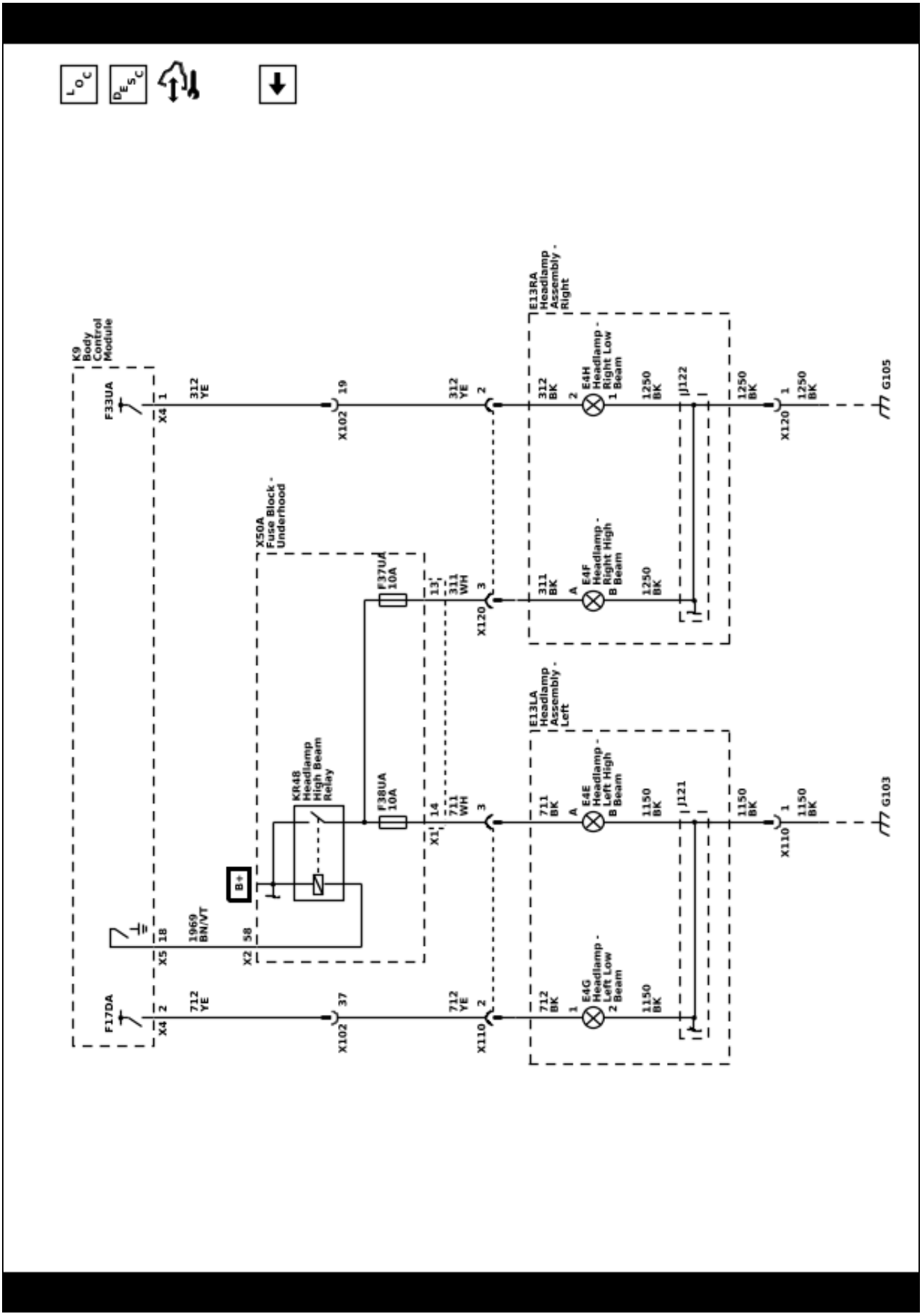

5681592

5681602

Fog Lights Schematics (Fog Lamps (T3U/ULV))

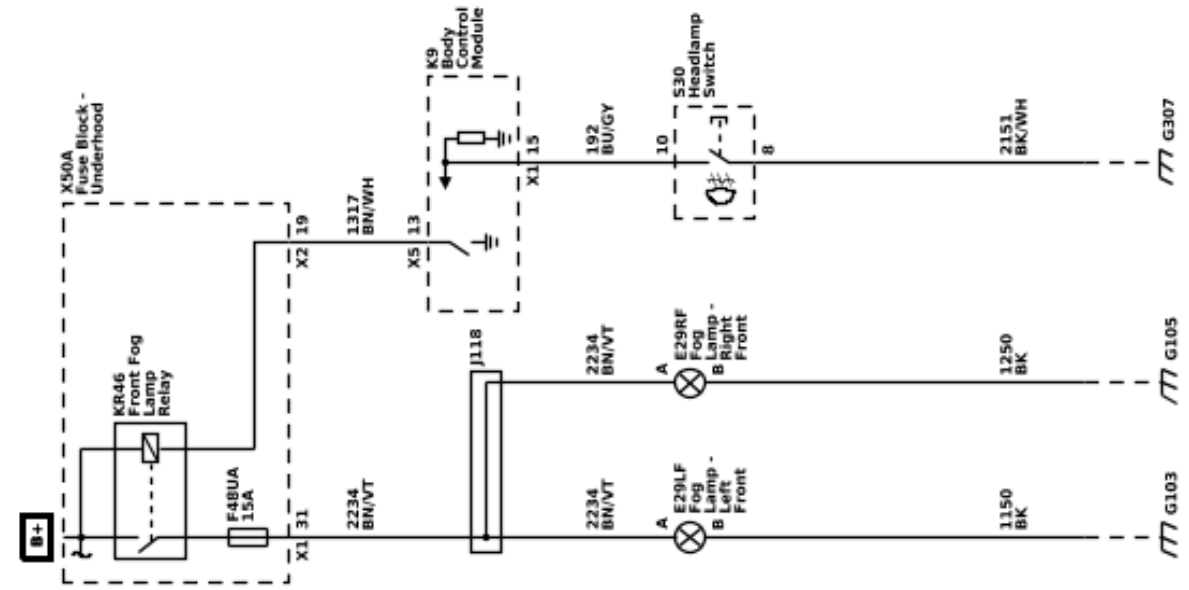

Fog Lights Schematics (Fog Lamps (Z88))

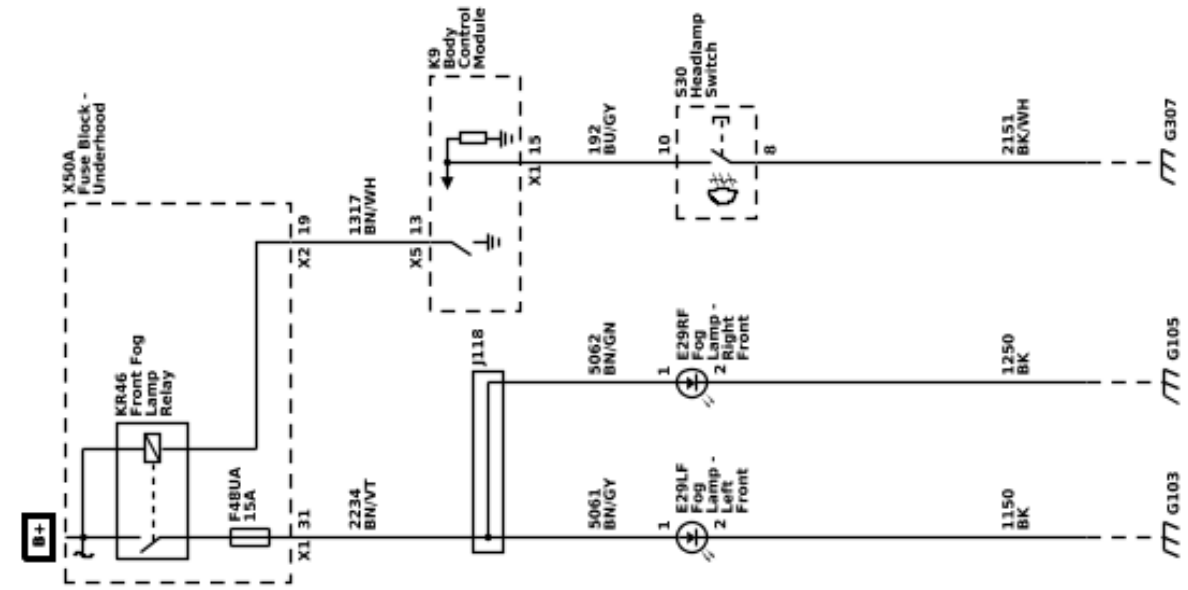

5681603

Exterior Lights Schematics (Controls and Indicators)

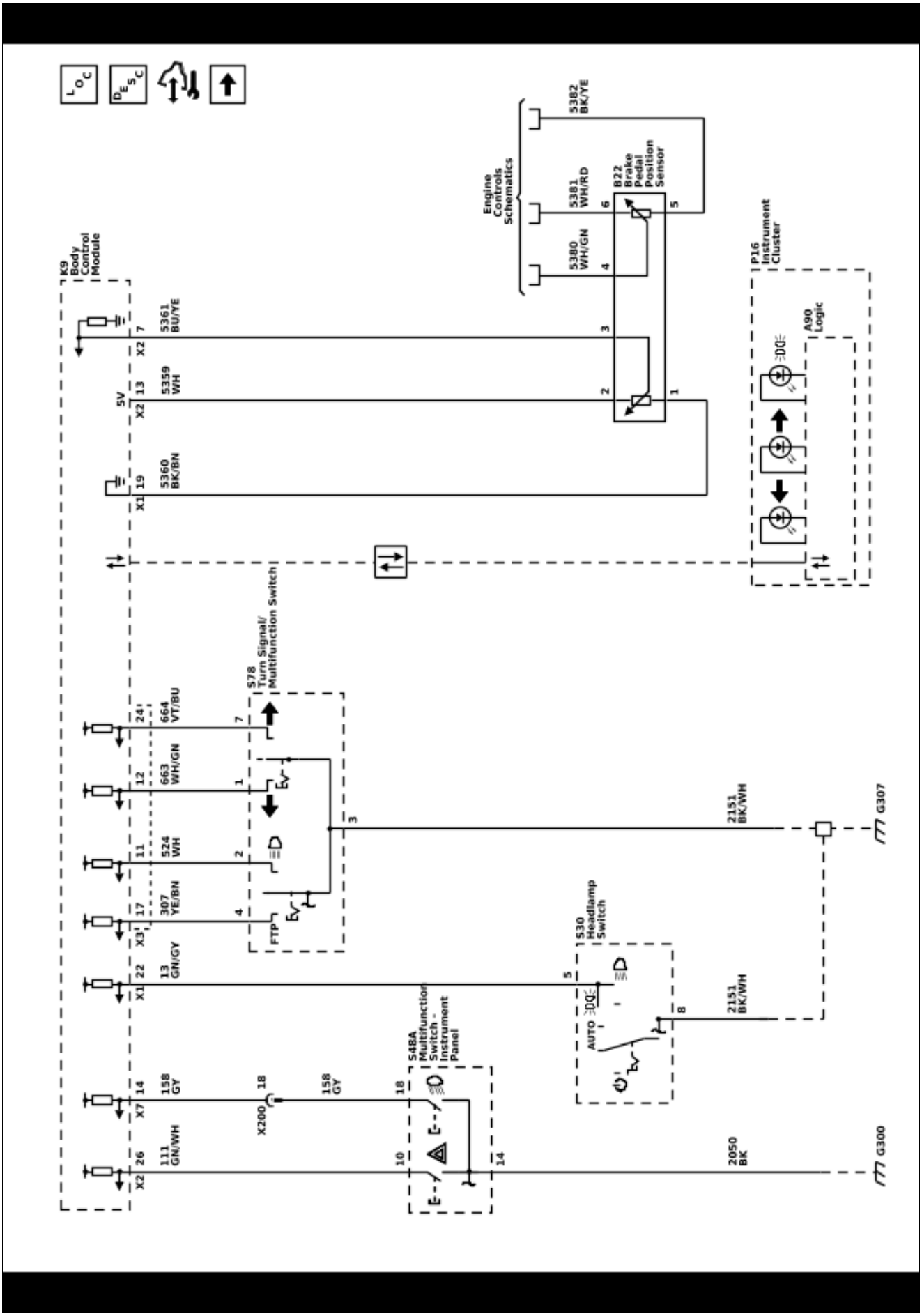

5681593

Exterior Lights Schematics (Park, Side Marker and Front Turn Lamps)

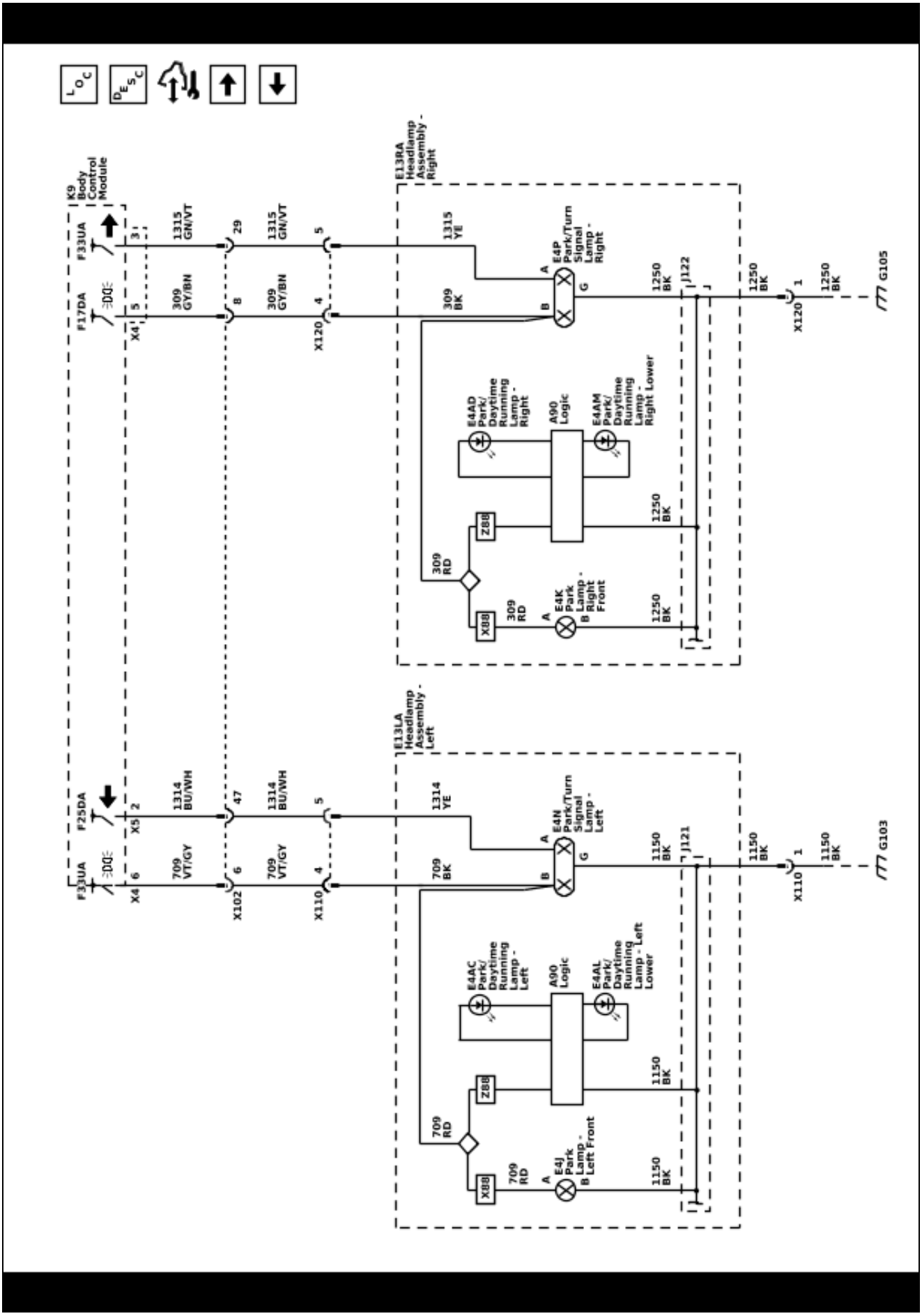

5681594

5681595

Exterior Lights Schematics (Tail Lamps)

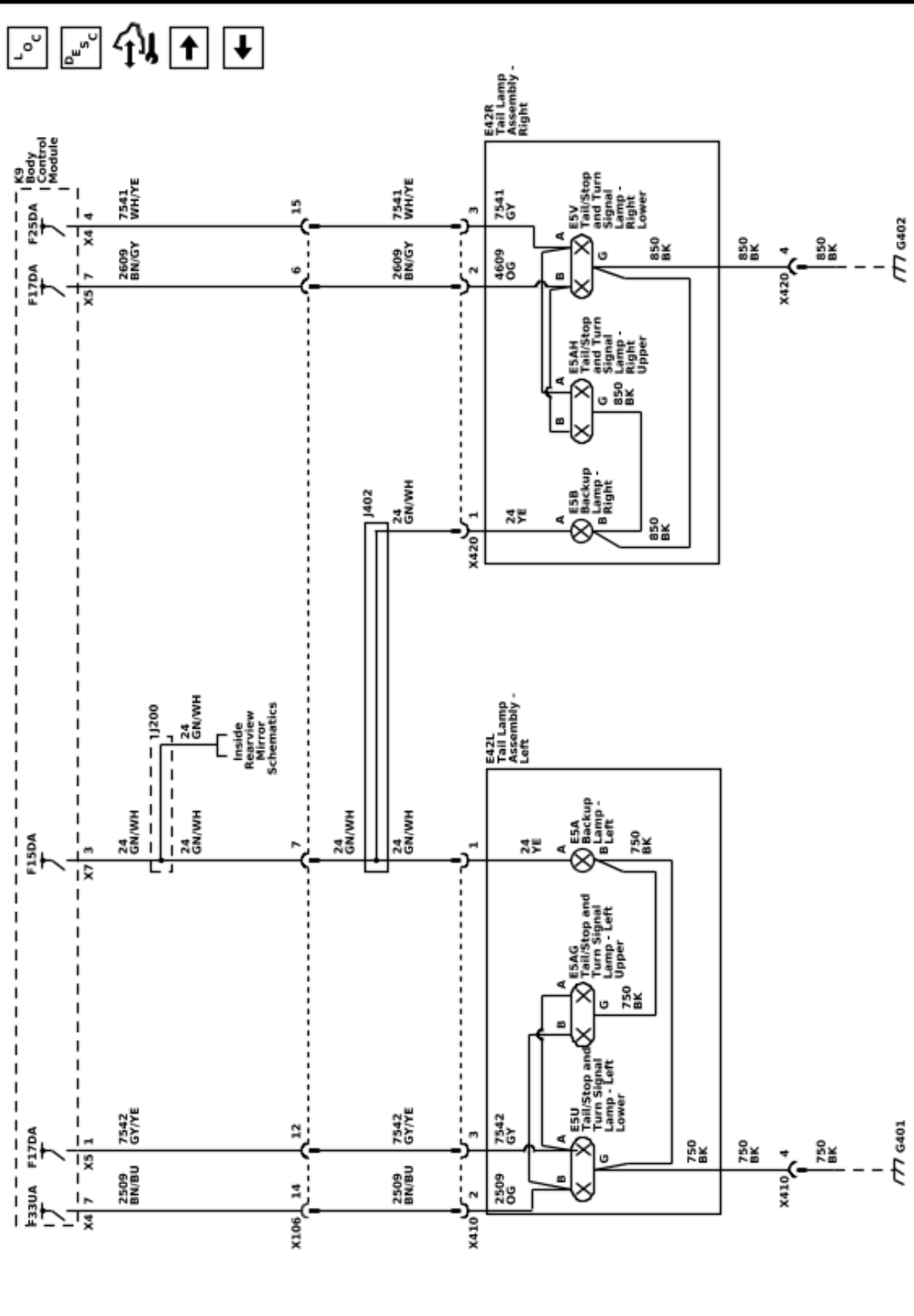

Exterior Lights Schematics (CHMSL, Cargo, License Plate Lamps and Accessory Bed Lighting (S0Y))

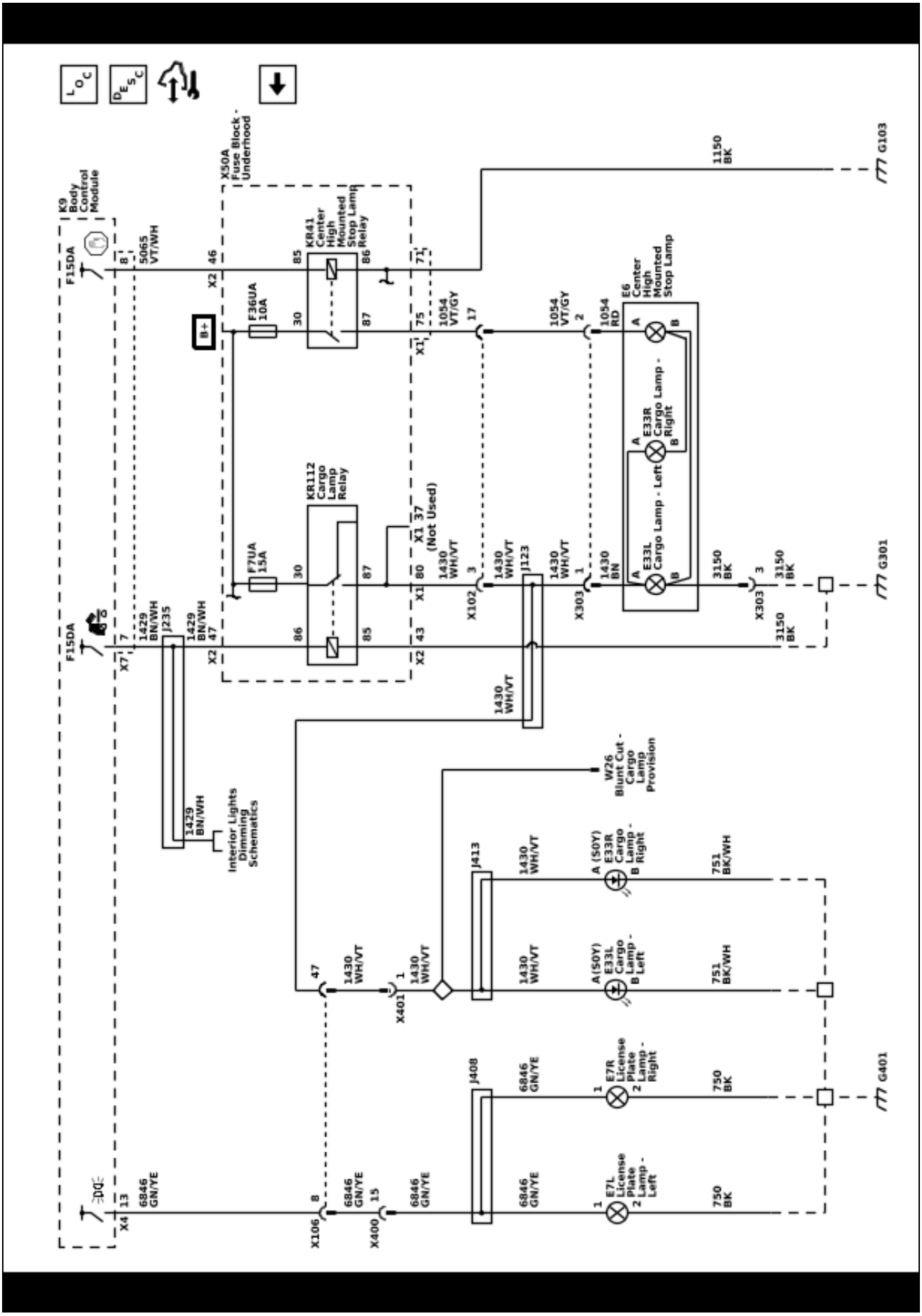

5681596

5681597

Interior Lights Schematics (Dome Lamps (Except C74))

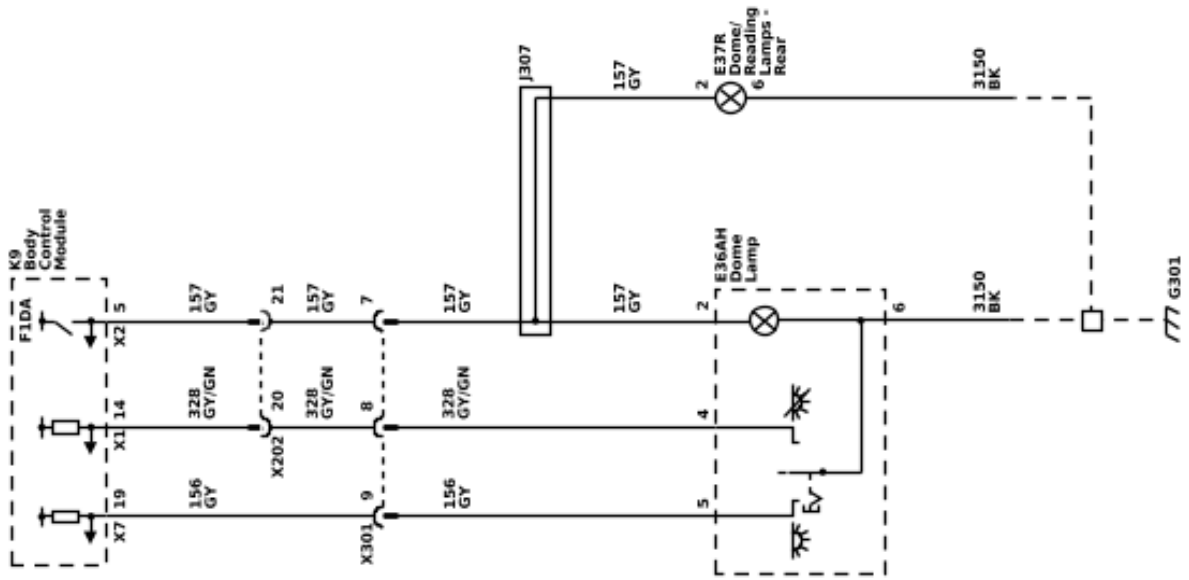

Interior Lights Schematics (Dome/Reading, and Sunshades Lamps (C74/TR0/D6I))

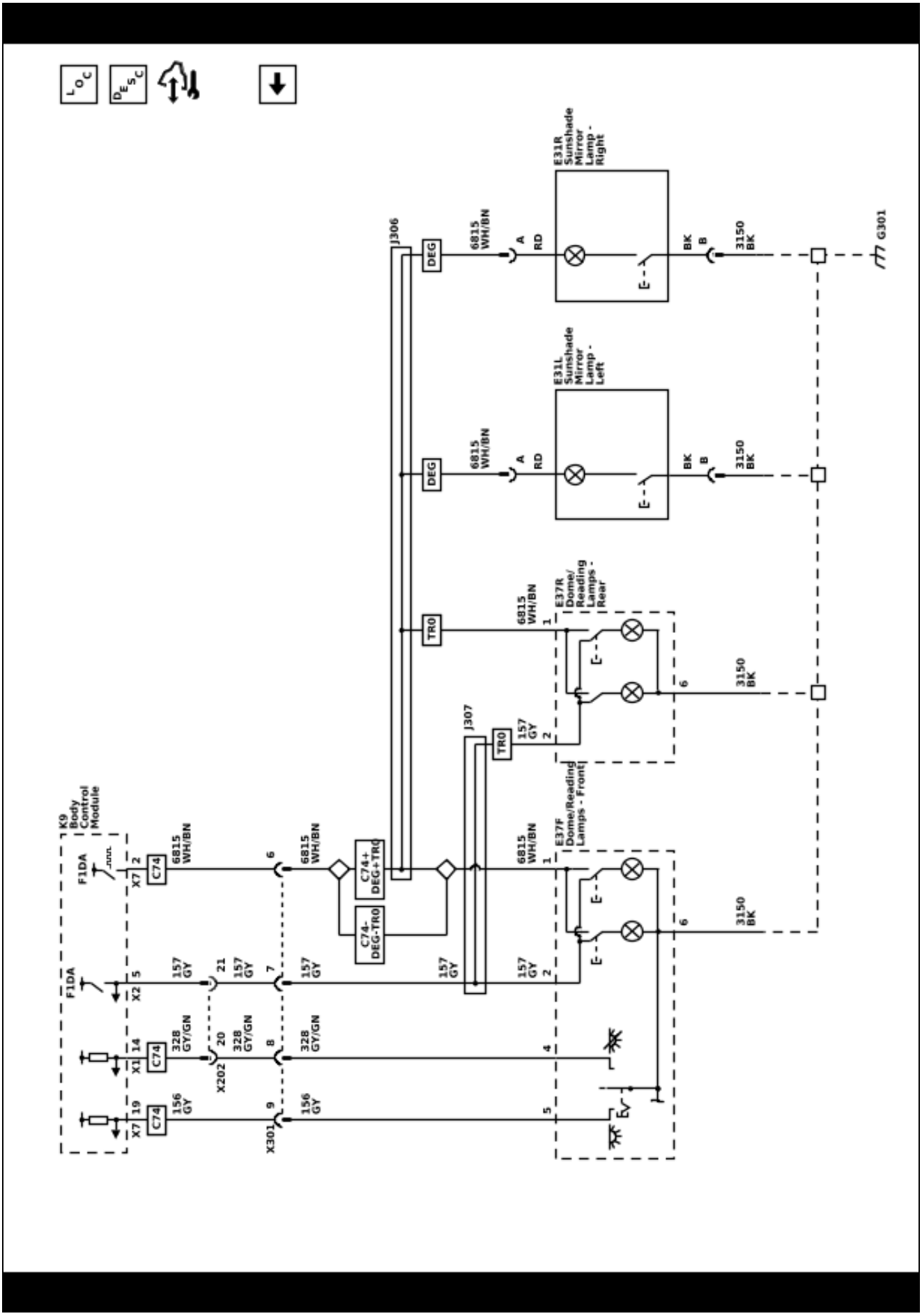

5681598

Interior Lights Dimming Schematics (Dimming Control (1 of 3))

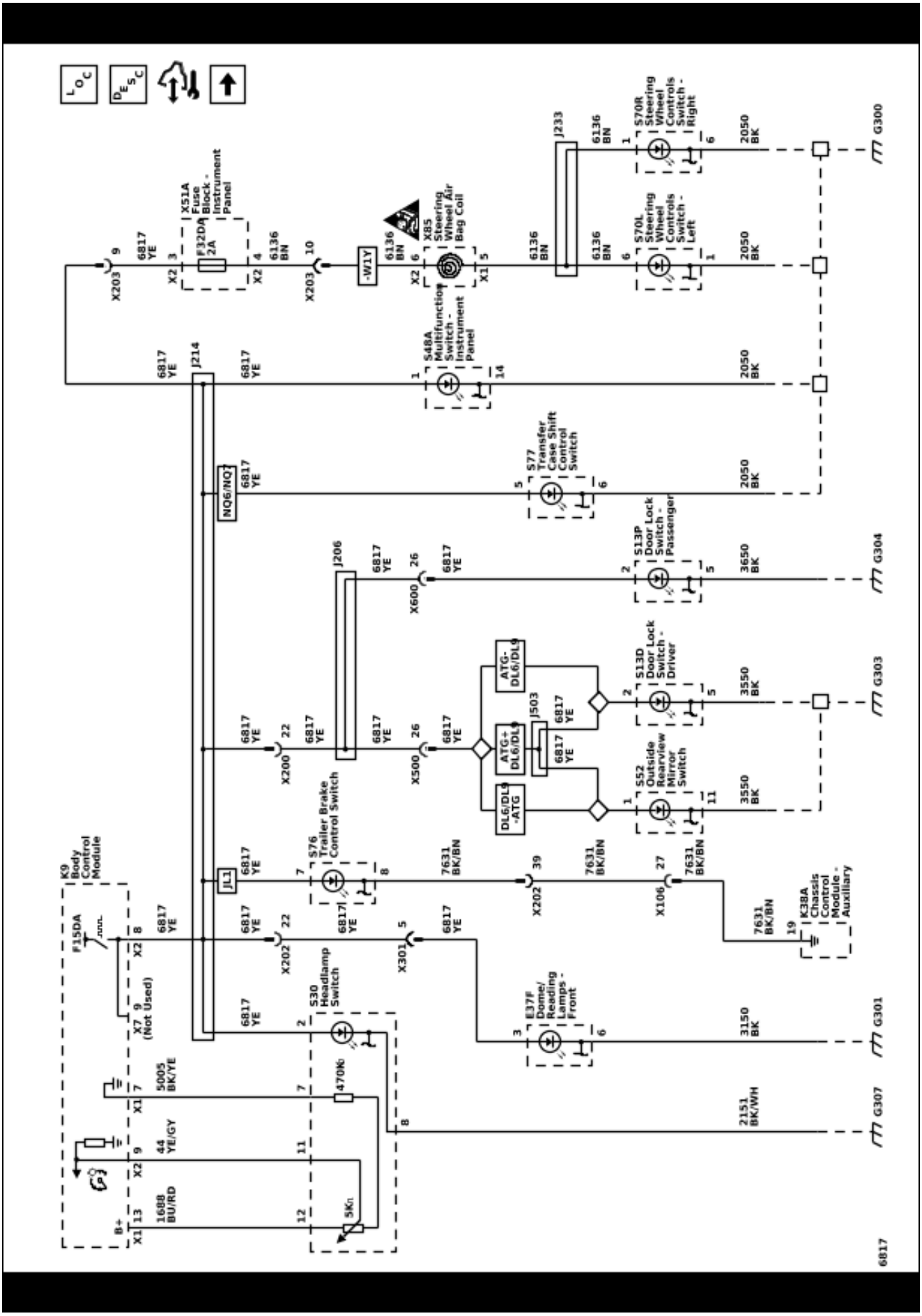

5681599

Interior Lights Dimming Schematics (Dimming Control (2 of 3))

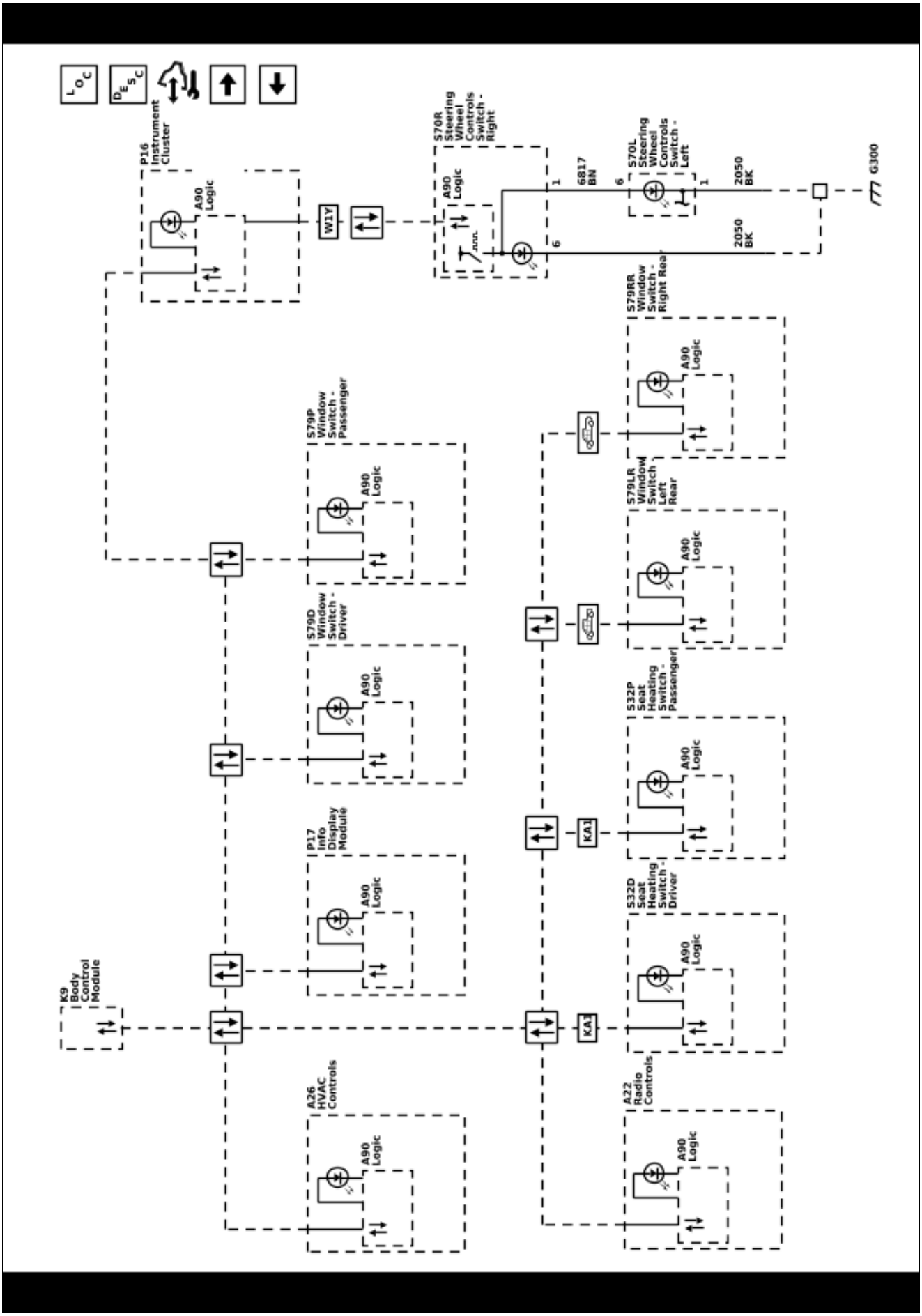

5681600

Interior Lights Dimming Schematics (Dimming Control (3 of 3))

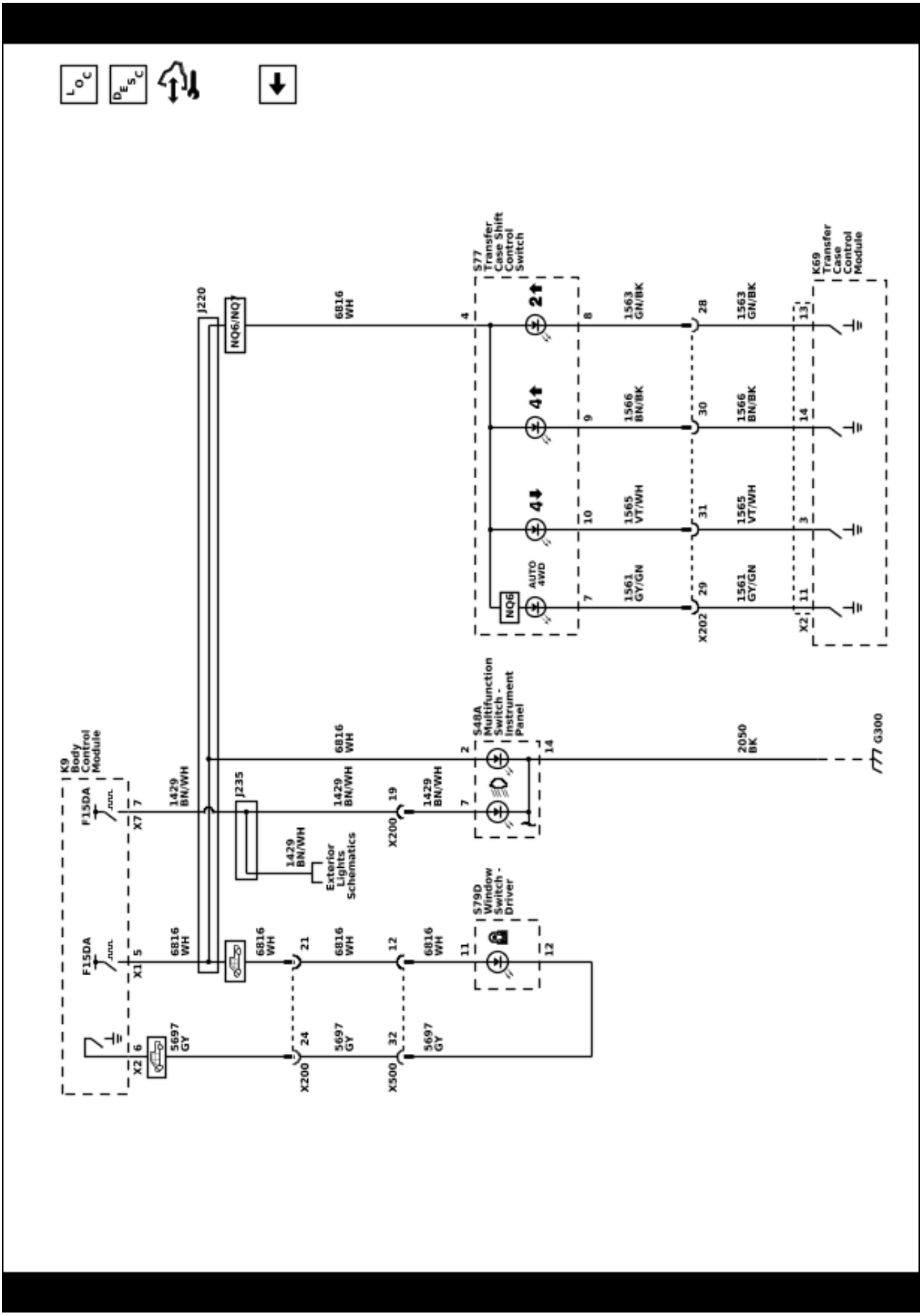

5681601

Description and Operation

Exterior Lighting Systems Description and Operation

The exterior lighting system consist of the following lamps:

- Backup lamps
- Daytime running lamps
- Front fog lamps
- Hazard warning lamps
- Headlamps
- Park, tail, license, and marker lamps
- Stop lamps
- Turn signal lamps
- Trailer lighting

Low Beam Headlamps

The headlamps may be turned ON in 3 different ways:

- When the headlamp switch is placed in the ON position, for normal operation
- When the headlamp switch is placed in the AUTO position, for automatic lamp control
- When the headlamp switch is placed in the AUTO position, with the windshield wipers ON in daylight conditions, after a 6 second delay

The BCM will also command the low beam headlamps ON during daylight conditions when the following conditions are met:

- Headlamp switch in the AUTO position
- Windshield wipers ON
- Vehicle in any gear but PARK

When the BCM commands the low beam headlamps ON, the vehicle operator will notice the interior backlighting for the instrument cluster and the various switches with backlighting control will dim to the level of brightness selected by the instrument panel dimmer switch.

The body control module (BCM) monitors three signal circuits from the headlamp switch. When the headlamp switch is in the AUTO position, all three signal circuits are open. When placed in the AUTO position, the BCM monitors inputs from the ambient light sensor to determine if headlamps are required or if daytime running lamps will be activated based on outside lighting conditions. When the headlamp switch is placed in the OFF position, the headlamp switch headlamps OFF signal circuit is grounded, indicating to the BCM that the exterior lamps should be turned OFF. With the headlamp switch in the PARK position, the headlamp switch park lamps ON signal circuit is grounded, indicating that the park lamps have been requested. When the headlamp switch is placed in the HEADLAMP position, both the headlamp switch park lamps ON signal circuit and the headlamp switch headlamps ON signal circuit are grounded. The BCM responds to the inputs by illuminating the park lamps and headlamps. When the low beam headlamps are requested, the BCM applies B+ to both low beam headlamp control circuits illuminating the low beam headlamps.

High Beam Headlamps

Note: High beams are controlled through a non-servicable printed circuit board (PCB) relay. If the relay is found to be defective, fuse block assembly replacement will be required

When the low beam headlamps are ON and the turn signal/multifunction switch is placed in the high beam position, ground is applied to the BCM through the high beam signal circuit. The BCM responds to the high beam request by applying ground to the high beam relay control circuit which energizes the high beam relay. With the high beam relay energized, the switch contacts close allowing battery voltage to flow through the left and right high beam fuses to the high beam control circuits illuminating the left and right high beam headlamps.

Daytime Running Lamps

The daytime running lamps/low beams will illuminate continuously when the following conditions are met:

- The ignition is in the RUN or CRANK position
- The shift lever is out of the PARK position for vehicles equipped with automatic transmissions or the parking brake is released for vehicles with manual transmissions

The ambient light sensor is used to monitor outside lighting conditions. The ambient light sensor provides a voltage signal that will vary between 0.2 and 4.9 volts depending on outside lighting conditions. The body control module (BCM) provides a 5 V reference signal to the ambient light sensor and the HVAC control module provides a low reference ground. The BCM monitors the ambient light sensor signal circuit to determine if outside lighting conditions are correct for either daytime running lights or automatic lamp control when the headlamp switch is in the AUTO position. In daylight conditions the BCM will command the low beam headlamps ON.

Flash to Pass

When the turn signal/multifunction switch is momentarily placed in the flash to pass position, ground is applied to the turn signal/multifunction switch. The turn signal/multifunction switch applies ground to the body control module (BCM) through the flash to pass switch signal circuit. The BCM responds to the flash to pass request by applying ground to the high beam relay control circuit. This energizes the high beam relay, closing the switch side contacts of the high beam relay, applying battery voltage to the left and right high beam fuses. Battery voltage is applied from the high beam fuses through the high beam control circuit to the high beam headlamp assemblies. This causes the high beam headlamps to illuminate at full brightness momentarily.

Backup Lamps

With the engine ON and the transmission in the REVERSE position, the transmission control module (TCM) sends a serial data message to the body control module (BCM). The message indicates that the gear selector is in the REVERSE position. The BCM applies battery voltage to the backup lamps control circuit illuminating the backup lamps. Once the driver moves the gear selector out of the REVERSE position, a

message is sent by the TCM via serial data requesting the BCM to remove battery voltage from the backup lamps control circuit. The engine must be ON for the backup lamps to operate.

Front Fog Lamps

The front fog lamp switch is an input to the body control module (BCM) and is contained in the headlamp switch assembly. The BCM supplies voltage to the front fog lamp switch via the front fog lamp and instrument panel dimmer switch B+ circuit. When the front fog lamp switch is pressed, voltage from the B+ circuit is pulled down through the front fog lamp switch resistor. The front fog lamp resistor is part of the resistor ladder that also provides the dimming signals for the instrument panel dimmer switches. The BCM receives the voltage signal through the front fog lamp and instrument panel dimmer switch signal circuit.

The front fog lamp relay is supplied with battery voltage at all times. The front fog lamp switch signal circuit is grounded momentarily by pressing the front fog lamp switch. The body control module (BCM) energizes the front fog lamp relay by applying ground to the front fog lamp relay control circuit. When the front fog lamp relay is energized, the relay switch contacts close and battery voltage is applied through the front fog lamp fuse to the front fog lamp control circuit which illuminates the front fog lamps.

Hazard Lamps

The hazard flashers may be activated in any power mode. The hazard switch signal circuit is momentarily grounded when the hazard switch is pressed. The body control module (BCM) responds to the hazard switch signal input by supplying battery voltage to all four turn signal lamps in an ON and OFF duty cycle. When the hazard switch is activated, the BCM sends a serial data message to the instrument panel cluster requesting both turn signal indicators to be cycled ON and OFF.

The instrument panel dimmer switch controls the brightness of the interior backlighting components. When the instrument panel dimmer switch is placed in a desired brightness position, the body control module (BCM) receives a signal from the instrument panel dimmer switch and responds by applying a pulse width modulated voltage to the hazard switch light emitting diode (LED) backlighting control circuit illuminating the LED to the desired level of brightness.

Park, Tail, and License Lamps

When the headlamp switch is placed in the HEAD or PARK position, ground is applied to the park lamp switch ON signal circuit to the body control module (BCM). The BCM responds by applying voltage to the park lamps, tail lamps, and license lamps control circuits illuminating the park, tail, and license lamps.

Stop Lamps

The brake pedal position sensor is used to sense the action of the driver application of the brake pedal. The brake pedal position sensor provides an analog voltage signal that will increase as the brake pedal is applied. The body control module (BCM) provides a low reference signal and a 5 V reference voltage to the brake pedal position sensor. When the variable signal reaches a voltage threshold indicating the brakes have been applied, the BCM will apply battery voltage to the left and right stop lamp control circuits as well as the center high mounted stop lamp control circuit illuminating the left and right stop lamps and the center high mounted stop lamp.

Turn Signal Lamps

Ground is applied at all times to the turn signal/multifunction switch. The turn signal lamps may only be activated with the ignition switch in the ON or START positions. When the turn signal/multifunction switch is placed in either the TURN RIGHT or TURN LEFT position, ground is applied to the body control module (BCM) through either the right turn or left turn signal switch signal circuit. The BCM responds to the turn signal switch input by applying a pulsating voltage to the front and rear turn signal lamps through there respective control circuits. When a turn signal request is received by the BCM, a serial data message is sent to the instrument cluster requesting the respective turn signal indicator be pulsed ON and OFF.

Battery Run Down Protection/ Inadvertent Power

To provide battery run down protection, the exterior lamps will be deactivated automatically under certain conditions. The BCM monitors the state of the headlamp switch. If the park or headlamp switch is ON when the ignition switch is placed in either the CRANK or RUN position and then placed in the OFF position, the BCM initiates a 10 minute timer. At the end of the 10 minutes, the BCM will turn off the control power output to the park lamp controls as well as the headlamp relay coils, deactivating the exterior lamps. This feature will be cancelled if any power mode other than OFF becomes active. The BCM will disable battery run down protection if any of the following conditions exist. The park or headlamp switch is placed in the ON to OFF position, and back to the ON position during battery run down protection. The BCM determined that the park or headlamp switch was not active when the ignition was turned OFF.

Interior Lighting Systems Description and Operation

Interior Lamps

The interior lighting system consist of two groups. This first group includes lamps that may not be dimmed.

- Dome lamps
- Reading lamps
- Sunshade mirror lamps

Dome Lamps

The dome lamp switch has 3 positions: DOOR, OFF, and ON. The ON position provides a ground for continuous operation and the dome lamps will remain illuminated until the switch is placed in either the DOOR or OFF position. When in the DOOR position, the dome lamps operation is controlled by the body control module (BCM). When any door is opened, the door ajar switch contacts close and the BCM receives a door-open input. The BCM illuminates the dome lamps when any door is opened or a door lock/unlock request is activated with the key fob. After all doors have been

closed, the dome lamps will remain illuminated approximately 3 seconds after the last door closes. When the driver places the dome lamp switch in the OFF position, the dome lamps will be disabled. In the event that the dome lamps were to remain illuminated for more than 10 minutes with the ignition switch in the OFF position and no doors opened, the BCM will deactivate the dome lamps control circuit to prevent total battery discharge. The dome lamps will turn OFF using the theater dimming feature when controlled by the BCM.

Reading Lamps

The inadvertent power supply voltage circuit from the BCM provides battery positive voltage to each reading lamp. When a reading lamp switch is activated, the switch contacts close providing a path to ground and the reading lamp illuminates. If the operator inadvertently leaves a reading lamp ON, the BCM will turn all interior lamps OFF after 10 minutes has passed since any switch activation has been detected by the BCM.

Sunshade Mirror Lamps

The inadvertent power supply voltage circuit from the BCM provides battery voltage to each set of sunshade mirror lamps. When the sunshade mirror cover is opened, a switch closes providing ground and the sunshade lamps illuminate. If the operator inadvertently leaves a sunshade mirror cover open with the lamps ON, the BCM will turn all interior lamps OFF after 10 minutes has passed since any switch activation has been detected by the BCM.

Keyless Entry Interior Illumination

When the operator uses the keyless entry transmitter in order to unlock the doors, the BCM receives a door-unlock signal. The BCM must receive inputs from various systems that indicate that the ignition switch is OFF, the courtesy lamp switch is OFF, and all doors are closed before the BCM will activate the interior lamps. After all doors have been closed, the courtesy lamps will turn OFF immediately if the ignition switch is turned to the ON position, the door locks are LOCKED, or approximately 20 seconds after the last door closes. The BCM will turn off the courtesy lamps through the theater dimming feature. The BCM keeps the courtesy lamps on for 40 seconds after an alarm event is completed.

Interior Lamps Dimming

The second group includes lamps which may be dimmed. This group may use a combination of light emitting diodes (LED), incandescent lamps, and pulse width modulation (PWM) illumination.

- Dome/reading lamps – front
- Dome/reading lamps – rear
- Door lock switch – driver
- Door lock switch – passenger
- Hazard switch
- Headlamp switch
- HVAC control head assembly
- Multifunction switch – instrument panel
- Outside rearview mirror switch
- Radio
- Steering wheel control switch – left
- Steering wheel control switch – right
- Sun roof switch
- Sun roof tilt switch
- Window switch – passenger

With the headlamp switch in the PARK or HEAD position, the park lamp switch signal circuit provides an input to the body control module (BCM). The BCM responds by applying voltage to the park lamps as well as the backlight dimming control circuits illuminating all components with interior backlighting. All interior backlighting turns ON at the dimming level indicated by the instrument panel dimmer switch. The instrument panel dimmer switch is a momentary type switch and utilizes a resistor ladder to increase and decrease the brightness of the interior backlighting components. The instrument panel dimmer switch provides a voltage signal to the BCM that will increase as the brightness of the lights are increased and decrease as the brightness of the lights are decreased. The BCM provides a low reference signal and a B+ circuit to the switch. When the instrument panel dimmer switch is held in the desired position, the dimmed voltage setting is applied from the instrument panel dimmer switch through the instrument panel dimmer switch signal circuit to the BCM. The BCM interprets the signal and applies a pulse width modulated (PWM) voltage through the backlighting control circuits illuminating the interior backlighting to the requested level of brightness.

The backlighting for the HVAC controls, instrument cluster, and radio controls are controlled by the BCM via serial data. When the instrument panel dimmer switch is operated to the desired backlighting setting, the BCM sends a serial data message to the HVAC control module, radio, and instrument cluster requesting the backlighting be adjusted to the desired level.

Battery Rundown Protection/ Inadvertent Power

The BCM inadvertent power supply voltage circuit provides battery voltage to all of the interior courtesy lamps. In the event that any of these lamps were to remain illuminated for a period of more than 10 minutes with the ignition switch in the OFF position, the BCM will deactivate the inadvertent power supply voltage circuit to prevent total battery discharge. If the ignition switch is turned to any position other than OFF, or if a lamp switch is activated during this 10 minute period, the timer resets for another 10 minutes.

Mirrors

Schematic and Routing Diagrams

Inside Rearview Mirror Schematics (Auto-Dimming Mirror (DD8))

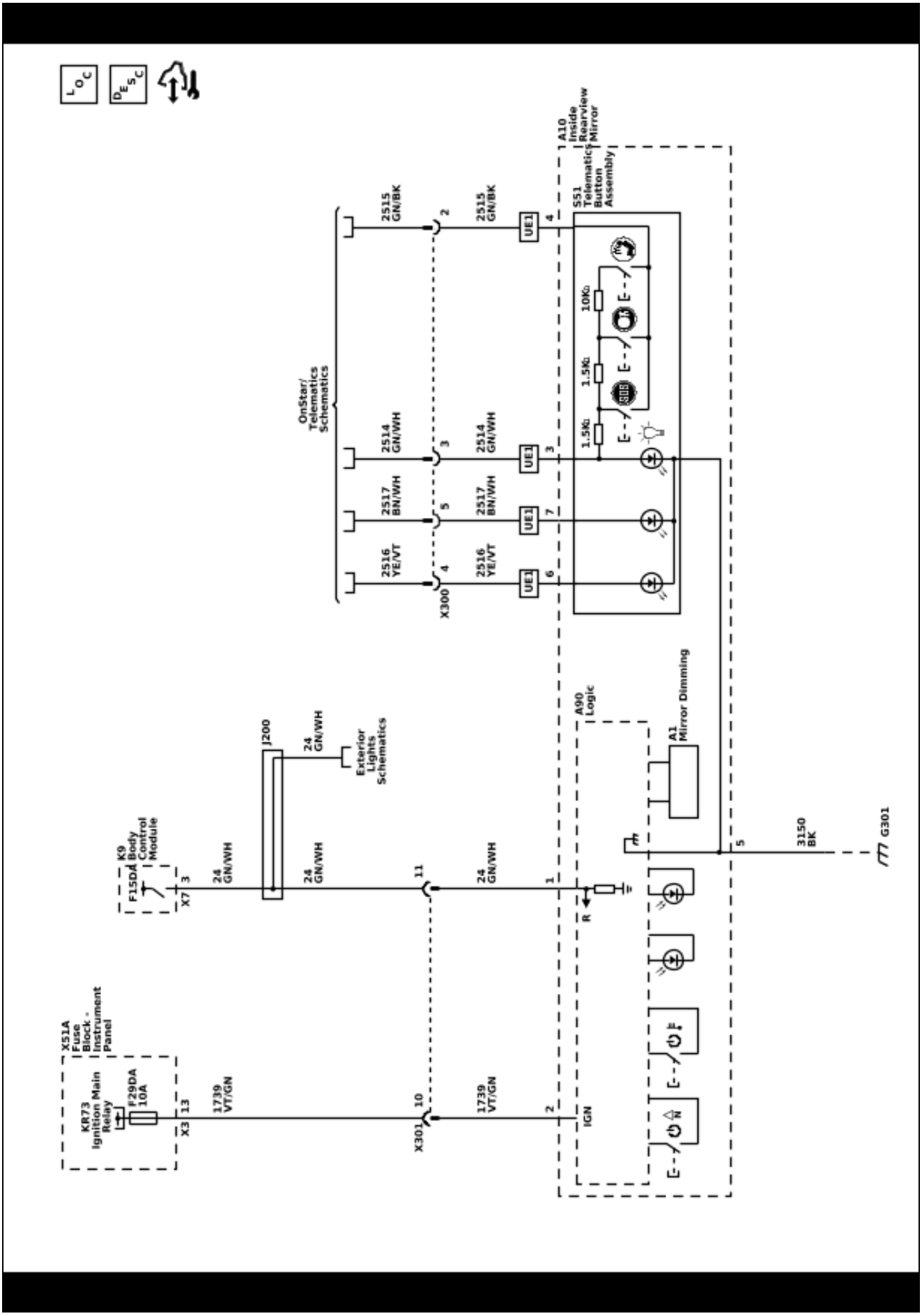

Outside Rearview Mirror Schematics (Driver and Passenger Position)

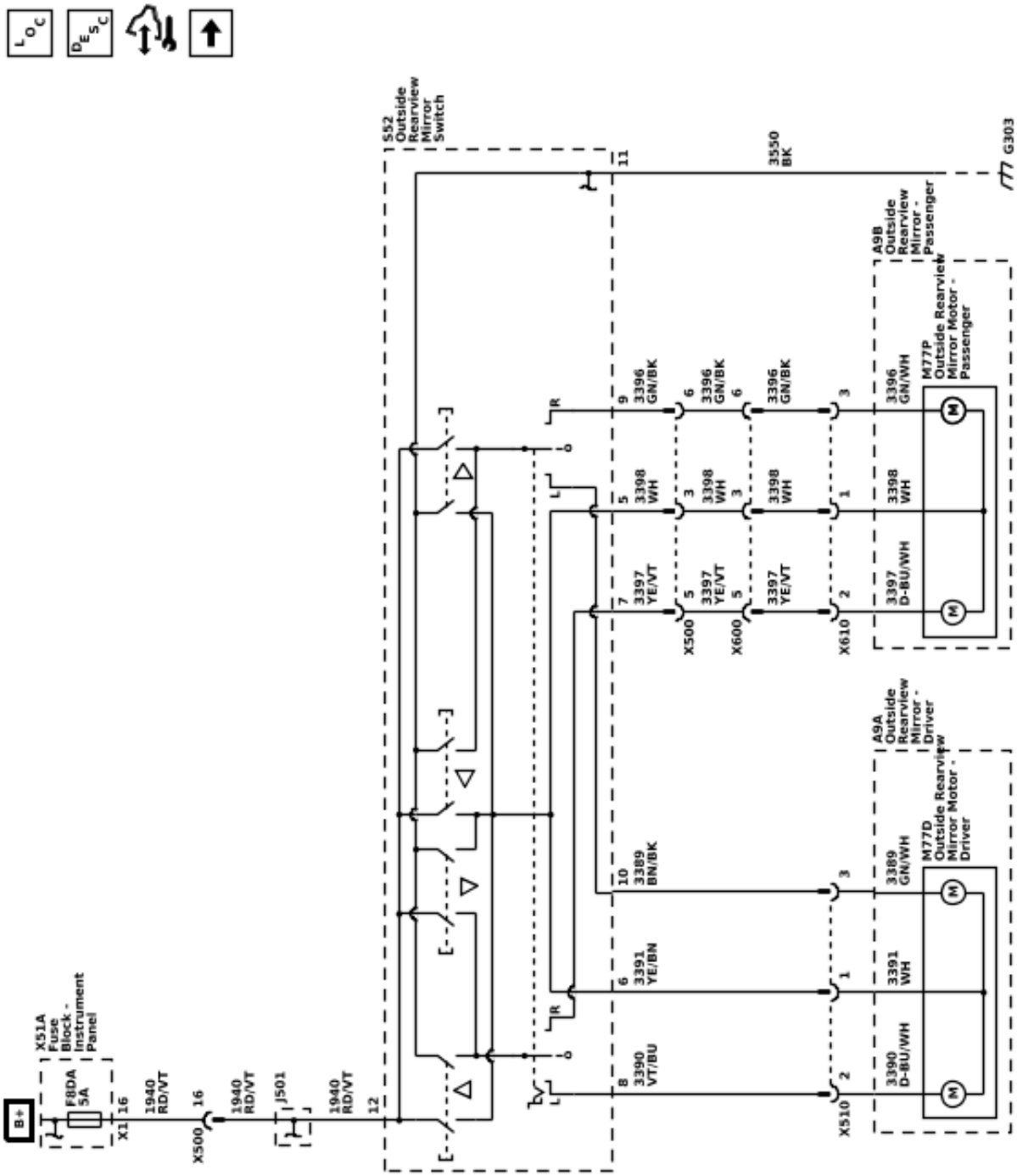

5681605

Outside Rearview Mirror Schematics (Heating (DL9))

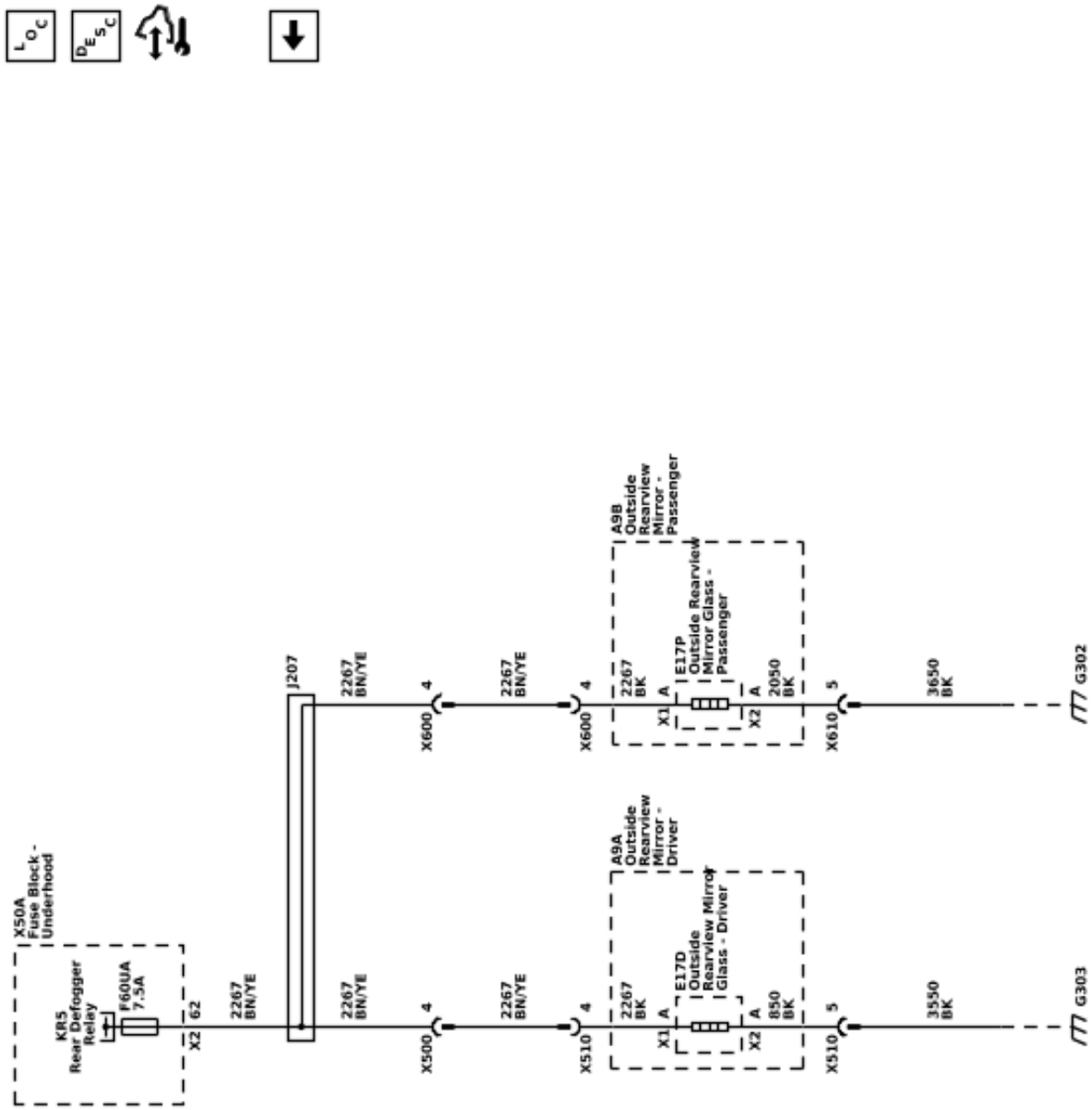

5681606

Description and Operation

Automatic Day-Night Mirror Description and Operation

Inside Rearview Mirror with the Automatic Day-Night Feature System Operation

The inside rearview mirror uses 2 photocell sensors. One sensor is the headlight sensor, located on the face side of the mirror. The headlight sensor is used to determine light conditions present at the mirror face. The other sensor is the ambient light sensor, located on the rear of the mirror or windshield side. The ambient light sensor is used to determine the exterior light conditions. With a low exterior light condition detected, and a high light condition from behind of the car, at the headlight sensor, the inside rearview mirror will automatically darken the face of the mirror.

In the daytime, the mirror is in a normal state because of the high exterior light condition that is indicated by the ambient light sensor. With the gear selector lever in the REVERSE position, backup lamp supply voltage is supplied as an input to the inside rearview mirror. The mirror monitors this input to disable the automatic day-night feature. This allows the driver to see objects in the mirror clearly when backing up, even during the night.

Trailering Systems

Schematic and Routing Diagrams

Trailering Systems Schematics (Trailer Brake (LWN))

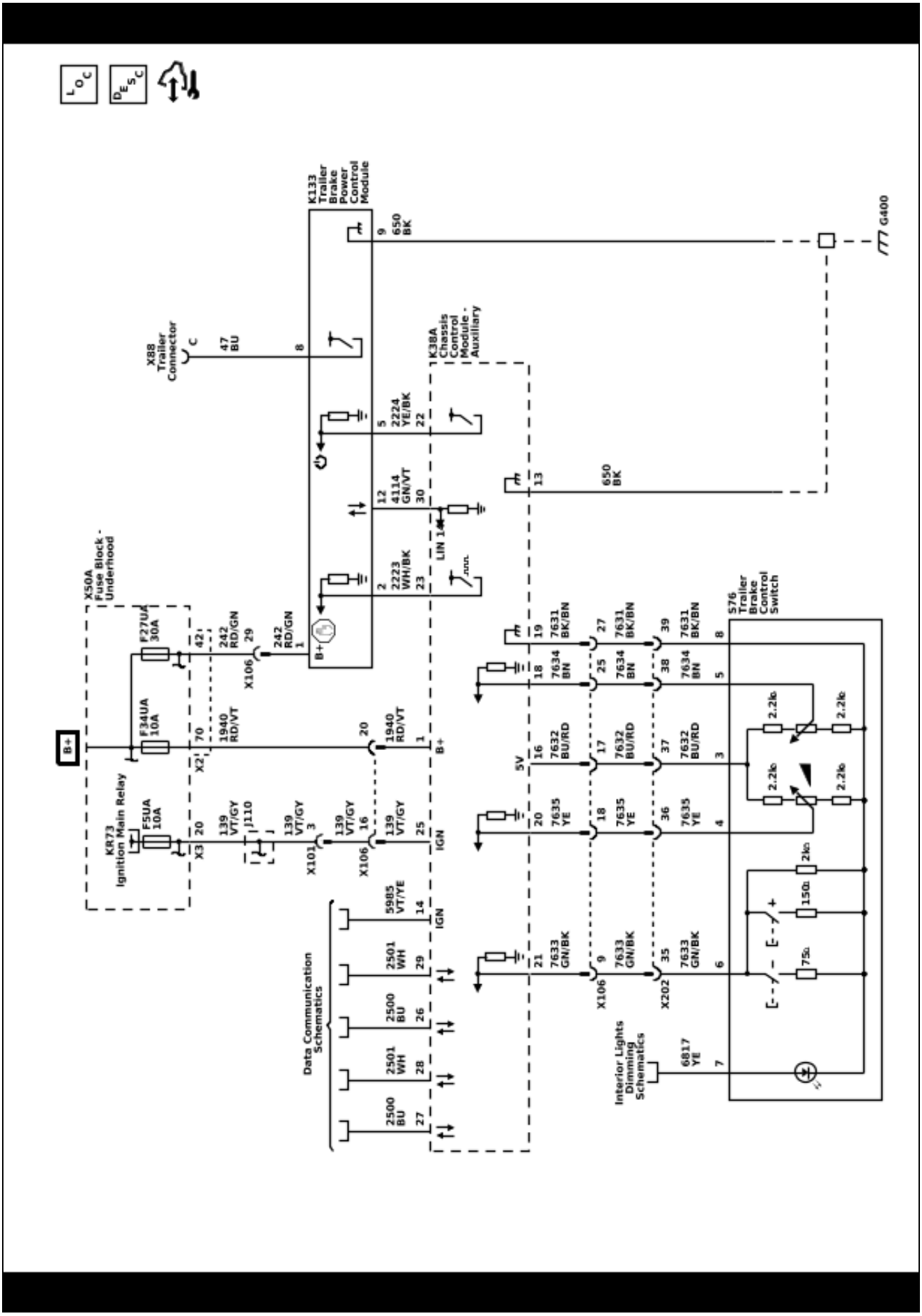

Trailering Systems Schematics (Trailer Brake (LGZ))

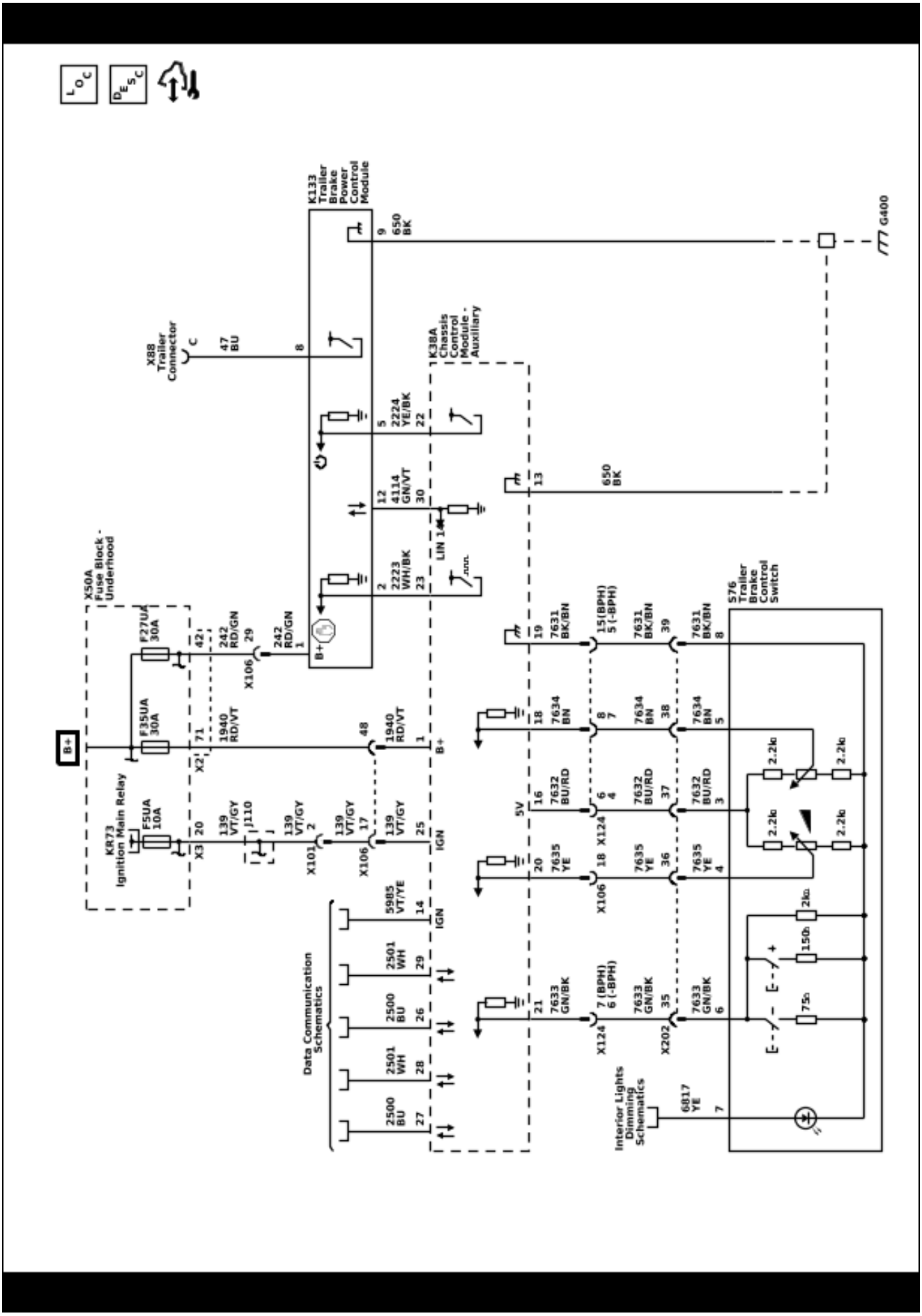

5681608

Trailering Systems Schematics (Trailer Connector Pins: A,D,F, and G)

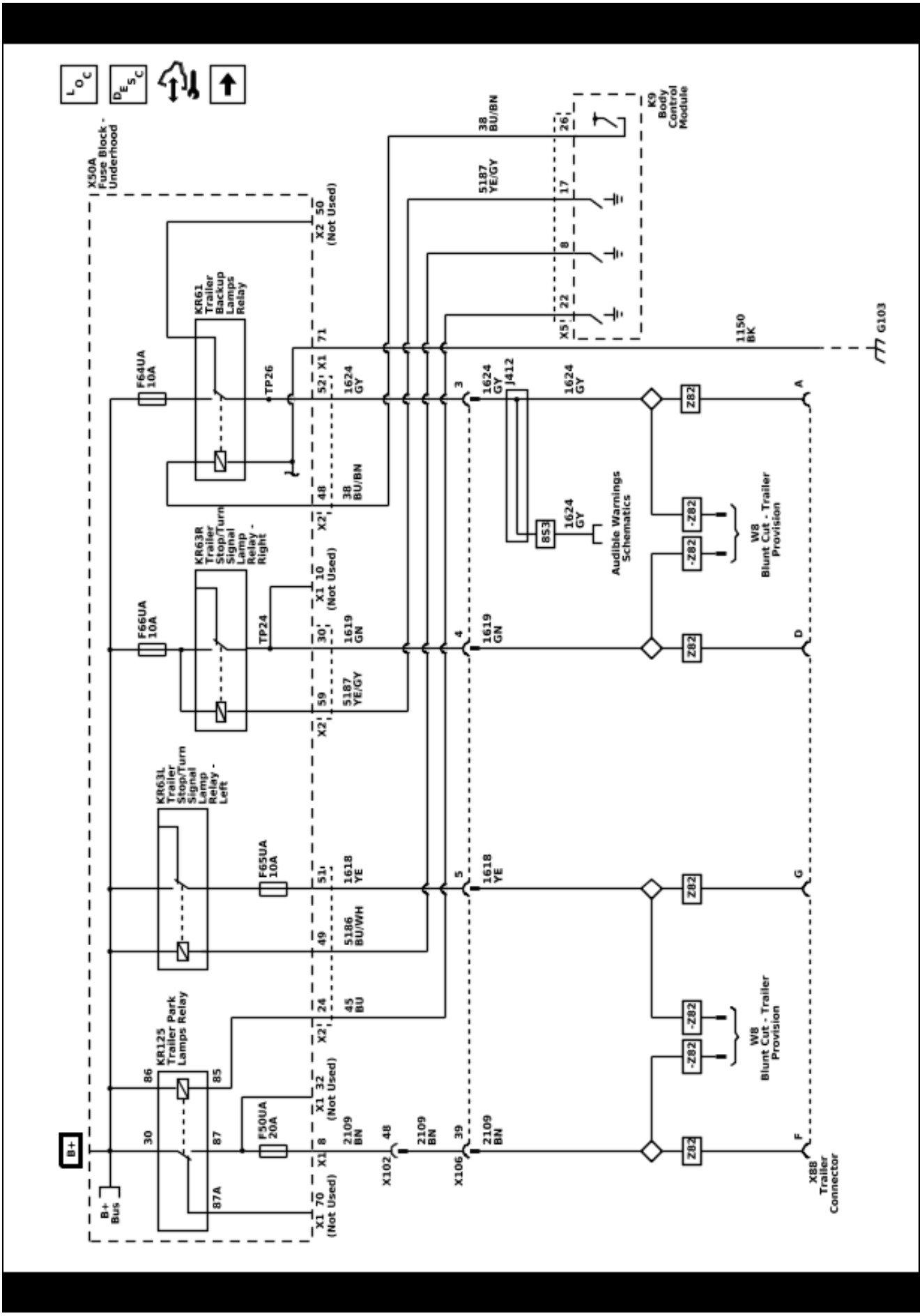

Trailering Systems Schematics (Trailer Connector Pins: B,C, E, and Trailer Brakes Provisions)

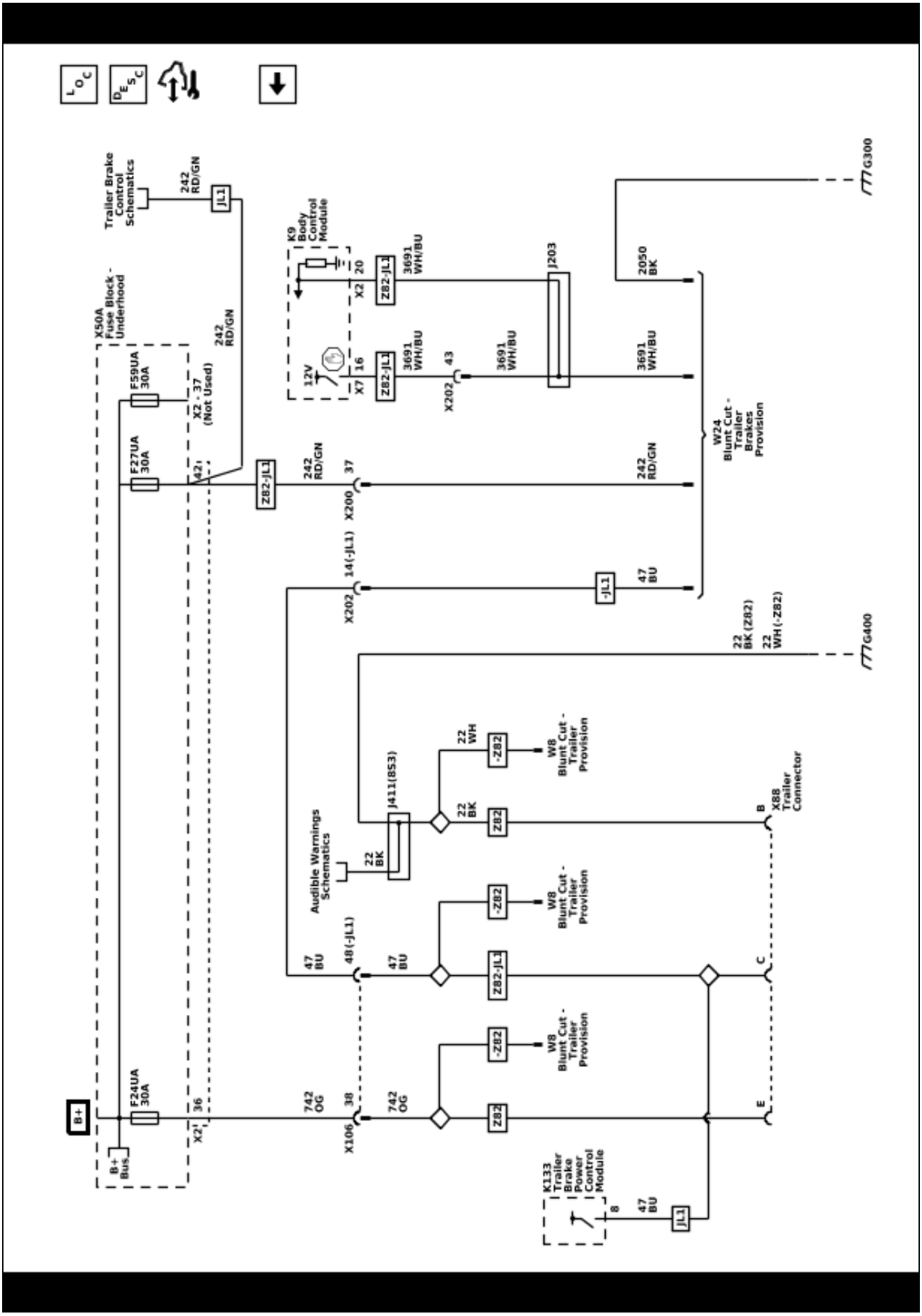

5681610

Description and Operation

Trailering Description and Operation

Trailer Lighting

Backup Lamps

For backup lamp operation, the trailer backup lamps relay is supplied with battery voltage at all times. With the engine running and the transmission in the reverse position, the transmission control module (TCM) sends a serial data message to the body control module (BCM). The message indicates that the gear selector is in the reverse position. The BCM responds to the backup lamp request by energizing the trailer backup lamps relay by applying battery voltage to the trailer backup lamps relay control circuit. When the trailer backup lamps relay is energized, the relay switch contacts close and battery voltage is applied through the backup lamp fuse to the trailer backup lamps control circuit which illuminates the trailer backup lamps. Once the driver moves the gear selector out of the reverse position, a message is sent by the TCM via serial data requesting the BCM to remove battery voltage from the trailer backup lamps relay control circuit.

Park Lamps

For trailer park lamp operation, the trailer park lamps relay is supplied with battery voltage at all times. When the headlamp switch is placed in the HEAD or PARK position, ground is applied to the park lamp switch ON signal circuit to the body control module (BCM). The BCM responds to the park lamp request by energizing the trailer park lamps relay by applying ground to the trailer park lamps relay control circuit. When the trailer park lamps relay is energized, the relay switch contacts close and battery voltage is applied through the trailer parks lamp fuse to the trailer park lamp control circuit which illuminates the trailer park lamps.

Stop Lamps

For trailer stop lamp operation, the left and right trailer stop/turn signal lamp relay's are supplied with battery voltage at all times. The brake pedal position sensor is used to sense the action of the driver application of the brake pedal. The brake pedal position sensor provides an analog voltage signal that will increase as the brake pedal is applied. The body control module (BCM) provides a low reference signal and a 5 V reference voltage to the brake pedal position sensor. When the variable signal reaches a voltage threshold indicating the brakes have been applied, the BCM energizes the left and right trailer stop/turn signal lamp relay's by applying ground to the left and right trailer stop/turn signal lamp relay control circuits. With the left and right trailer stop/turn signal lamp relay's energized, the relay switch contacts close and battery voltage is applied through the left and right trailer stop/turn signal fuse's to the trailer stop lamp control circuits which illuminates the trailer stop lamps.

Turn Signal Lamps

For trailer turn signal lamp operation, the left and right trailer stop/turn signal lamp relay's are supplied with battery voltage at all times. Ground is applied at all times to the turn signal/multifunction switch. The turn signal lamps may only be activated with the ignition switch in the ON or START positions. When the turn signal/multifunction switch is placed in either the TURN RIGHT or TURN LEFT position, ground is applied to the body control module (BCM) through either the right turn or left turn signal switch signal circuit. The BCM responds to the turn signal switch input by applying a pulsating ground to the left and right trailer stop/turn signal lamp relay control circuits energizing the relay's in an ON and OFF cycle. With the left and right trailer stop/turn signal lamp relay's energized, the relay switch contacts cycle ON and OFF applying battery voltage through the left and right trailer stop/turn signal fuse's to the trailer turn signal lamp control circuits which illuminates the trailer turn signal lamps in an ON and OFF cycle.

Trailer Battery Charging System

Trailer battery charging is accomplished through constant battery voltage from the X50A Fuse Block – Underhood to the X88 Trailer Connector. Battery voltage is supplied to terminal E at the X88 Trailer Connector at all times. If equipped, the trailer battery will constantly be charged by the vehicle's electrical system anytime the trailer is connected. Some trailers require the B+ circuit to the X88 Trailer Connector for the trailer brakes to function.

Trailer Brakes

A trailer brake control system is used to control the amount of trailer braking power that is made available to trailers with brakes that require a controlled electrical output signal for actuation.

The power output to the trailer brakes is based on both the amount of braking being applied by the vehicle's brake system and on the type of trailer brakes detected.

The Trailer Brake Control System is compatible with two types of Trailer Brake Systems as listed below:

1. **Electric Brakes** A controlled electrical output signal energizes an electric-magnet/lever arm assembly that directly actuates the brake mechanism. The GDS name for this system is "Electromagnetic Brakes".
2. **Electric Over Hydraulic Brakes** A controlled electrical output signal energizes a remote, trailer mounted hydraulic pump to build brake pressure in a closed hydraulic system on the trailer. The hydraulic fluid pressure actuates the brake mechanism. The GDS name for this system is "Electrohydraulic Brakes".

Trailer Brake Output Versus Trailer Brake Type

- The trailer brake system characterizes the trailer brakes as either Electric Brake or Electric Over Hydraulic Brake automatically. This characterization may be affected by the number, type, and age of the trailer brake magnets, as well as any other devices installed on the trailer brakes (i.e. adapters for Electric Over Hydraulic brake functionality).
- The trailer brake system is fully operational with either characterization.
- Some features of the trailer brake system may be different based on the trailer brake type characterization. An example of this is at zero

speed, where pressing the service brake pedal will produce output when the trailer brakes are characterized as Electric Brakes, but not when characterized as Electric Over Hydraulic Brakes.

- Sliding the manual trailer brake apply lever will produce output at zero speed for either characterization.

The user gain allows the driver to adjust the amount of trailer brake output to match the trailer load and road surface. The controller determines the desired trailer brake output and provides a control signal to the K133 Trailer Brake Power Control Module. The K133 Trailer Brake Power Control Module amplifies the signal and provides the output required to activate the Electric or Electric Over Hydraulic trailer brakes.

The trailer brake control can support up to a maximum of four axles with electric trailer brakes (8 brake magnets).

Connecting a trailer that is not compatible with the trailer brake system may result in reduced or complete loss of trailer braking. There may be an increase in stopping distance or trailer instability which could result in personal injury or damage to the vehicle, trailer or other property. An aftermarket controller may be available for use with trailers with surge or air trailer brake systems.

To determine the type of brakes on your trailer and the availability of controllers, check with your trailer manufacturer or dealer. Do not power up an aftermarket controller with the factory brake controller at the same time.

The vehicle is equipped with the following trailer braking components:

- K38A Chassis Control Module-Auxiliary
- K133 Trailer Brake Power Control Module
- S76 Trailer Brake Control Panel
- Manual Trailer Brake Apply
- Trailer Gain Adjustment
- Trailer Brake Driver Information Center Display

Chassis Control Module-Auxiliary

The K38A Chassis Control Module-Auxiliary is a serviceable GMLAN module. The chassis control module sends the low power commanded duty cycle signal to the trailer brake power control module. The trailer brake power control module amplifies the signal and provides an output that is required to drive the trailer brakes.

Trailer Brake Power Control Module

The K133 Trailer Brake Power Control Module (TBPM) is a solid state power switching module that supplies power to the trailer brakes at the input command duty cycle. Diagnostic messages are sent from the TBPM to the CCM on a dedicated LIN bus.

Trailer Brake Control Panel

The S76 Trailer Brake Control Panel contains the trailer gain and manual apply switches. It is located on the instrument panel to the left of the steering column. Refer to the instrument panel overview for more information on the location. The control panel and switches allows you to adjust the amount of output, referred to as trailer gain, available to the Electric or Electric Over Hydraulic brakes. It also allows you to manually apply the trailer brakes. The trailer brake control panel and switches are used along with the trailer brake display page on the driver information center to adjust and display power output to the trailer brakes.

Manual Trailer Brake Apply

The manual trailer brake apply lever is located on the S76 Trailer Brake Control Panel and is used to apply the trailer's Electric or Electric Over Hydraulic brakes independent of the vehicle's brakes. This lever is used in the trailer gain adjustment procedure to properly adjust the power output to the trailer brakes.

Sliding the lever to the left will apply only the trailer brakes. The power output to the trailer is indicated in the trailer brake display page in the Driver Information Center (DIC). If the vehicle's service brakes are applied while using the manual trailer brake apply lever, the trailer output power will be the greater of the two.

The trailer and the vehicle's brake lamps will come on when either the vehicle's braking or manual trailer brakes are applied.

Trailer Gain Adjustment

Trailer gain should be set for a specific trailering condition and must be adjusted any time vehicle loading, trailer loading or road surface conditions change. It is important to re-adjust trailer gain any time the tow vehicle, trailer loading or road surface conditions change or it you notice trailer wheel lock-up at any time while you are towing.

Setting the trailer gain properly is needed for the best trailer stopping performance. A trailer that is over-gained may result in locked trailer brakes. A trailer that is under-gained may result in not enough trailer braking. Both of these conditions may result in poor stopping and stability of the vehicle and trailer.

Trailer Gain Adjustment Procedure

- Adjust trailer gain in 0.5 step increments up to 10 gain setting by using the gain adjustment +/− buttons on the trailer brake control panel switch. Pressing and holding a gain button will cause the trailer gain to continuously increment or decrement. To turn the output to the trailer off, set the gain to zero.
- Drive the tow vehicle and trailer combination on a level surface representative of the towing condition and free of traffic at approximately 32–40 km/h (20–25 mph) and fully apply the manual trailer brake apply lever mechanism located on the trailer brake control panel switch. Adjusting the trailer gain at slower speeds may result in an incorrect gain setting.
- Adjust the trailer gain to just below the threshold of trailer wheel lock-up . Trailer wheel lock-up may not occur if towing a heavily loaded trailer. In this case, adjust the trailer gain to the highest allowable setting for the towing condition.

Hill Start Assist

The hill start assist allows the driver to launch the vehicle without a roll back when the driver is moving their foot from the brake pedal to the accelerator pedal.

Refer to the hill start assist system in the anti-lock brake system description and operation document for more information.

Trailer Sway Control

The trailer sway control can detect the vehicle yaw instability, caused by an attached trailer. Refer to the trailer sway control system in the anti-lock brake system description and operation document for more information.

Trailer Gain and Output Display

This display menu can be accessed by scrolling through the DIC menu, or any time the trailer gain +/− button is depressed, or the manual trailer brake apply lever is actuated. The trailer output is displayed from 0 to full output and indicates the output power provided to the trailer brakes, relative to the gain setting.

After the electrical connection is made to a trailer equipped with electric brakes or electric over hydraulic brakes, the TRAILER CONNECTED message will be displayed momentarily on the DIC. The Trailer Brake Display Page can be selected on the DIC showing TRAILER GAIN and OUTPUT, after all vehicle related service messages are acknowledged by the driver. Depending on which instrument panel cluster is in the vehicle, the DIC may display dashed lines, a greyed out display, or it may be blank signifying a disconnected trailer or a trailer brake fault condition.

Trailer Brake Messages

The following indicators are used to inform the driver of several different conditions:

Trailer Connected

This message will be briefly displayed when a trailer with Electric or Electric Over Hydraulic brakes is first connected to the vehicle. This message will automatically turn off in about ten seconds. The driver can also acknowledge this message before it automatically turns off.

Check Trailer Wiring

This message will be displayed if:

- The system detects that a trailer with Electric or Electric Over Hydraulic brakes is connected to the vehicle and then the trailer harness becomes disconnected from the vehicle.
- The trailer connection is recognized initially and then a disconnect occurs while the vehicle is stationary. This message will automatically turn off in about thirty seconds. This message will also turn off if the driver acknowledges this message off or if the trailer harness is reconnected.
- A disconnect of the trailer wiring harness occurs while the vehicle is moving. The Check Trailer Wiring message will continue until the ignition is turned off. The message will also turn off if the driver acknowledges this message off or it the trailer harness is re-connected or repairs are completed.
- There is an electrical fault in the wiring to the electric trailer brakes. The Check Trailer Wiring message will continue as long as there is an electrical fault in the trailer wiring. This message will also turn off if the driver acknowledges this message off.
- A poor connection at the 7–way connector may cause the Check Trailer Wiring message. Some aftermarket 7–way trailer side connector adapters or plugs may cause deformation or excessive wear to the vehicle’s trailer terminals. It is recommended that you use an OEM or Pollak heavy duty 7–way trailer side connector adapter.

Service Trailer Brake System

This message will be displayed when there is a problem with the trailer brake control system. The trailer brake system may not be fully functional, or may not be functioning at all. The trailer brake system is designed to provide trailer braking, if possible, even when faults prevent it from being fully functional. This reduced functionality includes:

1. Providing trailer braking when the master cylinder pressure or brake pedal switch are faulted.
2. Providing trailer braking when hill start assist and trailer sway control communication is faulted.
3. Providing trailer braking when certain manual trailer brake apply lever faults are present.

These conditions should be repaired to allow the trailer brake system to be fully functional.

Trailering Diagnostic Tools

In some situations when diagnosing trailer lighting, or integrated trailer brakes, it may be necessary to connect the vehicle to a trailer to confirm proper operation. Performing this activity may prove difficult in the service environment since trailers are not often available for diagnostic use, may have existing electrical issues outside of the issues a technician is attempting to diagnose, or simply may be too unwieldily to connect for diagnosis.

With all this in mind, it may be helpful to build or create a tool that can be plugged into the vehicle’s 7-way trailer connector and simulate a connected trailer. This tool would include park lamps, stop lamps, and a reverse lamp for lighting and trailer tire pressure monitoring diagnosis. It can be expanded to include trailer brake magnets to diagnose integrated trailer brake concerns. Also, an additional lamp can be included to diagnose the B+ circuit to the trailer.

Trailer issues are NOT covered under warranty, but these tools may be used to verify the vehicle is functioning properly and to help the customer understand and correct any trailer related issues if they so choose.

Available Trailer Presence Simulator Tool

Illustration	Tool Number/Description
5166189	*EL-52641* Trailer Presence Simulator Tool

Simulated Trailer Lighting

Creating a tool to simulate a connected trailer can be used to diagnose issues with trailer lighting, trailer brake (if equipped), the Trailering App (if equipped), and trailer tire pressure monitoring system (if equipped).

If the vehicle is equipped with a K68 Trailer Lighting Control Module, the K68 Trailer Lighting Control Module monitors the current on the lighting circuits to determine a trailer has been connected. The K68 Trailer Lighting Control Module pulses current on the trailer lighting circuits every 10–15 s to monitor for a connected trailer. If a greater than 55mA draw is detected, the K68 Trailer Lighting Control Module recognizes this as a connected trailer. This will enable any trailer lighting controlled by the K68 Trailer Lighting Control Module. If the vehicle is also equipped with trailer tire pressure monitoring, the K68 Trailer Lighting Control Module will also use this trailer detection as a cue to enable the Trailering App and trailer tire pressure monitoring functions.

If the vehicle is not equipped with a K68 Trailer Lighting Control Module, the K9 Body Control Module controls the trailer lighting. The K9 Body Control Module does not actively monitor for a connected trailer. Instead, the K9 Body Control Module controls the trailer lights much like a parallel circuit with the vehicle lights.

Creating a Simulated Trailer Lighting Tool

Parts needed:

- 7-way RV trailer connector Qty: 1
- Combination trailer park/stop/turn lamp (greater than 55mA drawn when on) Qty: 2
- Reverse lamp Qty: 1
- 12 gauge wire and terminals/connectors Qty: As needed
- 18 gauge wire and terminals/connectors Qty: As needed
- Mounting board Qty: 1

1. Connect a 12 gauge wire to the ground terminal of the 7-way trailer connector and the ground circuit of each combination trailer park/stop/turn lamp and the reverse lamp in parallel.
2. Connect an 18 gauge wire between the park lamp terminal of the 7-way trailer connector and the park lamp circuit of each combination trailer park/stop/turn lamp in parallel.
3. Connect an 18 gauge wire between the left turn/stop lamp terminal of the 7-way trailer connector and the turn/stop lamp circuit of left trailer park/stop/turn lamp.
4. Connect an 18 gauge wire between the right turn/stop lamp terminal of the 7-way trailer connector and the turn/stop lamp circuit of right trailer park/stop/turn lamp.
5. Connect an 18 gauge wire between the reverse lamp terminal of the 7-way trailer connector and the reverse lamp.

   Note: A combination trailer lighting and trailer brake tool can be created on the same mounting board.
6. Mount the left combination trailer park/stop/turn lamp, right combination trailer park/stop/turn lamp, and reverse lamp to the mounting board.
7. Plug the 7-way RV trailer connector to the vehicle and verify functionality.

Simulated Trailer Brakes

Creating a tool to simulate trailer brakes can be used to diagnose trailer brake issues.

The trailer brake control system is compatible with two types of trailer brake systems: electromagnetic or electro-over hydraulic trailer brakes. The Brake System Control Module must determine which type of brakes the trailer is equipped with so the system can output correctly for the trailer's brake system. Because the Brake System Control Module has to determine the type of trailer brake system that is being used, it can be sensitive to a variety of trailer wiring issues.

The Trailer Brake Power Control Module continuously sends a test pulse out on the trailer brake control circuit (circuit 47) to determine if a trailer with trailer brakes has been connected. How the pulse reacts when a trailer is connected is how the Trailer Brake Power Control Module determines which type of braking system the trailer is equipped with.

Even after the system detects the trailer, Trailer Brake Power Control Module will continue to send this test pulse on the trailer brake control circuit, which now is monitoring both the truck and trailer circuitry. The trailer brake control circuit continues to be monitored for any faults so the driver can be notified of any issues that may occur within the truck or trailer, as well as, to determine when the trailer is disconnected from the truck.

Creating a Simulated Trailer Brake Tool

Parts needed:

- 7-way RV trailer connector Qty: 1
- Electric trailer brake magnets Qty: 2, 4, 6, or 8
- Reverse lamp Qty: 1
- Mounting board Qty: 1
- 12 gauge wire and terminals/connectors Qty: As needed

1. Connect a 12 gauge wire to the ground terminal of the 7-way trailer connector.
2. Connect a 12 gauge wire to the brake controller output terminal of the 7-way trailer connector.

Note: The trailer brake magnets must be connected in parallel. Connecting in series will create an excessive current draw and disable the trailer brake system.

3. Connect the trailer brake magnets to the 12 gauge wires from the 7-way trailer connector in parallel.

   Note: A combination trailer lighting and trailer brake tool can be created on the same mounting board.

4. Mount the trailer brake magnets to the mounting board.
5. Plug the 7-way RV trailer connector to the vehicle and verify functionality.

Vehicle Access

Schematic and Routing Diagrams

Door Lock/Indicator Schematics (Controls)

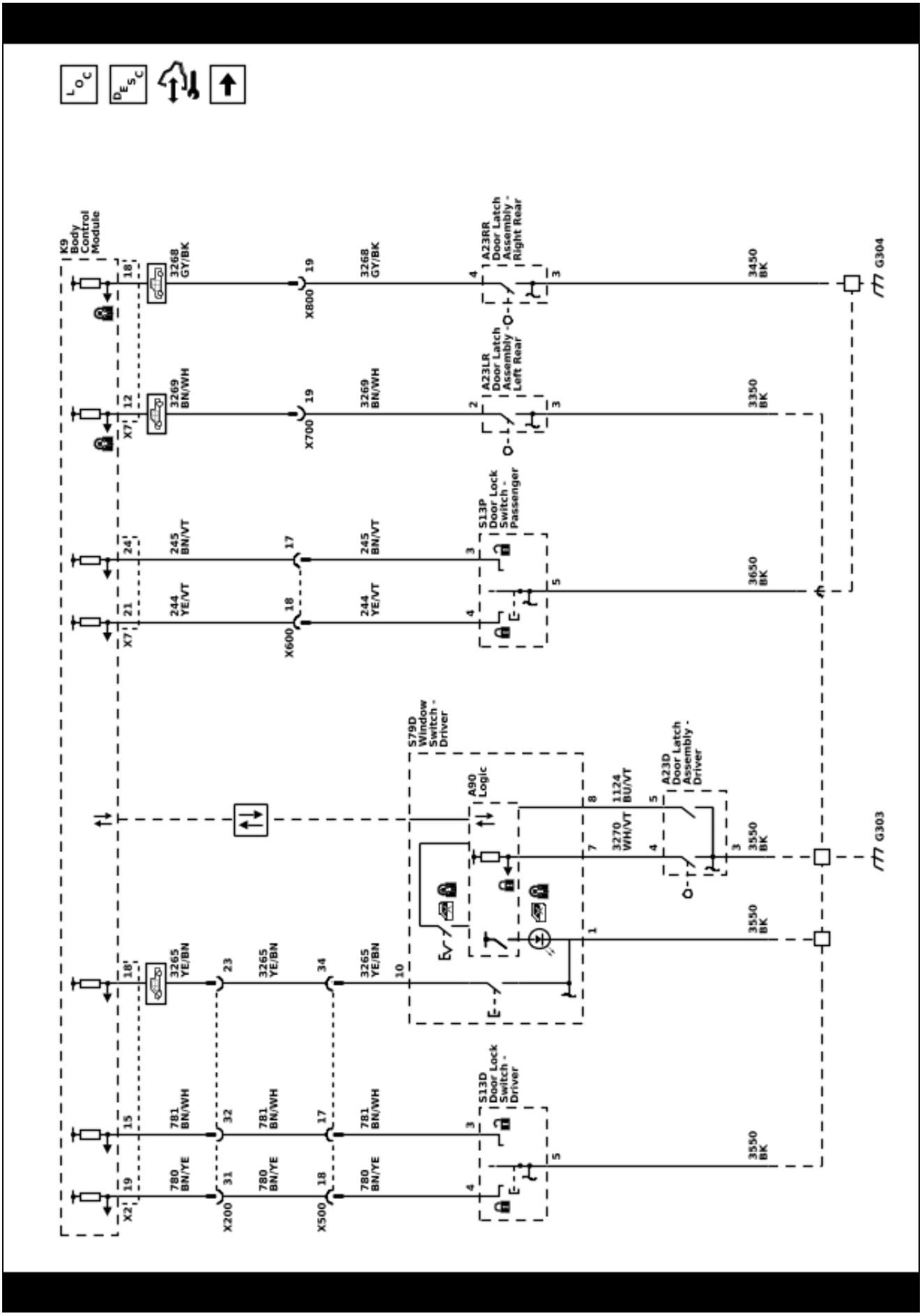

5681611

Door Lock/Indicator Schematics (Indicators)

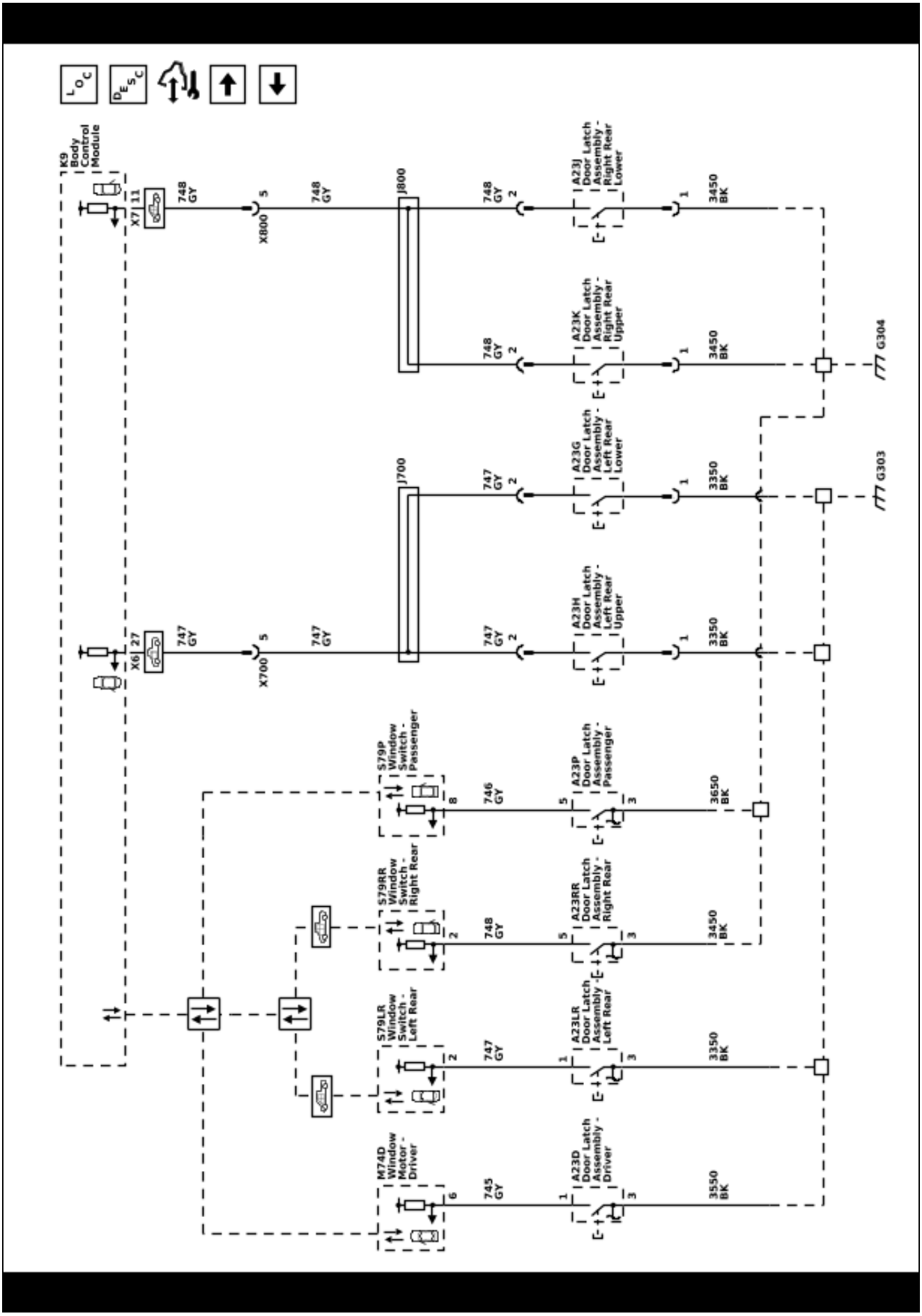

5681612

Door Lock/Indicator Schematics (Actuators 1 of 2)

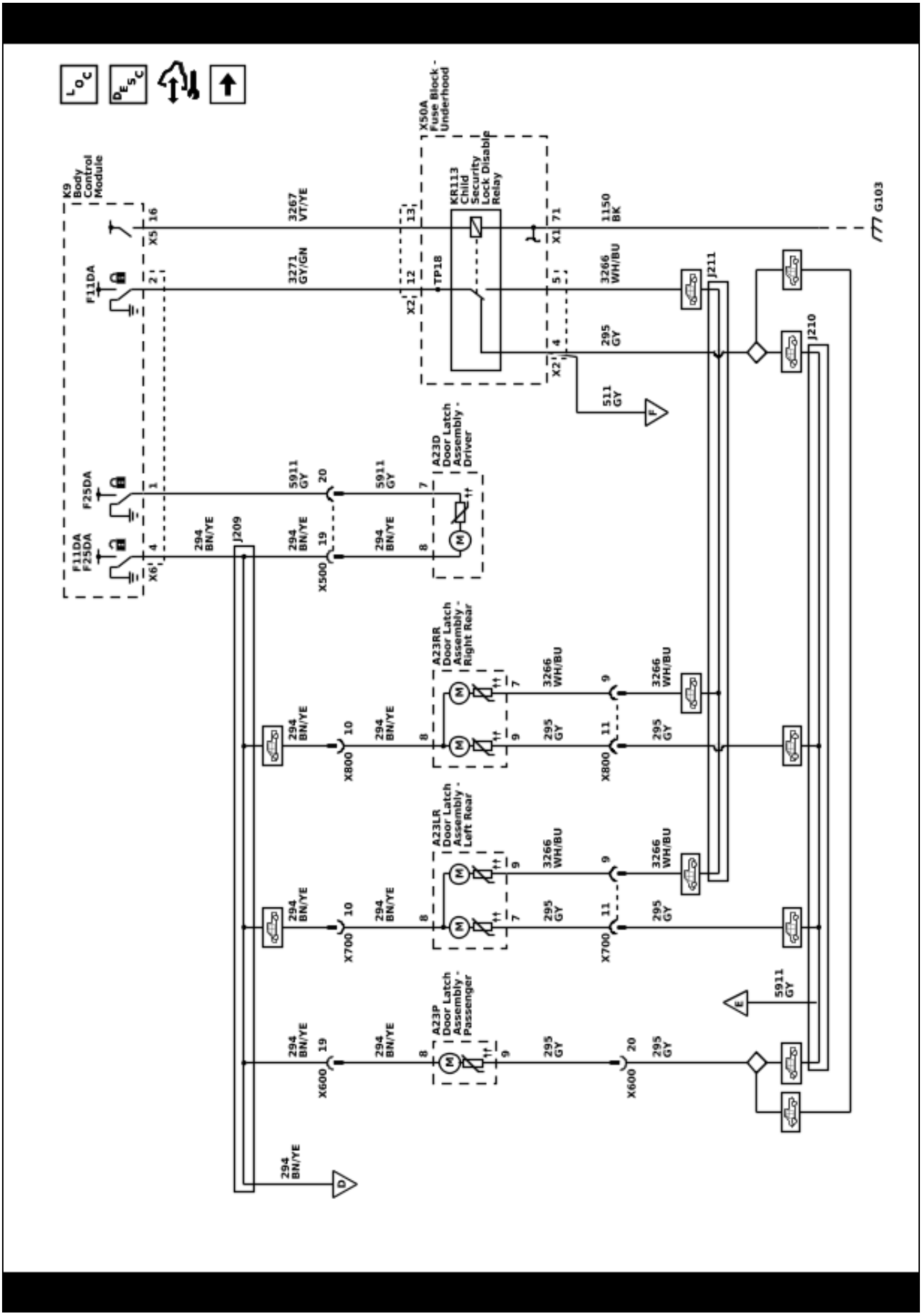

5681613

Door Lock/Indicator Schematics (Actuators 2 of 2)

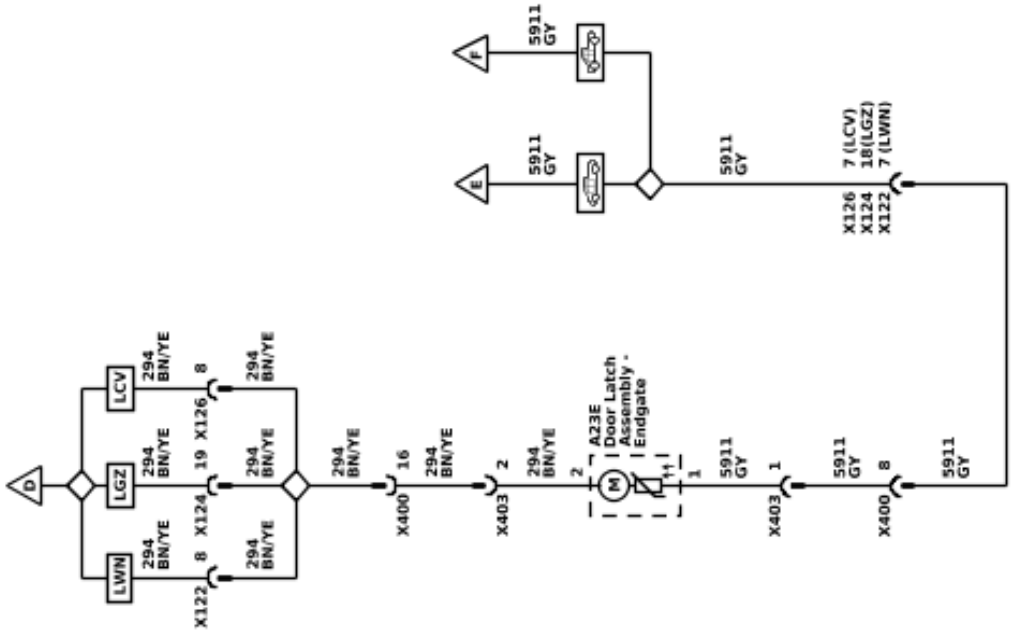

5681614

5681615

Hood Latch Schematics (Hood Latch (UTJ))

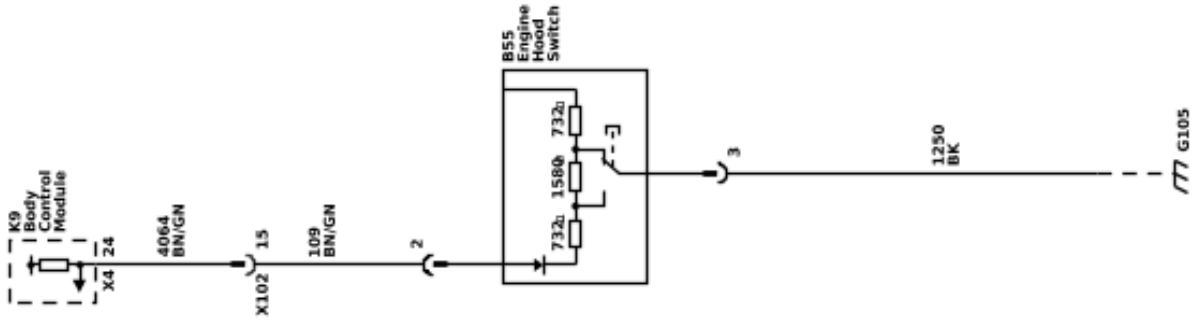

Description and Operation

Door Ajar Indicator Description and Operation

Door Ajar Indicator System Components

The door ajar indicator system consists of the following components:

- Body control module
- Instrument cluster
- Driver door latch
- Passenger door latch
- Left rear door latch
- Right rear door latch
- Driver window motor (AXG)
- Passenger window switch (AED)
- Left rear window switch (AEQ)
- Right rear window switch (AEQ)

Door Ajar System

Depending upon if the vehicle is a standard cab, extended cab or crew cab and/or is equipped with express up/down power windows or standard express down power windows or manual crank windows affects how the driver and passenger door ajar signal circuits are configured and monitored.

Door Ajar Indicator With AXG/AED/AEQ Block Diagram

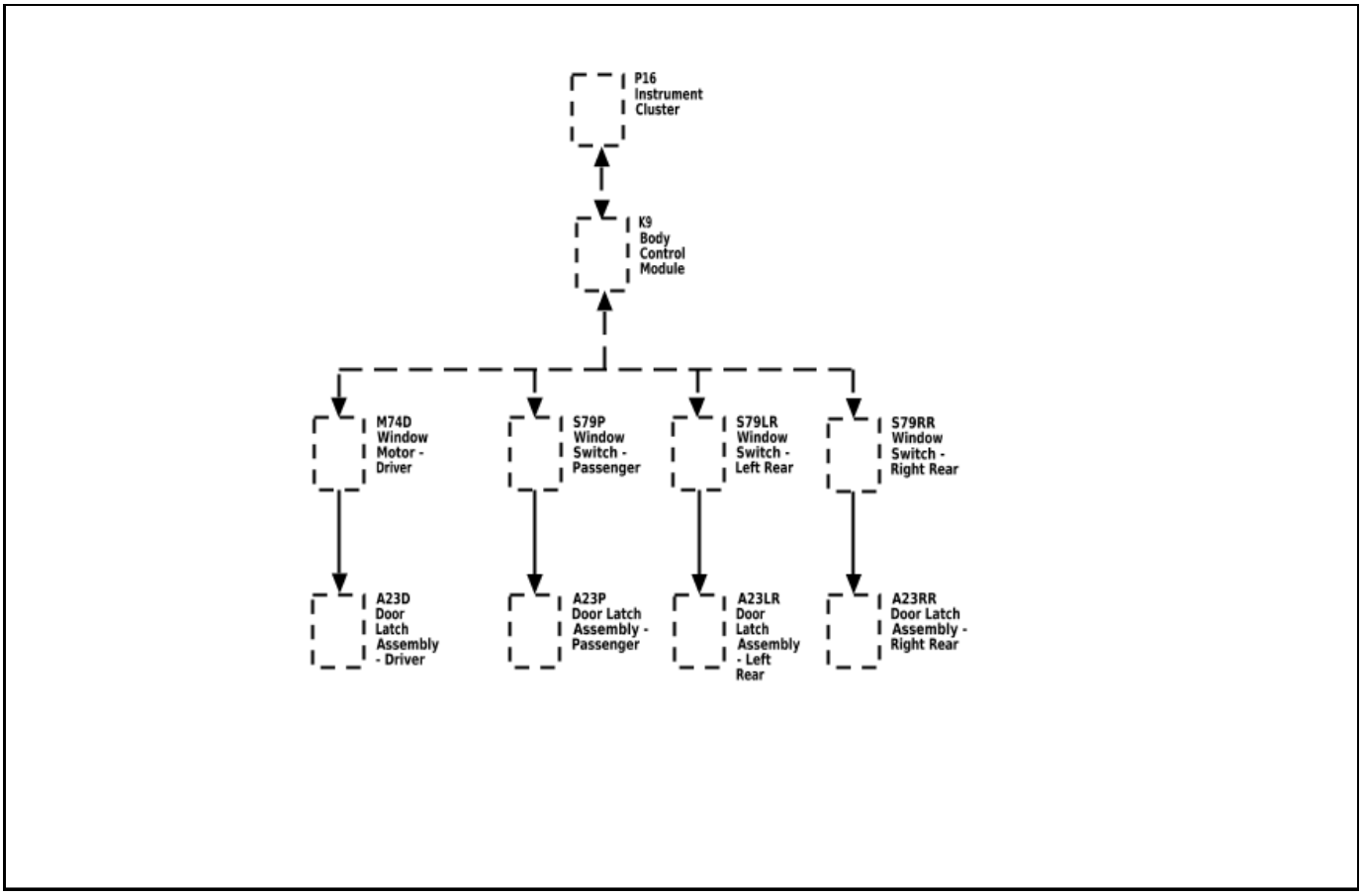

3270438

Driver Door Ajar (With AXG)

The driver window motor will provide a 12V signal to the driver door ajar switch within the door latch to indicate the status of the door. When the driver door is open, the contract within the ajar switch closes providing a ground part for the signal circuit. The driver window motor will detect the voltage drop in the ajar signal circuit and will send a serial data message to the body control module. The body control module will then send a message to the instrument cluster which will illuminate the door ajar icon.

Passenger and Rear Doors Ajar (With AED and AEQ)

The passenger and rear window switches provide a 12V signal to the respective door ajar switch within the door latch to indicate the status of the door. When the door is open, the contract within the ajar switch closes providing a ground part for the signal circuit. The window switch will detect the voltage drop in the ajar signal circuit and will send a serial data message to the body control module. The body control module will then send a message to the instrument cluster which will illuminate the door ajar icon.

Door Ajar Indicator Block Diagram

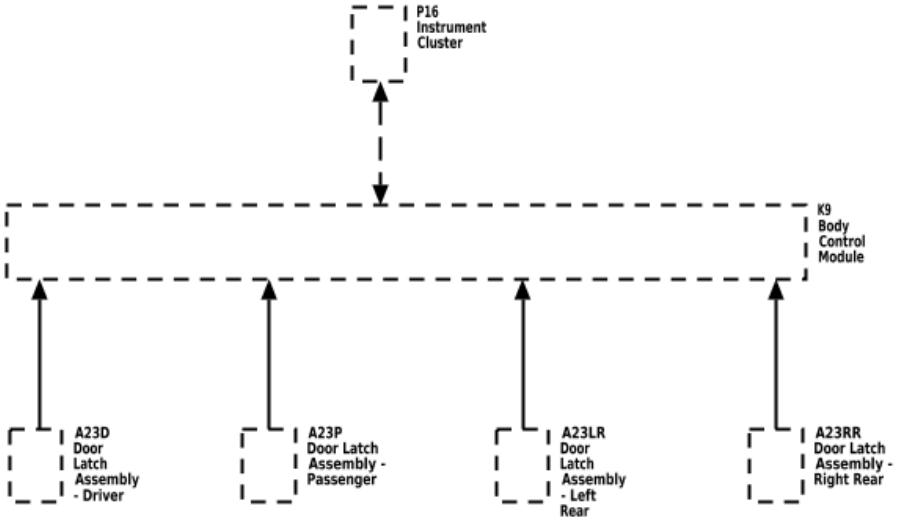

3668690

Driver, Passenger and Rear Doors Ajar (Without AXG, AED or AEQ)

The body control module provides a 12V signal to each door ajar switch within the door latch to indicate the status of the door. When the door is open, the contract within the ajar switch closes providing a ground part for the signal circuit. The body control module will detect the voltage drop in the ajar signal circuit and will send a message to the instrument cluster which will illuminate the door ajar icon

Hood Ajar Indicator Description and Operation

Hood Ajar Switch

The body control module (BCM) applies B+ to the hood ajar signal circuit and monitors the voltage to determine the position of the hood. When the hood is closed, the switch is open and voltage remains high. When the hood is open, the switch is closed and the voltage is pulled low.

The BCM uses the hood ajar switch as a content theft deterrent alarm trigger.

Hood Ajar Indicator/Message

When the hood is ajar, a message is displayed on the DIC or the hood ajar indicator will be illuminated.

Power Door Locks Description and Operation

Door Lock System Components

The power door lock system consists of the following components:

- Driver door lock switch
- Driver door key cylinder switch (Part of the driver door latch assembly)
- Child door lockout switch (Part of the driver window switch)
- Passenger door lock switch
- Front door lock actuators
- Rear door lock actuators (Extended and crew cab models)
- Body control module (BCM)
- Remote control door lock receiver
- Keyless entry transmitter
- Underhood fuse block (Contains child security lock disable PCB relay)

Door Lock System Controls

The power door lock system can be controlled by any of the following:

- A door lock switch LOCK or UNLOCK activation
- A key cylinder switch unlock activation
- A keyless entry transmitter activation
- Pressing the driver door lock plunger flush with the door panel will lock all doors

Door Lock Operation

The BCM supplies a 12 volt signal to the lock and unlock signal circuits of the driver and passenger door lock switches. When the appropriate switch is pressed, a contact within the door lock switch closes providing a ground path for the signal circuit. The BCM will detect the voltage drop in the signal and will command the doors to perform the lock or unlock functions.

The driver door latch contains 2 internal switches and 2 signal circuits that are monitored by the BCM. One switch is controlled by the driver key cylinder switch, when the key is turned to the unlock position, a switch will close and the BCM will command the remaining doors to UNLOCK. The other switch is controlled by the driver door lock plunger, pressing the plunger flush with the door panel will close the switch, the switch will close and the BCM will command the remaining doors to LOCK

The BCM may also receive a LOCK or UNLOCK command from the remote control door lock receiver, refer to *Keyless Entry System Description and Operation on page 7-14* for information on the keyless entry system

The BCM, upon receipt of a lock switch lock or unlock signal, will supply voltage to the door lock actuator lock or unlock control circuits and ground to the other lock actuator control circuit, the doors will then lock or unlock as commanded.

The following three circuits are used to operate the lock:

- Driver door unlock
- Passenger doors unlock
- All doors lock

Power Door Child Lock Block Diagram

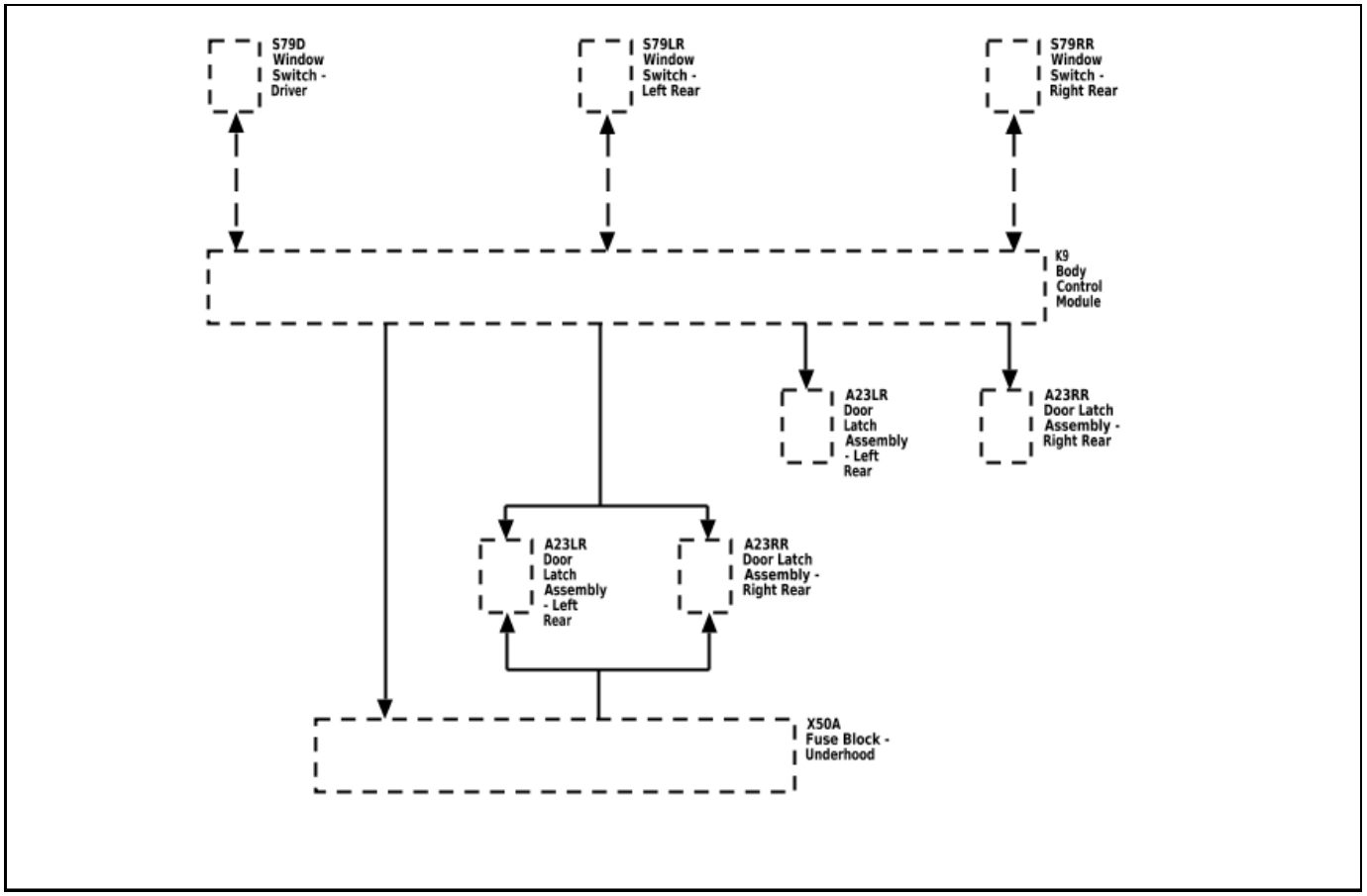

3271228

Child Security Lockout System Operation

The child door lockout switch on the driver window switch controls the child locks on the rear doors. The lockout switch is an input to the body control module and the body control module controls the door lock security relay. When the body control module receives a command from the child door lockout switch, it will apply voltage to the child security lock disable relay coil, this will energize the relay and the contact within the relay will then direct the voltage to activate the left rear and right rear child locks and then isolate them from the normal door lock system to prevent the rear doors from being opened by using the interior rear door handles. An indicator will also illuminate to alert the driver that the child lockout system has been activated. Pushing the switch again will return normal function to the rear interior door handles and the indicator will go out.

The body control module monitors the voltage level of the child security motor status signal circuit, when the child locks have been activated, the contacts of the child security motor status switch (internal to the rear door latch) will close providing a ground path for the signal circuit pulling the voltage low. It is in this manner that the body control module is able to determine if the rear door latch has been successfully been locked out.

The body control module monitors the status of the child security lockout system, when the body control module detects a fault in the system, it will command the child lockout indicator to flash ON and OFF for 30 seconds to alert the driver that the child security lockout system may not be functioning properly.

The body control module will command the child lockout indicator to flash ON and OFF for the following reasons:

- An open/high resistance in either child security motor status signal circuit
- The body control module detects that one or both rear door latches have not activated and are not locked out
- The body control module detects a short to ground or an open/high resistance in the child security lock disable relay control circuit
- A malfunctioning child security lock disable relay
- An open/high resistance in the child security lock motor control circuit

Section 3

Driver Information and Entertainment

Image Display Cameras 3-3
Schematic and Routing Diagrams 3-3
Image Display Camera Schematics 3-4
Description and Operation 3-6
Rear Vision Camera Description and Operation (UVC) 3-6
Rear Vision Camera Description and Operation (UVB) 3-6

BLANK

Image Display Cameras

Schematic and Routing Diagrams

Image Display Camera Schematics (Rear Camera (UVC))

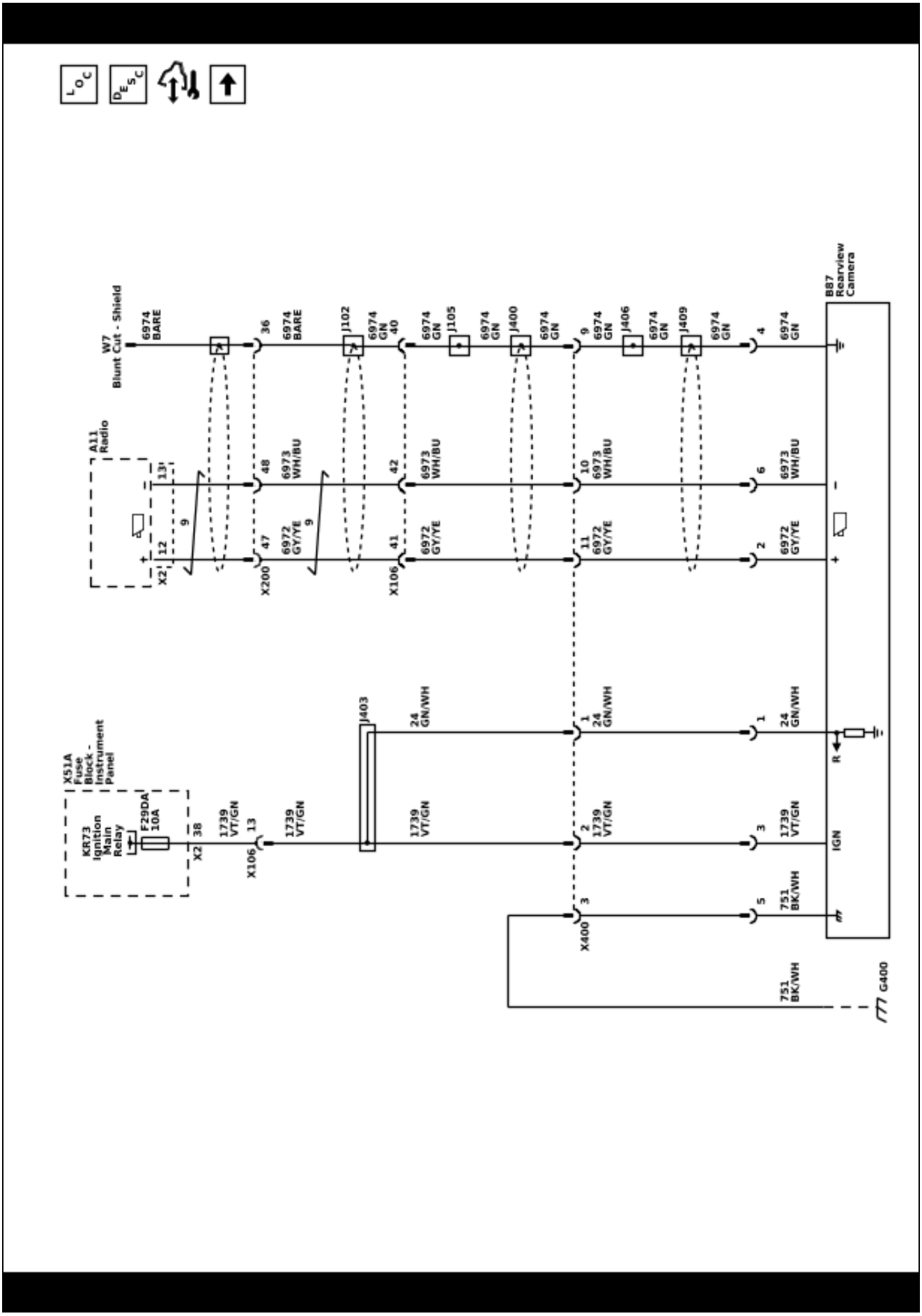

5681645

5681646

Image Display Camera Schematics (Rear Camera (UVB))

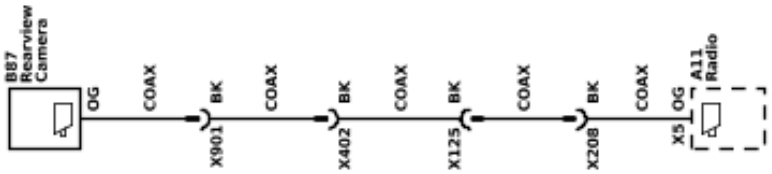

Description and Operation

Rear Vision Camera Description and Operation (UVC)

Rear Vision Camera System Operation

The rear vision camera system consists of a video camera located at the rear of the vehicle and the Rado.

When the transmission is placed into REVERSE, a signal indicates to the Radio that the vehicle is in reverse and image display is requested. The rear vision camera receives ignition voltage and a constant ground to power the camera. Video signal + and video signal – circuits carry the video image from the rear vision camera to the radio. Additionally, the video signal circuits are shielded to prevent any interference which may lead to a loss of video signal resolution and a degraded video image. The shield is provided a ground path by the rear vision camera.

The following conditions may cause a degraded rear vision camera image:

- Ice, snow, or mud has built up on the rear vision camera
- Dark conditions
- Extreme light conditions, such as glare from the sun or the headlights of another vehicle
- Damage to the rear of the vehicle
- Extreme high temperatures or extreme temperature changes

If a malfunction is detected in the system, Service Rear Vision Camera may be displayed on the Info Display Module as an indicator to the customer that a problem exists that requires service.

Rear Vision Camera Description and Operation (UVB)

Rear Vision Camera System Operation

The rear vision camera system consists of a video camera located at the rear of the vehicle and the Rado.

When the transmission is placed into REVERSE, a signal is sent to the Radio indicating that camera operation is requested. The rearview camera sends video information to the radio through a coax cable. The coax cable also provides power from the Radio to the rearview camera.

The following conditions may cause a degraded rear vision camera image:

- Ice, snow, or mud has built up on the rear vision camera
- Dark conditions
- Extreme light conditions, such as glare from the sun or the headlights of another vehicle
- Damage to the rear of the vehicle
- Extreme high temperatures or extreme temperature changes

If a malfunction is detected in the system, Service Rear Vision Camera may be displayed on the Info Display Module as an indicator to the customer that a problem exists that requires service.

Section 4

Engine/Propulsion

12 V Starting and Charging 4-3
Schematic and Routing Diagrams 4-3
Starting and Charging Schematics 4-4
Description and Operation 4-7
Charging System Description and Operation 4-7
Electrical Power Management Description and Operation 4-10
Starting System Description and Operation 4-12

BLANK

12 V Starting and Charging

Schematic and Routing Diagrams

Starting and Charging Schematics (Starting (1 of 2))

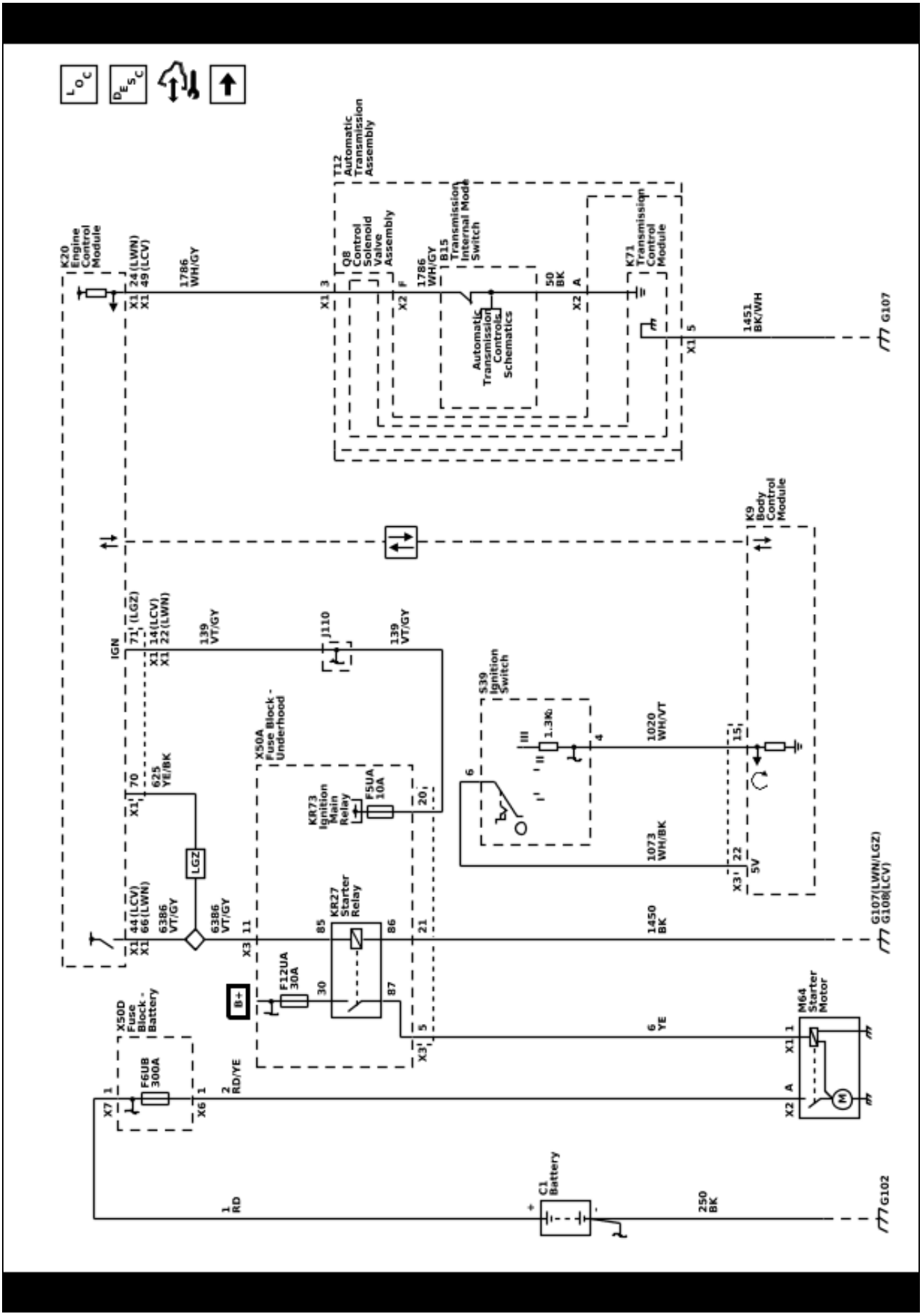

5681650

5681651

Starting and Charging Schematics (Starting (2 of 2))

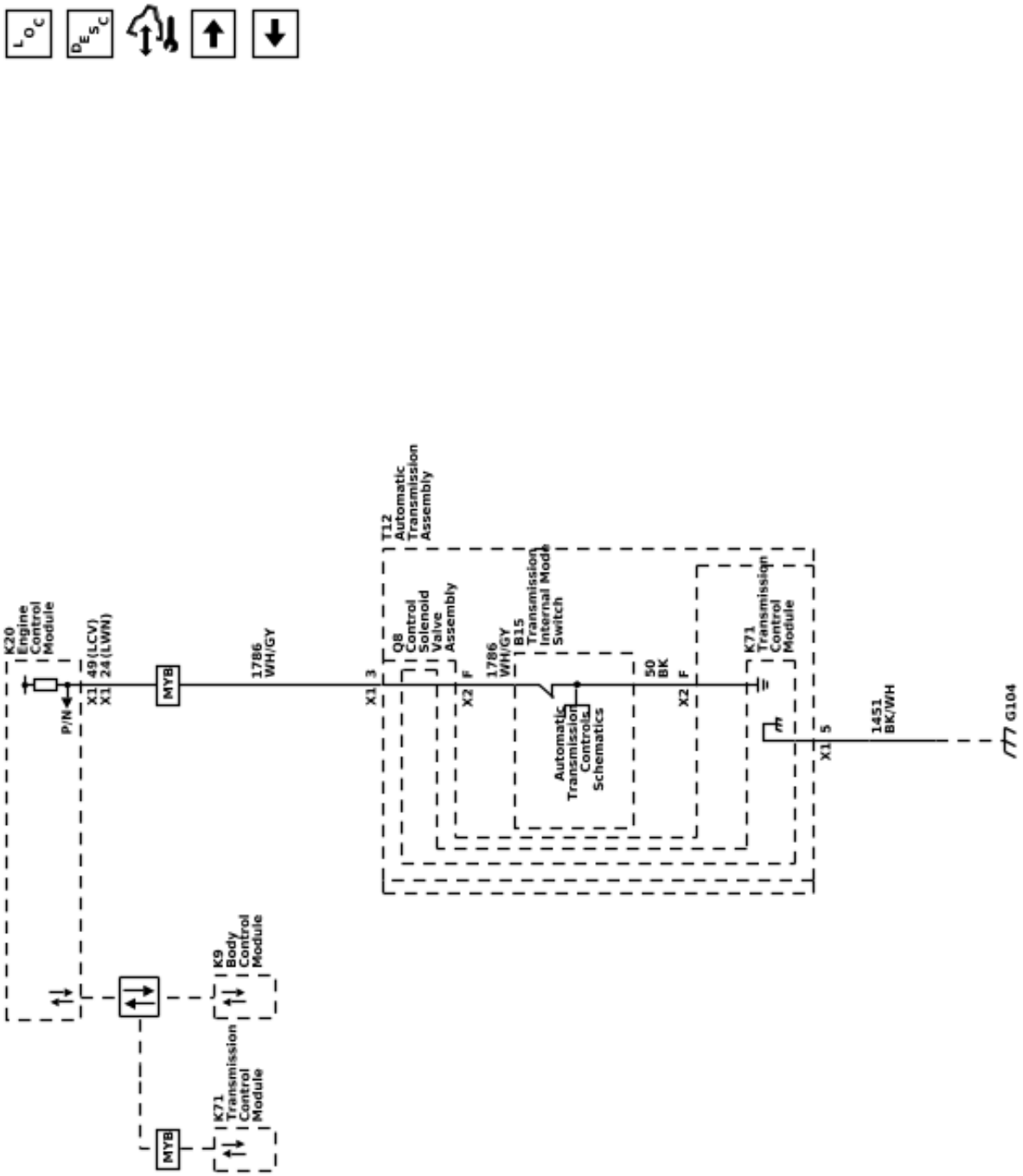

Starting and Charging Schematics (Charging)

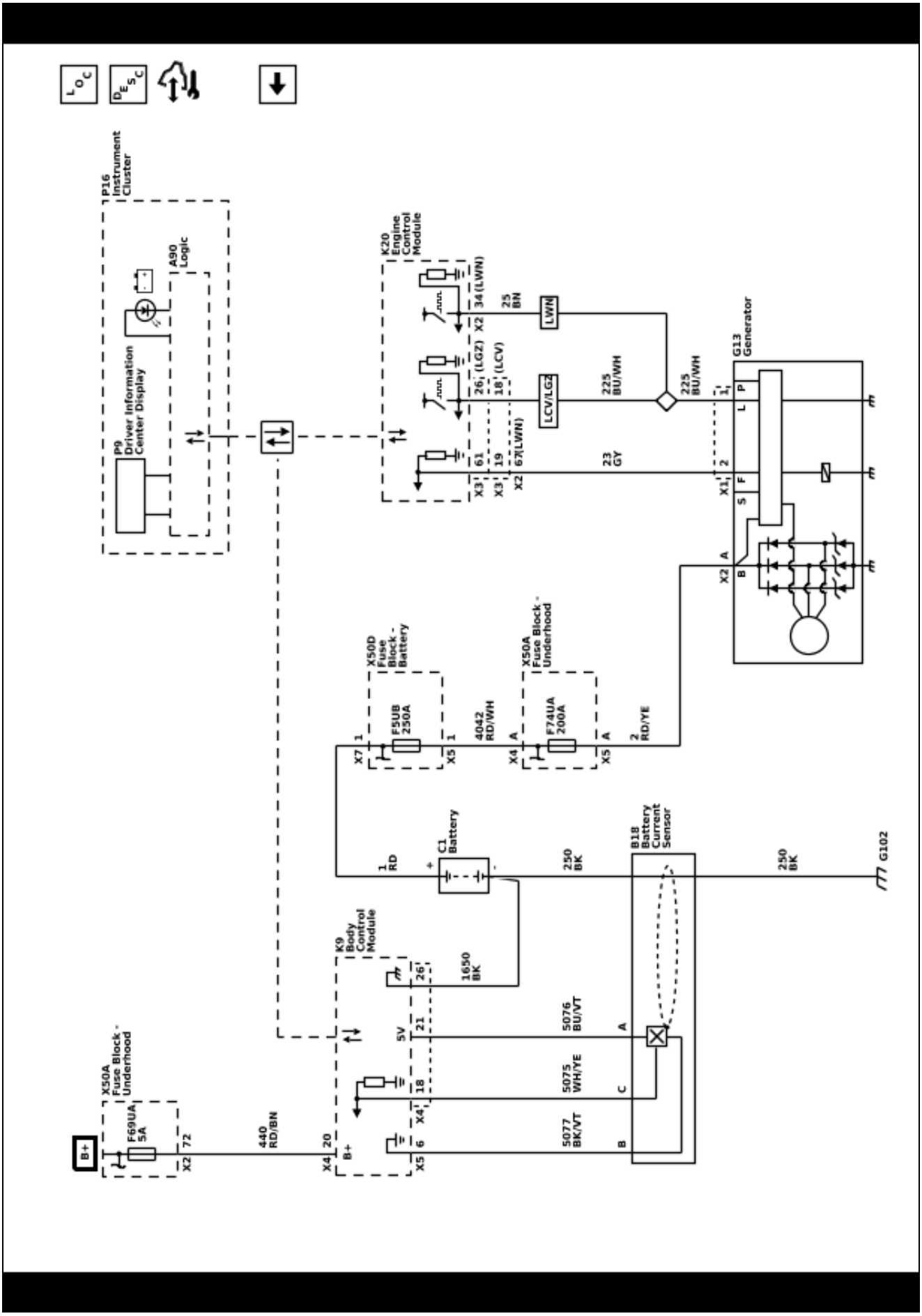

5681652

Description and Operation

Charging System Description and Operation

Electrical Power Management Overview

The electrical power management system is designed to monitor and control the charging system and send diagnostic messages to alert the driver of possible problems with the battery and generator. This electrical power management system primarily utilizes existing on-board computer capability to maximize the effectiveness of the generator, to manage the load, improve battery state-of-charge and life, and minimize the system's impact on fuel economy. The electrical power management system performs 3 functions:

- Monitor the battery voltage and estimate the battery condition
- Take corrective actions by boosting idle speeds, and adjusting the regulated voltage
- Perform diagnostics and driver notification

The battery condition is estimated during ignition/vehicle off and during ignition/vehicle on. During ignition/vehicle off the state-of-charge of the battery is determined by measuring the open-circuit voltage. The state-of-charge is a function of the acid concentration and the internal resistance of the battery, and is estimated by reading the battery open circuit voltage when the battery has been at rest for several hours.

Any time the ignition/vehicle is on, the vehicle algorithm continuously estimates battery state-of-charge based on adjusted net amp hours, battery capacity, initial state-of-charge, and calculated temperature.

While the engine is running, the battery degree of discharge is primarily determined by the integrated battery current sensor, to obtain net amp hours.

In addition, the electrical power management function is designed to perform regulated voltage control to improve battery state-of-charge, battery life, and fuel economy. This is accomplished by using knowledge of the battery state-of-charge and temperature to set the charging voltage to an optimum battery voltage level for recharging without detriment to battery life.

Charging System Components

Generator

The engine drive belt drives the generator. When the rotor is spun, it induces an alternating current (AC) into the stator windings. The AC voltage is then sent through a series of diodes for rectification. The rectified voltage has been converted into a direct current (DC) for use by the vehicles electrical system to maintain electrical loads and the battery charge. The voltage regulator integral to the generator controls the output of the generator; It is not serviceable. The voltage regulator controls the amount of current provided to the rotor. If the generator has field control circuit fault, the generator defaults to an output voltage of 13.8 V.

The generator is serviced as a complete assembly. If there is a diagnosed fault in the generator, it must be replaced as an assembly.

Generator Pulley

The pulley drives the Generator via the engine drive belt. There are 2 types of pulleys:

1. Conventional solid Pulley which is bolted to the Generator stator shaft. This Pulley can be serviced separately.

2. One Way Clutch Pulley or Overrunning Alternator Decoupler Pulley allows the Generator to spin freely when the engine rapidly slows down on sudden deceleration. This part is not serviceable and the Generator needs to be replaced as an assembly.

Body Control Module (BCM)

The BCM communicates with the Engine Control Module (ECM) and the instrument cluster for electrical power management operation. The BCM determines the output of the generator and sends the information to the ECM for control of the generator turn on signal circuit. It monitors the generator field duty cycle signal circuit information sent from the ECM for control of the generator. It monitors the battery current sensor, the battery positive voltage circuit, and estimates battery temperature to determine battery state of charge. The BCM also performs idle boost.

Battery Current Sensor (if applicable)

The Battery Current Sensor is a serviceable component that is connected to the negative battery cable at the battery. The battery current sensor is a 3-wire hall effect current sensor. The battery current sensor monitors the battery current. It directly inputs to the BCM. It creates a 5 volt Pulse Width Modulation (PWM) signal of 128 Hz with a duty cycle of 0–100%. Normal duty cycle is between 5–95%. Between 0–5% and 95–100% are for diagnostic purposes.

Battery Sensor Module (if applicable)

The BCM monitors the Battery Sensor Module for battery state of current, state of health, and battery charge via serial data. If the battery is determined to be in poor state of health or having a low state of charge, the BCM will not allow the ECM to perform an auto-stop.

Engine Control Module (ECM)

When the engine is running, the generator turn-on signal is sent to the generator from the ECM, turning on the regulator. The generator's voltage regulator controls current to the rotor, thereby controlling the output voltage. The rotor current is proportional to the electrical pulse width supplied by the regulator. When the engine is started, the regulator senses generator rotation by detecting AC voltage at the stator through an internal wire. Once the engine is running, the regulator varies the field current by controlling the pulse width. This regulates the generator output voltage for proper battery charging and electrical system operation. The generator field duty terminal is connected internally to the voltage regulator and externally to the ECM. When the voltage regulator detects a charging system problem, it grounds this circuit to signal the ECM that a problem exists. The ECM monitors the generator field duty cycle signal circuit, and receives control decisions based on information from the BCM.

Instrument Cluster

As a means of displaying the charging system functions, some vehicles may be equipped with a voltmeter gauge on the instrument cluster and/or a system voltage display in the driver information center. These will indicate the current vehicle system voltage.

The instrument cluster also provides customer notification if there is a concern with the charging system. There are two means of notification: a charge indicator on the instrument cluster and/or a service system message displayed on the Driver Information Center (DIC) if equipped.

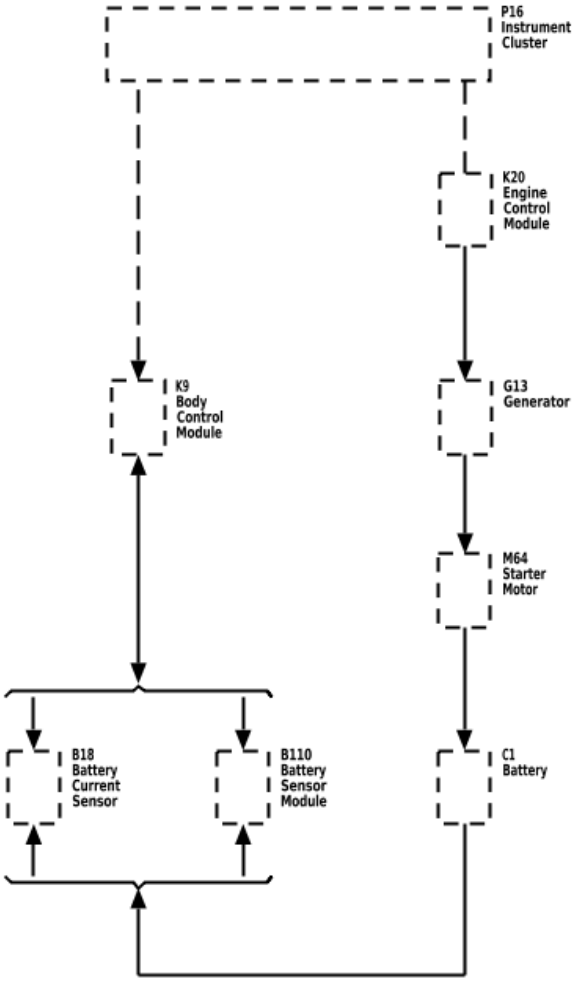

3603724

Charging System Operation

The purpose of the charging system is to maintain the battery charge and vehicle loads. There are 6 modes of operation and they include:

- Battery Sulfation Mode
- Charge Mode
- Fuel Economy Mode
- Head lamp Mode
- Start Up Mode
- Voltage Reduction Mode

The ECM Controls the Generator through the generator turn–on signal circuit, also known as the Generator L-terminal. The ECM monitors the generator performance though the Generator field duty cycle signal circuit, also known as the generator F-terminal.

The Generator turn–on signal (Generator L-terminal) is a Pulse Width Modulation (PWM) signal of 128 Hz with a duty cycle of 0–100%. Normal duty cycle is between 5–95%. 0–5% and 95–100% are for diagnostic purposes, with 0–5% monitoring for an open circuit and 95–100% monitoring for a short to ground at a fixed 13.8 V. The following table shows the commanded duty cycle and output voltage of the Generator:

Commanded Duty Cycle	Generator Output Voltage (+/- .25 V)
0–5%	13.8 V
10%	11 V
20%	11.56 V
30%	12.13 V
40%	12.69 V
50%	13.25 V
60%	13.81 V
70%	14.38 V
80%	14.94 V
90%	15.5 V
95–100%	13.8 V

The Generator provides a PWM feedback signal of the Generator voltage output through the Generator field duty cycle signal circuit to the ECM. This information is sent to the Body Control Module (BCM). The Generator field duty cycle signal (Generator F-terminal) is a PWM signal of 60–460 Hz with a duty cycle of 0–100%. Normal duty cycle is between 5–100%. 0–5% is reserved for diagnostic purposes.

As the charging systems works to maintain the battery charge and manage vehicle electrical loads, it is normal for the voltmeter gauge on the instrument cluster or the system voltage displayed in the DIC to fluctuate or change. This does not indicate a malfunction. Depending on the battery state of charge and the vehicle electrical load, these values may be anywhere from 12.5 V to 15.5 V.

Charging System Modes

Battery Sulfation Mode

The BCM will enter this mode when the interpreted Generator output voltage is less than 13.2 V for 45 minutes. When this condition exists the BCM will enter Charge Mode for 2–3 minutes. The BCM will then determine which mode to enter depending on voltage requirements.

Charge Mode

The BCM will enter Charge Mode when ever one of the following conditions are met:

- Windshield wipers are ON for more than 3 s.
- Climate Control Voltage Boost Mode Request is true, as sensed by the HVAC control module via serial data. High speed cooling fan, rear defogger, and HVAC high speed blower operation can cause the BCM to enter the Charge Mode.
- The estimated battery temperature is less than 0° C (32°F).
- Battery State of Charge is less than 80%.
- Vehicle speed is greater than 145 km/h (90 mph)
- A current sensor malfunction exists.
- System voltage is determined to be below 12.56 V

When any one of these conditions is met, the system will set targeted generator output voltage to a charging voltage between 13.9–15.5 V, depending on the battery state of charge and estimated battery temperature.

Fuel Economy Mode

The BCM will enter Fuel Economy Mode when the estimated battery temperature is at least 0°C (32°F) but less than or equal to 80°C (176°F), the calculated battery current is less than 15 A and greater than −8 A, and the battery state-of-charge is greater than or equal to 80%. Its targeted generator output voltage is the open circuit voltage of the battery and can be between 12.5–13.1 V. When fuel economy mode is active, the generator is not charging, only maintaining open circuit battery voltage. The BCM will exit this mode and enter Charge Mode when any of the conditions described above are present.

Headlamp Mode

The BCM will enter Headlamp Mode when ever the head lamps are ON (high or low beams). Voltage will be regulated between 13.9–14.5 V.

Start Up Mode

When the engine is started the BCM sets a targeted generator output voltage of 14.5 V for 30 s.

Tow/Haul Mode (if applicable)

Pressing the Tow/Haul Mode button located on the center stack, the vehicle system voltage is raised and the remote (non-vehicle) battery will be charged. Having the headlamps on will raise the system voltage and if the Tow/Haul button is applied it will not serve any purpose. The voltage is regulated between 13.9-14.5 V.

Instrument Cluster Operation

Charge Indicator Operation

The instrument cluster illuminates the charge indicator and displays a warning message in the driver information center if equipped, when the one or more of the following occurs:

- The ECM detects that the generator output is less than 11 V or greater than 16 V. The instrument cluster receives a serial data message from the ECM requesting illumination.
- The instrument cluster determines that the system voltage is less than 11 V or greater than 16 V for more than 30 s. The instrument cluster receives a serial data message from the BCM indicating there is a system voltage range concern.
- The instrument cluster performs the displays test at the start of each ignition cycle. The indicator illuminates for approximately 3 s.

Driver Information Center Message: BATTERY NOT CHARGING SERVICE CHARGING SYSTEM or SERVICE BATTERY CHARGING SYSTEM

The BCM and the ECM will send a serial data message to the driver information center for the BATTERY NOT CHARGING SERVICE CHARGING SYSTEM or

SERVICE BATTERY CHARGING SYSTEM message to be displayed. It is displayed when a charging system DTC is a current DTC. The message is turned off when the conditions for clearing the DTC have been met.

Voltmeter Gauge and/or System Voltage Display (if equipped)

As a means of displaying the charging system functions, some vehicles may be equipped with a voltmeter gauge on the instrument cluster and/or a system voltage display in the driver information center. These will indicate the current vehicle system voltage.

As the charging systems works to maintain the battery charge and manage vehicle electrical loads, it is normal for the voltmeter gauge on the instrument cluster or the system voltage display in the driver information center to fluctuate or change. This does not indicate a malfunction. Depending on the battery state of charge and the vehicle electrical load, these values may be anywhere from 12.5 V to 15.5 V.

Electrical Power Management Description and Operation

Electrical Power Management

The electrical power management is used to monitor and control the charging system and alert the driver of possible problems within the charging system. The electrical power management system makes the most efficient use of the generator output, improves the battery state-of-charge, extends battery life, and manages system electrical loads.

The load shed operation is a means of reducing electrical loads during a low voltage or low battery state-of-charge condition.

The idle boost operation is a means of improving generator performance during a low voltage or low battery state-of-charge condition.

Each electrical power management function, either idle boost or load shed, is activated in incremental steps. For example, idle boost 1 must be active before idle boost 2 can be active. The criteria used by the body control module (BCM) to regulate electrical power management are outlined below:

Idle Boost and Load Shed With Current Sensor

Function	Battery Temperature Calculation	Battery Voltage Calculation	Amp-Hour Calculation	Action Taken
Idle Boost 1 Start	Less Than −15°C (5°F)	Less Than 13 V	—	First level Idle boost requested
Idle Boost 1 Start	—	—	Battery has a net loss greater than 0.6 Ah	First level Idle boost requested
Idle Boost 1 Start	—	Less Than 11 V	—	First level Idle boost requested
Idle Boost 1 End	Greater Than −10°C (14°F)	Greater Than 12 V	Battery has a net loss less than 0.2 Ah	First level Idle boost request cancelled
Idle Boost 2 Start	—	—	Battery has a net loss greater than 1.6 Ah	Second level Idle boost requested
Idle Boost 2 Start	—	Less Than 11 V	—	Second level Idle boost requested
Idle Boost 2 End	—	Greater Than 12 V	Battery has a net loss less than 0.8 Ah	Second level Idle boost request cancelled

Idle Boost and Load Shed With Current Sensor (cont'd)

Function	Battery Temperature Calculation	Battery Voltage Calculation	Amp-Hour Calculation	Action Taken
Load Shed 1 Start	—	—	Battery has a net loss of 4 Ah	Rear Defrost, Heated Mirrors, Heated Seats, HVAC cycled OFF for 20% of their cycle
Load Shed 1 Start	—	Less Than 11 V	—	Rear Defrost, Heated Mirrors, Heated Seats, HVAC cycled OFF for 20% of their cycle
Load Shed 1 End	—	Greater Than 12 V	Battery has a net loss of less than 2 Ah	Clear Load Shed 1
Idle Boost 3 Start	—	—	Battery has a net loss of 10 Ah	Third level Idle boost requested
Idle Boost 3 Start	—	Less Than 11 V	—	Third level Idle boost requested
Idle Boost 3 End	—	Greater Than 12 V	Battery has a net loss of less than 6.0 Ah	Third level Idle boost request cancelled
Load Shed 2 Start	—	—	Battery has a net loss greater than 12 Ah	Rear Defrost, Heated Mirrors, Heated Seats, HVAC cycled OFF for 50% of their cycle. The BATTERY SAVER ACTIVE message will be displayed on the DIC
Load Shed 2 Start	—	Less Than 11 V	—	Rear Defrost, Heated Mirrors, Heated Seats, HVAC cycled OFF for 50% of their cycle. The BATTERY SAVER ACTIVE message will be displayed on the DIC
Load Shed 2 End	—	Greater Than 12 V	Battery has a net loss of less than 8 Ah	Clear Load Shed 2
Load Shed 3 Start	—	Less Than 11.9 V	Battery has a net loss greater than 20 Ah	Rear Defrost, Heated Mirrors, Heated Seats, HVAC cycled OFF for 100% of their cycle. The BATTERY SAVER ACTIVE message will be displayed on the DIC
Load Shed 3 Start	—	Less Than 11 V	—	Rear Defrost, Heated Mirrors, Heated Seats, HVAC cycled OFF for 100% of their cycle. The BATTERY SAVER ACTIVE message will be displayed on the DIC
Load Shed 3 End	—	Greater Than 12.6 V	Battery has a net loss of less than 13 Ah	Clear Load Shed 3

Idle Boost and Load Shed Without Current Sensor (based on battery voltage)

Function	Battery Temperature Calculation	Battery Voltage Calculation	Action Taken
Idle Boost 1 Start	Less Than −15°C (5°F)	Less Than 13 V	First level Idle boost requested
Idle Boost 1 Start	—	Less Than 12.6 V	First level Idle boost requested

Idle Boost and Load Shed Without Current Sensor (based on battery voltage) (cont'd)

Function	Battery Temperature Calculation	Battery Voltage Calculation	Action Taken
Idle Boost 1 End	Greater Than −15°C (5°F)	—	First level Idle boost request cancelled
Idle Boost 1 End	—	Greater Than 13 V	First level Idle boost request cancelled
Idle Boost 2 Start	—	Less Than 12.4 V	Second level Idle boost requested
Idle Boost 2 End	—	Greater Than 12.5 V	Second level Idle boost request cancelled
Load Shed 1 Start	—	Less Than 12.3 V	Rear Defrost, Heated Mirrors, Heated Seats, HVAC cycled OFF for 20% of their cycle
Load Shed 1 End	—	Greater Than 12.4 V	Clear Load Shed 1
Idle Boost 3 Start	—	Less Than 10 V	Third level Idle boost requested
Idle Boost 3 End	—	Greater Than 12.3 V	Third level Idle boost request cancelled
Load Shed 2 Start	—	Less Than 12.1 V	Rear Defrost, Heated Mirrors, Heated Seats, HVAC cycled OFF for 50% of their cycle. The BATTERY SAVER ACTIVE message will be displayed on the DIC
Load Shed 2 End	—	Greater Than 12.2 V	Clear Load Shed 2
Load Shed 3 Start	—	Less Than 11.9 V	Rear Defrost, Heated Mirrors, Heated Seats, HVAC cycled OFF for 100% of their cycle. The BATTERY SAVER ACTIVE message will be displayed on the DIC
Load Shed 3 End	—	Greater Than 12.0 V	Clear Load Shed 3

Starting System Description and Operation

Starter Motor Operation (Without KL9)

The starter motors are non-repairable. They have pole pieces that are arranged around the armature. Both solenoid windings are energized. The pull-in winding circuit is completed to the ground through the starter motor. The windings work together magnetically to pull and hold in the plunger. The plunger moves the shift lever. This action causes the starter drive assembly to rotate on the armature shaft spline as it engages with the flywheel ring gear on the engine. Moving at the same time, the plunger also closes the solenoid switch contacts in the starter solenoid. Full battery voltage is applied directly to the starter motor and it cranks the engine.

As soon as the solenoid switch contacts close, current stops flowing thorough the pull-in winding because battery voltage is applied to both ends of the windings. The hold-in winding remains energized. Its magnetic field is strong enough to hold the plunger, shift lever, starter drive assembly, and solenoid switch contacts in place to continue cranking the engine. When the engine starts, pinion overrun protects the armature from excessive speed until the switch is opened.

When the crank signal is removed, the starter relay opens and battery voltage is removed from the starter solenoid S terminal. Current flows from the motor contacts through both windings to the ground at the end of the hold-in winding. However, the direction of the current flow through the pull-in winding is now opposite the direction of the current flow when the winding was first energized.

The magnetic fields of the pull-in and hold-in windings now oppose one another. This action of the windings, along with the help of the return spring, causes the starter drive assembly to disengage and the solenoid switch contacts to open simultaneously. As soon as the contacts open, the starter circuit is turned off.

Enhanced Starter Motor Operation (KL9)

The Engine Stop/Start system in GM vehicles automatically turns off the engine when the vehicle comes to a stop under certain driving conditions, and can quickly restart the engine in about 0.3 seconds when commanded to do so.

In order to smoothly restart the engine as quickly as possible while managing the greater number of engine starts, the Stop/Start system uses an enhanced starter motor that operates differently from a conventional starter motor. It has a high performance electric motor

and a stronger pinion engagement mechanism than a conventional starter. It also has independent control of the pinion and motor.

The enhanced starter motor continues using the typical pinion engagement mechanism with a starter solenoid that drives the pinion gear to engage or disengage the flywheel of the engine. When engaged, the starter motor can rotate the engine flywheel and, in turn, the crankshaft.

On the enhanced starter of a Stop/Start system the operation is done in two separate functions inside the solenoid, Starter Motor and Pinion Actuator. Each function controlled individually by the ECM. There are two separate relays to control the two separate parts of the enhanced solenoid:

- KR27 Starter Motor Relay
- KR27C Starter Pinion Actuator Relay

The two individually-controlled relays allow for smooth engagement of the pinion gear into the flywheel with minimum noise and wear.

When the vehicle is coming to a stop, just before the engine stops rotating (at approximately 50 RPM) during stop/start operation, the ECM energizes the Starter Pinion Solenoid Actuator Relay to easily push the pinion gear into the flywheel gear without gear clash. (Fig. 8) When the engine stops rotating during Stop/Start operation (Auto Stop mode), the starter pinion gear is fully engaged, ready for the starter motor to become energized to quickly start the engine again.

A secondary need for the starter pinion to be driven into the flywheel gear before the engine stops rotating is to address quickly changing demands on the engine. For example, when a driver is slowing nearly to a stop — and the Stop/Start system is preparing for Auto Stop mode — but suddenly decides to release the brake and accelerate

In this situation, the engine has already stopped rotating, or nearly so. A conventional starter cannot restart the engine until the engine has completely stopped. However, with the enhanced starter, the starter pinion gear is fully engaged and ready to begin rotating the engine even before it fully stops turning. Otherwise, the engine would actually have to stop rotating before the pinion can engage smoothly to begin a restart.

To prevent a lag in engine operation, the ECM uses predictive speed matching of the flywheel gear speed and the pinion gear speed to engage the pinion gear into the flywheel gear without gear clash before the engine fully stops. By predicting how long it takes the starter motor to spin up using an algorithm, the pinion gear speed can be matched to the flywheel gear speed. The result is an almost instant restart that is possible at extremely low engine speeds.

Circuit Description

Keyless Start

When the Ignition mode switch is placed in the crank position, a discrete signal is supplied to the body control module (BCM) notifying it that the ignition is in the crank position. The BCM then sends a serial data message to the engine control module (ECM) that crank has been requested. The ECM then verifies that the clutch is fully depressed or the automatic transmission is in Park/Neutral. If it is, the ECM then supplies 12 V to the control circuit of the starter relay. When this occurs, battery positive voltage is supplied through the switch side of the crank relay to the S terminal of the starter solenoid.

Key Start

When the ignition switch is placed in the Start position, a discrete signal is supplied to the body control module (BCM) notifying it that the ignition is in the Start position. The BCM then sends a message to the engine control module (ECM) notifying it that CRANK has been requested. The ECM verifies that the transmission is in Park or Neutral. If it is, the ECM then supplies 12 V to the control circuit of the crank relay. When this occurs, battery positive voltage is supplied through the switch side of the crank relay to the S terminal of the starter solenoid.

BLANK

Section 5

HVAC

HVAC - Automatic 5-3
Schematic and Routing Diagrams 5-3
HVAC Schematics 5-4
Description and Operation 5-9
Automatic HVAC Description and Operation 5-9
HVAC - Manual 5-12
Schematic and Routing Diagrams 5-12
HVAC Schematics 5-13
Description and Operation 5-17
Manual HVAC Description and Operation 5-17

BLANK

HVAC - Automatic

Schematic and Routing Diagrams

HVAC Schematics (Power, Ground, Serial Data, HVAC and Blower Controls)

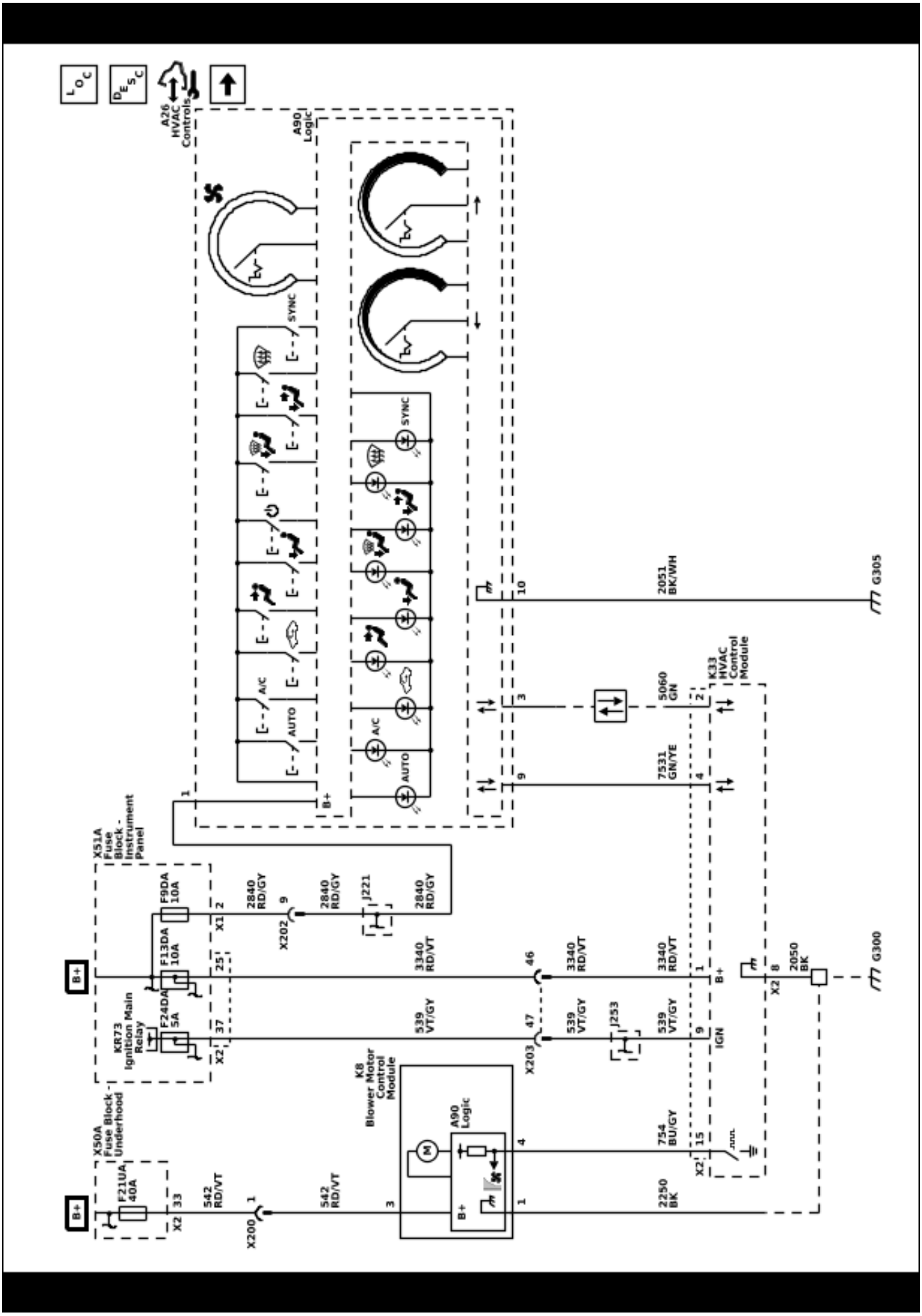

5681700

HVAC Schematics (Moisture, Sunload, and Temperature Sensors)

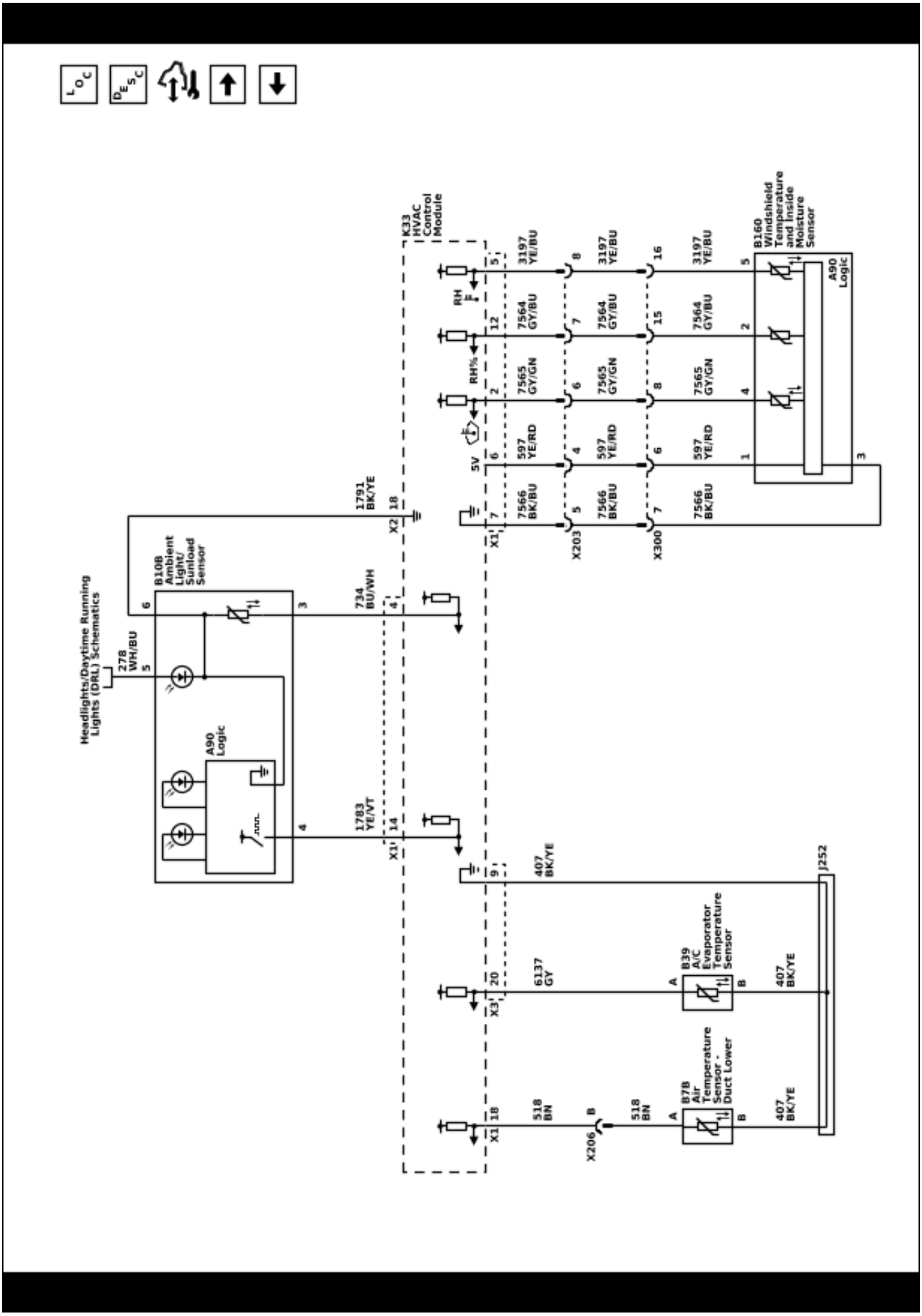

5681701

HVAC Schematics (Mode and Temperature Control Actuators)

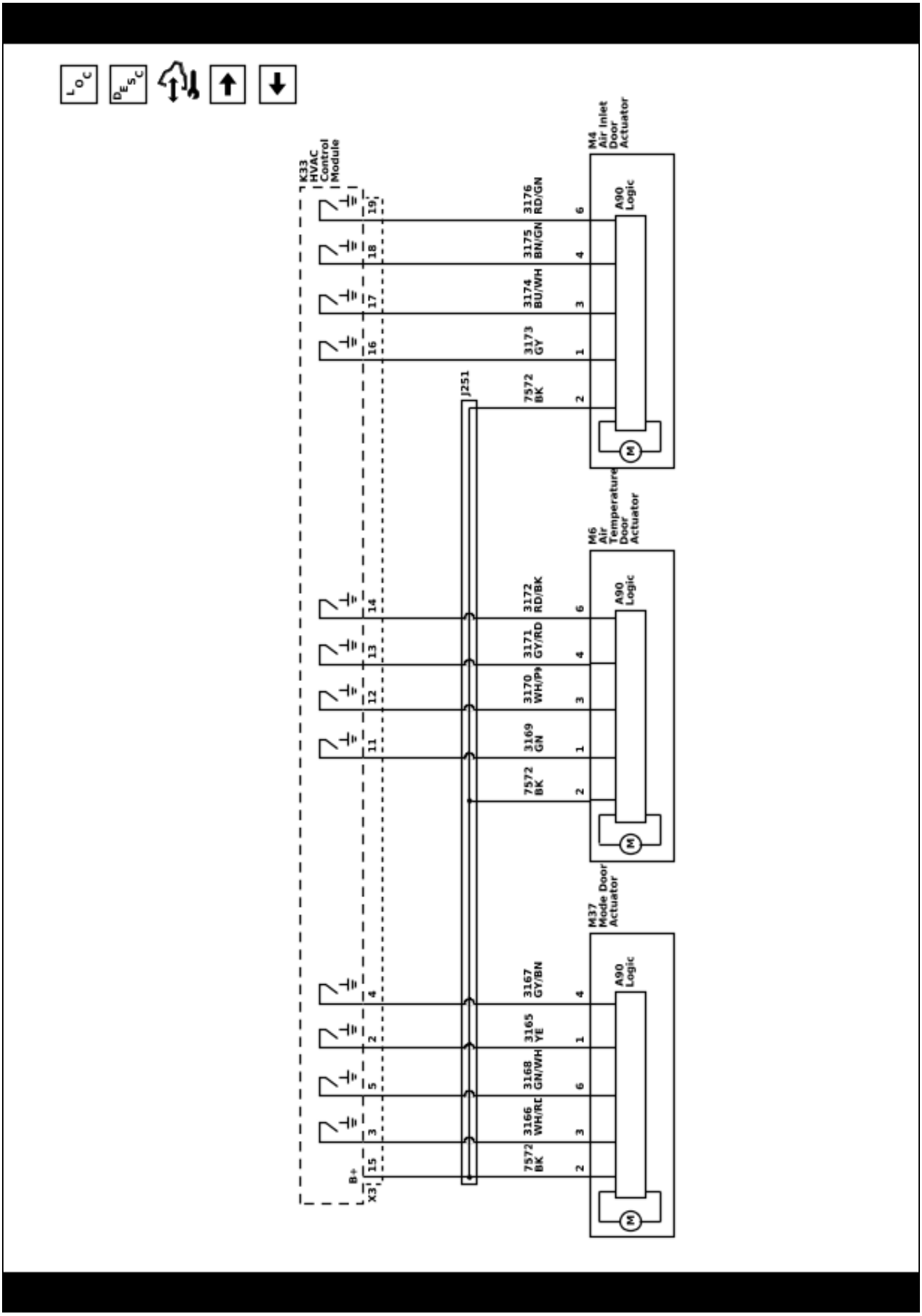

5681702

HVAC Schematics (A/C Compressor Controls)

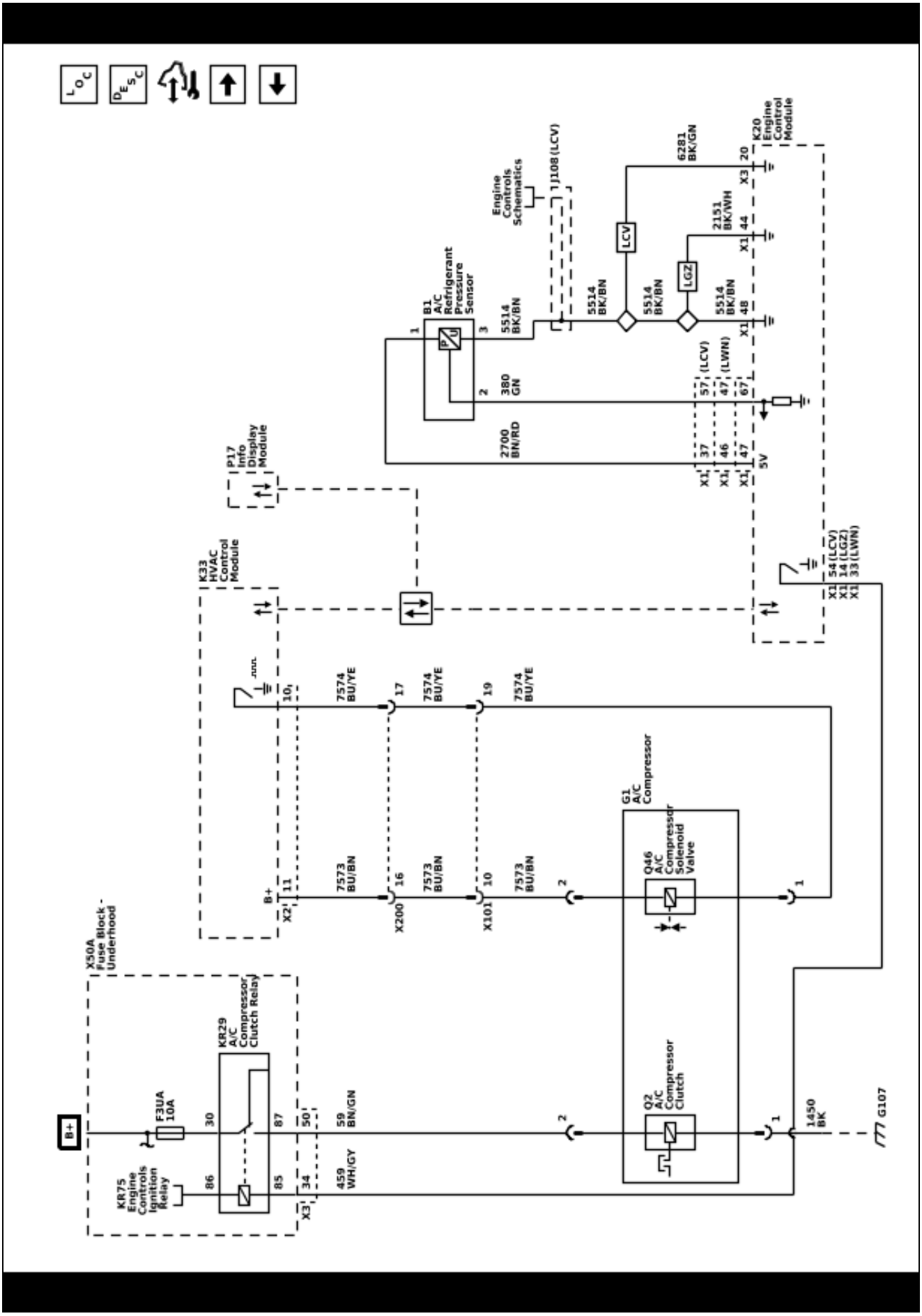

5681703

HVAC Schematics (Auxiliary Heater (LWN))

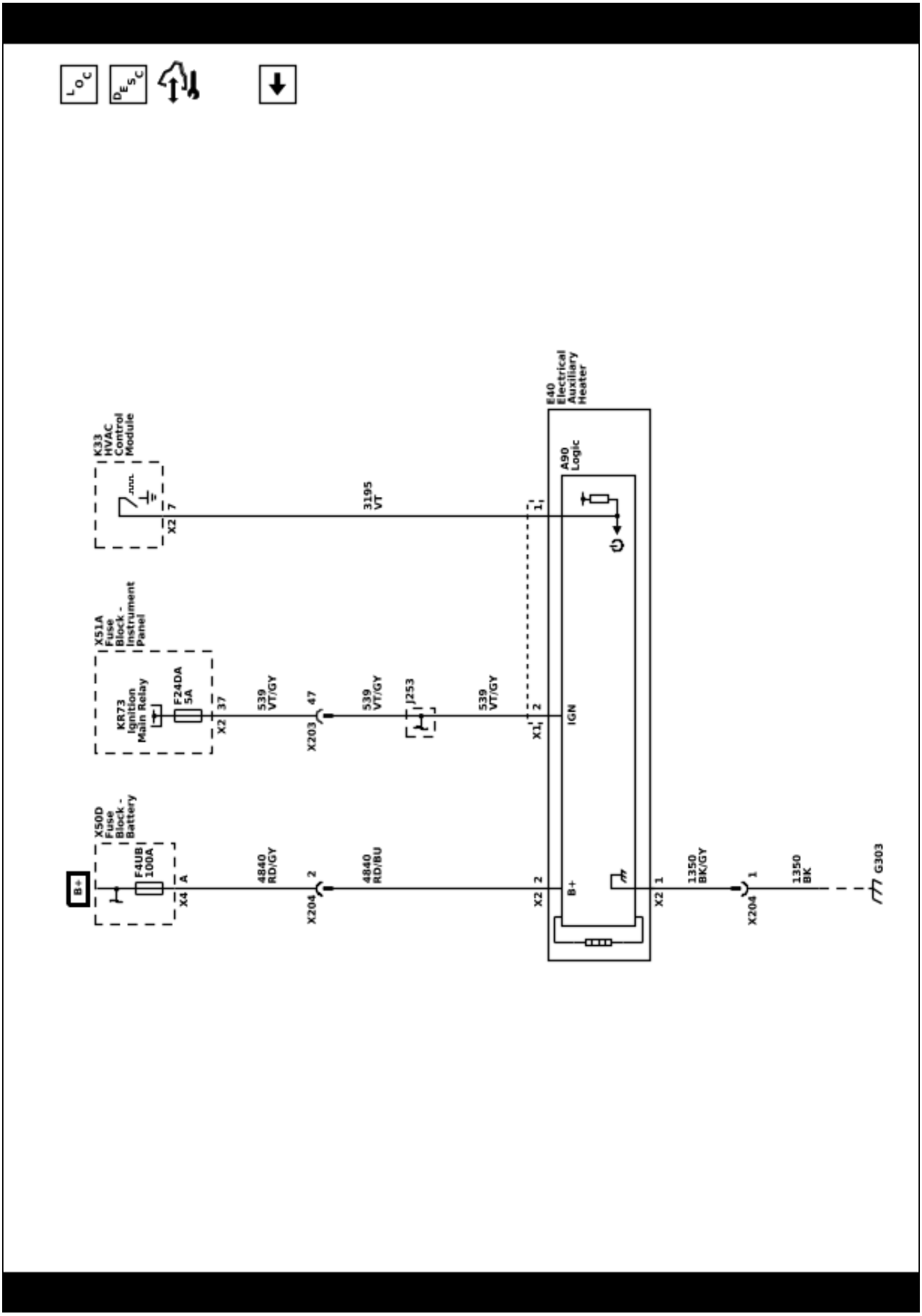

5681704

Description and Operation

Automatic HVAC Description and Operation

The air temperature and the air delivery description and operation are divided into eight areas:

- HVAC Control Components
- Air Speed
- Air Delivery
- Heating and A/C Operation
- Recirculation Operation
- Automatic Operation
- Auxiliary Electric Heater
- Engine Coolant and A/C System Refrigerant

HVAC Control Components

HVAC Control

The HVAC controls contains all buttons, switches, and dials which are required to control the functions of the HVAC system and serve as an interface between the operator and the HVAC control module. The selected values are passed to the HVAC control module via LIN-Bus.

HVAC Control Module

The HVAC control module is a GMLAN device that interfaces between the operator and the HVAC system to maintain and control desired air temperature and air distribution settings. The battery positive voltage circuit provides power that the HVAC control module uses for keep alive memory. If the battery positive voltage circuit loses power, all HVAC DTCs and settings will be erased from keep alive memory. The body control module (BCM), which is the vehicle mode master, provides a device ON-Signal. The HVAC control module provides blower, air delivery mode and air temperature settings.

Actuators

Doors in the HVAC case assembly are used to control air flow. The HVAC control module operates the doors through the use of actuators, with one actuator being used for each door. The system has the following air control doors and associated actuators: mode, temperature, and recirculation.

Each actuator used in the system is a 5-wire stepper motor. The HVAC control module supplies a 12 V reference voltage to the stepper motor and energizes the 4 stepper motor coils with a pulsed ground signal. The stepper motor moves the associated air control door into the calculated position in order to reach the selected position. The null point of the stepper motor will be calibrated, if the stepper motor is new. When the stepper motor is calibrated, the HVAC control module can drive the applicable coil to reach exactly the desired position of the door.

Blower Motor

The blower motor speed control signal from the HVAC Control Module, battery positive and ground circuits enable the blower motor to operate. The blower motor control circuitry is integrated within the blower motor assembly. The HVAC Control Module provides a pulse width modulation (PWM) signal to the blower motor to request a specific motor speed. The blower motor translates the PWM signal and drives the motor accordingly. As the requested blower speed increases, the HVAC control module increases the amount of time that the speed signal is modulated to ground. As the requested blower speed decreases, the HVAC control module decreases the amount of time that the signal is modulated to ground.

Evaporator Temperature Sensor

The evaporator temperature sensor is a 2-wire negative temperature coefficient thermistor. The sensor operates within a temperature range of −40 to +85°C (−40 to +185°F). The sensor is installed near the evaporator core to measure the air temperature exiting the core.

Based on vehicle operating conditions and operator settings, the HVAC software algorithms will determine a target evaporator air temperature. The operation of the compressor solenoid will be adjusted as needed to quickly reach and maintain the targeted temperature.

Duct Temperature Sensors

The air temperature sensors are 2-wire negative temperature coefficient thermistors. The sensors operate within a temperature range of −40 to +85°C (−40 to +185°F). The sensors are installed in the air distribution ducts and measurethe temperature of the air that streams from the ducts. The HVAC control module uses these values to calculate the desired Air temperature door position.

A/C Refrigerant Pressure Sensor

The A/C refrigerant pressure sensor is a 3-wire piezoelectric pressure transducer. The 5 V reference voltage, low reference, and signal circuits enable the sensor to operate. The A/C pressure signal can be between 0.2–4.8 V. When the A/C refrigerant pressure is low, the signal value is near 0 V. When the A/C refrigerant pressure is high, the signal value is near 5 V. The engine control module (ECM) converts the voltage signal to a pressure value. When pressure is too high or too low, the ECM will not allow the A/C compressor clutch to engage.

A/C Compressor

The A/C compressor uses a conventional belt driven magnetic clutch to engage and mechanically turn the compressor. When the A/C switch is pressed, the HVAC control module sends an A/C request message to the ECM via serial data. If specific criteria is met, the ECM then grounds the A/C compressor clutch relay control circuit, which will switch the A/C compressor clutch relay. With the relay contacts closed, battery voltage is supplied to the permanently grounded A/C compressor clutch. The A/C compressor clutch will then be activated.

This A/C system utilizes a variable displacement solenoid valve to alter the amount of displacement created by the turning of the compressor. The HVAC control module provides both battery voltage and a pulse width modulated ground to the variable displacement solenoid valve. When the A/C switch is pressed, the HVAC control module grounds the variable displacement solenoid using a (PWM) signal in

order to determine the amount of compressor displacement. The performance of the A/C compressor is regulated based on the adjusted interior temperature.

Windshield Temperature and Inside Moisture Sensor

The windshield temperature and inside moisture sensor assembly provides information about:

- Relative humidity level at windshield (compartment side)
- Temperature of the windshield inside (compartment side)
- Temperature of the humidity sensor element

The relative humidity sensor measures the relative humidity of the compartment side of the windshield. It also detects the temperature of the windshield surface on the passenger compartment side. Both values are used as control inputs for the HVAC control module application to calculate the fog risk on windshield compartment side and ability to reduce fuel consumption by decreasing A/C compressor power to a minimum without causing any fog. The sensor will also enable partial recirculation mode in order to improve heat-up performance of the passenger compartment under cold ambient temperature conditions without the risk of mist build-up on the windshield. The humidity sensor element temperature sensor supplies the temperature of the humidity sensor element. It is only needed if the thermal contact between the humidity sensing element and the inside windshield surface is not sufficient.

Air Speed

The blower control switch is part of the HVAC controls. The selected value of the blower switch position is sent to the HVAC control module via LIN-Bus.

The HVAC control module provides a PWM signal to the blower motor in order to command the desired blower motor speed.

Afterblow

Afterblow is a feature that dries the evaporator core by operating the blower motor after the engine is turned OFF under certain conditions. This reduces the amount of microbial growth that can create undesirable odors. For additional information on afterblow, the default setting, and changing the setting, refer to Afterblow Configuration.

Air Delivery

The desired air distribution mode can be selected with the air distribution switches at the HVAC controls. The HVAC controls delivers the values to the HVAC control module via LIN-Bus. The HVAC control module controls the air distribution actuator so that it drives the door to the calculated position. Depending on the position of the door, air is distributed through various ducts leading to the outlets in the dash. Turning the mode door to the defrost position, the HVAC control module will move the recirculation actuator to outside air, reducing window fogging. When defrost is selected, the blower motor will be activated, regardless of the coolant temperature. The HVAC control module enables a high volume of air delivered to the front defrost vents. A/C is available in all modes.

The rear window defogger does not affect the HVAC system.

Heating and A/C Operation

The purpose of the heating and A/C system is to provide heated and cooled air to the interior of the vehicle. The A/C system will also remove humidity from the interior and reduce windshield fogging. Regardless of the temperature setting, the following can affect the rate that the HVAC system can achieve the desired temperature:

- Recirculation actuator setting
- Difference between inside and desired temperature
- Blower motor speed setting
- Mode setting

This vehicle may be equipped with a low voltage positive temperature coefficient cabin air heater. This is an electrical grid heater located in the HVAC case consisting of three 330 W stages used to heat the passenger compartment under cold conditions. When max temperature is selected and the engine coolant has not yet reached a sufficient temperature, the cabin air heater will be cycled on by the HVAC control module. The HVAC control module will monitor conditions in order to determine when to reduce or turn off the electrical cabin air heater.

When the A/C switch is pressed, the HVAC controls sends a signal to the HVAC control module via LIN-Bus. The HVAC control module evaluates this signal and sends an A/C request signal to the ECM via CAN-Bus. The ECM checks all preconditions before releasing and if all conditions are met sends a release signal back to the HVAC control module.

The following conditions must be met in order to activate the A/C compressor:

- Battery voltage is between 9–18 V
- Engine coolant temperature is less than 124°C (255°F)
- Engine speed is greater than 600 RPM
- Engine speed is less than 5 500 RPM
- A/C high side pressure is between 269–2 929 kPa (39–425 PSI)
- Throttle position is less than 100%
- Evaporator temperature is greater than 3°C (38°F)
- ECM does not detect excessive torque load
- ECM does not detect insufficient idle quality
- The ambient temperature is above 1°C (34°F)

The A/C high side pressure sensor information is used by the ECM to determine the following:

- The A/C high side pressure
- An A/C system load on the engine
- An immoderate A/C high side pressure
- The heat load at the A/C condenser

The air streams into the passenger compartment through the heater core and the evaporator core. The air temperature actuator drives the mixed air door to determine the path of the incoming air. If the interior temperature should be increased, the mixed air door is put into the position in which more air streams through

the heater core. If the interior temperature should be decreased, the mixed air door is put into the position in which more air streams through the evaporator core.

Recirculation Operation

The recirculation switch is integrated into the HVAC control. The selected recirculation setting is sent to the HVAC control module via LIN-Bus. The HVAC control module controls the air intake using the recirculation actuator. In recirculation mode the recirculation door is positioned to block outside air from entering and circulate the air within the vehicle. In outside air mode the recirculation door is positioned to route outside air into the vehicle.

Recirculation is only available if the defrost mode is not active. When the defrost mode is active, the recirculation actuator positions the recirculation door so that outside air is circulated to the windshield to reduce fogging.

In automatic mode the values of the sensors are used as inputs for the HVAC control module to calculate the fog risk on the passenger compartment side of the windshield. The A/C compressor and the defrost mode may be activated to prevent or remove fog on the passenger compartment side of the windshield.

Automatic Operation

In automatic operation, the HVAC control module maintains the comfort level inside of the vehicle by controlling the A/C compressor clutch, the blower motor, the air temperature actuators, mode actuator and recirculation actuator.

To put the HVAC system in automatic mode, the following is required:

1. The auto switch must be activated.
2. The air temperature switch must be in any other position than full hot or full cold position.

Once the desired temperature is reached, the blower motor, mode, recirculation and temperature actuators automatically adjust to maintain the temperature selected. The HVAC control module performs the following functions to maintain the desired air temperature:

- Monitors the following sensors:
  - Ambient air temperature sensor
  - Lower left air temperature sensor
  - Upper left air temperature sensor
  - Windshield temperature and inside moisture sensor
  - Ambient light/sunload sensor
  - Air quality sensor
- Regulate blower motor speed
- Position the air temperature actuator
- Position the mode actuator
- Position the recirculation actuator
- Request A/C operation

When the warmest position is selected in automatic operation the blower speed will increase gradually until the vehicle reaches normal operating temperature.

When normal operating temperature is reached the blower stays on high speed and the air temperature actuators stays in the full heat position.

When the coldest position is selected in automatic operation the blower stays on high and the air temperature actuators stay in full cold position. The mode actuator remains in the panel position and the recirculation actuator will remain in the recirculation position.

Under cold ambient temperatures, the automatic HVAC system provides heat in the most efficient manner. The operator can select an extreme temperature setting but the system will not warm the vehicle any faster. Under warm ambient temperatures, the automatic HVAC system also provides air conditioning in the most efficient manner. Selecting an extreme cool temperature will not cool the vehicle any faster.

In automatic mode the values of the windshield temperature and inside moisture sensor are used as control inputs for the HVAC control module application to calculate the fog risk on the passenger compartment side of the windshield and ability to reduce fuel consumption by decreasing A/C compressor power to a minimum without causing any fog. The A/C compressor and the defrost mode are activated to prevent or remove fog on the passenger compartment side of the windshield. The sensor will also enable partial recirculation mode in order to improve heat-up performance of the passenger compartment under cold ambient temperature conditions without the risk of mist build-up on the windshield.

Auxiliary Electric Heater (Diesel ONLY)

Models equipped with a diesel engine are also equipped with an auxiliary electric heater grid to provide faster cabin warm-ups in cold climates. The auxiliary heater grid is mounted in the low-center of the HVAC module, where heat is transferred from the grid to air which is directed to the floor outlet ducts.

The auxiliary heater is enabled only when the cabin temperature is set to MAX, the engine coolant temperature is less than 80°C (176°F), and the outside air temperature is below 12°C (54°F). When engine coolant temperature rises above 80°C (176°F), the temperature control is moved away from the MAX position, or the outside air temperature is above 12° C (54°F), the auxiliary electric heater is disabled, and cabin heat is managed only by the coolant-based heater core and temperature door position. If the auxiliary electric heater is activated and then turns off, it can actuate once again if the engine coolant temperature drops below 75°C (167°F), or the outside air temperature drops below 8°C (46°F).

The actual amount of heat output from the auxiliary electric heater can vary and is dependant upon internal overheating protection, battery state of charge, and other vehicle electrical load requirements.

Engine Coolant and A/C System Refrigerant

For information on engine coolant, coolant flow, A/C refrigerant, and the A/C refrigerant cycle, refer to Heating and Air Conditioning System Description and Operation.

HVAC - Manual

Schematic and Routing Diagrams

HVAC Schematics (Power, Ground, Serial Data, HVAC and Blower Controls)

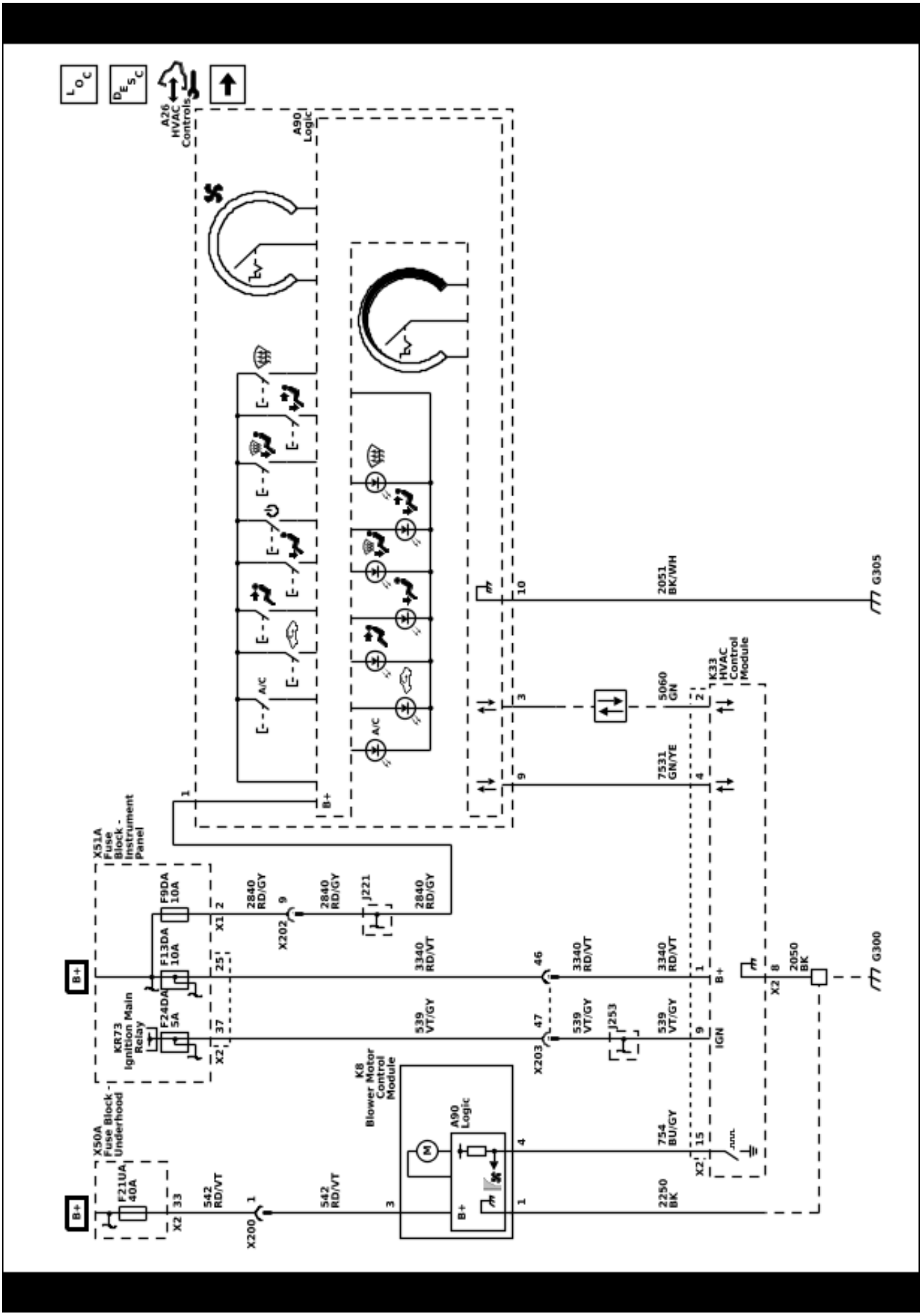

HVAC Schematics (Temperature Sensors and Actuators)

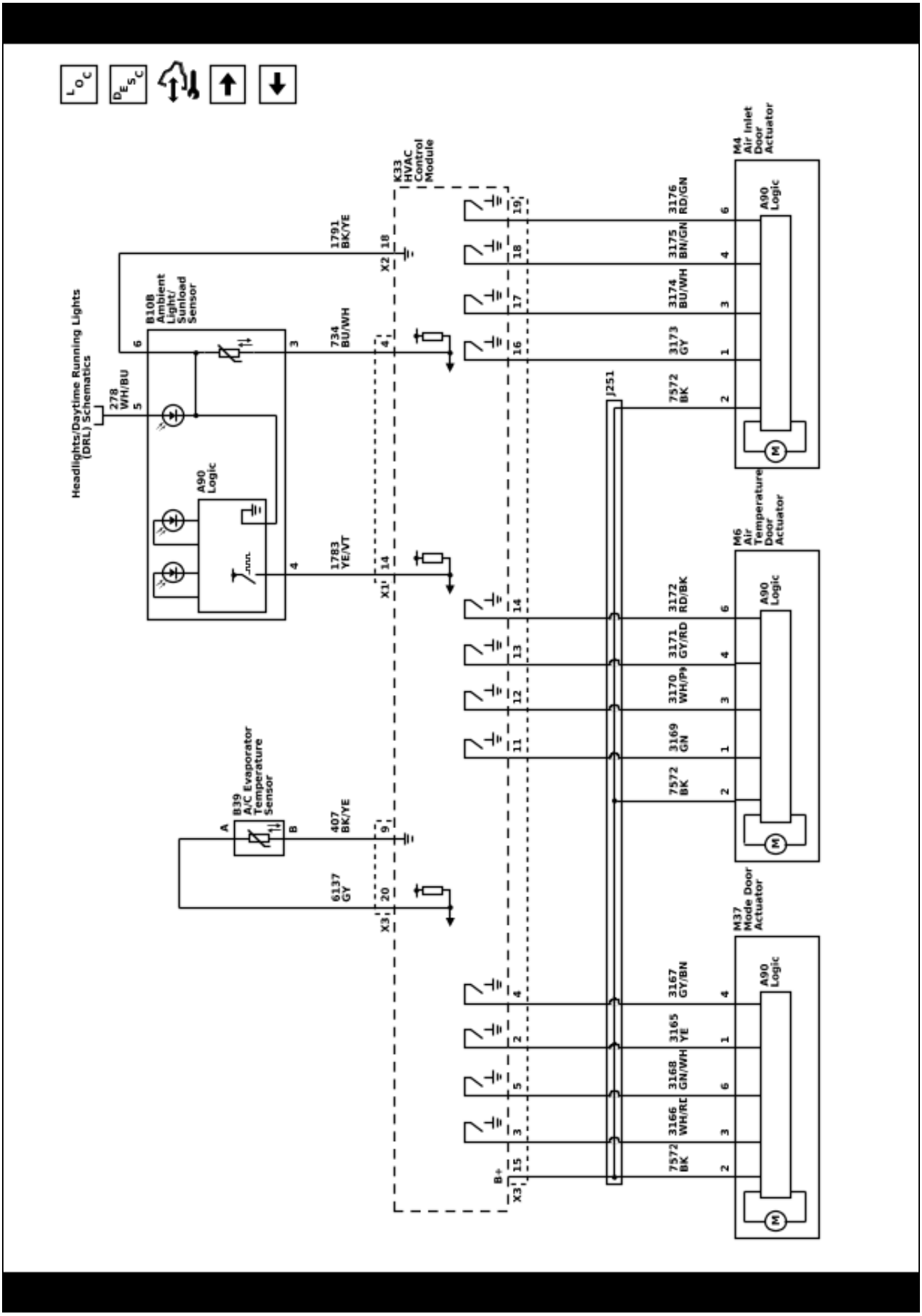

5681706

HVAC Schematics (A/C Compressor Controls)

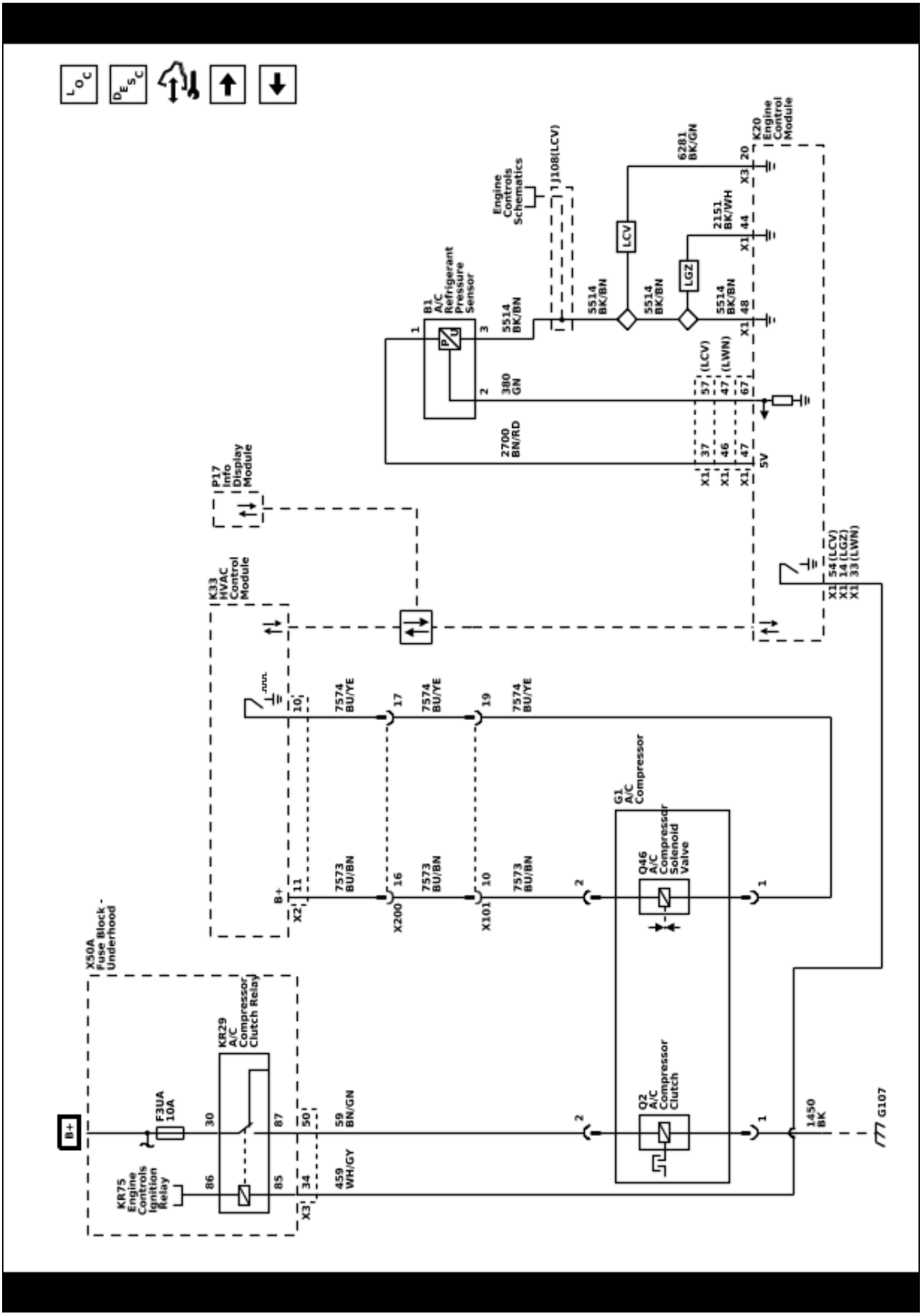

5681707

HVAC Schematics (Auxiliary Heater (LWN))

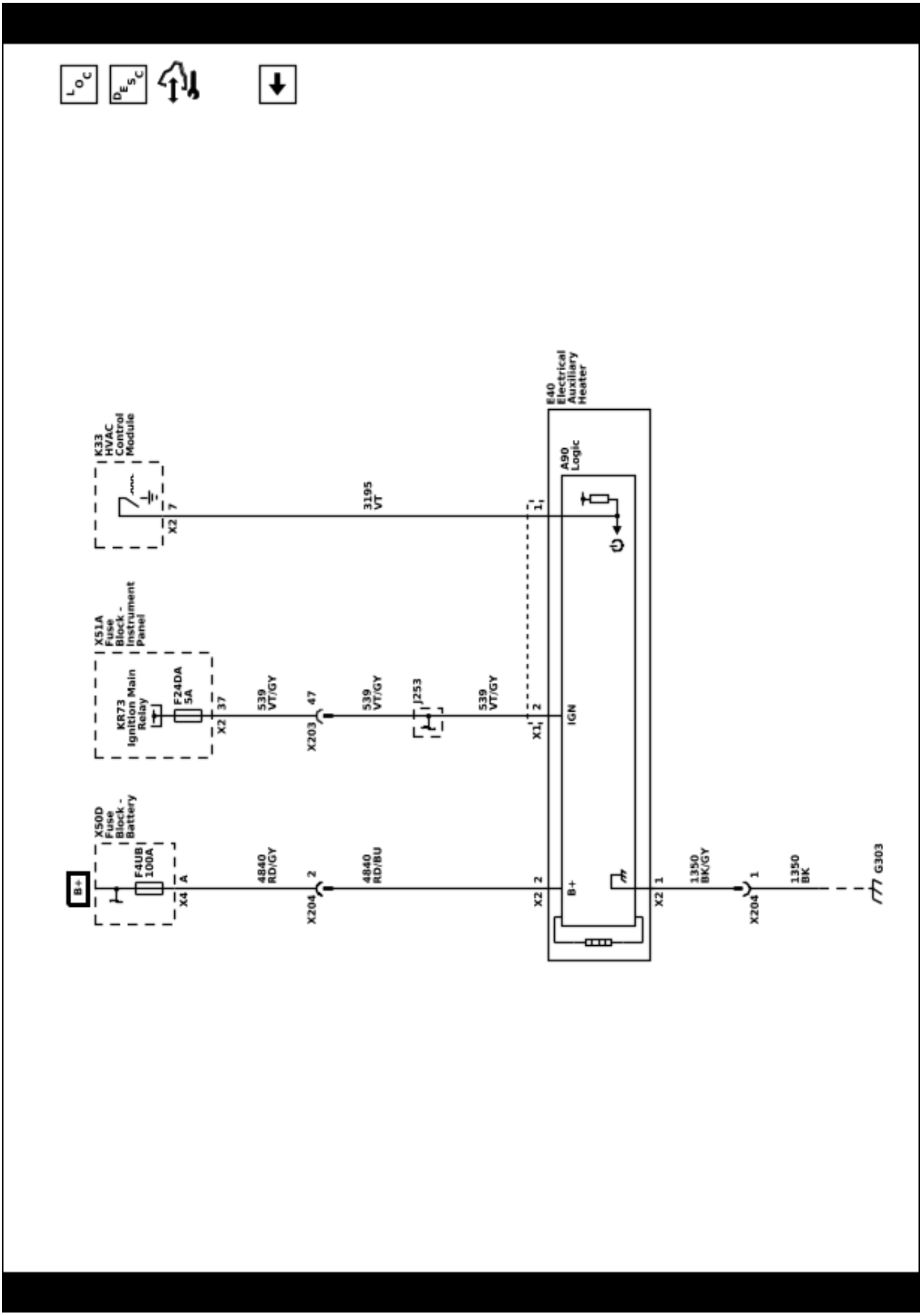

Description and Operation

Manual HVAC Description and Operation

The air temperature and the air delivery description and operation are divided into seven areas:

- HVAC Control Components
- Air Speed
- Air Delivery
- Heating and A/C Operation
- Recirculation Operation
- Auxiliary Electric Heater
- Engine Coolant and A/C System Refrigerant

HVAC Control Components

HVAC Controls

The HVAC controls contains all switches, which are required to control the functions of HVAC and serve as interface between the operator and the HVAC control module. The selected values are passed to the HVAC control module via LIN-Bus.

HVAC Control Module

The HVAC control module is a GMLAN device that interfaces between the operator and the HVAC system to maintain and control desired air temperature and air distribution settings. The battery positive voltage circuit provides power that the HVAC control module uses for keep alive memory. If the battery positive voltage circuit loses power, all HVAC DTCs and settings will be erased from keep alive memory. The body control module (BCM), which is the vehicle mode master, provides a device ON-Signal. The HVAC control module provides blower, air delivery mode and air temperature settings.

Actuators

Doors in the HVAC case assembly are used to control air flow. The HVAC control module operates the doors through the use of actuators, with one actuator being used for each door. The system has the following air control doors and associated actuators: mode, temperature, and recirculation.

Each actuator used in the system is a 5-wire stepper motor. The HVAC control module supplies a 12 V reference voltage to the stepper motor and energizes the 4 stepper motor coils with a pulsed ground signal. The stepper motor moves the associated air control door into the calculated position in order to reach the selected position. The null point of the stepper motor will be calibrated, if the stepper motor is new. When the stepper motor is calibrated, the HVAC control module can drive the applicable coil to reach exactly the desired position of the door.

Blower Motor

The blower motor speed control signal from the HVAC Control Module, battery positive and ground circuits enable the blower motor to operate. The blower motor control circuitry is integrated within the blower motor assembly. The HVAC Control Module provides a pulse width modulation (PWM) signal to the blower motor to request a specific motor speed. The blower motor translates the PWM signal and drives the motor accordingly. As the requested blower speed increases, the HVAC control module increases the amount of time that the speed signal is modulated to ground. As the requested blower speed decreases, the HVAC control module decreases the amount of time that the signal is modulated to ground.

Evaporator Temperature Sensor

The evaporator temperature sensor is a 2-wire negative temperature coefficient thermistor. The sensor operates within a temperature range of −40 to +85°C (−40 to +185°F). The sensor is installed near the evaporator core to measure the air temperature exiting the core.

Based on vehicle operating conditions and operator settings, the HVAC software algorithms will determine a target evaporator air temperature. The operation of the compressor solenoid will be adjusted as needed to quickly reach and maintain the targeted temperature.

A/C Refrigerant Pressure Sensor

The A/C refrigerant pressure sensor is a 3-wire piezoelectric pressure transducer. The 5 V reference voltage, low reference, and signal circuits enable the sensor to operate. The A/C pressure signal can be between 0.2–4.8 V. When the A/C refrigerant pressure is low, the signal value is near 0 V. When the A/C refrigerant pressure is high, the signal value is near 5 V. The engine control module (ECM) converts the voltage signal to a pressure value. When pressure is too high or too low, the ECM will not allow the A/C compressor clutch to engage.

A/C Compressor

The A/C compressor uses a conventional belt driven magnetic clutch to engage and mechanically turn the compressor. When the A/C switch is pressed, the HVAC control module sends an A/C request message to the ECM via serial data. If specific criteria is met, the ECM then grounds the A/C compressor clutch relay control circuit, which will switch the A/C compressor clutch relay. With the relay contacts closed, battery voltage is supplied to the permanently grounded A/C compressor clutch. The A/C compressor clutch will then be activated.

This A/C system utilizes a variable displacement solenoid valve to alter the amount of displacement created by the turning of the compressor. The HVAC control module provides both battery voltage and a pulse width modulated ground to the variable displacement solenoid valve. When the A/C switch is pressed, the HVAC control module grounds the variable displacement solenoid using a (PWM) signal in order to determine the amount of compressor displacement. The performance of the A/C compressor is regulated based on the adjusted interior temperature.

Air Speed

The blower control switch is part of the HVAC controls. The selected value of the blower switch position is sent to the HVAC control module via LIN-Bus.

The HVAC control module provides a PWM signal to the blower motor in order to command the desired blower motor speed.

Afterblow

Afterblow is a feature that dries the evaporator core by operating the blower motor after the engine is turned OFF under certain conditions. This reduces the amount of microbial growth that can create undesirable odors. For additional information on afterblow, the default setting, and changing the setting, refer to Afterblow Configuration.

Air Delivery

The desired air distribution mode can be selected with the air distribution switches at the HVAC controls. The HVAC controls delivers the values to the HVAC control module via LIN-Bus. The HVAC control module controls the air distribution actuator so that it drives the door to the calculated position. Depending on the position of the door, air is distributed through various ducts leading to the outlets in the dash. Turning the mode door to the defrost position, the HVAC control module will move the recirculation actuator to outside air, reducing window fogging. When defrost is selected, the blower motor will be activated, regardless of the coolant temperature. The HVAC control module enables a high volume of air delivered to the front defrost vents. A/C is available in all modes.

The rear window defogger does not affect the HVAC system.

Heating and A/C Operation

The purpose of the heating and A/C system is to provide heated and cooled air to the interior of the vehicle. The A/C system will also remove humidity from the interior and reduce windshield fogging. Regardless of the temperature setting, the following can affect the rate that the HVAC system can achieve the desired temperature:

- Recirculation actuator setting
- Difference between inside and desired temperature
- Blower motor speed setting
- Mode setting

This vehicle may be equipped with a low voltage positive temperature coefficient cabin air heater. This is an electrical grid heater located in the HVAC case consisting of three 330 W stages used to heat the passenger compartment under cold conditions. When max temperature is selected and the engine coolant has not yet reached a sufficient temperature, the cabin air heater will be cycled on by the HVAC control module. The HVAC control module will monitor conditions in order to determine when to reduce or turn off the electrical cabin air heater.

When the A/C switch is pressed, the HVAC controls sends a signal to the HVAC control module via LIN-Bus. The HVAC control module evaluates this signal and sends an A/C request signal to the ECM via CAN-Bus. The ECM checks all preconditions before releasing and if all conditions are met sends a release signal back to the HVAC control module.

The following conditions must be met in order to activate the A/C compressor:

- Battery voltage is between 9–18 V
- Engine coolant temperature is less than 124°C (255°F)
- Engine speed is greater than 600 RPM
- Engine speed is less than 5 500 RPM
- A/C high side pressure is between 269–2 929 kPa (39–425 PSI)
- Throttle position is less than 100%
- Evaporator temperature is greater than 3°C (38°F)
- ECM does not detect excessive torque load
- ECM does not detect insufficient idle quality
- The ambient temperature is above 1°C (34°F)

The A/C high side pressure sensor information is used by the ECM to determine the following:

- The A/C high side pressure
- An A/C system load on the engine
- An immoderate A/C high side pressure
- The heat load at the A/C condenser

The air streams into the passenger compartment through the heater core and the evaporator core. The air temperature actuator drives the mixed air door to determine the path of the incoming air. If the interior temperature should be increased, the mixed air door is put into the position in which more air streams through the heater core. If the interior temperature should be decreased, the mixed air door is put into the position in which more air streams through the evaporator core.

Recirculation Operation

The recirculation switch is integrated into the HVAC control. The selected recirculation setting is sent to the HVAC control module via LIN-Bus. The HVAC control module controls the air intake using the recirculation actuator. In recirculation mode the recirculation door is positioned to block outside air from entering and circulate the air within the vehicle. In outside air mode the recirculation door is positioned to route outside air into the vehicle.

Recirculation is only available if the defrost mode is not active. When the defrost mode is active, the recirculation actuator positions the recirculation door so that outside air is circulated to the windshield to reduce fogging.

Auxiliary Electric Heater (Diesel ONLY)

Models equipped with a diesel engine are also equipped with an auxiliary electric heater grid to provide faster cabin warm-ups in cold climates. The auxiliary heater grid is mounted in the low-center of the HVAC module, where heat is transferred from the grid to air which is directed to the floor outlet ducts.

The auxiliary heater is enabled only when the cabin temperature is set to MAX, the engine coolant temperature is less than 80°C (176°F), and the outside air temperature is below 12°C (54°F). When engine coolant temperature rises above 80°C (176°F), the temperature control is moved away from the MAX position, or the outside air temperature is above 12° C (54°F), the auxiliary electric heater is disabled, and cabin heat is managed only by the coolant-based heater core and temperature door position. If the auxiliary electric heater is activated and then turns off, it can actuate once again if the engine coolant temperature drops below 75°C (167°F), or the outside air temperature drops below 8°C (46°F).

The actual amount of heat output from the auxiliary electric heater can vary and is dependant upon internal overheating protection, battery state of charge, and other vehicle electrical load requirements.

Engine Coolant and A/C System Refrigerant

For information on engine coolant, coolant flow, A/C refrigerant, and the A/C refrigerant cycle, refer to Heating and Air Conditioning System Description and Operation.

BLANK

Section 6

Power and Signal Distribution

Data Communications 6-3
Schematic and Routing Diagrams 6-3
Data Communication Schematics 6-4
Body Control System Schematics 6-16
Description and Operation 6-20
Data Link Communications Description and Operation 6-20

Electrical Component and Inline Harness Connector End Views 6-25
Component Locator 6-25
Electrical Center Identification Views 6-25
Component Connector End Views 6-68
Inline Harness Connector End Views 6-498

Power Outlets 6-604
Schematic and Routing Diagrams 6-604
Cigar Lighter/Power Outlet Schematics 6-605
Description and Operation 6-607
Mobile Device Wireless Charger Description and Operation 6-607
Power Outlets Description and Operation 6-607

Wiring Systems and Power Management 6-608
Electronic Park Lock Description and Operation 6-608
Power Mode Description and Operation 6-609
Retained Accessory Power Description and Operation 6-611

BLANK

Data Communications

Schematic and Routing Diagrams

Data Communication Schematics (Serial Data Gateway Module and Data Link Connector Power and Ground)

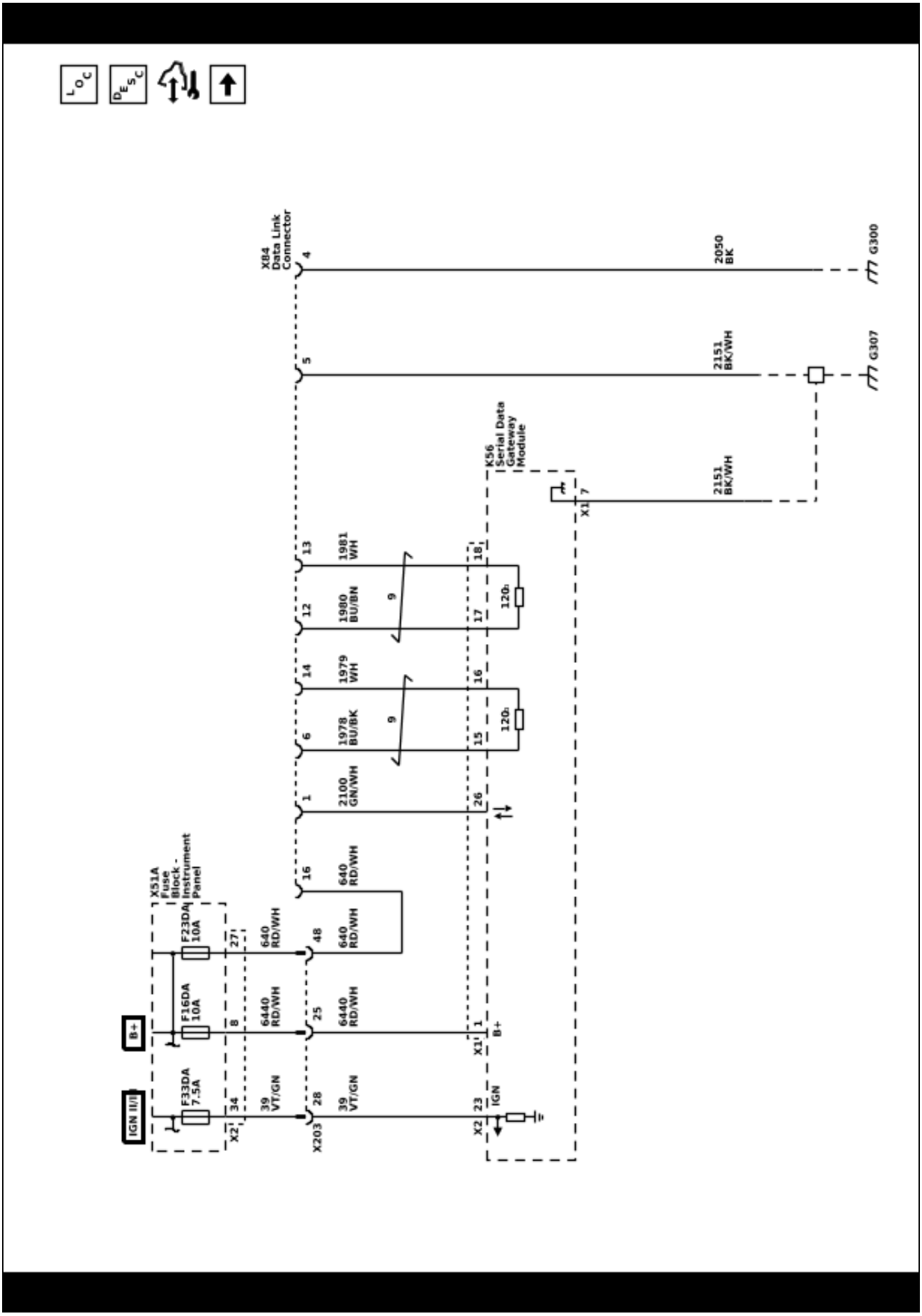

5681713

5681714

Data Communication Schematics (Low Speed GMLAN)

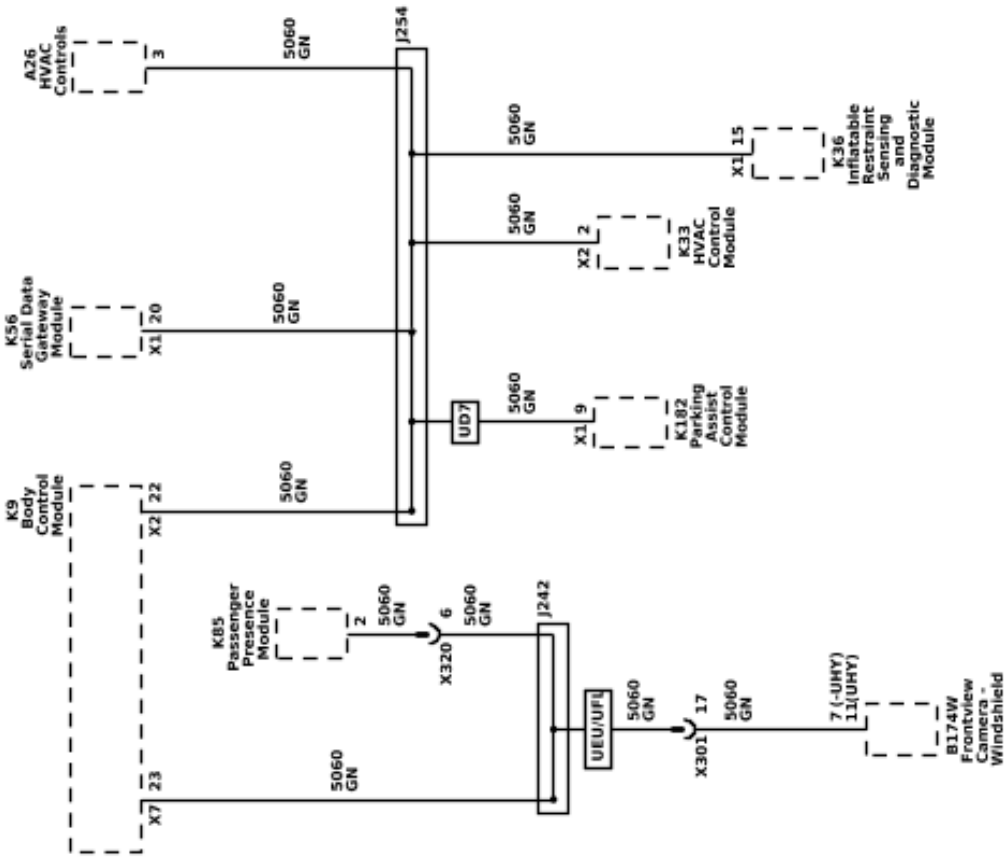

Data Communication Schematics (Isolated Low Speed GMLAN)

5681715

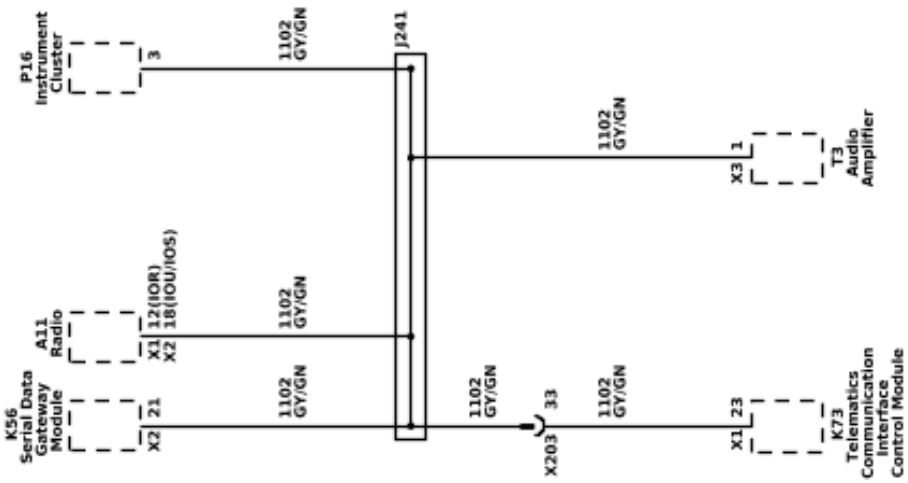

Data Communication Schematics (High Speed GMLAN)

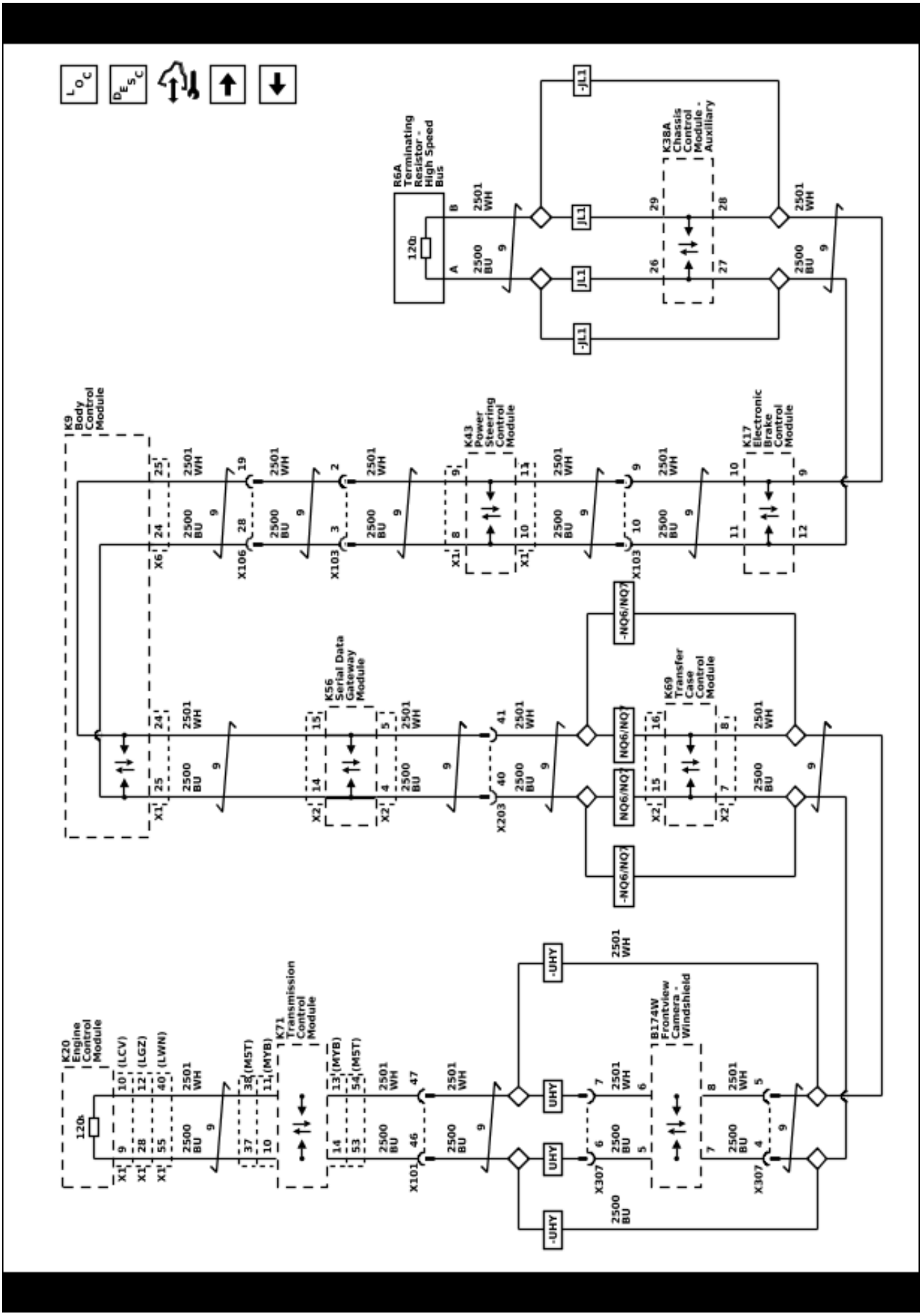

5681716

Data Communication Schematics (Isolated High Speed GMLAN)

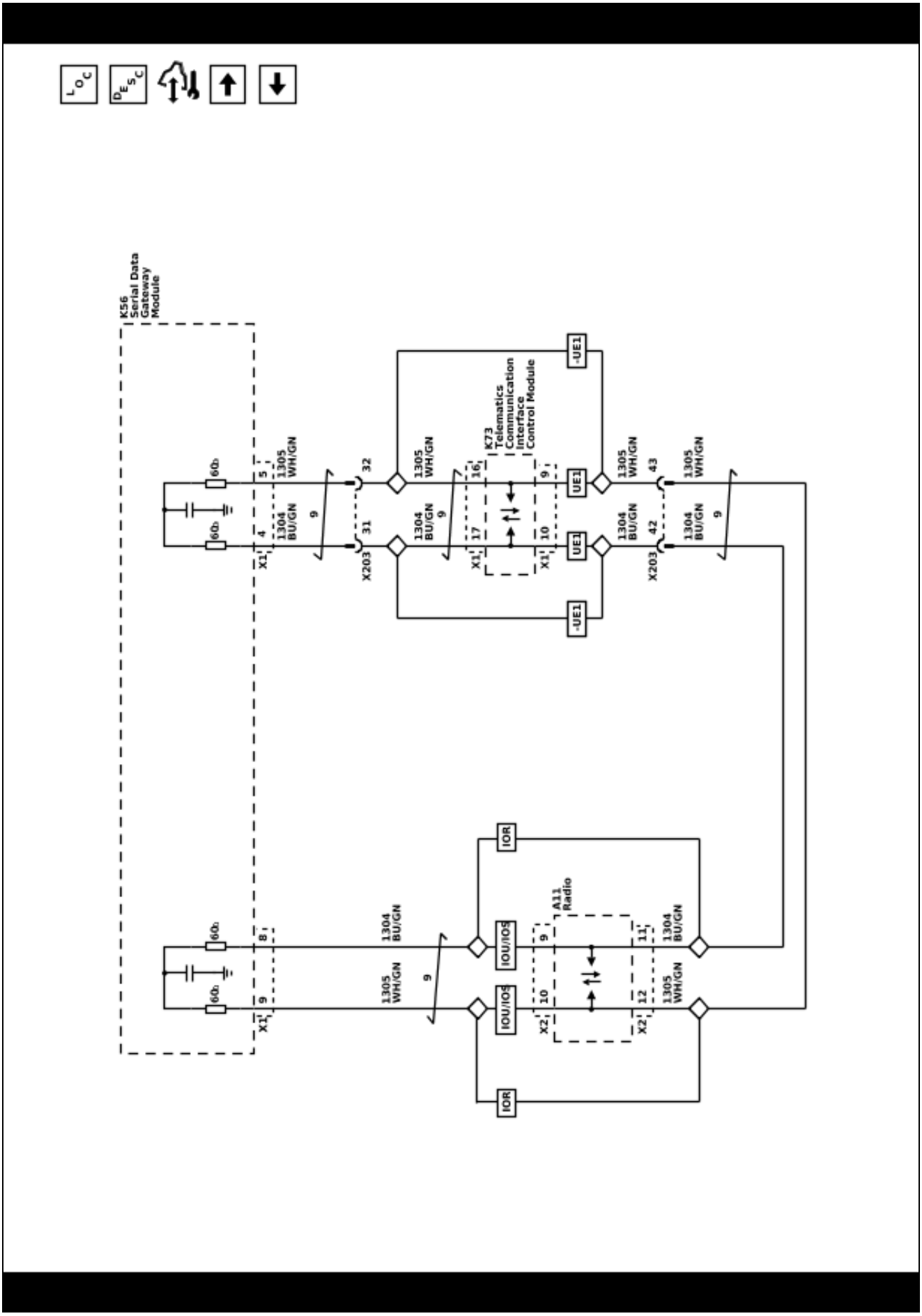

5681718

Data Communication Schematics (Powertrain Expansion Bus (LCV,LGZ))

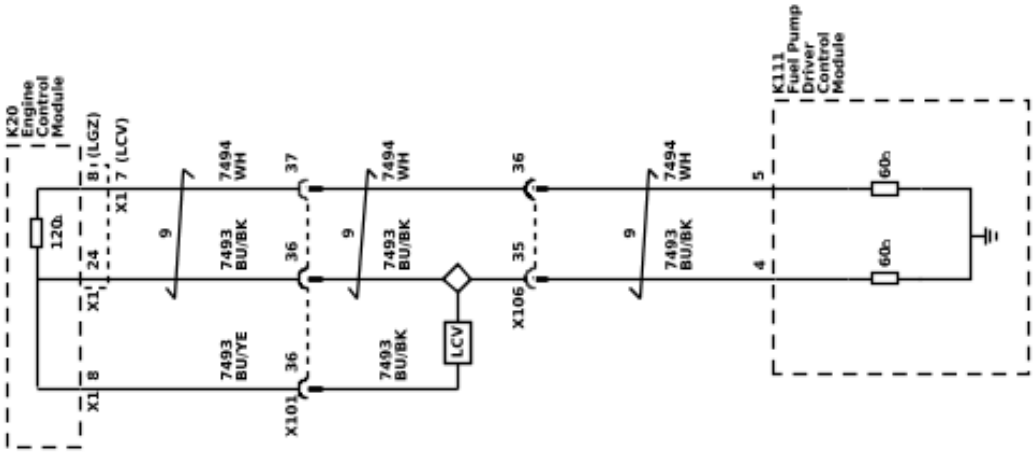

Data Communication Schematics (Powertrain NOX Bus (LWN))

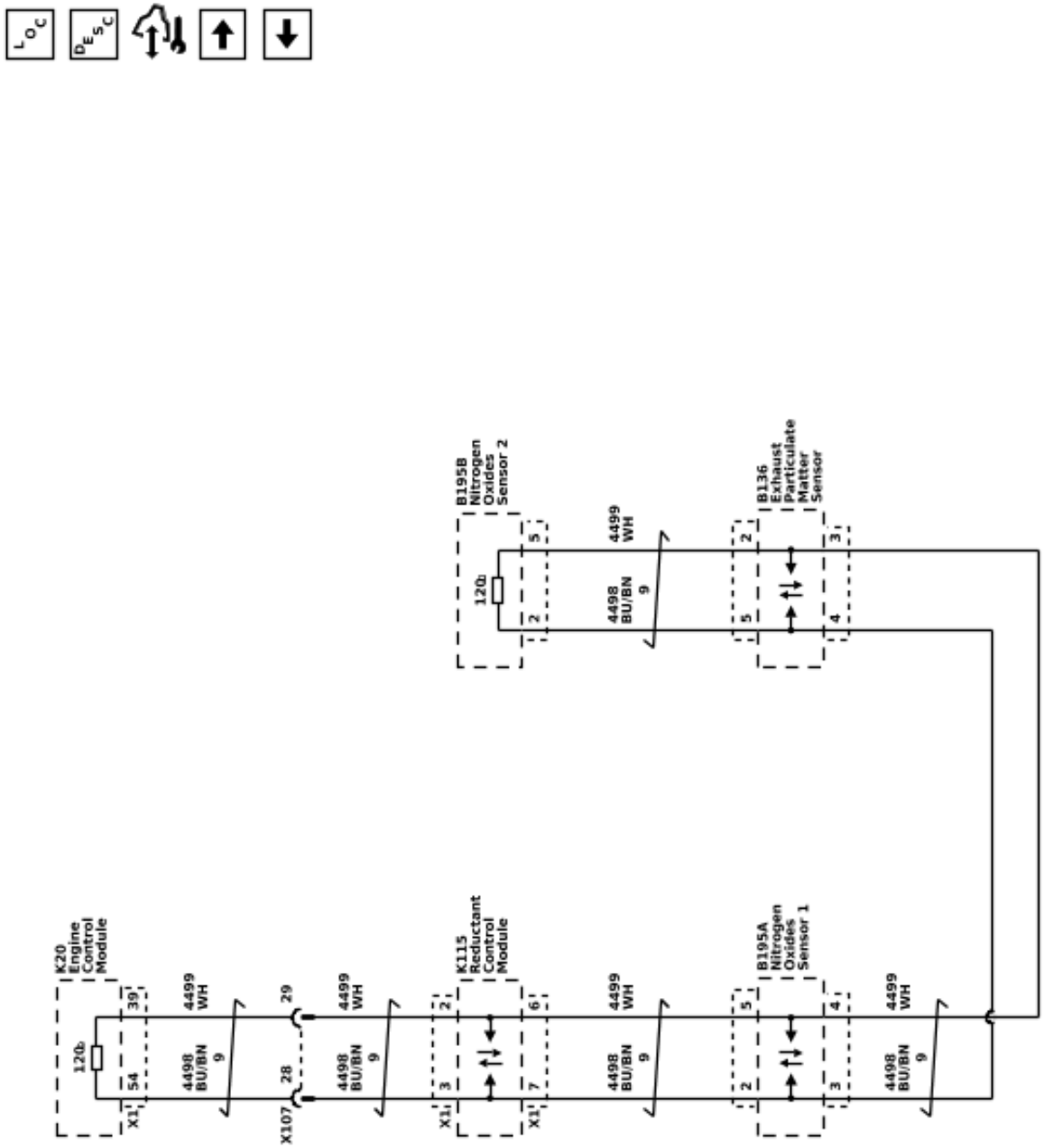

5681719

5681720

Data Communication Schematics (Chassis High Speed GMLAN)

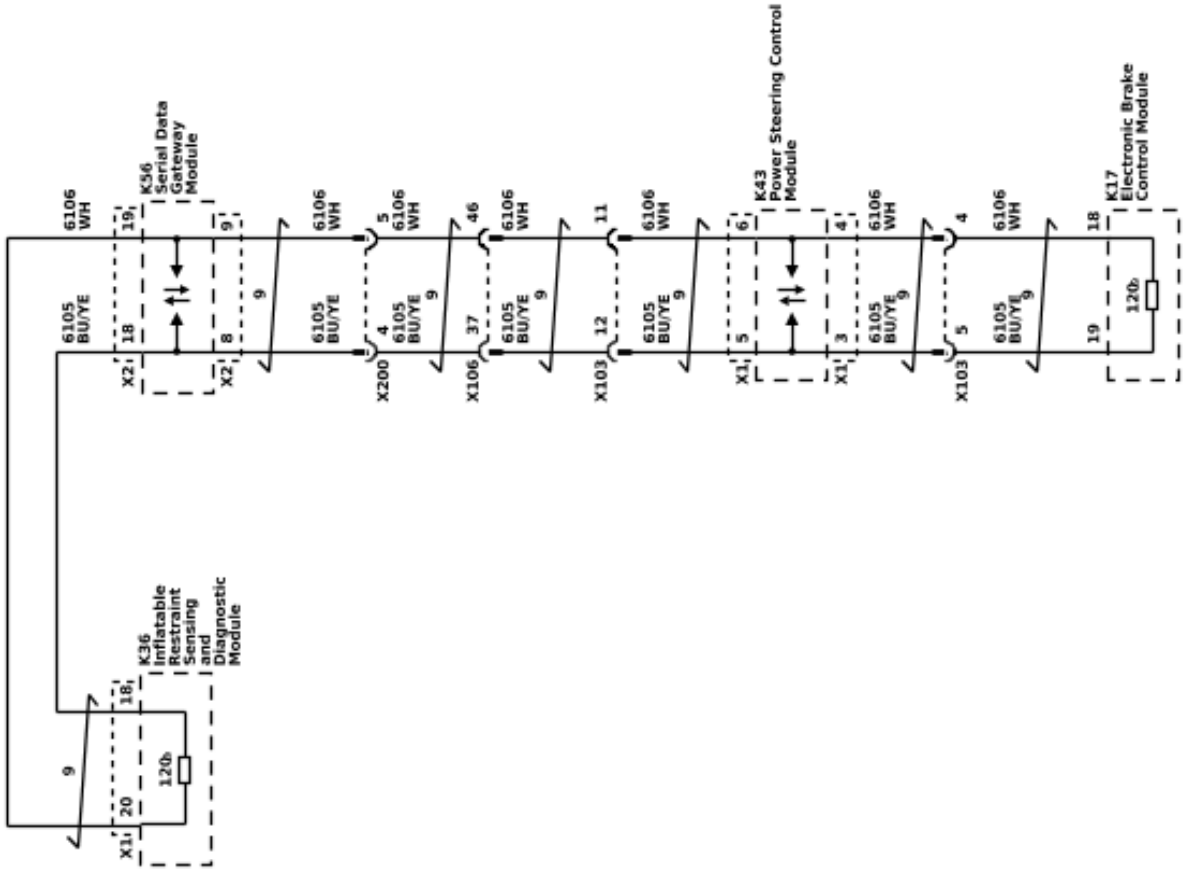

Data Communication Schematics (Ethernet BUS)

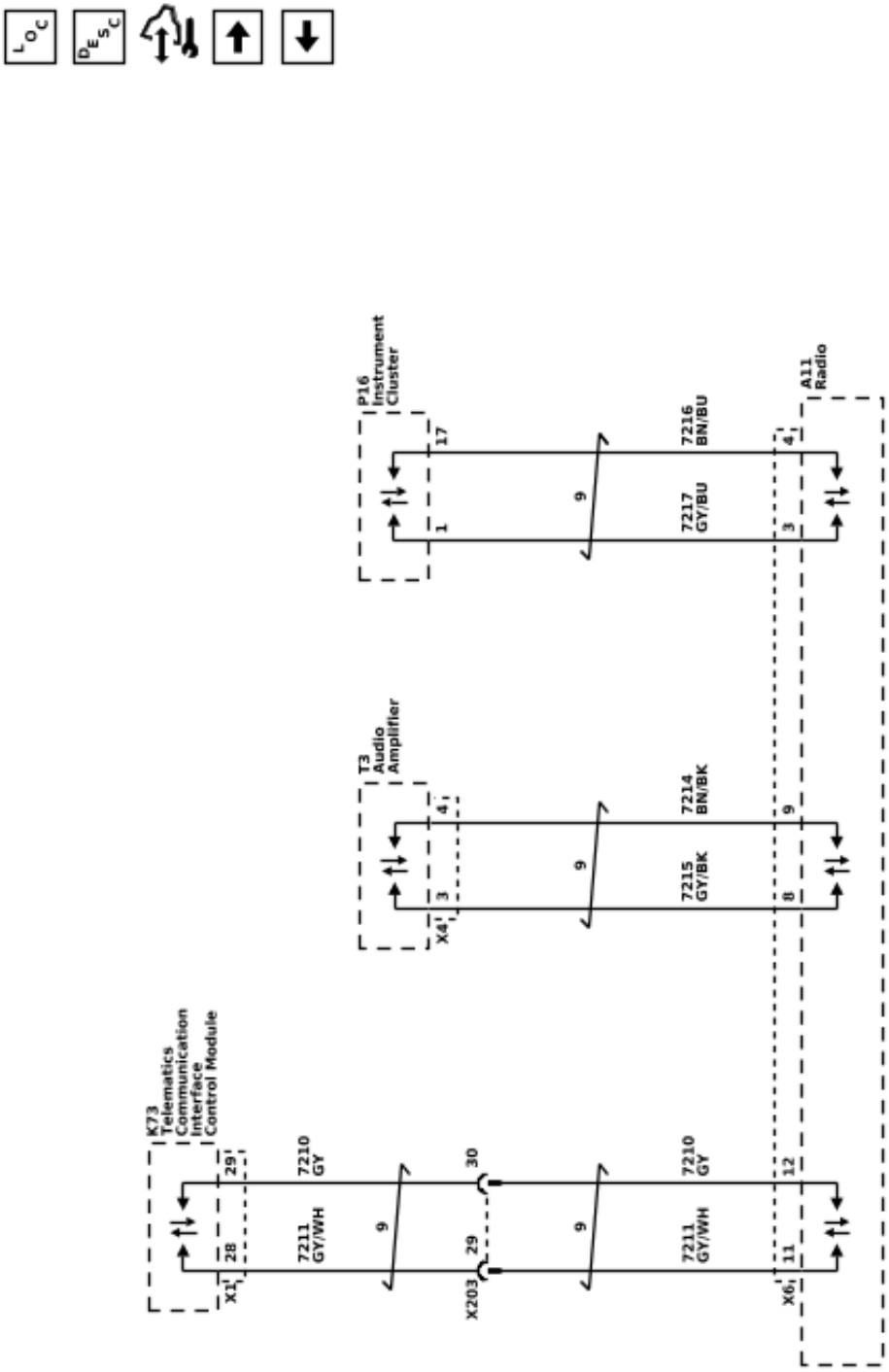

5681721

Data Communication Schematics (Accessory Wakeup and Communications Enable (LWN))

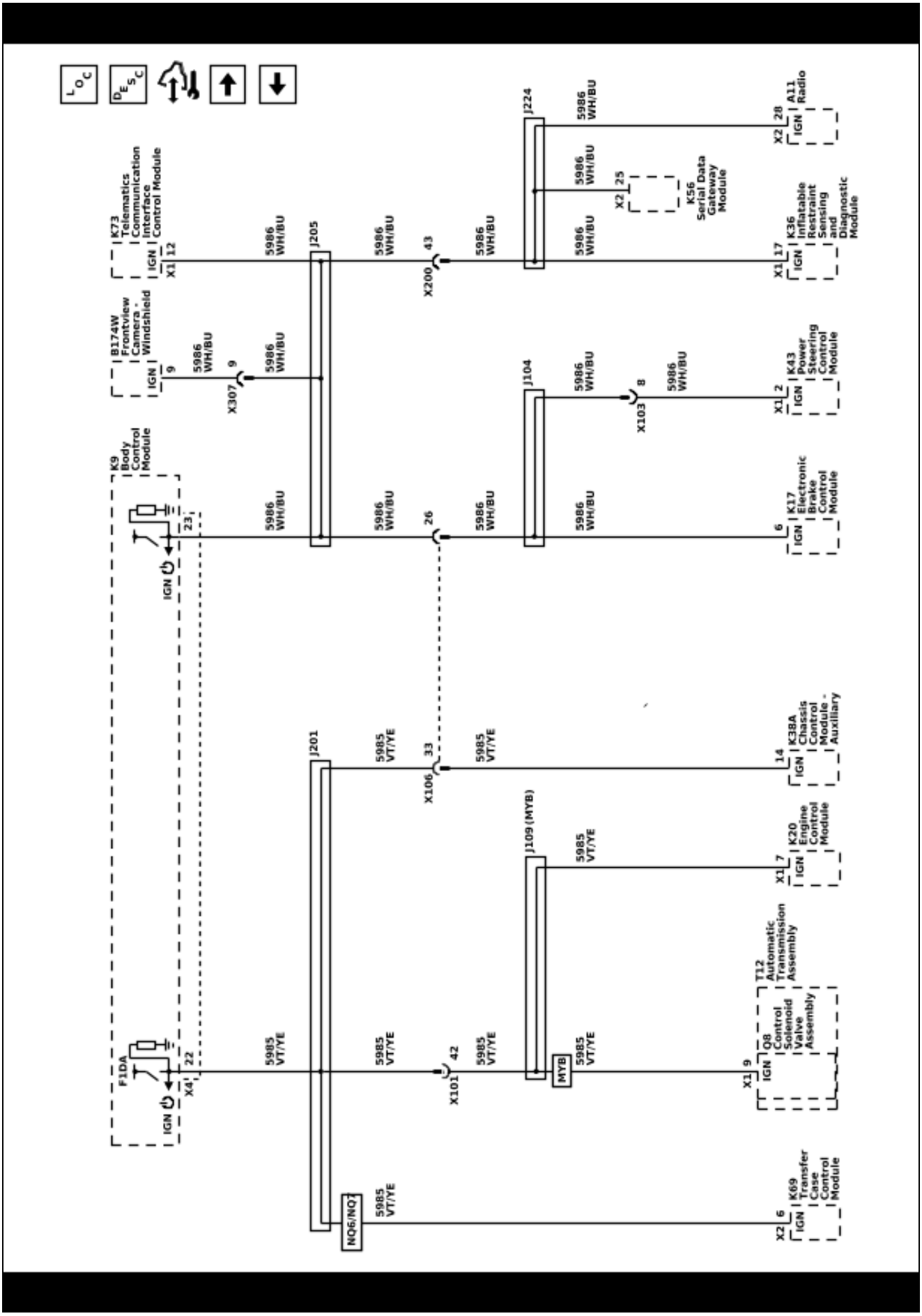

Data Communication Schematics (Accessory Wakeup and Communications Enable (LCV/LGZ))

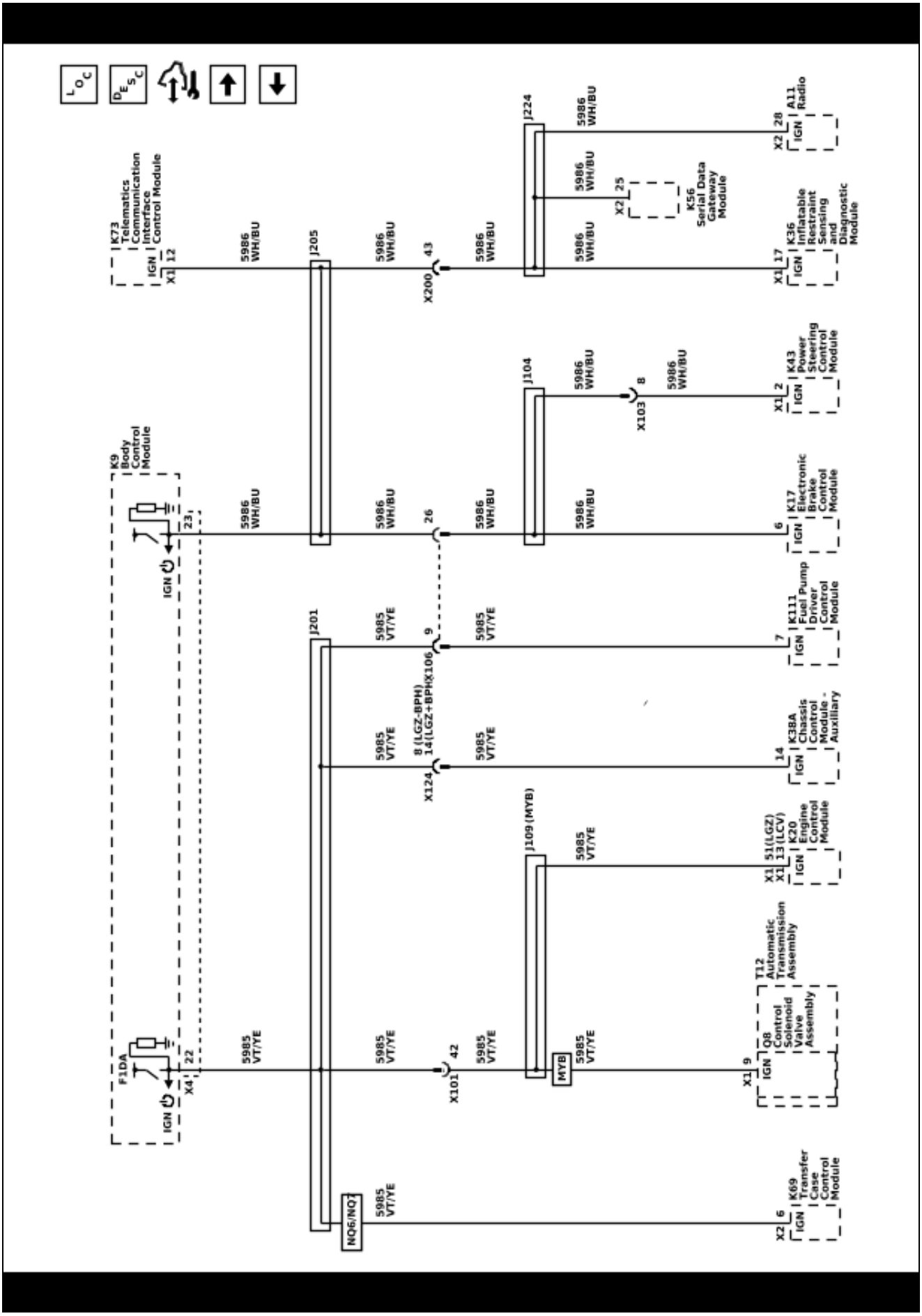

5681723

Data Communication Schematics (Local Interconnect Network)

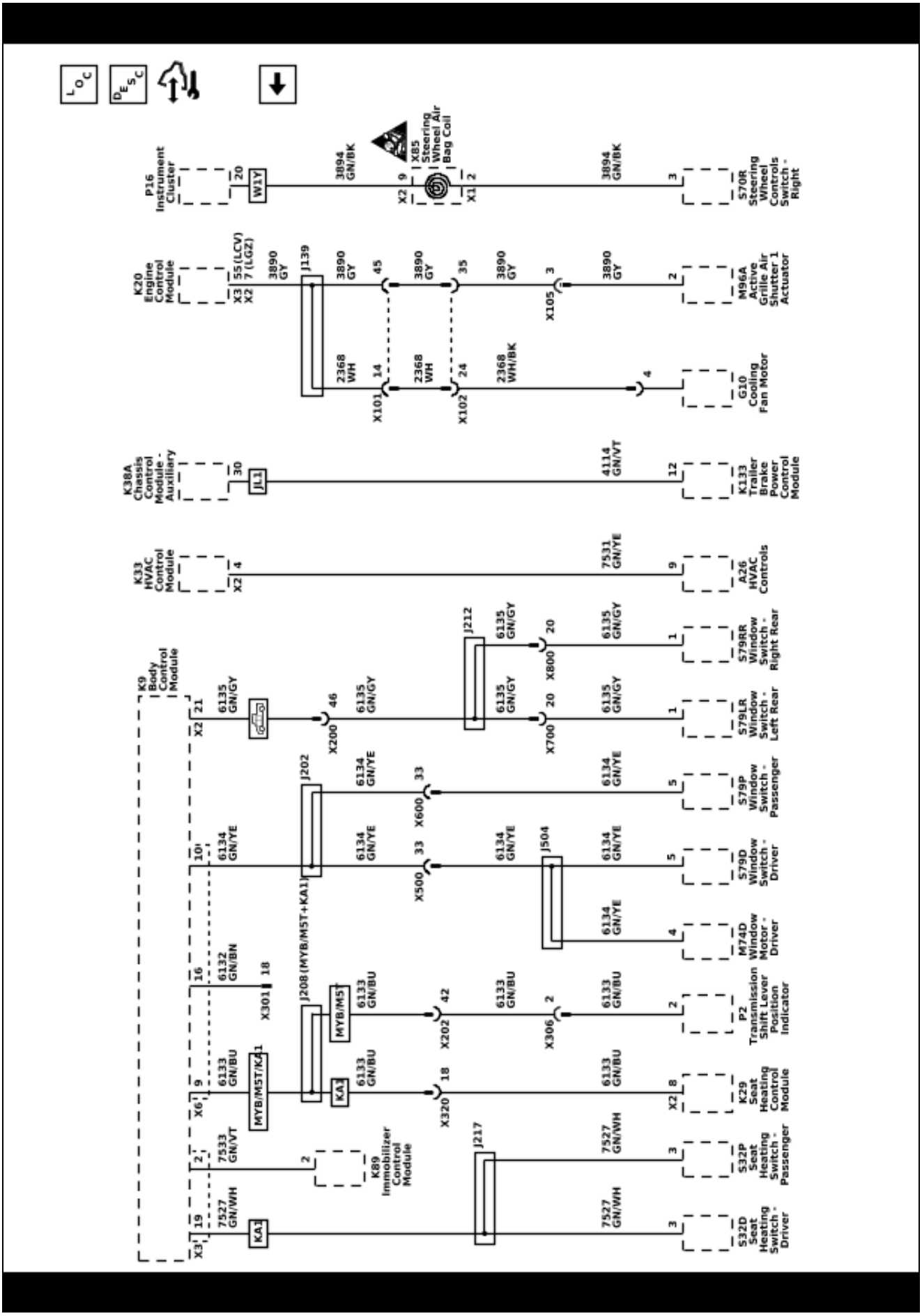

5681724

Body Control System Schematics (Power, Ground, and Serial Data)

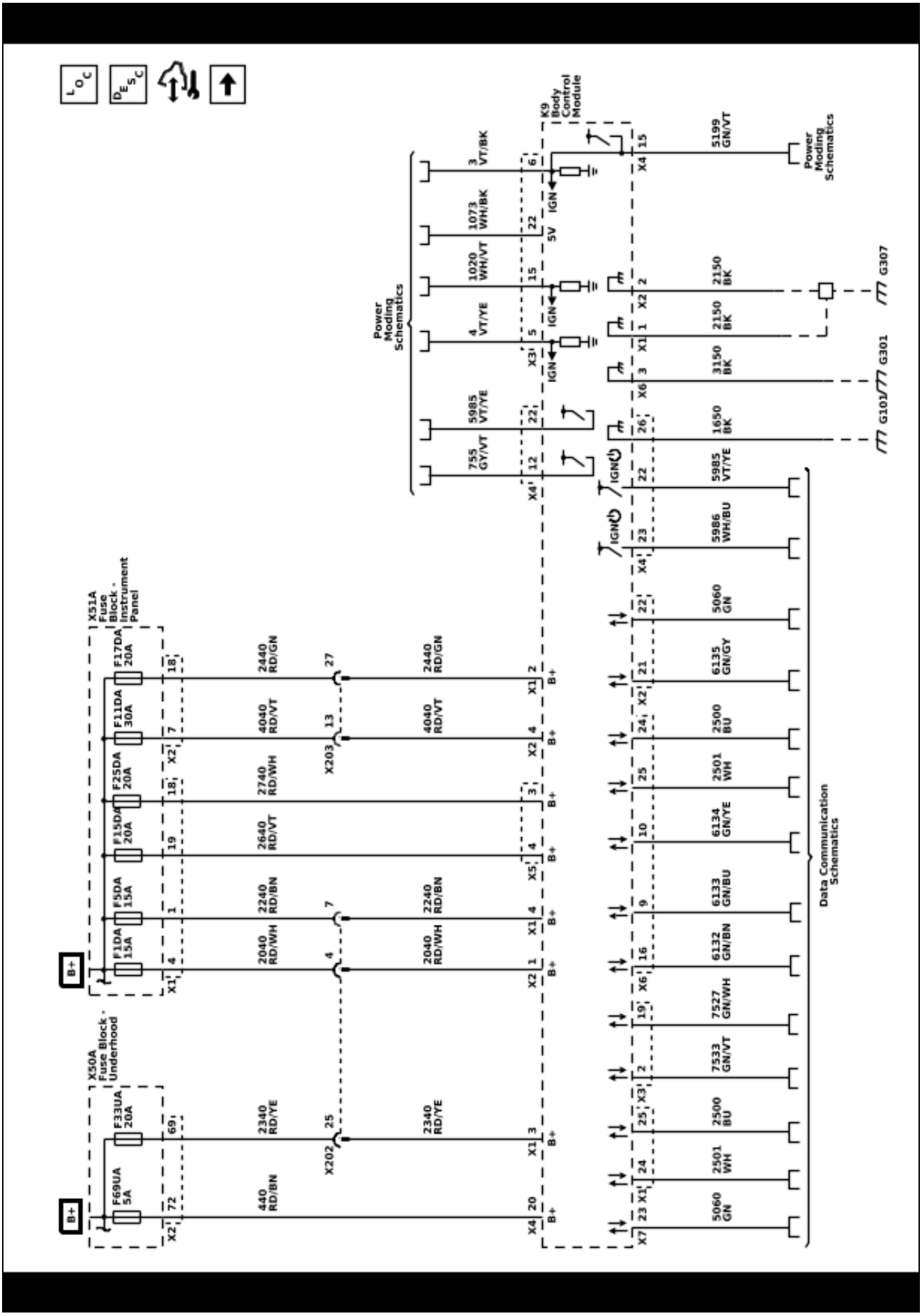

Body Control System Schematics (Subsystem References (1 of 3))

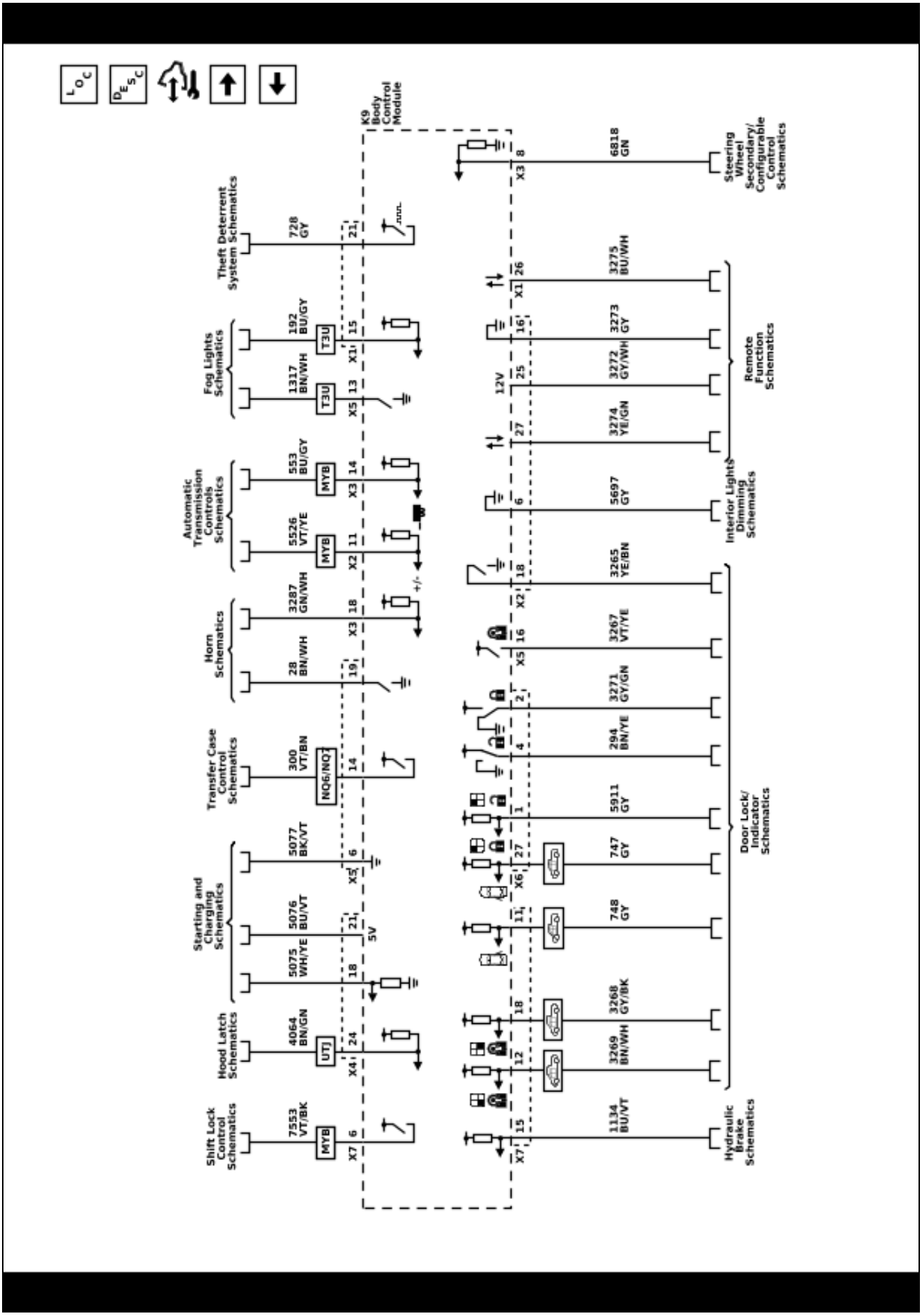

5681710

Body Control System Schematics (Subsystem References (2 of 3))

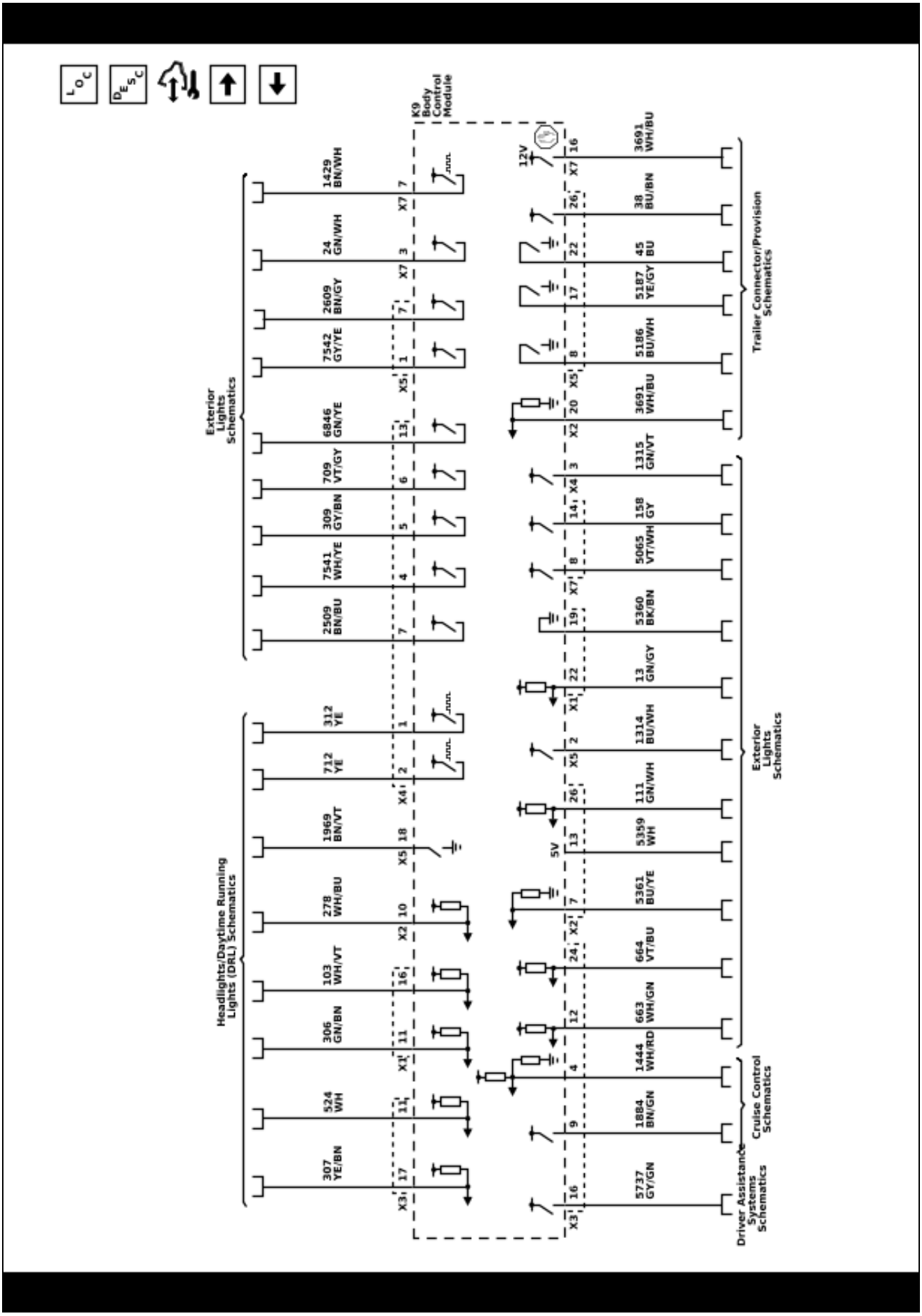

5681711

Body Control System Schematics (Subsystem References (3 of 3))

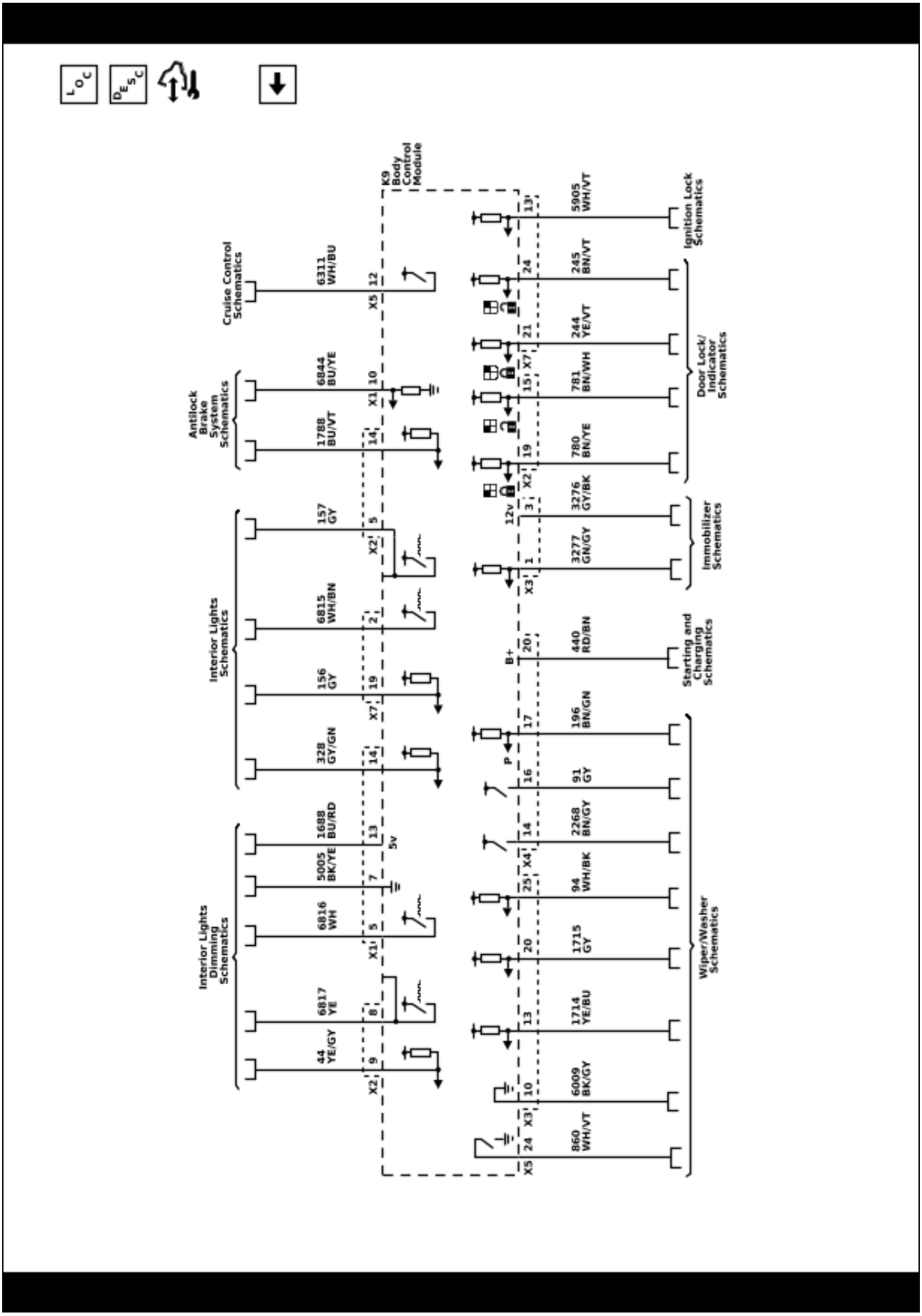

5681712

Description and Operation

Data Link Communications Description and Operation

Note: This is an overview of different serial data buses used by GM devices to communicate with each others. Use *Data Communication Schematics on page 6-4* to find out which serial data buses are configured for a specific vehicle.

Data Link Communications Overview

There are many components in a vehicle that rely on information from other sources, transmit information to other sources, or both. Serial data communication networks provide a reliable, cost effective, way for various components of the vehicle to “talk” to one another and share information.

GM uses a number of different communication buses to insure the timely and efficient exchange of information between devices. When compared to each other, some of these buses are different in nature as far as speed, signal characteristics, and behavior. An example of this is the High Speed GMLAN and Low Speed GMLAN Buses.

On the other hand, when other buses are compared to each other they have similar characteristics and simply operate in parallel. In this case they are used to group together components which have high interaction. Examples are the High Speed GMLAN, Powertrain Expansion, and Chassis Expansion Buses. This allows them to communicate with each other on a bus with reduced message congestion insuring faster and the more timely exchange of information than if all vehicle devices were on a single bus.

The majority of information that exists within a given network generally stays local; however some information will have to be shared on other networks. Control modules designated as Gateway’s perform the function of transferring information between the various buses. A Gateway module is connected to at least 2 buses and will interact with each network according to its message strategy and transmission models.

GMLAN provides the capability for a receiving device to monitor message transmissions from other devices in order to determine if messages of interest are not being received. The primary purpose is to allow reasonable default values to be substituted for the information no longer being received. Additionally, a device may set a Diagnostic Trouble Code (DTC) to indicate that the device it is expecting information from is no longer communicating. A lost communication DTC typically is set in devices other than the device with a communication failure.

K9 Body Control Module (BCM)

The K9 Body Control Module has discrete input and output terminals to control the vehicle's body functions. The K9 Body Control Module is wired to the High Speed GMLAN Bus, Low Speed GMLAN Bus and multiple Local Interconnect Network (LIN) Buses and acts as a gateway between them. The various K9 Body Control Module input and output circuits are illustrated in the corresponding functional areas on the K9 Body Control Module electrical schematics. Refer to the *Body Control System Schematics on page 6-16* for more detailed information.

Power Mode Master

The K9 Body Control Module functions as the power mode master. The ignition switch is a low current switch with multiple discrete ignition switch signals to the power mode master for determining the power mode that will be sent over the serial data circuits to the other devices that need this information; the power mode master will activate relays and other direct outputs of the power mode master as needed. Refer to *Power Mode Description and Operation on page 6-609* for a complete description of power mode functions.

Gateway

The K9 Body Control Module functions as a gateway or translator. The purpose of the gateway is to translate serial data messages between the High Speed GMLAN Bus and the Low Speed GMLAN Bus for communication between the various devices. The gateway will interact with each network according to that network's transmission protocol. All communication between the K9 Body Control Module and a scan tool is done through the primary High Speed GMLAN Bus.

K56 Serial Data Gateway Module (Gen 3)

Note: The Data Bus Diagnostic Tool will not work with vehicles equipped with K56 Serial Data Gateway Module gen 3.

This vehicle is equipped with a K56 Serial Data Gateway Module gen 3. The K56 Serial Data Gateway Module is used to handle communications between multiple GMLAN buses and functions as a gateway to isolate the secure networks from the unsecured networks. It was created to mitigate bus loading to support cyber security and new active/advanced safety features (if equipped). The K56 Serial Data Gateway Module is used as a frame-to-frame gateway for all functional messages. Communication between the K56 Serial Data Gateway Module and a scan tool is done through the primary High Speed GMLAN bus. When the K56 Serial Data Gateway Module is not communicating, the scan tool can not communicate with the vehicle.

The K56 Serial Data Gateway Module has two microprocessors within the electronic control unit. Each microprocessor is diagnosed/programmed independently via the scan tool because the two microprocessors do not talk internally. Each of these processors are responsible for managing the traffic for specific communication buses on the vehicle. The two particular buses that they will manage are high speed and low speed. If communication does not exist or the particular micros have not been programmed, control modules won’t be able to communicate with or through the K56 Serial Data Gateway Module.

Low speed Microprocessor

- The low speed microprocessor is programmable via the X84 Data Link Connector (DLC) terminal 1. This low speed bus between the X84 Data Link Connector and the K56 Serial Data Gateway Module is called the Low Speed DLC Bus.
- The low speed microprocessor is capable of gating signals between the Low Speed DLC, the primary Low Speed GMLAN, and the Gateway Isolated Low Speed GMLAN Buses.
- The low speed microprocessor is also capable of gating signals between the Object High Speed DLC Bus (DLC terminals 3 & 11) and the Object High Speed GMLAN Bus.

High speed Microprocessor

- The high speed micro is programmable via the X84 Data Link Connector (DLC) terminals 6 & 14. This high speed bus between the X84 Data Link Connector and the K56 Serial Data Gateway Module is called High Speed DLC Bus.
- The high speed micro is capable of gating signals between the High Speed DLC, the primary High Speed GMLAN, the Gateway Expansion High Speed GMLAN, and the Gateway Isolated High Speed GMLAN Buses.
- The high speed micro is also capable of gating signals between the Chassis High Speed DLC Bus (DLC terminals 12 & 13) and the Chassis High Speed GMLAN Bus.

High Speed GMLAN Bus (Circuits 2500 & 2501)

Note: Continuity check cannot be performed between the X84 Data Link Connector and control modules on the primary High Speed GMLAN Bus.

A primary High Speed GMLAN Bus is used where data needs to be exchanged at a high enough rate to minimize the delay between the occurrence of a change in sensor value and the reception of this information by a control device using the information to adjust vehicle system performance.

The primary High Speed GMLAN serial data network consists of two twisted wires. One signal circuit is identified as GMLAN-High and the other signal circuit is identified as GMLAN-Low. At each end of the data bus there is a 120 Ω termination resistor between the GMLAN-High and GMLAN-Low circuits.

Data symbols (1's and 0's) are transmitted sequentially at a rate of 500 Kbit/s. The data to be transmitted over the bus is represented by the voltage difference between the GMLAN-High signal voltage and the GMLAN-Low signal voltage.

When the two wire bus is at rest the GMLAN-High and GMLAN-Low signal circuits are not being driven and this represents a logic "1". In this state both signal circuits are at the same voltage of 2.5 V. The differential voltage is approximately 0 V.

When a logic "0" is to be transmitted, the GMLAN-High signal circuit is driven higher to about 3.5 V and the GMLAN-Low circuit is driven lower to about 1.5 V. The differential voltage becomes approximately 2.0 (+/- 0.5) V.

High Speed DLC Bus (Circuits 1978 & 1979)

Between the X84 Data Link Connector (DLC) terminals 6 & 14 and the K56 Serial Data Gateway Module terminals 15 X1 & 16 X1, there is a high speed bus called the High Speed DLC Bus. The High Speed DLC Bus is similar to the primary High Speed GMLAN Bus. Between the GMLAN-High and GMLAN-Low circuits, there is a 120 Ω termination resistor internal to the K56 Serial Data Gateway Module. There is no terminating resistor at the DLC.

The K56 Serial Data Gateway Module uses its high speed microprocessor to gate signals between the High Speed DLC, the primary High Speed GMLAN, the Gateway Expansion High Speed GMLAN, and the Gateway Isolated High Speed GMLAN Buses.

Chassis High Speed GMLAN Bus (Circuits 6105 & 6106) (if equipped)

Note: Continuity check cannot be performed between the X84 Data Link Connector and control modules on the Chassis High Speed GMLAN Bus.

The Chassis High Speed GMLAN Bus (or Chassis Expansion Bus) is basically a copy of the High Speed GMLAN Bus except that its use is reserved for chassis components. This implementation splits message congestion between two parallel buses helping to insure timely message transmission and reception. Sometimes communication is required between the Chassis High Speed GMLAN Bus and the primary High Speed GMLAN Bus. This is accomplished by using the K17 Electronic Brake Control Module as the Gateway module. Since the Chassis High Speed GMLAN Bus and primary High Speed GMLAN Bus operate in the same manner, the diagnostics for each are similar.

Chassis High Speed DLC Bus (Circuits 1980 & 1981)

Between the X84 Data Link Connector (DLC) terminals 12 & 13 and the K56 Serial Data Gateway Module terminals 17 X1 & 18 X1, there is a high speed bus called the Chassis High Speed DLC Bus. The Chassis High Speed DLC Bus is similar to the Chassis High Speed GMLAN Bus. Between the GMLAN-High and GMLAN-Low circuits, there is a 120 Ω termination resistor internal to the K56 Serial Data Gateway Module. There is no terminating resistor at the DLC.

The K56 Serial Data Gateway Module uses its high speed microprocessor to gate signals between the Chassis High Speed DLC Bus and the Chassis High Speed GMLAN Bus.

Powertrain High Speed GMLAN Bus (Circuits 7493 & 7494) (if equipped)

Note: Continuity check cannot be performed between the X84 Data Link Connector and control modules on the Powertrain High Speed GMLAN Bus.

The Powertrain High Speed GMLAN Bus (or Powertrain Expansion Bus) is basically a copy of the High Speed GMLAN Bus except that its use is reserved for Powertrain components. The bus is optional based upon feature content. Sometimes communication is required between the Powertrain High Speed GMLAN

Bus and the primary High Speed GMLAN Bus. This is accomplished by using the K20 Engine Control Module as the Gateway module. Since the Powertrain High Speed GMLAN Bus and the primary High Speed GMLAN Bus operate in the same manner, the diagnostics for each are similar.

Powertrain Sensor High Speed GMLAN Bus (Circuits 4498 & 4499) (if equipped)

Note: Continuity check cannot be performed between the X84 Data Link Connector and control modules on the Powertrain Sensor High Speed GMLAN Bus.

The Powertrain Sensor High Speed GMLAN Bus is basically a copy of the primary High Speed GMLAN Bus except that its use is reserved for Powertrain components. The bus is optional based upon feature content. Sometimes communication is required between the Powertrain Sensor High Speed GMLAN Bus and the primary High Speed GMLAN Bus. This is accomplished by using the K20 Engine Control Module as the Gateway module. Since the Powertrain Sensor High Speed GMLAN Bus and the primary High Speed GMLAN Bus operate in the same manner, the diagnostics for each are similar.

Object High Speed GMLAN Bus (Circuits 3811 & 3813) (if equipped)

Note: Continuity check cannot be performed between the X84 Data Link Connector and control modules on the Object High Speed GMLAN Bus.

The Object High Speed GMLAN Bus is basically a copy of the High Speed GMLAN Bus except that its use is reserved for the enhanced safety system. This implementation is used to isolate the heavy communication among the enhanced safety system devices from the other vehicle buses, reducing congestion. The K124 Active Safety Control Module is connected to the Object High Speed GMLAN Bus as well as the primary High Speed GMLAN Bus, the Chassis High Speed GMLAN Bus, and the Low Speed GMLAN Bus. The K124 Active Safety Control Module acts as a Gateway module for all required communication between the Object High Speed GMLAN Bus devices and devices on these other vehicle buses. The Object High Speed GMLAN Bus operates in the same manner as the Chassis High Speed GMLAN and primary High Speed GMLAN buses and so the diagnostics are similar. The Object High Speed GMLAN Bus is physically partitioned into a Front Object Bus and a Rear Object Bus with each partition having its own communication enable circuit to activate the partition, but functional operation of both is identical. The Front Object Bus standard devices are the K124 Active Safety Control Module, the K109 Frontview Camera Module (or B174W Frontview Camera – Windshield), and the B233B Radar Sensor Module – Long Range. The Front Object Bus optional devices are the B233LF Radar Sensor Module – Short Range Left Front and the B233RF Radar Sensor Module – Short Range Right Front. The Rear Object Bus is optional and when present will have the K124 Active Safety Control Module, B233LR Radar Sensor Module – Short Range Left Rear, and B233RR Radar Sensor Module – Short Range Right Rear on the bus. All Object High Speed GMLAN Bus components are powered by the K124 Active Safety Control Module via the communication enable circuits, except the K109 Frontview Camera Module (or B174W Frontview Camera – Windshield) which is powered directly by battery.

Object High Speed DLC Bus (Circuits 2089 & 2090)

Between the X84 Data Link Connector (DLC) terminals 3 & 11 and the K56 Serial Data Gateway Module terminals 13 X1 & 14 X1, there is a high speed bus called the Object High Speed DLC Bus. The Object High Speed DLC Bus is similar to the Object High Speed GMLAN Bus. Between the GMLAN-High and GMLAN-Low circuits, there is a 120 Ω termination resistor internal to the K56 Serial Data Gateway Module. There is no terminating resistor at the DLC.

The K56 Serial Data Gateway Module uses its low speed microprocessor to gate signals between the Object High Speed DLC Bus and the Object High Speed GMLAN Bus.

Gateway Isolated High Speed GMLAN Bus (Circuits 1304 & 1305)

Note: Continuity check cannot be performed between the X84 Data Link Connector (or control modules on the primary High Speed GMLAN Bus) and control modules on the Gateway Isolated High Speed GMLAN Bus.

The Gateway Isolated High Speed GMLAN Bus is an extension of the primary High Speed GMLAN Bus except it is separated from the primary High Speed GMLAN Bus by the K56 Serial Data Gateway Module for cybersecurity protection. The K56 Serial Data Gateway Module verifies data messages being transmitted from the control modules on the Gateway Isolated High Speed GMLAN Bus back to the primary High Speed GMLAN Bus are good with valid transmitter messages. This bus does not terminate to the X84 Data Link Connector.

The Gateway Isolated High Speed GMLAN Bus consists of two twisted wires. One signal circuit is identified as GMLAN-High and the other signal circuit is identified as GMLAN-Low. At each end of the data bus there is a 120 Ω termination resistor between the GMLAN-High and GMLAN-Low circuits.

Gateway Expansion High Speed GMLAN Bus (Circuits 3935 & 3936)

Note: Continuity check cannot be performed between the X84 Data Link Connector (or control modules on the primary High Speed GMLAN Bus) and control modules on the Gateway Expansion High Speed GMLAN Bus.

The Gateway Expansion High Speed GMLAN Bus is not cybersecurity protected and does not terminate at the X84 Data Link Connector. This expansion bus is created to alleviate the throughput on the primary High Speed GMLAN Bus.

The Gateway Expansion High Speed GMLAN Bus consists of two twisted wires. One signal circuit is identified as GMLAN-High and the other signal circuit is identified as GMLAN-Low. At each end of the data bus there is a 120 Ω termination resistor between the GMLAN-High and GMLAN-Low circuits.

Ethernet Bus (if equipped)

At the core of the infotainment system is the Radio Ethernet Audio Video Bridging switch which communicates directly to each contributing Infotainment module terminator. The Ethernet harness consists of twisted pair wires from point to point. Each device on the Ethernet infotainment system sends/receives data at 100 Mbit/s to/from a specified port at the A11 Radio. The Radio/Ethernet will also be used to program USB software update files to the devices connected to the Ethernet ports.

The A11 Radio is the Ethernet master. The Radio communicates with other devices and systems in the vehicle via GMLAN and LIN buses. Diagnostic Trouble Codes will be read on GMLAN to diagnose Ethernet, LIN and system faults. GMLAN will also be used for programming calibrations.

Media Oriented Systems Transport (MOST) Bus (Circuits 3997 & 3998) (if equipped)

The MOST Infotainment network is a dedicated high speed multimedia streaming data bus independent from GMLAN. The MOST Bus will be configured in a physical hardwired loop with each device within the bus sends and receives data on an assigned MOST addresses in a set order. Each device on the MOST Bus will be required to have twisted pair copper wires (2 transmit TX, 2 receive RX, and 1 electronic control line which is a 12 V wakeup signal line). The A11 Radio is the MOST Master and will monitor the bus for vehicle configuration, Infotainment data messages and errors on the bus. The MOST initialization consists of a short 100 ms low voltage pulse on the electronic control line (or MOST control line) connected to all devices contained on the MOST ring. This wakeup message once received by each device, will first respond with a generic device response. Once these initial responses on the MOST Bus are reported successfully without error to the A11 Radio, the second data request will record the MOST device addresses, their functionality requirements and capabilities within. The A11 Radio will learn this information and also record the address node sequence on the MOST Bus at this point. This node address list will now be stored within the A11 Radio as the MOST Bus configuration (called “Last Working MOST ID of Node 1 – 9” on scan tool data display).

When MOST receive, transmit, or control line faults are detected, transmit/receive messages will not received as expected from the wakeup request. The A11 Radio and the K74 Human Machine Interface Control Module will then perform diagnostics to isolate these MOST faults. If the MOST control line is shorted low to 0 V for excess amount of time, the A11 Radio will set a U2098 DTC and K74 Human Machine Interface Control Module will set a U0029 02 DTC. At this point the MOST Bus will be unable to communicate until the shorted MOST control line is repaired.

Once the shorted MOST control line diagnostics pass, the A11 Radio will attempt to resend the initial short pulse attempts up to 3 times on the MOST control line. If the expected responses are not received, the A11 Radio continues into a failure mode setting a U0028 DTC and will continue on to send one 300 ms long pulse, which will enable the furthest upstream transmitting device to become the surrogate MOST Master in this MOST fault/diagnostic mode. When the A11 Radio receives this new MOST Master identity, the surrogate MOST master device can be identified based on scan tool data parameter “Surrogate MOST Master Node Upstream Position”. The scan tool should be used to determine the MOST Bus configuration and direction by utilizing the “Last Working MOST ID of Node 1 – 9” parameters from the A11 Radio data display. When a fault is present, it will indicate the newly enabled “Surrogate MOST Master Node Upstream Position” from the A11 Radio. This will assist in determining where the MOST bus/control is at fault. The MOST device upstream from the surrogate MOST master device, transmit, receive, or control lines will be the suspect areas for diagnostics at this point. These faults can be associated with any of the MOST transmit, receive, or control line twisted copper wires or possibly an internal device fault.

The K74 Human Machine Interface Control Module will set a U0029 00 DTC when it diagnoses a MOST bus not communicating properly after one attempt. When the DTC U0029 00 is set by the K74 Human Machine Interface Control Module without the corresponding DTC U0028 from the A11 Radio, it will be an indication of an intermittent wiring/device condition.

FlexRay Bus (if equipped)

The FlexRay Bus is developed for safety related applications and higher data rate in real time application. The communication is time triggered. The FlexRay serial data network consists of two unshielded twisted wires to connect FlexRay nodes together. A FlexRay node is a device connected to a FlexRay Bus.

The FlexRay serial data network features 2 communication channels: channel A and channel B. Each channel may be operated at a data rate of up to 10 Mbit/s. FlexRay nodes can be connected to either both channels or a single channel. Each FlexRay channel consists of multiple branches. Each branch is a private bus. At each end of a branch, there is a 100 Ω terminating resistor connected between the pair of FlexRay serial data circuits. The terminating resistors can be external or internal to a FlexRay device.

The second FlexRay channel can be used as a redundant channel for fault toleration or to increase data rate of up to 20 Mbit/s. The dual channel configuration consists of two independent data channels for fault-tolerance. When one channel fails, the communication can still continue with reduced bandwidth.

Low Speed GMLAN Bus (Circuit 5060)

Note: Continuity check cannot be performed between the X84 Data Link Connector and control modules on the Low Speed GMLAN Bus.

Low Speed GMLAN Bus is used in applications where a high data rate is not required which allows for the use of less complex components. It is typically used for operator controlled functions where the response time requirements are slower than those required for dynamic vehicle control.

The Low Speed GMLAN Serial Data Network consists of a single wire, ground referenced bus with high side voltage drive. During on road vehicle operation data symbols (1's and 0's) are transmitted sequentially at the normal rate of 33.3 Kbit/s. For component programming only, a special high speed data mode of 83.3 Kbit/s may be used.

Unlike the high speed dual wire networks, the single wire low speed network does not use terminating resistors at either end of the network.

The data symbols to be transmitted over the bus are represented by different voltage signals on the bus. When the Low Speed GMLAN Bus is at rest and is not being driven, there is a low signal voltage of approximately 0.2 V. This represents a logic "1". When a logic "0" is to be transmitted, the signal voltage is driven higher to around 4.0 V or higher.

Low Speed DLC Bus (Circuit 2100)

Between the X84 Data Link Connector (DLC) terminal 1 and the K56 Serial Data Gateway Module terminal 26 X1, there is a low speed bus called the Low Speed DLC Bus. The Low Speed DLC Bus is similar to the primary Low Speed GMLAN Bus.

The K56 Serial Data Gateway Module uses its low speed microprocessor to gate signals between the Low Speed DLC, the primary Low Speed GMLAN, and the Gateway Isolated Low Speed GMLAN Buses.

Gateway Isolated Low Speed GMLAN Bus (Circuit 1102)

Note: Continuity check cannot be performed between the X84 Data Link Connector (or control modules on the primary Low Speed GMLAN Bus) and control modules on the Gateway Isolated Low Speed GMLAN Bus.

The Gateway Isolated Low Speed GMLAN Bus is an extension of the primary Low Speed GMLAN Bus except it is separated from the primary Low Speed GMLAN Bus by the K56 Serial Data Gateway Module for cybersecurity protection. The K56 Serial Data Gateway Module verifies data messages being transmitted from the control modules on the Gateway Isolated Low Speed GMLAN Bus back to the primary Low Speed GMLAN Bus are good with valid transmitter messages. This bus does not terminate to the X84 Data Link Connector.

Local Interconnect Network (LIN) Bus

The Local Interconnect Network (LIN) Bus consists of a single wire with a transmission rate of 10.417 Kbit/s. This bus is used to exchange information between a master control module and other smart devices which provide supporting functionality. This type of configuration does not require the capacity or speed of either a High Speed GMLAN Bus or Low Speed GMLAN Bus and is thus relatively simpler.

The data symbols (1's and 0's) to be transmitted are represented by different voltage levels on the communication bus. When the LIN Bus is at rest and is not being driven, the signal is in a high voltage state of approximately Vbatt. This represents a logic "1". When a logic "0" is to be transmitted, the signal voltage is driven low to about ground (0.0 V).

Communication Enable Circuit Description

Devices on High Speed GMLAN Bus enable or disable communication based on the voltage level of the Serial Data Communication Enable circuit or Accessory Wakeup Serial Data circuit. When the circuit voltage is high (around 12 V), communications are enabled. When the circuit is low, communications are disabled.

X84 Data Link Connector (DLC)

The X84 Data Link Connector is a standardized 16-cavity connector. Connector design and location is dictated by an industry wide standard, and is required to provide the following:

- Terminal 1: Low Speed GMLAN Serial Data #3 terminal (Low Speed DLC Bus)
- Terminal 3: High Speed GMLAN Serial Data (+)(13) terminal (Object High Speed DLC Bus)
- Terminal 4: Scan tool power ground terminal
- Terminal 5: Common signal ground terminal
- Terminal 6: High Speed GMLAN Serial Data (+)(11) terminal (High Speed DLC Bus)
- Terminal 11: High Speed GMLAN Serial Data (-)(13) terminal (Object High Speed DLC Bus)
- Terminal 12: High Speed GMLAN Serial Data (+)(12) terminal (Chassis High Speed DLC Bus)
- Terminal 13: High Speed GMLAN Serial Data (-)(12) terminal (Chassis High Speed DLC Bus)
- Terminal 14: High Speed GMLAN Serial Data (-)(11) terminal (High Speed DLC Bus)
- Terminal 16: Scan tool power, battery positive voltage terminal

Serial Data Reference

The scan tool communicates over the various buses on the vehicle. When a scan tool is installed on a vehicle, the scan tool will try to communicate with every device that could be optioned into the vehicle. If an option is not installed on the vehicle, the scan tool will display No Comm (or Not Connected) for that optional device. In order to avert misdiagnoses of No Communication with a specific device, refer to Data Link References for a list of devices and the buses they communicate with. Use schematics and specific vehicle build RPO codes to determine optional devices.

Electrical Component and Inline Harness Connector End Views

Component Locator

Electrical Center Identification Views

X50A Fuse Block - Underhood Label (LCV/LGZ)

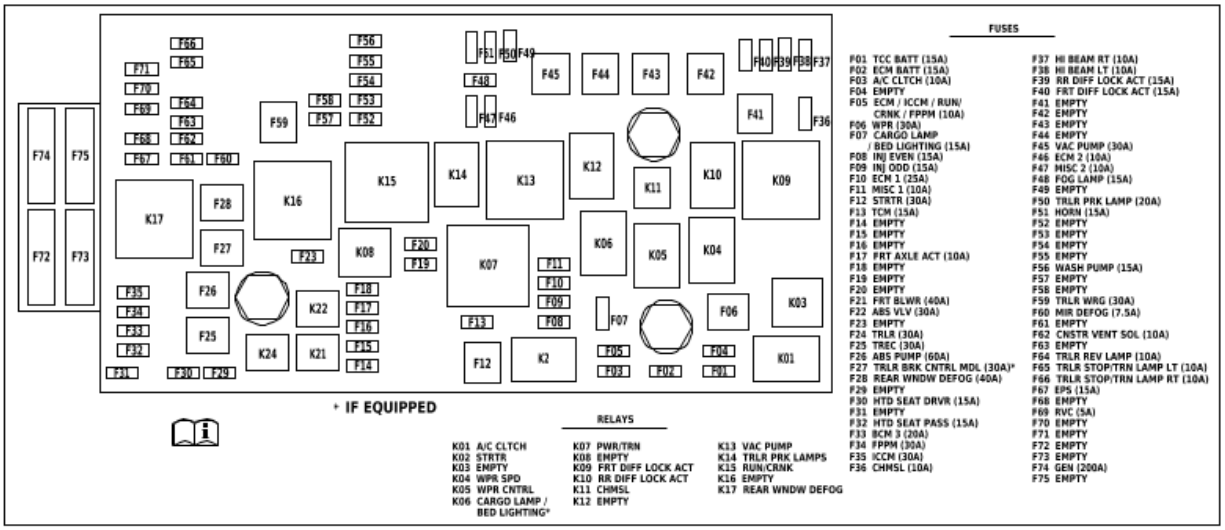

5440575

X50A Fuse Block - Underhood Label (LWN)

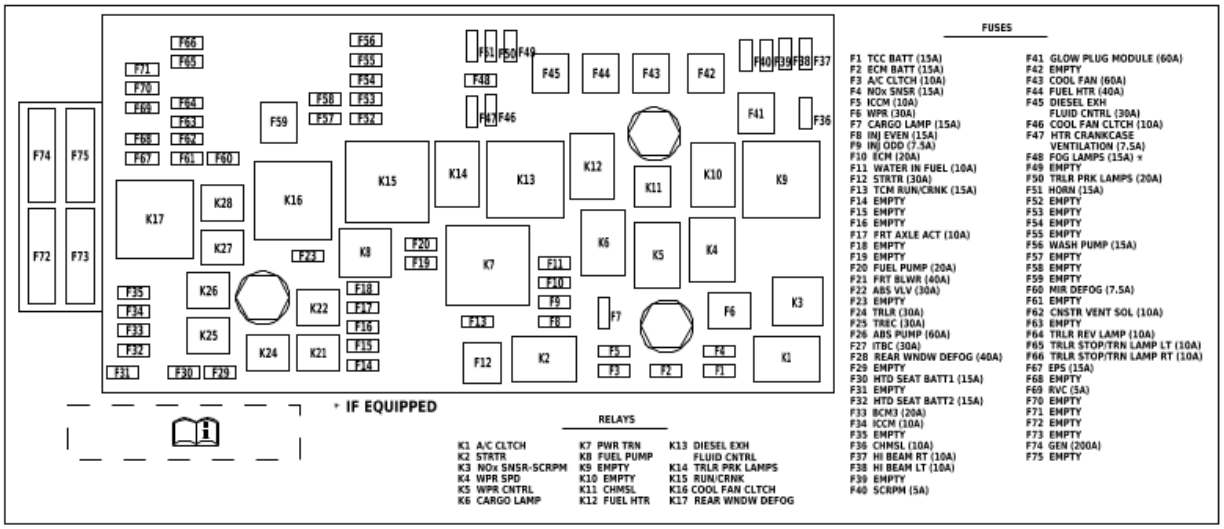

5440576

X50A Fuse Block - Underhood Top View (LCV/LGZ)

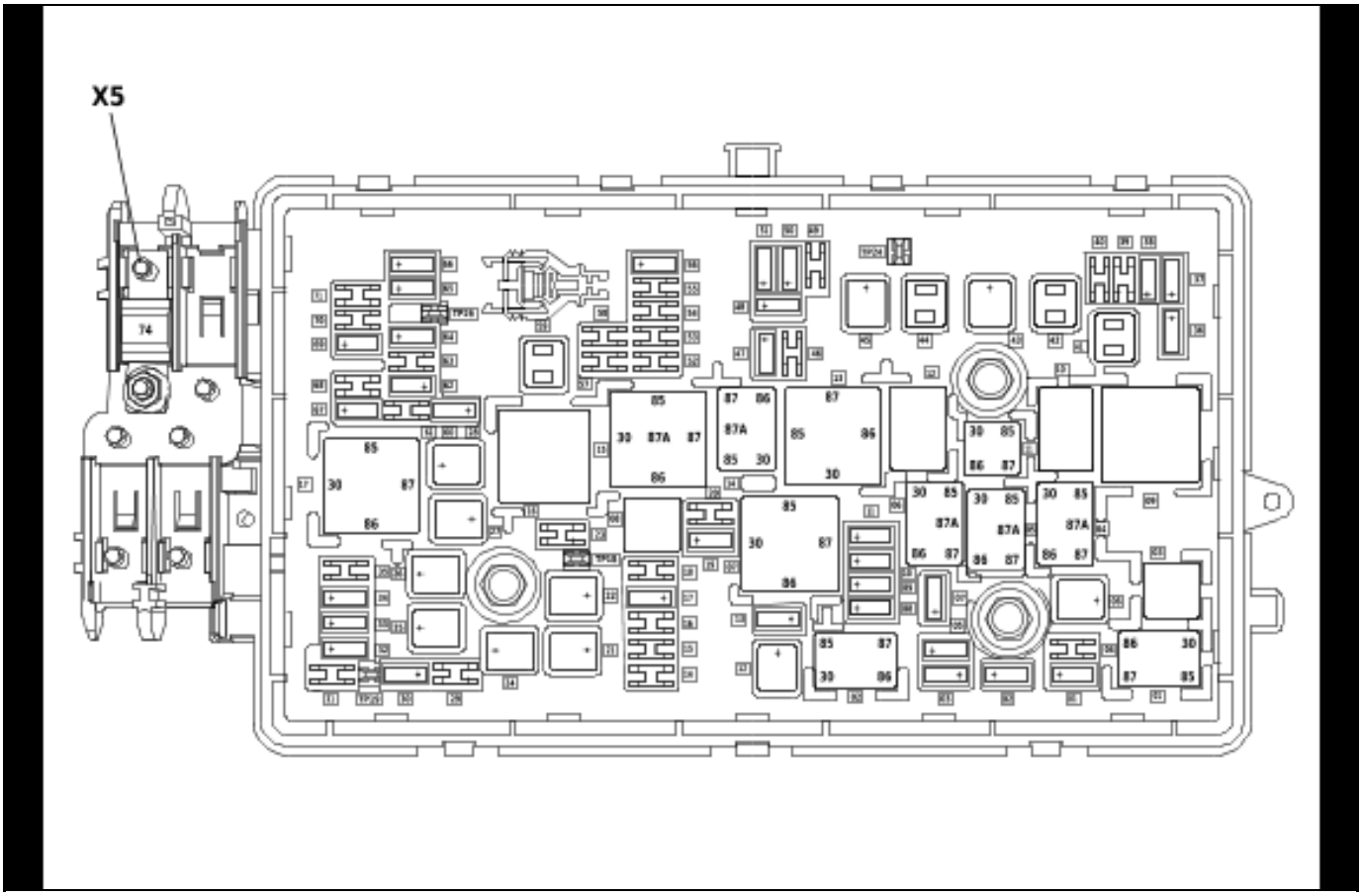

4816016

Usage Table

No.	Device Label Name	Device Assigned Name	Rating	Description
Fuses				
F1	TCM BATT	F1UA	15A	• K71 Transmission Control Module (MYB) • Q8 Control Solenoid Valve Assembly (MYB)
F2	ECM BATT	F2UA	15A	• K20 Engine Control Module
F3	A/C CLTCH	F3UA	10A	• KR29 A/C Compressor Clutch Relay • Q2 A/C Compressor Clutch
F4	EMPTY	F4UA	—	• Not Used
F5	FUEL MDL RUN/ CRNK	F5UA	10A	• K20 Engine Control Module • K38 Chassis Control Module • K71 Transmission Control Module (MYB) • K111 Fuel Pump Driver Control Module • Q8 Control Solenoid Valve Assembly (MYB)
F6	WPR	F6UA	30A	• KR12B Windshield Wiper Relay • KR12C Windshield Wiper Speed Control Relay
F7	CARGO LAMP	F7UA	15A	• KR112 Cargo Lamp Relay
F8	INJ EVEN	F8UA	15A	• K20 Engine Control Module (LGZ) • T8B Ignition Coil 2 (LGZ) • T8D Ignition Coil 4 (LGZ) • T8F Ignition Coil 6 (LGZ)

Usage Table (cont'd)

No.	Device Label Name	Device Assigned Name	Rating	Description
F9	INJ ODD	F9UA	15A	• K20 Engine Control Module • T8A Ignition Coil 1 (LCV) • T8A Ignition Coil 1 (LGZ) • T8B Ignition Coil 2 (LCV) • T8C Ignition Coil 3 (LCV) • T8C Ignition Coil 3 (LGZ) • T8D Ignition Coil 4 (LCV) • T8E Ignition Coil 5 (LGZ)
F10	ECM	F10UA	20A	• K20 Engine Control Module
F11	MISC 1	F11UA	10A	• B52B Heated Oxygen Sensor 2 (LCV) • B52D Heated Oxygen Sensor - Bank 1 Sensor 2 (LGZ) • B52F Heated Oxygen Sensor - Bank 2Sensor 2 (LGZ) • B75C Multifunction Intake Air Sensor • K20 Engine Control Module
F12	STRTR	F12UA	30A	• KR27 Starter Relay
F13	TCM	F13UA	15A	• K71 Transmission Control Module (MYB)
F14	EMPTY	F14UA	—	• Not Used
F15	EMPTY	F15UA	—	• Not Used
F16	EMPTY	F16UA	—	• Not Used
F17	FRT AXLE ACT	F17UA	10A	• M26 Front Axle Engagement Actuator (NQ6/NQ7)
F18	EMPTY	F18UA	—	• Not Used
F19	AERO SHTR	F19UA	10A	• M96 Active Grille Air Shutter Actuator
F20	EMPTY	F20UA	—	• Not Used
F21	FRT BLWR	F21UA	40A	• K8 Blower Motor Control Module
F22	ABS VLV	F22UA	30A	• K17 Electronic Brake Control Module
F23	EMPTY	F23UA	—	• Not Used
F24	TRLR	F24UA	30A	• W8 Blunt Cut - Trailer Provision • X88 Trailer Connector (Z82)
F25	TREC	F25UA	30A	• A16 Transfer Case Motor (NQ6/NQ7) • K69 Transfer Case Control Module (NQ6/NQ7)
F26	ABS PUMP	F26UA	60A	• K17 Electronic Brake Control Module
F27	TRLR BRK CNTRL MDL	F27UA	30A	• K133 Trailer Brake Power Control module (Z82) • W24 Blunt Cut - Trailer Brakes Provision (Z82)
F28	REAR WNDW DE-FOG	F28UA	40A	• F63UA • E18 Rear Defogger Grid (C49)
F29	EMPTY	F29UA	—	• Not Used
F30	HTD SEAT BATT1	F30UA	15A	• K29 Seat Heating Control Module (KA1)
F31	EMPTY	F31UA	—	• Not Used
F32	HTD SEAT BATT2	F32UA	15A	• K29 Seat Heating Control Module (KA1)
F33	BCM 3	F33UA	20A	• K9 Body Control Module
F34	FSCM	F34UA	30A	• K111 Fuel Pump Driver Control Module (LCV)
F35	FSCM	F35UA	30A	• K38 Chassis Control Module (LGZ)
F36	CHMSL	F36UA	10A	• KR41 Center High Mounted Stop Lamp Relay
F37	HI BEAM RT	F37UA	10A	• E4F Headlamp – Right High Beam
F38	HI BEAM LT	F38UA	10A	• E4E Headlamp – Left High Beam

Usage Table (cont'd)

No.	Device Label Name	Device Assigned Name	Rating	Description
F39	RR DIFF LOCK ACT	F39UA	15A	• Rear Differential Lock Control Actuator
F40	FRT DIFF LOCK ACT	F40UA	15A	• Front Differential Lock Control Actuator
F41	EMPTY	F41UA	—	• Not Used
F42	EMPTY	F42UA	—	• Not Used
F43	COOL FAN	F43UA	60A	• K22 Cooling Fan Control Module
F44	EMPTY	F44UA	—	• Not Used
F45	VAC PUMP	F45UA	30A	• KR14 Brake Booster Pump Motor Relay (LGZ)
F46	EMPTY	F46UA	—	• K20 Engine Control Module (LGZ)
F47	MISC 2	F47UA	10A	• B52A Heated Oxygen Sensor 1 (LCV) • B52C Heated Oxygen Sensor - Bank 1 Sensor 1 (LGZ) • B52E Heated Oxygen Sensor - Bank 2 Sensor 1 (LGZ) • E41 Engine Coolant Thermostat Heater (LCV) • K20 Engine Control Module (LCV) • Q12 Evaporative Emission Purge Solenoid Valve • Q44 Engine Oil Pressure Control Solenoid Valve (LCV) • Q83A Valve Lifter Oil Solenoid Valve Bank 1 (LGZ) • Q83B Valve Lifter Oil Solenoid Valve Bank 2 (LGZ) • Q84A Camshaft Position Actuator Park Lock Solenoid Valve - Bank 1 Intake (LGZ) • Q84B Camshaft Position Actuator park Lock Solenoid Valve - Bank 2 Intake (LGZ)
F48	FOG LAMP	F48UA	15A	• E29LF Fog Lamp – Left Front (T3U) • E29RF Fog Lamp – Right Front (T3U)
F49	EMPTY	F49UA	—	• Not Used
F50	TRLR PRK LAMP	F50UA	20A	• W8 Blunt Cut - Trailer Provision • X88 Trailer Connector (Z82)
F51	HORN	F51UA	15A	• P13 Horn Assembly
F52	EMPTY	F52UA	—	• Not Used
F53	EMPTY	F53UA	—	• Not Used
F54	EMPTY	F54UA	—	• Not Used
F55	EMPTY	F55UA	—	• Not Used
F56	WASH PUMP	F56UA	15A	• G24 Windshield Washer Pump
F57	EMPTY	F57UA	—	• Not Used
F58	EMPTY	F58UA	—	• Not Used
F59	EMPTY	F59UA	—	• Not Used
F60	MIR DEFOG	F60UA	7.5A	• E17D Outside Rearview Mirror Glass – Driver (DL9) • E17P Outside Rearview Mirror Glass – Passenger (DL9)
F61	EMPTY	F61UA	—	• Not Used
F62	CNSTR VENT SOL	F62UA	10A	• Q13 Evaporative Emission Vent Solenoid Valve
F63	EMPTY	F63UA	—	• Not Used
F64	TRLR REV LAMP	F64UA	10A	• KR61 Trailer Backup Lamps Relay

Usage Table (cont'd)

No.	Device Label Name	Device Assigned Name	Rating	Description
F65	TRLR STOP/TRN LAMP LT	F65UA	10A	• W8 Blunt Cut - Trailer Provision • X88 Trailer Connector (Z82)
F66	TRLR STOP/TRN LAMP RT	F66UA	10A	• KR63R Trailer Stop/Turn Signal Lamp Relay - Right
F67	EPS	F67UA	15A	• K43 Power Steering Control Module
F68	EMPTY	F68UA	—	• Not Used
F69	RVC	F69UA	5A	• K9 Body Control Module
F70	EMPTY	F70UA	—	• Not Used
F71	EMPTY	F71UA	—	• Not Used
F72	EMPTY	F72UB	—	• Not Used
F73	EMPTY	F73UB	—	• Not Used
F74	GEN	F74UB	200A	• G13 Generator
F75	EMPTY	F75UB	—	• Not Used
Relays				
K1	A/C CLTCH	KR29 A/C Compressor Clutch Relay	—	• Q2 A/C Compressor Clutch
K2	STRTR	KR27 Starter Relay	—	• M64 Starter Motor
K3	EMPTY	—	—	• Not Used
K4	WPR SPD	KR12C Windshield Wiper Speed Control Relay	—	• M75 Windshield Wiper Motor
K5	WPR CNTRL	KR12B Windshield Wiper Relay	—	• M75 Windshield Wiper Motor
K6	CARGO LAMP	KR112 Cargo Lamp Relay	—	• E6 Center High Mounted Stop Lamp
K7	PWR TRN	KR75 Engine Controls Ignition Relay	—	• F8UA • F9UA • F10UA • F11UA • F47UA • KR29 A/C Compressor Clutch Relay
K8	EMPTY	—	—	• Not Used
K9	FRT DIFF LOCK ACT	KR175A Front Differentail Lock Actuator High Contorl Relay	—	• Q9F Differential Lock Actuator - Front • K38A Chassis Control Module - Auxiliary
K10	RR DIFF LOCK ACT	KR176A Rear Differential Lock Actuator High Control Relay	—	• Q9R Differential Lock Actuator - Rear • K38A Chassis Control Module - Auxiliary
K11	CHMSL	KR41 Center High Mounted Stop Lamp Relay	—	• E6 Center High Mounted Stop Lamp
K12	EMPTY	—	—	• Not Used
K13	VAC PUMP	KR14 Brake Booster Pump Motor Relay	—	• M9 Brake Booster Pump Motor (LGZ)
K14	PRK LAMPS	KR125 Trailer Park Lamps Relay	—	• F50UA

Usage Table (cont'd)

No.	Device Label Name	Device Assigned Name	Rating	Description
K15	RUN/CRNK	KR73 Ignition Main Relay	—	• F5UA • F13UA • F16UA • F17UA • F18UA • F19UA • F52UA • F53UA • F54UA • F57UA
K16	EMPTY	—	—	• Not Used
K17	REAR WNDW DE-FOG	KR5 Rear Defog-ger Relay	—	• F28UA • F60UA • F63UA • E17D Outside Rearview Mirror Glass – Driver (DL9) • E17P Outside Rearview Mirror Glass – Passenger (DL9) • E18 Rear Defogger Grid (C49)
Note: Relays listed below are non-serviceable Printed Circuit Board (PCB) relays and are internal to the block.				
—	—	KR3 Horn Relay	—	• F51UA
—	—	KR11 Windshield Washer Pump Re-lay	—	• F56UA
—	—	KR46 Front Fog Lamp Relay	—	• F48UA
—	—	KR48 Headlamp High Beam Relay	—	• F37UA • F38UA
—	—	KR61 Trailer Back-up Lamps Relay	—	• P3 Backup Alarm (8S3) • W8 Blunt Cut - Trailer Provision • X88 Trailer Connector (Z82)
—	—	KR63L Trailer Stop/Turn Signal Lamp Relay - Left	—	• F65UA • X88 Trailer Connector (Z82) • W8 Blunt Cut - Trailer Provision
—	—	KR63R Trailer Stop/Turn Signal Lamp Relay - Right	—	• W8 Blunt Cut - Trailer Provision • X88 Trailer Connector (Z82)
—	—	KR113 Child Se-curity Lock Disable Relay	—	• A23LR Door Latch Assembly - Left Rear • A23P Door Latch Assembly - Passenger • A23RR Door Latch Assembly - Right Rear • A23E door Latch Assembly Endgate (A91)
—	—	KR175B Front Dif-ferential Lock Ac-tuator Low Control Relay	—	• Q9F Differential Lock Actuator - Front • K38A Chassis Control Module - Auxiliary
—	—	KR176B Rear Dif-ferential Lock Ac-tuator Low Control Relay	—	• Q9R Differential Lock Actuator - Rear • K38A Chassis Control Module - Auxiliary
Note: Items listed below are diagnostic testing points.				
TP19	—	TP19	—	• Not Used
Note: Items listed below are Door Lock/Indicator system diagnostic testing points.				
TP18	CKT 3271	TP18	—	• KR113 Child Security Lock Disable Relay

Usage Table (cont'd)

No.	Device Label Name	Device Assigned Name	Rating	Description
Note: Items listed below are Trailer Connector/Provision system diagnostic testing points.				
TP24	CKT 1619	TP24	—	• KR63R Trailer Stop/Turn Signal Lamp Relay - Right
TP26	CKT 1624	TP26	—	• KR61 Trailer Backup Lamps Relay

X50A Fuse Block - Underhood Top View (LWN)

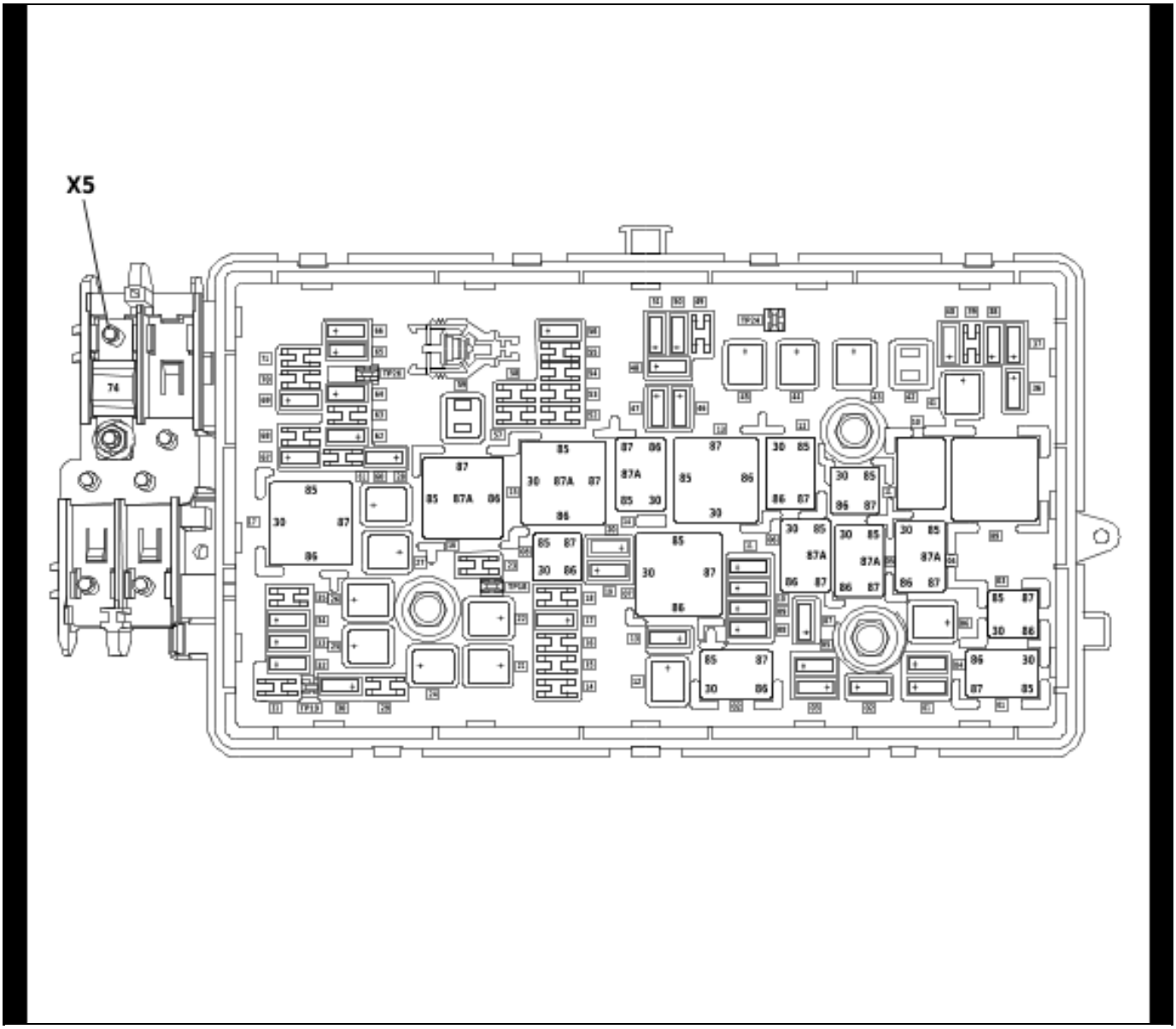

4102622

Usage Table

No.	Device Label Name	Device Assigned Name	Rating	Description
Fuses				
F1	TCM BATT	F1UA	15A	• K71 Transmission Control Module (MYB) • Q8 Control Solenoid Valve Assembly (MYB)
F2	ECM BATT	F2UA	15A	• K20 Engine Control Module
F3	A/C CLTCH	F3UA	10A	• KR29 A/C Compressor Clutch Relay • Q2 A/C Compressor Clutch
F4	NOx SNSR	F4UA	15A	• B136 Exhaust Particulate Matter Sensor (LWN) • B195A Nitrogen Oxides Sensor 1 (LWN) • B195B Nitrogen Oxides Sensor 2 (LWN)
F5	ICCM	F5UA	10A	• B116 Water in Fuel Sensor • K20 Engine Control Module • K71 Transmission Control Module (MYB) • Q8 Control Solenoid Valve Assembly (MYB)
F6	WPR	F6UA	30A	• KR12B Windshield Wiper Relay • KR12C Windshield Wiper Speed Control Relay
F7	CARGO LAMP	F7UA	15A	• KR112 Cargo Lamp Relay
F8	INJ EVEN	F8UA	15A	• K20 Engine Control Module
F9	INJ ODD	F9UA	7.5A	• K20 Engine Control Module
F10	ECM	F10UA	20A	• K20 Engine Control Module
F11	WATER IN FUEL	F11UA	10A	• B75C Multifunction Intake Air Sensor
F12	STRTR	F12UA	30A	• KR27 Starter Relay
F13	TCM RUN/CRNK	F13UA	15A	• K71 Transmission Control Module (MYB) • Q8 Control Solenoid Valve Assembly (MYB)
F14	EMPTY	F14UA	—	• Not Used
F15	EMPTY	F15UA	—	• Not Used
F16	EMPTY	F16UA	—	• Not Used
F17	FRT AXLE ACT	F17UA	10A	• M26 Front Axle Engagement Actuator (NQ6/NQ7)
F18	EMPTY	F18UA	—	• Not Used
F19	EMPTY	F19UA	—	• Not Used
F20	FUEL PUMP	F20UA	20A	• KR23A Fuel Pump Relay
F21	FRT BLWR	F21UA	40A	• K8 Blower Motor Control Module
F22	ABS VLV	F22UA	30A	• K17 Electronic Brake Control Module
F23	EMPTY	F23UA	—	• Not Used
F24	TRLR	F24UA	30A	• X88 Trailer Connector (Z82)
F25	TREC	F25UA	30A	• A16 Transfer Case Motor (NQ6/NQ7) • K69 Transfer Case Control Module (NQ6/NQ7)
F26	ABS PUMP	F26UA	60A	• K17 Electronic Brake Control Module
F27	ITBC	F27UA	30A	• K133 Trailer Brake Power Control module (Z82) • W24 Blunt Cut - Trailer Brakes Provision (Z82)
F28	REAR WNDW DE-FOG	F28UA	40A	• F63UA • E18 Rear Defogger Grid (C49)
F29	EMPTY	F29UA	—	• Not Used
F30	HTD SEAT BATT1	F30UA	15A	• K29 Seat Heating Control Module (KA1)
F31	EMPTY	F31UA	—	• Not Used
F32	HTD SEAT BATT2	F32UA	15A	• K29 Seat Heating Control Module (KA1)

Usage Table (cont'd)

No.	Device Label Name	Device Assigned Name	Rating	Description
F33	BCM 3	F33UA	20A	• K9 Body Control Module
F34	ICCM	F34UA	10A	• K38 Chassis Control Module
F35	EMPTY	F35UA	—	• Not Used
F36	CHMSL	F36UA	10A	• KR41 Center High Mounted Stop Lamp Relay
F37	HI BEAM RT	F37UA	10A	• E4F Headlamp – Right High Beam
F38	HI BEAM LT	F38UA	10A	• E4E Headlamp – Left High Beam
F39	EMPTY	F39UA	—	• Not Used
F40	SCRPN	F40UA	5A	• K115 Reductant Control Module
F41	GLOW PLUG MODULE	F41UA	60A	• K20 Engine Control Module
F42	EMPTY	F42UA	—	• Not Used
F43	COOL FAN	F43UA	60A	• K22 Cooling Fan Control Module
F44	FUEL HTR	F44UA	40A	• KR22 Fuel Heater Relay
F45	DIESEL EXH FLU-ID CNTRL	F45UA	30A	• KR121A Reductant Control Module Relay 1
F46	COOL FAN CLTCH	F46UA	10A	• KR20F Cooling Fan Relay
F47	HTR CRANKCASE VENTILATION	F47UA	7.5A	• E45 Positive Crankcase Ventilation Heater
F48	FOG LAMPS	F48UA	15A	• E29LF Fog Lamp – Left Front (T3U) • E29RF Fog Lamp – Right Front (T3U)
F49	EMPTY	F49UA	—	• Not Used
F50	TRLR PRK LAMPS	F50UA	20A	• X88 Trailer Connector (Z82)
F51	HORN	F51UA	15A	• P13 Horn Assembly
F52	EMPTY	F52UA	—	• Not Used
F53	EMPTY	F53UA	—	• Not Used
F54	EMPTY	F54UA	—	• Not Used
F55	EMPTY	F55UA	—	• Not Used
F56	WASH PUMP	F56UA	15A	• G24 Windshield Washer Pump
F57	EMPTY	F57UA	—	• Not Used
F58	EMPTY	F58UA	—	• Not Used
F59	EMPTY	F59UA	—	• Not Used
F60	MIR DEFOG	F60UA	7.5A	• E17D Outside Rearview Mirror Glass – Driver (DL9) • E17P Outside Rearview Mirror Glass – Passenger (DL9)
F61	EMPTY	F61UA	—	• Not Used
F62	CNSTR VENT SOL	F62UA	10A	• K115 Reductant Control Module
F63	EMPTY	F63UA	—	• Not Used
F64	TRLR REV LAMP	F64UA	10A	• KR61 Trailer Backup Lamps Relay
F65	TRLR STOP/TRN LAMP LT	F65UA	10A	• X88 Trailer Connector (Z82)
F66	TRLR STOP/TRN LAMP RT	F66UA	10A	• KR63R Trailer Stop/Turn Signal Lamp Relay - Right
F67	EPS	F67UA	15A	• K43 Power Steering Control Module
F68	EMPTY	F68UA	—	• Not Used
F69	RVC	F69UA	5A	• K9 Body Control Module

Usage Table (cont'd)

No.	Device Label Name	Device Assigned Name	Rating	Description
F70	EMPTY	F70UA	—	• Not Used
F71	EMPTY	F71UA	—	• Not Used
F72	EMPTY	F72UB	—	• Not Used
F73	EMPTY	F73UB	—	• Not Used
F74	GEN	F74UB	200A	• G13 Generator
F75	EMPTY	F75UB	—	• Not Used
Relays				
K1	A/C CLTCH	KR29 A/C Compressor Clutch Relay	—	• Q2 A/C Compressor Clutch
K2	STRTR	KR27 Starter Relay	—	• M64 Starter Motor
K3	NOx SNSR-SCRPM	KR121B Reductant Control Module Relay 2	—	• F4UA • F44UA • B136 Exhaust Particulate Matter Sensor • B195A Nitrogen Oxides Sensor 1 • B195B Nitrogen Oxides Sensor 2 • K115 Reductant Control Module
K4	WPR SPD	KR12C Windshield Wiper Speed Control Relay	—	• M75 Windshield Wiper Motor
K5	WPR CNTRL	KR12B Windshield Wiper Relay	—	• M75 Windshield Wiper Motor
K6	CARGO LAMP	KR112 Cargo Lamp Relay	—	• E6 Center High Mounted Stop Lamp
K7	PWR TRN	KR75 Engine Controls Ignition Relay	—	• F8UA • F9UA • F10UA • F11UA • F47UA • KR29 A/C Compressor Clutch Relay
K8	FUEL PUMP	KR23A Fuel Pump Relay	—	• A7 Fuel Pump and Level Sensor - Assembly
K9	EMPTY	—	—	• Not Used
K10	EMPTY	—	—	• Not Used
K11	CHMSL	KR41 Center High Mounted Stop Lamp Relay	—	• E6 Center High Mounted Stop Lamp
K12	FUEL HTR	KR22 Fuel Heater Relay	—	• E11B Fuel Heater/Temperature Sensor
K13	DIESEL EXH FLUID CNTRL	KR121A Reductant Control Module Relay 1	—	• K115 Reductant Control Module
K14	PRK LAMPS	KR125 Trailer Park Lamps Relay	—	• F50UA

Usage Table (cont'd)

No.	Device Label Name	Device Assigned Name	Rating	Description
K15	RUN/CRNK	KR73 Ignition Main Relay	—	• F5UA • F13UA • F16UA • F17UA • F18UA • F19UA • F52UA • F53UA • F54UA • F57UA
K16	COOL FAN CLTCH	KR20F Cooling Fan Relay	—	• K22 Cooling Fan Control Module
K17	REAR WNDW DE-FOG	KR5 Rear Defog-ger Relay	—	• F28UA • F60UA • F63UA • E17D Outside Rearview Mirror Glass – Driver (DL9) • E17P Outside Rearview Mirror Glass – Passenger (DL9) • E18 Rear Defogger Grid (C49)
Note: Relays listed below are non-serviceable Printed Circuit Board (PCB) relays and are internal to the block.				
—	—	KR3 Horn Relay	—	• F51UA
—	—	KR11 Windshield Washer Pump Re-lay	—	• F56UA
—	—	KR46 Front Fog Lamp Relay	—	• F48UA
—	—	KR48 Headlamp High Beam Relay	—	• F37UA • F38UA
—	—	KR61 Trailer Back-up Lamps Relay	—	• P3 Backup Alarm (8S3) • X88 Trailer Connector (Z82)
—	—	KR63L Trailer Stop/Turn Signal Lamp Relay - Left	—	• F65UA • X88 Trailer Connector (Z82)
—	—	KR63R Trailer Stop/Turn Signal Lamp Relay - Right	—	• X88 Trailer Connector (Z82)
—	—	KR113 Child Se-curity Lock Disable Relay	—	• A23LR Door Latch Assembly - Left Rear • A23P Door Latch Assembly - Passenger • A23RR Door Latch Assembly - Right Rear • A23E Door Latch Assembly - Endage (A91)
Note: Items listed below are diagnostic testing points.				
TP19	—	TP19	—	• Not Used
Note: Items listed below are Door Lock/Indicator system diagnostic testing points.				
TP18	CKT 3271	TP18	—	• KR113 Child Security Lock Disable Relay
Note: Items listed below are Trailer Connector/Provision system diagnostic testing points.				
TP24	CKT 1619	TP24	—	• KR63R Trailer Stop/Turn Signal Lamp Relay - Right
TP26	CKT 1624	TP26	—	• KR61 Trailer Backup Lamps Relay

X50A Fuse Block - Underhood Bottom View

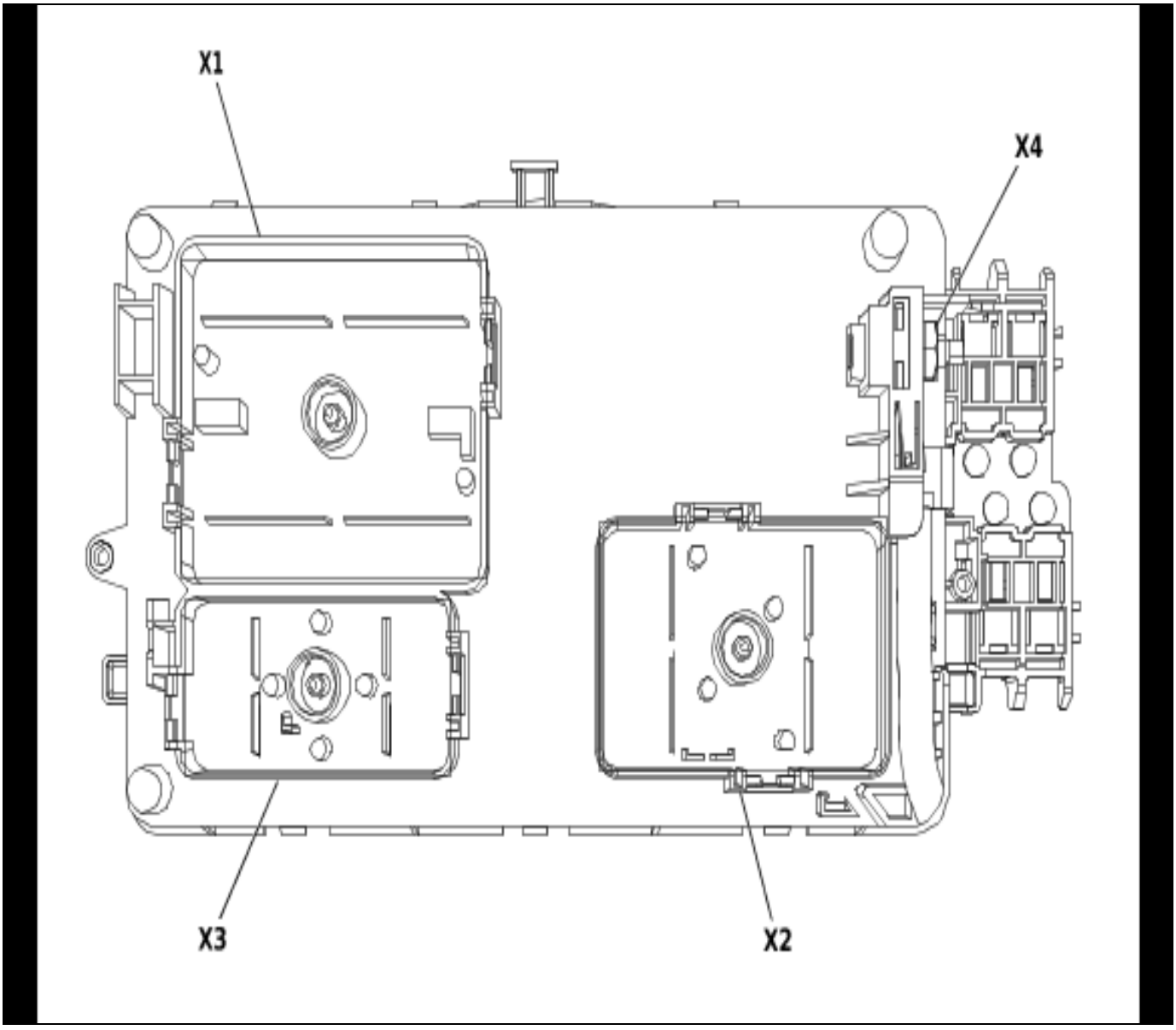

3788616

X50A Fuse Block - Underhood X1

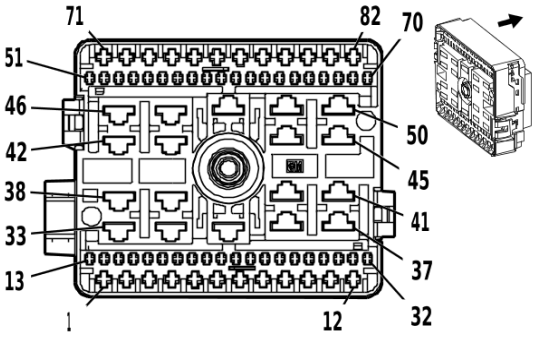

2174006

Connector Part Information

Harness Type: Forward Lamp Wiring Harness
OEM Connector: 13262028
Service Connector: 13576528
Description: 82 <p01>-Way F 1.5, 2.8 DSQ, 800 Metri-Pack Series(BK)

Terminal Part Information

Terminal Type ID	Terminated Lead	Diagnostic Test Probe	Terminal Removal Tool
I	13575355	J-35616-44 (YE)	J-38125-558
II	19299860	J-35616-35 (VT)	J-38125-215A
III	19366953	J-35616-44 (YE)	J-38125-558
IV	19368323	J-35616-14 (GN)	J-38125-215A

X50A Fuse Block - Underhood X1

Pin	Size	Color	Circuit	Function	Terminal Type ID	Option
1	1	VT / BN	7258	Rear Differential Lock Actuator Control	II	—
2	1	VT / WH	7256	Front Differential Lock Actuator Control	II	—
3 - 7	—	—	—	Not Occupied	—	—
8	1.5	BN	2109	Trailer Park Lamp Control	II	—
9 - 10	—	—	—	Not Occupied	—	—
11	0.75	BN / GY	29	Horn Control	II	—
12	—	—	—	Not Occupied	—	—
13	0.75	WH	311	Right Headlamp High Beam Control	IV	—
14	0.5	WH	711	Left Headlamp High Beam Control	IV	—
15 - 29	—	—	—	Not Occupied	—	—
30	0.75	GY / VT	228	Windshield Washer Pump Control	IV	—
31	0.75	BN / VT	2234	Front Fog Lamp Control	IV	—
32 - 34	—	—	—	Not Occupied	—	—
35	6	RD / GY	4840	Battery Positive Voltage	III	—
36 - 37	—	—	—	Not Occupied	—	—
38	4	BN / BU	104	Glow Plug Control	III	—
39 - 40	—	—	—	Not Occupied	—	—
41	1.5	GN / BU	3889	Powertrain Sensor Bus Relay Control	I	—
42 - 48	—	—	—	Not Occupied	—	—

X50A Fuse Block - Underhood X1 (cont'd)

Pin	Size	Color	Circuit	Function	Terminal Type ID	Option
49	2.5	BU / GN	7071	Fuel Heater Control	I	—
50	2.5 4	BN / VT BU	1470 3921	Brake Booster Pump Motor Control Diesel Exhaust Fluid Heater Control 1	I III	LGZ LWN
51	—	—	—	Not Occupied	—	—
52	0.5	BU / WH	7120	Rear Axle Differential Lock Control	IV	—
53 - 67	—	—	—	Not Occupied	—	—
68	1.5	GN / BU	3889	Powertrain Sensor Bus Relay Control	IV	—
69	0.5	WH / VT	4333	Active Grille Air Shutter Actuator Control	IV	—
70	—	—	—	Not Occupied	—	—
71	0.75	BK	1150	Ground	II	—
72	1.5	WH	92	Windshield Wiper Motor High Speed Control	II	—
73	1.5	YE / BN	95	Windshield Wiper Motor Low Speed Control	II	—
74	1.5	BK	3150	Ground	II	—
75	0.35	VT / GY	1054	Stop Lamp Control	II	—
76 - 79	—	—	—	Not Occupied	—	—
80	0.75	WH / VT	1430	Exterior Courtesy Lamp Control	II	—
81 - 82	—	—	—	Not Occupied	—	—

X50A Fuse Block - Underhood X2

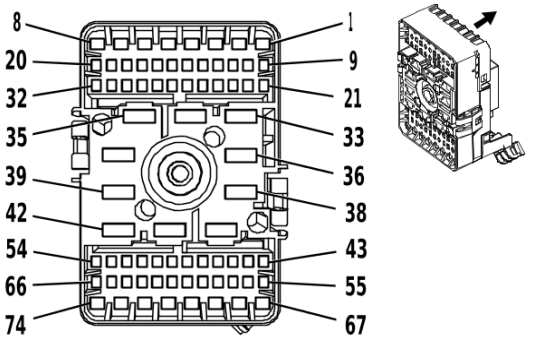

2174004

Connector Part Information

Harness Type: Body Wiring Harness
OEM Connector: 13732284
Service Connector: 13576544
Description: 74 <p01>-Way F 1.5, 2.8 DSQ, 800 Metri-Pack Series(BK)

Terminal Part Information

Terminal Type ID	Terminated Lead	Diagnostic Test Probe	Terminal Removal Tool
I	19299860	J-35616-35 (VT)	J-38125-215A
II	19366953	J-35616-44 (YE)	J-38125-558
III	19368323	J-35616-14 (GN)	J-38125-215A
IV	19368323	J-35616-2A (GY)	J-38125-215A

X50A Fuse Block - Underhood X2

Pin	Size	Color	Circuit	Function	Terminal Type ID	Option
1	1	WH / BK	7254	Front Differential Lock Actuator Low Control	I	—
2	1.5	BK	3950	Ground	I	—
3	1	GY / BK	7253	Rear Differential Lock Actuator Low Control	I	—
4	1.5 0.75 0.75	GY GY GY	295 295 5911	Door Lock Actuator Lock Control Door Lock Actuator Lock Control Door Lock Actuator Lock Control 2	I I I	CREW CAB EXTENDED CAB LGZ
5	1.5	WH / BU	3266	Child Security Lock Motor Lock Control	I	—
6	2.5	GY	120	Fuel Pump Control	I	—
7 - 10	—	—	—	Not Occupied	—	—
11	0.5	GN / BK	7118	Front Axle Differential Lock Low Reference	IV	—
12	1.5	GY / GN	3271	Door Lock Control 2	III	—
13	0.5	VT / YE	3267	Child Security Lock Relay Control	IV	—
14	0.75	VT / BK	2139	Run/Crank Ignition 1 Voltage	III	—
15 - 16	—	—	—	Not Occupied	—	—
17	0.5	GN / VT	5199	Run/Crank Relay Coil Control	IV	—
18	—	—	—	Not Occupied	—	—
19	0.5	BN / WH	1317	Fog Lamp Relay Control	IV	—
20	0.5	VT / BK	7121	Rear Axle Differential Lock Low Reference	IV	—
21	—	—	—	Not Occupied	—	—

X50A Fuse Block - Underhood X2 (cont'd)

Pin	Size	Color	Circuit	Function	Terminal Type ID	Option
22	0.5	GY	91	Windshield Wiper Motor Relay Coil Control	IV	—
23	—	—	—	Not Occupied	—	—
24	0.5	BU	45	Park Lamp Relay Control	IV	—
25	0.5	BN / WH	28	Horn Relay Control	IV	—
26 - 29	—	—	—	Not Occupied	—	—
30	0.75	GN	1619	Right Rear Trailer Stop/Turn Lamp Control	III	—
31 - 32	—	—	—	Not Occupied	—	—
33	2.5	RD / VT	542	Battery Positive Voltage	II	—
34	2.5	RD / YE	442	Battery Positive Voltage	II	—
35	—	—	—	Not Occupied	—	—
36	4	OG	742	Battery Positive Voltage	II	—
37 - 38	—	—	—	Not Occupied	—	—
39	2.5	BN / VT	293	Rear Defogger Grid Control	II	—
40	2.5	RD / GY	1342	Battery Positive Voltage	II	—
41	4	RD / GY	1042	Battery Positive Voltage	II	—
42	2.5	RD / GN	242	Battery Positive Voltage	II	—
43	0.5	BK	3150	Ground	IV	—
44	—	—	—	Not Occupied	—	—
45	0.5	WH / VT	860	Windshield Wiper Switch High Signal	IV	—
46	0.5	VT / WH	5065	Stop Lamp Relay Coil Control	IV	—
47	0.5	BN / WH	1429	Standing Lamp Relay Control	IV	—
48	0.5	BU / BN	38	Backup Lamp Relay Control	IV	—
49	0.5	BU / WH	5186	Left Trailer Turn Signal Lamp Control	IV	—
50	—	—	—	Not Occupied	—	—
51	0.75	YE	1618	Left Rear Trailer Stop/Turn Lamp Control	III	—
52	0.75	GY	1624	Trailer Backup Lamp Control	III	—
53 - 55	—	—	—	Not Occupied	—	—
56	0.75	RD / GN	5140	Battery Positive Voltage	III	—
57	—	—	—	Not Occupied	—	—
58	0.5	BN / VT	1969	Headlamp High Beam Relay Control	IV	—
59	0.5	YE / GY	5187	Right Trailer Turn Signal Lamp Control	IV	—
60	0.5	BN / GY	2268	Windshield Washer Relay Control	IV	—
61	0.5	BN / VT	193	Rear Defogger Relay Control	IV	—
62	0.5	BN / YE	2267	Outside Rearview Mirror Heater Control	IV	—
63 - 67	—	—	—	Not Occupied	—	—
68	0.75	RD / GN	6140	Battery Positive Voltage	I	—
69	2.5	RD / YE	2340	Battery Positive Voltage	I	—
70	2.5	RD / VT	1940	Battery Positive Voltage	I	—
71	2.5	RD / VT	1940	Battery Positive Voltage	I	—
72	0.5	RD / BN	440	Battery Positive Voltage	I	—
73	0.5	RD / GN	2440	Battery Positive Voltage	I	—
74	0.5	RD / BN	5940	Battery Positive Voltage	I	—

X50A Fuse Block - Underhood X3

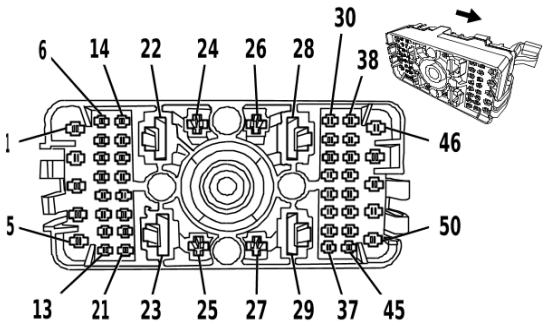

2220560

Connector Part Information

Harness Type: Engine Wiring Harness
OEM Connector: 13732282
Service Connector: 13505902
Description: 50 <p01>-Way F 1.5, 2.8 DSQ, 800 Metri-Pack Series(BK)

Terminal Part Information

Terminal Type ID	Terminated Lead	Diagnostic Test Probe	Terminal Removal Tool
I	19299860	J-35616-35 (VT)	J-38125-215A
II	19368323	J-35616-14 (GN)	J-38125-215A

X50A Fuse Block - Underhood X3

Pin	Size	Color	Circuit	Function	Terminal Type ID	Option
1	0.75	VT / BU	5290	Powertrain Main Relay Fused Supply Voltage 1	I	LCV
	1	VT / BU	5290	Powertrain Main Relay Fused Supply Voltage 1		LCV
	2	VT / BU	5290	Powertrain Main Relay Fused Supply Voltage 1		LGZ
	2.5	VT / BU	5290	Powertrain Main Relay Fused Supply Voltage 1		LWN
2	0.75	VT / BU	5291	Powertrain Main Relay Fused Supply Voltage 2	I	—
3	0.75	VT / BU	5292	Powertrain Main Relay Fused Supply Voltage 3	I	LGZ
	1.5	VT / BU	5292	Powertrain Main Relay Fused Supply Voltage 3	I	LWN
4	0.5	VT / BK	2139	Run/Crank Ignition 1 Voltage	I	—
5	2	YE	6	Starter Solenoid Crank Ignition Voltage	I	LCV
	2.5	YE	6	Starter Solenoid Crank Ignition Voltage	I	LGZ/ LWN
6	0.5	VT / BU	5293	Powertrain Main Relay Fused Supply Voltage 4	II	—
7	0.75	VT / BU	5294	Powertrain Main Relay Fused Supply Voltage 5	II	—
8	—	—	—	Not Occupied	—	—
9	0.5	GN / GY	465	Fuel Pump Primary Relay Control	II	—
10	—	—	—	Not Occupied	—	—
11	0.5	VT / GY	6386	—	II	LCV/ LWN
	0.5	YE / BK	625	Starter Enable Relay Control	II	LGZ
12	0.5	WH / BK	2366	Cooling Fan Speed Control Signal	II	—
13	0.75	BK / WH	151	Signal Ground	II	—
14	—	—	—	Not Occupied	—	—
15	0.5	BN	6305	Brake Vacuum Switch Signal	II	LGZ
	0.5	GN / BU	3889	Powertrain Sensor Bus Relay Control	II	LWN

X50A Fuse Block - Underhood X3 (cont'd)

Pin	Size	Color	Circuit	Function	Terminal Type ID	Option
16	—	—	—	Not Occupied	—	—
17	0.5	YE	5991	Powertrain Relay Coil Control	II	—
18 - 19	—	—	—	Not Occupied	—	—
20	0.75 1	VT / GY VT / GY	139 139	Run/Crank Ignition 1 Voltage Run/Crank Ignition 1 Voltage	II II	LCV/ LGZ LWN
21	0.5	BK	1450	Ground	II	—
22 - 26	—	—	—	Not Occupied	—	—
27	0.5	RD / WH	140	Battery Positive Voltage	I	—
28 - 29	—	—	—	Not Occupied	—	—
30	0.5 0.5	VT / BU WH	5290 2368	Powertrain Main Relay Fused Supply Voltage 1 Cooling Fan Control Signal	II II	LCV/ LGZ LWN
31 - 32	—	—	—	Not Occupied	—	—
33	0.5	VT / GN	4320	Powertrain Sensor Bus Enable	II	—
34	0.5	WH / GY	459	A/C Compressor Clutch Relay Control	II	—
35	1.5	VT / BU	3674	NOx Sensor 1 Control	II	—
36	—	—	—	Not Occupied	—	—
37	0.75	RD / GN	1840	Battery Positive Voltage	II	—
38 - 39	—	—	—	Not Occupied	—	—
40	0.5	BU	3017	Fuel Heater Relay 1 Control	II	—
41 - 45	—	—	—	Not Occupied	—	—
46	0.5	BU / BK	7116	Front Axle Differential Lock Control	I	—
47 - 48	—	—	—	Not Occupied	—	—
49	0.5	GN / BU	3889	Powertrain Sensor Bus Relay Control	I	—
50	0.75	BN / GN	59	A/C Compressor Clutch Control	I	—

X50A Fuse Block - Underhood X4

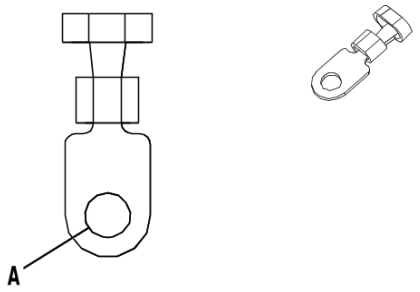

2892235

Connector Part Information

Harness Type: Battery Positive Cable
OEM Connector: 15327720
Service Connector: Service by Harness - See Part Catalog
Description: 1 <p01>-Way Ring Terminal

Terminal Part Information

Terminal Type ID	Terminated Lead	Diagnostic Test Probe	Terminal Removal Tool
I	Not Available	No Tool Required	Not Available

X50A Fuse Block - Underhood X4

Pin	Size	Color	Circuit	Function	Terminal Type ID	Option
A	—	RD / WH	4042	Battery Positive Voltage	I	—

X50A Fuse Block - Underhood X5 (LCV/LWN)

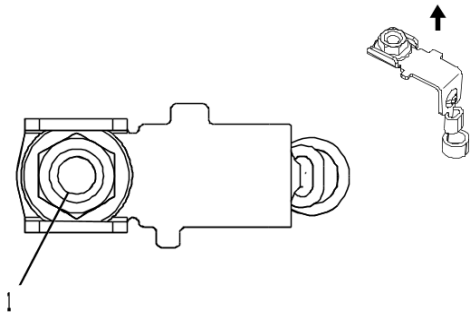

2173547

Connector Part Information

Harness Type: Battery Positive Cable
OEM Connector: 1193803
Service Connector: Service by Cable Assembly — See Part Catalog
Description: 1 <p01>-Way Ring Terminal

Terminal Part Information

Terminal Type ID	Terminated Lead	Diagnostic Test Probe	Terminal Removal Tool
I	Not required	No Tool Required	No Tool Required

X50A Fuse Block - Underhood X5 (LCV/LWN)

Pin	Size	Color	Circuit	Function	Terminal Type ID	Option
1	25	RD / YE	2	Battery Positive Voltage	I	—

X50A Fuse Block - Underhood X5 (LGZ)

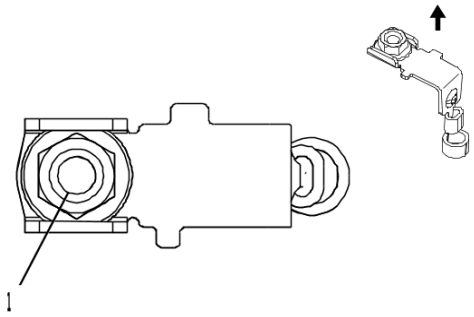

2173547

Connector Part Information

Harness Type: Generator Battery Jumper Cable
OEM Connector: 1193803
Service Connector: Service by Cable Assembly — See Part Catalog
Description: 1 <p01>-Way Ring Terminal

Terminal Part Information

Terminal Type ID	Terminated Lead	Diagnostic Test Probe	Terminal Removal Tool
I	Not required	No Tool Required	No Tool Required

X50A Fuse Block - Underhood X5 (LGZ)

Pin	Size	Color	Circuit	Function	Terminal Type ID	Option
1	25	RD / YE	2	Battery Positive Voltage	I	—

X50D Fuse Block - Battery Top View

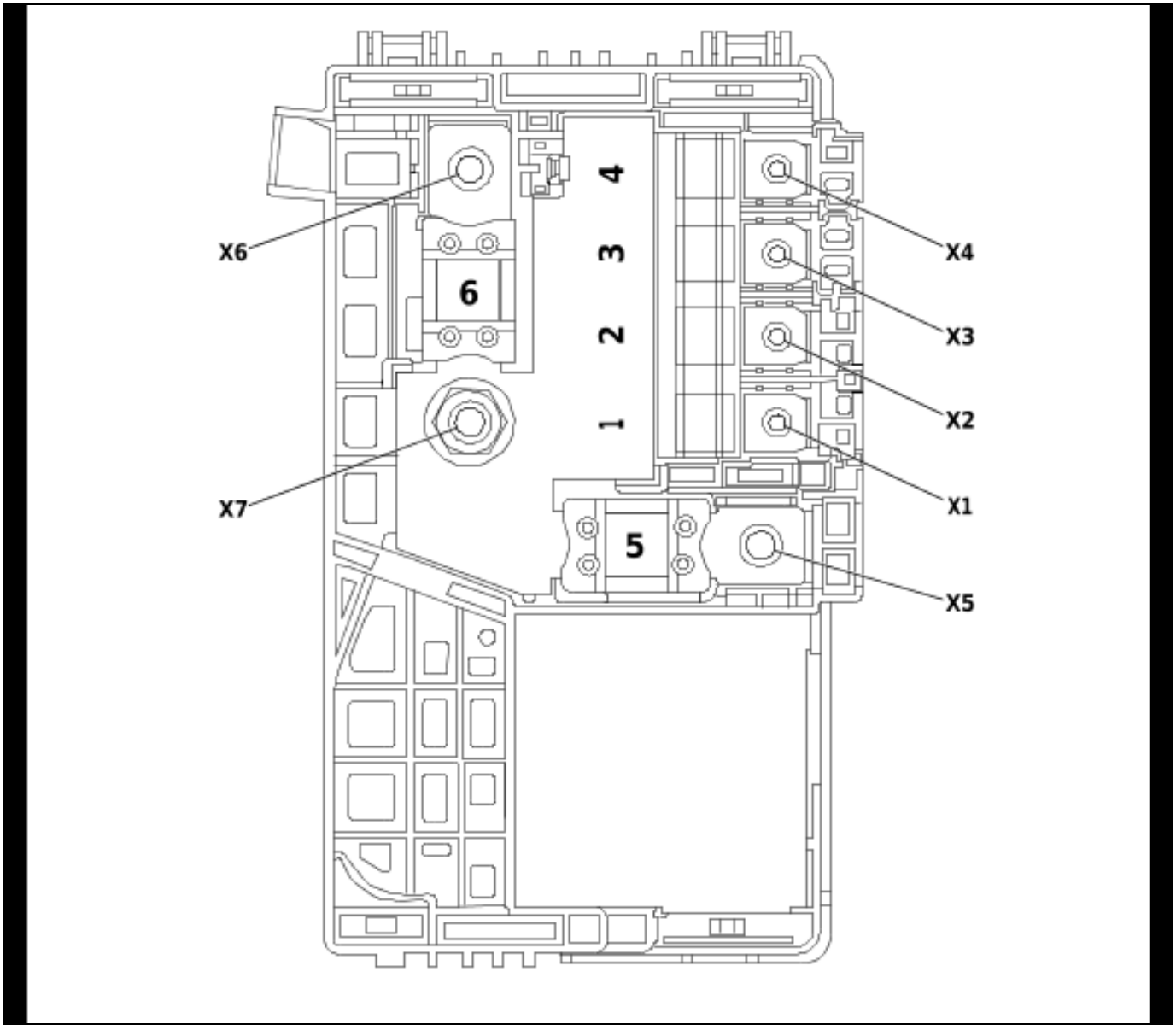

4790898

Usage Table

No.	Device Label Name	Device Assigned Name	Rating	Description
Fuses				
1	—	F1UB	100A	• K43 Power Steering Control Module
2	—	F2UB	100A	• X51A Fuse Block – Instrument Panel
3	—	F3UB	100A	• X51A Fuse Block – Instrument Panel
4	—	F4UB	100A	• K22 Cooling Fan Control Module
5	—	F5UB	250A	• X50A Fuse Block – Underhood
6	—	F6UB	300A	• M64 Starter Motor

X50D Fuse Block - Battery X1

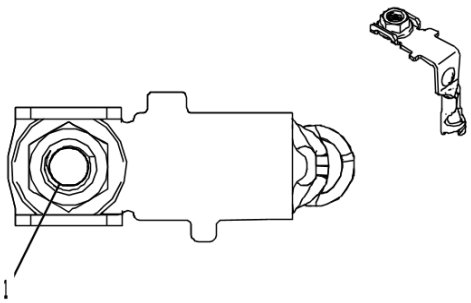

2772379

Connector Part Information

Harness Type: Battery Negative Cable
OEM Connector: 13371977
Service Connector: Service by Cable Assembly — See Part Catalog
Description: 1 <p01>-Way Ring Terminal

Terminal Part Information

Terminal Type ID	Terminated Lead	Diagnostic Test Probe	Terminal Removal Tool
I	Not required	No Tool Required	No Tool Required

X50D Fuse Block - Battery X1

Pin	Size	Color	Circuit	Function	Terminal Type ID	Option
1	10	RD / VT	842	Battery Positive Voltage	I	—

X50D Fuse Block - Battery X2

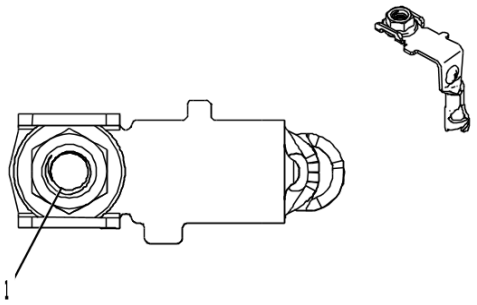

2772384

Connector Part Information

Harness Type: Body Wiring Harness
OEM Connector: 13869259
Service Connector: Service by Cable Assembly — See Part Catalog
Description: 1 <p01>-Way Ring Terminal

Terminal Part Information

Terminal Type ID	Terminated Lead	Diagnostic Test Probe	Terminal Removal Tool
I	Not required	No Tool Required	No Tool Required

X50D Fuse Block - Battery X2

Pin	Size	Color	Circuit	Function	Terminal Type ID	Option
1	10	RD / BU	42	Battery Positive Voltage	I	—

X50D Fuse Block - Battery X3

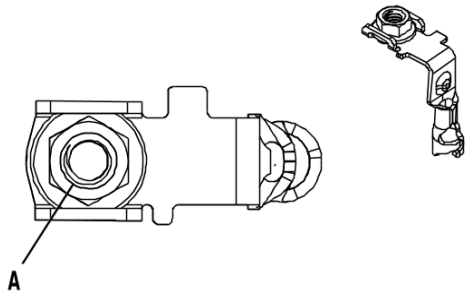

2759566

Connector Part Information

Harness Type: Body Wiring Harness
OEM Connector: 13869260
Service Connector: Service by Cable Assembly — See Part Catalog
Description: 1 <p01>-Way Ring Terminal

Terminal Part Information

Terminal Type ID	Terminated Lead	Diagnostic Test Probe	Terminal Removal Tool
I	Not required	No Tool Required	No Tool Required

X50D Fuse Block - Battery X3

Pin	Size	Color	Circuit	Function	Terminal Type ID	Option
A	10	RD / VT	842	Battery Positive Voltage	I	—

X50D Fuse Block - Battery X4 (LGZ)

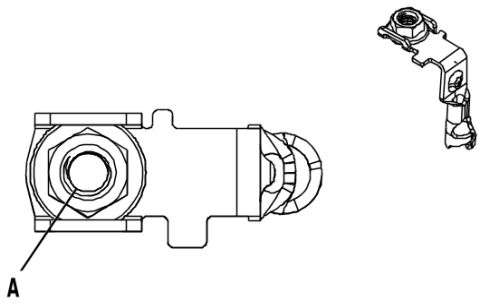

2759576

Connector Part Information

Harness Type: Forward Lamp Wiring Harness
OEM Connector: 13869288
Service Connector: Service by Cable Assembly — See Part Catalog
Description: 1 <p01>-Way Ring Terminal

Terminal Part Information

Terminal Type ID	Terminated Lead	Diagnostic Test Probe	Terminal Removal Tool
I	Not required	No Tool Required	No Tool Required

X50D Fuse Block - Battery X4 (LGZ)

Pin	Size	Color	Circuit	Function	Terminal Type ID	Option
A	10	RD / GY	4840	Battery Positive Voltage	I	—

X50D Fuse Block - Battery X4 (LWN)

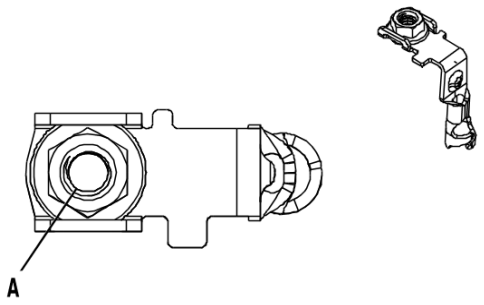

2759576

Connector Part Information

Harness Type: Body Wiring Harness
OEM Connector: 13869288
Service Connector: Service by Cable Assembly — See Part Catalog
Description: 1 <p01>-Way Ring Terminal

Terminal Part Information

Terminal Type ID	Terminated Lead	Diagnostic Test Probe	Terminal Removal Tool
I	Not required	No Tool Required	No Tool Required

X50D Fuse Block - Battery X4 (LWN)

Pin	Size	Color	Circuit	Function	Terminal Type ID	Option
A	10	RD / GY	4840	Battery Positive Voltage	I	—

X50D Fuse Block - Battery X5

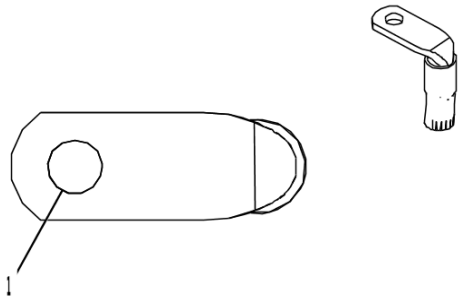

2772389

Connector Part Information

Harness Type: Battery Positive Cable
OEM Connector: 13644223
Service Connector: Service by Harness - See Part Catalog
Description: 1 <p01>-Way Ring Terminal

Terminal Part Information

Terminal Type ID	Terminated Lead	Diagnostic Test Probe	Terminal Removal Tool
I	Not Available	No Tool Required	Not Available

X50D Fuse Block - Battery X5

Pin	Size	Color	Circuit	Function	Terminal Type ID	Option
1	—	RD / WH	4042	Battery Positive Voltage	I	—

X50D Fuse Block - Battery X6A

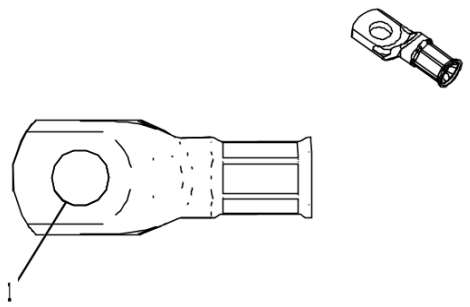

2772406

Connector Part Information

Harness Type: Battery Positive Cable
OEM Connector: 10730988
Service Connector: Service by Cable Assembly — See Part Catalog
Description: 1 <p01>-Way Ring Terminal

Terminal Part Information

Terminal Type ID	Terminated Lead	Diagnostic Test Probe	Terminal Removal Tool
I	Not required	No Tool Required	No Tool Required

X50D Fuse Block - Battery X6A

Pin	Size	Color	Circuit	Function	Terminal Type ID	Option
1	35	RD / YE	2	Battery Positive Voltage	I	—

X50D Fuse Block - Battery X6 (LGZ)

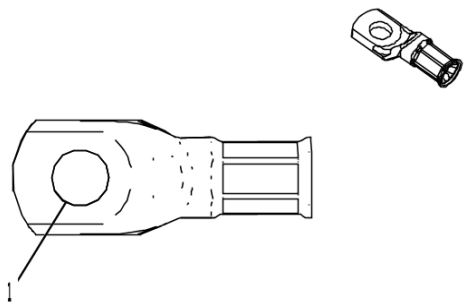

2772406

Connector Part Information

Harness Type: Battery Positive Cable
OEM Connector: 10730988
Service Connector: Service by Cable Assembly — See Part Catalog
Description: 1 <p01>-Way Ring Terminal

Terminal Part Information

Terminal Type ID	Terminated Lead	Diagnostic Test Probe	Terminal Removal Tool
I	Not required	No Tool Required	No Tool Required

X50D Fuse Block - Battery X6 (LGZ)

Pin	Size	Color	Circuit	Function	Terminal Type ID	Option
1	35	RD / YE	2	Battery Positive Voltage	I	—

X50D Fuse Block - Battery X6 (LWN)

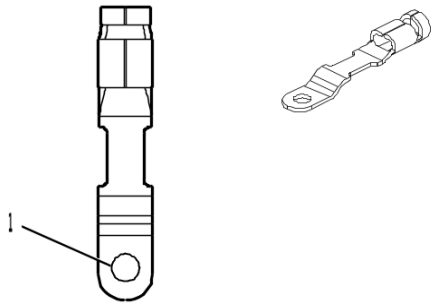

4880301

Connector Part Information

Harness Type: Starter Solenoid Cable
OEM Connector: AXZ47063
Service Connector: Service by Cable Assembly — See Part Catalog
Description: 1 <p01>-Way Ring Terminal

Terminal Part Information

Terminal Type ID	Terminated Lead	Diagnostic Test Probe	Terminal Removal Tool
I	Not required	No Tool Required	No Tool Required

X50D Fuse Block - Battery X6 (LWN)

Pin	Size	Color	Circuit	Function	Terminal Type ID	Option
1	50	RD / YE	2	Battery Positive Voltage	I	—

X50D Fuse Block - Battery X7

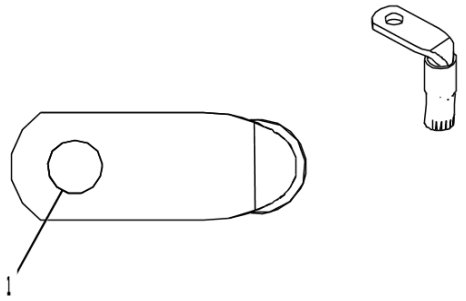

2772389

Connector Part Information

Harness Type: Battery Cable Positive
OEM Connector: 13644223
Service Connector: Service by Cable Assembly — See Part Catalog
Description: 1 <p01>-Way Ring Terminal

Terminal Part Information

Terminal Type ID	Terminated Lead	Diagnostic Test Probe	Terminal Removal Tool
I	Not required	No Tool Required	No Tool Required

X50D Fuse Block - Battery X7

Pin	Size	Color	Circuit	Function	Terminal Type ID	Option
1	—	RD	1	Unfused Battery Positive Voltage	I	—

X51A Fuse Block - Instrument Panel Label

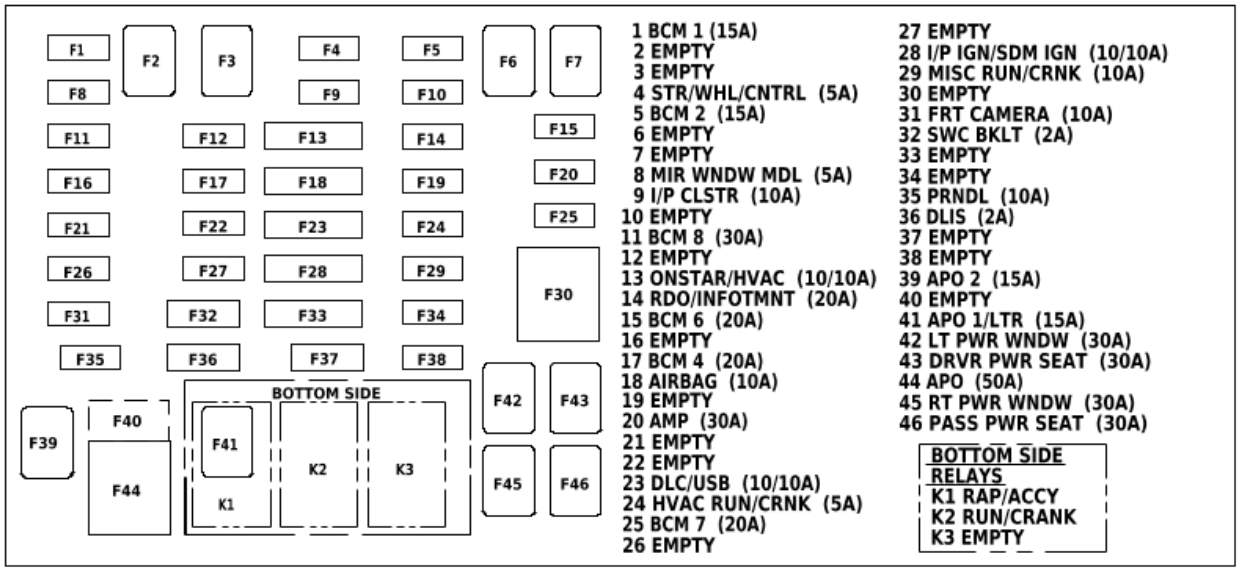

1 BCM 1 (15A)
2 EMPTY
3 EMPTY
4 STR/WHL/CNTRL (5A)
5 BCM 2 (15A)
6 EMPTY
7 EMPTY
8 MIR WNDW MDL (5A)
9 I/P CLSTR (10A)
10 EMPTY
11 BCM 8 (30A)
12 EMPTY
13 ONSTAR/HVAC (10/10A)
14 RDO/INFOTMNT (20A)
15 BCM 6 (20A)
16 EMPTY
17 BCM 4 (20A)
18 AIRBAG (10A)
19 EMPTY
20 AMP (30A)
21 EMPTY
22 EMPTY
23 DLC/USB (10/10A)
24 HVAC RUN/CRNK (5A)
25 BCM 7 (20A)
26 EMPTY
27 EMPTY
28 I/P IGN/SDM IGN (10/10A)
29 MISC RUN/CRNK (10A)
30 EMPTY
31 FRT CAMERA (10A)
32 SWC BKLT (2A)
33 EMPTY
34 EMPTY
35 PRNDL (10A)
36 DLIS (2A)
37 EMPTY
38 EMPTY
39 APO 2 (15A)
40 EMPTY
41 APO 1/LTR (15A)
42 LT PWR WNDW (30A)
43 DRVR PWR SEAT (30A)
44 APO (50A)
45 RT PWR WNDW (30A)
46 PASS PWR SEAT (30A)

BOTTOM SIDE RELAYS
K1 RAP/ACCY
K2 RUN/CRANK
K3 EMPTY

5440581

X51A Fuse Block - Instrument Panel Top View Fuses

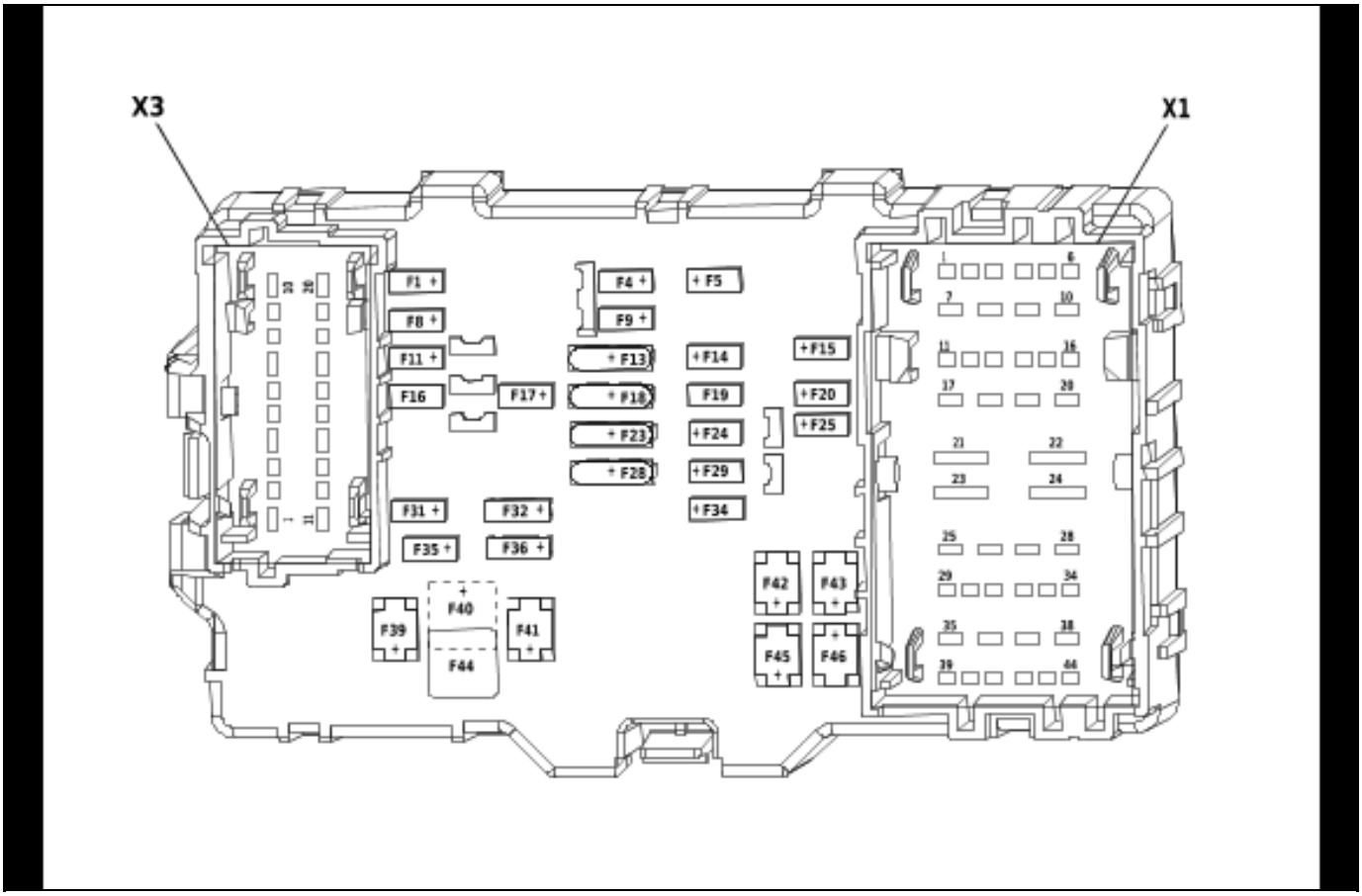

3818716

Usage Table

No.	Device Label Name	Device Assigned Name	Rating	Description
Fuses				
F1	BCM 1	F1DA	15A	• K9 Body Control Module
F2	EMPTY	F2DA	—	• Not Used
F3	EMPTY	F3DA	—	• Not Used
F4	STR/WHL/CNTRL	F4DA	5A	• S70L Steering Wheel Controls Switch - Left • S70R Steering Wheel Controls Switch - Right
F5	BCM 2	F5DA	15A	• K9 Body Control Module
F6	EMPTY	F6DA	—	• Not Used
F7	EMPTY	F7DA	—	• Not Used
F8	MIR WNDW MDL	F8DA	5A	• S79D Window Switch - Driver • S52 Outside Rearview Mirror Switch (DL6/DL9)
F9	I/P CLSTR	F9DA	10A	• P16 Instrument Cluster • P17 Info Display Module • S32D Seat Heating Switch - Driver (KA1) • S32P Seat Heating Switch - Passenger (KA1) • A26 HVAC Controls
F10	EMPTY	F10DA	—	• Not Used
F11	BCM 8	F11DA	30A	• K9 Body Control Module
F12	EMPTY	F12DA	—	• Not Used

Usage Table (cont'd)

No.	Device Label Name	Device Assigned Name	Rating	Description
F13	ONSTAR/HVAC	F13DA	10A	• K33 HVAC Control Module • K73 Telematics Communication Interface Control Module (UE1)
F14	RDO/INFOTMNT	F14DA	20A	• A11 Radio
F15	BCM 6	F15DA	20A	• K9 Body Control Module
F16	CGM	F16DA	—	• K56 Serial Data Gateway Module
F17	BCM 4	F17DA	20A	• K9 Body Control Module
F18	AIRBAG	F18DA	10A	• K85 Passenger Presence Module • K36 Inflatable Restraint Sensing and Diagnostic Module
F19	EMPTY	F19DA	—	• Not Used
F20	AMP	F20DA	30A	• T3 Audio Amplifier (UQA)
F21	EMPTY	F21DA	—	• Not Used
F22	EMPTY	F22DA	—	• Not Used
F23	DLC/USB	F23DA	10A	• X84 Data Link Connector • X83 Auxiliary Audio Input • X83R Auxiliary Audio Input - Rear • X92C USB Receptacle - Center Console Rear
F24	HVAC RUN/CRNK	F24DA	5A	• E40 Electrical Auxiliary Heater (LWN) • K33 HVAC Control Module
F25	BCM 7	F25DA	20A	• K9 Body Control Module
F26	EMPTY	F26DA	—	• Not Used
F27	EMPTY	F27DA	—	• Not Used
F28	I/P IGN/SDM IGN	F28DA	10A	• P14 Passenger Air Bag Disabled Indicator • P16 Instrument Cluster • and P43 Collision Alert Indicators (UEU)
F29	MISC RUN/CRNK	F29DA	10A	• B87 Rearview Camera • K69 Transfer Case Control Module (NQ6/NQ7) • A10 Inside Rearview Mirror
F30	EMPTY	F30DA	—	• Not Used
F31	FRT CAMERA	F31DA	10A	• B174W Frontview Camera - Windshield • K182 Parking Assist Control Module
F32	SWC BKLT	F32DA	2A	• S48A Multifunction Switch - Instrument Panel • S77 Transfer Case Shift Control Switch (NQ6/NQ7) • S30 Headlamp Switch • X85 Steering Wheel Air Bag Coil
F33	HTD STR WHL/ SPARE	F33DA	7.5A	• K32 Steering Wheel Heating Control Module
F34	EMPTYVent Seat FRT	F34DA	15A	• M37A Seat Blower Motor - Driver Back • M37B Seat Blower Motor - Passenger back • M73C Seat Blower Motor - Driver Cushion • M73D Seat Blower Motor - Passenger Cushion
F35	PRNDL	F35DA	10A	• P2 Transmission Shift Lever Position Indicator (MYB) • T22 Mobile Device Wireless Charger Module
F36	DLIS	F36DA	2A	• S39 Ignition Switch
F37	EMPTY	F37DA	—	• Not Used
F38	EMPTY	F38DA	—	• Not Used

Usage Table (cont'd)

No.	Device Label Name	Device Assigned Name	Rating	Description
F39	APO 2	F39DA	15A	• X80B Accessory Power Receptacle - Center Console 2
F40	APO	F40DA	50A	• F39DA • F41DA • X80A Accessory Power Receptacle - Center Console 1 • X80B Accessory Power Receptacle - Center Console 2 • E32 Cigarette Lighter Receptacle (SAO)
F41	APO 1/LTR	F41DA	15A	• E32 Cigarette Lighter Receptacle (SAO) • X80A Accessory Power Receptacle - Center Console 1
F42	LT PWR WNDW	F42DA	30A	• M74D Window Motor - Driver • S79LR Window Switch - Left Rear
F43	DRVR PWR SEAT	F43DA	30A	• S64D Seat Adjuster Switch - Driver
F44	APO	F44DA	50A	• F39DA • F41DA • X80A Accessory Power Receptacle - Center Console 1 • X80B Accessory Power Receptacle - Center Console 2 • E32 Cigarette Lighter Receptacle (SAO)
F45	RT PWR WNDW	F45DA	30A	• S79P Window Switch - Passenger • S79RR Window Switch - Right Rear
F46	PASS PWR SEAT	F46DA	30A	• S64P Seat Adjuster Switch - Passenger (AAQ)

X51A Fuse Block - Instrument Panel Bottom View Relays

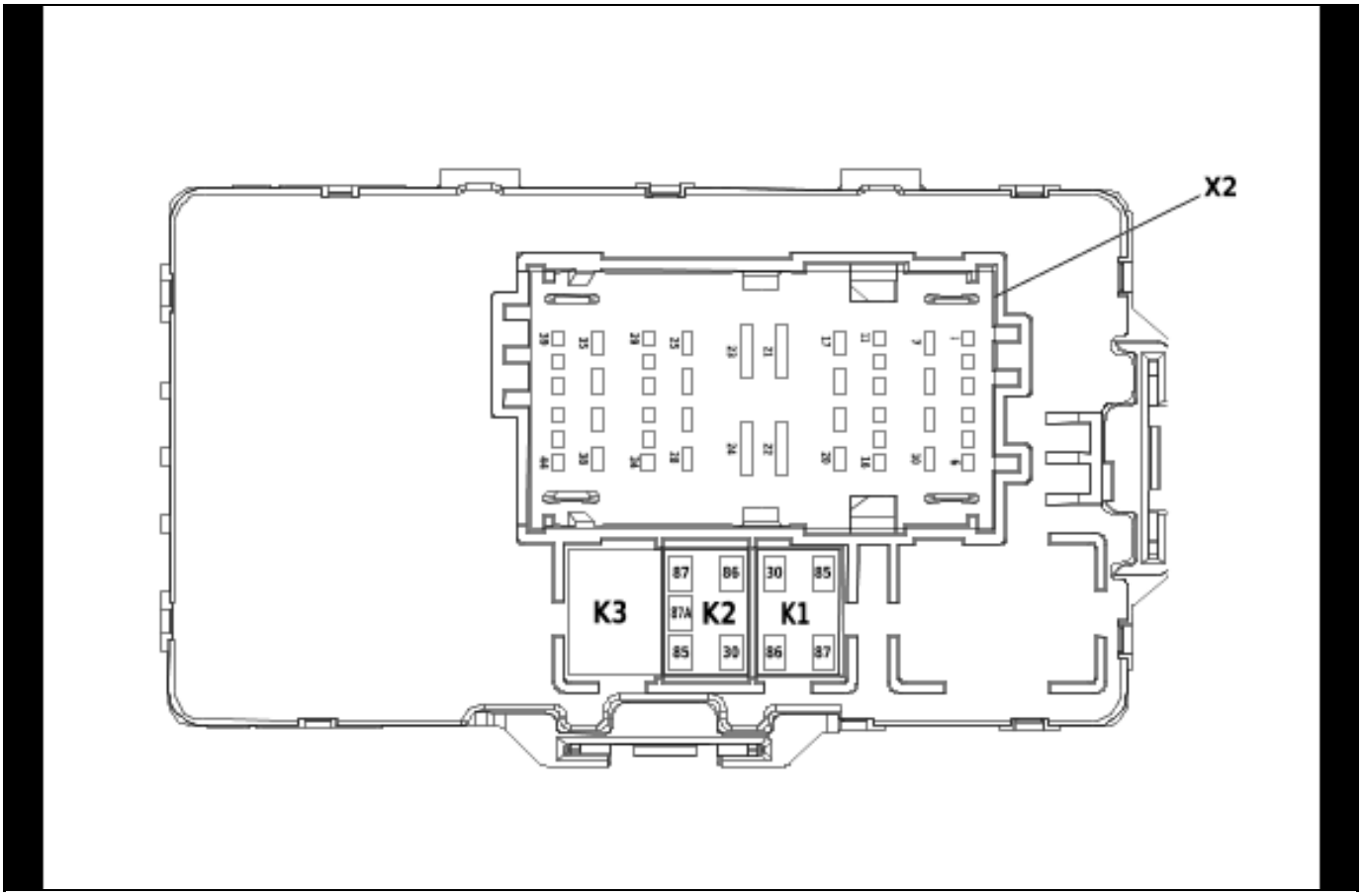

3818830

Usage Table

No.	Device Label Name	Device Assigned Name	Rating	Description
Relays				
K1	K1	KR76 Retained Accessory Power Relay	—	• F35DA • F44DA
K2	K2	KR73 Ignition Main Relay	—	• F24DA • F28DA • F29DA
K3	K3	—	—	• Not Used

X51A Fuse Block - Instrument Panel X1

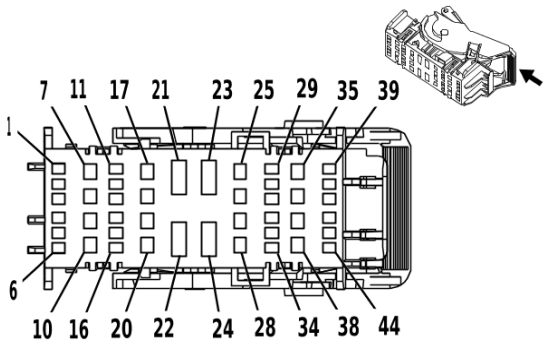

3240123

Connector Part Information

Harness Type: Body Wiring Harness
OEM Connector: 13967687
Service Connector: 19329455
Description: 44 <p01>-Way F 1.5, 2.8, 800 Metri-Pack Series(BK)

Terminal Part Information

Terminal Type ID	Terminated Lead	Diagnostic Test Probe	Terminal Removal Tool
I	19370817	J-35616-2A (GY)	J-38125-215A
II	85524896	J-35616-4A (PU)	J-38125-215A
III	Not required	J-35616-44 (YE)	No Tool Required

X51A Fuse Block - Instrument Panel X1

Pin	Size	Color	Circuit	Function	Terminal Type ID	Option
1	0.75	RD / BN	2240	Battery Positive Voltage	I	—
2	0.5	RD / GY	2840	Battery Positive Voltage	I	—
3	0.35	RD / YE	3040	Battery Positive Voltage	I	—
4	0.5	RD / WH	2040	Battery Positive Voltage	I	—
5	0.5	RD / GN	4440	Battery Positive Voltage	I	—
6 - 13	—	—	—	Not Occupied	—	—
14	0.5	RD / BU	3240	Battery Positive Voltage	I	—
15	—	—	—	Not Occupied	—	—
16	0.35	RD / VT	1940	Battery Positive Voltage	I	—
17	2.5	RD / YE	3740	Battery Positive Voltage	II	—
18	1.5	RD / WH	2740	Battery Positive Voltage	II	—
19	1	RD / VT	2640	Battery Positive Voltage	II	—
20	—	—	—	Not Occupied	—	—
21	10	RD / VT	842	Battery Positive Voltage	III	—
22	—	—	—	Not Occupied	—	—
23	10	RD / BU	42	Battery Positive Voltage	III	—
24	—	—	—	Not Occupied	—	—
25	2.5	RD / BU	1240	Battery Positive Voltage	II	—
26	—	—	—	Not Occupied	—	—
27	2.5	RD / YE	5040	Battery Positive Voltage	II	—

X51A Fuse Block - Instrument Panel X1 (cont'd)

Pin	Size	Color	Circuit	Function	Terminal Type ID	Option
28 - 29	—	—	—	Not Occupied	—	—
30	0.75	VT / BK	1239	Run/Crank Ignition 1 Voltage	I	—
31	—	—	—	Not Occupied	—	—
32	0.35	VT / GN	1739	Run/Crank Ignition 1 Voltage	I	—
33 - 34	—	—	—	Not Occupied	—	—
35	2.5	RD / WH	1340	Battery Positive Voltage	II	—
36	2.5	RD / BN	1440	Battery Positive Voltage	II	—
37 - 41	—	—	—	Not Occupied	—	—
42	0.35	GN / VT	5199	Run/Crank Relay Coil Control	I	—
43	0.35	GY / VT	755	Retained Accessory Power Relay Coil Control	I	—
44	0.35	VT	801	Retained Accessory Power Control	I	—

X51A Fuse Block - Instrument Panel X2

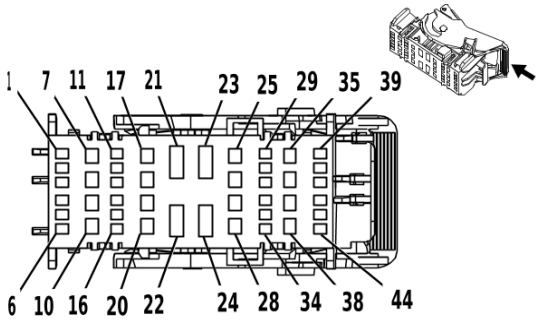

3240119

Connector Part Information

Harness Type: Body Wiring Harness
OEM Connector: 13967688
Service Connector: 19329456
Description: 44 <p01>-Way F 1.5, 2.8, 800 Metri-Pack Series(GY)

Terminal Part Information

Terminal Type ID	Terminated Lead	Diagnostic Test Probe	Terminal Removal Tool
I	19370817	J-35616-2A (GY)	J-38125-215A
II	85524896	J-35616-4A (PU)	J-38125-215A

X51A Fuse Block - Instrument Panel X2

Pin	Size	Color	Circuit	Function	Terminal Type ID	Option
1 - 2	—	—	—	Not Occupied	—	—
3	0.35	YE	6817	LED Backlight Dimming Control 1	I	—
4	0.35	BN	6136	Control	I	—
5	0.5	RD / BU	540	Battery Positive Voltage	I	—
6	—	—	—	Not Occupied	—	—
7	2.5	RD / VT	4040	Battery Positive Voltage	II	—
8	0.35	RD / WH	6440	Battery Positive Voltage	II	—
9	—	—	—	Not Occupied	—	—
10	1	VT	2101	Retained Accessory Power Control	II	—
11 - 13	—	—	—	Not Occupied	—	—
14	0.5	RD / VT	340	Battery Positive Voltage	I	—
15	0.5	VT / WH	1139	Run/Crank Ignition 1 Voltage	I	—
16 - 17	—	—	—	Not Occupied	—	—
18	2.5	RD / GN	2440	Battery Positive Voltage	II	—
19	—	—	—	Not Occupied	—	—
20	1	VT	1701	Retained Accessory Power Control	II	—
21 - 24	—	—	—	Not Occupied	—	—
25	0.5	RD / VT	3340	Battery Positive Voltage	II	—
26	—	—	—	Not Occupied	—	—
27	0.5	RD / WH	640	Battery Positive Voltage	II	—
28	0.5	VT / BK	1639	Run/Crank Ignition 1 Voltage	II	—

X51A Fuse Block - Instrument Panel X2 (cont'd)

Pin	Size	Color	Circuit	Function	Terminal Type ID	Option
29 - 33	—	—	—	Not Occupied	—	—
34	0.35	VT / GN	39	Run/Crank Ignition 1 Voltage	I	—
35	1	RD / VT	340	Battery Positive Voltage	II	—
36	—	—	—	Not Occupied	—	—
37	0.35	VT / GY	539	Run/Crank Ignition 1 Voltage	II	—
38	0.5	VT / GN	1739	Run/Crank Ignition 1 Voltage	II	—
39 - 43	—	—	—	Not Occupied	—	—
44	0.75	BK	2050	Ground	I	—

X51A Fuse Block - Instrument Panel X3

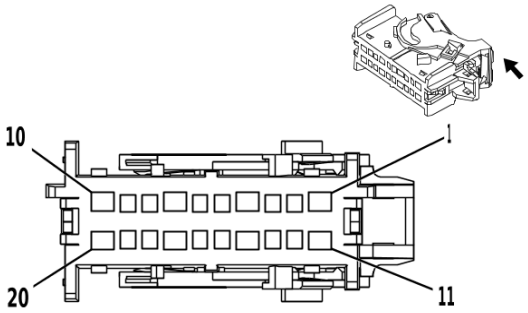

3240104

Connector Part Information

Harness Type: Body Wiring Harness
OEM Connector: 15547106
Service Connector: 13597270
Description: 20 <p01>-Way F 1.5, 2.8 OCS Series(BK)

Terminal Part Information

Terminal Type ID	Terminated Lead	Diagnostic Test Probe	Terminal Removal Tool
I	19301761	J-35616-4A (PU)	J-38125-215A
II	19370817	J-35616-2A (GY)	J-38125-215A

X51A Fuse Block - Instrument Panel X3

Pin	Size	Color	Circuit	Function	Terminal Type ID	Option
1 - 10	—	—	—	Not Occupied	—	—
11	0.5	VT	4601	Retained Accessory Power Control	I	—
12	0.35 0.75	RD / GN RD / GN	3140 3140	Battery Positive Voltage Battery Positive Voltage	II II	UD7+ (UEU/ UFL) - UHY UD7+ (UEU/ UFL)
13	0.5	VT / GN	1739	Run/Crank Ignition 1 Voltage	II	—
14	0.35	VT / WH	1139	Run/Crank Ignition 1 Voltage	I	—
15 - 20	—	—	—	Not Occupied	—	—

Component Connector End Views

A7 Fuel Pump and Level Sensor Assembly (LCV/LGZ)

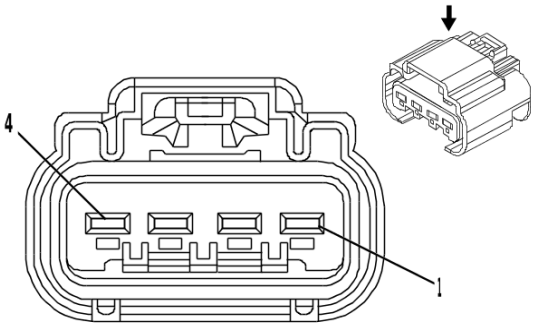

1962075

Connector Part Information

Harness Type: Chassis Wiring Harness
OEM Connector: 13527865
Service Connector: 13587174
Description: 4 <p01>-Way F 280 GT Series, Sealed(NA)

Terminal Part Information

Terminal Type ID	Terminated Lead	Diagnostic Test Probe	Terminal Removal Tool
I	Not required	J-35616-4A (PU)	No Tool Required

A7 Fuel Pump and Level Sensor Assembly (LCV/LGZ)

Pin	Size	Color	Circuit	Function	Terminal Type ID	Option
1	2.5	GY	120	Fuel Pump Control	I	—
2	2.5	BK / GN	1580	Fuel Pump Low Reference	I	—
3	0.5	BK / GN	6281	Fuel Level Sensor Low Reference	I	—
4	0.5	BU / VT	1589	Primary Fuel Level Sensor Signal	I	—

A7 Fuel Pump and Level Sensor Assembly (LWN)

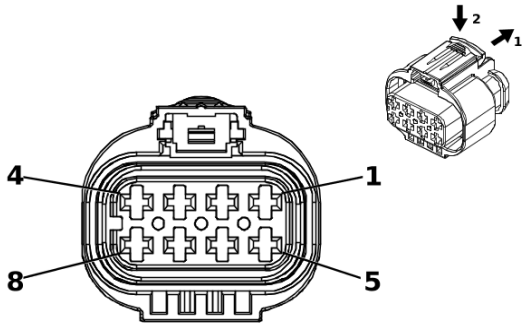

3749581

Connector Part Information

Harness Type: Chassis Wiring Harness
OEM Connector: 2109441-2
Service Connector: 19370092
Description: 8 <p01>-Way F 2.8 Series, Sealed(BK)

Terminal Part Information

Terminal Type ID	Terminated Lead	Diagnostic Test Probe	Terminal Removal Tool
I	Not required	J-35616-35 (VT)	No Tool Required
II	Not required	J-35616-4A (PU)	No Tool Required

A7 Fuel Pump and Level Sensor Assembly (LWN)

Pin	Size	Color	Circuit	Function	Terminal Type ID	Option
1 - 2	—	—	—	Not Occupied	—	—
3	2.5	GY	120	Fuel Pump Control	I	—
4	2.5	BK	1950	Ground	I	—
5	0.5	BU / VT	1589	Primary Fuel Level Sensor Signal	II	—
6	0.5	BK / GN	6281	Fuel Level Sensor Low Reference	II	—
7 - 8	—	—	—	Not Occupied	—	—

A10 Inside Rearview Mirror

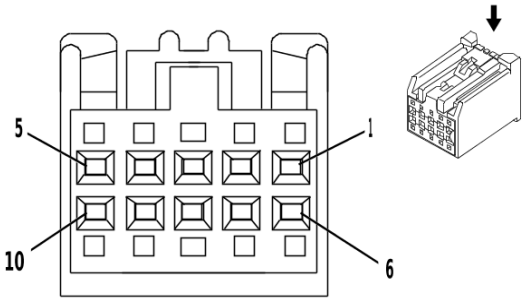

2180211

Connector Part Information

Harness Type: Headliner Wiring Harness
OEM Connector: 13577390
Service Connector: 13577390
Description: 10 <p01>-Way F 0.64 Kaizen Series(BK)

Terminal Part Information

Terminal Type ID	Terminated Lead	Diagnostic Test Probe	Terminal Removal Tool
I	13575742	J-35616-64B (LT BU)	J-38125-215A

A10 Inside Rearview Mirror

Pin	Size	Color	Circuit	Function	Terminal Type ID	Option
1	0.5	GN / WH	24	Backup Lamp Control	I	—
2	0.5	VT / GN	1739	Run/Crank Ignition 1 Voltage	I	—
3	0.35	GN / WH	2514	Telematics Switch Signal	I	—
4	0.5	GN / BK	2515	Telematics Switch Supply Voltage	I	—
5	0.5	BK	3150	Ground	I	—
6	0.35	YE / VT	2516	Telematics Switch Green LED Indicator Control	I	—
7	0.35	BN / WH	2517	Telematics Switch Red LED Indicator Control	I	—
8 - 10	—	—	—	Not Occupied	—	—

A11 Radio X1 (IOR)

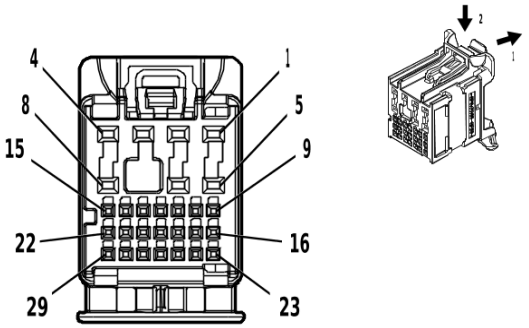

4584346

Connector Part Information

Harness Type: Instrument Panel Wiring Harness
OEM Connector: 160014-0002
Service Connector: 13534972
Description: 29 <p01>-Way F 0.5 NANO, 1.2 MCON Series(GN)

Terminal Part Information

Terminal Type ID	Terminated Lead	Diagnostic Test Probe	Terminal Removal Tool
I	19370262	EL-35616-58 (BK)	EL-38125-58
II	84729890	J-35616-16 (LT GN)	J-38125-215A
III	84729890	J-35616-16 (LT GN)	J-38125-559

A11 Radio X1 (IOR)

Pin	Size	Color	Circuit	Function	Terminal Type ID	Option
1	0.75	RD / VT	340	Battery Positive Voltage	III	—
2	0.75	RD / VT	340	Battery Positive Voltage	III	—
3	0.75	BK / WH	2051	Signal Ground	III	—
4	0.35	BU / RD	2807	Radio Keypad Voltage Reference	II	—
5	0.35	BK / GN	2804	Radio Display Backlight Low Reference	II	—
6	0.75	BK / WH	2051	Signal Ground	III	—
7	—	—	—	Not Occupied	—	—
8	0.75	GN / BK	116	Left Rear Speaker [-] Control	III	—
9	0.35	GY / BU	2803	Radio Display Touch Interrupt Request Signal	I	—
10	—	—	—	Not Occupied	—	—
11	0.35	GN / WH	24	Backup Lamp Control	I	—
12	0.35	GY / GN	1102	Low Speed GMLAN Serial Data 2	I	—
13 - 14	—	—	—	Not Occupied	—	—
15	0.35	BU / GY	2808	Radio Keypad Dimming Control	I	—
16 - 20	—	—	—	Not Occupied	—	—
21	0.35	GY / VT	3363	Navigation Display Dimming Control	I	—
22	0.35	BU / GN	2813	Radio Display Backlight Dimming Control	I	—
23	—	—	—	Not Occupied	—	—
24	0.35	BN / WH	2809	Radio Keypad Power Signal	I	—
25	0.35	VT / WH	2810	Radio Keypad Button Signal	I	—

A11 Radio X1 (IOR) (cont'd)

Pin	Size	Color	Circuit	Function	Terminal Type ID	Option
26	0.35	BU	4315	Radio Volume Up Switch Signal	I	—
27	0.35	GY / BN	4314	Radio Volume Down Switch Signal	I	—
28 - 29	—	—	—	Not Occupied	—	—

A11 Radio X1 (IOS/IOU)

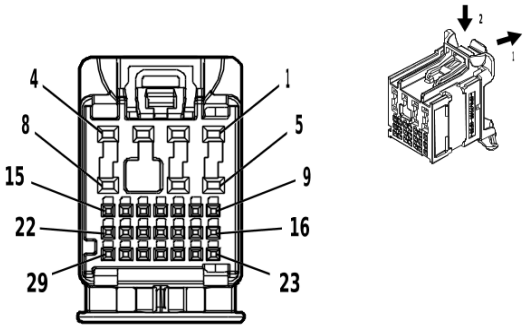

4496253

Connector Part Information

Harness Type: Instrument Panel Wiring Harness
OEM Connector: 160014-0004
Service Connector: 13534974
Description: 29 <p01>-Way F 0.5 NANO, 1.2 MCON Series(BK)

Terminal Part Information

Terminal Type ID	Terminated Lead	Diagnostic Test Probe	Terminal Removal Tool
I	19370262	EL-35616-58 (BK)	EL-38125-58
II	84729890	J-35616-16 (LT GN)	J-38125-559

A11 Radio X1 (IOS/IOU)

Pin	Size	Color	Circuit	Function	Terminal Type ID	Option
1	0.75	RD / VT	340	Battery Positive Voltage	II	—
2	0.75	RD / VT	340	Battery Positive Voltage	II	—
3	0.75	BK / WH	2051	Signal Ground	II	—
4 - 5	—	—	—	Not Occupied	—	—
6	0.75	BK / WH	2051	Signal Ground	II	—
7	—	—	—	Not Occupied	—	—
8	0.75	GN / BK	116	Left Rear Speaker [-] Control	II	—
9	0.35	GY / YE	5149	Voice Recognition Audio Signal	I	—
10	0.35	BK / GY	5152	Voice Recognition Audio [-] Control	I	—
11	0.35	VT / YE	7043	Microphone [+] Signal	I	—
12	0.35	BU / BK	7044	Microphone [-]	I	—
13 - 29	—	—	—	Not Occupied	—	—

A11 Radio X2 (IOR+UQ3)

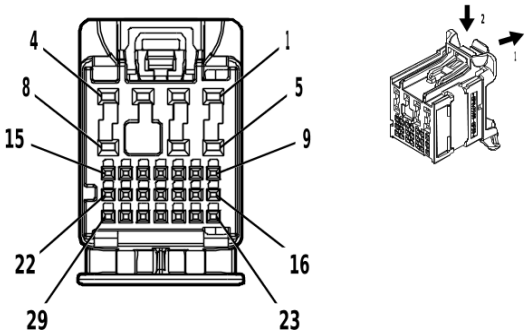

4584398

Connector Part Information

Harness Type: Instrument Panel Wiring Harness
OEM Connector: 160014-0003
Service Connector: 13534973
Description: 29 <p01>-Way F 0.5 NANO, 1.2 MCON Series(GY)

Terminal Part Information

Terminal Type ID	Terminated Lead	Diagnostic Test Probe	Terminal Removal Tool
I	19370262	EL-35616-58 (BK)	EL-38125-58
II	84729890	J-35616-16 (LT GN)	J-38125-559

A11 Radio X2 (IOR+UQ3)

Pin	Size	Color	Circuit	Function	Terminal Type ID	Option
1	0.75	GN	199	Left Rear Speaker [+] Control	II	—
2	0.75	BU	201	Left Front Speaker 1 [+] Control	II	—
3	0.75	YE	200	Right Front Speaker 1 [+] Control	II	—
4	0.75	BU / BK	115	Right Rear Speaker [-] Control	II	—
5	0.75	BN / BU	118	Left Front Speaker [-] Control 1	II	—
6	0.75	YE / BK	117	Right Front Speaker [-] Control 1	II	—
7	—	—	—	Not Occupied	—	—
8	0.75	WH	46	Right Rear Speaker [+] Control	II	—
9	0.35	BK / GY	5152	Voice Recognition Audio [-] Control	I	—
10	0.35	GY / YE	5149	Voice Recognition Audio Signal	I	—
11	—	—	—	Not Occupied	—	—
12	0.35	GY / YE	6972	Rearview Camera Signal [+]	I	—
13	0.35	WH / BU	6973	Rearview Camera Signal [-]	I	—
14 - 29	—	—	—	Not Occupied	—	—

A11 Radio X2 (IOS/IOU)

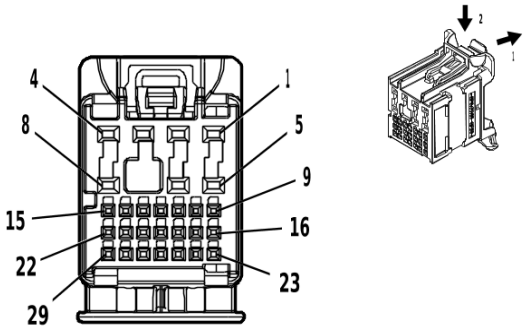

4578560

Connector Part Information

Harness Type: Instrument Panel Wiring Harness
OEM Connector: 160014-0001
Service Connector: 13534971
Description: 29 <p01>-Way F 0.5 NANO, 1.2 MCON Series(GY)

Terminal Part Information

Terminal Type ID	Terminated Lead	Diagnostic Test Probe	Terminal Removal Tool
I	19370262	EL-35616-58 (BK)	EL-38125-58
II	84729890	J-35616-16 (LT GN)	J-38125-559

A11 Radio X2 (IOS/IOU)

Pin	Size	Color	Circuit	Function	Terminal Type ID	Option
1	0.75	GN	199	Left Rear Speaker [+] Control	II	—
2	0.75	BU	201	Left Front Speaker 1 [+] Control	II	—
3	0.75	YE / BK	117	Right Front Speaker [-] Control 1	II	—
4	0.75	BU / BK	115	Right Rear Speaker [-] Control	II	—
5	0.75	BN / BU	118	Left Front Speaker [-] Control 1	II	—
6	0.75	YE	200	Right Front Speaker 1 [+] Control	II	—
7	—	—	—	Not Occupied	—	—
8	0.75	WH	46	Right Rear Speaker [+] Control	II	—
9	0.35	BU / GN	1304	High Speed GMLAN Serial Data [+] 9	I	—
10	0.35	WH / GN	1305	High Speed GMLAN Serial Data [-] 9	I	—
11	0.35	BU / GN	1304	High Speed GMLAN Serial Data [+] 9	I	—
12	0.35	WH / GN	1305	High Speed GMLAN Serial Data [-] 9	I	—
13	0.35	GN / WH	24	Backup Lamp Control	I	—
14 - 17	—	—	—	Not Occupied	—	—
18	0.35	GY / GN	1102	Low Speed GMLAN Serial Data 2	I	—
19 - 27	—	—	—	Not Occupied	—	—
28	0.35	WH / BU	5986	Serial Data Communication Enable	I	—
29	—	—	—	Not Occupied	—	—

A11 Radio X3 (IOR+U2K)

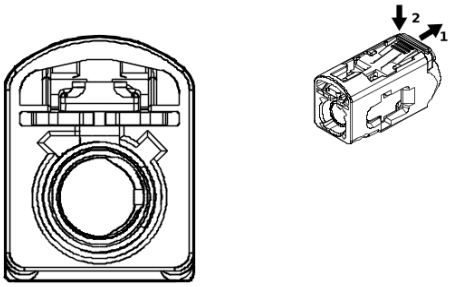

5205095

Connector Part Information

Harness Type: Instrument Panel Wiring Harness COAX
OEM Connector: 13515624
Service Connector: Service by Cable Assembly — See Part Catalog
Description: 1 <p01>-Way F Coax Type(BK)

Terminal Part Information

Terminal Type ID	Terminated Lead	Diagnostic Test Probe	Terminal Removal Tool
I	Not required	No Tool Required	No Tool Required

A11 Radio X3 (IOR+U2K)

Pin	Size	Color	Circuit	Function	Terminal Type ID	Option
—	—	Coax Cable	—	(AM/FM) Antenna RF Signal	I	—

A11 Radio X3 (IOS/IOU)

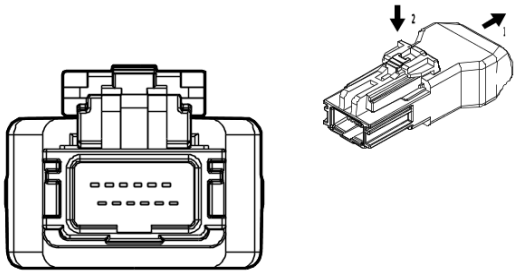

4584321

Connector Part Information

Harness Type: Instrument Panel Wiring Harness LVDS
OEM Connector: 13511515
Service Connector: Service by Cable Assembly — See Part Catalog
Description: 12 <p01>-Way M 2.0 HSAL-2 Series(GY)

Terminal Part Information

Terminal Type ID	Terminated Lead	Diagnostic Test Probe	Terminal Removal Tool
I	Not required	No Tool Required	No Tool Required

A11 Radio X3 (IOS/IOU)

Pin	Size	Color	Circuit	Function	Terminal Type ID	Option
—	—	LVDS	—	(Infotainment) Infotainment Display Signal	I	—

A11 Radio X4 (IOR)

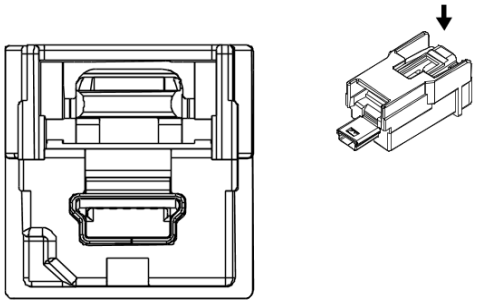

2807491

Connector Part Information

Harness Type: Instrument Panel Wiring Harness USB
OEM Connector: 13576673
Service Connector: Service by Cable Assembly — See Part Catalog
Description: 5 <p01>-Way M 2.0 Mini-B USB Type(GY)

Terminal Part Information

Terminal Type ID	Terminated Lead	Diagnostic Test Probe	Terminal Removal Tool
I	Not required	No Tool Required	No Tool Required

A11 Radio X4 (IOR)

Pin	Size	Color	Circuit	Function	Terminal Type ID	Option
—	—	USB	—	USB Serial Data	I	—

A11 Radio X4 (IOS/IOU)

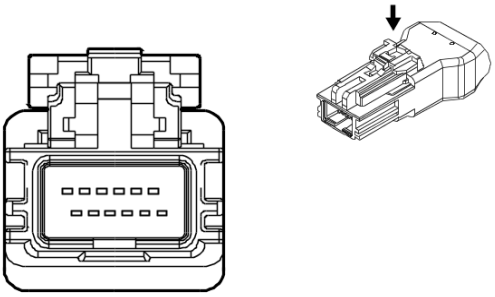

4527210

Connector Part Information

Harness Type: Instrument Panel Wiring Harness USB
OEM Connector: 13511514
Service Connector: Service by Cable Assembly — See Part Catalog
Description: 12 <p01>-Way M 2.0 HSAL-2 Series(BK)

Terminal Part Information

Terminal Type ID	Terminated Lead	Diagnostic Test Probe	Terminal Removal Tool
I	Not required	No Tool Required	No Tool Required

A11 Radio X4 (IOS/IOU)

Pin	Size	Color	Circuit	Function	Terminal Type ID	Option
—	—	USB	—	USB Serial Data	I	—

A11 Radio X5 (IOR)

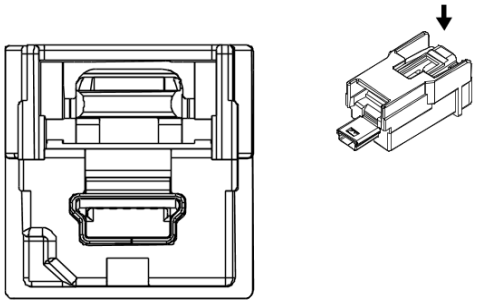

2807491

Connector Part Information

Harness Type: Instrument Panel Wiring Harness USB
OEM Connector: 13576673
Service Connector: Service by Cable Assembly — See Part Catalog
Description: 5 <p01>-Way M 2.0 Mini-B USB Type(GY)

Terminal Part Information

Terminal Type ID	Terminated Lead	Diagnostic Test Probe	Terminal Removal Tool
I	Not required	No Tool Required	No Tool Required

A11 Radio X5 (IOR)

Pin	Size	Color	Circuit	Function	Terminal Type ID	Option
—	—	USB	—	USB Serial Data	I	—

A11 Radio X5 (IOS/IOU+UVB)

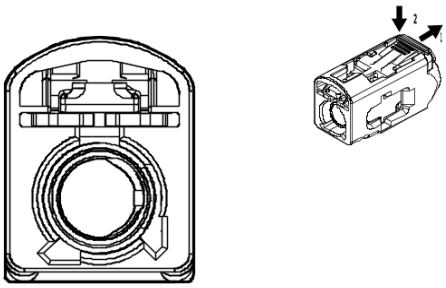

5161804

Connector Part Information

Harness Type: Instrument Panel Wiring Harness COAX
OEM Connector: 13515635
Service Connector: Service by Cable Assembly — See Part Catalog
Description: 1 <p01>-Way F Coax Type(OG)

Terminal Part Information

Terminal Type ID	Terminated Lead	Diagnostic Test Probe	Terminal Removal Tool
I	Not required	No Tool Required	No Tool Required

A11 Radio X5 (IOS/IOU+UVB)

Pin	Size	Color	Circuit	Function	Terminal Type ID	Option
—	—	Coax Cable	—	Driver Monitoring System Camera Coaxial Signal	I	—

A11 Radio X6 (IOR)

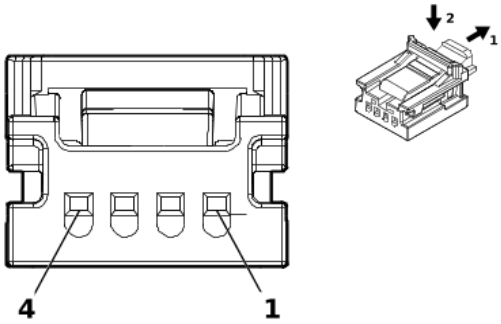

5493278

Connector Part Information

Harness Type: Instrument Panel Wiring Harness
OEM Connector: 34791-5140
Service Connector: 19354840
Description: 4 <p01>-Way F Mini 50 Series(BK)

Terminal Part Information

Terminal Type ID	Terminated Lead	Diagnostic Test Probe	Terminal Removal Tool
I	Not required	EL-35616-58 (BK)	No Tool Required

A11 Radio X6 (IOR)

Pin	Size	Color	Circuit	Function	Terminal Type ID	Option
1	—	—	—	Not Occupied	—	—
2	0.1	GY / WH	7211	Ethernet Bus 4 [+]	I	—
3	0.1	GY / <p01>	7210	Ethernet Bus 4 [-]	I	—
4	—	—	—	Not Occupied	—	—

A11 Radio X6 (IOS/IOU)

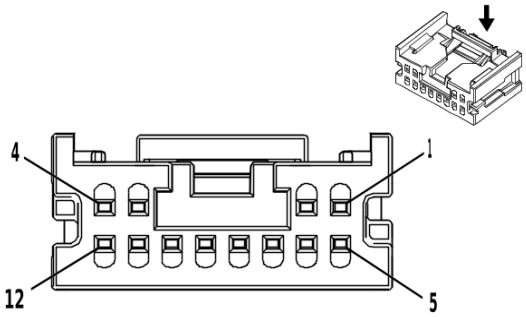

3824362

Connector Part Information

Harness Type: Instrument Panel Wiring Harness
OEM Connector: 34824-5124
Service Connector: 13507121
Description: 12 <p01>-Way F Mini 50 Series(BK)

Terminal Part Information

Terminal Type ID	Terminated Lead	Diagnostic Test Probe	Terminal Removal Tool
I	19333221	EL-35616-58 (BK)	EL-38125-58

A11 Radio X6 (IOS/IOU)

Pin	Size	Color	Circuit	Function	Terminal Type ID	Option
1 - 2	—	—	—	Not Occupied	—	—
3	0.1	GY / BU	7217	Ethernet Bus 7 [+]	I	—
4	0.1	BN / BU	7216	Ethernet Bus 7 [-]	I	—
5 - 7	—	—	—	Not Occupied	—	—
8	0.1	GY / BK	7215	Ethernet Bus 6 [+]	I	—
9	0.1	BN / BK	7214	Ethernet Bus 6 [-]	I	—
10	—	—	—	Not Occupied	—	—
11	0.1	GY / WH	7211	Ethernet Bus 4 [+]	I	—
12	0.1	GY / <p01>	7210	Ethernet Bus 4 [-]	I	—

A11 Radio X7 (IOS/IOU)

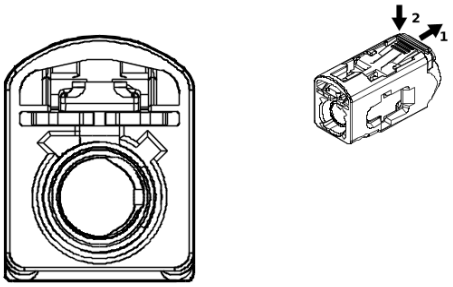

5205095

Connector Part Information

Harness Type: Instrument Panel Wiring Harness COAX
OEM Connector: 13515624
Service Connector: Service by Cable Assembly — See Part Catalog
Description: 1 <p01>-Way F Coax Type(BK)

Terminal Part Information

Terminal Type ID	Terminated Lead	Diagnostic Test Probe	Terminal Removal Tool
I	Not required	No Tool Required	No Tool Required

A11 Radio X7 (IOS/IOU)

Pin	Size	Color	Circuit	Function	Terminal Type ID	Option
—	—	Coax Cable	—	(AM/FM) Antenna RF Signal	I	—

A11 Radio X8 (IOS/IOU)

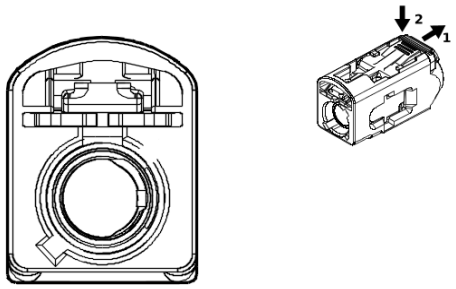

5277091

Connector Part Information

Harness Type: Instrument Panel Wiring Harness COAX
OEM Connector: 13515626
Service Connector: Service by Cable Assembly — See Part Catalog
Description: 1 <p01>-Way F Coax Type(BU)

Terminal Part Information

Terminal Type ID	Terminated Lead	Diagnostic Test Probe	Terminal Removal Tool
I	Not required	No Tool Required	No Tool Required

A11 Radio X8 (IOS/IOU)

Pin	Size	Color	Circuit	Function	Terminal Type ID	Option
—	—	Coax Cable	—	(GPS only) Coaxial Antenna GPS Signal	I	—

A11 Radio X8 (IOS/IOU+U2K)

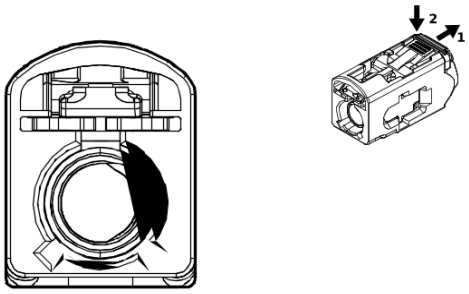

5277111

Connector Part Information

Harness Type: Instrument Panel Wiring Harness COAX
OEM Connector: 13515633
Service Connector: Service by Cable Assembly — See Part Catalog
Description: 1 <p01>-Way F Coax Type(CU)

Terminal Part Information

Terminal Type ID	Terminated Lead	Diagnostic Test Probe	Terminal Removal Tool
I	Not required	No Tool Required	No Tool Required

A11 Radio X8 (IOS/IOU+U2K)

Pin	Size	Color	Circuit	Function	Terminal Type ID	Option
—	—	Coax Cable	—	(XM +/-HD) Coaxial Antenna XM Signal	I	—

A16 Transfer Case Motor

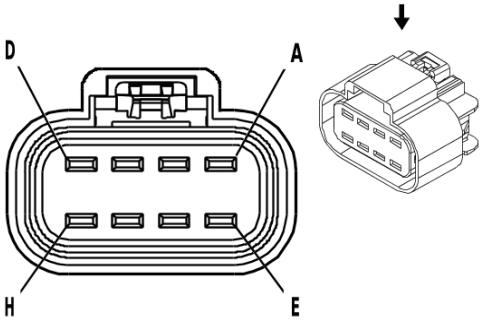

646372

Connector Part Information

Harness Type: Engine Wiring Harness
OEM Connector: 13538370
Service Connector: 19369184
Description: 8 <p01>-Way F 280 GT Series, Sealed(BK)

Terminal Part Information

Terminal Type ID	Terminated Lead	Diagnostic Test Probe	Terminal Removal Tool
I	Not required	J-35616-4A (PU)	No Tool Required

A16 Transfer Case Motor

Pin	Size	Color	Circuit	Function	Terminal Type ID	Option
A	2.5	YE / GY	1552	Transfer Case Motor Clockwise Control	I	—
B	2.5	RD / GY	1342	Battery Positive Voltage	I	—
C	2.5	YE / BN	1569	Transfer Case Lock Solenoid Valve Control	I	—
D	2.5	YE / VT	1553	Transfer Case Motor Counter Clockwise Control	I	—
E	0.5	BU / GY	7473	Incremental Encoder Impulse Signal	I	—
F	0.5	YE	7474	Incremental Encoder Direction Signal	I	—
G	0.5	WH / GN	7475	Incremental Encoder Sensor 8V Reference	I	—
H	0.5	VT	7476	Incremental Encoder Sensor Low Reference	I	—

A22 Radio Controls

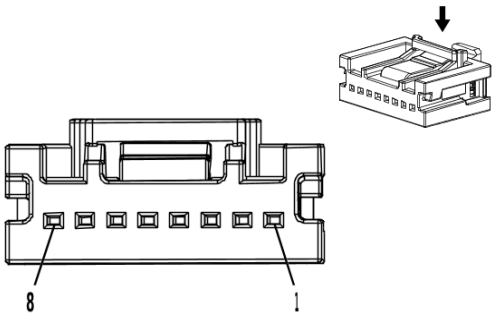

4017639

Connector Part Information

Harness Type: Instrument Panel Wiring Harness
OEM Connector: 34791-5180
Service Connector: 19354223
Description: 8 <p01>-Way F Mini 50 Series(BK)

Terminal Part Information

Terminal Type ID	Terminated Lead	Diagnostic Test Probe	Terminal Removal Tool
I	Not required	EL-35616-58 (BK)	No Tool Required

A22 Radio Controls

Pin	Size	Color	Circuit	Function	Terminal Type ID	Option
1	0.35	BU / RD	2807	Radio Keypad Voltage Reference	I	—
2	—	—	—	Not Occupied	—	—
3	0.35	BN / WH	2809	Radio Keypad Power Signal	I	—
4	0.35	BK / YE	2806	Radio Keypad Low Reference	I	—
5	0.35	BU / GY	2808	Radio Keypad Dimming Control	I	—
6	0.35	VT / WH	2810	Radio Keypad Button Signal	I	—
7	0.35	BU	4315	Radio Volume Up Switch Signal	I	—
8	0.35	GY / BN	4314	Radio Volume Down Switch Signal	I	—

A23D Door Latch Assembly - Driver

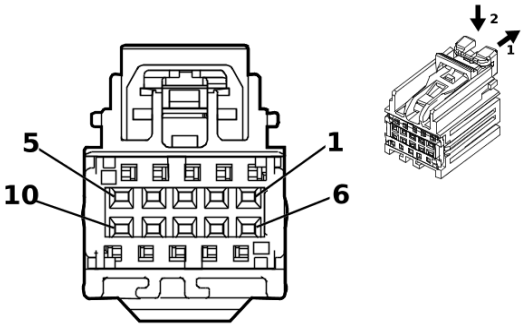

4622549

Connector Part Information

Harness Type: Front Side Door Door Wiring Harness - Driver
OEM Connector: 7289-5068-60
Service Connector: Service by Harness - See Part Catalog
Description: 10 <p01>-Way F 0.64 YESC Kaizen Series(GN)

Terminal Part Information

Terminal Type ID	Terminated Lead	Diagnostic Test Probe	Terminal Removal Tool
I	Not required	J-35616-64B (LT BU)	No Tool Required

A23D Door Latch Assembly - Driver

Pin	Size	Color	Circuit	Function	Terminal Type ID	Option
1	0.35	GY	745	Left Front Door Ajar Switch Signal	I	—
2	—	—	—	Not Occupied	—	—
3	0.35	BK	3550	Ground	I	—
4	0.35	WH / VT	3270	Driver Door Lock Motor Status Signal	I	—
5	0.35	BU / VT	1124	Door Lock Key Switch Unlock Signal	I	—
6	—	—	—	Not Occupied	—	—
7	0.75	GY	5911	Door Lock Actuator Lock Control 2	I	—
8	0.75	BN / YE	294	Door Lock Actuator Unlock Control	I	—
9 - 10	—	—	—	Not Occupied	—	—

A23E Door Latch Assembly - Endgate

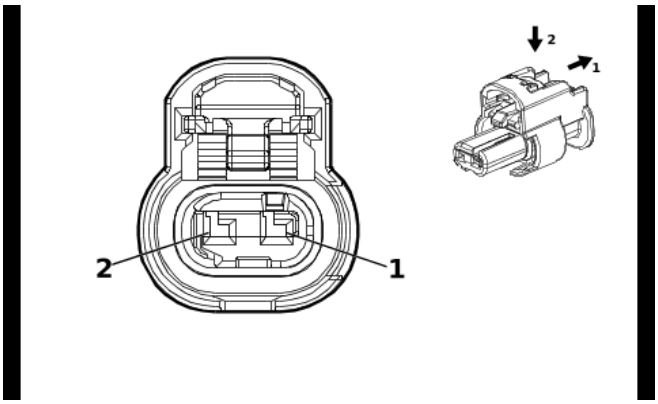

4649903

Connector Part Information

Harness Type: Liftgate Jumper Wiring Harness
OEM Connector: 1-2296694-1
Service Connector: Service by Harness - See Part Catalog
Description: 2 <p01>-Way F 1.2 MCON Series, Sealed(BK)

Terminal Part Information

Terminal Type ID	Terminated Lead	Diagnostic Test Probe	Terminal Removal Tool
I	Not required	J-35616-16 (LT GN)	No Tool Required

A23E Door Latch Assembly - Endgate

Pin	Size	Color	Circuit	Function	Terminal Type ID	Option
1	0.75	GY	5911	Door Lock Actuator Lock Control 2	I	—
2	0.75	BN / YE	294	Door Lock Actuator Unlock Control	I	—

A23G Door Latch Assembly - Left Rear Lower

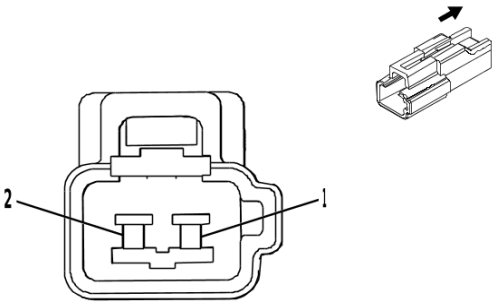

4141662

Connector Part Information

Harness Type: Rear Side Door Door Wiring Harness - Left
OEM Connector: 7282-6160
Service Connector: Service by Harness - See Part Catalog
Description: 2 <p01>-Way M 090 Series(NA)

Terminal Part Information

Terminal Type ID	Terminated Lead	Diagnostic Test Probe	Terminal Removal Tool
I	Not required	J-35616-19 (BK)	No Tool Required

A23G Door Latch Assembly - Left Rear Lower

Pin	Size	Color	Circuit	Function	Terminal Type ID	Option
1	0.35	BK	3350	Ground	I	—
2	0.35	GY	747	Left Rear Door Ajar Switch Signal	I	—

A23H Door Latch Assembly - Left Rear Upper

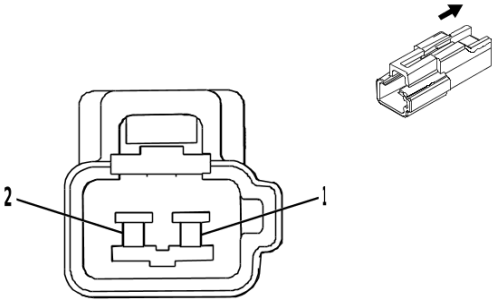

4141662

Connector Part Information

Harness Type: Rear Side Door Door Wiring Harness - Left
OEM Connector: 7282-6160
Service Connector: Service by Harness - See Part Catalog
Description: 2 <p01>-Way M 090 Series(NA)

Terminal Part Information

Terminal Type ID	Terminated Lead	Diagnostic Test Probe	Terminal Removal Tool
I	Not required	J-35616-19 (BK)	No Tool Required

A23H Door Latch Assembly - Left Rear Upper

Pin	Size	Color	Circuit	Function	Terminal Type ID	Option
1	0.35	BK	3350	Ground	I	—
2	0.35	GY	747	Left Rear Door Ajar Switch Signal	I	—

A23J Door Latch Assembly - Right Rear Lower

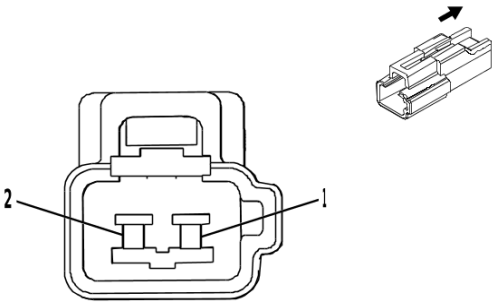

4141662

Connector Part Information

Harness Type: Rear Side Door Door Wiring Harness - Right
OEM Connector: 7282-6160
Service Connector: Service by Harness - See Part Catalog
Description: 2 <p01>-Way M 090 Series(NA)

Terminal Part Information

Terminal Type ID	Terminated Lead	Diagnostic Test Probe	Terminal Removal Tool
I	Not required	J-35616-19 (BK)	No Tool Required

A23J Door Latch Assembly - Right Rear Lower

Pin	Size	Color	Circuit	Function	Terminal Type ID	Option
1	0.35	BK	3450	Ground	I	—
2	0.35	GY	748	Right Rear Door Ajar Switch Signal	I	—

A23K Door Latch Assembly - Right Rear Upper

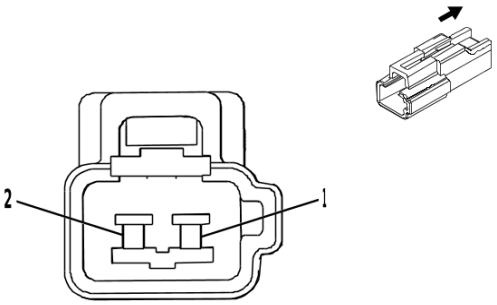

4141662

Connector Part Information

Harness Type: Rear Side Door Door Wiring Harness - Right
OEM Connector: 7282-6160
Service Connector: Service by Harness - See Part Catalog
Description: 2 <p01>-Way M 090 Series(NA)

Terminal Part Information

Terminal Type ID	Terminated Lead	Diagnostic Test Probe	Terminal Removal Tool
I	Not required	J-35616-19 (BK)	No Tool Required

A23K Door Latch Assembly - Right Rear Upper

Pin	Size	Color	Circuit	Function	Terminal Type ID	Option
1	0.35	BK	3450	Ground	I	—
2	0.35	GY	748	Right Rear Door Ajar Switch Signal	I	—

A23LR Door Latch Assembly - Left Rear

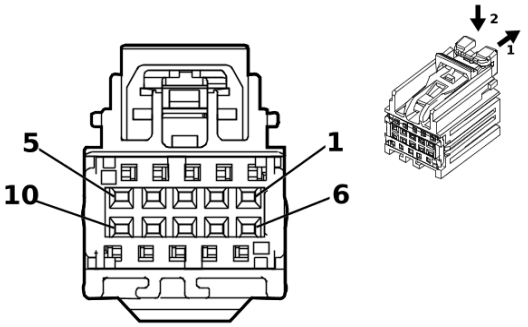

4622549

Connector Part Information

Harness Type: Rear Side Door Door Wiring Harness - Left
OEM Connector: 7289-5068-60
Service Connector: Service by Harness - See Part Catalog
Description: 10 <p01>-Way F 0.64 YESC Kaizen Series(GN)

Terminal Part Information

Terminal Type ID	Terminated Lead	Diagnostic Test Probe	Terminal Removal Tool
I	Not required	J-35616-64B (LT BU)	No Tool Required

A23LR Door Latch Assembly - Left Rear

Pin	Size	Color	Circuit	Function	Terminal Type ID	Option
1	0.35	GY	747	Left Rear Door Ajar Switch Signal	I	—
2	0.35	BN / WH	3269	Child Security Lock Actuator Status Signal Left Rear	I	—
3	0.35	BK	3350	Ground	I	—
4 - 6	—	—	—	Not Occupied	—	—
7	0.75	GY	295	Door Lock Actuator Lock Control	I	—
8	0.75	BN / YE	294	Door Lock Actuator Unlock Control	I	—
9	0.75	WH / BU	3266	Child Security Lock Motor Lock Control	I	—
10	—	—	—	Not Occupied	—	—

A23P Door Latch Assembly - Passenger

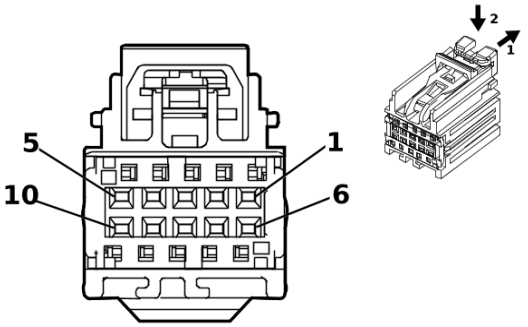

4622549

Connector Part Information

Harness Type: Front Side Door Door Wiring Harness - Passenger
OEM Connector: 7289-5068-60
Service Connector: Service by Harness - See Part Catalog
Description: 10 <p01>-Way F 0.64 YESC Kaizen Series(GN)

Terminal Part Information

Terminal Type ID	Terminated Lead	Diagnostic Test Probe	Terminal Removal Tool
I	Not required	J-35616-64B (LT BU)	No Tool Required

A23P Door Latch Assembly - Passenger

Pin	Size	Color	Circuit	Function	Terminal Type ID	Option
1 - 2	—	—	—	Not Occupied	—	—
3	0.35	BK	3650	Ground	I	—
4	—	—	—	Not Occupied	—	—
5	0.35	GY	746	Right Front Door Ajar Switch Signal	I	—
6 - 7	—	—	—	Not Occupied	—	—
8	0.75	BN / YE	294	Door Lock Actuator Unlock Control	I	—
9	0.75	GY	295	Door Lock Actuator Lock Control	I	—
10	—	—	—	Not Occupied	—	—

A23RR Door Latch Assembly - Right Rear

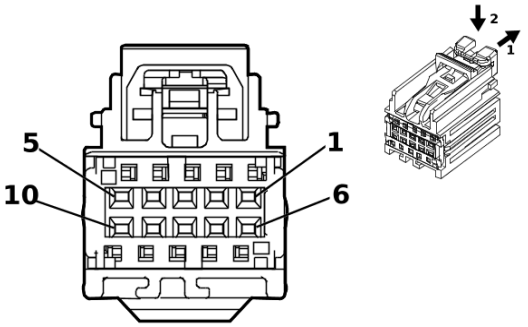

4622549

Connector Part Information

Harness Type: Rear Side Door Door Wiring Harness - Right
OEM Connector: 7289-5068-60
Service Connector: Service by Harness - See Part Catalog
Description: 10 <p01>-Way F 0.64 YESC Kaizen Series(GN)

Terminal Part Information

Terminal Type ID	Terminated Lead	Diagnostic Test Probe	Terminal Removal Tool
I	Not required	J-35616-64B (LT BU)	No Tool Required

A23RR Door Latch Assembly - Right Rear

Pin	Size	Color	Circuit	Function	Terminal Type ID	Option
1 - 2	—	—	—	Not Occupied	—	—
3	0.35	BK	3450	Ground	I	—
4	0.35	GY / BK	3268	Child Security Lock Actuator Status Signal Right Rear	I	—
5	0.35	GY	748	Right Rear Door Ajar Switch Signal	I	—
6	—	—	—	Not Occupied	—	—
7	0.75	WH / BU	3266	Child Security Lock Motor Lock Control	I	—
8	0.75	BN / YE	294	Door Lock Actuator Unlock Control	I	—
9	0.75	GY	295	Door Lock Actuator Lock Control	I	—
10	—	—	—	Not Occupied	—	—

A26 HVAC Controls

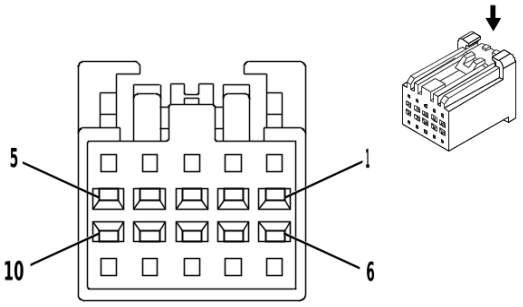

2840038

Connector Part Information

Harness Type: Instrument Panel Wiring Harness
OEM Connector: AIT2PB-10P-2BH
Service Connector: 13581139
Description: 10 <p01>-Way F 0.64 Kaizen Series(GY)

Terminal Part Information

Terminal Type ID	Terminated Lead	Diagnostic Test Probe	Terminal Removal Tool
I	13575742	J-35616-64B (LT BU)	J-38125-215A

A26 HVAC Controls

Pin	Size	Color	Circuit	Function	Terminal Type ID	Option
1	0.5	RD / GY	2840	Battery Positive Voltage	I	—
2	—	—	—	Not Occupied	—	—
3	0.35	GN	5060	Low Speed GMLAN Serial Data	I	—
4 - 8	—	—	—	Not Occupied	—	—
9	0.35	GN / YE	7531	HVAC Control Module LIN Bus 1	I	—
10	0.35	BK / WH	2051	Signal Ground	I	—

A38 Reductant Pump and Sensor Assembly (LWN)

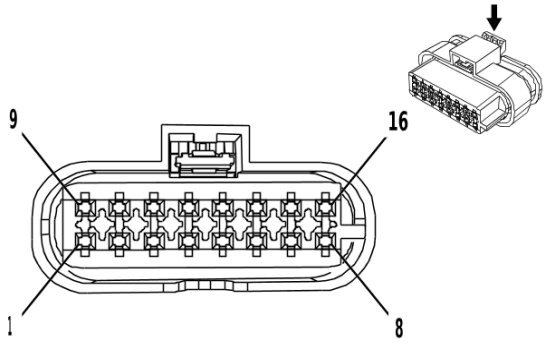

4259227

Connector Part Information

Harness Type: Emission Reduction Fluid Tank Reservoir Wire Harness
OEM Connector: 805-587-541
Service Connector: Service by Harness - See Part Catalog
Description: 16 <p01>-Way F 1.2 Multilock Series(BK)

Terminal Part Information

Terminal Type ID	Terminated Lead	Diagnostic Test Probe	Terminal Removal Tool
I	Not Available	No Tool Required	Not Available

A38 Reductant Pump and Sensor Assembly (LWN)

Pin	Size	Color	Circuit	Function	Terminal Type ID	Option
1	0.35	OG	3244	Diesel Exhaust Fluid Tank Temperature Sensor Signal	I	—
2	0.35	GN	3245	Diesel Exhaust Fluid Tank Temperature Sensor Low Reference	I	—
3	0.35	YE	3107	Diesel Exhaust Fluid Pressure Sensor Low Reference	I	—
4	0.35	GY	3108	Diesel Exhaust Fluid Pressure Sensor Signal	I	—
5	0.35	BU	3106	Diesel Exhaust Fluid Pressure Sensor 5 Volt Reference	I	—
6	—	—	—	Not Occupied	—	—
7	1.0	BU	3876	Diesel Exhaust Fluid Smart Pump Supply Voltage Phase 3	I	—
8	1.0	GN	3875	Diesel Exhaust Fluid Smart Pump Supply Voltage Phase 2	I	—
9	0.35	YE	3921	Diesel Exhaust Fluid Heater Control 1	I	—
10	—	—	—	Not Occupied	—	—
11	0.35	VT	4318	Diesel Exhaust Fluid Tank Heater Low Control	I	—
12 - 14	—	—	—	Not Occupied	—	—
15	0.35	BK	3104	Diesel Exhaust Fluid Smart Pump Low Reference	I	—
16	0.35	OG	3103	Diesel Exhaust Fluid Smart Pump Control	I	—

B1 A/C Refrigerant Pressure Sensor

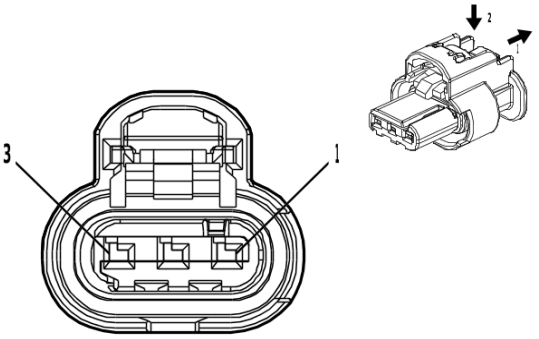

4581126

Connector Part Information

Harness Type: Engine Wiring Harness
OEM Connector: 1-2296695-1
Service Connector: 19371207
Description: 3 <p01>-Way F 1.2 MCON-CB Series, Sealed(BK)

Terminal Part Information

Terminal Type ID	Terminated Lead	Diagnostic Test Probe	Terminal Removal Tool
I	Not required	J-35616-16 (LT GN)	No Tool Required

B1 A/C Refrigerant Pressure Sensor

Pin	Size	Color	Circuit	Function	Terminal Type ID	Option
1	0.5	BN / RD	2700	A/C Pressure Sensor 5V Reference	I	—
2	0.5	GN	380	A/C Refrigerant Pressure Sensor Signal	I	—
3	0.5	BK / BN	5514	A/C Refrigerant Pressure Sensor Low Reference	I	—

B5LF Wheel Speed Sensor - Left Front

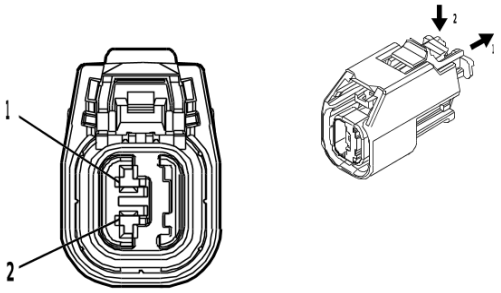

4889830

Connector Part Information

Harness Type: Chassis Wiring Harness
OEM Connector: 33164011
Service Connector: 19371210
Description: 2 <p01>-Way F 1.5 OCS Series, Sealed(BK)

Terminal Part Information

Terminal Type ID	Terminated Lead	Diagnostic Test Probe	Terminal Removal Tool
I	Not required	J-35616-14 (GN)	No Tool Required

B5LF Wheel Speed Sensor - Left Front

Pin	Size	Color	Circuit	Function	Terminal Type ID	Option
1	0.5	GY / WH	7064	Left Front Wheel Speed Sensor Control	I	—
2	0.5	GY	830	Left Front Wheel Speed Sensor Signal	I	—

B5LR Wheel Speed Sensor - Left Rear

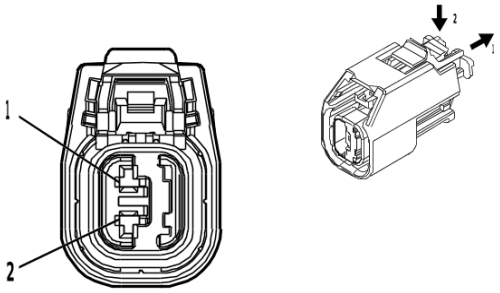

4889830

Connector Part Information

Harness Type: Chassis Wiring Harness
OEM Connector: 33164011
Service Connector: 19371210
Description: 2 <p01>-Way F 1.5 OCS Series, Sealed(BK)

Terminal Part Information

Terminal Type ID	Terminated Lead	Diagnostic Test Probe	Terminal Removal Tool
I	Not required	J-35616-14 (GN)	No Tool Required

B5LR Wheel Speed Sensor - Left Rear

Pin	Size	Color	Circuit	Function	Terminal Type ID	Option
1	0.5	GY / BK	7127	Left Rear Wheel Speed Sensor Control	I	—
2	0.5	BU	884	Left Rear Wheel Speed Sensor Signal	I	—

B5RF Wheel Speed Sensor - Right Front

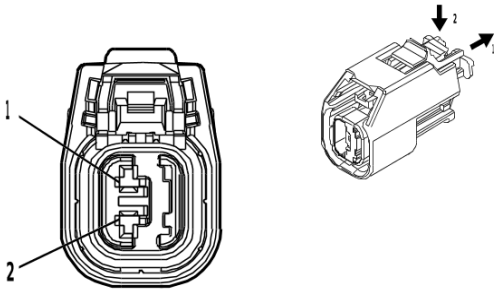

4889830

Connector Part Information

Harness Type: Chassis Wiring Harness
OEM Connector: 33164011
Service Connector: 19371210
Description: 2 <p01>-Way F 1.5 OCS Series, Sealed(BK)

Terminal Part Information

Terminal Type ID	Terminated Lead	Diagnostic Test Probe	Terminal Removal Tool
I	Not required	J-35616-14 (GN)	No Tool Required

B5RF Wheel Speed Sensor - Right Front

Pin	Size	Color	Circuit	Function	Terminal Type ID	Option
1	0.5	GY / BN	7065	Right Front Wheel Speed Sensor Control	I	—
2	0.5	YE	872	Right Front Wheel Speed Sensor Signal	I	—

B5RR Wheel Speed Sensor - Right Rear

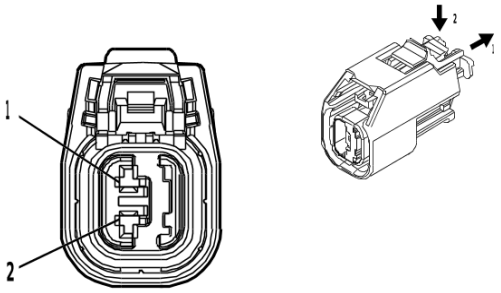

4889830

Connector Part Information

Harness Type: Chassis Wiring Harness
OEM Connector: 33164011
Service Connector: 19371210
Description: 2 <p01>-Way F 1.5 OCS Series, Sealed(BK)

Terminal Part Information

Terminal Type ID	Terminated Lead	Diagnostic Test Probe	Terminal Removal Tool
I	Not required	J-35616-14 (GN)	No Tool Required

B5RR Wheel Speed Sensor - Right Rear

Pin	Size	Color	Circuit	Function	Terminal Type ID	Option
1	0.5	GY / YE	7128	Right Rear Wheel Speed Sensor Control	I	—
2	0.5	VT	882	Right Rear Wheel Speed Sensor Signal	I	—

B7B Air Temperature Sensor - Duct Lower

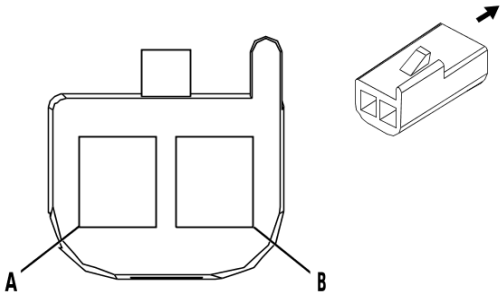

82383

Connector Part Information

Harness Type: HVAC
OEM Connector: 12047662
Service Connector: Service by Harness - See Part Catalog
Description: 2 <p01>-Way F 150 Metri-Pack Series(BK)

Terminal Part Information

Terminal Type ID	Terminated Lead	Diagnostic Test Probe	Terminal Removal Tool
I	Not Available	No Tool Required	Not Available

B7B Air Temperature Sensor - Duct Lower

Pin	Size	Color	Circuit	Function	Terminal Type ID	Option
A	—	BN	518	Lower Left Duct Air Temperature Sensor Signal	I	—
B	—	BK / YE	407	Sensor Low Reference	I	—

B9 Ambient Air Temperature Sensor

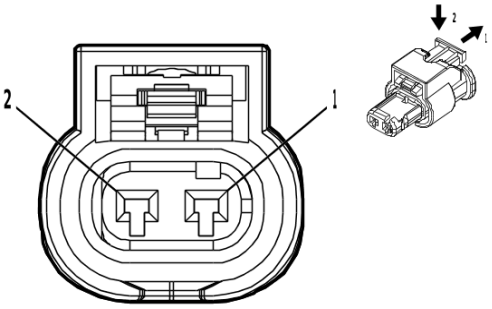

2698576

Connector Part Information

Harness Type: Engine Wiring Harness Extension
OEM Connector: 13580179
Service Connector: Service by Harness - See Part Catalog
Description: 2 <p01>-Way F 1.2 MCP Series, Sealed(BK)

Terminal Part Information

Terminal Type ID	Terminated Lead	Diagnostic Test Probe	Terminal Removal Tool
I	Not Available	No Tool Required	Not Available

B9 Ambient Air Temperature Sensor

Pin	Size	Color	Circuit	Function	Terminal Type ID	Option
1	0.5	BU / GY	636	Ambient Air Temperature Sensor Signal	I	—
2	0.5	BK / BU	61	Ambient Air Temperature Sensor Low Reference	I	—

B10B Ambient Light/Sunload Sensor

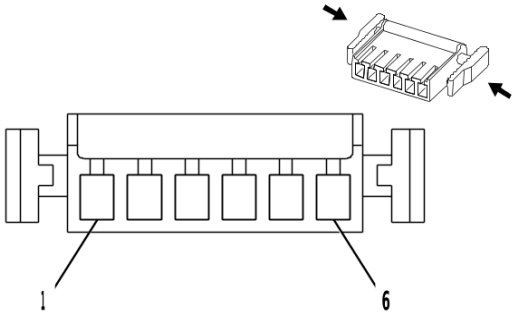

2173602

Connector Part Information

Harness Type: Instrument Panel Wiring Harness
OEM Connector: 13726957
Service Connector: 13576539
Description: 6 <p01>-Way F 0.64 Micro-Quadlock Series(BK)

Terminal Part Information

Terminal Type ID	Terminated Lead	Diagnostic Test Probe	Terminal Removal Tool
I	Not required	J-35616-64B (LT BU)	No Tool Required

B10B Ambient Light/Sunload Sensor

Pin	Size	Color	Circuit	Function	Terminal Type ID	Option
1	0.35	GY	728	Security Indicator Control	I	—
2	—	—	—	Not Occupied	—	—
3	0.35	BU / WH	734	Inside Air Temperature Sensor Signal	I	—
4	0.35	YE / VT	1783	Ambient Light Sensor Signal	I	—
5	0.35	WH / BU	278	Ambient Light Sensor Signal	I	—
6	0.35	BK / YE	1791	Air Temperature Door Low Reference	I	—

B18 Battery Current Sensor

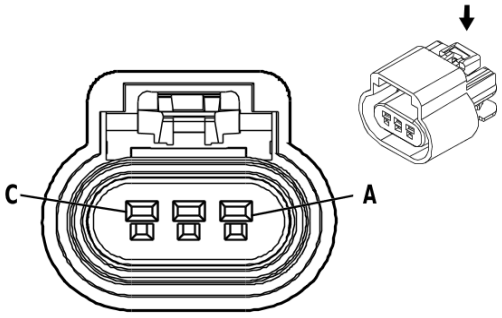

646415

Connector Part Information

Harness Type: Body Wiring Harness
OEM Connector: 13872434
Service Connector: 19119468
Description: 3 <p01>-Way F 150 GT Series, Sealed(BK)

Terminal Part Information

Terminal Type ID	Terminated Lead	Diagnostic Test Probe	Terminal Removal Tool
I	Not required	J-35616-2A (GY)	No Tool Required

B18 Battery Current Sensor

Pin	Size	Color	Circuit	Function	Terminal Type ID	Option
A	0.5	BU / VT	5076	Current Sensor Voltage Reference	I	—
B	0.5	BK / VT	5077	Current Sensor Low Reference	I	—
C	0.5	WH / YE	5075	Current Sensor Signal	I	—

B19B Brake Booster Vacuum Sensor

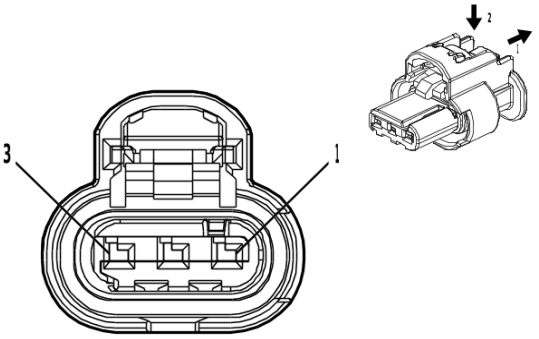

4581126

Connector Part Information

Harness Type: Chassis Wiring Harness
OEM Connector: 1-2296695-1
Service Connector: 19371207
Description: 3 <p01>-Way F 1.2 MCON-CB Series, Sealed(BK)

Terminal Part Information

Terminal Type ID	Terminated Lead	Diagnostic Test Probe	Terminal Removal Tool
I	Not required	J-35616-16 (LT GN)	No Tool Required

B19B Brake Booster Vacuum Sensor

Pin	Size	Color	Circuit	Function	Terminal Type ID	Option
1	0.5	YE / VT	6030	Brake Vacuum Sensor Signal	I	—
2	0.5	BK / YE	6032	Brake Vacuum Sensor Low Reference	I	—
3	0.5	YE / RD	6031	Brake Vacuum Sensor 5V Reference	I	—

B20 Brake Fluid Level Switch

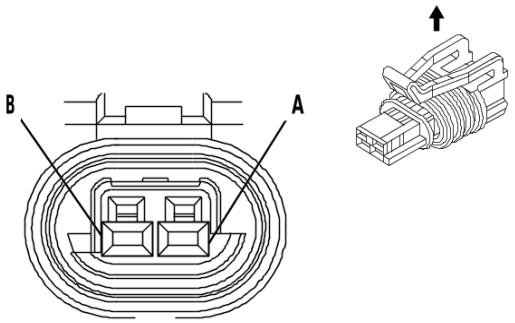

1538760

Connector Part Information

Harness Type: Chassis Wiring Harness
OEM Connector: 15449028
Service Connector: 88987993
Description: 2 <p01>-Way F 150 GT Series, Sealed(BK)

Terminal Part Information

Terminal Type ID	Terminated Lead	Diagnostic Test Probe	Terminal Removal Tool
I	Not required	J-35616-14 (GN)	No Tool Required

B20 Brake Fluid Level Switch

Pin	Size	Color	Circuit	Function	Terminal Type ID	Option
A	0.5	BK / WH	551	Signal Ground	I	—
B	0.5	GN / GY	333	Brake Fluid Level Signal	I	—

B22 Brake Pedal Position Sensor

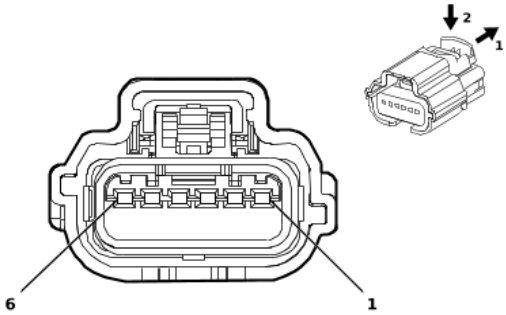

4773396

Connector Part Information

Harness Type: Body Wiring Harness
OEM Connector: 31404-7810
Service Connector: 84683650
Description: 6 <p01>-Way F 64 Series, Sealed(NA)

Terminal Part Information

Terminal Type ID	Terminated Lead	Diagnostic Test Probe	Terminal Removal Tool
I	Not required	J-35616-64B (LT BU)	No Tool Required

B22 Brake Pedal Position Sensor

Pin	Size	Color	Circuit	Function	Terminal Type ID	Option
1	0.35	BK / BN	5360	Brake Apply Sensor Low Reference	I	—
2	0.35	WH	5359	Brake Apply Sensor Control	I	—
3	0.35	BU / YE	5361	Brake Apply Sensor Signal	I	—
4	0.5	WH / GN	5380	Brake Position Sensor Signal	I	—
5	0.5	BK / YE	5382	Brake Position Sensor Low Reference	I	—
6	0.5	WH / RD	5381	Brake Position Sensor 5V Reference	I	—

B23 Camshaft Position Sensor

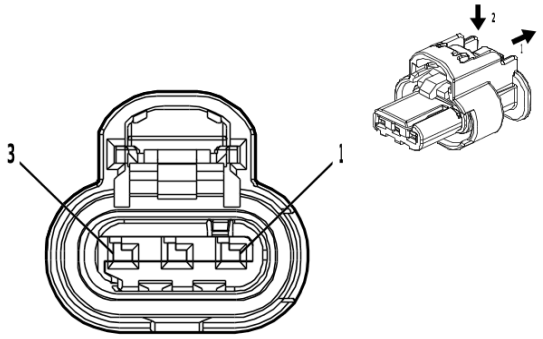

4581126

Connector Part Information

Harness Type: Engine Wiring Harness
OEM Connector: 1-2296695-1
Service Connector: 19371207
Description: 3 <p01>-Way F 1.2 MCON-CB Series, Sealed(BK)

Terminal Part Information

Terminal Type ID	Terminated Lead	Diagnostic Test Probe	Terminal Removal Tool
I	Not required	J-35616-16 (LT GN)	No Tool Required

B23 Camshaft Position Sensor

Pin	Size	Color	Circuit	Function	Terminal Type ID	Option
1	0.5	GY / BU	5300	Intake Camshaft Position Sensor 1 Voltage Reference	I	—
2	0.5	BK / GN	5301	Intake Camshaft Position Sensor Low Reference 1	I	—
3	0.5	YE / VT	5275	Intake Camshaft Position Sensor 1	I	—

B23A Camshaft Position Sensor - Bank 1 Exhaust

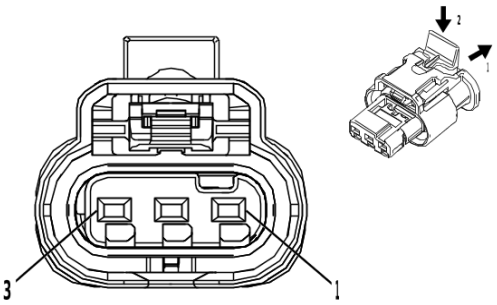

4249125

Connector Part Information

Harness Type: Engine Wiring Harness
OEM Connector: 4-2272004-1
Service Connector: 19371207
Description: 3 <p01>-Way F 1.2 MCP Series, Sealed(BN)

Terminal Part Information

Terminal Type ID	Terminated Lead	Diagnostic Test Probe	Terminal Removal Tool
I	Not required	J-35616-16 (LT GN)	No Tool Required

B23A Camshaft Position Sensor - Bank 1 Exhaust

Pin	Size	Color	Circuit	Function	Terminal Type ID	Option
1	0.5	GY / YE	5297	Exhaust Camshaft Position Sensor 1 Voltage Reference	I	—
2	0.5	BK / GY	5296	Exhaust Camshaft Position Sensor Low Reference 1	I	—
3	0.5	VT / BK	5273	Exhaust Camshaft Position Sensor 1	I	—

B23B Camshaft Position Sensor - Bank 1 Intake

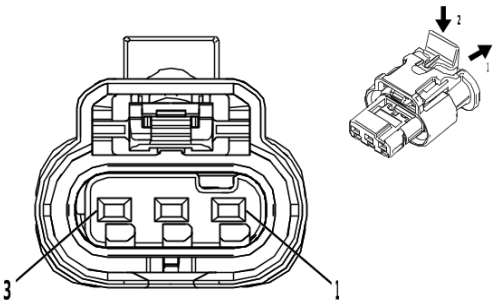

4249125

Connector Part Information

Harness Type: Engine Wiring Harness
OEM Connector: 4-2272004-1
Service Connector: 19371207
Description: 3 <p01>-Way F 1.2 MCP Series, Sealed(BN)

Terminal Part Information

Terminal Type ID	Terminated Lead	Diagnostic Test Probe	Terminal Removal Tool
I	Not required	J-35616-16 (LT GN)	No Tool Required

B23B Camshaft Position Sensor - Bank 1 Intake

Pin	Size	Color	Circuit	Function	Terminal Type ID	Option
1	0.5	GY / BU	5300	Intake Camshaft Position Sensor 1 Voltage Reference	I	—
2	0.5	BK / GN	5301	Intake Camshaft Position Sensor Low Reference 1	I	—
3	0.5	YE / VT	5275	Intake Camshaft Position Sensor 1	I	—

B23C Camshaft Position Sensor - Bank 2 Exhaust

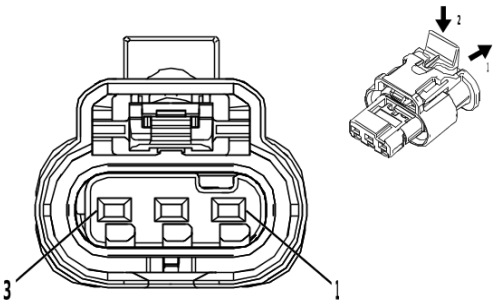

4249125

Connector Part Information

Harness Type: Engine Wiring Harness
OEM Connector: 4-2272004-1
Service Connector: 19371207
Description: 3 <p01>-Way F 1.2 MCP Series, Sealed(BN)

Terminal Part Information

Terminal Type ID	Terminated Lead	Diagnostic Test Probe	Terminal Removal Tool
I	Not required	J-35616-16 (LT GN)	No Tool Required

B23C Camshaft Position Sensor - Bank 2 Exhaust

Pin	Size	Color	Circuit	Function	Terminal Type ID	Option
1	0.5	GN / BN	5298	Exhaust Camshaft Position Sensor 2 Voltage Reference	I	—
2	0.5	BK / BN	5299	Exhaust Camshaft Position Sensor Low Reference 2	I	—
3	0.5	VT / BU	5274	Exhaust Camshaft Position Sensor 2	I	—

B23D Camshaft Position Sensor - Bank 2 Intake

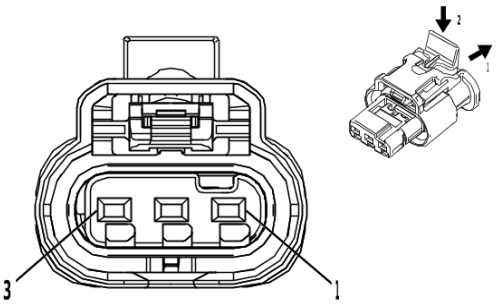

4249125

Connector Part Information

Harness Type: Engine Wiring Harness
OEM Connector: 4-2272004-1
Service Connector: 19371207
Description: 3 <p01>-Way F 1.2 MCP Series, Sealed(BN)

Terminal Part Information

Terminal Type ID	Terminated Lead	Diagnostic Test Probe	Terminal Removal Tool
I	Not required	J-35616-16 (LT GN)	No Tool Required

B23D Camshaft Position Sensor - Bank 2 Intake

Pin	Size	Color	Circuit	Function	Terminal Type ID	Option
1	0.5	WH / BU	5302	Intake Camshaft Position Sensor 2 Voltage Reference	I	—
2	0.5	BK / VT	5303	Intake Camshaft Position Sensor Low Reference 2	I	—
3	0.5	YE	5276	Intake Camshaft Position Sensor 2	I	—

B23E Camshaft Position Sensor - Exhaust

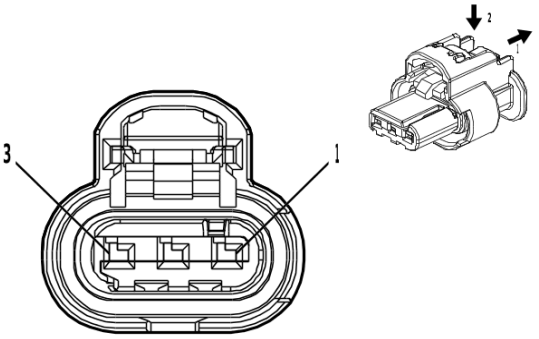

4581126

Connector Part Information

Harness Type: Engine Wiring Harness
OEM Connector: 1-2296695-1
Service Connector: 19371207
Description: 3 <p01>-Way F 1.2 MCON-CB Series, Sealed(BK)

Terminal Part Information

Terminal Type ID	Terminated Lead	Diagnostic Test Probe	Terminal Removal Tool
I	Not required	J-35616-16 (LT GN)	No Tool Required

B23E Camshaft Position Sensor - Exhaust

Pin	Size	Color	Circuit	Function	Terminal Type ID	Option
1	0.5	GY / YE	5297	Exhaust Camshaft Position Sensor 1 Voltage Reference	I	—
2	0.5	BK / GY	5296	Exhaust Camshaft Position Sensor Low Reference 1	I	—
3	0.5	VT / BK	5273	Exhaust Camshaft Position Sensor 1	I	—

B23F Camshaft Position Sensor - Intake

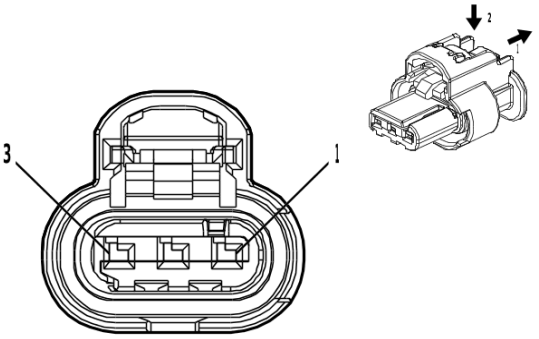

4581126

Connector Part Information

Harness Type: Engine Wiring Harness
OEM Connector: 1-2296695-1
Service Connector: 19371207
Description: 3 <p01>-Way F 1.2 MCON-CB Series, Sealed(BK)

Terminal Part Information

Terminal Type ID	Terminated Lead	Diagnostic Test Probe	Terminal Removal Tool
I	Not required	J-35616-16 (LT GN)	No Tool Required

B23F Camshaft Position Sensor - Intake

Pin	Size	Color	Circuit	Function	Terminal Type ID	Option
1	0.5	GY / BU	5300	Intake Camshaft Position Sensor 1 Voltage Reference	I	—
2	0.5	BK / GN	5301	Intake Camshaft Position Sensor Low Reference 1	I	—
3	0.5	YE / VT	5275	Intake Camshaft Position Sensor 1	I	—

B24LF Mobile Telephone Microphone - Left Front

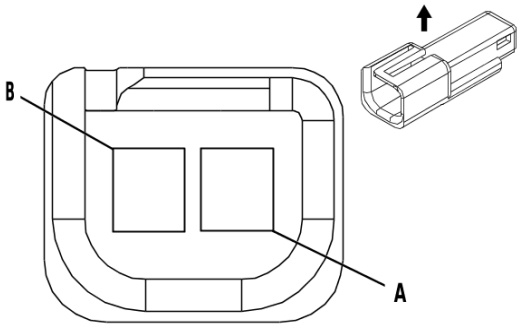

35441

Connector Part Information

Harness Type: Headliner Wiring Harness
OEM Connector: 12047663
Service Connector: 13584278
Description: 2 <p01>-Way M 150 Metri-Pack Series(BK)

Terminal Part Information

Terminal Type ID	Terminated Lead	Diagnostic Test Probe	Terminal Removal Tool
I	Not required	J-35616-3 (GY)	No Tool Required

B24LF Mobile Telephone Microphone - Left Front

Pin	Size	Color	Circuit	Function	Terminal Type ID	Option
A	0.35	BK / BN	654	Cellular Telephone Microphone Low Reference	I	—
B	0.35	BU	655	Cellular Telephone Microphone Signal	I	—

B24RF Mobile Telephone Microphone - Right Front

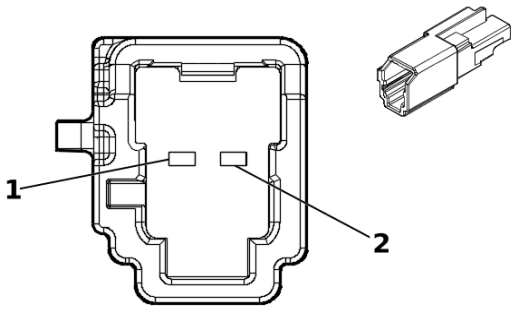

5360948

Connector Part Information

Harness Type: Headliner Wiring Harness
OEM Connector: 6098-9073
Service Connector: 84847259
Description: 2 <p01>-Way M 1.2 MCON Series(GY)

Terminal Part Information

Terminal Type ID	Terminated Lead	Diagnostic Test Probe	Terminal Removal Tool
I	Not required	J-35616-17 (LT GN)	No Tool Required

B24RF Mobile Telephone Microphone - Right Front

Pin	Size	Color	Circuit	Function	Terminal Type ID	Option
1	0.35	BU / BK	7044	Microphone [-]	I	—
2	0.35	VT / YE	7043	Microphone [+] Signal	I	—

B26 Crankshaft Position Sensor (LCV/LWN)

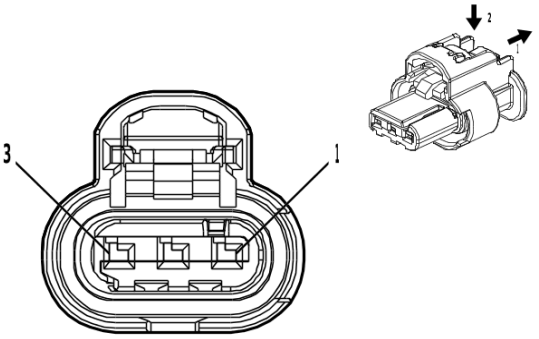

4581126

Connector Part Information

Harness Type: Engine Wiring Harness
OEM Connector: 1-2296695-1
Service Connector: 19371207
Description: 3 <p01>-Way F 1.2 MCON-CB Series, Sealed(BK)

Terminal Part Information

Terminal Type ID	Terminated Lead	Diagnostic Test Probe	Terminal Removal Tool
I	Not required	J-35616-16 (LT GN)	No Tool Required

B26 Crankshaft Position Sensor (LCV/LWN)

Pin	Size	Color	Circuit	Function	Terminal Type ID	Option
1	0.5	VT / BU	6270	Crankshaft Position Sensor Voltage	I	—
2	0.5	BK / VT	6272	Crankshaft Position Sensor Low Reference	I	—
3	0.5	GN	6271	Crankshaft Position Sensor Signal	I	—

B26 Crankshaft Position Sensor (LGZ)

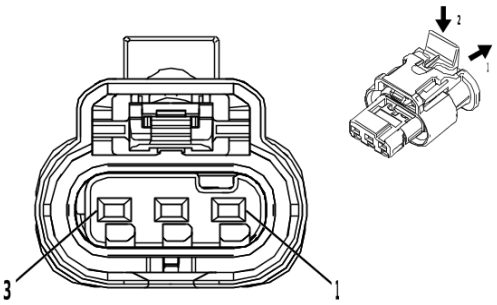

4249125

Connector Part Information

Harness Type: Engine Wiring Harness
OEM Connector: 4-2272004-1
Service Connector: 19371207
Description: 3 <p01>-Way F 1.2 MCP Series, Sealed(BN)

Terminal Part Information

Terminal Type ID	Terminated Lead	Diagnostic Test Probe	Terminal Removal Tool
I	Not required	J-35616-16 (LT GN)	No Tool Required

B26 Crankshaft Position Sensor (LGZ)

Pin	Size	Color	Circuit	Function	Terminal Type ID	Option
1	0.5	VT / BU	6270	Crankshaft Position Sensor Voltage	I	—
2	0.5	BK / VT	6272	Crankshaft Position Sensor Low Reference	I	—
3	0.5	GN	6271	Crankshaft Position Sensor Signal	I	—

B34 Engine Coolant Temperature Sensor (LCV)

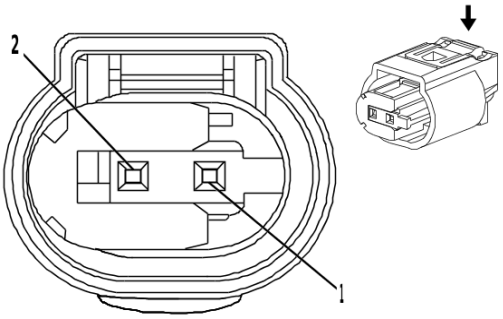

1869767

Connector Part Information

Harness Type: Engine Wiring Harness
OEM Connector: 1-967644-1
Service Connector: 13576533
Description: 2 <p01>-Way F 0.64 Micro-Quadlock Series, Sealed(BK)

Terminal Part Information

Terminal Type ID	Terminated Lead	Diagnostic Test Probe	Terminal Removal Tool
I	Not required	J-35616-64B (LT BU)	No Tool Required

B34 Engine Coolant Temperature Sensor (LCV)

Pin	Size	Color	Circuit	Function	Terminal Type ID	Option
1	0.5	BU	410	Engine Coolant Temperature Sensor Signal	I	—
2	0.5	BK / BN	2761	Coolant Temperature Sensor Low Reference	I	—

B34 Engine Coolant Temperature Sensor (LGZ)

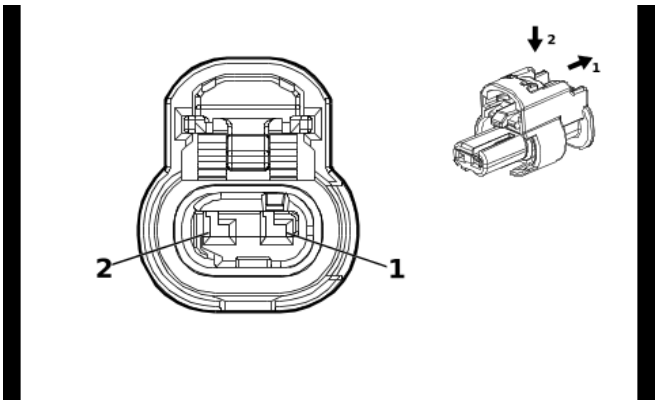

4649903

Connector Part Information

Harness Type: Engine Coolant Temperature Sensor Harness
OEM Connector: 13512365
Service Connector: Service by Harness - See Part Catalog
Description: 2 <p01>-Way F 1.2 MCON Series, Sealed(BK)

Terminal Part Information

Terminal Type ID	Terminated Lead	Diagnostic Test Probe	Terminal Removal Tool
I	Not Available	No Tool Required	Not Available

B34 Engine Coolant Temperature Sensor (LGZ)

Pin	Size	Color	Circuit	Function	Terminal Type ID	Option
1	0.5	BK / YE	548	Engine Control Sensors Low Reference 1	I	—
2	0.5	BU	410	Engine Coolant Temperature Sensor Signal	I	—

B34 Engine Coolant Temperature Sensor (LWN)

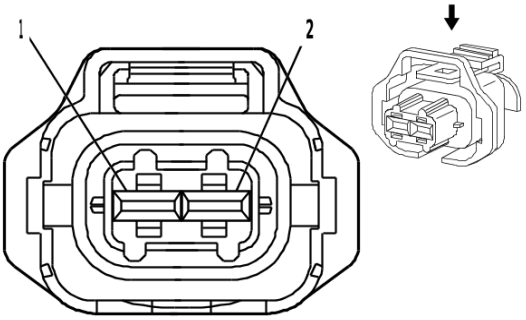

1403270

Connector Part Information

Harness Type: Engine Wiring Harness
OEM Connector: 1928403698
Service Connector: 88953309
Description: 2 <p01>-Way F 2.8 Junior Power Timer Series, Sealed(BK)

Terminal Part Information

Terminal Type ID	Terminated Lead	Diagnostic Test Probe	Terminal Removal Tool
I	Not required	J-35616-35 (VT)	No Tool Required

B34 Engine Coolant Temperature Sensor (LWN)

Pin	Size	Color	Circuit	Function	Terminal Type ID	Option
1	0.5	BU	410	Engine Coolant Temperature Sensor Signal	I	—
2	0.5	BK / BN	2761	Coolant Temperature Sensor Low Reference	I	—

B35 Engine Oil Level Switch (LCV)

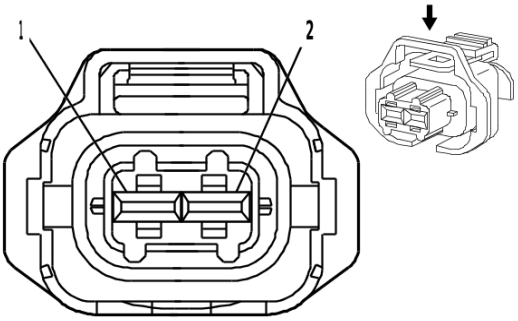

784092

Connector Part Information

Harness Type: Engine Wiring Harness
OEM Connector: 1928403874
Service Connector: 88988963
Description: 2 <p01>-Way F 2.8 Kompakt Series, Sealed(BK)

Terminal Part Information

Terminal Type ID	Terminated Lead	Diagnostic Test Probe	Terminal Removal Tool
I	Not required	J-35616-35 (VT)	No Tool Required

B35 Engine Oil Level Switch (LCV)

Pin	Size	Color	Circuit	Function	Terminal Type ID	Option
1	0.5	BK / WH	1451	Signal Ground	I	—
2	0.5	BN / GN	1174	Oil Level Switch Signal	I	—

B35 Engine Oil Level Switch (LGZ)

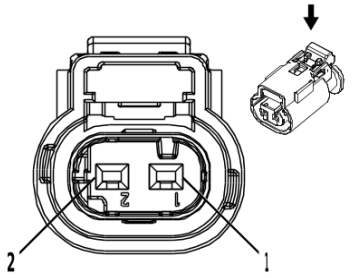

2717066

Connector Part Information

Harness Type: Engine Wiring Harness
OEM Connector: 10010337
Service Connector: 13587326
Description: 2 <p01>-Way F 1.2 Multilock Series, Sealed(BK)

Terminal Part Information

Terminal Type ID	Terminated Lead	Diagnostic Test Probe	Terminal Removal Tool
I	Not required	J-35616-16 (LT GN)	No Tool Required

B35 Engine Oil Level Switch (LGZ)

Pin	Size	Color	Circuit	Function	Terminal Type ID	Option
1	0.5	BK	650	Ground	I	—
2	0.5	BN / GN	1174	Oil Level Switch Signal	I	—

B35 Engine Oil Level Switch (LWN)

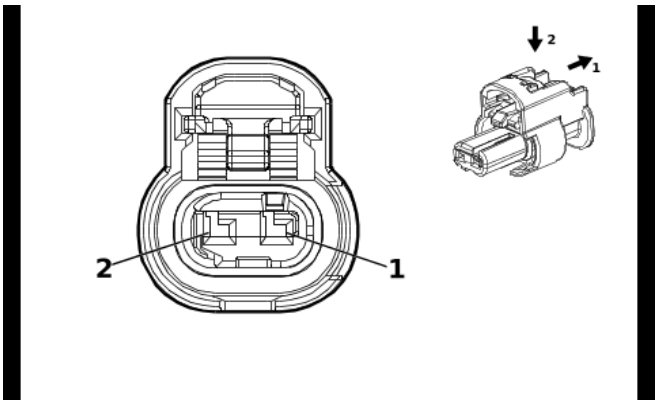

4649903

Connector Part Information

Harness Type: Engine Wiring Harness
OEM Connector: 1-2296694-1
Service Connector: 85519075
Description: 2 <p01>-Way F 1.2 MCON Series, Sealed(BK)

Terminal Part Information

Terminal Type ID	Terminated Lead	Diagnostic Test Probe	Terminal Removal Tool
I	Not required	J-35616-16 (LT GN)	No Tool Required

B35 Engine Oil Level Switch (LWN)

Pin	Size	Color	Circuit	Function	Terminal Type ID	Option
1	0.5	BN / GN	1174	Oil Level Switch Signal	I	—
2	0.75	BK / WH	151	Signal Ground	I	—

B37B Engine Oil Pressure Sensor (LCV)

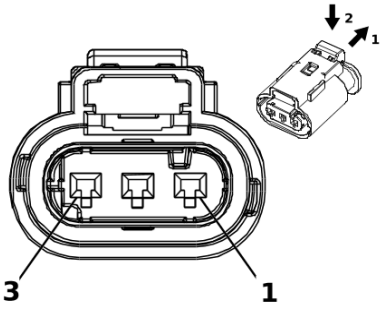

2717069

Connector Part Information

Harness Type: Engine Wiring Harness
OEM Connector: 13503570
Service Connector: 84601390
Description: 3 <p01>-Way F 1.2 Multilock Series, Sealed(BK)

Terminal Part Information

Terminal Type ID	Terminated Lead	Diagnostic Test Probe	Terminal Removal Tool
I	Not required	J-35616-16 (LT GN)	No Tool Required

B37B Engine Oil Pressure Sensor (LCV)

Pin	Size	Color	Circuit	Function	Terminal Type ID	Option
1	0.5	YE / BN	331	Oil Pressure Sensor Signal	I	—
2	0.5	BK / VT	2755	Oil Pressure Sensor Low Reference	I	—
3	0.5	WH / RD	2705	Oil Pressure Sensor 5V Reference	I	—

B37B Engine Oil Pressure Sensor (LGZ/LWN)

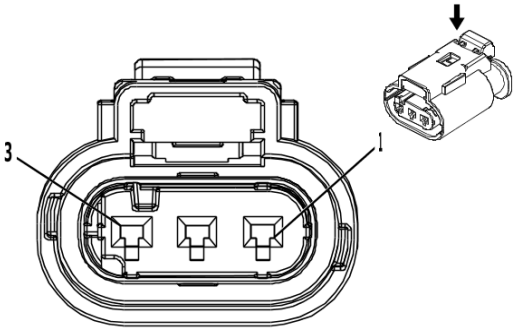

3240107

Connector Part Information

Harness Type: Engine Wiring Harness
OEM Connector: 10010344
Service Connector: 19301717
Description: 3 <p01>-Way F 1.2 Multilock Series, Sealed(BK)

Terminal Part Information

Terminal Type ID	Terminated Lead	Diagnostic Test Probe	Terminal Removal Tool
I	Not required	J-35616-16 (LT GN)	No Tool Required

B37B Engine Oil Pressure Sensor (LGZ/LWN)

Pin	Size	Color	Circuit	Function	Terminal Type ID	Option
1	0.5	YE / BN	331	Oil Pressure Sensor Signal	I	—
2	0.5	BK / VT	2755	Oil Pressure Sensor Low Reference	I	—
3	0.5	WH / RD	2705	Oil Pressure Sensor 5V Reference	I	—

B39 A/C Evaporator Temperature Sensor

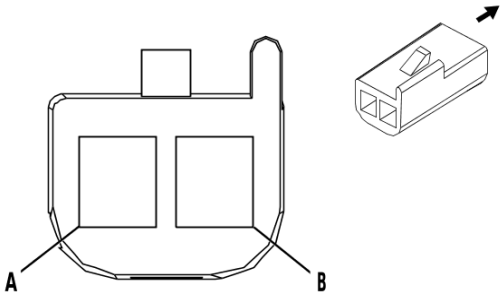

82383

Connector Part Information

Harness Type: HVAC
OEM Connector: 12047662
Service Connector: Service by Harness - See Part Catalog
Description: 2 <p01>-Way F 150 Metri-Pack Series(BK)

Terminal Part Information

Terminal Type ID	Terminated Lead	Diagnostic Test Probe	Terminal Removal Tool
I	Not Available	No Tool Required	Not Available

B39 A/C Evaporator Temperature Sensor

Pin	Size	Color	Circuit	Function	Terminal Type ID	Option
A	—	GY	6137	A/C Evaporator Temperature Sensor Signal	I	—
B	—	BK / YE	407	Sensor Low Reference	I	—

B47 Fuel Pressure Sensor

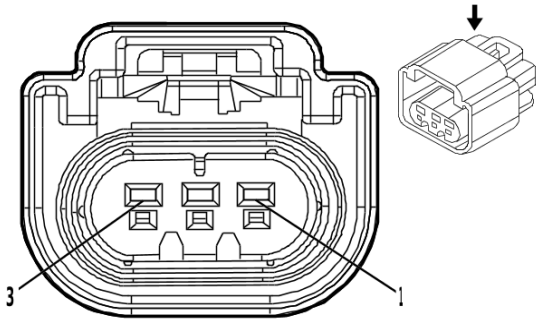

1860942

Connector Part Information

Harness Type: Chassis Wiring Harness
OEM Connector: 13511131
Service Connector: 19168035
Description: 3 <p01>-Way F 150 GT Series, Sealed(BK)

Terminal Part Information

Terminal Type ID	Terminated Lead	Diagnostic Test Probe	Terminal Removal Tool
I	Not required	J-35616-2A (GY)	No Tool Required

B47 Fuel Pressure Sensor

Pin	Size	Color	Circuit	Function	Terminal Type ID	Option
1	0.5	BU / WH	7446	Fuel Pressure Sensor Signal	I	—
2	0.5	BK / YE	7447	Fuel Pressure Sensor Low Reference	I	—
3	0.5	BN / RD	7445	Fuel Line Pressure Sensor 5V Reference	I	—

B47B Fuel Rail Pressure Sensor

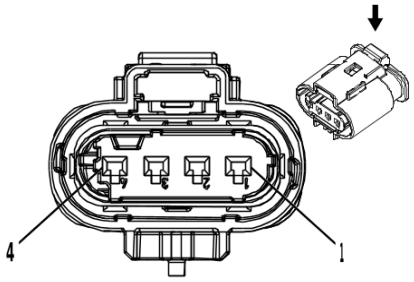

2717079

Connector Part Information

Harness Type: Engine Wiring Harness
OEM Connector: 10010346
Service Connector: 13587299
Description: 4 <p01>-Way F 1.2 Multilock Series, Sealed(BK)

Terminal Part Information

Terminal Type ID	Terminated Lead	Diagnostic Test Probe	Terminal Removal Tool
I	Not required	J-35616-16 (LT GN)	No Tool Required

B47B Fuel Rail Pressure Sensor

Pin	Size	Color	Circuit	Function	Terminal Type ID	Option
1	0.5	BN / RD	2917	Fuel Rail Pressure Sensor 5V Reference	I	—
2	0.5	BN / YE	2161	Fuel Rail Pressure Sensor 2 Signal	I	—
3	0.5	BK / GN	2919	Fuel Rail Pressure Sensor Low Reference	I	—
4	0.5	BU / WH	2918	Fuel Rail Pressure Sensor Signal	I	—

B52A Heated Oxygen Sensor 1

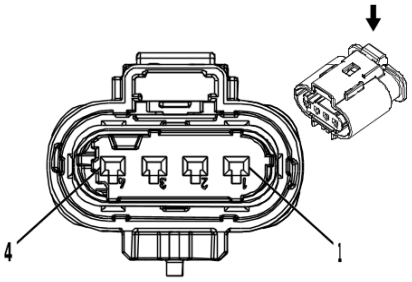

2717079

Connector Part Information

Harness Type: Engine Wiring Harness
OEM Connector: 10010346
Service Connector: 13587299
Description: 4 <p01>-Way F 1.2 Multilock Series, Sealed(BK)

Terminal Part Information

Terminal Type ID	Terminated Lead	Diagnostic Test Probe	Terminal Removal Tool
I	Not required	J-35616-16 (LT GN)	No Tool Required

B52A Heated Oxygen Sensor 1

Pin	Size	Color	Circuit	Function	Terminal Type ID	Option
1	0.5	GY / WH	3113	HO2S Heater Low Control Bank 1 Sensor 1	I	—
2	0.5	VT / BU	5293	Powertrain Main Relay Fused Supply Voltage 4	I	—
3	0.5	WH / BK	3111	HO2S Low Signal Bank 1 Sensor 1	I	—
4	0.5	VT / GY	3110	HO2S High Signal Bank 1 Sensor 1	I	—

B52B Heated Oxygen Sensor 2

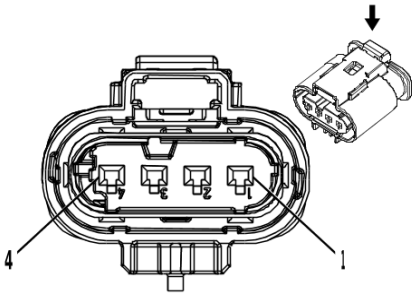

2717096

Connector Part Information

Harness Type: Engine Wiring Harness
OEM Connector: 10010347
Service Connector: 13587298
Description: 4 <p01>-Way F 1.2 Multilock Series, Sealed(L-GY)

Terminal Part Information

Terminal Type ID	Terminated Lead	Diagnostic Test Probe	Terminal Removal Tool
I	Not required	J-35616-16 (LT GN)	No Tool Required

B52B Heated Oxygen Sensor 2

Pin	Size	Color	Circuit	Function	Terminal Type ID	Option
1	0.5	GY / WH	3122	HO2S Heater Low Control Bank 1 Sensor 2	I	—
2	0.5	VT / BU	5294	Powertrain Main Relay Fused Supply Voltage 5	I	—
3	0.5	WH / YE	3121	HO2S Low Signal Bank 1 Sensor 2	I	—
4	0.5	VT / BU	3120	HO2S High Signal Bank 1 Sensor 2	I	—

B52C Heated Oxygen Sensor - Bank 1 Sensor 1

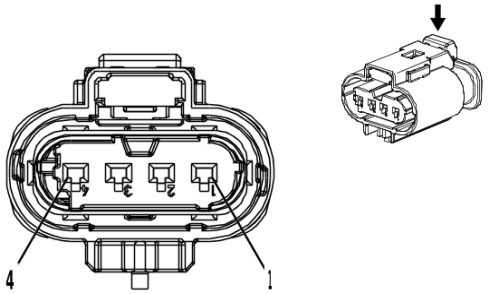

4036370

Connector Part Information

Harness Type: Engine Wiring Harness
OEM Connector: 10021266
Service Connector: 19330920
Description: 4 <p01>-Way F 1.2 Multilock Series, Sealed(GY)

Terminal Part Information

Terminal Type ID	Terminated Lead	Diagnostic Test Probe	Terminal Removal Tool
I	Not required	J-35616-16 (LT GN)	No Tool Required

B52C Heated Oxygen Sensor - Bank 1 Sensor 1

Pin	Size	Color	Circuit	Function	Terminal Type ID	Option
1	0.5	GY / WH	3113	HO2S Heater Low Control Bank 1 Sensor 1	I	—
2	0.5	VT / BU	5293	Powertrain Main Relay Fused Supply Voltage 4	I	—
3	0.5	WH / BK	3111	HO2S Low Signal Bank 1 Sensor 1	I	—
4	0.5	VT / GY	3110	HO2S High Signal Bank 1 Sensor 1	I	—

B52D Heated Oxygen Sensor - Bank 1 Sensor 2

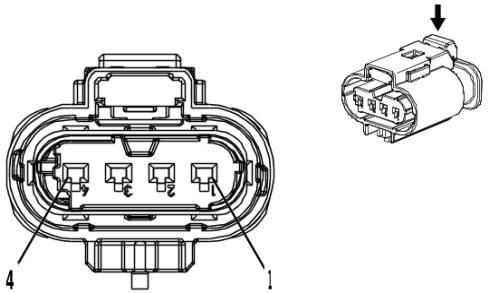

4036370

Connector Part Information

Harness Type: Engine Wiring Harness
OEM Connector: 10021266
Service Connector: 19330920
Description: 4 <p01>-Way F 1.2 Multilock Series, Sealed(GY)

Terminal Part Information

Terminal Type ID	Terminated Lead	Diagnostic Test Probe	Terminal Removal Tool
I	Not required	J-35616-16 (LT GN)	No Tool Required

B52D Heated Oxygen Sensor - Bank 1 Sensor 2

Pin	Size	Color	Circuit	Function	Terminal Type ID	Option
1	0.5	GY / WH	3122	HO2S Heater Low Control Bank 1 Sensor 2	I	—
2	0.5	VT / BU	5294	Powertrain Main Relay Fused Supply Voltage 5	I	—
3	0.5	WH / YE	3121	HO2S Low Signal Bank 1 Sensor 2	I	—
4	0.5	VT / BU	3120	HO2S High Signal Bank 1 Sensor 2	I	—

B52E Heated Oxygen Sensor - Bank 2 Sensor 1

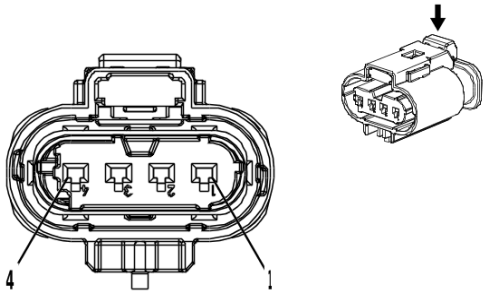

4036370

Connector Part Information

Harness Type: Engine Wiring Harness
OEM Connector: 10021266
Service Connector: 19330920
Description: 4 <p01>-Way F 1.2 Multilock Series, Sealed(GY)

Terminal Part Information

Terminal Type ID	Terminated Lead	Diagnostic Test Probe	Terminal Removal Tool
I	Not required	J-35616-16 (LT GN)	No Tool Required

B52E Heated Oxygen Sensor - Bank 2 Sensor 1

Pin	Size	Color	Circuit	Function	Terminal Type ID	Option
1	0.5	GN / YE	3212	HO2S Heater Low Control Bank 2 Sensor 1	I	—
2	0.5	VT / BU	5293	Powertrain Main Relay Fused Supply Voltage 4	I	—
3	0.5	YE / WH	3211	HO2S Low Signal Bank 2 Sensor 1	I	—
4	0.5	VT / WH	3210	HO2S High Signal Bank 2 Sensor 1	I	—

B52F Heated Oxygen Sensor - Bank 2 Sensor 2

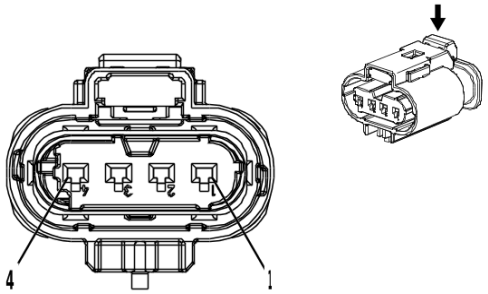

4036370

Connector Part Information

Harness Type: Engine Wiring Harness
OEM Connector: 10021266
Service Connector: 19330920
Description: 4 <p01>-Way F 1.2 Multilock Series, Sealed(GY)

Terminal Part Information

Terminal Type ID	Terminated Lead	Diagnostic Test Probe	Terminal Removal Tool
I	Not required	J-35616-16 (LT GN)	No Tool Required

B52F Heated Oxygen Sensor - Bank 2 Sensor 2

Pin	Size	Color	Circuit	Function	Terminal Type ID	Option
1	0.5	WH / BN	3223	HO2S Heater Low Control Bank 2 Sensor 2	I	—
2	0.5	VT / BU	5294	Powertrain Main Relay Fused Supply Voltage 5	I	—
3	0.5	YE / BU	3221	HO2S Low Signal Bank 2 Sensor 2	I	—
4	0.5	VT / GN	3220	HO2S High Signal Bank 2 Sensor 2	I	—

B55 Engine Hood Switch

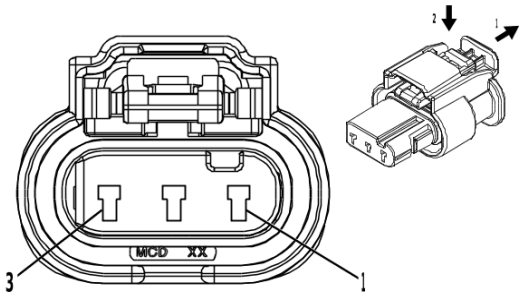

4421568

Connector Part Information

Harness Type: Forward Lamp Wiring Harness
OEM Connector: 34900-3120
Service Connector: 19368220
Description: 3 <p01>-Way F 1.2 MCON-LL Series, Sealed(BK)

Terminal Part Information

Terminal Type ID	Terminated Lead	Diagnostic Test Probe	Terminal Removal Tool
I	Not required	J-35616-16 (LT GN)	No Tool Required

B55 Engine Hood Switch

Pin	Size	Color	Circuit	Function	Terminal Type ID	Option
1	—	—	—	Not Occupied	—	—
2	0.5	BN / GN	109	Hood Ajar Switch Signal	I	—
3	0.75	BK	1250	Ground	I	—

B59L Front Impact Sensor - Left

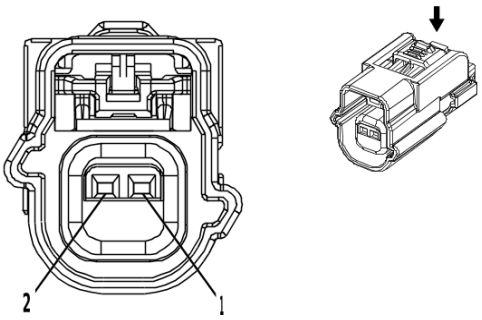

3931604

Connector Part Information

Harness Type: Forward Lamp Wiring Harness
OEM Connector: 54390241
Service Connector: 84937049
Description: 2 <p01>-Way F 0.64 Series, Sealed(BN)

Terminal Part Information

Terminal Type ID	Terminated Lead	Diagnostic Test Probe	Terminal Removal Tool
I	Not required	J-35616-64B (LT BU)	No Tool Required

B59L Front Impact Sensor - Left

Pin	Size	Color	Circuit	Function	Terminal Type ID	Option
1	0.5	OG / YE	354	Left Front Impact Discriminating Sensor Signal	I	—
2	0.5	BK / OG	5045	Left Front Impact Discriminating Sensor Low Reference	I	—

B59R Front Impact Sensor - Right

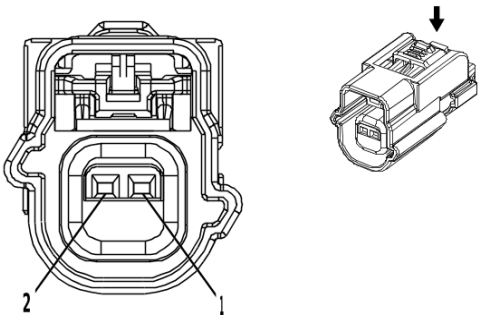

3931604

Connector Part Information

Harness Type: Forward Lamp Wiring Harness
OEM Connector: 54390241
Service Connector: 84937049
Description: 2 <p01>-Way F 0.64 Series, Sealed(BN)

Terminal Part Information

Terminal Type ID	Terminated Lead	Diagnostic Test Probe	Terminal Removal Tool
I	Not required	J-35616-64B (LT BU)	No Tool Required

B59R Front Impact Sensor - Right

Pin	Size	Color	Circuit	Function	Terminal Type ID	Option
1	0.5	OG / GN	1409	Right Front Impact Discriminating Sensor Signal	I	—
2	0.5	BK / OG	5600	Right Front Impact Discriminating Sensor Low Reference	I	—

B61P Seat Belt Tension Sensor - Passenger

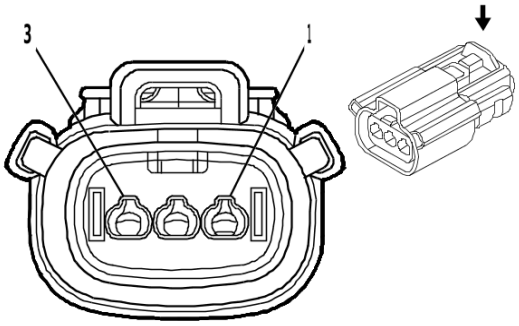

1862095

Connector Part Information

Harness Type: Passenger Seat
OEM Connector: 33471-0306
Service Connector: Service by Harness - See Part Catalog
Description: 3 <p01>-Way F 1.5 Series, Sealed(BK)

Terminal Part Information

Terminal Type ID	Terminated Lead	Diagnostic Test Probe	Terminal Removal Tool
I	Not Available	No Tool Required	Not Available

B61P Seat Belt Tension Sensor - Passenger

Pin	Size	Color	Circuit	Function	Terminal Type ID	Option
1	—	VT / OG	5611	Passenger Seat Belt Tension Sensor Signal	I	—
2	—	BK / WH	2251	Signal Ground	I	—
3	—	BU / RD	5612	Passenger Seat Belt Tension Sensor Voltage Reference	I	—

B63LF Side Impact Sensor - Left Front

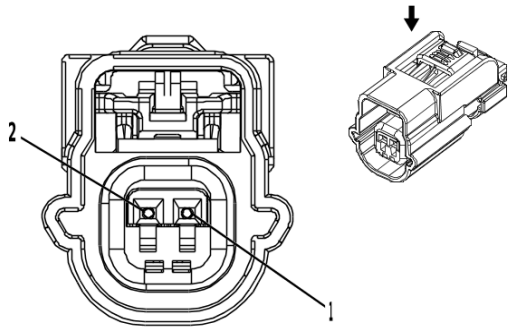

3556418

Connector Part Information

Harness Type: Front Side Door Door Wiring Harness - Driver
OEM Connector: 54390240
Service Connector: Service by Harness - See Part Catalog
Description: 2 <p01>-Way F 0.64 Series, Sealed(GY)

Terminal Part Information

Terminal Type ID	Terminated Lead	Diagnostic Test Probe	Terminal Removal Tool
I	Not required	J-35616-64B (LT BU)	No Tool Required

B63LF Side Impact Sensor - Left Front

Pin	Size	Color	Circuit	Function	Terminal Type ID	Option
1	0.35	OG / GN	2132	Left Front Side Impact Sensor Signal	I	—
2	0.35	BK / OG	6628	Left Front Side Impact Sensor Low Reference	I	—

B63LR Side Impact Sensor - Left Rear

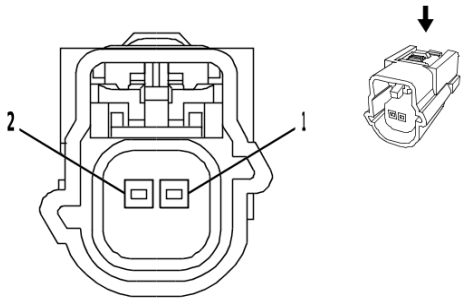

2179777

Connector Part Information

Harness Type: Body Wiring Harness
OEM Connector: 54390242
Service Connector: 13585852
Description: 2 <p01>-Way F 0.64 Series, Sealed(GY)

Terminal Part Information

Terminal Type ID	Terminated Lead	Diagnostic Test Probe	Terminal Removal Tool
I	Not required	J-35616-64B (LT BU)	No Tool Required

B63LR Side Impact Sensor - Left Rear

Pin	Size	Color	Circuit	Function	Terminal Type ID	Option
1	0.35	OG / BU	6620	Left Middle Side Impact Sensor Signal	I	—
2	0.35	BK / OG	6621	Left Middle Side Impact Sensor Low Reference	I	—

B63RF Side Impact Sensor - Right Front

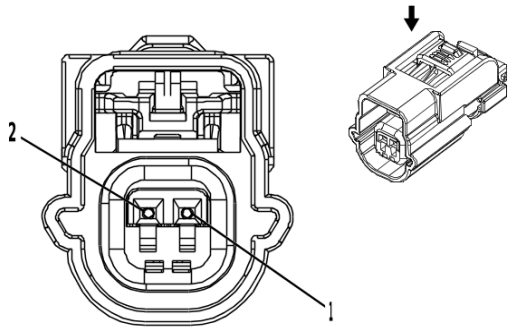

3556418

Connector Part Information

Harness Type: Front Side Door Door Wiring Harness - Passenger
OEM Connector: 54390240
Service Connector: Service by Harness - See Part Catalog
Description: 2 <p01>-Way F 0.64 Series, Sealed(GY)

Terminal Part Information

Terminal Type ID	Terminated Lead	Diagnostic Test Probe	Terminal Removal Tool
I	Not required	J-35616-64B (LT BU)	No Tool Required

B63RF Side Impact Sensor - Right Front

Pin	Size	Color	Circuit	Function	Terminal Type ID	Option
1	0.35	BN / OG	2134	Right Front Side Impact Sensor Signal	I	—
2	0.35	BK / OG	6629	Right Front Side Impact Sensor Low Reference	I	—

B63RR Side Impact Sensor - Right Rear

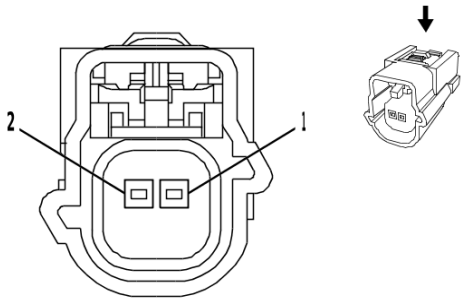

2179777

Connector Part Information

Harness Type: Body Wiring Harness
OEM Connector: 54390242
Service Connector: 13585852
Description: 2 <p01>-Way F 0.64 Series, Sealed(GY)

Terminal Part Information

Terminal Type ID	Terminated Lead	Diagnostic Test Probe	Terminal Removal Tool
I	Not required	J-35616-64B (LT BU)	No Tool Required

B63RR Side Impact Sensor - Right Rear

Pin	Size	Color	Circuit	Function	Terminal Type ID	Option
1	0.35	OG / VT	6624	Right Middle Side Impact Sensor Signal	I	—
2	0.35	BK / OG	6625	Right Middle Side Impact Sensor Low Reference	I	—

B65 Intake Manifold Pressure and Air Temperature Sensor

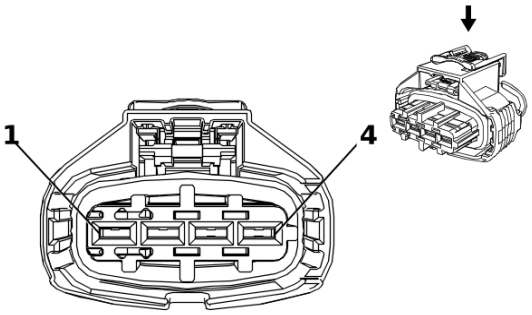

2487930

Connector Part Information

Harness Type: Engine Wiring Harness
OEM Connector: 1928405525
Service Connector: 13584423
Description: 4 <p01>-Way F 2.8 Series, Sealed(BK)

Terminal Part Information

Terminal Type ID	Terminated Lead	Diagnostic Test Probe	Terminal Removal Tool
I	Not required	J-35616-35 (VT)	No Tool Required

B65 Intake Manifold Pressure and Air Temperature Sensor

Pin	Size	Color	Circuit	Function	Terminal Type ID	Option
1	0.5	BK / GN	469	Manifold Absolute Pressure Sensor Low Reference	I	—
2	0.5	BN	7348	Intake Air Temperature Sensor 2 Signal	I	—
3	0.5	GY / RD	2704	Manifold Absolute Pressure Sensor 5V Reference	I	—
4	0.5	GN / WH	432	Manifold Absolute Pressure Sensor Signal	I	—

B68A Knock Sensor 1

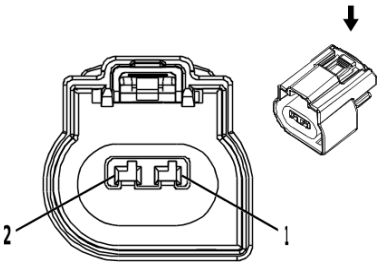

2717073

Connector Part Information

Harness Type: Engine Wiring Harness
OEM Connector: 34752-0204
Service Connector: 19301207
Description: 2 <p01>-Way F 1.5 MX Series, Sealed(BK)

Terminal Part Information

Terminal Type ID	Terminated Lead	Diagnostic Test Probe	Terminal Removal Tool
I	Not required	J-35616-2A (GY)	No Tool Required

B68A Knock Sensor 1

Pin	Size	Color	Circuit	Function	Terminal Type ID	Option
1	0.5	VT / GY	496	Knock Sensor 1 Signal	I	—
2	0.5	BK / YE	1716	Knock Sensor Low Reference 1	I	—

B68B Knock Sensor 2

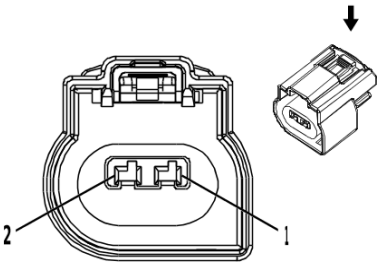

2717073

Connector Part Information

Harness Type: Engine Wiring Harness
OEM Connector: 34752-0204
Service Connector: 19301207
Description: 2 <p01>-Way F 1.5 MX Series, Sealed(BK)

Terminal Part Information

Terminal Type ID	Terminated Lead	Diagnostic Test Probe	Terminal Removal Tool
I	Not required	J-35616-2A (GY)	No Tool Required

B68B Knock Sensor 2

Pin	Size	Color	Circuit	Function	Terminal Type ID	Option
1	0.5	WH / GY	1876	Knock Sensor 2 Signal	I	—
2	0.5	BK / GY	2303	Knock Sensor Low Reference 2	I	—

B74 Manifold Absolute Pressure Sensor (LCV)

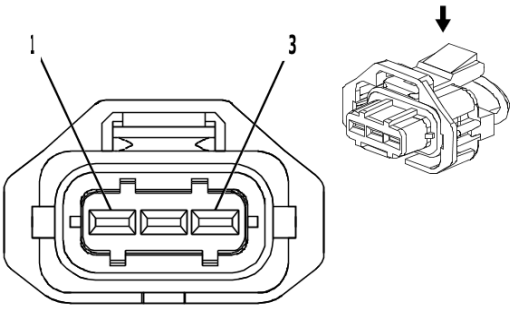

1331443

Connector Part Information

Harness Type: Engine Wiring Harness
OEM Connector: 13145408
Service Connector: 13384360
Description: 3 <p01>-Way F 2.8 Series, Sealed(BK)

Terminal Part Information

Terminal Type ID	Terminated Lead	Diagnostic Test Probe	Terminal Removal Tool
I	Not required	J-35616-35 (VT)	No Tool Required

B74 Manifold Absolute Pressure Sensor (LCV)

Pin	Size	Color	Circuit	Function	Terminal Type ID	Option
1	0.5	GY / RD	2704	Manifold Absolute Pressure Sensor 5V Reference	I	—
2	0.5	BK / GN	469	Manifold Absolute Pressure Sensor Low Reference	I	—
3	0.5	GN / WH	432	Manifold Absolute Pressure Sensor Signal	I	—

B74 Manifold Absolute Pressure Sensor (LGZ)

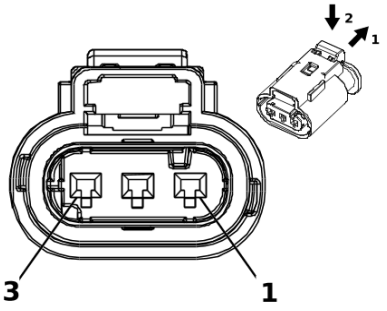

2717069

Connector Part Information

Harness Type: Engine Wiring Harness
OEM Connector: 13503570
Service Connector: 84601390
Description: 3 <p01>-Way F 1.2 Multilock Series, Sealed(BK)

Terminal Part Information

Terminal Type ID	Terminated Lead	Diagnostic Test Probe	Terminal Removal Tool
I	Not required	J-35616-16 (LT GN)	No Tool Required

B74 Manifold Absolute Pressure Sensor (LGZ)

Pin	Size	Color	Circuit	Function	Terminal Type ID	Option
1	0.5	GY / RD	2704	Manifold Absolute Pressure Sensor 5V Reference	I	—
2	0.5	BK / GN	469	Manifold Absolute Pressure Sensor Low Reference	I	—
3	0.5	GN / WH	432	Manifold Absolute Pressure Sensor Signal	I	—

B75C Multifunction Intake Air Sensor

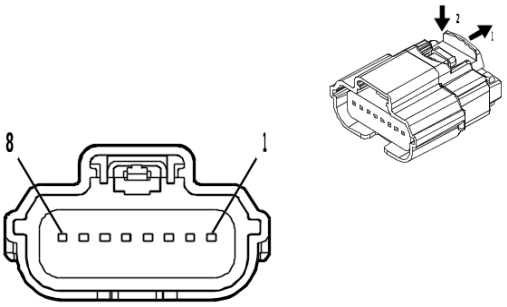

4708234

Connector Part Information

Harness Type: Engine Wiring Harness
OEM Connector: 31404-9110
Service Connector: 84677313
Description: 8 <p01>-Way F 64 Series, Sealed(BK)

Terminal Part Information

Terminal Type ID	Terminated Lead	Diagnostic Test Probe	Terminal Removal Tool
I	Not required	J-35616-64B (LT BU)	No Tool Required

B75C Multifunction Intake Air Sensor

Pin	Size	Color	Circuit	Function	Terminal Type ID	Option
1	0.5	WH / BU	6289	Intake Air Temperature Sensor Signal	I	—
2	0.5	WH / RD	3201	Throttle Inlet Absolute Pressure Sensor 5V Reference	I	—
3	0.5 0.5 0.5	BK / BN WH / YE BK / VT	2761 3202 2760	Coolant Temperature Sensor Low Reference Throttle Inlet Absolute Pressure Sensor 5V Reference Intake Air Temperature Sensor Low Reference	I I I	LCV LGZ LWN
4	0.5	YE / WH	3200	Throttle Inlet Absolute Pressure Sensor Signal	I	—
5	0.5	VT / BU	5294	Powertrain Main Relay Fused Supply Voltage 5	I	—
6	0.5	GN / WH	492	Mass Air Flow Sensor Signal	I	—
7	0.5 0.5 0.75	BK / WH BK / WH BK / WH	1451 151 151	Signal Ground Signal Ground Signal Ground	I I I	LCV LGZ LWN
8	0.5	BN / GY	4008	Humidity Sensor Signal	I	—

B80 Park Brake Switch

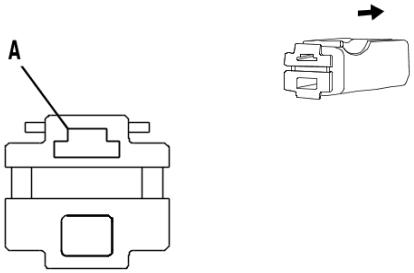

4248834

Connector Part Information

Harness Type: Body Wiring Harness
OEM Connector: 7123-5014-30
Service Connector: 19367647
Description: 1 <p01>-Way F 250 Series(BK)

Terminal Part Information

Terminal Type ID	Terminated Lead	Diagnostic Test Probe	Terminal Removal Tool
I	Not required	J-35616-42 (RD)	No Tool Required

B80 Park Brake Switch

Pin	Size	Color	Circuit	Function	Terminal Type ID	Option
A	0.35	BU / VT	1134	Park Brake Switch Signal	I	—

B87 Rearview Camera (UVB)

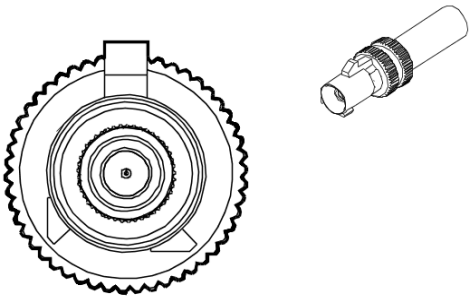

5000397

Connector Part Information

Harness Type: Rearview Camera Wiring Harness COAX
OEM Connector: 13516350
Service Connector: Service by Cable Assembly — See Part Catalog
Description: 1 <p01>-Way M Coax Type(OG)

Terminal Part Information

Terminal Type ID	Terminated Lead	Diagnostic Test Probe	Terminal Removal Tool
I	Not required	No Tool Required	No Tool Required

B87 Rearview Camera (UVB)

Pin	Size	Color	Circuit	Function	Terminal Type ID	Option
—	—	Coax Cable	—	Rear Vision Camera Coaxial Video Signal	I	—

B87 Rearview Camera (UVC)

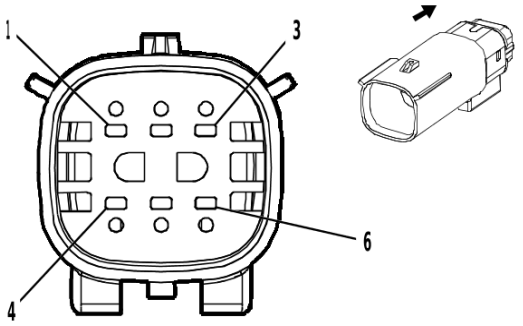

1986159

Connector Part Information

Harness Type: Rear License Plate Lamp Wiring Harness
OEM Connector: 33482-3601
Service Connector: Service by Harness - See Part Catalog
Description: 6 <p01>-Way M 1.5 MX Series, Sealed(BK)

Terminal Part Information

Terminal Type ID	Terminated Lead	Diagnostic Test Probe	Terminal Removal Tool
I	Not required	J-35616-3 (GY)	No Tool Required

B87 Rearview Camera (UVC)

Pin	Size	Color	Circuit	Function	Terminal Type ID	Option
1	0.5	GN / WH	24	Backup Lamp Control	I	—
2	0.5	GY / YE	6972	Rearview Camera Signal [+]	I	—
3	0.5	VT / GN	1739	Run/Crank Ignition 1 Voltage	I	—
4	0.5	GN	6974	Rearview Camera Low Reference	I	—
5	0.5	BK / WH	751	Signal Ground	I	—
6	0.5	WH / BU	6973	Rearview Camera Signal [-]	I	—

B107 Accelerator Pedal Position Sensor

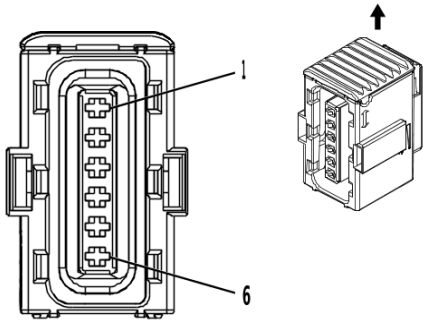

2173601

Connector Part Information

Harness Type: Body Wiring Harness
OEM Connector: 9115133
Service Connector: 13580116
Description: 6 <p01>-Way F 1.2 Micro-Timer II Series, Sealed(BK)

Terminal Part Information

Terminal Type ID	Terminated Lead	Diagnostic Test Probe	Terminal Removal Tool
I	Not required	J-35616-14 (GN)	No Tool Required

B107 Accelerator Pedal Position Sensor

Pin	Size	Color	Circuit	Function	Terminal Type ID	Option
1	0.5	BN / RD	1274	Accelerator Pedal Position 5V Reference 2	I	—
2	0.5	WH / RD	1164	Accelerator Pedal Position 5V Reference 1	I	—
3	0.5	YE / WH	1161	Accelerator Pedal Position Signal 1	I	—
4	0.5	BK / BU	1271	Accelerator Pedal Position Low Reference 1	I	—
5	0.5	BK / VT	1272	Accelerator Pedal Position Low Reference 2	I	—
6	0.5	GN / WH	1162	Accelerator Pedal Position Signal 2	I	—

B115 Vehicle Speed Sensor (NQ6/NQ7)

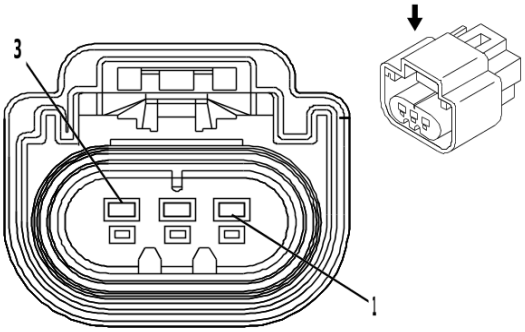

1962078

Connector Part Information

Harness Type: Engine Wiring Harness
OEM Connector: 13511996
Service Connector: 13580873
Description: 3 <p01>-Way F 150 GT Series, Sealed(GY)

Terminal Part Information

Terminal Type ID	Terminated Lead	Diagnostic Test Probe	Terminal Removal Tool
I	Not required	J-35616-14 (GN)	No Tool Required

B115 Vehicle Speed Sensor (NQ6/NQ7)

Pin	Size	Color	Circuit	Function	Terminal Type ID	Option
1	0.5	BU / RD	3096	Digital Output Speed Sensor 5V Reference	I	LCV/ LWN
	0.5	GY / BK	3096	Digital Output Speed Sensor 5V Reference	I	LGZ
2	0.5	VT / WH	821	Vehicle Speed Sensor Signal	I	LCV/ LWN
	0.5	GN	3098	Output Speed Signal	I	LGZ
3	0.5	BK / GN	822	Vehicle Speed Sensor Low Reference	I	LCV/ LWN
	0.5	WH / BK	3097	Digital Output Speed Sensor 5V Reference	I	LGZ

B116 Water in Fuel Sensor

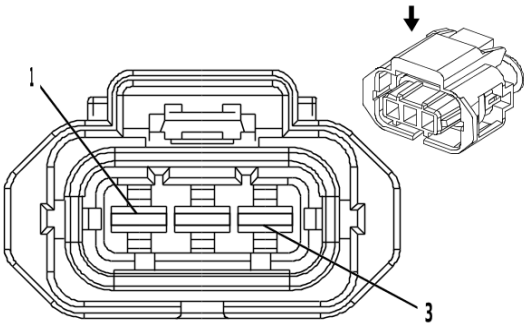

1914850

Connector Part Information

Harness Type: Chassis Wiring Harness
OEM Connector: 15397338
Service Connector: 13585845
Description: 3 <p01>-Way F 2.8 Junior Power Timer Series, Sealed(BK)

Terminal Part Information

Terminal Type ID	Terminated Lead	Diagnostic Test Probe	Terminal Removal Tool
I	Not required	J-35616-35 (VT)	No Tool Required

B116 Water in Fuel Sensor

Pin	Size	Color	Circuit	Function	Terminal Type ID	Option
1	0.75	VT / GY	139	Run/Crank Ignition 1 Voltage	I	—
2	0.75	BK	1950	Ground	I	—
3	0.5	BU / YE	6861	Water In Fuel Sensor Signal	I	—

B118 Windshield Washer Fluid Level Sensor

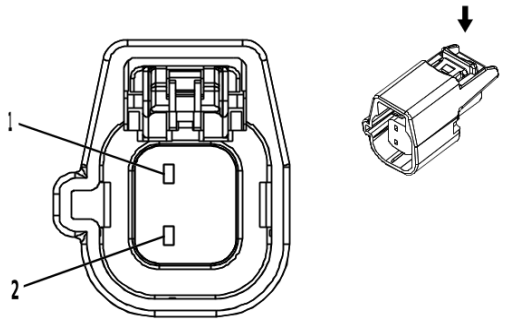

3958652

Connector Part Information

Harness Type: Forward Lamp Wiring Harness
OEM Connector: 7287-8378-40
Service Connector: 13593220
Description: 2 <p01>-Way F 1.5 Series, Sealed(L-GY)

Terminal Part Information

Terminal Type ID	Terminated Lead	Diagnostic Test Probe	Terminal Removal Tool
I	Not required	J-35616-14 (GN)	No Tool Required

B118 Windshield Washer Fluid Level Sensor

Pin	Size	Color	Circuit	Function	Terminal Type ID	Option
1	0.5	VT	185	Low Washer Fluid Indicator Control	I	—
2	0.5	BK	1150	Ground	I	—

B130A Exhaust Gas Recirculation Temperature Sensor 1

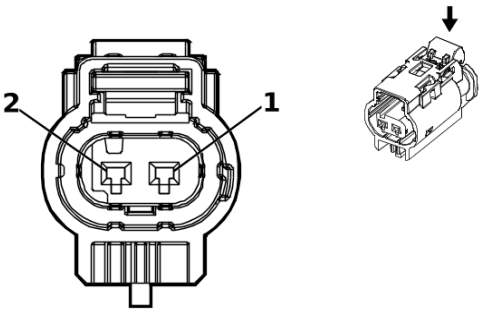

5207726

Connector Part Information

Harness Type: Engine Wiring Harness
OEM Connector: 10094237
Service Connector: 19332628
Description: 2 <p01>-Way F 1.2 Multilock Series, Sealed(GY)

Terminal Part Information

Terminal Type ID	Terminated Lead	Diagnostic Test Probe	Terminal Removal Tool
I	Not required	J-35616-16 (LT GN)	No Tool Required

B130A Exhaust Gas Recirculation Temperature Sensor 1

Pin	Size	Color	Circuit	Function	Terminal Type ID	Option
1	0.5	BK / YE	6275	Exhaust Gas Recirculation Temperature Sensor 2 Low Reference	I	—
2	0.5	YE / GN	3236	Exhaust Gas Recirculation Temperature Sensor 2 Signal	I	—

B130B Exhaust Gas Recirculation Temperature Sensor 2

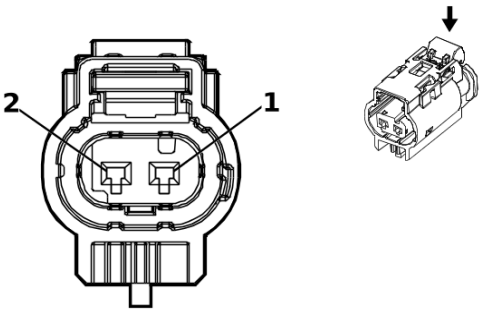

3747581

Connector Part Information

Harness Type: Engine Wiring Harness
OEM Connector: 10094234
Service Connector: 84727362
Description: 2 <p01>-Way F 1.2 Multilock Series, Sealed(BK)

Terminal Part Information

Terminal Type ID	Terminated Lead	Diagnostic Test Probe	Terminal Removal Tool
I	Not required	J-35616-16 (LT GN)	No Tool Required

B130B Exhaust Gas Recirculation Temperature Sensor 2

Pin	Size	Color	Circuit	Function	Terminal Type ID	Option
1	0.5	BK / BU	6274	Exhaust Gas Recirculation Temperature Sensor Low Reference	I	—
2	0.5	WH / BN	3237	Exhaust Gas Recirculation Temperature Sensor Signal	I	—

B131A Exhaust Temperature Sensor 1

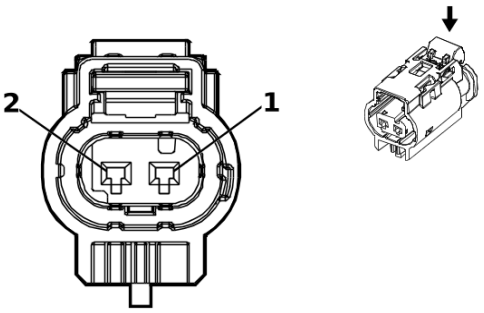

3747581

Connector Part Information

Harness Type: Engine Wiring Harness
OEM Connector: 10094234
Service Connector: 84727362
Description: 2 <p01>-Way F 1.2 Multilock Series, Sealed(BK)

Terminal Part Information

Terminal Type ID	Terminated Lead	Diagnostic Test Probe	Terminal Removal Tool
I	Not required	J-35616-16 (LT GN)	No Tool Required

B131A Exhaust Temperature Sensor 1

Pin	Size	Color	Circuit	Function	Terminal Type ID	Option
1	0.5	BK / BN	6782	Exhaust Gas Temperature Sensor 1 Low Reference	I	—
2	0.5	BU / WH	5277	Exhaust Gas Temperature Sensor 1 Signal	I	—

B131B Exhaust Temperature Sensor 2

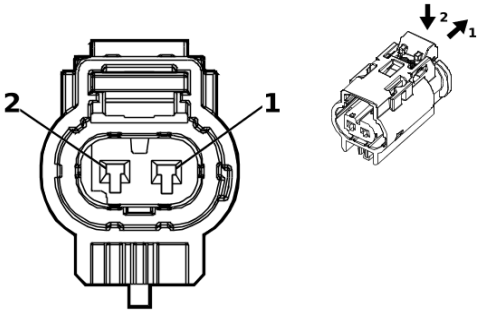

3747580

Connector Part Information

Harness Type: Chassis Wiring Harness
OEM Connector: 10094236
Service Connector: 19332627
Description: 2 <p01>-Way F 1.2 Multilock Series, Sealed(GY)

Terminal Part Information

Terminal Type ID	Terminated Lead	Diagnostic Test Probe	Terminal Removal Tool
I	Not required	J-35616-16 (LT GN)	No Tool Required

B131B Exhaust Temperature Sensor 2

Pin	Size	Color	Circuit	Function	Terminal Type ID	Option
1	0.5	BK / BU	6783	Exhaust Gas Temperature Sensor 2 Low Reference	I	—
2	0.5	BU / GN	5377	Exhaust Gas Temperature Sensor 2 Signal	I	—

B131C Exhaust Temperature Sensor 3

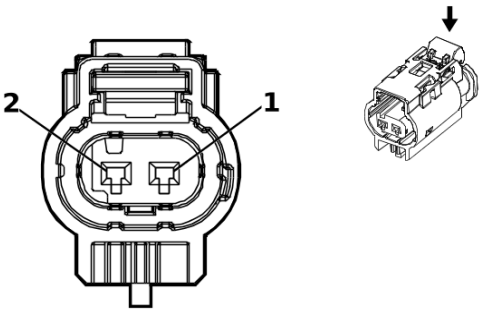

5207726

Connector Part Information

Harness Type: Chassis Wiring Harness
OEM Connector: 10094237
Service Connector: 19332628
Description: 2 <p01>-Way F 1.2 Multilock Series, Sealed(GY)

Terminal Part Information

Terminal Type ID	Terminated Lead	Diagnostic Test Probe	Terminal Removal Tool
I	Not required	J-35616-16 (LT GN)	No Tool Required

B131C Exhaust Temperature Sensor 3

Pin	Size	Color	Circuit	Function	Terminal Type ID	Option
1	0.5	BK / GN	3657	Exhaust Gas Temperature Sensor 3 Low Reference	I	—
2	0.5	GY / GN	5378	Exhaust Gas Temperature Sensor 3 Signal	I	—

B131D Exhaust Temperature Sensor 4

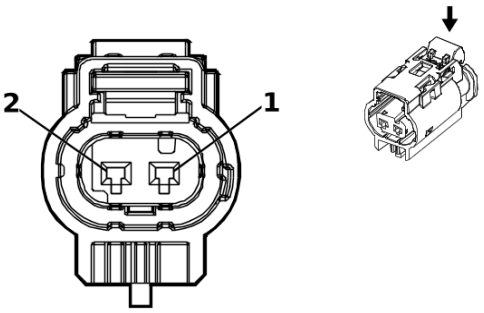

3747581

Connector Part Information

Harness Type: Chassis Wiring Harness
OEM Connector: 10094234
Service Connector: 84727362
Description: 2 <p01>-Way F 1.2 Multilock Series, Sealed(BK)

Terminal Part Information

Terminal Type ID	Terminated Lead	Diagnostic Test Probe	Terminal Removal Tool
I	Not required	J-35616-16 (LT GN)	No Tool Required

B131D Exhaust Temperature Sensor 4

Pin	Size	Color	Circuit	Function	Terminal Type ID	Option
1	0.5	BK / GY	3659	Exhaust Gas Temperature Sensor 4 Low Reference	I	—
2	0.5	VT / BN	3658	Exhaust Gas Temperature Sensor 4 Signal	I	—

B131E Exhaust Temperature Sensor 5

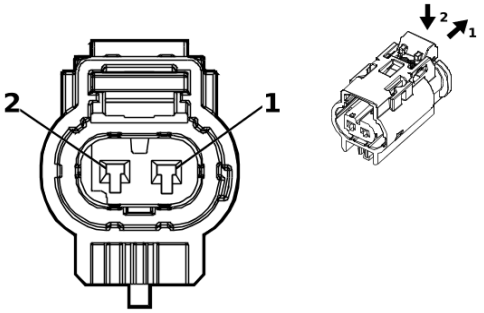

3747580

Connector Part Information

Harness Type: Chassis Wiring Harness
OEM Connector: 10094236
Service Connector: 19332627
Description: 2 <p01>-Way F 1.2 Multilock Series, Sealed(GY)

Terminal Part Information

Terminal Type ID	Terminated Lead	Diagnostic Test Probe	Terminal Removal Tool
I	Not required	J-35616-16 (LT GN)	No Tool Required

B131E Exhaust Temperature Sensor 5

Pin	Size	Color	Circuit	Function	Terminal Type ID	Option
1	0.5	BK / VT	3661	Exhaust Gas Temperature Sensor 5 Low Reference	I	—
2	0.5	BU / GY	3660	Exhaust Gas Temperature Sensor 5 Signal	I	—

B136 Exhaust Particulate Matter Sensor

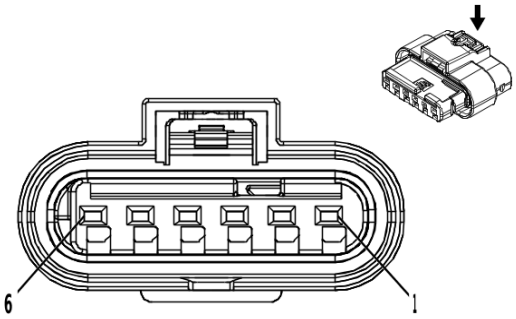

3747582

Connector Part Information

Harness Type: Chassis Wiring Harness
OEM Connector: 34900-6121
Service Connector: Service by Harness - See Part Catalog
Description: 6 <p01>-Way F 1.2 MCON-LL Series, Sealed(BK)

Terminal Part Information

Terminal Type ID	Terminated Lead	Diagnostic Test Probe	Terminal Removal Tool
I	Not required	J-35616-16 (LT GN)	No Tool Required

B136 Exhaust Particulate Matter Sensor

Pin	Size	Color	Circuit	Function	Terminal Type ID	Option
1	1	BK	1950	Ground	I	—
2	0.5	WH	4499	High Speed GMLAN Serial Data [-] 7	I	—
3	0.5	WH	4499	High Speed GMLAN Serial Data [-] 7	I	—
4	0.5	BU / BN	4498	High Speed GMLAN Serial Data [+] 7	I	—
5	0.5	BU / BN	4498	High Speed GMLAN Serial Data [+] 7	I	—
6	1	VT / BU	3674	NOx Sensor 1 Control	I	—

B137 Power Steering Shaft Torque Sensor

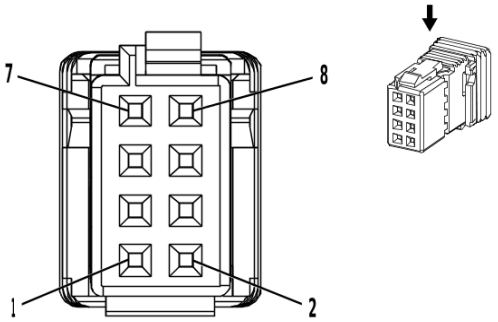

3530698

Connector Part Information

Harness Type: Power Steering Wiring Harness
OEM Connector: 965382-2
Service Connector: Service by Harness - See Part Catalog
Description: 6 <p01>-Way

Terminal Part Information

Terminal Type ID	Terminated Lead	Diagnostic Test Probe	Terminal Removal Tool
I	Not Available	No Tool Required	Not Available

B137 Power Steering Shaft Torque Sensor

Pin	Size	Color	Circuit	Function	Terminal Type ID	Option
1	0.5	BN / RD	6631	Torque Input Sensor High Reference	I	—
2	0.5	BN / BK	—	5 - Volt Reference	I	—
3	0.5	WH / OG	—	PWM	I	—
4	0.5	BK / BU	6632	Torque Input Sensor Low Reference	I	—
5	0.5	BN / RD	6631	Torque Input Sensor High Reference	I	—
6	0.5	BU / GY	6633	Torque Input Sensor Signal	I	—
7	0.5	BU / GY	6633	Torque Input Sensor Signal	I	—
8	0.5	BK / BU	6632	Torque Input Sensor Low Reference	I	—

B150 Fuel Tank Pressure Sensor

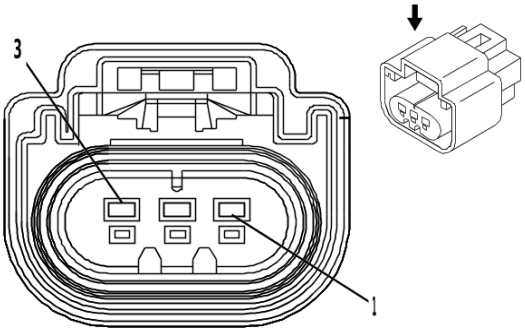

1962078

Connector Part Information

Harness Type: Chassis Wiring Harness
OEM Connector: 13511996
Service Connector: 13580873
Description: 3 <p01>-Way F 150 GT Series, Sealed(GY)

Terminal Part Information

Terminal Type ID	Terminated Lead	Diagnostic Test Probe	Terminal Removal Tool
I	Not required	J-35616-14 (GN)	No Tool Required

B150 Fuel Tank Pressure Sensor

Pin	Size	Color	Circuit	Function	Terminal Type ID	Option
1	0.5	BU / WH	890	Fuel Tank Pressure Sensor Signal	I	—
2	0.5	BK / GN	6281	Fuel Level Sensor Low Reference	I	—
3	0.5	YE / RD	2709	Fuel Tank Pressure Sensor 5V Reference	I	—

B153D Seat Belt Buckle - Driver

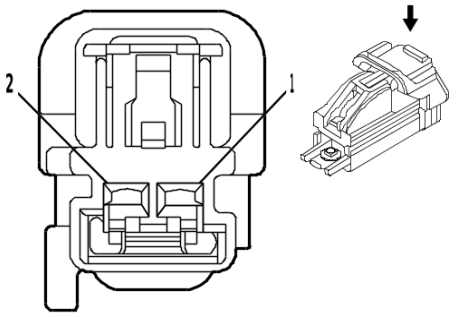

1856792

Connector Part Information

Harness Type: Driver Seat
OEM Connector: Not Available
Service Connector: Service by Harness - See Part Catalog
Description: 6 <p01>-Way

Terminal Part Information

Terminal Type ID	Terminated Lead	Diagnostic Test Probe	Terminal Removal Tool
I	Not Available	No Tool Required	Not Available

B153D Seat Belt Buckle - Driver

Pin	Size	Color	Circuit	Function	Terminal Type ID	Option
1	0.35	BK / OG	1363	Driver Seat Belt Switch Low Reference	I	—
2	0.35	OG / BN	238	Driver Seat Belt Switch Signal	I	—

B153P Seat Belt Buckle - Passenger

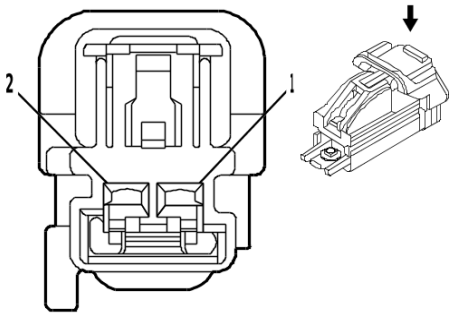

1856792

Connector Part Information

Harness Type: Passenger Seat
OEM Connector: Not Available
Service Connector: Service by Harness - See Part Catalog
Description: 6 <p01>-Way

Terminal Part Information

Terminal Type ID	Terminated Lead	Diagnostic Test Probe	Terminal Removal Tool
I	Not Available	No Tool Required	Not Available

B153P Seat Belt Buckle - Passenger

Pin	Size	Color	Circuit	Function	Terminal Type ID	Option
1	0.35	BK / OG	1361	Passenger Seat Belt Switch Low Reference	I	—
2	0.35	OG / VT	1362	Passenger Seat Belt Switch Signal	I	—

B154 Diesel Particulate Filter Exhaust Differential Pressure Sensor

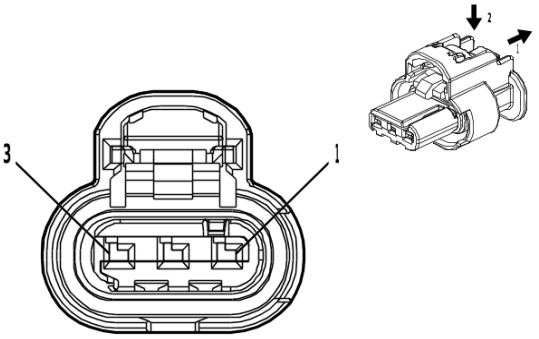

4581126

Connector Part Information

Harness Type: Chassis Wiring Harness
OEM Connector: 1-2296695-1
Service Connector: 19371207
Description: 3 <p01>-Way F 1.2 MCON-CB Series, Sealed(BK)

Terminal Part Information

Terminal Type ID	Terminated Lead	Diagnostic Test Probe	Terminal Removal Tool
I	Not required	J-35616-16 (LT GN)	No Tool Required

B154 Diesel Particulate Filter Exhaust Differential Pressure Sensor

Pin	Size	Color	Circuit	Function	Terminal Type ID	Option
1	0.5	BU	6053	Exhaust Pressure Sensor 1 Signal	I	—
2	0.5	BK / YE	6055	Exhaust Pressure Sensor 1 Low Reference	I	—
3	0.5	WH / RD	6054	Exhaust Pressure Sensor 1 5V Reference	I	—

B160 Windshield Temperature and Inside Moisture Sensor

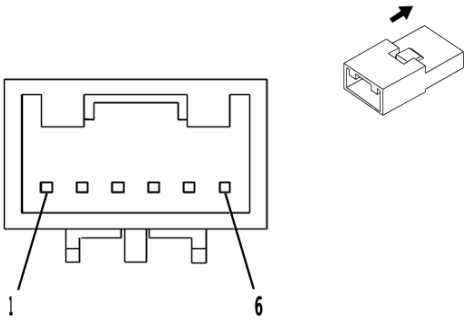

2839920

Connector Part Information

Harness Type: Headliner Wiring Harness
OEM Connector: AIT2WSB-06-1AK
Service Connector: 19299681
Description: 6 <p01>-Way M 0.64 Kaizen Series(BK)

Terminal Part Information

Terminal Type ID	Terminated Lead	Diagnostic Test Probe	Terminal Removal Tool
I	Not required	J-35616-65B (LT BU)	No Tool Required

B160 Windshield Temperature and Inside Moisture Sensor

Pin	Size	Color	Circuit	Function	Terminal Type ID	Option
1	0.35	YE / RD	597	5V Reference	I	—
2	0.35	GY / BU	7564	Humidity Sensor Signal 2	I	—
3	0.35	BK / BU	7566	Windshield Temperature and Inside Moisture Sensor Low Reference	I	—
4	0.35	GY / GN	7565	Windshield Temperature Sensor Signal	I	—
5	0.35	YE / BU	3197	Intake Air Humidity and Temperature Sensor Signal	I	—
6	—	—	—	Not Occupied	—	—

B174W Frontview Camera - Windshield (-UYH)

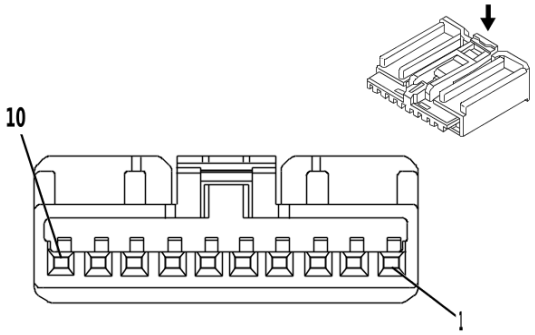

1862241

Connector Part Information

Harness Type: Headliner Wiring Harness
OEM Connector: AIT2PB-10-1AK
Service Connector: 13576634
Description: 10 <p01>-Way F 0.64 Kaizen Series(BK)

Terminal Part Information

Terminal Type ID	Terminated Lead	Diagnostic Test Probe	Terminal Removal Tool
I	13575742	J-35616-64B (LT BU)	J-38125-215A

B174W Frontview Camera - Windshield (-UYH)

Pin	Size	Color	Circuit	Function	Terminal Type ID	Option
1	0.35	BK / WH	3451	Signal Ground	I	—
2	—	—	—	Not Occupied	—	—
3	0.35	RD / GN	3140	Battery Positive Voltage	I	—
4	0.35	WH	3152	Lane Departure Warning Indicator Control	I	—
5 - 6	—	—	—	Not Occupied	—	—
7	0.5	GN	5060	Low Speed GMLAN Serial Data	I	—
8 - 9	—	—	—	Not Occupied	—	—
10	0.35	GY / WH	3153	Lane Departure Warning Disable Switch Signal	I	—

B174W Frontview Camera - Windshield (UYH)

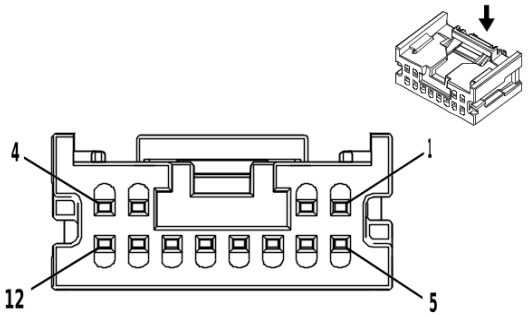

3824362

Connector Part Information

Harness Type: Headliner Wiring Harness
OEM Connector: 34824-5124
Service Connector: 13507121
Description: 12 <p01>-Way F Mini 50 Series(BK)

Terminal Part Information

Terminal Type ID	Terminated Lead	Diagnostic Test Probe	Terminal Removal Tool
I	19333221	EL-35616-58 (BK)	EL-38125-58

B174W Frontview Camera - Windshield (UYH)

Pin	Size	Color	Circuit	Function	Terminal Type ID	Option
1	0.35	BK / WH	3451	Signal Ground	I	—
2	—	—	—	Not Occupied	—	—
3	0.35	RD / GN	3140	Battery Positive Voltage	I	—
4	0.35	WH	3152	Lane Departure Warning Indicator Control	I	—
5	0.35	BU	2500	High Speed GMLAN Serial Data [+] 1	I	—
6	0.35	WH	2501	High Speed GMLAN Serial Data [-] 1	I	—
7	0.35	BU	2500	High Speed GMLAN Serial Data [+] 1	I	—
8	0.35	WH	2501	High Speed GMLAN Serial Data [-] 1	I	—
9	0.35	WH / BU	5986	Serial Data Communication Enable	I	—
10	0.35	GY / WH	3153	Lane Departure Warning Disable Switch Signal	I	—
11	0.35	GN	5060	Low Speed GMLAN Serial Data	I	—
12	—	—	—	Not Occupied	—	—

B193A Charge Air Cooler Inlet Temperature Sensor

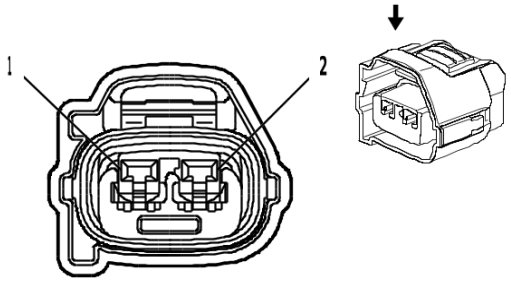

2388842

Connector Part Information

Harness Type: Engine Wiring Harness
OEM Connector: 7283-7020-10
Service Connector: 19368660
Description: 2 <p01>-Way F 090 Series, Sealed(D-GY)

Terminal Part Information

Terminal Type ID	Terminated Lead	Diagnostic Test Probe	Terminal Removal Tool
I	Not required	J-35616-18 (BK)	No Tool Required

B193A Charge Air Cooler Inlet Temperature Sensor

Pin	Size	Color	Circuit	Function	Terminal Type ID	Option
1	0.5	GN	3683	Charge Air Cooler Inlet Temperature Sensor Signal	I	—
2	0.5	YE / BK	3682	Charge Air Cooler Inlet Temperature Sensor Low Reference	I	—

B193B Charge Air Cooler Outlet Temperature Sensor

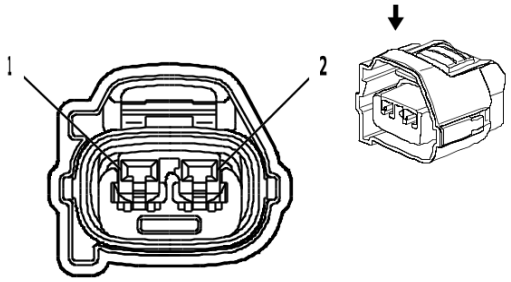

2388842

Connector Part Information

Harness Type: Engine Wiring Harness
OEM Connector: 7283-7020-10
Service Connector: 19368660
Description: 2 <p01>-Way F 090 Series, Sealed(D-GY)

Terminal Part Information

Terminal Type ID	Terminated Lead	Diagnostic Test Probe	Terminal Removal Tool
I	Not required	J-35616-18 (BK)	No Tool Required

B193B Charge Air Cooler Outlet Temperature Sensor

Pin	Size	Color	Circuit	Function	Terminal Type ID	Option
1	0.5	BN	3681	Charge Air Cooler Outlet Temperature Sensor Signal	I	—
2	0.5	YE / BU	3680	Charge Air Cooler Outlet Temperature Sensor Low Reference	I	—

B195A Nitrogen Oxides Sensor 1

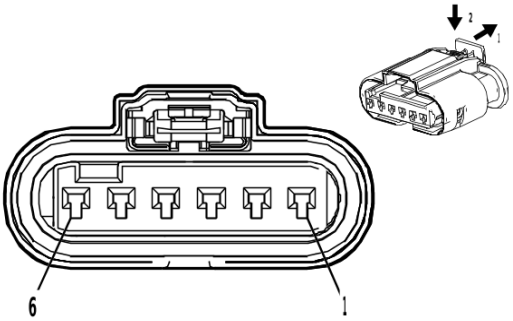

3960142

Connector Part Information

Harness Type: Chassis Wiring Harness
OEM Connector: 34900-6119
Service Connector: 85005020
Description: 6 <p01>-Way F 1.2 MCON-LL Series, Sealed(BK)

Terminal Part Information

Terminal Type ID	Terminated Lead	Diagnostic Test Probe	Terminal Removal Tool
I	Not required	J-35616-16 (LT GN)	No Tool Required

B195A Nitrogen Oxides Sensor 1

Pin	Size	Color	Circuit	Function	Terminal Type ID	Option
1	1	VT / BU	3674	NOx Sensor 1 Control	I	—
2	0.5	BU / BN	4498	High Speed GMLAN Serial Data [+] 7	I	—
3	0.5	BU / BN	4498	High Speed GMLAN Serial Data [+] 7	I	—
4	0.5	WH	4499	High Speed GMLAN Serial Data [-] 7	I	—
5	0.5	WH	4499	High Speed GMLAN Serial Data [-] 7	I	—
6	1	BK	1950	Ground	I	—

B195B Nitrogen Oxides Sensor 2

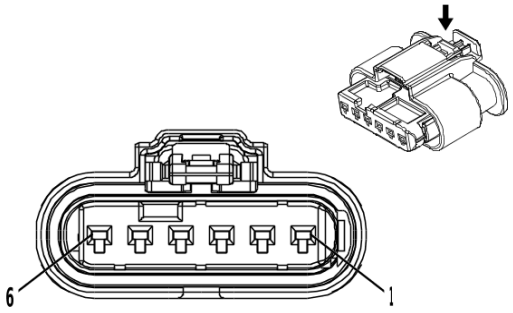

4455148

Connector Part Information

Harness Type: Chassis Wiring Harness
OEM Connector: 34900-6128
Service Connector: Service by Harness - See Part Catalog
Description: 6 <p01>-Way F 1.2 MCON-LL Series, Sealed(BK)

Terminal Part Information

Terminal Type ID	Terminated Lead	Diagnostic Test Probe	Terminal Removal Tool
I	Not required	J-35616-16 (LT GN)	No Tool Required

B195B Nitrogen Oxides Sensor 2

Pin	Size	Color	Circuit	Function	Terminal Type ID	Option
1	1	VT / BU	3674	NOx Sensor 1 Control	I	—
2	0.5	BU / BN	4498	High Speed GMLAN Serial Data [+] 7	I	—
3 - 4	—	—	—	Not Occupied	—	—
5	0.5	WH	4499	High Speed GMLAN Serial Data [-] 7	I	—
6	1	BK	1950	Ground	I	—

B203 Radiator Coolant Temperature Sensor

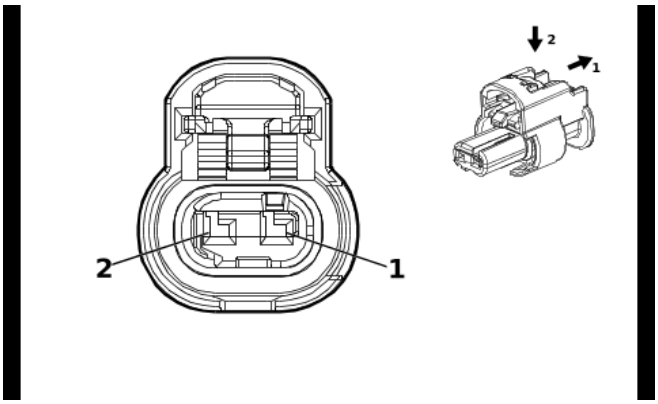

4649903

Connector Part Information

Harness Type: Forward Lamp Extension Wiring Harness
OEM Connector: 1-2296694-1
Service Connector: Service by Harness - See Part Catalog
Description: 2 <p01>-Way F 1.2 MCON Series, Sealed(BK)

Terminal Part Information

Terminal Type ID	Terminated Lead	Diagnostic Test Probe	Terminal Removal Tool
I	Not required	J-35616-16 (LT GN)	No Tool Required

B203 Radiator Coolant Temperature Sensor

Pin	Size	Color	Circuit	Function	Terminal Type ID	Option
1	0.5	YE / BK	3000	Coolant Temperature Sensor 2 Signal	I	—
2	0.5	BK / BU	6813	Coolant Temperature Sensor 2 Low Reference	I	—

B212 Reductant Sensor Module (LWN)

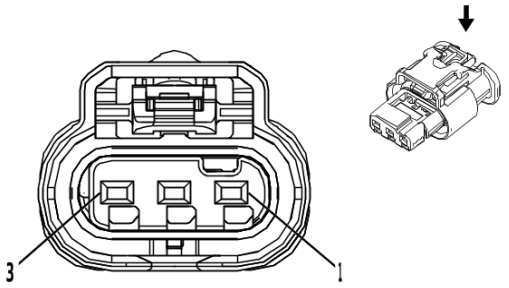

2889711

Connector Part Information

Harness Type: Emission Reduction Fluid Tank Reservoir Wire Harness
OEM Connector: 1488991-5
Service Connector: Service by Harness - See Part Catalog
Description: 3 <p01>-Way F 1.2 MCP Series, Sealed(BK)

Terminal Part Information

Terminal Type ID	Terminated Lead	Diagnostic Test Probe	Terminal Removal Tool
I	Not Available	No Tool Required	Not Available

B212 Reductant Sensor Module (LWN)

Pin	Size	Color	Circuit	Function	Terminal Type ID	Option
1	0.35	VT / GY	7286	Diesel Exhaust Fluid Sensor Voltage Reference 2	I	—
2	0.35	YE / GN	7284	Diesel Exhaust Fluid Liquid Quality Temperature Signal	I	—
3	0.35	BK / BN	7285	Diesel Exhaust Fluid Liquid Quality Temperature Sensor Low Reference	I	—

B227 Gear Position Sensor

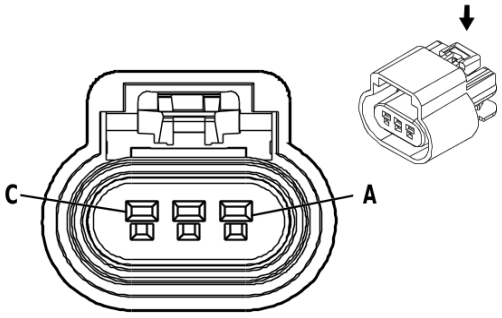

646415

Connector Part Information

Harness Type: Engine Wiring Harness
OEM Connector: 15326808
Service Connector: 19368886
Description: 3 <p01>-Way F 150 GT Series, Sealed(BK)

Terminal Part Information

Terminal Type ID	Terminated Lead	Diagnostic Test Probe	Terminal Removal Tool
I	Not required	J-35616-2A (GY)	No Tool Required

B227 Gear Position Sensor

Pin	Size	Color	Circuit	Function	Terminal Type ID	Option
A	0.5	YE / BK	7478	Gear Position Sensor Low Reference	I	—
B	0.5	WH / RD	7477	Gear Position Sensor 5V Reference	I	—
C	0.5	WH / GN	7479	Rotary Position Sensor Signal	I	—

B303 Transmission Range Sensor (M5T)

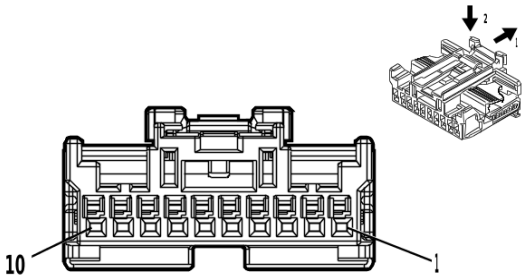

4051038

Connector Part Information

Harness Type: Transmission Control
OEM Connector: 2138504-1
Service Connector: Service by Harness - See Part Catalog
Description: 10 <p01>-Way F 0.64 Generation Y Series(BN)

Terminal Part Information

Terminal Type ID	Terminated Lead	Diagnostic Test Probe	Terminal Removal Tool
I	Not Available	No Tool Required	Not Available
II	Not required	J-35616-64B (LT BU)	No Tool Required

B303 Transmission Range Sensor (M5T)

Pin	Size	Color	Circuit	Function	Terminal Type ID	Option
1	0.5	GN / YE	3337	Transmission Internal Mode Switch Mode Control Y	II	—
2	0.5	WH / RD	596	5V Reference	II	—
3	—	BK / GY	3927	Transmission Internal Mode Switch Feedback Signal	I	—
4	0.5	BU / WH	3338	Transmission Internal Mode Switch Mode Control X	II	—
5	0.5	VT / WH	5981	Transmission Range Switch Signal A	II	—
6	0.5	WH / BK	5983	Transmission Range Switch Signal C	II	—
7	0.5	GY / YE	4169	Transmission Range Switch Signal S	II	—
8	0.5	GY / BN	5982	Transmission Range Switch Signal B	II	—
9	0.5	GY / WH	4168	Transmission Range Switch Signal P	II	—
10	0.5	YE / GN	4170	Transmission Output Shaft Speed Sensor Circuit 9V Reference	II	—

B306E Parking Assist Sensor - Rear Left Outer

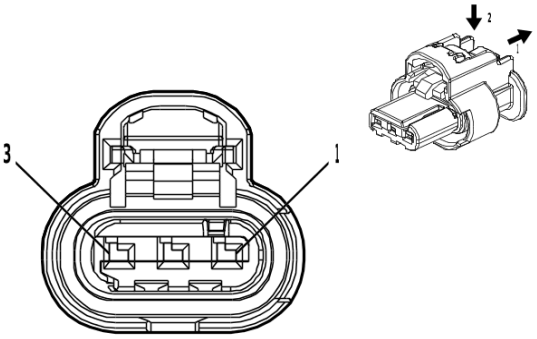

4581126

Connector Part Information

Harness Type: Rear License Plate Lamp Wiring Harness
OEM Connector: 1-2296695-1
Service Connector: Service by Harness - See Part Catalog
Description: 3 <p01>-Way F 1.2 MCON-CB Series, Sealed(BK)

Terminal Part Information

Terminal Type ID	Terminated Lead	Diagnostic Test Probe	Terminal Removal Tool
I	Not required	J-35616-16 (LT GN)	No Tool Required

B306E Parking Assist Sensor - Rear Left Outer

Pin	Size	Color	Circuit	Function	Terminal Type ID	Option
1	0.5	BN / WH	2374	Object Sensor Voltage Reference	I	—
2	0.5	YE	2375	Left Rear Outer Parking Assist Sensor Signal	I	—
3	0.5	BK / GY	2379	Object Sensor Low Reference	I	—

B306F Parking Assist Sensor - Rear Left Middle

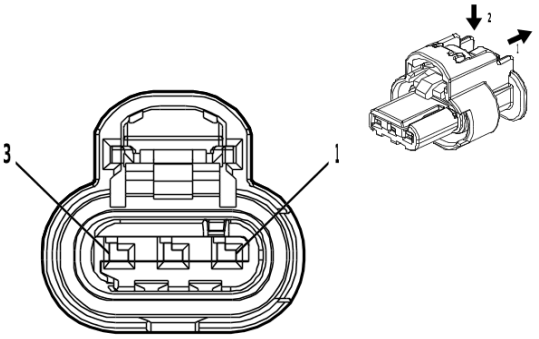

4581126

Connector Part Information

Harness Type: Rear License Plate Lamp Wiring Harness
OEM Connector: 1-2296695-1
Service Connector: Service by Harness - See Part Catalog
Description: 3 <p01>-Way F 1.2 MCON-CB Series, Sealed(BK)

Terminal Part Information

Terminal Type ID	Terminated Lead	Diagnostic Test Probe	Terminal Removal Tool
I	Not required	J-35616-16 (LT GN)	No Tool Required

B306F Parking Assist Sensor - Rear Left Middle

Pin	Size	Color	Circuit	Function	Terminal Type ID	Option
1	0.5	BN / WH	2374	Object Sensor Voltage Reference	I	—
2	0.5	YE / BU	2376	Left Rear Middle Parking Assist Sensor Signal	I	—
3	0.5	BK / GY	2379	Object Sensor Low Reference	I	—

B306G Parking Assist Sensor - Rear Right Middle

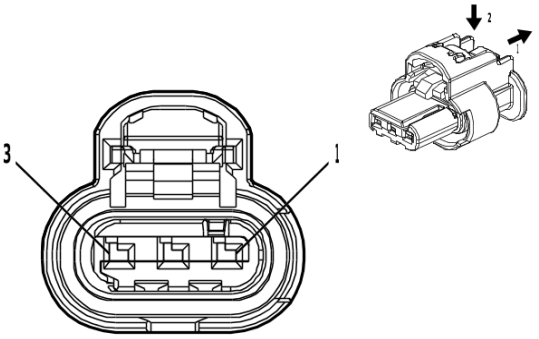

4581126

Connector Part Information

Harness Type: Rear License Plate Lamp Wiring Harness
OEM Connector: 1-2296695-1
Service Connector: Service by Harness - See Part Catalog
Description: 3 <p01>-Way F 1.2 MCON-CB Series, Sealed(BK)

Terminal Part Information

Terminal Type ID	Terminated Lead	Diagnostic Test Probe	Terminal Removal Tool
I	Not required	J-35616-16 (LT GN)	No Tool Required

B306G Parking Assist Sensor - Rear Right Middle

Pin	Size	Color	Circuit	Function	Terminal Type ID	Option
1	0.5	BN / WH	2374	Object Sensor Voltage Reference	I	—
2	0.5	YE / WH	2377	Right Rear Middle Parking Assist Sensor Signal	I	—
3	0.5	BK / GY	2379	Object Sensor Low Reference	I	—

B306H Parking Assist Sensor - Rear Right Outer

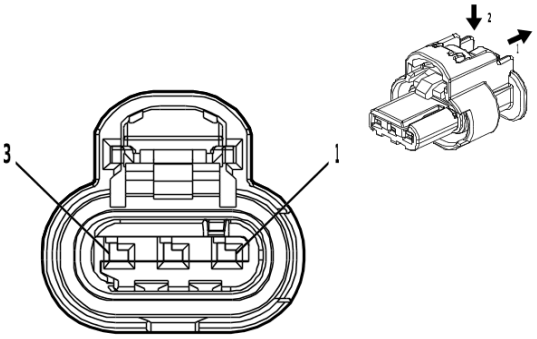

4581126

Connector Part Information

Harness Type: Rear License Plate Lamp Wiring Harness
OEM Connector: 1-2296695-1
Service Connector: Service by Harness - See Part Catalog
Description: 3 <p01>-Way F 1.2 MCON-CB Series, Sealed(BK)

Terminal Part Information

Terminal Type ID	Terminated Lead	Diagnostic Test Probe	Terminal Removal Tool
I	Not required	J-35616-16 (LT GN)	No Tool Required

B306H Parking Assist Sensor - Rear Right Outer

Pin	Size	Color	Circuit	Function	Terminal Type ID	Option
1	0.5	BN / WH	2374	Object Sensor Voltage Reference	I	—
2	0.5	YE / VT	2378	Right Rear Outer Parking Assist Sensor Signal	I	—
3	0.5	BK / GY	2379	Object Sensor Low Reference	I	—

B310 Fuel Pressure/Temperature Sensor (LGZ/LCV)

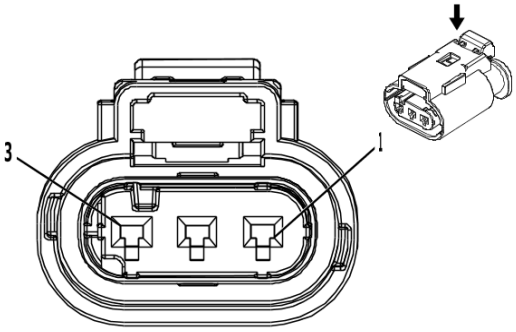

3240107

Connector Part Information

Harness Type: Fuel Injector Wiring Harness
OEM Connector: 13503573
Service Connector: Service by Harness - See Part Catalog
Description: 3 <p01>-Way F 1.2 Multilock Series, Sealed(BK)

Terminal Part Information

Terminal Type ID	Terminated Lead	Diagnostic Test Probe	Terminal Removal Tool
I	Not Available	No Tool Required	Not Available

B310 Fuel Pressure/Temperature Sensor (LGZ/LCV)

Pin	Size	Color	Circuit	Function	Terminal Type ID	Option
1	0.5	BK / GN	2919	Fuel Rail Pressure Sensor Low Reference	I	—
2	0.5	BU / WH	2918	Fuel Rail Pressure Sensor Signal	I	—
3	0.5	BN / RD	2917	Fuel Rail Pressure Sensor 5V Reference	I	—

C1 Battery X2

—

Connector Part Information

Harness Type: Battery Negative Cable
OEM Connector: BBS16068
Service Connector: Service by Harness - See Part Catalog
Description: —

Terminal Part Information

Terminal Type ID	Terminated Lead	Diagnostic Test Probe	Terminal Removal Tool
I	Not required	No Tool Required	No Tool Required

C1 Battery X2

Pin	Size	Color	Circuit	Function	Terminal Type ID	Option
A	25	BK	50	Ground	I	LCV
	25	BK	150	Ground	I	LWN/ LGZ
	35	BK	250	Ground	I	LWN/ LGZ/ LCV

C1 Battery X3

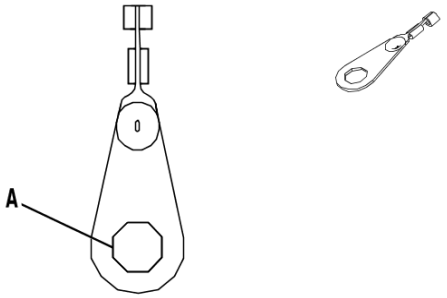

2906941

Connector Part Information

Harness Type: Body Wiring Harness
OEM Connector: 13268280
Service Connector: Service by Cable Assembly — See Part Catalog
Description: 1 <p01>-Way Ring Terminal

Terminal Part Information

Terminal Type ID	Terminated Lead	Diagnostic Test Probe	Terminal Removal Tool
I	Not required	No Tool Required	No Tool Required

C1 Battery X3

Pin	Size	Color	Circuit	Function	Terminal Type ID	Option
A	0.5	BK	1650	Ground	I	—

E4E Headlamp - Left High Beam

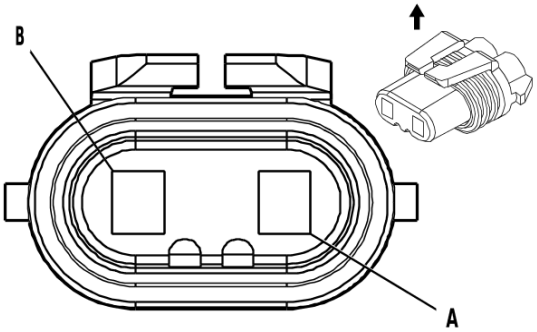

684797

Connector Part Information

Harness Type: Left Front Headlamp Assembly
OEM Connector: 12059183
Service Connector: Service by Harness - See Part Catalog
Description: 2 <p01>-Way F 280 Metri-Pack Series, Sealed(BK)

Terminal Part Information

Terminal Type ID	Terminated Lead	Diagnostic Test Probe	Terminal Removal Tool
I	Not Available	No Tool Required	Not Available

E4E Headlamp - Left High Beam

Pin	Size	Color	Circuit	Function	Terminal Type ID	Option
A	1.5	BK	711	Left Headlamp High Beam Control	I	—
B	1.5	BK	1150	Ground	I	—

E4F Headlamp - Right High Beam

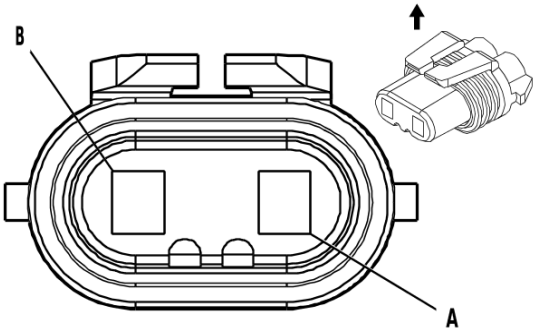

684797

Connector Part Information

Harness Type: Right Front Headlamp Assembly
OEM Connector: 12059183
Service Connector: Service by Harness - See Part Catalog
Description: 2 <p01>-Way F 280 Metri-Pack Series, Sealed(BK)

Terminal Part Information

Terminal Type ID	Terminated Lead	Diagnostic Test Probe	Terminal Removal Tool
I	Not Available	No Tool Required	Not Available

E4F Headlamp - Right High Beam

Pin	Size	Color	Circuit	Function	Terminal Type ID	Option
A	1.5	BK	311	Right Headlamp High Beam Control	I	—
B	1.5	BK	1250	Ground	I	—

E4G Headlamp - Left Low Beam

—

Connector Part Information

Harness Type: Left Front Headlamp Assembly
OEM Connector: Not Available
Service Connector: Service by Harness - See Part Catalog
Description: 2 <p01>-Way

Terminal Part Information

Terminal Type ID	Terminated Lead	Diagnostic Test Probe	Terminal Removal Tool
I	Not Available	No Tool Required	Not Available

E4G Headlamp - Left Low Beam

Pin	Size	Color	Circuit	Function	Terminal Type ID	Option
1	1.5	BK	712	Left Headlamp Low Beam Control	I	—
2	1.5	BK	1150	Ground	I	—

E4H Headlamp - Right Low Beam

—

Connector Part Information

Harness Type: Right Front Headlamp Assembly
OEM Connector: Not Available
Service Connector: Service by Harness - See Part Catalog
Description: 2 <p01>-Way

Terminal Part Information

Terminal Type ID	Terminated Lead	Diagnostic Test Probe	Terminal Removal Tool
I	Not Available	No Tool Required	Not Available

E4H Headlamp - Right Low Beam

Pin	Size	Color	Circuit	Function	Terminal Type ID	Option
1	1.5	BK	1250	Ground	I	—
2	1.5	BK	312	Right Headlamp Low Beam Control	I	—

E4J Park Lamp - Left Front

—

Connector Part Information

Harness Type: Left Front Headlamp Assembly
OEM Connector: Not Available
Service Connector: Service by Harness - See Part Catalog
Description: 2 <p01>-Way

Terminal Part Information

Terminal Type ID	Terminated Lead	Diagnostic Test Probe	Terminal Removal Tool
I	Not Available	No Tool Required	Not Available

E4J Park Lamp - Left Front

Pin	Size	Color	Circuit	Function	Terminal Type ID	Option
A	0.75	RD	709	Left Park Lamp Control	I	—
B	0.75	BK	1150	Ground	I	—

E4K Park Lamp - Right Front (X88)

—

Connector Part Information

Harness Type: Right Front Headlamp Assembly
OEM Connector: Not Available
Service Connector: Service by Harness - See Part Catalog
Description: 2 <p01>-Way

Terminal Part Information

Terminal Type ID	Terminated Lead	Diagnostic Test Probe	Terminal Removal Tool
I	Not Available	No Tool Required	Not Available

E4K Park Lamp - Right Front (X88)

Pin	Size	Color	Circuit	Function	Terminal Type ID	Option
A	0.75	RD	309	Right Park Lamp Control	I	—
B	0.75	BK	1250	Ground	I	—

E4N Park/Turn Signal Lamp - Left

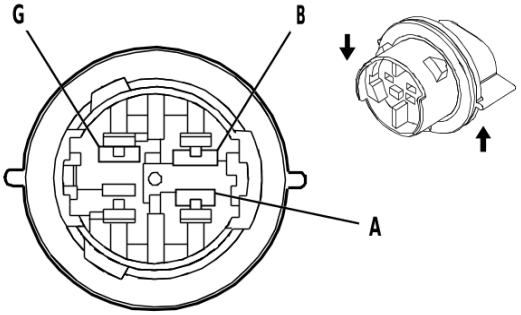

1717007

Connector Part Information

Harness Type: Left Front Headlamp Assembly
OEM Connector: 16530873
Service Connector: Service by Harness - See Part Catalog
Description: 3 <p01>-Way F Wedge Base Lamp Socket, Type W-3(BK)

Terminal Part Information

Terminal Type ID	Terminated Lead	Diagnostic Test Probe	Terminal Removal Tool
I	Not Available	No Tool Required	Not Available

E4N Park/Turn Signal Lamp - Left

Pin	Size	Color	Circuit	Function	Terminal Type ID	Option
A	0.75	YE	1314	Left Front Turn Signal Lamp Control	I	—
B	0.75	BK	709	Left Park Lamp Control	I	—
G	0.75	BK	1150	Ground	I	—

E4P Park/Turn Signal Lamp - Right

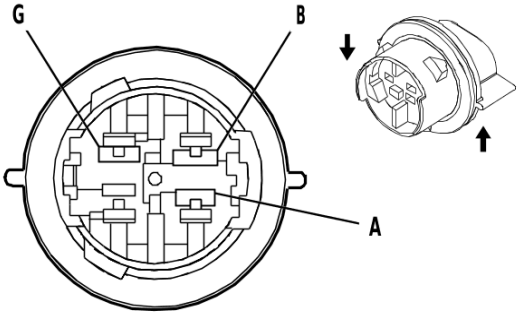

1717007

Connector Part Information

Harness Type: Right Front Headlamp Assembly
OEM Connector: 16530873
Service Connector: Service by Harness - See Part Catalog
Description: 3 <p01>-Way F Wedge Base Lamp Socket, Type W-3(BK)

Terminal Part Information

Terminal Type ID	Terminated Lead	Diagnostic Test Probe	Terminal Removal Tool
I	Not Available	No Tool Required	Not Available

E4P Park/Turn Signal Lamp - Right

Pin	Size	Color	Circuit	Function	Terminal Type ID	Option
A	0.75	YE	1315	Right Front Turn Signal Lamp Control	I	—
B	0.75	BK	309	Right Park Lamp Control	I	—
G	0.75	BK	1250	Ground	I	—

E5A Backup Lamp - Left

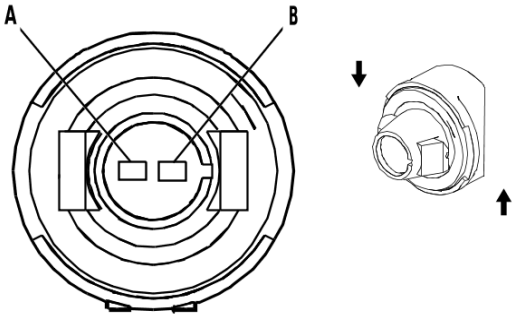

877923

Connector Part Information

Harness Type: Left Tail Lamp
OEM Connector: 16530675
Service Connector: Service by Harness - See Part Catalog
Description: 2 <p01>-Way F (L-GY)

Terminal Part Information

Terminal Type ID	Terminated Lead	Diagnostic Test Probe	Terminal Removal Tool
I	Not Available	No Tool Required	Not Available

E5A Backup Lamp - Left

Pin	Size	Color	Circuit	Function	Terminal Type ID	Option
A	—	YE	24	Backup Lamp Control	I	—
B	—	BK	750	Ground	I	—

E5AG Tail/Stop and Turn Signal Lamp - Left Upper

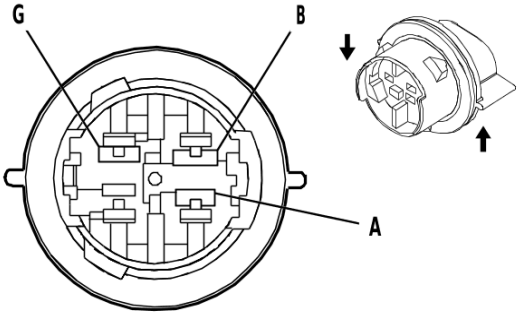

1717007

Connector Part Information

Harness Type: Left Tail Lamp
OEM Connector: 16530873
Service Connector: Service by Harness - See Part Catalog
Description: 3 <p01>-Way F Wedge Base Lamp Socket, Type W-3(BK)

Terminal Part Information

Terminal Type ID	Terminated Lead	Diagnostic Test Probe	Terminal Removal Tool
I	Not Available	No Tool Required	Not Available

E5AG Tail/Stop and Turn Signal Lamp - Left Upper

Pin	Size	Color	Circuit	Function	Terminal Type ID	Option
A	—	GY	7542	Left Rear Stop Lamp Control	I	—
B	—	OG	2509	Left Rear Park Lamp Control	I	—
G	—	BK	750	Ground	I	—

E5AH Tail/Stop and Turn Signal Lamp - Right Upper

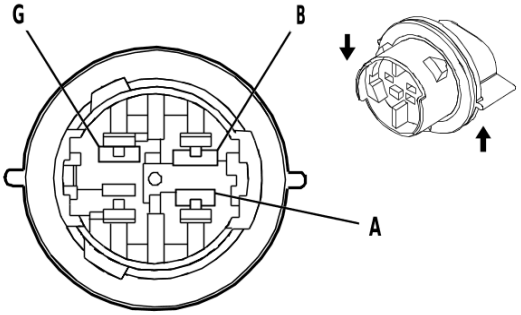

1717007

Connector Part Information

Harness Type: Right Tail Lamp
OEM Connector: 16530873
Service Connector: Service by Harness - See Part Catalog
Description: 3 <p01>-Way F Wedge Base Lamp Socket, Type W-3(BK)

Terminal Part Information

Terminal Type ID	Terminated Lead	Diagnostic Test Probe	Terminal Removal Tool
I	Not Available	No Tool Required	Not Available

E5AH Tail/Stop and Turn Signal Lamp - Right Upper

Pin	Size	Color	Circuit	Function	Terminal Type ID	Option
A	—	GY	7541	Right Rear Stop Lamp Control	I	—
B	—	OG	4609	Audio Request Signal	I	—
G	—	BK	850	Ground	I	—

E5B Backup Lamp - Right

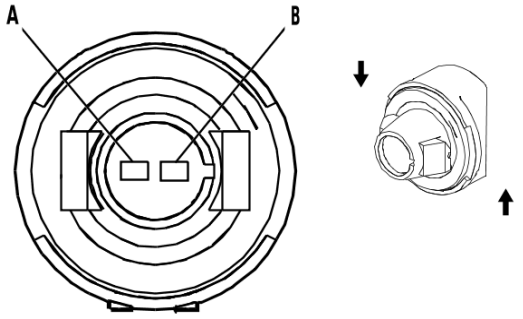

877923

Connector Part Information

Harness Type: Right Tail Lamp
OEM Connector: 16530675
Service Connector: Service by Harness - See Part Catalog
Description: 2 <p01>-Way F (L-GY)

Terminal Part Information

Terminal Type ID	Terminated Lead	Diagnostic Test Probe	Terminal Removal Tool
I	Not Available	No Tool Required	Not Available

E5B Backup Lamp - Right

Pin	Size	Color	Circuit	Function	Terminal Type ID	Option
A	—	YE	24	Backup Lamp Control	I	—
B	—	BK	850	Ground	I	—

E5U Tail/Stop and Turn Signal Lamp - Left Lower

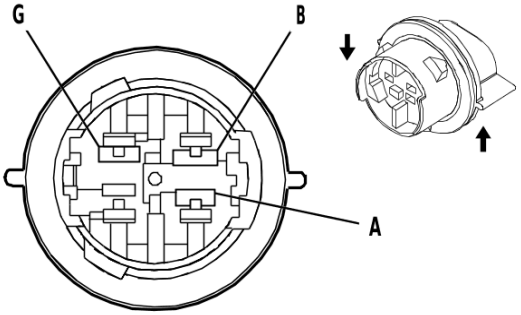

1717007

Connector Part Information

Harness Type: Left Tail Lamp
OEM Connector: 16530873
Service Connector: Service by Harness - See Part Catalog
Description: 3 <p01>-Way F Wedge Base Lamp Socket, Type W-3(BK)

Terminal Part Information

Terminal Type ID	Terminated Lead	Diagnostic Test Probe	Terminal Removal Tool
I	Not Available	No Tool Required	Not Available

E5U Tail/Stop and Turn Signal Lamp - Left Lower

Pin	Size	Color	Circuit	Function	Terminal Type ID	Option
A	—	GY	7542	Left Rear Stop Lamp Control	I	—
B	—	OG	2509	Left Rear Park Lamp Control	I	—
G	—	BK	750	Ground	I	—

E5V Tail/Stop and Turn Signal Lamp - Right Lower

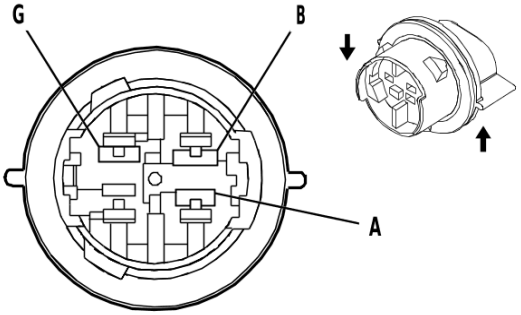

1717007

Connector Part Information

Harness Type: Right Tail Lamp
OEM Connector: 16530873
Service Connector: Service by Harness - See Part Catalog
Description: 3 <p01>-Way F Wedge Base Lamp Socket, Type W-3(BK)

Terminal Part Information

Terminal Type ID	Terminated Lead	Diagnostic Test Probe	Terminal Removal Tool
I	Not Available	No Tool Required	Not Available

E5V Tail/Stop and Turn Signal Lamp - Right Lower

Pin	Size	Color	Circuit	Function	Terminal Type ID	Option
A	—	GY	7541	Right Rear Stop Lamp Control	I	—
B	—	OG	4609	Audio Request Signal	I	—
G	—	BK	850	Ground	I	—

E7L License Plate Lamp - Left

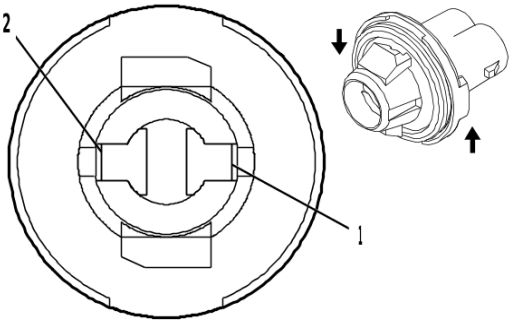

5153536

Connector Part Information

Harness Type: Rear License Plate Lamp Wiring Harness
OEM Connector: 15324946
Service Connector: Service by Harness - See Part Catalog
Description: 2 <p01>-Way F Lamp Socket Wedge Base, Type W-2(D-GY)

Terminal Part Information

Terminal Type ID	Terminated Lead	Diagnostic Test Probe	Terminal Removal Tool
I	Not required	No Tool Required	No Tool Required

E7L License Plate Lamp - Left

Pin	Size	Color	Circuit	Function	Terminal Type ID	Option
1	0.5	GN / YE	6846	Rear License Plate Lamp Control	I	—
2	0.5	BK	750	Ground	I	—

E7R License Plate Lamp - Right

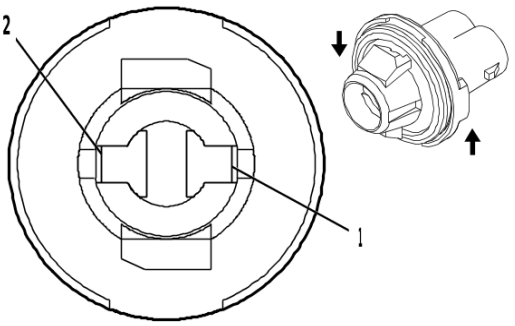

5153536

Connector Part Information

Harness Type: Rear License Plate Lamp Wiring Harness
OEM Connector: 15324946
Service Connector: Service by Harness - See Part Catalog
Description: 2 <p01>-Way F Lamp Socket Wedge Base, Type W-2(D-GY)

Terminal Part Information

Terminal Type ID	Terminated Lead	Diagnostic Test Probe	Terminal Removal Tool
I	Not required	No Tool Required	No Tool Required

E7R License Plate Lamp - Right

Pin	Size	Color	Circuit	Function	Terminal Type ID	Option
1	0.5	GN / YE	6846	Rear License Plate Lamp Control	I	—
2	0.5	BK	750	Ground	I	—

E11 Fuel Heater

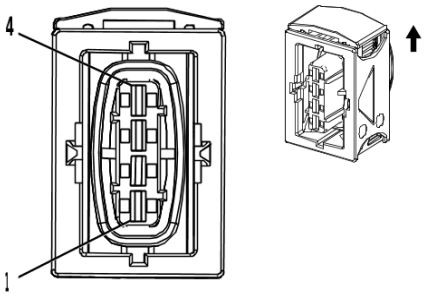

2470480

Connector Part Information

Harness Type: Chassis Wiring Harness
OEM Connector: 15397339
Service Connector: 19368722
Description: 4 <p01>-Way F 2.8 Junior Power Timer Series, Sealed(BK)

Terminal Part Information

Terminal Type ID	Terminated Lead	Diagnostic Test Probe	Terminal Removal Tool
I	Not required	J-35616-35 (VT)	No Tool Required

E11 Fuel Heater

Pin	Size	Color	Circuit	Function	Terminal Type ID	Option
1	0.5	BN / GY	7072	Fuel Temperature Sensor 1 Signal	I	—
2	0.5	BN / WH	7073	Fuel Temperature Sensor 1 Low Reference	I	—
3	2.5	BK	1950	Ground	I	—
4	2.5	BU / GN	7071	Fuel Heater Control	I	—

E12A Glow Plug 1 (LWN)

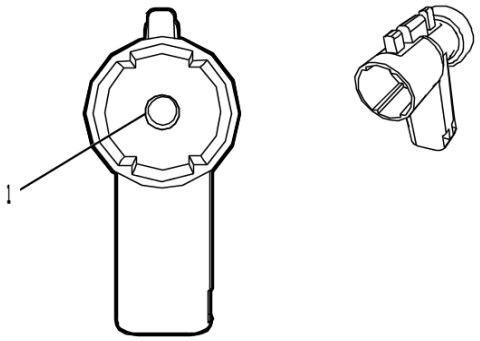

2323611

Connector Part Information

Harness Type: Diesel Glow Plug Wiring Harness
OEM Connector: 1928404878
Service Connector: Service by Cable Assembly - See Part Catalog
Description: 1 <p01>-Way F Glow Plug(BK)

Terminal Part Information

Terminal Type ID	Terminated Lead	Diagnostic Test Probe	Terminal Removal Tool
I	Not required	No Tool Required	No Tool Required

E12A Glow Plug 1 (LWN)

Pin	Size	Color	Circuit	Function	Terminal Type ID	Option
1	1.5	GN / BK	1581	Glow Plug 1 Control	I	—

E12B Glow Plug 2 (LWN)

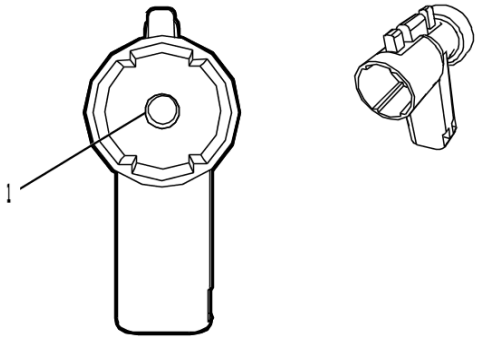

2323611

Connector Part Information

Harness Type: Diesel Glow Plug Wiring Harness
OEM Connector: 1928404878
Service Connector: Service by Cable Assembly - See Part Catalog
Description: 1 <p01>-Way F Glow Plug(BK)

Terminal Part Information

Terminal Type ID	Terminated Lead	Diagnostic Test Probe	Terminal Removal Tool
I	Not required	No Tool Required	No Tool Required

E12B Glow Plug 2 (LWN)

Pin	Size	Color	Circuit	Function	Terminal Type ID	Option
1	1.5	RD / BK	1582	Glow Plug 2 Control	I	—

E12C Glow Plug 3 (LWN)

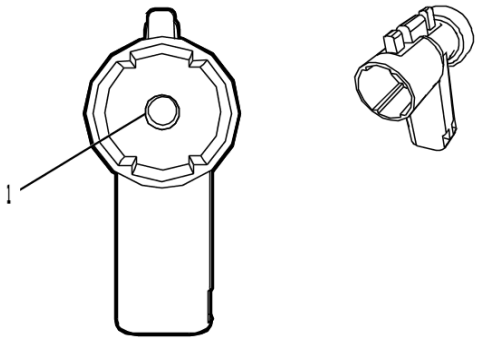

2323611

Connector Part Information

Harness Type: Diesel Glow Plug Wiring Harness
OEM Connector: 1928404878
Service Connector: Service by Cable Assembly - See Part Catalog
Description: 1 <p01>-Way F Glow Plug(BK)

Terminal Part Information

Terminal Type ID	Terminated Lead	Diagnostic Test Probe	Terminal Removal Tool
I	Not required	No Tool Required	No Tool Required

E12C Glow Plug 3 (LWN)

Pin	Size	Color	Circuit	Function	Terminal Type ID	Option
1	1.5	WH / BK	1583	Glow Plug 3 Control	I	—

E12D Glow Plug 4 (LWN)

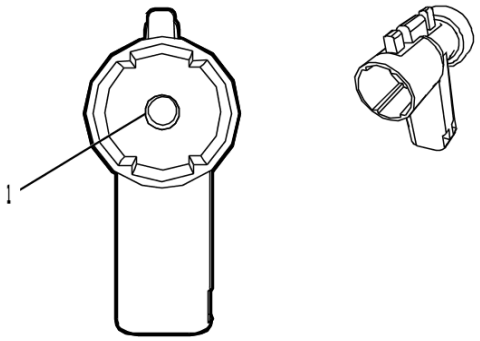

2323611

Connector Part Information

Harness Type: Diesel Glow Plug Wiring Harness
OEM Connector: 1928404878
Service Connector: Service by Cable Assembly - See Part Catalog
Description: 1 <p01>-Way F Glow Plug(BK)

Terminal Part Information

Terminal Type ID	Terminated Lead	Diagnostic Test Probe	Terminal Removal Tool
I	Not required	No Tool Required	No Tool Required

E12D Glow Plug 4 (LWN)

Pin	Size	Color	Circuit	Function	Terminal Type ID	Option
1	1.5	BK / <p01>	1584	Glow Plug 4 Control	I	—

E14A Seat Heating Element - Driver Back (KA1)

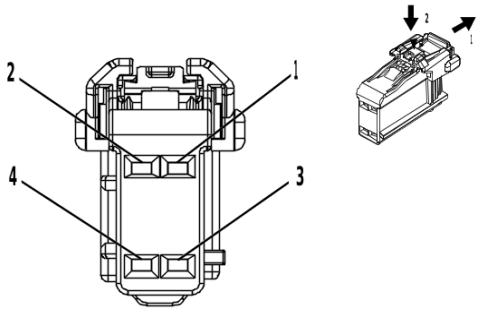

4539012

Connector Part Information

Harness Type: Driver Seat
OEM Connector: 13595575
Service Connector: Service by Harness - See Part Catalog
Description: 4 <p01>-Way F 1.2 Series(GY)

Terminal Part Information

Terminal Type ID	Terminated Lead	Diagnostic Test Probe	Terminal Removal Tool
I	Not Available	No Tool Required	Not Available

E14A Seat Heating Element - Driver Back (KA1)

Pin	Size	Color	Circuit	Function	Terminal Type ID	Option
1	0.75	BN	2432	Driver Seat Back Heating Element Control	I	—
2	0.75	BU	2425	Driver Seat Back Heating Temperature Sensor Signal	I	—
3	0.75	BK / YE	2080	Driver Heated Seat Thermistor Low Reference	I	—
4	0.75	VT / BK	2424	Driver Seat Back Heating Element Low Reference	I	—

E14B Seat Heating Element - Driver Cushion (KA1)

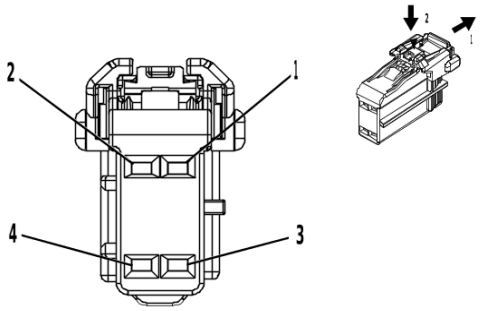

4115727

Connector Part Information

Harness Type: Driver Seat
OEM Connector: 13595574
Service Connector: Service by Harness - See Part Catalog
Description: 4 <p01>-Way F 1.2 Series(BK)

Terminal Part Information

Terminal Type ID	Terminated Lead	Diagnostic Test Probe	Terminal Removal Tool
I	Not Available	No Tool Required	Not Available

E14B Seat Heating Element - Driver Cushion (KA1)

Pin	Size	Color	Circuit	Function	Terminal Type ID	Option
1	0.75	BN / VT	2077	Driver Seat Heating Element Control	I	—
2	0.75	YE / GY	2079	Driver Seat Heating Temperature Sensor Signal	I	—
3	0.75	BK / YE	2080	Driver Heated Seat Thermistor Low Reference	I	—
4	0.75	VT / BK	2424	Driver Seat Back Heating Element Low Reference	I	—

E14C Seat Heating Element - Passenger Back (KA1)

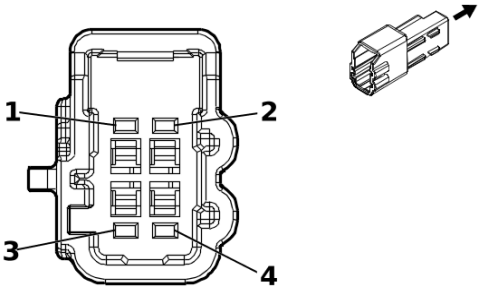

5396241

Connector Part Information

Harness Type: Passenger Seat
OEM Connector: 13595573
Service Connector: Service by Harness - See Part Catalog
Description: 4 <p01>-Way M 1.2 Series(GY)

Terminal Part Information

Terminal Type ID	Terminated Lead	Diagnostic Test Probe	Terminal Removal Tool
I	Not Available	No Tool Required	Not Available

E14C Seat Heating Element - Passenger Back (KA1)

Pin	Size	Color	Circuit	Function	Terminal Type ID	Option
1	0.75	WH / BN	2481	Passenger Seat Back Heating Element Control	I	—
2	0.75	WH / BU	2436	Passenger Seat Back Heating Temperature Sensor Signal	I	—
3	0.75	BK / GN	2482	Passenger Heated Back Thermistor Low Reference	I	—
4	0.75	BK	2480	Passenger Seat Heating Element Low Reference	I	—

E14D Seat Heating Element - Passenger Cushion (KA1)

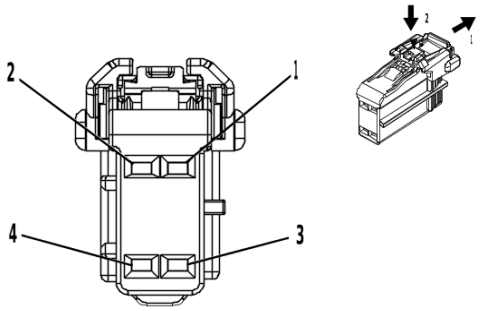

4115727

Connector Part Information

Harness Type: Passenger Seat
OEM Connector: 13595574
Service Connector: Service by Harness - See Part Catalog
Description: 4 <p01>-Way F 1.2 Series(BK)

Terminal Part Information

Terminal Type ID	Terminated Lead	Diagnostic Test Probe	Terminal Removal Tool
I	Not Available	No Tool Required	Not Available

E14D Seat Heating Element - Passenger Cushion (KA1)

Pin	Size	Color	Circuit	Function	Terminal Type ID	Option
1	0.75	BN / BU	2479	Passenger Seat Heating Element Control	I	—
2	0.75	WH / GY	2434	Passenger Seat Heating Temperature Sensor Signal	I	—
3	0.75	GY / BK	2435	Passenger Heated Seat Thermistor Low Reference	I	—
4	0.75	GY / BK	2480	Passenger Seat Heating Element Low Reference	I	—

E18L Rear Defogger Grid - Left X2

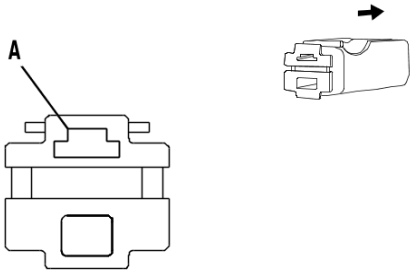

4248834

Connector Part Information

Harness Type: Body Wiring Harness
OEM Connector: 7123-5014-30
Service Connector: Service by Harness - See Part Catalog
Description: 1 <p01>-Way F 250 Series(BK)

Terminal Part Information

Terminal Type ID	Terminated Lead	Diagnostic Test Probe	Terminal Removal Tool
I	Not Available	No Tool Required	Not Available

E18L Rear Defogger Grid - Left X2

Pin	Size	Color	Circuit	Function	Terminal Type ID	Option
A	—	BK	3950	Ground	I	—

E18R Rear Defogger Grid - Right X1

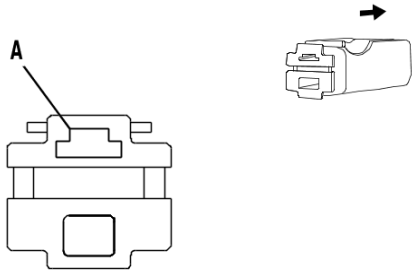

4248834

Connector Part Information

Harness Type: Body Wiring Harness
OEM Connector: 7123-5014-30
Service Connector: 19367647
Description: 1 <p01>-Way F 250 Series(BK)

Terminal Part Information

Terminal Type ID	Terminated Lead	Diagnostic Test Probe	Terminal Removal Tool
I	Not required	J-35616-42 (RD)	No Tool Required

E18R Rear Defogger Grid - Right X1

Pin	Size	Color	Circuit	Function	Terminal Type ID	Option
A	2.5	BN / VT	293	Rear Defogger Grid Control	I	—

E18R Rear Defogger Grid - Right X2

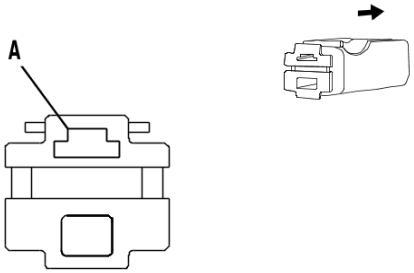

4248834

Connector Part Information

Harness Type: Body Wiring Harness
OEM Connector: 7123-5014-30
Service Connector: 19367647
Description: 1 <p01>-Way F 250 Series(BK)

Terminal Part Information

Terminal Type ID	Terminated Lead	Diagnostic Test Probe	Terminal Removal Tool
I	Not required	J-35616-18 (BK)	No Tool Required

E18R Rear Defogger Grid - Right X2

Pin	Size	Color	Circuit	Function	Terminal Type ID	Option
A	4	BK	3950	Ground	I	—

E29LF Fog Lamp - Left Front (T3U+ULV)

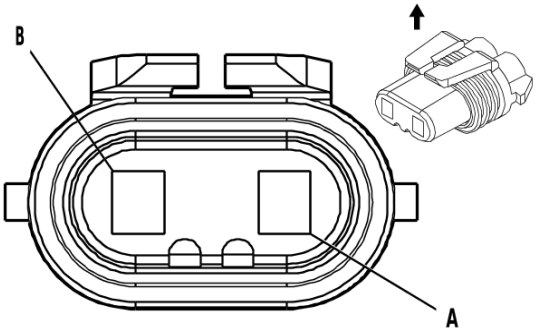

684797

Connector Part Information

Harness Type: Forward Lamp Wiring Harness
OEM Connector: 12059183
Service Connector: 12101898
Description: 2 <p01>-Way F 280 Metri-Pack Series, Sealed(BK)

Terminal Part Information

Terminal Type ID	Terminated Lead	Diagnostic Test Probe	Terminal Removal Tool
I	Not required	J-35616-4A (PU)	No Tool Required

E29LF Fog Lamp - Left Front (T3U+ULV)

Pin	Size	Color	Circuit	Function	Terminal Type ID	Option
A	0.75	BN / VT	2234	Front Fog Lamp Control	I	—
B	0.75	BK	1150	Ground	I	—

E29LF Fog Lamp - Left Front (-T3U-ULV)

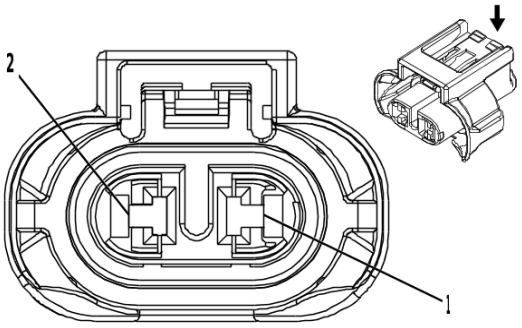

3404058

Connector Part Information

Harness Type: Forward Lamp Wiring Harness
OEM Connector: 13818129
Service Connector: 19332000
Description: 2 <p01>-Way F 2.8 APEX Series, Sealed(BK)

Terminal Part Information

Terminal Type ID	Terminated Lead	Diagnostic Test Probe	Terminal Removal Tool
I	Not required	J-35616-35 (VT)	No Tool Required

E29LF Fog Lamp - Left Front (-T3U-ULV)

Pin	Size	Color	Circuit	Function	Terminal Type ID	Option
1	1.5	BN / GY	5061	Left Front Fog Lamp Control	I	—
2	1.5	BK	1150	Ground	I	—

E29LF Fog Lamp - Left Front (T3U-ULV)

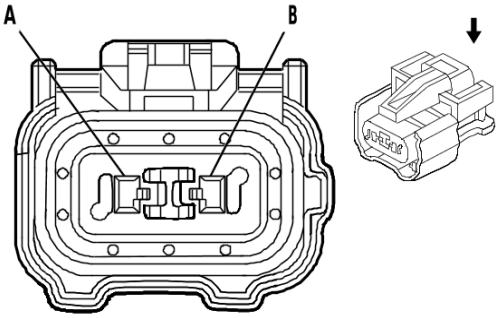

1862046

Connector Part Information

Harness Type: Forward Lamp Wiring Harness
OEM Connector: 13513272
Service Connector: 19369113
Description: 2 <p01>-Way F 150 GT Series, Sealed(NA)

Terminal Part Information

Terminal Type ID	Terminated Lead	Diagnostic Test Probe	Terminal Removal Tool
I	Not required	J-35616-2A (GY)	No Tool Required

E29LF Fog Lamp - Left Front (T3U-ULV)

Pin	Size	Color	Circuit	Function	Terminal Type ID	Option
A	0.75	BN / VT	2234	Front Fog Lamp Control	I	—
B	0.75	BK	1150	Ground	I	—

E29RF Fog Lamp - Right Front (T3U+ULV)

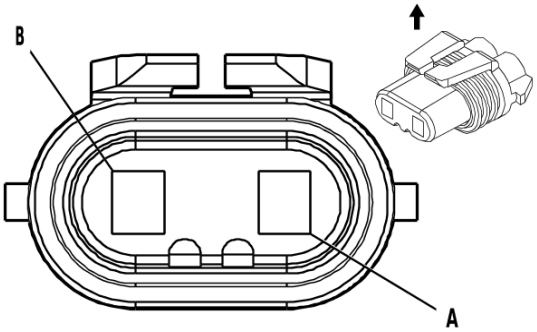

684797

Connector Part Information

Harness Type: Forward Lamp Wiring Harness
OEM Connector: 12059183
Service Connector: 12101898
Description: 2 <p01>-Way F 280 Metri-Pack Series, Sealed(BK)

Terminal Part Information

Terminal Type ID	Terminated Lead	Diagnostic Test Probe	Terminal Removal Tool
I	Not required	J-35616-4A (PU)	No Tool Required

E29RF Fog Lamp - Right Front (T3U+ULV)

Pin	Size	Color	Circuit	Function	Terminal Type ID	Option
A	0.75	BN / VT	2234	Front Fog Lamp Control	I	—
B	0.75	BK	1250	Ground	I	—

E29RF Fog Lamp - Right Front (-T3U-ULV)

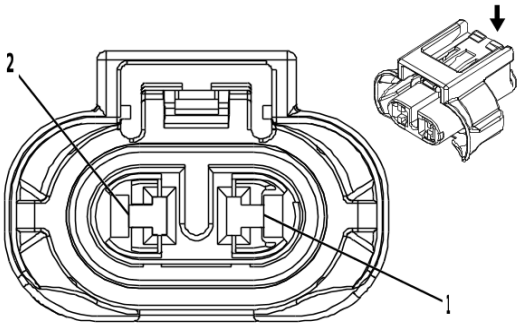

3404058

Connector Part Information

Harness Type: Forward Lamp Wiring Harness
OEM Connector: 13818129
Service Connector: 19332000
Description: 2 <p01>-Way F 2.8 APEX Series, Sealed(BK)

Terminal Part Information

Terminal Type ID	Terminated Lead	Diagnostic Test Probe	Terminal Removal Tool
I	Not required	J-35616-35 (VT)	No Tool Required

E29RF Fog Lamp - Right Front (-T3U-ULV)

Pin	Size	Color	Circuit	Function	Terminal Type ID	Option
1	1.5	BN / GN	5062	Right Front Fog Lamp Control	I	—
2	1.5	BK	1250	Ground	I	—

E29RF Fog Lamp - Right Front (T3U-ULV)

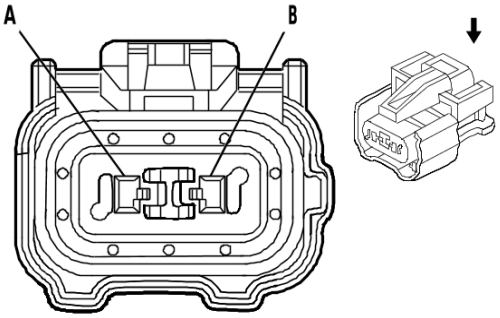

1862046

Connector Part Information

Harness Type: Forward Lamp Wiring Harness
OEM Connector: 13513272
Service Connector: 19369113
Description: 2 <p01>-Way F 150 GT Series, Sealed(NA)

Terminal Part Information

Terminal Type ID	Terminated Lead	Diagnostic Test Probe	Terminal Removal Tool
I	Not required	J-35616-2A (GY)	No Tool Required

E29RF Fog Lamp - Right Front (T3U-ULV)

Pin	Size	Color	Circuit	Function	Terminal Type ID	Option
A	0.75	BN / VT	2234	Front Fog Lamp Control	I	—
B	0.75	BK	1250	Ground	I	—

E31L Sunshade Mirror Lamp - Left

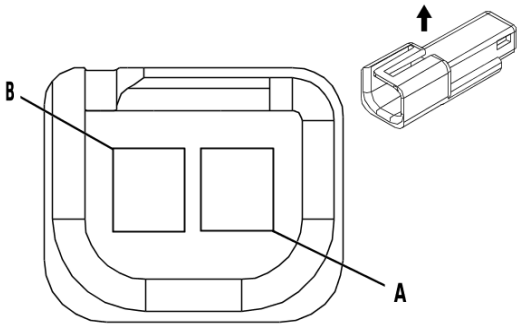

35441

Connector Part Information

Harness Type: Headliner Wiring Harness
OEM Connector: 12047663
Service Connector: 13584278
Description: 2 <p01>-Way M 150 Metri-Pack Series(BK)

Terminal Part Information

Terminal Type ID	Terminated Lead	Diagnostic Test Probe	Terminal Removal Tool
I	Not required	J-35616-3 (GY)	No Tool Required

E31L Sunshade Mirror Lamp - Left

Pin	Size	Color	Circuit	Function	Terminal Type ID	Option
A	0.5	WH / BN	6815	Inadvertent Load Control	I	—
B	0.5	BK	3150	Ground	I	—

E31R Sunshade Mirror Lamp - Right

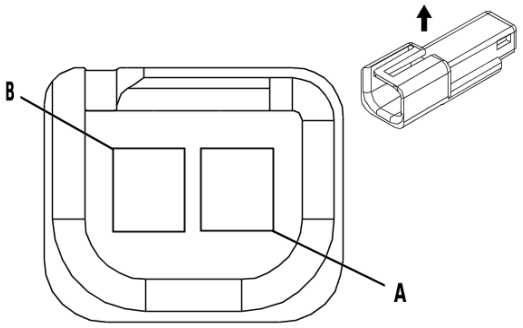

35441

Connector Part Information

Harness Type: Headliner Wiring Harness
OEM Connector: 12047663
Service Connector: 13584278
Description: 2 <p01>-Way M 150 Metri-Pack Series(BK)

Terminal Part Information

Terminal Type ID	Terminated Lead	Diagnostic Test Probe	Terminal Removal Tool
I	Not required	J-35616-3 (GY)	No Tool Required

E31R Sunshade Mirror Lamp - Right

Pin	Size	Color	Circuit	Function	Terminal Type ID	Option
A	0.5	WH / BN	6815	Inadvertent Load Control	I	—
B	0.5	BK	3150	Ground	I	—

E32 Cigarette Lighter Receptacle

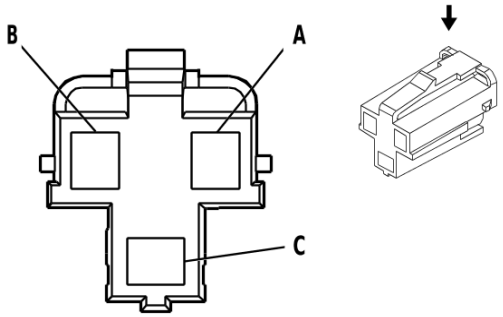

362748

Connector Part Information

Harness Type: Front Floor Console Wiring Harness
OEM Connector: Floor Console
Service Connector: Service by Harness - See Part Catalog
Description: 2 <p01>-Way

Terminal Part Information

Terminal Type ID	Terminated Lead	Diagnostic Test Probe	Terminal Removal Tool
I	Not Available	No Tool Required	Not Available

E32 Cigarette Lighter Receptacle

Pin	Size	Color	Circuit	Function	Terminal Type ID	Option
A	—	VT	1701	Retained Accessory Power Control	I	—
B	—	—	—	Not Occupied	—	—
C	—	BK	2050	Ground	I	—

E33L Cargo Lamp - Left (S0Y)

—

Connector Part Information

Harness Type: Center High Mounted Stop Lamp
OEM Connector: Not Available
Service Connector: Service by Harness - See Part Catalog
Description: 3 <p01>-Way

Terminal Part Information

Terminal Type ID	Terminated Lead	Diagnostic Test Probe	Terminal Removal Tool
I	Not Available	No Tool Required	Not Available

E33L Cargo Lamp - Left (S0Y)

Pin	Size	Color	Circuit	Function	Terminal Type ID	Option
A	0.75	WH / VT	1430	Exterior Courtesy Lamp Control	I	—
B	0.75	BK / WH	751	Signal Ground	I	—

E33R Cargo Lamp - Right (S0Y)

—

Connector Part Information

Harness Type: Center High Mounted Stop Lamp
OEM Connector: Not Available
Service Connector: Service by Harness - See Part Catalog
Description: 3 <p01>-Way

Terminal Part Information

Terminal Type ID	Terminated Lead	Diagnostic Test Probe	Terminal Removal Tool
I	Not Available	No Tool Required	Not Available

E33R Cargo Lamp - Right (S0Y)

Pin	Size	Color	Circuit	Function	Terminal Type ID	Option
A	0.75	WH / VT	1430	Exterior Courtesy Lamp Control	I	—
B	0.75	BK / WH	751	Signal Ground	I	—

E36AH Dome Lamp (TCA)

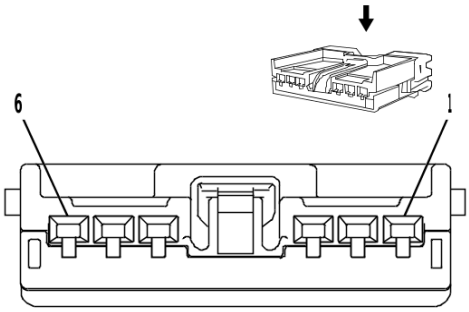

2180199

Connector Part Information

Harness Type: Roof Wiring Harness
OEM Connector: 6098-5985
Service Connector: 13576538
Description: 6 <p01>-Way F 1.5 Series(BK)

Terminal Part Information

Terminal Type ID	Terminated Lead	Diagnostic Test Probe	Terminal Removal Tool
I	Not Available	No Tool Required	Not Available

E36AH Dome Lamp (TCA)

Pin	Size	Color	Circuit	Function	Terminal Type ID	Option
1	—	—	—	Not Occupied	—	—
2	0.5	GY	157	Interior Lamp Control	I	—
3	—	—	—	Not Occupied	—	—
4	0.35	GY / GN	328	Interior Lamp Defeat Switch Signal	I	—
5	0.35	GY	156	Courtesy Lamp Switch Signal	I	—
6	0.5	BK	3150	Ground	I	—

E37F Dome/Reading Lamps - Front

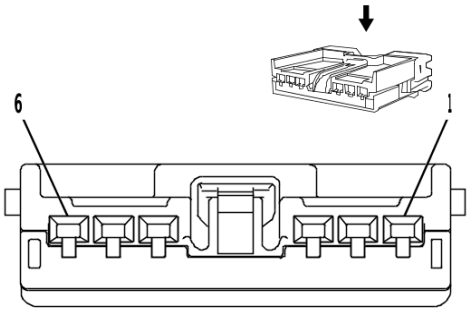

2180199

Connector Part Information

Harness Type: Headliner Wiring Harness
OEM Connector: 6098-5985
Service Connector: 13576538
Description: 6 <p01>-Way F 1.5 Series(BK)

Terminal Part Information

Terminal Type ID	Terminated Lead	Diagnostic Test Probe	Terminal Removal Tool
I	Not required	J-35616-2A (GY)	No Tool Required

E37F Dome/Reading Lamps - Front

Pin	Size	Color	Circuit	Function	Terminal Type ID	Option
1	0.5	WH / BN	6815	Inadvertent Load Control	I	—
2	0.5	GY	157	Interior Lamp Control	I	—
3	0.5	YE	6817	LED Backlight Dimming Control 1	I	—
4	0.35	GY / GN	328	Interior Lamp Defeat Switch Signal	I	—
5	0.35	GY	156	Courtesy Lamp Switch Signal	I	—
6	0.5	BK	3150	Ground	I	—

E37R Dome/Reading Lamps - Rear

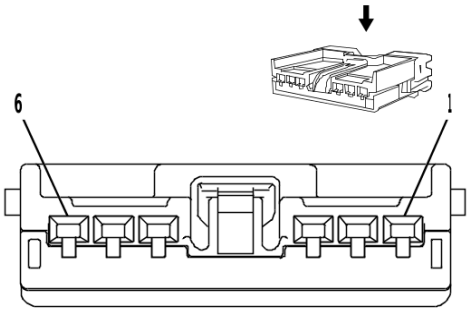

2180199

Connector Part Information

Harness Type: Headliner Wiring Harness
OEM Connector: 6098-5985
Service Connector: 13576538
Description: 6 <p01>-Way F 1.5 Series(BK)

Terminal Part Information

Terminal Type ID	Terminated Lead	Diagnostic Test Probe	Terminal Removal Tool
I	Not required	J-35616-2A (GY)	No Tool Required

E37R Dome/Reading Lamps - Rear

Pin	Size	Color	Circuit	Function	Terminal Type ID	Option
1	0.5	WH / BN	6815	Inadvertent Load Control	I	—
2	0.5	GY	157	Interior Lamp Control	I	—
3 - 5	—	—	—	Not Occupied	—	—
6	0.5	BK	3150	Ground	I	—

E40 Electrical Auxiliary Heater X1

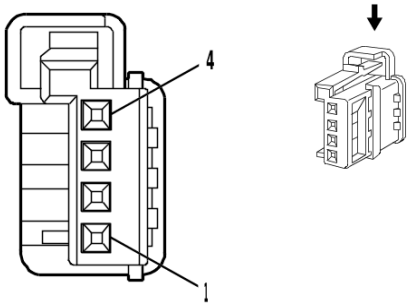

2179793

Connector Part Information

Harness Type: Instrument Panel Wiring Harness
OEM Connector: 1379029-1
Service Connector: 84724190
Description: 4 <p01>-Way F 0.64 Micro-Quadlock Series(BK)

Terminal Part Information

Terminal Type ID	Terminated Lead	Diagnostic Test Probe	Terminal Removal Tool
I	Not required	J-35616-64B (LT BU)	No Tool Required

E40 Electrical Auxiliary Heater X1

Pin	Size	Color	Circuit	Function	Terminal Type ID	Option
1	0.5	VT	3195	Auxiliary Heater Control	I	—
2	0.35	VT / GY	539	Run/Crank Ignition 1 Voltage	I	—
3 - 4	—	—	—	Not Occupied	—	—

E40 Electrical Auxiliary Heater X2

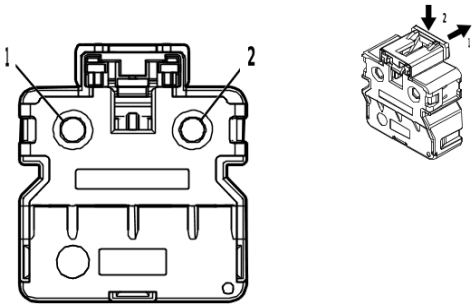

4322228

Connector Part Information

Harness Type: HVAC
OEM Connector: C380-10E106 241 2
Service Connector: Service by Harness - See Part Catalog
Description: 2 <p01>-Way F 3.6 HCC Series(BK)

Terminal Part Information

Terminal Type ID	Terminated Lead	Diagnostic Test Probe	Terminal Removal Tool
I	Not Available	No Tool Required	Not Available

E40 Electrical Auxiliary Heater X2

Pin	Size	Color	Circuit	Function	Terminal Type ID	Option
1	—	BK / GY	1350	Ground	I	—
2	—	RD / BU	4840	Battery Positive Voltage	I	—

E41 Engine Coolant Thermostat Heater

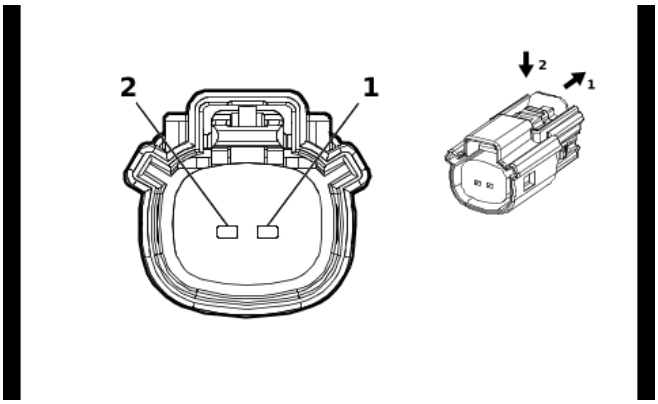

2474713

Connector Part Information

Harness Type: Engine Wiring Harness
OEM Connector: 33471-0206
Service Connector: 13577534
Description: 2 <p01>-Way F 1.5 Series, Sealed(BK)

Terminal Part Information

Terminal Type ID	Terminated Lead	Diagnostic Test Probe	Terminal Removal Tool
I	Not required	J-35616-14 (GN)	No Tool Required

E41 Engine Coolant Thermostat Heater

Pin	Size	Color	Circuit	Function	Terminal Type ID	Option
1	0.5	VT / BU	5293	Powertrain Main Relay Fused Supply Voltage 4	I	—
2	0.5	BU	6814	Engine Coolant Thermostat Heater Control	I	—

E45 Positive Crankcase Ventilation Heater

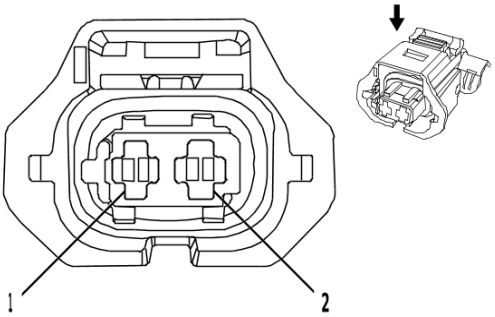

2231613

Connector Part Information

Harness Type: Engine Wiring Harness
OEM Connector: 13595623
Service Connector: 13355762
Description: 2 <p01>-Way F 2.8 ATS Series, Sealed(BK)

Terminal Part Information

Terminal Type ID	Terminated Lead	Diagnostic Test Probe	Terminal Removal Tool
I	Not required	J-35616-4A (PU)	No Tool Required

E45 Positive Crankcase Ventilation Heater

Pin	Size	Color	Circuit	Function	Terminal Type ID	Option
1	0.5	YE / BU	1497	Positive Crankcase Ventilation Heater Control	I	—
2	0.5	VT / BU	5293	Powertrain Main Relay Fused Supply Voltage 4	I	—

E52 Reductant Line Heater (LWN)

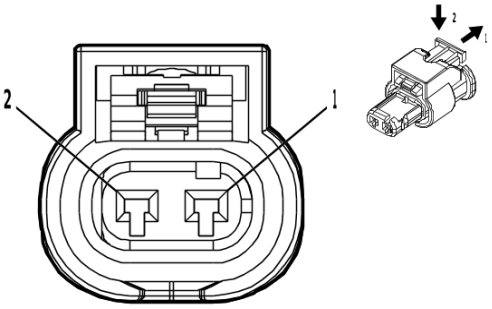

2698576

Connector Part Information

Harness Type: Emission Reduction Fluid Tank Reservoir Wire Harness
OEM Connector: 1-1823608-5
Service Connector: Service by Harness - See Part Catalog
Description: 2 <p01>-Way F 1.2 MCP Series, Sealed(BK)

Terminal Part Information

Terminal Type ID	Terminated Lead	Diagnostic Test Probe	Terminal Removal Tool
I	Not Available	No Tool Required	Not Available

E52 Reductant Line Heater (LWN)

Pin	Size	Color	Circuit	Function	Terminal Type ID	Option
1	1.0	VT	4319	Diesel Exhaust Fluid Line Heater Low Control	I	—
2	1.0	YE	3922	Diesel Exhaust Fluid Heater Supply 2	I	—

F101 Passenger Instrument Panel Air Bag X1

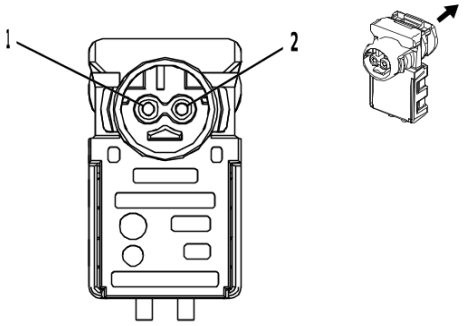

3214032

Connector Part Information

Harness Type: Instrument Panel Air Bag
OEM Connector: 13580454
Service Connector: Service by Harness - See Part Catalog
Description: 2 <p01>-Way F AK-2 Series(L-GN with YE Cover)

Terminal Part Information

Terminal Type ID	Terminated Lead	Diagnostic Test Probe	Terminal Removal Tool
I	Not Available	No Tool Required	Not Available

F101 Passenger Instrument Panel Air Bag X1

Pin	Size	Color	Circuit	Function	Terminal Type ID	Option
1	—	YE / OG	3025	Passenger Instrument Panel Air Bag Stage 1 High Control	I	—
2	—	OG / WH	3024	Passenger Instrument Panel Air Bag Stage 1 Low Control	I	—

F101 Passenger Instrument Panel Air Bag X2

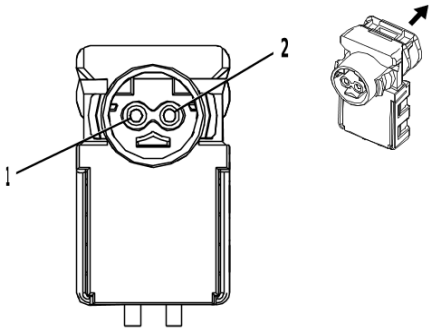

3214033

Connector Part Information

Harness Type: Instrument Panel Air Bag
OEM Connector: 13580453
Service Connector: Service by Harness - See Part Catalog
Description: 2 <p01>-Way F AK-2 Series(YE with YE Cover)

Terminal Part Information

Terminal Type ID	Terminated Lead	Diagnostic Test Probe	Terminal Removal Tool
I	Not Available	No Tool Required	Not Available

F101 Passenger Instrument Panel Air Bag X2

Pin	Size	Color	Circuit	Function	Terminal Type ID	Option
1	—	GY	3027	Passenger Instrument Panel Air Bag Stage 2 High Control	I	—
2	—	OG / VT	3026	Passenger Instrument Panel Air Bag Stage 2 Low Control	I	—

F101 Passenger Instrument Panel Air Bag X3

—

Connector Part Information

Harness Type: Instrument Panel Air Bag
OEM Connector: Not Available
Service Connector: Service by Harness - See Part Catalog
Description: 1 <p01>-Way

Terminal Part Information

Terminal Type ID	Terminated Lead	Diagnostic Test Probe	Terminal Removal Tool
I	Not Available	No Tool Required	Not Available

F101 Passenger Instrument Panel Air Bag X3

Pin	Size	Color	Circuit	Function	Terminal Type ID	Option
1	—	BK / WH	2051	Signal Ground	I	—

F105L Roof Rail Air Bag - Left

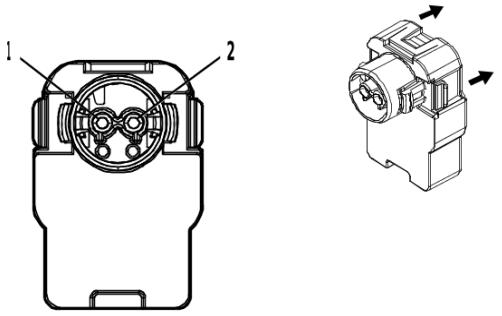

4823720

Connector Part Information

Harness Type: Body Wiring Harness
OEM Connector: 1-1801930-3
Service Connector: 13530533
Description: 2 <p01>-Way F 1.0 Series(GY with YE Cover)

Terminal Part Information

Terminal Type ID	Terminated Lead	Diagnostic Test Probe	Terminal Removal Tool
I	Not required	J-35616-16 (LT GN)	No Tool Required

F105L Roof Rail Air Bag - Left

Pin	Size	Color	Circuit	Function	Terminal Type ID	Option
1	0.5	OG / GN	5019	Left Front Roof Rail Air Bag High Control	I	—
2	0.5	VT / OG	5020	Left Front Roof Rail Air Bag Low Control	I	—

F105R Roof Rail Air Bag - Right

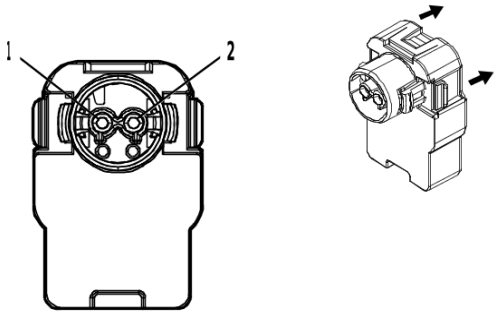

4823720

Connector Part Information

Harness Type: Body Wiring Harness
OEM Connector: 1-1801930-3
Service Connector: 13530533
Description: 2 <p01>-Way F 1.0 Series(GY with YE Cover)

Terminal Part Information

Terminal Type ID	Terminated Lead	Diagnostic Test Probe	Terminal Removal Tool
I	Not required	J-35616-16 (LT GN)	No Tool Required

F105R Roof Rail Air Bag - Right

Pin	Size	Color	Circuit	Function	Terminal Type ID	Option
1	0.5	OG / GY	5021	Right Front Roof Rail Air Bag High Control	I	—
2	0.5	WH / OG	5022	Right Front Roof Rail Air Bag Low Control	I	—

F106D Seat Side Air Bag - Driver

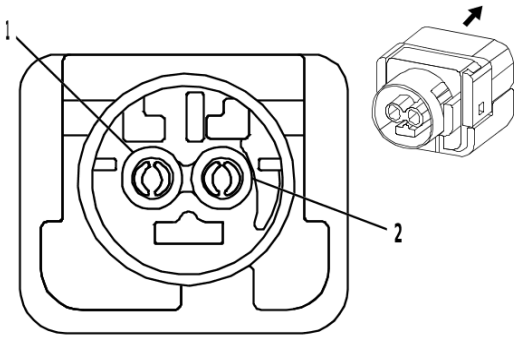

2231620

Connector Part Information

Harness Type: Driver Seat
OEM Connector: PPI0001142
Service Connector: Service by Harness - See Part Catalog
Description: 2 <p01>-Way F FPB 180-1 Series(BK with YE Cover)

Terminal Part Information

Terminal Type ID	Terminated Lead	Diagnostic Test Probe	Terminal Removal Tool
I	Not Available	No Tool Required	Not Available

F106D Seat Side Air Bag - Driver

Pin	Size	Color	Circuit	Function	Terminal Type ID	Option
1	0.5	OG / BU	3068	Driver Seat Side Air Bag High Control	I	—
2	0.5	GN / OG	3069	Driver Seat Side Air Bag Low Control	I	—

F106P Seat Side Air Bag - Passenger

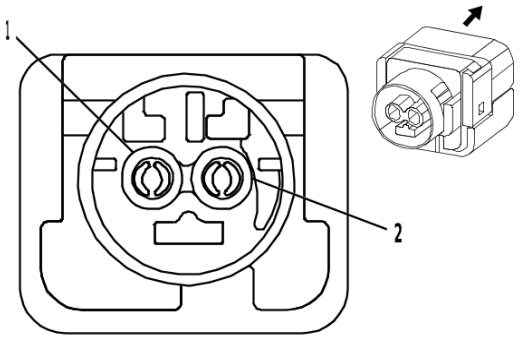

2231620

Connector Part Information

Harness Type: Passenger Seat
OEM Connector: PPI0001142
Service Connector: Service by Harness - See Part Catalog
Description: 2 <p01>-Way F FPB 180-1 Series(BK with YE Cover)

Terminal Part Information

Terminal Type ID	Terminated Lead	Diagnostic Test Probe	Terminal Removal Tool
I	Not Available	No Tool Required	Not Available

F106P Seat Side Air Bag - Passenger

Pin	Size	Color	Circuit	Function	Terminal Type ID	Option
1	0.5	OG / GY	3066	Passenger Seat Side Air Bag High Control	I	—
2	0.5	BN / OG	3067	Passenger Seat Side Air Bag Low Control	I	—

F107 Steering Wheel Air Bag X1

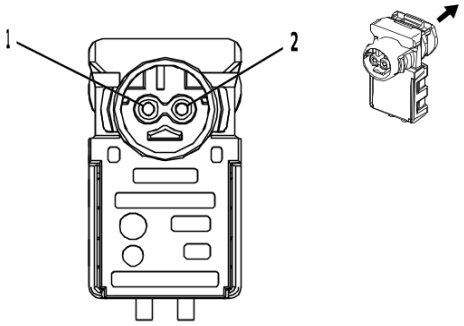

3214032

Connector Part Information

Harness Type: Steering Wheel Air Bag Coil
OEM Connector: 13580454
Service Connector: Service by Harness - See Part Catalog
Description: 2 <p01>-Way F AK-2 Series(L-GN with YE Cover)

Terminal Part Information

Terminal Type ID	Terminated Lead	Diagnostic Test Probe	Terminal Removal Tool
I	Not Available	No Tool Required	Not Available

F107 Steering Wheel Air Bag X1

Pin	Size	Color	Circuit	Function	Terminal Type ID	Option
1	0.5	TN	3020	Steering Wheel Air Bag Stage 1 Low Control	I	—
2	0.5	BN	3021	Steering Wheel Air Bag Stage 1 High Control	I	—

F107 Steering Wheel Air Bag X2

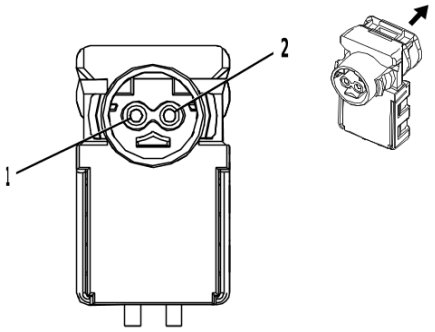

3214033

Connector Part Information

Harness Type: Steering Wheel Air Bag Coil
OEM Connector: 13580453
Service Connector: Service by Harness - See Part Catalog
Description: 2 <p01>-Way F AK-2 Series(YE with YE Cover)

Terminal Part Information

Terminal Type ID	Terminated Lead	Diagnostic Test Probe	Terminal Removal Tool
I	Not Available	No Tool Required	Not Available

F107 Steering Wheel Air Bag X2

Pin	Size	Color	Circuit	Function	Terminal Type ID	Option
1	0.35	WH	3022	Steering Wheel Air Bag Stage 2 Low Control	I	—
2	0.35	PK	3023	Steering Wheel Air Bag Stage 2 High Control	I	—

F112D Seat Belt Retractor Pretensioner - Driver (Crew Cab)

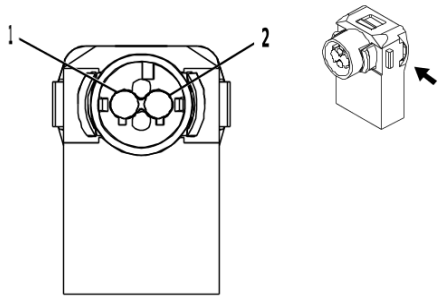

4241364

Connector Part Information

Harness Type: Body Wiring Harness
OEM Connector: 33345778
Service Connector: 19355490
Description: 2 <p01>-Way F ABX-5 Series(PU with YE Cover)

Terminal Part Information

Terminal Type ID	Terminated Lead	Diagnostic Test Probe	Terminal Removal Tool
I	Not required	J-35616-10 (GN)	No Tool Required

F112D Seat Belt Retractor Pretensioner - Driver (Crew Cab)

Pin	Size	Color	Circuit	Function	Terminal Type ID	Option
1	0.1	OG / WH	3477	Driver Seat Belt Retractor Pretensioner High Control	I	—
2	0.1	GY / OG	3478	Driver Seat Belt Retractor Pretensioner Low Control	I	—

F112D Seat Belt Retractor Pretensioner - Driver (Extended Cab)

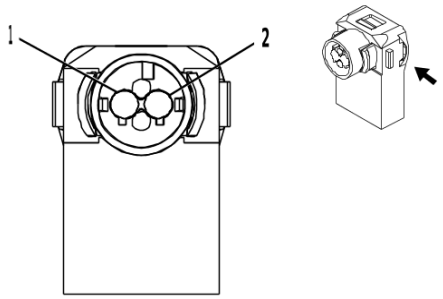

4241364

Connector Part Information

Harness Type: Rear Side Door Door Wiring Harness - Left
OEM Connector: 33345778
Service Connector: Service by Harness - See Part Catalog
Description: 2 <p01>-Way F ABX-5 Series(PU with YE Cover)

Terminal Part Information

Terminal Type ID	Terminated Lead	Diagnostic Test Probe	Terminal Removal Tool
I	Not required	J-35616-10 (GN)	No Tool Required

F112D Seat Belt Retractor Pretensioner - Driver (Extended Cab)

Pin	Size	Color	Circuit	Function	Terminal Type ID	Option
1	0.5	OG / WH	3477	Driver Seat Belt Retractor Pretensioner High Control	I	—
2	0.5	GY / OG	3478	Driver Seat Belt Retractor Pretensioner Low Control	I	—

F112P Seat Belt Retractor Pretensioner - Passenger (Crew Cab)

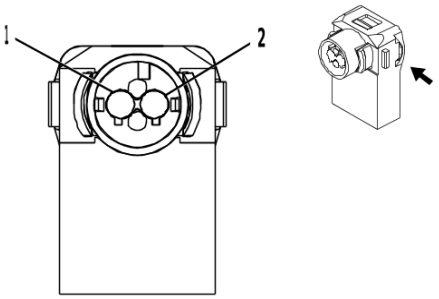

4241364

Connector Part Information

Harness Type: Body Wiring Harness
OEM Connector: 33345778
Service Connector: 19355490
Description: 2 <p01>-Way F ABX-5 Series(PU with YE Cover)

Terminal Part Information

Terminal Type ID	Terminated Lead	Diagnostic Test Probe	Terminal Removal Tool
I	Not required	J-35616-10 (GN)	No Tool Required

F112P Seat Belt Retractor Pretensioner - Passenger (Crew Cab)

Pin	Size	Color	Circuit	Function	Terminal Type ID	Option
1	0.1	OG / GN	3475	Passenger Seat Belt Retractor Pretensioner High Control	I	—
2	0.1	WH / OG	3476	Passenger Seat Belt Retractor Pretensioner Low Control	I	—

F112P Seat Belt Retractor Pretensioner - Passenger (Extended Cab)

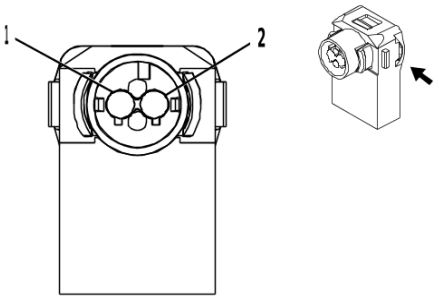

4241364

Connector Part Information

Harness Type: Rear Side Door Door Wiring Harness - Right
OEM Connector: 33345778
Service Connector: Service by Harness - See Part Catalog
Description: 2 <p01>-Way F ABX-5 Series(PU with YE Cover)

Terminal Part Information

Terminal Type ID	Terminated Lead	Diagnostic Test Probe	Terminal Removal Tool
I	Not required	J-35616-10 (GN)	No Tool Required

F112P Seat Belt Retractor Pretensioner - Passenger (Extended Cab)

Pin	Size	Color	Circuit	Function	Terminal Type ID	Option
1	0.5	OG / GN	3475	Passenger Seat Belt Retractor Pretensioner High Control	I	—
2	0.5	WH / OG	3476	Passenger Seat Belt Retractor Pretensioner Low Control	I	—

F113D Seat Belt Anchor Pretensioner - Driver

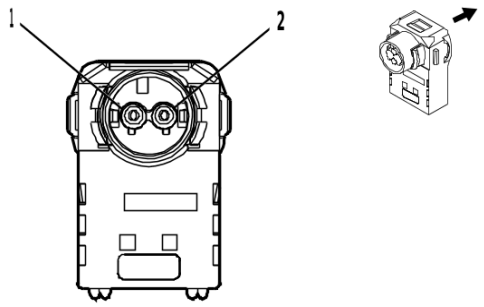

4231869

Connector Part Information

Harness Type: Rear Side Door Door Wiring Harness - Left
OEM Connector: 33345777
Service Connector: Service by Harness - See Part Catalog
Description: 2 <p01>-Way F ABX-5 Series(PK with YE Cover)

Terminal Part Information

Terminal Type ID	Terminated Lead	Diagnostic Test Probe	Terminal Removal Tool
I	Not required	J-35616-10 (GN)	No Tool Required

F113D Seat Belt Anchor Pretensioner - Driver

Pin	Size	Color	Circuit	Function	Terminal Type ID	Option
1	0.5	OG / YE	3481	Driver Seat Belt Anchor Pretensioner High Control	I	—
2	0.5	VT / OG	3482	Driver Seat Belt Anchor Pretensioner Low Control	I	—

F113P Seat Belt Anchor Pretensioner - Passenger

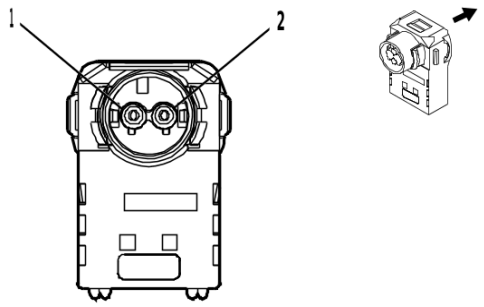

4231869

Connector Part Information

Harness Type: Rear Side Door Door Wiring Harness - Right
OEM Connector: 33345777
Service Connector: Service by Harness - See Part Catalog
Description: 2 <p01>-Way F ABX-5 Series(PK with YE Cover)

Terminal Part Information

Terminal Type ID	Terminated Lead	Diagnostic Test Probe	Terminal Removal Tool
I	Not required	J-35616-10 (GN)	No Tool Required

F113P Seat Belt Anchor Pretensioner - Passenger

Pin	Size	Color	Circuit	Function	Terminal Type ID	Option
1	0.5	OG / BN	3479	Passenger Seat Belt Anchor Pretensioner High Control	I	—
2	0.5	GY / OG	3480	Passenger Seat Belt Anchor Pretensioner Low Control	I	—

G10 Cooling Fan Motor (LGZ)

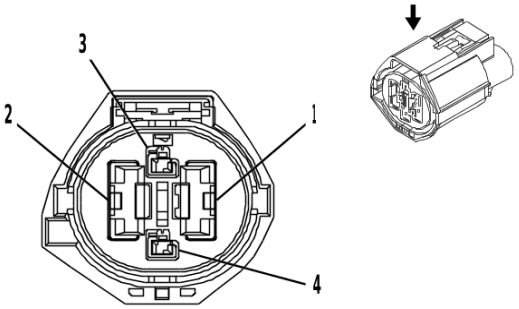

2394097

Connector Part Information

Harness Type: Forward Lamp Wiring Harness
OEM Connector: 7287-1404-10
Service Connector: Service by Harness - See Part Catalog
Description: 4 <p01>-Way F 1.5, 9.5 Series, Sealed(D-GY)

Terminal Part Information

Terminal Type ID	Terminated Lead	Diagnostic Test Probe	Terminal Removal Tool
I	Not required	J-35616-14 (GN)	No Tool Required
II	Not required	J-35616-42 (RD)	No Tool Required

G10 Cooling Fan Motor (LGZ)

Pin	Size	Color	Circuit	Function	Terminal Type ID	Option
1	10	BK	1350	Ground	II	—
2	10	RD / GY	4840	Battery Positive Voltage	II	—
3	—	—	—	Not Occupied	—	—
4	0.5	WH / BK	2368	Cooling Fan Control Signal	I	—

G13 Generator X1 (LCV)

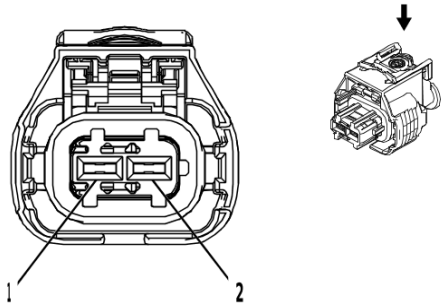

2577394

Connector Part Information

Harness Type: Engine Wiring Harness
OEM Connector: 1928405521
Service Connector: 13384371
Description: 2 <p01>-Way F 2.8 Series, Sealed(BK)

Terminal Part Information

Terminal Type ID	Terminated Lead	Diagnostic Test Probe	Terminal Removal Tool
I	Not required	J-35616-35 (VT)	No Tool Required

G13 Generator X1 (LCV)

Pin	Size	Color	Circuit	Function	Terminal Type ID	Option
1	0.5	BU / WH	225	Generator Turn On Signal	I	—
2	0.5	GY	23	Generator Field Duty Cycle Signal	I	—

G13 Generator X1 (LGZ)

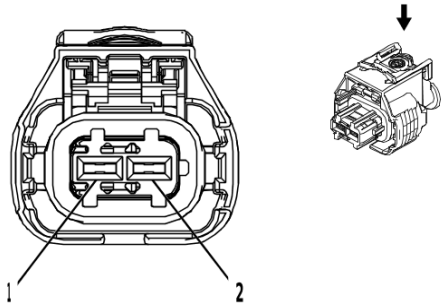

2577394

Connector Part Information

Harness Type: Engine Wiring Harness
OEM Connector: 1928405714
Service Connector: 13384371
Description: 2 <p01>-Way F 2.8 Series, Sealed(BK)

Terminal Part Information

Terminal Type ID	Terminated Lead	Diagnostic Test Probe	Terminal Removal Tool
I	Not required	J-35616-35 (VT)	No Tool Required

G13 Generator X1 (LGZ)

Pin	Size	Color	Circuit	Function	Terminal Type ID	Option
1	0.5	BU / WH	225	Generator Turn On Signal	I	—
2	0.5	GY	23	Generator Field Duty Cycle Signal	I	—

G13 Generator X1 (LWN)

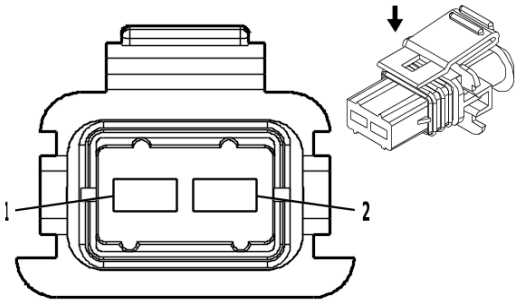

1522871

Connector Part Information

Harness Type: Engine Wiring Harness
OEM Connector: 12186308
Service Connector: 13384371
Description: 2 <p01>-Way F Junior Power Timer Series, Sealed(BK)

Terminal Part Information

Terminal Type ID	Terminated Lead	Diagnostic Test Probe	Terminal Removal Tool
I	Not required	J-35616-35 (VT)	No Tool Required

G13 Generator X1 (LWN)

Pin	Size	Color	Circuit	Function	Terminal Type ID	Option
1	0.5	BN	25	Charge Indicator Control	I	—
2	0.5	GY	23	Generator Field Duty Cycle Signal	I	—

G13 Generator X2A

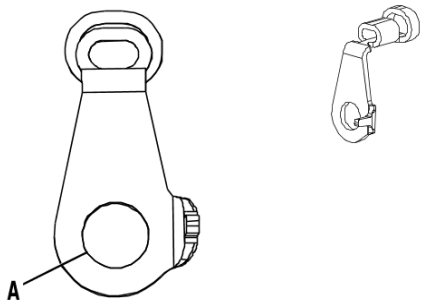

4069640

Connector Part Information

Harness Type: Battery Positive Cable
OEM Connector: M23002043
Service Connector: Service by Cable Assembly — See Part Catalog
Description: 1 <p01>-Way Ring Terminal

Terminal Part Information

Terminal Type ID	Terminated Lead	Diagnostic Test Probe	Terminal Removal Tool
I	Not required	No Tool Required	No Tool Required

G13 Generator X2A

Pin	Size	Color	Circuit	Function	Terminal Type ID	Option
A	25	RD / YE	2	Battery Positive Voltage	I	—

G13 Generator X2 (LGZ)

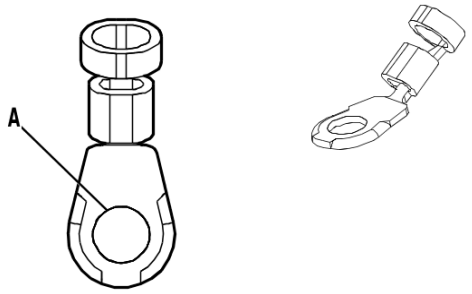

4880299

Connector Part Information

Harness Type: Generator Battery Jumper Cable
OEM Connector: 23398006
Service Connector: Service by Cable Assembly — See Part Catalog
Description: 1 <p01>-Way Ring Terminal

Terminal Part Information

Terminal Type ID	Terminated Lead	Diagnostic Test Probe	Terminal Removal Tool
I	Not required	No Tool Required	No Tool Required

G13 Generator X2 (LGZ)

Pin	Size	Color	Circuit	Function	Terminal Type ID	Option
A	25	RD / YE	2	Battery Positive Voltage	I	—

G13 Generator X2 (LWN)

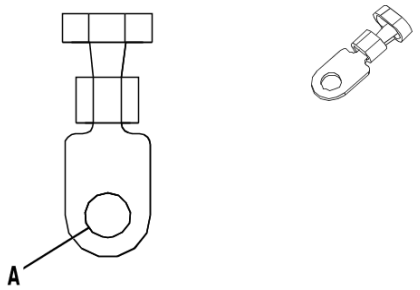

2892235

Connector Part Information

Harness Type: Battery Positive Cable
OEM Connector: 15327720
Service Connector: Service by Cable Assembly — See Part Catalog
Description: 1 <p01>-Way Ring Terminal

Terminal Part Information

Terminal Type ID	Terminated Lead	Diagnostic Test Probe	Terminal Removal Tool
I	Not required	No Tool Required	No Tool Required

G13 Generator X2 (LWN)

Pin	Size	Color	Circuit	Function	Terminal Type ID	Option
A	25	RD / YE	2	Battery Positive Voltage	I	—

G18 High Pressure Fuel Pump

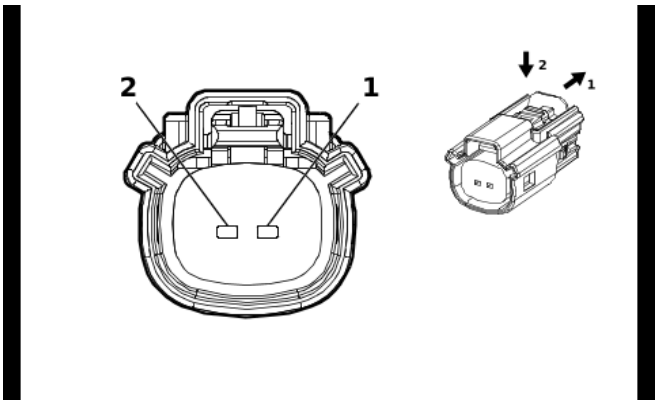

2474713

Connector Part Information

Harness Type: Engine Wiring Harness
OEM Connector: 33471-0206
Service Connector: 13577534
Description: 2 <p01>-Way F 1.5 Series, Sealed(BK)

Terminal Part Information

Terminal Type ID	Terminated Lead	Diagnostic Test Probe	Terminal Removal Tool
I	Not required	J-35616-14 (GN)	No Tool Required

G18 High Pressure Fuel Pump

Pin	Size	Color	Circuit	Function	Terminal Type ID	Option
1	0.5	YE	7301	High Pressure Fuel Pump High Control	I	LCV
	0.5	VT / BK	7300	High Pressure Fuel Pump Low Control	I	LGZ
2	0.5	VT / BK	7300	High Pressure Fuel Pump Low Control	I	LCV
	0.5	YE	7301	High Pressure Fuel Pump High Control	I	LGZ

G24 Windshield Washer Pump

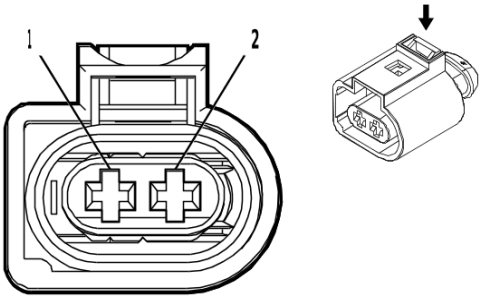

2474738

Connector Part Information

Harness Type: Forward Lamp Wiring Harness
OEM Connector: 1-1355200-1
Service Connector: 85005016
Description: 2 <p01>-Way F 2.8 MDK5 Series, Sealed(BK)

Terminal Part Information

Terminal Type ID	Terminated Lead	Diagnostic Test Probe	Terminal Removal Tool
I	Not required	J-35616-4A (PU)	No Tool Required

G24 Windshield Washer Pump

Pin	Size	Color	Circuit	Function	Terminal Type ID	Option
1	0.75	GY / VT	228	Windshield Washer Pump Control	I	—
2	0.75	BK	1150	Ground	I	—

K8 Blower Motor Control Module

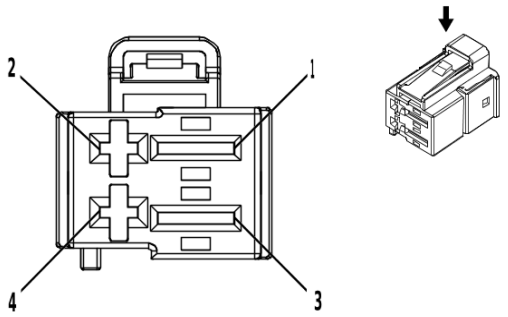

3924403

Connector Part Information

Harness Type: Instrument Panel Wiring Harness
OEM Connector: 1-1418507-2
Service Connector: 19352990
Description: 4 <p01>-Way F 2.8, 6.3 MCON Series(BK)

Terminal Part Information

Terminal Type ID	Terminated Lead	Diagnostic Test Probe	Terminal Removal Tool
I	Not required	J-35616-40 (BU)	No Tool Required
II	Not required	J-35616-4A (PU)	No Tool Required

K8 Blower Motor Control Module

Pin	Size	Color	Circuit	Function	Terminal Type ID	Option
1	5	BK	2250	Ground	I	—
2	—	—	—	Not Occupied	—	—
3	2.5	RD / VT	542	Battery Positive Voltage	I	—
4	0.35	BU / GY	754	Blower Motor Speed Control	II	—

K9 Body Control Module X1

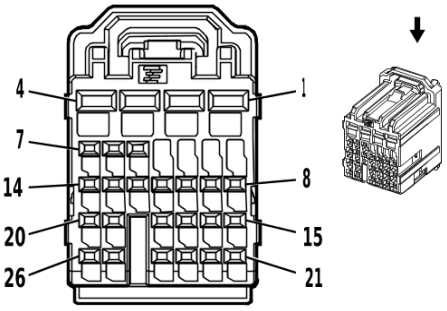

2537268

Connector Part Information

Harness Type: Instrument Panel Wiring Harness
OEM Connector: 2098067-1
Service Connector: 13576031
Description: 26 <p01>-Way F 0.64, 2.8 Series(NA)

Terminal Part Information

Terminal Type ID	Terminated Lead	Diagnostic Test Probe	Terminal Removal Tool
I	13582298	J-35616-64B (LT BU)	J-38125-215A
II	19354201	J-35616-35 (VT)	J-38125-553

K9 Body Control Module X1

Pin	Size	Color	Circuit	Function	Terminal Type ID	Option
1	0.75	BK	2150	Ground	II	—
2	2.5	RD / GN	2440	Battery Positive Voltage	II	—
3	2.5	RD / YE	2340	Battery Positive Voltage	II	—
4	0.75	RD / BN	2240	Battery Positive Voltage	II	—
5	0.35	WH	6816	Indicator Dimming Control	I	—
6	—	—	—	Not Occupied	—	—
7	0.35	BK / YE	5005	Instrument Panel Lamp Dimmer Switch Low Reference	I	—
8 - 9	—	—	—	Not Occupied	—	—
10	0.35	BU / YE	6844	ABS/Traction Control Hill Descent Control Switch Signal	I	—
11	0.35	GN / BN	306	Headlamp Switch Off Signal	I	—
12	—	—	—	Not Occupied	—	—
13	0.35	BU / RD	1688	12V Reference	I	—
14	0.35	GY / GN	328	Interior Lamp Defeat Switch Signal	I	—
15	0.35	BU / GY	192	Front Fog Lamp Switch Signal	I	—
16	0.35	WH / VT	103	Headlamp Switch On Signal	I	—
17 - 18	—	—	—	Not Occupied	—	—
19	0.35	BK / BN	5360	Brake Apply Sensor Low Reference	I	—
20	—	—	—	Not Occupied	—	—
21	0.35	GY	728	Security Indicator Control	I	—
22	0.35	GN / GY	13	Headlamp Switch Park Lamp Signal	I	—

K9 Body Control Module X1 (cont'd)

Pin	Size	Color	Circuit	Function	Terminal Type ID	Option
23	—	—	—	Not Occupied	—	—
24	0.35	WH	2501	High Speed GMLAN Serial Data [-] 1	I	—
25	0.35	BU	2500	High Speed GMLAN Serial Data [+] 1	I	—
26	0.35	BU / WH	3275	Remote Control Door Lock Receiver Receive Signal	I	—

K9 Body Control Module X2

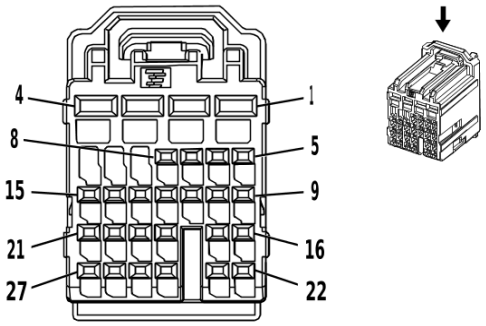

2537269

Connector Part Information

Harness Type: Instrument Panel Wiring Harness
OEM Connector: 2098067-2
Service Connector: 13576032
Description: 27 <p01>-Way F 0.64, 2.8 Series(BU)

Terminal Part Information

Terminal Type ID	Terminated Lead	Diagnostic Test Probe	Terminal Removal Tool
I	13582298	J-35616-64B (LT BU)	J-38125-215A
II	19354201	J-35616-35 (VT)	J-38125-553

K9 Body Control Module X2

Pin	Size	Color	Circuit	Function	Terminal Type ID	Option
1	0.75	RD / WH	2040	Battery Positive Voltage	II	—
2	0.75	BK	2150	Ground	II	—
3	—	—	—	Not Occupied	—	—
4	2.5	RD / VT	4040	Battery Positive Voltage	II	—
5	0.5	GY	157	Interior Lamp Control	I	—
6	0.35	GY	5697	Child Security Lock Indicator Control	I	—
7	0.35	BU / YE	5361	Brake Apply Sensor Signal	I	—
8	0.5	YE	6817	LED Backlight Dimming Control 1	I	—
9	0.35	YE / GY	44	Instrument Panel Lamp Dimmer Switch Signal	I	—
10	0.35	WH / BU	278	Ambient Light Sensor Signal	I	—
11	0.35	VT / YE	5526	Tap Up/Tap Down Switch Signal	I	—
12	—	—	—	Not Occupied	—	—
13	0.35	WH	5359	Brake Apply Sensor Control	I	—
14	0.35	BU / VT	1788	Traction Control Switch Signal 1	I	—
15	0.35	BN / WH	781	Driver Door Lock Switch Unlock Signal	I	—
16	0.35	GY	3273	Remote Control Door Lock Receiver Low Reference	I	—
17	—	—	—	Not Occupied	—	—
18	0.35	YE / BN	3265	Child Security Lock Switch Signal	I	—
19	0.35	BN / YE	780	Driver Door Lock Switch Lock Signal	I	—
20	0.5	WH / BU	3691	Trailer Brake Apply Signal	I	—

K9 Body Control Module X2 (cont'd)

Pin	Size	Color	Circuit	Function	Terminal Type ID	Option
21	0.5	GN / GY	6135	Body Control Module LIN Bus 4	I	—
22	0.35	GN	5060	Low Speed GMLAN Serial Data	I	—
23 - 24	—	—	—	Not Occupied	—	—
25	0.35	GY / WH	3272	Remote Control Door Lock Receiver Control	I	—
26	0.35	GN / WH	111	Hazard Warning Switch Signal	I	—
27	0.35	YE / GN	3274	Remote Control Door Lock Receiver Transmit Signal	I	—

K9 Body Control Module X3

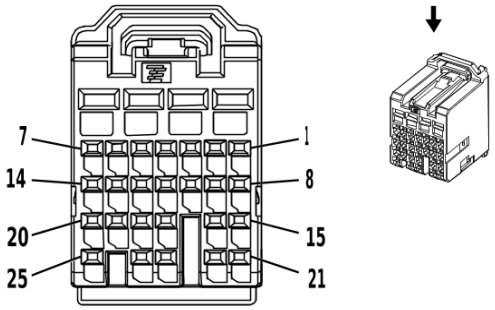

2537274

Connector Part Information

Harness Type: Instrument Panel Wiring Harness
OEM Connector: 2098067-7
Service Connector: 13576037
Description: 25 <p01>-Way F 0.64, 2.8 Series(GN)

Terminal Part Information

Terminal Type ID	Terminated Lead	Diagnostic Test Probe	Terminal Removal Tool
I	13582298	J-35616-64B (LT BU)	J-38125-215A

K9 Body Control Module X3

Pin	Size	Color	Circuit	Function	Terminal Type ID	Option
1	0.35	GN / GY	3277	Vehicle Anti-Theft System Immobilizer Low Reference	I	—
2	0.35	GN / VT	7533	Immobilizer LIN Bus 1	I	—
3	0.35	GY / BK	3276	Immobilizer Control Module Control	I	—
4	0.35	WH / RD	1444	12V Reference	I	—
5	0.5	VT / YE	4	Accessory Ignition Voltage	I	—
6	0.5	VT / BK	3	Run/Crank Ignition 1 Voltage	I	—
7	0.35	VT / YE	143	Accessory Ignition Voltage	I	—
8	0.35	GN	6818	Steering Wheel Controls Signal 1	I	—
9	0.35	BN / GN	1884	Cruise Control Set/Coast/Resume/Accelerate Switch Signal	I	—
10	0.35	BK / GY	6009	Windshield Wiper Switch Low Reference	I	—
11	0.35	WH	524	High Beam Select Switch High Beam Signal	I	—
12	0.35	WH / GN	663	Hazard Switch Left Turn Signal	I	—
13	0.35	YE / BU	1714	Windshield Wiper Switch Low Signal	I	—
14	0.35	BU / GY	553	Shift Select Switch Performance Signal	I	—
15	0.5	WH / VT	1020	Off/Run/Crank Ignition Voltage	I	—
16	0.35	GY / GN	5737	Distance Sensing Cruise Control Gap Up/Down Switch Signal	I	—
17	0.35	YE / BN	307	Headlamp Switch Flash Signal	I	—
18	0.35	GN / WH	3287	Horn Switch Signal	I	—
19	0.35	GN / WH	7527	Human Machine Interface Control Module LIN Bus 1	I	—

K9 Body Control Module X3 (cont'd)

Pin	Size	Color	Circuit	Function	Terminal Type ID	Option
20	0.35	GY	1715	Windshield Wiper Switch High Signal	I	—
21	—	—	—	Not Occupied	—	—
22	0.5	WH / BK	1073	Ignition Key Resistor Signal	I	—
23	0.35	GY	5054	Sport Mode Switch Signal	I	—
24	0.35	VT / BU	664	Hazard Switch Right Turn Signal	I	—
25	0.35	WH / BK	94	Windshield Washer Switch Signal	I	—

K9 Body Control Module X4

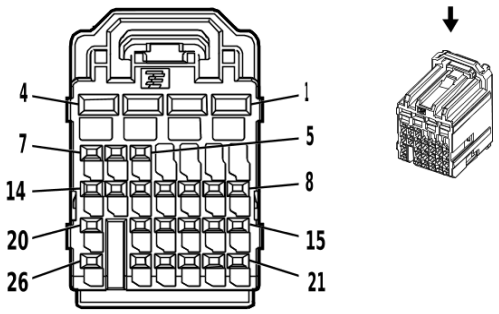

2537270

Connector Part Information

Harness Type: Body Wiring Harness
OEM Connector: 2098067-3
Service Connector: 13576033
Description: 26 <p01>-Way F 0.64, 2.8 Series(BK)

Terminal Part Information

Terminal Type ID	Terminated Lead	Diagnostic Test Probe	Terminal Removal Tool
I	13582298	J-35616-64B (LT BU)	J-38125-215A
II	19354201	J-35616-35 (VT)	J-38125-553

K9 Body Control Module X4

Pin	Size	Color	Circuit	Function	Terminal Type ID	Option
1	1.5	YE	312	Right Headlamp Low Beam Control	II	—
2	1.5	YE	712	Left Headlamp Low Beam Control	II	—
3	0.75	GN / VT	1315	Right Front Turn Signal Lamp Control	II	—
4	1.5	WH / YE	7541	Right Rear Stop Lamp Control	II	—
5	0.5	GY / BN	309	Right Park Lamp Control	I	—
6	0.5	VT / GY	709	Left Park Lamp Control	I	—
7	0.5	BN / BU	2509	Left Rear Park Lamp Control	I	—
8 - 11	—	—	—	Not Occupied	—	—
12	0.35	GY / VT	755	Retained Accessory Power Relay Coil Control	I	—
13	0.75	GN / YE	6846	Rear License Plate Lamp Control	I	—
14	0.5	BN / GY	2268	Windshield Washer Relay Control	I	—
15	0.35	GN / VT	5199	Run/Crank Relay Coil Control	I	—
16	0.5	GY	91	Windshield Wiper Motor Relay Coil Control	I	—
17	0.5	BN / GN	196	Windshield Wiper Motor Park Switch Signal	I	—
18	0.5	WH / YE	5075	Current Sensor Signal	I	—
19	—	—	—	Not Occupied	—	—
20	0.5	RD / BN	440	Battery Positive Voltage	I	—
21	0.5	BU / VT	5076	Current Sensor Voltage Reference	I	—
22	0.35	VT / YE	5985	Accessory Wake-Up Serial Data	I	—
23	0.5	WH / BU	5986	Serial Data Communication Enable	I	—
24	0.5	BN / GN	4064	Hood Status B Signal	I	—

K9 Body Control Module X4 (cont'd)

Pin	Size	Color	Circuit	Function	Terminal Type ID	Option
25	—	—	—	Not Occupied	—	—
26	0.5	BK	1650	Ground	I	—

K9 Body Control Module X5

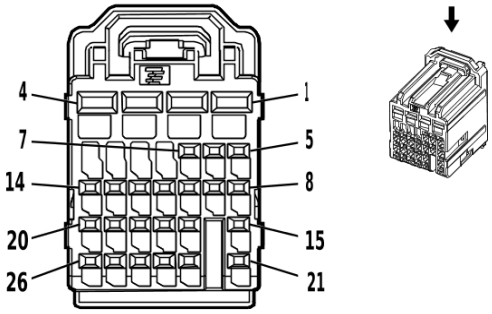

2537271

Connector Part Information

Harness Type: Body Wiring Harness
OEM Connector: 13576034
Service Connector: 13576034
Description: 26 <p01>-Way F 0.64, 2.8 Series(BN)

Terminal Part Information

Terminal Type ID	Terminated Lead	Diagnostic Test Probe	Terminal Removal Tool
I	13582298	J-35616-64B (LT BU)	J-38125-215A
II	19354201	J-35616-35 (VT)	J-38125-553

K9 Body Control Module X5

Pin	Size	Color	Circuit	Function	Terminal Type ID	Option
1	1.5	GY / YE	7542	Left Rear Stop Lamp Control	II	—
2	0.75	BU / WH	1314	Left Front Turn Signal Lamp Control	II	—
3	1.5	RD / WH	2740	Battery Positive Voltage	II	—
4	1	RD / VT	2640	Battery Positive Voltage	II	—
5	—	—	—	Not Occupied	—	—
6	0.5	BK / VT	5077	Current Sensor Low Reference	I	—
7	0.5	BN / GY	2609	Right Rear Park Lamp Control	I	—
8	0.5	BU / WH	5186	Left Trailer Turn Signal Lamp Control	I	—
9 - 11	—	—	—	Not Occupied	—	—
12	0.5	WH / BU	6311	Cruise/ETC/TCC Brake Signal	I	—
13	0.5	BN / WH	1317	Fog Lamp Relay Control	I	—
14	0.5	VT / BN	300	Run Ignition 3 Voltage	I	—
15	—	—	—	Not Occupied	—	—
16	0.5	VT / YE	3267	Child Security Lock Relay Control	I	—
17	0.5	YE / GY	5187	Right Trailer Turn Signal Lamp Control	I	—
18	0.5	BN / VT	1969	Headlamp High Beam Relay Control	I	—
19	0.5	BN / WH	28	Horn Relay Control	I	—
20 - 21	—	—	—	Not Occupied	—	—
22	0.5	BU	45	Park Lamp Relay Control	I	—
23	—	—	—	Not Occupied	—	—
24	0.5	WH / VT	860	Windshield Wiper Switch High Signal	I	—

K9 Body Control Module X5 (cont'd)

Pin	Size	Color	Circuit	Function	Terminal Type ID	Option
25	—	—	—	Not Occupied	—	—
26	0.5	BU / BN	38	Backup Lamp Relay Control	I	—

K9 Body Control Module X6

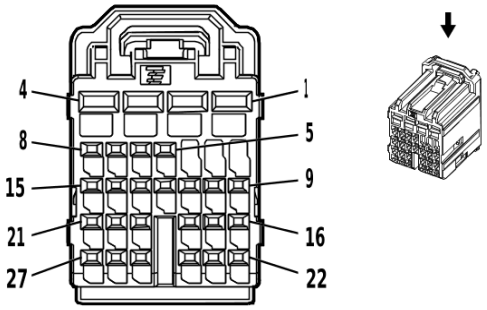

2537272

Connector Part Information

Harness Type: Body Wiring Harness
OEM Connector: 2098067-5
Service Connector: 13576035
Description: 27 <p01>-Way F 0.64, 2.8 Series(PK)

Terminal Part Information

Terminal Type ID	Terminated Lead	Diagnostic Test Probe	Terminal Removal Tool
I	13582298	J-35616-64B (LT BU)	J-38125-215A
II	19354201	J-35616-35 (VT)	J-38125-553

K9 Body Control Module X6

Pin	Size	Color	Circuit	Function	Terminal Type ID	Option
1	0.75	GY	5911	Door Lock Actuator Lock Control 2	II	—
2	1.5	GY / GN	3271	Door Lock Control 2	II	—
3	1.5	BK	3150	Ground	II	—
4	1.5 0.75	BN / YE BN / YE	294 294	Door Lock Actuator Unlock Control Door Lock Actuator Unlock Control	II II	CREW CAB EXTENDED CAB
5 - 8	—	—	—	Not Occupied	—	—
9	0.5	GN / BU	6133	Body Control Module LIN Bus 2	I	—
10	0.5	GN / YE	6134	Body Control Module LIN Bus 3	I	—
11 - 13	—	—	—	Not Occupied	—	—
14	0.35	BN	4511	Wireless Charging System Fault Indicator Control	I	—
15	0.35	GN	4512	Wireless Charging System Charge Indicator Control	I	—
16	0.5	GN / BN	6132	Body Control Module LIN Bus 1	I	—
17 - 23	—	—	—	Not Occupied	—	—
24	0.5	BU	2500	High Speed GMLAN Serial Data [+] 1	I	—
25	0.5	WH	2501	High Speed GMLAN Serial Data [-] 1	I	—
26	—	—	—	Not Occupied	—	—
27	0.35	GY	747	Left Rear Door Ajar Switch Signal	I	—

K9 Body Control Module X7

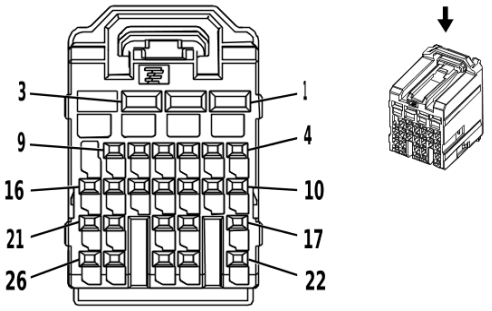

2537273

Connector Part Information

Harness Type: Body Wiring Harness
OEM Connector: 2098067-6
Service Connector: 13576036
Description: 26 <p01>-Way F 0.64, 2.8 Series(GY)

Terminal Part Information

Terminal Type ID	Terminated Lead	Diagnostic Test Probe	Terminal Removal Tool
I	13582298	J-35616-64B (LT BU)	J-38125-215A
II	19354201	J-35616-35 (VT)	J-38125-553

K9 Body Control Module X7

Pin	Size	Color	Circuit	Function	Terminal Type ID	Option
1	—	—	—	Not Occupied	—	—
2	0.75	WH / BN	6815	Inadvertent Load Control	II	—
3	0.75	GN / WH	24	Backup Lamp Control	II	—
4 - 5	—	—	—	Not Occupied	—	—
6	0.5	VT / BK	7553	Park Lock Solenoid Actuator Control	I	—
7	0.5	BN / WH	1429	Standing Lamp Relay Control	I	—
8	0.5	VT / WH	5065	Stop Lamp Relay Coil Control	I	—
9 - 10	—	—	—	Not Occupied	—	—
11	0.35	GY	748	Right Rear Door Ajar Switch Signal	I	—
12	0.35	BN / WH	3269	Child Security Lock Actuator Status Signal Left Rear	I	—
13	0.5	WH / VT	5905	Key Capture/Column Lock Shift Position Signal	I	—
14	0.35	GY	158	Cargo Lamp Switch Signal	I	—
15	0.35	BU / VT	1134	Park Brake Switch Signal	I	—
16	0.5	WH / BU	3691	Trailer Brake Apply Signal	I	—
17	—	—	—	Not Occupied	—	—
18	0.35	GY / BK	3268	Child Security Lock Actuator Status Signal Right Rear	I	—
19	0.35	GY	156	Courtesy Lamp Switch Signal	I	—
20	—	—	—	Not Occupied	—	—
21	0.35	YE / VT	244	Passenger Door Lock Switch Lock Control	I	—
22	—	—	—	Not Occupied	—	—

K9 Body Control Module X7 (cont'd)

Pin	Size	Color	Circuit	Function	Terminal Type ID	Option
23	0.5	GN	5060	Low Speed GMLAN Serial Data	I	—
24	0.35	BN / VT	245	Passenger Door Lock Switch Unlock Control	I	—
25 - 26	—	—	—	Not Occupied	—	—

K17 Electronic Brake Control Module

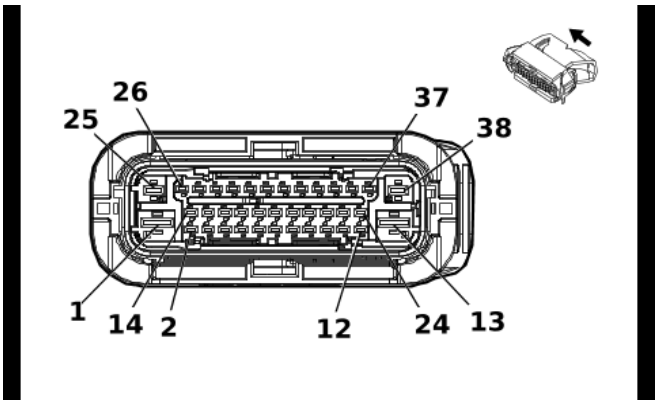

3240112

Connector Part Information

Harness Type: Chassis Wiring Harness
OEM Connector: 13582125
Service Connector: 19303771
Description: 38 <p01>-Way F 1.5 CTS, 2.8 MCP, 4.8 MCP Series, Sealed(BK with BN Inner Connector)

Terminal Part Information

Terminal Type ID	Terminated Lead	Diagnostic Test Probe	Terminal Removal Tool
I	13575368	J-35616-35 (VT)	J-38125-557
II	13579775	J-35616-14 (GN)	J-38125-215A
III	85158596	J-35616-40 (BU)	J-38125-556

K17 Electronic Brake Control Module

Pin	Size	Color	Circuit	Function	Terminal Type ID	Option
1	4	RD / GY	1042	Battery Positive Voltage	III	—
2 - 3	—	—	—	Not Occupied	—	—
4	0.5	YE / VT	6030	Brake Vacuum Sensor Signal	II	—
5	—	—	—	Not Occupied	—	—
6	0.5	WH / BU	5986	Serial Data Communication Enable	II	—
7 - 8	—	—	—	Not Occupied	—	—
9	0.5	WH	2501	High Speed GMLAN Serial Data [-] 1	II	—
10	0.5	WH	2501	High Speed GMLAN Serial Data [-] 1	II	—
11	0.5	BU	2500	High Speed GMLAN Serial Data [+] 1	II	—
12	0.5	BU	2500	High Speed GMLAN Serial Data [+] 1	II	—
13	4	BK	550	Ground	III	—
14 - 15	—	—	—	Not Occupied	—	—
16	0.5	YE / RD	6031	Brake Vacuum Sensor 5V Reference	II	—
17	—	—	—	Not Occupied	—	—
18	0.5	WH	6106	High Speed GMLAN Serial Data [-] 2	II	—
19	0.5	BU / YE	6105	High Speed GMLAN Serial Data [+] 2	II	—
20	—	—	—	Not Occupied	—	—
21	0.5	GN / GY	333	Brake Fluid Level Signal	II	—
22	0.5	BK / YE	6032	Brake Vacuum Sensor Low Reference	II	—
23 - 24	—	—	—	Not Occupied	—	—

K17 Electronic Brake Control Module (cont'd)

Pin	Size	Color	Circuit	Function	Terminal Type ID	Option
25	2.5	RD / YE	442	Battery Positive Voltage	I	—
26	0.5	YE	872	Right Front Wheel Speed Sensor Signal	II	—
27	0.5	GY / BN	7065	Right Front Wheel Speed Sensor Control	II	—
28	0.5	BN	6305	Brake Vacuum Switch Signal	II	—
29	0.5	GY / BK	7127	Left Rear Wheel Speed Sensor Control	II	—
30	0.5	BU	884	Left Rear Wheel Speed Sensor Signal	II	—
31 - 32	—	—	—	Not Occupied	—	—
33	0.5	VT	882	Right Rear Wheel Speed Sensor Signal	II	—
34	0.5	GY / YE	7128	Right Rear Wheel Speed Sensor Control	II	—
35	—	—	—	Not Occupied	—	—
36	0.5	GY / WH	7064	Left Front Wheel Speed Sensor Control	II	—
37	0.5	GY	830	Left Front Wheel Speed Sensor Signal	II	—
38	—	—	—	Not Occupied	—	—

K20 Engine Control Module X1 (LCV)

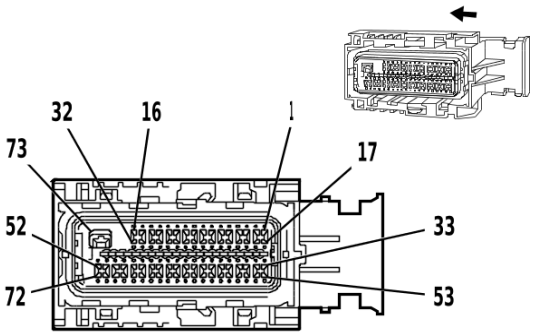

2470482

Connector Part Information

Harness Type: Engine Wiring Harness
OEM Connector: 34566-0303
Service Connector: 13574782
Description: 73 <p01>-Way F 0.64, 2.8 Series, Sealed(BK with BU Terminal Position Assurance)

Terminal Part Information

Terminal Type ID	Terminated Lead	Diagnostic Test Probe	Terminal Removal Tool
I	13587518	J-35616-4A (PU)	J-38125-11A
II	19351723	J-35616-64B (LT BU)	J-38125-213

K20 Engine Control Module X1 (LCV)

Pin	Size	Color	Circuit	Function	Terminal Type ID	Option
1 - 6	—	—	—	Not Occupied	—	—
7	0.5	WH	7494	High Speed GMLAN Serial Data [-] 3	II	—
8	0.5	BU / YE	7493	High Speed GMLAN Serial Data [+] 3	II	—
9	0.5	BU	2500	High Speed GMLAN Serial Data [+] 1	II	—
10	0.5	WH	2501	High Speed GMLAN Serial Data [-] 1	II	—
11	0.5	BN / RD	1274	Accelerator Pedal Position 5V Reference 2	II	—
12	0.5	WH / RD	1164	Accelerator Pedal Position 5V Reference 1	II	—
13	0.5	VT / YE	5985	Accessory Wake-Up Serial Data	II	—
14	0.5	VT / GY	139	Run/Crank Ignition 1 Voltage	II	—
15	0.5	RD / WH	140	Battery Positive Voltage	II	—
16	0.75	VT / BU	5290	Powertrain Main Relay Fused Supply Voltage 1	II	—
17 - 24	—	—	—	Not Occupied	—	—
25	0.5	BK / YE	5382	Brake Position Sensor Low Reference	II	—
26	—	—	—	Not Occupied	—	—
27	0.5	BK / VT	1272	Accelerator Pedal Position Low Reference 2	II	—
28	0.5	BK / BU	1271	Accelerator Pedal Position Low Reference 1	II	—
29 - 32	—	—	—	Not Occupied	—	—
33	0.5	GN / WH	1162	Accelerator Pedal Position Signal 2	II	—
34	0.5	GN / WH	492	Mass Air Flow Sensor Signal	II	—
35 - 36	—	—	—	Not Occupied	—	—
37	0.5	BN / RD	2700	A/C Pressure Sensor 5V Reference	II	—

K20 Engine Control Module X1 (LCV) (cont'd)

Pin	Size	Color	Circuit	Function	Terminal Type ID	Option
38 - 40	—	—	—	Not Occupied	—	—
41	0.5	WH / RD	5381	Brake Position Sensor 5V Reference	II	—
42 - 43	—	—	—	Not Occupied	—	—
44	0.5	VT / GY	6386	—	II	—
45	0.5	YE / WH	1161	Accelerator Pedal Position Signal 1	II	—
46	0.5	YE / BK	3000	Coolant Temperature Sensor 2 Signal	II	—
47	0.5	BU / GY	636	Ambient Air Temperature Sensor Signal	II	—
48	0.5	WH / BU	6289	Intake Air Temperature Sensor Signal	II	—
49	0.5	WH / GY	1786	Transmission Park/Neutral Signal 1	II	—
50	0.5	WH / BU	6311	Cruise/ETC/TCC Brake Signal	II	—
51	0.75	VT / BU	5291	Powertrain Main Relay Fused Supply Voltage 2	II	—
52 - 53	—	—	—	Not Occupied	—	—
54	0.5	WH / GY	459	A/C Compressor Clutch Relay Control	II	—
55 - 56	—	—	—	Not Occupied	—	—
57	0.5	GN	380	A/C Refrigerant Pressure Sensor Signal	II	—
58 - 59	—	—	—	Not Occupied	—	—
60	0.5	BN / GY	4008	Humidity Sensor Signal	II	—
61	0.5	WH / GN	5380	Brake Position Sensor Signal	II	—
62 - 63	—	—	—	Not Occupied	—	—
64	0.5	GN / GY	465	Fuel Pump Primary Relay Control	II	—
65	0.5	WH	1310	EVAP Vent Solenoid Valve Control	II	—
66	—	—	—	Not Occupied	—	—
67	0.5	YE	5991	Powertrain Relay Coil Control	II	—
68	—	—	—	Not Occupied	—	—
69	0.5	BU	6814	Engine Coolant Thermostat Heater Control	II	—
70	—	—	—	Not Occupied	—	—
71	0.5	BN / WH	419	Check Engine Indicator Control	II	—
72	—	—	—	Not Occupied	—	—
73	1	VT / BU	5290	Powertrain Main Relay Fused Supply Voltage 1	I	—

K20 Engine Control Module X2 (LCV)

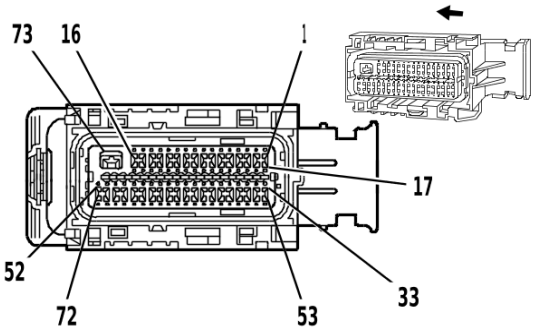

1673472

Connector Part Information

Harness Type: Engine Wiring Harness
OEM Connector: 34566-0103
Service Connector: 19333090
Description: 73 <p01>-Way F 0.64, 2.8 Series, Sealed(BK with BK Terminal Position Assurance)

Terminal Part Information

Terminal Type ID	Terminated Lead	Diagnostic Test Probe	Terminal Removal Tool
I	13587518	J-35616-35 (VT)	J-38125-11A
II	19354746	J-35616-64B (LT BU)	J-38125-213

K20 Engine Control Module X2 (LCV)

Pin	Size	Color	Circuit	Function	Terminal Type ID	Option
1	—	—	—	Not Occupied	—	—
2	0.5	BU	410	Engine Coolant Temperature Sensor Signal	II	—
3	—	—	—	Not Occupied	—	—
4	0.5	BN / RD	7445	Fuel Line Pressure Sensor 5V Reference	II	—
5	0.5	GY / RD	2704	Manifold Absolute Pressure Sensor 5V Reference	II	—
6	0.5	GY / YE	5297	Exhaust Camshaft Position Sensor 1 Voltage Reference	II	—
7	0.5	GY / BU	5300	Intake Camshaft Position Sensor 1 Voltage Reference	II	—
8 - 11	—	—	—	Not Occupied	—	—
12	0.5	BN / RD	2701	Throttle Position Sensor 5V Reference	II	—
13	0.5	BU / WH	3630	Throttle Position Sensor SENT 1 Signal	II	—
14	0.5	WH / RD	2705	Oil Pressure Sensor 5V Reference	II	—
15	0.5	VT / BU	6270	Crankshaft Position Sensor Voltage	II	—
16 - 19	—	—	—	Not Occupied	—	—
20	0.5	BU / WH	7446	Fuel Pressure Sensor Signal	II	—
21	0.5	BK / GN	469	Manifold Absolute Pressure Sensor Low Reference	II	—
22	0.5	BK / GY	5296	Exhaust Camshaft Position Sensor Low Reference 1	II	—
23	0.5	BK / GN	5301	Intake Camshaft Position Sensor Low Reference 1	II	—

K20 Engine Control Module X2 (LCV) (cont'd)

Pin	Size	Color	Circuit	Function	Terminal Type ID	Option
24 - 27	—	—	—	Not Occupied	—	—
28	0.5	BK / BN	2752	Throttle Position Sensor Low Reference	II	—
29	0.5	YE / BN	331	Oil Pressure Sensor Signal	II	—
30	0.5	BK / VT	2755	Oil Pressure Sensor Low Reference	II	—
31	0.5	BK / VT	6272	Crankshaft Position Sensor Low Reference	II	—
32	—	—	—	Not Occupied	—	—
33	0.5	WH / BK	3111	HO2S Low Signal Bank 1 Sensor 1	II	—
34	0.5	WH / YE	3121	HO2S Low Signal Bank 1 Sensor 2	II	—
35	—	—	—	Not Occupied	—	—
36	0.5	BK / VT	6754	Camshaft Position Actuator Solenoid Valve X Low Reference	II	—
37	0.5	BK / BN	6753	Camshaft Position Actuator Solenoid Valve W Low Reference	II	—
38	0.5	VT / BK	5273	Exhaust Camshaft Position Sensor 1	II	—
39	0.5	YE / VT	5275	Intake Camshaft Position Sensor 1	II	—
40	0.5	GN	6271	Crankshaft Position Sensor Signal	II	—
41 - 42	—	—	—	Not Occupied	—	—
43	0.5	BK / BN	2761	Coolant Temperature Sensor Low Reference	II	—
44	0.5	BK / BU	2129	Ignition Control Low Reference Bank 1	II	—
45	0.5	GN / BU	2123	Ignition Control 3	II	—
46	0.5	BU / VT	2121	Ignition Control 1	II	—
47	—	—	—	Not Occupied	—	—
48	0.75	BU	4802	Direct Fuel Injector High Voltage Control Cylinder 2	II	—
49	0.75	GY / BU	4804	Direct Fuel Injector High Voltage Control Cylinder 4	II	—
50	0.75	GN	4803	Direct Fuel Injector High Voltage Control Cylinder 3	II	—
51	0.75	BN	4801	Direct Fuel Injector High Voltage Control Cylinder 1	II	—
52	0.5	YE	581	Throttle Actuator Open Control	II	—
53	0.5	VT / GY	3110	HO2S High Signal Bank 1 Sensor 1	II	—
54	0.5	VT / BU	3120	HO2S High Signal Bank 1 Sensor 2	II	—
55	—	—	—	Not Occupied	—	—
56	0.5	GY / BU	5282	Exhaust Camshaft Position Actuator Solenoid Valve 1	II	—
57	0.5	VT / BN	5284	Intake Camshaft Position Actuator Solenoid Valve 1	II	—
58 - 59	—	—	—	Not Occupied	—	—
60	0.5	GY / WH	3122	HO2S Heater Low Control Bank 1 Sensor 2	II	—
61	0.5	GY / WH	3113	HO2S Heater Low Control Bank 1 Sensor 1	II	—
62 - 63	—	—	—	Not Occupied	—	—
64	0.5	BU	179	Engine Oil Pump Control	II	—
65	0.5	BU / WH	2122	Ignition Control 2	II	—
66	0.5	YE / BU	2124	Ignition Control 4	II	—
67	—	—	—	Not Occupied	—	—
68	0.75	BU / GY	4902	Direct Fuel Injector High Voltage Supply Cylinder 2	II	—

K20 Engine Control Module X2 (LCV) (cont'd)

Pin	Size	Color	Circuit	Function	Terminal Type ID	Option
69	0.75	BU / WH	4904	Direct Fuel Injector High Voltage Supply Cylinder 4	II	—
70	0.75	GN / GY	4903	Direct Fuel Injector High Voltage Supply Cylinder 3	II	—
71	0.75	BN / WH	4901	Direct Fuel Injector High Voltage Supply Cylinder 1	II	—
72	0.5	BN / WH	582	Throttle Actuator Close Control	II	—
73	2.5	BK / WH	1451	Signal Ground	I	—

K20 Engine Control Module X3 (LCV)

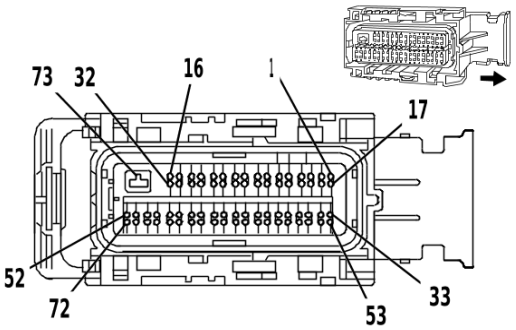

1590596

Connector Part Information

Harness Type: Engine Wiring Harness
OEM Connector: 34566-0203
Service Connector: 19333091
Description: 73 <p01>-Way F 0.64, 2.8 Series, Sealed(BK with GY Terminal Position Assurance)

Terminal Part Information

Terminal Type ID	Terminated Lead	Diagnostic Test Probe	Terminal Removal Tool
I	13587518	J-35616-35 (VT)	J-38125-11A
II	19354746	J-35616-64B (LT BU)	J-38125-213

K20 Engine Control Module X3 (LCV)

Pin	Size	Color	Circuit	Function	Terminal Type ID	Option
1 - 3	—	—	—	Not Occupied	—	—
4	0.5	GN / BU	428	EVAP Canister Purge Solenoid Control	II	—
5	—	—	—	Not Occupied	—	—
6	0.5	BN / RD	2917	Fuel Rail Pressure Sensor 5V Reference	II	—
7	—	—	—	Not Occupied	—	—
8	0.5	YE / RD	2709	Fuel Tank Pressure Sensor 5V Reference	II	—
9 - 10	—	—	—	Not Occupied	—	—
11	0.5	BU / RD	3096	Digital Output Speed Sensor 5V Reference	II	—
12 - 13	—	—	—	Not Occupied	—	—
14	0.5	WH / RD	3201	Throttle Inlet Absolute Pressure Sensor 5V Reference	II	—
15	—	—	—	Not Occupied	—	—
16	0.5	VT / BU	5294	Powertrain Main Relay Fused Supply Voltage 5	II	—
17	—	—	—	Not Occupied	—	—
18	0.5	BU / WH	225	Generator Turn On Signal	II	—
19	0.5	GY	23	Generator Field Duty Cycle Signal	II	—
20	0.5	BK / GN	6281	Fuel Level Sensor Low Reference	II	—
21	0.5	BU / WH	2918	Fuel Rail Pressure Sensor Signal	II	—
22	0.5	BK / GN	2919	Fuel Rail Pressure Sensor Low Reference	II	—
23 - 26	—	—	—	Not Occupied	—	—
27	0.5	BK / GN	822	Vehicle Speed Sensor Low Reference	II	—

K20 Engine Control Module X3 (LCV) (cont'd)

Pin	Size	Color	Circuit	Function	Terminal Type ID	Option
28 - 39	—	—	—	Not Occupied	—	—
40	0.5	GN / WH	432	Manifold Absolute Pressure Sensor Signal	II	—
41	0.5	BN / GN	1174	Oil Level Switch Signal	II	—
42	—	—	—	Not Occupied	—	—
43	0.5	BU / VT	1589	Primary Fuel Level Sensor Signal	II	—
44 - 45	—	—	—	Not Occupied	—	—
46	0.5	YE / WH	3200	Throttle Inlet Absolute Pressure Sensor Signal	II	—
47 - 51	—	—	—	Not Occupied	—	—
52	0.5	VT / BK	7300	High Pressure Fuel Pump Low Control	II	—
53 - 54	—	—	—	Not Occupied	—	—
55	0.5	GY	3890	Active Grille Air Shutter Control 2	II	—
56 - 58	—	—	—	Not Occupied	—	—
59	0.5	BK / GY	2303	Knock Sensor Low Reference 2	II	—
60	0.5	WH / GY	1876	Knock Sensor 2 Signal	II	—
61	0.5	BK / YE	1716	Knock Sensor Low Reference 1	II	—
62	0.5	VT / GY	496	Knock Sensor 1 Signal	II	—
63	0.5	VT / WH	821	Vehicle Speed Sensor Signal	II	—
64 - 67	—	—	—	Not Occupied	—	—
68	0.5	BU / WH	890	Fuel Tank Pressure Sensor Signal	II	—
69 - 71	—	—	—	Not Occupied	—	—
72	0.5	YE	7301	High Pressure Fuel Pump High Control	II	—
73	2.5	BK / WH	1451	Signal Ground	I	—

K20 Engine Control Module X1 (LGZ)

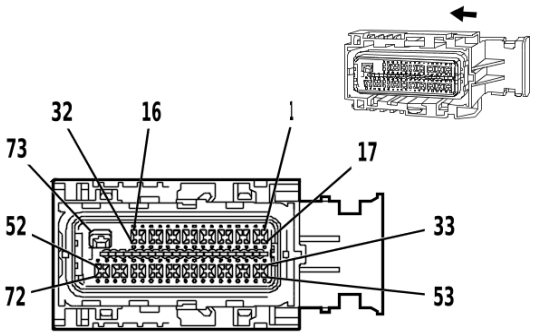

2470482

Connector Part Information

Harness Type: Engine Wiring Harness
OEM Connector: 34566-0303
Service Connector: 13574782
Description: 73 <p01>-Way F 0.64, 2.8 Series, Sealed(BK with BU Terminal Position Assurance)

Terminal Part Information

Terminal Type ID	Terminated Lead	Diagnostic Test Probe	Terminal Removal Tool
I	13587518	J-35616-35 (VT)	J-38125-11A
II	19351723	J-35616-64B (LT BU)	J-38125-213

K20 Engine Control Module X1 (LGZ)

Pin	Size	Color	Circuit	Function	Terminal Type ID	Option
1 - 4	—	—	—	Not Occupied	—	—
5	0.5	BK / VT	1272	Accelerator Pedal Position Low Reference 2	II	—
6	0.5	YE / WH	1161	Accelerator Pedal Position Signal 1	II	—
7	0.5	BK / BU	1271	Accelerator Pedal Position Low Reference 1	II	—
8	0.5	WH	7494	High Speed GMLAN Serial Data [-] 3	II	—
9	0.5	BK / YE	5382	Brake Position Sensor Low Reference	II	—
10 - 11	—	—	—	Not Occupied	—	—
12	0.5	WH	2501	High Speed GMLAN Serial Data [-] 1	II	—
13	0.5	WH / BU	6311	Cruise/ETC/TCC Brake Signal	II	—
14	0.5	WH / GY	459	A/C Compressor Clutch Relay Control	II	—
15	0.5	YE	5991	Powertrain Relay Coil Control	II	—
16	0.5	BN / WH	419	Check Engine Indicator Control	II	—
17 - 20	—	—	—	Not Occupied	—	—
21	0.5	BN / RD	1274	Accelerator Pedal Position 5V Reference 2	II	—
22	0.5	GN / WH	1162	Accelerator Pedal Position Signal 2	II	—
23	0.5	WH / RD	1164	Accelerator Pedal Position 5V Reference 1	II	—
24	0.5	BU / BK	7493	High Speed GMLAN Serial Data [+] 3	II	—
25	0.5	WH / RD	5381	Brake Position Sensor 5V Reference	II	—
26	0.5	WH / GN	5380	Brake Position Sensor Signal	II	—
27	—	—	—	Not Occupied	—	—
28	0.5	BU	2500	High Speed GMLAN Serial Data [+] 1	II	—

K20 Engine Control Module X1 (LGZ) (cont'd)

Pin	Size	Color	Circuit	Function	Terminal Type ID	Option
29	—	—	—	Not Occupied	—	—
30	0.5	GN / WH	492	Mass Air Flow Sensor Signal	II	—
31 - 37	—	—	—	Not Occupied	—	—
38	0.5	BU / WH	890	Fuel Tank Pressure Sensor Signal	II	—
39	0.5	BN / GY	4008	Humidity Sensor Signal	II	—
40	0.5	WH / RD	596	5V Reference	II	—
41 - 43	—	—	—	Not Occupied	—	—
44	0.5	BK / WH	2151	Signal Ground	II	—
45 - 46	—	—	—	Not Occupied	—	—
47	0.5	BN / RD	2700	A/C Pressure Sensor 5V Reference	II	—
48	—	—	—	Not Occupied	—	—
49	0.5	VT / BU	5292	Powertrain Main Relay Fused Supply Voltage 3	II	—
50	0.5	VT / BU	5291	Powertrain Main Relay Fused Supply Voltage 2	II	—
51	0.5	VT / YE	5985	Accessory Wake-Up Serial Data	II	—
52	0.5	RD / WH	140	Battery Positive Voltage	II	—
53	—	—	—	Not Occupied	—	—
54	0.5	WH	1310	EVAP Vent Solenoid Valve Control	II	—
55 - 59	—	—	—	Not Occupied	—	—
60	0.5	GN / YE	3337	Transmission Internal Mode Switch Mode Control Y	II	—
61 - 63	—	—	—	Not Occupied	—	—
64	0.5	BU / GY	636	Ambient Air Temperature Sensor Signal	II	—
65 - 66	—	—	—	Not Occupied	—	—
67	0.5	GN	380	A/C Refrigerant Pressure Sensor Signal	II	—
68	—	—	—	Not Occupied	—	—
69	0.5	GN / GY	465	Fuel Pump Primary Relay Control	II	—
70	0.5	YE / BK	625	Starter Enable Relay Control	II	—
71	0.5	VT / GY	139	Run/Crank Ignition 1 Voltage	II	—
72	0.5	VT / BU	5290	Powertrain Main Relay Fused Supply Voltage 1	II	—
73	2	VT / BU	5290	Powertrain Main Relay Fused Supply Voltage 1	I	—

K20 Engine Control Module X2 (LGZ)

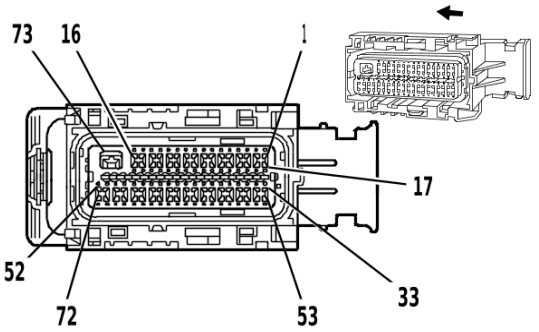

1673472

Connector Part Information

Harness Type: Engine Wiring Harness
OEM Connector: 34566-0103
Service Connector: 19333090
Description: 73 <p01>-Way F 0.64, 2.8 Series, Sealed(BK with BK Terminal Position Assurance)

Terminal Part Information

Terminal Type ID	Terminated Lead	Diagnostic Test Probe	Terminal Removal Tool
I	13587518	J-35616-35 (VT)	J-38125-11A
II	19354746	J-35616-64B (LT BU)	J-38125-213

K20 Engine Control Module X2 (LGZ)

Pin	Size	Color	Circuit	Function	Terminal Type ID	Option
1	0.5	GY / WH	3122	HO2S Heater Low Control Bank 1 Sensor 2	II	—
2	0.5	WH / BN	3223	HO2S Heater Low Control Bank 2 Sensor 2	II	—
3 - 6	—	—	—	Not Occupied	—	—
7	0.5	GY	3890	Active Grille Air Shutter Control 2	II	—
8	—	—	—	Not Occupied	—	—
9	0.5	BN / GN	1174	Oil Level Switch Signal	II	—
10	—	—	—	Not Occupied	—	—
11	0.5	YE / BN	331	Oil Pressure Sensor Signal	II	—
12	0.5	BK / BN	2761	Coolant Temperature Sensor Low Reference	II	—
13 - 16	—	—	—	Not Occupied	—	—
17	0.5	GY / WH	3113	HO2S Heater Low Control Bank 1 Sensor 1	II	—
18	0.5	GN / YE	3212	HO2S Heater Low Control Bank 2 Sensor 1	II	—
19 - 21	—	—	—	Not Occupied	—	—
22	0.5	BU / VT	1589	Primary Fuel Level Sensor Signal	II	—
23 - 26	—	—	—	Not Occupied	—	—
27	0.5	WH / RD	2705	Oil Pressure Sensor 5V Reference	II	—
28	0.5	VT / BU	5294	Powertrain Main Relay Fused Supply Voltage 5	II	—
29 - 34	—	—	—	Not Occupied	—	—
35	0.5	WH / BK	3111	HO2S Low Signal Bank 1 Sensor 1	II	—
36	0.5	YE / WH	3211	HO2S Low Signal Bank 2 Sensor 1	II	—
37	0.5	WH / YE	3121	HO2S Low Signal Bank 1 Sensor 2	II	—

K20 Engine Control Module X2 (LGZ) (cont'd)

Pin	Size	Color	Circuit	Function	Terminal Type ID	Option
38	0.5	YE / BU	3221	HO2S Low Signal Bank 2 Sensor 2	II	—
39	0.5	BK / YE	1716	Knock Sensor Low Reference 1	II	—
40	0.5	BK / GY	2303	Knock Sensor Low Reference 2	II	—
41	—	—	—	Not Occupied	—	—
42	0.5	YE / WH	3200	Throttle Inlet Absolute Pressure Sensor Signal	II	—
43	0.5	WH / RD	3201	Throttle Inlet Absolute Pressure Sensor 5V Reference	II	—
44	—	—	—	Not Occupied	—	—
45	0.5	GY / BK	3096	Digital Output Speed Sensor 5V Reference	II	—
46	0.5	YE / RD	2709	Fuel Tank Pressure Sensor 5V Reference	II	—
47	0.5	GY / RD	2704	Manifold Absolute Pressure Sensor 5V Reference	II	—
48	0.5	BK / GN	469	Manifold Absolute Pressure Sensor Low Reference	II	—
49 - 50	—	—	—	Not Occupied	—	—
51	0.5	BK / VT	2755	Oil Pressure Sensor Low Reference	II	—
52	0.5	BN / WH	582	Throttle Actuator Close Control	II	—
53 - 54	—	—	—	Not Occupied	—	—
55	0.5	VT / GY	3110	HO2S High Signal Bank 1 Sensor 1	II	—
56	0.5	VT / WH	3210	HO2S High Signal Bank 2 Sensor 1	II	—
57	0.5	VT / BU	3120	HO2S High Signal Bank 1 Sensor 2	II	—
58	0.5	VT / GN	3220	HO2S High Signal Bank 2 Sensor 2	II	—
59	0.5	VT / GY	496	Knock Sensor 1 Signal	II	—
60	0.5	WH / GY	1876	Knock Sensor 2 Signal	II	—
61 - 62	—	—	—	Not Occupied	—	—
63	0.5	WH / YE	3202	Throttle Inlet Absolute Pressure Sensor 5V Reference	II	—
64	—	—	—	Not Occupied	—	—
65	0.5	GN	3098	Output Speed Signal	II	—
66	0.5	WH / BK	3097	Digital Output Speed Sensor 5V Reference	II	—
67	0.5	GN / WH	432	Manifold Absolute Pressure Sensor Signal	II	—
68 - 69	—	—	—	Not Occupied	—	—
70	0.5	WH / BU	6289	Intake Air Temperature Sensor Signal	II	—
71	—	—	—	Not Occupied	—	—
72	0.5	YE	581	Throttle Actuator Open Control	II	—
73	2.5	BK / WH	151	Signal Ground	I	—

K20 Engine Control Module X3 (LGZ)

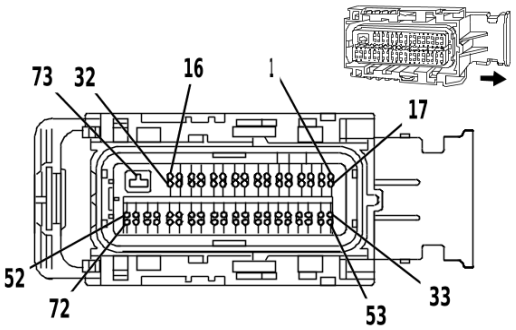

1590596

Connector Part Information

Harness Type: Engine Wiring Harness
OEM Connector: 34566-0203
Service Connector: 19333091
Description: 73 <p01>-Way F 0.64, 2.8 Series, Sealed(BK with GY Terminal Position Assurance)

Terminal Part Information

Terminal Type ID	Terminated Lead	Diagnostic Test Probe	Terminal Removal Tool
I	13587518	J-35616-35 (VT)	J-38125-11A
II	19354746	J-35616-64B (LT BU)	J-38125-213

K20 Engine Control Module X3 (LGZ)

Pin	Size	Color	Circuit	Function	Terminal Type ID	Option
1	0.5	GN	5492	Cylinder Deactivation Solenoid Valve Control 2	II	—
2	0.5	BU	5491	Cylinder Deactivation Solenoid Valve Control 1	II	—
3	0.5	GN / BN	5298	Exhaust Camshaft Position Sensor 2 Voltage Reference	II	—
4	0.5	YE	5276	Intake Camshaft Position Sensor 2	II	—
5	0.5	WH / BU	5302	Intake Camshaft Position Sensor 2 Voltage Reference	II	—
6	0.5	VT / BU	6270	Crankshaft Position Sensor Voltage	II	—
7	0.5	GN	6271	Crankshaft Position Sensor Signal	II	—
8	0.5	BN / RD	2701	Throttle Position Sensor 5V Reference	II	—
9 - 11	—	—	—	Not Occupied	—	—
12	0.5	BN / BU	2126	Ignition Control 6	II	—
13	0.5	BU / GY	2125	Ignition Control 5	II	—
14	0.5	YE / BU	2124	Ignition Control 4	II	—
15	0.5	BK / GY	2130	Ignition Control Low Reference Bank 2	II	—
16	0.5	YE	7301	High Pressure Fuel Pump High Control	II	—
17	0.5	WH / GN	7805	Park Phasor Lock Control 2	II	—
18	0.5	YE / GN	4321	Camshaft Position Actuator Park Lock Control	II	—
19	0.5	BK / BN	5299	Exhaust Camshaft Position Sensor Low Reference 2	II	—
20	0.5	VT / BU	5274	Exhaust Camshaft Position Sensor 2	II	—

K20 Engine Control Module X3 (LGZ) (cont'd)

Pin	Size	Color	Circuit	Function	Terminal Type ID	Option
21	0.5	BK / VT	5303	Intake Camshaft Position Sensor Low Reference 2	II	—
22	0.5	BK / VT	6272	Crankshaft Position Sensor Low Reference	II	—
23	0.5	BU / WH	3630	Throttle Position Sensor SENT 1 Signal	II	—
24	0.5	BK / BN	2752	Throttle Position Sensor Low Reference	II	—
25	—	—	—	Not Occupied	—	—
26	0.5	BU / WH	225	Generator Turn On Signal	II	—
27	—	—	—	Not Occupied	—	—
28	0.5	GN / BU	2123	Ignition Control 3	II	—
29	0.5	BU / WH	2122	Ignition Control 2	II	—
30	0.5	BU / VT	2121	Ignition Control 1	II	—
31	0.5	BK / BU	2129	Ignition Control Low Reference Bank 1	II	—
32	0.5	VT / BK	7300	High Pressure Fuel Pump Low Control	II	—
33	0.5	GN / BU	428	EVAP Canister Purge Solenoid Control	II	—
34	0.5	BU	179	Engine Oil Pump Control	II	—
35	0.5	GY / YE	5297	Exhaust Camshaft Position Sensor 1 Voltage Reference	II	—
36	0.5	VT / BK	5273	Exhaust Camshaft Position Sensor 1	II	—
37	0.5	BK / GY	5296	Exhaust Camshaft Position Sensor Low Reference 1	II	—
38	0.5	BU	410	Engine Coolant Temperature Sensor Signal	II	—
39	0.5	BN / RD	7445	Fuel Line Pressure Sensor 5V Reference	II	—
40	0.5	BN / RD	2917	Fuel Rail Pressure Sensor 5V Reference	II	—
41	0.5	BK / GN	2919	Fuel Rail Pressure Sensor Low Reference	II	—
42	—	—	—	Not Occupied	—	—
43	0.5	BK / BU	6755	Camshaft Position Actuator Solenoid Valve Y Low Reference	II	—
44	0.5	GN	5272	Intake Camshaft Position Actuator Solenoid Valve 2	II	—
45	0.5	VT / BN	5284	Intake Camshaft Position Actuator Solenoid Valve 1	II	—
46	0.5	BK / BN	6753	Camshaft Position Actuator Solenoid Valve W Low Reference	II	—
47	0.75	WH / GN	4805	Direct Fuel Injector High Voltage Control Cylinder 5	II	—
48	0.75	BU	4802	Direct Fuel Injector High Voltage Control Cylinder 2	II	—
49	0.75	BN	4801	Direct Fuel Injector High Voltage Control Cylinder 1	II	—
50	0.75	GY / BU	4804	Direct Fuel Injector High Voltage Control Cylinder 4	II	—
51	0.75	VT / GN	4806	Direct Fuel Injector High Voltage Control Cylinder 6	II	—
52	0.75	GN	4803	Direct Fuel Injector High Voltage Control Cylinder 3	II	—
53 - 54	—	—	—	Not Occupied	—	—
55	0.5	GY / BU	5300	Intake Camshaft Position Sensor 1 Voltage Reference	II	—
56	0.5	YE / VT	5275	Intake Camshaft Position Sensor 1	II	—

K20 Engine Control Module X3 (LGZ) (cont'd)

Pin	Size	Color	Circuit	Function	Terminal Type ID	Option
57	0.5	BK / GN	5301	Intake Camshaft Position Sensor Low Reference 1	II	—
58	—	—	—	Not Occupied	—	—
59	0.5	BU / WH	7446	Fuel Pressure Sensor Signal	II	—
60	0.5	BU / WH	2918	Fuel Rail Pressure Sensor Signal	II	—
61	0.5	GY	23	Generator Field Duty Cycle Signal	II	—
62	—	—	—	Not Occupied	—	—
63	0.5	BK / GY	6756	Camshaft Position Actuator Solenoid Valve Z Low Reference	II	—
64	0.5	GN / BN	5283	Exhaust Camshaft Position Actuator Solenoid Valve 2	II	—
65	0.5	GY / BU	5282	Exhaust Camshaft Position Actuator Solenoid Valve 1	II	—
66	0.5	BK / VT	6754	Camshaft Position Actuator Solenoid Valve X Low Reference	II	—
67	0.75	GN / WH	4905	Direct Fuel Injector High Voltage Supply Cylinder 5	II	—
68	0.75	BU / GY	4902	Direct Fuel Injector High Voltage Supply Cylinder 2	II	—
69	0.75	BN / WH	4901	Direct Fuel Injector High Voltage Supply Cylinder 1	II	—
70	0.75	BU / WH	4904	Direct Fuel Injector High Voltage Supply Cylinder 4	II	—
71	0.75	VT / GY	4906	Direct Fuel Injector High Voltage Supply Cylinder 6	II	—
72	0.75	GN / GY	4903	Direct Fuel Injector High Voltage Supply Cylinder 3	II	—
73	2.5	BK / WH	151	Signal Ground	I	—

K20 Engine Control Module X1 (LWN)

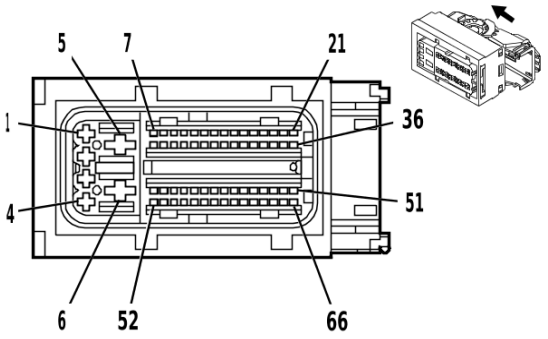

2498868

Connector Part Information

Harness Type: Engine Wiring Harness
OEM Connector: 35059716
Service Connector: 19370822
Description: 66 <p01>-Way F 0.64 MTS-B, 2.8 ATS, 6.3 Ducon Series, Sealed(BK)

Terminal Part Information

Terminal Type ID	Terminated Lead	Diagnostic Test Probe	Terminal Removal Tool
I	13584530	J-35616-4A (PU)	J-38125-215A
II	19330637	J-35616-64B (LT BU)	J-38125-215A
III	19369848	J-35616-18 (BK)	J-38125-215A

K20 Engine Control Module X1 (LWN)

Pin	Size	Color	Circuit	Function	Terminal Type ID	Option
1	2.5	VT / BU	5290	Powertrain Main Relay Fused Supply Voltage 1	I	—
2	0.75	VT / BU	5291	Powertrain Main Relay Fused Supply Voltage 2	I	—
3	1.5	VT / BU	5292	Powertrain Main Relay Fused Supply Voltage 3	I	—
4	0.5	RD / WH	140	Battery Positive Voltage	I	—
5	6	BN / BU	104	Glow Plug Control	III	—
6	6	BK / WH	451	Signal Ground	III	—
7	0.5	VT / YE	5985	Accessory Wake-Up Serial Data	II	—
8 - 10	—	—	—	Not Occupied	—	—
11	0.5	BU / YE	6861	Water In Fuel Sensor Signal	II	—
12	—	—	—	Not Occupied	—	—
13	0.5	WH / RD	1164	Accelerator Pedal Position 5V Reference 1	II	—
14	0.5	BN / RD	1274	Accelerator Pedal Position 5V Reference 2	II	—
15	0.5	GN / WH	1162	Accelerator Pedal Position Signal 2	II	—
16	0.5	BK / VT	1272	Accelerator Pedal Position Low Reference 2	II	—
17	0.5	WH / BK	2366	Cooling Fan Speed Control Signal	II	—
18	0.5	BN / WH	419	Check Engine Indicator Control	II	—
19	0.5	GN / BN	507	Wait To Start Indicator Control	II	—
20	—	—	—	Not Occupied	—	—
21	0.5	YE	2928	Fuel Metering Solenoid Valve High Control	II	—
22	0.5	VT / GY	139	Run/Crank Ignition 1 Voltage	II	—

K20 Engine Control Module X1 (LWN) (cont'd)

Pin	Size	Color	Circuit	Function	Terminal Type ID	Option
23	0.5	WH / BU	6311	Cruise/ETC/TCC Brake Signal	II	—
24	0.5	WH / GY	1786	Transmission Park/Neutral Signal 1	II	—
25	0.5	GN / WH	492	Mass Air Flow Sensor Signal	II	—
26	0.5	BU / VT	2364	Cooling Fan Speed Signal	II	—
27	0.5	BK / BU	1271	Accelerator Pedal Position Low Reference 1	II	—
28	0.5	YE / WH	1161	Accelerator Pedal Position Signal 1	II	—
29	0.5	BU / RD	3096	Digital Output Speed Sensor 5V Reference	II	—
30	0.5	VT / WH	821	Vehicle Speed Sensor Signal	II	—
31	0.5	BK / GN	822	Vehicle Speed Sensor Low Reference	II	—
32	—	—	—	Not Occupied	—	—
33	0.5	WH / GY	459	A/C Compressor Clutch Relay Control	II	—
34 - 35	—	—	—	Not Occupied	—	—
36	0.5	BN / BK	2929	Fuel Metering Solenoid Valve Low Control	II	—
37 - 38	—	—	—	Not Occupied	—	—
39	0.5	WH	4499	High Speed GMLAN Serial Data [-] 7	II	—
40	0.5	WH	2501	High Speed GMLAN Serial Data [-] 1	II	—
41 - 42	—	—	—	Not Occupied	—	—
43	0.5	BK / YE	5382	Brake Position Sensor Low Reference	II	—
44	0.5	WH / RD	5381	Brake Position Sensor 5V Reference	II	—
45	0.5	WH / BU	6289	Intake Air Temperature Sensor Signal	II	—
46	0.5	BN / RD	2700	A/C Pressure Sensor 5V Reference	II	—
47	0.5	GN	380	A/C Refrigerant Pressure Sensor Signal	II	—
48	0.5	BK / BN	5514	A/C Refrigerant Pressure Sensor Low Reference	II	—
49	—	—	—	Not Occupied	—	—
50	0.5	GN / GY	465	Fuel Pump Primary Relay Control	II	—
51	0.5	YE	5991	Powertrain Relay Coil Control	II	—
52 - 53	—	—	—	Not Occupied	—	—
54	0.5	BU / BN	4498	High Speed GMLAN Serial Data [+] 7	II	—
55	0.5	BU	2500	High Speed GMLAN Serial Data [+] 1	II	—
56 - 58	—	—	—	Not Occupied	—	—
59	0.5	WH / GN	5380	Brake Position Sensor Signal	II	—
60	0.5	BK / VT	2760	Intake Air Temperature Sensor Low Reference	II	—
61 - 63	—	—	—	Not Occupied	—	—
64	0.5	VT / BN	2927	Exhaust Aftertreatment Fuel Injector Low Control	II	—
65	—	—	—	Not Occupied	—	—
66	0.5	VT / GY	6386	—	II	—

K20 Engine Control Module X2 (LWN)

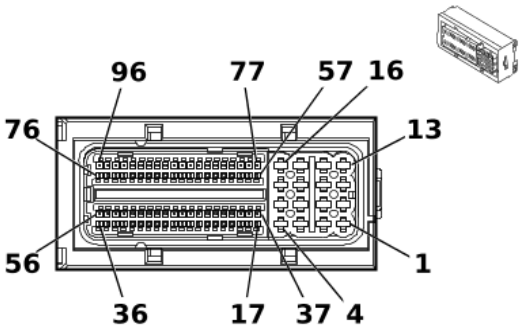

4115094

Connector Part Information

Harness Type: Engine Wiring Harness
OEM Connector: 35059745
Service Connector: 19370825
Description: 96 <p01>-Way F 0.64 MTS-B, 2.8 ATS Series, Sealed(BK)

Terminal Part Information

Terminal Type ID	Terminated Lead	Diagnostic Test Probe	Terminal Removal Tool
I	13584448	J-35616-64B (LT BU)	J-38125-215A
II	13584530	J-35616-4A (PU)	J-38125-215A

K20 Engine Control Module X2 (LWN)

Pin	Size	Color	Circuit	Function	Terminal Type ID	Option
1	1.5	BU / GY	4902	Direct Fuel Injector High Voltage Supply Cylinder 2	II	—
2	1.5	GN / GY	4903	Direct Fuel Injector High Voltage Supply Cylinder 3	II	—
3	1.5	BU / WH	4904	Direct Fuel Injector High Voltage Supply Cylinder 4	II	—
4	1.5	BN / WH	4901	Direct Fuel Injector High Voltage Supply Cylinder 1	II	—
5	1.5	BU	4802	Direct Fuel Injector High Voltage Control Cylinder 2	II	—
6	1.5	GN	4803	Direct Fuel Injector High Voltage Control Cylinder 3	II	—
7	1.5	GY / BU	4804	Direct Fuel Injector High Voltage Control Cylinder 4	II	—
8	1.5	BN	4801	Direct Fuel Injector High Voltage Control Cylinder 1	II	—
9 - 12	—	—	—	Not Occupied	—	—
13	2	GY / BN	1582	Glow Plug 2 Control	II	—
14	2	GY / YE	1584	Glow Plug 4 Control	II	—
15	2	GY / GN	1583	Glow Plug 3 Control	II	—
16	2	GY / BU	1581	Glow Plug 1 Control	II	—
17	0.5	BK / VT	2755	Oil Pressure Sensor Low Reference	I	—
18	0.5	YE / BN	331	Oil Pressure Sensor Signal	I	—
19	0.5	WH / RD	2705	Oil Pressure Sensor 5V Reference	I	—

K20 Engine Control Module X2 (LWN) (cont'd)

Pin	Size	Color	Circuit	Function	Terminal Type ID	Option
20 - 25	—	—	—	Not Occupied	—	—
26	0.5	BN	7348	Intake Air Temperature Sensor 2 Signal	I	—
27	0.5	BN / GY	7072	Fuel Temperature Sensor 1 Signal	I	—
28 - 29	—	—	—	Not Occupied	—	—
30	0.5	BU	410	Engine Coolant Temperature Sensor Signal	I	—
31	0.5	BN	3681	Charge Air Cooler Outlet Temperature Sensor Signal	I	—
32	0.5	GN	3683	Charge Air Cooler Inlet Temperature Sensor Signal	I	—
33	—	—	—	Not Occupied	—	—
34	0.5	BN	25	Charge Indicator Control	I	—
35 - 37	—	—	—	Not Occupied	—	—
38	0.5	BN / YE	2161	Fuel Rail Pressure Sensor 2 Signal	I	—
39	—	—	—	Not Occupied	—	—
40	0.5	GY / BU	5300	Intake Camshaft Position Sensor 1 Voltage Reference	I	—
41	0.5	YE / VT	5275	Intake Camshaft Position Sensor 1	I	—
42	0.5	BK / GN	5301	Intake Camshaft Position Sensor Low Reference 1	I	—
43	0.5	BN / RD	2701	Throttle Position Sensor 5V Reference	I	—
44	0.5	BU / WH	3630	Throttle Position Sensor SENT 1 Signal	I	—
45	0.5	BK / BN	2752	Throttle Position Sensor Low Reference	I	—
46	—	—	—	Not Occupied	—	—
47	0.5	BN / WH	7073	Fuel Temperature Sensor 1 Low Reference	I	—
48 - 49	—	—	—	Not Occupied	—	—
50	0.5	BK / BN	2761	Coolant Temperature Sensor Low Reference	I	—
51	0.5	YE / BU	3680	Charge Air Cooler Outlet Temperature Sensor Low Reference	I	—
52	0.5	YE / BK	3682	Charge Air Cooler Inlet Temperature Sensor Low Reference	I	—
53 - 55	—	—	—	Not Occupied	—	—
56	0.5	BN / BU	2926	Exhaust Aftertreatment Fuel Injector High Control	I	—
57	0.5	BK / BN	2753	Exhaust Gas Recirculation Sensor Low Reference	I	—
58	0.5	BN / WH	5763	Exhaust Gas Recirculation Position Signal	I	—
59	0.5	BU / RD	5047	Exhaust Gas Recirculation Valve Position Sensor 5V Reference 1	I	—
60	0.5	BK / BN	6141	Cooling Fan Speed Sensor Low Reference	I	—
61	—	—	—	Not Occupied	—	—
62	0.5	GY / RD	2365	Cooling Fan Speed Sensor 5V Reference	I	—
63 - 66	—	—	—	Not Occupied	—	—
67	0.5	GY	23	Generator Field Duty Cycle Signal	I	—
68	—	—	—	Not Occupied	—	—
69	0.5	BK / GN	2919	Fuel Rail Pressure Sensor Low Reference	I	—
70	0.5	VT / BK	5746	Exhaust Gas Recirculation Valve Low Control	I	—
71	0.5	WH / VT	5764	Exhaust Gas Recirculation Valve High Control	I	—

K20 Engine Control Module X2 (LWN) (cont'd)

Pin	Size	Color	Circuit	Function	Terminal Type ID	Option
72	0.5	GY / BU	5930	Turbocharger Vane Position Control Solenoid Valve High Signal	I	—
73	0.5	WH / BK	5931	Turbocharger Vane Position Control Solenoid Valve Low Signal	I	—
74 - 75	—	—	—	Not Occupied	—	—
76	0.5	BK / YE	2834	Fuel Rail Pressure Solenoid Valve Low Reference	I	—
77 - 79	—	—	—	Not Occupied	—	—
80	0.5	BK / GN	469	Manifold Absolute Pressure Sensor Low Reference	I	—
81	0.5	GN / WH	432	Manifold Absolute Pressure Sensor Signal	I	—
82	0.5	GY / RD	2704	Manifold Absolute Pressure Sensor 5V Reference	I	—
83	0.5	VT / BU	6270	Crankshaft Position Sensor Voltage	I	—
84	0.5	GN	6271	Crankshaft Position Sensor Signal	I	—
85	0.5	BK / VT	6272	Crankshaft Position Sensor Low Reference	I	—
86	0.5	BN / GN	1174	Oil Level Switch Signal	I	—
87	—	—	—	Not Occupied	—	—
88	0.5	BU / WH	2918	Fuel Rail Pressure Sensor Signal	I	—
89	0.5	BN / RD	2917	Fuel Rail Pressure Sensor 5V Reference	I	—
90	0.5	BN / WH	582	Throttle Actuator Close Control	I	—
91	0.5	YE	581	Throttle Actuator Open Control	I	—
92 - 93	—	—	—	Not Occupied	—	—
94	0.5	YE / BU	3231	Exhaust Gas Recirculation Cooler Bypass Solenoid Valve Control	I	—
95	0.5	GY / BU	3230	Exhaust Gas Recirculation Cooler Bypass Solenoid Valve Control	I	—
96	0.5	BU / WH	2530	Fuel Rail Pressure Solenoid Valve Control	I	—

K20 Engine Control Module X3 (LWN)

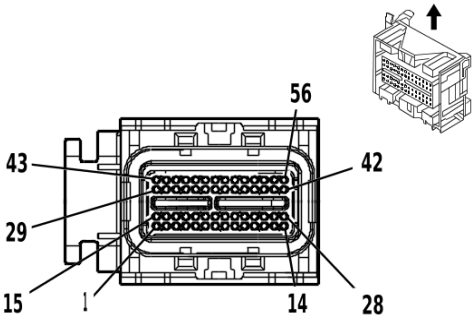

784851

Connector Part Information

Harness Type: Engine Wiring Harness
OEM Connector: 34576-0703
Service Connector: 88988373
Description: 56 <p01>-Way F 0.64 Series, Sealed(BK with BU Terminal Position Assurance)

Terminal Part Information

Terminal Type ID	Terminated Lead	Diagnostic Test Probe	Terminal Removal Tool
I	19351723	J-35616-64B (LT BU)	J-38125-213

K20 Engine Control Module X3 (LWN)

Pin	Size	Color	Circuit	Function	Terminal Type ID	Option
1	0.5	BN / WH	3100	Diesel Exhaust Fluid Dosing Valve Low Control	I	—
2	—	—	—	Not Occupied	—	—
3	0.5	BK / GN	6281	Fuel Level Sensor Low Reference	I	—
4 - 5	—	—	—	Not Occupied	—	—
6	0.5	YE / WH	3200	Throttle Inlet Absolute Pressure Sensor Signal	I	—
7	0.5	WH / RD	3201	Throttle Inlet Absolute Pressure Sensor 5V Reference	I	—
8	0.5	BK / BU	61	Ambient Air Temperature Sensor Low Reference	I	—
9	0.5	BK / VT	3661	Exhaust Gas Temperature Sensor 5 Low Reference	I	—
10	0.5	BK / BU	6274	Exhaust Gas Recirculation Temperature Sensor Low Reference	I	—
11	0.5	BK / GY	3659	Exhaust Gas Temperature Sensor 4 Low Reference	I	—
12	0.5	BK / GN	3657	Exhaust Gas Temperature Sensor 3 Low Reference	I	—
13	0.5	BK / BU	6783	Exhaust Gas Temperature Sensor 2 Low Reference	I	—
14	0.5	BU / WH	5277	Exhaust Gas Temperature Sensor 1 Signal	I	—
15	0.5	BN	3099	Diesel Exhaust Fluid Dosing Valve High Control	I	—
16 - 17	—	—	—	Not Occupied	—	—
18	0.5	BU / VT	1589	Primary Fuel Level Sensor Signal	I	—
19	0.5	BK / YE	6275	Exhaust Gas Recirculation Temperature Sensor 2 Low Reference	I	—

K20 Engine Control Module X3 (LWN) (cont'd)

Pin	Size	Color	Circuit	Function	Terminal Type ID	Option
20	0.5	YE / GN	3236	Exhaust Gas Recirculation Temperature Sensor 2 Signal	I	—
21	0.5	GY / RD	5928	Turbocharger Vane Position Sensor Voltage Reference	I	—
22	0.5	BU / GY	636	Ambient Air Temperature Sensor Signal	I	—
23	0.5	BU / GY	3660	Exhaust Gas Temperature Sensor 5 Signal	I	—
24	0.5	WH / BN	3237	Exhaust Gas Recirculation Temperature Sensor Signal	I	—
25	0.5	VT / BN	3658	Exhaust Gas Temperature Sensor 4 Signal	I	—
26	0.5	GY / GN	5378	Exhaust Gas Temperature Sensor 3 Signal	I	—
27	0.5	BK / BN	6782	Exhaust Gas Temperature Sensor 1 Low Reference	I	—
28	0.5	BU / GN	5377	Exhaust Gas Temperature Sensor 2 Signal	I	—
29	—	—	—	Not Occupied	—	—
30	0.5	YE / BU	1497	Positive Crankcase Ventilation Heater Control	I	—
31	—	—	—	Not Occupied	—	—
32	0.5	BN / GY	4008	Humidity Sensor Signal	I	—
33	0.5	BK / BN	5929	Turbocharger Vane Position Sensor Low Reference	I	—
34 - 42	—	—	—	Not Occupied	—	—
43	0.5	GN / BU	3889	Powertrain Sensor Bus Relay Control	I	—
44	—	—	—	Not Occupied	—	—
45	0.5	BU	3017	Fuel Heater Relay 1 Control	I	—
46	0.5	VT / YE	5947	Turbocharger Vane Position Sensor Signal	I	—
47 - 49	—	—	—	Not Occupied	—	—
50	0.5	WH / RD	6054	Exhaust Pressure Sensor 1 5V Reference	I	—
51	0.5	BU	6053	Exhaust Pressure Sensor 1 Signal	I	—
52	0.5	BK / YE	6055	Exhaust Pressure Sensor 1 Low Reference	I	—
53 - 56	—	—	—	Not Occupied	—	—

K22 Cooling Fan Control Module

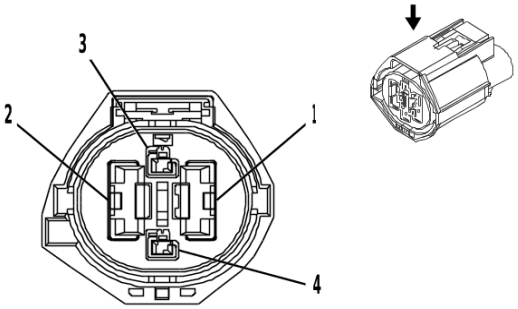

2394097

Connector Part Information

Harness Type: Cooling Fan
OEM Connector: 7287-1404-10
Service Connector: Service by Harness - See Part Catalog
Description: 4 <p01>-Way F 1.5, 9.5 Series, Sealed(D-GY)

Terminal Part Information

Terminal Type ID	Terminated Lead	Diagnostic Test Probe	Terminal Removal Tool
I	Not Available	No Tool Required	Not Available

K22 Cooling Fan Control Module

Pin	Size	Color	Circuit	Function	Terminal Type ID	Option
1	—	BK	1350	Ground	I	—
2	—	RD / GY	4840	Battery Positive Voltage	I	—
3 - 4	—	—	—	Not Occupied	—	—

K29 Seat Heating Control Module X1 (KA1)

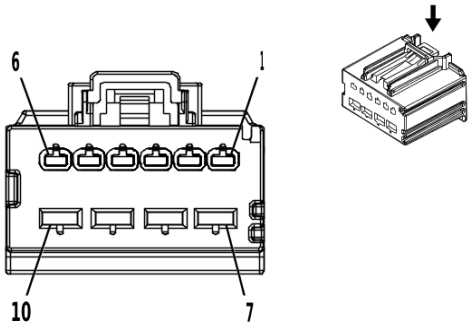

3791446

Connector Part Information

Harness Type: Passenger Seat
OEM Connector: 13582823
Service Connector: Service by Harness - See Part Catalog
Description: 10 <p01>-Way F 1.5, 2.8 STAC Series(BK)

Terminal Part Information

Terminal Type ID	Terminated Lead	Diagnostic Test Probe	Terminal Removal Tool
I	Not Available	No Tool Required	Not Available

K29 Seat Heating Control Module X1 (KA1)

Pin	Size	Color	Circuit	Function	Terminal Type ID	Option
1	0.75	WH / BN	2481	Passenger Seat Back Heating Element Control	I	—
2	0.75	BN / BU	2479	Passenger Seat Heating Element Control	I	KA1
3	0.75	GY / BK	2480	Passenger Seat Heating Element Low Reference	I	—
4	0.75	VT / BK	2424	Driver Seat Back Heating Element Low Reference	I	—
5	0.75	BN	2432	Driver Seat Back Heating Element Control	I	—
6	0.75	BN / VT	2077	Driver Seat Heating Element Control	I	—
7	0.75	RD / GN	6140	Battery Positive Voltage	I	—
8	0.75	BK	3850	Ground	I	—
9	—	—	—	Not Occupied	—	—
10	0.75	RD / GN	5140	Battery Positive Voltage	I	—

K29 Seat Heating Control Module X2 (KA1)

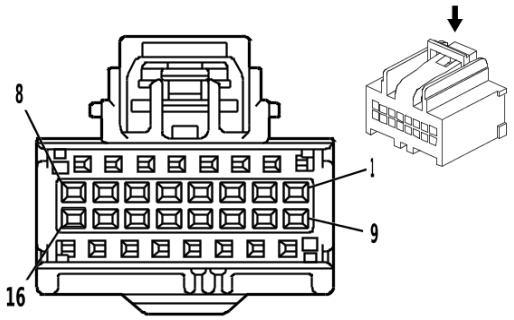

1653409

Connector Part Information

Harness Type: Passenger Seat
OEM Connector: 15136073
Service Connector: Service by Harness - See Part Catalog
Description: 16 <p01>-Way F 0.64 Kaizen Series(BK)

Terminal Part Information

Terminal Type ID	Terminated Lead	Diagnostic Test Probe	Terminal Removal Tool
I	Not Available	No Tool Required	Not Available

K29 Seat Heating Control Module X2 (KA1)

Pin	Size	Color	Circuit	Function	Terminal Type ID	Option
1	—	BK / YE	2080	Driver Heated Seat Thermistor Low Reference	I	—
2	—	GY / BK	2435	Passenger Heated Seat Thermistor Low Reference	I	—
3	—	BU	2425	Driver Seat Back Heating Temperature Sensor Signal	I	—
4	—	WH / BU	2436	Passenger Seat Back Heating Temperature Sensor Signal	I	—
5	—	WH / GY	2434	Passenger Seat Heating Temperature Sensor Signal	I	—
6	—	YE / GY	2079	Driver Seat Heating Temperature Sensor Signal	I	—
7	—	—	—	Not Occupied	—	—
8	—	GN / BU	6133	Body Control Module LIN Bus 2	I	—
9	—	GN / VT	5906	Driver Seat Blower Motor Control 1	I	—
10	—	VT / WH	5908	Passenger Seat Blower Motor Control 1	I	—
11	—	—	—	Not Occupied	—	—
12	—	BK / GN	2482	Passenger Heated Back Thermistor Low Reference	I	—
13 - 16	—	—	—	Not Occupied	—	—

K32 Steering Wheel Heating Control Module X1

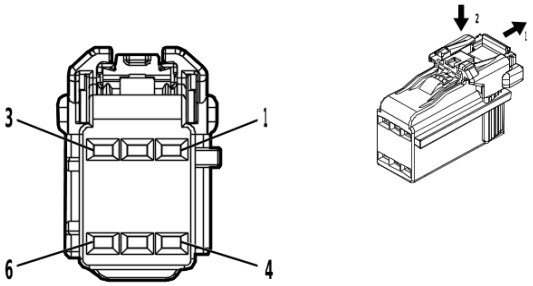

4862126

Connector Part Information

Harness Type: Steering Wheel Horn Switch Wiring Harness
OEM Connector: Not Available
Service Connector: Service by Harness - See Part Catalog
Description: 6 <p01>-Way

Terminal Part Information

Terminal Type ID	Terminated Lead	Diagnostic Test Probe	Terminal Removal Tool
I	Not Available	No Tool Required	Not Available

K32 Steering Wheel Heating Control Module X1

Pin	Size	Color	Circuit	Function	Terminal Type ID	Option
1	0.35	TN / <p01>	5883	Steering Wheel Heating Switch Signal	I	—
2	0.35	GN	5884	Steering Wheel Heating Switch LED Control	I	—
3	0.75	RD / <p01>	1139	Run/Crank Ignition 1 Voltage	I	—
4	0.35	BK	2050	Ground	I	—
5	0.35	BN	2050	Ground	I	—
6	—	—	—	Not Occupied	—	—

K32 Steering Wheel Heating Control Module X2

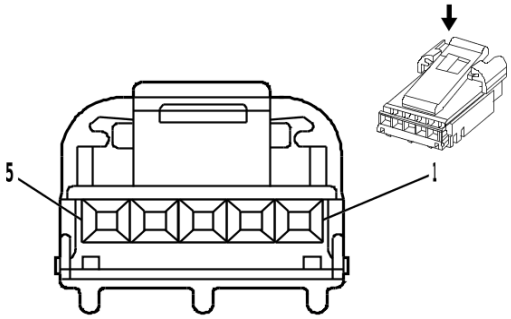

1682177

Connector Part Information

Harness Type: Steering Wheel Horn Switch Wiring Harness
OEM Connector: Not Available
Service Connector: Service by Harness - See Part Catalog
Description: 5 <p01>-Way F

Terminal Part Information

Terminal Type ID	Terminated Lead	Diagnostic Test Probe	Terminal Removal Tool
I	Not Available	No Tool Required	Not Available

K32 Steering Wheel Heating Control Module X2

Pin	Size	Color	Circuit	Function	Terminal Type ID	Option
1	0.35	BN	2050	Ground	I	—
2	0.35	GY	5886	Steering Wheel Heating Temperature Sensor Signal	I	—
3	0.75	WH	5888	Steering Wheel Heating High Control	I	—
4	0.35	BK	2050	Ground	I	—
5	—	—	—	Not Occupied	—	—

K33 HVAC Control Module X1

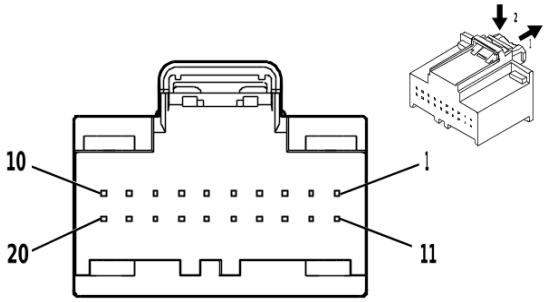

5109511

Connector Part Information

Harness Type: Instrument Panel Wiring Harness
OEM Connector: 31410-0208
Service Connector: 13525993
Description: 20 <p01>-Way F 0.64 Series(GN)

Terminal Part Information

Terminal Type ID	Terminated Lead	Diagnostic Test Probe	Terminal Removal Tool
I	13584547	J-35616-64B (LT BU)	J-38125-215A

K33 HVAC Control Module X1

Pin	Size	Color	Circuit	Function	Terminal Type ID	Option
1	—	—	—	Not Occupied	—	—
2	0.35	GY / GN	7565	Windshield Temperature Sensor Signal	I	—
3	—	—	—	Not Occupied	—	—
4	0.35	BU / WH	734	Inside Air Temperature Sensor Signal	I	—
5	0.35	YE / BU	3197	Intake Air Humidity and Temperature Sensor Signal	I	—
6	0.35	YE / RD	597	5V Reference	I	—
7	0.35	BK / BU	7566	Windshield Temperature and Inside Moisture Sensor Low Reference	I	—
8 - 11	—	—	—	Not Occupied	—	—
12	0.35	GY / BU	7564	Humidity Sensor Signal 2	I	—
13	—	—	—	Not Occupied	—	—
14	0.35	YE / VT	1783	Ambient Light Sensor Signal	I	—
15 - 17	—	—	—	Not Occupied	—	—
18	0.5	BN	518	Lower Left Duct Air Temperature Sensor Signal	I	—
19 - 20	—	—	—	Not Occupied	—	—

K33 HVAC Control Module X2

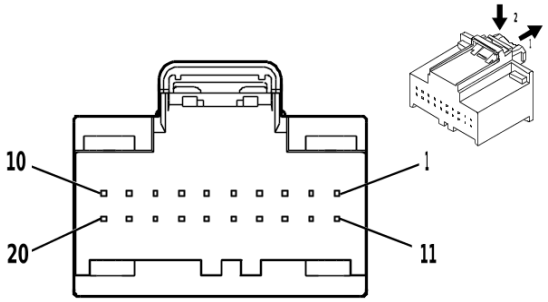

5109514

Connector Part Information

Harness Type: Instrument Panel Wiring Harness
OEM Connector: 31410-0207
Service Connector: 13525992
Description: 20 <p01>-Way F 0.64 Series(BN)

Terminal Part Information

Terminal Type ID	Terminated Lead	Diagnostic Test Probe	Terminal Removal Tool
I	13584547	J-35616-64B (LT BU)	J-38125-215A

K33 HVAC Control Module X2

Pin	Size	Color	Circuit	Function	Terminal Type ID	Option
1	0.5	RD / VT	3340	Battery Positive Voltage	I	—
2	0.35	GN	5060	Low Speed GMLAN Serial Data	I	—
3	—	—	—	Not Occupied	—	—
4	0.35	GN / YE	7531	HVAC Control Module LIN Bus 1	I	—
5 - 6	—	—	—	Not Occupied	—	—
7	0.5	VT	3195	Auxiliary Heater Control	I	—
8	0.5	BK	2050	Ground	I	—
9	0.35	VT / GY	539	Run/Crank Ignition 1 Voltage	I	—
10	0.5	BU / YE	7574	A/C Compressor Solenoid Valve Control	I	—
11	0.5	BU / BN	7573	A/C Compressor Solenoid Valve Control	I	—
12 - 14	—	—	—	Not Occupied	—	—
15	0.35	BU / GY	754	Blower Motor Speed Control	I	—
16 - 17	—	—	—	Not Occupied	—	—
18	0.35	BK / YE	1791	Air Temperature Door Low Reference	I	—
19	0.35	BN / VT	193	Rear Defogger Relay Control	I	—
20	—	—	—	Not Occupied	—	—

K33 HVAC Control Module X3

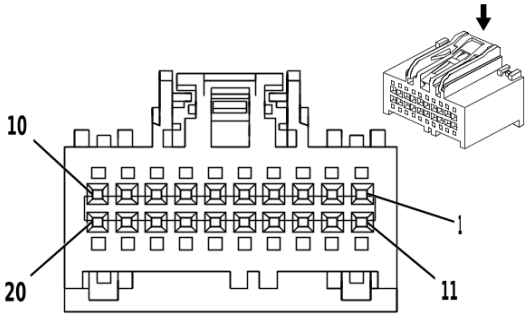

1715223

Connector Part Information

Harness Type: HVAC
OEM Connector: 31410-1200
Service Connector: Service by Harness - See Part Catalog
Description: 20 <p01>-Way F 0.64 Series(BK)

Terminal Part Information

Terminal Type ID	Terminated Lead	Diagnostic Test Probe	Terminal Removal Tool
I	Not Available	No Tool Required	Not Available

K33 HVAC Control Module X3

Pin	Size	Color	Circuit	Function	Terminal Type ID	Option
1	—	—	—	Not Occupied	—	—
2	—	YE	3165	Mode Door Actuator Control 1	I	—
3	—	WH / RD	3166	Mode Door Actuator Control 2	I	—
4	—	GY / BN	3167	Mode Door Actuator Control 3	I	—
5	—	GN / WH	3168	Mode Door Actuator Control 4	I	—
6 - 8	—	—	—	Not Occupied	—	—
9	—	BK / YE	407	Sensor Low Reference	I	—
10	—	—	—	Not Occupied	—	—
11	—	GN	3169	Air Temperature Door Actuator Control 1	I	—
12	—	WH / PK	3170	Air Temperature Door Actuator Control 2	I	—
13	—	GY / RD	3171	Air Temperature Door Actuator Control 3	I	—
14	—	RD / BK	3172	Air Temperature Door Actuator Control 4	I	—
15	—	BK	7572	HVAC Door Actuator Control	I	—
16	—	GY	3173	Air Inlet Door Actuator Control 1	I	—
17	—	BU / WH	3174	Air Inlet Door Actuator Control 2	I	—
18	—	BN / GN	3175	Air Inlet Door Actuator Control 3	I	—
19	—	RD / GN	3176	Air Inlet Door Actuator Control 4	I	—
20	—	GY	6137	A/C Evaporator Temperature Sensor Signal	I	—

K36 Inflatable Restraint Sensing and Diagnostic Module X1

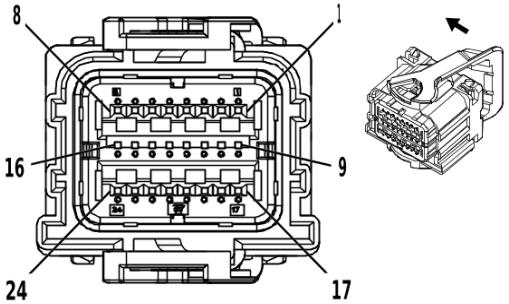

2829824

Connector Part Information

Harness Type: Instrument Panel Wiring Harness
OEM Connector: 2098923-7
Service Connector: 13579297
Description: 24 <p01>-Way F 0.64 Series, Sealed(YE)

Terminal Part Information

Terminal Type ID	Terminated Lead	Diagnostic Test Probe	Terminal Removal Tool
I	19328872	J-35616-64B (LT BU)	J-38125-215A

K36 Inflatable Restraint Sensing and Diagnostic Module X1

Pin	Size	Color	Circuit	Function	Terminal Type ID	Option
1	0.35	OG / GN	3021	Steering Wheel Air Bag Stage 1 High Control	I	—
2	0.35	WH / OG	3020	Steering Wheel Air Bag Stage 1 Low Control	I	—
3	0.35	BN / OG	3022	Steering Wheel Air Bag Stage 2 Low Control	I	—
4	0.35	OG / VT	3023	Steering Wheel Air Bag Stage 2 High Control	I	—
5	0.35	YE / OG	3025	Passenger Instrument Panel Air Bag Stage 1 High Control	I	—
6	0.35	OG / WH	3024	Passenger Instrument Panel Air Bag Stage 1 Low Control	I	—
7	0.35	OG / VT	3026	Passenger Instrument Panel Air Bag Stage 2 Low Control	I	—
8	0.35	GY / OG	3027	Passenger Instrument Panel Air Bag Stage 2 High Control	I	—
9	0.5	RD / GN	4440	Battery Positive Voltage	I	—
10	0.35	VT / WH	5234	Passenger Seat Belt Indicator Control	I	—
11	0.35	BU	2307	Passenger Air Bag On Indicator Control	I	—
12	0.35	GN	2308	Passenger Air Bag Off Indicator Control	I	—
13 - 14	—	—	—	Not Occupied	—	—
15	0.5	GN	5060	Low Speed GMLAN Serial Data	I	—
16	—	—	—	Not Occupied	—	—
17	0.5	WH / BU	5986	Serial Data Communication Enable	I	—
18	0.35	BU / YE	6105	High Speed GMLAN Serial Data [+] 2	I	—
19	0.5	BK / WH	2251	Signal Ground	I	—
20	0.35	WH	6106	High Speed GMLAN Serial Data [-] 2	I	—

K36 Inflatable Restraint Sensing and Diagnostic Module X1 (cont'd)

Pin	Size	Color	Circuit	Function	Terminal Type ID	Option
21 - 24	—	—	—	Not Occupied	—	—

K36 Inflatable Restraint Sensing and Diagnostic Module X2

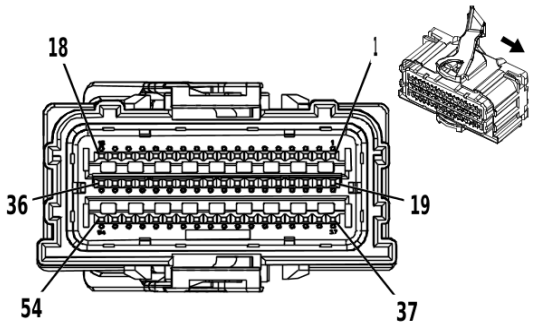

2817420

Connector Part Information

Harness Type: Body Wiring Harness
OEM Connector: 2098922-9
Service Connector: 19303770
Description: 54 <p01>-Way F 0.64 Series, Sealed(YE)

Terminal Part Information

Terminal Type ID	Terminated Lead	Diagnostic Test Probe	Terminal Removal Tool
I	19328872	J-35616-64B (LT BU)	J-38125-215A
II	Not required	J-35616-64B (LT BU)	No Tool Required

K36 Inflatable Restraint Sensing and Diagnostic Module X2

Pin	Size	Color	Circuit	Function	Terminal Type ID	Option
1 - 8	—	—	—	Not Occupied	—	—
9	0.35	OG / YE	3481	Driver Seat Belt Anchor Pretensioner High Control	I	—
10	0.35	YE / OG	3482	Driver Seat Belt Anchor Pretensioner Low Control	I	—
11	0.35	GY / OG	3480	Passenger Seat Belt Anchor Pretensioner Low Control	I	—
12	0.35	OG / BN	3479	Passenger Seat Belt Anchor Pretensioner High Control	I	—
13	0.35	OG / BU	3068	Driver Seat Side Air Bag High Control	I	—
14	0.35	GN / OG	3069	Driver Seat Side Air Bag Low Control	I	—
15	0.35	BN / OG	3067	Passenger Seat Side Air Bag Low Control	I	—
16	0.35	OG / GY	3066	Passenger Seat Side Air Bag High Control	I	—
17	0.5	OG / GN	5019	Left Front Roof Rail Air Bag High Control	II	—
18	0.5	VT / OG	5020	Left Front Roof Rail Air Bag Low Control	II	—
19	0.35	OG / GN	2132	Left Front Side Impact Sensor Signal	I	—
20	0.35	BK / OG	6628	Left Front Side Impact Sensor Low Reference	I	—
21	0.35	BK / OG	6629	Right Front Side Impact Sensor Low Reference	I	—
22	0.35	BN / OG	2134	Right Front Side Impact Sensor Signal	I	—
23	0.5	OG / YE	354	Left Front Impact Discriminating Sensor Signal	I	—
24	0.5	BK / OG	5045	Left Front Impact Discriminating Sensor Low Reference	I	—

K36 Inflatable Restraint Sensing and Diagnostic Module X2 (cont'd)

Pin	Size	Color	Circuit	Function	Terminal Type ID	Option
25	0.5	BK / OG	5600	Right Front Impact Discriminating Sensor Low Reference	I	—
26	0.5	OG / GN	1409	Right Front Impact Discriminating Sensor Signal	I	—
27	0.35	OG / BU	6620	Left Middle Side Impact Sensor Signal	I	—
28	0.35	BK / OG	6621	Left Middle Side Impact Sensor Low Reference	I	—
29	0.35	BK / OG	6625	Right Middle Side Impact Sensor Low Reference	I	—
30	0.35	OG / VT	6624	Right Middle Side Impact Sensor Signal	I	—
31 - 36	—	—	—	Not Occupied	—	—
37	0.35	OG / WH	3477	Driver Seat Belt Retractor Pretensioner High Control	I	—
38	0.35	GY / OG	3478	Driver Seat Belt Retractor Pretensioner Low Control	I	—
39	0.35	WH / OG	3476	Passenger Seat Belt Retractor Pretensioner Low Control	I	—
40	0.35	OG / GN	3475	Passenger Seat Belt Retractor Pretensioner High Control	I	—
41	0.35	OG / BN	238	Driver Seat Belt Switch Signal	I	—
42	—	—	—	Not Occupied	—	—
43	0.35	BK / OG	1363	Driver Seat Belt Switch Low Reference	I	—
44	0.35	BK / OG	1361	Passenger Seat Belt Switch Low Reference	I	—
45	0.35	OG / VT	1362	Passenger Seat Belt Switch Signal	I	—
46 - 52	—	—	—	Not Occupied	—	—
53	0.5	OG / GY	5021	Right Front Roof Rail Air Bag High Control	II	—
54	0.5	WH / OG	5022	Right Front Roof Rail Air Bag Low Control	II	—

K38A Chassis Control Module - Auxiliary

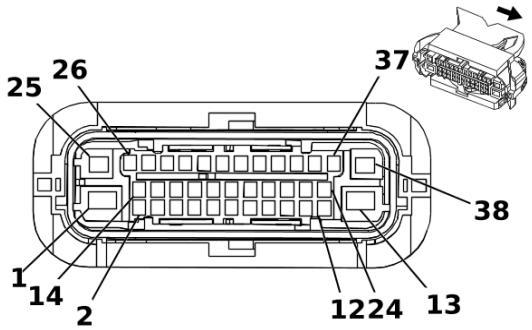

3240110

Connector Part Information

Harness Type: Chassis Wiring Harness
OEM Connector: 15498534
Service Connector: 19329924
Description: 38 <p01>-Way F 1.5 CTS, 2.8 MCP, 4.8 MCP Series, Sealed(BK with BK Inner Connector)

Terminal Part Information

Terminal Type ID	Terminated Lead	Diagnostic Test Probe	Terminal Removal Tool
I	13575368	J-35616-35 (VT)	J-38125-557
II	19301776	J-35616-14 (GN)	J-38125-215A
III	85158596	J-35616-40 (BU)	J-38125-556

K38A Chassis Control Module - Auxiliary

Pin	Size	Color	Circuit	Function	Terminal Type ID	Option
1	2.5	RD / VT	1940	Battery Positive Voltage	III	—
2	—	—	—	Not Occupied	—	—
3	0.5	BK / YE	7259	Axle Differential Lock Switch Low Reference	II	—
4	0.5	YE / GN	7122	Axle Differential Lock Switch Signal	II	—
5 - 6	—	—	—	Not Occupied	—	—
7	0.5	WH / BK	7254	Front Differential Lock Actuator Low Control	II	—
8 - 9	—	—	—	Not Occupied	—	—
10	0.5	GY / BK	7253	Rear Differential Lock Actuator Low Control	II	—
11	0.5	YE	7115	Rear Axle Differential Lock Indicator Control	II	—
12	0.5	VT / GY	7117	Front Axle Differential Lock Indicator Control	II	—
13	2.5	BK	650	Ground	III	—
14	0.5	VT / YE	5985	Accessory Wake-Up Serial Data	II	—
15	0.5	VT / WH	7256	Front Differential Lock Actuator Control	II	—
16	0.5	BU / RD	7632	Trailer Brake Control Switch 5V Reference	II	—
17	0.5	VT / BN	7258	Rear Differential Lock Actuator Control	II	—
18	0.5	BN	7634	Trailer Brake Control Redundant Manual Apply Signal	II	—
19	0.5	BK / BN	7631	Trailer Brake Control Switch Low Reference	II	—
20	0.5	YE	7635	Trailer Brake Control Manual Apply Signal	II	—
21	0.5	GN / BK	7633	Trailer Brake Control User Gain Signal	II	—

K38A Chassis Control Module - Auxiliary (cont'd)

Pin	Size	Color	Circuit	Function	Terminal Type ID	Option
22	0.5	YE / BK	2224	Trailer Brake Enable Signal	II	—
23	0.5	WH / BK	2223	Trailer Brake Apply Signal	II	—
24	—	—	—	Not Occupied	—	—
25	0.75	VT / GY	139	Run/Crank Ignition 1 Voltage	I	—
26	0.5	BU	2500	High Speed GMLAN Serial Data [+] 1	II	—
27	0.5	BU	2500	High Speed GMLAN Serial Data [+] 1	II	—
28	0.5	WH	2501	High Speed GMLAN Serial Data [-] 1	II	—
29	0.5	WH	2501	High Speed GMLAN Serial Data [-] 1	II	—
30	0.5	GN / VT	4114	Chassis Control Module LIN Bus 1	II	—
31 - 33	—	—	—	Not Occupied	—	—
34	0.5	GN / BK	7118	Front Axle Differential Lock Low Reference	II	—
35	0.5	VT / BK	7121	Rear Axle Differential Lock Low Reference	II	—
36	0.5	BU / BK	7116	Front Axle Differential Lock Control	II	—
37	0.5	BU / WH	7120	Rear Axle Differential Lock Control	II	—
38	—	—	—	Not Occupied	—	—

K43 Power Steering Control Module X1

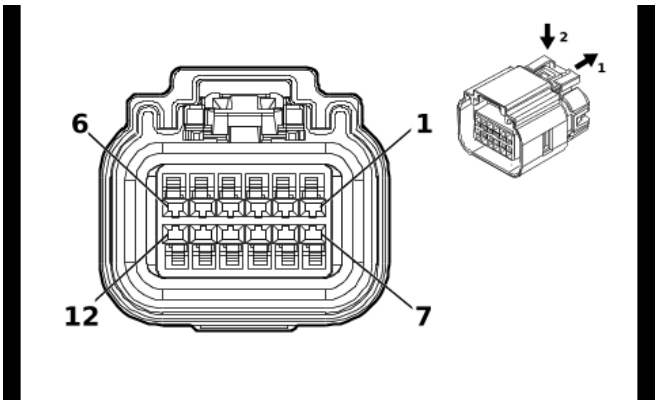

3293624

Connector Part Information

Harness Type: Power Steering Wiring Harness
OEM Connector: 13678638
Service Connector: Service by Harness - See Part Catalog
Description: 12 <p01>-Way F 1.2 OCS Series, Sealed(BK)

Terminal Part Information

Terminal Type ID	Terminated Lead	Diagnostic Test Probe	Terminal Removal Tool
I	Not required	J-35616-16 (LT GN)	No Tool Required

K43 Power Steering Control Module X1

Pin	Size	Color	Circuit	Function	Terminal Type ID	Option
1	0.5	RD / BN	5940	Battery Positive Voltage	I	—
2	0.5	WH / BU	5986	Serial Data Communication Enable	I	—
3	0.5	BU / YE	6105	High Speed GMLAN Serial Data [+] 2	I	—
4	0.5	WH	6106	High Speed GMLAN Serial Data [-] 2	I	—
5	0.5	BU / YE	6105	High Speed GMLAN Serial Data [+] 2	I	—
6	0.5	WH	6106	High Speed GMLAN Serial Data [-] 2	I	—
7	0.5	BK	1150	Ground	I	—
8	0.5	BU	2500	High Speed GMLAN Serial Data [+] 1	I	—
9	0.5	WH	2501	High Speed GMLAN Serial Data [-] 1	I	—
10	0.5	BU	2500	High Speed GMLAN Serial Data [+] 1	I	—
11	0.5	WH	2501	High Speed GMLAN Serial Data [-] 1	I	—
12	0.5	BK	1150	Ground	I	—

K43 Power Steering Control Module X2

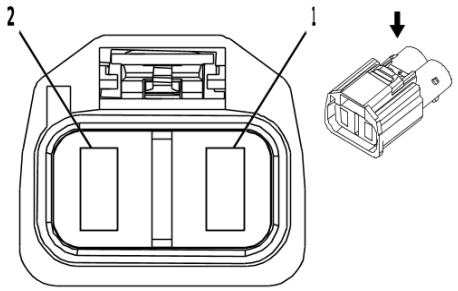

2748050

Connector Part Information

Harness Type: Power Steering Wiring Harness
OEM Connector: 7287-1990-30
Service Connector: Service by Harness - See Part Catalog
Description: 2 <p01>-Way F 9.5 Series, Sealed(BK)

Terminal Part Information

Terminal Type ID	Terminated Lead	Diagnostic Test Probe	Terminal Removal Tool
I	Not required	J-35616-22 (RD)	No Tool Required

K43 Power Steering Control Module X2

Pin	Size	Color	Circuit	Function	Terminal Type ID	Option
1	10	BK	1050	Ground	I	—
2	10	RD / VT	842	Battery Positive Voltage	I	—

K43 Power Steering Control Module X3

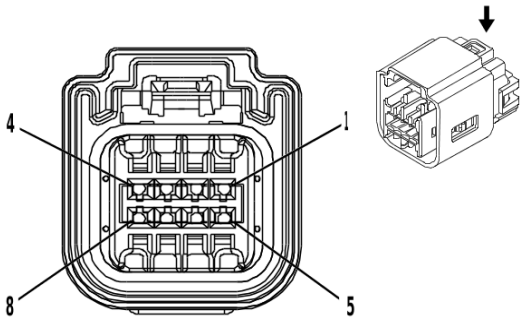

3996837

Connector Part Information

Harness Type: Power Steering Wiring Harness
OEM Connector: 13572498
Service Connector: Service by Harness - See Part Catalog
Description: 8 <p01>-Way F 1.2 OCS Series, Sealed(BK)

Terminal Part Information

Terminal Type ID	Terminated Lead	Diagnostic Test Probe	Terminal Removal Tool
I	Not Available	No Tool Required	Not Available

K43 Power Steering Control Module X3

Pin	Size	Color	Circuit	Function	Terminal Type ID	Option
1	—	—	—	Not Occupied	—	—
2	0.5	BN / RD	6631	Torque Input Sensor High Reference	I	—
3	0.5	BU / GY	6633	Torque Input Sensor Signal	I	—
4	0.5	BK / BU	6632	Torque Input Sensor Low Reference	I	—
5	—	—	—	Not Occupied	—	—
6	0.5	BN / RD	6631	Torque Input Sensor High Reference	I	—
7	0.5	BU / GY	6633	Torque Input Sensor Signal	I	—
8	0.5	BK / BU	6632	Torque Input Sensor Low Reference	I	—

K56 Serial Data Gateway Module X1

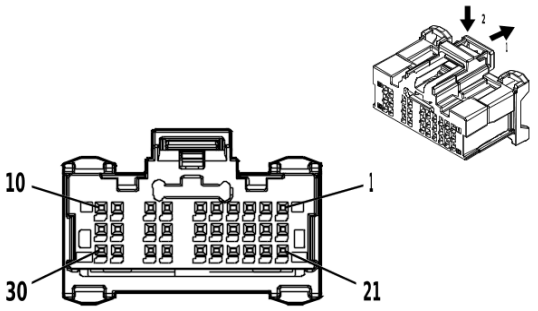

4900333

Connector Part Information

Harness Type: Instrument Panel Wiring Harness
OEM Connector: 2309644-3
Service Connector: 13519319
Description: 30 <p01>-Way F 0.5 MQS Series(BK with GY Terminal Position Assurance)

Terminal Part Information

Terminal Type ID	Terminated Lead	Diagnostic Test Probe	Terminal Removal Tool
I	19370262	EL-35616-58 (BK)	EL-38125-58

K56 Serial Data Gateway Module X1

Pin	Size	Color	Circuit	Function	Terminal Type ID	Option
1	0.35	RD / WH	6440	Battery Positive Voltage	I	—
2 - 3	—	—	—	Not Occupied	—	—
4	0.35	BU / GN	1304	High Speed GMLAN Serial Data [+] 9	I	—
5	0.35	WH / GN	1305	High Speed GMLAN Serial Data [-] 9	I	—
6	—	—	—	Not Occupied	—	—
7	0.35	BK / WH	2151	Signal Ground	I	—
8	0.35	BU / GN	1304	High Speed GMLAN Serial Data [+] 9	I	—
9	0.35	WH / GN	1305	High Speed GMLAN Serial Data [-] 9	I	—
10 - 14	—	—	—	Not Occupied	—	—
15	0.35	BU / BK	1978	High Speed GMLAN Serial Data [+] 11	I	—
16	0.35	WH	1979	High Speed GMLAN Serial Data [-] 11	I	—
17	0.35	BU / BN	1980	High Speed GMLAN Serial Data [+] 12	I	—
18	0.35	WH	1981	High Speed GMLAN Serial Data [-] 12	I	—
19	—	—	—	Not Occupied	—	—
20	0.35	GN	5060	Low Speed GMLAN Serial Data	I	—
21 - 25	—	—	—	Not Occupied	—	—
26	0.35	GN / WH	2100	Low Speed GMLAN Serial Data 3	I	—
27 - 30	—	—	—	Not Occupied	—	—

K56 Serial Data Gateway Module X2

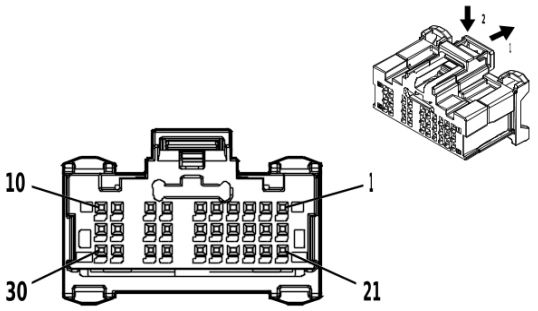

4897967

Connector Part Information

Harness Type: Instrument Panel Wiring Harness
OEM Connector: 2309644-4
Service Connector: 13519320
Description: 30 <p01>-Way F 0.5 MQS Series(BK with BU Terminal Position Assurance)

Terminal Part Information

Terminal Type ID	Terminated Lead	Diagnostic Test Probe	Terminal Removal Tool
I	19370262	EL-35616-58 (BK)	EL-38125-58

K56 Serial Data Gateway Module X2

Pin	Size	Color	Circuit	Function	Terminal Type ID	Option
1 - 3	—	—	—	Not Occupied	—	—
4	0.35	BU	2500	High Speed GMLAN Serial Data [+] 1	I	—
5	0.35	WH	2501	High Speed GMLAN Serial Data [-] 1	I	—
6 - 7	—	—	—	Not Occupied	—	—
8	0.35	BU / YE	6105	High Speed GMLAN Serial Data [+] 2	I	—
9	0.35	WH	6106	High Speed GMLAN Serial Data [-] 2	I	—
10 - 13	—	—	—	Not Occupied	—	—
14	0.35	BU	2500	High Speed GMLAN Serial Data [+] 1	I	—
15	0.35	WH	2501	High Speed GMLAN Serial Data [-] 1	I	—
16 - 17	—	—	—	Not Occupied	—	—
18	0.35	BU / YE	6105	High Speed GMLAN Serial Data [+] 2	I	—
19	0.35	WH	6106	High Speed GMLAN Serial Data [-] 2	I	—
20	—	—	—	Not Occupied	—	—
21	0.35	GY / GN	1102	Low Speed GMLAN Serial Data 2	I	—
22	—	—	—	Not Occupied	—	—
23	0.35	VT / GN	39	Run/Crank Ignition 1 Voltage	I	—
24	—	—	—	Not Occupied	—	—
25	0.35	WH / BU	5986	Serial Data Communication Enable	I	—
26 - 30	—	—	—	Not Occupied	—	—

K69 Transfer Case Control Module X1

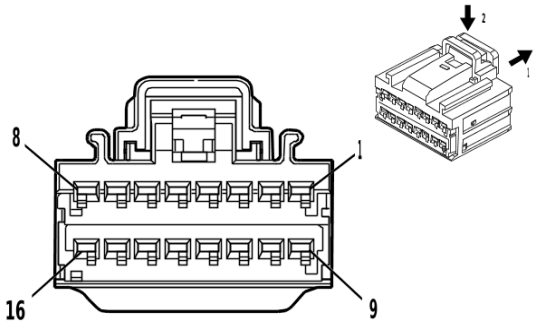

4847548

Connector Part Information

Harness Type: Body Wiring Harness
OEM Connector: 15512507
Service Connector: 13591062
Description: 16 <p01>-Way F 1.5 OCS Series(GY)

Terminal Part Information

Terminal Type ID	Terminated Lead	Diagnostic Test Probe	Terminal Removal Tool
I	84757974	J-35616-2A (GY)	J-38125-215A

K69 Transfer Case Control Module X1

Pin	Size	Color	Circuit	Function	Terminal Type ID	Option
1	0.5	YE / BK	7478	Gear Position Sensor Low Reference	I	—
2	0.5	WH / GN	7479	Rotary Position Sensor Signal	I	—
3	0.5	YE	7474	Incremental Encoder Direction Signal	I	—
4	0.5	GY / BK	1570	Front Axle Actuator Control	I	—
5	0.5	BU / GY	7473	Incremental Encoder Impulse Signal	I	—
6	0.35	GY / RD	6029	Four Wheel Drive Mode Switch 5V Reference	I	—
7	0.35	BU / YE	1693	Four Wheel Drive Switch Signal	I	—
8	—	—	—	Not Occupied	—	—
9	0.5	WH / RD	7477	Gear Position Sensor 5V Reference	I	—
10	0.5	WH / GN	7475	Incremental Encoder Sensor 8V Reference	I	—
11	0.5	VT	7476	Incremental Encoder Sensor Low Reference	I	—
12	0.5	YE / WH	1695	4WD Locked Range Indicator Control	I	—
13	1	YE / BN	1569	Transfer Case Lock Solenoid Valve Control	I	—
14 - 16	—	—	—	Not Occupied	—	—

K69 Transfer Case Control Module X2

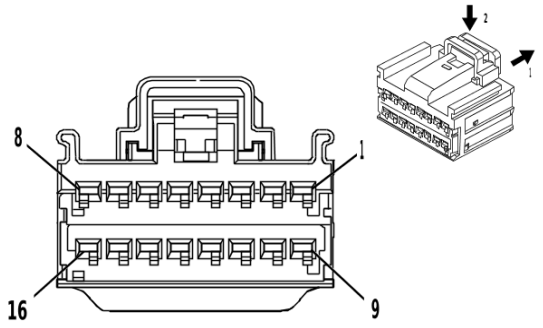

4332214

Connector Part Information

Harness Type: Body Wiring Harness
OEM Connector: 15512506
Service Connector: 13591061
Description: 16 <p01>-Way F 1.5 OCS Series(BK)

Terminal Part Information

Terminal Type ID	Terminated Lead	Diagnostic Test Probe	Terminal Removal Tool
I	84757974	J-35616-2A (GY)	J-38125-215A

K69 Transfer Case Control Module X2

Pin	Size	Color	Circuit	Function	Terminal Type ID	Option
1 - 2	—	—	—	Not Occupied	—	—
3	0.35	VT / WH	1565	4WD LO Indicator Control	I	—
4	0.35	VT / GN	1739	Run/Crank Ignition 1 Voltage	I	—
5	—	—	—	Not Occupied	—	—
6	0.35	VT / YE	5985	Accessory Wake-Up Serial Data	I	—
7	0.5	BU	2500	High Speed GMLAN Serial Data [+] 1	I	—
8	0.5	WH	2501	High Speed GMLAN Serial Data [-] 1	I	—
9 - 10	—	—	—	Not Occupied	—	—
11	0.35	GY / GN	1561	AWD Indicator Control	I	—
12	0.35	BN	1560	Neutral Indicator Control	I	—
13	0.35	GN / BK	1563	2WD HI Indicator Control	I	—
14	0.35	BN / BK	1566	4WD HI Indicator Control	I	—
15	0.5	BU	2500	High Speed GMLAN Serial Data [+] 1	I	—
16	0.5	WH	2501	High Speed GMLAN Serial Data [-] 1	I	—

K69 Transfer Case Control Module X3

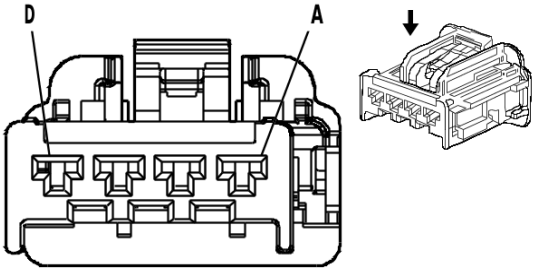

1866237

Connector Part Information

Harness Type: Body Wiring Harness
OEM Connector: 15466671
Service Connector: 19149301
Description: 4 <p01>-Way F 280 GT Series(L-GY)

Terminal Part Information

Terminal Type ID	Terminated Lead	Diagnostic Test Probe	Terminal Removal Tool
I	Not required	J-35616-4A (PU)	No Tool Required

K69 Transfer Case Control Module X3

Pin	Size	Color	Circuit	Function	Terminal Type ID	Option
A	2.5	YE / VT	1553	Transfer Case Motor Counter Clockwise Control	I	—
B	2.5	YE / GY	1552	Transfer Case Motor Clockwise Control	I	—
C	2.5	RD / GY	1342	Battery Positive Voltage	I	—
D	2.5	BK	3250	Ground	I	—

K71 Transmission Control Module

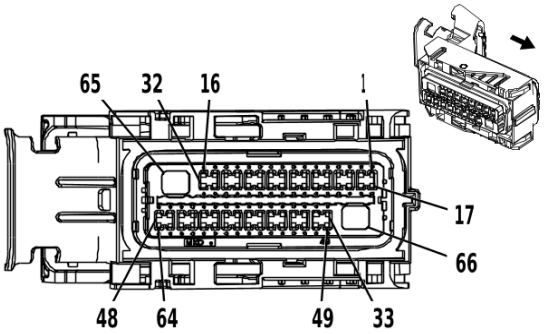

4024881

Connector Part Information

Harness Type: Engine Wiring Harness
OEM Connector: 34822-0023
Service Connector: 19330900
Description: 66 <p01>-Way F 0.64, 2.8 Series, Sealed(BK with BK Terminal Position Assurance)

Terminal Part Information

Terminal Type ID	Terminated Lead	Diagnostic Test Probe	Terminal Removal Tool
I	13587518	J-35616-35 (VT)	J-38125-11A
II	19351723	J-35616-64B (LT BU)	J-38125-213

K71 Transmission Control Module

Pin	Size	Color	Circuit	Function	Terminal Type ID	Option
1	0.5	WH / BU	4507	Transmission Clutch H Control	II	—
2	0.5	BU	6401	Clutch Solenoid Valve B Control	II	—
3	0.5	GY / GN	6403	Clutch Solenoid Valve D Control	II	—
4 - 6	—	—	—	Not Occupied	—	—
7	0.5	YE / GN	4170	Transmission Output Shaft Speed Sensor Circuit 9V Reference	II	—
8	0.5	YE / BU	4171	Transmission Input Shaft Speed Sensor Circuit 9V Reference	II	—
9 - 12	—	—	—	Not Occupied	—	—
13	0.5	GN / VT	4510	Transmission Intermediate Speed Signal	II	—
14	0.5	GY / BU	6358	Output Speed Signal	II	—
15	0.5	GN / YE	6353	Input Speed Signal	II	—
16	—	—	—	Not Occupied	—	—
17	0.5	WH	4508	Transmission Clutch G Control	II	—
18	0.5	BN	6400	Clutch Solenoid Valve A Control	II	—
19	0.5	GY	6402	Clutch Solenoid Valve C Control	II	—
20	0.5	YE / BN	6404	Clutch Solenoid Valve E Control	II	—
21	0.5	GN / WH	6380	Torque Converter Clutch Enable Solenoid Valve A Control	II	—
22	0.5	YE / BN	6210	Torque Converter Clutch Enable Solenoid Valve B Control	II	—
23 - 27	—	—	—	Not Occupied	—	—

K71 Transmission Control Module (cont'd)

Pin	Size	Color	Circuit	Function	Terminal Type ID	Option
28	0.5	BK / BN	586	Transmission Fluid Temperature Sensor Low Reference	II	—
29 - 32	—	—	—	Not Occupied	—	—
33	0.75	GN / GY	6387	Transmission High Side Driver 1 Control	II	—
34	—	—	—	Not Occupied	—	—
35	0.5	VT / BK	2139	Run/Crank Ignition 1 Voltage	II	—
36	—	—	—	Not Occupied	—	—
37	0.5	BU	2500	High Speed GMLAN Serial Data [+] 1	II	—
38	0.5	WH	2501	High Speed GMLAN Serial Data [-] 1	II	—
39 - 48	—	—	—	Not Occupied	—	—
49	0.75	GY / BN	6388	Transmission High Side Driver 2 Control	II	—
50	—	—	—	Not Occupied	—	—
51	0.5	VT / YE	5985	Accessory Wake-Up Serial Data	II	—
52	—	—	—	Not Occupied	—	—
53	0.5	BU	2500	High Speed GMLAN Serial Data [+] 1	II	—
54	0.5	WH	2501	High Speed GMLAN Serial Data [-] 1	II	—
55 - 62	—	—	—	Not Occupied	—	—
63	0.5	BN / WH	585	Transmission Fluid Temperature Sensor Signal	II	—
64	0.5	BU / WH	3338	Transmission Internal Mode Switch Mode Control X	II	—
65	0.75	BK / WH	1451	Signal Ground	I	—
66	0.75	RD / GN	1840	Battery Positive Voltage	I	—

K73 Telematics Communication Interface Control Module X1

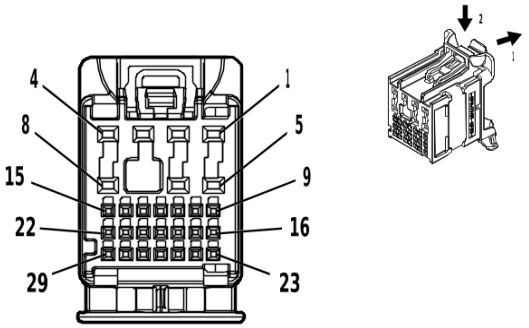

4496253

Connector Part Information

Harness Type: Body Wiring Harness
OEM Connector: 160014-0004
Service Connector: 13534974
Description: 29 <p01>-Way F 0.5 NANO, 1.2 MCON Series(BK)

Terminal Part Information

Terminal Type ID	Terminated Lead	Diagnostic Test Probe	Terminal Removal Tool
I	19370262	EL-35616-58 (BK)	EL-38125-58
II	84729890	J-35616-16 (LT GN)	J-38125-215A

K73 Telematics Communication Interface Control Module X1

Pin	Size	Color	Circuit	Function	Terminal Type ID	Option
1	0.5	RD / BU	3240	Battery Positive Voltage	II	—
2 - 3	—	—	—	Not Occupied	—	—
4	0.5	BK / WH	3451	Signal Ground	II	—
5	—	—	—	Not Occupied	—	—
6	0.5	GN / BK	2515	Telematics Switch Supply Voltage	II	—
7	—	—	—	Not Occupied	—	—
8	0.5	BK / WH	3451	Signal Ground	II	—
9	0.35	WH / GN	1305	High Speed GMLAN Serial Data [-] 9	I	—
10	0.35	BU / GN	1304	High Speed GMLAN Serial Data [+] 9	I	—
11	0.35	GN / WH	2514	Telematics Switch Signal	I	—
12	0.35	WH / BU	5986	Serial Data Communication Enable	I	—
13	0.35	Bare	1792	Low Reference	I	—
14	0.35	BK / GY	5152	Voice Recognition Audio [-] Control	I	—
15	0.35	GY / YE	5149	Voice Recognition Audio Signal	I	—
16	0.35	WH / GN	1305	High Speed GMLAN Serial Data [-] 9	I	—
17	0.35	BU / GN	1304	High Speed GMLAN Serial Data [+] 9	I	—
18	—	—	—	Not Occupied	—	—
19	0.35	YE / VT	2516	Telematics Switch Green LED Indicator Control	I	—
20	0.35	Bare	1782	Low Reference	I	—
21	0.35	BK / BN	654	Cellular Telephone Microphone Low Reference	I	—
22	0.35	BU	655	Cellular Telephone Microphone Signal	I	—

K73 Telematics Communication Interface Control Module X1 (cont'd)

Pin	Size	Color	Circuit	Function	Terminal Type ID	Option
23	0.35	GY / GN	1102	Low Speed GMLAN Serial Data 2	I	—
24 - 25	—	—	—	Not Occupied	—	—
26	0.35	BN / WH	2517	Telematics Switch Red LED Indicator Control	I	—
27	—	—	—	Not Occupied	—	—
28	0.1	GY / WH	7211	Ethernet Bus 4 [+]	I	—
29	0.1	GY / <p01>	7210	Ethernet Bus 4 [-]	I	—

K73 Telematics Communication Interface Control Module X5

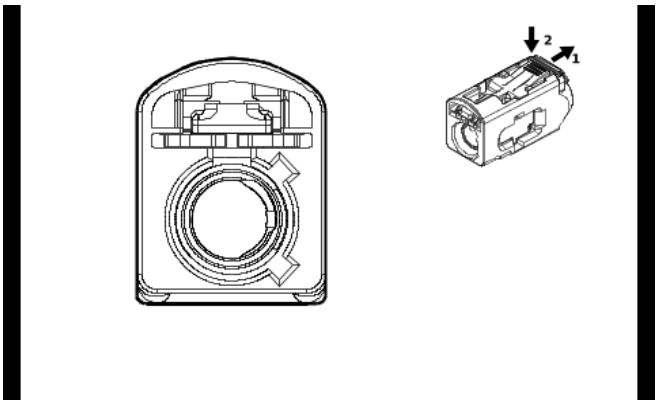

5429349

Connector Part Information

Harness Type: Body Wiring Harness COAX
OEM Connector: 13515627
Service Connector: Service by Cable Assembly — See Part Catalog
Description: 1 <p01>-Way F Coax Type(VT)

Terminal Part Information

Terminal Type ID	Terminated Lead	Diagnostic Test Probe	Terminal Removal Tool
I	Not required	No Tool Required	No Tool Required

K73 Telematics Communication Interface Control Module X5

Pin	Size	Color	Circuit	Function	Terminal Type ID	Option
—	—	Coax Cable	—	(Cell only) Coaxial Antenna Cell Phone Signal	I	—

K73 Telematics Communication Interface Control Module X7

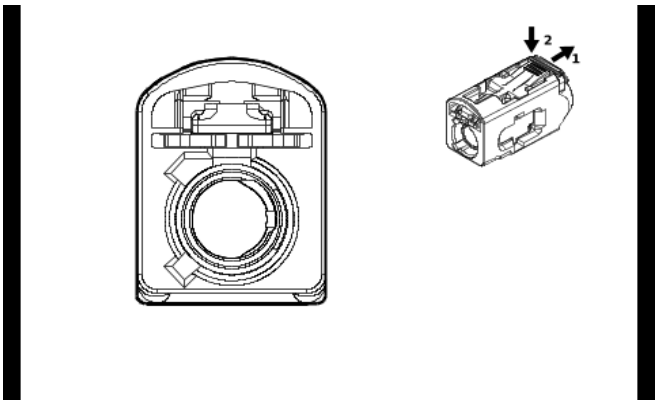

5483027

Connector Part Information

Harness Type: Body Wiring Harness COAX
OEM Connector: 13515629
Service Connector: Service by Cable Assembly — See Part Catalog
Description: 1 <p01>-Way F Coax Type(BN)

Terminal Part Information

Terminal Type ID	Terminated Lead	Diagnostic Test Probe	Terminal Removal Tool
I	Not required	No Tool Required	No Tool Required

K73 Telematics Communication Interface Control Module X7

Pin	Size	Color	Circuit	Function	Terminal Type ID	Option
—	—	Coax Cable	—	(GPS/Cell) Coaxial Antenna Cell/GPS combined Signal	I	—

K77 Remote Control Door Lock Receiver

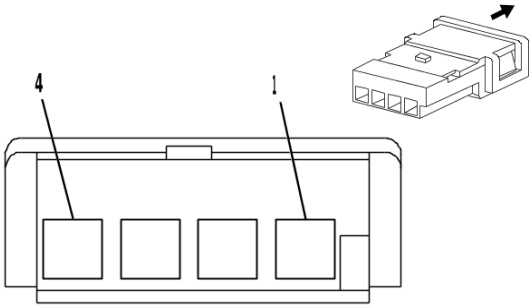

872587

Connector Part Information

Harness Type: Headliner Wiring Harness
OEM Connector: 968943-1
Service Connector: 13576534
Description: 4 <p01>-Way F 0.64 Micro-Quadlock Series(BK)

Terminal Part Information

Terminal Type ID	Terminated Lead	Diagnostic Test Probe	Terminal Removal Tool
I	Not required	J-35616-64B (LT BU)	No Tool Required

K77 Remote Control Door Lock Receiver

Pin	Size	Color	Circuit	Function	Terminal Type ID	Option
1	0.35	GY	3273	Remote Control Door Lock Receiver Low Reference	I	—
2	0.35	YE / GN	3274	Remote Control Door Lock Receiver Transmit Signal	I	—
3	0.35	BU / WH	3275	Remote Control Door Lock Receiver Receive Signal	I	—
4	0.35	GY / WH	3272	Remote Control Door Lock Receiver Control	I	—

K85 Passenger Presence Module

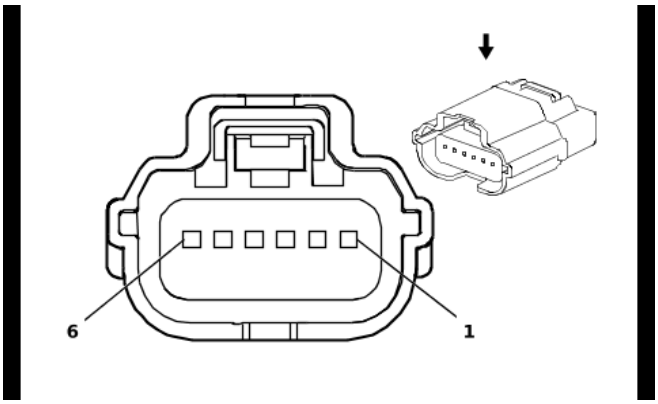

1974974

Connector Part Information

Harness Type: Passenger Seat
OEM Connector: 31404-6132
Service Connector: Service by Harness - See Part Catalog
Description: 6 <p01>-Way F 0.64 Series, Sealed(BK)

Terminal Part Information

Terminal Type ID	Terminated Lead	Diagnostic Test Probe	Terminal Removal Tool
I	Not Available	No Tool Required	Not Available

K85 Passenger Presence Module

Pin	Size	Color	Circuit	Function	Terminal Type ID	Option
1	0.35	RD / GN	4440	Battery Positive Voltage	I	—
2	0.35	GN	5060	Low Speed GMLAN Serial Data	I	—
3	—	—	—	Not Occupied	—	—
4	0.35	BK / WH	2251	Signal Ground	I	—
5	0.35	BU / RD	5612	Passenger Seat Belt Tension Sensor Voltage Reference	I	—
6	0.35	VT / OG	5611	Passenger Seat Belt Tension Sensor Signal	I	—

K89 Immobilizer Control Module

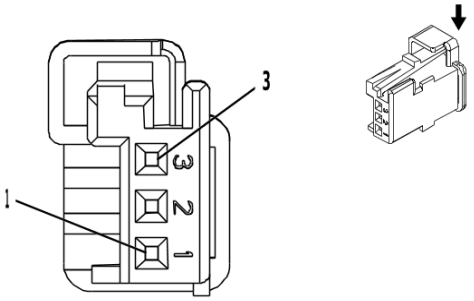

4218883

Connector Part Information

Harness Type: Instrument Panel Wiring Harness
OEM Connector: 953697-1
Service Connector: 19333317
Description: 3 <p01>-Way F 0.64 Micro-Quadlock Series(BK)

Terminal Part Information

Terminal Type ID	Terminated Lead	Diagnostic Test Probe	Terminal Removal Tool
I	Not required	J-35616-64B (LT BU)	No Tool Required

K89 Immobilizer Control Module

Pin	Size	Color	Circuit	Function	Terminal Type ID	Option
1	0.35	GN / GY	3277	Vehicle Anti-Theft System Immobilizer Low Reference	I	—
2	0.35	GN / VT	7533	Immobilizer LIN Bus 1	I	—
3	0.35	GY / BK	3276	Immobilizer Control Module Control	I	—

K111 Fuel Pump Driver Control Module

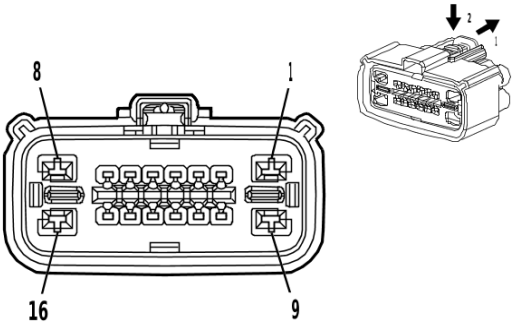

4283035

Connector Part Information

Harness Type: Chassis Wiring Harness
OEM Connector: 34985-4003
Service Connector: 19352906
Description: 16 <p01>-Way F 1.5, 2.8 MX Series, Sealed(BK)

Terminal Part Information

Terminal Type ID	Terminated Lead	Diagnostic Test Probe	Terminal Removal Tool
I	13579751	J-35616-2A (GY)	J-38125-215A
II	19300432	J-35616-14 (GN)	J-38125-217
III	19300432	J-35616-2A (GY)	J-38125-217

K111 Fuel Pump Driver Control Module

Pin	Size	Color	Circuit	Function	Terminal Type ID	Option
1	2.5	RD / VT	1940	Battery Positive Voltage	I	—
2	0.5	GN / GY	465	Fuel Pump Primary Relay Control	II	—
3	—	—	—	Not Occupied	—	—
4	0.5	BU / BK	7493	High Speed GMLAN Serial Data [+] 3	II	—
5	0.5	WH	7494	High Speed GMLAN Serial Data [-] 3	II	—
6	0.75	VT / GY	139	Run/Crank Ignition 1 Voltage	III	—
7	0.5	VT / YE	5985	Accessory Wake-Up Serial Data	II	—
8	2.5	GY	120	Fuel Pump Control	I	—
9	2.5	BK	650	Ground	I	—
10 - 14	—	—	—	Not Occupied	—	—
15	0.5	BK	7444	Fuel Pump Assembly Shield Ground	II	—
16	2.5	BK / GN	1580	Fuel Pump Low Reference	I	—

K115 Reductant Control Module X1

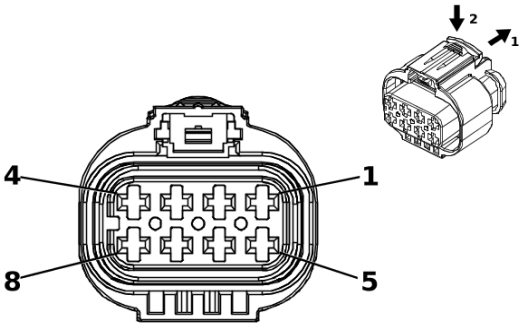

3749581

Connector Part Information

Harness Type: Chassis Wiring Harness
OEM Connector: 2109441-2
Service Connector: 19370092
Description: 8 <p01>-Way F 2.8 Series, Sealed(BK)

Terminal Part Information

Terminal Type ID	Terminated Lead	Diagnostic Test Probe	Terminal Removal Tool
I	Not required	J-35616-35 (VT)	No Tool Required
II	Not required	J-35616-4A (PU)	No Tool Required

K115 Reductant Control Module X1

Pin	Size	Color	Circuit	Function	Terminal Type ID	Option
1	0.5	RD / GN	2440	Battery Positive Voltage	II	—
2	0.5	WH	4499	High Speed GMLAN Serial Data [-] 7	II	—
3	0.5	BU / BN	4498	High Speed GMLAN Serial Data [+] 7	II	—
4	2.5	BK	650	Ground	I	—
5	0.5	VT / GN	4320	Powertrain Sensor Bus Enable	II	—
6	0.5	WH	4499	High Speed GMLAN Serial Data [-] 7	II	—
7	0.5	BU / BN	4498	High Speed GMLAN Serial Data [+] 7	II	—
8	2.5	BU	3921	Diesel Exhaust Fluid Heater Control 1	I	—

K115 Reductant Control Module X2 (LWN)

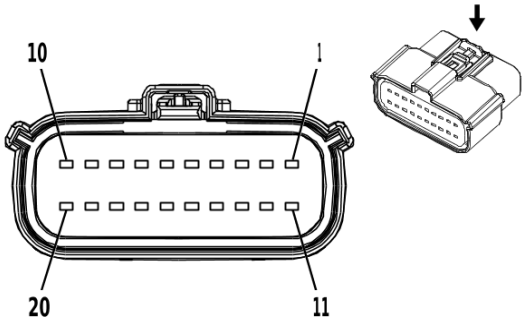

2871898

Connector Part Information

Harness Type: Emission Reduction Fluid Supply Pump Module
OEM Connector: 13504367
Service Connector: Service by Harness - See Part Catalog
Description: 20 <p01>-Way F 1.5 Series, Sealed(BK)

Terminal Part Information

Terminal Type ID	Terminated Lead	Diagnostic Test Probe	Terminal Removal Tool
I	Not Available	No Tool Required	Not Available

K115 Reductant Control Module X2 (LWN)

Pin	Size	Color	Circuit	Function	Terminal Type ID	Option
1	1.0	OG	3103	Diesel Exhaust Fluid Smart Pump Control	I	—
2	1.0	GN	3875	Diesel Exhaust Fluid Smart Pump Supply Voltage Phase 2	I	—
3	1.0	BU	3876	Diesel Exhaust Fluid Smart Pump Supply Voltage Phase 3	I	—
4	1.0	VT	4318	Diesel Exhaust Fluid Tank Heater Low Control	I	—
5	1.0	BK	3104	Diesel Exhaust Fluid Smart Pump Low Reference	I	—
6	0.35	BK / BN	7285	Diesel Exhaust Fluid Liquid Quality Temperature Sensor Low Reference	I	—
7	0.35	YE	3922	Diesel Exhaust Fluid Heater Supply 2	I	—
8	—	—	—	Not Occupied	—	—
9	0.5	OG	3244	Diesel Exhaust Fluid Tank Temperature Sensor Signal	I	—
10	0.35	GN	3245	Diesel Exhaust Fluid Tank Temperature Sensor Low Reference	I	—
11	0.35	YE	3921	Diesel Exhaust Fluid Heater Supply 1	I	—
12	0.35	BU	3106	Diesel Exhaust Fluid Pressure Sensor 5 Volt Reference	I	—
13	0.35	GY	3108	Diesel Exhaust Fluid Pressure Sensor Signal	I	—
14	0.35	YE	3107	Diesel Exhaust Fluid Pressure Sensor Low Reference	I	—
15 - 17	—	—	—	Not Occupied	—	—
18	0.35	YE / GN	7284	Diesel Exhaust Fluid Liquid Quality Temperature Signal	I	—

K115 Reductant Control Module X2 (LWN) (cont'd)

Pin	Size	Color	Circuit	Function	Terminal Type ID	Option
19	0.35	VT / GY	7286	Diesel Exhaust Fluid Sensor Voltage Reference 2	I	—
20	0.35	VT	4319	Diesel Exhaust Fluid Line Heater Low Control	I	—

K133 Trailer Brake Power Control Module

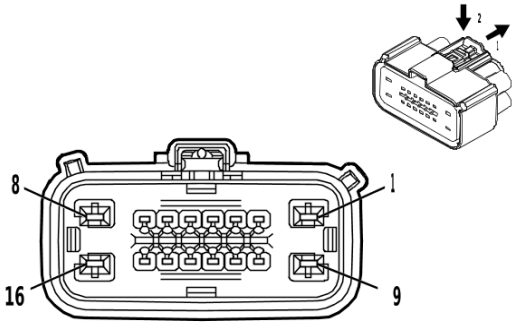

4624589

Connector Part Information

Harness Type: Chassis Wiring Harness
OEM Connector: 34985-4016
Service Connector: 13599889
Description: 16 <p01>-Way F 1.5, 2.8 MX Series, Sealed(GY)

Terminal Part Information

Terminal Type ID	Terminated Lead	Diagnostic Test Probe	Terminal Removal Tool
I	13579751	J-35616-35 (VT)	J-38125-12A
II	19300432	J-35616-14 (GN)	J-38125-557

K133 Trailer Brake Power Control Module

Pin	Size	Color	Circuit	Function	Terminal Type ID	Option
1	2.5	RD / GN	242	Battery Positive Voltage	I	—
2	0.5	WH / BK	2223	Trailer Brake Apply Signal	II	—
3 - 4	—	—	—	Not Occupied	—	—
5	0.5	YE / BK	2224	Trailer Brake Enable Signal	II	—
6 - 7	—	—	—	Not Occupied	—	—
8	2.5	BU	47	Trailer Auxiliary Control	I	—
9	2.5	BK	650	Ground	I	—
10 - 11	—	—	—	Not Occupied	—	—
12	0.5	GN / VT	4114	Chassis Control Module LIN Bus 1	II	—
13 - 16	—	—	—	Not Occupied	—	—

K182 Parking Assist Control Module X1

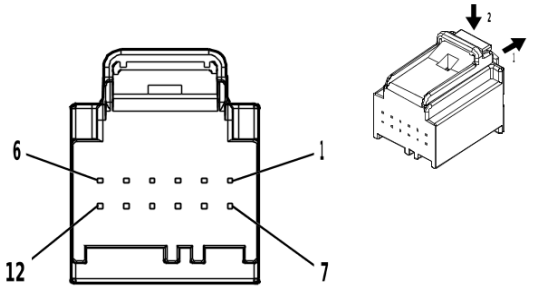

5095565

Connector Part Information

Harness Type: Instrument Panel Wiring Harness
OEM Connector: 31410-0125
Service Connector: 13525987
Description: 12 <p01>-Way F 0.64 Series(BK)

Terminal Part Information

Terminal Type ID	Terminated Lead	Diagnostic Test Probe	Terminal Removal Tool
I	13584547	J-35616-64B (LT BU)	J-38125-215A

K182 Parking Assist Control Module X1

Pin	Size	Color	Circuit	Function	Terminal Type ID	Option
1	0.75	RD / GN	3140	Battery Positive Voltage	I	—
2	—	—	—	Not Occupied	—	—
3	0.35	GN / BN	5852	Rear Parking Assist Disable LED Signal	I	—
4 - 7	—	—	—	Not Occupied	—	—
8	0.35	GY / GN	2555	Rear Parking Assist Disable Signal	I	—
9	0.35	GN	5060	Low Speed GMLAN Serial Data	I	—
10	0.5	BK	2050	Ground	I	—
11 - 12	—	—	—	Not Occupied	—	—

K182 Parking Assist Control Module X2

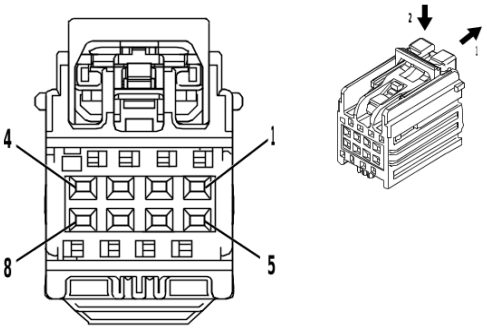

4280711

Connector Part Information

Harness Type: Instrument Panel Wiring Harness
OEM Connector: 7289-2895-40
Service Connector: 19355209
Description: 8 <p01>-Way F YESC Kaizen Series(GY)

Terminal Part Information

Terminal Type ID	Terminated Lead	Diagnostic Test Probe	Terminal Removal Tool
I	Not required	J-35616-64B (LT BU)	No Tool Required

K182 Parking Assist Control Module X2

Pin	Size	Color	Circuit	Function	Terminal Type ID	Option
1	—	—	—	Not Occupied	—	—
2	0.5	YE / WH	2377	Right Rear Middle Parking Assist Sensor Signal	I	—
3	0.5	YE	2375	Left Rear Outer Parking Assist Sensor Signal	I	—
4	0.75	BN / WH	2374	Object Sensor Voltage Reference	I	—
5	0.5	YE / VT	2378	Right Rear Outer Parking Assist Sensor Signal	I	—
6	0.5	YE / BU	2376	Left Rear Middle Parking Assist Sensor Signal	I	—
7	—	—	—	Not Occupied	—	—
8	0.75	BK / GY	2379	Object Sensor Low Reference	I	—

M4 Air Inlet Door Actuator

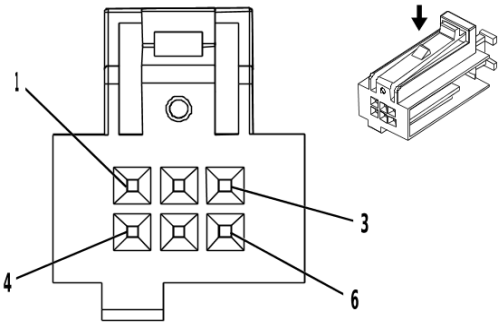

2220563

Connector Part Information

Harness Type: HVAC
OEM Connector: 1519302
Service Connector: Service by Harness - See Part Catalog
Description: 6 <p01>-Way F Micro-Quadlock Series(BK)

Terminal Part Information

Terminal Type ID	Terminated Lead	Diagnostic Test Probe	Terminal Removal Tool
I	Not Available	No Tool Required	Not Available

M4 Air Inlet Door Actuator

Pin	Size	Color	Circuit	Function	Terminal Type ID	Option
1	—	GY	3173	Air Inlet Door Actuator Control 1	I	—
2	—	BK	7572	HVAC Door Actuator Control	I	—
3	—	BU / WH	3174	Air Inlet Door Actuator Control 2	I	—
4	—	BN / GN	3175	Air Inlet Door Actuator Control 3	I	—
5	—	—	—	Not Occupied	—	—
6	—	RD / GN	3176	Air Inlet Door Actuator Control 4	I	—

M6 Air Temperature Door Actuator

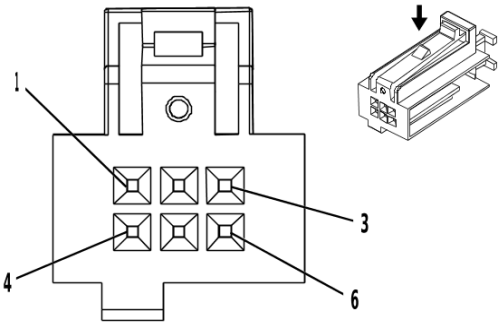

2220563

Connector Part Information

Harness Type: HVAC
OEM Connector: 1519302
Service Connector: Service by Harness - See Part Catalog
Description: 6 <p01>-Way F Micro-Quadlock Series(BK)

Terminal Part Information

Terminal Type ID	Terminated Lead	Diagnostic Test Probe	Terminal Removal Tool
I	Not Available	No Tool Required	Not Available

M6 Air Temperature Door Actuator

Pin	Size	Color	Circuit	Function	Terminal Type ID	Option
1	—	GN	3169	Air Temperature Door Actuator Control 1	I	—
2	—	BK	7572	HVAC Door Actuator Control	I	—
3	—	WH / PK	3170	Air Temperature Door Actuator Control 2	I	—
4	—	GY / RD	3171	Air Temperature Door Actuator Control 3	I	—
5	—	—	—	Not Occupied	—	—
6	—	RD / BK	3172	Air Temperature Door Actuator Control 4	I	—

M9 Brake Booster Pump Motor

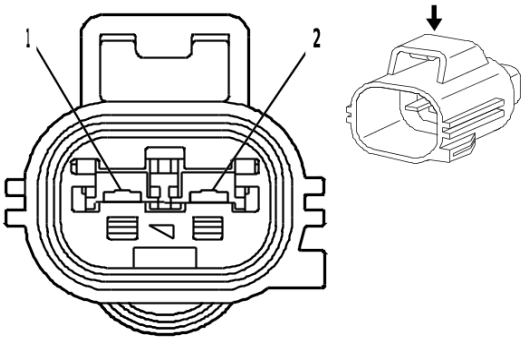

1826248

Connector Part Information

Harness Type: Engine Wiring Harness
OEM Connector: 7282-5575-10
Service Connector: 19368267
Description: 2 <p01>-Way M 2.8 Series, Sealed(D-GY)

Terminal Part Information

Terminal Type ID	Terminated Lead	Diagnostic Test Probe	Terminal Removal Tool
I	Not required	J-35616-5 (PU)	No Tool Required

M9 Brake Booster Pump Motor

Pin	Size	Color	Circuit	Function	Terminal Type ID	Option
1	2.5	BN / VT	1470	Brake Booster Pump Motor Control	I	—
2	2.5	BK	1450	Ground	I	—

M26 Front Axle Engagement Actuator

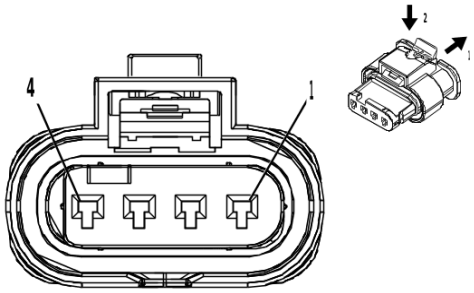

4249158

Connector Part Information

Harness Type: Power Steering Wiring Harness
OEM Connector: 4-2272005-1
Service Connector: Service by Harness - See Part Catalog
Description: 4 <p01>-Way F 1.2 MCON Series, Sealed(BK)

Terminal Part Information

Terminal Type ID	Terminated Lead	Diagnostic Test Probe	Terminal Removal Tool
I	Not required	J-35616-16 (LT GN)	No Tool Required

M26 Front Axle Engagement Actuator

Pin	Size	Color	Circuit	Function	Terminal Type ID	Option
1	0.75	VT / BK	2139	Run/Crank Ignition 1 Voltage	I	—
2	0.5	GY / BK	1570	Front Axle Actuator Control	I	—
3	0.5	YE / WH	1695	4WD Locked Range Indicator Control	I	—
4	0.75	BK	1450	Ground	I	—

M37 Mode Door Actuator

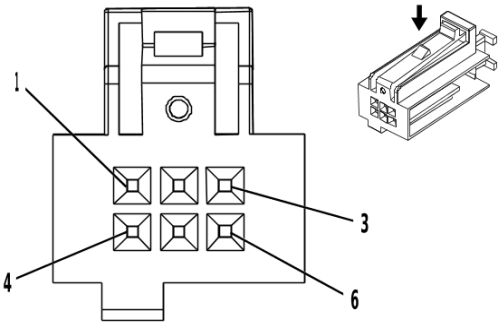

2220563

Connector Part Information

Harness Type: HVAC
OEM Connector: 1519302
Service Connector: Service by Harness - See Part Catalog
Description: 6 <p01>-Way F Micro-Quadlock Series(BK)

Terminal Part Information

Terminal Type ID	Terminated Lead	Diagnostic Test Probe	Terminal Removal Tool
I	Not Available	No Tool Required	Not Available

M37 Mode Door Actuator

Pin	Size	Color	Circuit	Function	Terminal Type ID	Option
1	—	YE	3165	Mode Door Actuator Control 1	I	—
2	—	BK	7572	HVAC Door Actuator Control	I	—
3	—	WH / RD	3166	Mode Door Actuator Control 2	I	—
4	—	GY / BN	3167	Mode Door Actuator Control 3	I	—
5	—	—	—	Not Occupied	—	—
6	—	GN / WH	3168	Mode Door Actuator Control 4	I	—

M50D Seat Front Vertical Motor - Driver

—

Connector Part Information

Harness Type: Driver Seat
OEM Connector: Not Available
Service Connector: Service by Harness - See Part Catalog
Description: 2 <p01>-Way F

Terminal Part Information

Terminal Type ID	Terminated Lead	Diagnostic Test Probe	Terminal Removal Tool
I	Not Available	No Tool Required	Not Available

M50D Seat Front Vertical Motor - Driver

Pin	Size	Color	Circuit	Function	Terminal Type ID	Option
1	—	BU / VT	287	Driver Seat Front Vertical Motor Down Control	I	—
3	—	GN / BN	286	Driver Seat Front Vertical Motor Up Control	I	—

M51D Seat Horizontal Motor - Driver

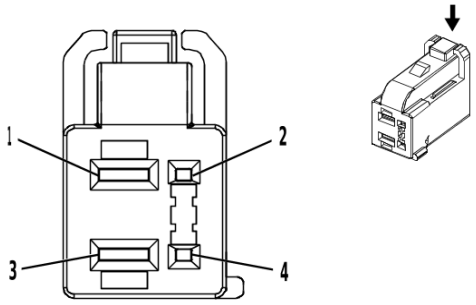

3683652

Connector Part Information

Harness Type: Driver Seat
OEM Connector: 3-023-66-52
Service Connector: Service by Harness - See Part Catalog
Description: 4 <p01>-Way F 0.64, 2.8 Series(BN)

Terminal Part Information

Terminal Type ID	Terminated Lead	Diagnostic Test Probe	Terminal Removal Tool
I	Not Available	No Tool Required	Not Available

M51D Seat Horizontal Motor - Driver

Pin	Size	Color	Circuit	Function	Terminal Type ID	Option
1	1.5	YE / BU	285	Driver Seat Horizontal Motor Forward Control	I	—
2	—	—	—	Not Occupied	—	—
3	1.5	GY / GN	284	Driver Seat Horizontal Motor Rearward Control	I	—
4	—	—	—	Not Occupied	—	—

M51P Seat Horizontal Motor - Passenger (AAQ)

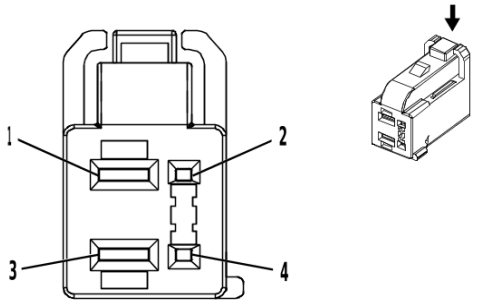

3683652

Connector Part Information

Harness Type: Passenger Seat
OEM Connector: 3-023-66-52
Service Connector: Service by Harness - See Part Catalog
Description: 4 <p01>-Way F 0.64, 2.8 Series(BN)

Terminal Part Information

Terminal Type ID	Terminated Lead	Diagnostic Test Probe	Terminal Removal Tool
I	Not Available	No Tool Required	Not Available

M51P Seat Horizontal Motor - Passenger (AAQ)

Pin	Size	Color	Circuit	Function	Terminal Type ID	Option
1	1.5	YE / WH	296	Passenger Seat Horizontal Motor Forward Control	I	—
2	—	—	—	Not Occupied	—	—
3	1.5	YE / BU	290	Passenger Seat Horizontal Motor Rearward Control	I	—
4	—	—	—	Not Occupied	—	—

M52D Seat Lumbar Support Horizontal Motor - Driver (AL9)

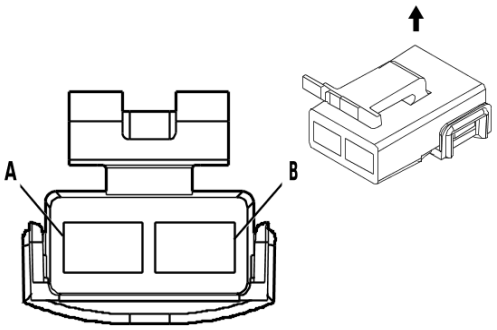

130707

Connector Part Information

Harness Type: Driver Seat
OEM Connector: 12020556
Service Connector: Service by Harness - See Part Catalog
Description: 2 <p01>-Way F 480 Metri-Pack Series(BK)

Terminal Part Information

Terminal Type ID	Terminated Lead	Diagnostic Test Probe	Terminal Removal Tool
I	Not Available	No Tool Required	Not Available

M52D Seat Lumbar Support Horizontal Motor - Driver (AL9)

Pin	Size	Color	Circuit	Function	Terminal Type ID	Option
A	1.5	VT	610	Driver Seat Lumbar Support Motor Backward Control	I	—
B	1.5	BU	611	Driver Seat Lumbar Support Motor Forward Control	I	—

M52P Seat Lumbar Support Horizontal Motor - Passenger (AAQ)

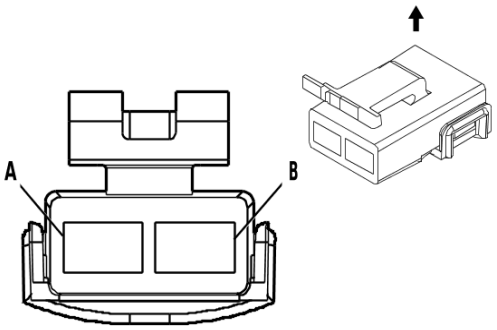

130707

Connector Part Information

Harness Type: Passenger Seat
OEM Connector: 12020556
Service Connector: Service by Harness - See Part Catalog
Description: 2 <p01>-Way F 480 Metri-Pack Series(BK)

Terminal Part Information

Terminal Type ID	Terminated Lead	Diagnostic Test Probe	Terminal Removal Tool
I	Not Available	No Tool Required	Not Available

M52P Seat Lumbar Support Horizontal Motor - Passenger (AAQ)

Pin	Size	Color	Circuit	Function	Terminal Type ID	Option
A	1.5	VT	210	Passenger Seat Lumbar Support Motor Backward Control	I	—
B	1.5	BU	211	Passenger Seat Lumbar Support Motor Forward Control	I	—

M53D Seat Lumbar Support Motor - Driver

—

Connector Part Information

Harness Type: Driver Seat
OEM Connector: Not Available
Service Connector: Service by Harness - See Part Catalog
Description: 2 <p01>-Way F

Terminal Part Information

Terminal Type ID	Terminated Lead	Diagnostic Test Probe	Terminal Removal Tool
I	Not Available	No Tool Required	Not Available

M53D Seat Lumbar Support Motor - Driver

Pin	Size	Color	Circuit	Function	Terminal Type ID	Option
1	—	VT	610	Driver Seat Lumbar Support Motor Backward Control	I	—
2	—	BU	611	Driver Seat Lumbar Support Motor Forward Control	I	—

M55D Seat Rear Vertical Motor - Driver

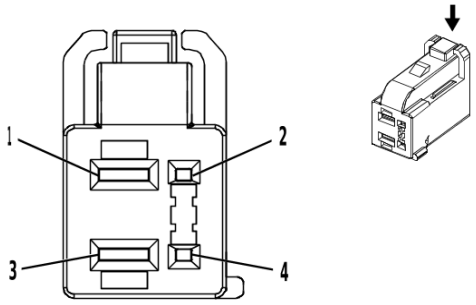

3683652

Connector Part Information

Harness Type: Driver Seat
OEM Connector: 3-023-66-52
Service Connector: Service by Harness - See Part Catalog
Description: 4 <p01>-Way F 0.64, 2.8 Series(BN)

Terminal Part Information

Terminal Type ID	Terminated Lead	Diagnostic Test Probe	Terminal Removal Tool
I	Not Available	No Tool Required	Not Available

M55D Seat Rear Vertical Motor - Driver

Pin	Size	Color	Circuit	Function	Terminal Type ID	Option
1	1.5	GY / BU	283	Driver Seat Rear Vertical Motor Down Control	I	—
2	—	—	—	Not Occupied	—	—
3	1.5	YE	282	Driver Seat Rear Vertical Motor Up Control	I	—
4	—	—	—	Not Occupied	—	—

M55P Seat Rear Vertical Motor - Passenger (AAQ)

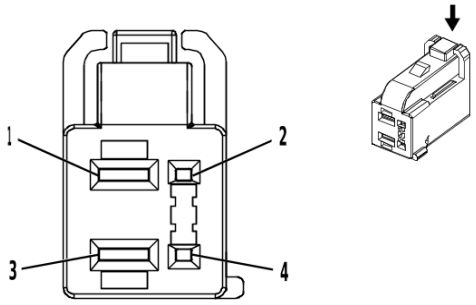

3683652

Connector Part Information

Harness Type: Passenger Seat
OEM Connector: 3-023-66-52
Service Connector: Service by Harness - See Part Catalog
Description: 4 <p01>-Way F 0.64, 2.8 Series(BN)

Terminal Part Information

Terminal Type ID	Terminated Lead	Diagnostic Test Probe	Terminal Removal Tool
I	Not Available	No Tool Required	Not Available

M55P Seat Rear Vertical Motor - Passenger (AAQ)

Pin	Size	Color	Circuit	Function	Terminal Type ID	Option
1	1.5	GN / WH	288	Passenger Seat Rear Vertical Motor Up Control	I	—
2	—	—	—	Not Occupied	—	—
3	1.5	BU / WH	289	Passenger Seat Rear Vertical Motor Down Control	I	—
4	—	—	—	Not Occupied	—	—

M64 Starter Motor X1

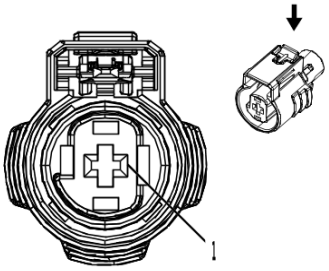

2717134

Connector Part Information

Harness Type: Engine Wiring Harness
OEM Connector: 2098198-5
Service Connector: 19300471
Description: 1 <p01>-Way F 2.8 MCP Series, Sealed(BK)

Terminal Part Information

Terminal Type ID	Terminated Lead	Diagnostic Test Probe	Terminal Removal Tool
I	Not required	J-35616-35 (VT)	No Tool Required
II	Not required	J-35616-4A (PU)	No Tool Required

M64 Starter Motor X1

Pin	Size	Color	Circuit	Function	Terminal Type ID	Option
1	2.5	YE	6	Starter Solenoid Crank Ignition Voltage	II	LCV
	2.5	YE	6	Starter Solenoid Crank Ignition Voltage	I	LGZ
	2	YE	6	Starter Solenoid Crank Ignition Voltage	II	LWN

M64 Starter Motor X2 (LCV)

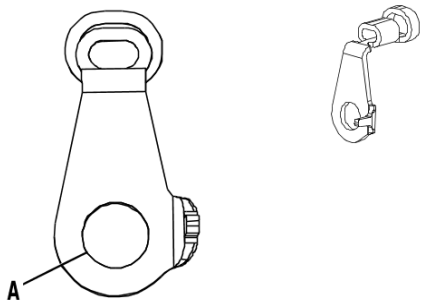

4069640

Connector Part Information

Harness Type: Battery Positive Cable
OEM Connector: BBS18185
Service Connector: Service by Cable Assembly — See Part Catalog
Description: 1 <p01>-Way Ring Terminal

Terminal Part Information

Terminal Type ID	Terminated Lead	Diagnostic Test Probe	Terminal Removal Tool
I	Not required	No Tool Required	No Tool Required

M64 Starter Motor X2 (LCV)

Pin	Size	Color	Circuit	Function	Terminal Type ID	Option
A	35	RD / YE	2	Battery Positive Voltage	I	—

M64 Starter Motor X2 (LGZ)

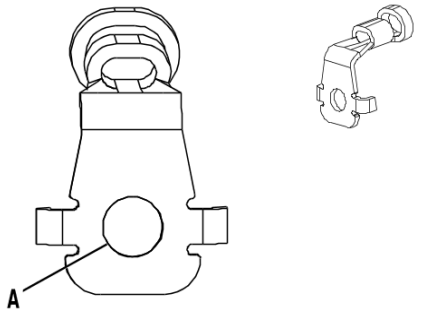

4069670

Connector Part Information

Harness Type: Battery Positive Cable
OEM Connector: BBS47641
Service Connector: Service by Cable Assembly — See Part Catalog
Description: 1 <p01>-Way Ring Terminal

Terminal Part Information

Terminal Type ID	Terminated Lead	Diagnostic Test Probe	Terminal Removal Tool
I	Not required	No Tool Required	No Tool Required

M64 Starter Motor X2 (LGZ)

Pin	Size	Color	Circuit	Function	Terminal Type ID	Option
A	35	RD / YE	2	Battery Positive Voltage	I	—

M64 Starter Motor X2 (LWN)

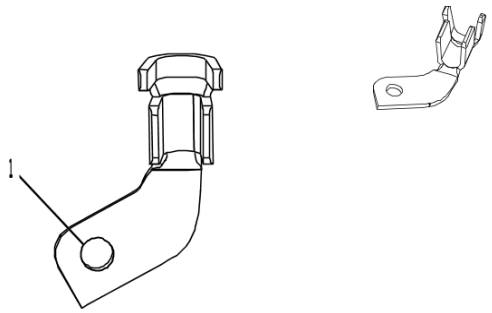

4293880

Connector Part Information

Harness Type: Starter Solenoid Cable
OEM Connector: BBS17174
Service Connector: Service by Cable Assembly — See Part Catalog
Description: 1 <p01>-Way Ring Terminal

Terminal Part Information

Terminal Type ID	Terminated Lead	Diagnostic Test Probe	Terminal Removal Tool
I	Not required	No Tool Required	No Tool Required

M64 Starter Motor X2 (LWN)

Pin	Size	Color	Circuit	Function	Terminal Type ID	Option
1	50	RD / YE	2	Battery Positive Voltage	I	—

M73A Seat Blower Motor - Driver Back (KU1)

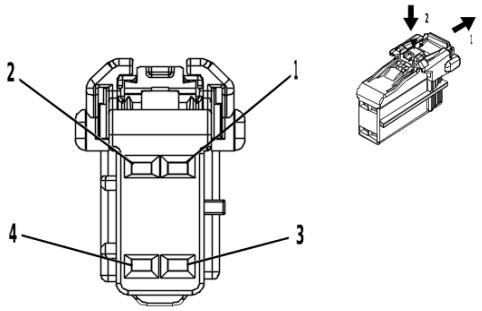

4115727

Connector Part Information

Harness Type: Front Seat Back Vent Fan Mat
OEM Connector: Not Available
Service Connector: Service by Harness - See Part Catalog
Description: 4 <p01>-Way

Terminal Part Information

Terminal Type ID	Terminated Lead	Diagnostic Test Probe	Terminal Removal Tool
I	Not Available	No Tool Required	Not Available

M73A Seat Blower Motor - Driver Back (KU1)

Pin	Size	Color	Circuit	Function	Terminal Type ID	Option
1	0.5	VT / BK	1239	Run/Crank Ignition 1 Voltage	I	—
2	0.5	GN / VT	5906	Driver Seat Blower Motor Control 1	I	—
3	0.5	BK	2150	Ground	I	—
4	—	—	—	Not Occupied	—	—

M73B Seat Blower Motor - Passenger Back (KU3)

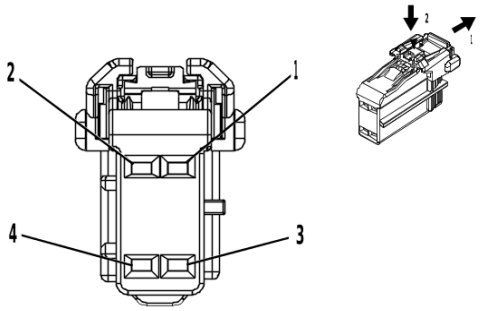

4115727

Connector Part Information

Harness Type: Front Seat Vent Fan Mat
OEM Connector: Not Available
Service Connector: Service by Harness - See Part Catalog
Description: 4 <p01>-Way

Terminal Part Information

Terminal Type ID	Terminated Lead	Diagnostic Test Probe	Terminal Removal Tool
I	Not Available	No Tool Required	Not Available

M73B Seat Blower Motor - Passenger Back (KU3)

Pin	Size	Color	Circuit	Function	Terminal Type ID	Option
1	0.5	VT / BK	1239	Run/Crank Ignition 1 Voltage	I	—
2	0.5	VT / WH	5908	Passenger Seat Blower Motor Control 1	I	—
3	0.5	BK	2250	Ground	I	—
4	—	—	—	Not Occupied	—	—

M73C Seat Blower Motor - Driver Cushion (KU1)

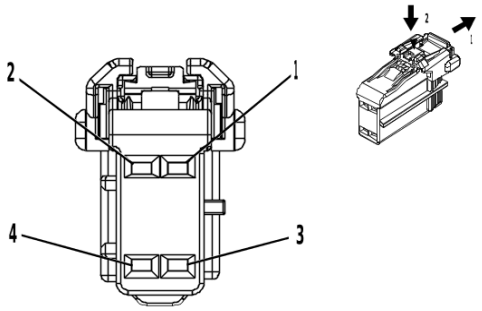

4115727

Connector Part Information

Harness Type: Driver Seat
OEM Connector: Not Available
Service Connector: Service by Harness - See Part Catalog
Description: 4 <p01>-Way

Terminal Part Information

Terminal Type ID	Terminated Lead	Diagnostic Test Probe	Terminal Removal Tool
I	Not Available	No Tool Required	Not Available

M73C Seat Blower Motor - Driver Cushion (KU1)

Pin	Size	Color	Circuit	Function	Terminal Type ID	Option
1	0.5	VT / BK	1239	Run/Crank Ignition 1 Voltage	I	—
2	0.5	GN / VT	5906	Driver Seat Blower Motor Control 1	I	—
3	0.5	BK	2150	Ground	I	—
4	—	—	—	Not Occupied	—	—

M73D Seat Blower Motor - Passenger Cushion (KU3)

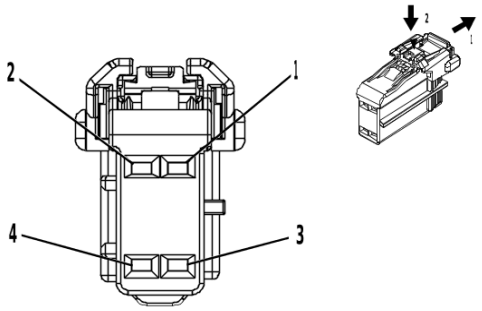

4115727

Connector Part Information

Harness Type: Front Seat Vent Fan Mat
OEM Connector: Not Available
Service Connector: Service by Harness - See Part Catalog
Description: 4 <p01>-Way

Terminal Part Information

Terminal Type ID	Terminated Lead	Diagnostic Test Probe	Terminal Removal Tool
I	Not Available	No Tool Required	Not Available

M73D Seat Blower Motor - Passenger Cushion (KU3)

Pin	Size	Color	Circuit	Function	Terminal Type ID	Option
1	0.5	VT / BK	1239	Run/Crank Ignition 1 Voltage	I	—
2	0.5	VT / WH	5908	Passenger Seat Blower Motor Control 1	I	—
3	0.5	BK	2250	Ground	I	—
4	—	—	—	Not Occupied	—	—

M74D Window Motor - Driver

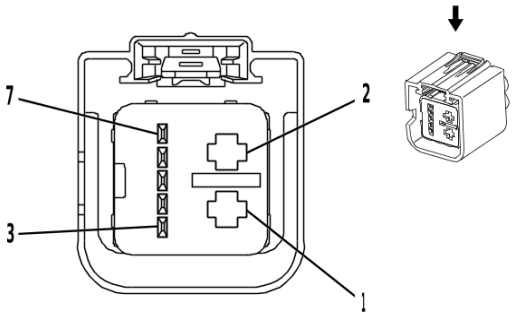

2282932

Connector Part Information

Harness Type: Front Side Door Door Wiring Harness - Driver
OEM Connector: 1-1732115-1
Service Connector: Service by Harness - See Part Catalog
Description: 7 <p01>-Way F 0.64, 2.8 Kaizen Timer Series, Sealed(GY)

Terminal Part Information

Terminal Type ID	Terminated Lead	Diagnostic Test Probe	Terminal Removal Tool
I	Not required	J-35616-4A (PU)	No Tool Required
II	Not required	J-35616-64B (LT BU)	No Tool Required

M74D Window Motor - Driver

Pin	Size	Color	Circuit	Function	Terminal Type ID	Option
1	2.5	BK	3550	Ground	I	—
2	2.5	RD / BU	1240	Battery Positive Voltage	I	—
3	0.35	GN / WH	1300	Left Front Window Up Switch Main Control Signal	II	—
4	0.5	GN / YE	6134	Body Control Module LIN Bus 3	II	—
5	0.35	GN / VT	7628	Left Front Window Motor Express Control	II	—
6	0.35	GY	745	Left Front Door Ajar Switch Signal	II	—
7	0.35	GY	1136	Left Front Window Down Switch Main Control Signal	II	—

M74LR Window Motor - Left Rear

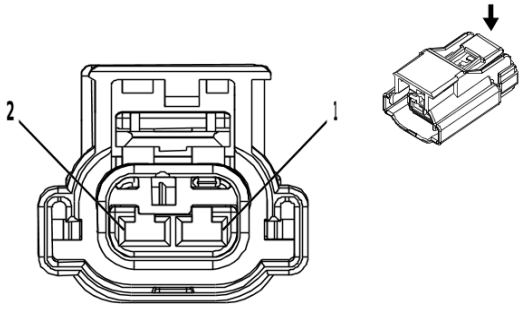

2716333

Connector Part Information

Harness Type: Rear Side Door Door Wiring Harness - Left
OEM Connector: 54200220N
Service Connector: Service by Harness - See Part Catalog
Description: 2 <p01>-Way F 2.8 Series, Sealed(BK)

Terminal Part Information

Terminal Type ID	Terminated Lead	Diagnostic Test Probe	Terminal Removal Tool
I	Not required	J-35616-4A (PU)	No Tool Required

M74LR Window Motor - Left Rear

Pin	Size	Color	Circuit	Function	Terminal Type ID	Option
1	2.5	BU / VT	668	Left Rear Window Motor Up Control	I	—
2	2.5	YE / BU	669	Left Rear Window Motor Down Control	I	—

M74P Window Motor - Passenger

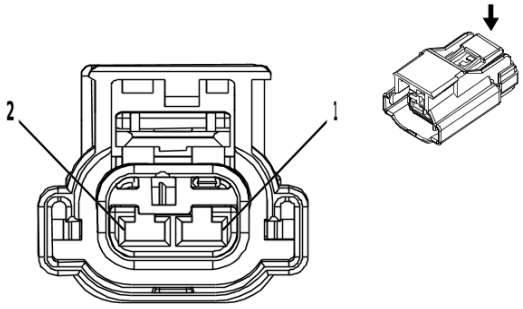

2716333

Connector Part Information

Harness Type: Front Side Door Door Wiring Harness - Passenger
OEM Connector: 54200220N
Service Connector: Service by Harness - See Part Catalog
Description: 2 <p01>-Way F 2.8 Series, Sealed(BK)

Terminal Part Information

Terminal Type ID	Terminated Lead	Diagnostic Test Probe	Terminal Removal Tool
I	Not required	J-35616-4A (PU)	No Tool Required

M74P Window Motor - Passenger

Pin	Size	Color	Circuit	Function	Terminal Type ID	Option
1	2.5	YE / BU	3388	Passenger Window Motor Down Control	I	—
2	2.5	GN / GY	3387	Passenger Window Motor Up Control	I	—

M74RR Window Motor - Right Rear

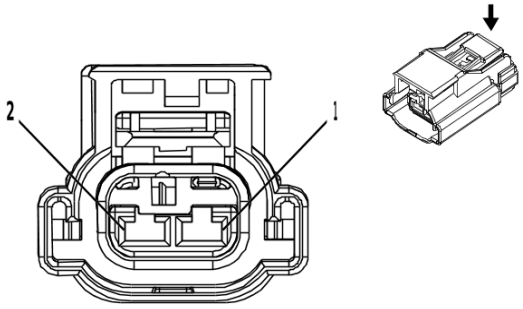

2716333

Connector Part Information

Harness Type: Rear Side Door Door Wiring Harness - Right
OEM Connector: 54200220N
Service Connector: Service by Harness - See Part Catalog
Description: 2 <p01>-Way F 2.8 Series, Sealed(BK)

Terminal Part Information

Terminal Type ID	Terminated Lead	Diagnostic Test Probe	Terminal Removal Tool
I	Not required	J-35616-4A (PU)	No Tool Required

M74RR Window Motor - Right Rear

Pin	Size	Color	Circuit	Function	Terminal Type ID	Option
1	2.5	BU / GY	670	Right Rear Window Motor Up Control	I	—
2	2.5	GN / BK	671	Right Rear Window Motor Down Control	I	—

M75 Windshield Wiper Motor

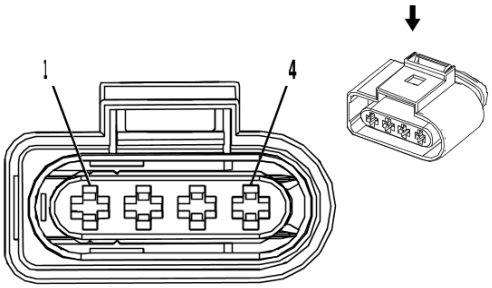

2474722

Connector Part Information

Harness Type: Body Wiring Harness
OEM Connector: 638245-2
Service Connector: 19367598
Description: 4 <p01>-Way F Junior Power Timer Series, Sealed(BK)

Terminal Part Information

Terminal Type ID	Terminated Lead	Diagnostic Test Probe	Terminal Removal Tool
I	Not required	J-35616-4A (PU)	No Tool Required

M75 Windshield Wiper Motor

Pin	Size	Color	Circuit	Function	Terminal Type ID	Option
1	0.5	BN / GN	196	Windshield Wiper Motor Park Switch Signal	I	—
2	1.5	YE / BN	95	Windshield Wiper Motor Low Speed Control	I	—
3	1.5	BK	3150	Ground	I	—
4	1.5	WH	92	Windshield Wiper Motor High Speed Control	I	—

M93 Key Capture Solenoid Actuator

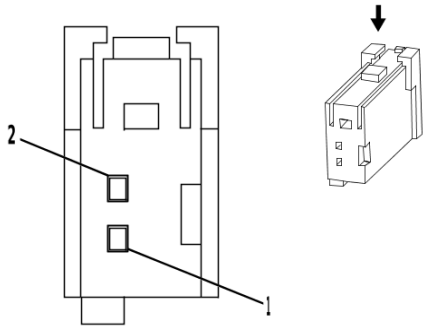

2173598

Connector Part Information

Harness Type: Instrument Panel Wiring Harness
OEM Connector: AIT2PB-02A-1AK
Service Connector: 13314093
Description: 2 <p01>-Way F 0.64 Series(BK)

Terminal Part Information

Terminal Type ID	Terminated Lead	Diagnostic Test Probe	Terminal Removal Tool
I	Not required	J-35616-64B (LT BU)	No Tool Required

M93 Key Capture Solenoid Actuator

Pin	Size	Color	Circuit	Function	Terminal Type ID	Option
1	0.35	VT / YE	143	Accessory Ignition Voltage	I	—
2	0.35	BK	2050	Ground	I	—

M96A Active Grille Air Shutter 1 Actuator

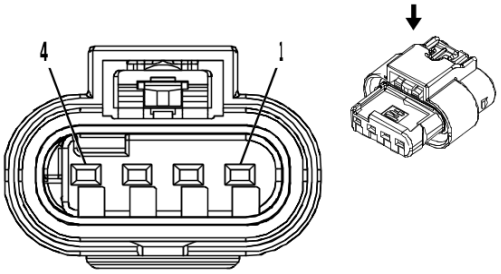

2596543

Connector Part Information

Harness Type: Engine Wiring Harness Extension
OEM Connector: 13576420
Service Connector: Service by Harness - See Part Catalog
Description: 4 <p01>-Way F 1.2 MCP Series, Sealed(BK)

Terminal Part Information

Terminal Type ID	Terminated Lead	Diagnostic Test Probe	Terminal Removal Tool
I	Not Available	No Tool Required	Not Available

M96A Active Grille Air Shutter 1 Actuator

Pin	Size	Color	Circuit	Function	Terminal Type ID	Option
1	0.5	WH / VT	4333	Active Grille Air Shutter Actuator Control	I	—
2	0.5	GY	3890	Active Grille Air Shutter Control 2	I	—
3	—	—	—	Not Occupied	—	—
4	0.75	BK	1250	Ground	I	—

M103 Turbocharger Vane Position Actuator

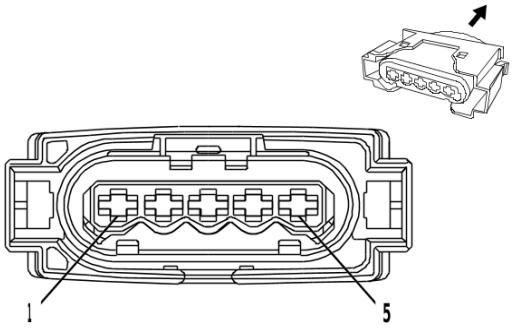

3794114

Connector Part Information

Harness Type: Engine Wiring Harness
OEM Connector: 09-4415-81
Service Connector: 19368141
Description: 5 <p01>-Way F 2.8 SLK Series, Sealed(BK)

Terminal Part Information

Terminal Type ID	Terminated Lead	Diagnostic Test Probe	Terminal Removal Tool
I	Not required	J-35616-4A (PU)	No Tool Required

M103 Turbocharger Vane Position Actuator

Pin	Size	Color	Circuit	Function	Terminal Type ID	Option
1	0.5	GY / BU	5930	Turbocharger Vane Position Control Solenoid Valve High Signal	I	—
2	0.5	WH / BK	5931	Turbocharger Vane Position Control Solenoid Valve Low Signal	I	—
3	0.5	BK / BN	5929	Turbocharger Vane Position Sensor Low Reference	I	—
4	0.5	VT / YE	5947	Turbocharger Vane Position Sensor Signal	I	—
5	0.5	GY / RD	5928	Turbocharger Vane Position Sensor Voltage Reference	I	—

P2 Transmission Shift Lever Position Indicator

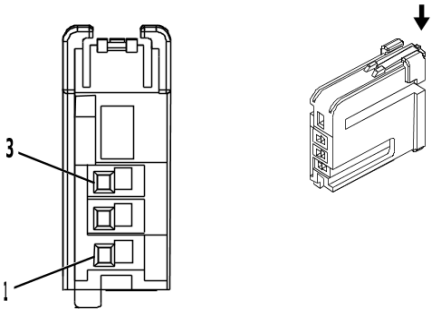

2831062

Connector Part Information

Harness Type: Front Floor Console Wiring Harness
OEM Connector: AIT2PB-03B-1AK
Service Connector: Service by Harness - See Part Catalog
Description: 3 <p01>-Way F 0.64 Series(BK)

Terminal Part Information

Terminal Type ID	Terminated Lead	Diagnostic Test Probe	Terminal Removal Tool
I	Not required	J-35616-64B (LT BU)	No Tool Required

P2 Transmission Shift Lever Position Indicator

Pin	Size	Color	Circuit	Function	Terminal Type ID	Option
1	0.35	VT	801	Retained Accessory Power Control	I	—
2	0.5	GN / BU	6133	Body Control Module LIN Bus 2	I	—
3	0.35	BK	2050	Ground	I	—

P3 Backup Alarm

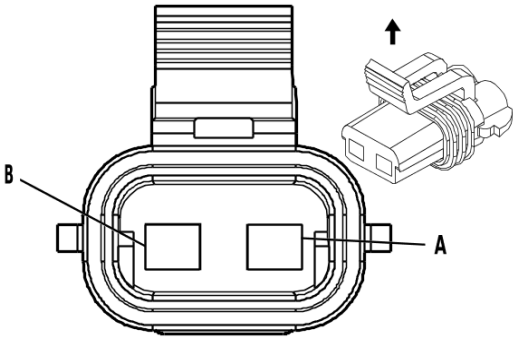

68721

Connector Part Information

Harness Type: Chassis Wiring Harness
OEM Connector: 15300027
Service Connector: 12101855
Description: 2 <p01>-Way F 280 Metri-Pack Series, Sealed(BK)

Terminal Part Information

Terminal Type ID	Terminated Lead	Diagnostic Test Probe	Terminal Removal Tool
I	Not required	J-35616-4A (PU)	No Tool Required

P3 Backup Alarm

Pin	Size	Color	Circuit	Function	Terminal Type ID	Option
A	0.75	GY	1624	Trailer Backup Lamp Control	I	—
B	0.75	BK	22	Trailer Ground	I	—

P13 Horn Assembly

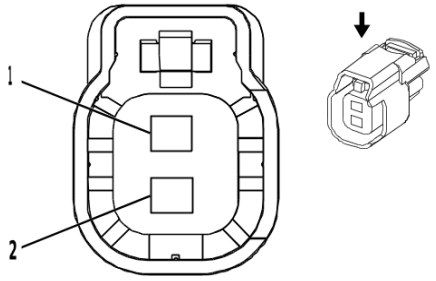

2422378

Connector Part Information

Harness Type: Forward Lamp Wiring Harness
OEM Connector: 34062-0028
Service Connector: 13579002
Description: 2 <p01>-Way F 1.5 Series, Sealed(BK)

Terminal Part Information

Terminal Type ID	Terminated Lead	Diagnostic Test Probe	Terminal Removal Tool
I	Not required	J-35616-2A (GY)	No Tool Required

P13 Horn Assembly

Pin	Size	Color	Circuit	Function	Terminal Type ID	Option
1	1	BK	1150	Ground	I	—
2	0.75	BN / GY	29	Horn Control	I	—

P14 Passenger Air Bag Disabled Indicator

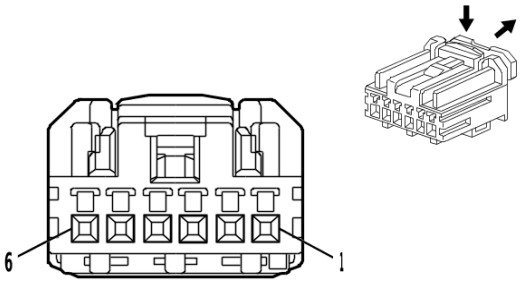

4650256

Connector Part Information

Harness Type: Headliner Wiring Harness
OEM Connector: HCMPB-C06A-S
Service Connector: 19368127
Description: 6 <p01>-Way F 0.64 HCM Series(NA)

Terminal Part Information

Terminal Type ID	Terminated Lead	Diagnostic Test Probe	Terminal Removal Tool
I	Not required	J-35616-64B (LT BU)	No Tool Required

P14 Passenger Air Bag Disabled Indicator

Pin	Size	Color	Circuit	Function	Terminal Type ID	Option
1	0.35	BU	2307	Passenger Air Bag On Indicator Control	I	—
2	0.5	BK	3150	Ground	I	—
3	0.35	GN	2308	Passenger Air Bag Off Indicator Control	I	—
4	0.35	VT / WH	1139	Run/Crank Ignition 1 Voltage	I	—
5	0.35	VT / WH	5234	Passenger Seat Belt Indicator Control	I	—
6	—	—	—	Not Occupied	—	—

P16 Instrument Cluster

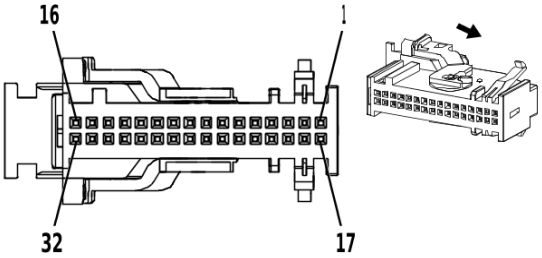

627214

Connector Part Information

Harness Type: Instrument Panel Wiring Harness
OEM Connector: 2-2236674-1
Service Connector: 13511333
Description: 32 <p01>-Way F 0.64 Micro-Quadlock Series(GY)

Terminal Part Information

Terminal Type ID	Terminated Lead	Diagnostic Test Probe	Terminal Removal Tool
I	19300632	J-35616-64B (LT BU)	J-38125-12A

P16 Instrument Cluster

Pin	Size	Color	Circuit	Function	Terminal Type ID	Option
1	0.1	GY / BU	7217	Ethernet Bus 7 [+]	I	—
2	—	—	—	Not Occupied	—	—
3	0.5	GY / GN	1102	Low Speed GMLAN Serial Data 2	I	—
4 - 6	—	—	—	Not Occupied	—	—
7	0.5	RD / GY	2840	Battery Positive Voltage	I	—
8	0.5	VT / BK	1639	Run/Crank Ignition 1 Voltage	I	—
9	0.35	GY / BU	893	Driver Information Center Select Menu Switch Signal	I	—
10 - 11	—	—	—	Not Occupied	—	—
12	0.35	GY / YE	3885	Forward Collision Alert LED Control	I	—
13	0.35	BK / BN	897	Driver Information Center Switch Low Reference	I	—
14	0.35	GN / WH	1358	Driver Information Center Switch Signal	I	—
15	—	—	—	Not Occupied	—	—
16	0.35	BN / WH	419	Check Engine Indicator Control	I	—
17	0.1	BN / BU	7216	Ethernet Bus 7 [-]	I	—
18	—	—	—	Not Occupied	—	—
19	0.5	BK / WH	2151	Signal Ground	I	—
20	0.5	GN / BK	3894	Instrument Cluster LIN Bus 1	I	—
21 - 23	—	—	—	Not Occupied	—	—
24	0.35	VT	185	Low Washer Fluid Indicator Control	I	—
25 - 29	—	—	—	Not Occupied	—	—
30	0.35	WH / GN	3535	Reflected LED Display Dimming Control	I	—

P16 Instrument Cluster (cont'd)

Pin	Size	Color	Circuit	Function	Terminal Type ID	Option
31	—	—	—	Not Occupied	—	—
32	0.35	GN / BN	507	Wait To Start Indicator Control	I	—

P17 Info Display Module X1 (IOR)

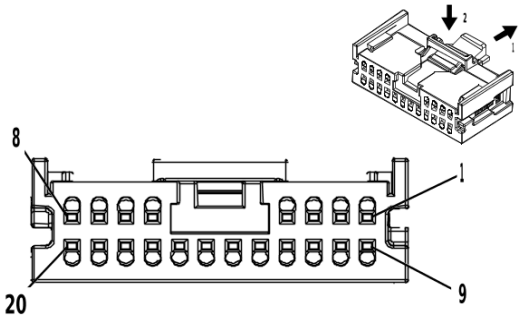

4231339

Connector Part Information

Harness Type: Instrument Panel Wiring Harness
OEM Connector: 34824-2200
Service Connector: 13596105
Description: 20 <p01>-Way F Mini 50 Series(BK)

Terminal Part Information

Terminal Type ID	Terminated Lead	Diagnostic Test Probe	Terminal Removal Tool
I	19333221	EL-35616-58 (BK)	EL-38125-58

P17 Info Display Module X1 (IOR)

Pin	Size	Color	Circuit	Function	Terminal Type ID	Option
1	0.35	BU / RD	2807	Radio Keypad Voltage Reference	I	—
2	0.35	GY / BU	2803	Radio Display Touch Interrupt Request Signal	I	—
3	—	—	—	Not Occupied	—	—
4	0.35	BU	4315	Radio Volume Up Switch Signal	I	—
5	0.35	GY / BN	4314	Radio Volume Down Switch Signal	I	—
6	0.35	BN / WH	2809	Radio Keypad Power Signal	I	—
7	0.35	VT / WH	2810	Radio Keypad Button Signal	I	—
8	0.35	BU / GY	2808	Radio Keypad Dimming Control	I	—
9	0.35	BU / GN	2813	Radio Display Backlight Dimming Control	I	—
10	—	—	—	Not Occupied	—	—
11	0.35	BK / GN	2804	Radio Display Backlight Low Reference	I	—
12	0.35	BU / RD	2807	Radio Keypad Voltage Reference	I	—
13	—	—	—	Not Occupied	—	—
14	0.35	BU	4315	Radio Volume Up Switch Signal	I	—
15	0.35	GY / BN	4314	Radio Volume Down Switch Signal	I	—
16	0.35	BN / WH	2809	Radio Keypad Power Signal	I	—
17	0.35	VT / WH	2810	Radio Keypad Button Signal	I	—
18	0.35	BU / GY	2808	Radio Keypad Dimming Control	I	—
19	0.35	GY / VT	3363	Navigation Display Dimming Control	I	—
20	0.35	BK / YE	2806	Radio Keypad Low Reference	I	—

P17 Info Display Module X1 (IOS/IOU)

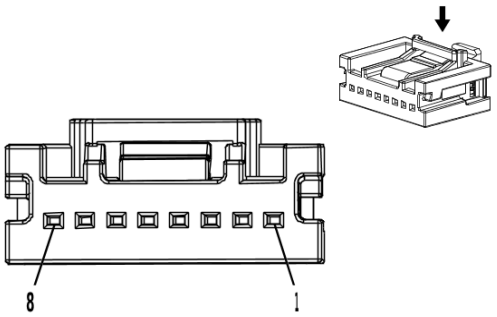

4017639

Connector Part Information

Harness Type: Instrument Panel Wiring Harness
OEM Connector: 34791-5180
Service Connector: 19354223
Description: 8 <p01>-Way F Mini 50 Series(BK)

Terminal Part Information

Terminal Type ID	Terminated Lead	Diagnostic Test Probe	Terminal Removal Tool
I	Not required	EL-35616-58 (BK)	No Tool Required

P17 Info Display Module X1 (IOS/IOU)

Pin	Size	Color	Circuit	Function	Terminal Type ID	Option
1	0.35	RD / GY	2840	Battery Positive Voltage	I	—
2 - 7	—	—	—	Not Occupied	—	—
8	0.35	BK / WH	2051	Signal Ground	I	—

P17 Info Display Module X2 (IOR)

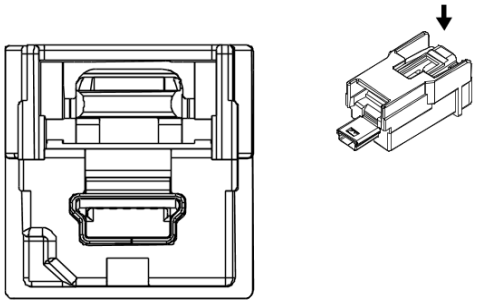

2807491

Connector Part Information

Harness Type: Instrument Panel Wiring Harness USB
OEM Connector: 13580203
Service Connector: Service by Cable Assembly — See Part Catalog
Description: 5 <p01>-Way M 2.0 Mini-B USB Type(GY)

Terminal Part Information

Terminal Type ID	Terminated Lead	Diagnostic Test Probe	Terminal Removal Tool
I	Not required	No Tool Required	No Tool Required

P17 Info Display Module X2 (IOR)

Pin	Size	Color	Circuit	Function	Terminal Type ID	Option
—	—	USB	—	USB Serial Data	I	—

P17 Info Display Module X2 (IOS/IOU)

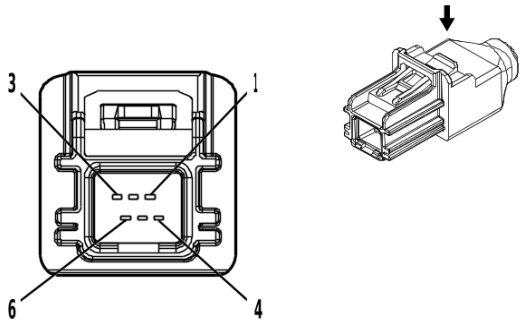

4806625

Connector Part Information

Harness Type: Instrument Panel Wiring Harness USB
OEM Connector: 13522802
Service Connector: Service by Cable Assembly — See Part Catalog
Description: 6 <p01>-Way M HSAL-2 Series(BK)

Terminal Part Information

Terminal Type ID	Terminated Lead	Diagnostic Test Probe	Terminal Removal Tool
I	Not required	No Tool Required	No Tool Required

P17 Info Display Module X2 (IOS/IOU)

Pin	Size	Color	Circuit	Function	Terminal Type ID	Option
—	—	USB	—	USB Serial Data	I	—

P19AG Speaker - Left Front Door

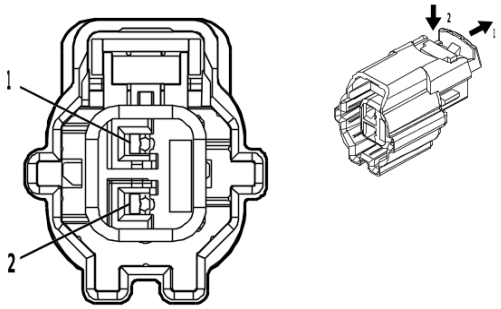

4840334

Connector Part Information

Harness Type: Front Side Door Door Wiring Harness - Driver
OEM Connector: 148032-0005
Service Connector: Service by Harness - See Part Catalog
Description: 2 <p01>-Way F 1.5 MX Series, Sealed(BK)

Terminal Part Information

Terminal Type ID	Terminated Lead	Diagnostic Test Probe	Terminal Removal Tool
I	Not required	J-35616-2A (GY)	No Tool Required

P19AG Speaker - Left Front Door

Pin	Size	Color	Circuit	Function	Terminal Type ID	Option
1	1	BN / BU	118	Left Front Speaker [-] Control 1	I	—
2	1	BU	201	Left Front Speaker 1 [+] Control	I	—

P19AH Speaker - Right Front Door

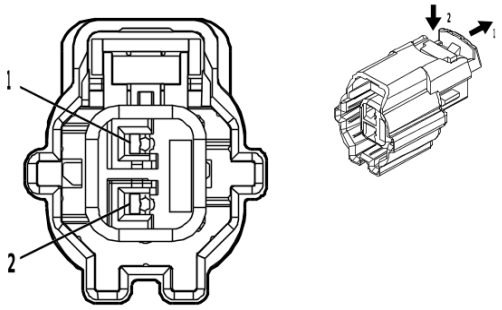

4840334

Connector Part Information

Harness Type: Front Side Door Door Wiring Harness - Passenger
OEM Connector: 148032-0005
Service Connector: Service by Harness - See Part Catalog
Description: 2 <p01>-Way F 1.5 MX Series, Sealed(BK)

Terminal Part Information

Terminal Type ID	Terminated Lead	Diagnostic Test Probe	Terminal Removal Tool
I	Not required	J-35616-2A (GY)	No Tool Required

P19AH Speaker - Right Front Door

Pin	Size	Color	Circuit	Function	Terminal Type ID	Option
1	1	YE / BK	117	Right Front Speaker [-] Control 1	I	—
2	1	YE	200	Right Front Speaker 1 [+] Control	I	—

P19AL Speaker - Left Rear Door

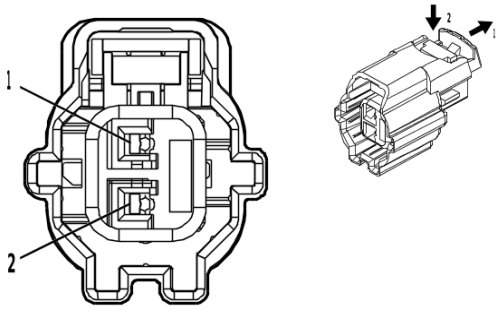

4840334

Connector Part Information

Harness Type: Rear Side Door Door Wiring Harness - Left
OEM Connector: 148032-0005
Service Connector: Service by Harness - See Part Catalog
Description: 2 <p01>-Way F 1.5 MX Series, Sealed(BK)

Terminal Part Information

Terminal Type ID	Terminated Lead	Diagnostic Test Probe	Terminal Removal Tool
I	Not required	J-35616-2A (GY)	No Tool Required

P19AL Speaker - Left Rear Door

Pin	Size	Color	Circuit	Function	Terminal Type ID	Option
1	1	GN / BK	116	Left Rear Speaker [-] Control	I	—
2	1	GN	199	Left Rear Speaker [+] Control	I	—

P19AM Speaker - Right Rear Door

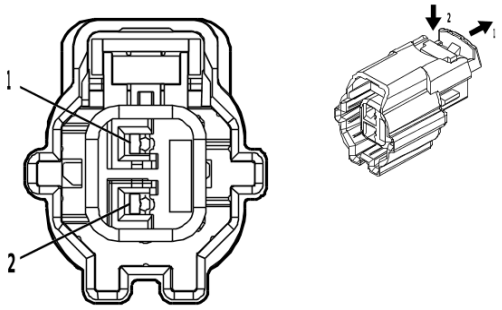

4840334

Connector Part Information

Harness Type: Rear Side Door Door Wiring Harness - Right
OEM Connector: 148032-0005
Service Connector: Service by Harness - See Part Catalog
Description: 2 <p01>-Way F 1.5 MX Series, Sealed(BK)

Terminal Part Information

Terminal Type ID	Terminated Lead	Diagnostic Test Probe	Terminal Removal Tool
I	Not required	J-35616-2A (GY)	No Tool Required

P19AM Speaker - Right Rear Door

Pin	Size	Color	Circuit	Function	Terminal Type ID	Option
1	1	BU / BK	115	Right Rear Speaker [-] Control	I	—
2	1	WH	46	Right Rear Speaker [+] Control	I	—

P19B Speaker - Center Instrument Panel

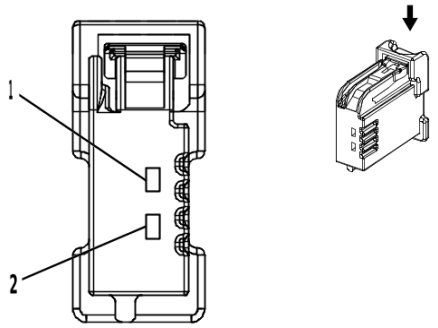

2179775

Connector Part Information

Harness Type: Instrument Panel Wiring Harness
OEM Connector: 6098-5527
Service Connector: 85102563
Description: 2 <p01>-Way F 1.5 Series(GY)

Terminal Part Information

Terminal Type ID	Terminated Lead	Diagnostic Test Probe	Terminal Removal Tool
I	Not required	J-35616-14 (GN)	No Tool Required

P19B Speaker - Center Instrument Panel

Pin	Size	Color	Circuit	Function	Terminal Type ID	Option
1	0.75	BU / YE	1960	Front Center Speaker [-] Control	I	—
2	0.75	YE / WH	1860	Front Center Speaker [+] Control	I	—

P19H Speaker - Left Front Tweeter (UQ3)

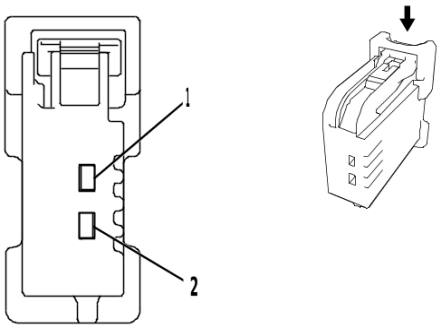

2173586

Connector Part Information

Harness Type: Instrument Panel Wiring Harness
OEM Connector: 6098-5510
Service Connector: 13584097
Description: 2 <p01>-Way F 1.5 Series(BK)

Terminal Part Information

Terminal Type ID	Terminated Lead	Diagnostic Test Probe	Terminal Removal Tool
I	Not required	J-35616-14 (GN)	No Tool Required

P19H Speaker - Left Front Tweeter (UQ3)

Pin	Size	Color	Circuit	Function	Terminal Type ID	Option
1	0.75	BN / BU	118	Left Front Speaker [-] Control 1	I	—
2	0.75	BU	201	Left Front Speaker 1 [+] Control	I	—

P19H Speaker - Left Front Tweeter (UQA)

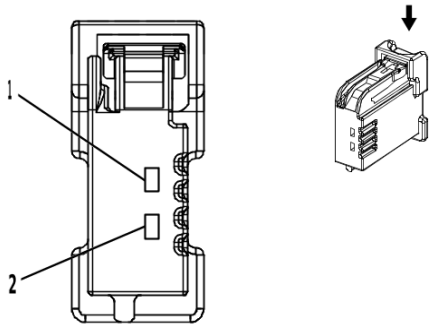

2179775

Connector Part Information

Harness Type: Instrument Panel Wiring Harness
OEM Connector: 6098-5527
Service Connector: 85102563
Description: 2 <p01>-Way F 1.5 Series(GY)

Terminal Part Information

Terminal Type ID	Terminated Lead	Diagnostic Test Probe	Terminal Removal Tool
I	Not required	J-35616-14 (GN)	No Tool Required

P19H Speaker - Left Front Tweeter (UQA)

Pin	Size	Color	Circuit	Function	Terminal Type ID	Option
1	0.75	VT / GY	1956	Left Front Tweeter Speaker [-] Control	I	—
2	0.75	YE / BU	1856	Left Front Tweeter Speaker [+] Control	I	—

P19V Speaker - Right Front Tweeter (UQ3)

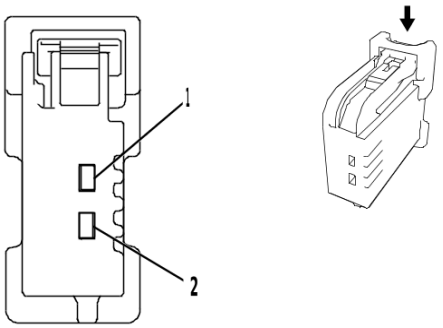

2173586

Connector Part Information

Harness Type: Instrument Panel Wiring Harness
OEM Connector: 6098-5510
Service Connector: 13584097
Description: 2 <p01>-Way F 1.5 Series(BK)

Terminal Part Information

Terminal Type ID	Terminated Lead	Diagnostic Test Probe	Terminal Removal Tool
I	Not required	J-35616-14 (GN)	No Tool Required

P19V Speaker - Right Front Tweeter (UQ3)

Pin	Size	Color	Circuit	Function	Terminal Type ID	Option
1	0.75	YE / BK	117	Right Front Speaker [-] Control 1	I	—
2	0.75	YE	200	Right Front Speaker 1 [+] Control	I	—

P19V Speaker - Right Front Tweeter (UQA)

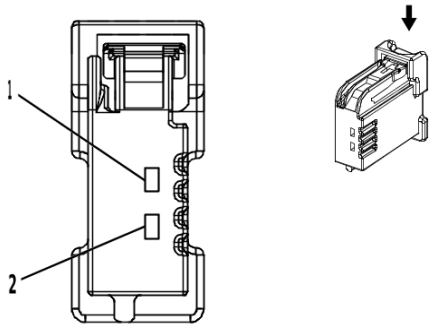

2179775

Connector Part Information

Harness Type: Instrument Panel Wiring Harness
OEM Connector: 6098-5527
Service Connector: 85102563
Description: 2 <p01>-Way F 1.5 Series(GY)

Terminal Part Information

Terminal Type ID	Terminated Lead	Diagnostic Test Probe	Terminal Removal Tool
I	Not required	J-35616-14 (GN)	No Tool Required

P19V Speaker - Right Front Tweeter (UQA)

Pin	Size	Color	Circuit	Function	Terminal Type ID	Option
1	0.75	VT / BN	1952	Right Front Tweeter Speaker [-] Control	I	—
2	0.75	BN / GN	1852	Right Front Tweeter Speaker [+] Control	I	—

P43 Collision Alert Indicators

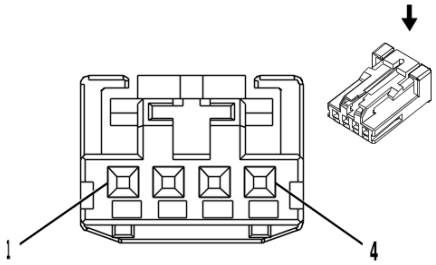

2717162

Connector Part Information

Harness Type: Instrument Panel Wiring Harness
OEM Connector: 0-936119-1
Service Connector: 19367524
Description: 4 <p01>-Way F 0.64 Micro-Quadlock Series(BK)

Terminal Part Information

Terminal Type ID	Terminated Lead	Diagnostic Test Probe	Terminal Removal Tool
I	Not required	J-35616-64B (LT BU)	No Tool Required

P43 Collision Alert Indicators

Pin	Size	Color	Circuit	Function	Terminal Type ID	Option
1	0.5	VT / BK	1639	Run/Crank Ignition 1 Voltage	I	—
2	0.35	GY / YE	3885	Forward Collision Alert LED Control	I	—
3	0.35	WH / GN	3535	Reflected LED Display Dimming Control	I	—
4	0.35	BK / WH	2151	Signal Ground	I	—

Q2 A/C Compressor Clutch

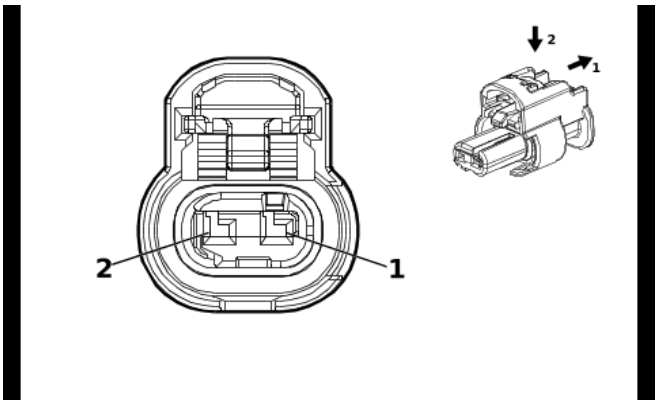

4649903

Connector Part Information

Harness Type: Engine Wiring Harness
OEM Connector: 1-2296694-1
Service Connector: 85519075
Description: 2 <p01>-Way F 1.2 MCON Series, Sealed(BK)

Terminal Part Information

Terminal Type ID	Terminated Lead	Diagnostic Test Probe	Terminal Removal Tool
I	Not required	J-35616-16 (LT GN)	No Tool Required

Q2 A/C Compressor Clutch

Pin	Size	Color	Circuit	Function	Terminal Type ID	Option
1	0.75	BK	1450	Ground	I	—
2	0.75	BN / GN	59	A/C Compressor Clutch Control	I	—

Q6A Camshaft Position Actuator Solenoid Valve - Bank 1 Exhaust

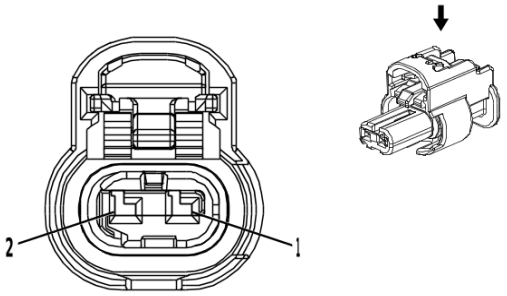

4335931

Connector Part Information

Harness Type: Engine Wiring Harness
OEM Connector: 1-2296694-2
Service Connector: 19366843
Description: 2 <p01>-Way F 1.2 MCON Series, Sealed(BK)

Terminal Part Information

Terminal Type ID	Terminated Lead	Diagnostic Test Probe	Terminal Removal Tool
I	Not required	J-35616-16 (LT GN)	No Tool Required

Q6A Camshaft Position Actuator Solenoid Valve - Bank 1 Exhaust

Pin	Size	Color	Circuit	Function	Terminal Type ID	Option
1	0.5	GY / BU	5282	Exhaust Camshaft Position Actuator Solenoid Valve 1	I	—
2	0.5	BK / VT	6754	Camshaft Position Actuator Solenoid Valve X Low Reference	I	—

Q6B Camshaft Position Actuator Solenoid Valve - Bank 1 Intake

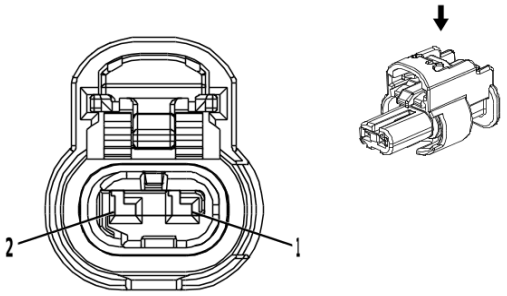

4335931

Connector Part Information

Harness Type: Engine Wiring Harness
OEM Connector: 1-2296694-2
Service Connector: 19366843
Description: 2 <p01>-Way F 1.2 MCON Series, Sealed(BK)

Terminal Part Information

Terminal Type ID	Terminated Lead	Diagnostic Test Probe	Terminal Removal Tool
I	Not required	J-35616-16 (LT GN)	No Tool Required

Q6B Camshaft Position Actuator Solenoid Valve - Bank 1 Intake

Pin	Size	Color	Circuit	Function	Terminal Type ID	Option
1	0.5	VT / BN	5284	Intake Camshaft Position Actuator Solenoid Valve 1	I	—
2	0.5	BK / BN	6753	Camshaft Position Actuator Solenoid Valve W Low Reference	I	—

Q6C Camshaft Position Actuator Solenoid Valve - Bank 2 Exhaust

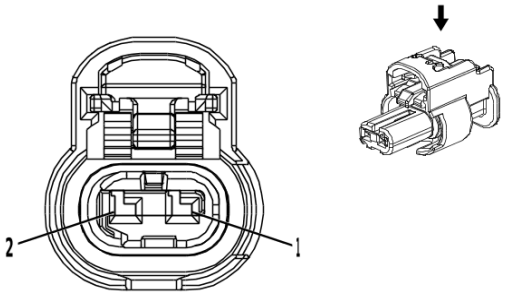

4335931

Connector Part Information

Harness Type: Engine Wiring Harness
OEM Connector: 1-2296694-2
Service Connector: 19366843
Description: 2 <p01>-Way F 1.2 MCON Series, Sealed(BK)

Terminal Part Information

Terminal Type ID	Terminated Lead	Diagnostic Test Probe	Terminal Removal Tool
I	Not required	J-35616-16 (LT GN)	No Tool Required

Q6C Camshaft Position Actuator Solenoid Valve - Bank 2 Exhaust

Pin	Size	Color	Circuit	Function	Terminal Type ID	Option
1	0.5	GN / BN	5283	Exhaust Camshaft Position Actuator Solenoid Valve 2	I	—
2	0.5	BK / GY	6756	Camshaft Position Actuator Solenoid Valve Z Low Reference	I	—

Q6D Camshaft Position Actuator Solenoid Valve - Bank 2 Intake

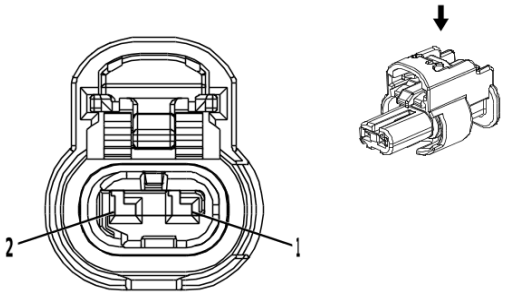

4335931

Connector Part Information

Harness Type: Engine Wiring Harness
OEM Connector: 1-2296694-2
Service Connector: 19366843
Description: 2 <p01>-Way F 1.2 MCON Series, Sealed(BK)

Terminal Part Information

Terminal Type ID	Terminated Lead	Diagnostic Test Probe	Terminal Removal Tool
I	Not required	J-35616-16 (LT GN)	No Tool Required

Q6D Camshaft Position Actuator Solenoid Valve - Bank 2 Intake

Pin	Size	Color	Circuit	Function	Terminal Type ID	Option
1	0.5	GN	5272	Intake Camshaft Position Actuator Solenoid Valve 2	I	—
2	0.5	BK / BU	6755	Camshaft Position Actuator Solenoid Valve Y Low Reference	I	—

Q6E Camshaft Position Actuator Solenoid Valve - Exhaust

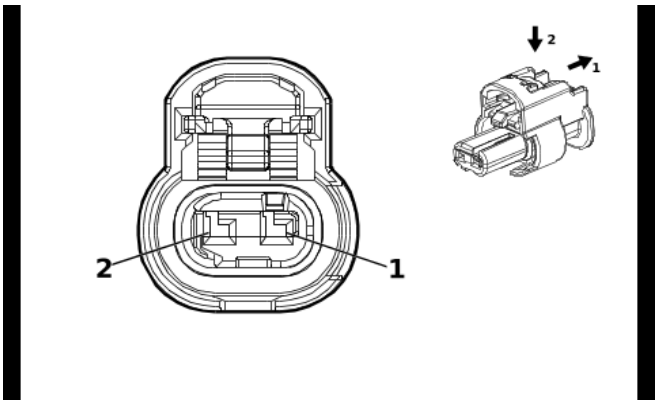

4649903

Connector Part Information

Harness Type: Engine Wiring Harness
OEM Connector: 1-2296694-1
Service Connector: 85519075
Description: 2 <p01>-Way F 1.2 MCON Series, Sealed(BK)

Terminal Part Information

Terminal Type ID	Terminated Lead	Diagnostic Test Probe	Terminal Removal Tool
I	Not required	J-35616-16 (LT GN)	No Tool Required

Q6E Camshaft Position Actuator Solenoid Valve - Exhaust

Pin	Size	Color	Circuit	Function	Terminal Type ID	Option
1	0.5	GY / BU	5282	Exhaust Camshaft Position Actuator Solenoid Valve 1	I	—
2	0.5	BK / VT	6754	Camshaft Position Actuator Solenoid Valve X Low Reference	I	—

Q6F Camshaft Position Actuator Solenoid Valve - Intake

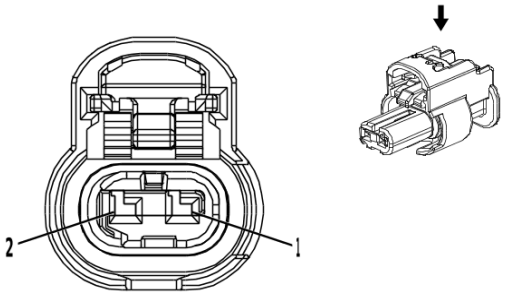

4335931

Connector Part Information

Harness Type: Engine Wiring Harness
OEM Connector: 1-2296694-2
Service Connector: 19366843
Description: 2 <p01>-Way F 1.2 MCON Series, Sealed(BK)

Terminal Part Information

Terminal Type ID	Terminated Lead	Diagnostic Test Probe	Terminal Removal Tool
I	Not required	J-35616-16 (LT GN)	No Tool Required

Q6F Camshaft Position Actuator Solenoid Valve - Intake

Pin	Size	Color	Circuit	Function	Terminal Type ID	Option
1	0.5	VT / BN	5284	Intake Camshaft Position Actuator Solenoid Valve 1	I	—
2	0.5	BK / BN	6753	Camshaft Position Actuator Solenoid Valve W Low Reference	I	—

Q8 Control Solenoid Valve Assembly X1

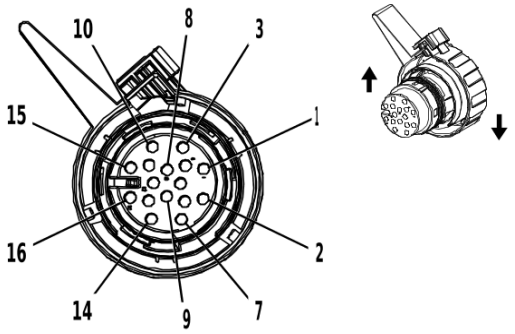

3277917

Connector Part Information

Harness Type: Engine Wiring Harness
OEM Connector: 9430734
Service Connector: 19303772
Description: 16 <p01>-Way F 1.5 LKS Series, Sealed(BK)

Terminal Part Information

Terminal Type ID	Terminated Lead	Diagnostic Test Probe	Terminal Removal Tool
I	13575434	J-35616-66 (YE)	J-38125-28

Q8 Control Solenoid Valve Assembly X1

Pin	Size	Color	Circuit	Function	Terminal Type ID	Option
1 - 2	—	—	—	Not Occupied	—	—
3	0.5	WH / GY	1786	Transmission Park/Neutral Signal 1	I	—
4	0.75	RD / GN	1840	Battery Positive Voltage	I	—
5	0.75	BK / WH	1451	Signal Ground	I	—
6 - 8	—	—	—	Not Occupied	—	—
9	0.5	VT / YE	5985	Accessory Wake-Up Serial Data	I	—
10	0.5	BU	2500	High Speed GMLAN Serial Data [+] 1	I	—
11	0.5	WH	2501	High Speed GMLAN Serial Data [-] 1	I	—
12	0.5	VT / BK	2139	Run/Crank Ignition 1 Voltage	I	—
13	0.5	WH	2501	High Speed GMLAN Serial Data [-] 1	I	—
14	0.5	BU	2500	High Speed GMLAN Serial Data [+] 1	I	—
15 - 16	—	—	—	Not Occupied	—	—

Q8 Control Solenoid Valve Assembly X2 (MYB)

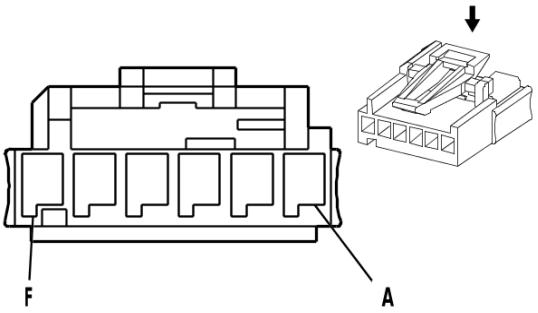

347262

Connector Part Information

Harness Type: Transmission
OEM Connector: 89046635
Service Connector: Service by Harness - See Part Catalog
Description: 6 <p01>-Way

Terminal Part Information

Terminal Type ID	Terminated Lead	Diagnostic Test Probe	Terminal Removal Tool
I	Not Available	No Tool Required	Not Available

Q8 Control Solenoid Valve Assembly X2 (MYB)

Pin	Size	Color	Circuit	Function	Terminal Type ID	Option
A	0.35	BK / <p01>	50	Ground	I	—
B	0.35	WH / <p01>	776	Transmission Position Switch Parity Bit Signal	I	—
C	0.35	GY / <p01>	773	Transmission Position Switch Bit 3 Signal	I	—
D	0.35	RD / <p01>	772	Transmission Position Switch Bit 2 Signal	I	—
E	0.35	GN / <p01>	771	Transmission Position Switch Bit 1 Signal	I	—
F	0.35	WH / GY	1786	Transmission Park/Neutral Signal 1	I	—

Q8 Control Solenoid Valve Assembly X3 (MYB)

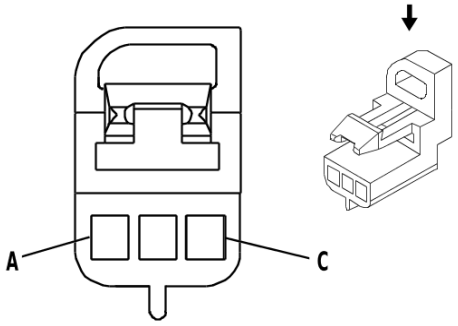

2334125

Connector Part Information

Harness Type: Transmission
OEM Connector: 13539487
Service Connector: Service by Harness - See Part Catalog
Description: 3 <p01>-Way F 150 Metri-Pack Series(BK)

Terminal Part Information

Terminal Type ID	Terminated Lead	Diagnostic Test Probe	Terminal Removal Tool
I	Not Available	No Tool Required	Not Available

Q8 Control Solenoid Valve Assembly X3 (MYB)

Pin	Size	Color	Circuit	Function	Terminal Type ID	Option
A	0.35	GN / <p01>	4173	Transmission Speed Input Low Signal	I	—
B	0.35	RD / <p01>	4170	Transmission Output Shaft Speed Sensor Circuit 9V Reference	I	—
C	0.35	BK / <p01>	6356	Output Speed [-] Signal	I	—

Q9F Differential Lock Actuator - Front

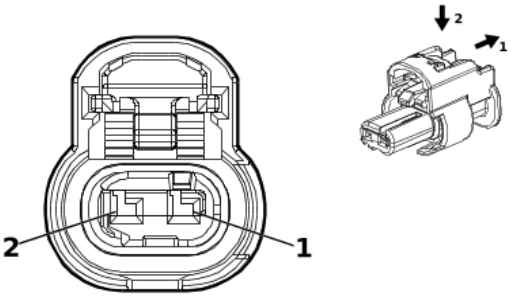

4649903

Connector Part Information

Harness Type: Power Steering Wiring Harness
OEM Connector: 1-2296694-1
Service Connector: Service by Harness - See Part Catalog
Description: 2 <p01>-Way F 1.2 MCON Series, Sealed(BK)

Terminal Part Information

Terminal Type ID	Terminated Lead	Diagnostic Test Probe	Terminal Removal Tool
I	Not required	J-35616-16 (LT GN)	No Tool Required

Q9F Differential Lock Actuator - Front

Pin	Size	Color	Circuit	Function	Terminal Type ID	Option
1	1	VT / WH	7256	Front Differential Lock Actuator Control	I	—
2	1	WH / BK	7254	Front Differential Lock Actuator Low Control	I	—

Q9R Differential Lock Actuator - Rear

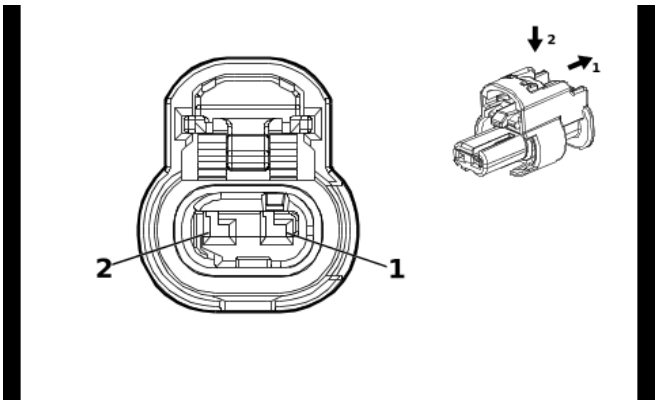

4649903

Connector Part Information

Harness Type: Chassis Wiring Harness
OEM Connector: 1-2296694-1
Service Connector: 85519075
Description: 2 <p01>-Way F 1.2 MCON Series, Sealed(BK)

Terminal Part Information

Terminal Type ID	Terminated Lead	Diagnostic Test Probe	Terminal Removal Tool
I	Not required	J-35616-16 (LT GN)	No Tool Required

Q9R Differential Lock Actuator - Rear

Pin	Size	Color	Circuit	Function	Terminal Type ID	Option
1	1	VT / BN	7258	Rear Differential Lock Actuator Control	I	—
2	1	GY / BK	7253	Rear Differential Lock Actuator Low Control	I	—

Q12 Evaporative Emission Purge Solenoid Valve

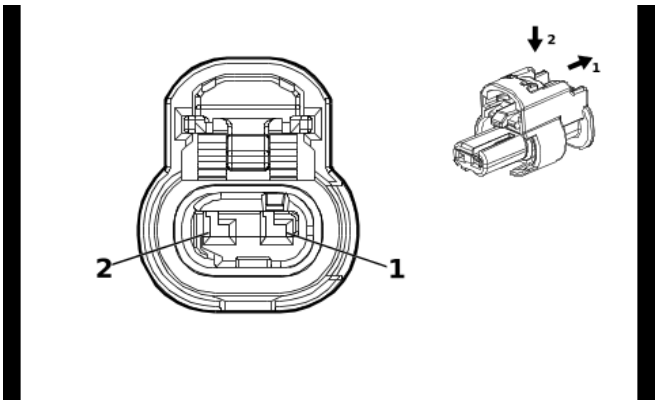

4649903

Connector Part Information

Harness Type: Engine Wiring Harness
OEM Connector: 1-2296694-1
Service Connector: 85519075
Description: 2 <p01>-Way F 1.2 MCON Series, Sealed(BK)

Terminal Part Information

Terminal Type ID	Terminated Lead	Diagnostic Test Probe	Terminal Removal Tool
I	Not required	J-35616-16 (LT GN)	No Tool Required

Q12 Evaporative Emission Purge Solenoid Valve

Pin	Size	Color	Circuit	Function	Terminal Type ID	Option
1	0.5	VT / BU	5293	Powertrain Main Relay Fused Supply Voltage 4	I	—
2	0.5	GN / BU	428	EVAP Canister Purge Solenoid Control	I	—

Q13 Evaporative Emission Vent Solenoid Valve

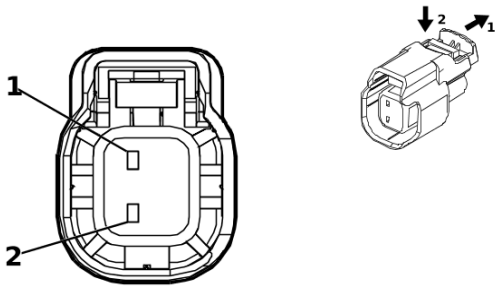

3028817

Connector Part Information

Harness Type: Chassis Wiring Harness
OEM Connector: 13580239
Service Connector: 19352404
Description: 2 <p01>-Way F 1.5 Series, Sealed(BK)

Terminal Part Information

Terminal Type ID	Terminated Lead	Diagnostic Test Probe	Terminal Removal Tool
I	Not required	J-35616-14 (GN)	No Tool Required

Q13 Evaporative Emission Vent Solenoid Valve

Pin	Size	Color	Circuit	Function	Terminal Type ID	Option
1	0.5	WH	1310	EVAP Vent Solenoid Valve Control	I	—
2	0.5	RD / GN	2440	Battery Positive Voltage	I	—

Q14 Exhaust Gas Recirculation Valve

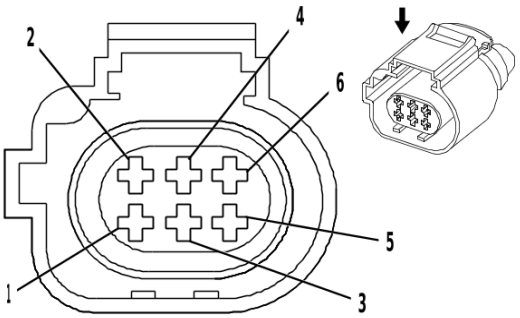

2216905

Connector Part Information

Harness Type: Engine Wiring Harness
OEM Connector: 284716-3
Service Connector: 19368732
Description: 6 <p01>-Way F 1.6 Micro-Timer Series, Sealed(BN)

Terminal Part Information

Terminal Type ID	Terminated Lead	Diagnostic Test Probe	Terminal Removal Tool
I	Not required	J-35616-14 (GN)	No Tool Required

Q14 Exhaust Gas Recirculation Valve

Pin	Size	Color	Circuit	Function	Terminal Type ID	Option
1	0.5	WH / VT	5764	Exhaust Gas Recirculation Valve High Control	I	—
2	0.5	BN / WH	5763	Exhaust Gas Recirculation Position Signal	I	—
3	—	—	—	Not Occupied	—	—
4	0.5	BK / BN	2753	Exhaust Gas Recirculation Sensor Low Reference	I	—
5	0.5	VT / BK	5746	Exhaust Gas Recirculation Valve Low Control	I	—
6	0.5	BU / RD	5047	Exhaust Gas Recirculation Valve Position Sensor 5V Reference 1	I	—

Q17A Fuel Injector 1 (LCV)

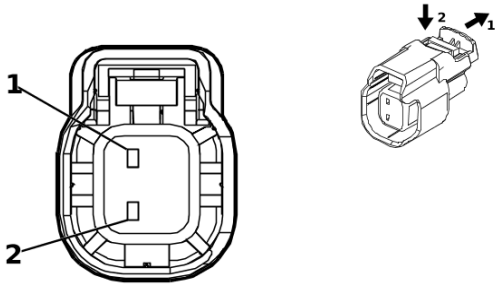

3028817

Connector Part Information

Harness Type: Fuel Injector Wiring Harness
OEM Connector: 13503508
Service Connector: Service by Harness - See Part Catalog
Description: 2 <p01>-Way F 1.5 Series, Sealed(BK)

Terminal Part Information

Terminal Type ID	Terminated Lead	Diagnostic Test Probe	Terminal Removal Tool
I	Not Available	No Tool Required	Not Available

Q17A Fuel Injector 1 (LCV)

Pin	Size	Color	Circuit	Function	Terminal Type ID	Option
1	0.75	BN	4801	Direct Fuel Injector High Voltage Control Cylinder 1	I	—
2	0.75	BN / WH	4901	Direct Fuel Injector High Voltage Supply Cylinder 1	I	—

Q17A Fuel Injector 1 (LGZ)

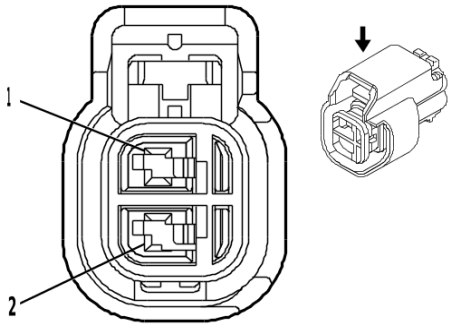

1659331

Connector Part Information

Harness Type: Fuel Injector Wiring Harness
OEM Connector: E-2157
Service Connector: Service by Harness - See Part Catalog
Description: 2 <p01>-Way F 1.5 Series, Sealed(BK)

Terminal Part Information

Terminal Type ID	Terminated Lead	Diagnostic Test Probe	Terminal Removal Tool
I	Not Available	No Tool Required	Not Available

Q17A Fuel Injector 1 (LGZ)

Pin	Size	Color	Circuit	Function	Terminal Type ID	Option
1	0.5	BN	4801	Direct Fuel Injector High Voltage Control Cylinder 1	I	—
2	0.5	BN / WH	4901	Direct Fuel Injector High Voltage Supply Cylinder 1	I	—

Q17A Fuel Injector 1 (LWN)

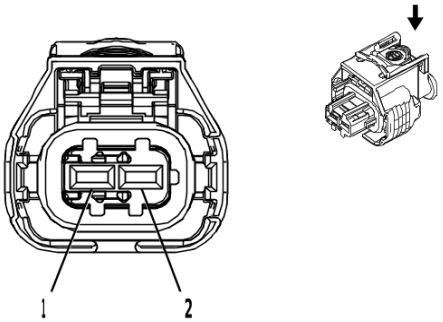

2845578

Connector Part Information

Harness Type: Engine Wiring Harness
OEM Connector: 1928405715
Service Connector: 19368140
Description: 2 <p01>-Way F 2.8 Series, Sealed(BK)

Terminal Part Information

Terminal Type ID	Terminated Lead	Diagnostic Test Probe	Terminal Removal Tool
I	Not required	J-35616-35 (VT)	No Tool Required

Q17A Fuel Injector 1 (LWN)

Pin	Size	Color	Circuit	Function	Terminal Type ID	Option
1	1.5	BN / WH	4901	Direct Fuel Injector High Voltage Supply Cylinder 1	I	—
2	1.5	BN	4801	Direct Fuel Injector High Voltage Control Cylinder 1	I	—

Q17B Fuel Injector 2 (LCV)

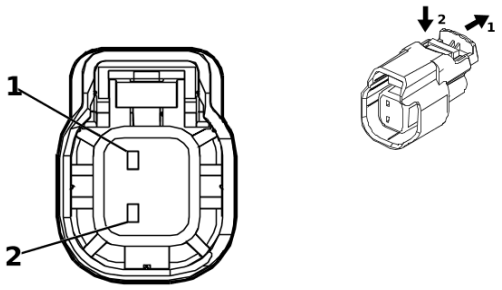

3028817

Connector Part Information

Harness Type: Fuel Injector Wiring Harness
OEM Connector: 13503508
Service Connector: Service by Harness - See Part Catalog
Description: 2 <p01>-Way F 1.5 Series, Sealed(BK)

Terminal Part Information

Terminal Type ID	Terminated Lead	Diagnostic Test Probe	Terminal Removal Tool
I	Not Available	No Tool Required	Not Available

Q17B Fuel Injector 2 (LCV)

Pin	Size	Color	Circuit	Function	Terminal Type ID	Option
1	0.75	BU	4802	Direct Fuel Injector High Voltage Control Cylinder 2	I	—
2	0.75	BU / GY	4902	Direct Fuel Injector High Voltage Supply Cylinder 2	I	—

Q17B Fuel Injector 2 (LGZ)

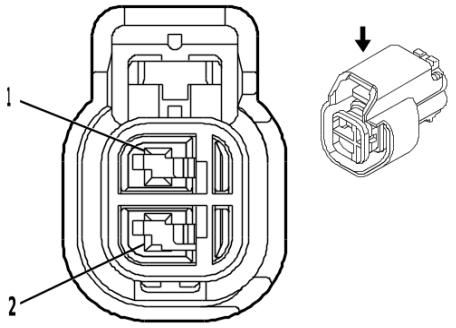

1659331

Connector Part Information

Harness Type: Fuel Injector Wiring Harness
OEM Connector: E-2157
Service Connector: Service by Harness - See Part Catalog
Description: 2 <p01>-Way F 1.5 Series, Sealed(BK)

Terminal Part Information

Terminal Type ID	Terminated Lead	Diagnostic Test Probe	Terminal Removal Tool
I	Not Available	No Tool Required	Not Available

Q17B Fuel Injector 2 (LGZ)

Pin	Size	Color	Circuit	Function	Terminal Type ID	Option
1	0.5	BU	4802	Direct Fuel Injector High Voltage Control Cylinder 2	I	—
2	0.5	BU / GY	4902	Direct Fuel Injector High Voltage Supply Cylinder 2	I	—

Q17B Fuel Injector 2 (LWN)

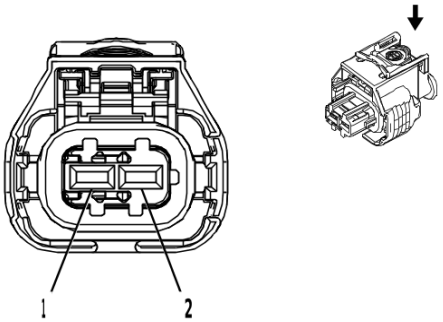

2845578

Connector Part Information

Harness Type: Engine Wiring Harness
OEM Connector: 1928405715
Service Connector: 19368140
Description: 2 <p01>-Way F 2.8 Series, Sealed(BK)

Terminal Part Information

Terminal Type ID	Terminated Lead	Diagnostic Test Probe	Terminal Removal Tool
I	Not required	J-35616-35 (VT)	No Tool Required

Q17B Fuel Injector 2 (LWN)

Pin	Size	Color	Circuit	Function	Terminal Type ID	Option
1	1.5	BU / GY	4902	Direct Fuel Injector High Voltage Supply Cylinder 2	I	—
2	1.5	BU	4802	Direct Fuel Injector High Voltage Control Cylinder 2	I	—

Q17C Fuel Injector 3 (LCV)

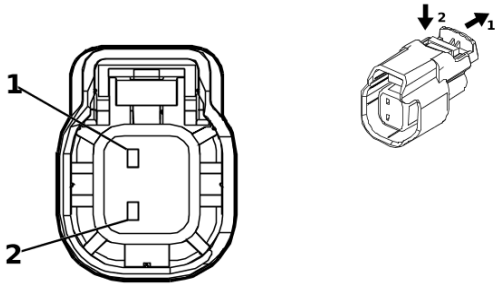

3028817

Connector Part Information

Harness Type: Fuel Injector Wiring Harness
OEM Connector: 13503508
Service Connector: Service by Harness - See Part Catalog
Description: 2 <p01>-Way F 1.5 Series, Sealed(BK)

Terminal Part Information

Terminal Type ID	Terminated Lead	Diagnostic Test Probe	Terminal Removal Tool
I	Not Available	No Tool Required	Not Available

Q17C Fuel Injector 3 (LCV)

Pin	Size	Color	Circuit	Function	Terminal Type ID	Option
1	0.75	GN	4803	Direct Fuel Injector High Voltage Control Cylinder 3	I	—
2	0.75	GN / GY	4903	Direct Fuel Injector High Voltage Supply Cylinder 3	I	—

Q17C Fuel Injector 3 (LGZ)

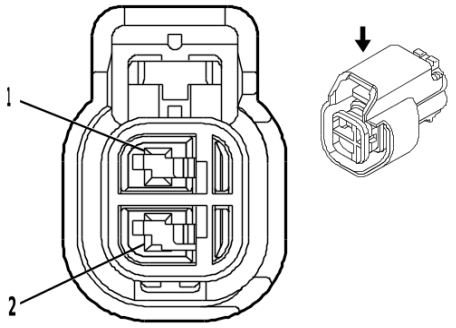

1659331

Connector Part Information

Harness Type: Fuel Injector Wiring Harness
OEM Connector: E-2157
Service Connector: Service by Harness - See Part Catalog
Description: 2 <p01>-Way F 1.5 Series, Sealed(BK)

Terminal Part Information

Terminal Type ID	Terminated Lead	Diagnostic Test Probe	Terminal Removal Tool
I	Not Available	No Tool Required	Not Available

Q17C Fuel Injector 3 (LGZ)

Pin	Size	Color	Circuit	Function	Terminal Type ID	Option
1	0.5	GN	4803	Direct Fuel Injector High Voltage Control Cylinder 3	I	—
2	0.5	GN / GY	4903	Direct Fuel Injector High Voltage Supply Cylinder 3	I	—

Q17C Fuel Injector 3 (LWN)

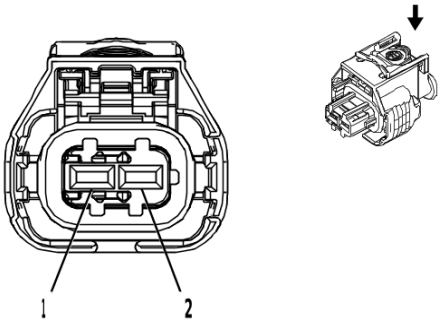

2845578

Connector Part Information

Harness Type: Engine Wiring Harness
OEM Connector: 1928405715
Service Connector: 19368140
Description: 2 <p01>-Way F 2.8 Series, Sealed(BK)

Terminal Part Information

Terminal Type ID	Terminated Lead	Diagnostic Test Probe	Terminal Removal Tool
I	Not required	J-35616-35 (VT)	No Tool Required

Q17C Fuel Injector 3 (LWN)

Pin	Size	Color	Circuit	Function	Terminal Type ID	Option
1	1.5	GN / GY	4903	Direct Fuel Injector High Voltage Supply Cylinder 3	I	—
2	1.5	GN	4803	Direct Fuel Injector High Voltage Control Cylinder 3	I	—

Q17D Fuel Injector 4 (LCV)

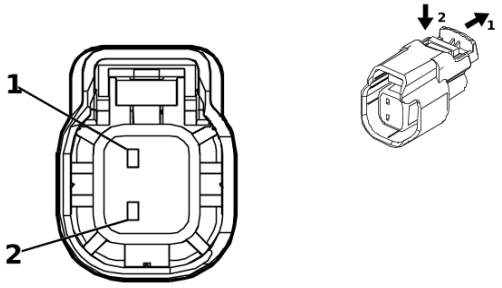

3028817

Connector Part Information

Harness Type: Fuel Injector Wiring Harness
OEM Connector: 13503508
Service Connector: Service by Harness - See Part Catalog
Description: 2 <p01>-Way F 1.5 Series, Sealed(BK)

Terminal Part Information

Terminal Type ID	Terminated Lead	Diagnostic Test Probe	Terminal Removal Tool
I	Not Available	No Tool Required	Not Available

Q17D Fuel Injector 4 (LCV)

Pin	Size	Color	Circuit	Function	Terminal Type ID	Option
1	0.75	GY / BU	4804	Direct Fuel Injector High Voltage Control Cylinder 4	I	—
2	0.75	BU / WH	4904	Direct Fuel Injector High Voltage Supply Cylinder 4	I	—

Q17D Fuel Injector 4 (LGZ)

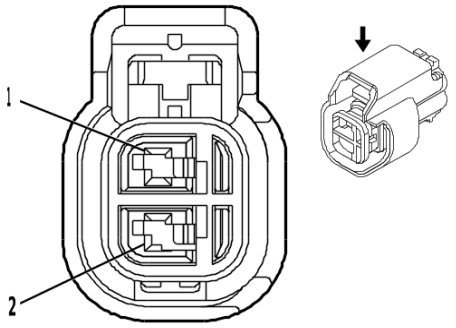

1659331

Connector Part Information

Harness Type: Fuel Injector Wiring Harness
OEM Connector: E-2157
Service Connector: Service by Harness - See Part Catalog
Description: 2 <p01>-Way F 1.5 Series, Sealed(BK)

Terminal Part Information

Terminal Type ID	Terminated Lead	Diagnostic Test Probe	Terminal Removal Tool
I	Not Available	No Tool Required	Not Available

Q17D Fuel Injector 4 (LGZ)

Pin	Size	Color	Circuit	Function	Terminal Type ID	Option
1	0.5	GY / BU	4804	Direct Fuel Injector High Voltage Control Cylinder 4	I	—
2	0.5	BU / WH	4904	Direct Fuel Injector High Voltage Supply Cylinder 4	I	—

Q17D Fuel Injector 4 (LWN)

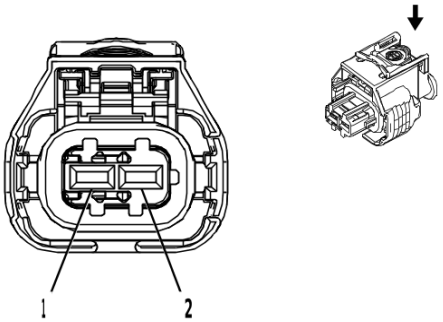

2845578

Connector Part Information

Harness Type: Engine Wiring Harness
OEM Connector: 1-928-405-715
Service Connector: 19368140
Description: 2 <p01>-Way F 2.8 Series, Sealed(BK)

Terminal Part Information

Terminal Type ID	Terminated Lead	Diagnostic Test Probe	Terminal Removal Tool
I	Not required	J-35616-35 (VT)	No Tool Required

Q17D Fuel Injector 4 (LWN)

Pin	Size	Color	Circuit	Function	Terminal Type ID	Option
1	1.5	BU / WH	4904	Direct Fuel Injector High Voltage Supply Cylinder 4	I	—
2	1.5	GY / BU	4804	Direct Fuel Injector High Voltage Control Cylinder 4	I	—

Q17E Fuel Injector 5 (LGZ)

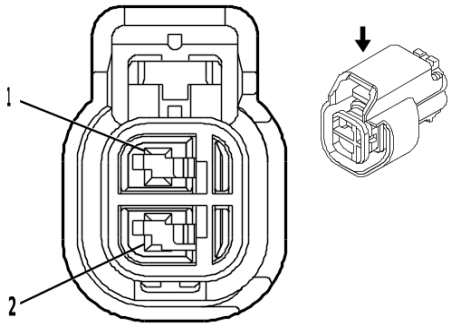

1659331

Connector Part Information

Harness Type: Fuel Injector Wiring Harness
OEM Connector: E-2157
Service Connector: Service by Harness - See Part Catalog
Description: 2 <p01>-Way F 1.5 Series, Sealed(BK)

Terminal Part Information

Terminal Type ID	Terminated Lead	Diagnostic Test Probe	Terminal Removal Tool
I	Not Available	No Tool Required	Not Available

Q17E Fuel Injector 5 (LGZ)

Pin	Size	Color	Circuit	Function	Terminal Type ID	Option
1	0.5	WH / GN	4805	Direct Fuel Injector High Voltage Control Cylinder 5	I	—
2	0.5	GN / WH	4905	Direct Fuel Injector High Voltage Supply Cylinder 5	I	—

Q17F Fuel Injector 6 (LGZ)

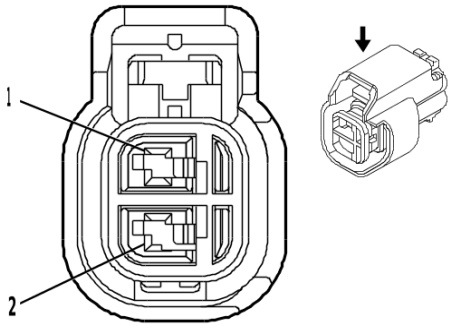

1659331

Connector Part Information

Harness Type: Fuel Injector Wiring Harness
OEM Connector: E-2157
Service Connector: Service by Harness - See Part Catalog
Description: 2 <p01>-Way F 1.5 Series, Sealed(BK)

Terminal Part Information

Terminal Type ID	Terminated Lead	Diagnostic Test Probe	Terminal Removal Tool
I	Not Available	No Tool Required	Not Available

Q17F Fuel Injector 6 (LGZ)

Pin	Size	Color	Circuit	Function	Terminal Type ID	Option
1	0.5	VT / GN	4806	Direct Fuel Injector High Voltage Control Cylinder 6	I	—
2	0.5	VT / GY	4906	Direct Fuel Injector High Voltage Supply Cylinder 6	I	—

Q18A Fuel Pressure Regulator 1

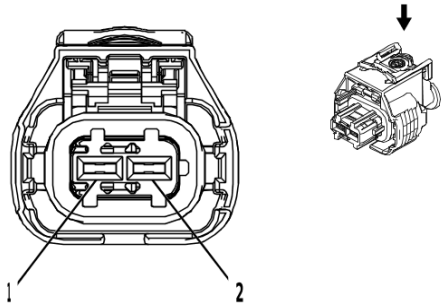

2577394

Connector Part Information

Harness Type: Engine Wiring Harness
OEM Connector: 1928405521
Service Connector: 13384371
Description: 2 <p01>-Way F 2.8 Series, Sealed(BK)

Terminal Part Information

Terminal Type ID	Terminated Lead	Diagnostic Test Probe	Terminal Removal Tool
I	Not required	J-35616-35 (VT)	No Tool Required

Q18A Fuel Pressure Regulator 1

Pin	Size	Color	Circuit	Function	Terminal Type ID	Option
1	0.5	YE	2928	Fuel Metering Solenoid Valve High Control	I	—
2	0.5	BN / BK	2929	Fuel Metering Solenoid Valve Low Control	I	—

Q18B Fuel Pressure Regulator 2

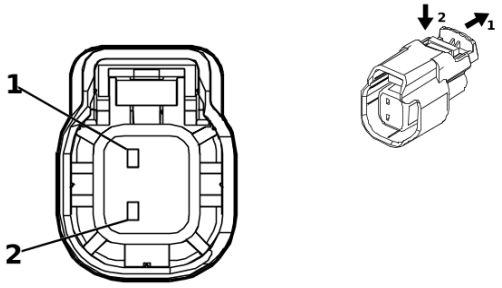

3028817

Connector Part Information

Harness Type: Engine Wiring Harness
OEM Connector: 13580239
Service Connector: 19352404
Description: 2 <p01>-Way F 1.5 Series, Sealed(BK)

Terminal Part Information

Terminal Type ID	Terminated Lead	Diagnostic Test Probe	Terminal Removal Tool
I	Not required	J-35616-2A (GY)	No Tool Required

Q18B Fuel Pressure Regulator 2

Pin	Size	Color	Circuit	Function	Terminal Type ID	Option
1	0.5	BU / WH	2530	Fuel Rail Pressure Solenoid Valve Control	I	—
2	0.5	BK / YE	2834	Fuel Rail Pressure Solenoid Valve Low Reference	I	—

Q20 Intake Air Flow Valve

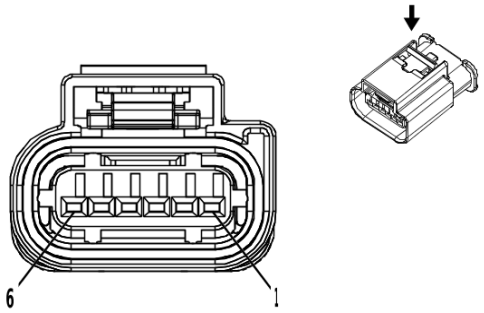

3747579

Connector Part Information

Harness Type: Engine Wiring Harness
OEM Connector: 2272975-5
Service Connector: 19352911
Description: 6 <p01>-Way F 1.2 MCON Series, Sealed(BK)

Terminal Part Information

Terminal Type ID	Terminated Lead	Diagnostic Test Probe	Terminal Removal Tool
I	Not required	J-35616-16 (LT GN)	No Tool Required

Q20 Intake Air Flow Valve

Pin	Size	Color	Circuit	Function	Terminal Type ID	Option
1	0.5	YE	581	Throttle Actuator Open Control	I	—
2	0.5	BN / WH	582	Throttle Actuator Close Control	I	—
3	0.5	BU / WH	3630	Throttle Position Sensor SENT 1 Signal	I	—
4	0.5	BK / BN	2752	Throttle Position Sensor Low Reference	I	—
5	0.5	BN / RD	2701	Throttle Position Sensor 5V Reference	I	—
6	—	—	—	Not Occupied	—	—

Q38 Throttle Body

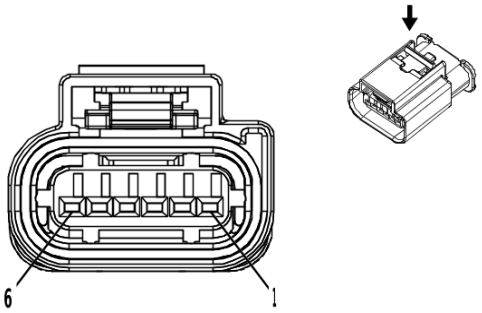

3747579

Connector Part Information

Harness Type: Engine Wiring Harness
OEM Connector: 2272975-5
Service Connector: 19352911
Description: 6 <p01>-Way F 1.2 MCON Series, Sealed(BK)

Terminal Part Information

Terminal Type ID	Terminated Lead	Diagnostic Test Probe	Terminal Removal Tool
I	Not required	J-35616-16 (LT GN)	No Tool Required

Q38 Throttle Body

Pin	Size	Color	Circuit	Function	Terminal Type ID	Option
1	0.5	YE	581	Throttle Actuator Open Control	I	—
2	0.5	BN / WH	582	Throttle Actuator Close Control	I	—
3	0.5	BU / WH	3630	Throttle Position Sensor SENT 1 Signal	I	—
4	0.5	BK / BN	2752	Throttle Position Sensor Low Reference	I	—
5	0.5	BN / RD	2701	Throttle Position Sensor 5V Reference	I	—
6	—	—	—	Not Occupied	—	—

Q44 Engine Oil Pressure Control Solenoid Valve (LCV)

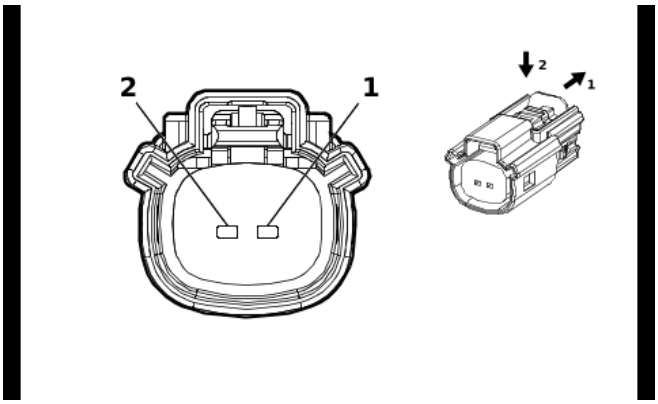

2474713

Connector Part Information

Harness Type: Engine Wiring Harness
OEM Connector: 33471-0206
Service Connector: 13577534
Description: 2 <p01>-Way F 1.5 Series, Sealed(BK)

Terminal Part Information

Terminal Type ID	Terminated Lead	Diagnostic Test Probe	Terminal Removal Tool
I	Not required	J-35616-14 (GN)	No Tool Required

Q44 Engine Oil Pressure Control Solenoid Valve (LCV)

Pin	Size	Color	Circuit	Function	Terminal Type ID	Option
1	0.5	VT / BU	5293	Powertrain Main Relay Fused Supply Voltage 4	I	—
2	0.5	BU	179	Engine Oil Pump Control	I	—

Q44 Engine Oil Pressure Control Solenoid Valve (LGZ)

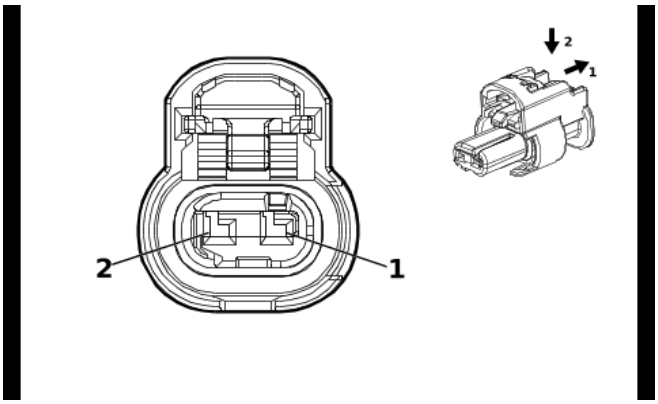

4036662

Connector Part Information

Harness Type: Oil Pump Flow Control Solenoid Valve Harness
OEM Connector: 13514238
Service Connector: Service by Harness - See Part Catalog
Description: 2 <p01>-Way F 1.2 MCON-CB Series, Sealed(BK)

Terminal Part Information

Terminal Type ID	Terminated Lead	Diagnostic Test Probe	Terminal Removal Tool
I	Not Available	No Tool Required	Not Available

Q44 Engine Oil Pressure Control Solenoid Valve (LGZ)

Pin	Size	Color	Circuit	Function	Terminal Type ID	Option
1	0.5	VT / BU	5293	Powertrain Main Relay Fused Supply Voltage 4	I	—
2	0.5	BU	179	Engine Oil Pump Control	I	—

Q46 A/C Compressor Solenoid Valve

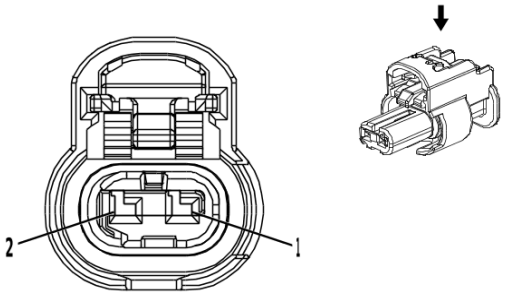

4335931

Connector Part Information

Harness Type: Engine Wiring Harness
OEM Connector: 1-2296694-2
Service Connector: 19366843
Description: 2 <p01>-Way F 1.2 MCON Series, Sealed(BK)

Terminal Part Information

Terminal Type ID	Terminated Lead	Diagnostic Test Probe	Terminal Removal Tool
I	Not required	J-35616-16 (LT GN)	No Tool Required

Q46 A/C Compressor Solenoid Valve

Pin	Size	Color	Circuit	Function	Terminal Type ID	Option
1	0.75	BU / YE	7574	A/C Compressor Solenoid Valve Control	I	—
2	0.75	BU / BN	7573	A/C Compressor Solenoid Valve Control	I	—

Q47 Exhaust Gas Recirculation Cooler Bypass Solenoid Valve

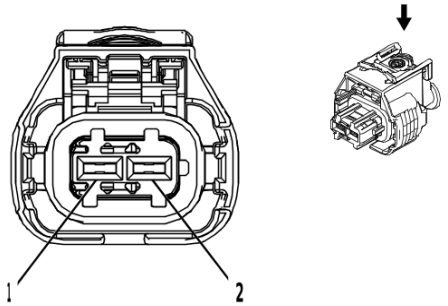

2577394

Connector Part Information

Harness Type: Engine Wiring Harness
OEM Connector: 1928405521
Service Connector: 13384371
Description: 2 <p01>-Way F 2.8 Series, Sealed(BK)

Terminal Part Information

Terminal Type ID	Terminated Lead	Diagnostic Test Probe	Terminal Removal Tool
I	Not required	J-35616-35 (VT)	No Tool Required

Q47 Exhaust Gas Recirculation Cooler Bypass Solenoid Valve

Pin	Size	Color	Circuit	Function	Terminal Type ID	Option
1	0.5	YE / BU	3231	Exhaust Gas Recirculation Cooler Bypass Solenoid Valve Control	I	—
2	0.5	GY / BU	3230	Exhaust Gas Recirculation Cooler Bypass Solenoid Valve Control	I	—

Q61 Reductant Injector

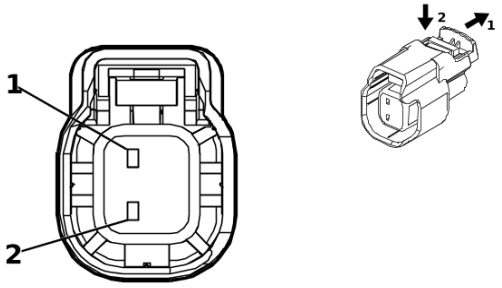

3028817

Connector Part Information

Harness Type: Engine Wiring Harness
OEM Connector: 13580239
Service Connector: 19352404
Description: 2 <p01>-Way F 1.5 Series, Sealed(BK)

Terminal Part Information

Terminal Type ID	Terminated Lead	Diagnostic Test Probe	Terminal Removal Tool
I	Not required	J-35616-2A (GY)	No Tool Required

Q61 Reductant Injector

Pin	Size	Color	Circuit	Function	Terminal Type ID	Option
1	0.5	BN / WH	3100	Diesel Exhaust Fluid Dosing Valve Low Control	I	—
2	0.5	BN	3099	Diesel Exhaust Fluid Dosing Valve High Control	I	—

Q67 Exhaust Aftertreatment Fuel Injector

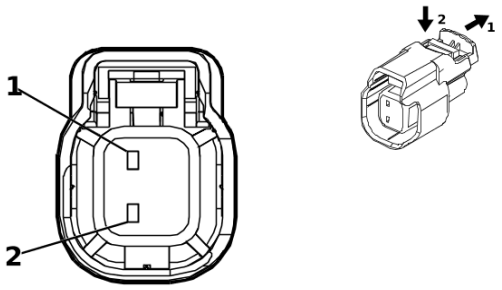

5199958

Connector Part Information

Harness Type: Chassis Wiring Harness
OEM Connector: 34062-0025
Service Connector: 13580230
Description: 2 <p01>-Way F 1.5 Series, Sealed(BK)

Terminal Part Information

Terminal Type ID	Terminated Lead	Diagnostic Test Probe	Terminal Removal Tool
I	Not required	J-35616-2A (GY)	No Tool Required

Q67 Exhaust Aftertreatment Fuel Injector

Pin	Size	Color	Circuit	Function	Terminal Type ID	Option
1	0.5	VT / BN	2927	Exhaust Aftertreatment Fuel Injector Low Control	I	—
2	0.5	BN / BU	2926	Exhaust Aftertreatment Fuel Injector High Control	I	—

Q77A Transmission Control Solenoid Valve 1 (M5T)

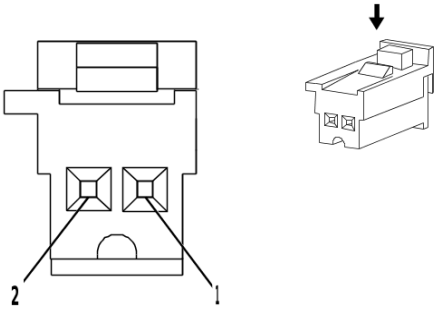

4051391

Connector Part Information

Harness Type: Transmission Control
OEM Connector: 13956948
Service Connector: Service by Harness - See Part Catalog
Description: 2 <p01>-Way F 0.64 MTS Series(VT)

Terminal Part Information

Terminal Type ID	Terminated Lead	Diagnostic Test Probe	Terminal Removal Tool
I	Not required	J-35616-64B (LT BU)	No Tool Required

Q77A Transmission Control Solenoid Valve 1 (M5T)

Pin	Size	Color	Circuit	Function	Terminal Type ID	Option
1	0.5	BN	6400	Clutch Solenoid Valve A Control	I	—
2	0.5	GY / BN	6388	Transmission High Side Driver 2 Control	I	—

Q77B Transmission Control Solenoid Valve 2 (M5T)

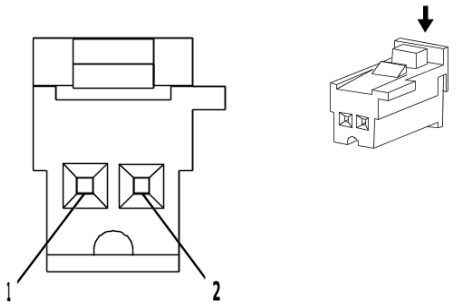

4008644

Connector Part Information

Harness Type: Transmission Control
OEM Connector: 13941672
Service Connector: Service by Harness - See Part Catalog
Description: 2 <p01>-Way F 0.64 MTS Series(GY)

Terminal Part Information

Terminal Type ID	Terminated Lead	Diagnostic Test Probe	Terminal Removal Tool
I	Not required	J-35616-64B (LT BU)	No Tool Required

Q77B Transmission Control Solenoid Valve 2 (M5T)

Pin	Size	Color	Circuit	Function	Terminal Type ID	Option
1	0.5	BU	6401	Clutch Solenoid Valve B Control	I	—
2	0.5	GY / BN	6388	Transmission High Side Driver 2 Control	I	—

Q77C Transmission Control Solenoid Valve 3 (M5T)

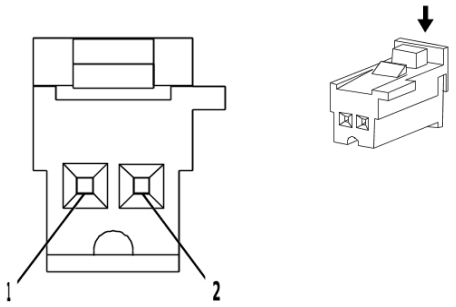

4008644

Connector Part Information

Harness Type: Transmission Control
OEM Connector: 13941672
Service Connector: Service by Harness - See Part Catalog
Description: 2 <p01>-Way F 0.64 MTS Series(GY)

Terminal Part Information

Terminal Type ID	Terminated Lead	Diagnostic Test Probe	Terminal Removal Tool
I	Not required	J-35616-64B (LT BU)	No Tool Required

Q77C Transmission Control Solenoid Valve 3 (M5T)

Pin	Size	Color	Circuit	Function	Terminal Type ID	Option
1	0.5	GY	6402	Clutch Solenoid Valve C Control	I	—
2	0.5	GY / BN	6388	Transmission High Side Driver 2 Control	I	—

Q77D Transmission Control Solenoid Valve 4 (M5T)

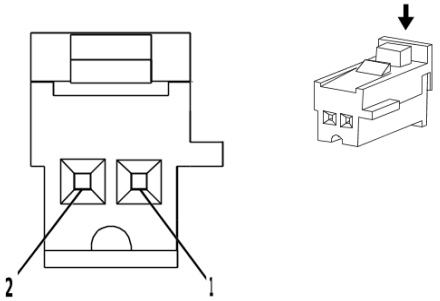

4008636

Connector Part Information

Harness Type: Transmission Control
OEM Connector: 13947283
Service Connector: Service by Harness - See Part Catalog
Description: 2 <p01>-Way F 0.64 MTS Series(NA)

Terminal Part Information

Terminal Type ID	Terminated Lead	Diagnostic Test Probe	Terminal Removal Tool
I	Not required	J-35616-64B (LT BU)	No Tool Required

Q77D Transmission Control Solenoid Valve 4 (M5T)

Pin	Size	Color	Circuit	Function	Terminal Type ID	Option
1	0.5	WH	4508	Transmission Clutch G Control	I	—
2	0.5	GN / GY	6387	Transmission High Side Driver 1 Control	I	—

Q77E Transmission Control Solenoid Valve 5 (M5T)

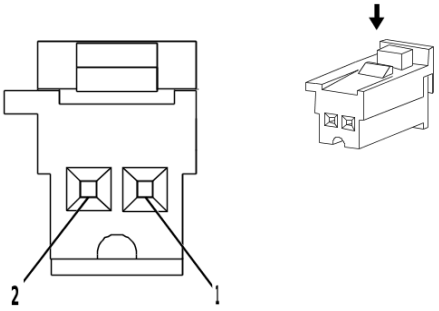

4051391

Connector Part Information

Harness Type: Transmission Control
OEM Connector: 13956948
Service Connector: Service by Harness - See Part Catalog
Description: 2 <p01>-Way F 0.64 MTS Series(VT)

Terminal Part Information

Terminal Type ID	Terminated Lead	Diagnostic Test Probe	Terminal Removal Tool
I	Not required	J-35616-64B (LT BU)	No Tool Required

Q77E Transmission Control Solenoid Valve 5 (M5T)

Pin	Size	Color	Circuit	Function	Terminal Type ID	Option
1	0.5	WH / BU	4507	Transmission Clutch H Control	I	—
2	0.5	GN / GY	6387	Transmission High Side Driver 1 Control	I	—

Q77F Transmission Control Solenoid Valve 6 (M5T)

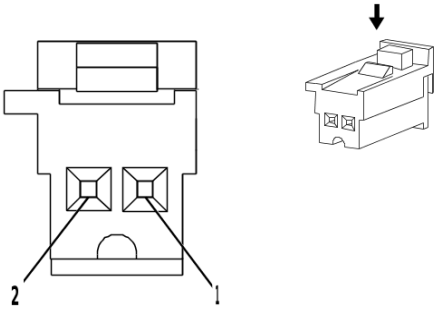

4051391

Connector Part Information

Harness Type: Transmission Control
OEM Connector: 13956948
Service Connector: Service by Harness - See Part Catalog
Description: 2 <p01>-Way F 0.64 MTS Series(VT)

Terminal Part Information

Terminal Type ID	Terminated Lead	Diagnostic Test Probe	Terminal Removal Tool
I	Not required	J-35616-64B (LT BU)	No Tool Required

Q77F Transmission Control Solenoid Valve 6 (M5T)

Pin	Size	Color	Circuit	Function	Terminal Type ID	Option
1	0.5	GY / GN	6403	Clutch Solenoid Valve D Control	I	—
2	0.5	GY / BN	6388	Transmission High Side Driver 2 Control	I	—

Q77G Transmission Control Solenoid Valve 7 (M5T)

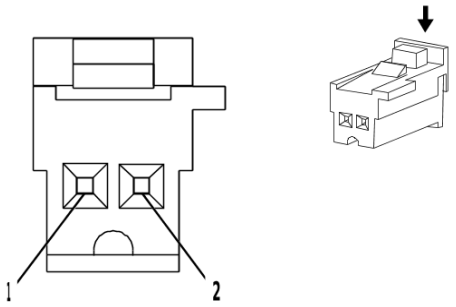

4008644

Connector Part Information

Harness Type: Transmission Control
OEM Connector: 13941672
Service Connector: Service by Harness - See Part Catalog
Description: 2 <p01>-Way F 0.64 MTS Series(GY)

Terminal Part Information

Terminal Type ID	Terminated Lead	Diagnostic Test Probe	Terminal Removal Tool
I	Not required	J-35616-64B (LT BU)	No Tool Required

Q77G Transmission Control Solenoid Valve 7 (M5T)

Pin	Size	Color	Circuit	Function	Terminal Type ID	Option
1	0.5	YE / BN	6404	Clutch Solenoid Valve E Control	I	—
2	0.5	GY / BN	6388	Transmission High Side Driver 2 Control	I	—

Q77H Transmission Control Solenoid Valve 8 (M5T)

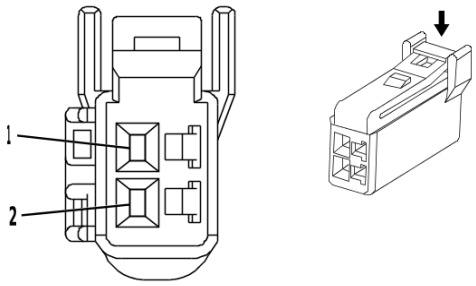

4051682

Connector Part Information

Harness Type: Transmission Control
OEM Connector: 7287-0122
Service Connector: Service by Harness - See Part Catalog
Description: 2 <p01>-Way F 040 III Series(NA)

Terminal Part Information

Terminal Type ID	Terminated Lead	Diagnostic Test Probe	Terminal Removal Tool
I	Not required	J-35616-16 (LT GN)	No Tool Required

Q77H Transmission Control Solenoid Valve 8 (M5T)

Pin	Size	Color	Circuit	Function	Terminal Type ID	Option
1	0.5	GN / GY	6387	Transmission High Side Driver 1 Control	I	—
2	0.5	GN / WH	6380	Torque Converter Clutch Enable Solenoid Valve A Control	I	—

Q77J Transmission Control Solenoid Valve 9 (M5T)

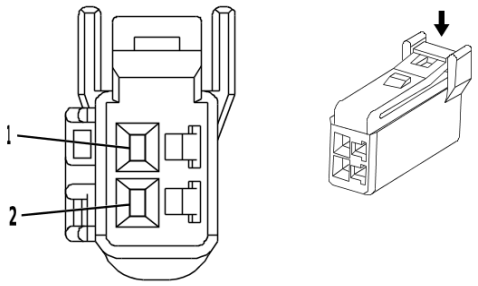

4051682

Connector Part Information

Harness Type: Transmission Control
OEM Connector: 7287-0122
Service Connector: Service by Harness - See Part Catalog
Description: 2 <p01>-Way F 040 III Series(NA)

Terminal Part Information

Terminal Type ID	Terminated Lead	Diagnostic Test Probe	Terminal Removal Tool
I	Not required	J-35616-16 (LT GN)	No Tool Required

Q77J Transmission Control Solenoid Valve 9 (M5T)

Pin	Size	Color	Circuit	Function	Terminal Type ID	Option
1	0.5	GY / BN	6388	Transmission High Side Driver 2 Control	I	—
2	0.5	YE / BN	6210	Torque Converter Clutch Enable Solenoid Valve B Control	I	—

Q83A Valve Lifter Oil Solenoid Valve - Bank 1

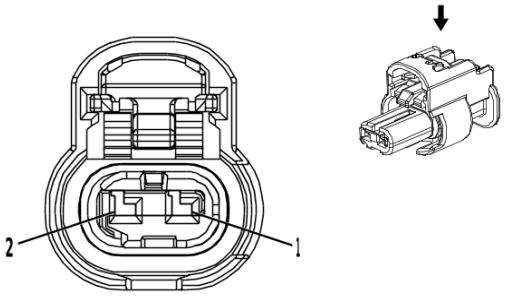

4335931

Connector Part Information

Harness Type: Engine Wiring Harness
OEM Connector: 1-2296694-2
Service Connector: 19366843
Description: 2 <p01>-Way F 1.2 MCON Series, Sealed(BK)

Terminal Part Information

Terminal Type ID	Terminated Lead	Diagnostic Test Probe	Terminal Removal Tool
I	Not required	J-35616-16 (LT GN)	No Tool Required

Q83A Valve Lifter Oil Solenoid Valve - Bank 1

Pin	Size	Color	Circuit	Function	Terminal Type ID	Option
1	0.5	VT / BU	5293	Powertrain Main Relay Fused Supply Voltage 4	I	—
2	0.5	BU	5491	Cylinder Deactivation Solenoid Valve Control 1	I	—

Q83B Valve Lifter Oil Solenoid Valve - Bank 2

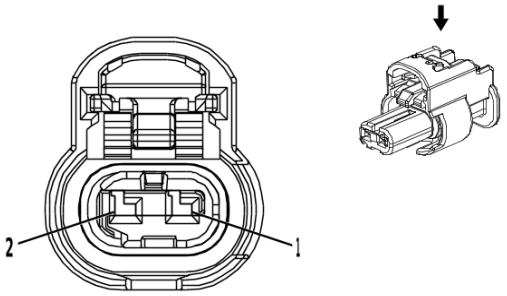

4335931

Connector Part Information

Harness Type: Engine Wiring Harness
OEM Connector: 1-2296694-2
Service Connector: 19366843
Description: 2 <p01>-Way F 1.2 MCON Series, Sealed(BK)

Terminal Part Information

Terminal Type ID	Terminated Lead	Diagnostic Test Probe	Terminal Removal Tool
I	Not required	J-35616-16 (LT GN)	No Tool Required

Q83B Valve Lifter Oil Solenoid Valve - Bank 2

Pin	Size	Color	Circuit	Function	Terminal Type ID	Option
1	0.5	VT / BU	5293	Powertrain Main Relay Fused Supply Voltage 4	I	—
2	0.5	GN	5492	Cylinder Deactivation Solenoid Valve Control 2	I	—

Q84A Camshaft Position Actuator Park Lock Solenoid Valve - Bank 1 Intake

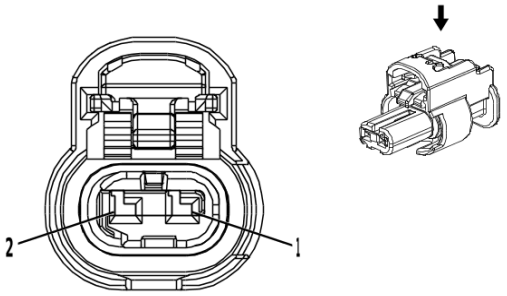

4335931

Connector Part Information

Harness Type: Engine Wiring Harness
OEM Connector: 1-2296694-2
Service Connector: 19366843
Description: 2 <p01>-Way F 1.2 MCON Series, Sealed(BK)

Terminal Part Information

Terminal Type ID	Terminated Lead	Diagnostic Test Probe	Terminal Removal Tool
I	Not required	J-35616-16 (LT GN)	No Tool Required

Q84A Camshaft Position Actuator Park Lock Solenoid Valve - Bank 1 Intake

Pin	Size	Color	Circuit	Function	Terminal Type ID	Option
1	0.5	VT / BU	5293	Powertrain Main Relay Fused Supply Voltage 4	I	—
2	0.5	YE / GN	4321	Camshaft Position Actuator Park Lock Control	I	—

Q84B Camshaft Position Actuator Park Lock Solenoid Valve - Bank 2 Intake

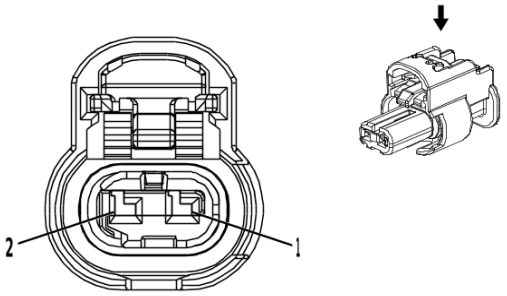

4335931

Connector Part Information

Harness Type: Engine Wiring Harness
OEM Connector: 1-2296694-2
Service Connector: 19366843
Description: 2 <p01>-Way F 1.2 MCON Series, Sealed(BK)

Terminal Part Information

Terminal Type ID	Terminated Lead	Diagnostic Test Probe	Terminal Removal Tool
I	Not required	J-35616-16 (LT GN)	No Tool Required

Q84B Camshaft Position Actuator Park Lock Solenoid Valve - Bank 2 Intake

Pin	Size	Color	Circuit	Function	Terminal Type ID	Option
1	0.5	VT / BU	5293	Powertrain Main Relay Fused Supply Voltage 4	I	—
2	0.5	WH / GN	7805	Park Phasor Lock Control 2	I	—

Q85 Cooling Fan Clutch (LWN)

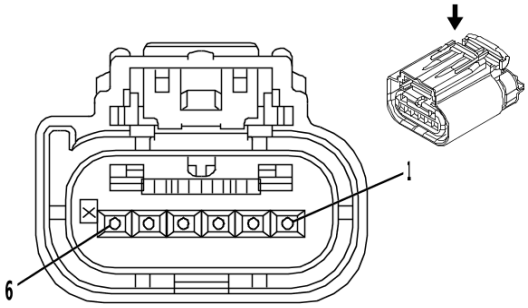

4279553

Connector Part Information

Harness Type: Cooling Fan
OEM Connector: 1438153-6
Service Connector: Service by Harness - See Part Catalog
Description: 6 <p01>-Way F 0.64 GET Series, Sealed(BK)

Terminal Part Information

Terminal Type ID	Terminated Lead	Diagnostic Test Probe	Terminal Removal Tool
I	Not Available	No Tool Required	Not Available

Q85 Cooling Fan Clutch (LWN)

Pin	Size	Color	Circuit	Function	Terminal Type ID	Option
1	—	—	—	Not Occupied	—	—
2	0.5	WH	2368	Cooling Fan Control Signal	I	—
3	0.5	GY / RD	2365	Cooling Fan Speed Sensor 5V Reference	I	—
4	0.5	BU / VT	2364	Cooling Fan Speed Signal	I	—
5	0.5	BK / BN	6141	Cooling Fan Speed Sensor Low Reference	I	—
6	0.5	BK	550	Ground	I	—

R6A Terminating Resistor - High Speed Bus

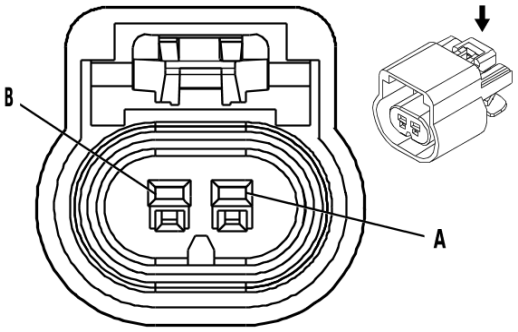

523630

Connector Part Information

Harness Type: Chassis Wiring Harness
OEM Connector: 13510085
Service Connector: 13580114
Description: 2 <p01>-Way F 150 GT Series, Sealed(BK)

Terminal Part Information

Terminal Type ID	Terminated Lead	Diagnostic Test Probe	Terminal Removal Tool
I	Not required	J-35616-2A (GY)	No Tool Required

R6A Terminating Resistor - High Speed Bus

Pin	Size	Color	Circuit	Function	Terminal Type ID	Option
A	0.5	BU	2500	High Speed GMLAN Serial Data [+] 1	I	—
B	0.5	WH	2501	High Speed GMLAN Serial Data [-] 1	I	—

R10 Cooling Fan Resistor

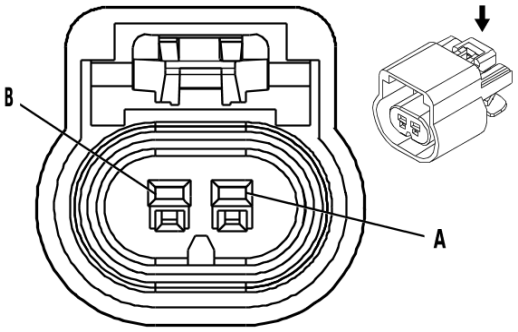

523630

Connector Part Information

Harness Type: Engine Wiring Harness
OEM Connector: 13510085
Service Connector: 13580114
Description: 2 <p01>-Way F 150 GT Series, Sealed(BK)

Terminal Part Information

Terminal Type ID	Terminated Lead	Diagnostic Test Probe	Terminal Removal Tool
I	Not required	J-35616-14 (GN)	No Tool Required

R10 Cooling Fan Resistor

Pin	Size	Color	Circuit	Function	Terminal Type ID	Option
A	0.5	GY / RD	2365	Cooling Fan Speed Sensor 5V Reference	I	—
B	0.5	BU / VT	2364	Cooling Fan Speed Signal	I	—

S3 Transmission Shift Lever

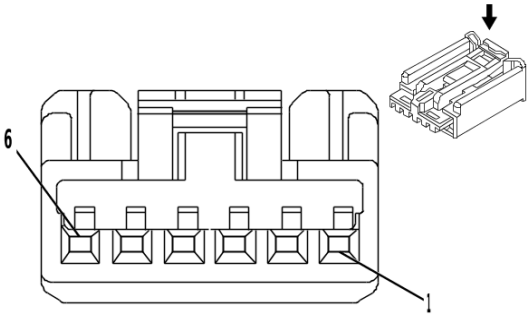

1862240

Connector Part Information

Harness Type: Front Floor Console Wiring Harness
OEM Connector: AIT2PB-06-1AK
Service Connector: Service by Harness - See Part Catalog
Description: 6 <p01>-Way F 0.64 Kaizen Series(BK)

Terminal Part Information

Terminal Type ID	Terminated Lead	Diagnostic Test Probe	Terminal Removal Tool
I	Not required	J-35616-64B (LT BU)	No Tool Required

S3 Transmission Shift Lever

Pin	Size	Color	Circuit	Function	Terminal Type ID	Option
1	—	—	—	Not Occupied	—	—
2	0.5	BK	2050	Ground	I	—
3	0.35	VT / YE	5526	Tap Up/Tap Down Switch Signal	I	—
4	0.5	VT / BK	7553	Park Lock Solenoid Actuator Control	I	—
5	—	—	—	Not Occupied	—	—
6	0.5	WH / VT	5905	Key Capture/Column Lock Shift Position Signal	I	—

S13D Door Lock Switch - Driver

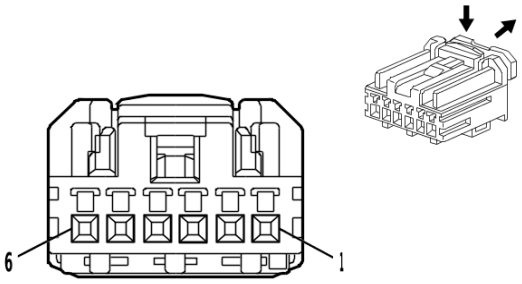

4650256

Connector Part Information

Harness Type: Front Side Door Door Wiring Harness - Driver
OEM Connector: HCMPB-C06A-K
Service Connector: Service by Harness - See Part Catalog
Description: 6 <p01>-Way F 0.64 HCM Series(BK)

Terminal Part Information

Terminal Type ID	Terminated Lead	Diagnostic Test Probe	Terminal Removal Tool
I	Not required	J-35616-64B (LT BU)	No Tool Required

S13D Door Lock Switch - Driver

Pin	Size	Color	Circuit	Function	Terminal Type ID	Option
1	—	—	—	Not Occupied	—	—
2	0.35	YE	6817	LED Backlight Dimming Control 1	I	—
3	0.35	BN / WH	781	Driver Door Lock Switch Unlock Signal	I	—
4	0.35	BN / YE	780	Driver Door Lock Switch Lock Signal	I	—
5	0.5	BK	3550	Ground	I	—
6	—	—	—	Not Occupied	—	—

S13P Door Lock Switch - Passenger

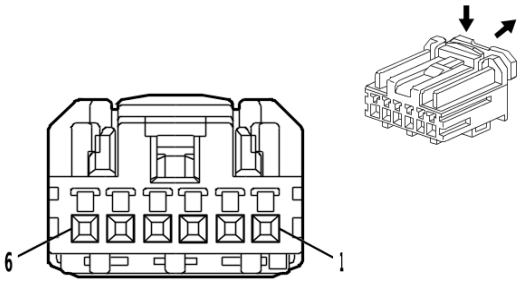

4650256

Connector Part Information

Harness Type: Front Side Door Door Wiring Harness - Passenger
OEM Connector: HCMPB-C06A-K
Service Connector: Service by Harness - See Part Catalog
Description: 6 <p01>-Way F 0.64 HCM Series(BK)

Terminal Part Information

Terminal Type ID	Terminated Lead	Diagnostic Test Probe	Terminal Removal Tool
I	Not required	J-35616-64B (LT BU)	No Tool Required

S13P Door Lock Switch - Passenger

Pin	Size	Color	Circuit	Function	Terminal Type ID	Option
1	—	—	—	Not Occupied	—	—
2	0.35	YE	6817	LED Backlight Dimming Control 1	I	—
3	0.35	BN / VT	245	Passenger Door Lock Switch Unlock Control	I	—
4	0.35	YE / VT	244	Passenger Door Lock Switch Lock Control	I	—
5	0.35	BK	3650	Ground	I	—
6	—	—	—	Not Occupied	—	—

S30 Headlamp Switch

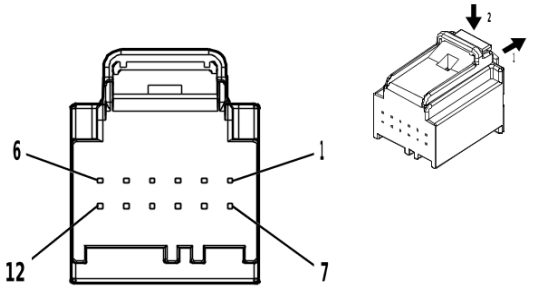

5095565

Connector Part Information

Harness Type: Instrument Panel Wiring Harness
OEM Connector: 31410-0125
Service Connector: 13525987
Description: 12 <p01>-Way F 0.64 Series(BK)

Terminal Part Information

Terminal Type ID	Terminated Lead	Diagnostic Test Probe	Terminal Removal Tool
I	13584547	J-35616-64B (LT BU)	J-38125-215A

S30 Headlamp Switch

Pin	Size	Color	Circuit	Function	Terminal Type ID	Option
1	0.35	WH / VT	103	Headlamp Switch On Signal	I	—
2	0.5	YE	6817	LED Backlight Dimming Control 1	I	—
3	0.35	GN / BN	306	Headlamp Switch Off Signal	I	—
4	—	—	—	Not Occupied	—	—
5	0.35	GN / GY	13	Headlamp Switch Park Lamp Signal	I	—
6	—	—	—	Not Occupied	—	—
7	0.35	BK / YE	5005	Instrument Panel Lamp Dimmer Switch Low Reference	I	—
8	0.35	BK / WH	2151	Signal Ground	I	—
9	—	—	—	Not Occupied	—	—
10	0.35	BU / GY	192	Front Fog Lamp Switch Signal	I	—
11	0.35	YE / GY	44	Instrument Panel Lamp Dimmer Switch Signal	I	—
12	0.35	BU / RD	1688	12V Reference	I	—

S32D Seat Heating Switch - Driver

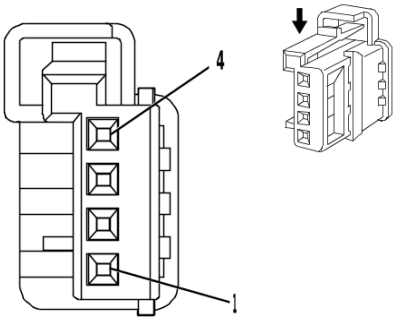

2173576

Connector Part Information

Harness Type: Instrument Panel Wiring Harness
OEM Connector: 1379029-2
Service Connector: 13576536
Description: 4 <p01>-Way F 0.64 Micro-Quadlock Series(WH)

Terminal Part Information

Terminal Type ID	Terminated Lead	Diagnostic Test Probe	Terminal Removal Tool
I	Not required	J-35616-64B (LT BU)	No Tool Required

S32D Seat Heating Switch - Driver

Pin	Size	Color	Circuit	Function	Terminal Type ID	Option
1	0.35	BK	2050	Ground	I	—
2	—	—	—	Not Occupied	—	—
3	0.35	GN / WH	7527	Human Machine Interface Control Module LIN Bus 1	I	—
4	0.5	RD / GY	2840	Battery Positive Voltage	I	—

S32P Seat Heating Switch - Passenger

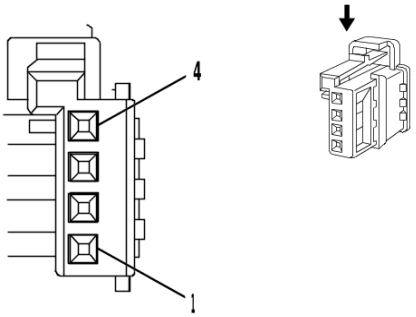

2667612

Connector Part Information

Harness Type: Instrument Panel Wiring Harness
OEM Connector: 1379029-6
Service Connector: 13587956
Description: 4 <p01>-Way F 0.64 Micro-Quadlock Series(BN)

Terminal Part Information

Terminal Type ID	Terminated Lead	Diagnostic Test Probe	Terminal Removal Tool
I	Not required	J-35616-64B (LT BU)	No Tool Required

S32P Seat Heating Switch - Passenger

Pin	Size	Color	Circuit	Function	Terminal Type ID	Option
1	0.35	BK	2050	Ground	I	—
2	—	—	—	Not Occupied	—	—
3	0.35	GN / WH	7527	Human Machine Interface Control Module LIN Bus 1	I	—
4	0.5	RD / GY	2840	Battery Positive Voltage	I	—

S33 Horn Switch X1

—

Connector Part Information

Harness Type: Steering Wheel Horn Switch Wiring Harness
OEM Connector: 2–520272–2
Service Connector: Service by Harness - See Part Catalog
Description: 1 <p01>-Way

Terminal Part Information

Terminal Type ID	Terminated Lead	Diagnostic Test Probe	Terminal Removal Tool
I	Not Available	No Tool Required	Not Available

S33 Horn Switch X1

Pin	Size	Color	Circuit	Function	Terminal Type ID	Option
1	0.35	GN / WH	3287	Horn Switch Signal	I	—

S33 Horn Switch X2

—

Connector Part Information

Harness Type: Steering Wheel Horn Switch Wiring Harness
OEM Connector: Not Available
Service Connector: Service by Harness - See Part Catalog
Description: 11 <p01>-Way

Terminal Part Information

Terminal Type ID	Terminated Lead	Diagnostic Test Probe	Terminal Removal Tool
I	Not Available	No Tool Required	Not Available

S33 Horn Switch X2

Pin	Size	Color	Circuit	Function	Terminal Type ID	Option
1	0.35	BK	2050	Ground	I	—

S39 Ignition Switch

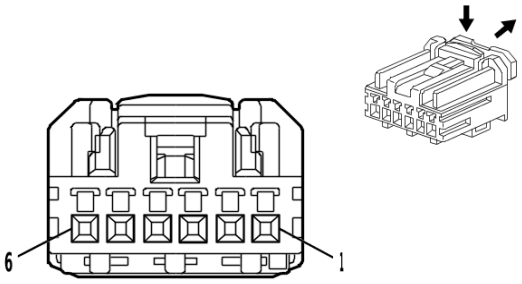

4650256

Connector Part Information

Harness Type: Instrument Panel Wiring Harness
OEM Connector: HCMPB-C06A-K
Service Connector: 19368127
Description: 6 <p01>-Way F 0.64 HCM Series(BK)

Terminal Part Information

Terminal Type ID	Terminated Lead	Diagnostic Test Probe	Terminal Removal Tool
I	Not required	J-35616-64B (LT BU)	No Tool Required

S39 Ignition Switch

Pin	Size	Color	Circuit	Function	Terminal Type ID	Option
1	0.5	VT / BK	3	Run/Crank Ignition 1 Voltage	I	—
2	0.5	RD / BU	540	Battery Positive Voltage	I	—
3	0.5	VT / YE	4	Accessory Ignition Voltage	I	—
4	0.5	WH / VT	1020	Off/Run/Crank Ignition Voltage	I	—
5	—	—	—	Not Occupied	—	—
6	0.5	WH / BK	1073	Ignition Key Resistor Signal	I	—

S48A Multifunction Switch - Instrument Panel

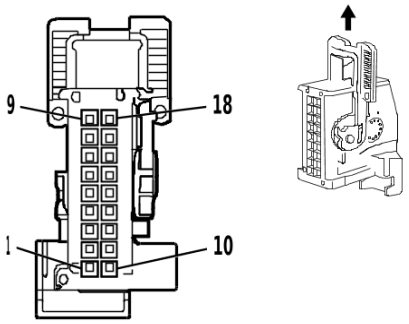

1567082

Connector Part Information

Harness Type: Instrument Panel Wiring Harness
OEM Connector: 13504129
Service Connector: 84976200
Description: 18 <p01>-Way F Micro-Quadlock Series(BK)

Terminal Part Information

Terminal Type ID	Terminated Lead	Diagnostic Test Probe	Terminal Removal Tool
I	19300632	J-35616-64B (LT BU)	J-38125-12A
II	19300632	J-35616-64B (LT BU)	J-38125-215A

S48A Multifunction Switch - Instrument Panel

Pin	Size	Color	Circuit	Function	Terminal Type ID	Option
1	0.35	YE	6817	LED Backlight Dimming Control 1	II	—
2	0.35	WH	6816	Indicator Dimming Control	II	—
3	0.5	YE / GN	7122	Axle Differential Lock Switch Signal	I	—
4	0.35	BU / YE	6844	ABS/Traction Control Hill Descent Control Switch Signal	II	—
5	0.35	WH	3152	Lane Departure Warning Indicator Control	II	—
6	0.5	VT / GY	7117	Front Axle Differential Lock Indicator Control	I	—
7	0.5	BN / WH	1429	Standing Lamp Relay Control	I	—
8	0.35	GY / WH	3153	Lane Departure Warning Disable Switch Signal	II	—
9	0.5	BK / YE	7259	Axle Differential Lock Switch Low Reference	I	—
10	0.35	GN / WH	111	Hazard Warning Switch Signal	II	—
11	0.35	BU / GY	553	Shift Select Switch Performance Signal	II	—
12	0.5	YE	7115	Rear Axle Differential Lock Indicator Control	I	—
13	—	—	—	Not Occupied	—	—
14	0.35	BK	2050	Ground	II	—
15	0.35	GY / GN	2555	Rear Parking Assist Disable Signal	II	—
16	0.35	GN / BN	5852	Rear Parking Assist Disable LED Signal	II	—
17	0.35	BU / VT	1788	Traction Control Switch Signal 1	II	—
18	0.35	GY	158	Cargo Lamp Switch Signal	II	—

S52 Outside Rearview Mirror Switch

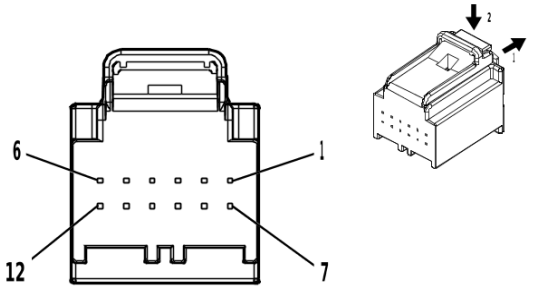

5142798

Connector Part Information

Harness Type: Front Side Door Door Wiring Harness - Driver
OEM Connector: 31410-0126
Service Connector: Service by Harness - See Part Catalog
Description: 12 <p01>-Way F 0.64 Series(GY)

Terminal Part Information

Terminal Type ID	Terminated Lead	Diagnostic Test Probe	Terminal Removal Tool
I	Not required	J-35616-64B (LT BU)	No Tool Required

S52 Outside Rearview Mirror Switch

Pin	Size	Color	Circuit	Function	Terminal Type ID	Option
1	0.35	YE	6817	LED Backlight Dimming Control 1	I	—
2 - 4	—	—	—	Not Occupied	—	—
5	0.35	WH	3398	Passenger Outside Rearview Mirror Motor Common Control	I	—
6	0.35	YE / BN	3391	Driver Mirror Motor Common Control	I	—
7	0.35	YE / VT	3397	Passenger Outside Rearview Mirror Motor Up [+] Down [-] Control	I	—
8	0.35	VT / BU	3390	Driver Outside Rearview Mirror Motor Up [+] Down [-] Control	I	—
9	0.35	GN / BK	3396	Passenger Outside Rearview Mirror Motor Right [+] Left [-] Control	I	—
10	0.35	BN / BK	3389	Driver Outside Rearview Mirror Motor Right [+] Left [-] Control	I	—
11	0.5	BK	3550	Ground	I	—
12	0.35	RD / VT	1940	Battery Positive Voltage	I	—

S64D Seat Adjuster Switch - Driver

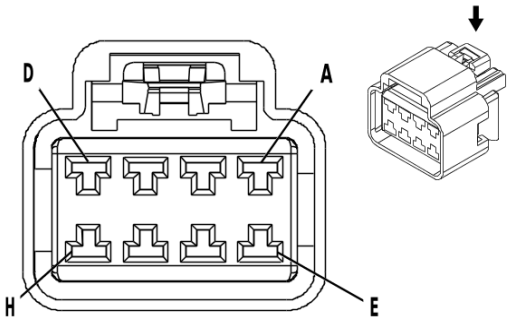

556473

Connector Part Information

Harness Type: Driver Seat
OEM Connector: 15326924
Service Connector: Service by Harness - See Part Catalog
Description: 8 <p01>-Way F 280 GT Series, Sealed(BK)

Terminal Part Information

Terminal Type ID	Terminated Lead	Diagnostic Test Probe	Terminal Removal Tool
I	Not required	Not Available	No Tool Required

S64D Seat Adjuster Switch - Driver

Pin	Size	Color	Circuit	Function	Terminal Type ID	Option
A	1.5	GN / BN	286	Driver Seat Front Vertical Motor Up Control	I	AG1
	1.5	YE	282	Driver Seat Rear Vertical Motor Up Control	I	AH6
B	1.5	BK	3750	Ground	I	—
C	1.5	YE / BU	285	Driver Seat Horizontal Motor Forward Control	I	—
D	1.5	RD / YE	5040	Battery Positive Voltage	I	—
E	1.5	YE	282	Driver Seat Rear Vertical Motor Up Control	I	—
F	1.5	GY / GN	284	Driver Seat Horizontal Motor Rearward Control	I	—
G	1.5	GY / BU	283	Driver Seat Rear Vertical Motor Down Control	I	—
H	1.5	BU / VT	287	Driver Seat Front Vertical Motor Down Control	I	AG1
	1.5	GY / BU	283	Driver Seat Rear Vertical Motor Down Control	I	AH6

S64P Seat Adjuster Switch - Passenger (AAQ)

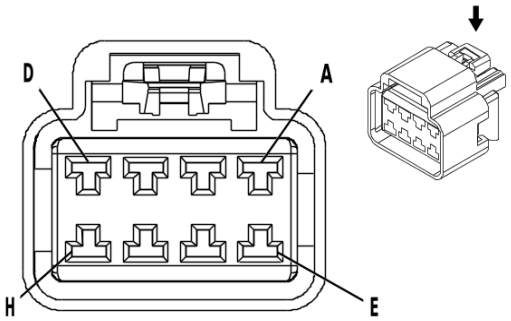

556473

Connector Part Information

Harness Type: Passenger Seat
OEM Connector: 15326924
Service Connector: Service by Harness - See Part Catalog
Description: 8 <p01>-Way F 280 GT Series, Sealed(BK)

Terminal Part Information

Terminal Type ID	Terminated Lead	Diagnostic Test Probe	Terminal Removal Tool
I	Not Available	No Tool Required	Not Available

S64P Seat Adjuster Switch - Passenger (AAQ)

Pin	Size	Color	Circuit	Function	Terminal Type ID	Option
A	1.5	GN / WH	288	Passenger Seat Rear Vertical Motor Up Control	I	—
B	2.5	BK	3850	Ground	I	—
C	1.5	YE / BU	290	Passenger Seat Horizontal Motor Rearward Control	I	—
D	2.5	RD / BN	1440	Battery Positive Voltage	I	—
E	—	—	—	Not Occupied	—	—
F	1.5	YE / WH	296	Passenger Seat Horizontal Motor Forward Control	I	—
G	—	—	—	Not Occupied	—	—
H	1.5	BU / WH	289	Passenger Seat Rear Vertical Motor Down Control	I	—

S65D Seat Lumbar Support Switch - Driver

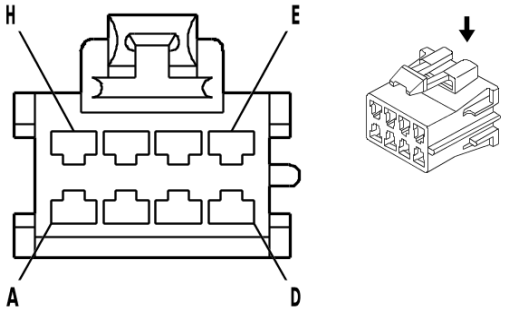

73155

Connector Part Information

Harness Type: Driver Seat
OEM Connector: 12089287
Service Connector: Service by Harness - See Part Catalog
Description: 8 <p01>-Way F 280 Metri-Pack Series(NA)

Terminal Part Information

Terminal Type ID	Terminated Lead	Diagnostic Test Probe	Terminal Removal Tool
I	Not Available	No Tool Required	Not Available

S65D Seat Lumbar Support Switch - Driver

Pin	Size	Color	Circuit	Function	Terminal Type ID	Option
A	—	VT	610	Driver Seat Lumbar Support Motor Backward Control	I	—
B - C	—	—	—	Not Occupied	—	—
D	—	BU	611	Driver Seat Lumbar Support Motor Forward Control	I	—
E	—	RD / YE	5040	Battery Positive Voltage	I	—
F - G	—	—	—	Not Occupied	—	—
H	—	BK	3750	Ground	I	—

S65P Seat Lumbar Support Switch - Passenger (AT9)

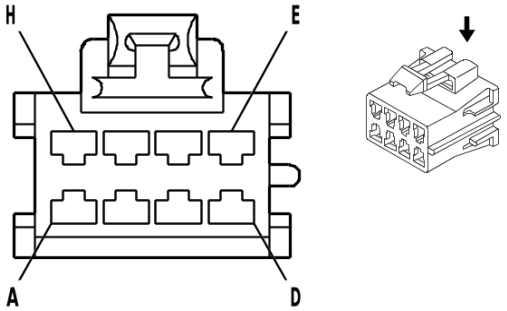

73155

Connector Part Information

Harness Type: Passenger Seat
OEM Connector: 12089287
Service Connector: Service by Harness - See Part Catalog
Description: 8 <p01>-Way F 280 Metri-Pack Series(NA)

Terminal Part Information

Terminal Type ID	Terminated Lead	Diagnostic Test Probe	Terminal Removal Tool
I	Not Available	No Tool Required	Not Available

S65P Seat Lumbar Support Switch - Passenger (AT9)

Pin	Size	Color	Circuit	Function	Terminal Type ID	Option
A	1.5	VT	210	Passenger Seat Lumbar Support Motor Backward Control	I	—
B - C	—	—	—	Not Occupied	—	—
D	1.5	BU	211	Passenger Seat Lumbar Support Motor Forward Control	I	—
E	2.5	RD / BN	1440	Battery Positive Voltage	I	—
F - G	—	—	—	Not Occupied	—	—
H	2.5	BK	3850	Ground	I	—

S70E Steering Wheel Controls Switch - Radio Presets

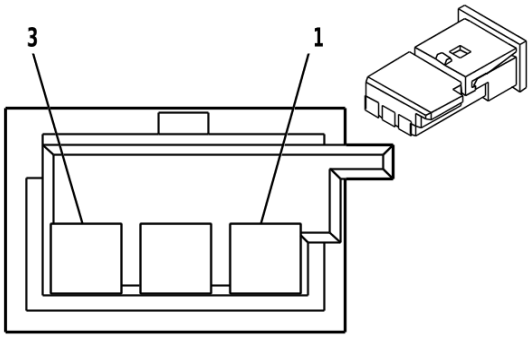

647970

Connector Part Information

Harness Type: Steering Wheel Horn Switch Wiring Harness
OEM Connector: 13153088
Service Connector: Service by Harness - See Part Catalog
Description: 3 <p01>-Way F 0.64 Micro-Quadlock Series(BK)

Terminal Part Information

Terminal Type ID	Terminated Lead	Diagnostic Test Probe	Terminal Removal Tool
I	Not Available	No Tool Required	Not Available

S70E Steering Wheel Controls Switch - Radio Presets

Pin	Size	Color	Circuit	Function	Terminal Type ID	Option
1	—	WH / YE	4313	Radio Favorite Forward Switch Signal	I	—
2	—	YE / RD	4312	Radio Favorite Back Switch Signal	I	—
3	—	BK	2050	Ground	I	—

S70F Steering Wheel Controls Switch - Radio Volume (W1Y)

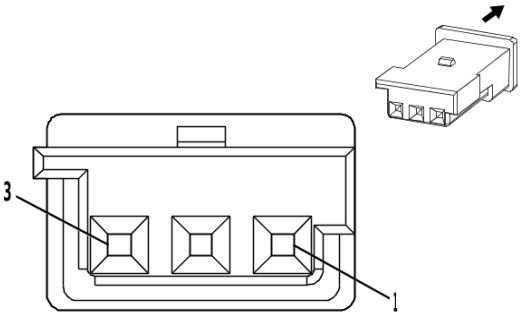

2179789

Connector Part Information

Harness Type: Steering Wheel Horn Switch Wiring Harness
OEM Connector: 19153569
Service Connector: Service by Harness - See Part Catalog
Description: 3 <p01>-Way F Micro-Quadlock Series(PU)

Terminal Part Information

Terminal Type ID	Terminated Lead	Diagnostic Test Probe	Terminal Removal Tool
I	Not Available	No Tool Required	Not Available

S70F Steering Wheel Controls Switch - Radio Volume (W1Y)

Pin	Size	Color	Circuit	Function	Terminal Type ID	Option
1	—	BU	4315	Radio Volume Up Switch Signal	I	—
2	—	GY / BN	4314	Radio Volume Down Switch Signal	I	—
3	—	BK	2050	Ground	I	—

S70L Steering Wheel Controls Switch - Left

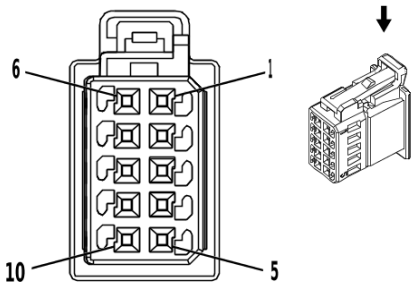

2830955

Connector Part Information

Harness Type: Steering Wheel Horn Switch Wiring Harness
OEM Connector: 13582766
Service Connector: Service by Harness - See Part Catalog
Description: 10 <p01>-Way F 0.64 Micro-Quadlock Series(BK)

Terminal Part Information

Terminal Type ID	Terminated Lead	Diagnostic Test Probe	Terminal Removal Tool
I	Not Available	No Tool Required	Not Available

S70L Steering Wheel Controls Switch - Left

Pin	Size	Color	Circuit	Function	Terminal Type ID	Option
1	0.35	BK	2050	Ground	I	—
2	0.5	BK	2050	Ground	I	—
3	0.35	GY / OG	5737	Distance Sensing Cruise Control Gap Up/Down Switch Signal	I	—
4	0.35	BN / YE	1884	Cruise Control Set/Coast/Resume/Accelerate Switch Signal	I	—
5	0.35	TN	5883	Steering Wheel Heating Switch Signal	I	—
6	0.35 0.35	BN BN	6817 6136	LED Backlight Dimming Control 1 Control	I I	W1Y - W1Y
7	0.35	BU / BU	6816	Indicator Dimming Control	I	—
8	0.35	BU	5884	Steering Wheel Heating Switch LED Control	I	—
9	0.35	WH	1444	12V Reference	I	—
10	0.35	RD / YE	3040	Battery Positive Voltage	I	—

S70R Steering Wheel Controls Switch - Right

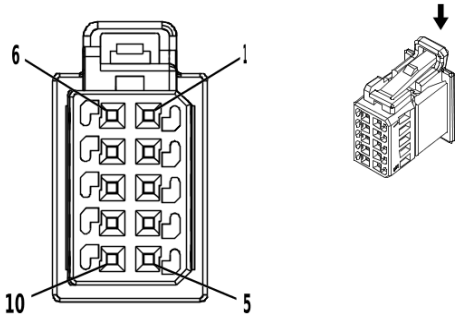

3824564

Connector Part Information

Harness Type: Steering Wheel Horn Switch Wiring Harness
OEM Connector: 13582767
Service Connector: Service by Harness - See Part Catalog
Description: 10 <p01>-Way F 0.64 Micro-Quadlock Series(BK)

Terminal Part Information

Terminal Type ID	Terminated Lead	Diagnostic Test Probe	Terminal Removal Tool
I	Not Available	No Tool Required	Not Available

S70R Steering Wheel Controls Switch - Right

Pin	Size	Color	Circuit	Function	Terminal Type ID	Option
1	0.35 0.35	BN BN	6817 6136	LED Backlight Dimming Control 1 Control	I I	W1Y - W1Y
2	0.35 0.35	BU / BU WH / RD	6816 1444	Indicator Dimming Control 12V Reference	I I	UVD - UVD
3	0.5	GN / BK	3894	Instrument Cluster LIN Bus 1	I	—
4	0.35	GN	6818	Steering Wheel Controls Signal 1	I	—
5	0.35	RD / YE	3040	Battery Positive Voltage	I	—
6	0.35	BK	2050	Ground	I	—
7	0.35	BU	4315	Radio Volume Up Switch Signal	I	—
8	0.35	GY / BN	4314	Radio Volume Down Switch Signal	I	—
9	0.35	WH / YE	4313	Radio Favorite Forward Switch Signal	I	—
10	0.35	YE / RD	4312	Radio Favorite Back Switch Signal	I	—

S76 Trailer Brake Control Switch

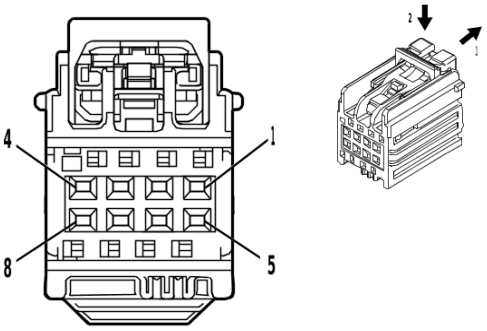

4808677

Connector Part Information

Harness Type: Instrument Panel Wiring Harness
OEM Connector: 7289-2894-30
Service Connector: 19368548
Description: 8 <p01>-Way F 0.64 YESC Series(BK)

Terminal Part Information

Terminal Type ID	Terminated Lead	Diagnostic Test Probe	Terminal Removal Tool
I	Not required	J-35616-64B (LT BU)	No Tool Required

S76 Trailer Brake Control Switch

Pin	Size	Color	Circuit	Function	Terminal Type ID	Option
1 - 2	—	—	—	Not Occupied	—	—
3	0.5	BU / RD	7632	Trailer Brake Control Switch 5V Reference	I	—
4	0.5	YE	7635	Trailer Brake Control Manual Apply Signal	I	—
5	0.5	BN	7634	Trailer Brake Control Redundant Manual Apply Signal	I	—
6	0.5	GN / BK	7633	Trailer Brake Control User Gain Signal	I	—
7	0.35	YE	6817	LED Backlight Dimming Control 1	I	—
8	0.5	BK / BN	7631	Trailer Brake Control Switch Low Reference	I	—

S77 Transfer Case Shift Control Switch

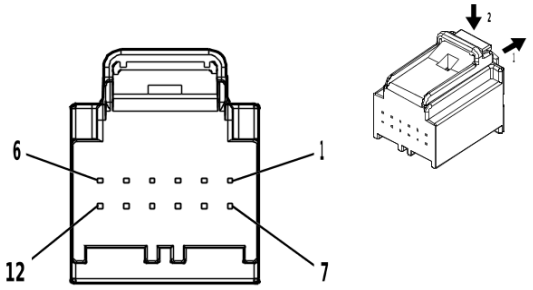

5142798

Connector Part Information

Harness Type: Instrument Panel Wiring Harness
OEM Connector: 31410-0126
Service Connector: 13525988
Description: 12 <p01>-Way F 0.64 Series(GY)

Terminal Part Information

Terminal Type ID	Terminated Lead	Diagnostic Test Probe	Terminal Removal Tool
I	13584547	J-35616-64B (LT BU)	J-38125-215A

S77 Transfer Case Shift Control Switch

Pin	Size	Color	Circuit	Function	Terminal Type ID	Option
1	0.35	GY	5054	Sport Mode Switch Signal	I	—
2	0.5	VT / BN	300	Run Ignition 3 Voltage	I	—
3	0.35	BN	1560	Neutral Indicator Control	I	—
4	0.35	WH	6816	Indicator Dimming Control	I	—
5	0.35	YE	6817	LED Backlight Dimming Control 1	I	—
6	0.5	BK	2050	Ground	I	—
7	0.35	GY / GN	1561	AWD Indicator Control	I	—
8	0.35	GN / BK	1563	2WD HI Indicator Control	I	—
9	0.35	BN / BK	1566	4WD HI Indicator Control	I	—
10	0.35	VT / WH	1565	4WD LO Indicator Control	I	—
11	0.35	GY / RD	6029	Four Wheel Drive Mode Switch 5V Reference	I	—
12	0.35	BU / YE	1693	Four Wheel Drive Switch Signal	I	—

S78 Turn Signal/Multifunction Switch

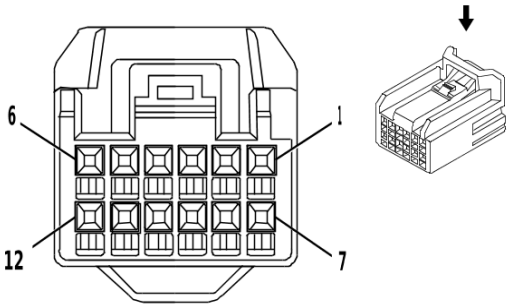

2180217

Connector Part Information

Harness Type: Instrument Panel Wiring Harness
OEM Connector: SHC2PB-12-2AK
Service Connector: 13576635
Description: 12 <p01>-Way F 0.64 Series(BK)

Terminal Part Information

Terminal Type ID	Terminated Lead	Diagnostic Test Probe	Terminal Removal Tool
I	13575870	J-35616-64B (LT BU)	J-38125-12A

S78 Turn Signal/Multifunction Switch

Pin	Size	Color	Circuit	Function	Terminal Type ID	Option
1	0.35	WH / GN	663	Hazard Switch Left Turn Signal	I	—
2	0.35	WH	524	High Beam Select Switch High Beam Signal	I	—
3	0.35	BK / WH	2151	Signal Ground	I	—
4	0.35	YE / BN	307	Headlamp Switch Flash Signal	I	—
5	0.35	GY / BU	893	Driver Information Center Select Menu Switch Signal	I	—
6	0.35	BK / BN	897	Driver Information Center Switch Low Reference	I	—
7	0.35	VT / BU	664	Hazard Switch Right Turn Signal	I	—
8 - 11	—	—	—	Not Occupied	—	—
12	0.35	GN / WH	1358	Driver Information Center Switch Signal	I	—

S79D Window Switch - Driver

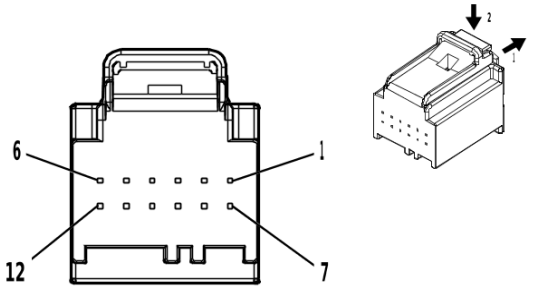

5095565

Connector Part Information

Harness Type: Front Side Door Door Wiring Harness - Driver
OEM Connector: 31410-0125
Service Connector: Service by Harness - See Part Catalog
Description: 12 <p01>-Way F 0.64 Series(BK)

Terminal Part Information

Terminal Type ID	Terminated Lead	Diagnostic Test Probe	Terminal Removal Tool
I	Not required	J-35616-64B (LT BU)	No Tool Required

S79D Window Switch - Driver

Pin	Size	Color	Circuit	Function	Terminal Type ID	Option
1	0.75	BK	3550	Ground	I	—
2	0.35	GN / VT	7628	Left Front Window Motor Express Control	I	—
3	0.35	GY	1136	Left Front Window Down Switch Main Control Signal	I	—
4	0.35	RD / VT	1940	Battery Positive Voltage	I	—
5	0.5	GN / YE	6134	Body Control Module LIN Bus 3	I	—
6	0.35	GN / WH	1300	Left Front Window Up Switch Main Control Signal	I	—
7	0.35	WH / VT	3270	Driver Door Lock Motor Status Signal	I	—
8	0.35	BU / VT	1124	Door Lock Key Switch Unlock Signal	I	—
9	—	—	—	Not Occupied	—	—
10	0.35	YE / BN	3265	Child Security Lock Switch Signal	I	—
11	0.35	WH	6816	Indicator Dimming Control	I	—
12	0.35	GY	5697	Child Security Lock Indicator Control	I	—

S79LR Window Switch - Left Rear

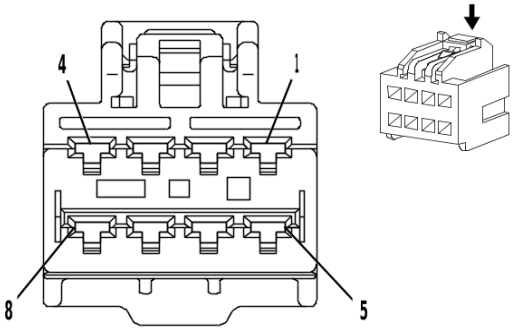

1653389

Connector Part Information

Harness Type: Rear Side Door Door Wiring Harness - Left
OEM Connector: 6098-4713
Service Connector: Service by Harness - See Part Catalog
Description: 8 <p01>-Way F 2.8 Series(BK)

Terminal Part Information

Terminal Type ID	Terminated Lead	Diagnostic Test Probe	Terminal Removal Tool
I	Not required	J-35616-35 (VT)	No Tool Required

S79LR Window Switch - Left Rear

Pin	Size	Color	Circuit	Function	Terminal Type ID	Option
1	0.5	GN / GY	6135	Body Control Module LIN Bus 4	I	—
2	0.35	GY	747	Left Rear Door Ajar Switch Signal	I	—
3	0.35	BK	3350	Ground	I	—
4	—	—	—	Not Occupied	—	—
5	2.5	BK	3350	Ground	I	—
6	2.5	BU / VT	668	Left Rear Window Motor Up Control	I	—
7	2.5	YE / BU	669	Left Rear Window Motor Down Control	I	—
8	2.5	RD / BU	1240	Battery Positive Voltage	I	—

S79P Window Switch - Passenger

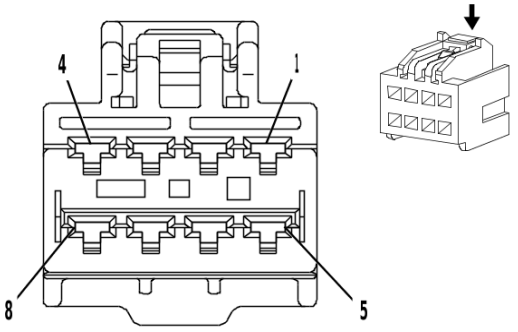

1653389

Connector Part Information

Harness Type: Front Side Door Door Wiring Harness - Passenger
OEM Connector: 6098-4713
Service Connector: Service by Harness - See Part Catalog
Description: 8 <p01>-Way F 2.8 Series(BK)

Terminal Part Information

Terminal Type ID	Terminated Lead	Diagnostic Test Probe	Terminal Removal Tool
I	Not required	J-35616-35 (VT)	No Tool Required

S79P Window Switch - Passenger

Pin	Size	Color	Circuit	Function	Terminal Type ID	Option
1	2.5	BK	3650	Ground	I	—
2	2.5	GN / GY	3387	Passenger Window Motor Up Control	I	—
3	2.5	YE / BU	3388	Passenger Window Motor Down Control	I	—
4	2.5	RD / WH	1340	Battery Positive Voltage	I	—
5	0.5	GN / YE	6134	Body Control Module LIN Bus 3	I	—
6 - 7	—	—	—	Not Occupied	—	—
8	0.35	GY	746	Right Front Door Ajar Switch Signal	I	—

S79RR Window Switch - Right Rear

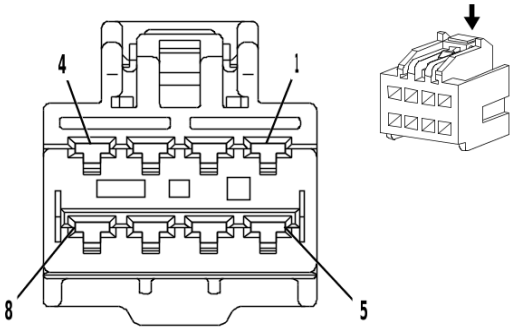

1653389

Connector Part Information

Harness Type: Rear Side Door Door Wiring Harness - Right
OEM Connector: 6098-4713
Service Connector: Service by Harness - See Part Catalog
Description: 8 <p01>-Way F 2.8 Series(BK)

Terminal Part Information

Terminal Type ID	Terminated Lead	Diagnostic Test Probe	Terminal Removal Tool
I	Not required	J-35616-35 (VT)	No Tool Required

S79RR Window Switch - Right Rear

Pin	Size	Color	Circuit	Function	Terminal Type ID	Option
1	0.5	GN / GY	6135	Body Control Module LIN Bus 4	I	—
2	0.35	GY	748	Right Rear Door Ajar Switch Signal	I	—
3 - 4	—	—	—	Not Occupied	—	—
5	2.5	BK	3450	Ground	I	—
6	2.5	BU / GY	670	Right Rear Window Motor Up Control	I	—
7	2.5	GN / BK	671	Right Rear Window Motor Down Control	I	—
8	2.5	RD / WH	1340	Battery Positive Voltage	I	—

S82 Windshield Wiper/Washer Switch

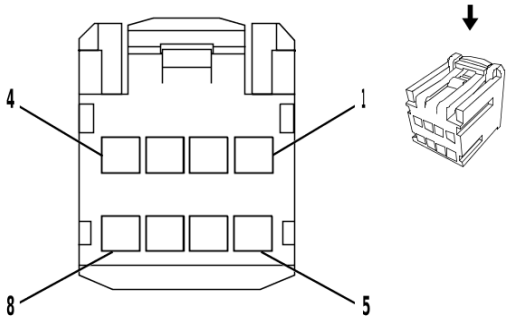

2180203

Connector Part Information

Harness Type: Instrument Panel Wiring Harness
OEM Connector: HCMDPB-08-K
Service Connector: 13576541
Description: 8 <p01>-Way F 1.2 HCM Series(BK)

Terminal Part Information

Terminal Type ID	Terminated Lead	Diagnostic Test Probe	Terminal Removal Tool
I	Not required	J-35616-64B (LT BU)	No Tool Required

S82 Windshield Wiper/Washer Switch

Pin	Size	Color	Circuit	Function	Terminal Type ID	Option
1	0.35	GY	1715	Windshield Wiper Switch High Signal	I	—
2	0.35	BK / GY	6009	Windshield Wiper Switch Low Reference	I	—
3	0.35	YE / BU	1714	Windshield Wiper Switch Low Signal	I	—
4	—	—	—	Not Occupied	—	—
5	0.35	WH / BK	94	Windshield Washer Switch Signal	I	—
6 - 8	—	—	—	Not Occupied	—	—

T2RR Antenna - Roof Rear (U2K)

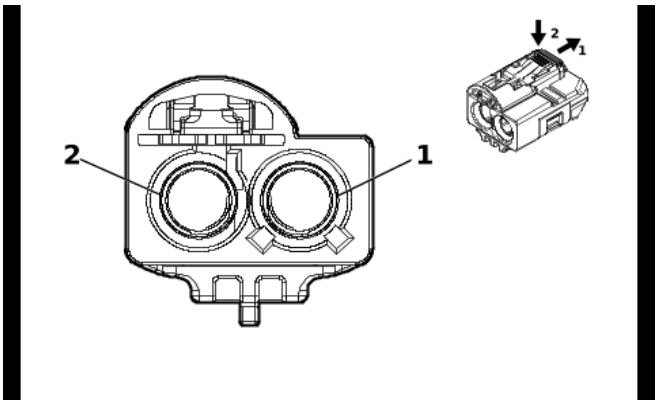

5429321

Connector Part Information

Harness Type: Body Wiring Harness COAX
OEM Connector: 13516236
Service Connector: Service by Cable Assembly — See Part Catalog
Description: 2 <p01>-Way F Coax Type(CU)

Terminal Part Information

Terminal Type ID	Terminated Lead	Diagnostic Test Probe	Terminal Removal Tool
I	Not required	No Tool Required	No Tool Required

T2RR Antenna - Roof Rear (U2K)

Pin	Size	Color	Circuit	Function	Terminal Type ID	Option
—	—	Coax Cable	—	(XM +/-HD) Coaxial Antenna XM Signal	I	—

T3 Audio Amplifier X1

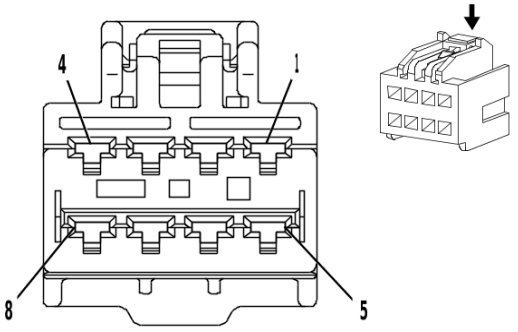

1653389

Connector Part Information

Harness Type: Instrument Panel Wiring Harness
OEM Connector: 6098-4713
Service Connector: 13580111
Description: 8 <p01>-Way F 2.8 Series(BK)

Terminal Part Information

Terminal Type ID	Terminated Lead	Diagnostic Test Probe	Terminal Removal Tool
I	Not required	J-35616-35 (VT)	No Tool Required

T3 Audio Amplifier X1

Pin	Size	Color	Circuit	Function	Terminal Type ID	Option
1	1	YE	200	Right Front Speaker 1 [+] Control	I	—
2	—	—	—	Not Occupied	—	—
3	1	BU	201	Left Front Speaker 1 [+] Control	I	—
4	2.5	RD / YE	3740	Battery Positive Voltage	I	—
5	1	YE / BK	117	Right Front Speaker [-] Control 1	I	—
6	—	—	—	Not Occupied	—	—
7	1	BN / BU	118	Left Front Speaker [-] Control 1	I	—
8	2.5	BK / WH	2251	Signal Ground	I	—

T3 Audio Amplifier X2

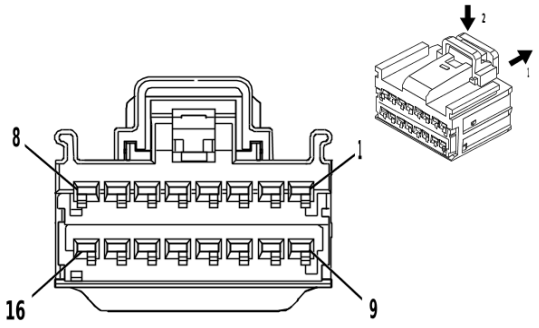

4332214

Connector Part Information

Harness Type: Instrument Panel Wiring Harness
OEM Connector: 15512506
Service Connector: 13591061
Description: 16 <p01>-Way F 1.5 OCS Series(BK)

Terminal Part Information

Terminal Type ID	Terminated Lead	Diagnostic Test Probe	Terminal Removal Tool
I	84757974	J-35616-2A (GY)	J-38125-11A

T3 Audio Amplifier X2

Pin	Size	Color	Circuit	Function	Terminal Type ID	Option
1	—	—	—	Not Occupied	—	—
2	0.75	VT / BN	1952	Right Front Tweeter Speaker [-] Control	I	—
3	0.75	YE / BU	1856	Left Front Tweeter Speaker [+] Control	I	—
4	1	WH	46	Right Rear Speaker [+] Control	I	—
5	1	GN	199	Left Rear Speaker [+] Control	I	—
6	—	—	—	Not Occupied	—	—
7	0.75	YE / WH	1860	Front Center Speaker [+] Control	I	—
8 - 9	—	—	—	Not Occupied	—	—
10	0.75	BN / GN	1852	Right Front Tweeter Speaker [+] Control	I	—
11	0.75	VT / GY	1956	Left Front Tweeter Speaker [-] Control	I	—
12	1	BU / BK	115	Right Rear Speaker [-] Control	I	—
13	1	GN / BK	116	Left Rear Speaker [-] Control	I	—
14	—	—	—	Not Occupied	—	—
15	0.75	BU / YE	1960	Front Center Speaker [-] Control	I	—
16	—	—	—	Not Occupied	—	—

T3 Audio Amplifier X3

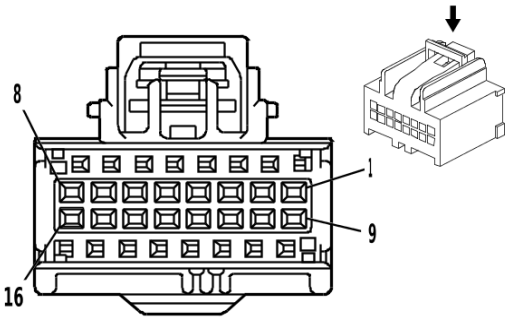

1653409

Connector Part Information

Harness Type: Instrument Panel Wiring Harness
OEM Connector: 7283-9076-30
Service Connector: 15136073
Description: 16 <p01>-Way F 0.64 Kaizen Series(BK)

Terminal Part Information

Terminal Type ID	Terminated Lead	Diagnostic Test Probe	Terminal Removal Tool
I	19303553	J-35616-64B (LT BU)	J-38125-215A

T3 Audio Amplifier X3

Pin	Size	Color	Circuit	Function	Terminal Type ID	Option
1	0.35	GY / GN	1102	Low Speed GMLAN Serial Data 2	I	—
2 - 16	—	—	—	Not Occupied	—	—

T3 Audio Amplifier X4

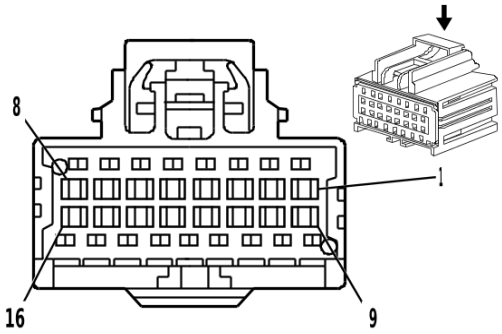

1664488

Connector Part Information

Harness Type: Instrument Panel Wiring Harness
OEM Connector: 7283-9078-80
Service Connector: 15136074
Description: 16 <p01>-Way F 0.64 Kaizen Series(BN)

Terminal Part Information

Terminal Type ID	Terminated Lead	Diagnostic Test Probe	Terminal Removal Tool
I	19303553	J-35616-64B (LT BU)	J-38125-215A

T3 Audio Amplifier X4

Pin	Size	Color	Circuit	Function	Terminal Type ID	Option
1 - 2	—	—	—	Not Occupied	—	—
3	0.1	GY / BK	7215	Ethernet Bus 6 [+]	I	—
4	0.1	BN / BK	7214	Ethernet Bus 6 [-]	I	—
5 - 16	—	—	—	Not Occupied	—	—

T4G Cellular Phone, Navigation, and Digital Radio Antenna

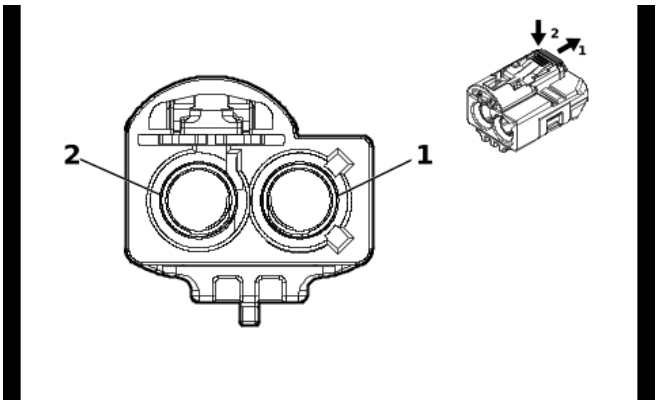

5483043

Connector Part Information

Harness Type: Body Wiring Harness COAX
OEM Connector: 13516230
Service Connector: Service by Cable Assembly — See Part Catalog
Description: 2 <p01>-Way F Coax Type(VT)

Terminal Part Information

Terminal Type ID	Terminated Lead	Diagnostic Test Probe	Terminal Removal Tool
I	Not required	No Tool Required	No Tool Required

T4G Cellular Phone, Navigation, and Digital Radio Antenna

Pin	Size	Color	Circuit	Function	Terminal Type ID	Option
—	—	Coax Cable	—	(GPS/Cell) Coaxial Antenna Cell/GPS combined Signal	I	—

T8A Ignition Coil 1 (LCV)

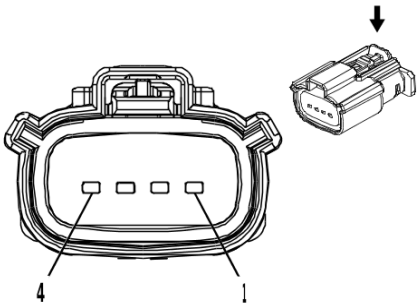

2717131

Connector Part Information

Harness Type: Engine Wiring Harness
OEM Connector: 33471-0461
Service Connector: 19367730
Description: 4 <p01>-Way F 1.5 Series, Sealed(BK)

Terminal Part Information

Terminal Type ID	Terminated Lead	Diagnostic Test Probe	Terminal Removal Tool
I	Not required	J-35616-14 (GN)	No Tool Required

T8A Ignition Coil 1 (LCV)

Pin	Size	Color	Circuit	Function	Terminal Type ID	Option
1	1	BK	1450	Ground	I	—
2	0.5	BK / BU	2129	Ignition Control Low Reference Bank 1	I	—
3	0.5	BU / VT	2121	Ignition Control 1	I	—
4	1	VT / BU	5291	Powertrain Main Relay Fused Supply Voltage 2	I	—

T8A Ignition Coil 1 (LGZ)

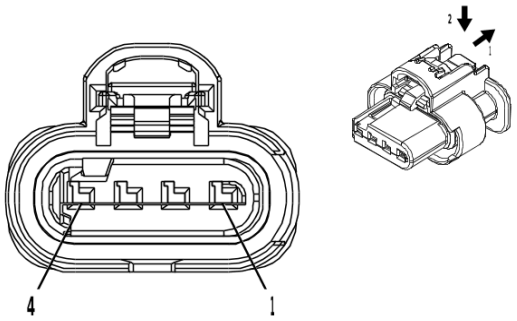

4210809

Connector Part Information

Harness Type: Engine Wiring Harness
OEM Connector: 1-2296696-1
Service Connector: 85518225
Description: 4 <p01>-Way F 1.2 MCON-CB Series, Sealed(BK)

Terminal Part Information

Terminal Type ID	Terminated Lead	Diagnostic Test Probe	Terminal Removal Tool
I	Not required	J-35616-16 (LT GN)	No Tool Required

T8A Ignition Coil 1 (LGZ)

Pin	Size	Color	Circuit	Function	Terminal Type ID	Option
1	1	BK	1450	Ground	I	—
2	0.5	BK / BU	2129	Ignition Control Low Reference Bank 1	I	—
3	0.5	BU / VT	2121	Ignition Control 1	I	—
4	1	VT / BU	5291	Powertrain Main Relay Fused Supply Voltage 2	I	—

T8B Ignition Coil 2 (LCV)

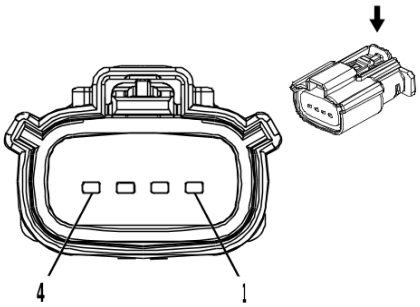

2717131

Connector Part Information

Harness Type: Engine Wiring Harness
OEM Connector: 33471-0461
Service Connector: 19367730
Description: 4 <p01>-Way F 1.5 Series, Sealed(BK)

Terminal Part Information

Terminal Type ID	Terminated Lead	Diagnostic Test Probe	Terminal Removal Tool
I	Not required	J-35616-14 (GN)	No Tool Required

T8B Ignition Coil 2 (LCV)

Pin	Size	Color	Circuit	Function	Terminal Type ID	Option
1	1	BK	1450	Ground	I	—
2	0.5	BK / BU	2129	Ignition Control Low Reference Bank 1	I	—
3	0.5	BU / WH	2122	Ignition Control 2	I	—
4	1	VT / BU	5291	Powertrain Main Relay Fused Supply Voltage 2	I	—

T8B Ignition Coil 2 (LGZ)

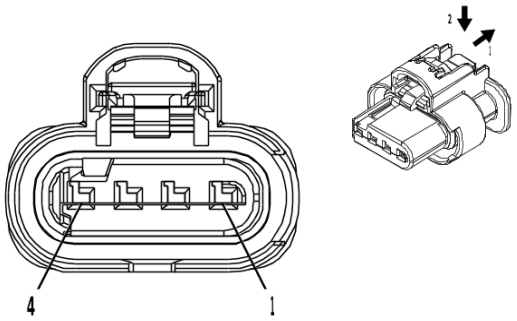

4210809

Connector Part Information

Harness Type: Engine Wiring Harness
OEM Connector: 1-2296696-1
Service Connector: 85518225
Description: 4 <p01>-Way F 1.2 MCON-CB Series, Sealed(BK)

Terminal Part Information

Terminal Type ID	Terminated Lead	Diagnostic Test Probe	Terminal Removal Tool
I	Not required	J-35616-16 (LT GN)	No Tool Required

T8B Ignition Coil 2 (LGZ)

Pin	Size	Color	Circuit	Function	Terminal Type ID	Option
1	1	BK	1550	Ground	I	—
2	0.5	BK / GY	2130	Ignition Control Low Reference Bank 2	I	—
3	0.5	BU / WH	2122	Ignition Control 2	I	—
4	1	VT / BU	5292	Powertrain Main Relay Fused Supply Voltage 3	I	—

T8C Ignition Coil 3 (LCV)

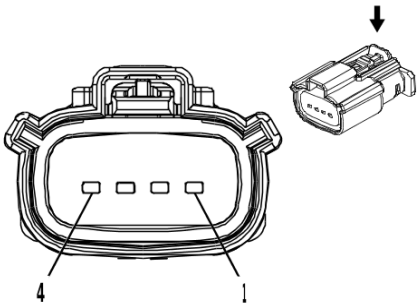

2717131

Connector Part Information

Harness Type: Engine Wiring Harness
OEM Connector: 33471-0461
Service Connector: 19367730
Description: 4 <p01>-Way F 1.5 Series, Sealed(BK)

Terminal Part Information

Terminal Type ID	Terminated Lead	Diagnostic Test Probe	Terminal Removal Tool
I	Not required	J-35616-14 (GN)	No Tool Required

T8C Ignition Coil 3 (LCV)

Pin	Size	Color	Circuit	Function	Terminal Type ID	Option
1	1	BK	1450	Ground	I	—
2	0.5	BK / BU	2129	Ignition Control Low Reference Bank 1	I	—
3	0.5	GN / BU	2123	Ignition Control 3	I	—
4	1	VT / BU	5291	Powertrain Main Relay Fused Supply Voltage 2	I	—

T8C Ignition Coil 3 (LGZ)

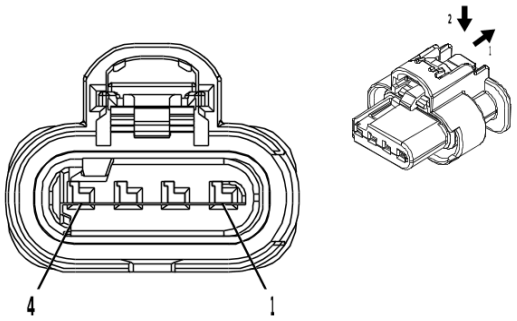

4210809

Connector Part Information

Harness Type: Engine Wiring Harness
OEM Connector: 1-2296696-1
Service Connector: 85518225
Description: 4 <p01>-Way F 1.2 MCON-CB Series, Sealed(BK)

Terminal Part Information

Terminal Type ID	Terminated Lead	Diagnostic Test Probe	Terminal Removal Tool
I	Not required	J-35616-16 (LT GN)	No Tool Required

T8C Ignition Coil 3 (LGZ)

Pin	Size	Color	Circuit	Function	Terminal Type ID	Option
1	1	BK	1450	Ground	I	—
2	0.5	BK / BU	2129	Ignition Control Low Reference Bank 1	I	—
3	0.5	GN / BU	2123	Ignition Control 3	I	—
4	1	VT / BU	5291	Powertrain Main Relay Fused Supply Voltage 2	I	—

T8D Ignition Coil 4 (LCV)

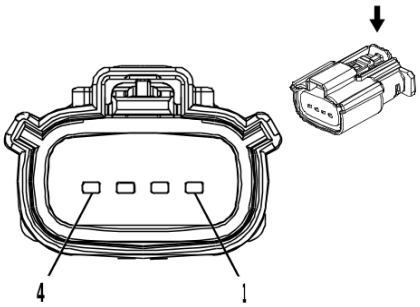

2717131

Connector Part Information

Harness Type: Engine Wiring Harness
OEM Connector: 33471-0461
Service Connector: 19367730
Description: 4 <p01>-Way F 1.5 Series, Sealed(BK)

Terminal Part Information

Terminal Type ID	Terminated Lead	Diagnostic Test Probe	Terminal Removal Tool
I	Not required	J-35616-14 (GN)	No Tool Required

T8D Ignition Coil 4 (LCV)

Pin	Size	Color	Circuit	Function	Terminal Type ID	Option
1	1	BK	1450	Ground	I	—
2	0.5	BK / BU	2129	Ignition Control Low Reference Bank 1	I	—
3	0.5	YE / BU	2124	Ignition Control 4	I	—
4	1	VT / BU	5291	Powertrain Main Relay Fused Supply Voltage 2	I	—

T8D Ignition Coil 4 (LGZ)

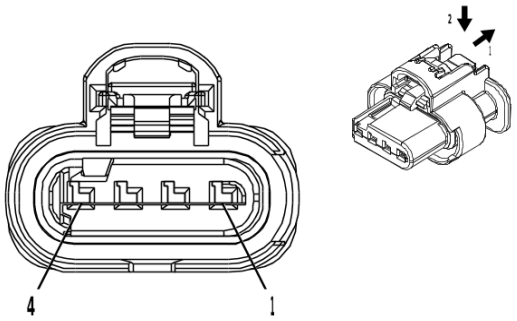

4210809

Connector Part Information

Harness Type: Engine Wiring Harness
OEM Connector: 1-2296696-1
Service Connector: 85518225
Description: 4 <p01>-Way F 1.2 MCON-CB Series, Sealed(BK)

Terminal Part Information

Terminal Type ID	Terminated Lead	Diagnostic Test Probe	Terminal Removal Tool
I	Not required	J-35616-16 (LT GN)	No Tool Required

T8D Ignition Coil 4 (LGZ)

Pin	Size	Color	Circuit	Function	Terminal Type ID	Option
1	1	BK	1550	Ground	I	—
2	0.5	BK / GY	2130	Ignition Control Low Reference Bank 2	I	—
3	0.5	YE / BU	2124	Ignition Control 4	I	—
4	1	VT / BU	5292	Powertrain Main Relay Fused Supply Voltage 3	I	—

T8E Ignition Coil 5 (LGZ)

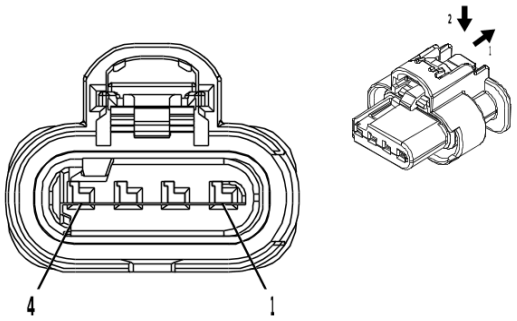

4210809

Connector Part Information

Harness Type: Engine Wiring Harness
OEM Connector: 1-2296696-1
Service Connector: 85518225
Description: 4 <p01>-Way F 1.2 MCON-CB Series, Sealed(BK)

Terminal Part Information

Terminal Type ID	Terminated Lead	Diagnostic Test Probe	Terminal Removal Tool
I	Not required	J-35616-16 (LT GN)	No Tool Required

T8E Ignition Coil 5 (LGZ)

Pin	Size	Color	Circuit	Function	Terminal Type ID	Option
1	1	BK	1450	Ground	I	—
2	0.5	BK / BU	2129	Ignition Control Low Reference Bank 1	I	—
3	0.5	BU / GY	2125	Ignition Control 5	I	—
4	1	VT / BU	5291	Powertrain Main Relay Fused Supply Voltage 2	I	—

T8F Ignition Coil 6 (LGZ)

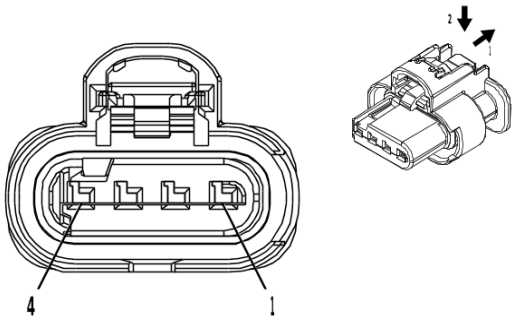

4210809

Connector Part Information

Harness Type: Engine Wiring Harness
OEM Connector: 1-2296696-1
Service Connector: 85518225
Description: 4 <p01>-Way F 1.2 MCON-CB Series, Sealed(BK)

Terminal Part Information

Terminal Type ID	Terminated Lead	Diagnostic Test Probe	Terminal Removal Tool
I	Not required	J-35616-16 (LT GN)	No Tool Required

T8F Ignition Coil 6 (LGZ)

Pin	Size	Color	Circuit	Function	Terminal Type ID	Option
1	1	BK	1550	Ground	I	—
2	0.5	BK / GY	2130	Ignition Control Low Reference Bank 2	I	—
3	0.5	BN / BU	2126	Ignition Control 6	I	—
4	1	VT / BU	5292	Powertrain Main Relay Fused Supply Voltage 3	I	—

T22 Mobile Device Wireless Charger Module

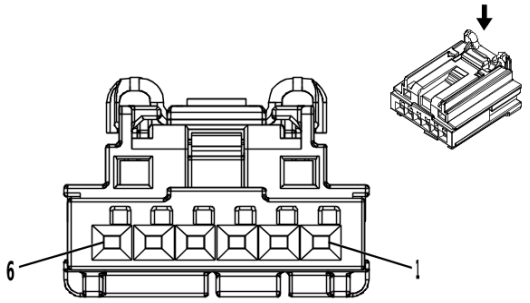

3960313

Connector Part Information

Harness Type: Front Floor Console Wiring Harness
OEM Connector: 2035363-4
Service Connector: Service by Harness - See Part Catalog
Description: 6 <p01>-Way F 0.64 Generation Y Series(BK)

Terminal Part Information

Terminal Type ID	Terminated Lead	Diagnostic Test Probe	Terminal Removal Tool
I	Not required	J-35616-64B (LT BU)	No Tool Required

T22 Mobile Device Wireless Charger Module

Pin	Size	Color	Circuit	Function	Terminal Type ID	Option
1	0.5	VT	4601	Retained Accessory Power Control	I	—
2	0.5	BK	2050	Ground	I	—
3	0.35	GN	4512	Wireless Charging System Charge Indicator Control	I	—
4	0.35	BN	4511	Wireless Charging System Fault Indicator Control	I	—
5 - 6	—	—	—	Not Occupied	—	—

X80A Accessory Power Receptacle - Center Console 1

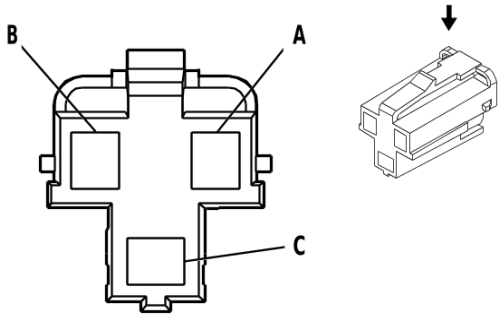

362748

Connector Part Information

Harness Type: Instrument Panel Wiring Harness
OEM Connector: 12176836
Service Connector: 19369634
Description: 3 <p01>-Way F 280 Metri-Pack Series(GY)

Terminal Part Information

Terminal Type ID	Terminated Lead	Diagnostic Test Probe	Terminal Removal Tool
I	Not required	J-35616-4A (PU)	No Tool Required

X80A Accessory Power Receptacle - Center Console 1

Pin	Size	Color	Circuit	Function	Terminal Type ID	Option
A	1	VT	1701	Retained Accessory Power Control	I	—
B	—	—	—	Not Occupied	—	—
C	1	BK	2050	Ground	I	—

X80B Accessory Power Receptacle - Center Console 2

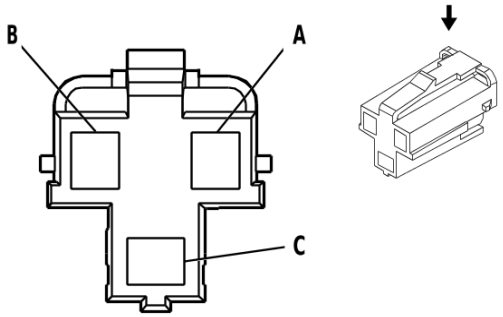

362748

Connector Part Information

Harness Type: Front Floor Console Wiring Harness
OEM Connector: 12176836
Service Connector: Service by Harness - See Part Catalog
Description: 3 <p01>-Way F 280 Metri-Pack Series(GY)

Terminal Part Information

Terminal Type ID	Terminated Lead	Diagnostic Test Probe	Terminal Removal Tool
I	Not required	J-35616-4A (PU)	No Tool Required

X80B Accessory Power Receptacle - Center Console 2

Pin	Size	Color	Circuit	Function	Terminal Type ID	Option
A	1.5	VT	2101	Retained Accessory Power Control	I	—
B	—	—	—	Not Occupied	—	—
C	1.5	BK	2050	Ground	I	—

X83 Auxiliary Audio Input X1

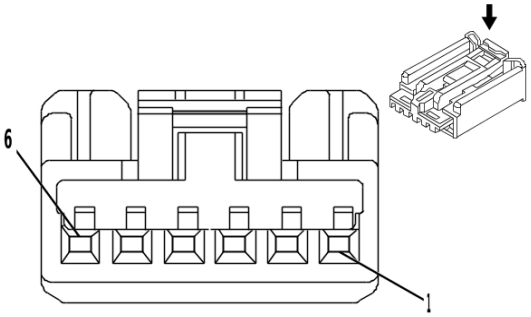

1862240

Connector Part Information

Harness Type: Instrument Panel Wiring Harness
OEM Connector: 15269798
Service Connector: 19367517
Description: 6 <p01>-Way F 0.64 Kaizen Series(BK)

Terminal Part Information

Terminal Type ID	Terminated Lead	Diagnostic Test Probe	Terminal Removal Tool
I	Not required	J-35616-64B (LT BU)	No Tool Required

X83 Auxiliary Audio Input X1

Pin	Size	Color	Circuit	Function	Terminal Type ID	Option
1 - 3	—	—	—	Not Occupied	—	—
4	0.35	BK / WH	2051	Signal Ground	I	—
5	—	—	—	Not Occupied	—	—
6	0.5	RD / VT	340	Battery Positive Voltage	I	—

X83 Auxiliary Audio Input X2

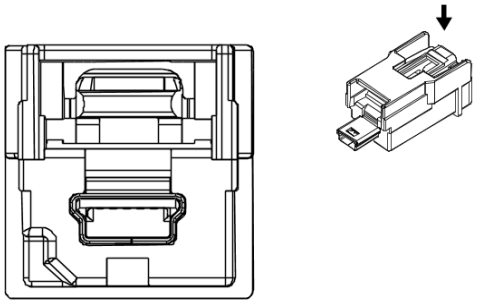

2807491

Connector Part Information

Harness Type: Instrument Panel Wiring Harness USB
OEM Connector: 13576673
Service Connector: Service by Cable Assembly — See Part Catalog
Description: 5 <p01>-Way M 2.0 Mini-B USB Type(GY)

Terminal Part Information

Terminal Type ID	Terminated Lead	Diagnostic Test Probe	Terminal Removal Tool
I	Not required	No Tool Required	No Tool Required

X83 Auxiliary Audio Input X2

Pin	Size	Color	Circuit	Function	Terminal Type ID	Option
—	—	USB	—	USB Serial Data	I	—

X84 Data Link Connector

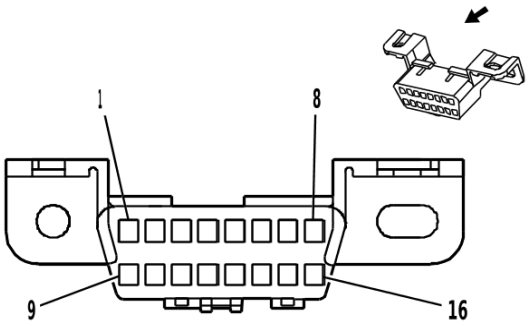

68793

Connector Part Information

Harness Type: Instrument Panel Wiring Harness
OEM Connector: 12110250
Service Connector: 12110250
Description: 16 <p01>-Way F 150 Metri-Pack Series(BK)

Terminal Part Information

Terminal Type ID	Terminated Lead	Diagnostic Test Probe	Terminal Removal Tool
I	13580059	J-35616-14 (GN)	J-38125-12A

X84 Data Link Connector

Pin	Size	Color	Circuit	Function	Terminal Type ID	Option
1	0.35	GN / WH	2100	Low Speed GMLAN Serial Data 3	I	—
2 - 3	—	—	—	Not Occupied	—	—
4	0.5	BK	2050	Ground	I	—
5	0.75	BK / WH	2151	Signal Ground	I	—
6	0.35	BU / BK	1978	High Speed GMLAN Serial Data [+] 11	I	—
7 - 11	—	—	—	Not Occupied	—	—
12	0.35	BU / BN	1980	High Speed GMLAN Serial Data [+] 12	I	—
13	0.35	WH	1981	High Speed GMLAN Serial Data [-] 12	I	—
14	0.35	WH	1979	High Speed GMLAN Serial Data [-] 11	I	—
15	—	—	—	Not Occupied	—	—
16	0.5	RD / WH	640	Battery Positive Voltage	I	—

X85 Steering Wheel Air Bag Coil X1

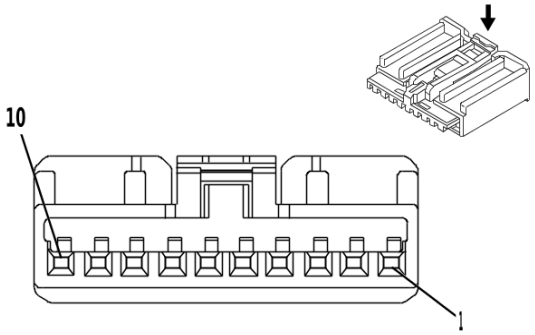

1862241

Connector Part Information

Harness Type: Steering Wheel Horn Switch Wiring Harness
OEM Connector: 15269795
Service Connector: Service by Harness - See Part Catalog
Description: 10 <p01>-Way F 0.64 Kaizen Series(BK)

Terminal Part Information

Terminal Type ID	Terminated Lead	Diagnostic Test Probe	Terminal Removal Tool
I	Not Available	No Tool Required	Not Available

X85 Steering Wheel Air Bag Coil X1

Pin	Size	Color	Circuit	Function	Terminal Type ID	Option
1	0.35	RD / YE	3040	Battery Positive Voltage	I	—
2	0.5	GN / BK	3894	Instrument Cluster LIN Bus 1	I	—
3	—	—	—	Not Occupied	—	—
4	0.35	GY / OG	5737	Distance Sensing Cruise Control Gap Up/Down Switch Signal	I	—
5	0.35	BN	6136	Control	I	—
6	0.35	WH	1444	12V Reference	I	—
7	0.35	GN	6818	Steering Wheel Controls Signal 1	I	—
8	0.35	BN / YE	1884	Cruise Control Set/Coast/Resume/Accelerate Switch Signal	I	—
9	0.5	BK	2050	Ground	I	—
10	0.35	GN / WH	3287	Horn Switch Signal	I	—

X85 Steering Wheel Air Bag Coil X2

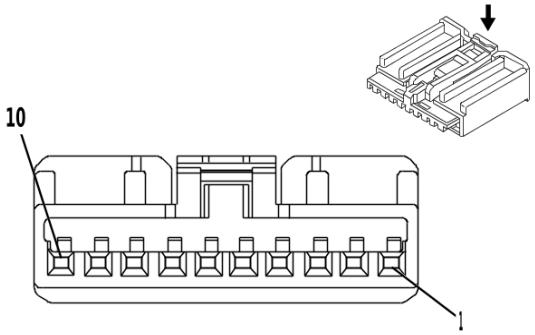

1862241

Connector Part Information

Harness Type: Instrument Panel Wiring Harness
OEM Connector: AIT2PB-10-1AK
Service Connector: 13576634
Description: 10 <p01>-Way F 0.64 Kaizen Series(BK)

Terminal Part Information

Terminal Type ID	Terminated Lead	Diagnostic Test Probe	Terminal Removal Tool
I	13575742	J-35616-64B (LT BU)	J-38125-215A

X85 Steering Wheel Air Bag Coil X2

Pin	Size	Color	Circuit	Function	Terminal Type ID	Option
1	0.35	GN / WH	3287	Horn Switch Signal	I	—
2	0.5	BK	2050	Ground	I	—
3	0.35	BN / GN	1884	Cruise Control Set/Coast/Resume/Accelerate Switch Signal	I	—
4	0.35	GN	6818	Steering Wheel Controls Signal 1	I	—
5	0.35	WH / RD	1444	12V Reference	I	—
6	0.35	BN	6136	Control	I	—
7	0.35	GY / GN	5737	Distance Sensing Cruise Control Gap Up/Down Switch Signal	I	—
8	—	—	—	Not Occupied	—	—
9	0.5	GN / BK	3894	Instrument Cluster LIN Bus 1	I	—
10	0.35	RD / YE	3040	Battery Positive Voltage	I	—

X85 Steering Wheel Air Bag Coil X3

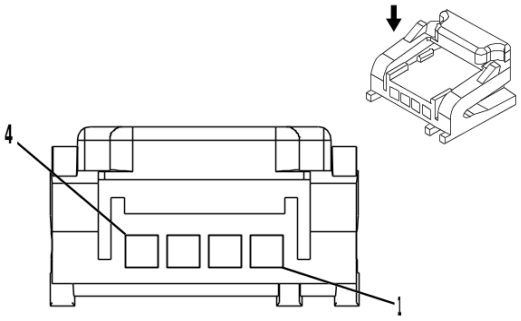

1399226

Connector Part Information

Harness Type: Instrument Panel Wiring Harness
OEM Connector: 15393421
Service Connector: 13580115
Description: 4 <p01>-Way F 0.64 Micro-Pack Series(YE)

Terminal Part Information

Terminal Type ID	Terminated Lead	Diagnostic Test Probe	Terminal Removal Tool
I	Not required	J-35616-64B (LT BU)	No Tool Required

X85 Steering Wheel Air Bag Coil X3

Pin	Size	Color	Circuit	Function	Terminal Type ID	Option
1	0.35	WH / OG	3020	Steering Wheel Air Bag Stage 1 Low Control	I	—
2	0.35	OG / GN	3021	Steering Wheel Air Bag Stage 1 High Control	I	—
3	0.35	BN / OG	3022	Steering Wheel Air Bag Stage 2 Low Control	I	—
4	0.35	OG / VT	3023	Steering Wheel Air Bag Stage 2 High Control	I	—

X85 Steering Wheel Air Bag Coil X4

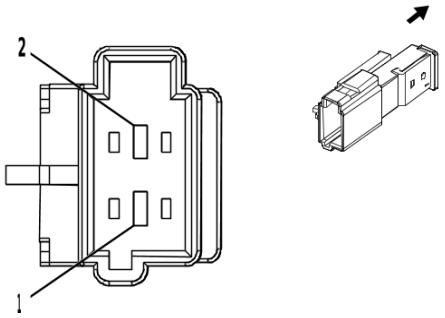

2339581

Connector Part Information

Harness Type: Instrument Panel Wiring Harness
OEM Connector: 1563190-1
Service Connector: 19367515
Description: 2 <p01>-Way M 1.6 Timer Series(BK)

Terminal Part Information

Terminal Type ID	Terminated Lead	Diagnostic Test Probe	Terminal Removal Tool
I	Not required	J-35616-34 (YE)	No Tool Required

X85 Steering Wheel Air Bag Coil X4

Pin	Size	Color	Circuit	Function	Terminal Type ID	Option
1	0.5	VT / WH	1139	Run/Crank Ignition 1 Voltage	I	—
2	0.5	BK	2050	Ground	I	—

X85 Steering Wheel Air Bag Coil X5 (UVD)

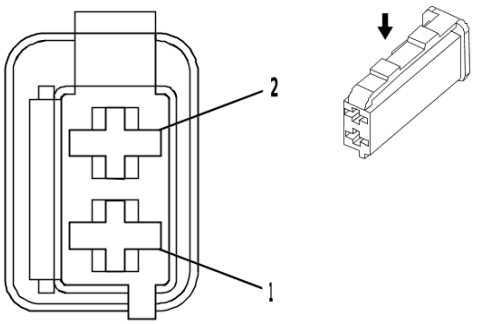

2339593

Connector Part Information

Harness Type: Steering Wheel Horn Switch Wiring Harness
OEM Connector: 19179871
Service Connector: Service by Harness - See Part Catalog
Description: 2 <p01>-Way F 1.6 Timer Series(BK)

Terminal Part Information

Terminal Type ID	Terminated Lead	Diagnostic Test Probe	Terminal Removal Tool
I	Not Available	No Tool Required	Not Available

X85 Steering Wheel Air Bag Coil X5 (UVD)

Pin	Size	Color	Circuit	Function	Terminal Type ID	Option
1	0.75	RD	1139	Run/Crank Ignition 1 Voltage	I	—
2	0.75	BK	2050	Ground	I	—

X88 Trailer Connector

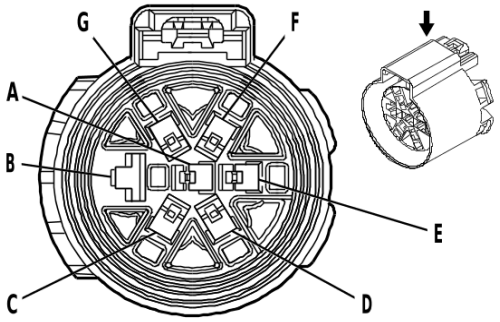

2056936

Connector Part Information

Harness Type: Chassis Wiring Harness
OEM Connector: 13857223
Service Connector: 15306164
Description: 7 <p01>-Way F 280, 630 Metri-Pack Series, Sealed(BK)

Terminal Part Information

Terminal Type ID	Terminated Lead	Diagnostic Test Probe	Terminal Removal Tool
I	Not required	J-35616-42 (RD)	No Tool Required
II	Not required	J-35616-4A (PU)	No Tool Required

X88 Trailer Connector

Pin	Size	Color	Circuit	Function	Terminal Type ID	Option
A	0.75	GY	1624	Trailer Backup Lamp Control	II	—
B	6	BK	22	Trailer Ground	I	—
C	2.5	BU	47	Trailer Auxiliary Control	II	—
D	0.75	GN	1619	Right Rear Trailer Stop/Turn Lamp Control	II	—
E	4	OG	742	Battery Positive Voltage	II	—
F	1.5	BN	2109	Trailer Park Lamp Control	II	—
G	0.75	YE	1618	Left Rear Trailer Stop/Turn Lamp Control	II	—

X92C USB Receptacle - Center Console Rear

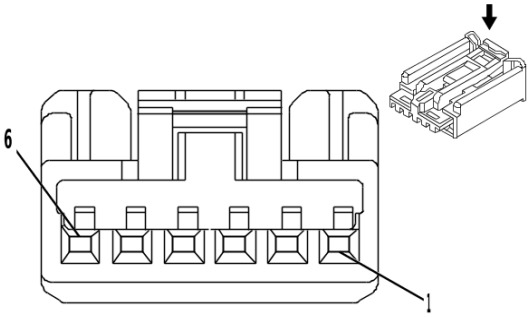

1862240

Connector Part Information

Harness Type: Front Floor Console Wiring Harness
OEM Connector: AIT2PB-06-1AK
Service Connector: Service by Harness - See Part Catalog
Description: 6 <p01>-Way F 0.64 Kaizen Series(BK)

Terminal Part Information

Terminal Type ID	Terminated Lead	Diagnostic Test Probe	Terminal Removal Tool
I	Not required	J-35616-64B (LT BU)	No Tool Required

X92C USB Receptacle - Center Console Rear

Pin	Size	Color	Circuit	Function	Terminal Type ID	Option
1 - 3	—	—	—	Not Occupied	—	—
4	0.35 0.5	BK / WH BK / WH	2051 2051	Signal Ground Signal Ground	I I	- USS USS+ (M5T/ MYB)
5	—	—	—	Not Occupied	—	—
6	0.5	RD / VT	340	Battery Positive Voltage	I	—

Inline Harness Connector End Views

X100 Battery Negative Cable to Power Steering Wiring Harness

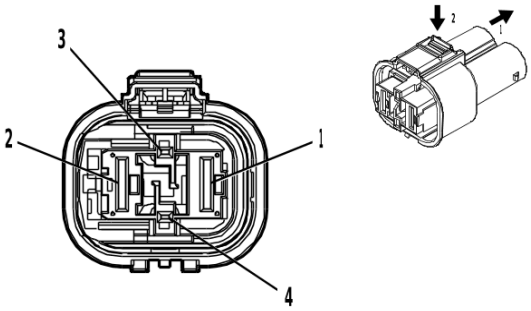

4847569

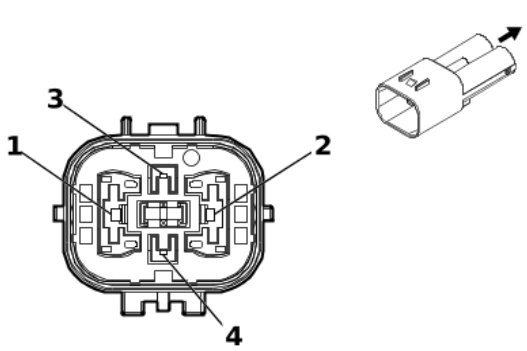

5203853

Connector Part Information

Harness Type: Battery Negative Cable

OEM Connector: 5-2286732-1

Service Connector: Service by Harness - See Part Catalog

Description: 4 <p01>-Way F 1.2, 9.5 MCON Series, Sealed(BK)

Connector Part Information

Harness Type: Power Steering Wiring Harness

OEM Connector: 5-2286733-1

Service Connector: Service by Harness - See Part Catalog

Description: 4 <p01>-Way M 1.2, 9.5 MCON Series, Sealed(BK)

Terminal Part Information

Terminal Type ID	Terminated Lead	Diagnostic Test Probe	Terminal Removal Tool
I	Not required	J-35616-22 (RD)	No Tool Required
II	Not required	J-35616-21 (RD)	No Tool Required

X100 Battery Negative Cable to Power Steering Wiring Harness

Pin	Size	Color	Circuit	Terminal Type ID	Option	Function	Pin	Size	Color	Circuit	Terminal Type ID	Option
1	10	RD / VT	842	I	—	Battery Positive Voltage	1	10	RD / VT	842	II	—
2	10	BK	1050	I	—	Ground	2	10	BK	1050	II	—
3 - 4	—	—	—	—	—	Not Occupied	3 - 4	—	—	—	—	—

X101 Engine Wiring Harness to Body Wiring Harness

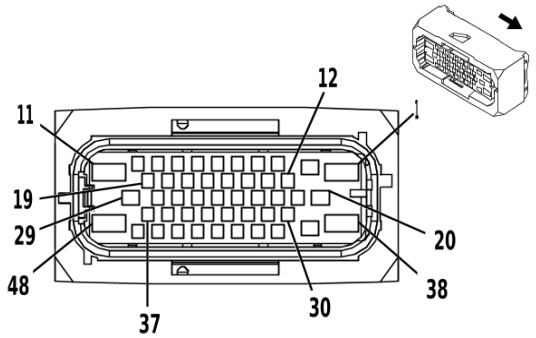

3931602

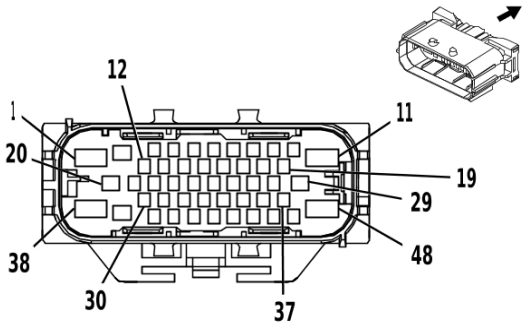

3924401

Connector Part Information

Harness Type: Engine Wiring Harness

OEM Connector: 15509585

Service Connector: 19329744

Description: 48 <p01>-Way F 1.5 MCP, 2.8 JPT, 6.3 MCP Series, Sealed(BK)

Connector Part Information

Harness Type: Body Wiring Harness

OEM Connector: 15513438

Service Connector: 19356277

Description: 48 <p01>-Way M 1.6, 2.8, 5.8 Series, Sealed(BK)

Terminal Part Information

Terminal Type ID	Terminated Lead	Diagnostic Test Probe	Terminal Removal Tool
I	13580821	J-35616-4A (PU)	J-38125-36
II	19369235	J-35616-14 (GN)	J-38125-215A
III	85158596	J-35616-42 (BU)	J-38125-556
IV	13575376	J-35616-43 (RD)	J-38125-557
V	19303873	J-35616-3 (GY)	EL-38125-560-A
VI	84992391	J-35616-5 (PU)	J-38125-215A
VII	84992391	J-35616-5 (PU)	J-38125-36

X101 Engine Wiring Harness to Body Wiring Harness

Pin	Size	Color	Circuit	Terminal Type ID	Option	Function	Pin	Size	Color	Circuit	Terminal Type ID	Option
1	2.5	YE / VT	1553	III	—	Transfer Case Motor Counter Clockwise Control	1	2.5	YE / VT	1553	IV	—
2	0.75	VT / GY	139	I	—	Run/Crank Ignition 1 Voltage	2	0.75	VT / GY	139	VI	—
3	0.75	VT / GY	139	II	—	Run/Crank Ignition 1 Voltage	3	0.75	VT / GY	139	V	—
4	0.5	WH / GN	7475	II	—	Incremental Encoder Sensor 8V Reference	4	0.5	WH / GN	7475	V	—
5	0.5	WH / BU	6311	II	—	Cruise/ETC/ TCC Brake Signal	5	0.5	WH / BU	6311	V	—

X101 Engine Wiring Harness to Body Wiring Harness (cont'd)

Pin	Size	Color	Circuit	Terminal Type ID	Option	Function	Pin	Size	Color	Circuit	Terminal Type ID	Option
6	0.5	BK / VT	1272	II	—	Accelerator Pedal Position Low Reference 2	6	0.5	BK / VT	1272	V	—
7	0.5	BN / WH	419	II	—	Check Engine Indicator Control	7	0.5	BN / WH	419	V	—
8	0.5	BN / RD	1274	II	—	Accelerator Pedal Position 5V Reference 2	8	0.5	BN / RD	1274	V	—
9	0.5	YE	7474	II	—	Incremental Encoder Direction Signal	9	0.5	YE	7474	V	—
10	0.75	BU / BN	7573	II	—	A/C Compressor Solenoid Valve Control	10	0.5	BU / BN	7573	V	—
11	0.75	BK	1450	III	—	Ground	11	0.75	BK	1450	IV	—
12	0.5	BK	1782	II	—	Low Reference	12	0.5	BK	1782	V	—
13	0.5	GN / GY	465	II	—	Fuel Pump Primary Relay Control	13	0.5	GN / GY	465	V	—
14	0.5	WH	2368	II	—	Cooling Fan Control Signal	14	0.5	WH	2368	V	—
15	0.5	BU / WH	890	II	—	Fuel Tank Pressure Sensor Signal	15	0.5	BU / WH	890	V	—
16	0.5	YE / RD	2709	II	—	Fuel Tank Pressure Sensor 5V Reference	16	0.5	YE / RD	2709	V	—
17	0.5	BK / GN	6281	II	—	Fuel Level Sensor Low Reference	17	0.5	BK / GN	6281	V	—
18	0.5	BU / VT	1589	II	—	Primary Fuel Level Sensor Signal	18	0.5	BU / VT	1589	V	—
19	0.75	BU / YE	7574	II	—	A/C Compressor Solenoid Valve Control	19	0.5	BU / YE	7574	V	—
20	2.5	YE / BN	1569	I	—	Transfer Case Lock Solenoid Valve Control	20	2.5	YE / BN	1569	VII	—
21	0.5 0.5	BK / YE GN / BN	7447 507	II II	LCV/ LGZ LWN	Fuel Pressure Sensor Low Reference Wait To Start Indicator Control	21	0.5 0.5	BK / YE GN / BN	7447 507	V V	LCV/ LGZ LWN
22	0.5	BU / GY	7473	II	—	Incremental Encoder Impulse Signal	22	0.5	BU / GY	7473	V	—

X101 Engine Wiring Harness to Body Wiring Harness (cont'd)

Pin	Size	Color	Circuit	Terminal Type ID	Option	Function	Pin	Size	Color	Circuit	Terminal Type ID	Option
23	0.5	GN / WH	1162	II	—	Accelerator Pedal Position Signal 2	23	0.5	GN / WH	1162	V	—
24	0.5	BK / BU	1271	II	—	Accelerator Pedal Position Low Reference 1	24	0.5	BK / BU	1271	V	—
25	0.5	WH / RD	1164	II	—	Accelerator Pedal Position 5V Reference 1	25	0.5	WH / RD	1164	V	—
26	0.5	WH	1310	II	—	EVAP Vent Solenoid Valve Control	26	0.5	WH	1310	V	—
27	0.5	WH / RD	7477	II	—	Gear Position Sensor 5V Reference	27	0.5	WH / RD	7477	V	—
28	0.5 0.5	WH / GN BN	7479 6305	II II	LCV/ LWN LGZ	Rotary Position Sensor Signal Brake Vacuum Switch Signal	28	0.5 0.5	WH / GN BN	7479 6305	V V	LCV/ LWN LGZ
29	0.5 2.5	YE / BK BN / VT	7478 1470	I I	LCV/ LWN LGZ	Gear Position Sensor Low Reference Brake Booster Pump Motor Control	29	0.5 2.5	YE / BK BN / VT	7478 1470	VI VII	LCV/ LWN LGZ
30	0.5	BK / BU	61	II	—	Ambient Air Temperature Sensor Low Reference	30	0.5	BK / BU	61	V	—
31	0.5	BU / GY	636	II	—	Ambient Air Temperature Sensor Signal	31	0.5	BU / GY	636	V	—
32	0.5	YE / WH	1161	II	—	Accelerator Pedal Position Signal 1	32	0.5	YE / WH	1161	V	—
33	0.5	BK / YE	5382	II	—	Brake Position Sensor Low Reference	33	0.5	BK / YE	5382	V	—
34	0.5	WH / GN	5380	II	—	Brake Position Sensor Signal	34	0.5	WH / GN	5380	V	—
35	0.5	WH / RD	5381	II	—	Brake Position Sensor 5V Reference	35	0.5	WH / RD	5381	V	—
36	0.5 0.5	BU / YE BU / BK	7493 7493	II II	LCV LGZ	High Speed GMLAN Serial Data [+] 3 High Speed GMLAN Serial Data [+] 3	36	0.5	BU / BK	7493	V	—

X101 Engine Wiring Harness to Body Wiring Harness (cont'd)

Pin	Size	Color	Circuit	Terminal Type ID	Option	Function	Pin	Size	Color	Circuit	Terminal Type ID	Option
37	0.5	WH	7494	II	—	High Speed GMLAN Serial Data [-] 3	37	0.5	WH	7494	V	—
38	2.5	YE / GY	1552	III	—	Transfer Case Motor Clockwise Control	38	2.5	YE / GY	1552	IV	—
39	2.5	RD / GY	1342	I	—	Battery Positive Voltage	39	2.5	RD / GY	1342	VII	—
40	0.5	BK / BU	6813	II	—	Coolant Temperature Sensor 2 Low Reference	40	0.5	BK / BU	6813	V	—
41	0.5 0.5	YE / BK BU / BK	3000 7116	II II	LCV LGZ/ LWN	Coolant Temperature Sensor 2 Signal Front Axle Differential Lock Control	41	0.5 0.5	YE / BK BU / BK	3000 7116	V V	LCV LGZ/ LWN
42	0.5	VT / YE	5985	II	—	Accessory Wake-Up Serial Data	42	0.5	VT / YE	5985	V	—
43	0.5	VT	7476	II	—	Incremental Encoder Sensor Low Reference	43	0.5	VT	7476	V	—
44	0.5	BU / WH	7446	II	—	Fuel Pressure Sensor Signal	44	0.5	BU / WH	7446	V	—
45	0.5	GY	3890	II	—	Active Grille Air Shutter Control 2	45	0.5	GY	3890	V	—
46	0.5	BU	2500	II	—	High Speed GMLAN Serial Data [+] 1	46	0.5	BU	2500	V	—
47	0.5	WH	2501	II	—	High Speed GMLAN Serial Data [-] 1	47	0.5	WH	2501	V	—
48	0.5	BN / RD	7445	III	—	Fuel Line Pressure Sensor 5V Reference	48	0.5	BN / RD	7445	IV	—

X102 Forward Lamp Wiring Harness to Body Wiring Harness

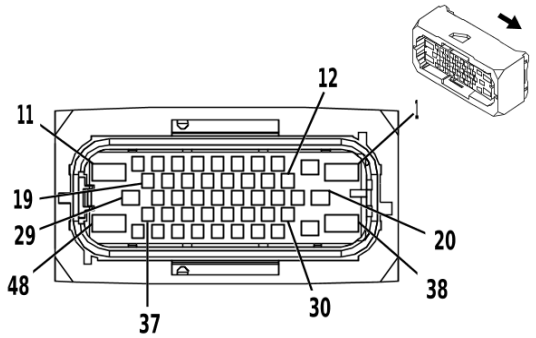

3620765

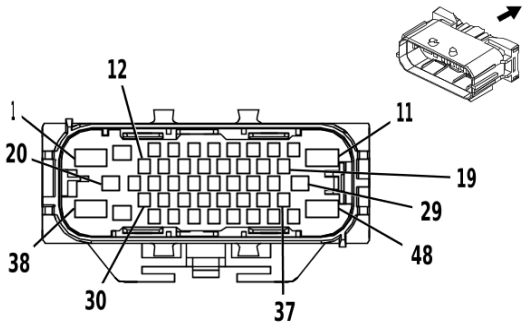

3240126

Connector Part Information

Harness Type: Forward Lamp Wiring Harness

OEM Connector: 15509588

Service Connector: 19356278

Description: 48 <p01>-Way F 1.5 MCP, 2.8 JPT, 6.3 MCP Series, Sealed(YE)

Connector Part Information

Harness Type: Body Wiring Harness

OEM Connector: 15513436

Service Connector: 19301796

Description: 48 <p01>-Way M 1.6, 2.8, 5.8 Series, Sealed(YE)

Terminal Part Information

Terminal Type ID	Terminated Lead	Diagnostic Test Probe	Terminal Removal Tool
I	13580830	J-35616-4A (PU)	J-38125-36
II	19119379	J-35616-40 (BU)	J-38125-556
III	19369235	J-35616-14 (GN)	J-38125-215A
IV	13580827	J-35616-5 (PU)	J-38125-215A
V	19301750	J-35616-43 (RD)	J-38125-36
VI	19368136	J-35616-3 (GY)	EL-38125-560-A
VII	19368136	J-35616-3 (GY)	J-38125-560

X102 Forward Lamp Wiring Harness to Body Wiring Harness

Pin	Size	Color	Circuit	Terminal Type ID	Option	Function	Pin	Size	Color	Circuit	Terminal Type ID	Option
1	2.5	BN / VT	1470	II	—	Brake Booster Pump Motor Control	1	2.5	BN / VT	1470	V	—
2	—	—	—	—	—	Not Occupied	2	—	—	—	—	—
3	0.75	WH / VT	1430	III	—	Exterior Courtesy Lamp Control	3	0.75	WH / VT	1430	VI	—
4 - 5	—	—	—	—	—	Not Occupied	4 - 5	—	—	—	—	—
6	0.75	VT / GY	709	III	—	Left Park Lamp Control	6	0.5	VT / GY	709	VI	—
7	—	—	—	—	—	Not Occupied	7	—	—	—	—	—
8	0.75	GY / BN	309	III	—	Right Park Lamp Control	8	0.5	GY / BN	309	VI	—
9	—	—	—	—	—	Not Occupied	9	—	—	—	—	—

X102 Forward Lamp Wiring Harness to Body Wiring Harness (cont'd)

Pin	Size	Color	Circuit	Terminal Type ID	Option	Function	Pin	Size	Color	Circuit	Terminal Type ID	Option
10	1.5	WH	92	III	—	Windshield Wiper Motor High Speed Control	10	1.5	WH	92	VII	—
11	1.5	YE / BN	95	II	—	Windshield Wiper Motor Low Speed Control	11	1.5	YE / BN	95	V	—
12	—	—	—	—	—	Not Occupied	12	—	—	—	—	—
13	0.5	OG / YE	354	III	—	Left Front Impact Discriminating Sensor Signal	13	0.5	OG / YE	354	VI	—
14	0.5	BK / OG	5045	III	—	Left Front Impact Discriminating Sensor Low Reference	14	0.5	BK / OG	5045	VI	—
15	0.5	BN / GN	109	III	—	Hood Ajar Switch Signal	15	0.5	BN / GN	4064	VI	—
16	—	—	—	—	—	Not Occupied	16	—	—	—	—	—
17	0.35	VT / GY	1054	III	—	Stop Lamp Control	17	0.35	VT / GY	1054	VII	—
18	—	—	—	—	—	Not Occupied	18	—	—	—	—	—
19	1.5	YE	312	III	—	Right Headlamp Low Beam Control	19	1.5	YE	312	VII	—
20	—	—	—	—	—	Not Occupied	20	—	—	—	—	—
21	0.5	OG / GN	1409	III	—	Right Front Impact Discriminating Sensor Signal	21	0.5	OG / GN	1409	VI	—
22	0.5	BK / OG	5600	III	—	Right Front Impact Discriminating Sensor Low Reference	22	0.5	BK / OG	5600	VI	—
23	—	—	—	—	—	Not Occupied	23	—	—	—	—	—
24	0.5 0.5	WH / BK WH / BK	2366 2368	III III	T3U - T3U	Cooling Fan Speed Control Signal Cooling Fan Control Signal	24	0.5	WH	2368	VI	—
25	0.5	VT	185	III	—	Low Washer Fluid Indicator Control	25	0.35	VT	185	VII	—
26	0.5	BU / GY	636	III	—	Ambient Air Temperature Sensor Signal	26	0.5	BU / GY	636	VI	—

X102 Forward Lamp Wiring Harness to Body Wiring Harness (cont'd)

Pin	Size	Color	Circuit	Terminal Type ID	Option	Function	Pin	Size	Color	Circuit	Terminal Type ID	Option
27	0.5	BK / BU	61	III	—	Ambient Air Temperature Sensor Low Reference	27	0.5	BK / BU	61	VI	—
28	—	—	—	—	—	Not Occupied	28	—	—	—	—	—
29	0.75	GN / VT	1315	I	—	Right Front Turn Signal Lamp Control	29	0.75	GN / VT	1315	IV	—
30 - 34	—	—	—	—	—	Not Occupied	30 - 34	—	—	—	—	—
35	0.5	GY	3890	III	—	Active Grille Air Shutter Control 2	35	0.5	GY	3890	VI	—
36	—	—	—	—	—	Not Occupied	36	—	—	—	—	—
37	1.5	YE	712	III	—	Left Headlamp Low Beam Control	37	1.5	YE	712	VII	—
38	1.5	BK	3150	II	—	Ground	38	1.5	BK	3150	V	—
39	—	—	—	—	—	Not Occupied	39	—	—	—	—	—
40	1	VT / WH	7256	III	—	Front Differential Lock Actuator Control	40	1	VT / WH	7256	VII	—
41	1	VT / BN	7258	III	—	Rear Differential Lock Actuator Control	41	1	VT / BN	7258	VII	—
42 - 43	—	—	—	—	—	Not Occupied	42 - 43	—	—	—	—	—
44	0.5 0.5	YE / BK BU / WH	3000 7120	III III	LCV LWN/ LGZ	Coolant Temperature Sensor 2 Signal Rear Axle Differential Lock Control	44	0.5 0.5	YE / BK BU / WH	3000 7120	VI VI	LCV LWN/ LGZ
45	0.5	BK / BU	6813	III	—	Coolant Temperature Sensor 2 Low Reference	45	0.5	BK / BU	6813	VI	—
46	—	—	—	—	—	Not Occupied	46	—	—	—	—	—
47	0.75	BU / WH	1314	III	—	Left Front Turn Signal Lamp Control	47	0.75	BU / WH	1314	VI	—
48	1.5	BN	2109	II	—	Trailer Park Lamp Control	48	1.5	BN	2109	V	—

X103 Chassis Wiring Harness to Power Steering Wiring Harness

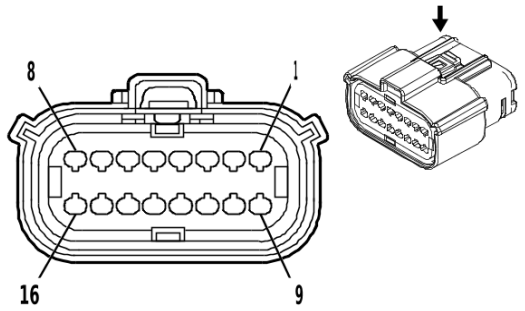

2548389

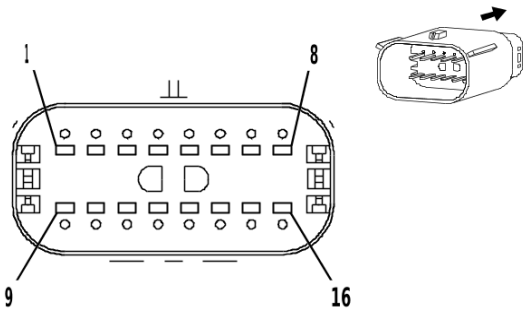

2548390

Connector Part Information

Harness Type: Chassis Wiring Harness
OEM Connector: 33472-1606
Service Connector: 13584788
Description: 16 <p01>-Way F 1.5 MX Series, Sealed(BK)

Connector Part Information

Harness Type: Power Steering Wiring Harness
OEM Connector: 33482-8601
Service Connector: Service by Harness - See Part Catalog
Description: 16 <p01>-Way M 1.5 MX Series, Sealed(BK)

Terminal Part Information

Terminal Type ID	Terminated Lead	Diagnostic Test Probe	Terminal Removal Tool
I	19368973	J-35616-14 (GN)	J-38125-217
II	19368973	J-35616-2A (GY)	J-38125-217
III	Not required	J-35616-3 (GY)	No Tool Required

X103 Chassis Wiring Harness to Power Steering Wiring Harness

Pin	Size	Color	Circuit	Terminal Type ID	Option	Function	Pin	Size	Color	Circuit	Terminal Type ID	Option
1	0.75	VT / BK	2139	II	—	Run/Crank Ignition 1 Voltage	1	0.75	VT / BK	2139	III	—
2	0.5	WH	2501	I	—	High Speed GMLAN Serial Data [-] 1	2	0.5	WH	2501	III	—
3	0.5	BU	2500	I	—	High Speed GMLAN Serial Data [+] 1	3	0.5	BU	2500	III	—
4	0.5	WH	6106	I	—	High Speed GMLAN Serial Data [-] 2	4	0.5	WH	6106	III	—
5	0.5	BU / YE	6105	I	—	High Speed GMLAN Serial Data [+] 2	5	0.5	BU / YE	6105	III	—
6	0.5	GY / BK	1570	I	—	Front Axle Actuator Control	6	0.5	GY / BK	1570	III	—
7	0.5	RD / BN	5940	I	—	Battery Positive Voltage	7	0.5	RD / BN	5940	III	—
8	0.5	WH / BU	5986	I	—	Serial Data Communication Enable	8	0.5	WH / BU	5986	III	—
9	0.5	WH	2501	I	—	High Speed GMLAN Serial Data [-] 1	9	0.5	WH	2501	III	—

X103 Chassis Wiring Harness to Power Steering Wiring Harness (cont'd)

Pin	Size	Color	Circuit	Terminal Type ID	Option	Function	Pin	Size	Color	Circuit	Terminal Type ID	Option
10	0.5	BU	2500	I	—	High Speed GMLAN Serial Data [+] 1	10	0.5	BU	2500	III	—
11	0.5	WH	6106	I	—	High Speed GMLAN Serial Data [-] 2	11	0.5	WH	6106	III	—
12	0.5	BU / YE	6105	I	—	High Speed GMLAN Serial Data [+] 2	12	0.5	BU / YE	6105	III	—
13	0.75	BK	1450	II	—	Ground	13	0.75	BK	1450	III	—
14	0.5	YE / WH	1695	I	—	4WD Locked Range Indicator Control	14	0.5	YE / WH	1695	III	—
15	1	VT / WH	7256	II	—	Front Differential Lock Actuator Control	15	1	VT / WH	7256	III	—
16	1	WH / BK	7254	II	—	Front Differential Lock Actuator Low Control	16	1	WH / BK	7254	III	—

X104 Forward Lamp Wiring Harness to Forward Lamp Extension Wiring Harness

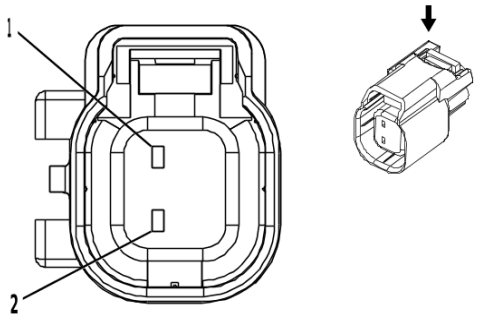

3653749

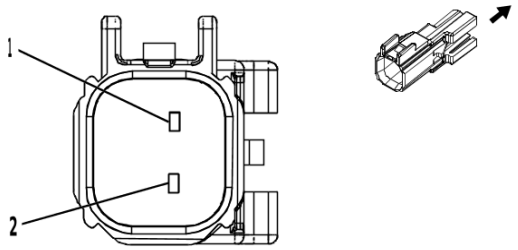

3271068

Connector Part Information

Harness Type: Forward Lamp Wiring Harness
OEM Connector: 34062-0038
Service Connector: 19329741
Description: 2 <p01>-Way F 1.5 Series, Sealed(BK)

Connector Part Information

Harness Type: Forward Lamp Extension Wiring Harness
OEM Connector: 34675-0001
Service Connector: Service by Harness - See Part Catalog
Description: 2 <p01>-Way M 1.5 Series, Sealed(BK)

Terminal Part Information

Terminal Type ID	Terminated Lead	Diagnostic Test Probe	Terminal Removal Tool
I	Not required	J-35616-14 (GN)	No Tool Required
II	Not required	J-35616-3 (GY)	No Tool Required

X104 Forward Lamp Wiring Harness to Forward Lamp Extension Wiring Harness

Pin	Size	Color	Circuit	Terminal Type ID	Option	Function	Pin	Size	Color	Circuit	Terminal Type ID	Option
1	0.5	YE / BK	3000	I	—	Coolant Temperature Sensor 2 Signal	1	0.5	YE / BK	3000	II	—
2	0.5	BK / BU	6813	I	—	Coolant Temperature Sensor 2 Low Reference	2	0.5	BK / BU	6813	II	—

X105 Forward Lamp Wiring Harness to Engine Extension Wiring Harness

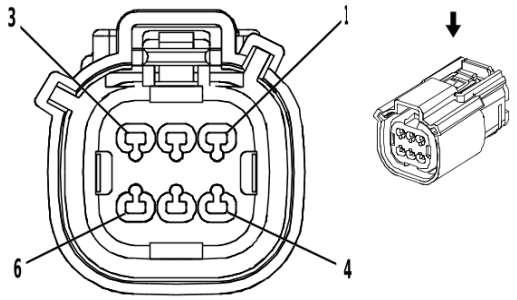

3225042

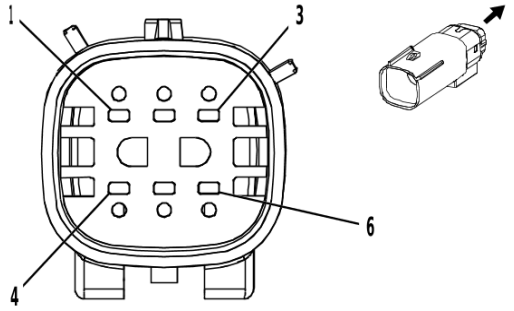

3225221

Connector Part Information

Harness Type: Forward Lamp Wiring Harness
OEM Connector: 33472-0607
Service Connector: 19301527
Description: 6 <p01>-Way F 1.5 MX Series, Sealed(GY)

Connector Part Information

Harness Type: Engine Extension Wiring Harness
OEM Connector: Not Available
Service Connector: Service by Harness - See Part Catalog
Description: 6 <p01>-Way M (GY)

Terminal Part Information

Terminal Type ID	Terminated Lead	Diagnostic Test Probe	Terminal Removal Tool
I	Not required	J-35616-14 (GN)	No Tool Required
II	Not required	J-35616-2A (GY)	No Tool Required
III	Not required	No Tool Required	No Tool Required

X105 Forward Lamp Wiring Harness to Engine Extension Wiring Harness

Pin	Size	Color	Circuit	Terminal Type ID	Option	Function	Pin	Size	Color	Circuit	Terminal Type ID	Option
1	0.75	BK	1250	II	—	Ground	1	0.75	BK	1250	III	—
2	0.5	WH / VT	4333	I	—	Active Grille Air Shutter Actuator Control	2	0.5	WH / VT	4333	III	—
3	0.5	GY	3890	I	—	Active Grille Air Shutter Control 2	3	0.5	GY	3890	III	—
4	—	—	—	—	—	Not Occu-pied	4	—	—	—	—	—
5	0.5	BU / GY	636	I	—	Ambient Air Temperature Sensor Sig-nal	5	0.5	BU / GY	636	III	—
6	0.5	BK / BU	61	I	—	Ambient Air Temperature Sensor Low Reference	6	0.5	BK / BU	61	III	—

X106 Body Wiring Harness to Chassis Wiring Harness

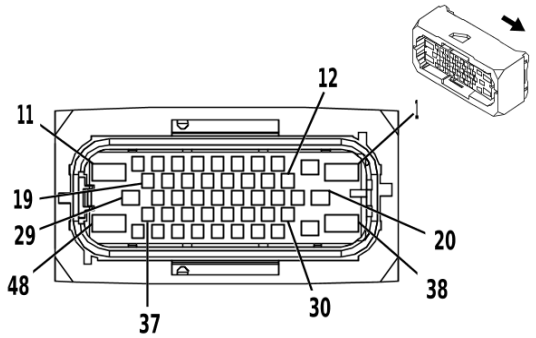

3240124

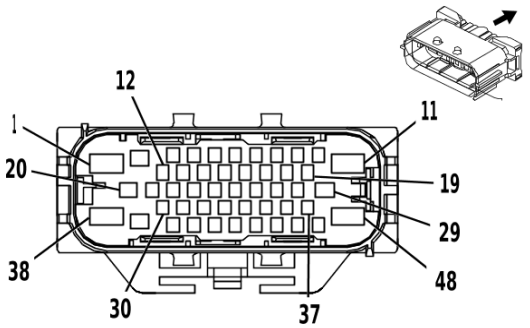

3240125

Connector Part Information

Harness Type: Body Wiring Harness

OEM Connector: 15509587

Service Connector: 19329480

Description: 48 <p01>-Way F 1.5 MCP, 2.8 JPT, 6.3 MCP Series, Sealed(GY)

Connector Part Information

Harness Type: Chassis Wiring Harness

OEM Connector: 15513437

Service Connector: 19370346

Description: 48 <p01>-Way M 1.6, 2.8, 5.8 Series, Sealed(GY)

Terminal Part Information

Terminal Type ID	Terminated Lead	Diagnostic Test Probe	Terminal Removal Tool
I	13580821	J-35616-4A (PU)	J-38125-36
II	19369235	J-35616-14 (GN)	J-38125-215A
III	85158596	J-35616-42 (BU)	J-38125-556
IV	19301750	J-35616-43 (RD)	J-38125-557
V	19303873	J-35616-3 (GY)	EL-38125-560-A
VI	19303873	J-35616-3 (GY)	J-38125-560
VII	84992391	J-35616-5 (PU)	J-38125-36

X106 Body Wiring Harness to Chassis Wiring Harness

Pin	Size	Color	Circuit	Terminal Type ID	Option	Function	Pin	Size	Color	Circuit	Terminal Type ID	Option
1	4	RD / GY	1042	III	—	Battery Positive Voltage	1	4	RD / GY	1042	IV	—
2	2.5	RD / YE	442	I	—	Battery Positive Voltage	2	2.5	RD / YE	442	VII	—
3	0.75	GY	1624	II	—	Trailer Backup Lamp Control	3	0.75	GY	1624	V	—
4	0.75	GN	1619	II	—	Right Rear Trailer Stop/ Turn Lamp Control	4	0.75	GN	1619	V	—
5	0.75	YE	1618	II	—	Left Rear Trailer Stop/ Turn Lamp Control	5	0.75	YE	1618	V	—
6	0.5	BN / GY	2609	II	—	Right Rear Park Lamp Control	6	1.5	BN / GY	2609	VI	—
7	0.75	GN / WH	24	II	—	Backup Lamp Control	7	0.5	GN / WH	24	V	—

X106 Body Wiring Harness to Chassis Wiring Harness (cont'd)

Pin	Size	Color	Circuit	Terminal Type ID	Option	Function	Pin	Size	Color	Circuit	Terminal Type ID	Option
8	0.75	GN / YE	6846	II	—	Rear License Plate Lamp Control	8	0.5	GN / YE	6846	V	—
9	0.5 0.75	VT / YE GN / BK	5985 7633	II II	LCV/ LGZ LWN	Accessory Wake-Up Serial Data Trailer Brake Control User Gain Signal	9	0.5 0.5	VT / YE GN / BK	5985 7633	V V	LCV/ LGZ LWN
10	0.75	VT / BK	2139	II	—	Run/Crank Ignition 1 Voltage	10	0.75	VT / BK	2139	V	—
11	0.75	BK	1450	III	—	Ground	11	0.75	BK	1450	IV	—
12	1.5	GY / YE	7542	II	—	Left Rear Stop Lamp Control	12	1.5	GY / YE	7542	VI	—
13	0.5	VT / GN	1739	II	—	Run/Crank Ignition 1 Voltage	13	0.5	VT / GN	1739	V	—
14	0.5	BN / BU	2509	II	—	Left Rear Park Lamp Control	14	1.5	BN / BU	2509	VI	—
15	1.5	WH / YE	7541	II	—	Right Rear Stop Lamp Control	15	1.5	WH / YE	7541	VI	—
16	0.75	VT / GY	139	II	—	Run/Crank Ignition 1 Voltage	16	0.75	VT / GY	139	V	—
17	0.75 0.5	VT / GY BU / RD	139 7632	II II	LGZ- BPH LWN	Run/Crank Ignition 1 Voltage Trailer Brake Control Switch 5V Reference	17	0.75 0.5	VT / GY BU / RD	139 7632	V V	LGZ- BPH LWN
18	0.5	YE	7635	II	—	Trailer Brake Control Manual Apply Signal	18	0.5	YE	7635	V	—
19	0.5	WH	2501	II	—	High Speed GMLAN Serial Data [-] 1	19	0.5	WH	2501	V	—
20	2.5	RD / VT	1940	I	—	Battery Positive Voltage	20	2.5	RD / VT	1940	VII	—
21	0.5	RD / BN	5940	II	—	Battery Positive Voltage	21	0.5	RD / BN	5940	V	—
22	0.5	BK / GN	6281	II	—	Fuel Level Sensor Low Reference	22	0.5	BK / GN	6281	V	—
23	0.5 0.5	BU / WH BU / VT	890 1589	II II	LCV/ LGZ LWN	Fuel Tank Pressure Sensor Signal Primary Fuel Level Sensor Signal	23	0.5 0.5	BU / WH BU / VT	890 1589	V V	LCV/ LGZ LWN

X106 Body Wiring Harness to Chassis Wiring Harness (cont'd)

Pin	Size	Color	Circuit	Terminal Type ID	Option	Function	Pin	Size	Color	Circuit	Terminal Type ID	Option
24	0.5 0.5	YE / RD RD / GN	2709 2440	II II	LCV/ LGZ LWN	Fuel Tank Pressure Sensor 5V Reference Battery Positive Voltage	24	0.5 0.5	YE / RD RD / GN	2709 2440	V V	LCV/ LGZ LWN
25	0.5 0.5 0.5	BN BK / GN BN	7634 6281 6305	II II II	JL1 LCV LGZ	Trailer Brake Control Redundant Manual Apply Signal Fuel Level Sensor Low Reference Brake Vacuum Switch Signal	25	0.5 0.5 0.5	BN BK / GN BN	7634 6281 6305	V V V	JL1 LCV LGZ
26	0.5	WH / BU	5986	II	—	Serial Data Communication Enable	26	0.5	WH / BU	5986	V	—
27	0.5 0.5	GN / GY BK / BN	465 7631	II II	LCV/ LGZ LWN	Fuel Pump Primary Relay Control Trailer Brake Control Switch Low Reference	27	0.5 0.5	GN / GY BK / BN	465 7631	V V	LCV/ LGZ LWN
28	0.5	BU	2500	II	—	High Speed GMLAN Serial Data [+] 1	28	0.5	BU	2500	V	—
29	2.5	RD / GN	242	I	—	Battery Positive Voltage	29	2.5	RD / GN	242	VII	—
30	0.5	GY / BK	1570	II	—	Front Axle Actuator Control	30	0.5	GY / BK	1570	V	—
31	0.5	YE / WH	1695	II	—	4WD Locked Range Indicator Control	31	0.5	YE / WH	1695	V	—
32	0.5 0.5	BU / VT VT / BK	1589 7121	II II	LCV/ LGZ LWN	Primary Fuel Level Sensor Signal Rear Axle Differential Lock Low Reference	32	0.5 0.5	BU / VT VT / BK	1589 7121	V V	LCV/ LGZ LWN
33	0.5 0.5	VT / YE RD / GN	5985 2440	II II	JL1 LGZ/ LCV	Accessory Wake-Up Serial Data Battery Positive Voltage	33	0.5 0.5	VT / YE RD / GN	5985 2440	V V	JL1 LGZ/ LCV
34	0.5 0.5	WH BU / WH	1310 7120	II II	LGZ/ LCV LWN	EVAP Vent Solenoid Valve Control Rear Axle Differential Lock Control	34	0.5 0.5	WH BU / WH	1310 7120	V V	LGZ/ LCV LWN

X106 Body Wiring Harness to Chassis Wiring Harness (cont'd)

Pin	Size	Color	Circuit	Terminal Type ID	Option	Function	Pin	Size	Color	Circuit	Terminal Type ID	Option
35	0.5 0.5	BU / BK GN / BK	7493 7118	II II	LCV/ LGZ LWN	High Speed GMLAN Serial Data [+] 3 Front Axle Differential Lock Low Reference	35	0.5 0.5	BU / BK GN / BK	7493 7118	V V	LCV/ LGZ LWN
36	0.5 0.5	WH BU / BK	7494 7116	II II	LCV/ LGZ LWN	High Speed GMLAN Serial Data [-] 3 Front Axle Differential Lock Control	36	0.5 0.5	WH BU / BK	7494 7116	V V	LCV/ LGZ LWN
37	0.5	BU / YE	6105	II	—	High Speed GMLAN Serial Data [+] 2	37	0.5	BU / YE	6105	V	—
38	4	OG	742	III	—	Battery Positive Voltage	38	4	OG	742	IV	—
39	1.5	BN	2109	I	—	Trailer Park Lamp Control	39	1.5	BN	2109	VII	—
40	0.5	GN	6974	II	—	Rearview Camera Low Reference	40	0.5	GN	6974	V	—
41	0.5	GY / YE	6972	II	—	Rearview Camera Signal [+]	41	0.5	GY / YE	6972	V	—
42	0.5	WH / BU	6973	II	—	Rearview Camera Signal [-]	42	0.5	WH / BU	6973	V	—
43	0.5 0.5	BK / YE VT / GY	7447 7117	II II	LCV/ LGZ LWN	Fuel Pressure Sensor Low Reference Front Axle Differential Lock Indicator Control	43	0.5 0.5	BK / YE VT / GY	7447 7117	V V	LCV/ LGZ LWN
44	0.5 0.5	BU / WH BK / YE	7446 7259	II II	LCV/ LGZ LWN	Fuel Pressure Sensor Signal Axle Differential Lock Switch Low Reference	44	0.5 0.5	BU / WH BK / YE	7446 7259	V V	LCV/ LGZ LWN
45	0.5 0.5	BN / RD YE / GN	7445 7122	II II	LCV/ LGZ LWN	Fuel Line Pressure Sensor 5V Reference Axle Differential Lock Switch Signal	45	0.5 0.5	BN / RD YE / GN	7445 7122	V V	LCV/ LGZ LWN
46	0.5	WH	6106	II	—	High Speed GMLAN Serial Data [-] 2	46	0.5	WH	6106	V	—
47	0.75 0.5	WH / VT YE	1430 7115	II II	- BPH LWN	Exterior Courtesy Lamp Control Rear Axle Differential Lock Indicator Control	47	0.75 0.5	WH / VT YE	1430 7115	V V	- BPH LWN

X106 Body Wiring Harness to Chassis Wiring Harness (cont'd)

Pin	Size	Color	Circuit	Terminal Type ID	Option	Function	Pin	Size	Color	Circuit	Terminal Type ID	Option
48	2.5 2.5 2.5	RD / VT GY BU	1940 120 47	III III III	LGZ- BPH LWN Z82	Battery Positive Voltage Fuel Pump Control Trailer Auxiliary Control	48	2.5 2.5 2.5	RD / VT GY BU	1940 120 47	IV IV IV	LGZ- BPH LWN Z82

X107 Engine Wiring Harness to Chassis Wiring Harness

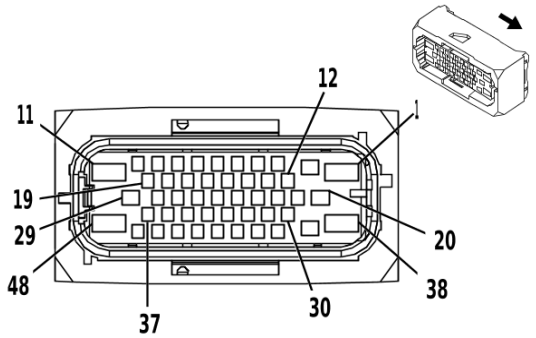

3931602

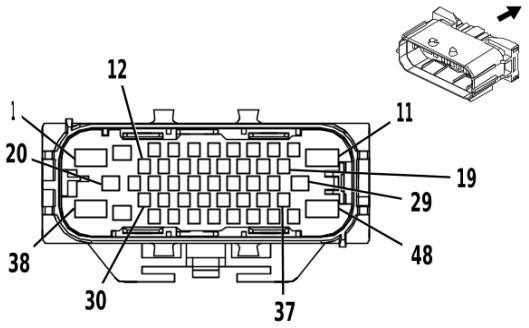

3924401

Connector Part Information

Harness Type: Engine Wiring Harness

OEM Connector: 15509585

Service Connector: 19329744

Description: 48 <p01>-Way F 1.5 MCP, 2.8 JPT, 6.3 MCP Series, Sealed(BK)

Connector Part Information

Harness Type: Chassis Wiring Harness

OEM Connector: 15513438

Service Connector: 19356277

Description: 48 <p01>-Way M 1.6, 2.8, 5.8 Series, Sealed(BK)

Terminal Part Information

Terminal Type ID	Terminated Lead	Diagnostic Test Probe	Terminal Removal Tool
I	13580821	J-35616-4A (PU)	J-38125-36
II	19369235	J-35616-14 (GN)	J-38125-215A
III	85158596	J-35616-42 (BU)	J-38125-556
IV	13575376	J-35616-43 (RD)	J-38125-557
V	19303873	J-35616-3 (GY)	EL-38125-560-A
VI	19303873	J-35616-3 (GY)	J-38125-560
VII	84992391	J-35616-5 (PU)	J-38125-215A
VIII	84992391	J-35616-5 (PU)	J-38125-36

X107 Engine Wiring Harness to Chassis Wiring Harness

Pin	Size	Color	Circuit	Terminal Type ID	Option	Function	Pin	Size	Color	Circuit	Terminal Type ID	Option
1	1.5	VT / BU	3674	III	—	NOx Sensor 1 Control	1	1.5	VT / BU	3674	IV	—
2	0.5	BN / BU	2926	I	—	Exhaust Aftertreatment Fuel Injector High Control	2	0.5	BN / BU	2926	VII	—
3	0.5	VT / BN	2927	II	—	Exhaust Aftertreatment Fuel Injector Low Control	3	0.5	VT / BN	2927	V	—
4	—	—	—	—	—	Not Occupied	4	—	—	—	—	—
5	0.75	VT / GY	139	II	—	Run/Crank Ignition 1 Voltage	5	0.75	VT / GY	139	V	—

X107 Engine Wiring Harness to Chassis Wiring Harness (cont'd)

Pin	Size	Color	Circuit	Terminal Type ID	Option	Function	Pin	Size	Color	Circuit	Terminal Type ID	Option
6	0.5	BU / YE	6861	II	—	Water In Fuel Sensor Signal	6	0.5	BU / YE	6861	V	—
7	1.5	VT / BU	3674	II	—	NOx Sensor 1 Control	7	1.5	VT / BU	3674	VI	—
8 - 9	—	—	—	—	—	Not Occupied	8 - 9	—	—	—	—	—
10	0.5	WH / RD	6054	II	—	Exhaust Pressure Sensor 1 5V Reference	10	0.5	WH / RD	6054	V	—
11	0.5	BK / YE	6055	III	—	Exhaust Pressure Sensor 1 Low Reference	11	0.5	BK / YE	6055	IV	—
12	0.5	BU	6053	II	—	Exhaust Pressure Sensor 1 Signal	12	0.5	BU	6053	V	—
13	0.5	VT / GN	4320	II	—	Powertrain Sensor Bus Enable	13	0.5	VT / GN	4320	V	—
14	0.5	BK / BU	6783	II	—	Exhaust Gas Temperature Sensor 2 Low Reference	14	0.5	BK / BU	6783	V	—
15	0.5	BU / GN	5377	II	—	Exhaust Gas Temperature Sensor 2 Signal	15	0.5	BU / GN	5377	V	—
16 - 17	—	—	—	—	—	Not Occupied	16 - 17	—	—	—	—	—
18	0.5	BK / GN	3657	II	—	Exhaust Gas Temperature Sensor 3 Low Reference	18	0.5	BK / GN	3657	V	—
19	0.5	GY / GN	5378	II	—	Exhaust Gas Temperature Sensor 3 Signal	19	0.5	GY / GN	5378	V	—
20	0.5	BK / GY	3659	I	—	Exhaust Gas Temperature Sensor 4 Low Reference	20	0.5	BK / GY	3659	VII	—
21	0.5	VT / BN	3658	II	—	Exhaust Gas Temperature Sensor 4 Signal	21	0.5	VT / BN	3658	V	—
22	0.5	BK / VT	3661	II	—	Exhaust Gas Temperature Sensor 5 Low Reference	22	0.5	BK / VT	3661	V	—
23	0.5	BU / GY	3660	II	—	Exhaust Gas Temperature Sensor 5 Signal	23	0.5	BU / GY	3660	V	—

X107 Engine Wiring Harness to Chassis Wiring Harness (cont'd)

Pin	Size	Color	Circuit	Terminal Type ID	Option	Function	Pin	Size	Color	Circuit	Terminal Type ID	Option
24 - 27	—	—	—	—	—	Not Occupied	24 - 27	—	—	—	—	—
28	0.5	BU / BN	4498	II	—	High Speed GMLAN Serial Data [+] 7	28	0.5	BU / BN	4498	V	—
29	0.5	WH	4499	I	—	High Speed GMLAN Serial Data [-] 7	29	0.5	WH	4499	VII	—
30	0.5	BN / GY	7072	II	—	Fuel Temperature Sensor 1 Signal	30	0.5	BN / GY	7072	V	—
31	0.5	BN / WH	7073	II	—	Fuel Temperature Sensor 1 Low Reference	31	0.5	BN / WH	7073	V	—
32 - 37	—	—	—	—	—	Not Occupied	32 - 37	—	—	—	—	—
38	4	BU	3921	III	—	Diesel Exhaust Fluid Heater Control 1	38	4	BU	3921	IV	—
39	2.5	BU / GN	7071	I	—	Fuel Heater Control	39	2.5	BU / GN	7071	VIII	—
40 - 48	—	—	—	—	—	Not Occupied	40 - 48	—	—	—	—	—

X108 Engine Wiring Harness to Cooling Fan Wiring Harness

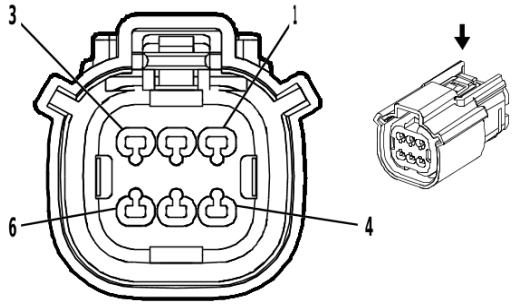

1986157

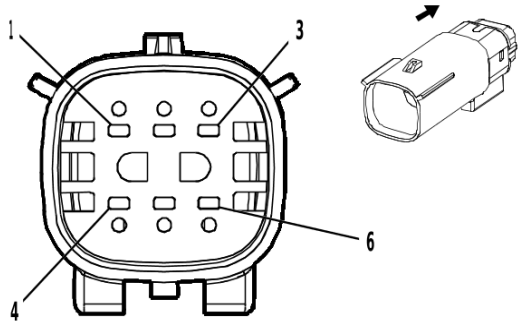

1986159

Connector Part Information

Harness Type: Engine Wiring Harness
OEM Connector: 33472-0606
Service Connector: 13578533
Description: 6 <p01>-Way F 1.5 MX Series, Sealed(BK)

Connector Part Information

Harness Type: Cooling Fan Wiring Harness
OEM Connector: Not Available
Service Connector: Service by Harness - See Part Catalog
Description: 6 <p01>-Way M (BK)

Terminal Part Information

Terminal Type ID	Terminated Lead	Diagnostic Test Probe	Terminal Removal Tool
I	Not required	J-35616-14 (GN)	No Tool Required
II	Not required	No Tool Required	No Tool Required

X108 Engine Wiring Harness to Cooling Fan Wiring Harness

Pin	Size	Color	Circuit	Terminal Type ID	Option	Function	Pin	Size	Color	Circuit	Terminal Type ID	Option
1	—	—	—	—	—	Not Occupied	1	—	—	—	—	—
2	0.5	WH	2368	I	—	Cooling Fan Control Signal	2	0.5	WH	2368	II	—
3	0.5	GY / RD	2365	I	—	Cooling Fan Speed Sensor 5V Reference	3	0.5	GY / RD	2365	II	—
4	0.5	BU / VT	2364	I	—	Cooling Fan Speed Signal	4	0.5	BU / VT	2364	II	—
5	0.5	BK / BN	6141	I	—	Cooling Fan Speed Sensor Low Reference	5	0.5	BK / BN	6141	II	—
6	0.5	BK	550	I	—	Ground	6	0.5	BK	550	II	—

X109 Engine Wiring Harness to Body Wiring Harness

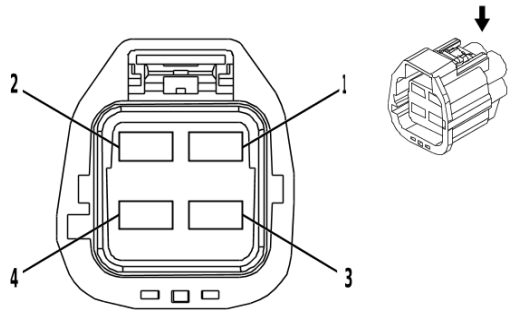

2852121

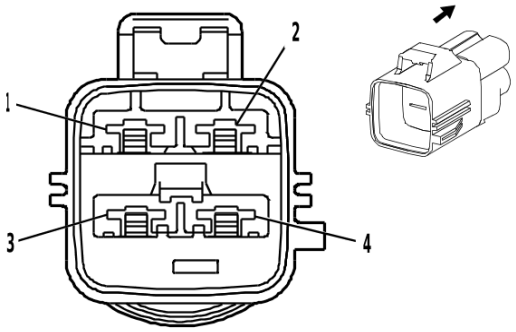

1853524

Connector Part Information

Harness Type: Engine Wiring Harness
OEM Connector: 7283-3108-10
Service Connector: 85522473
Description: 4 <p01>-Way F 6.3 Series, Sealed(D-GY)

Connector Part Information

Harness Type: Forward Lamp Wiring Harness
OEM Connector: 7288-3029-10
Service Connector: 19371198
Description: 4 <p01>-Way M 6.3 Series, Sealed(GY)

Terminal Part Information

Terminal Type ID	Terminated Lead	Diagnostic Test Probe	Terminal Removal Tool
I	Not required	J-35616-42 (RD)	No Tool Required
II	Not required	J-35616-43 (RD)	No Tool Required

X109 Engine Wiring Harness to Body Wiring Harness

Pin	Size	Color	Circuit	Terminal Type ID	Option	Function	Pin	Size	Color	Circuit	Terminal Type ID	Option
1	6	BN / BU	104	I	—	Glow Plug Control	1	4	BN / BU	104	II	—
2	4	BU	3921	I	—	Diesel Exhaust Fluid Heater Control 1	2	4	BU	3921	II	—
3	2.5	BU / GN	7071	I	—	Fuel Heater Control	3	2.5	BU / GN	7071	II	—
4	—	—	—	—	—	Not Occupied	4	—	—	—	—	—

X110 Forward Lamp Wiring Harness to Headlamp Assembly - Left

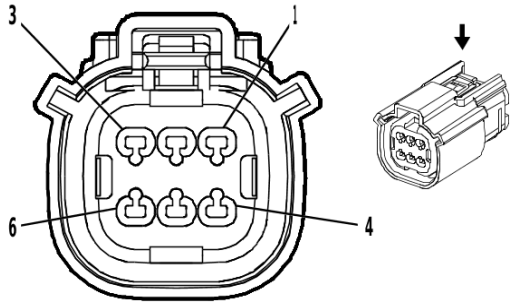

1986157

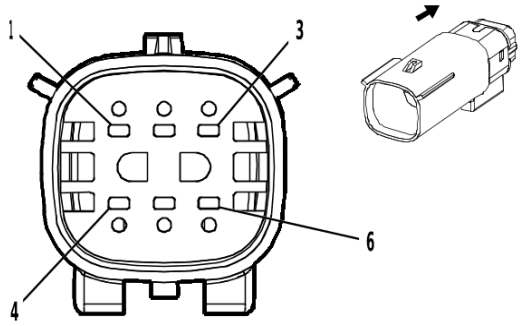

1986159

Connector Part Information

Harness Type: Forward Lamp Wiring Harness
OEM Connector: 33472-0606
Service Connector: 13578533
Description: 6 <p01>-Way F 1.5 MX Series, Sealed(BK)

Connector Part Information

Harness Type: Headlamp Assembly - Left
OEM Connector: Not Available
Service Connector: Service by Harness - See Part Catalog
Description: 6 <p01>-Way M (BK)

Terminal Part Information

Terminal Type ID	Terminated Lead	Diagnostic Test Probe	Terminal Removal Tool
I	Not required	J-35616-14 (GN)	No Tool Required
II	Not required	J-35616-2A (GY)	No Tool Required
III	Not required	No Tool Required	No Tool Required

X110 Forward Lamp Wiring Harness to Headlamp Assembly - Left

Pin	Size	Color	Circuit	Terminal Type ID	Option	Function	Pin	Size	Color	Circuit	Terminal Type ID	Option
1	1.5	BK	1150	I	—	Ground	1	1.5	BK	1150	III	—
2	1.5	YE	712	I	—	Left Head-lamp Low Beam Con-trol	2	1.5	BK / <p01->	712	III	—
3	0.5	WH	711	I	—	Left Head-lamp High Beam Con-trol	3	0.5	BK / <p01->	711	III	—
4	0.75	VT / GY	709	II	—	Left Park Lamp Control	4	0.75	BK / <p01->	709	III	—
5	0.75	BU / WH	1314	II	—	Left Front Turn Signal Lamp Control	5	0.75	YE / <p01->	1314	III	—
6	—	—	—	—	—	Not Occu-pied	6	—	—	—	—	—

X111 Engine Wiring Harness to Diesel Glow Plug Wiring Harness (LWN)

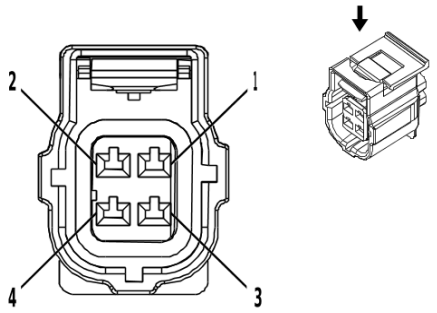

2716365

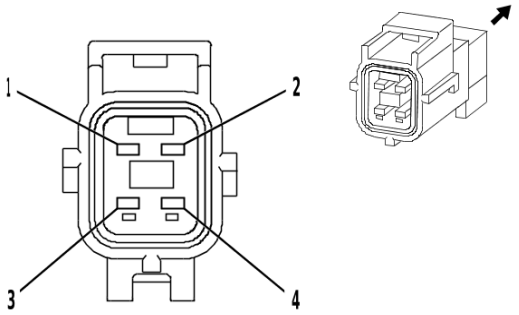

1243485

Connector Part Information

Harness Type: Engine Wiring Harness
OEM Connector: 184248-1
Service Connector: 13587793
Description: 4 <p01>-Way F SSC Series(BK)

Connector Part Information

Harness Type: Diesel Glow Plug Wiring Harness
OEM Connector: 184346-1
Service Connector: Service by Harness - See Part Catalog
Description: 4 <p01>-Way M Sealed Sensor Connector System(BK)

Terminal Part Information

Terminal Type ID	Terminated Lead	Diagnostic Test Probe	Terminal Removal Tool
I	Not required	J-35616-33 (YE)	No Tool Required
II	Not required	J-35616-34 (YE)	No Tool Required

X111 Engine Wiring Harness to Diesel Glow Plug Wiring Harness (LWN)

Pin	Size	Color	Circuit	Terminal Type ID	Option	Function	Pin	Size	Color	Circuit	Terminal Type ID	Option
1	2	GY / BU	1581	I	—	Glow Plug 1 Control	1	1.5	GN / BK	1581	II	—
2	2	GY / BN	1582	I	—	Glow Plug 2 Control	2	1.5	RD / BK	1582	II	—
3	2	GY / GN	1583	I	—	Glow Plug 3 Control	3	1.5	WH / BK	1583	II	—
4	2	GY / YE	1584	I	—	Glow Plug 4 Control	4	1.5	BK / <p01->	1584	II	—

X113 Engine Wiring Harness to Oil Pump Flow Control Solenoid Valve Harness

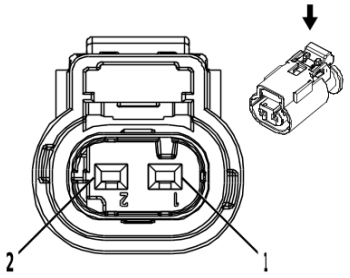

2717066

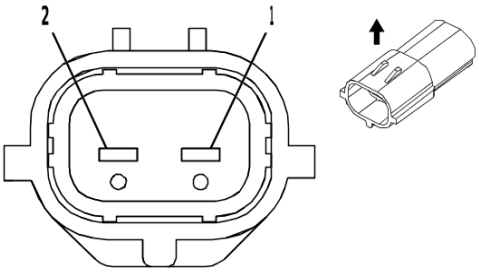

2684367

Connector Part Information

Harness Type: Engine Wiring Harness

OEM Connector: 10010337

Service Connector: 13587326

Description: 2 <p01>-Way F 1.2 Multilock Series, Sealed(BK)

Connector Part Information

Harness Type: Oil Pump Flow Control Solenoid Valve Harness

OEM Connector: Not Available

Service Connector: Service by Harness - See Part Catalog

Description: 2 <p01>-Way M (BK)

Terminal Part Information

Terminal Type ID	Terminated Lead	Diagnostic Test Probe	Terminal Removal Tool
I	Not required	J-35616-16 (LT GN)	No Tool Required
II	Not required	J-35616-17 (LT GN)	No Tool Required

X113 Engine Wiring Harness to Oil Pump Flow Control Solenoid Valve Harness

Pin	Size	Color	Circuit	Terminal Type ID	Option	Function	Pin	Size	Color	Circuit	Terminal Type ID	Option
1	0.5	VT / BU	5293	I	—	Powertrain Main Relay Fused Supply Voltage 4	1	0.5	VT / BU	5293	II	—
2	0.5	BU	179	I	—	Engine Oil Pump Control	2	0.5	BU	179	II	—

X114 Engine Wiring Harness to Engine Coolant Temperature Sensor Harness

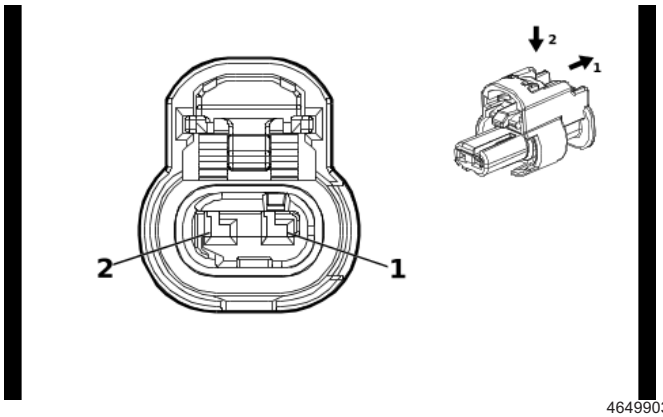

4649903

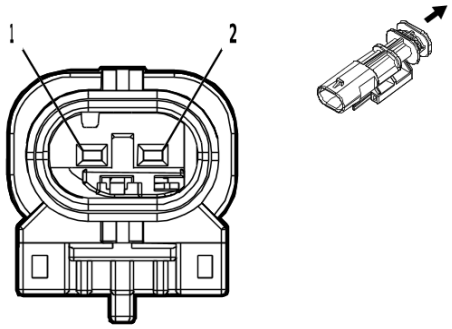

4569729

Connector Part Information

Harness Type: Engine Wiring Harness
OEM Connector: 1-2296694-1
Service Connector: 85519075
Description: 2 <p01>-Way F 1.2 MCON Series, Sealed(BK)

Connector Part Information

Harness Type: Engine Coolant Temperature Sensor Harness
OEM Connector: Not Available
Service Connector: Service by Harness - See Part Catalog
Description: 2 <p01>-Way M (BK)

Terminal Part Information

Terminal Type ID	Terminated Lead	Diagnostic Test Probe	Terminal Removal Tool
I	Not required	J-35616-16 (LT GN)	No Tool Required
II	Not required	J-35616-17 (LT GN)	No Tool Required

X114 Engine Wiring Harness to Engine Coolant Temperature Sensor Harness

Pin	Size	Color	Circuit	Terminal Type ID	Option	Function	Pin	Size	Color	Circuit	Terminal Type ID	Option
1	0.5	BU	410	I	—	Engine Coolant Temperature Sensor Signal	1	0.5	BU	410	II	—
2	0.5	BK / BN	2761	I	—	Coolant Temperature Sensor Low Reference	2	0.5	BK / YE	548	II	—

X119 Engine Wiring Harness to Body Wiring Harness (LGZ)

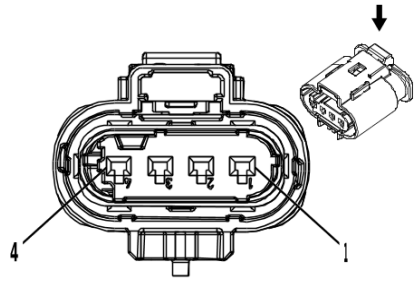

2717079

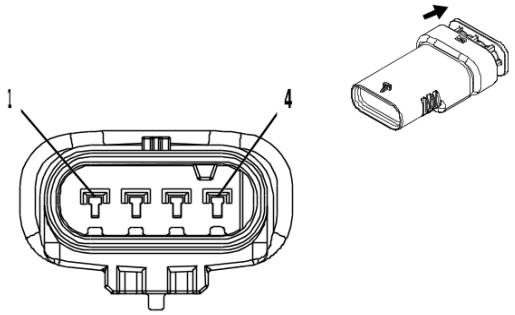

4560843

Connector Part Information

Harness Type: Engine Wiring Harness

OEM Connector: 10010346

Service Connector: 13587299

Description: 4 <p01>-Way F 1.2 Multilock Series, Sealed(BK)

Connector Part Information

Harness Type: Body Wiring Harness

OEM Connector: 10013906

Service Connector: 19354931

Description: 4 <p01>-Way M 1.2 Multilock Series, Sealed(GY)

Terminal Part Information

Terminal Type ID	Terminated Lead	Diagnostic Test Probe	Terminal Removal Tool
I	Not required	J-35616-16 (LT GN)	No Tool Required
II	Not required	J-35616-17 (LT GN)	No Tool Required

X119 Engine Wiring Harness to Body Wiring Harness (LGZ)

Pin	Size	Color	Circuit	Terminal Type ID	Option	Function	Pin	Size	Color	Circuit	Terminal Type ID	Option
1	0.5	WH / RD	7477	I	—	Gear Position Sensor 5V Reference	1	0.5	WH / RD	7477	II	—
2	0.5	WH / GN	7479	I	—	Rotary Position Sensor Signal	2	0.5	WH / GN	7479	II	—
3	0.5	YE / BK	7478	I	—	Gear Position Sensor Low Reference	3	0.5	YE / BK	7478	II	—
4	—	—	—	—	—	Not Occupied	4	—	—	—	—	—

X120 Forward Lamp Wiring Harness to Headlamp Assembly - Right

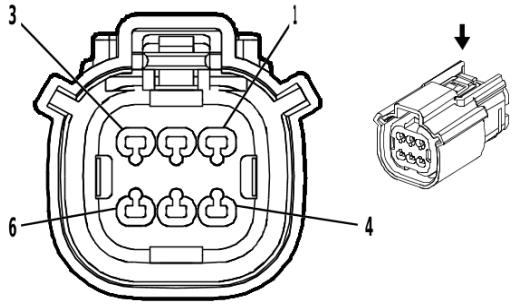

1986157

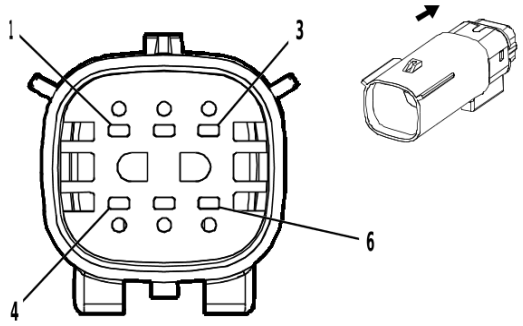

1986159

Connector Part Information

Harness Type: Forward Lamp Wiring Harness
OEM Connector: 33472-0606
Service Connector: 13578533
Description: 6 <p01>-Way F 1.5 MX Series, Sealed(BK)

Connector Part Information

Harness Type: Headlamp Assembly - Right
OEM Connector: Not Available
Service Connector: Service by Harness - See Part Catalog
Description: 6 <p01>-Way M (BK)

Terminal Part Information

Terminal Type ID	Terminated Lead	Diagnostic Test Probe	Terminal Removal Tool
I	Not required	J-35616-14 (GN)	No Tool Required
II	Not required	J-35616-2A (GY)	No Tool Required
III	Not required	No Tool Required	No Tool Required

X120 Forward Lamp Wiring Harness to Headlamp Assembly - Right

Pin	Size	Color	Circuit	Terminal Type ID	Option	Function	Pin	Size	Color	Circuit	Terminal Type ID	Option
1	1.5	BK	1250	I	—	Ground	1	1.5	BK	1250	III	—
2	1.5	YE	312	I	—	Right Head-lamp Low Beam Con-trol	2	1.5	BK / <p01->	312	III	—
3	0.75	WH	311	II	—	Right Head-lamp High Beam Con-trol	3	0.75	BK / <p01->	311	III	—
4	0.75	GY / BN	309	II	—	Right Park Lamp Control	4	0.75	BK / <p01->	309	III	—
5	0.75	GN / VT	1315	II	—	Right Front Turn Signal Lamp Control	5	0.75	YE / <p01->	1315	III	—
6	—	—	—	—	—	Not Occu-pied	6	—	—	—	—	—

X122 Body Wiring Harness to Chassis Wiring Harness (LWN)

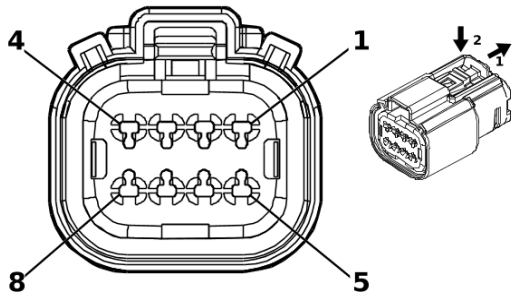

5201844

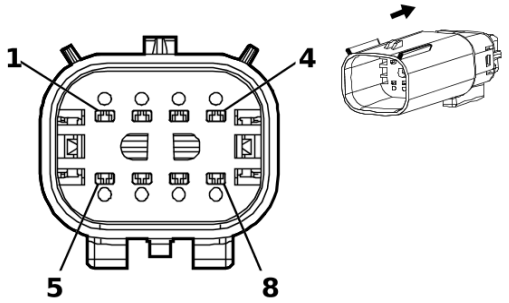

5210917

Connector Part Information

Harness Type: Body Wiring Harness
OEM Connector: 33472-4882
Service Connector: 84742541
Description: 8 <p01>-Way F 1.5 MX Series, Sealed(GY)

Connector Part Information

Harness Type: Chassis Wiring Harness
OEM Connector: 33482-4853
Service Connector: 84742542
Description: 8 <p01>-Way M 1.5 MX Series, Sealed(GY)

Terminal Part Information

Terminal Type ID	Terminated Lead	Diagnostic Test Probe	Terminal Removal Tool
I	Not required	J-35616-14 (GN)	No Tool Required
II	Not required	J-35616-2A (GY)	No Tool Required
III	Not required	J-35616-3 (GY)	No Tool Required

X122 Body Wiring Harness to Chassis Wiring Harness (LWN)

Pin	Size	Color	Circuit	Terminal Type ID	Option	Function	Pin	Size	Color	Circuit	Terminal Type ID	Option
1	1 0.75	GY / BK BN / WH	7253 2374	II II	LWN LWN-BPH	Rear Differential Lock Actuator Low Control Object Sensor Voltage Reference	1	1 0.75	GY / BK BN / WH	7253 2374	III III	LWN LWN- BPH
2	1 0.5	VT / BN YE	7258 2375	II I	LWN LWN-BPH	Rear Differential Lock Actuator Control Left Rear Outer Parking Assist Sensor Signal	2	1 0.5	VT / BN YE	7258 2375	III III	LWN LWN- BPH
3	0.5	YE / BU	2376	I	—	Left Rear Middle Parking Assist Sensor Signal	3	0.5	YE / BU	2376	III	—

X122 Body Wiring Harness to Chassis Wiring Harness (LWN) (cont'd)

Pin	Size	Color	Circuit	Terminal Type ID	Option	Function	Pin	Size	Color	Circuit	Terminal Type ID	Option
4	1 0.5	WH / BK YE / VT	7254 2378	II I	LWN LWN- BPH	Front Differential Lock Actuator Low Control Right Rear Outer Parking Assist Sensor Signal	4	1 0.5	WH / BK YE / VT	7254 2378	III III	LWN LWN- BPH
5	1 0.5	VT / WH YE / WH	7256 2377	II I	LWN LWN- BPH	Front Differential Lock Actuator Control Right Rear Middle Parking Assist Sensor Signal	5	1 0.5	VT / WH YE / WH	7256 2377	III III	LWN LWN- BPH
6	0.75 0.75	WH / VT BK / GY	1430 2379	II II	LWN+ BPH LWN- BPH	Exterior Courtesy Lamp Control Object Sensor Low Reference	6	0.75 0.75	WH / VT BK / GY	1430 2379	III III	LWN+ BPH LWN- BPH
7	0.75	GY	5911	II	—	Door Lock Actuator Lock Control 2	7	0.75	GY	5911	III	—
8	0.75	BN / YE	294	II	—	Door Lock Actuator Unlock Control	8	0.75	BN / YE	294	III	—

X124 Body Wiring Harness to Chassis Wiring Harness

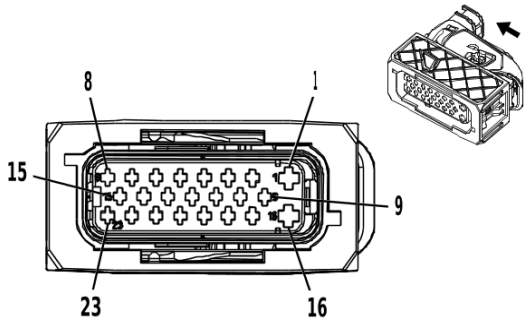

2906942

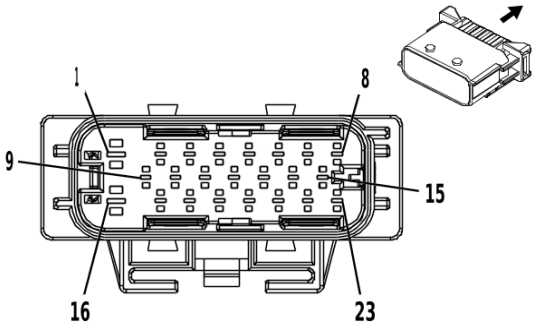

2906943

Connector Part Information

Harness Type: Body Wiring Harness

OEM Connector: 13674800

Service Connector: 19300480

Description: 23 <p01>-Way F 1.5 DSQ, 2.8 ATS Series, Sealed(BK)

Connector Part Information

Harness Type: Chassis Wiring Harness

OEM Connector: 13674783

Service Connector: 19303858

Description: 23 <p01>-Way M 1.5 DSQ, 2.8 ATS Series, Sealed(BK)

Terminal Part Information

Terminal Type ID	Terminated Lead	Diagnostic Test Probe	Terminal Removal Tool
I	13580834	J-35616-14 (GN)	J-38125-560
II	19353105	J-35616-4A (PU)	J-38125-36
III	13580827	J-35616-5 (PU)	J-38125-215A
IV	19368136	J-35616-3 (GY)	EL-38125-560-A
V	19368136	J-35616-3 (GY)	J-38125-560

X124 Body Wiring Harness to Chassis Wiring Harness

Pin	Size	Color	Circuit	Terminal Type ID	Option	Function	Pin	Size	Color	Circuit	Terminal Type ID	Option
1	1	VT / BN	7258	II	—	Rear Differential Lock Actuator Control	1	1	VT / BN	7258	III	—
2	—	—	—	—	—	Not Occupied	2	—	—	—	—	—
3	0.5	BU / WH	7120	I	—	Rear Axle Differential Lock Control	3	0.5	BU / WH	7120	IV	—
4	0.5 0.5	VT / BK BU / RD	7121 7632	I I	LGZ LGZ-BPH	Rear Axle Differential Lock Low Reference Trailer Brake Control Switch 5V Reference	4	0.5 0.5	VT / BK BU / RD	7121 7632	IV IV	LGZ LGZ- BPH
5	0.5	BK / BN	7631	I	—	Trailer Brake Control Switch Low Reference	5	0.5	BK / BN	7631	IV	—

X124 Body Wiring Harness to Chassis Wiring Harness (cont'd)

Pin	Size	Color	Circuit	Terminal Type ID	Option	Function	Pin	Size	Color	Circuit	Terminal Type ID	Option
6	0.5 0.5	BU / RD GN / BK	7632 7633	I I	LGZ+ BPH LGZ- BPH	Trailer Brake Control Switch 5V Reference Trailer Brake Control User Gain Signal	6	0.5 0.5	BU / RD GN / BK	7632 7633	IV IV	LGZ+ BPH LGZ- BPH
7	0.5 0.5	GN / BK BN	7633 7634	I I	LGZ+ BPH LGZ- BPH	Trailer Brake Control User Gain Signal Trailer Brake Control Redundant Manual Apply Signal	7	0.5 0.5	GN / BK BN	7633 7634	IV IV	LGZ+ BPH LGZ- BPH
8	0.5 0.5	BN VT / YE	7634 5985	I I	LGZ+ BPH LGZ- BPH	Trailer Brake Control Redundant Manual Apply Signal Accessory Wake-Up Serial Data	8	0.5 0.5	BN VT / YE	7634 5985	IV IV	LGZ+ BPH LGZ- BPH
9	1	GY / BK	7253	I	—	Rear Differential Lock Actuator Low Control	9	1	GY / BK	7253	V	—
10	—	—	—	—	—	Not Occupied	10	—	—	—	—	—
11	0.5	BU / BK	7116	I	—	Front Axle Differential Lock Control	11	0.5	BU / BK	7116	IV	—
12	0.5	GN / BK	7118	I	—	Front Axle Differential Lock Low Reference	12	0.5	GN / BK	7118	IV	—
13	0.5 0.5	YE / GN YE	7122 2375	I I	LGZ+ BPH LGZ- BPH	Axle Differential Lock Switch Signal Left Rear Outer Parking Assist Sensor Signal	13	0.5 0.5	YE / GN YE	7122 2375	IV IV	LGZ+ BPH LGZ- BPH
14	0.5 0.5	VT / YE YE / BU	5985 2376	I I	LGZ+ BPH LGZ- BPH	Accessory Wake-Up Serial Data Left Rear Middle Parking Assist Sensor Signal	14	0.5 0.5	VT / YE YE / BU	5985 2376	IV IV	LGZ+ BPH LGZ- BPH
15	0.5 0.5	BK / BN YE / WH	7631 2377	I I	LGZ+ BPH LGZ- BPH	Trailer Brake Control Switch Low Reference Right Rear Middle Parking Assist Sensor Signal	15	0.5 0.5	BK / BN YE / WH	7631 2377	IV IV	LGZ+ BPH LGZ- BPH

X124 Body Wiring Harness to Chassis Wiring Harness (cont'd)

Pin	Size	Color	Circuit	Terminal Type ID	Option	Function	Pin	Size	Color	Circuit	Terminal Type ID	Option
16	1	VT / WH	7256	II	—	Front Differential Lock Actuator Control	16	1	VT / WH	7256	III	—
17	1	WH / BK	7254	I	—	Front Differential Lock Actuator Low Control	17	1	WH / BK	7254	V	—
18	0.75	GY	5911	I	—	Door Lock Actuator Lock Control 2	18	0.75	GY	5911	IV	—
19	0.75	BN / YE	294	I	—	Door Lock Actuator Unlock Control	19	0.75	BN / YE	294	IV	—
20	—	—	—	—	—	Not Occupied	20	—	—	—	—	—
21	0.5 0.5	BK / YE YE / VT	7259 2378	I I	LGZ LGZ-BPH	Axle Differential Lock Switch Low Reference Right Rear Outer Parking Assist Sensor Signal	21	0.5 0.5	BK / YE YE / VT	7259 2378	IV IV	LGZ LGZ- BPH
22	0.5 0.75	YE BK / GY	7115 2379	I I	LGZ LGZ-BPH	Rear Axle Differential Lock Indicator Control Object Sensor Low Reference	22	0.5 0.75	YE BK / GY	7115 2379	IV IV	LGZ LGZ- BPH
23	0.5 0.75	VT / GY BN / WH	7117 2374	I I	LGZ LGZ-BPH	Front Axle Differential Lock Indicator Control Object Sensor Voltage Reference	23	0.5 0.75	VT / GY BN / WH	7117 2374	IV IV	LGZ LGZ- BPH

X125 Body Wiring Harness to Chassis Wiring Harness

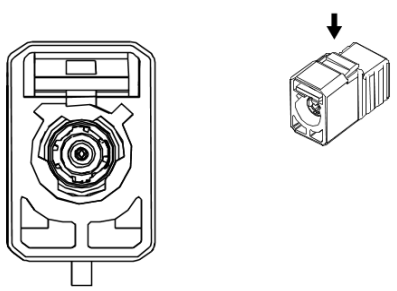

2893647

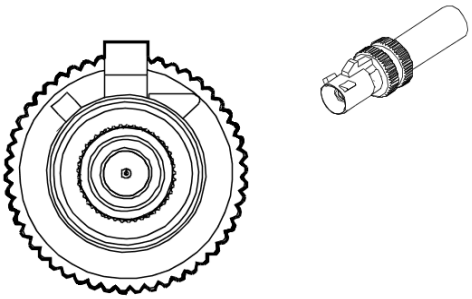

5001492

Connector Part Information

Harness Type: Body Wiring Harness COAX

OEM Connector: 13508115

Service Connector: Service by Cable Assembly — See Part Catalog

Description: 1 <p01>-Way F Coax Type(BK)

Connector Part Information

Harness Type: Chassis Wiring Harness COAX

OEM Connector: 13508111

Service Connector: Service by Cable Assembly — See Part Catalog

Description: 1 <p01>-Way M Coax Type(BK)

Terminal Part Information

Terminal Type ID	Terminated Lead	Diagnostic Test Probe	Terminal Removal Tool
I	Not required	No Tool Required	No Tool Required

X125 Body Wiring Harness to Chassis Wiring Harness

Pin	Size	Color	Circuit	Terminal Type ID	Option	Function	Pin	Size	Color	Circuit	Terminal Type ID	Option
—	—	Coax Cable	—	I	—	Driver Monitoring System Camera Coaxial Signal	—	—	Coax Cable	—	I	—

X126 Body Wiring Harness to Chassis Wiring Harness

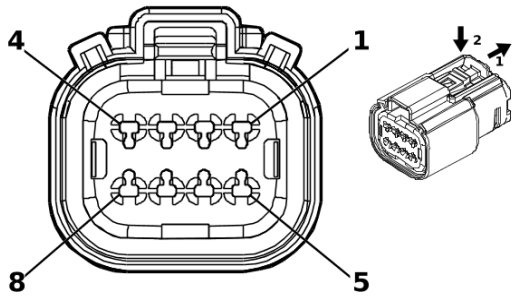

5201844

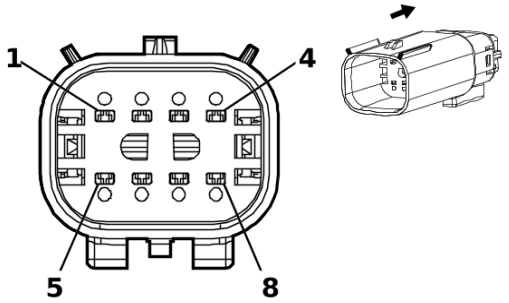

5210917

Connector Part Information

Harness Type: Body Wiring Harness
OEM Connector: 33472-4882
Service Connector: 84742541
Description: 8 <p01>-Way F 1.5 MX Series, Sealed(GY)

Connector Part Information

Harness Type: Chassis Wiring Harness
OEM Connector: 33482-4853
Service Connector: 84742542
Description: 8 <p01>-Way M 1.5 MX Series, Sealed(GY)

Terminal Part Information

Terminal Type ID	Terminated Lead	Diagnostic Test Probe	Terminal Removal Tool
I	Not required	J-35616-14 (GN)	No Tool Required
II	Not required	J-35616-2A (GY)	No Tool Required
III	Not required	J-35616-3 (GY)	No Tool Required

X126 Body Wiring Harness to Chassis Wiring Harness

Pin	Size	Color	Circuit	Terminal Type ID	Option	Function	Pin	Size	Color	Circuit	Terminal Type ID	Option
1	0.75	BN / WH	2374	II	—	Object Sensor Voltage Reference	1	0.75	BN / WH	2374	III	—
2	0.5	YE	2375	I	—	Left Rear Outer Parking Assist Sensor Signal	2	0.5	YE	2375	III	—
3	0.5	YE / BU	2376	I	—	Left Rear Middle Parking Assist Sensor Signal	3	0.5	YE / BU	2376	III	—
4	0.5	YE / VT	2378	I	—	Right Rear Outer Parking Assist Sensor Signal	4	0.5	YE / VT	2378	III	—
5	0.5	YE / WH	2377	I	—	Right Rear Middle Parking Assist Sensor Signal	5	0.5	YE / WH	2377	III	—
6	0.75	BK / GY	2379	II	—	Object Sensor Low Reference	6	0.75	BK / GY	2379	III	—

X126 Body Wiring Harness to Chassis Wiring Harness (cont'd)

Pin	Size	Color	Circuit	Terminal Type ID	Option	Function	Pin	Size	Color	Circuit	Terminal Type ID	Option
7	0.75	GY	5911	II	—	Door Lock Actuator Lock Control 2	7	0.75	GY	5911	III	—
8	0.75	BN / YE	294	II	—	Door Lock Actuator Un-lock Control	8	0.75	BN / YE	294	III	—

X160 Engine Wiring Harness to Fuel Injector Wiring Harness (LCV)

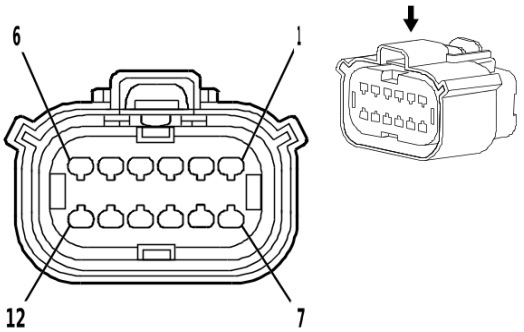

1825165

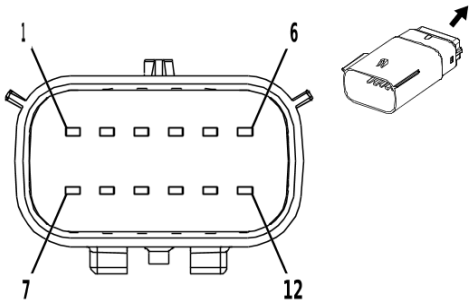

2687960

Connector Part Information

Harness Type: Engine Wiring Harness
OEM Connector: 33472-1216
Service Connector: 19352907
Description: 12 <p01>-Way F 1.5 MX Series, Sealed(BK)

Connector Part Information

Harness Type: Fuel Injector Wiring Harness
OEM Connector: Not Available
Service Connector: Service by Harness - See Part Catalog
Description: 12 <p01>-Way M (BK)

Terminal Part Information

Terminal Type ID	Terminated Lead	Diagnostic Test Probe	Terminal Removal Tool
I	19368973	J-35616-2A (GY)	J-38125-217
II	Not required	J-35616-3 (GY)	No Tool Required

X160 Engine Wiring Harness to Fuel Injector Wiring Harness (LCV)

Pin	Size	Color	Circuit	Terminal Type ID	Option	Function	Pin	Size	Color	Circuit	Terminal Type ID	Option
1	0.75	BN	4801	I	—	Direct Fuel Injector High Voltage Control Cylinder 1	1	0.75	BN	4801	II	—
2	0.75	BU	4802	I	—	Direct Fuel Injector High Voltage Control Cylinder 2	2	0.75	BU	4802	II	—
3	0.75	GN	4803	I	—	Direct Fuel Injector High Voltage Control Cylinder 3	3	0.75	GN	4803	II	—
4	0.75	GY / BU	4804	I	—	Direct Fuel Injector High Voltage Control Cylinder 4	4	0.75	GY / BU	4804	II	—
5	0.5	BK / GN	2919	I	—	Fuel Rail Pressure Sensor Low Reference	5	0.5	BK / GN	2919	II	—
6	—	—	—	—	—	Not Occupied	6	—	—	—	—	—

X160 Engine Wiring Harness to Fuel Injector Wiring Harness (LCV) (cont'd)

Pin	Size	Color	Circuit	Terminal Type ID	Option	Function	Pin	Size	Color	Circuit	Terminal Type ID	Option
7	0.75	BN / WH	4901	I	—	Direct Fuel Injector High Voltage Supply Cylinder 1	7	0.75	BN / WH	4901	II	—
8	0.75	BU / GY	4902	I	—	Direct Fuel Injector High Voltage Supply Cylinder 2	8	0.75	BU / GY	4902	II	—
9	0.75	GN / GY	4903	I	—	Direct Fuel Injector High Voltage Supply Cylinder 3	9	0.75	GN / GY	4903	II	—
10	0.75	BU / WH	4904	I	—	Direct Fuel Injector High Voltage Supply Cylinder 4	10	0.75	BU / WH	4904	II	—
11	0.5	BN / RD	2917	I	—	Fuel Rail Pressure Sensor 5V Reference	11	0.5	BN / RD	2917	II	—
12	0.5	BU / WH	2918	I	—	Fuel Rail Pressure Sensor Signal	12	0.5	BU / WH	2918	II	—

X160 Engine Wiring Harness to Fuel Injector Wiring Harness (LGZ)

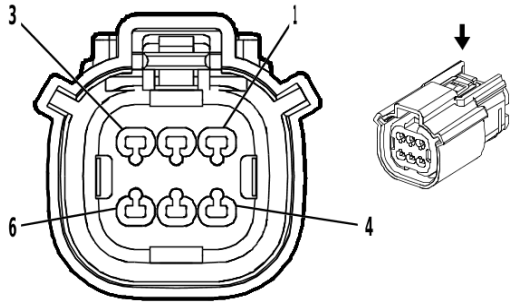

1986157

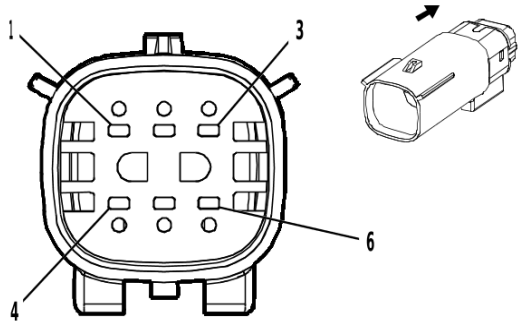

1986159

Connector Part Information

Harness Type: Engine Wiring Harness
OEM Connector: 33472-0606
Service Connector: 13578533
Description: 6 <p01>-Way F 1.5 MX Series, Sealed(BK)

Connector Part Information

Harness Type: Fuel Injector Wiring Harness
OEM Connector: Not Available
Service Connector: Service by Harness - See Part Catalog
Description: 6 <p01>-Way M (BK)

Terminal Part Information

Terminal Type ID	Terminated Lead	Diagnostic Test Probe	Terminal Removal Tool
I	Not required	J-35616-14 (GN)	No Tool Required
II	Not required	No Tool Required	No Tool Required

X160 Engine Wiring Harness to Fuel Injector Wiring Harness (LGZ)

Pin	Size	Color	Circuit	Terminal Type ID	Option	Function	Pin	Size	Color	Circuit	Terminal Type ID	Option
1	0.75	BN	4801	I	—	Direct Fuel Injector High Voltage Control Cylinder 1	1	0.75	BN	4801	II	—
2	0.75	BN / WH	4901	I	—	Direct Fuel Injector High Voltage Supply Cylinder 1	2	0.75	BN / WH	4901	II	—
3	0.75	GN	4803	I	—	Direct Fuel Injector High Voltage Control Cylinder 3	3	0.75	GN	4803	II	—
4	0.75	GN / GY	4903	I	—	Direct Fuel Injector High Voltage Supply Cylinder 3	4	0.75	GN / GY	4903	II	—
5	0.75	WH / GN	4805	I	—	Direct Fuel Injector High Voltage Control Cylinder 5	5	0.75	WH / GN	4805	II	—
6	0.75	GN / WH	4905	I	—	Direct Fuel Injector High Voltage Supply Cylinder 5	6	0.75	GN / WH	4905	II	—

X161 Engine Wiring Harness to Fuel Injector Wiring Harness

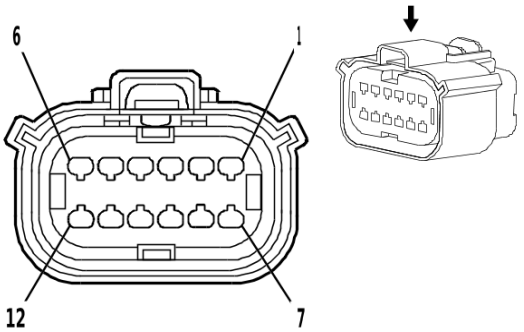

1825165

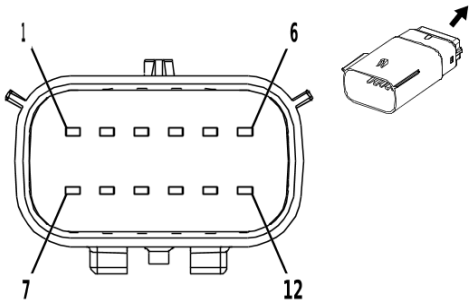

2687960

Connector Part Information

Harness Type: Engine Wiring Harness
OEM Connector: 33472-1236
Service Connector: 19352907
Description: 12 <p01>-Way F 1.5 MX Series, Sealed(BK)

Connector Part Information

Harness Type: Fuel Injector Wiring Harness
OEM Connector: Not Available
Service Connector: Service by Harness - See Part Catalog
Description: 12 <p01>-Way M (BK)

Terminal Part Information

Terminal Type ID	Terminated Lead	Diagnostic Test Probe	Terminal Removal Tool
I	19368973	J-35616-14 (GN)	J-38125-217
II	Not required	No Tool Required	No Tool Required

X161 Engine Wiring Harness to Fuel Injector Wiring Harness

Pin	Size	Color	Circuit	Terminal Type ID	Option	Function	Pin	Size	Color	Circuit	Terminal Type ID	Option
1	—	—	—	—	—	Not Occupied	1	—	—	—	—	—
2	0.75	BU	4802	I	—	Direct Fuel Injector High Voltage Control Cylinder 2	2	0.75	BU	4802	II	—
3	0.75	GY / BU	4804	I	—	Direct Fuel Injector High Voltage Control Cylinder 4	3	0.75	GY / BU	4804	II	—
4	0.75	VT / GN	4806	I	—	Direct Fuel Injector High Voltage Control Cylinder 6	4	0.75	VT / GN	4806	II	—
5	0.5	BK / GN	2919	I	—	Fuel Rail Pressure Sensor Low Reference	5	0.5	BK / GN	2919	II	—
6 - 7	—	—	—	—	—	Not Occupied	6 - 7	—	—	—	—	—
8	0.75	BU / GY	4902	I	—	Direct Fuel Injector High Voltage Supply Cylinder 2	8	0.75	BU / GY	4902	II	—

X161 Engine Wiring Harness to Fuel Injector Wiring Harness (cont'd)

Pin	Size	Color	Circuit	Terminal Type ID	Option	Function	Pin	Size	Color	Circuit	Terminal Type ID	Option
9	0.75	BU / WH	4904	I	—	Direct Fuel Injector High Voltage Supply Cylinder 4	9	0.75	BU / WH	4904	II	—
10	0.75	VT / GY	4906	I	—	Direct Fuel Injector High Voltage Supply Cylinder 6	10	0.75	VT / GY	4906	II	—
11	0.5	BN / RD	2917	I	—	Fuel Rail Pressure Sensor 5V Reference	11	0.5	BN / RD	2917	II	—
12	0.5	BU / WH	2918	I	—	Fuel Rail Pressure Sensor Signal	12	0.5	BU / WH	2918	II	—

X175 Engine Wiring Harness to Transmission

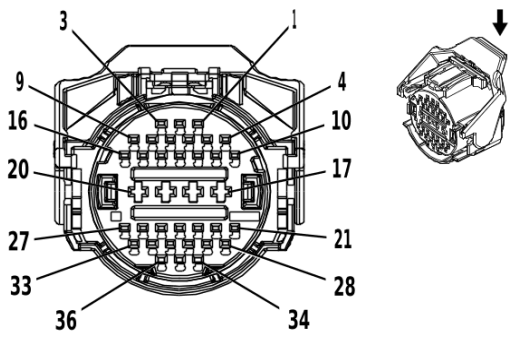

3621473

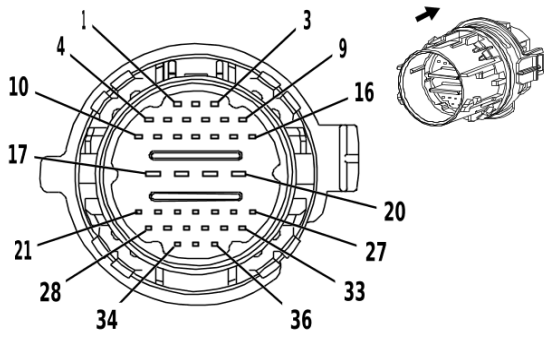

3977661

Connector Part Information

Harness Type: Engine Wiring Harness

OEM Connector: 2138314-5

Service Connector: 19329922

Description: 36 <p01>-Way F 1.2 MCON-CB, 2.8 MCP Series, Sealed(BK)

Connector Part Information

Harness Type: Transmission

OEM Connector: Not Available

Service Connector: Service by Harness - See Part Catalog

Description: 36 <p01>-Way M (BK)

Terminal Part Information

Terminal Type ID	Terminated Lead	Diagnostic Test Probe	Terminal Removal Tool
I	13575368	J-35616-35 (VT)	J-38125-557
II	19300445	J-35616-16 (LT GN)	J-38125-11A
III	Not required	J-35616-17 (LT GN)	No Tool Required

X175 Engine Wiring Harness to Transmission

Pin	Size	Color	Circuit	Terminal Type ID	Option	Function	Pin	Size	Color	Circuit	Terminal Type ID	Option
1	0.5	GN / WH	6380	II	—	Torque Converter Clutch Enable Solenoid Valve A Control	1	0.5	GN / WH	6380	III	—
2	—	—	—	—	—	Not Occupied	2	—	—	—	—	—
3	0.5	YE / BN	6404	II	—	Clutch Solenoid Valve E Control	3	0.5	YE / BN	6404	III	—
4	0.5	GY / GN	6403	II	—	Clutch Solenoid Valve D Control	4	0.5	GY / GN	6403	III	—
5	0.5	BN	6400	II	—	Clutch Solenoid Valve A Control	5	0.5	BN	6400	III	—
6	0.5	BU	6401	II	—	Clutch Solenoid Valve B Control	6	0.5	BU	6401	III	—
7	0.5	YE / BN	6210	II	—	Torque Converter Clutch Enable Solenoid Valve B Control	7	0.5	YE / BN	6210	III	—
8 - 9	—	—	—	—	—	Not Occupied	8 - 9	—	—	—	—	—

X175 Engine Wiring Harness to Transmission (cont'd)

Pin	Size	Color	Circuit	Terminal Type ID	Option	Function	Pin	Size	Color	Circuit	Terminal Type ID	Option
10	0.5	GY	6402	II	—	Clutch Solenoid Valve C Control	10	0.5	GY	6402	III	—
11	0.5	BK / BN	586	II	—	Transmission Fluid Temperature Sensor Low Reference	11	0.5	BK / BN	586	III	—
12	0.5	BN / WH	585	II	—	Transmission Fluid Temperature Sensor Signal	12	0.5	BN / WH	585	III	—
13	0.5	WH	4508	II	—	Transmission Clutch G Control	13	0.5	WH	4508	III	—
14	0.5	WH / BU	4507	II	—	Transmission Clutch H Control	14	0.5	WH / BU	4507	III	—
15 - 17	—	—	—	—	—	Not Occupied	15 - 17	—	—	—	—	—
18	0.75	GN / GY	6387	I	—	Transmission High Side Driver 1 Control	18	0.75	GN / GY	6387	III	—
19	0.75	GY / BN	6388	I	—	Transmission High Side Driver 2 Control	19	0.75	GY / BN	6388	III	—
20	—	—	—	—	—	Not Occupied	20	—	—	—	—	—
21	0.5	GN / YE	3337	II	—	Transmission Internal Mode Switch Mode Control Y	21	0.5	GN / YE	3337	III	—
22	0.5	BU / WH	3338	II	—	Transmission Internal Mode Switch Mode Control X	22	0.5	BU / WH	3338	III	—
23	—	—	—	—	—	Not Occupied	23	—	—	—	—	—
24	0.5	GY / BU	6358	II	—	Output Speed Signal	24	0.5	GY / BU	6358	III	—
25	0.5	YE / GN	4170	II	—	Transmission Output Shaft Speed Sensor Circuit 9V Reference	25	0.5	YE / GN	4170	III	—
26	0.5	GN / YE	6353	II	—	Input Speed Signal	26	0.5	GN / YE	6353	III	—
27	0.5	YE / BU	4171	II	—	Transmission Input Shaft Speed Sensor Circuit 9V Reference	27	0.5	YE / BU	4171	III	—
28	—	—	—	—	—	Not Occupied	28	—	—	—	—	—

X175 Engine Wiring Harness to Transmission (cont'd)

Pin	Size	Color	Circuit	Terminal Type ID	Option	Function	Pin	Size	Color	Circuit	Terminal Type ID	Option
29	0.5	WH / RD	596	II	—	5V Reference	29	0.5	WH / RD	596	III	—
30	0.5	BK / GY	3927	II	—	Transmission Internal Mode Switch Feedback Signal	30	0.5	BK / GY	3927	III	—
31	—	—	—	—	—	Not Occupied	31	—	—	—	—	—
32	0.5	GN / VT	4510	II	—	Transmission Intermediate Speed Signal	32	0.5	GN / VT	4510	III	—
33 - 36	—	—	—	—	—	Not Occupied	33 - 36	—	—	—	—	—

X176 Transmission Case Harness to Transmission Control Harness (M5T)

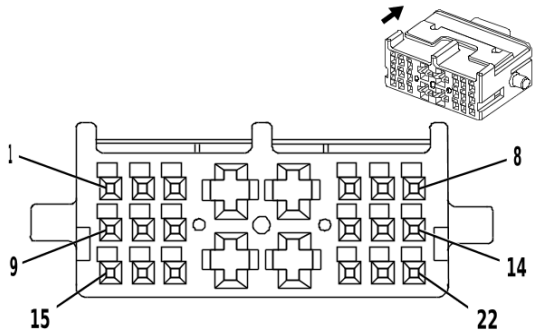

3977748

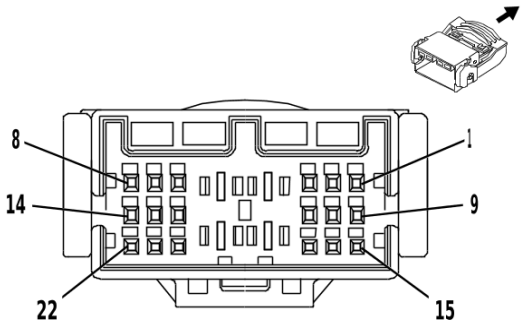

3977770

Connector Part Information

Harness Type: Transmission Case

OEM Connector: 1897543-1

Service Connector: Service by Harness - See Part Catalog

Description: 22 <p01>-Way F 0.64 Micro-Quadlock, 2.8 Micro-Power Series(NA)

Connector Part Information

Harness Type: Transmission Control

OEM Connector: 1897540-1

Service Connector: Service by Harness - See Part Catalog

Description: 22 <p01>-Way M 0.64 Micro-Quadlock, 2.8 Micro-Power Series(NA)

Terminal Part Information

Terminal Type ID	Terminated Lead	Diagnostic Test Probe	Terminal Removal Tool
I	Not required	J-35616-35 (VT)	No Tool Required
II	Not required	J-35616-64B (LT BU)	No Tool Required
III	Not required	J-35616-5 (PU)	No Tool Required
IV	Not required	J-35616-65B (LT BU)	No Tool Required

X176 Transmission Case Harness to Transmission Control Harness (M5T)

Pin	Size	Color	Circuit	Terminal Type ID	Option	Function	Pin	Size	Color	Circuit	Terminal Type ID	Option
1	0.5	GN / WH	6380	II	—	Torque Converter Clutch Enable Solenoid Valve A Control	1	0.5	GN / WH	6380	IV	—
2	0.5	VT / WH	5981	II	—	Transmission Range Switch Signal A	2	0.5	VT / WH	5981	IV	—
3	0.5	GY / BN	5982	II	—	Transmission Range Switch Signal B	3	0.5	GY / BN	5982	IV	—
4	2.5	GN / GY	6387	I	—	Transmission High Side Driver 1 Control	4	2.5	GN / GY	6387	III	—
5	0.5	YE / BU	4171	I	—	Transmission Input Shaft Speed Sensor Circuit 9V Reference	5	0.5	YE / BU	4171	III	—

X176 Transmission Case Harness to Transmission Control Harness (M5T) (cont'd)

Pin	Size	Color	Circuit	Terminal Type ID	Option	Function	Pin	Size	Color	Circuit	Terminal Type ID	Option
6	0.5	GY / YE	4169	II	—	Transmission Range Switch Signal S	6	0.5	GY / YE	4169	IV	—
7	0.5	WH / BU	4507	II	—	Transmission Clutch H Control	7	0.5	WH / BU	4507	IV	—
8	0.5	GY / GN	6403	II	—	Clutch Solenoid Valve D Control	8	0.5	GY / GN	6403	IV	—
9	0.5	WH	4508	II	—	Transmission Clutch G Control	9	0.5	WH	4508	IV	—
10	0.5	YE / BN	6210	II	—	Torque Converter Clutch Enable Solenoid Valve B Control	10	0.5	YE / BN	6210	IV	—
11	0.5	WH / BK	5983	II	—	Transmission Range Switch Signal C	11	0.5	WH / BK	5983	IV	—
12	0.5	WH / GY	1786	II	—	Transmission Park/Neutral Signal 1	12	0.5	WH / GY	1786	IV	—
13	0.5	GY	6402	II	—	Clutch Solenoid Valve C Control	13	0.5	GY	6402	IV	—
14	0.5	YE / BN	6404	II	—	Clutch Solenoid Valve E Control	14	0.5	YE / BN	6404	IV	—
15	0.5	BN / WH	585	II	—	Transmission Fluid Temperature Sensor Signal	15	0.5	BN / WH	585	IV	—
16	0.5	BK / BN	586	II	—	Transmission Fluid Temperature Sensor Low Reference	16	0.5	BK / BN	586	IV	—
17	0.5	GY / WH	4168	II	—	Transmission Range Switch Signal P	17	0.5	GY / WH	4168	IV	—
18	2.5	GY / BN	6388	I	—	Transmission High Side Driver 2 Control	18	2.5	GY / BN	6388	III	—
19	0.5	YE / GN	4170	I	—	Transmission Output Shaft Speed Sensor Circuit 9V Reference	19	0.5	YE / GN	4170	III	—
20	0.5	BK / GY	3927	II	—	Transmission Internal Mode Switch Feedback Signal	20	0.5	BK / GY	3927	IV	—
21	0.5	BN	6400	II	—	Clutch Solenoid Valve A Control	21	0.5	BN	6400	IV	—

X176 Transmission Case Harness to Transmission Control Harness (M5T) (cont'd)

Pin	Size	Color	Circuit	Terminal Type ID	Option	Function	Pin	Size	Color	Circuit	Terminal Type ID	Option
22	0.5	BU	6401	II	—	Clutch Sole-noid Valve B Control	22	0.5	BU	6401	IV	—

X177 Transmission Case Harness to Speed Sensor Assembly Harness (M5T)

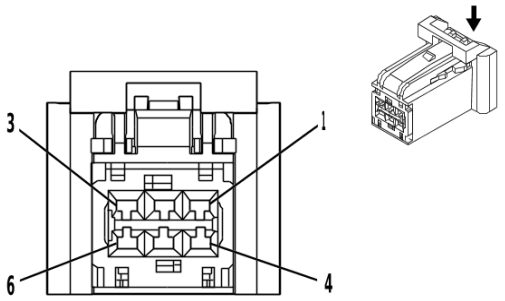

3977938

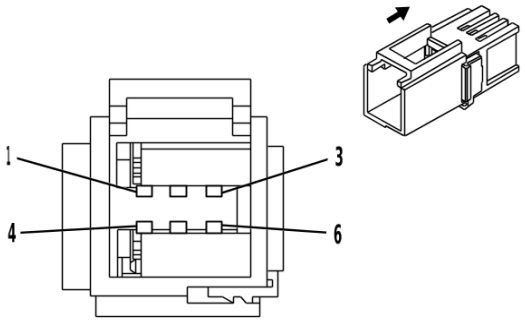

3977959

Connector Part Information

Harness Type: Transmission Case
OEM Connector: 13960975
Service Connector: Service by Harness - See Part Catalog
Description: 6 <p01>-Way F 1.2 OCS Series(NA)

Connector Part Information

Harness Type: Speed Sensor Assembly
OEM Connector: 13955963
Service Connector: Service by Harness - See Part Catalog
Description: 6 <p01>-Way M 0.64 II Series(GY)

Terminal Part Information

Terminal Type ID	Terminated Lead	Diagnostic Test Probe	Terminal Removal Tool
I	Not required	J-35616-16 (LT GN)	No Tool Required
II	Not required	J-35616-65B (LT BU)	No Tool Required

X177 Transmission Case Harness to Speed Sensor Assembly Harness (M5T)

Pin	Size	Color	Circuit	Terminal Type ID	Option	Function	Pin	Size	Color	Circuit	Terminal Type ID	Option
1	0.5	GY / BU	6358	I	—	Output Speed Signal	1	0.5	GY / BU	6358	II	—
2	0.5	YE / GN	4170	I	—	Transmission Output Shaft Speed Sensor Circuit 9V Reference	2	0.5	YE / GN	4170	II	—
3	0.5	YE / GN	4170	I	—	Transmission Output Shaft Speed Sensor Circuit 9V Reference	3	0.5	YE / GN	4170	II	—
4	0.5	YE / BU	4171	I	—	Transmission Input Shaft Speed Sensor Circuit 9V Reference	4	0.5	YE / BU	4171	II	—
5	0.5	GN / YE	6353	I	—	Input Speed Signal	5	0.5	GN / YE	6353	II	—
6	0.5	GN / VT	4510	I	—	Transmission Intermediate Speed Signal	6	0.5	GN / VT	4510	II	—

X200 Body Wiring Harness to Instrument Panel Wiring Harness

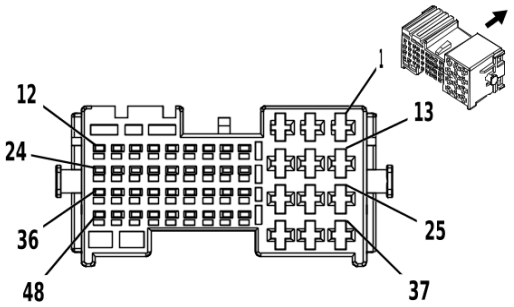

3277913

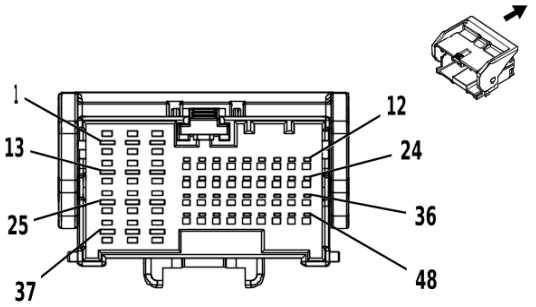

3277901

Connector Part Information

Harness Type: Body Wiring Harness

OEM Connector: 2109452-2

Service Connector: 19329739

Description: 48 <p01>-Way F 1.2 MCON, 2.8 MCP Series(BK)

Connector Part Information

Harness Type: Instrument Panel Wiring Harness

OEM Connector: 5-2109455-2

Service Connector: 19329740

Description: 48 <p01>-Way M 1.2 MCON, 2.8 MCP Series(BK)

Terminal Part Information

Terminal Type ID	Terminated Lead	Diagnostic Test Probe	Terminal Removal Tool
I	13575435	J-35616-4A (PU)	J-38125-557
II	19329758	J-35616-16 (LT GN)	J-38125-215A
III	13575574	J-35616-5 (PU)	J-38125-215A
IV	19329749	J-35616-17 (LT GN)	J-38125-215A

X200 Body Wiring Harness to Instrument Panel Wiring Harness

Pin	Size	Color	Circuit	Terminal Type ID	Option	Function	Pin	Size	Color	Circuit	Terminal Type ID	Option
1	2.5	RD / VT	542	I	—	Battery Positive Voltage	1	2.5	RD / VT	542	III	—
2	—	—	—	—	—	Not Occupied	2	—	—	—	—	—
3	0.5	GN / BN	507	I	—	Wait To Start Indicator Control	3	0.35	GN / BN	507	III	—
4	0.5	BU / YE	6105	II	—	High Speed GMLAN Serial Data [+] 2	4	0.35	BU / YE	6105	IV	—
5	0.5	WH	6106	II	—	High Speed GMLAN Serial Data [-] 2	5	0.35	WH	6106	IV	—
6	0.5	RD / GN	4440	II	—	Battery Positive Voltage	6	0.5	RD / GN	4440	IV	—
7	0.75	BN / WH	2374	II	—	Object Sensor Voltage Reference	7	0.75	BN / WH	2374	IV	—
8	0.75	BK / GY	2379	II	—	Object Sensor Low Reference	8	0.75	BK / GY	2379	IV	—

X200 Body Wiring Harness to Instrument Panel Wiring Harness (cont'd)

Pin	Size	Color	Circuit	Terminal Type ID	Option	Function	Pin	Size	Color	Circuit	Terminal Type ID	Option
9	0.5	YE	2375	II	—	Left Rear Outer Parking Assist Sensor Signal	9	0.5	YE	2375	IV	—
10	0.5	YE / BU	2376	II	—	Left Rear Middle Parking Assist Sensor Signal	10	0.5	YE / BU	2376	IV	—
11	0.5	YE / VT	2378	II	—	Right Rear Outer Parking Assist Sensor Signal	11	0.5	YE / VT	2378	IV	—
12	0.5	YE / WH	2377	II	—	Right Rear Middle Parking Assist Sensor Signal	12	0.5	YE / WH	2377	IV	—
13	—	—	—	—	—	Not Occupied	13	—	—	—	—	—
14	1	BU	201	I	—	Left Front Speaker 1 [+] Control Left Front Speaker 1 [+] Control	14	0.75 1	BU BU	201 201	III III	UQ3 UQA
15	1	BN / BU	118	I	—	Left Front Speaker [-] Control 1 Left Front Speaker [-] Control 1	15	0.75 1	BN / BU BN / BU	118 118	III III	UQ3 UQA
16	0.5	BU / BN	7573	II	—	A/C Compressor Solenoid Valve Control	16	0.5	BU / BN	7573	IV	—
17	0.5	BU / YE	7574	II	—	A/C Compressor Solenoid Valve Control	17	0.5	BU / YE	7574	IV	—
18	0.35	GY	158	II	—	Cargo Lamp Switch Signal	18	0.35	GY	158	IV	—
19	0.5	BN / WH	1429	II	—	Standing Lamp Relay Control	19	0.5	BN / WH	1429	IV	—
20	0.5	GN / WH	24	II	—	Backup Lamp Control	20	0.35	GN / WH	24	IV	—
21	0.35	WH	6816	II	—	Indicator Dimming Control	21	0.35	WH	6816	IV	—
22	0.5	YE	6817	II	—	LED Backlight Dimming Control 1	22	0.5	YE	6817	IV	—
23	0.35	YE / BN	3265	II	—	Child Security Lock Switch Signal	23	0.35	YE / BN	3265	IV	—

X200 Body Wiring Harness to Instrument Panel Wiring Harness (cont'd)

Pin	Size	Color	Circuit	Terminal Type ID	Option	Function	Pin	Size	Color	Circuit	Terminal Type ID	Option
24	0.35	GY	5697	II	—	Child Security Lock Indicator Control	24	0.35	GY	5697	IV	—
25	—	—	—	—	—	Not Occupied	25	—	—	—	—	—
26	1	GN / BK	116	I	—	Left Rear Speaker [-] Control Left Rear Speaker [-] Control	26	0.75 1	GN / BK GN / BK	116 116	III III	UQ3 UQA
27	1	GN	199	I	—	Left Rear Speaker [+] Control Left Rear Speaker [+] Control	27	0.75 1	GN GN	199 199	III III	UQ3 UQA
28 - 29	—	—	—	—	—	Not Occupied	28 - 29	—	—	—	—	—
30	0.5	BN / WH	419	II	—	Check Engine Indicator Control	30	0.35	BN / WH	419	IV	—
31	0.35	BN / YE	780	II	—	Driver Door Lock Switch Lock Signal	31	0.35	BN / YE	780	IV	—
32	0.35	BN / WH	781	II	—	Driver Door Lock Switch Unlock Signal	32	0.35	BN / WH	781	IV	—
33	0.35	WH	5359	II	—	Brake Apply Sensor Control	33	0.35	WH	5359	IV	—
34	0.35	BU / YE	5361	II	—	Brake Apply Sensor Signal	34	0.35	BU / YE	5361	IV	—
35	0.35	BK / BN	5360	II	—	Brake Apply Sensor Low Reference	35	0.35	BK / BN	5360	IV	—
36	0.5	Bare	6974	II	—	Rearview Camera Low Reference	36	0.35	Bare	6974	IV	—
37	2.5	RD / GN	242	I	—	Battery Positive Voltage	37	2.5	RD / GN	242	III	—
38 - 39	—	—	—	—	—	Not Occupied	38 - 39	—	—	—	—	—
40	0.35	VT	185	II	—	Low Washer Fluid Indicator Control	40	0.35	VT	185	IV	—
41	—	—	—	—	—	Not Occupied	41	—	—	—	—	—
42	0.5	BK / WH	2251	II	—	Signal Ground	42	0.5	BK / WH	2251	IV	—
43	0.5	WH / BU	5986	II	—	Serial Data Communication Enable	43	0.5	WH / BU	5986	IV	—
44	—	—	—	—	—	Not Occupied	44	—	—	—	—	—

X200 Body Wiring Harness to Instrument Panel Wiring Harness (cont'd)

Pin	Size	Color	Circuit	Terminal Type ID	Option	Function	Pin	Size	Color	Circuit	Terminal Type ID	Option
45	0.5	BN / VT	193	II	—	Rear Defogger Relay Control	45	0.35	BN / VT	193	IV	—
46	0.5	GN / GY	6135	II	—	Body Control Module LIN Bus 4	46	0.5	GN / GY	6135	IV	—
47	0.5	GY / YE	6972	II	—	Rearview Camera Signal [+]	47	0.35	GY / YE	6972	IV	—
48	0.5	WH / BU	6973	II	—	Rearview Camera Signal [-]	48	0.35	WH / BU	6973	IV	—

X202 Body Wiring Harness to Instrument Panel Wiring Harness

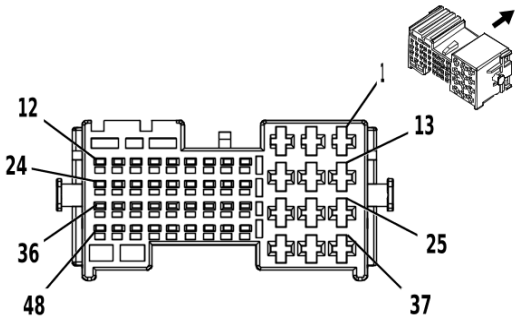

3924402

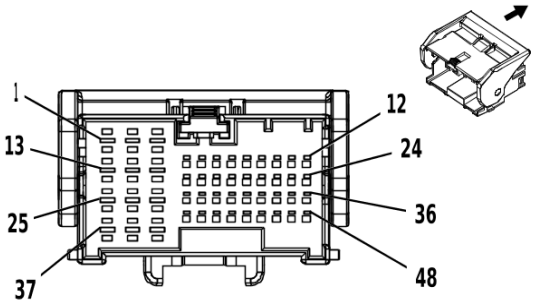

3924404

Connector Part Information

Harness Type: Body Wiring Harness

OEM Connector: 1-2109452-3

Service Connector: 19329737

Description: 48 <p01>-Way F 1.2 MCON, 2.8 MCP Series(GY)

Connector Part Information

Harness Type: Instrument Panel Wiring Harness

OEM Connector: 1-2109455-3

Service Connector: 19329738

Description: 48 <p01>-Way M 1.2 MCON, 2.8 MCP Series(GY)

Terminal Part Information

Terminal Type ID	Terminated Lead	Diagnostic Test Probe	Terminal Removal Tool
I	13575435	J-35616-4A (PU)	J-38125-557
II	19329758	J-35616-16 (LT GN)	J-38125-215A
III	13575574	J-35616-5 (PU)	J-38125-215A
IV	19329749	J-35616-17 (LT GN)	J-38125-215A

X202 Body Wiring Harness to Instrument Panel Wiring Harness

Pin	Size	Color	Circuit	Terminal Type ID	Option	Function	Pin	Size	Color	Circuit	Terminal Type ID	Option
1	0.35	GN	4512	I	—	Wireless Charging System Charge Indicator Control	1	0.35	GN	4512	III	—
2	0.35	BN	4511	I	—	Wireless Charging System Fault Indicator Control	2	0.35	BN	4511	III	—
3	—	—	—	—	—	Not Occupied	3	—	—	—	—	—
4	0.5	RD / WH	2040	II	—	Battery Positive Voltage	4	0.75	RD / WH	2040	IV	—
5	0.5	VT	4601	II	—	Retained Accessory Power Control	5	0.5	VT	4601	IV	—
6	0.35	RD / YE	3040	II	—	Battery Positive Voltage	6	0.35	RD / YE	3040	IV	—
7	0.75	RD / BN	2240	II	—	Battery Positive Voltage	7	0.75	RD / BN	2240	IV	—

X202 Body Wiring Harness to Instrument Panel Wiring Harness (cont'd)

Pin	Size	Color	Circuit	Terminal Type ID	Option	Function	Pin	Size	Color	Circuit	Terminal Type ID	Option
8	0.35	VT	801	II	—	Retained Accessory Power Control	8	0.35	VT	801	IV	—
9	0.5	RD / GY	2840	II	—	Battery Positive Voltage	9	0.5	RD / GY	2840	IV	—
10	0.5	VT / BN	300	II	—	Run Ignition 3 Voltage	10	0.5	VT / BN	300	IV	—
11 - 13	—	—	—	—	—	Not Occupied	11 - 13	—	—	—	—	—
14	2.5	BU	47	I	—	Trailer Auxiliary Control	14	2.5	BU	47	III	—
15	—	—	—	—	—	Not Occupied	15	—	—	—	—	—
16	0.35	GY / WH	3272	II	—	Remote Control Door Lock Receiver Control	16	0.35	GY / WH	3272	IV	—
17	0.35	YE / GN	3274	II	—	Remote Control Door Lock Receiver Transmit Signal	17	0.35	YE / GN	3274	IV	—
18	0.35	BU / WH	3275	II	—	Remote Control Door Lock Receiver Receive Signal	18	0.35	BU / WH	3275	IV	—
19	0.35	GY	3273	II	—	Remote Control Door Lock Receiver Low Reference	19	0.35	GY	3273	IV	—
20	0.35	GY / GN	328	II	—	Interior Lamp Defeat Switch Signal	20	0.35	GY / GN	328	IV	—
21	0.5	GY	157	II	—	Interior Lamp Control	21	0.5	GY	157	IV	—
22	0.5	YE	6817	II	—	LED Backlight Dimming Control 1	22	0.5	YE	6817	IV	—
23	0.5	VT / GY	7117	II	—	Front Axle Differential Lock Indicator Control	23	0.5	VT / GY	7117	IV	—
24	0.5	YE	7115	II	—	Rear Axle Differential Lock Indicator Control	24	0.5	YE	7115	IV	—
25	2.5	RD / YE	2340	I	—	Battery Positive Voltage	25	2.5	RD / YE	2340	III	—
26	—	—	—	—	—	Not Occupied	26	—	—	—	—	—
27	0.5	BK / YE	7259	I	—	Axle Differential Lock Switch Low Reference	27	0.5	BK / YE	7259	III	—

X202 Body Wiring Harness to Instrument Panel Wiring Harness (cont'd)

Pin	Size	Color	Circuit	Terminal Type ID	Option	Function	Pin	Size	Color	Circuit	Terminal Type ID	Option
28	0.35	GN / BK	1563	II	—	2WD HI Indicator Control	28	0.35	GN / BK	1563	IV	—
29	0.35	GY / GN	1561	II	—	AWD Indicator Control	29	0.35	GY / GN	1561	IV	—
30	0.35	BN / BK	1566	II	—	4WD HI Indicator Control	30	0.35	BN / BK	1566	IV	—
31	0.35	VT / WH	1565	II	—	4WD LO Indicator Control	31	0.35	VT / WH	1565	IV	—
32	0.35	BN	1560	II	—	Neutral Indicator Control	32	0.35	BN	1560	IV	—
33	0.35	GY / RD	6029	II	—	Four Wheel Drive Mode Switch 5V Reference	33	0.35	GY / RD	6029	IV	—
34	0.35	BU / YE	1693	II	—	Four Wheel Drive Switch Signal	34	0.35	BU / YE	1693	IV	—
35	0.5 0.75	GN / BK GN / BK	7633 7633	II II	LGZ LWN	Trailer Brake Control User Gain Signal Trailer Brake Control User Gain Signal	35	0.5	GN / BK	7633	IV	—
36	0.5	YE	7635	II	—	Trailer Brake Control Manual Apply Signal	36	0.5	YE	7635	IV	—
37	0.5	BU / RD	7632	I	—	Trailer Brake Control Switch 5V Reference	37	0.5	BU / RD	7632	III	—
38	0.5	BN	7634	I	—	Trailer Brake Control Redundant Manual Apply Signal	38	0.5	BN	7634	III	—
39	0.5	BK / BN	7631	I	—	Trailer Brake Control Switch Low Reference	39	0.5	BK / BN	7631	III	—
40	0.5	YE / GN	7122	II	—	Axle Differential Lock Switch Signal	40	0.5	YE / GN	7122	IV	—
41	0.5	WH / VT	5905	II	—	Key Capture/ Column Lock Shift Position Signal	41	0.5	WH / VT	5905	IV	—
42	0.5	GN / BU	6133	II	—	Body Control Module LIN Bus 2	42	0.5	GN / BU	6133	IV	—
43	0.5	WH / BU	3691	II	—	Trailer Brake Apply Signal	43	0.5	WH / BU	3691	IV	—
44	0.5	VT / BK	7553	II	—	Park Lock Solenoid Actuator Control	44	0.5	VT / BK	7553	IV	—
45 - 48	—	—	—	—	—	Not Occupied	45 - 48	—	—	—	—	—

X203 Body Wiring Harness to Instrument Panel Wiring Harness

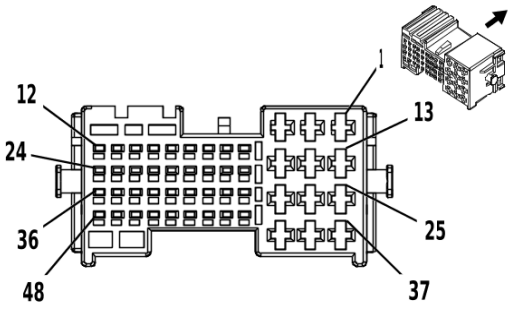

3277913

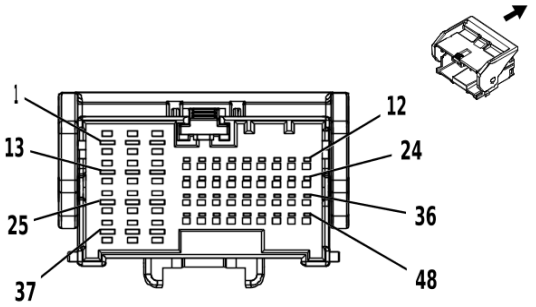

3277901

Connector Part Information

Harness Type: Body Wiring Harness

OEM Connector: 2109452-2

Service Connector: 19329739

Description: 48 <p01>-Way F 1.2 MCON, 2.8 MCP Series(BK)

Connector Part Information

Harness Type: Instrument Panel Wiring Harness

OEM Connector: 5-2109455-2

Service Connector: 19329740

Description: 48 <p01>-Way M 1.2 MCON, 2.8 MCP Series(BK)

Terminal Part Information

Terminal Type ID	Terminated Lead	Diagnostic Test Probe	Terminal Removal Tool
I	13575435	J-35616-4A (PU)	J-38125-557
II	19329758	J-35616-16 (LT GN)	J-38125-215A
III	13575574	J-35616-5 (PU)	J-38125-215A
IV	19329749	J-35616-17 (LT GN)	J-38125-215A

X203 Body Wiring Harness to Instrument Panel Wiring Harness

Pin	Size	Color	Circuit	Terminal Type ID	Option	Function	Pin	Size	Color	Circuit	Terminal Type ID	Option
1	2.5	RD / YE	3740	I	—	Battery Positive Voltage	1	2.5	RD / YE	3740	III	—
2	1	YE / BK	117	I	—	Right Front Speaker [-] Control 1 Right Front Speaker [-] Control 1	2	0.75 1	YE / BK YE / BK	117 117	III III	UQ3 UQA
3	1	YE	200	I	—	Right Front Speaker 1 [+] Control Right Front Speaker 1 [+] Control	3	0.75 1	YE YE	200 200	III III	UQ3 UQA
4	0.35	YE / RD	597	II	—	5V Reference	4	0.35	YE / RD	597	IV	—
5	0.35	BK / BU	7566	II	—	Windshield Temperature and Inside Moisture Sensor Low Reference	5	0.35	BK / BU	7566	IV	—

X203 Body Wiring Harness to Instrument Panel Wiring Harness (cont'd)

Pin	Size	Color	Circuit	Terminal Type ID	Option	Function	Pin	Size	Color	Circuit	Terminal Type ID	Option
6	0.35	GY / GN	7565	II	—	Windshield Temperature Sensor Signal	6	0.35	GY / GN	7565	IV	—
7	0.35	GY / BU	7564	II	—	Humidity Sensor Signal 2	7	0.35	GY / BU	7564	IV	—
8	0.35	YE / BU	3197	II	—	Intake Air Humidity and Temperature Sensor Signal	8	0.35	YE / BU	3197	IV	—
9	0.35	YE	6817	II	—	LED Backlight Dimming Control 1	9	0.35	YE	6817	IV	—
10	0.35	BN	6136	II	—	Control	10	0.35	BN	6136	IV	—
11	0.5	RD / BU	540	II	—	Battery Positive Voltage	11	0.5	RD / BU	540	IV	—
12	0.5	VT / WH	1139	II	—	Run/Crank Ignition 1 Voltage	12	0.5	VT / WH	1139	IV	—
13	2.5	RD / VT	4040	I	—	Battery Positive Voltage	13	2.5	RD / VT	4040	III	—
14	1	BU / BK	115	I	—	Right Rear Speaker [-] Control Right Rear Speaker [-] Control	14	0.75 1	BU / BK BU / BK	115 115	III III	IOE+ UQ3 UQA
15	1	WH	46	I	—	Right Rear Speaker [+] Control Right Rear Speaker [+] Control	15	0.75 1	WH WH	46 46	III III	IOE+ UQ3 UQA
16	0.35	VT / WH	5234	II	—	Passenger Seat Belt Indicator Control	16	0.35	VT / WH	5234	IV	—
17	0.35	BU	2307	II	—	Passenger Air Bag On Indicator Control	17	0.35	BU	2307	IV	—
18	0.35	GN	2308	II	—	Passenger Air Bag Off Indicator Control	18	0.35	GN	2308	IV	—
19	0.35	Bare	1792	II	—	Low Reference	19	0.5	Bare	1792	IV	—
20	0.35 0.35	BK / BN BK / GY	654 5152	II II	(IOS/ IOU) - UE1 UE1+ (IOS/ IOU)	Cellular Telephone Microphone Low Reference Voice Recognition Audio [-] Control	20	0.35	BK / GY	5152	IV	—

X203 Body Wiring Harness to Instrument Panel Wiring Harness (cont'd)

Pin	Size	Color	Circuit	Terminal Type ID	Option	Function	Pin	Size	Color	Circuit	Terminal Type ID	Option
21	0.35 0.35	BU GY / YE	655 5149	II II	(IOS/ IOU) - UE1 UE1+ (IOS/ IOU)	Cellular Telephone Microphone Signal Voice Recognition Audio Signal	21	0.35	GY / YE	5149	IV	—
22	0.35	VT / YE	7043	II	—	Microphone [+] Signal	22	0.35	VT / YE	7043	IV	—
23	0.35	GY / WH	3153	II	—	Lane Departure Warning Disable Switch Signal	23	0.35	GY / WH	3153	IV	—
24	0.35	WH	3152	II	—	Lane Departure Warning Indicator Control	24	0.35	WH	3152	IV	—
25	0.35	RD / WH	6440	I	—	Battery Positive Voltage	25	0.35	RD / WH	6440	III	—
26	1	VT	2101	I	—	Retained Accessory Power Control	26	1	VT	2101	III	—
27	2.5	RD / GN	2440	I	—	Battery Positive Voltage	27	2.5	RD / GN	2440	III	—
28	0.35	VT / GN	39	II	—	Run/Crank Ignition 1 Voltage	28	0.35	VT / GN	39	IV	—
29	0.1	GY / WH	7211	II	—	Ethernet Bus 4 [+]	29	0.1	GY / WH	7211	IV	—
30	0.1	GY	7210	II	—	Ethernet Bus 4 [-]	30	0.1	GY	7210	IV	—
31	0.35	BU / GN	1304	II	—	High Speed GMLAN Serial Data [+] 9	31	0.35	BU / GN	1304	IV	—
32	0.35	WH / GN	1305	II	—	High Speed GMLAN Serial Data [-] 9	32	0.35	WH / GN	1305	IV	—
33	0.35	GY / GN	1102	II	—	Low Speed GMLAN Serial Data 2	33	0.35	GY / GN	1102	IV	—
34	0.35	BU / BK	7044	II	—	Microphone [-]	34	0.35	BU / BK	7044	IV	—
35	1	RD / VT	340	II	—	Battery Positive Voltage	35	1	RD / VT	340	IV	—
36	0.5	VT / BK	1639	II	—	Run/Crank Ignition 1 Voltage	36	0.5	VT / BK	1639	IV	—
37	1	VT	1701	I	—	Retained Accessory Power Control	37	1	VT	1701	III	—
38	0.5	RD / VT	340	I	—	Battery Positive Voltage	38	0.5	RD / VT	340	III	—
39	0.75	BK	2050	I	—	Ground	39	0.75	BK	2050	III	—
40	0.5	BU	2500	II	—	High Speed GMLAN Serial Data [+] 1	40	0.35	BU	2500	IV	—

X203 Body Wiring Harness to Instrument Panel Wiring Harness (cont'd)

Pin	Size	Color	Circuit	Terminal Type ID	Option	Function	Pin	Size	Color	Circuit	Terminal Type ID	Option
41	0.5	WH	2501	II	—	High Speed GMLAN Serial Data [-] 1	41	0.35	WH	2501	IV	—
42	0.35	BU / GN	1304	II	—	High Speed GMLAN Serial Data [+] 9	42	0.35	BU / GN	1304	IV	—
43	0.35	WH / GN	1305	II	—	High Speed GMLAN Serial Data [-] 9	43	0.35	WH / GN	1305	IV	—
44	—	—	—	—	—	Not Occupied	44	—	—	—	—	—
45	0.75	RD / GN	3140	II	—	Battery Positive Voltage	45	0.75	RD / GN	3140	IV	—
46	0.5	RD / VT	3340	II	—	Battery Positive Voltage	46	0.5	RD / VT	3340	IV	—
47	0.35	VT / GY	539	II	—	Run/Crank Ignition 1 Voltage	47	0.35	VT / GY	539	IV	—
48	0.5	RD / WH	640	II	—	Battery Positive Voltage	48	0.5	RD / WH	640	IV	—

X204 Body Wiring Harness to Auxiliary Heater Jumper

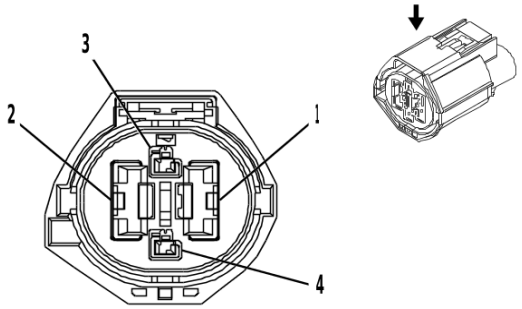

2394097

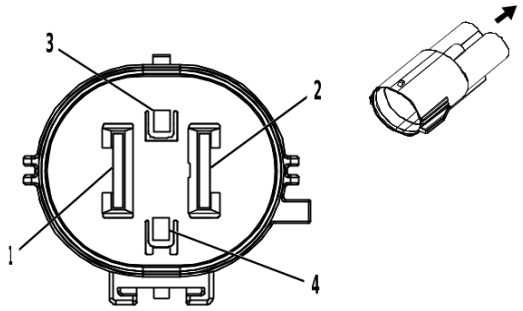

3931603

Connector Part Information

Harness Type: Body Wiring Harness
OEM Connector: 7287-1405-80
Service Connector: Service by Harness - See Part Catalog
Description: 4 <p01>-Way F 1.5, 9.5 Series, Sealed(BN)

Connector Part Information

Harness Type: Auxiliary Heater Jumper
OEM Connector: Not Available
Service Connector: Service by Harness - See Part Catalog
Description: 4 <p01>-Way M (BN)

Terminal Part Information

Terminal Type ID	Terminated Lead	Diagnostic Test Probe	Terminal Removal Tool
I	Not required	J-35616-42 (RD)	No Tool Required
II	Not required	J-35616-43 (RD)	No Tool Required

X204 Body Wiring Harness to Auxiliary Heater Jumper

Pin	Size	Color	Circuit	Terminal Type ID	Option	Function	Pin	Size	Color	Circuit	Terminal Type ID	Option
1	10	BK	1350	I	—	Ground	1	10	BK / GY	1350	II	—
2	10	RD / GY	4840	I	—	Battery Positive Voltage	2	10	RD / BU	4840	II	—
3 - 4	—	—	—	—	—	Not Occupied	3 - 4	—	—	—	—	—

X206 Instrument Panel Wiring Harness to HVAC

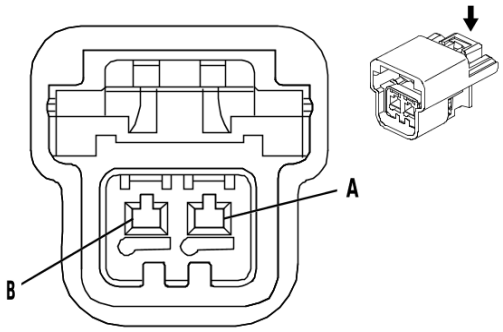

2509234

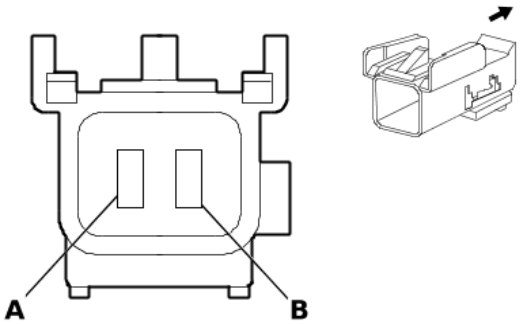

872877

Connector Part Information

Harness Type: Instrument Panel Wiring Harness
OEM Connector: 13668003
Service Connector: 13587145
Description: 2 <p01>-Way F 150 GT FBT Series(BK)

Connector Part Information

Harness Type: HVAC
OEM Connector: Not Available
Service Connector: Service by Harness - See Part Catalog
Description: 2 <p01>-Way M (BK)

Terminal Part Information

Terminal Type ID	Terminated Lead	Diagnostic Test Probe	Terminal Removal Tool
I	Not required	J-35616-2A (GY)	No Tool Required
II	Not required	J-35616-3 (GY)	No Tool Required

X206 Instrument Panel Wiring Harness to HVAC

Pin	Size	Color	Circuit	Terminal Type ID	Option	Function	Pin	Size	Color	Circuit	Terminal Type ID	Option
A	—	—	—	—	—	Not Occupied	A	—	—	—	—	—
B	0.5	BN	518	I	—	Lower Left Duct Air Temperature Sensor Signal	B	0.5	BN	518	II	—

X207 Instrument Panel Wiring Harness to Instrument Panel Air Bag Jumper

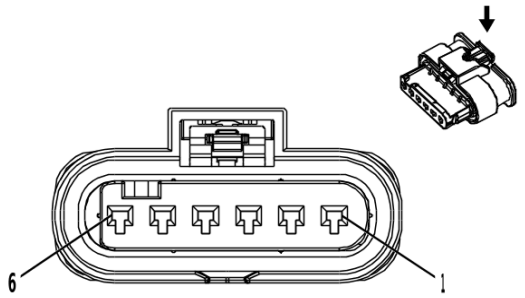

2717165

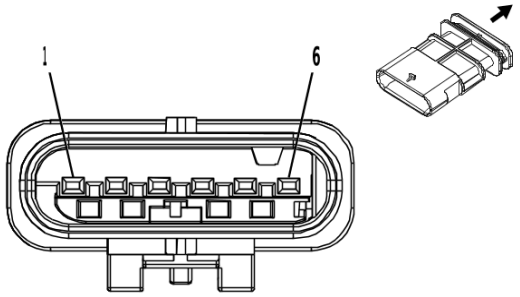

2874915

Connector Part Information

Harness Type: Instrument Panel Wiring Harness
OEM Connector: 1-2141530-5
Service Connector: 19300377
Description: 6 <p01>-Way F 1.2 MCP Series, Sealed(YE)

Connector Part Information

Harness Type: Instrument Panel Air Bag Jumper
OEM Connector: Not Available
Service Connector: Service by Harness - See Part Catalog
Description: 6 <p01>-Way M (YE)

Terminal Part Information

Terminal Type ID	Terminated Lead	Diagnostic Test Probe	Terminal Removal Tool
I	Not required	J-35616-16 (LT GN)	No Tool Required
II	Not required	J-35616-17 (LT GN)	No Tool Required

X207 Instrument Panel Wiring Harness to Instrument Panel Air Bag Jumper

Pin	Size	Color	Circuit	Terminal Type ID	Option	Function	Pin	Size	Color	Circuit	Terminal Type ID	Option
1	0.35	YE / OG	3025	I	—	Passenger Instrument Panel Air Bag Stage 1 High Control	1	0.35	YE / OG	3025	II	—
2	0.35	OG / WH	3024	I	—	Passenger Instrument Panel Air Bag Stage 1 Low Control	2	0.35	OG / WH	3024	II	—
3	0.35	GY / OG	3027	I	—	Passenger Instrument Panel Air Bag Stage 2 High Control	3	0.35	GY / <p01->	3027	II	—
4	0.35	OG / VT	3026	I	—	Passenger Instrument Panel Air Bag Stage 2 Low Control	4	0.35	OG / VT	3026	II	—
5	0.5	BK / WH	2051	I	—	Signal Ground	5	0.5	BK / WH	2051	II	—
6	—	—	—	—	—	Not Occu-pied	6	—	—	—	—	—

X208 Instrument Panel Wiring Harness to Body Wiring Harness

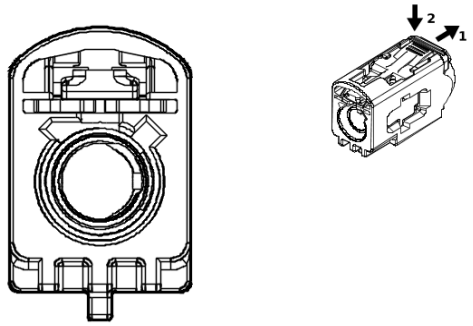

5215396

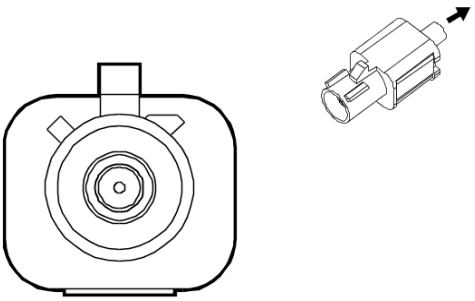

4496217

Connector Part Information

Harness Type: Instrument Panel Wiring Harness COAX

OEM Connector: 13516213

Service Connector: Service by Cable Assembly — See Part Catalog

Description: 1 <p01>-Way F Coax Type(BK)

Connector Part Information

Harness Type: Body Wiring Harness COAX

OEM Connector: 13594293

Service Connector: Service by Cable Assembly — See Part Catalog

Description: 1 <p01>-Way M Coax Type(BK)

Terminal Part Information

Terminal Type ID	Terminated Lead	Diagnostic Test Probe	Terminal Removal Tool
I	Not required	No Tool Required	No Tool Required

X208 Instrument Panel Wiring Harness to Body Wiring Harness

Pin	Size	Color	Circuit	Terminal Type ID	Option	Function	Pin	Size	Color	Circuit	Terminal Type ID	Option
—	—	Coax Cable	—	I	—	Driver Monitoring System Camera Coaxial Signal	—	—	Coax Cable	—	I	—

X217 Instrument Panel Wiring Harness to Body Wiring Harness

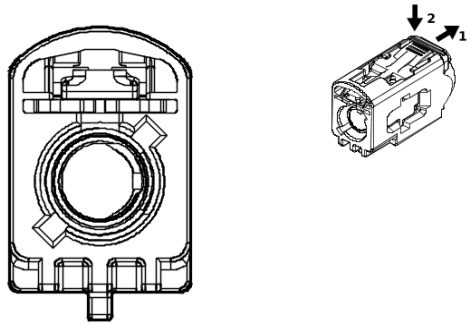

5215274

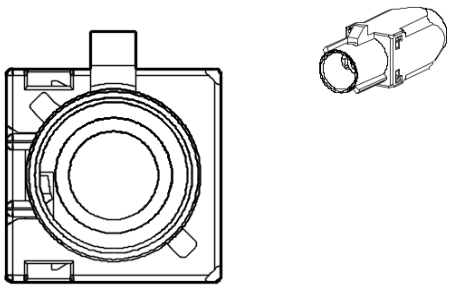

5215257

Connector Part Information

Harness Type: Instrument Panel Wiring Harness COAX

OEM Connector: 13516215

Service Connector: Service by Cable Assembly — See Part Catalog

Description: 1 <p01>-Way F Coax Type(BU)

Connector Part Information

Harness Type: Body Wiring Harness COAX

OEM Connector: 13515641

Service Connector: Service by Cable Assembly — See Part Catalog

Description: 1 <p01>-Way M Coax Type(BU)

Terminal Part Information

Terminal Type ID	Terminated Lead	Diagnostic Test Probe	Terminal Removal Tool
I	Not required	No Tool Required	No Tool Required

X217 Instrument Panel Wiring Harness to Body Wiring Harness

Pin	Size	Color	Circuit	Terminal Type ID	Option	Function	Pin	Size	Color	Circuit	Terminal Type ID	Option
—	—	Coax Cable	—	I	—	(GPS only) Coaxial Antenna GPS Signal	—	—	Coax Cable	—	I	—

X218 Instrument Panel Wiring Harness to Body Wiring Harness

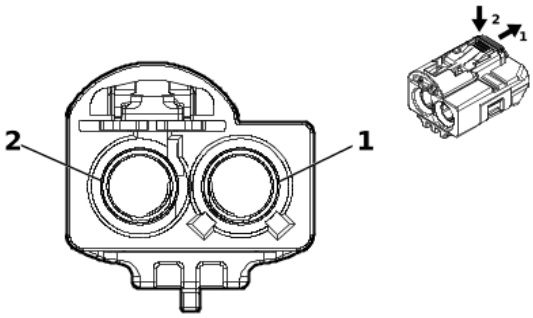

5429321

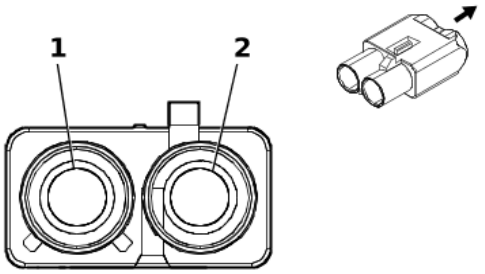

5429382

Connector Part Information

Harness Type: Instrument Panel Wiring Harness COAX

OEM Connector: 13516236

Service Connector: Service by Cable Assembly — See Part Catalog

Description: 2 <p01>-Way F Coax Type(CU)

Connector Part Information

Harness Type: Body Wiring Harness COAX

OEM Connector: 13515678

Service Connector: Service by Cable Assembly — See Part Catalog

Description: 2 <p01>-Way M Coax Type(CU)

Terminal Part Information

Terminal Type ID	Terminated Lead	Diagnostic Test Probe	Terminal Removal Tool
I	Not required	No Tool Required	No Tool Required

X218 Instrument Panel Wiring Harness to Body Wiring Harness

Pin	Size	Color	Circuit	Terminal Type ID	Option	Function	Pin	Size	Color	Circuit	Terminal Type ID	Option
—	—	Coax Cable	—	I	—	(XM +/-HD) Coaxial Antenna XM Signal	—	—	Coax Cable	—	I	—

X219 Instrument Panel Wiring Harness to Body Wiring Harness

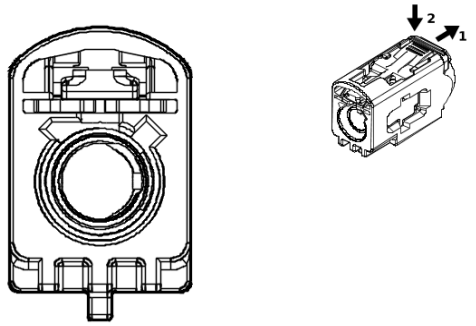

5215396

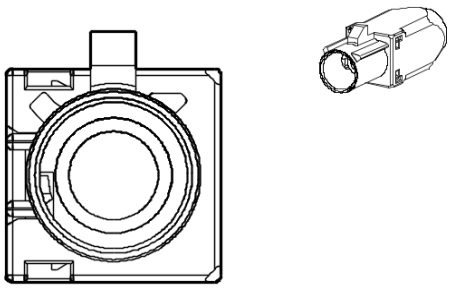

5215603

Connector Part Information

Harness Type: Instrument Panel Wiring Harness COAX

OEM Connector: 13516213

Service Connector: Service by Cable Assembly — See Part Catalog

Description: 1 <p01>-Way F Coax Type(BK)

Connector Part Information

Harness Type: Body Wiring Harness COAX

OEM Connector: 13515639

Service Connector: Service by Cable Assembly — See Part Catalog

Description: 1 <p01>-Way M Coax Type(BK)

Terminal Part Information

Terminal Type ID	Terminated Lead	Diagnostic Test Probe	Terminal Removal Tool
I	Not required	No Tool Required	No Tool Required

X219 Instrument Panel Wiring Harness to Body Wiring Harness

Pin	Size	Color	Circuit	Terminal Type ID	Option	Function	Pin	Size	Color	Circuit	Terminal Type ID	Option
—	—	Coax Cable	—	I	—	(AM/FM) Antenna RF Signal	—	—	Coax Cable	—	I	—

X300 Headliner Wiring Harness to Body Wiring Harness

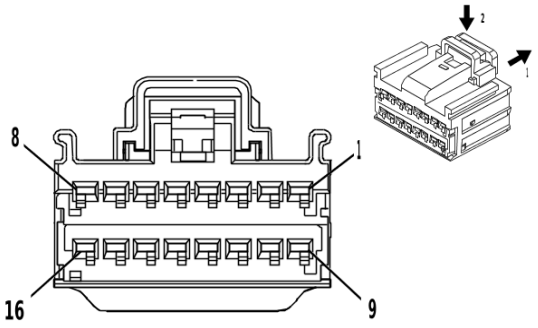

4332214

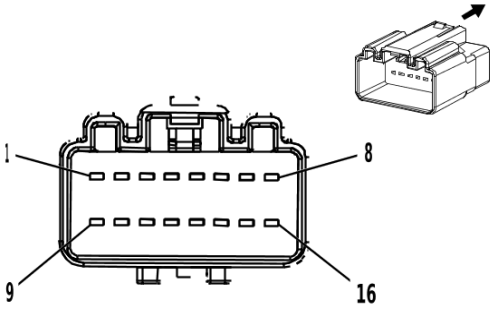

1483278

Connector Part Information

Harness Type: Headliner Wiring Harness
OEM Connector: 15512506
Service Connector: 13591061
Description: 16 <p01>-Way F 1.5 OCS Series(BK)

Connector Part Information

Harness Type: Body Wiring Harness
OEM Connector: 7282-6453-60
Service Connector: 89047072
Description: 16 <p01>-Way M 1.5 Kaizen Series(GN)

Terminal Part Information

Terminal Type ID	Terminated Lead	Diagnostic Test Probe	Terminal Removal Tool
I	84757974	J-35616-2A (GY)	J-38125-215A
II	13578907	J-35616-3 (GY)	J-38125-215A
III	13578907	J-35616-3 (GY)	J-38125-553

X300 Headliner Wiring Harness to Body Wiring Harness

Pin	Size	Color	Circuit	Terminal Type ID	Option	Function	Pin	Size	Color	Circuit	Terminal Type ID	Option
1	0.35	BK / BN	654	I	—	Cellular Telephone Microphone Low Reference	1	0.35	BK / BN	654	II	—
2	0.5	GN / BK	2515	I	—	Telematics Switch Supply Voltage	2	0.5	GN / BK	2515	III	—
3	0.35	GN / WH	2514	I	—	Telematics Switch Signal	3	0.35	GN / WH	2514	II	—
4	0.35	YE / VT	2516	I	—	Telematics Switch Green LED Indicator Control	4	0.35	YE / VT	2516	II	—
5	0.35	BN / WH	2517	I	—	Telematics Switch Red LED Indicator Control	5	0.35	BN / WH	2517	II	—
6	0.35	YE / RD	597	I	—	5V Reference	6	0.35	YE / RD	597	II	—
7	0.35	BK / BU	7566	I	—	Windshield Temperature and Inside Moisture Sensor Low Reference	7	0.35	BK / BU	7566	II	—

X300 Headliner Wiring Harness to Body Wiring Harness (cont'd)

Pin	Size	Color	Circuit	Terminal Type ID	Option	Function	Pin	Size	Color	Circuit	Terminal Type ID	Option
8	0.35	GY / GN	7565	I	—	Windshield Temperature Sensor Signal	8	0.35	GY / GN	7565	II	—
9	0.35	BU	655	I	—	Cellular Telephone Microphone Signal	9	0.35	BU	655	II	—
10	0.35	Bare	1782	I	—	Low Reference	10	0.35	Bare	1782	II	—
11	0.35	BK / WH	3451	I	—	Signal Ground	11	0.35	BK / WH	3451	II	—
12	0.35	RD / GN	3140	I	—	Battery Positive Voltage	12	0.35	RD / GN	3140	II	—
13	0.35	GY / WH	3153	I	—	Lane Departure Warning Disable Switch Signal	13	0.35	GY / WH	3153	II	—
14	0.35	WH	3152	I	—	Lane Departure Warning Indicator Control	14	0.35	WH	3152	II	—
15	0.35	GY / BU	7564	I	—	Humidity Sensor Signal 2	15	0.35	GY / BU	7564	II	—
16	0.35	YE / BU	3197	I	—	Intake Air Humidity and Temperature Sensor Signal	16	0.35	YE / BU	3197	II	—

X301 Headliner Wiring Harness to Body Wiring Harness

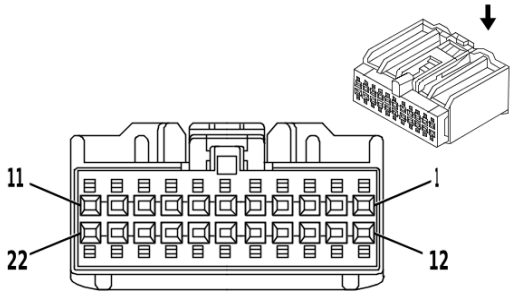

2593042

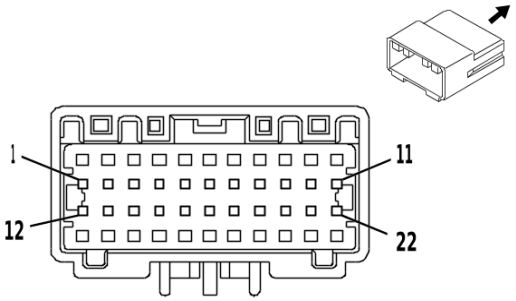

2916467

Connector Part Information

Harness Type: Headliner Wiring Harness
OEM Connector: AIT2PB-22-2AK
Service Connector: 13504097
Description: 22 <p01>-Way F 0.64 Kaizen Series(BK)

Connector Part Information

Harness Type: Body Wiring Harness
OEM Connector: 13892299
Service Connector: 13505628
Description: 22 <p01>-Way M 0.64 Series(BK)

Terminal Part Information

Terminal Type ID	Terminated Lead	Diagnostic Test Probe	Terminal Removal Tool
I	13575742	J-35616-64B (LT BU)	J-38125-215A
II	19299859	J-35616-65B (LT BU)	J-38125-215A

X301 Headliner Wiring Harness to Body Wiring Harness

Pin	Size	Color	Circuit	Terminal Type ID	Option	Function	Pin	Size	Color	Circuit	Terminal Type ID	Option
1	0.35	GY / WH	3272	I	—	Remote Control Door Lock Receiver Control	1	0.35	GY / WH	3272	II	—
2	0.35	YE / GN	3274	I	—	Remote Control Door Lock Receiver Transmit Signal	2	0.35	YE / GN	3274	II	—
3	0.35	BU / WH	3275	I	—	Remote Control Door Lock Receiver Receive Signal	3	0.35	BU / WH	3275	II	—
4	0.35	GY	3273	I	—	Remote Control Door Lock Receiver Low Reference	4	0.35	GY	3273	II	—
5	0.5	YE	6817	I	—	LED Backlight Dimming Control 1	5	0.5	YE	6817	II	—
6	0.5	WH / BN	6815	I	—	Inadvertent Load Control	6	0.75	WH / BN	6815	II	—
7	0.5	GY	157	I	—	Interior Lamp Control	7	0.5	GY	157	II	—

X301 Headliner Wiring Harness to Body Wiring Harness (cont'd)

Pin	Size	Color	Circuit	Terminal Type ID	Option	Function	Pin	Size	Color	Circuit	Terminal Type ID	Option
8	0.35	GY / GN	328	I	—	Interior Lamp Defeat Switch Signal	8	0.35	GY / GN	328	II	—
9	0.35	GY	156	I	—	Courtesy Lamp Switch Signal	9	0.35	GY	156	II	—
10	0.5	VT / GN	1739	I	—	Run/Crank Ignition 1 Voltage	10	0.5	VT / GN	1739	II	—
11	0.5	GN / WH	24	I	—	Backup Lamp Control	11	0.5	GN / WH	24	II	—
12	0.75	BK	3150	I	—	Ground	12	0.75	BK	3150	II	—
13	—	—	—	—	—	Not Occupied	13	—	—	—	—	—
14	0.35	VT / WH	5234	I	—	Passenger Seat Belt Indicator Control	14	0.35	VT / WH	5234	II	—
15	0.35	BU	2307	I	—	Passenger Air Bag On Indicator Control	15	0.35	BU	2307	II	—
16	0.35	GN	2308	I	—	Passenger Air Bag Off Indicator Control	16	0.35	GN	2308	II	—
17	0.35 0.5	GN GN	5060 5060	I I	UHY - UHY	Low Speed GMLAN Serial Data Low Speed GMLAN Serial Data	17	0.5	GN	5060	II	—
18	—	—	—	—	—	Body Control Module LIN Bus 1	18	0.5	GN / BN	6132	II	—
19	0.35	VT / WH	1139	I	—	Run/Crank Ignition 1 Voltage	19	0.35	VT / WH	1139	II	—
20 - 22	—	—	—	—	—	Not Occupied	20 - 22	—	—	—	—	—

X303 Body Wiring Harness to High Mount Stop Lamp Wiring Harness

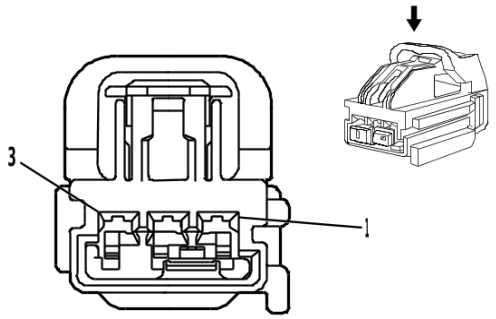

1787799

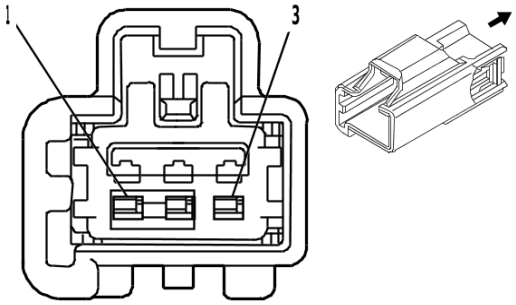

1787800

Connector Part Information

Harness Type: Body Wiring Harness
OEM Connector: 7283-3440-40
Service Connector: 19149536
Description: 3 <p01>-Way F 1.5 Kaizen Series(L-GY)

Connector Part Information

Harness Type: High Mount Stop Lamp Wiring Harness
OEM Connector: Not Available
Service Connector: Service by Harness - See Part Catalog
Description: 3 <p01>-Way M (L-GY)

Terminal Part Information

Terminal Type ID	Terminated Lead	Diagnostic Test Probe	Terminal Removal Tool
I	Not required	J-35616-2A (GY)	No Tool Required
II	Not required	J-35616-3 (GY)	No Tool Required

X303 Body Wiring Harness to High Mount Stop Lamp Wiring Harness

Pin	Size	Color	Circuit	Terminal Type ID	Option	Function	Pin	Size	Color	Circuit	Terminal Type ID	Option
1	0.75	WH / VT	1430	I	—	Exterior Courtesy Lamp Control	1	0.75	BN / <p01->	1430	II	—
2	0.35	VT / GY	1054	I	—	Stop Lamp Control	2	0.35	RD / <p01->	1054	II	—
3	0.75	BK	3150	I	—	Ground	3	0.75	BK	3150	II	—

X304 Body Wiring Harness to Antenna

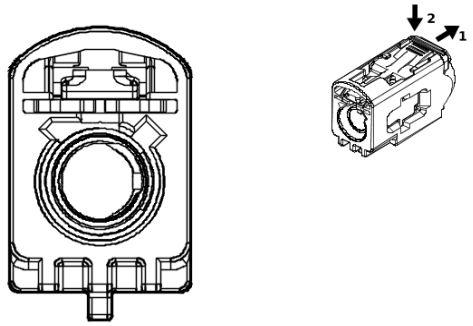

5215396

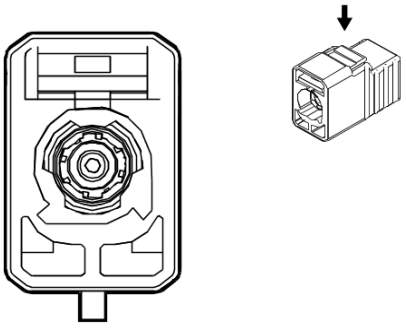

4991178

Connector Part Information

Harness Type: Body Wiring Harness COAX

OEM Connector: 13516213

Service Connector: Service by Cable Assembly — See Part Catalog

Description: 1 <p01>-Way F Coax Type(BK)

Connector Part Information

Harness Type: Antenna COAX

OEM Connector: Not Available

Service Connector: Service by Cable Assembly — See Part Catalog

Description: 1 <p01>-Way M (BK)

Terminal Part Information

Terminal Type ID	Terminated Lead	Diagnostic Test Probe	Terminal Removal Tool
I	Not required	No Tool Required	No Tool Required

X304 Body Wiring Harness to Antenna

Pin	Size	Color	Circuit	Terminal Type ID	Option	Function	Pin	Size	Color	Circuit	Terminal Type ID	Option
—	—	Coax Cable	—	I	—	(AM/FM) Antenna RF Signal	—	—	Coax Cable	—	I	—

X305 Instrument Panel Wiring Harness to Front Floor Console Wiring Harness

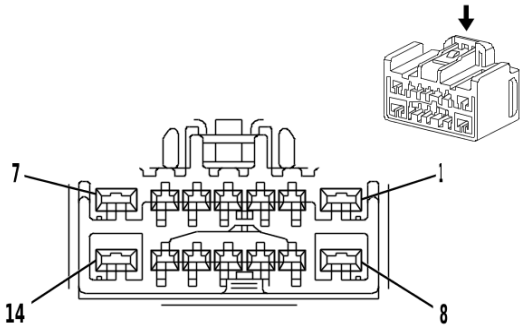

823290

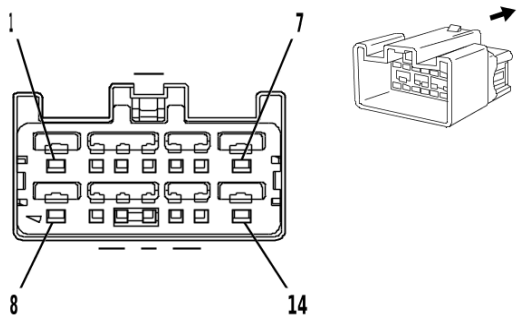

1283905

Connector Part Information

Harness Type: Instrument Panel Wiring Harness
OEM Connector: 7283-6447-40
Service Connector: 13513605
Description: 14 <p01>-Way F 1.5, 2.8 YESC Series(L-GY)

Connector Part Information

Harness Type: Front Floor Console Wiring Harness
OEM Connector: 7282-6447-40
Service Connector: Service by Harness - See Part Catalog
Description: 14 <p01>-Way M 1.5, 2.8 YESC Series(L-GY)

Terminal Part Information

Terminal Type ID	Terminated Lead	Diagnostic Test Probe	Terminal Removal Tool
I	13575850	J-35616-14 (GN)	J-38125-557
II	84962855	J-35616-4A (PU)	J-38125-11A
III	84962855	J-35616-5 (PU)	J-38125-553
IV	Not required	J-35616-3 (GY)	No Tool Required
V	Not required	J-35616-5 (PU)	No Tool Required

X305 Instrument Panel Wiring Harness to Front Floor Console Wiring Harness

Pin	Size	Color	Circuit	Terminal Type ID	Option	Function	Pin	Size	Color	Circuit	Terminal Type ID	Option
1	—	—	—	—	—	Not Occupied	1	—	—	—	—	—
2	0.5	BK / WH	2051	I	—	Signal Ground Signal Ground	2	0.35 0.5	BK / WH BK / WH	2051 2051	IV IV	IOR+ UIJ USS+ (M5T/ MYB)
3 - 7	—	—	—	—	—	Not Occupied	3 - 7	—	—	—	—	—
8	1.5	BK	2050	II	—	Ground	8	1.5	BK	2050	V	—
9	0.5	VT	4601	I	—	Battery Positive Voltage Retained Accessory Power Control	9	0.5 0.5	RD / VT VT	340 4601	IV IV	(M5T/ MYB) - K4C K4C/ USS
10	0.5	BK	2050	I	—	Ground	10	0.5	BK	2050	IV	—
11	0.35	GN	4512	I	—	Wireless Charging System Charge Indicator Control	11	0.35	GN	4512	IV	—

X305 Instrument Panel Wiring Harness to Front Floor Console Wiring Harness (cont'd)

Pin	Size	Color	Circuit	Terminal Type ID	Option	Function	Pin	Size	Color	Circuit	Terminal Type ID	Option
12	0.35	BN	4511	I	—	Wireless Charging System Fault Indicator Control	12	0.35	BN	4511	IV	—
13	—	—	—	—	—	Not Occupied	13	—	—	—	—	—
14	1	VT	2101	III	—	Retained Accessory Power Control	14	1.5	VT	2101	V	—

X306 Instrument Panel Wiring Harness to Front Floor Console Wiring Harness

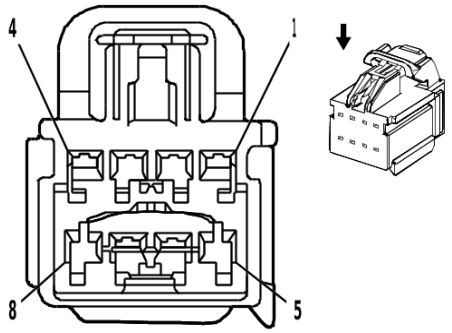

1849808

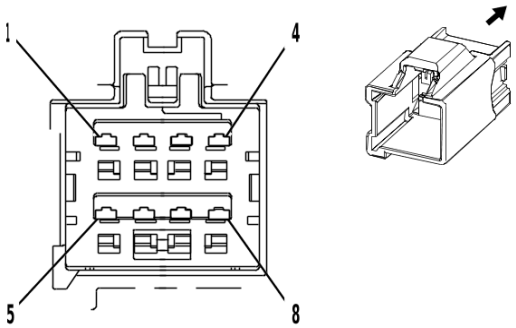

1849807

Connector Part Information

Harness Type: Instrument Panel Wiring Harness

OEM Connector: 7283-3441-40

Service Connector: 19153166

Description: 8 <p01>-Way F 1.5 YESC Kaizen Series(L-GY)

Connector Part Information

Harness Type: Front Floor Console Wiring Harness

OEM Connector: 7282-3441-40

Service Connector: Service by Harness - See Part Catalog

Description: 8 <p01>-Way M 1.5 YESC Kaizen Series(L-GY)

Terminal Part Information

Terminal Type ID	Terminated Lead	Diagnostic Test Probe	Terminal Removal Tool
I	Not required	J-35616-2A (GY)	No Tool Required
II	Not required	J-35616-3 (GY)	No Tool Required

X306 Instrument Panel Wiring Harness to Front Floor Console Wiring Harness

Pin	Size	Color	Circuit	Terminal Type ID	Option	Function	Pin	Size	Color	Circuit	Terminal Type ID	Option
1	0.35	VT	801	I	—	Retained Accessory Power Control	1	0.35	VT	801	II	—
2	0.5	GN / BU	6133	I	—	Body Control Module LIN Bus 2	2	0.5	GN / BU	6133	II	—
3	0.75	BK	2050	I	—	Ground	3	0.35	BK	2050	II	—
4 - 5	—	—	—	—	—	Not Occupied	4 - 5	—	—	—	—	—
6	0.35	VT / YE	5526	I	—	Tap Up/Tap Down Switch Signal	6	0.35	VT / YE	5526	II	—
7	0.5	VT / BK	7553	I	—	Park Lock Solenoid Actuator Control	7	0.5	VT / BK	7553	II	—
8	0.5	WH / VT	5905	I	—	Key Capture/ Column Lock Shift Position Signal	8	0.5	WH / VT	5905	II	—

X307 Headliner Wiring Harness to Body Wiring Harness (-UHY)

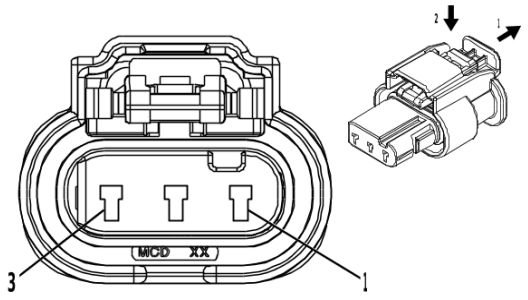

4421568

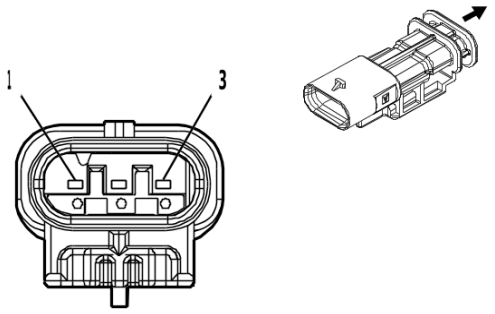

5068799

Connector Part Information

Harness Type: Headliner Wiring Harness

OEM Connector: 34900-3120

Service Connector: 19368220

Description: 3 <p01>-Way F 1.2 MCON-LL Series, Sealed(BK)

Connector Part Information

Harness Type: Body Wiring Harness

OEM Connector: 34899-3120

Service Connector: 84626740

Description: 3 <p01>-Way M 1.2 MCON-LL Series, Sealed(BK)

Terminal Part Information

Terminal Type ID	Terminated Lead	Diagnostic Test Probe	Terminal Removal Tool
I	Not required	J-35616-16 (LT GN)	No Tool Required
II	Not required	J-35616-17 (LT GN)	No Tool Required

X307 Headliner Wiring Harness to Body Wiring Harness (-UHY)

Pin	Size	Color	Circuit	Terminal Type ID	Option	Function	Pin	Size	Color	Circuit	Terminal Type ID	Option
1	0.35	VT / YE	7043	I	—	Microphone [+] Signal	1	0.35	VT / YE	7043	II	—
2	0.35	BU / BK	7044	I	—	Microphone [-]	2	0.35	BU / BK	7044	II	—
3	—	—	—	—	—	Not Occu-pied	3	—	—	—	—	—

X307 Headliner Wiring Harness to Body Wiring Harness (UHY)

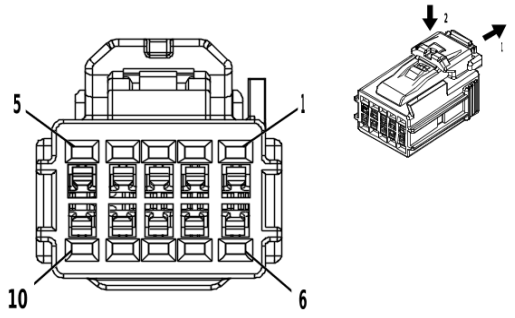

4254030

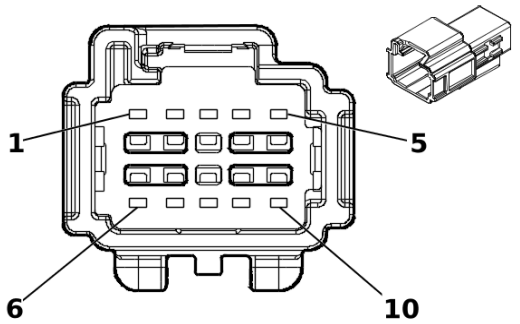

5355759

Connector Part Information

Harness Type: Headliner Wiring Harness
OEM Connector: 6098-9004
Service Connector: 13517411
Description: 10 <p01>-Way F 1.2 Series(BK)

Connector Part Information

Harness Type: Body Wiring Harness
OEM Connector: 6098-9079
Service Connector: 13530136
Description: 10 <p01>-Way M 1.2 MCON Series(BK)

Terminal Part Information

Terminal Type ID	Terminated Lead	Diagnostic Test Probe	Terminal Removal Tool
I	84962854	J-35616-16 (LT GN)	J-38125-215A
II	84726946	J-35616-17 (LT GN)	J-38125-215A

X307 Headliner Wiring Harness to Body Wiring Harness (UHY)

Pin	Size	Color	Circuit	Terminal Type ID	Option	Function	Pin	Size	Color	Circuit	Terminal Type ID	Option
1 - 3	—	—	—	—	—	Not Occupied	1 - 3	—	—	—	—	—
4	0.35	BU	2500	I	—	High Speed GMLAN Serial Data [+] 1	4	0.5	BU	2500	II	—
5	0.35	WH	2501	I	—	High Speed GMLAN Serial Data [-] 1	5	0.5	WH	2501	II	—
6	0.35	BU	2500	I	—	High Speed GMLAN Serial Data [+] 1	6	0.5	BU	2500	II	—
7	0.35	WH	2501	I	—	High Speed GMLAN Serial Data [-] 1	7	0.5	WH	2501	II	—
8	—	—	—	—	—	Not Occupied	8	—	—	—	—	—
9	0.35	WH / BU	5986	I	—	Serial Data Communication Enable	9	0.35	WH / BU	5986	II	—
10	—	—	—	—	—	Not Occupied	10	—	—	—	—	—

X309 Body Wiring Harness to Antenna COAX

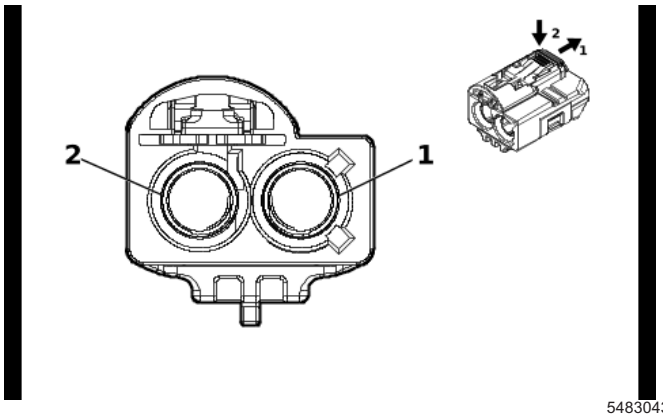

5483043

—

Connector Part Information

Harness Type: Body Wiring Harness COAX

OEM Connector: Not Available

Service Connector: Service by Cable Assembly — See Part Catalog

Description: 2 <p01>-Way F

Connector Part Information

Harness Type: Antenna COAX

OEM Connector: Not Available

Service Connector: Service by Cable Assembly — See Part Catalog

Description: 2 <p01>-Way M

Terminal Part Information

Terminal Type ID	Terminated Lead	Diagnostic Test Probe	Terminal Removal Tool
I	Not required	No Tool Required	No Tool Required

X309 Body Wiring Harness to Antenna COAX

Pin	Size	Color	Circuit	Terminal Type ID	Option	Function	Pin	Size	Color	Circuit	Terminal Type ID	Option
—	—	Coax Cable	—	I	—	(GPS/Cell) Coaxial Antenna Cell/ GPS combined Signal	—	—	Coax Cable	—	I	—

X310 Front Seat Wiring Harness - Driver to Body Wiring Harness

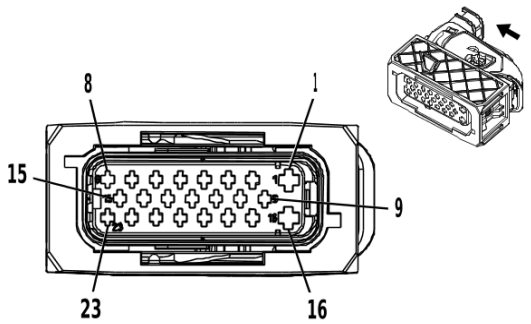

2906942

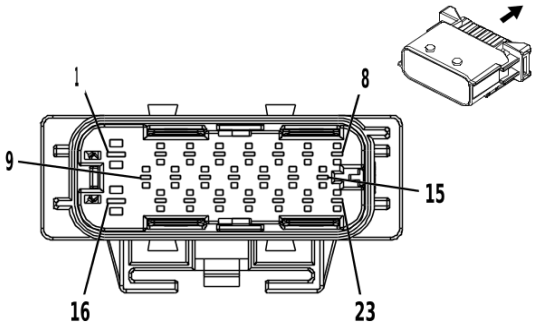

2906943

Connector Part Information

Harness Type: Front Seat Wiring Harness - Driver
OEM Connector: Not Available
Service Connector: Service by Harness - See Part Catalog
Description: 23 <p01>-Way F

Connector Part Information

Harness Type: Body Wiring Harness
OEM Connector: 13750010
Service Connector: 19332380
Description: 23 <p01>-Way M 1.5 DSQ, 2.8 ATS Series, Sealed(BK)

Terminal Part Information

Terminal Type ID	Terminated Lead	Diagnostic Test Probe	Terminal Removal Tool
I	Not required	J-35616-2A (GY)	No Tool Required
II	13575364	J-35616-5 (PU)	J-38125-36
III	13575380	J-35616-3 (GY)	EL-38125-560-A
IV	13575380	J-35616-3 (GY)	J-38125-215A
V	13575380	J-35616-3 (GY)	J-38125-560

X310 Front Seat Wiring Harness - Driver to Body Wiring Harness

Pin	Size	Color	Circuit	Terminal Type ID	Option	Function	Pin	Size	Color	Circuit	Terminal Type ID	Option
1	2.5	RD / YE	5040	I	—	Battery Positive Voltage	1	2.5	RD / YE	5040	II	—
2	0.75	BK / YE	2080	I	—	Driver Heated Seat Thermistor Low Reference	2	0.75	BK / YE	2080	III	—
3 - 6	—	—	—	—	—	Not Occupied	3 - 6	—	—	—	—	—
7	0.35	VT / OG	3482	I	—	Driver Seat Belt Anchor Pretensioner Low Control	7	0.35	YE / OG	3482	IV	—
8	0.35	OG / YE	3481	I	—	Driver Seat Belt Anchor Pretensioner High Control	8	0.35	OG / YE	3481	IV	—
9	—	—	—	—	—	Not Occupied	9	—	—	—	—	—
10	0.75	VT / BK	2424	I	—	Driver Seat Back Heating Element Low Reference	10	0.75	VT / BK	2424	III	—

X310 Front Seat Wiring Harness - Driver to Body Wiring Harness (cont'd)

Pin	Size	Color	Circuit	Terminal Type ID	Option	Function	Pin	Size	Color	Circuit	Terminal Type ID	Option
11	0.35	OG / BN	238	I	—	Driver Seat Belt Switch Signal	11	0.35	OG / BN	238	V	—
12	0.35	GN / VT	5906	I	—	Driver Seat Blower Motor Control 1	12	0.35	GN / VT	5906	V	—
13	0.75	BU	2425	I	—	Driver Seat Back Heating Temperature Sensor Signal	13	0.75	BU	2425	III	—
14	—	—	—	—	—	Not Occupied	14	—	—	—	—	—
15	0.35	GN / OG	3069	I	—	Driver Seat Side Air Bag Low Control	15	0.35	GN / OG	3069	IV	—
16	2.5	BK	3750	I	—	Ground	16	2.5	BK	3750	II	—
17	0.75	YE / GY	2079	I	—	Driver Seat Heating Temperature Sensor Signal	17	0.75	YE / GY	2079	III	—
18	—	—	—	—	—	Not Occupied	18	—	—	—	—	—
19	0.35	BK / OG	1363	I	—	Driver Seat Belt Switch Low Reference	19	0.35	BK / OG	1363	IV	—
20	0.75	VT / BK	1239	I	—	Run/Crank Ignition 1 Voltage	20	0.75	VT / BK	1239	III	—
21	0.75	BN / VT	2077	I	—	Driver Seat Heating Element Control	21	0.75	BN / VT	2077	III	—
22	0.75	BN	2432	I	—	Driver Seat Back Heating Element Control	22	0.75	BN	2432	III	—
23	0.35	OG / BU	3068	I	—	Driver Seat Side Air Bag High Control	23	0.35	OG / BU	3068	IV	—

X317 Body Wiring Harness to Antenna

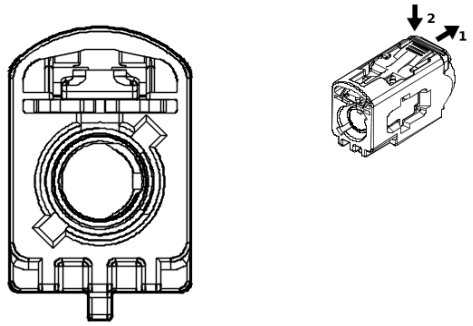

5215274

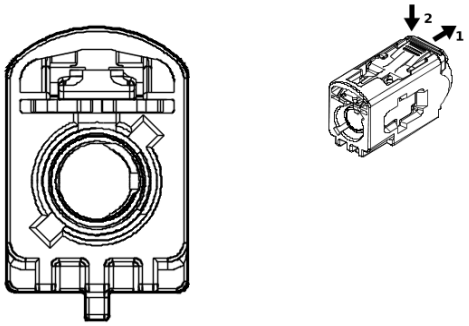

5215274

Connector Part Information

Harness Type: Body Wiring Harness COAX

OEM Connector: 13516215

Service Connector: Service by Cable Assembly — See Part Catalog

Description: 1 <p01>-Way F Coax Type(BU)

Connector Part Information

Harness Type: Antenna COAX

OEM Connector: Not Available

Service Connector: Service by Cable Assembly — See Part Catalog

Description: 1 <p01>-Way M (BU)

Terminal Part Information

Terminal Type ID	Terminated Lead	Diagnostic Test Probe	Terminal Removal Tool
I	Not required	No Tool Required	No Tool Required

X317 Body Wiring Harness to Antenna

Pin	Size	Color	Circuit	Terminal Type ID	Option	Function	Pin	Size	Color	Circuit	Terminal Type ID	Option
—	—	Coax Cable	—	I	—	(GPS only) Coaxial Antenna GPS Signal	—	—	Coax Cable	—	I	—

X320 Front Seat Wiring Harness - Passenger to Body Wiring Harness

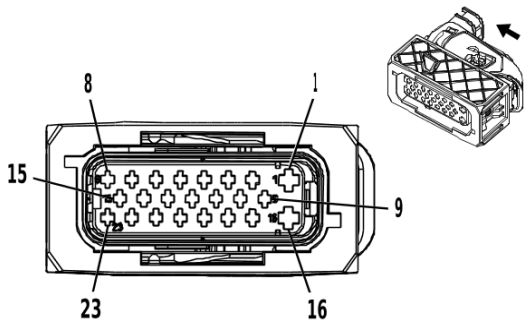

2906942

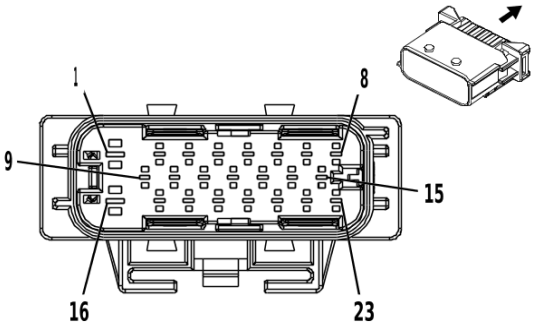

2906943

Connector Part Information

Harness Type: Front Seat Wiring Harness - Passenger
OEM Connector: Not Available
Service Connector: Service by Harness - See Part Catalog
Description: 23 <p01>-Way F

Connector Part Information

Harness Type: Body Wiring Harness
OEM Connector: 13750010
Service Connector: 19332380
Description: 23 <p01>-Way M 1.5 DSQ, 2.8 ATS Series, Sealed(BK)

Terminal Part Information

Terminal Type ID	Terminated Lead	Diagnostic Test Probe	Terminal Removal Tool
I	Not required	J-35616-2A (GY)	No Tool Required
II	13575364	J-35616-5 (PU)	J-38125-36
III	13575380	J-35616-3 (GY)	EL-38125-560-A
IV	13575380	J-35616-3 (GY)	J-38125-215A
V	13578882	J-35616-3 (GY)	J-38125-560

X320 Front Seat Wiring Harness - Passenger to Body Wiring Harness

Pin	Size	Color	Circuit	Terminal Type ID	Option	Function	Pin	Size	Color	Circuit	Terminal Type ID	Option
1	2.5	RD / BN	1440	I	—	Battery Positive Voltage	1	2.5	RD / BN	1440	II	—
2	0.75	BK / YE	2080	I	—	Driver Heated Seat Thermistor Low Reference	2	0.75	BK / YE	2080	III	—
3	0.75	RD / GN	5140	I	—	Battery Positive Voltage	3	0.75	RD / GN	5140	III	—
4	—	—	—	—	—	Not Occupied	4	—	—	—	—	—
5	0.5	BK / WH	2251	I	—	Signal Ground	5	0.5	BK / WH	2251	III	—
6	0.35	GN	5060	I	—	Low Speed GMLAN Serial Data	6	0.35	GN	5060	V	—
7	0.35	GY / OG	3480	I	—	Passenger Seat Belt Anchor Pretensioner Low Control	7	0.35	GY / OG	3480	IV	—

X320 Front Seat Wiring Harness - Passenger to Body Wiring Harness (cont'd)

Pin	Size	Color	Circuit	Terminal Type ID	Option	Function	Pin	Size	Color	Circuit	Terminal Type ID	Option
8	0.35	OG / BN	3479	I	—	Passenger Seat Belt Anchor Pretensioner High Control	8	0.35	OG / BN	3479	IV	—
9	0.75	RD / GN	6140	I	—	Battery Positive Voltage	9	0.75	RD / GN	6140	III	—
10	0.75	VT / BK	2424	I	—	Driver Seat Back Heating Element Low Reference	10	0.75	VT / BK	2424	III	—
11	0.35	OG / VT	1362	I	—	Passenger Seat Belt Switch Signal	11	0.35	OG / VT	1362	IV	—
12	0.35	RD / GN	4440	I	—	Battery Positive Voltage	12	0.35	RD / GN	4440	V	—
13	0.75	BU	2425	I	—	Driver Seat Back Heating Temperature Sensor Signal	13	0.75	BU	2425	III	—
14	0.35	GN / VT	5906	I	—	Driver Seat Blower Motor Control 1	14	0.35	GN / VT	5906	V	—
15	0.35	BN / OG	3067	I	—	Passenger Seat Side Air Bag Low Control	15	0.35	BN / OG	3067	IV	—
16	2.5	BK	3850	I	—	Ground	16	2.5	BK	3850	II	—
17	0.75	YE / GY	2079	I	—	Driver Seat Heating Temperature Sensor Signal	17	0.75	YE / GY	2079	III	—
18	0.5	GN / BU	6133	I	—	Body Control Module LIN Bus 2	18	0.5	GN / BU	6133	III	—
19	0.35	BK / OG	1361	I	—	Passenger Seat Belt Switch Low Reference	19	0.35	BK / OG	1361	IV	—
20	0.75	VT / BK	1239	I	—	Run/Crank Ignition 1 Voltage	20	0.75	VT / BK	1239	III	—
21	0.75	BN / VT	2077	I	—	Driver Seat Heating Element Control	21	0.75	BN / VT	2077	III	—
22	0.75	BN	2432	I	—	Driver Seat Back Heating Element Control	22	0.75	BN	2432	III	—
23	0.35	OG / GY	3066	I	—	Passenger Seat Side Air Bag High Control	23	0.35	OG / GY	3066	IV	—

X400 Rear License Plate Lamp Wiring Harness to Chassis Wiring Harness

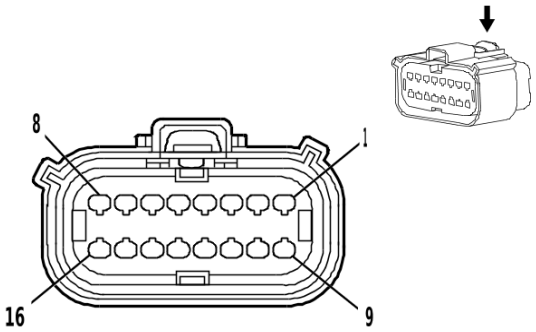

3639447

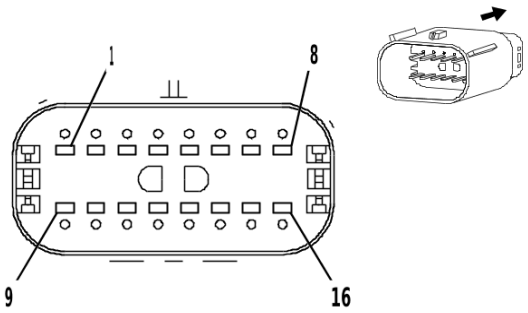

4223713

Connector Part Information

Harness Type: Rear License Plate Lamp Wiring Harness
OEM Connector: 33472-1607
Service Connector: Service by Harness - See Part Catalog
Description: 16 <p01>-Way F 1.5 MX Series, Sealed(L-GY)

Connector Part Information

Harness Type: Chassis Wiring Harness
OEM Connector: 33482-8602
Service Connector: 84625100
Description: 16 <p01>-Way M 1.5 MX Series, Sealed(GY)

Terminal Part Information

Terminal Type ID	Terminated Lead	Diagnostic Test Probe	Terminal Removal Tool
I	Not required	J-35616-14 (GN)	No Tool Required
II	Not required	J-35616-2A (GY)	No Tool Required
III	19119395	J-35616-3 (GY)	J-38125-217

X400 Rear License Plate Lamp Wiring Harness to Chassis Wiring Harness

Pin	Size	Color	Circuit	Terminal Type ID	Option	Function	Pin	Size	Color	Circuit	Terminal Type ID	Option
1	0.5	GN / WH	24	I	—	Backup Lamp Control	1	0.5	GN / WH	24	III	—
2	0.5	VT / GN	1739	I	—	Run/Crank Ignition 1 Voltage	2	0.5	VT / GN	1739	III	—
3	0.5	BK / WH	751	I	—	Signal Ground	3	0.5	BK / WH	751	III	—
4	0.5	YE	2375	I	—	Left Rear Outer Parking Assist Sensor Signal	4	0.5	YE	2375	III	—
5	0.5	YE / BU	2376	I	—	Left Rear Middle Parking Assist Sensor Signal	5	0.5	YE / BU	2376	III	—
6	0.5	BK / GY	2379	I	—	Object Sensor Low Reference	6	0.75	BK / GY	2379	III	—
7	0.5	BK	750	I	—	Ground	7	0.5	BK	750	III	—
8	0.75	GY	5911	II	—	Door Lock Actuator Lock Control 2	8	0.75	GY	5911	III	—

X400 Rear License Plate Lamp Wiring Harness to Chassis Wiring Harness (cont'd)

Pin	Size	Color	Circuit	Terminal Type ID	Option	Function	Pin	Size	Color	Circuit	Terminal Type ID	Option
9	0.5	GN	6974	I	—	Rearview Camera Low Reference	9	0.5	GN	6974	III	—
10	0.5	WH / BU	6973	I	—	Rearview Camera Signal [-]	10	0.5	WH / BU	6973	III	—
11	0.5	GY / YE	6972	I	—	Rearview Camera Signal [+]	11	0.5	GY / YE	6972	III	—
12	0.5	YE / VT	2378	I	—	Right Rear Outer Parking Assist Sensor Signal	12	0.5	YE / VT	2378	III	—
13	0.5	YE / WH	2377	I	—	Right Rear Middle Parking Assist Sensor Signal	13	0.5	YE / WH	2377	III	—
14	0.5	BN / WH	2374	I	—	Object Sensor Voltage Reference	14	0.75	BN / WH	2374	III	—
15	0.5	GN / YE	6846	I	—	Rear License Plate Lamp Control	15	0.5	GN / YE	6846	III	—
16	0.75	BN / YE	294	II	—	Door Lock Actuator Unlock Control	16	0.75	BN / YE	294	III	—

X401 Cargo Lamp to Chassis Wiring Harness

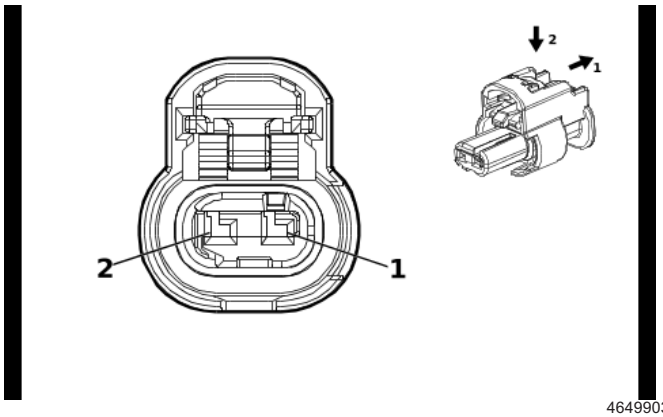

4649903

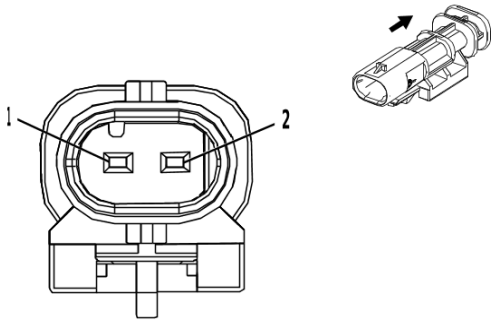

2474755

Connector Part Information

Harness Type: Cargo Lamp
OEM Connector: Not Available
Service Connector: Service by Harness - See Part Catalog
Description: 2 <p01>-Way F

Connector Part Information

Harness Type: Chassis Wiring Harness
OEM Connector: 2203314-1
Service Connector: 19332631
Description: 2 <p01>-Way M 1.2 Multilock Series, Sealed(BK)

Terminal Part Information

Terminal Type ID	Terminated Lead	Diagnostic Test Probe	Terminal Removal Tool
I	Not required	J-35616-16 (LT GN)	No Tool Required
II	Not required	J-35616-17 (LT GN)	No Tool Required

X401 Cargo Lamp to Chassis Wiring Harness

Pin	Size	Color	Circuit	Terminal Type ID	Option	Function	Pin	Size	Color	Circuit	Terminal Type ID	Option
1	0.75	WH / VT	1430	I	—	Exterior Courtesy Lamp Control	1	0.75	WH / VT	1430	II	—
2	0.75	BK / WH	751	I	—	Signal Ground	2	0.75	BK / WH	751	II	—

X402 Rearview Camera Wiring Harness to Chassis Wiring Harness (ULV)

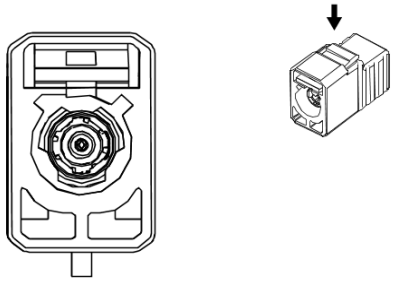

2893647

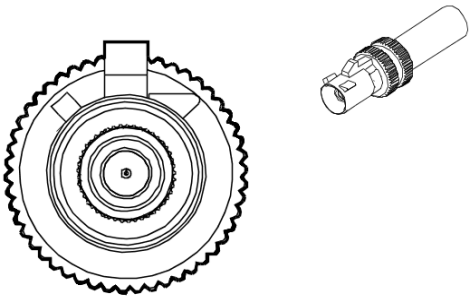

5001492

Connector Part Information

Harness Type: Rearview Camera Wiring Harness COAX

OEM Connector: 13508115

Service Connector: Service by Cable Assembly — See Part Catalog

Description: 1 <p01>-Way F Coax Type(BK)

Connector Part Information

Harness Type: Chassis Wiring Harness COAX

OEM Connector: 13508111

Service Connector: Service by Cable Assembly — See Part Catalog

Description: 1 <p01>-Way M Coax Type(BK)

Terminal Part Information

Terminal Type ID	Terminated Lead	Diagnostic Test Probe	Terminal Removal Tool
I	Not required	No Tool Required	No Tool Required

X402 Rearview Camera Wiring Harness to Chassis Wiring Harness (ULV)

Pin	Size	Color	Circuit	Terminal Type ID	Option	Function	Pin	Size	Color	Circuit	Terminal Type ID	Option
—	—	Coax Cable	—	I	—	Rear Vision Camera Co-axial Video Signal	—	—	Coax Cable	—	I	—

X402 Rear License Plate Lamp Wiring Harness to Chassis Wiring Harness (UVB-ULV)

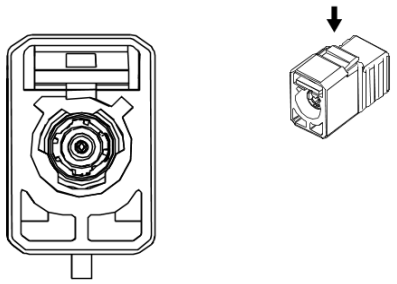

2893647

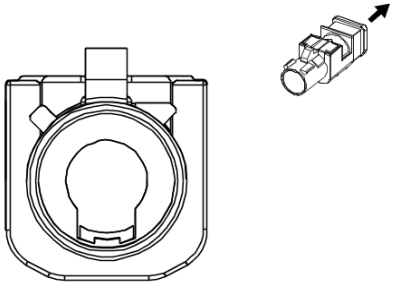

3214012

Connector Part Information

Harness Type: Rear License Plate Lamp Wiring Harness COAX

OEM Connector: 13508115

Service Connector: Service by Cable Assembly — See Part Catalog

Description: 1 <p01>-Way F Coax Type(BK)

Connector Part Information

Harness Type: Chassis Wiring Harness COAX

OEM Connector: Not Available

Service Connector: Service by Cable Assembly — See Part Catalog

Description: 1 <p01>-Way M (BK)

Terminal Part Information

Terminal Type ID	Terminated Lead	Diagnostic Test Probe	Terminal Removal Tool
I	Not required	No Tool Required	No Tool Required

X402 Rear License Plate Lamp Wiring Harness to Chassis Wiring Harness (UVB-ULV)

Pin	Size	Color	Circuit	Terminal Type ID	Option	Function	Pin	Size	Color	Circuit	Terminal Type ID	Option
—	—	Coax Cable	—	I	—	Rear Vision Camera Co-axial Video Signal	—	—	Coax Cable	—	I	—

X403 Liftgate Jumper Wiring Harness to Rear License Plate Lamp Wiring Harness

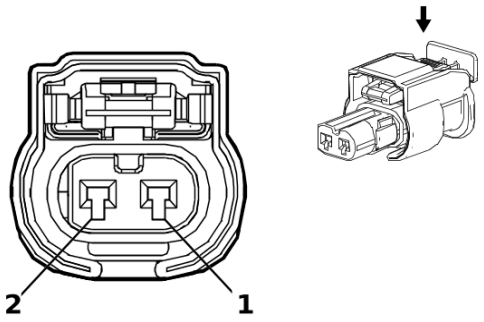

5210916

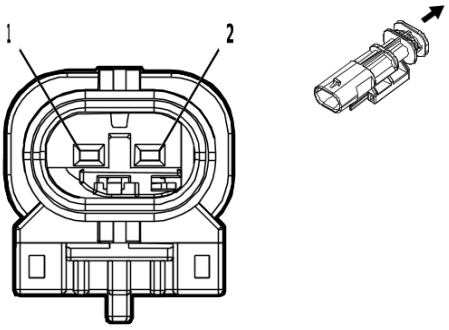

4994410

Connector Part Information

Harness Type: Liftgate Jumper Wiring Harness

OEM Connector: 34900-2121

Service Connector: Service by Harness - See Part Catalog

Description: 2 <p01>-Way F 1.2 MCON Series, Sealed(BK)

Connector Part Information

Harness Type: Rear License Plate Lamp Wiring Harness

OEM Connector: 34899-2081

Service Connector: Service by Harness - See Part Catalog

Description: 2 <p01>-Way M 1.2 MCON Series, Sealed(GY)

Terminal Part Information

Terminal Type ID	Terminated Lead	Diagnostic Test Probe	Terminal Removal Tool
I	Not required	J-35616-16 (LT GN)	No Tool Required
II	Not required	J-35616-17 (LT GN)	No Tool Required

X403 Liftgate Jumper Wiring Harness to Rear License Plate Lamp Wiring Harness

Pin	Size	Color	Circuit	Terminal Type ID	Option	Function	Pin	Size	Color	Circuit	Terminal Type ID	Option
1	0.75	GY	5911	I	—	Door Lock Actuator Lock Control 2	1	0.75	GY	5911	II	—
2	0.75	BN / YE	294	I	—	Door Lock Actuator Un-lock Control	2	0.75	BN / YE	294	II	—

X410 Tail Lamp - Left to Chassis Wiring Harness

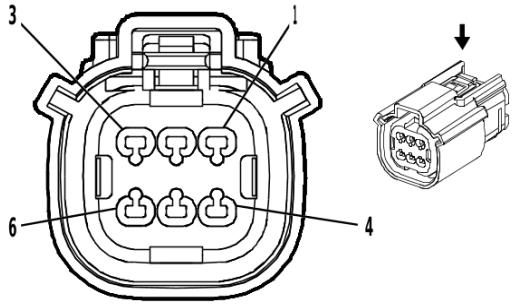

1986157

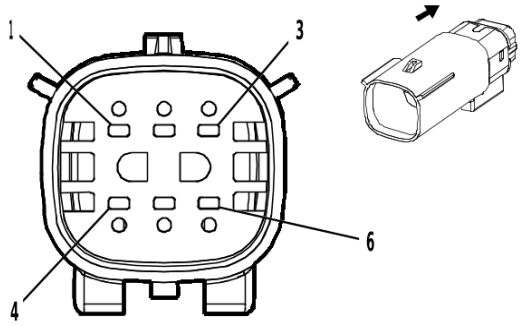

1986159

Connector Part Information

Harness Type: Tail Lamp - Left
OEM Connector: Not Available
Service Connector: Service by Harness - See Part Catalog
Description: 6 <p01>-Way F

Connector Part Information

Harness Type: Chassis Wiring Harness
OEM Connector: 33482-3601
Service Connector: 19367742
Description: 6 <p01>-Way M 1.5 MX Series, Sealed(BK)

Terminal Part Information

Terminal Type ID	Terminated Lead	Diagnostic Test Probe	Terminal Removal Tool
I	Not required	J-35616-2A (GY)	No Tool Required
II	Not required	J-35616-3 (GY)	No Tool Required

X410 Tail Lamp - Left to Chassis Wiring Harness

Pin	Size	Color	Circuit	Terminal Type ID	Option	Function	Pin	Size	Color	Circuit	Terminal Type ID	Option
1	1.5	YE	24	I	—	Backup Lamp Control	1	1.5	GN / WH	24	II	—
2	1.5	OG	2509	I	—	Left Rear Park Lamp Control	2	1.5	BN / BU	2509	II	—
3	1.5	GY	7542	I	—	Left Rear Stop Lamp Control	3	1.5	GY / YE	7542	II	—
4	1.5	BK	750	I	—	Ground	4	1.5	BK	750	II	—
5 - 6	—	—	—	—	—	Not Occu-pied	5 - 6	—	—	—	—	—

X420 Tail Lamp - Right to Chassis Wiring Harness

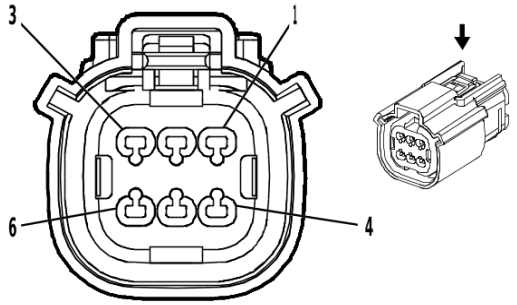

1986157

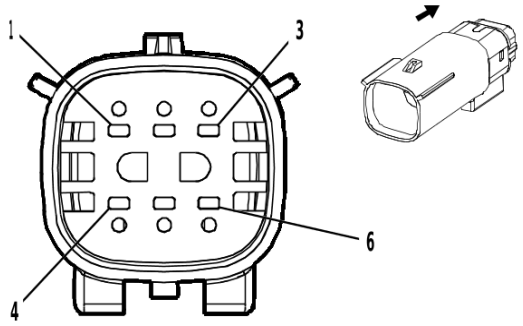

1986159

Connector Part Information

Harness Type: Tail Lamp - Right
OEM Connector: Not Available
Service Connector: Service by Harness - See Part Catalog
Description: 6 <p01>-Way F

Connector Part Information

Harness Type: Chassis Wiring Harness
OEM Connector: 33482-3601
Service Connector: 19367742
Description: 6 <p01>-Way M 1.5 MX Series, Sealed(BK)

Terminal Part Information

Terminal Type ID	Terminated Lead	Diagnostic Test Probe	Terminal Removal Tool
I	Not required	J-35616-2A (GY)	No Tool Required
II	Not required	J-35616-3 (GY)	No Tool Required

X420 Tail Lamp - Right to Chassis Wiring Harness

Pin	Size	Color	Circuit	Terminal Type ID	Option	Function	Pin	Size	Color	Circuit	Terminal Type ID	Option
1	1.5	YE	24	I	—	Backup Lamp Control	1	1.5	GN / WH	24	II	—
2	1.5	OG	4609	I	—	Audio Request Signal	2	1.5	BN / GY	2609	II	—
3	1.5	GY	7541	I	—	Right Rear Stop Lamp Control	3	1.5	WH / YE	7541	II	—
4	1.5	BK	850	I	—	Ground	4	1.5	BK	850	II	—
5 - 6	—	—	—	—	—	Not Occupied	5 - 6	—	—	—	—	—

X500 Body Wiring Harness to Front Side Door Door Wiring Harness - Driver

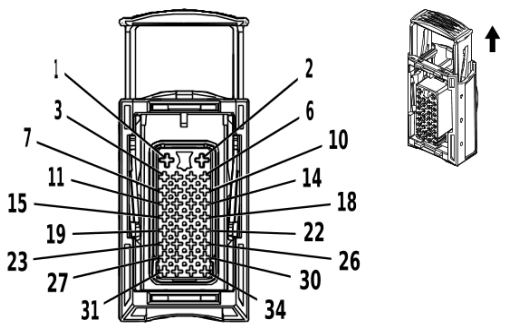

2042940

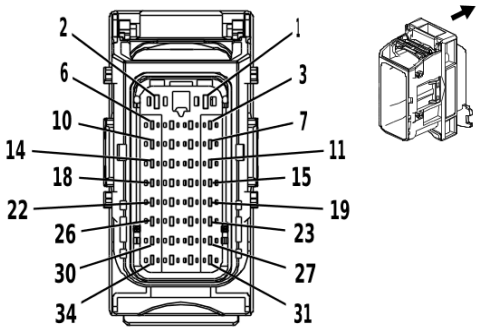

2042941

Connector Part Information

Harness Type: Body Wiring Harness

OEM Connector: 30432411

Service Connector: 19300485

Description: 34 <p01>-Way F 1.5, 2.8 DCS-2 Series, Sealed(BK)

Connector Part Information

Harness Type: Front Side Door Door Wiring Harness - Driver

OEM Connector: 3 053 06 11

Service Connector: Service by Harness - See Part Catalog

Description: 34 <p01>-Way M 1.5, 2.8 DCS-2 Series, Sealed(BK)

Terminal Part Information

Terminal Type ID	Terminated Lead	Diagnostic Test Probe	Terminal Removal Tool
I	13575377	J-35616-35 (VT)	J-38125-215A
II	13578884	J-35616-14 (GN)	J-38125-560
III	13578884	J-35616-2A (GY)	J-38125-215A
IV	Not required	J-35616-19 (BK)	No Tool Required
V	Not required	J-35616-3 (GY)	No Tool Required
VI	Not required	J-35616-5 (PU)	No Tool Required

X500 Body Wiring Harness to Front Side Door Door Wiring Harness - Driver

Pin	Size	Color	Circuit	Terminal Type ID	Option	Function	Pin	Size	Color	Circuit	Terminal Type ID	Option
1	2.5	RD / BU	1240	I	—	Battery Positive Voltage	1	2.5	RD / BU	1240	VI	—
2	2.5	BK	3550	I	—	Ground	2	2.5	BK	3550	VI	—
3	0.35	WH	3398	III	—	Passenger Outside Rearview Mirror Motor Common Control	3	0.35	WH	3398	V	—
4	0.5	BN / YE	2267	II	—	Outside Rearview Mirror Heater Control	4	0.5	BN / YE	2267	IV	—
5	0.35	YE / VT	3397	III	—	Passenger Outside Rearview Mirror Motor Up [+] Down [-] Control	5	0.35	YE / VT	3397	V	—

X500 Body Wiring Harness to Front Side Door Door Wiring Harness - Driver (cont'd)

Pin	Size	Color	Circuit	Terminal Type ID	Option	Function	Pin	Size	Color	Circuit	Terminal Type ID	Option
6	0.35	GN / BK	3396	III	—	Passenger Outside Rearview Mirror Motor Right [+] Left [-] Control	6	0.35	GN / BK	3396	V	—
7 - 8	—	—	—	—	—	Not Occupied	7 - 8	—	—	—	—	—
9	1	BN / BU	118	II	—	Left Front Speaker [-] Control 1	9	1	BN / BU	118	IV	—
10	1	BU	201	II	—	Left Front Speaker 1 [+] Control	10	1	BU	201	IV	—
11	—	—	—	—	—	Not Occupied	11	—	—	—	—	—
12	0.35	WH	6816	III	—	Indicator Dimming Control	12	0.35	WH	6816	V	—
13	—	—	—	—	—	Not Occupied	13	—	—	—	—	—
14	0.35	OG / GN	2132	III	—	Left Front Side Impact Sensor Signal	14	0.35	OG / GN	2132	V	—
15	0.35	BK / OG	6628	III	—	Left Front Side Impact Sensor Low Reference	15	0.35	BK / OG	6628	V	—
16	0.35	RD / VT	1940	III	—	Battery Positive Voltage	16	0.35	RD / VT	1940	V	—
17	0.35	BN / WH	781	III	—	Driver Door Lock Switch Unlock Signal	17	0.35	BN / WH	781	V	—
18	0.35	BN / YE	780	III	—	Driver Door Lock Switch Lock Signal	18	0.35	BN / YE	780	V	—
19	0.75	BN / YE	294	II	—	Door Lock Actuator Unlock Control	19	0.75	BN / YE	294	IV	—
20	0.75	GY	5911	II	—	Door Lock Actuator Lock Control 2	20	0.75	GY	5911	IV	—
21 - 25	—	—	—	—	—	Not Occupied	21 - 25	—	—	—	—	—
26	0.35	YE	6817	III	—	LED Backlight Dimming Control 1	26	0.35	YE	6817	V	—
27 - 31	—	—	—	—	—	Not Occupied	27 - 31	—	—	—	—	—
32	0.35	GY	5697	III	—	Child Security Lock Indicator Control	32	0.35	GY	5697	V	—

X500 Body Wiring Harness to Front Side Door Door Wiring Harness - Driver (cont'd)

Pin	Size	Color	Circuit	Terminal Type ID	Option	Function	Pin	Size	Color	Circuit	Terminal Type ID	Option
33	0.5	GN / YE	6134	II	—	Body Control Module LIN Bus 3	33	0.5	GN / YE	6134	IV	—
34	0.35	YE / BN	3265	III	—	Child Security Lock Switch Signal	34	0.35	YE / BN	3265	V	—

X510 Outside Rearview Mirror - Driver to Front Side Door Door Wiring Harness - Driver

—

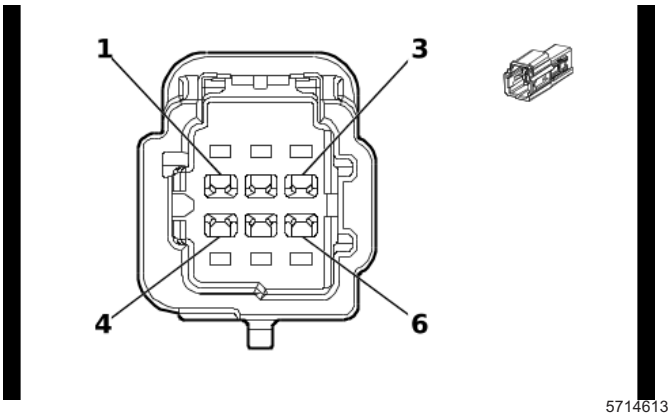

Connector Part Information

Harness Type: Outside Rearview Mirror - Driver
OEM Connector: Not Available
Service Connector: Service by Harness - See Part Catalog
Description: 6 <p01>-Way F

Connector Part Information

Harness Type: Front Side Door Door Wiring Harness - Driver
OEM Connector: 6098-9120
Service Connector: Service by Harness - See Part Catalog
Description: 6 <p01>-Way M 1.2 MBS Series(BK)

Terminal Part Information

Terminal Type ID	Terminated Lead	Diagnostic Test Probe	Terminal Removal Tool
I	Not required	J-35616-12 (BU)	No Tool Required
II	Not required	J-35616-13 (BU)	No Tool Required

X510 Outside Rearview Mirror - Driver to Front Side Door Door Wiring Harness - Driver

Pin	Size	Color	Circuit	Terminal Type ID	Option	Function	Pin	Size	Color	Circuit	Terminal Type ID	Option
1	0.35	YE / BN	3391	I	—	Driver Mirror Motor Common Control	1	0.35	YE / BN	3391	II	—
2	0.35	VT / BU	3390	I	—	Driver Outside Rearview Mirror Motor Up [+] Down [-] Control	2	0.35	VT / BU	3390	II	—
3	0.35	BN / BK	3389	I	—	Driver Outside Rearview Mirror Motor Right [+] Left [-] Control	3	0.35	BN / BK	3389	II	—
4	0.5	BN / YE	2267	I	—	Outside Rearview Mirror Heater Control	4	0.5	BN / YE	2267	II	—
5	0.5	BK	3550	I	—	Ground	5	0.5	BK	3550	II	—

X600 Body Wiring Harness to Front Side Door Door Wiring Harness - Passenger

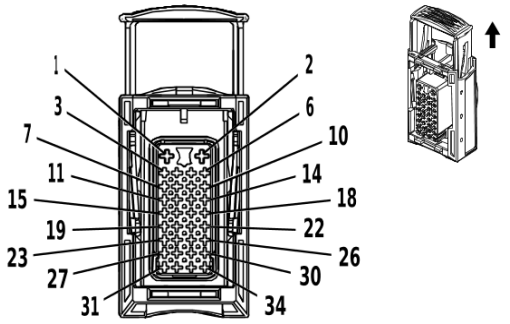

2042940

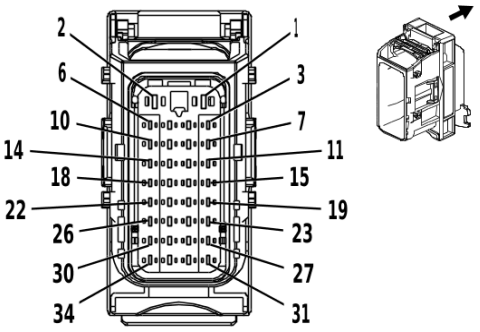

2042941

Connector Part Information

Harness Type: Body Wiring Harness

OEM Connector: 30432411

Service Connector: 19300485

Description: 34 <p01>-Way F 1.5, 2.8 DCS-2 Series, Sealed(BK)

Connector Part Information

Harness Type: Front Side Door Door Wiring Harness - Passenger

OEM Connector: 3 053 06 11

Service Connector: Service by Harness - See Part Catalog

Description: 34 <p01>-Way M 1.5, 2.8 DCS-2 Series, Sealed(BK)

Terminal Part Information

Terminal Type ID	Terminated Lead	Diagnostic Test Probe	Terminal Removal Tool
I	13575377	J-35616-35 (VT)	J-38125-215A
II	13578884	J-35616-14 (GN)	J-38125-560
III	13578884	J-35616-2A (GY)	J-38125-215A
IV	Not required	J-35616-19 (BK)	No Tool Required
V	Not required	J-35616-3 (GY)	No Tool Required
VI	Not required	J-35616-5 (PU)	No Tool Required

X600 Body Wiring Harness to Front Side Door Door Wiring Harness - Passenger

Pin	Size	Color	Circuit	Terminal Type ID	Option	Function	Pin	Size	Color	Circuit	Terminal Type ID	Option
1	2.5	RD / WH	1340	I	—	Battery Positive Voltage	1	2.5	RD / WH	1340	VI	—
2	2.5	BK	3650	I	—	Ground	2	2.5	BK	3650	VI	—
3	0.35	WH	3398	III	—	Passenger Outside Rearview Mirror Motor Common Control	3	0.35	WH	3398	V	—
4	0.5	BN / YE	2267	II	—	Outside Rearview Mirror Heater Control	4	0.5	BN / YE	2267	IV	—
5	0.35	YE / VT	3397	III	—	Passenger Outside Rearview Mirror Motor Up [+] Down [-] Control	5	0.35	YE / VT	3397	V	—

X600 Body Wiring Harness to Front Side Door Door Wiring Harness - Passenger (cont'd)

Pin	Size	Color	Circuit	Terminal Type ID	Option	Function	Pin	Size	Color	Circuit	Terminal Type ID	Option
6	0.35	GN / BK	3396	III	—	Passenger Outside Rearview Mirror Motor Right [+] Left [-] Control	6	0.35	GN / BK	3396	V	—
7 - 8	—	—	—	—	—	Not Occupied	7 - 8	—	—	—	—	—
9	1	YE / BK	117	II	—	Right Front Speaker [-] Control 1	9	1	YE / BK	117	IV	—
10	1	YE	200	II	—	Right Front Speaker 1 [+] Control	10	1	YE	200	IV	—
11 - 13	—	—	—	—	—	Not Occupied	11 - 13	—	—	—	—	—
14	0.35	BN / OG	2134	III	—	Right Front Side Impact Sensor Signal	14	0.35	BN / OG	2134	V	—
15	0.35	BK / OG	6629	III	—	Right Front Side Impact Sensor Low Reference	15	0.35	BK / OG	6629	V	—
16	—	—	—	—	—	Not Occupied	16	—	—	—	—	—
17	0.35	BN / VT	245	III	—	Passenger Door Lock Switch Unlock Control	17	0.35	BN / VT	245	V	—
18	0.35	YE / VT	244	III	—	Passenger Door Lock Switch Lock Control	18	0.35	YE / VT	244	V	—
19	0.75	BN / YE	294	II	—	Door Lock Actuator Unlock Control	19	0.75	BN / YE	294	IV	—
20	0.75	GY	295	II	—	Door Lock Actuator Lock Control	20	0.75	GY	295	IV	—
21 - 25	—	—	—	—	—	Not Occupied	21 - 25	—	—	—	—	—
26	0.35	YE	6817	III	—	LED Backlight Dimming Control 1	26	0.35	YE	6817	V	—
27 - 32	—	—	—	—	—	Not Occupied	27 - 32	—	—	—	—	—
33	0.5	GN / YE	6134	II	—	Body Control Module LIN Bus 3	33	0.5	GN / YE	6134	IV	—
34	—	—	—	—	—	Not Occupied	34	—	—	—	—	—

X610 Outside Rearview Mirror - Passenger to Front Side Door Door Wiring Harness - Passenger

—

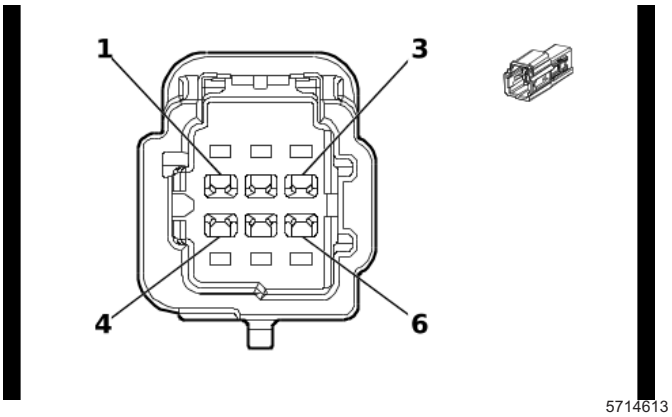

Connector Part Information

Harness Type: Outside Rearview Mirror - Passenger
OEM Connector: Not Available
Service Connector: Service by Harness - See Part Catalog
Description: 6 <p01>-Way F

Connector Part Information

Harness Type: Front Side Door Door Wiring Harness - Passenger
OEM Connector: 6098-9120
Service Connector: Service by Harness - See Part Catalog
Description: 6 <p01>-Way M 1.2 MBS Series(BK)

Terminal Part Information

Terminal Type ID	Terminated Lead	Diagnostic Test Probe	Terminal Removal Tool
I	Not required	J-35616-12 (BU)	No Tool Required
II	Not required	J-35616-13 (BU)	No Tool Required

X610 Outside Rearview Mirror - Passenger to Front Side Door Door Wiring Harness - Passenger

Pin	Size	Color	Circuit	Terminal Type ID	Option	Function	Pin	Size	Color	Circuit	Terminal Type ID	Option
1	0.35	WH	3398	I	—	Passenger Outside Rearview Mirror Motor Common Control	1	0.35	WH	3398	II	—
2	0.35	YE / VT	3397	I	—	Passenger Outside Rearview Mirror Motor Up [+] Down [-] Control	2	0.35	YE / VT	3397	II	—
3	0.35	GN / BK	3396	I	—	Passenger Outside Rearview Mirror Motor Right [+] Left [-] Control	3	0.35	GN / BK	3396	II	—
4	0.5	BN / YE	2267	I	—	Outside Rearview Mirror Heater Control	4	0.5	BN / YE	2267	II	—
5	0.5	BK	3650	I	—	Ground	5	0.5	BK	3650	II	—

X700 Rear Side Door Door Wiring Harness - Left to Body Wiring Harness (Crew Cab)

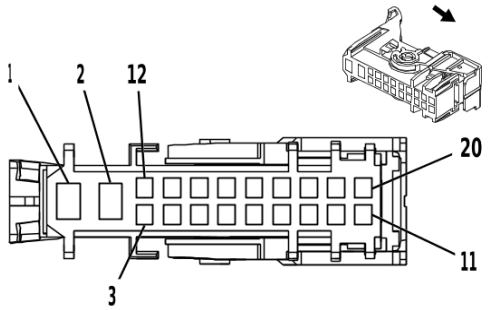

2474676

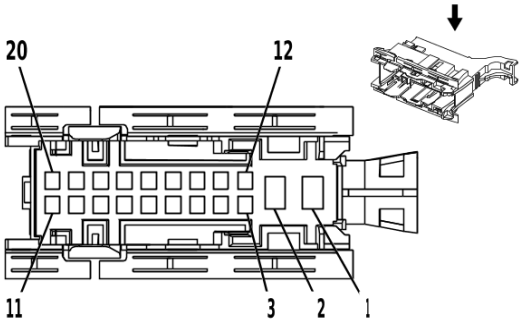

2474681

Connector Part Information

Harness Type: Rear Side Door Door Wiring Harness - Left

OEM Connector: 13678789

Service Connector: Service by Harness - See Part Catalog

Description: 20 <p01>-Way F 4.8 Timer, 1.5 DSQ Series(GY)

Connector Part Information

Harness Type: Body Wiring Harness

OEM Connector: 13680032

Service Connector: 13577518

Description: 20 <p01>-Way M 1.5, 2.8 DSQ Series(GY)

Terminal Part Information

Terminal Type ID	Terminated Lead	Diagnostic Test Probe	Terminal Removal Tool
I	Not required	J-35616-14 (GN)	No Tool Required
II	Not required	J-35616-42 (RD)	No Tool Required
III	19368242	J-35616-32 (OR)	J-38125-36
IV	19368263	J-35616-3 (GY)	J-38125-215A
V	19369193	J-35616-34 (YE)	J-38125-215A

X700 Rear Side Door Door Wiring Harness - Left to Body Wiring Harness (Crew Cab)

Pin	Size	Color	Circuit	Terminal Type ID	Option	Function	Pin	Size	Color	Circuit	Terminal Type ID	Option
1	2.5	RD / BU	1240	II	—	Battery Positive Voltage	1	2.5	RD / BU	1240	III	—
2	2.5	BK	3350	II	—	Ground	2	2.5	BK	3350	III	—
3 - 6	—	—	—	—	—	Not Occupied	3 - 6	—	—	—	—	—
7	1	GN	199	I	—	Left Rear Speaker [+] Control	7	1	GN	199	V	—
8	—	—	—	—	—	Not Occupied	8	—	—	—	—	—
9	0.75	WH / BU	3266	I	—	Child Security Lock Motor Lock Control	9	0.75	WH / BU	3266	IV	—
10	0.75	BN / YE	294	I	—	Door Lock Actuator Unlock Control	10	0.75	BN / YE	294	IV	—
11	0.75	GY	295	I	—	Door Lock Actuator Lock Control	11	0.75	GY	295	IV	—

X700 Rear Side Door Door Wiring Harness - Left to Body Wiring Harness (Crew Cab) (cont'd)

Pin	Size	Color	Circuit	Terminal Type ID	Option	Function	Pin	Size	Color	Circuit	Terminal Type ID	Option
12 - 15	—	—	—	—	—	Not Occupied	12 - 15	—	—	—	—	—
16	1	GN / BK	116	I	—	Left Rear Speaker [-] Control	16	1	GN / BK	116	V	—
17 - 18	—	—	—	—	—	Not Occupied	17 - 18	—	—	—	—	—
19	0.35	BN / WH	3269	I	—	Child Security Lock Actuator Status Signal Left Rear	19	0.35	BN / WH	3269	V	—
20	0.5	GN / GY	6135	I	—	Body Control Module LIN Bus 4	20	0.5	GN / GY	6135	IV	—

X700 Rear Side Door Door Wiring Harness - Left to Body Wiring Harness (Extended Cab)

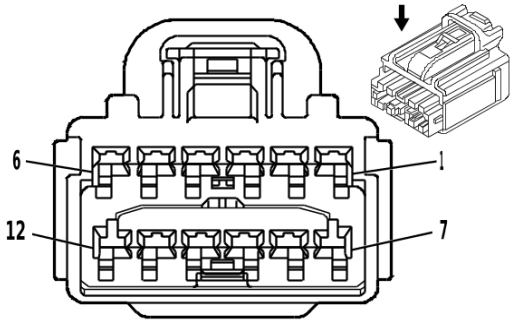

1856789

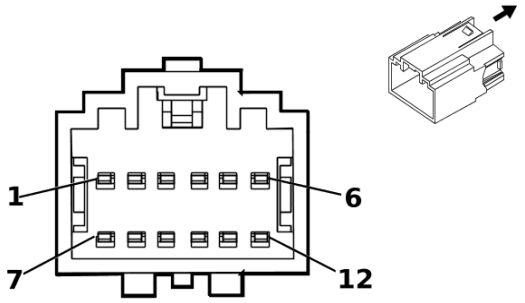

3240100

Connector Part Information

Harness Type: Rear Side Door Door Wiring Harness - Left
OEM Connector: 7283-3442-40
Service Connector: Service by Harness - See Part Catalog
Description: 12 <p01>-Way F YESC Kaizen Series(L-GY)

Connector Part Information

Harness Type: Body Wiring Harness
OEM Connector: 7282-3442-40
Service Connector: 88988266
Description: 12 <p01>-Way M 1.5 Series(L-GY)

Terminal Part Information

Terminal Type ID	Terminated Lead	Diagnostic Test Probe	Terminal Removal Tool
I	Not required	J-35616-2A (GY)	No Tool Required
II	19352418	J-35616-3 (GY)	J-38125-215A
III	19352418	J-35616-3 (GY)	J-38125-553

X700 Rear Side Door Door Wiring Harness - Left to Body Wiring Harness (Extended Cab)

Pin	Size	Color	Circuit	Terminal Type ID	Option	Function	Pin	Size	Color	Circuit	Terminal Type ID	Option
1	—	—	—	—	—	Not Occupied	1	—	—	—	—	—
2	0.5	OG / YE	3481	I	—	Driver Seat Belt Anchor Pretensioner High Control	2	0.35	OG / YE	3481	II	—
3	0.5	OG / WH	3477	I	—	Driver Seat Belt Retractor Pretensioner High Control	3	0.35	OG / WH	3477	II	—
4	1	GN / BK	116	I	—	Left Rear Speaker [-] Control	4	1	GN / BK	116	III	—
5	0.35	GY	747	I	—	Left Rear Door Ajar Switch Signal	5	0.35	GY	747	III	—
6 - 7	—	—	—	—	—	Not Occupied	6 - 7	—	—	—	—	—
8	0.5	VT / OG	3482	I	—	Driver Seat Belt Anchor Pretensioner Low Control	8	0.35	YE / OG	3482	II	—

X700 Rear Side Door Door Wiring Harness - Left to Body Wiring Harness (Extended Cab) (cont'd)

Pin	Size	Color	Circuit	Terminal Type ID	Option	Function	Pin	Size	Color	Circuit	Terminal Type ID	Option
9	0.5	GY / OG	3478	I	—	Driver Seat Belt Retractor Pretensioner Low Control	9	0.35	GY / OG	3478	II	—
10	1	GN	199	I	—	Left Rear Speaker [+] Control	10	1	GN	199	III	—
11	0.35	BK	3350	I	—	Ground	11	0.5	BK	3350	III	—
12	—	—	—	—	—	Not Occupied	12	—	—	—	—	—

X800 Rear Side Door Door Wiring Harness - Right to Body Wiring Harness (Crew Cab)

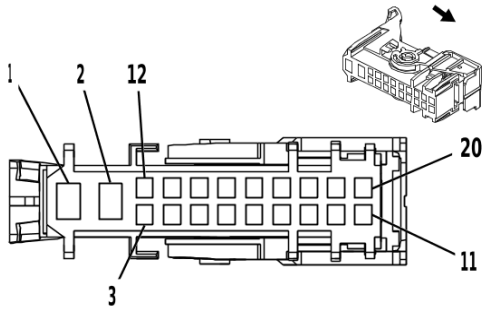

2474676

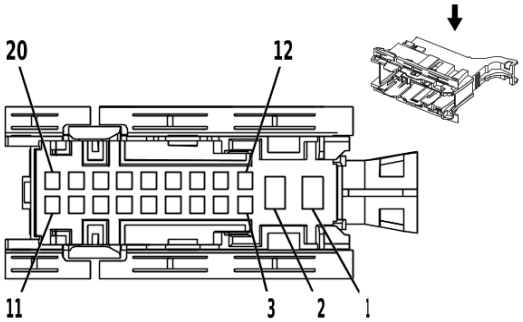

2474681

Connector Part Information

Harness Type: Rear Side Door Door Wiring Harness - Right

OEM Connector: 13678789

Service Connector: Service by Harness - See Part Catalog

Description: 20 <p01>-Way F 4.8 Timer, 1.5 DSQ Series(GY)

Connector Part Information

Harness Type: Body Wiring Harness

OEM Connector: 13680032

Service Connector: 13577518

Description: 20 <p01>-Way M 1.5, 2.8 DSQ Series(GY)

Terminal Part Information

Terminal Type ID	Terminated Lead	Diagnostic Test Probe	Terminal Removal Tool
I	Not required	J-35616-14 (GN)	No Tool Required
II	Not required	J-35616-42 (RD)	No Tool Required
III	19368242	J-35616-32 (OR)	J-38125-36
IV	19368263	J-35616-3 (GY)	J-38125-215A
V	19369193	J-35616-34 (YE)	J-38125-215A

X800 Rear Side Door Door Wiring Harness - Right to Body Wiring Harness (Crew Cab)

Pin	Size	Color	Circuit	Terminal Type ID	Option	Function	Pin	Size	Color	Circuit	Terminal Type ID	Option
1	2.5	RD / WH	1340	II	—	Battery Positive Voltage	1	2.5	RD / WH	1340	III	—
2	2.5	BK	3450	II	—	Ground	2	2.5	BK	3450	III	—
3 - 6	—	—	—	—	—	Not Occupied	3 - 6	—	—	—	—	—
7	1	WH	46	I	—	Right Rear Speaker [+] Control	7	1	WH	46	V	—
8	—	—	—	—	—	Not Occupied	8	—	—	—	—	—
9	0.75	WH / BU	3266	I	—	Child Security Lock Motor Lock Control	9	0.75	WH / BU	3266	IV	—
10	0.75	BN / YE	294	I	—	Door Lock Actuator Unlock Control	10	0.75	BN / YE	294	IV	—
11	0.75	GY	295	I	—	Door Lock Actuator Lock Control	11	0.75	GY	295	IV	—

X800 Rear Side Door Door Wiring Harness - Right to Body Wiring Harness (Crew Cab) (cont'd)

Pin	Size	Color	Circuit	Terminal Type ID	Option	Function	Pin	Size	Color	Circuit	Terminal Type ID	Option
12 - 15	—	—	—	—	—	Not Occupied	12 - 15	—	—	—	—	—
16	1	BU / BK	115	I	—	Right Rear Speaker [-] Control	16	1	BU / BK	115	V	—
17 - 18	—	—	—	—	—	Not Occupied	17 - 18	—	—	—	—	—
19	0.35	GY / BK	3268	I	—	Child Security Lock Actuator Status Signal Right Rear	19	0.35	GY / BK	3268	V	—
20	0.5	GN / GY	6135	I	—	Body Control Module LIN Bus 4	20	0.5	GN / GY	6135	IV	—

X800 Rear Side Door Door Wiring Harness - Right to Body Wiring Harness (Extended Cab)

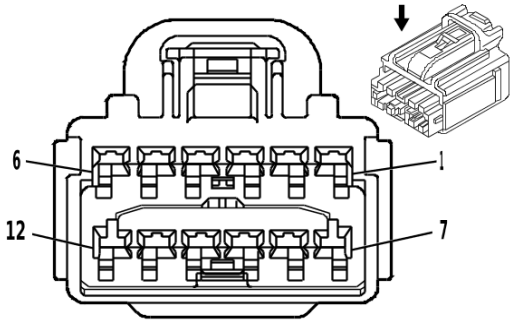

1856789

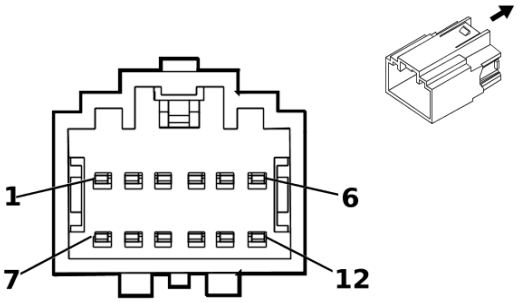

3240100

Connector Part Information

Harness Type: Rear Side Door Door Wiring Harness - Right
OEM Connector: 7283-3442-40
Service Connector: Service by Harness - See Part Catalog
Description: 12 <p01>-Way F YESC Kaizen Series(L-GY)

Connector Part Information

Harness Type: Body Wiring Harness
OEM Connector: 7282-3442-40
Service Connector: 88988266
Description: 12 <p01>-Way M 1.5 Series(L-GY)

Terminal Part Information

Terminal Type ID	Terminated Lead	Diagnostic Test Probe	Terminal Removal Tool
I	Not required	J-35616-2A (GY)	No Tool Required
II	19352418	J-35616-3 (GY)	J-38125-215A
III	19352418	J-35616-3 (GY)	J-38125-553

X800 Rear Side Door Door Wiring Harness - Right to Body Wiring Harness (Extended Cab)

Pin	Size	Color	Circuit	Terminal Type ID	Option	Function	Pin	Size	Color	Circuit	Terminal Type ID	Option
1	—	—	—	—	—	Not Occupied	1	—	—	—	—	—
2	0.5	OG / BN	3479	I	—	Passenger Seat Belt Anchor Pretensioner High Control	2	0.35	OG / BN	3479	II	—
3	0.5	OG / GN	3475	I	—	Passenger Seat Belt Retractor Pretensioner High Control	3	0.35	OG / GN	3475	II	—
4	1	BU / BK	115	I	—	Right Rear Speaker [-] Control	4	1	BU / BK	115	III	—
5	0.35	GY	748	I	—	Right Rear Door Ajar Switch Signal	5	0.35	GY	748	III	—
6 - 7	—	—	—	—	—	Not Occupied	6 - 7	—	—	—	—	—
8	0.5	GY / OG	3480	I	—	Passenger Seat Belt Anchor Pretensioner Low Control	8	0.35	GY / OG	3480	II	—

X800 Rear Side Door Door Wiring Harness - Right to Body Wiring Harness (Extended Cab) (cont'd)

Pin	Size	Color	Circuit	Terminal Type ID	Option	Function	Pin	Size	Color	Circuit	Terminal Type ID	Option
9	0.5	WH / OG	3476	I	—	Passenger Seat Belt Retractor Pretensioner Low Control	9	0.35	WH / OG	3476	II	—
10	1	WH	46	I	—	Right Rear Speaker [+] Control	10	1	WH	46	III	—
11	0.35	BK	3450	I	—	Ground	11	0.5	BK	3450	III	—
12	—	—	—	—	—	Not Occupied	12	—	—	—	—	—

Power Outlets

Schematic and Routing Diagrams

Cigar Lighter/Power Outlet Schematics (12-Volt DC Power Outlets)

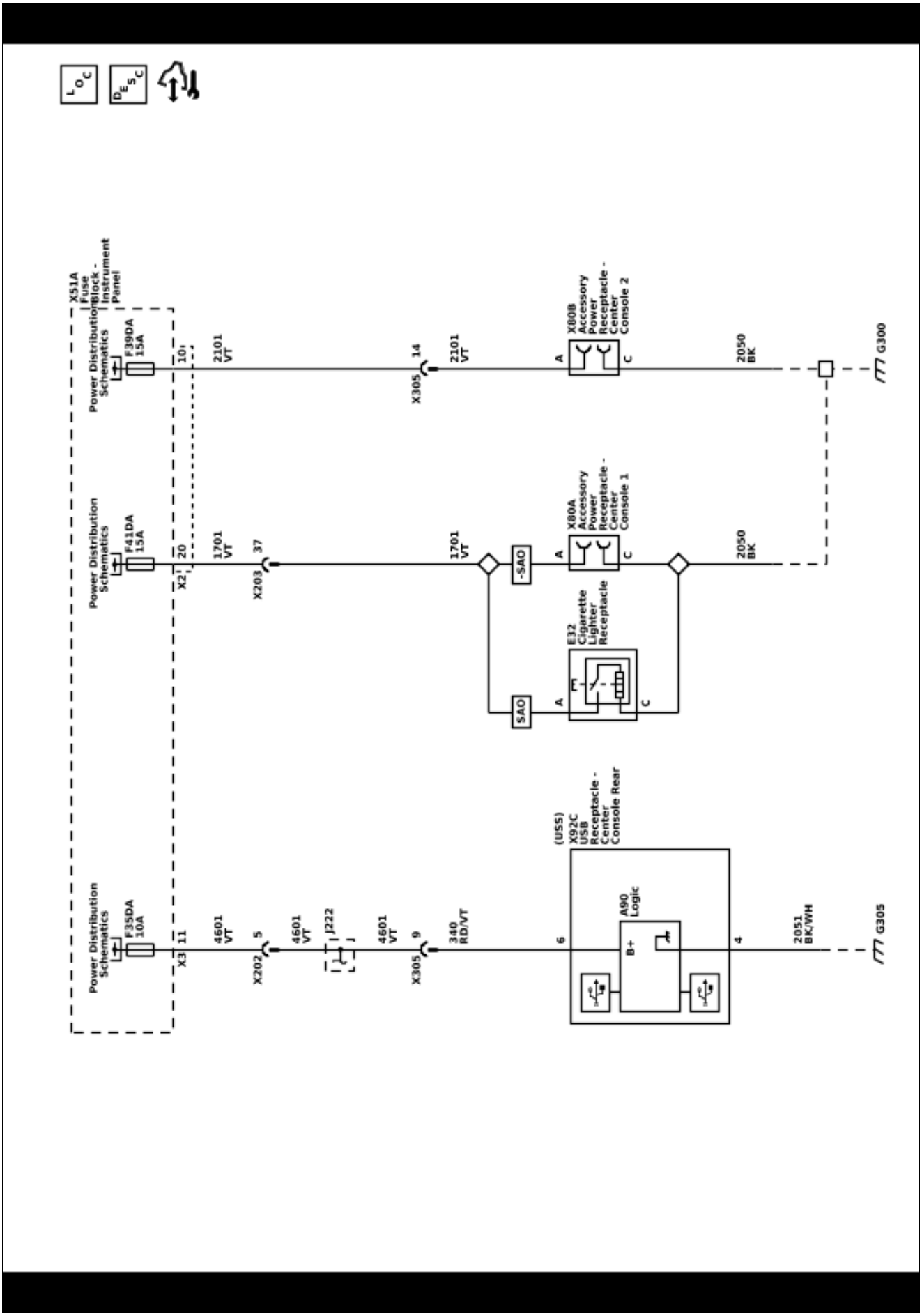

5681725

Cigar Lighter/Power Outlet Schematics (Wireless Charging (K4C))

5681726

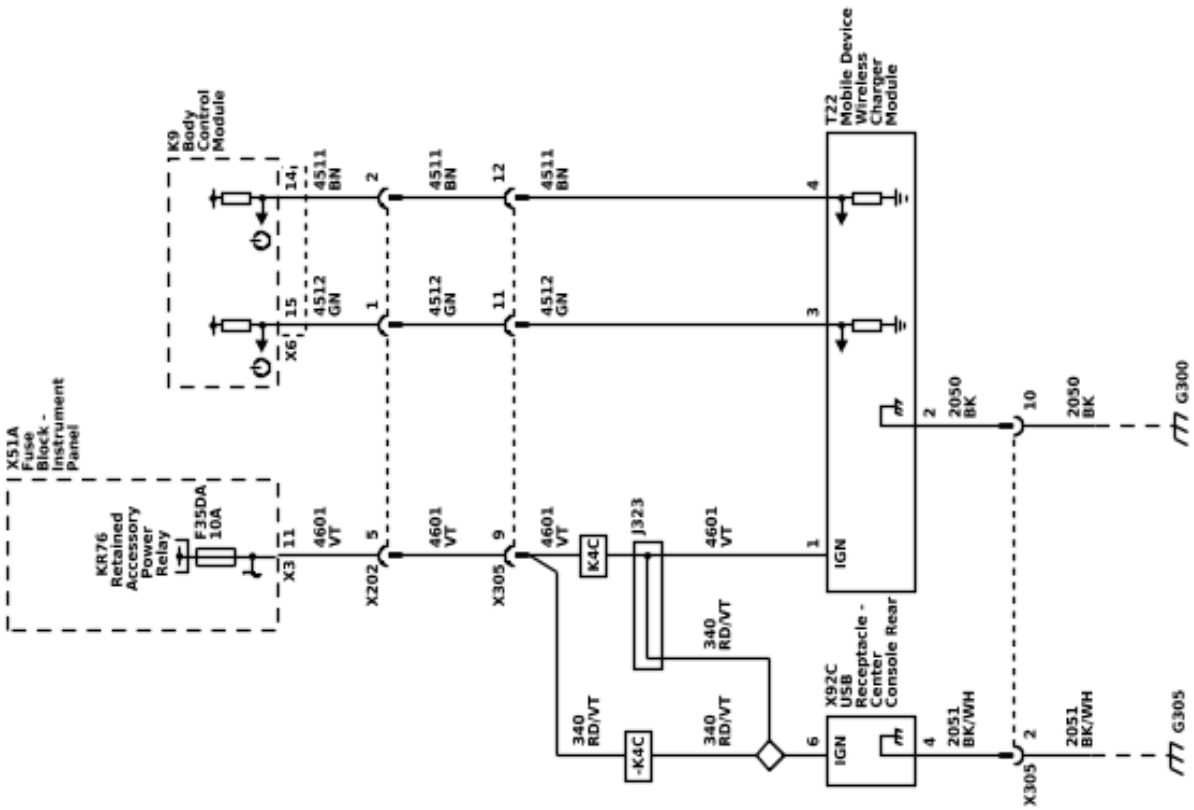

Description and Operation

Mobile Device Wireless Charger Description and Operation

Mobile Device Wireless Charging System

The Mobile Device Wireless Charging System (WCS) is an system for wirelessly charging mobile devices. It is capable of charging the batteries of compatible mobile devices. A compatible device is one that is compliant with Power Matters Alliance (PMA) or Wireless Power Consortium (WPC) Standard, meaning that it is equipped with a PMA or WPC wireless charge “receiver” that will work with the charge “transmitter” installed in the vehicle. The devices may utilize built-in charging circuitry or an adapter (external plug-in device which contains the charging circuitry). To check for phone or other device compatibility, refer to GM Total Connect.

Warning: Remove all objects from the charging pad before charging your mobile device. Objects, such as coins, keys, rings, paper clips, or cards, between the phone and charging pad will become very hot. On the rare occasion that the charging system does not detect an object, and the object gets wedged between the phone and charger, remove the phone and allow the object to cool before removing it from the charging pad, to prevent burns.

Charging

To charge a device, place it on the charging surface in the vehicle. There is a charging coil located in the center of the charging surface. The device has a charging coil typically near the center of the device. These coils must be lined up in order for charging to proceed. When the interruptible retained accessory power (IRAP) relay is closed (this is true typically when vehicle ignition is in Run or Accessory position), the WCS will detect the device, establish communications with the device to confirm it is a compatible device, and then deliver charging power to the device via wireless interface. The WCS will be able to deliver up to 5W of power to compatible devices. It shall only enter a charging state if communication is established and a compatible device is identified.

The WCS shall not enter a charging state if there is no communication established with a compatible device. If a non-compatible device or metallic foreign object is detected, the WCS will not transfer power. The charger monitors its internal temperature and will shut down if the charger temperature exceeds 185F (85C).

Indicator

The body control module supplies voltage to the Mobile Device Wireless Charger Indicators. When a mobile device or foreign object is placed on the charging pad the Mobile Device Wireless Charger Module will supply ground the appropriate control circuit turning on the indicator. The indicator is located next to the charging pad and will illuminate green (charging) when a compliant device is placed on the charging pad and will illuminate yellow (fault) when a foreign object is placed on the charging pad.

Power Outlets Description and Operation

Power Outlet Receptacle Description and Operation

The vehicle is fitted with 12 V accessory power receptacles. The accessory power receptacles are controlled by an ignition operated relay. The accessory power receptacles are operational when the ignition is turned to either the On or the Accessories positions. The accessory power receptacles may be configured to be operational when the ignition is Off by changing the position of the 50A fuse from the F44DA position to the F40DA position in the instrument panel fuse block.

Wiring Systems and Power Management

Description and Operation

Electronic Park Lock Description and Operation

If the vehicle is equipped with automatic transmission and a floor mounted console gear shift, it has an electronic park lock system (EPL). The EPL system purpose is to prevent the ignition key from being turned to the OFF position when the transmission is in any position other than PARK and the vehicle may still be moving. The EPL system consists of an ignition lock cylinder solenoid, and a park position switch that is located in the A/T shift lock control switch. The ignition lock cylinder solenoid contains a pin that is spring loaded to mechanically prevent the ignition key cylinder from being turned to the lock position when the vehicle transmission is not in the PARK position. If vehicle power is lost, and/or the transmission is not in the Park position the operator will not be able to turn the ignition key to the lock position and will not be able to remove the ignition key from the column.

Power Mode Description and Operation

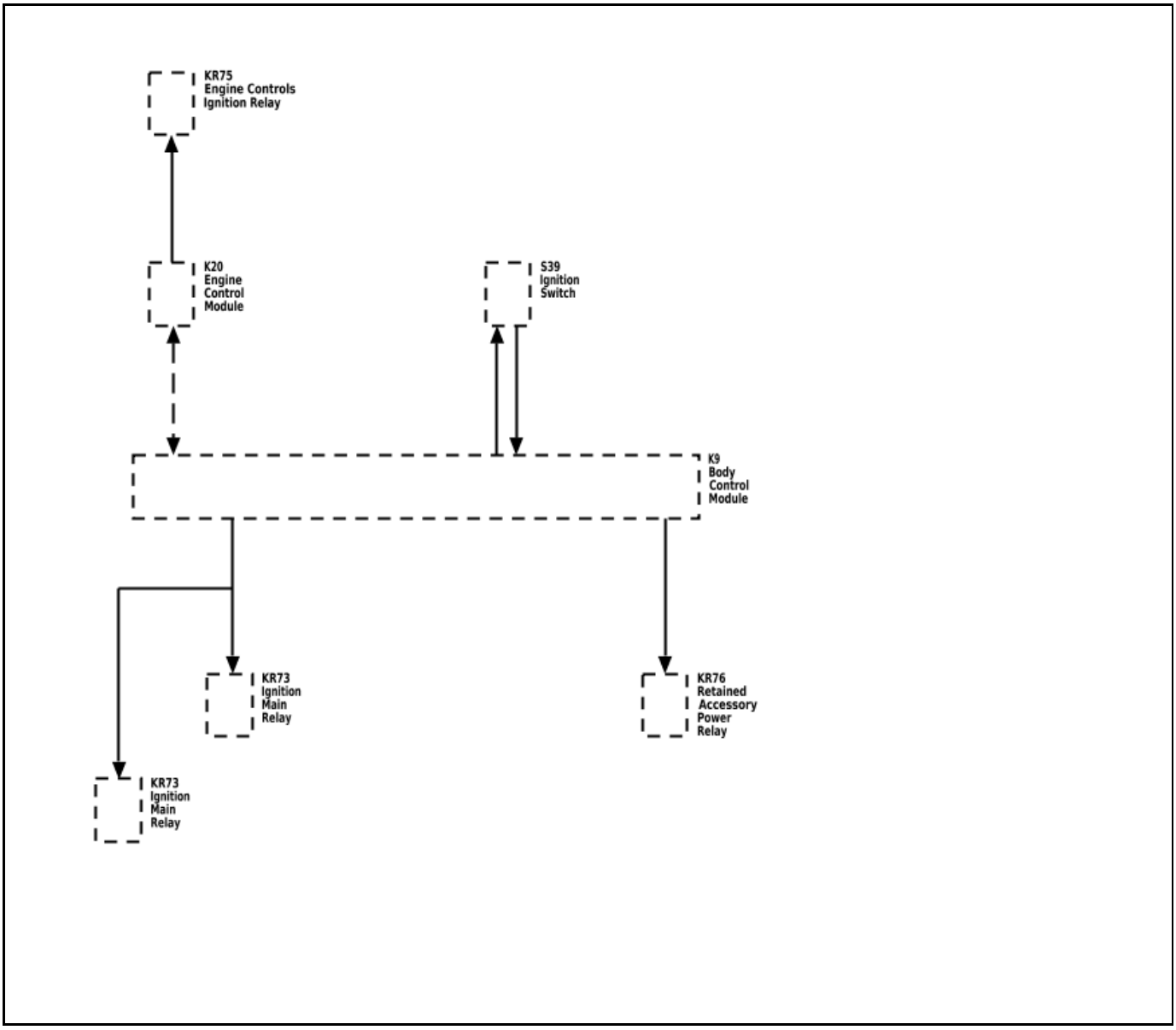

3829550

Serial Data Power Mode Master

Power to many of this vehicles circuits is controlled by the module that is designated the power mode master. This vehicles power mode master is the body control module (BCM). The BCM has multiple B+ circuits that feed into it. Each of those circuits are partitioned within the controller to drive certain outputs of the vehicle's body functions. An open or short in any one of the B+ circuits may induce multiple codes/or a section of non-functionality within the BCM with the rest of the BCM functioning normally. In this case it is useful to refer to the power distribution schematics to determine if the non-functional partition of the controller shares a common B+ circuit. The ignition switch is a low current switch with multiple discrete ignition switch signals to the power mode master for determination of the power mode that will be sent over the serial data circuits to the other modules that need this information. The power mode master will also activate relays and other direct outputs of the power mode master as needed. The power mode master determines which power mode (Off, Accessory, Run, Crank Request) is required, and reports this information to other modules via serial data. Modules which have switched voltage inputs may operate in a default mode if the power mode serial data message does not match what the individual module can see from its own connections.

The power mode master receives ignition switch or ignition mode switch signals to identify the operators desired power mode. The Power Mode Parameter tables below illustrate the correct state of these input parameters (circuits) in correspondence to the ignition switch position or ignition mode switch with the transmitter to vehicle range:

Power Mode Parameters

Ignition Switch Position	Power Mode Transmitted	Ign. Off/Run/Crank (Off/Run Crank Voltage Circuit)	Ignition Accessory/Run (Accessory Voltage Circuit)	Ignition Run/Crank (Ignition 1 Voltage Circuit)
Off Key Out	Off	Key Out / ACC	Inactive	Inactive
Off Key IN	Off	Key In / Off	Inactive	Inactive
Accessory	Accessory	Key Out / ACC	Active	Inactive
Run	Run	Run	Active	Active
Start	Crank Request	Crank	Inactive	Active

Relay Controlled Power Mode

The BCM uses the discrete ignition switch inputs Off/Run/Crank Voltage, Accessory Voltage, and Ignition 1 Voltage, to distinguish the correct power mode. The BCM, after determining the desired power mode, will activate the appropriate relays for that power mode.

The accessory relay remains on for a timed period after the Ignition key is removed. Refer to *Retained Accessory Power Description and Operation on page 6-611* for more information on the retained accessory power function.

Transport Mode

Transport mode reduces the parasitic load of some modules during vehicle shipping and/or during vehicle storage conditions. This improves the drain time on the battery (up to 70 days without the battery going dead). When a vehicle is in transport/storage, some features may have reduced functionality while enabled, such as disabling keyless entry, afterblow, and content theft features. Transport mode is initiated by turning on the hazard flashers, applying the brake pedal, and then turning the ignition key to the start position or pushing the ignition mode switch with the foot on the brake for greater than 15 s. The mode is disengaged by repeating the previous process. The driver information center (if equipped) will temporarily display Transport Mode is On when it enables and Transport Mode is OFF when it disables. For vehicles not equipped with a driver information center, the battery indicator light will constantly flash on the Instrument Cluster when enabled. This feature can be used as many times as necessary if the vehicle is to be stored for an extended period of time.

BCM Awake/Sleep States

The BCM is able to control or perform all of the BCM functions in the awake state. The BCM enters the sleep state when active control or normal monitoring of system functions has stopped and a time limit has passed. The BCM must detect certain wake-up inputs before entering the awake state. The BCM monitors for these inputs during the sleep state.

The BCM will enter the awake state if any of the following wake-up inputs are detected:

- Activity on the serial data line
- Detection of a battery reconnect
- Any door open signal
- Headlamps ON
- Key-in-ignition
- Ignition ON
- Park lamps ON
- Keyless entry or remote start message

The BCM will enter a sleep state when all of the following conditions exist:

- The ignition switch is OFF, key out.
- Ignition OFF, transmitter is out of range
- No activity exists on the serial data line.
- No outputs are commanded.
- No delay timers are actively counting.
- No wake-up inputs are present.

If all these conditions are met, the BCM will enter a low power or sleep condition.

Retained Accessory Power Description and Operation

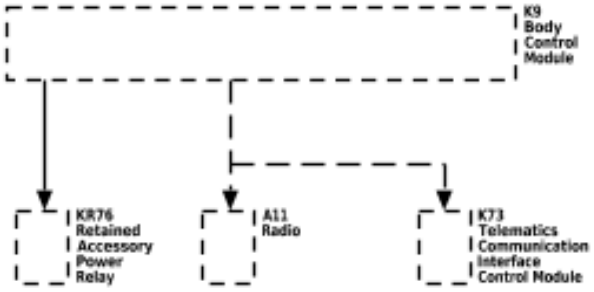

3275532

Retained Accessory Power

The body control module (BCM) monitors the ignition switch position, battery condition, and each door ajar/open switch status to determine whether the retained accessory power should be initiated or terminated. Retained accessory power is controlled by two different methods; relay control and serial data. Some modules receive a retained accessory power message from the BCM over the serial data circuits. Serial data controlled retained accessory power is deactivated as required by their modules retained accessory power mode operation. Other subsystems are activated directly by the BCM through a relay. Components and systems that are active in retained accessory power are also activated anytime the ignition is any position other than OFF regardless of the door switch signals.

Relay Controlled Retained Accessory Power

The BCM keeps the relay energized during all power modes, except Off-Awake and Crank. The relay is also energized for approximately 10 minutes after shutting the ignition OFF and removing the key, providing no door is opened.

Relay controlled retained accessory power will end when one of the following conditions is met:

- The BCM receives an input from any door ajar or open switch indicating the opening of any door after the ignition key is out of the ignition.

  Note: If the BCM is receiving any door ajar or open signal from those switches when the ignition key is turned OFF, retained accessory power will not initiate.

- The BCM internal timer for the retained accessory power expires after approximately 10 minutes.
- The BCM detects a decrease in battery capacity below a prescribed limit.

Systems powered by the retained accessory power relay during the retained accessory power mode are as follows:

Note: The vehicle may not be equipped with all components as listed below.

- Accessory Power Receptacle
- Cigarette Lighter Receptacle
- Window Switches
- Sunroof Control Module
- Sunroof Switch
- Mobile Device Wireless Charger Module
- Mobile Telephone Control Module
- Traffic Data Receiver

- Transmission Shift Lever Position Indicator (w/ floor mounted console gear shift)
- Seat Heating Control Module

Serial Data Controlled Retained Accessory Power

Retained accessory power systems controlled by serial data are as follows:

Radio

Note: RAP deactivation (off) operation for the Radio on European vehicles is different than all other regions. The deactivation (off) operation may vary between different models and years, The Power Outlet operation remains the same. Correct RAP operation can be confirmed by testing the power at the Power Outlets or comparing to an identical vehicle.

Europe With Push Button Start

The Radio may Turn off When the ignition is in the OFF mode.

Europe Without Push Button Start

The Radio may turn off when the key is removed from the ignition.

With UYE Except Europe

Radio retained accessory power activation/termination is the same as relay operation.

Without UYE Except Europe

Radio retained accessory power activation / termination is the same as relay operation with one exception; the only door switch that will turn off the radio during retained accessory power is the driver door open switch.

Vehicle Communication Interface Module (VCIM) (Onstar®) (If Equipped)

VCIM RAP activation/termination is the same as radio operation with 1 exception; if there is an active call when the ignition key is turned off the VCIM will remain in RAP mode, and keep the radio in RAP mode until the call is terminated.

Section 7

Safety and Security

Immobilizer 7-3
Schematic and Routing Diagrams 7-3
Immobilizer Schematics 7-4
Description and Operation 7-5
Immobilizer Description and Operation 7-5
Remote Vehicle Speed Limiting Description and Operation 7-6
Parking Assistance Systems 7-7
Schematic and Routing Diagrams 7-7
Parking Assistance Systems Schematics 7-8
Description and Operation 7-10
Parking Assist Description and Operation 7-10
Remote Functions 7-12
Schematic and Routing Diagrams 7-12
Remote Function Schematics 7-13
Description and Operation 7-14
Garage Door Opener Description and Operation 7-14
Keyless Entry System Description and Operation 7-14
Seat Belts 7-16
Specifications 7-16
Fastener Specifications 7-16
Description and Operation 7-16
Seat Belt System Description and Operation . . . 7-16

BLANK

Immobilizer

Schematic and Routing Diagrams

Immobilizer Schematics (Immobilizer)

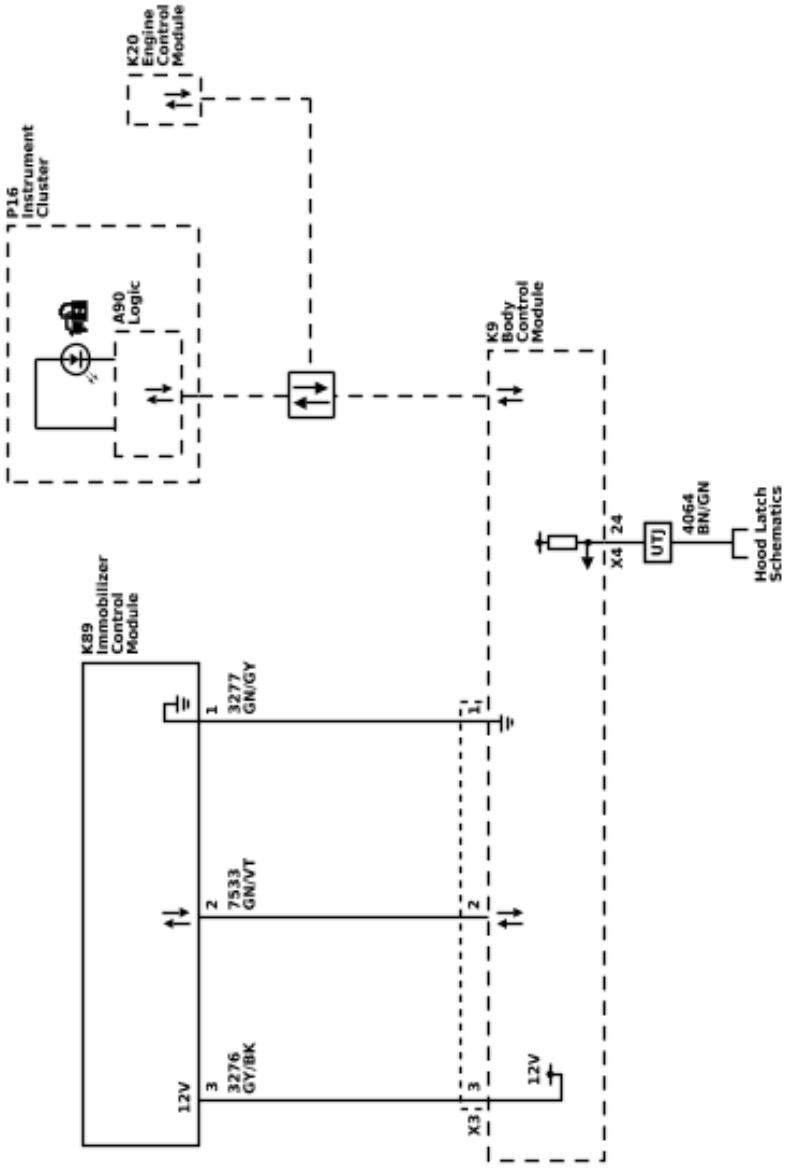

5681762

Description and Operation

Immobilizer Description and Operation

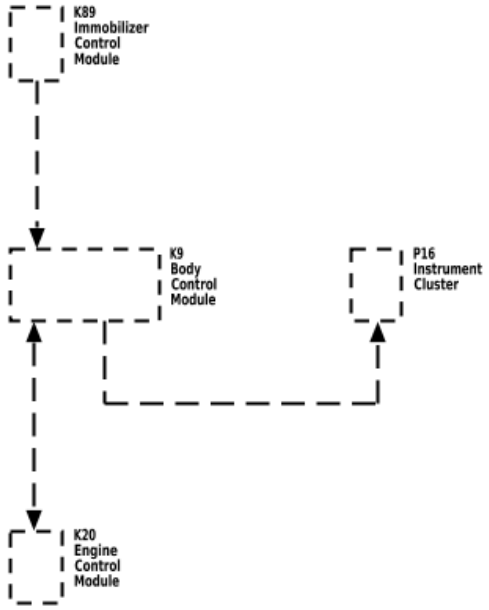

3510923

The immobilizer system functions are provided by the body control module (BCM) and the engine control module (ECM), as well as any control modules which store and report the environment identifier.

When an ignition key is inserted into the ignition lock cylinder and the ignition is switched ON, the transponder in the key is energized by the immobilizer coil surrounding the ignition lock cylinder. This immobilizer coil is part of the immobilizer control module. The transponder transmits a signal that contains its unique value, which is received by the BCM through the immobilizer coil. The BCM then compares this value to a value stored in memory. The BCM also monitors various control modules to determine if the stored environment identifiers match.

If both the environment identifier and the value received from the transponder match, the BCM will send the prerelease password via serial data to the ECM. If the encrypted code's unique value is incorrect or the environment identifier does not match, the BCM will send the start disable message to the ECM which will prevent the vehicle starter and fuel pump from operating.

When the ECM receives the BCM prerelease password, the ECM will challenge the password. The ECM sends this challenge to the BCM via serial data. Both the ECM and BCM perform a calculation on this challenge. If the BCM calculated response to the challenge equals the calculation performed by the ECM, the ECM will allow vehicle starting.

The components of the theft system are as follows:

- BCM
- ECM
- Immobilizer control module
- Steering column lock control module, if equipped
- Ignition key
- Security indicator
- Various control modules which store and report the environment identifier

Body Control Module (BCM)

The immobilizer system is an integral part of the BCM and is controlled internally within the BCM. The BCM can learn up to 8 keys (transponder values).

The BCM uses the following inputs:

- Environment identifier exchange with various modules
- Encrypted code from the vehicle key, received by the immobilizer control module

The BCM uses the following outputs:

- Prerelease password communication with ECM
- Challenge/response with ECM

When an ignition key is inserted into the ignition lock cylinder and the ignition is switched ON, the encrypted code in the key is energized by the immobilizer control module surrounding the ignition lock cylinder. The energized transponder transmits a signal that contains its unique value, which is received by the BCM. The BCM then compares this value to the learned key code stored in memory. The BCM then performs one of the following functions:

- If the encrypted code value matches the values stored in the BCM memory, the BCM will send the prerelease password to the ECM via serial data.
- If the encrypted code unique value does not match the value stored in the BCM, the BCM will send the start disable message to the ECM via serial data.
- If the BCM is unable to measure the ignition key encrypted code value, the BCM will not send any messages to the ECM.

Engine Control Module (ECM)

When the ECM receives the BCM prerelease password, the ECM will challenge the password. The ECM sends this challenge to the BCM via the serial data circuit. Both the ECM and BCM perform a calculation on this challenge. If the calculated response from the BCM equals the calculation performed by the ECM, the ECM will allow vehicle starting.

The ECM will disable vehicle starting if any of the following immobilization conditions occur:

- The prerelease password is invalid.
- The start disable password is sent by the BCM.
- No passwords are received. There is no communication with the BCM.
- The BCM calculated response to the challenge does not equal the calculation performed by the ECM.

Immobilizer Control Module

The immobilizer control module contains an immobilizer coil which surrounds the ignition cylinder. The coil passively powers the transponder located in the ignition key when the key is in the ignition. When powered, the key transmits its unique value to the immobilizer control module, which is then relayed to the BCM via a discrete serial data circuit. The immobilizer control module also receives B+ and ground from the BCM.

The immobilizer control module is used to:

1. Learn keys
2. To start the vehicle

Steering Column Lock Control Module

On vehicles with electronic steering column lock that use a steering column lock control module the immobilizer system will prevent vehicle starting if there is a fault or no communication with the steering column lock control module.

Ignition Key

Each ignition key contains a transponder with a unique encrypted value. The transponder's encrypted value is fixed and unable to be changed. The immobilizer system uses the ignition key transponder value to determine if a valid ignition key is being used to start the vehicle.

Environment Identifier

Various modules throughout the vehicle learn a specific environment identifier during the module programming process. The environment identifier is learned by each individual module and matches the environment identifier stored in the BCM. Prior to starting after a battery disconnect, each of the modules which store a environment identifier will compare their identifier to that of the identifier stored in the BCM. If all the identifiers match, the engine starting process will continue. If the environment identifiers do not match, engine starting will be disabled.

Security Indicator

The BCM will command the instrument cluster to illuminate the security indicator when the ignition is in the ON position to indicate a fault has occurred within the immobilizer system and when the engine starting is disabled.

Remote Vehicle Speed Limiting Description and Operation

Certain vehicles equipped with OnStar® now have an additional feature that allows for remote limiting of the vehicle's speed. This OnStar® feature is called Stolen Vehicle Slow-Down and is now part of the OnStar® Stolen Vehicle Assistance service. This feature, when used in conjunction with local law enforcement and strict guidelines at the OnStar® Call Center, will slow the vehicle by interacting with the engine control system.

When the engine control system receives a valid request from the OnStar® telematics communications interface module, it will enter into a reduced engine power/vehicle speed limiting mode, which will decelerate the vehicle. Once the request is active the engine control module begins reducing engine torque to match requested vehicle speed and a REDUCED ENGINE POWER indication is displayed. No DTCs will be set during this process.

Parking Assistance Systems

Schematic and Routing Diagrams

Parking Assistance Systems Schematics (Park Assist - Module Power, Ground, Serial Data, and Controls (UD7))

[redacted]

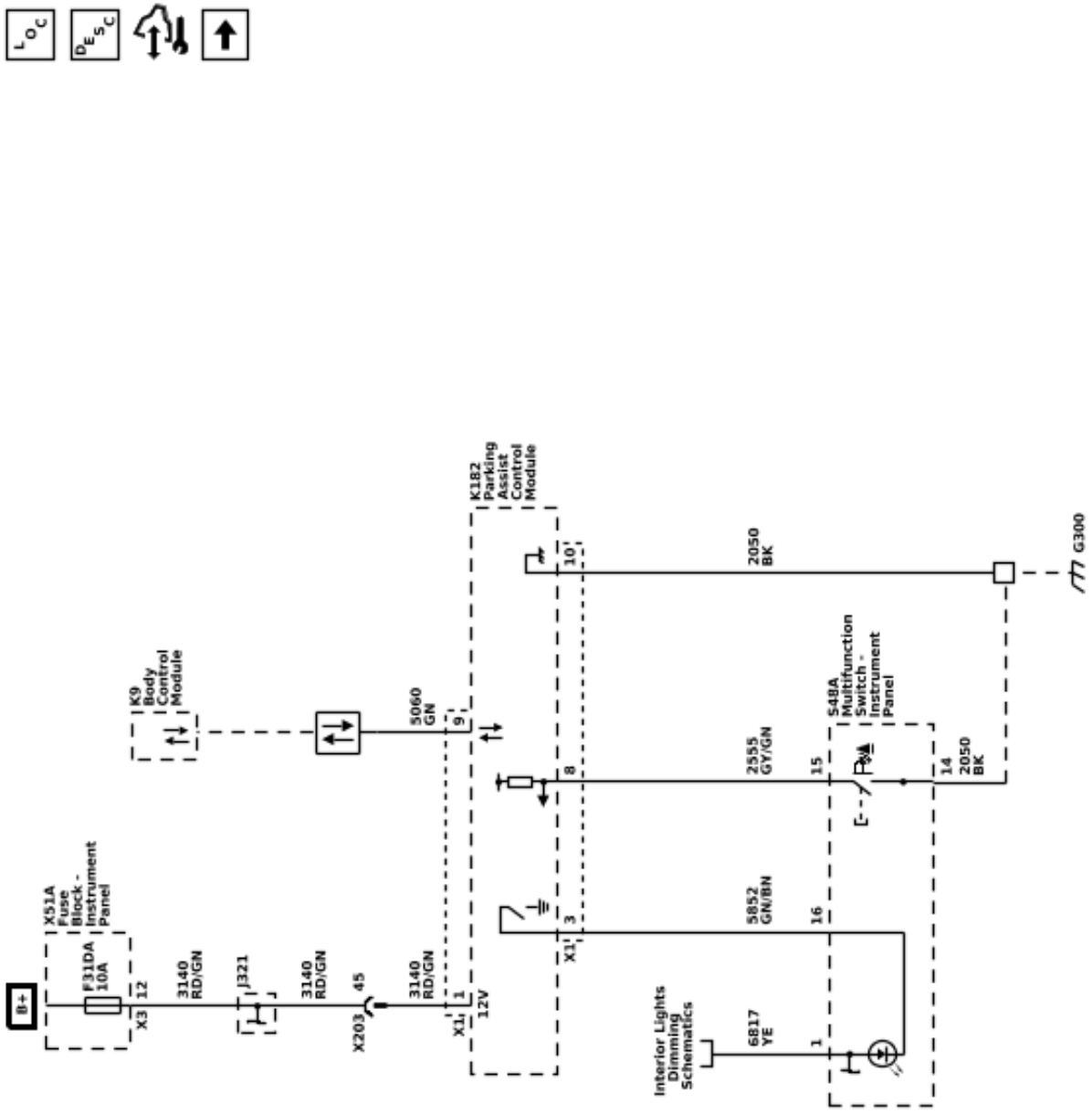

[redacted]

5681763

Parking Assistance Systems Schematics (Park Assist - Rear Parking Assist Sensors (UD7))

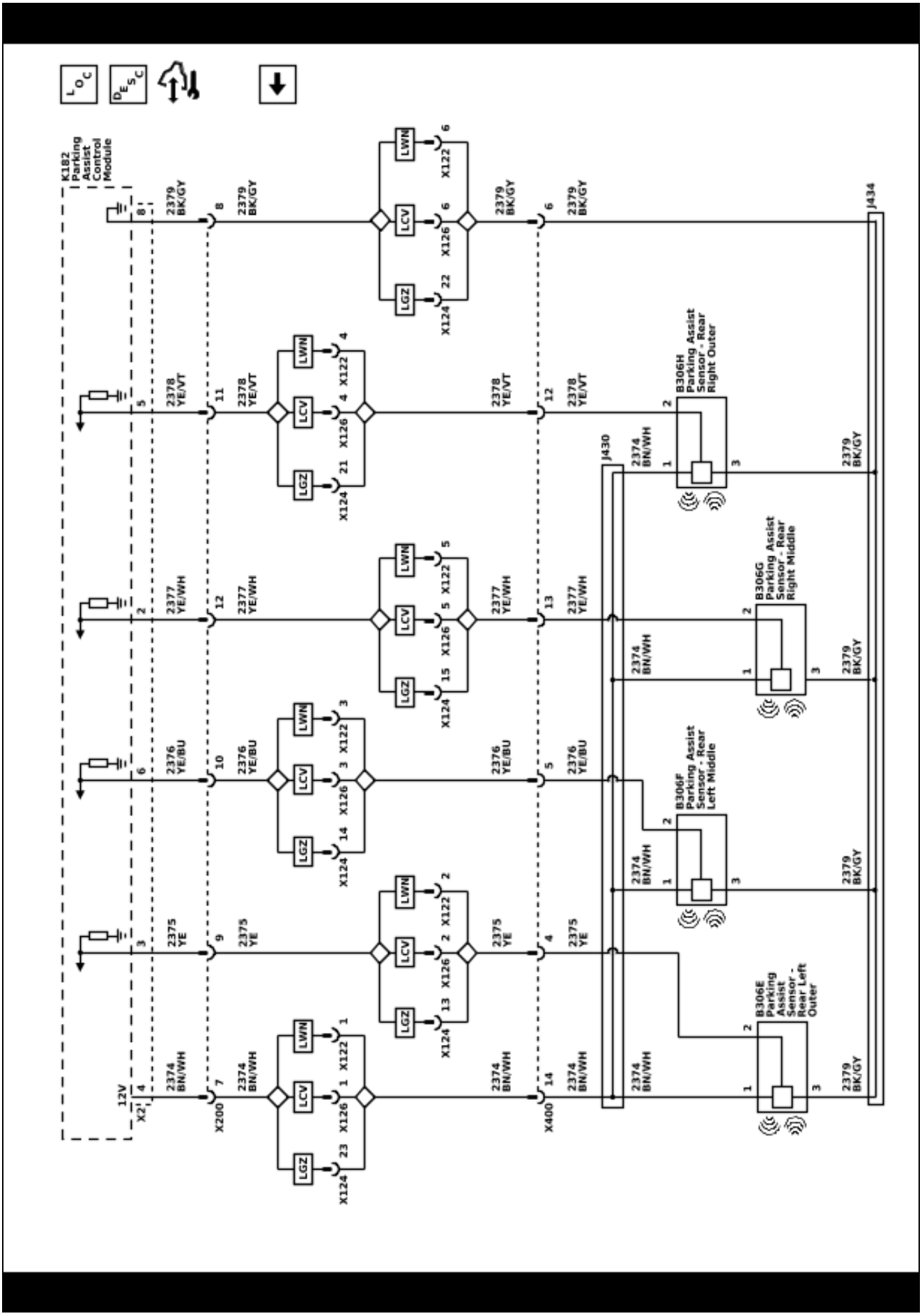

5681764

Description and Operation

Parking Assist Description and Operation

The parking assist system is designed to identify and notify the driver of an object in the vehicle path when reversing at speeds of less than 8 km/h (5 mph). The distance and location of the object is determined by four object sensors located in the rear fascia The parking assist system will notify the driver using audible beeps through the infotainment system. Some vehicles may also have a parking assist display on the infotainment screen or driver information center to graphically display the distance to an object.

The parking assist system is made up of the following components:

- K182 Parking Assist Control Module
- B306 Parking Assist Sensors
- Parking Assist Switch
- Parking Assist Switch Indicator
- Infotainment system

K182 Parking Assist Control Module

The K182 Parking Assist Control Module provides a reference voltage and a low reference to the B306 Parking Assist Sensors. The K182 Parking Assist Control Module receives individual signals from each of the four B306 Parking Assist Sensors and determines the location and distance of an object based on these inputs. When an object is detected, the K182 Parking Assist Control Module will send a serial data message to the infotainment system requesting an audible alert.

B306 Parking Assist Sensors

The B306 Parking Assist Sensors are located in the rear fascia of the vehicle. The sensors are used to determine the distance between an object and the bumper. Each sensor emits an ultrasonic frequency which is reflected off any object located behind the vehicle. These reflections are received by the sensors. The time difference between the emission of the frequency and when the reflection is received is known as sensor echo time; it is used to determine the distance to the object. The sensors report this information to the K182 Parking Assist Control Module.

Parking Assist Switch

The parking assist system can be activated and deactivated by pressing the parking assist switch. The K182 Parking Assist Control Module applies voltage and monitors the parking assist switch signal circuit. The parking assist switch is a normally open switch. With the switch open, voltage seen at the K182 Parking Assist Control Module is high. When the parking assist switch is pressed, the switch is closed and the signal circuit is pulled to ground. With the switch closed, voltage seen at the K182 Parking Assist Control Module is low. The K182 Parking Assist Control Module will respond to this by activating or deactivating the parking assist function.

Parking Assist Switch Indicator

When the parking assist system is enabled, the K182 Parking Assist Control Module will illuminate the indicator on the switch. The indicator receives voltage through a high control circuit from the K9 Body Control Module and is controlled through a low control circuit by the K182 Parking Assist Control Module.

Infotainment System

The infotainment system controls the audible alert for the parking assist system. If the an object is detected the infotainment system will command beeps as an audible alert to the driver.

Parking Assist Operation

When an object is within the measuring range of the B306 Parking Assist Sensors, the ultrasonic pulse is reflected and is received by the sending or a neighboring sensor. The sensor converts this signal into a voltage signal and sends this signal to the K182 Parking Assist Control Module. The K182 Parking Assist Control Module evaluates the received sensor signals. As soon as an object is within the measuring range, the K182 Parking Assist Control Module sends a message via serial data to the infotainment system to provide an audible alert signal.

The parking assist system can detect objects greater than 7.6 cm (3 in) wide and 25.4 cm (10 in) tall. The system cannot detect objects below the bumper or underneath the vehicle.

When the transmission is in R, parking assist is automatically activated, unless disable through vehicle personalization.

The K182 Parking Assist Control Module carries out a self test and monitors the sensors for electrical and mechanical faults. Monitored is the power supply of each sensor and the sensor signals. Mud, ice and snow may cause obstruction of the function of the sensors. The K182 Parking Assist Control Module also determines if the correct type of sensor is installed. If any of these tests fails, a DTC with corresponding symptom is set and the parking assist system is deactivated.

Parking Assist System Messages

SERVICE PARK ASSIST

The driver information center displays SERVICE PARK ASSIST when the K182 Parking Assist Control Module detects a malfunction in the parking assist system and the system is disabled. The driver information center also displays SERVICE PARK ASSIST when a loss of communication occurs with the K182 Parking Assist Control Module.

PARK ASSIST OFF

The PARK ASSIST OFF message is displayed in the driver information center when the parking assist system is disabled due to conditions that disable or inhibit the system. The K182 Parking Assist Control Module requests the driver information center display PARK ASSIST OFF when it detects that one of the following conditions:

- The parking assist system is manually disabled.
- An object is attached to the rear of the vehicle, such as a trailer, bicycle rack, trailer hitch receiver, or tow bar. Also, an object extending beyond a lowered tailgate will disable the system.

- The parking assist sensors are covered by snow, mud, dirt, slush, or ice.
- The vehicle rear fascia is damaged.
- Excessive paint thickness on a replacement B306 Parking Assist Sensor.
- The B306 Parking Assist Sensors are disrupted by vibrations, like those caused by a large nearby vehicle or from heavy equipment such as a jackhammer.

Remote Functions

Schematic and Routing Diagrams

5681765

Remote Function Schematics (Keyless Entry)

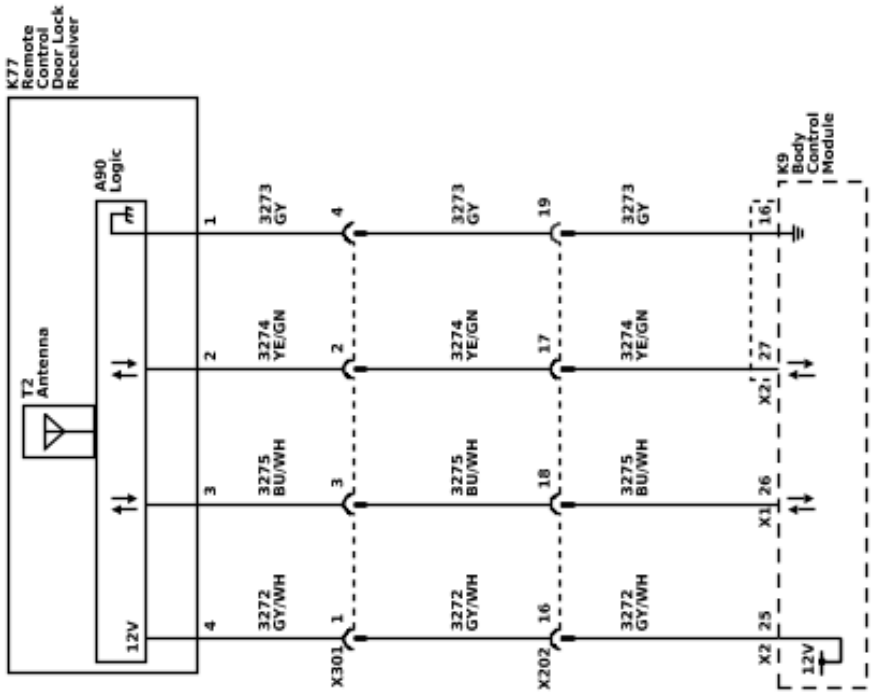

Description and Operation

Garage Door Opener Description and Operation

The garage door opener is fixed and rolling code capable. Rolling code is a system that allows the code that the customers receiver receives from the garage door opener to change every time the garage door opener is used within operating range of the receiver. Rolling code programming requires the customer to push a learn/program button on the garage door opener receiver at their home. This button is usually located on the receiver unit under a cover (light cover) on one end of the unit. The customer must follow the garage door opener manufacturers instructions to program/learn the receiver to accept the Universal Home Remote System as an authorized opener for their unit . When the receiver and the garage door opener are initially programmed together, a code is established and a new code is created for every new transmission. The software in the receiver recognizes the garage door opener and accepts the new code.

The garage door opener is compatible with most, but not all types and brands of transmitters.

The garage door opener is a transmitter operating between 288–434 MHz. The power and range of the transmitter is limited to comply with laws governing the generation of radio frequency interference. The transmitter is programmed by the user to accept the signal generated by the user's transmitters.

The garage door opener has 3 buttons that may be programmed for individual transmitter/receiver combinations to control up to 3 garage door openers, security gates, lighting systems, etc. Each button represents a transmitter code section of the transmitter, which operates separately from any other button, and may be considered a separate transmitter. Operation consists of simply pressing a button to activate the corresponding transmitter.

The garage door opener does not need any programming after it is replaced. However, for the opener function it must be programmed to the customer’s garage door or other devices such as a gate. The programming can only be performed at the device being programmed, it cannot be programmed at a service facility. Instructions for programming are listed in the Garage Door Opener Malfunction document in a Diagnostic Aid.

Note: Do not use the garage door opener (GDO) with any garage door opener that does not have the stop and reverse safety feature. This includes any garage door opener model manufactured before April 1, 1982.

Keyless Entry System Description and Operation

The keyless entry system is a vehicle entry device. The keyless entry system is used in conjunction with the door locks to unlock the vehicle. Keyless entry will lock/unlock the vehicle doors or open the rear compartment lid when a corresponding button on the keyless entry transmitter is pressed. This is accomplished by the transmitter sending a radio frequency to the Remote Control Door Lock Receiver antenna that has a direct link to the Body Control Module (BCM). The BCM interprets the signal and activates the requested function or request the appropriate control module to activate the function via a serial data message. A low transmitter battery or radio frequency interference from aftermarket devices, such as 2-way radios, power inverters, computers, etc., may cause a system malfunction. High radio frequency traffic areas, such as gas stations that use pay-at-the-pump radio frequency transponders, may also cause interference that could lead to a malfunction. Keyless entry allows you to operate the following features:

- Door lock/unlock
- Vehicle locator/Panic alarm
- Remote vehicle starting, if equipped

The keyless entry system has the following components:

- Keyless entry transmitters
- Body Control Module
- Remote Control Door Lock Receiver

Keyless Entry Transmitters

Note: When the vehicle key is in the ignition, keyless entry functions from all keyless entry transmitter are disabled.

The keyless entry transmitters are used to perform various entry functions while away from the immediate are of the vehicle. Keyless entry functions may work at up to 20 m (65 ft) away from the vehicle. Ambient conditions may affect the performance of the keyless entry transmitter and reduce the range at which keyless entry functions operate. Up to eight transmitters may be programmed to a single vehicle.

OnStar® Remote Link (if equipped)

A vehicle operator may have the ability to perform some of the keyless entry functions using applications on personal devices such as a smart phone. Unwanted or inadvertent door lock/unlock activation may be requested by the OnStar® Remote Link app. It is possible that a customer may be unaware of account usage, result in an unwanted or phantom door lock/unlock. If normal system diagnosis does results in an inability to verify the customer’s concern, contact Technical Assistance Center (TAC).

Body Control Module (BCM)

The BCM is a multifunction module that operates the keyless entry system. When an radio frequency message is received from a keyless entry transmitter, the BCM interprets this signal and performs the specific function, i.e. door lock, door unlock, or vehicle locate.

Remote Control Door Lock Receiver

The Remote Control Door Lock Receiver acts as an antenna for the keyless entry system and communicates with the BCM through a dedicated serial data link. When a button is pressed on a keyless entry transmitter, the Remote Control Door Lock Receiver receives this signal and sends the request to the BCM. The BCM interprets the signal and performs the specific function, i.e. door lock, door unlock, or vehicle locate.

Unlock Doors

Momentarily press the transmitter UNLOCK button in order to perform the following functions:

- Unlock only the driver door or all doors and liftgate (if equipped); this is customized through the DIC.
- Illuminate the interior lamps for a determined length of time or until the ignition is turned ON.
- Flash the exterior lights; this is customized through the DIC.
- Disarm the content theft deterrent system, if equipped.
- Deactivate the content theft deterrent system when in the alarm mode.

Lock All Doors

Press the transmitter LOCK button to perform the following functions:

- Lock all vehicle doors.
- Immediately turn OFF the interior lamps.
- Flash the exterior lights and/or sound the horn; this is customized through the DIC.
- Arm the content theft deterrent system.

Vehicle Locator/Panic Alarm

A single press of the panic button performs the following functions. Some functions may be dependent on personalization settings:

- Pulse the horn three times.
- Flash the exterior lamps three times.

A press and hold of the panic button performs the following functions:

- Illuminate the interior lamps.
- Pulse the horn and flash the exterior lamps for 30 seconds or until the following conditions occur:
  - The panic button is pressed.
  - The ignition switch is turned to the RUN position with a valid key.

Remote Vehicle Start, if equipped

The remote vehicle start function allows engine starting while not in the vehicle. It also allows the vehicle HVAC system and other vehicle systems to enable, providing a comfortable vehicle upon entry. The remote vehicle start sequence begins by pressing and releasing the lock button and then pressing and holding the remote vehicle start buttons on the keyless entry transmitter. The turn signal lamps will illuminate to indicate the vehicle has received the remote start request. Each time an remote vehicle start is performed, the vehicle doors are locked, however they may then be unlocked/locked with the transmitter or vehicle key at any time. Once activated, the engine is allowed to run for 10 minutes. The remote vehicle start time may be extended by an additional 10 minutes by again pressing and releasing the lock button and then pressing and holding the remote vehicle start buttons on the transmitter. This feature is called a remote vehicle start continue and allows a maximum of 20 minutes of engine running. If the remote vehicle start continue is performed at seven minutes into the initial 10 minute time-out, a total of 17 minutes of engine running would occur. The remote vehicle start event may be suspended at any time by pressing only the remote vehicle start button on the transmitter or by entering the vehicle and pressing the hazard lamp switch.

In between ignition cycles, only two remote vehicle start events may occur or be attempted. Once two events or attempts have been made, future remote vehicle start events will be suspended until the vehicle is started using the ignition.

Hood Ajar Switch

The hood switch provides status of the hood to the BCM for remote vehicle start purposes. The switch is integrated into the hood latch assembly.

Remote Vehicle Start Circuit Description

The BCM receives a signal from the keyless entry transmitter indicating a remote vehicle start request. A message is then sent to the BCM which determines if a crank request message will be sent to the ECM to allow engine starting. To determine if conditions are correct for an remote vehicle start event, the BCM will ensure the following conditions are met:

- A valid hood ajar switch closed signal is present.
- The doors are locked.
- The hazard switch is OFF.
- The vehicle power mode is correct.
- No content theft deterrent alarm triggers are present.

When the BCM determines all conditions meet those required for an remote vehicle start event, a message is sent via serial data to the ECM. The ECM relies on the remote vehicle start message from BCM to enable remote vehicle start when the crank request signal is received. If the ECM does not receive a valid remote vehicle start message, it will not attempt to start the engine. While the ECM is in remote vehicle start mode it will suspend engine operation if any of the following additional conditions occur:

- Vehicle speed is greater than 0.
- Transmission is not in PARK.
- Excessive engine coolant temperature
- Low oil pressure
- The malfunction indicator lamp (MIL) is commanded ON.
- Engine crank time is greater than 30 seconds.
- Excessive engine speed
- Accelerator pedal position too high
- Remote start timer equals 0.
- Immobilizer system indicates tamper

Keyless Entry Personalization

Vehicle lock/unlock functions and remote vehicle start remote vehicle start settings may be personalized. For functional descriptions and personalization instructions, refer to the vehicle owners manual.

Seat Belts

Specifications

Fastener Specifications

Reusable Threaded Fastener Tightening Specifications

Note: *All fasteners listed in this table can be reused after removal.*	
Application	Specification Metric (English)
Child Seat Restraint System Belt Bracket Bolt	22 N•m (16 lb ft)
Front Seat Belt Buckle Fastener	45 N•m (33 lb ft)
Front Seat Belt Guide Adjuster Bolt	45 N•m (33 lb ft)
Front Seat Belt Retractor Bolt	45 N•m (33 lb ft)
Rear Center Seat Belt Buckle Nut	45 N•m (33 lb ft)
Rear Seat Belt Retractor Anchor Plate Bolt	45 N•m (33 lb ft)
Rear Seat Belt Retractor Bolt	45 N•m (33 lb ft)

Description and Operation

Seat Belt System Description and Operation

Seat Belt Block Diagram

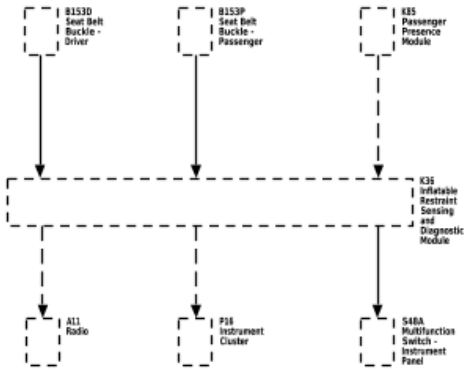

3282982

Restraint System

Note: If the vehicle has been in a collision, refer to Repairs and Inspections Required After a Collision

The vehicle has front and rear seat belts that are the primary means of occupant restraint. Seat belts help to keep the occupants inside the passenger compartment and to gradually reduce the impact forces during the following events:

- Frontal impact type crashes
- Rear impact type crashes
- Side impact type crashes
- Roll-over type crashes

All seat belt retractors have emergency locks. The retractors remain unlocked during normal operation and under normal driving conditions. The retractors remain unlocked during normal conditions in order to allow free movement of the upper body of each occupant.
A pendulum locks the seat belt webbing into position.

The pendulum causes a locking bar to engage a cog on the spool of the retractor mechanism when the following conditions occur:

- A rapid extraction of the seat belt webbing from the retractor
- An abrupt change in vehicle speed
- An abrupt change in vehicle direction
- Operation of the vehicle on a steep upgrade
- Operation of the vehicle on a downgrade

The seat belts have an automatic locking (cinch) feature. The cinch feature is activated when the seat belt webbing is completely extended from the retractor. The cinch feature prevents the webbing from extending beyond the position from which it is allowed to retract. Use of the cinch feature is recommended for securing a child seat. The cinch feature may be cancelled by allowing the webbing to wind back completely into the retractor. After the cinch feature is cancelled, the webbing is unlocked. After the cinch feature is cancelled, the webbing will extend from the retractor. This vehicle is also equipped with a supplemental inflatable restraint (SIR) system. Refer to Supplemental Inflatable Restraint System Description and Operation

Front Seat Belt System

The front seat belt system includes a driver and passenger seat belt retractor pretensioner. Both front seat belt pretensioners includes a seat belt switch in the seat buckle which controls a reminder lamp and a tone alarm.

Note: The front passenger seat is equipped with a passenger presence sensor, which detects an occupant. If the passenger presence sensor detects an empty front passenger seat, then the passenger fasten safety belt indicator will be disabled.

- When the driver seat belt is buckled and the ignition switch is turned ON, the following events will occur:
  - The tone alarm will not operate.
  - The reminder lamp will not operate.
- When the passenger seat belt is buckled with an occupant sitting in the passenger front seat, then the ignition switch is turned ON, the following events will occur:
  - The tone alarm will not operate.
  - The reminder lamp, which is located within the Instrument Panel Multifunction Switch, will not be turned ON.
- When the driver seat belt is not buckled and the ignition switch is in the ON position, the following events will occur:
  - The tone alarm will operate for 4–8 seconds and then go OFF.
  - The fasten safety belt indicator will turn ON for 20 seconds, until the driver seat belt is buckled.
- When the passenger seat belt is not buckled with an occupant sitting in the passenger front seat, then the ignition switch is turned ON, the following events will occur:
  - The tone alarm will operate for 4–8 seconds and then go OFF.
  - The reminder lamp, which is located within the Instrument Panel Multifunction Switch, will be turned ON.

Rear Seat Belt System

The Rear Seat Belt System includes the following components:

- The rear seat belt retractor is located at the wheelhouse panel and attached to the floor panel by the rear seat shoulder belt retractor bracket.
- The rear seat belt buckles and the center seat belt buckle are attached to each seat.

Child Seat Restraint System

Warning: A child in a rear-facing child restraint can be seriously injured if the front passenger air bag inflates, because the back of a rear-facing child restraint would be very close to the inflating air bag. NEVER use a rear-facing child restraint in this vehicle. If a forward-facing child restraint is suitable for your child, ALWAYS move the front passenger seat as far back as it will go and then install the child restraint. Be sure the child restraint position does not conflict with any additional requirements provided by the manufacturer. For more information, refer to the vehicle owner's manual and the instructions that came with the child restraint.

A child in a rear-facing child restraint can be seriously injured if the right-front passengers air bag inflates. This is because the back of a rear-facing child restraint would be very close to the inflating air bag. NEVER use a rear-facing child restraint in this vehicle. If a forward-facing child restraint is suitable for your child, ALWAYS move the front passenger seat as far back as it will go and then install the child restraint. Be sure the child restraint position does not conflict with any additional requirements provided by the manufacturer. For more information, refer to the vehicle owners manual and the instruction that came with the child restraint.

The child seat may only be used in a forward facing seating location. The child seat should be installed and secured according to the manufacturer's directions. If the child seat has a top strap, the seat will need to be anchored. Passengers should not be allowed to sit at locations where the seat belts are being used to secure the child seat.

All vehicles are equipped with a dual-mode type retractor with emergency and automatic locking features. The automatic locking feature is for restraint

of a child seat. The child seat can be secured by pulling the seat belt all the way out to lock it. Then tighten the seat belt around the child seat.

If a child seat is to be used in the second seat position, a special dealer-installed anchor must be used in order to anchor the child seat top strap. This only applies to the seats designed with the top strap provision and for the vehicles sold in Canada. In order to ensure the correct top strap angle, the child seat is only to be used at the seating position for which the top strap anchor is installed.

Fasten Safety Belt Indicators

There are two fasten safety belt indicators for this vehicle. The driver fasten safety belt reminder is displayed in the instrument cluster, and the passenger fasten safety belt reminder is displayed in the Instrument Panel Multifunction Switch. The fasten safety belt indicator may only be ON during RUN. The fasten safety belt indicator illuminates under the following conditions:

- During the bulb check
- The inflatable restraint sensing and diagnostic module (SDM) sends the status of the driver seat belt to the instrument cluster via serial data. The passenger seat belt status is sent to the Instrument Panel Multifunction Switch via a hard wire. If any of the seat belts are unfastened, the instrument cluster will send a message requesting a chime sound to be turned ON after a bulb check.

Section 8

Transmission

Shift Lock Control 8-3
Schematic and Routing Diagrams 8-3
Shift Lock Control Schematics 8-4
Description and Operation 8-5
Automatic Transmission Shift Lock Control
Description and Operation 8-5

BLANK

Shift Lock Control

Schematic and Routing Diagrams

Shift Lock Control Schematics (MYB)

[redacted]

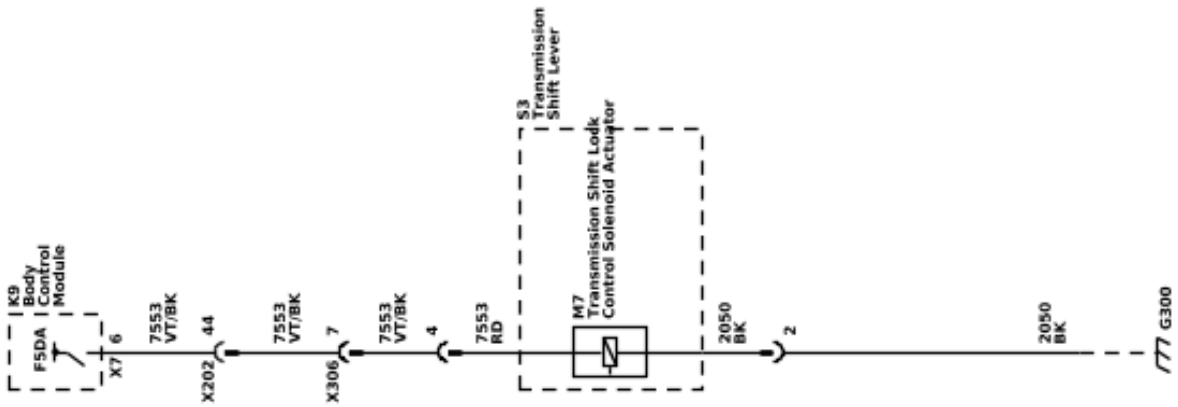

[redacted]

5681788

Description and Operation

Automatic Transmission Shift Lock Control Description and Operation

The Automatic Transmission Shift Lock Control System is a safety device that prevents an inadvertent shift out of PARK when the engine is running. This vehicle is equipped with RPO "T4Z" Safety Belt Assurance System. This system will not allow the vehicle to be shifted out of park unless the seat belt Driver/ Passenger (if occupied) is buckled. The system consists of the following components:

- The Automatic Transmission Shift Lock Solenoid (serviced as the Automatic Transmission Shift Lock Actuator)
- The Body Control Module (BCM)
- The Engine Control Module (ECM)
- The Inflatable Restraint Sensing and Diagnostic Module (SDM).

The BCM controls the voltage to the shift lock control solenoid though the shift lock control solenoid controlled voltage circuit. The following conditions must be met before the BCM will supply voltage to the shift lock control solenoid:

- The ignition is in the ON position.
- The ECM sends an input via GMLAN serial data to the BCM when the Transmission Control Module (TCM) indicates the transmission is in the PARK position.
- The BCM receives a brake applied input from the stop lamp switch.
- The SDM determines if the occupied driver and front outboard passenger, if present, have their safety belt(s) buckled.

Since the shift lock control solenoid is permanently grounded, the BCM supplies voltage to the automatic transmission shift lock control solenoid, releasing the mechanical lock on the shift lever as the solenoid energizes. The energized solenoid allows the driver to move the shift lever out of the PARK position. When the brake pedal is not applied, the BCM turns the control voltage output of the shift lock control solenoid OFF, de-energizing the shift lock control solenoid. When the transmission is in the PARK position, the de-energized shift lock control solenoid will prevent shifting as the lever is mechanically locked in the PARK position.

During remote start operation, the BCM will energize the shift lock control circuit, locking the shift lever in the PARK position.

Vehicles with the Safety Belt Assurance System, will display the following message “Shift Locked, Buckle Seatbelt” if the driver or front outboard passenger, if present, and safety belt(s) are not buckled. The vehicle will not shift out of PARK. Buckle the safety belt(s) to unlock the shifter.

This system may not allow the vehicle to shift out of PARK if an object such as a briefcase, handbag, grocery bag, laptop, or other electronic devices is on the front outboard passenger seat. If this happens, remove the object from the seat or buckle the safety belt.

Vehicles with the Safety Belt Assurance System, will display the following message “Shift Unlocked, Brake To Shift” if the system times out and allows the vehicle to be shifted out of PARK after 30 s following brake applied.

The Safety Belt Assurance System can be disabled with a calibration file update in the K36 Inflatable Restraint Sensing and Diagnostic Module using SPS. This procedure should only be done to help resolve a customer dissatisfaction issue.

BLANK

A

Automatic Day-Night Mirror
Description and Operation 2-35
Automatic HVAC Description and Operation 5-9

C

Charging System
Description and Operation 4-7
Component Connector End Views 6-68

D

Data Link Communications
Description and Operation 6-20
Door Ajar Indicator
Description and Operation 2-52

E

Electrical Center Identification Views 6-25
Electrical Power Management Description and
Operation 4-10
Electronic Park Lock Description and
Operation 6-608
Exterior Lighting Systems
Description and Operation 2-28

F

Fastener Specifications
Seat Belts 7-16

G

Garage Door Opener
Description and Operation 7-14

H

Hood Ajar Indicator
Description and Operation 2-54
Horn
System Description and Operation 2-13

I

Immobilizer
Description and Operation 7-5
Inline Harness Connector End Views 6-498
Interior Lighting System
Description and Operation 2-29

K

Keyless Entry
System Description and Operation 7-14

M

Manual HVAC Description and Operation 5-17
Mobile Device Wireless Charger
Description and Operation 6-607

P

Parking Assist
Description and Operation 7-10
Power Door Locks
Description and Operation 2-55
Power Mode Description and Operation 6-609
Power Outlets
Description and Operation 6-607
Power Windows
Description and Operation 2-8

R

Rear Vision Camera
Description and Operation 3-6
Rear Window Defogger
Description and Operation 2-9
Remote Vehicle Speed Limiting
Description and Operation 7-6
Remote Vehicle Speed Limiting Description and
Operation 7-6
Retained Accessory Power
Description and Operation 6-611
RPO Code List 1-7

S

Schematics
Body Control Systems 6-16
Cigar Lighter/Power Outlet 6-605
Data Communications 6-4
Defogger 2-7
Door Lock/Indicator 2-47
Exterior Lamps 2-19
Fog Lamps 2-17
Headlamps/Daytime Running Lamps 2-15
Hood Latch 2-51
Horns 2-12
HVAC Systems - Automatic 5-4
HVAC Systems - Manual 5-13
Image Display Cameras 3-4
Immobilizer 7-4
Inside Rearview Mirror 2-32
Interior Lamps 2-23
Interior Lamps Dimming 2-25
Moveable Window 2-4
Outside Rearview Mirror 2-33
Parking Assistance Systems 7-8
Remote Function 7-13
Shift Lock Control 8-4
Starting and Charging 4-4
Trailering Systems 2-37
Seat Belt
System Description and Operation 7-16
Shift Lock Control
Description and Operation 8-5
Starting System
Description and Operation 4-12

T

Trailering Description and Operation 2-41
Trailering Systems Schematics 2-37

V

Vehicle Certification, Tire Placard, and Anti-Theft Label 1-5
Vehicle, Engine and Transmission ID and VIN Location, Derivative and Usage 1-3