Table of Contents

General Information 1-1
General Information 1-3

Body Systems 2-1
Fixed and Moveable Windows 2-3
Horns and Pedestrian Alerts 2-10
Lighting 2-13
Vehicle Access 2-47

Driver Information and Entertainment 3-1
Image Display Cameras 3-3

Engine/Propulsion 4-1
12 V Starting and Charging 4-3

HVAC 5-1
Heating, Ventilation, and Air Conditioning 5-3
HVAC - Automatic 5-4

Power and Signal Distribution 6-1
Data Communications 6-3
Electrical Component and Inline Harness Connector End Views 6-7
Electrical Component Locator and Harness Routing Views 6-848
Power Outlets 6-944
Wiring Systems and Power Management 6-954

Safety and Security 7-1
Immobilizer 7-3
Parking Assistance Systems 7-7
Remote Functions 7-13
Seat Belts 7-21
Supplemental Restraints 7-26

INDEX INDEX-1

BLANK

Section 1

General Information

General Information 1-3
Introduction 1-3
Vehicle, Engine and Transmission ID and VIN Location, Derivative and Usage 1-3
Vehicle Certification, Tire Placard, and Anti-Theft Label 1-5
RPO Code List 1-7

BLANK

General Information

Introduction

Vehicle, Engine and Transmission ID and VIN Location, Derivative and Usage



5028742

The vehicle identification number (VIN) plate (1) is the legal identifier of the vehicle. The VIN plate is located on the upper left corner of the instrument panel. The VIN number can be seen through the windshield from the outside of the vehicle:

Vehicle Identification Number (VIN) System

Position	Definition	Character	Description
1	Country of Origin	1	United States
		3	Mexico
2	Manufacturer	G	General Motors
3	Vehicle Brand/Type	K	GMC MPV
4	GVWR/Brake System/Body Style	F	7,001–8,000 lbs Cargo Van/Four (4) Door Cab/Utility, Passenger Van

Vehicle Identification Number (VIN) System (cont'd)

Position	Definition	Character	Description
5/6	Line Chassis/Series	1/A	4x2, GMC Yukon SLE
		1/B	4x2, GMC Yukon SLT
		1/D	4x2, GMC Yukon Denali
		1/7	4x2, GMC Yukon, (Non-US, Non-Canada)
		1/F	4x2, GMC Yukon XL SLE
		1/G	4x2, GMC Yukon XL SLT
		C/J	4x2, GMC Yukon XL Denali
		1/8	4x2, GMC Yukon XL, (Non-US, Non-Canada)
		2/A	4x4, GMC Yukon SLE
		2/B	4x4, GMC Yukon SLT
		2/C	4x4, GMC Yukon AT4
		2/D	4x4, GMC Yukon Denali
		2/7	4x4, GMC Yukon, (Non-US, Non-Canada)
		2/F	4x4, GMC Yukon XL SLE
		2/G	4x4, GMC Yukon XL SLT
		2/H	4x4, GMC Yukon XL AT4
		2/J	4x4, GMC Yukon XL Denali
		2/8	4x4, GMC Yukon XL, (Non-US, Non-Canada)
7	Restraint System	E	RPO AY0 – Active Manual Belts, Airbags – Driver and Passenger – Front (1st row), Front Seat Side (1st row), Roof Side (all seating rows)
		K	AYQ - Active Manual Belts, Airbag - Driver & Passenger - Front (1st row) , Front Seat Side (1st Row), Front Inboard Seat Side (1st row), Roof Side (all seating rows)
8	Engine Type	D	RPO L84, Engine Gas, 8 Cylinder, 5.3L, DI, DFM, Aluminum, GEN 5, VAR 2
		L	RPO L87, Engine Gas, 8 Cylinder, V8, 6.2L, DI AFM, Aluminum, GEN 5
		T	RPO LM2, Engine Diesel, 6 Cylinder, 3.0L, CRI, V6, DOHC, Turbo, VGT, Aluminum
		*	Unless Equipped with RPO YK9 – Not Equipped with Cylinder Deactivation
9	Check Digit	—	Check Digit
10	Model Year	N	2022
11	Plant Location	R	Arlington, USA
12–17	Plant Sequence Number	—	Plant Sequence Number

3.0L (LM2) Diesel Engine ID and VIN Derivative Location

Engine Identification

5.3L (L82 L84) or 6.2L (L87) Engine ID and VIN Derivative Location

Engine Identification

10L80 (MQC) Transmission ID and VIN Derivative Location

Transmission Identification Information

Vehicle Certification, Tire Placard, and Anti-Theft Label

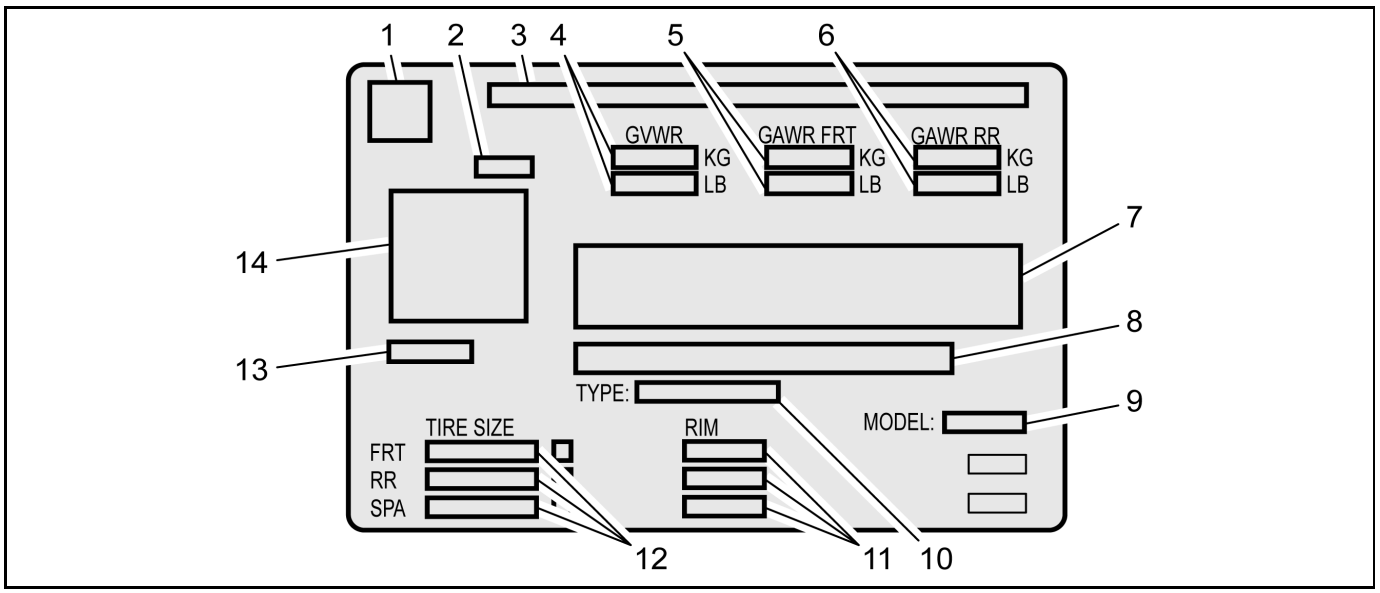

4992823

Vehicle Certification Label

Callout	Description
A vehicle-specific Certification label is attached to the vehicle's center pillar (B-pillar) and displays the following assessments:	
1	Logo
2	Final Date of Manufacture (Month and Year MM/YY) Date of manufacture is to reflect the date that the vehicle is counted as built. In those cases where a replacement label is needed, the replacement label should reflect the actual build date not the date of replacement.
3	Name of Manufacturer
4	Maximum Gross Vehicle Weight Rating (GVWR)
5	Maximum Gross Axle Weight Rating (GAWR) - Front
6	Maximum Gross Axle Weight Rating (GAWR) - Rear
7	Certification Statement
8	Vehicle Identification Number (VIN)
9	Engineering Model Number
10	Vehicle Class Type (Pass Car, etc.)
11	Original Equipment Rim Size
12	Original Equipment Tire Size
13	Paint Code
14	QR Code Once the QR code is scanned, the information will appear in this order on your smartphone or laptop: VIN, Model Year, Model, Build Month, Year, Engineering Book, Vehicle Order Number, 3 Digit RPO Codes sorted alphanumerically and the Paint Code (same code appears the lower left of the QR code)

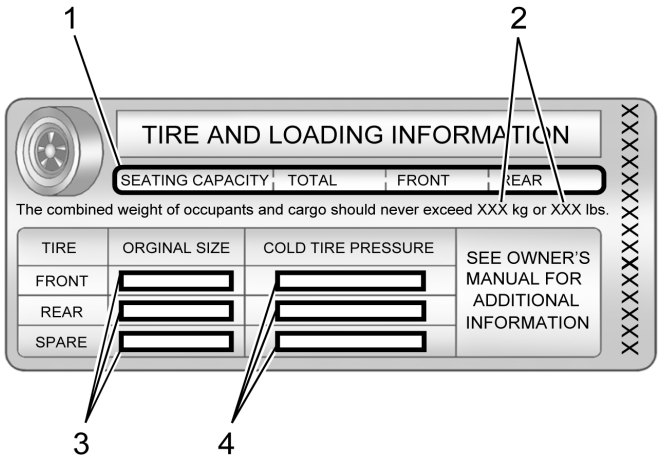
1
2
TIRE AND LOADING INFORMATION
SEATING CAPACITY
TOTAL
FRONT
REAR
The combined weight of occupants and cargo should never exceed XXX kg or XXX lbs.
TIRE
ORGINAL SIZE
COLD TIRE PRESSURE
FRONT
REAR
SPARE
SEE OWNER'S MANUAL FOR ADDITIONAL INFORMATION
XXXX

Anti-Theft Label

Callout	Description
This legal identifier is in the front corner of the instrument panel, on the driver side of the vehicle. It can be seen through the windshield from outside. The Vehicle Identification Number (VIN) also appears on the Vehicle Certification and certificates of title and registration.	
1	Vehicle Identification Number (VIN)

RPO Code List

The following table provides the description of the Regular Production Option (RPO) codes that are available on the vehicle. The vehicle's RPO list is printed on the Service Parts Identification Label.

RPO	Description
00C	IDENTIFICATION-NOT EQUIPPED WITH WIRELESS CHARGING MODULE
00H	IDENTIFICATION-EQUIPPED WITH HVAC MODULE WITH BRUSHED MOTOR
00S	IDENTIFICATION-NOT EQUIPPED WITH SIDE BLIND ZONE ALERT
3SA	PACKAGE-SLE OPTION 1
4AA	INTERIOR TRIM-JET BLACK
4AI	INTERIOR TRIM-JET BLACK/ BROWNSTONE TESTING15
4EL	INTERIOR TRIM-JET BLACK/BRANDY
4JJ	INTERIOR TRIM-GIDEON/VY DK ATMOSPHERE
4JX	INTERIOR TRIM-VERY DK ATMOSPHERE / VERY DK GREY
4JZ	INTERIOR TRIM-WHISPER BEIGE / FAWN
4SA	PACKAGE-SLT OPTION 1
4SB	PACKAGE-SLT OPTION 2
5JL	ACCESSORY-BRAKE UPGRADE PKG 1 - COMPLETE
5RU	ACCESSORY-ILLUMINATED SILL PLATE - RR COMPT OPENING
5SA	PACKAGE-DENALI OPTION 1
5VF	ACCESSORY-EXHAUST TIP - DESIGN 3
5W7	ACCESSORY-AIR FILTER - PERFORMANCE
65C	LABEL, WARNING-CALIFORNIA, PROP 65 COMPLIANT
A2X	ADJUSTER DRIVER SEAT-8WAY, PWR RECLINE, PWR FORE/AFT, PWR HEIGHT, PWR TILT
A45	MEMORY-SEAT ADJUSTER, MIRROR, POWER, DRIVER, PERSONALIZATION
A50	SEAT-FRT BKT
A7J	ADJUSTER PASS ST-6WAY, PWR RECLINE, PWR FORE/AFT, PWR HEIGHT
A7K	ADJUSTER PASS ST-8WAY, PWR RECLINE, PWR FORE/AFT, PWR HEIGHT, PWR TILT
AAK	ACCESSORY-FLOOR LINER - CONTOURED - ALT DESIGN 1
AEF	WINDOW REG PASS DR-POWER OPERATED, EXPRESS UP/DOWN (DO NOT USE NEXT NEW MAJOR)
AEQ	WINDOW REG REAR DR-POWER OPERATED, EXPRESS DOWN (DO NOT USE NEXT NEW MAJOR)
AKJ	WINDSHIELD STYLE-SHADE BAND
AKK	WINDSHIELD STYLE-ACOUSTIC PVB
AKO	WINDOW TYPE-PRIVACY
AKX	WINDSHIELD TYPE-SOLAR ABSORBING
AL0	SENSOR INDICATOR-INFLATABLE RESTRAINT, FRT PASS/CHILD PRESENCE DETECTOR
AL9	LUMBAR DRIVER-SEAT, POWER, 2 WAY
ARL	PLANT CODE-ARLINGTON, TX, USA
ARN	SEAT THIRD ROW-60/40 BENCH, MAN FOLD
AS8	SEAT THIRD ROW-60/40 BENCH, POWER FOLD
AT6	SEAT RR-BENCH, 60/40 MANUAL CONFIGURABLE
AT9	LUMBAR PASSENGER-SEAT, POWER, 2 WAY
ATH	LOCK CONTROL, ENTRY-REMOTE ENTRY, EXTENDED RANGE, PASSIVE ENTRY, ALL DOORS
ATN	SEAT RR-BUCKET, POWER CONFIGURABLE
ATT	SEAT RR-BENCH, 60/40 POWER CONFIGURABLE
ATV	SEAT RR-BUCKET, MANUAL CONFIGURABLE
AU3	LOCK CONTROL-SIDE DR, ELEC
AUN	MEMORY-DRIVER SEAT
AVI	RESTRAINT PROVISIONS-ADJUSTABLE GUIDE LOOP
AVK	LUMBAR DRIVER-SEAT, POWER, 4 WAY
AVU	LUMBAR PASSENGER-SEAT, POWER, 4-WAY
AX2	KEY-COMMON, VEHICULAR UNIQUE
AXG	WINDOW REG DRVR DR-POWER OPERATED, EXPRESS UP/DOWN (DO NOT USE NEXT NEW MAJOR)
AXP	VEHICLE TYPE-MULTI-PURPOSE PASSENGER VEHICLE
AY0	RESTRAINT SYSTEM-SEAT, INFLATABLE, DRIVER & PASS FRT, SEAT SIDE, ROOF SIDE

RPO	Description
AYQ	RESTRAINT SYSTEM-SEAT, INFLATABLE, DRIVER & PASS FRT, FRT SEAT SIDE, FRT INBOARD SEAT SIDE, ROOF SIDE
AZ3	SEAT-FRT SPLIT, DRIVER, PASS, FULL FEATURE CENTER
B1V	HANDLE O/S DOOR-CHROME, BODY COLOR STRIP
B30	COVERING FLOOR-CARPET
B3L	STEPS, RUNNINGBOARD-SIDE, RETRACTABLE, POWER, BLACK
B58	COVERING-FLOOR MAT, FRT & RR, CARPETED INSERT
B85	MOLDING B/S-EXTERIOR, BRIGHT
BMK	MOLDING B/S-CHROME
BTM	SWITCH-START, KEYLESS
BTV	REMOTE START-VEHICLE
BVE	STEPS, RUNNINGBOARD-SIDE
C25	WIPER SYS RR WINDOW-INTERMITTENT
C3A	HEATER AIR SYSTEM-HEATING/ DEFROSTER SYSTEM, REINFORCED, ELECTRIC, 1.5KW
C3Q	PLATE-DOOR SILL COVER, UPLEVEL
C3U	ROOF-SUN, GLASS, SLIDING, ELEC, TRANSPARENT GLASS FIXED (DO NOT USE NEXT NEW MAJOR)
C49	DEFOGGER-RR WINDOW, ELECTRIC
C69	HVAC SYSTEM RR-AIR CONDITIONER
CAV	ACCESSORY-TRAY - TRUNK/ CARGO AREA
CE1	WIPER SYS WINDSHIELD-PULSE, MOISTURE SENSITIVE
CJ2	HVAC SYSTEM-AIR CONDITIONER FRT, AUTO TEMP CONT, AUX TEMP CONT
CTT	HITCH ASSIST-GUIDELINES
CWA	WASHER-CAMERA, REAR
CWM	SALES PACKAGE-TECHNOLOGY
CWN	SALES PACKAGE-TECHNOLOGY II
D07	CONSOLE-FRT COMPT, FLOOR, CUSTOM
D31	MIRROR I/S R/V-TILT
D75	HANDLE O/S DOOR-BODY COLOR
DCH	CONSOLE-FRT COMPT, FLOOR, ARM REST SLIDING, UP LEVEL
DD8	MIRROR I/S R/V-LT SENSITIVE
DH6	MIRROR I/S FRT VAN-LH & RH, SUNSHADE, ILLUM (DO NOT USE NEXT NEW MAJOR)
DLF	MIRROR O/S-LH & RH, RC, ELEC, HEAT, MAN FOLD, FLAT/DRVR, CNVXPASS
DP6	MIRROR PROVISIONS-HOUSING, PAINTED
DRZ	MIRROR I/S R/V-LT SENSITIVE, FULL VIDEO DISPLAY

RPO	Description
DXR	MIRROR O/S-LH & RH, RC, ELEC, HEAT, FLAT/DRVR, PWRFOLD, LT SENS DRVR, CNVX/PASS, TURN SIG IND, PERM LIGHT
ENL	ENG CONTROL DISABLE-STOP/START, NON-LATCHING
EPH	TRANS RANGE SEL SYS-ELECTRONIC
F47	SUSPENSION SYSTEM-FRT & RR, AIR
F48	CHASSIS DRIVE LINE-ALL WHEEL DRIVE (AWD)/FOUR WHEEL DRIVE(4WD), DRIVER SELECT
FE9	CERTIFICATION-EMISSION, FEDERAL
FHX	VEHICLE FUEL-DIESEL B20
FJW	VEHICLE FUEL-GASOLINE E15
G1W	PRIMARY COLOR-EXTERIOR, ABALONE WHITE TRICOAT(140X)
G48	PRIMARY COLOR-EXTERIOR, GALACTICA MET-1 (613G)
G6M	PRIMARY COLOR-EXTERIOR, RUSH MET-1 (618G)
G86	AXLE-LIMITED SLIP
G96	AXLE POSITRACTION-LIMITED SLIP, ELECTRONIC
G9K	PRIMARY COLOR-EXTERIOR, SATIN STEEL GRAY MET-3 (464C)
GAZ	PRIMARY COLOR-EXTERIOR, SUMMIT WHITE (G) 8624
GBA	PRIMARY COLOR-EXTERIOR, BLACK (G) 8555
GED	PRIMARY COLOR-EXTERIOR, WILDER MET-1 (244F)
GFG	TRIM PACKAGE-AT4
GFI	TRIM PACKAGE-SLE
GFU	TRIM PACKAGE-SLT
GFW	TRIM PACKAGE-DENALI
GJW	PRIMARY COLOR-EXTERIOR, EMPIRE BEIGE MET-1 (317E)
GLU	PRIMARY COLOR-EXTERIOR, DARKMOON BLUE MET-1 (328E)
GSK	PRIMARY COLOR-EXTERIOR, CHERRY POP TINT-1 (252F)
GU5	AXLE REAR-3.23 RATIO
H0U	INTERIOR TRIM CONFIG-CLOTH, LEVEL 2, JET BLACK
H1Y	INTERIOR TRIM CONFIG-LEATHER, LEVEL 2, JET BLACK
H2X	INTERIOR TRIM CONFIG-LEATHER, LEVEL 4, JET BLACK
HFM	INTERIOR TRIM CONFIG-LEATHER, LEVEL 4, WHISPER BEIGE / FAWN
HFN	INTERIOR TRIM CONFIG-LEATHER, LEVEL 4, VERY DK ATMOSPHERE / VERY DK GREY
HI9	INTERIOR TRIM CONFIG-LEATHER, LEVEL 2, JET BLACK/BRANDY
HS1	ALERT-SAFETY HAPTIC SEAT

RPO	Description
HV5	INTERIOR TRIM CONFIG-CLOTH, LEVEL 2, GIDEON/VY DK ATMOSPHERE
HVE	INTERIOR TRIM CONFIG-LEATHER, LEVEL 2, GIDEON/VY DK ATMOSPHERE
IOK	RADIO-INFOTAINMENT SYSTEM - 3.X MID/ HIGH HMI,ENHANCED CONNECTIVITY 2.0, VOICE RECOGNITION
J22	ENGINEERING YEAR-2022
J61	BRAKE SYSTEM-POWER, FRT & RR DISC, ABS, 17"
JBK	BRAKE LINING WEAR SY-WEAR LIFE INDICATOR
JHD	BRK APL CTRL FEATURE-HILL DESCENT, GEAR HOLD
JL1	BRK APL CTRL FEATURE-INTEGRATED TRAILER BRAKE
K05	HEATER ENG-BLOCK
K1O	FILTER MONITOR-ENGINE AIR
K34	CRUISE CONTROL-AUTOMATIC, ELECTRONIC
K3W	BATTERY-LN5, AGM, 12V, 95AH, 900 ENCCA
K47	AIR CLEANER-HIGH CAPACITY
K4C	CHARGER-INDUCTIVE PORTABLE WIRELESS DEVICE
K4F	BATTERY-LN4, AGM, 12V, 80AH, 800 ENCCA
K6L	FILTER-AIR, POLLUTANT, ODOR & FINE DUST
KA1	HEATER SEAT FRT-DRVR & PASS
KA6	HEATER SEAT-REAR
KC4	COOLING SYSTEM-ENG OIL
KC5	RECEPTACLE-ELECTRICAL, ACCESSORY
KI3	STEERING WHEEL HEAT-AUTOMATIC
KI4	RECEPTACLE I/P-ELECTRICAL, 110 VOLT
KL9	ENG CONTROL-STOP/START SYS, CONVENTIONAL AT, CONVENTIONAL MT OR BRAKE RELEASE LATE RESTART
KNP	COOLING SYSTEM-TRANS, HD
KQV	HEATER-SEAT, VENTED, FRT (DO NOT USE NEXT NEW MAJOR, USE KU9)
KSG	CRUISE CONTROL-AUTOMATIC, ADAPTIVE, WITH STOP/GO
KW5	GENERATOR-220 AMP
KX4	GENERATOR-250 AMP
L84	ENGINE-GAS, 8 CYL, 5.3L, V8, DI, DFM, ALUM, GEN 5
L87	ENGINE-GAS, 8 CYL, V8, 6.2L, DI, DFM, ALUM, GEN 5
LM2	ENGINE-DIESEL, 6 CYL, 3.0L, CRI, L6, DOHC, TURBO, VGT, ALUM, CSS50V, VAR. 1
MAH	MARKETING AREA-US, PUERTO RICO/USVI

RPO	Description
MHS	TRANSMISSION-AUTO 10 SPD, 10L80, GRX, GEN 1, ATSS, ETRS, VAR 1
MQC	TRANSMISSION-AUTO 10 SPD, 10L80, ATSS, ETRS, CPA, GEN 2
N06	STEERING COLUMN LOCK-ELECTRICAL
N10	EXHAUST SYSTEM-DUAL
N37	STEERING COLUMN-TILT, TELESCOPING
N38	STEERING COLUMN-TILT, TELESCOPING, POWER
NB5	EXHAUST SYSTEM-SINGLE (DO NOT USE NEXT NEW MAJOR, USE NC2)
NE1	CERTIFICATION-EMISSION, GEOGRAPHICALLY RESTRICTED REGISTRATION
NHT	PERFORMANCE PACKAGE-ENHANCED TOWING
NP0	TRANSFER CASE-ACTIVE, SINGLE SPEED,SWITCH ACTIVATED,ALUM
NP5	STEERING WHEEL-LEATHER WRAPPED
NQH	TRANSFER CASE-ACTIVE, TWO SPEED, SWITCH ACTIVATED, ALUM
NSS	IDENTIFICATION-NOT EQUIPPED WITH STOP/START SYSTEM
NTB	EMISSION SYSTEM-FEDERAL, TIER 3
NUC	EMISSION SYSTEM-CALIFORNIA, ULEV50
NUF	EMISSION SYSTEM-CALIFORNIA, ULEV125
NWM	SHIELD-LOCK & LATCH, CLOSURES
NZG	WHEEL-20 X 9.0, J, ALUMINUM, DESIGN 7
NZH	WHEEL-20 X 9.0, J, ALUMINUM, DESIGN 8
PPW	PHONE PROJECTION-PHONE PROJECTION WIRELESS
PTT	TRAILER TIRE PRESSUR-MANUAL LEARN
PZ8	IMAGE ADJUSTMENT-HITCH VIEW
Q8E	JACK-MECHANICAL, W/TOOLS
QAE	TIRE ALL-275/60R20 SL 115S BW AT
QDF	TIRE ALL-265/65R18 SL 114T BW ALS VAR 1
R88	ACCESSORY-ILLUMINATED EMBLEM - EXTERIOR - DESIGN 2
RBR	WHEEL-22 X 9.0, J, STEEL, DESIGN 1
RC1	PLATE-FULL BODY, SKID
RDI	ACCESSORY-KEYLESS ENTRY
RIA	ACCESSORY-FLOOR LINER - CONTOURED
RIB	ACCESSORY-FLOOR LINER - CONTOURED - 3RD ROW
RIK	ACCESSORY-BADGE - EXTERIOR, PACKAGE, DESIGN 1
RM7	WHEEL SPARE-17 X 8.0, J, STEEL, DESIGN 1
RN2	ACCESSORY-ILLUMINATED EMBLEM - EXTERIOR - DESIGN 1

RPO	Description
RPU	WHEEL-22 X 9.0, J, ALUMINUM, DESIGN 15
RSR	OCCUPANT DETECT SYS-REAR SEAT, DOOR ACTIVATED
RTL	WHEEL-20 X 9.0, J, ALUMINUM, DESIGN 1
RVG	ACCESSORY-ADAPTER - TRAILER HARNESS
RWL	CHASSIS DRIVE LINE-REAR WHEEL DRIVE (RWD)
RWS	ACCESSORY-FLOOR MATS - CARPET
RWU	ACCESSORY-CARGO AREA ORGANIZER - COLLAPSIBLE
RXH	ACCESSORY-CENTER CAP - WHEEL - DESIGN 1
RXJ	ACCESSORY-CENTER CAP - WHEEL - DESIGN 2
RYT	ACCESSORY-FIRST AID KIT
RZ9	ACCESSORY-GRILLES/GRILLE INSERT - ALTERNATE DESIGN 1
S08	ACCESSORY-HIGHWAY SAFETY KIT
S0M	ACCESSORY-ILLUMINATED DOOR SILLS
S1O	ACCESSORY-CONTAINER - LOCKABLE STORAGE - INTERIOR
S1V	ACCESSORY-HEADPHONES - RSE
S2B	WHEEL SPARE-17 X 7.0, J, ALUMINUM, DESIGN 1
S3I	ACCESSORY-LAMPS - PERIMETER ILLUMINATION
S45	ACCESSORY-LUG NUT AND WHEEL LOCK KIT
S47	ACCESSORY-LUG NUTS
S4W	ACCESSORY-LUG NUT AND WHEEL LOCK KIT DESIGN 2
S4X	ACCESSORY-MIRROR COVERS/SKULL CAPS - ALTERNATE FINISH - PAINTED
SAF	LOCK-SPARE TIRE, HOIST SHAFT
SBZ	ACCESSORY-SPORT PEDAL KIT
SD3	ACCESSORY-FOLDABLE BOX - FLEXIBLE ORGANIZER - RR COMPT
SD5	ACCESSORY-TIRE PRESSURE MONITOR
SEM	ACCESSORY-WHEEL - 20" - ALUMINUM - DESIGN 5
SEV	ACCESSORY-WHEEL - 22 X 9.0 - J - ALUMINUM - DESIGN 3
SF1	ACCESSORY-WHEEL - 22 X 9.0 - J - ALUMINUM - DESIGN 8
SF2	ACCESSORY-WHEEL - 22" - ALUMINUM - DESIGN 9
SFE	ACCESSORY-WHEEL LOCKS
SFJ	ACCESSORY-WINDOW SHADES - REFLECTIVE
SFZ	ACCESSORY-EMBLEM - EXTERIOR - DESIGN 1
SGM	ACCESSORY-WHEEL - 22 X 9.0 - J - ALUMINUM - DESIGN 9
SII	WHEEL-22 X 9.0, J, ALUMINUM, DESIGN 8
SIY	WHEEL-22 X 9.0, J, ALUMINUM, DESIGN 9
SJB	ACCESSORY-GRILLE / GRILLE INSERTS - ALTERNATE FINISH 3
SPY	ACCESSORY-LUG NUTS - ALT FINISH
SPZ	ACCESSORY-WHEEL LOCKS - ALT FINISH
SRL	ACCESSORY-WHEEL - 22 X 9.0 - J - ALUMINUM - DESIGN 13
SRV	ACCESSORY-WHEEL - 22 X 9.0 - J - ALUMINUM - DESIGN 14
SSI	ACCESSORY-WHEEL - 22 X 9.0 - J - ALUMINUM - DESIGN 15
SSW	ACCESSORY-WHEEL - 22 X 9.0 - J - ALUMINUM - DESIGN 17
SUR	ACCESSORY-TRAILER TIRE PRESSURE MONITOR
T3S	LAMP-DAYTIME RUNNING, SEPARATE CAVITY, LED (DO NOT USE NEXT NEW MAJOR)
T40	LAMP FRT FOG-FRT FOG, LED
T4L	HEADLAMPS-LED
T8Z	SEAT BELT SAFETY SYS-SHIFTER INTERLOCK, GEN 3, INFOTAINMENT CUSTOMIZABLE
TB4	BODY EQUIPMENT-LIFT GATE (MANUAL)
TC2	BODY EQUIPMENT-LIFT GATE, POWER, HANDS FREE
TDM	MODE TEEN DRIVER-SETTINGS, INFOTAINMENT
THS	TRAILERING ASSIST-REVERSE
TQ5	HEADLAMP HIGH BEAM-AUTO CONTROL
TR1	LAMP-TAIL & STOP (DO NOT USE, SEE BFO)
TRG	VISION TRAILER-INSIDE VIEW, REAR VIEW
TRO	ACCESSORY-CAMERA PKG - TRAILERING AUX MOUNTED
U2K	DIGITAL AUDIO SYSTEM-S-BAND
UB3	ANTENNA-FIXED, RR SPOILER, RADIO
UD5	PARK ASSIST-FRONT AND REAR
UDV	DISPLAY INSTRUMENT-DRIVER INFO ENHANCED, FULL CLUSTER (MULTI COLOR GRAPHIC)
UE1	COMMUNICATION SYSTEM-VEHICLE, ONSTAR
UE4	SENSOR INDICATOR-FOLLOWING DISTANCE
UET	INDICATOR-SMART TRAILER INTEGRATION
UEU	SENSOR INDICATOR-FORWARD COLLISION ALERT
UFG	REAR CROSS TRAFFIC-ALERT
UG1	OPENER-GARAGE DOOR, UNIVERSAL
UGA	HOOK-TOW, RED

RPO	Description
UGN	COLL IMMINENT BRK-ALL SPEED, VEH FWD MOVEMENT, BRAKE PREFILL, INTEGRATED BRAKE ASSIST
UHN	WHEEL-18 X 8.5, J, ALUMINUM, DESIGN 3
UHX	LANE ACTIVE SAFETY-KEEP ASSIST
UHY	COLL IMMINENT BRK-LOW SPEED, VEH FWD MOVEMENT, BRAKE PREFILL, INTEGRATED BRAKE ASSIST
UIM	INFOTAINMENT DISPLAY-NORMALLY BLACK COLOR (TFT), 10.2", FHD 1920X1080P
UJN	TIRE PRESS INDICATOR-AUTO LEARN
UK3	CONTROL-STEERING WHEEL, ACCESSORY
UKC	SIDE ACTIVE SAFETY-OBSTACLE DETECTION ENHANCED
UKJ	PED DETECTION FRT-BASIC, PEDESTRIANS
UKK	SENSOR INDICATOR-PEDESTRIAN DETECTION - REAR
UKV	SIDE ACTIVE SAFETY-OBSTACLE DETECTION ENHANCED, EXTENDED TRAILER VIEW
UMN	SPEEDOMETER-INST, MILES & KILO, MILES ODOMETER
UQA	SPEAKER SYSTEM-PREMIUM AUDIO, BRANDED AMPLIFIER
UQF	SPEAKER SYSTEM-STANDARD AUDIO
UQP	SPEAKER SYSTEM-PERFORMANCE AUDIO, BRANDED SURROUND AMPLIFIER
USR	RECEPTACLE-USB (DO NOT USE NEXT NEW MAJOR, SEE BFO)
USS	RECEPTACLE-USB CHARGE PORT (DO NOT USE NEXT NEW MAJOR, SEE BFO)
UTJ	THEFT DETERENT-ELECTRICAL, UNAUTHORIZED ENTRY
UTR	ALARM, HORN-CONTENT THEFT DETERENT, SELF POWERED
UTU	SENSOR, VEHICLE-INCLINATION
UTV	SENSOR, VEHICLE-INTERIOR MOVEMENT
UTW	SENSOR, VEHICLE-GLASS BREAKAGE
UV2	VISION-360 VIEW, MONO, HD DIGITAL
UV6	HEAD UP DISPLAY-WINDSHIELD
UVB	VISION-REAR VIEW, MONO, HD DIGITAL
UVZ	SENSOR-COLLISION AVOIDANCE & MITIGATION, VEHICLE REVERSE MOVEMENT
UW9	ENTERTAINMENT PKG-RR SEAT, DUAL DISPLAY, SEAT BACK
V03	COOLING SYSTEM-EXTRA CAPACITY
V54	LUGGAGE CARRIER-ROOF, PAINTED
V55	LUGGAGE CARRIER-ROOF, CHROME
V8D	VEHICLE STATEMENT-VEHICLE LABEL CONTENT - U.S. FMVSS

RPO	Description
VAV	ACCESSORY-FLOOR MATS - ALL WEATHER
VFF	VIDEO FORMAT-REGION 1, NTSC
VGC	PROTECTOR-FILM, PAINT ETCH PREVENTIVE
VHM	PROGNOSTIC SYSTEM-VEHICLE HEALTH MANAGEMENT
VK3	LICENSE PLATE FRONT-FRT MOUNTING PKG
VKU	ACCESSORY-MIRROR CAPS - CHROME
VPH	VEHICLE PREPARATION-OVERSEAS DELIVERY
VQK	ACCESSORY-SPLASH GUARDS - CUSTOM MOLDED
VQQ	ACCESSORY-CROSS RAILS - ROOF RACK - INTEGRATED - BLACK
VQZ	ACCESSORY-EXHAUST TIP - DESIGN 1
VR6	HOOK-TIE-DN SHPG
VRS	ACCESSORY-CARGO SECURITY SHADE
VSX	LABEL-TOWING
VSY	ACCESSORY-ENGINE BLOCK HEATER
VT7	OWNERS MANUAL-ENGLISH LANGUAGE
VTA	ACCESSORY-EXHAUST TIP - DESIGN 2
VTB	ACCESSORY-PROTECTOR - REAR BUMPER
VTI	SHUTTERS-FRONT GRILLE, ACTIVE, UPR
VV4	COMMUNICATION EQUIP-MOBILE INTERNET CONNECTIVITY
VW9	ACCESSORY-CENTER CAP - WHEEL - DESIGN 3
VWD	ACCESSORY-CENTER CAP - WHEEL - DESIGN 4
W2D	ACCESSORY-CARGO NET
WBC	ACCESSORY-EXHAUST UPGRADE
WBL	SALES PACKAGE-SPORT
WMI	SHUTTERS-FRONT GRILLE, ACTIVE, UPR AND LWR
WMW	VIN MODEL YEAR-2022
WPD	SALES PACKAGE-SAFETY
WPL	SALES PACKAGE-LUXURY
WTX	FASCIA-FRT, STANDARD
WUA	FASCIA-FRT, CUSTOM
XCG	TIRE ALL-275/50R22 SL 111H BW AL3
XCI	TIRE ALL-275/60R20 SL 115T BW AL2 VAR 1
XCQ	TIRE SPARE-265/70R17 SL 115S BW SPR VAR1
XD6	ACCESSORY TIRE-TIRE ALL-275/50R22 SL 111H BW AL3
XL8	FREQUENCIES RATING-433 MHZ
YF5	CERTIFICATION-EMISSION, CALIFORNIA

RPO	Description
Z6E	SALES PACKAGE-OFF ROAD TECHNOLOGY
Z82	TRAILER PROVISIONS-SPECIAL EQUIPMENT, H.D.
Z88	MARKET BRAND-GMC
Z95	CHASSIS PACKAGE-MAGNERIDE
ZL6	SALES PACKAGE-TRAILER INTEGRATION
ZM1	SALES PACKAGE-ENHANCED TRAILER VIEW
ZW7	CHASSIS PACKAGE-PREMIUM SMOOTH RIDE

Section 2

Body Systems

Fixed and Moveable Windows 2-3
Schematic and Routing Diagrams 2-3
Moveable Window Schematics 2-4
Defogger Schematics 2-7
Description and Operation 2-8
Full-Cut Method Description 2-8
Power Windows Description and Operation 2-8
Rear Window Defogger Description and Operation 2-9
Stationary Window Description 2-9
Urethane Adhesive Description 2-9

Horns and Pedestrian Alerts 2-10
Schematic and Routing Diagrams 2-10
Horn Schematics 2-11
Description and Operation 2-12
Horns System Description and Operation 2-12

Lighting 2-13
Schematic and Routing Diagrams 2-13
Headlights/Daytime Running Lights (DRL) Schematics 2-14
Fog Lights Schematics 2-17
Exterior Lights Schematics 2-18
Interior Lights Schematics 2-31
Interior Lights Dimming Schematics 2-37
Description and Operation 2-42
Exterior Lighting Systems Description and Operation 2-42
Interior Lighting Systems Description and Operation 2-45

Vehicle Access 2-47
Schematic and Routing Diagrams 2-47
Door Lock/Indicator Schematics 2-48
Release Systems Schematics 2-54
Hood Latch Schematics 2-57
Liftgate Schematics 2-58
Description and Operation 2-61
Door Ajar Indicator Description and Operation 2-61
Fuel Fill Door Description and Operation 2-61
Hood Ajar Indicator Description and Operation 2-61
Liftgate Ajar Indicator Description and Operation 2-61
Liftgate Description and Operation 2-62
Power Door Locks Description and Operation 2-63
Rear Hatch/Gate Description and Operation ... 2-64

BLANK

Fixed and Moveable Windows

Schematic and Routing Diagrams

Moveable Window Schematics (Driver)

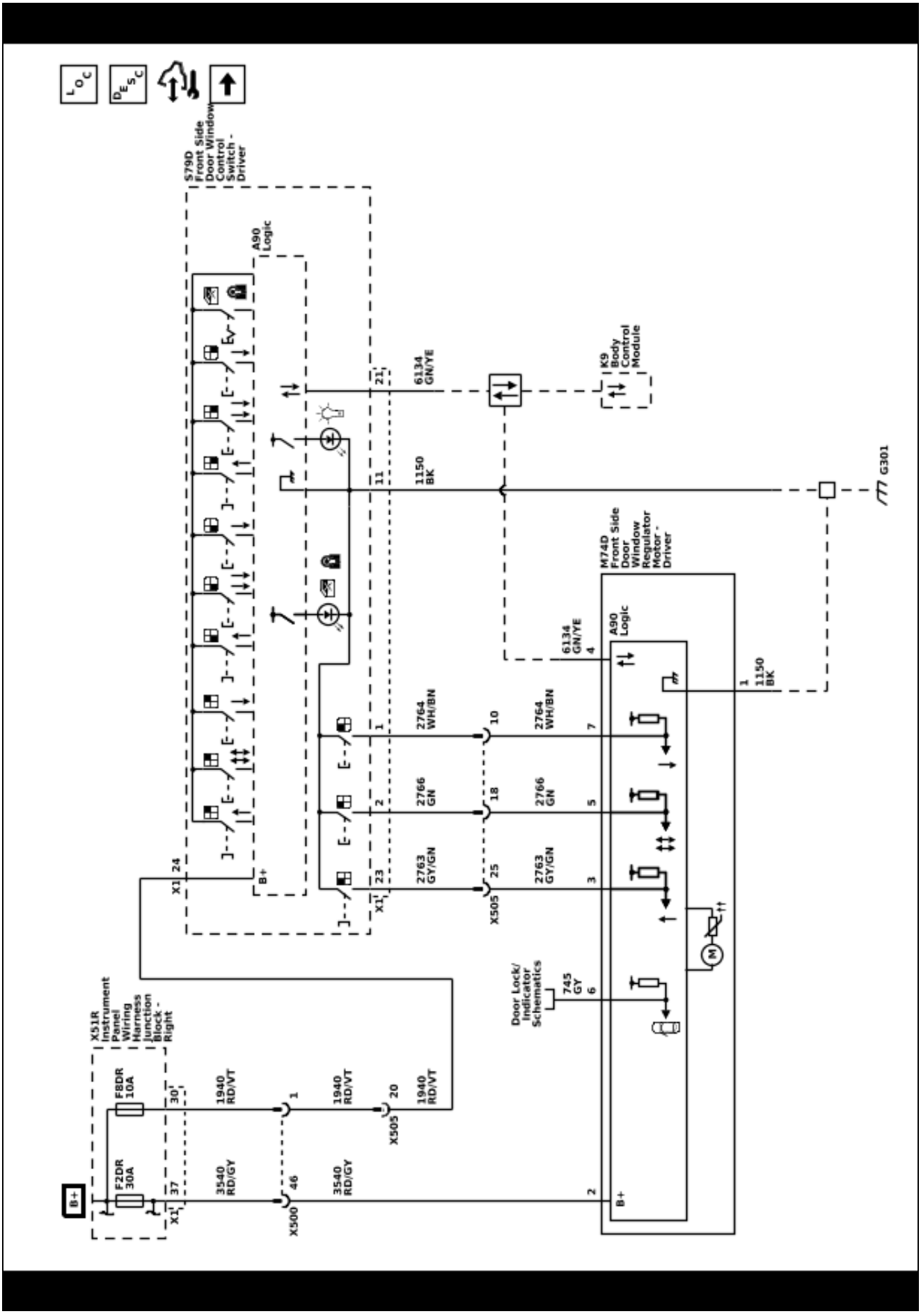

Moveable Window Schematics (Passenger)

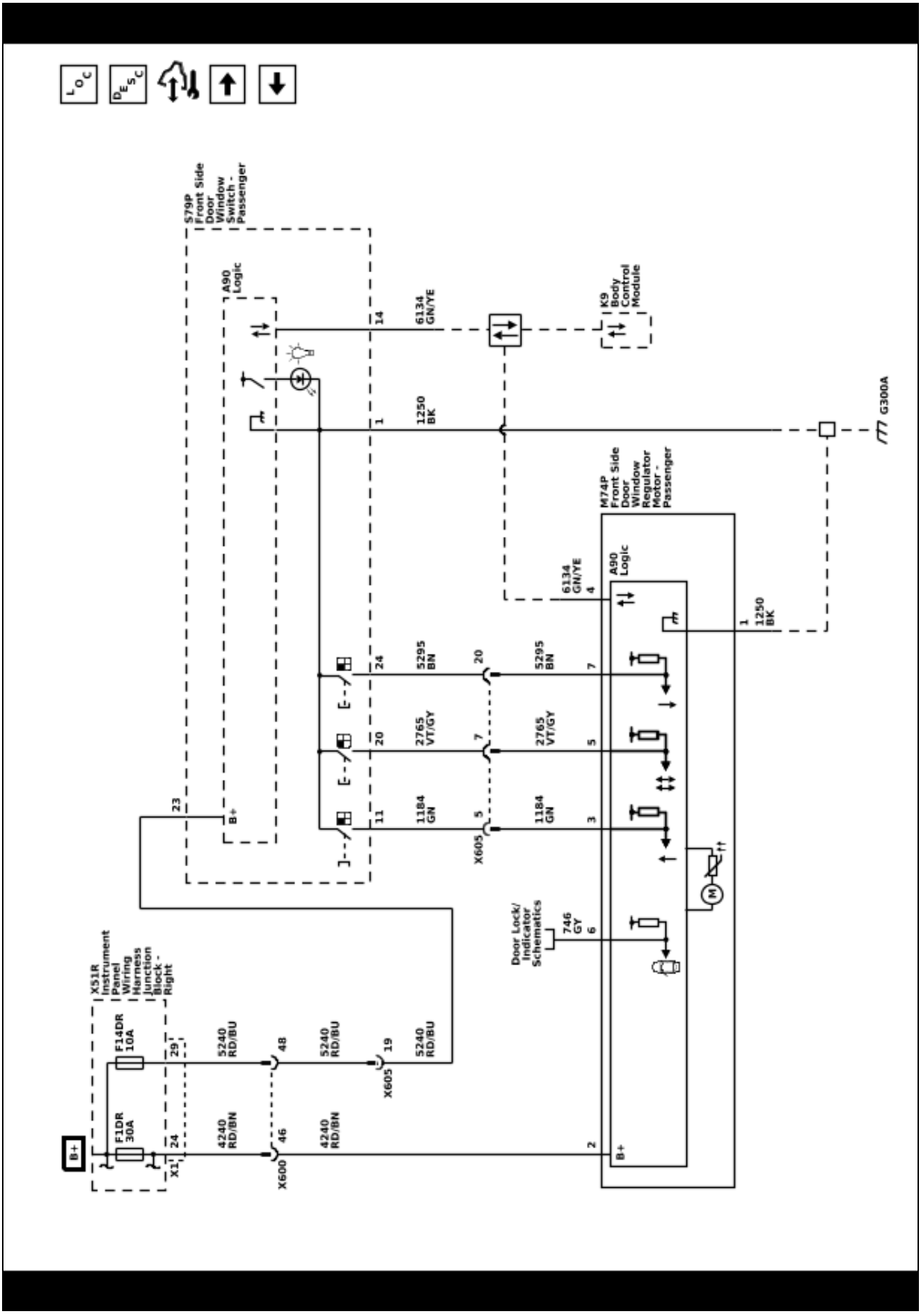

5861882

Moveable Window Schematics (Rear Windows)

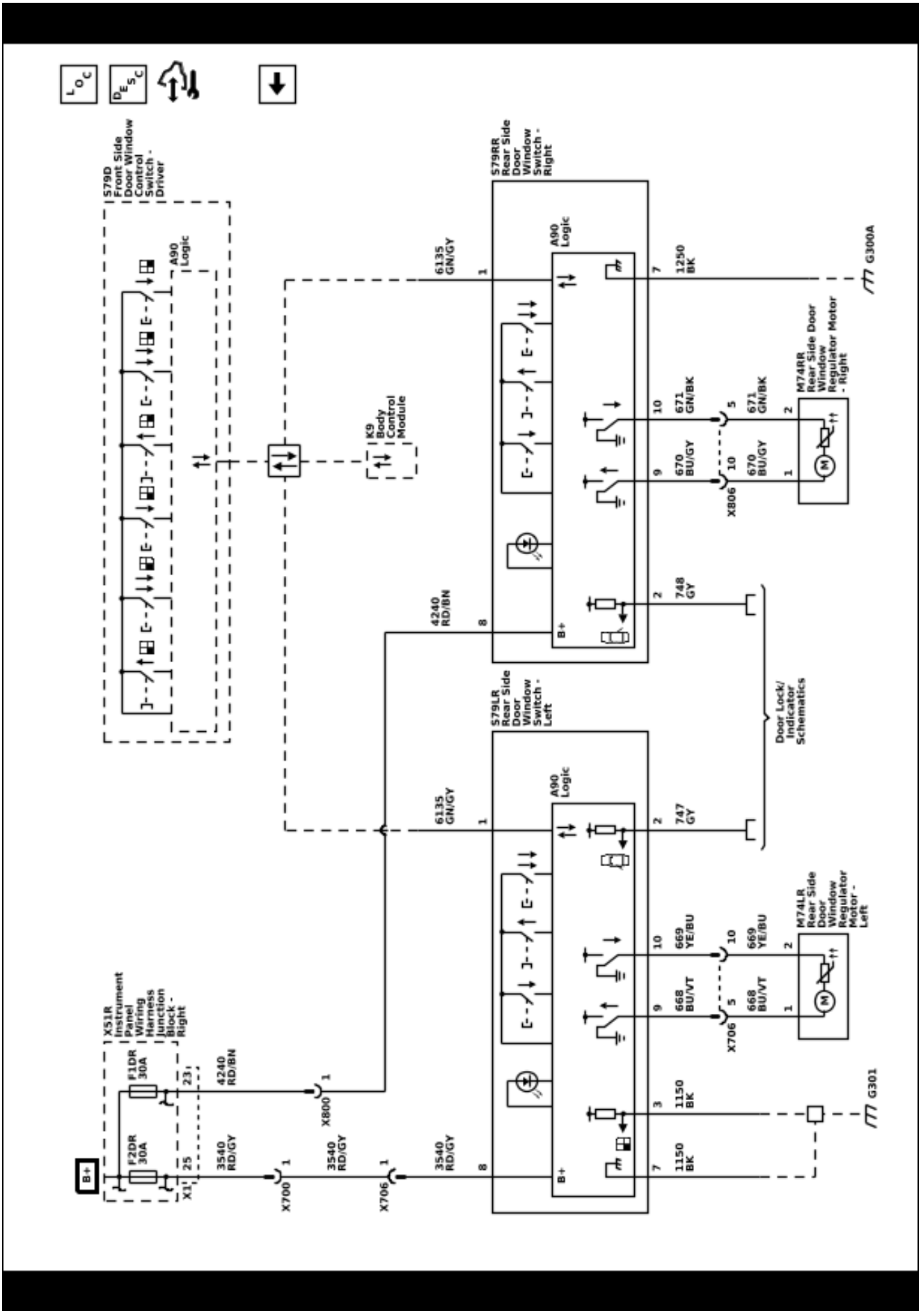

Defogger Schematics (Defogger)

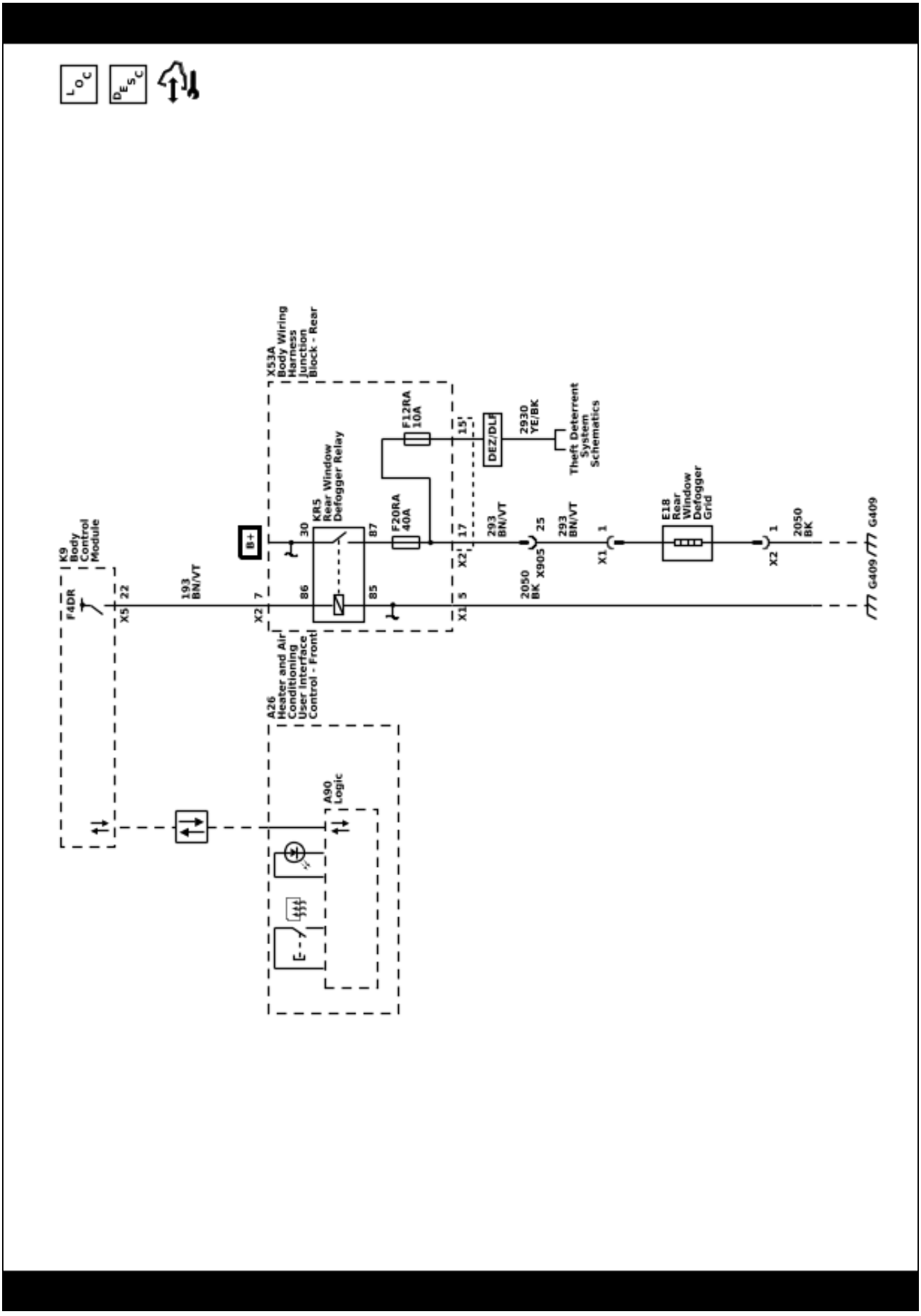

Description and Operation

Full-Cut Method Description

Note:

- If corrosion of the pinch-weld flange is present, or if sheet metal repairs or replacements are required, refinish the pinch-weld flange in order to present a clean, primer-only surface.
- If paint repairs are required, mask the flange bonding area, prior to applying the color coat, in order to provide a clean, primer-only surface.
- Appropriate materials for these primer applications are typically 2 component catalyzed products. Use materials such as BASF DE15®, DuPont 2610®, Sherwin-Williams PSE 4600 and NP70® and Martin-Semour 5120 ,5130® , PPG DP90LF SPIES/HECKER 3688/8590 – 3688/5150 – 4070/5090 STANDOX 11158/13320 – 14653/14980 products are approved for this application. Follow the manufacturer's directions for the mix, the application, and the drying times.
- After repairing the opening as indicated, use adhesive systems which meet GM Specification GM 3651G.

Use only the full cut method, also known in the field as full strip method, when installing windows.

This method includes the following:

- The replacement of a majority of the adhesive bead. Remove all but approximately 2 mm (3/64 in) of the existing bead of adhesive from the pinch-weld flange.
- Apply pinch-weld primer to any exposed painted areas on the pinch-weld flange.

No mounds or loose pieces of adhesive should remain on the pinch-weld flange. Do not remove all traces of adhesive.

Power Windows Description and Operation

Power Windows System Components

The power window system consists of the following components:

- Driver front side door window control switch
- Passenger front side door window control switch
- Left rear side door window switch
- Right rear side door window switch
- Window motors in each of the doors
- Body control module (BCM)

Driver and Passenger Express Up and Express Down Power Window Motors

The driver and passenger doors contains a window motor is smart motor that will detect excessive resistance while performing the express up function and automatically reverse direction to prevent injury to any occupants that may become trapped between the closing window and the door frame. The automatic reverse safety feature can be overridden by pulling and holding the window switch.

The logic circuit within the window motor monitors the up, down and express signal circuits which are normally equal to B+ voltage. When a switch is used on the front side door window control switch, the contacts close causing a voltage drop within the appropriate signal circuit. The window motor will detect the voltage drop and will command the window to move in the direction requested.

The driver front side door window control switch communicates to the BCM by a serial data circuit. When the driver wishes to control the passenger window, the driver will use the appropriate switch on the driver front side door window control switch. When this switch is used, a serial data message is sent to the BCM requesting the passenger window motor command, the BCM will then send a serial data message to the passenger window motor which will then move in the direction requested.

Left Rear, Right Rear Express Down Window Motors

For the right rear and left rear doors, when their window switch is pressed in the down position, battery positive voltage is applied to their respective window motor control circuit and ground to the other window motor control circuit causing that window to open. When the individual window switch is pulled in the up position, voltage and ground is applied to the window motor in the opposite direction causing that window to close. The return path to ground is supplied through the inactive control circuit being normally grounded through the window switch.

Each rear side door window switch communicates to the BCM by a serial data circuit. When the driver wishes to control the left rear or right rear window, the driver will use the appropriate switch on the driver front side door window control switch. When this switch is used, a serial data message is sent to the BCM requesting a window motor command, the BCM will then send a serial data message to the appropriate rear side door window switch which will then command that window to move in the direction requested.

Lockout Switch Feature

The driver front side door window control switch contains a window lockout switch, when the driver presses the window lockout switch, a serial data message is sent to the BCM which will send a disable command to the rear side door window switches, deactivating them. The rear windows will still function normally from the switches on the driver front side door window control switch.

Rear Window Defogger Description and Operation

Rear Window Defogger System Components

The rear window defogger system consists of the following components:

- Body Control Module
- Front Heater and Air Conditioning User Interface Control
- Rear Body Wiring Harness Junction Block (Contains PCB Rear Defogger Relay
- Rear Defogger Grid
- 40A Fuse

Rear Window Defogger Operation

The rear defog control system utilizes a single zone backlight design, driven with a single relay configuration. A switch for the customer to control the system is provided within the front heater and air conditioning user interface control. Also included in the front heater and air conditioning user interface control is an indicator to inform the customer with the current state of the system. The system is only operational when engine is running or during remote start.

Pressing the heated rear window switch causes the front heater and air conditioning user interface control to send a serial data message to the body control module requesting rear window defog operation. The body control module upon receipt of the serial data message will provide voltage to the coil side of the rear defogger relay, this will energize the relay causing the relay switch contacts to close allowing B+ voltage to flow through the rear defogger grid control circuit to the rear defogger grid.

When the rear heated rear window switch is pressed and the engine is running, the rear window defogger grid will activate and will turn off automatically depending upon the vehicle speed (refer to owner’s manual for rear window defogger operation cycles)

Stationary Window Description

Most stationary windows, specifically windshields, are retained to the body with urethane adhesive which adheres the window to the body, increasing structural integrity. The reinstallation of the windows with urethane adhesive requires complete replacement of the urethane adhesive bead, and is known as the full cut method.

Urethane Adhesive Description

For replacement of any adhesive-installed window, use the full cut method only.

Use an adhesive that is approved by GM, Specification GMW-15672.

Use these materials based on specific manufacturer. Do NOT intermix primers or adhesives from one manufacturer to another.

Always follow the system manufacturers instructions for application, handling, and curing.

Horns and Pedestrian Alerts

Schematic and Routing Diagrams

Horn Schematics (Horn)

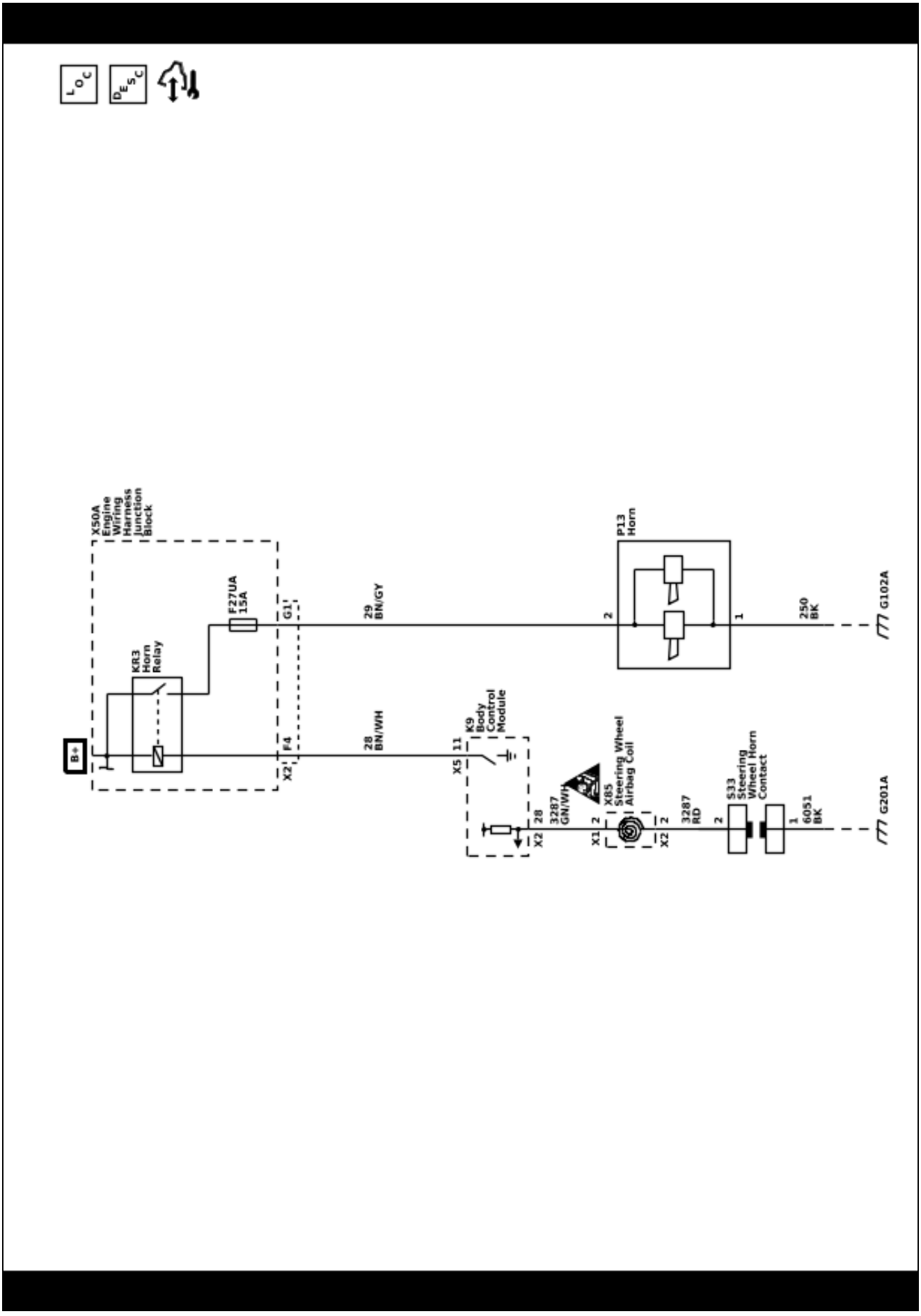

Description and Operation

Horns System Description and Operation

System Description

The horn system consists of the following components:

- HORN fuse
- Engine wiring harness junction block (contains horn PCB relay
- Steering wheel horn contact
- Horn
- Body control module (BCM)

System Operation

The vehicle horn system is activated under the following conditions:

- When the horn switch is depressed
- The BCM commands the horns ON under any of the following conditions:
  - When the content theft deterrent system detects a vehicle intrusion—For further information refer to Theft Systems Description and Operation.
  - When the panic button is depressed on the remote control door lock transmitter—For further information refer to *Keyless Entry System Description and Operation on page 7-17*.
  - When the keyless entry system is used to lock the vehicle, a horn chirp may sound to notify the driver that the vehicle has been locked. The notification feature may be enabled or disabled through personalization. For further information refer to *Keyless Entry System Description and Operation on page 7-17*.
  - When the OnStar® system is used to sound the horns if equipped—For further information, refer to OnStar Description and Operation.

Circuit Operation

Battery positive voltage is applied at all times to the horn relay coil and the horn relay switch. Pressing either of the horn switches applies ground to the horn relay control circuit. The BCM may also apply ground to the horn relay control circuit as described above. When the horn relay control circuit is grounded, the horn relay is energized and battery positive voltage is applied to the horns through the horn control circuit. The horns sound as long as ground is applied to the horn relay control circuit.

Lighting

Schematic and Routing Diagrams

Headlights/Daytime Running Lights (DRL) Schematics (Controls and Indicators)

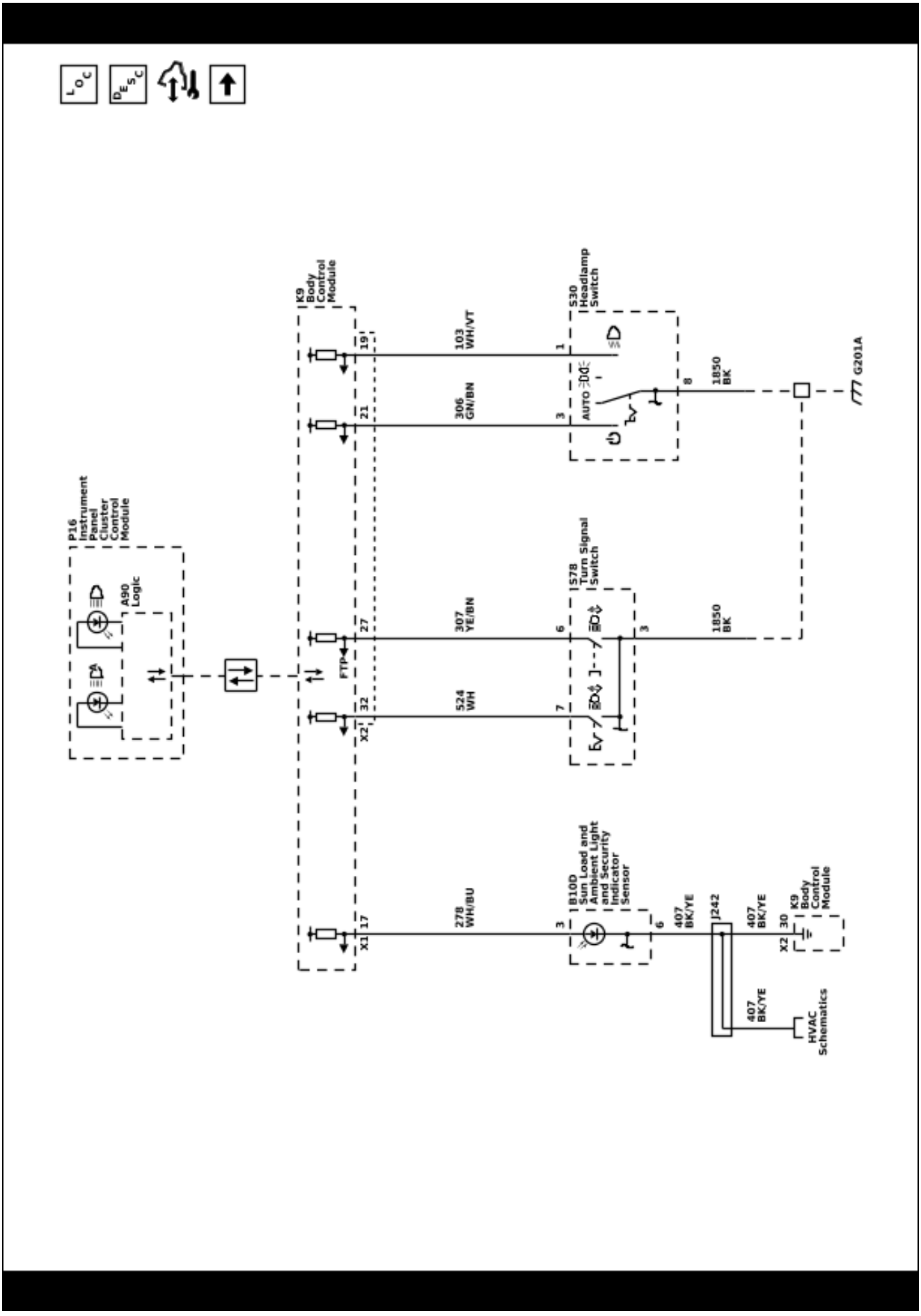

Headlights/Daytime Running Lights (DRL) Schematics (Headlamps and Daytime Running Lamps - Left)

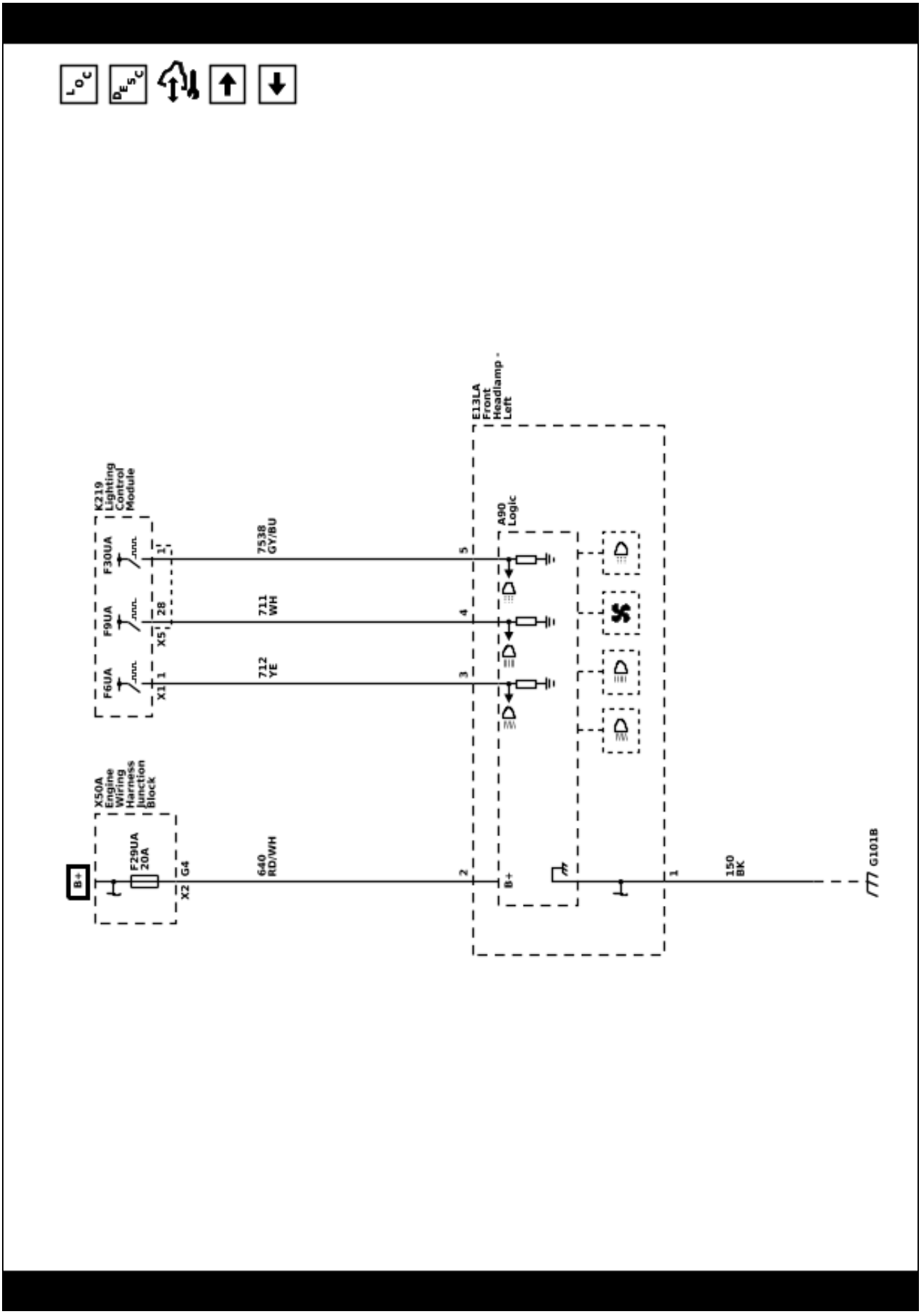

Headlights/Daytime Running Lights (DRL) Schematics (Headlamps and Daytime Running Lamps - Right)

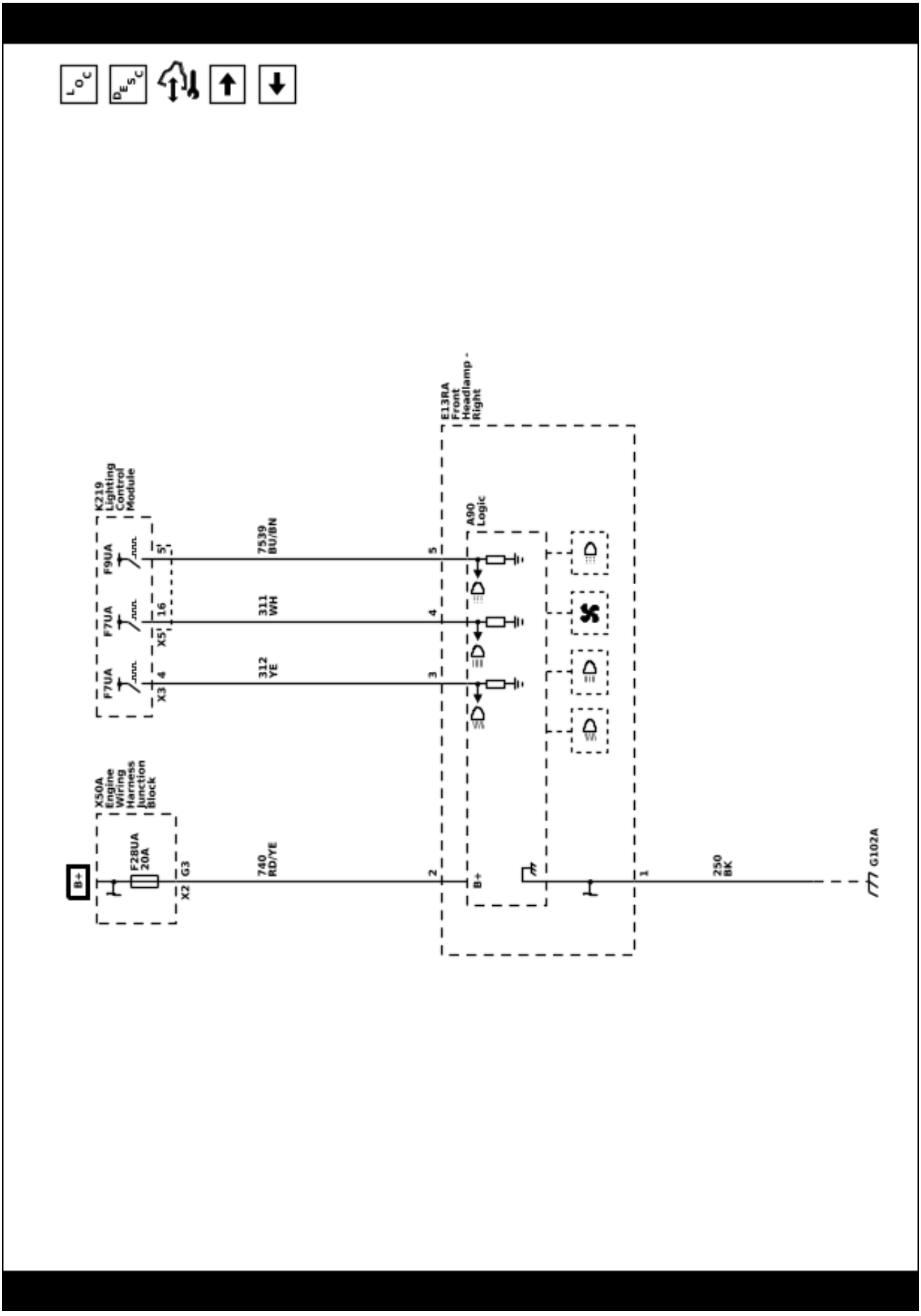

Fog Lights Schematics (Fog Lamps (T40))

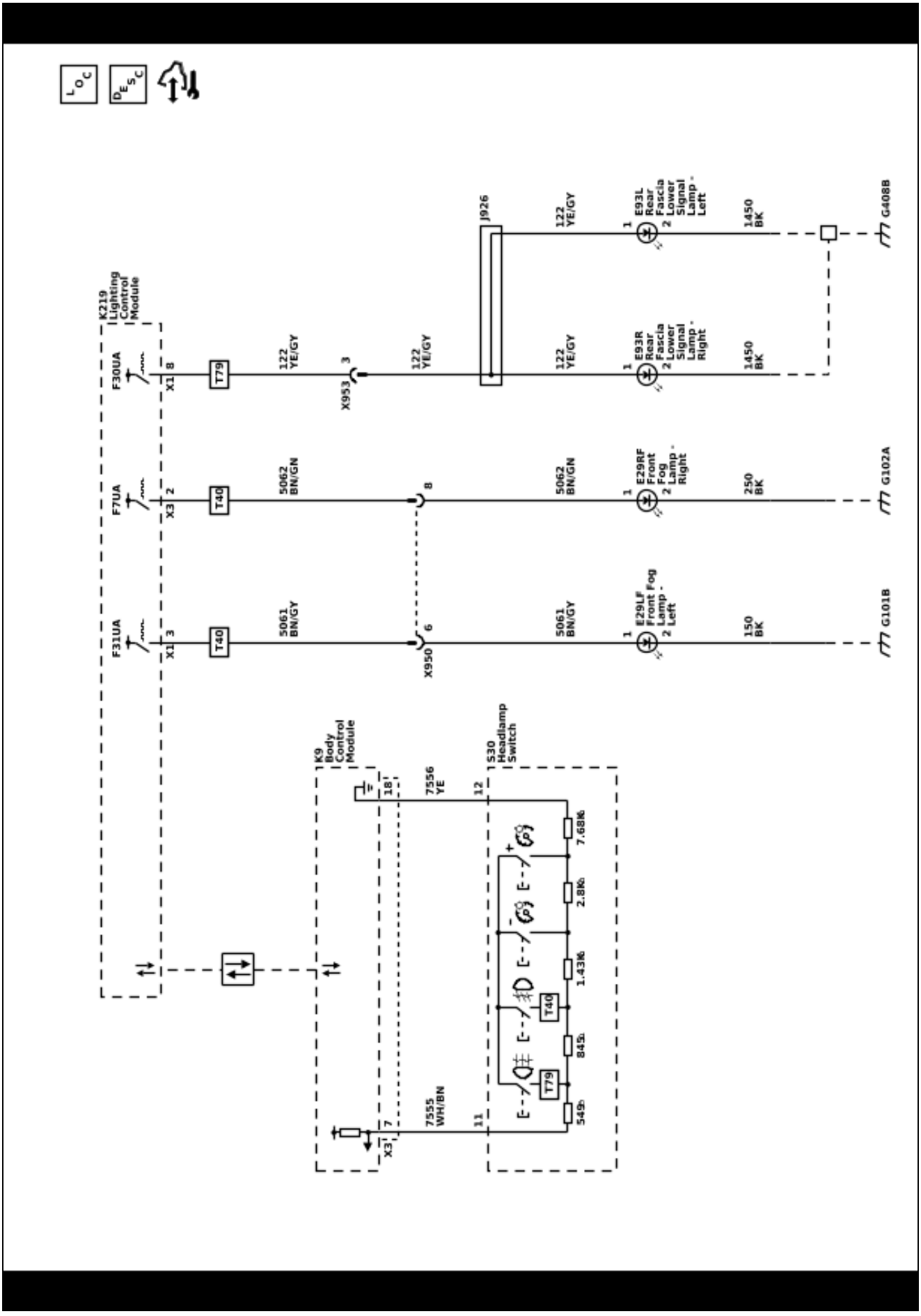

Exterior Lights Schematics (Lighting Control Module Power, Ground, and Serial Data)

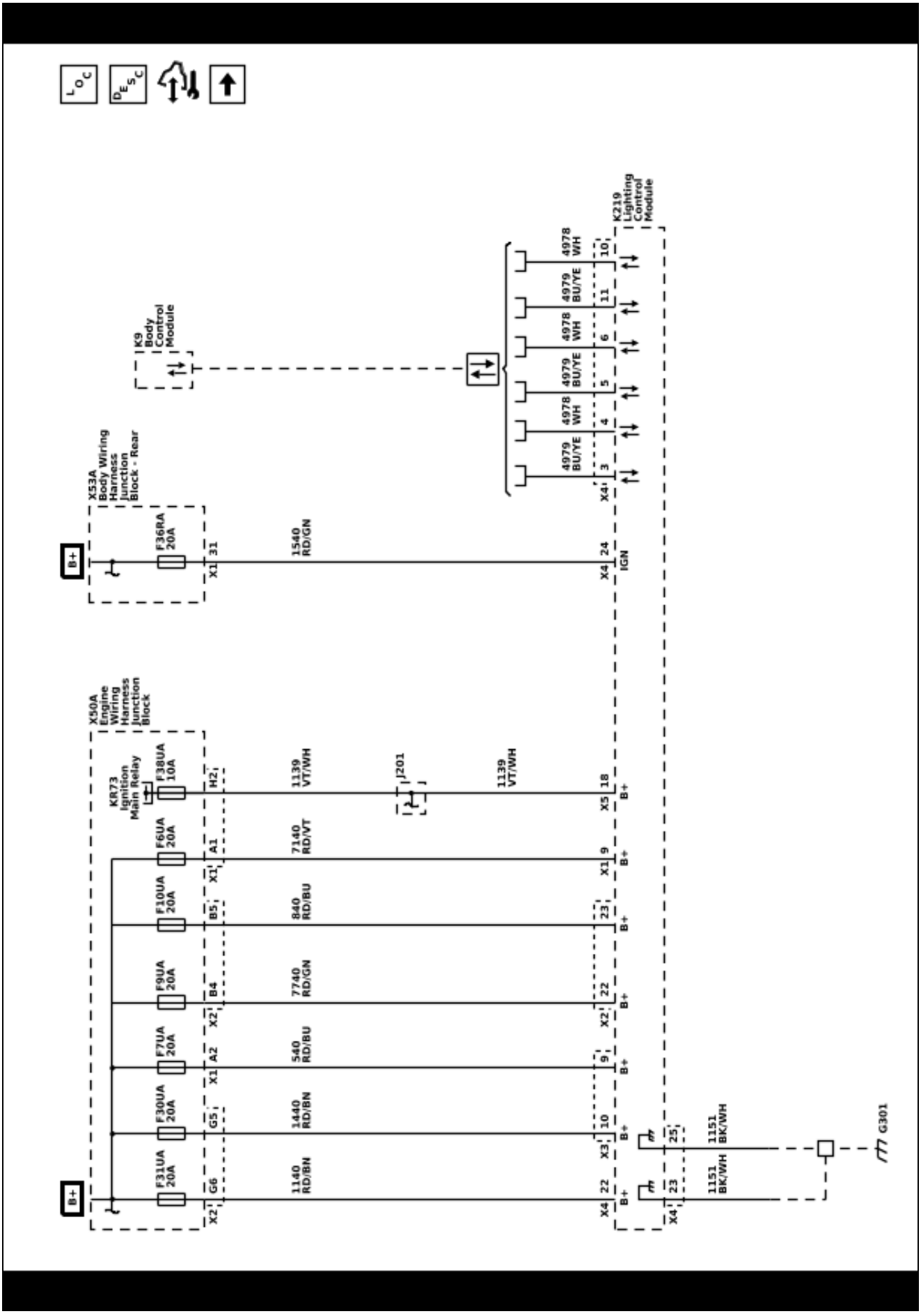

Exterior Lights Schematics (Lighting Control Module Subsystem References)

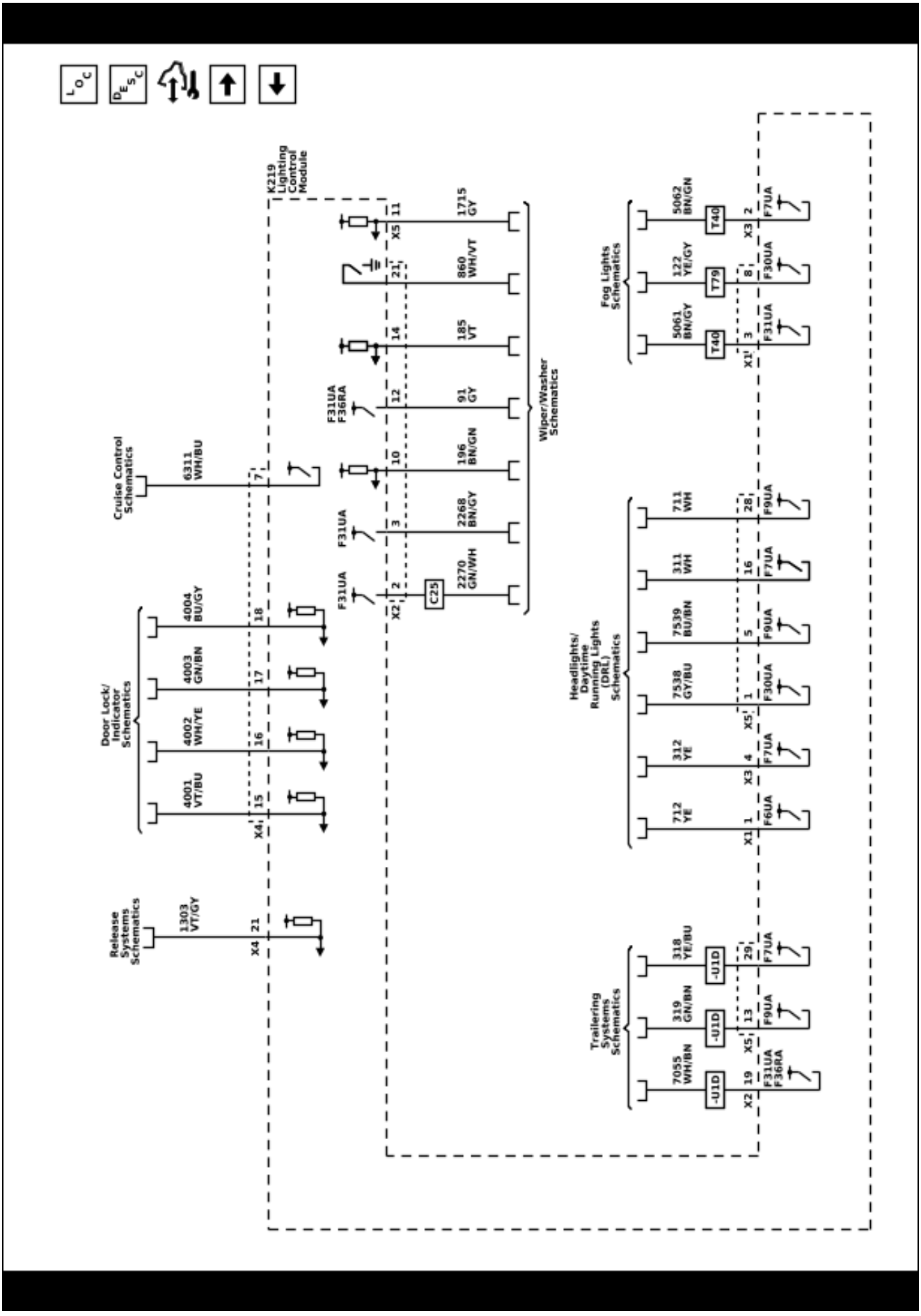

5861891

Exterior Lights Schematics (Controls and Indicators)

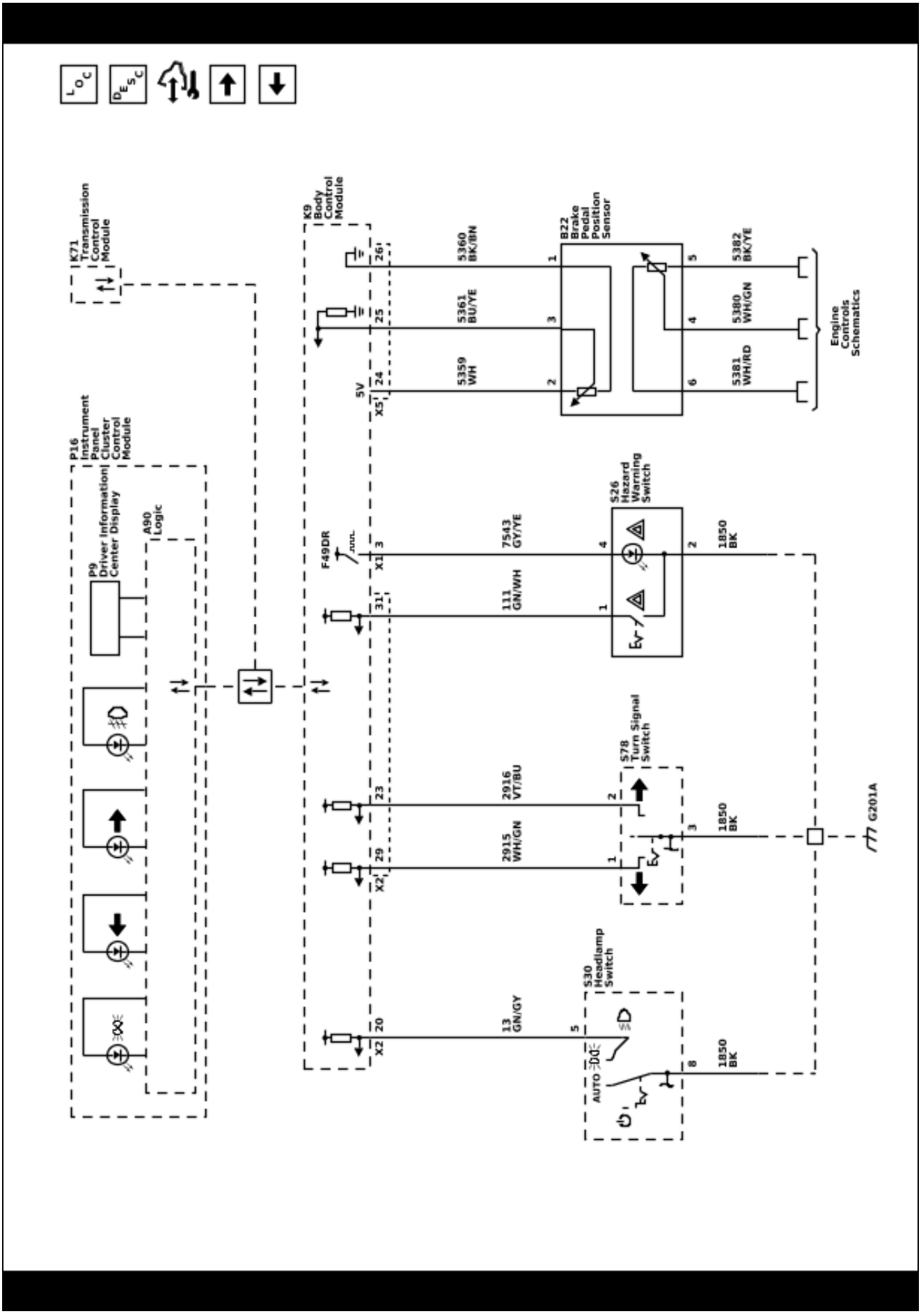

Exterior Lights Schematics (Turn Signals - Front)

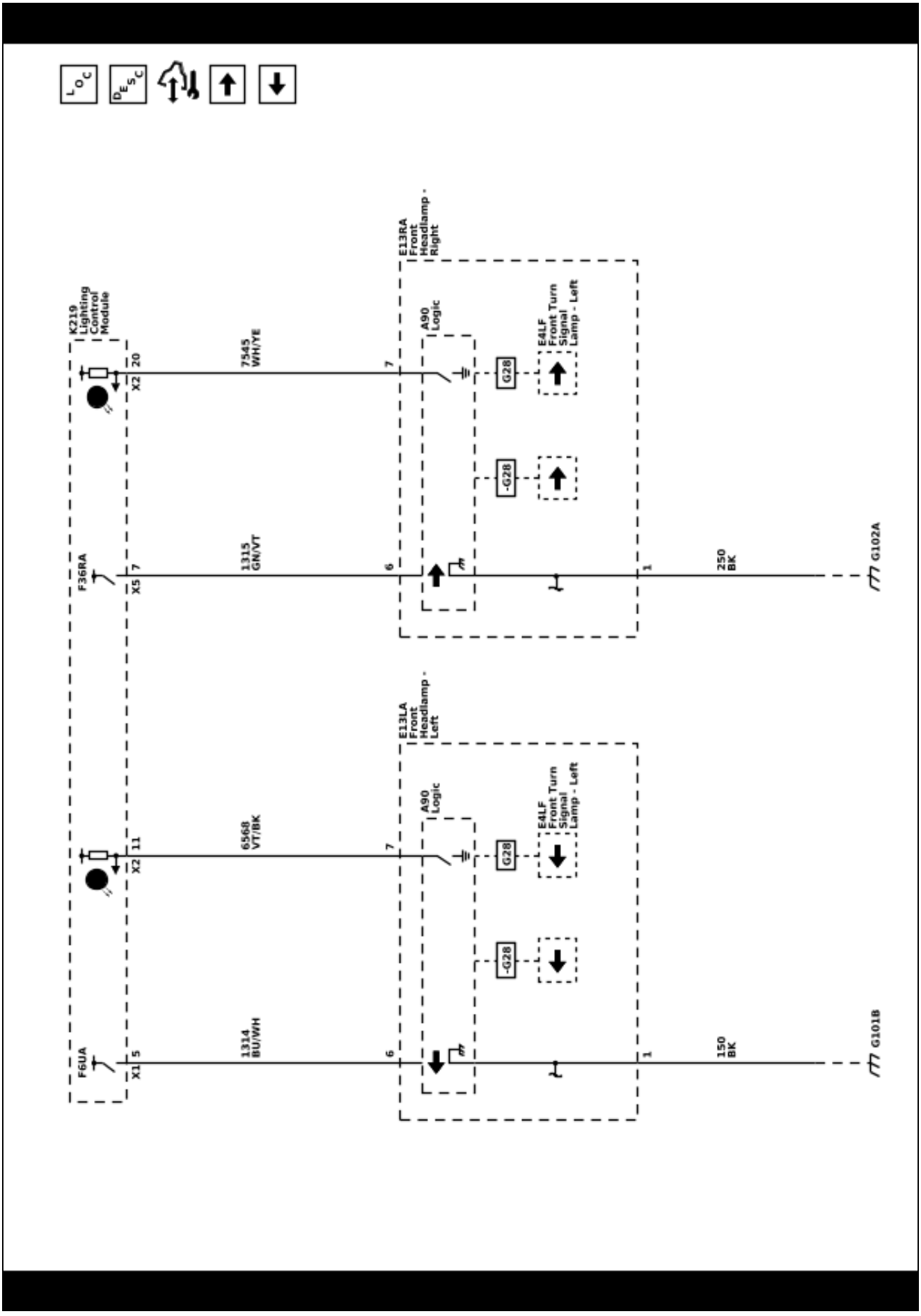

Exterior Lights Schematics (Side Markers and Park Lamps - Left Front)

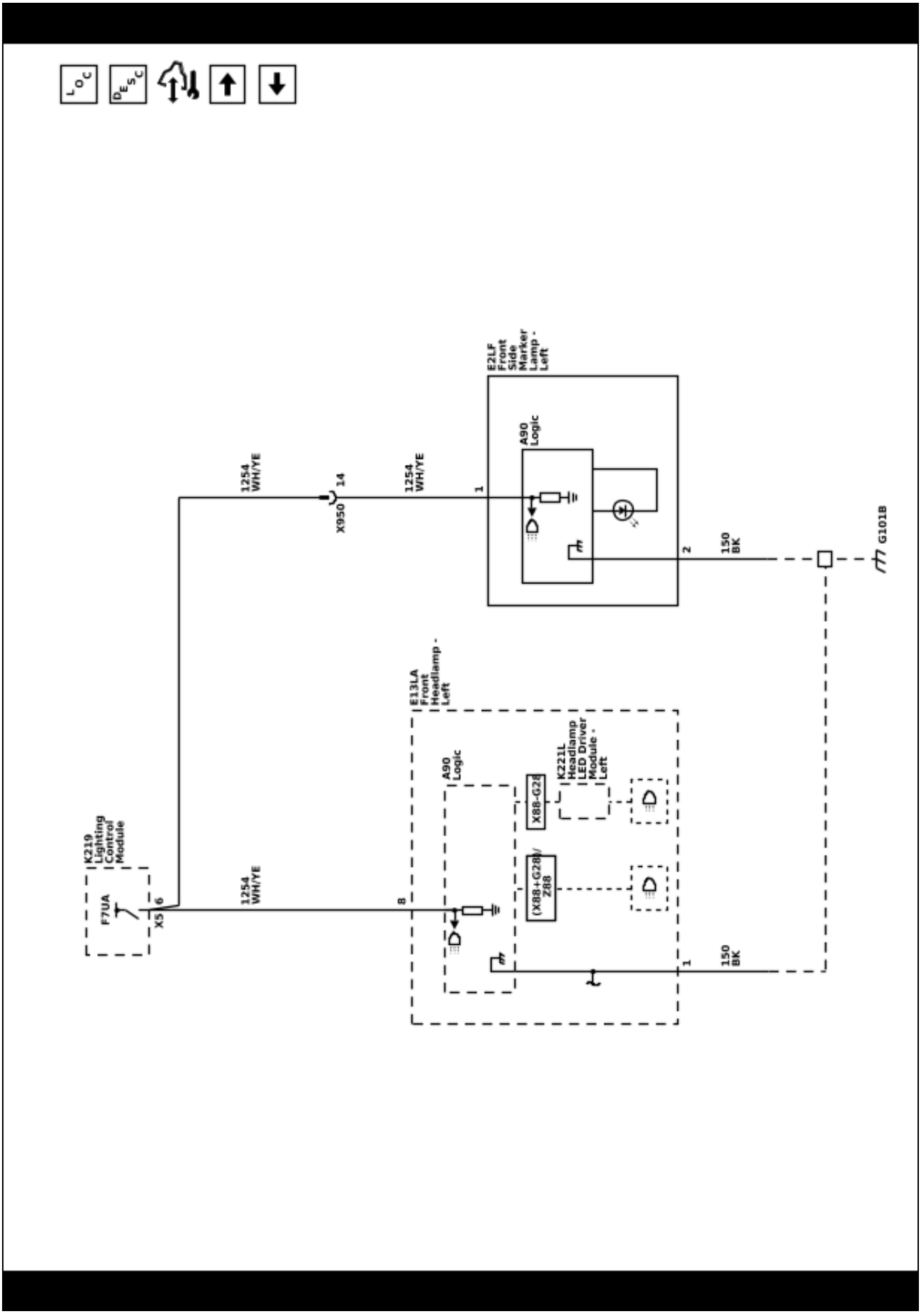

Exterior Lights Schematics (Side Markers and Park Lamps - Right Front)

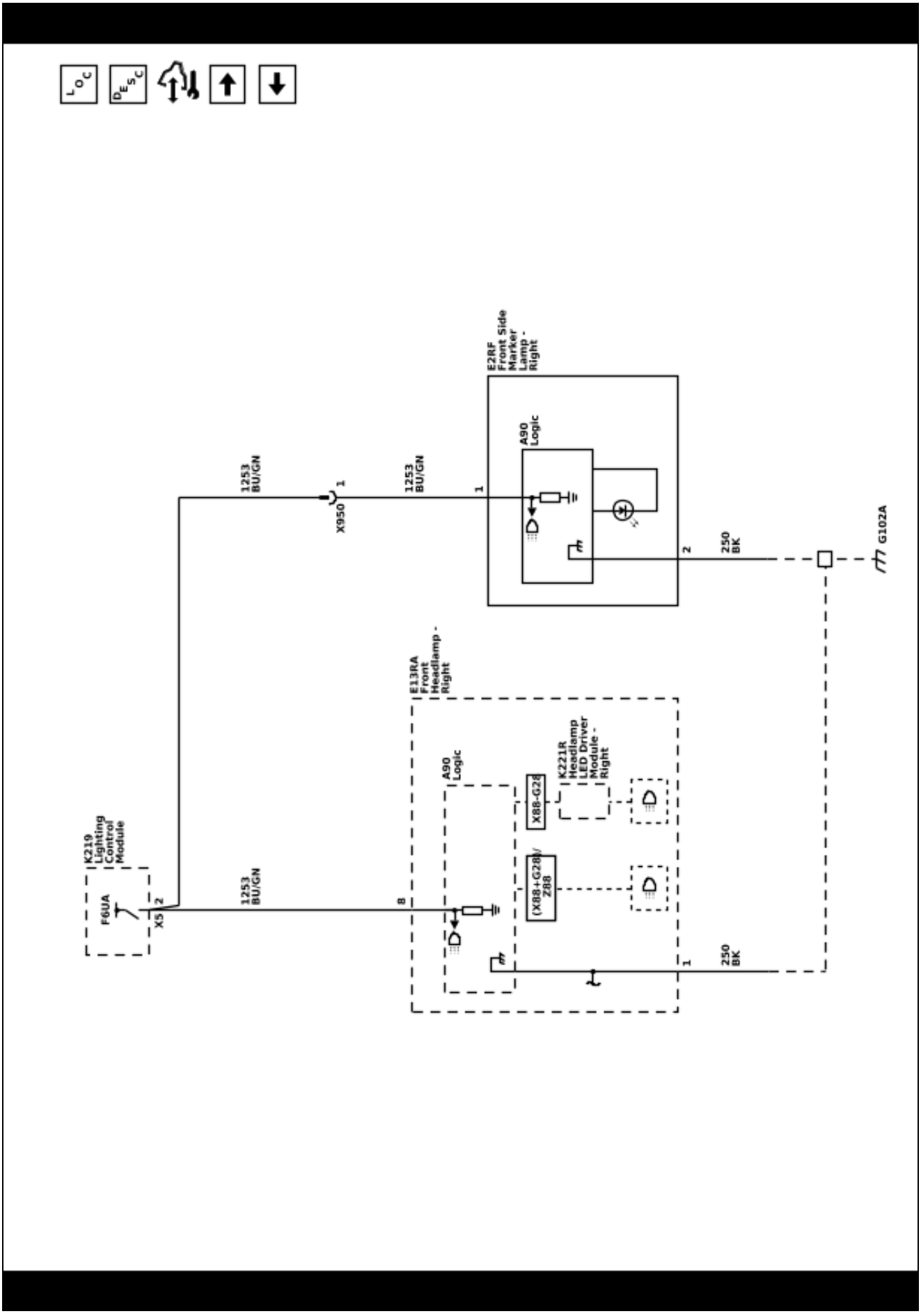

Exterior Lights Schematics (Outside Rearview Mirror Lamps (DXR))

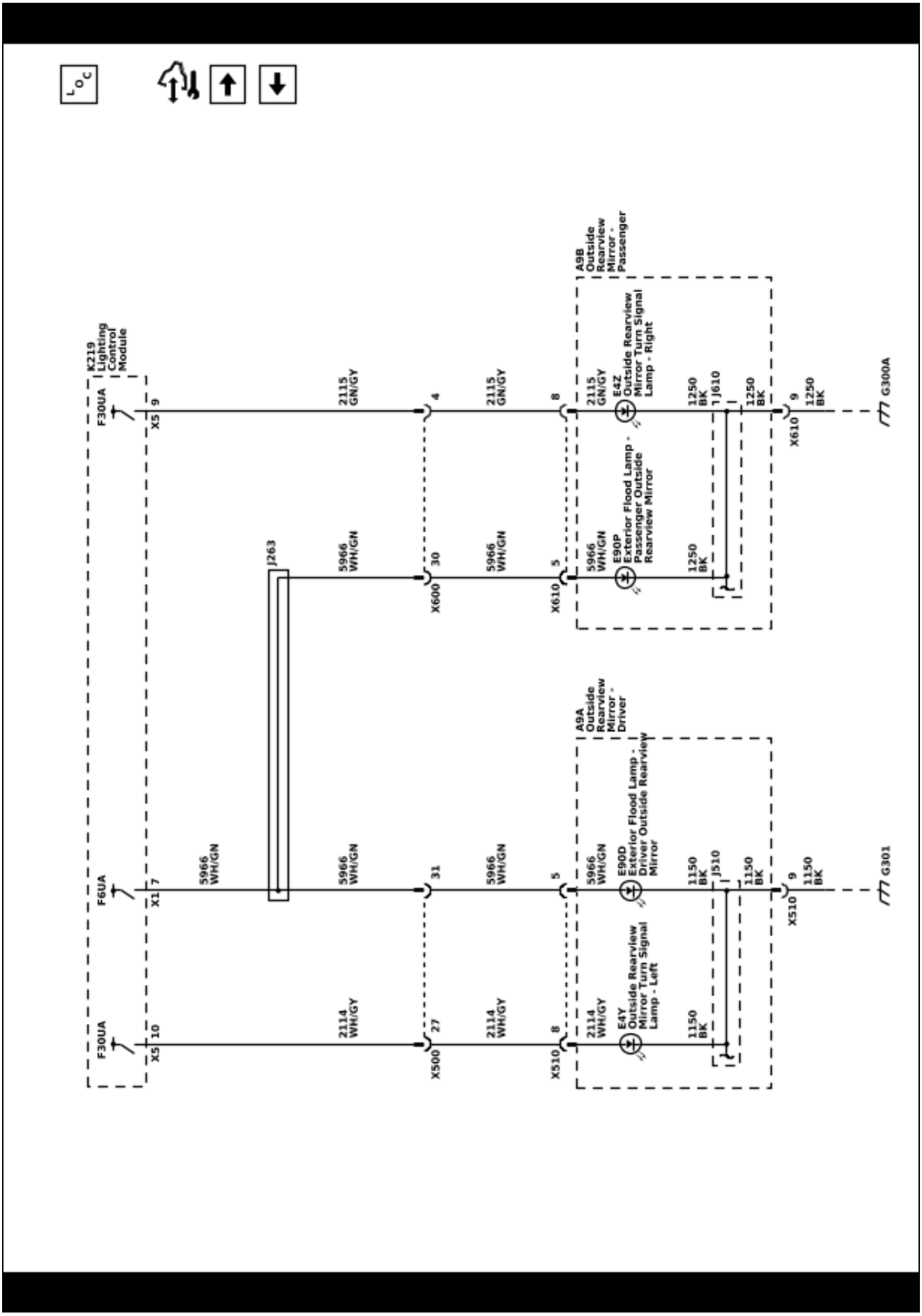

Exterior Lights Schematics (High Mount Stop Lamp)

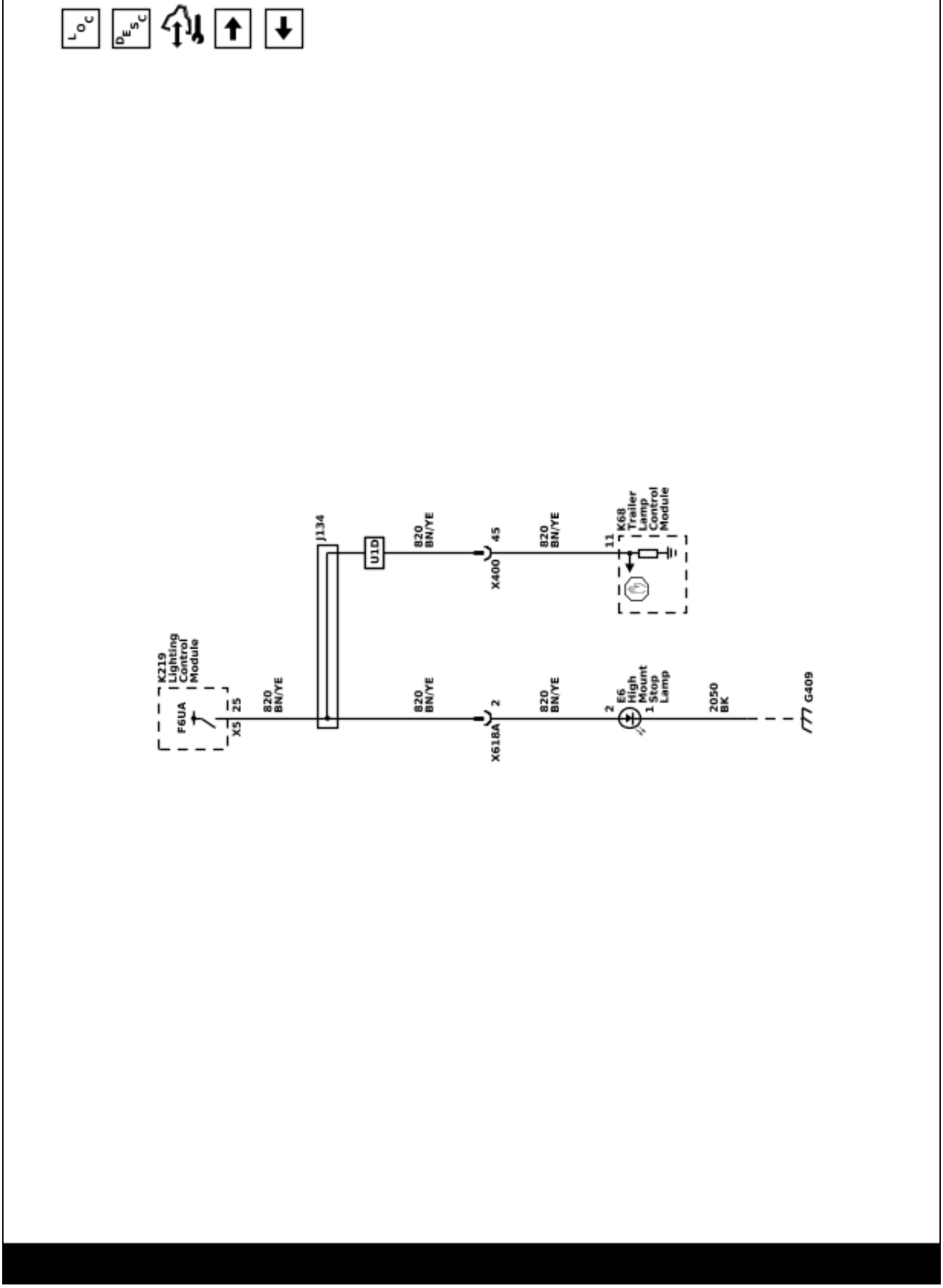

Exterior Lights Schematics (Stop and Turn Signals - Rear)

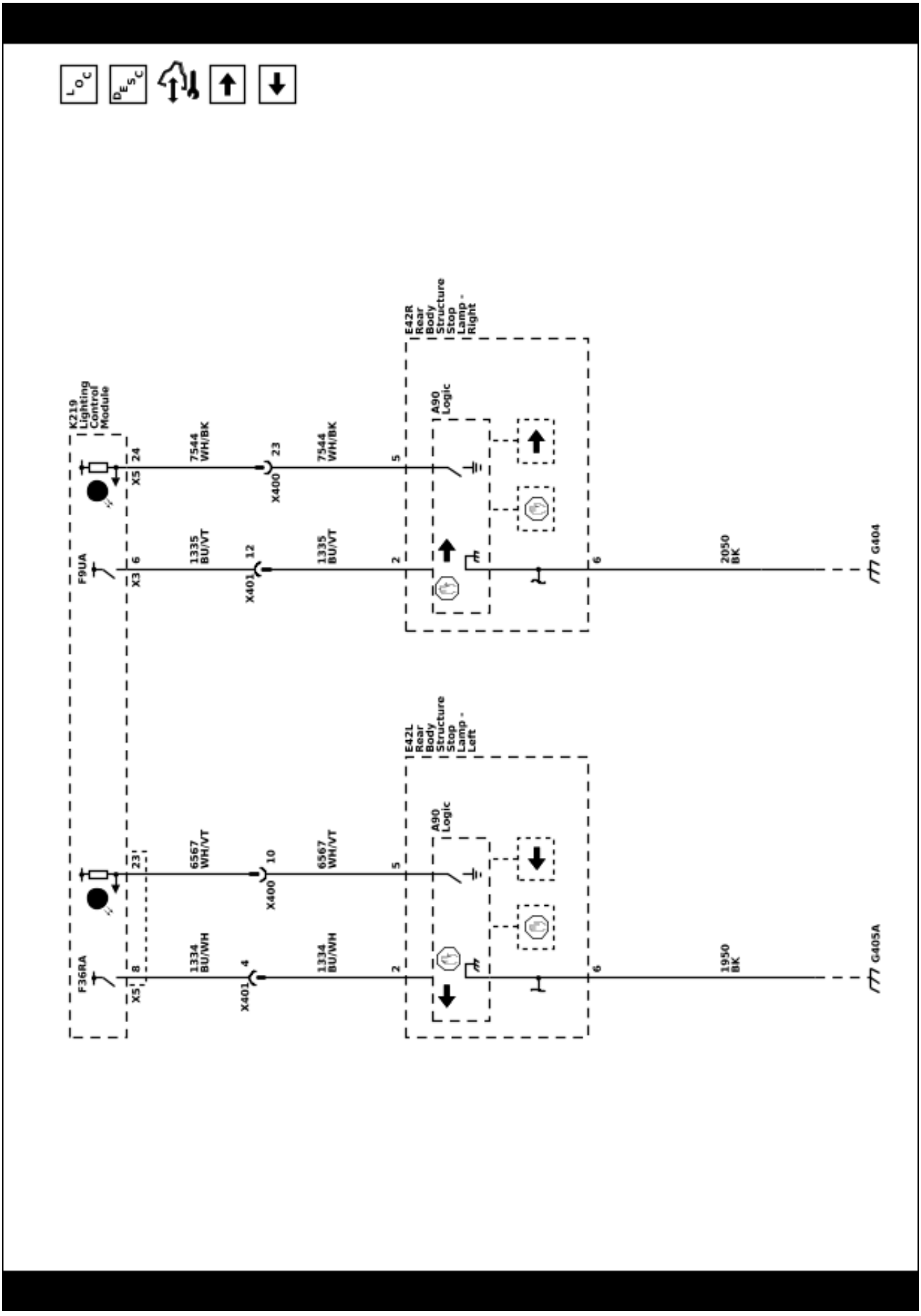

Exterior Lights Schematics (Side Markers and Tail Lamps - Left Rear)

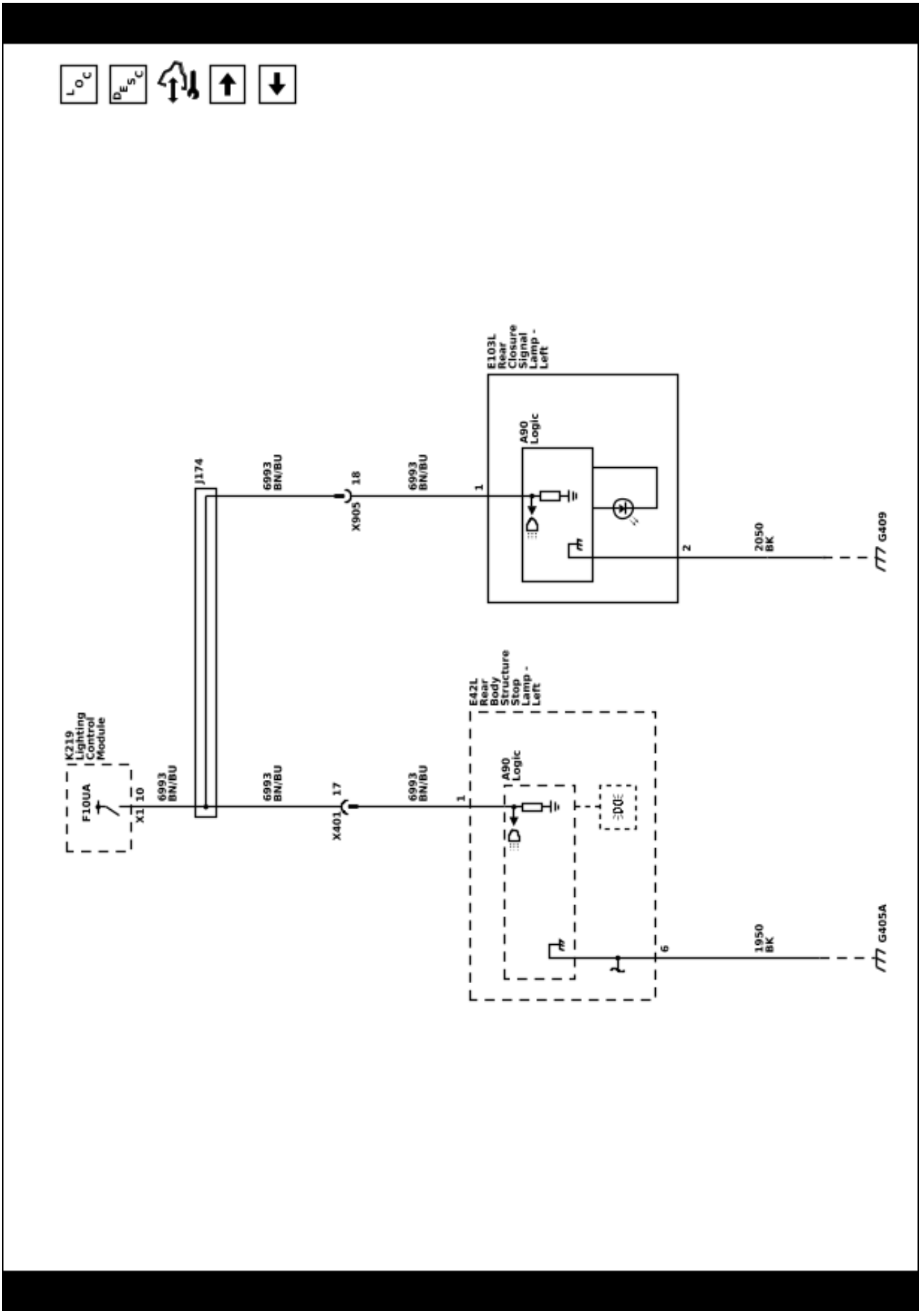

Exterior Lights Schematics (Side Markers and Tail Lamps - Right Rear)

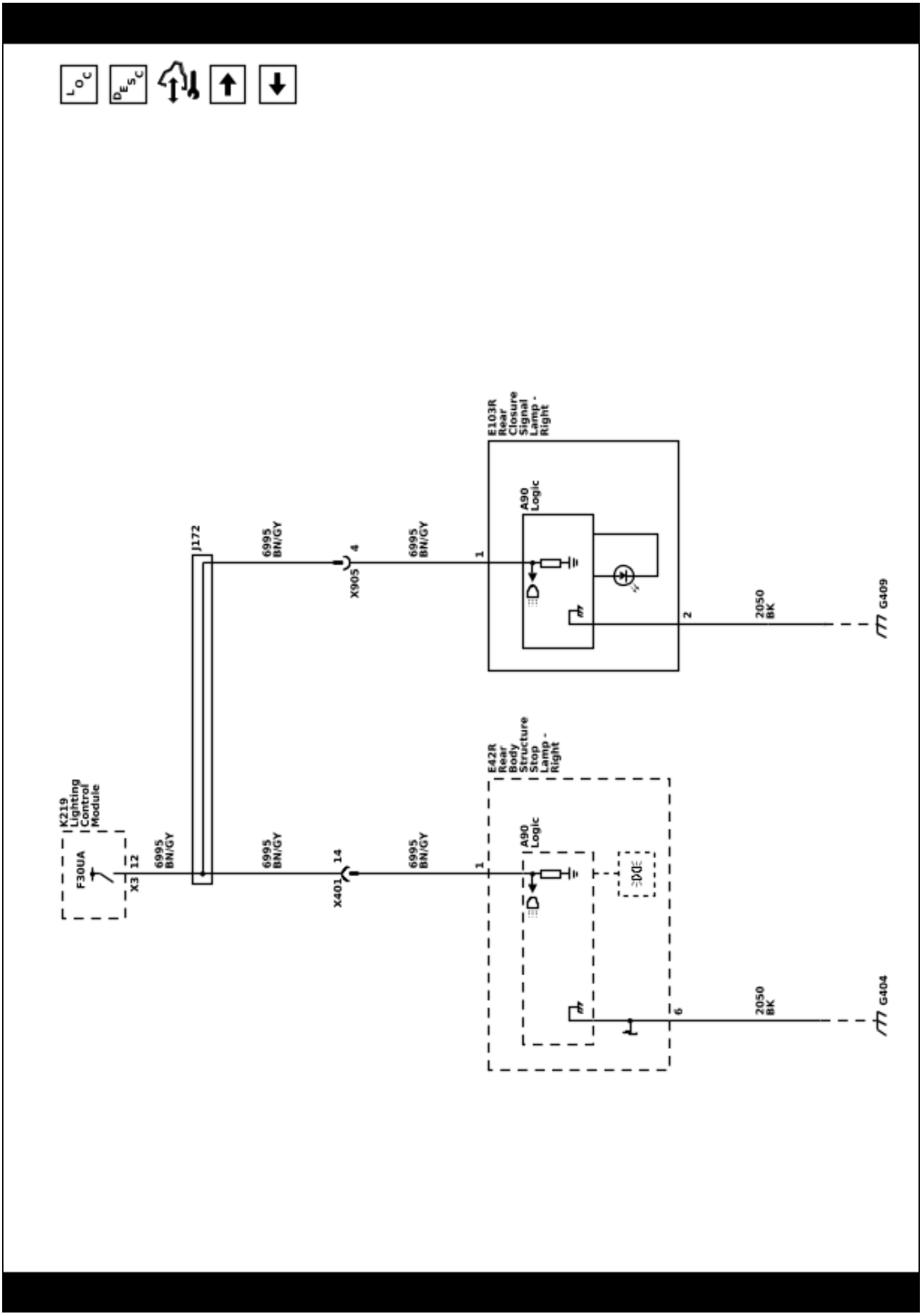

Exterior Lights Schematics (Back Up Lamps)

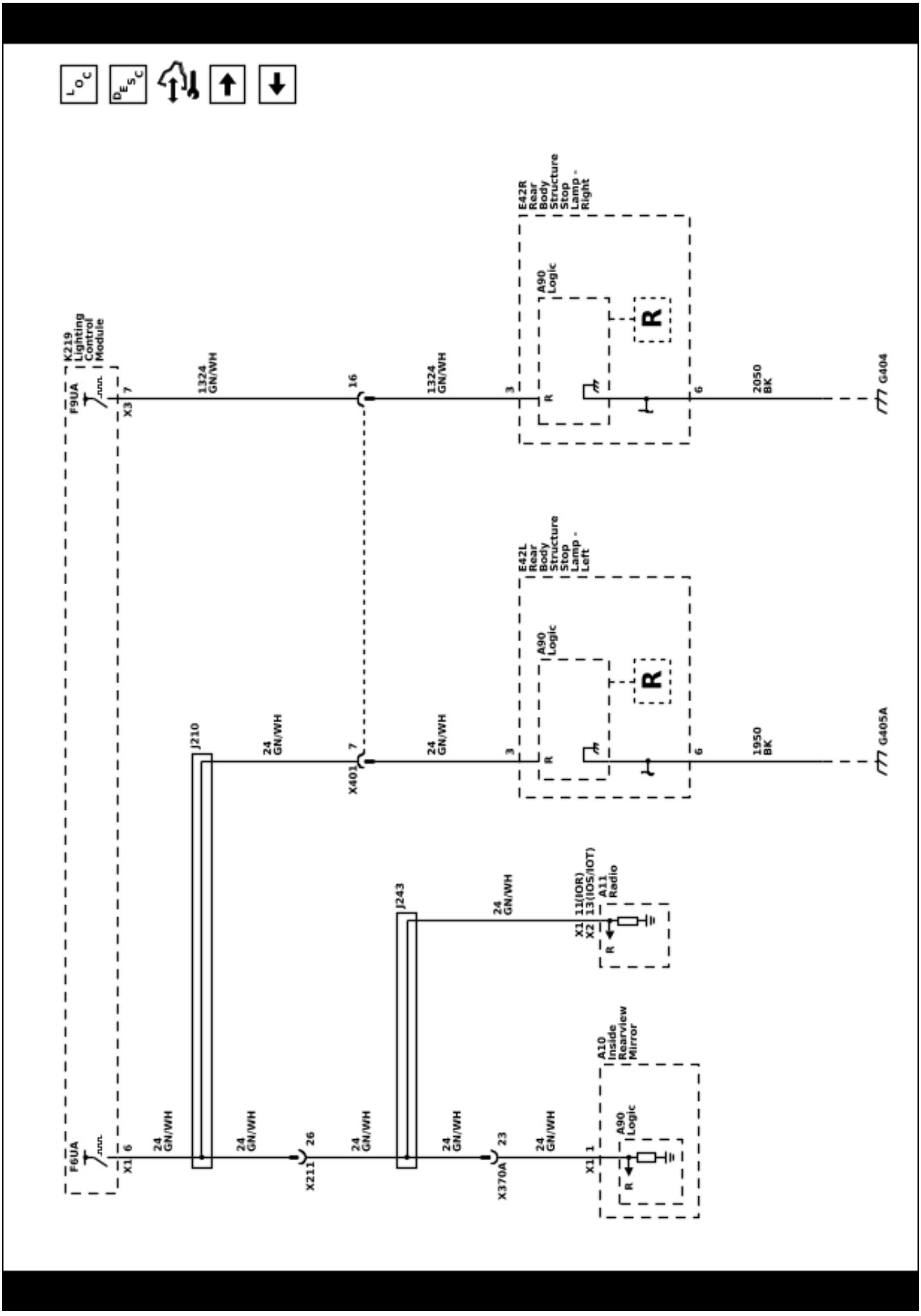

Exterior Lights Schematics (License Plate, Hands-Free Liftgate (TC2), and Running Board Lamps (B3L))

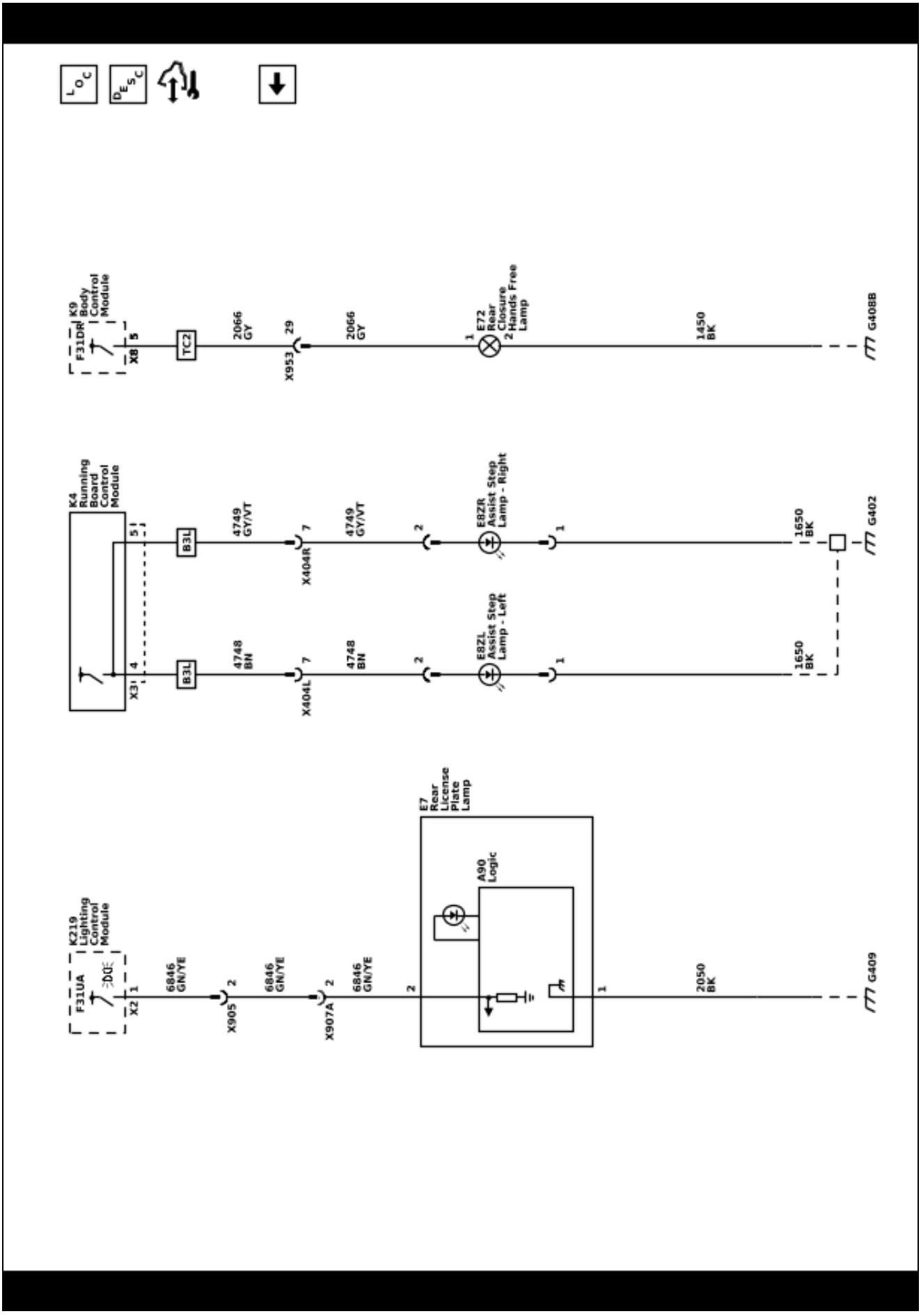

5861902

Interior Lights Schematics (Sunshades, Floor Console Compartment, and Cargo Lamps)

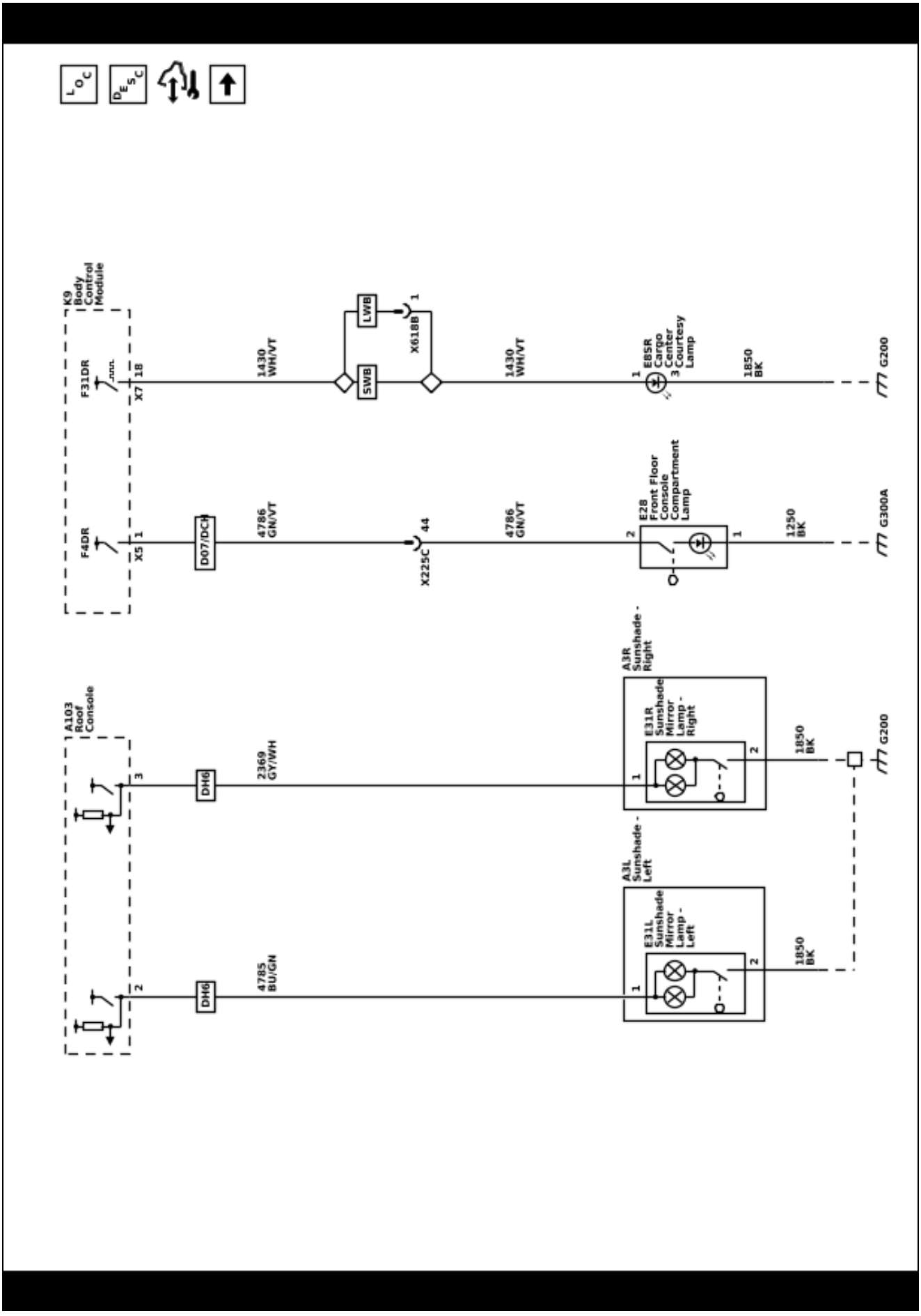

Interior Lights Schematics (Roof Console and Reading and Courtesy Lamps (C3U))

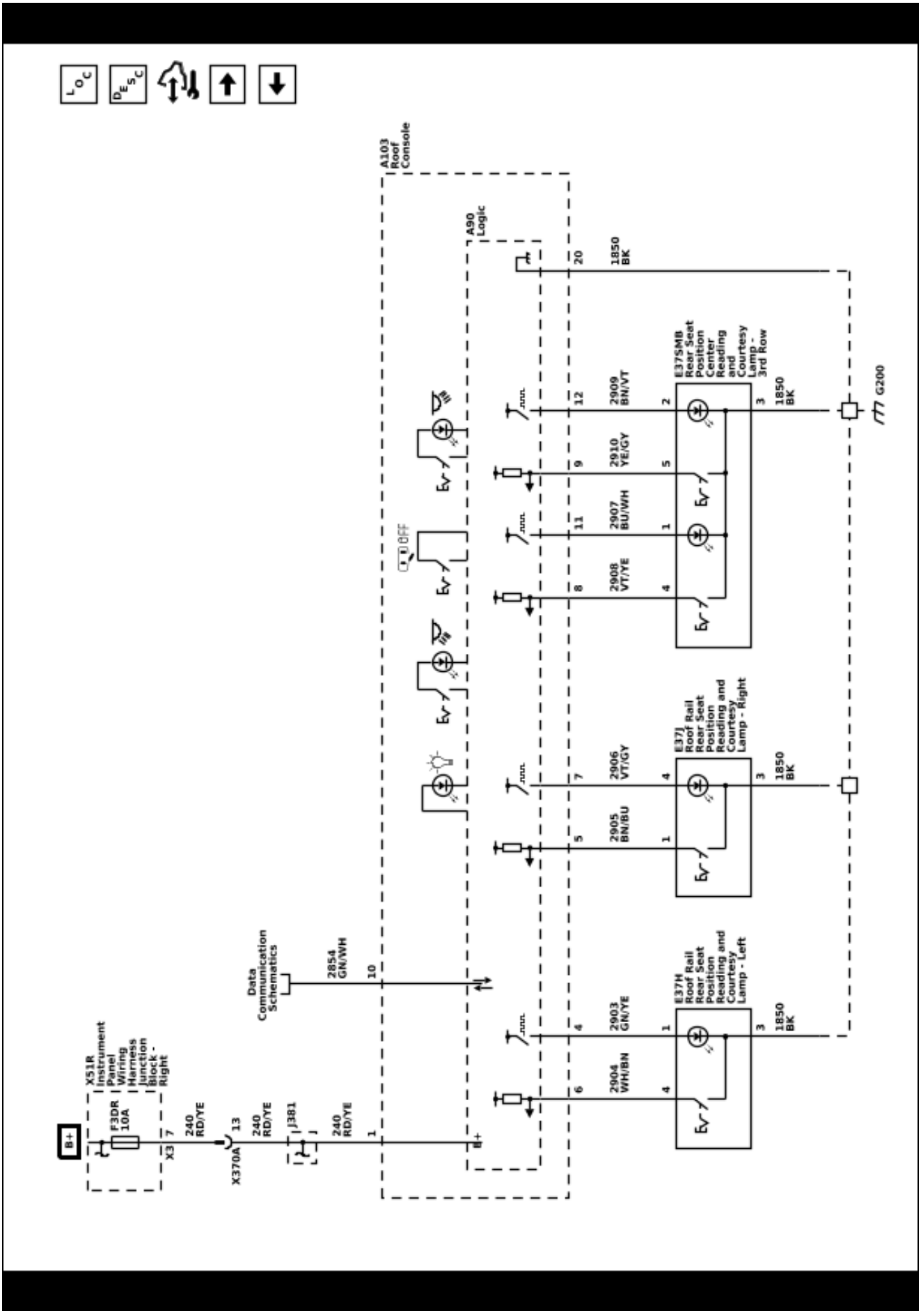

Interior Lights Schematics (Roof Console and Reading and Courtesy Lamps (-C3U))

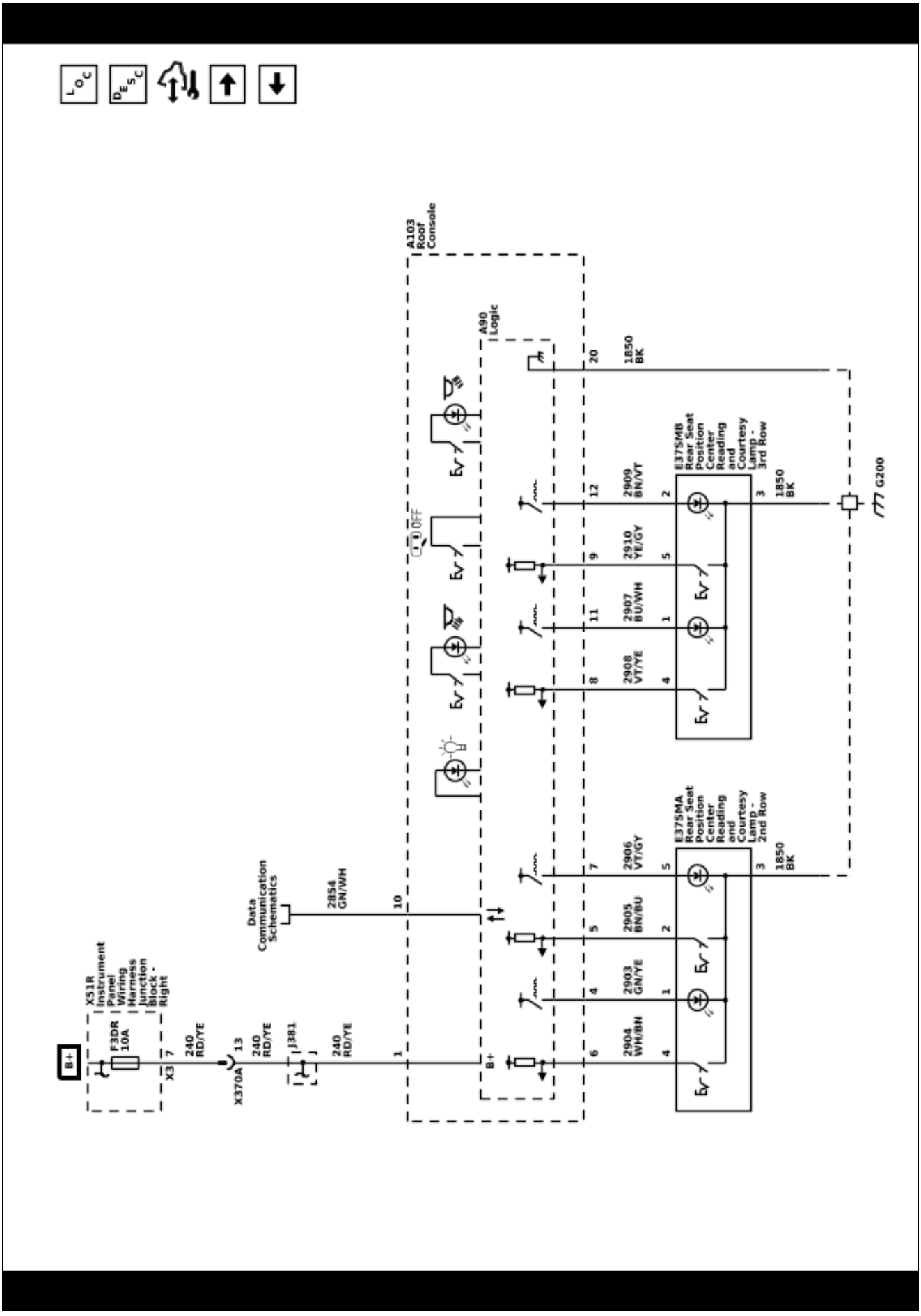

Interior Lights Schematics (Accent Lamps - Instrument Panel)

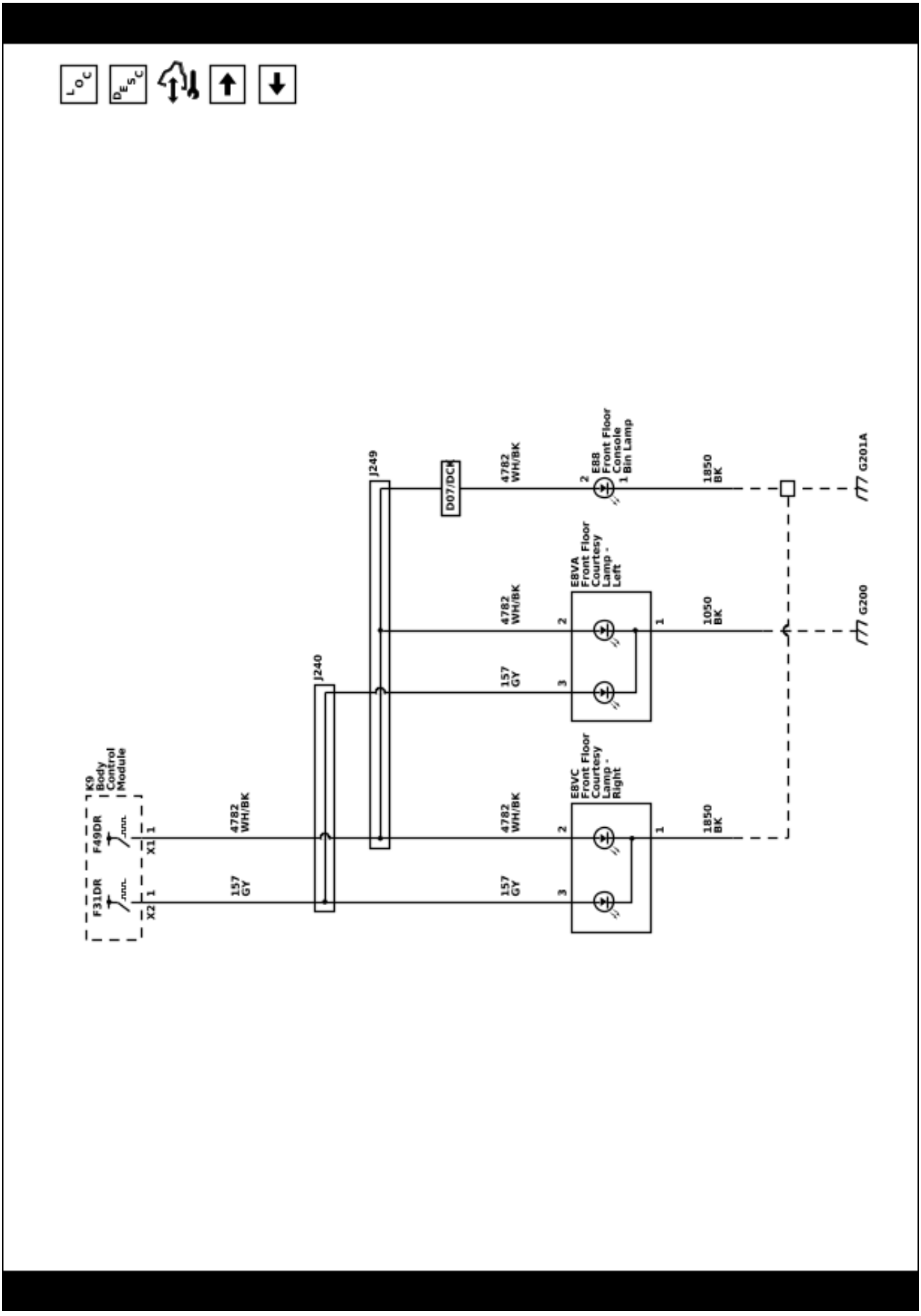

Interior Lights Schematics (Flood Lamps and Accent Lamps - Door Handles and Pockets)

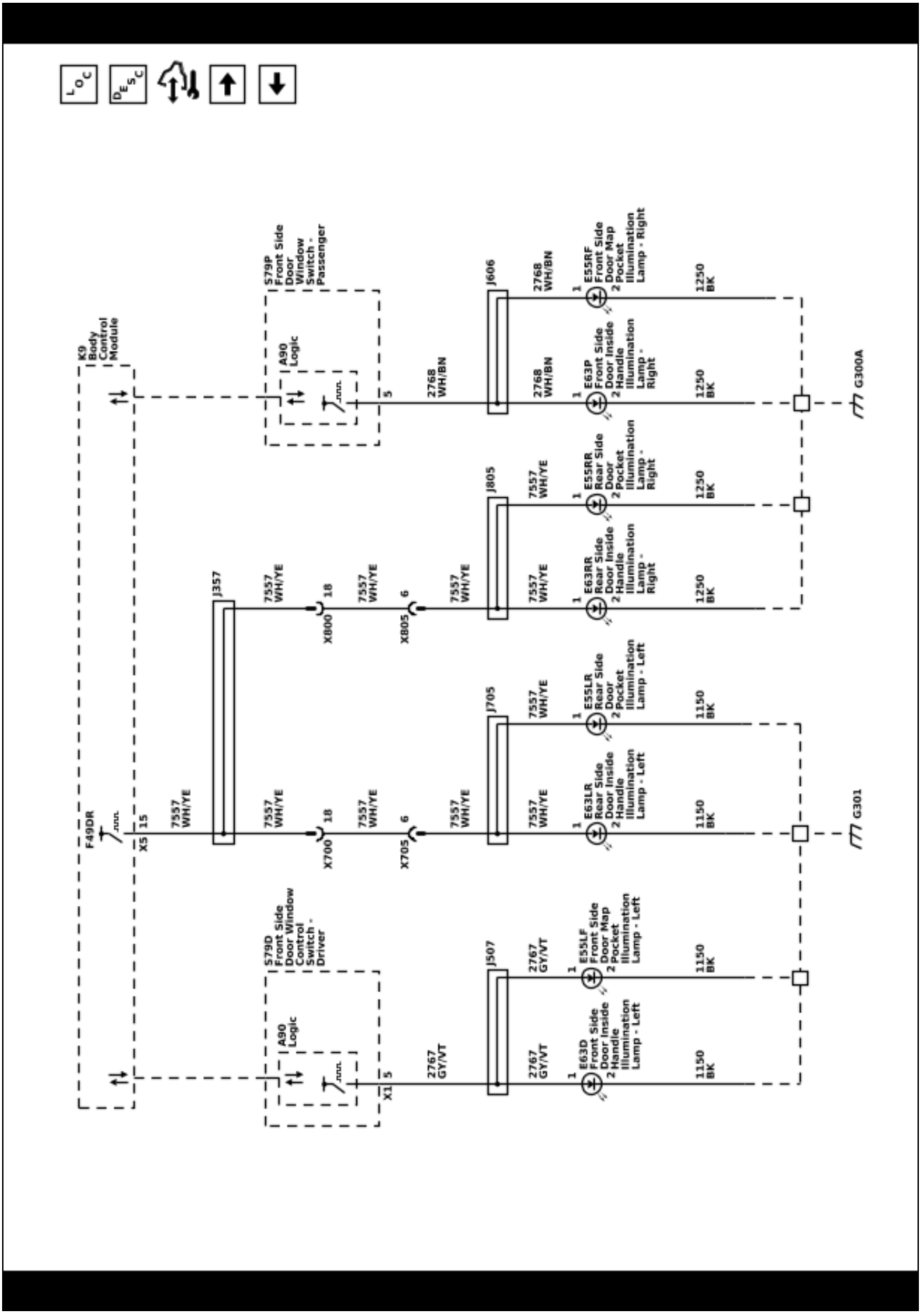

Interior Lights Schematics (Door Sill Plate Lamps Accessory (S0M))

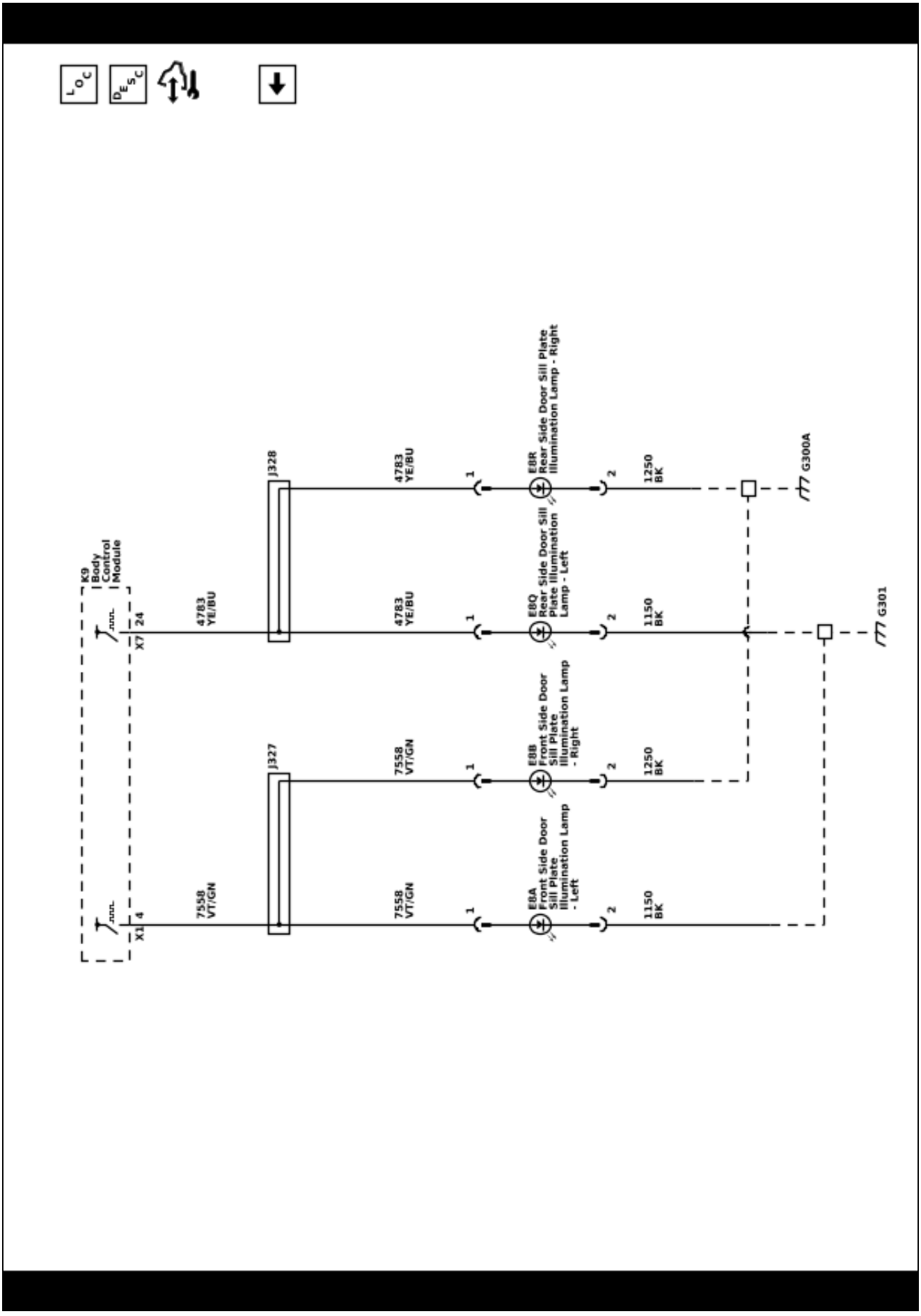

Interior Lights Dimming Schematics (Controls and Liftgate Dimming)

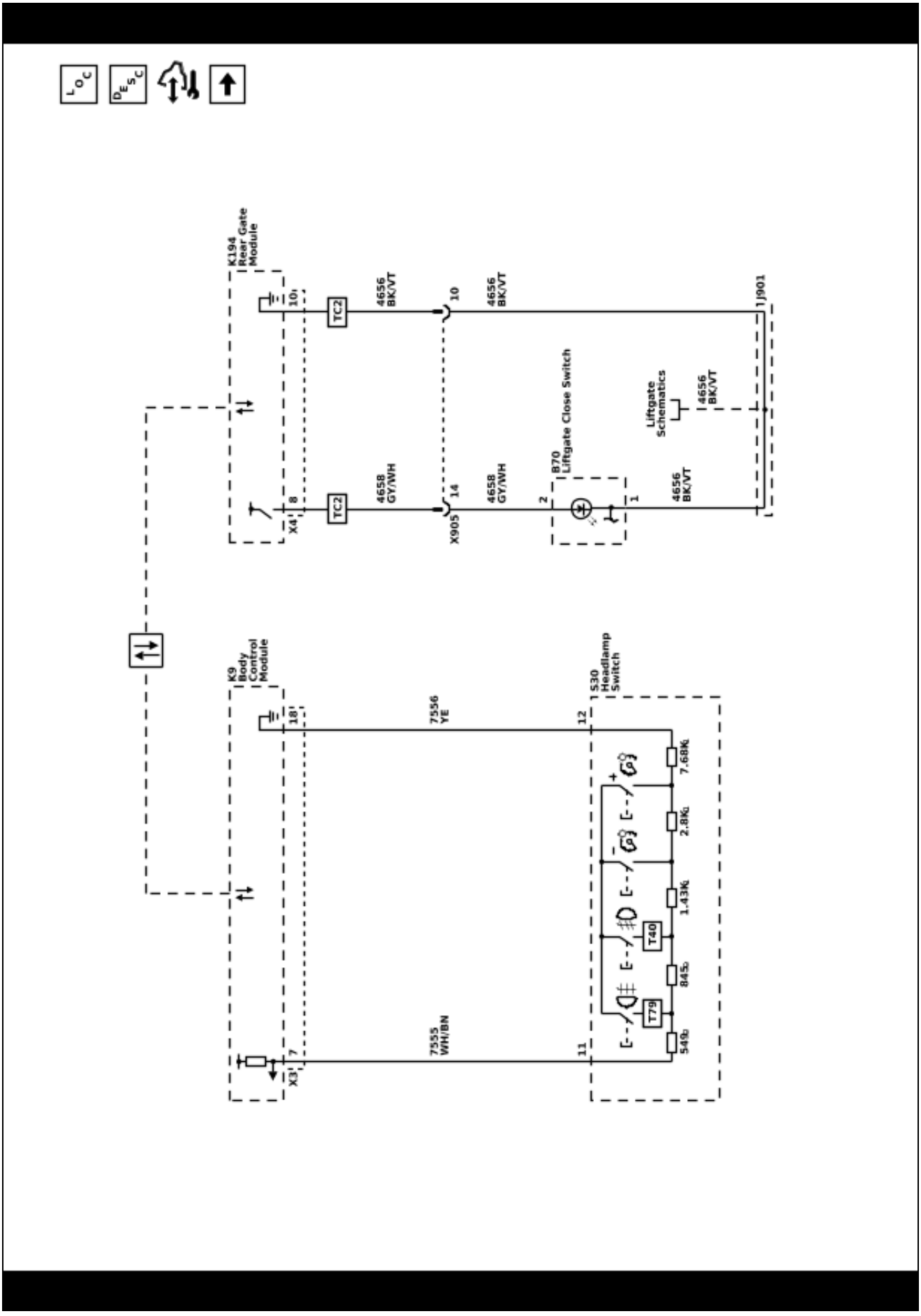

5861909

Interior Lights Dimming Schematics (Front Doors)

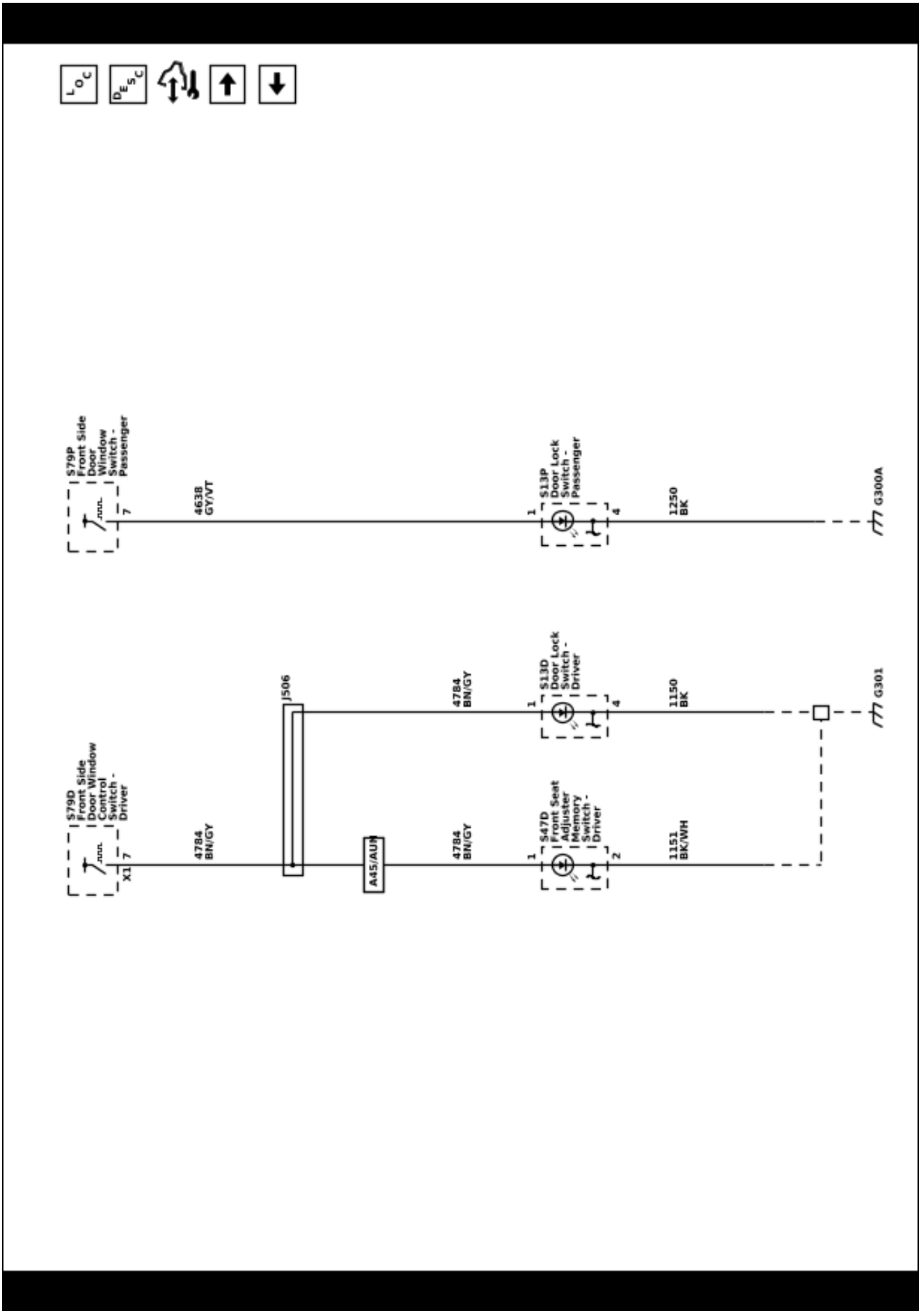

5861910

Interior Lights Dimming Schematics (Rear Doors and Floor Console Dimming)

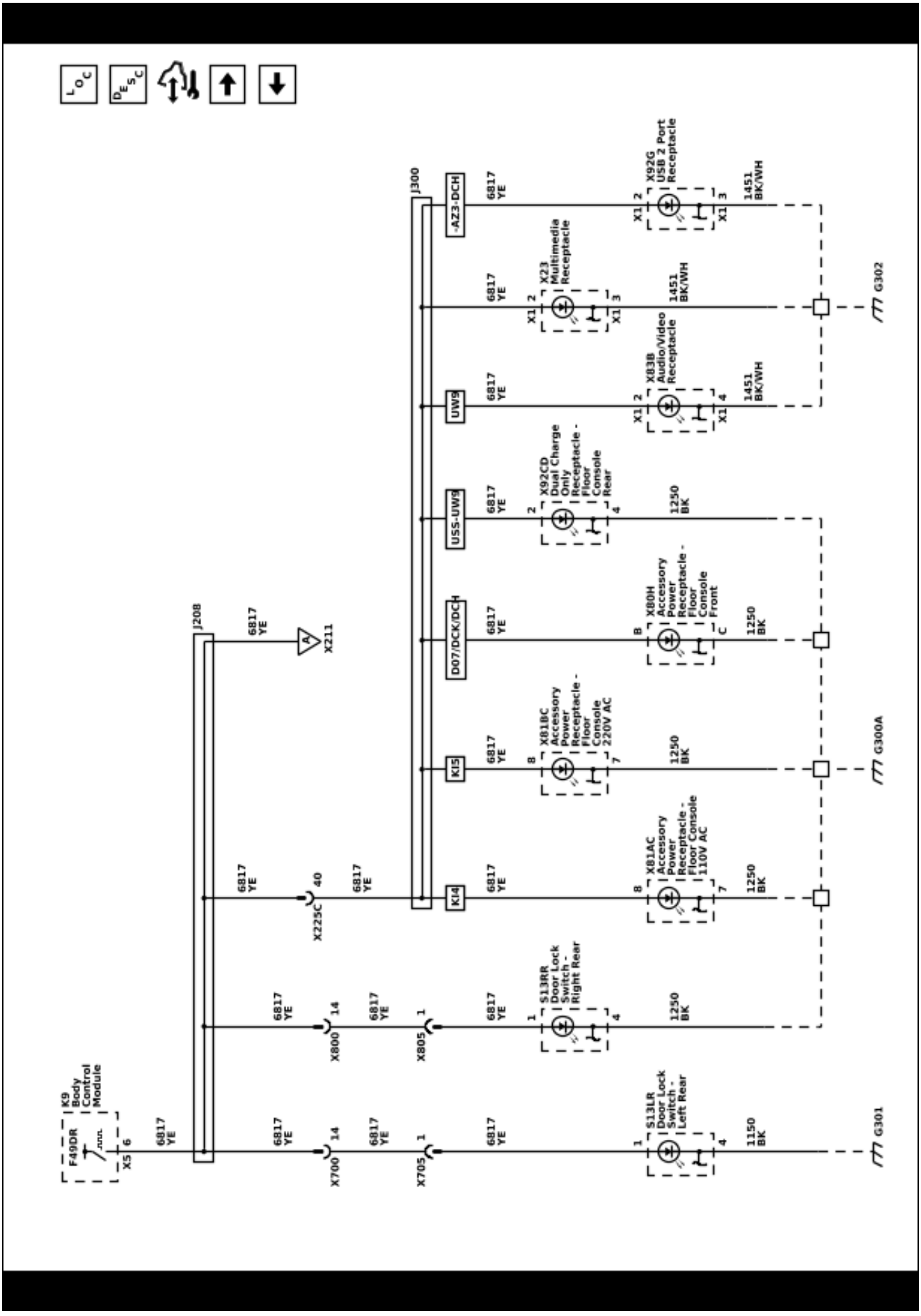

Interior Lights Dimming Schematics (Serial Data Dimming)

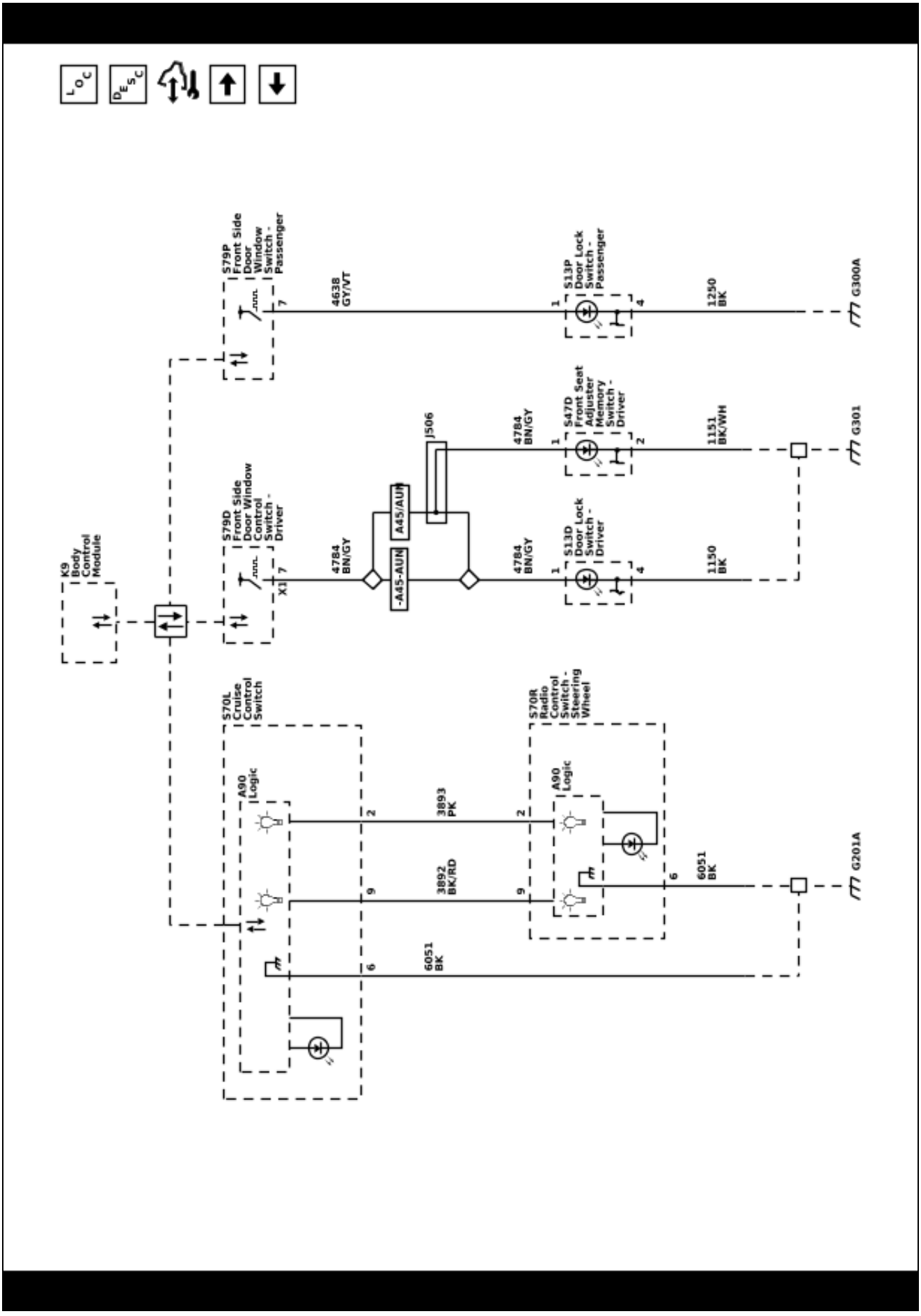

5861912

Interior Lights Dimming Schematics (Instrument Panel Dimming)

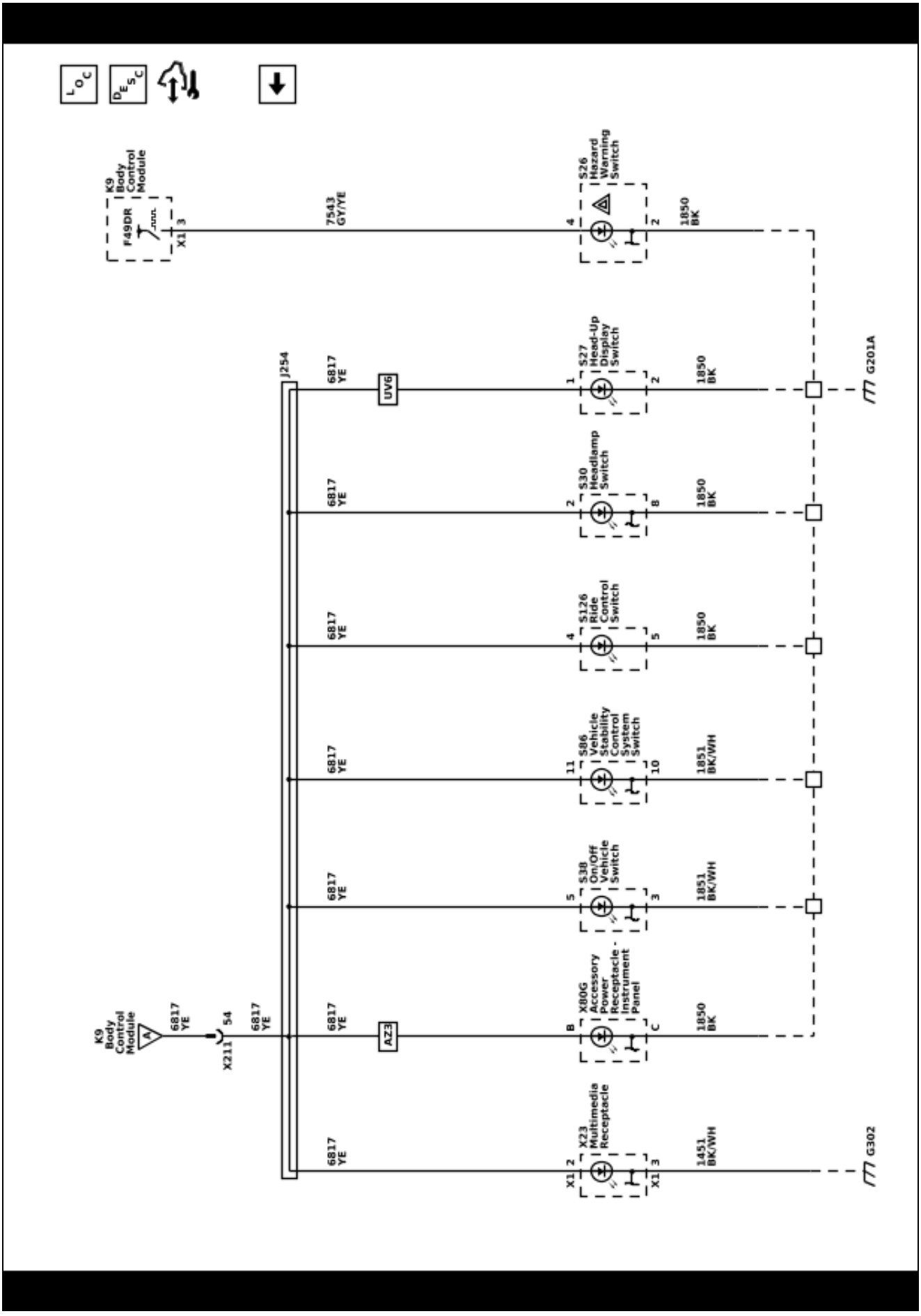

5861913

Description and Operation

Exterior Lighting Systems Description and Operation

The exterior lighting system consist of the following lamps:

- Backup lamps
- Daytime running lamps (DRL)
- Exterior courtesy lamps
- Hazard warning lamps
- Headlamps
- Park, tail, license, and marker lamps
- Front fog lamps (T40)
- Rear fog lamps (T79)
- Stop lamps
- Turn signal lamps
- Trailer lighting, refer to Trailering Description and Operation for more information.

Low Beam Headlamps

The headlamps may be turned ON in 3 different ways:

- When the headlamp switch is placed in the ON position, for normal operation
- When the headlamp switch is placed in the AUTO position, for automatic lamp control during low ambient light conditions
- When the headlamp switch is placed in the AUTO position, with the windshield wipers ON in daylight conditions, after a 6 second delay

The K9 Body Control Module (BCM) monitors three signal circuits from the S30 Headlamp Switch. When the headlamp switch is in the AUTO position, the three signal circuits are unaffected (open) and the BCM relies on the B10B Windshield Outside Moisture/Ambient Light and Humidity Sensor input to determine if headlamps are required or if daytime running lamps will be activated based on outside lighting conditions. When the headlamp switch is placed in the headlamp OFF position, the headlamp switch headlamps OFF signal circuit is grounded, indicating to the BCM that the exterior lamps should be turned OFF. With the headlamp switch in the PARK LAMPS position, the headlamp switch park lamps ON signal circuit is grounded, indicating that the park lamps have been requested. When the headlamp switch is in the HEADLAMP position, both the headlamp switch park lamps ON signal circuit and the headlamps ON signal circuit are grounded. The BCM responds to these inputs by sending a serial data message to the K219 Lighting Control Module. The Lighting Control Module responds by applying pulse width modulated (PWM) voltage to both headlamp low beam control circuits, illuminating the low beam headlamps. When the Lighting Control Module commands the low beam headlamps ON, the operator will notice the interior backlighting for the instrument cluster and the various other switches dim to the level of brightness selected by the instrument panel dimmer switch.

High Beam Headlamps

The high beam and flash to pass (FTP) functions are contained within the S78 Turn Signal Switch. The K9 Body Control Module (BCM) provides the turn signal/multifunction switch with two signal circuits, the high beam signal circuit and the FTP signal circuit. When the low beam headlamps are ON, and the turn signal/multifunction switch is placed in either the high beam position or FTP position, ground is applied to the BCM through the high beam/FTP signal circuit. The BCM responds to the high beam request by sending a serial data message to the K219 Lighting Control Module. The Lighting Control Module responds by applying pulse width modulated (PWM) voltage to both headlamp high beam control circuits, illuminating the high beam headlamps. The status of the high beam lamps is shown by a blue indicator located on the instrument cluster. When high beams are commanded on, the indicator will be illuminated continuously. If the driver turns the high beams off, the indicator will also turn off.

Flash to Pass

When the S78 Turn Signal Switch is momentarily placed in the flash to pass position, ground is applied to the turn signal/multifunction switch. The turn signal/multifunction switch applies ground to the K9 Body Control Module (BCM) through the flash to pass switch signal circuit. The BCM responds to the flash to pass request by sending a serial data message to the K219 Lighting Control Module. The Lighting Control Module responds by applying pulse width modulated (PWM) voltage to both headlamp high beam control circuits, illuminating the high beam headlamps. This causes the high beam headlamps to illuminate at full brightness until the turn signal/multifunction switch is returned to the at rest position.

Automatic Headlamp Control

The K9 Body Control Module (BCM) monitors three signal circuits from the S30 Headlamp Switch. When the headlamp switch is in the AUTO position, the three signal circuits are unaffected (open) and the BCM relies on the B10B Windshield Outside Moisture/Ambient Light and Humidity Sensor input to determine if headlamps are required or if daytime running lamps will be activated based on outside lighting conditions. During automatic lamp control, the headlamps will be off during daylight conditions but will turn on when the ambient light sensor detects low ambient light conditions. The ambient light sensor is a light sensitive transistor that varies the voltage signal to the BCM. The BCM provides a 5 volt reference signal and a low reference ground to the ambient light sensor. During low light conditions the BCM will request the low beam headlamps ON by sending a serial data message to the K219 Lighting Control Module. The Lighting Control Module responds by applying pulse width modulated (PWM) voltage to both headlamp low beam control circuits, illuminating the low beam headlamps.

Automatic High Beam Assist (TQ5)

The automatic high beam assist (AHBA) system operates the high beam headlamps ON and OFF automatically when the system is activated and certain conditions are met. The AHBA system consists of a front camera module that detects light and is able to identify approaching vehicles on an even, straight road at a distance of greater than 0.4 km (0.25 mi). The front camera module analyzes light color, intensity, and movement. The AHBA system will turn OFF the high beam headlamps when approaching vehicle headlamps or preceding vehicle taillights are detected by the front camera module. AHBA can be deactivated when the headlamp dimmer switch is moved from the neutral position to the high beam or flash to pass positions. AHBA can be reactivated by operating the high beam select switch from the neutral position to the high beam position twice within 2 seconds.

AHBA System Activation

- Vehicle ON
- Headlamp switch placed in the AUTO position
- Outside lighting conditions must be dark
- Vehicle speed greater than 25 mph (40 km/h)

AHBA System Operation

The following are conditions that the AHBA system will turn the high beam headlamps off during operation:

- The system detects approaching traffic headlamps
- The system detects preceding traffic tail lamps
- Ambient light level too high due to towns or twilight situations
- The vehicle's speed drops below 13 mph (22 km/h)
- Delay

Note: AHBA may not operate properly if any of the following conditions exist:

- Approaching and preceding vehicles lamps are undetectable due to dirt, snow, road spray, smoke, fog, or any other airborne conditions.
- The front camera module is covered with ice, dirt, snow, haze, or is obstructed.
- The vehicle is being driven on winding or hilly road conditions which would make any on coming vehicle headlamps undetectable by the AHBA.

AHBA System Deactivation

- Manually operating the headlamp switch from neutral to high beam position
- AHBA is deactivated automatically when the front or rear fog lamps are turned ON

AHBA System Indicator

The status of the AHBA system is shown by a green indicator located on the instrument panel cluster. When AHBA is active, the indicator will be illuminated continuously. If the operator deactivates the AHBA system, the indicator will turn off.

Daytime Running Lamps

The daytime running lamps (DRL) will illuminate continuously when the following conditions are met:

- Engine running
- The headlamp switch is in the AUTO position
- Ambient light conditions are daytime conditions

The B10B Windshield Outside Moisture/Ambient Light and Humidity Sensor is used to monitor outside lighting conditions. The ambient light sensor provides a voltage signal that will vary between 0.2 and 4.9 volts depending on outside lighting conditions. The K9 Body Control Module (BCM) provides a 5 volt reference signal and a low reference ground to the ambient light sensor. The BCM monitors the ambient light sensor signal circuit to determine if outside lighting conditions are correct for either daytime running lamps (DRL) or automatic lamp control when the headlamp switch is in the AUTO position. In daylight conditions the BCM will send a serial data message to the K219 Lighting Control Module to command the DRLs ON, the Lighting Control Module responds by applying pulse width modulated (PWM) voltage to both DRL control circuits, illuminating the DRLs. During low light conditions the Lighting Control Module will command the low beam headlamps ON.

Hazard Lamps

The hazard flashers may be activated in any power mode. The S26 Hazard Warning Switch signal circuit is momentarily grounded when the hazard switch is pressed. The K9 Body Control Module (BCM) responds to the hazard switch signal input by sending a serial data message to the K219 Lighting Control Module. The Lighting Control Module responds by supplying battery voltage to all turn signal lamps in an ON and OFF duty cycle. When the hazard switch is activated, the BCM also sends a serial data message to the instrument cluster requesting both turn signal indicators to be cycled ON and OFF.

Park, Tail, and License Lamps

When the S30 Headlamp Switch is placed in the HEAD or PARK position, ground is applied to the park lamp switch ON signal circuit to the K9 Body Control Module (BCM). The BCM responds to the park lamp switch signal input by sending a serial data message to the K219 Lighting Control Module. The Lighting Control Module responds by applying battery voltage to the park lamps, tail lamps, and license lamps control circuits illuminating the park, tail, and license lamps.

Stop Lamps

The B22 Brake Pedal Position Sensor is used to sense the action of the driver application of the brake pedal. The K9 Body Control Module (BCM) provides the brake pedal position sensor with low reference, signal, and 5 volt reference circuits. When the variable signal reaches a voltage threshold indicating the brakes have been applied, the BCM will respond by sending a serial data message to the K219 Lighting Control Module requesting the stop lamps to be turned ON. The Lighting Control Module responds by applying battery voltage to the left and right stop lamp control circuits as well as the center high mounted stop lamp control circuit illuminating the left and right stop lamps and the

center high mounted stop lamp. If serial data communication is lost between the BCM and the Lighting Control Module, the Lighting Control Module will receive a serial data message from the Electronic Brake Control Module indicating that the brakes have been applied. If serial data communication is lost between all three modules, the Lighting Control Module also receives a hard wired voltage signal from the BCM to signal the brake lamps ON.

Turn Signal Lamps

Turn Signals

The K9 Body Control Module (BCM) provides the S78 Turn Signal Switch with left and right turn signal switch signal circuits. Ground is applied at all times to the turn signal/multifunction switch. The turn signal lamps may only be activated with the ignition switch in the ON or START positions. When the turn signal/ multifunction switch is placed in either the turn right or turn left position, ground is applied to the BCM through either the right turn or left turn signal switch signal circuit. The BCM responds to the turn signal switch input by sending a serial data message to the K219 Lighting Control Module. The Lighting Control Module responds by applying a pulsating voltage to the turn signal lamps through there respective control circuits. When a turn signal request is received by the BCM, a serial data message is also sent to the instrument cluster requesting the respective turn signal indicator be pulsed ON and OFF.

Turn Signal Outage Detection

Vehicles with LED turn signals require additional turn signal outage detection circuits that provide turn signal feedback to the K219 Lighting Control Module. The Lighting Control Module uses the feedback information to send a serial data message to the instrument cluster to alert the driver anytime a turn signal fault is detected. If a fault is detected on a turn signal circuit or a turn signal feedback circuit, the turn signals will flash in a rapid manner to alert the driver of the fault.

Backup Lamps

With the engine running and the transmission in the reverse position, the transmission control module (TCM) sends a serial data message to the multiple control modules. The message indicates that the gear selector is in the reverse position. The K9 Body Control Module (BCM) responds to the reverse position message by sending a serial data message to the K219 Lighting Control Module to request the backup lamps on. The Lighting Control Module responds by applying battery voltage to the backup lamps control circuit(s) illuminating the backup lamps. The applied voltage is also sent to the A11 Radio and A10 Inside Rearview Mirror for rearview camera purposes. Once the driver moves the gear selector out of the reverse position, a serial data message is sent by the TCM that the transmission is no longer in the reverse position. The BCM responds to the reverse position message by sending a serial data message to the Lighting Control Module to request the backup lamps off. The Lighting Control Module responds by removing battery voltage from the backup lamp circuits. The engine must be running for the backup lamps to operate.

Exterior Courtesy Lamps

The body control module (BCM) supplies battery voltage to each exterior door handle LED backlighting circuit, the LED lighting located under each outside rearview mirror for approach lighting, and both running board step courtesy lamps when equipped. When the keyless entry transmitter is operated to either the lock or unlock functions the LED lighting located under each outside rearview mirror, exterior door handles, and both running board steps are commanded ON for approach lighting.

Hands−Free Liftgate Sensor Lamp (TC2)

If equipped with a hands-free liftgate, a vehicle logo will be projected onto the ground near the rear bumper when:

- An RKE transmitter is detected within an area of approximately 2 m (6 ft) outside the liftgate
- A successful hands-free operation has occurred

The projected logo shows where the kicking motion is to take place. Once activated, the projected vehicle logo will remain active for one minute, unless one of these conditions is met:

- The vehicle battery is low
- The vehicle is not parked
- Hands Free Liftgate Operation is set to OFF in vehicle personalization

Projected logo will not be provided to the customer for this RKE transmitter again for an approach until it has not been detected in the authentication zone for at least 20 s. If an RKE transmitter is again detected within approximately 2 m (6 ft) of the liftgate, or another hands-free operation has been detected, the one-minute timer will be reset. If the vehicle remains parked for an extended period of time with no RKE transmitter use or Keyless Access operation, the projected vehicle logo will be disabled. The projected logo will be re-enabled when:

- Any button is pressed on the RKE transmitter
- One or all vehicle doors are opened and closed
- The liftgate is closed when all doors are opened

The projected logo will not work for a single RKE transmitter when a transmitter:

- Has been left within approximately 5 m (15 ft) of the liftgate for several minutes
- Has been left inside the vehicle and all vehicle doors are closed
- Has approached the area outside of the liftgate several times in a short period of time

Battery Run Down Protection/ Inadvertent Power

To provide battery run down protection, the exterior lamps will be deactivated automatically under certain conditions. The K9 Body Control Module (BCM) monitors the state of the S30 Headlamp Switch. If the headlamp switch is in the park or headlamp position when the ignition switch is ON and then the ignition switch is placed in the OFF position, the BCM initiates a 10 minutes timer. At the end of the 10 minutes, the BCM will send a serial data message to the K219 Lighting

Control Module to deactivate the exterior lamps to prevent total battery discharge. This feature will be cancelled if any power mode other than OFF becomes active.

The BCM will disable battery run down protection if any of the following conditions exist:

- The park or headlamp switch is changed from the ON to OFF position, and back to the ON position during battery run down protection.
- The BCM determined that the park or headlamp switch was not active when the ignition was turned OFF.

Interior Lighting Systems Description and Operation

Interior Lamps

The interior lighting system consist of two groups. This first group includes lamps that are not be dimmed.

- Dome/reading lamps
- Door Sill Plate Lamps (B7G/S0M)
- Instrument panel compartment lamp
- Instrument panel courtesy lamps
- Overhead console accent lamp
- Rear compartment courtesy lamp
- Sunshade mirror lamps

Dome Lamps

The dome lamps are controlled by door ajar inputs to the K9 Body Control Module (BCM). When any door is opened, the door ajar switch contacts close and the BCM receives a door-open input. The BCM illuminates the dome lamp when any door is opened or a door lock/unlock request is activated with the key fob. After all doors have been closed, the dome lamp will remain illuminated approximately 3 seconds after the last door closes. In the event that the dome lamp were to remain illuminated for more than 10 minutes with the ignition switch in the OFF position, the BCM will deactivate the dome lamp control circuit to prevent total battery discharge. The dome lamps will turn OFF using the theater dimming feature when controlled by the BCM.

Door Sill Plate Lamps (B7G/S0M)

The Ambient Light Sensor provides a voltage signal that will vary between 0.2 and 4.9 V depending on outside lighting conditions. The door sill illumination lamps (B7G/S0M) become illuminated anytime the ignition is on during dark ambient light conditions.

Keyless Entry Interior Illumination

When the operator uses the keyless entry transmitter in order to unlock the doors, the K9 Body Control Module (BCM) receives a door-unlock signal. The BCM must receive inputs from various systems that indicate that the ignition switch is OFF, the courtesy lamp switch is OFF, and all doors are closed before the BCM will activate the interior lamps. After all doors have been closed, the courtesy lamps will turn OFF immediately if the ignition switch is turned to the ON position, the door locks are LOCKED, or approximately 20 seconds after the last door closes. The BCM will turn off the courtesy lamps through the theater dimming feature. The BCM keeps the courtesy lamps on for 40 seconds after an alarm event is completed.

Instrument Panel Compartment Lamp

The inadvertent power supply voltage circuit from the K9 Body Control Module (BCM) provides battery voltage to the instrument panel compartment (glove box) lamp. When the instrument panel compartment is opened, the instrument panel compartment lamp switch contacts close providing a path to ground and the instrument panel compartment lamp illuminates. If the operator inadvertently leaves the instrument panel compartment door open with the instrument panel compartment lamp ON, the BCM will turn all interior lamps OFF after 10 minutes has passed to prevent total battery discharge.

Reading Lamps

The inadvertent power supply voltage circuit from the K9 Body Control Module (BCM) provides battery positive voltage to each reading lamp. When a reading lamp switch is activated, the switch contacts close providing a path to ground and the reading lamp illuminates. If the operator inadvertently leaves a reading lamp ON, the BCM will turn all interior lamps OFF after 10 minutes has passed to prevent total battery discharge.

Rear Compartment Courtesy Lamps

When the rear compartment is opened, the rear compartment lid latch opens providing a rear compartment open input signal to the K9 Body Control Module (BCM). The BCM responds by applying battery voltage to the rear compartment courtesy lamp control circuit illuminating the rear compartment courtesy lamps. If the operator inadvertently leaves the rear compartment lid open, the BCM will turn all interior lamps OFF after 10 minutes has passed to prevent total battery discharge.

Sunshade Mirror Lamp

The inadvertent power supply voltage circuit from the K9 Body Control Module (BCM) provides battery voltage to the passenger side sunshade mirror lamp. When the sunshade mirror cover is opened, a switch closes providing ground and the sunshade lamp illuminates. If the operator inadvertently leaves the sunshade mirror cover open with the lamp ON, the BCM will turn all interior lamps OFF after 10 minutes has passed to prevent total battery discharge.

Interior Lamps Dimming

The second group includes lamps which may be dimmed. This group may use a combination of light emitting diodes (LED), incandescent lamps, and pulse width modulation (PWM) voltage illumination.

- Audio/Video Input Adapter
- Door lock switch – driver
- Door lock switch – passenger
- Door handle switch – driver interior
- Door handle switch – passenger interior
- Hazard switch
- Hood/liftgate release switch
- HVAC control head assembly

- Ignition mode switch
- Instrument panel dimmer switch
- Multifunction switch – center console
- Multifunction switch – instrument panel
- Outside rearview mirror switch
- Park brake switch
- Radio
- Rear compartment lid unlatch switch
- Seat memory switch – driver
- Seat memory switch – passenger
- Steering wheel controls switch – left
- Steering wheel controls switch – radio presets
- Steering wheel controls switch – radio volume
- Window switch – driver
- Window switch – passenger

With the headlamp switch in the PARK or HEAD position, the park lamp switch signal circuit provides an input to the K9 Body Control Module (BCM). The BCM responds by applying voltage to the backlight dimming control circuits illuminating all components with interior backlighting. All interior backlighting turns on at the dimming level set by the dimmer buttons within the headlamp switch. The headlamp switch is used to increase and decrease the brightness of the interior backlighting components. The BCM provides a signal circuit and a low reference circuit to the headlamp switch for backlight dimming. When a dimming button is pressed, the signal circuit becomes grounded through the appropriate resistor internal to the headlight switch and voltage from the BCM will decrease accordingly. The BCM interprets the signal and responds in two ways. The BCM applies a pulse width modulated (PWM) voltage through the LED dimming control circuits illuminating the interior backlighting to the requested level of brightness. The BCM also sends a serial data message to the appropriate control modules requesting all dimming components to be illuminated to the same level of brightness.

Battery Rundown Protection/ Inadvertent Power

The K9 Body Control Module (BCM) inadvertent power supply voltage circuit provides battery voltage to all of the interior courtesy lamps. In the event that any of these lamps were to remain illuminated for a period of more than 10 minutes with the ignition switch in the OFF position, the BCM will deactivate the inadvertent power supply voltage circuit to prevent total battery discharge. If the ignition switch is turned to any position other than OFF, or if a lamp switch is activated during this 10 minute period, the timer resets for another 10 minutes.

Vehicle Access

Schematic and Routing Diagrams

Door Lock/Indicator Schematics (Driver Door Switch Panel Control Module Power, Ground, Serial Data, and Subsystem References)

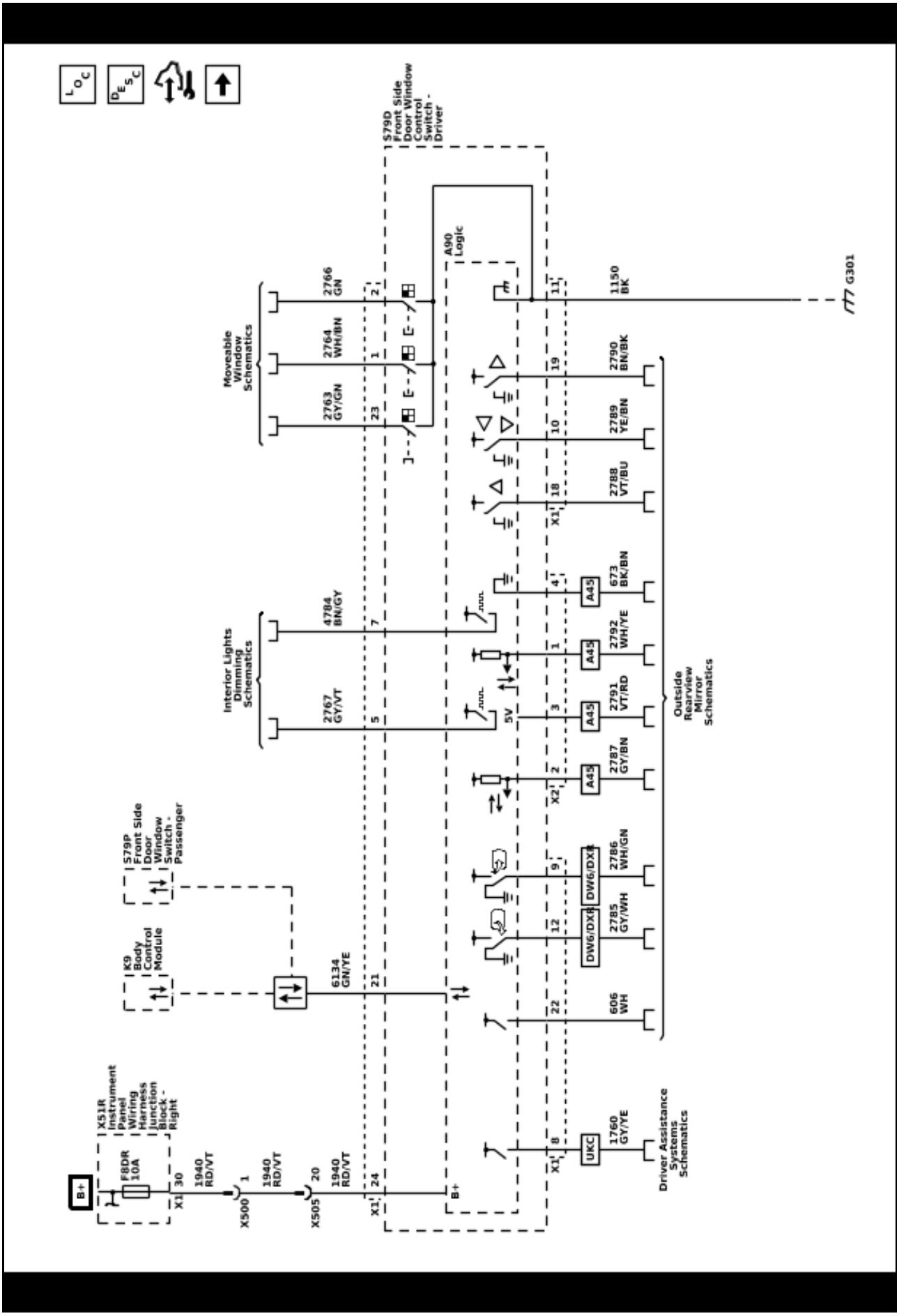

5861922

Door Lock/Indicator Schematics (Passenger Door Switch Panel Control Module Power, Ground, Serial Data, and Subsystem References)

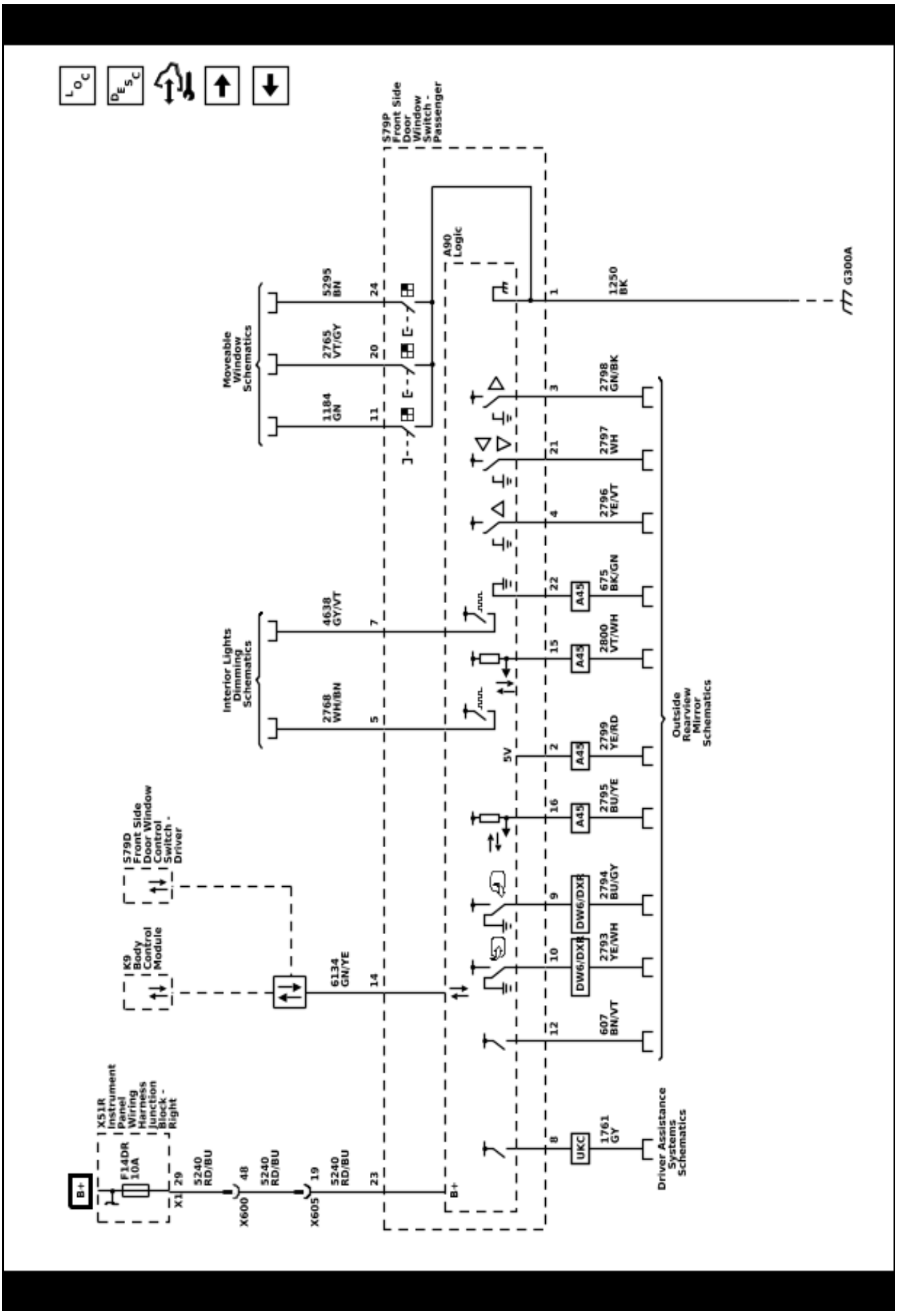

5861923

Door Lock/Indicator Schematics (Door Lock Switches and Indicators)

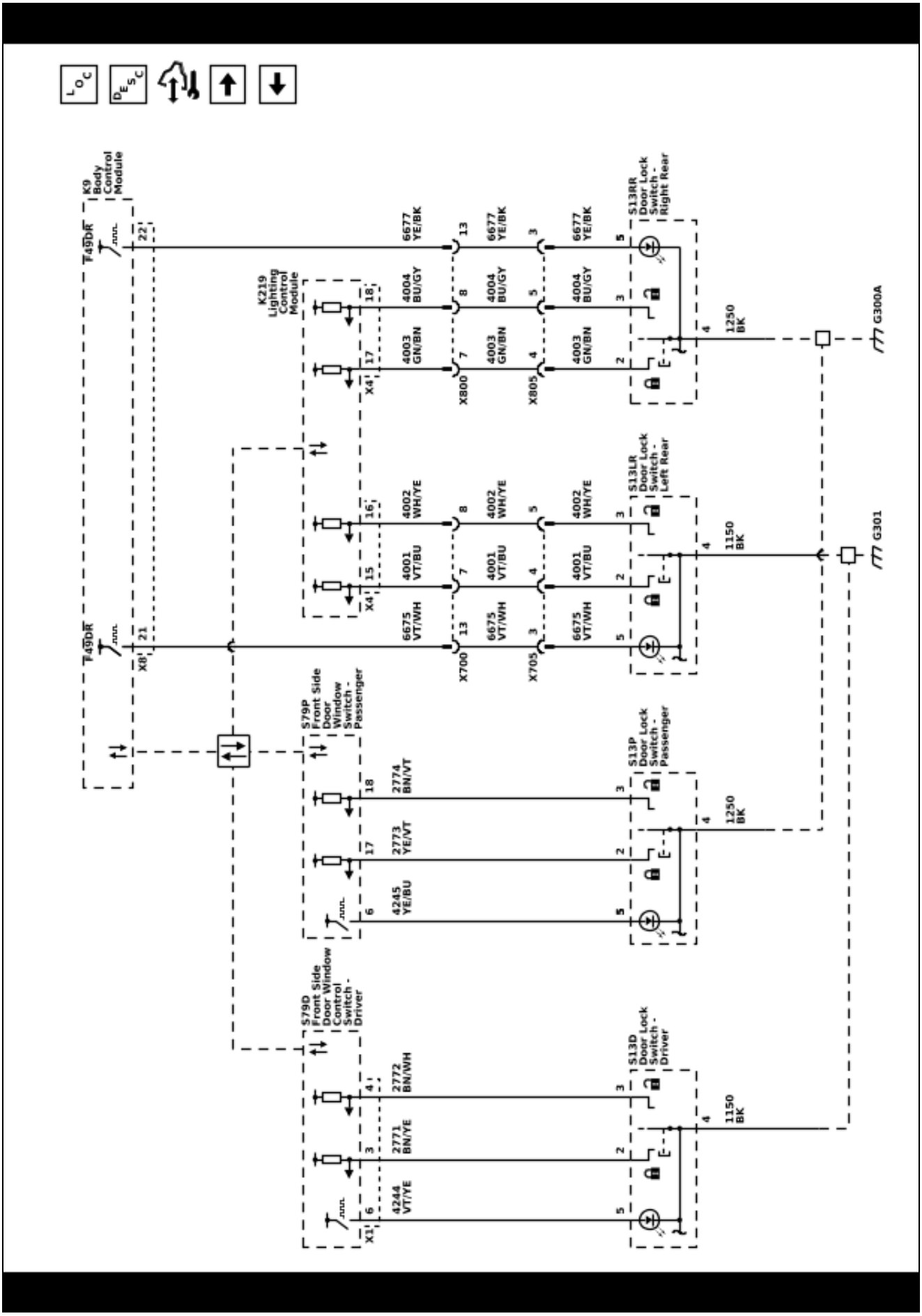

5861924

Door Lock/Indicator Schematics (Ajar Switches and Lock Indicators)

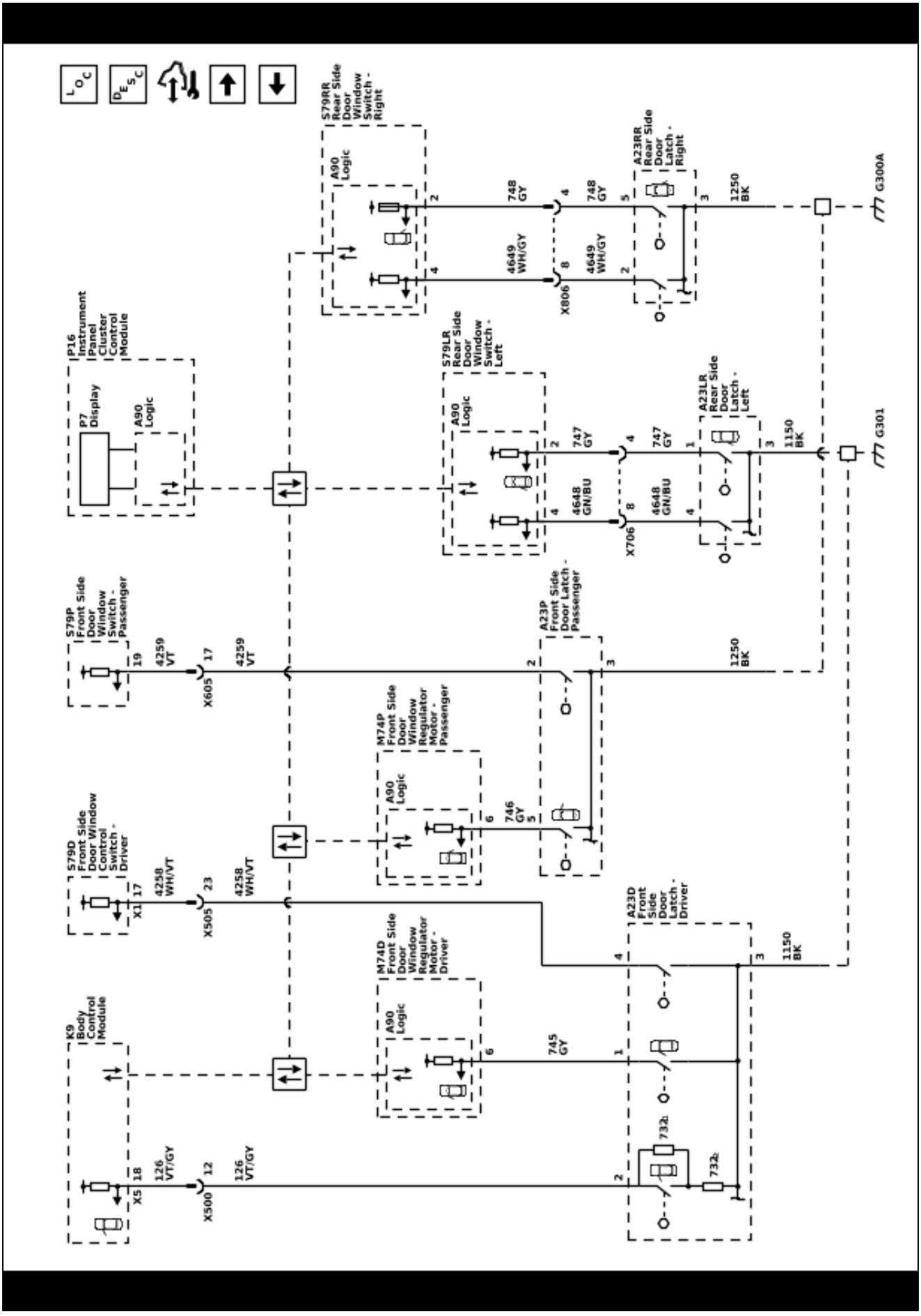

Door Lock/Indicator Schematics (Actuators)

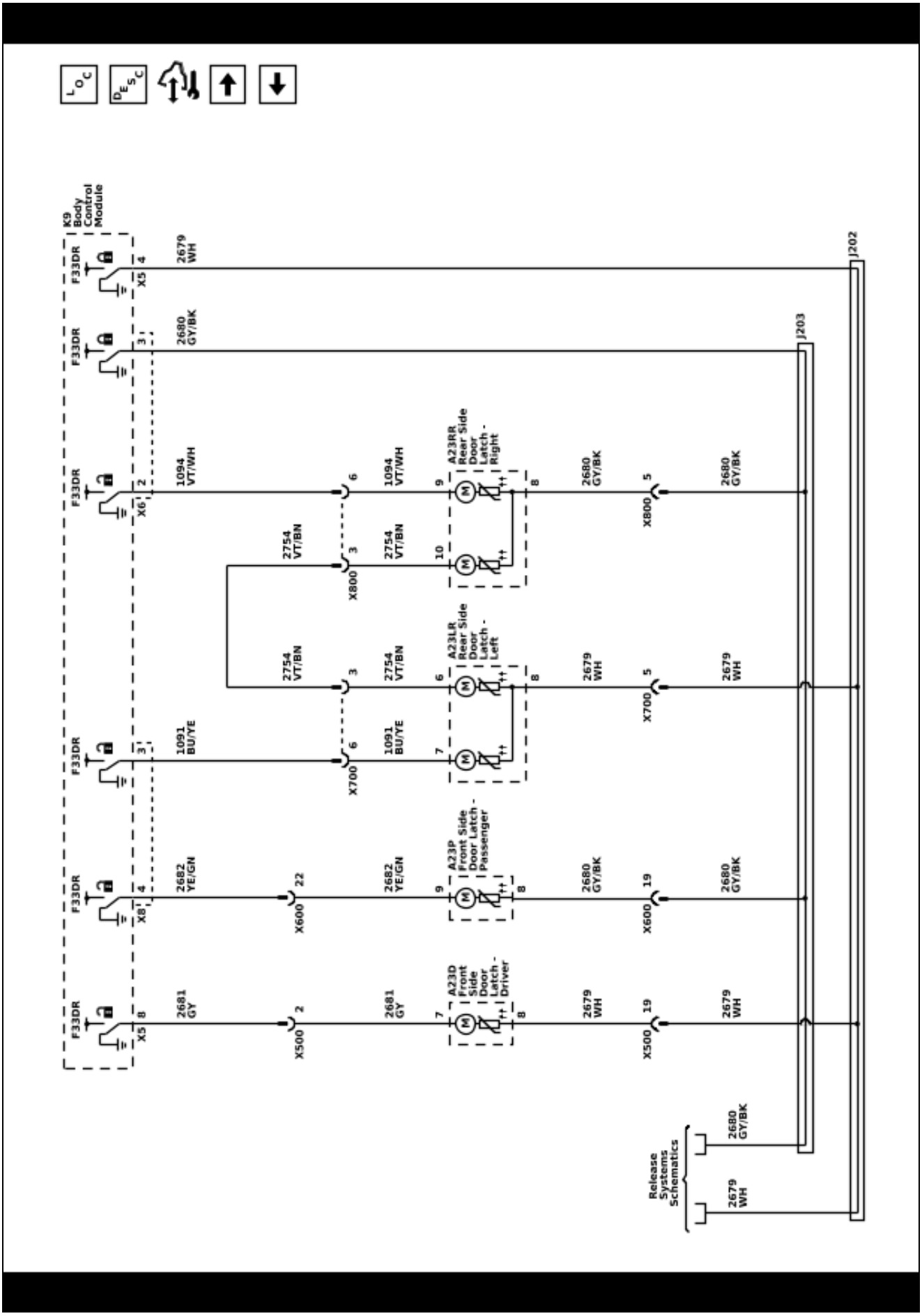

Door Lock/Indicator Schematics (Door Handle Switches)

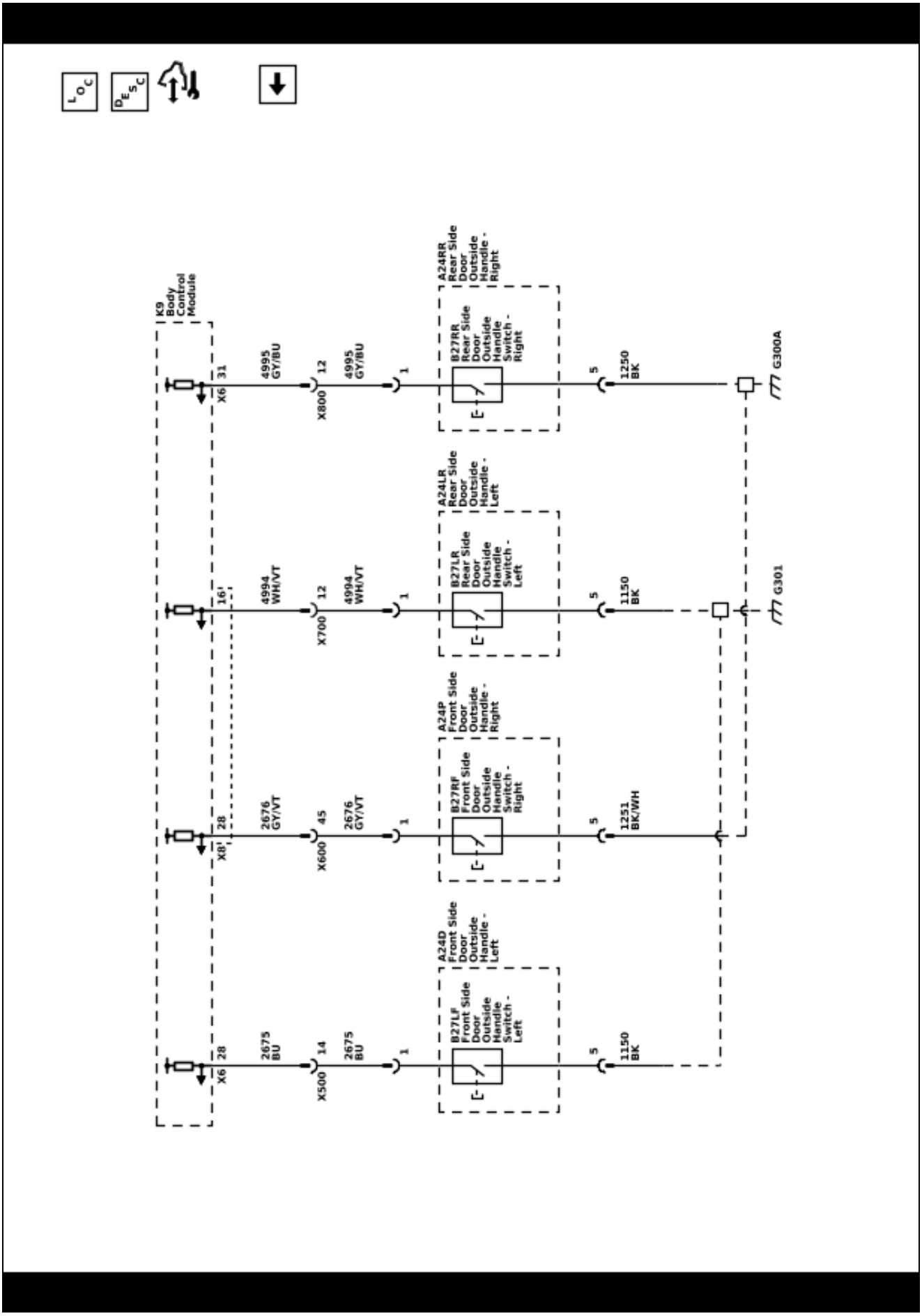

Release Systems Schematics (Liftglass Release)

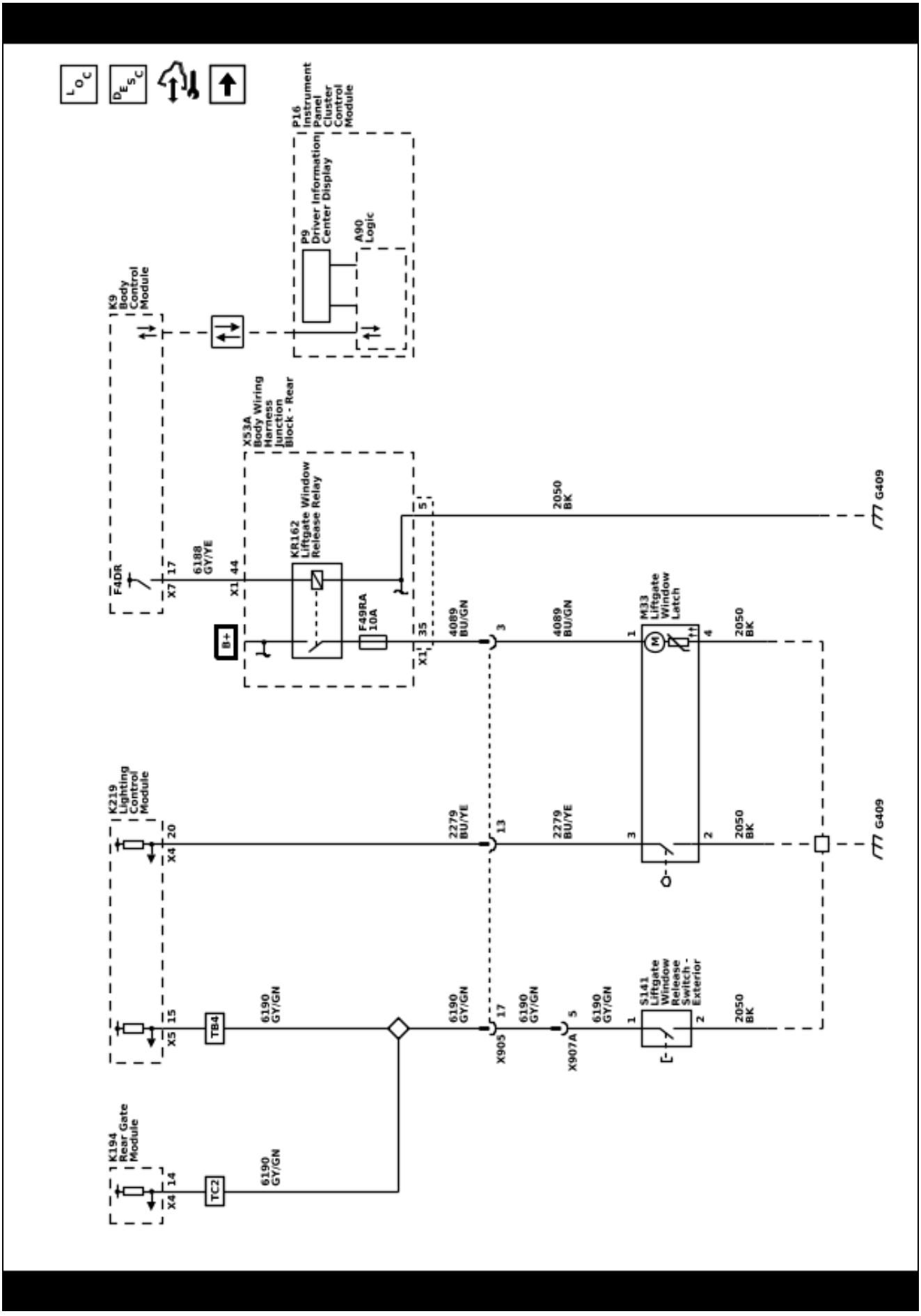

Release Systems Schematics (Liftgate Release (TB4))

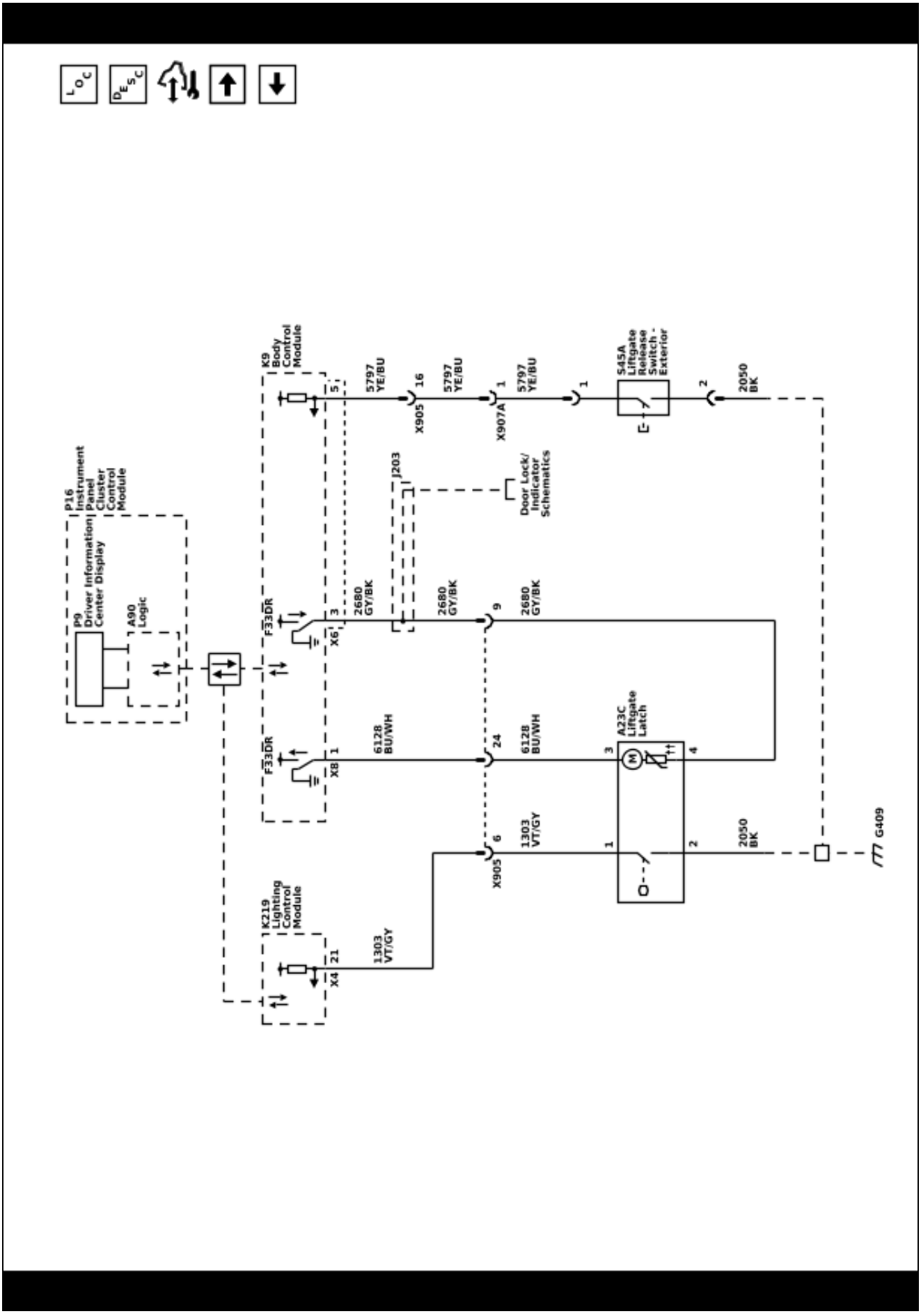

Release Systems Schematics (Fuel Tank Filler Door Lock Actuator (N08))

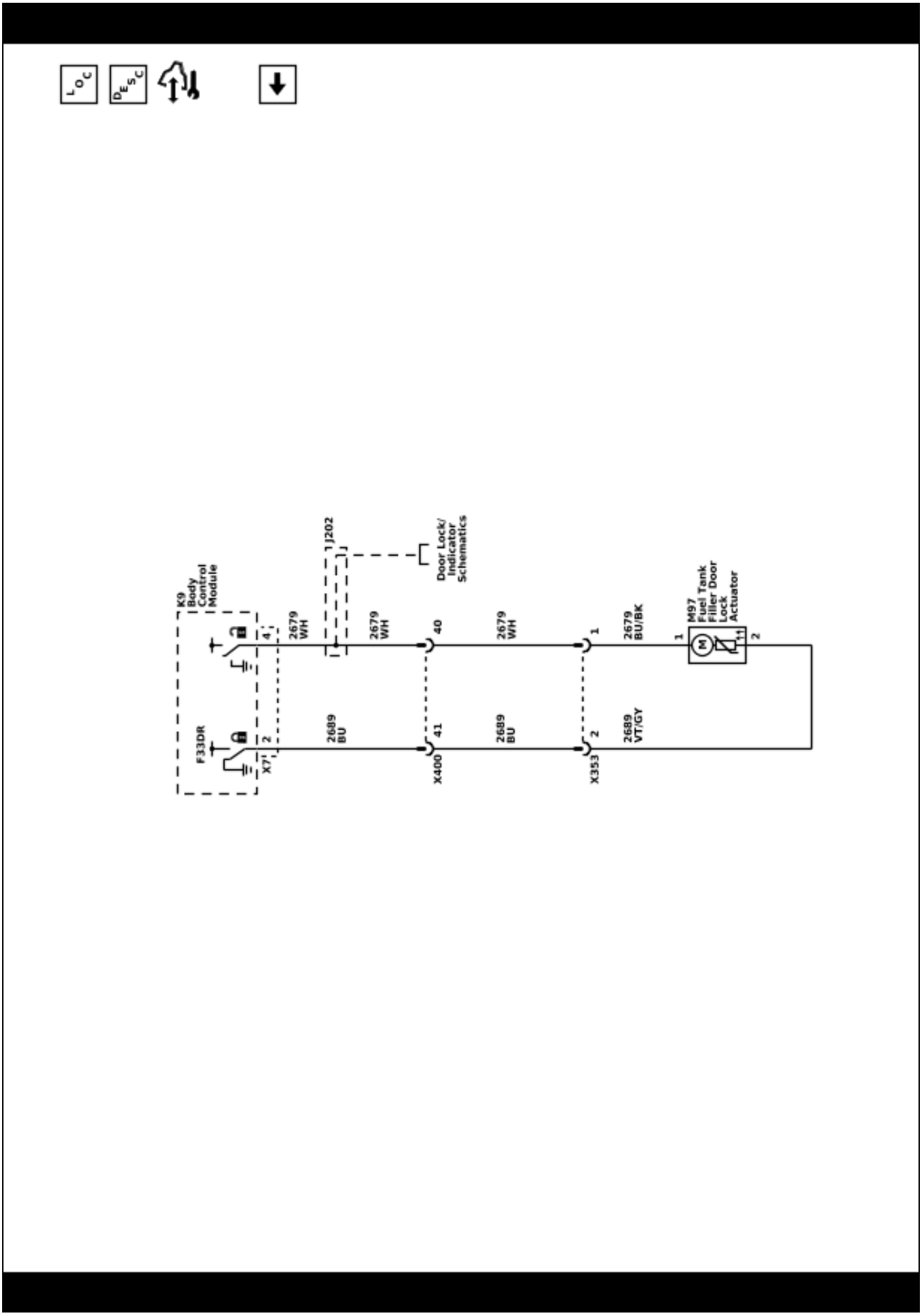

Hood Latch Schematics (Engine Compartment Cover Switch)

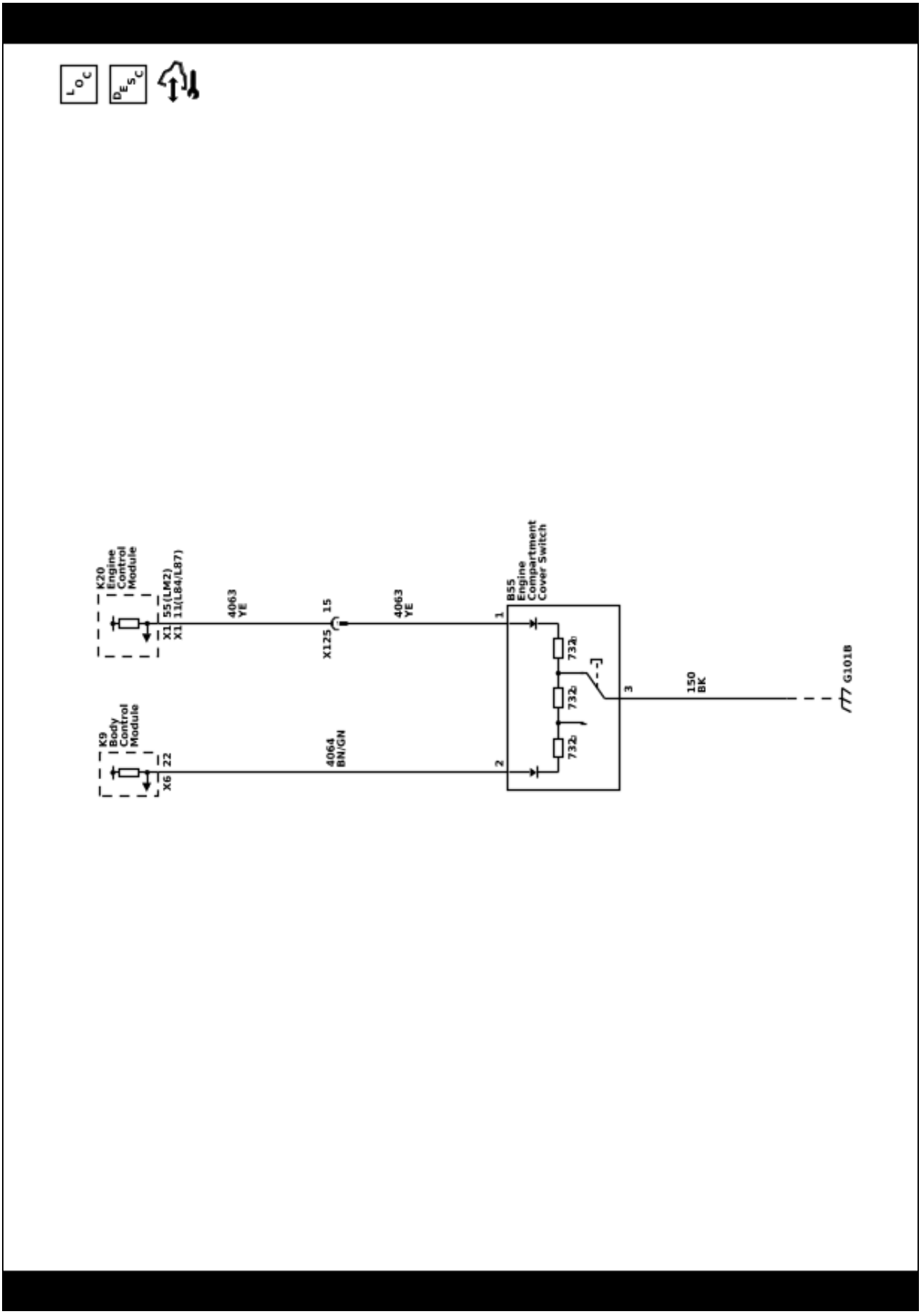

Liftgate Schematics (Rear Gate Module Power, Ground, Serial Data, and Liftgate Motor (TC2))

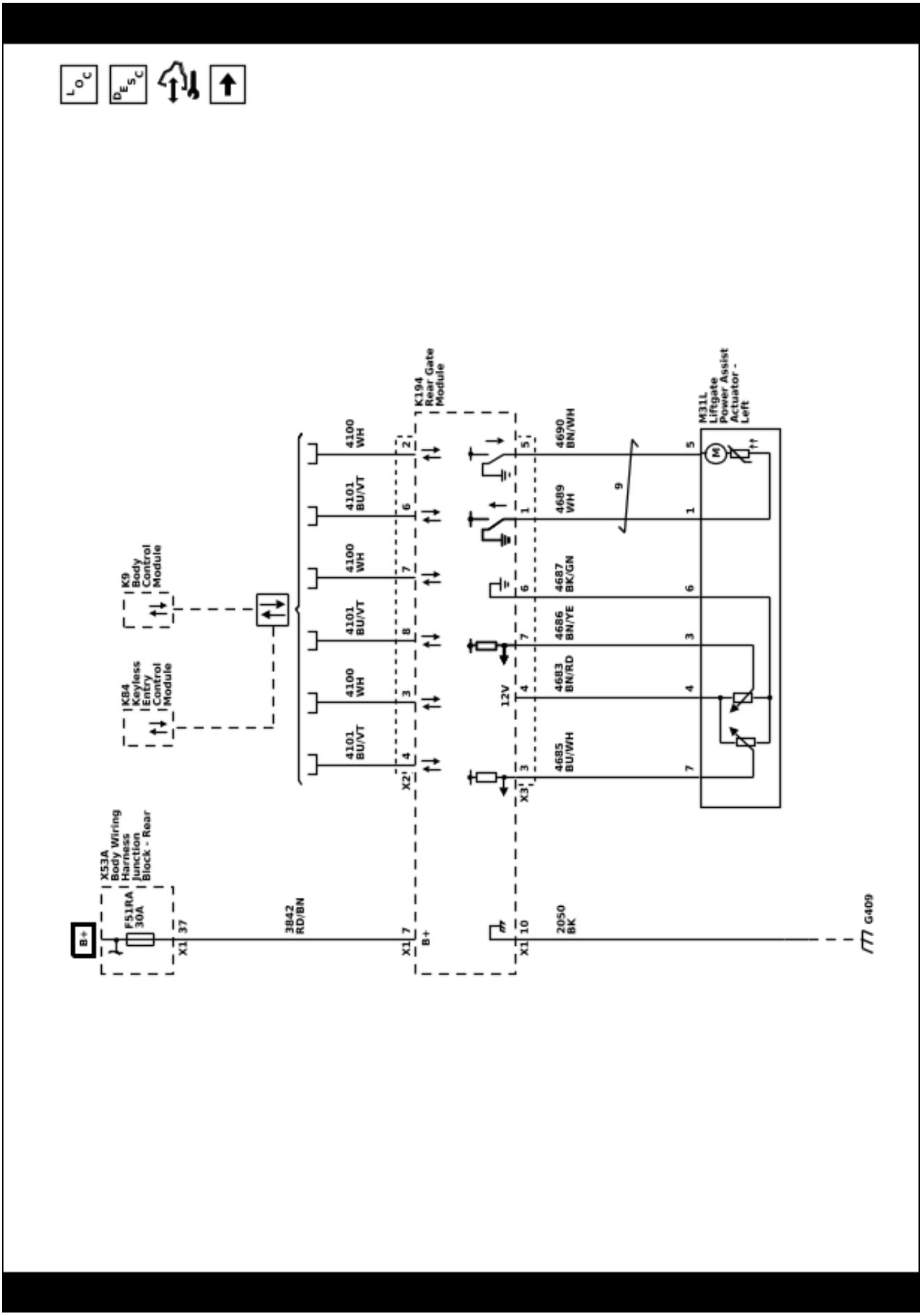

Liftgate Schematics (Liftgate Latch, Controls, and Object Sensors (TC2))

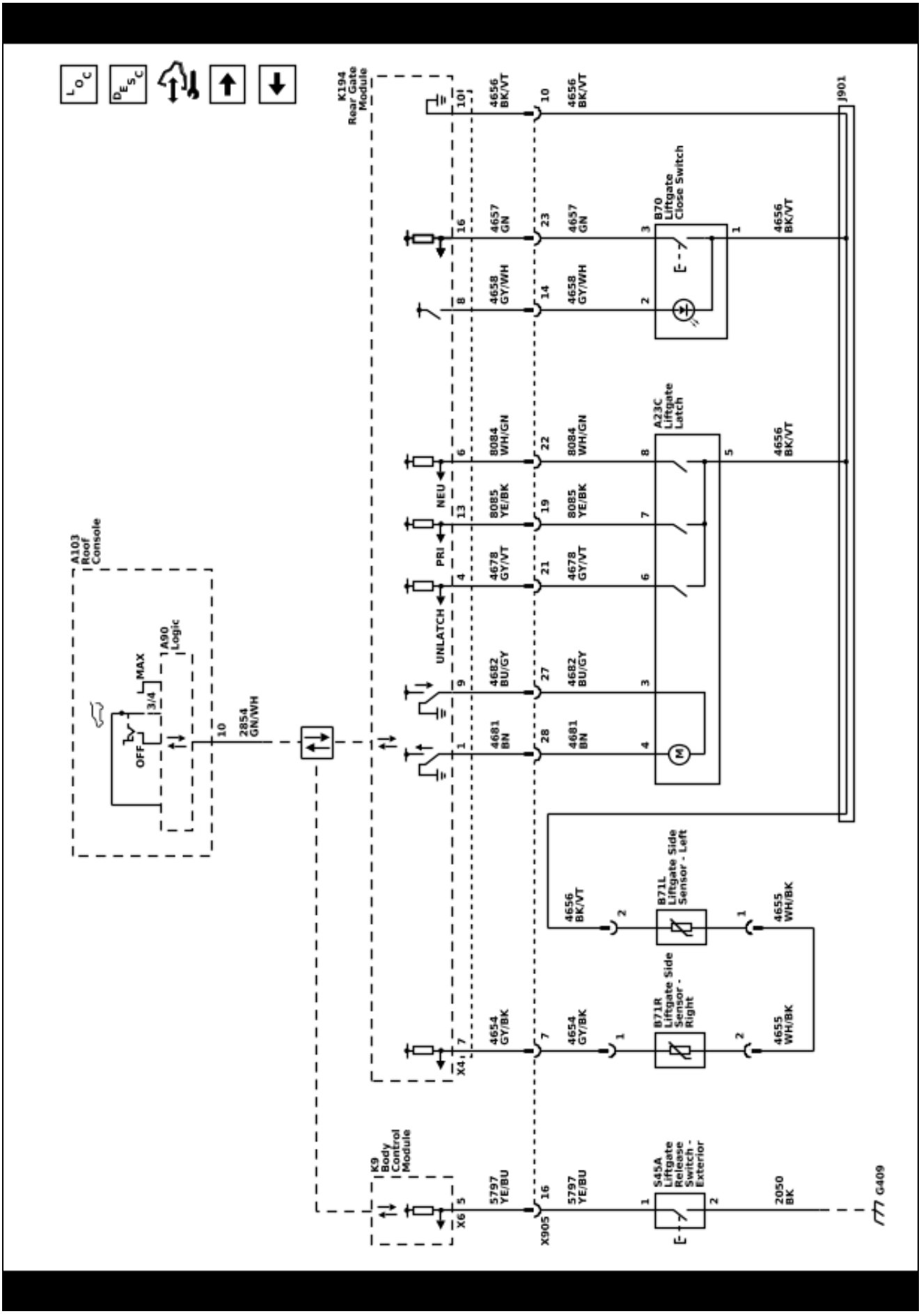

Liftgate Schematics (Rear Closure Hands Free Module (TC2))

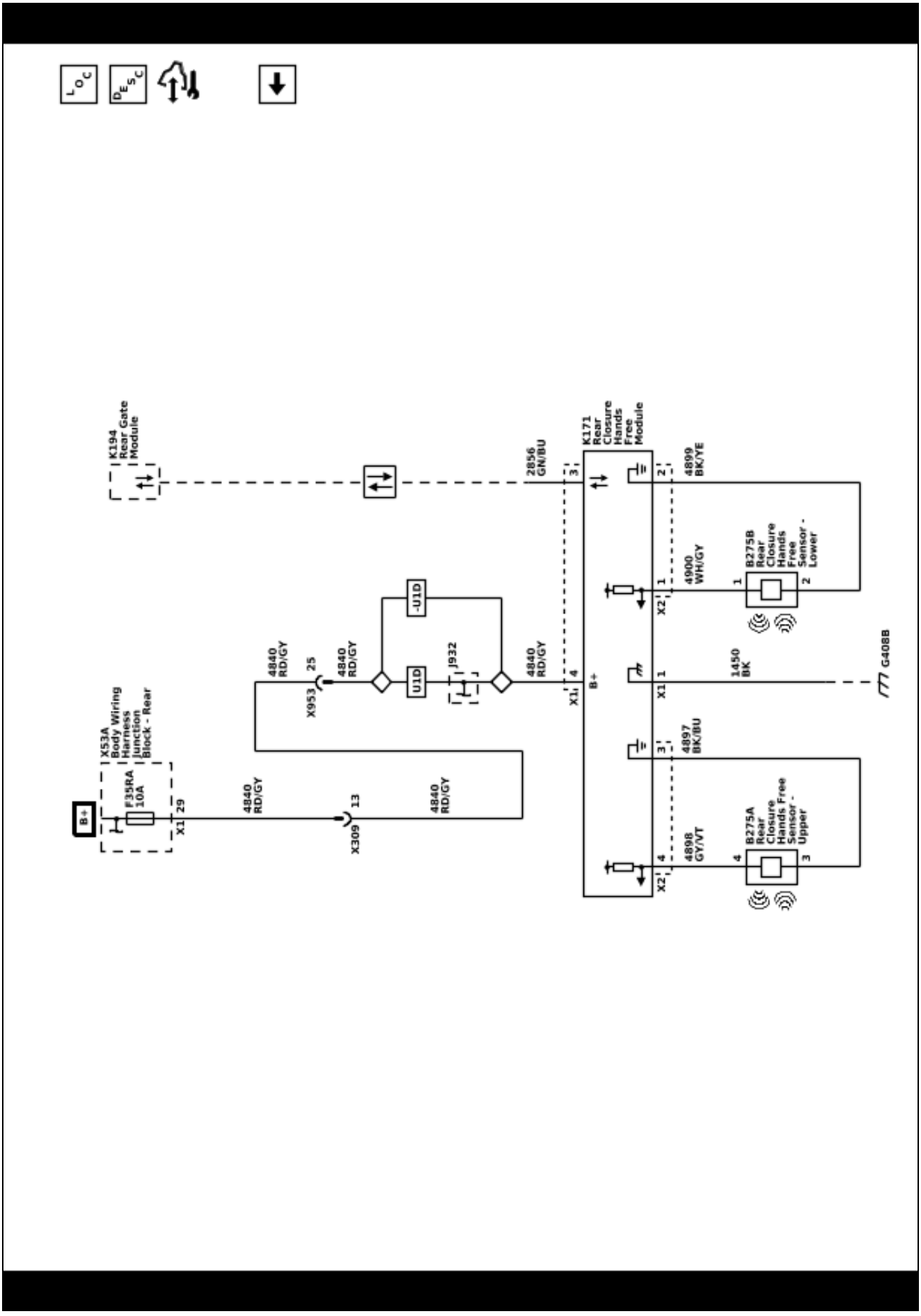

Description and Operation

Door Ajar Indicator Description and Operation

Door Ajar Indicator System Components

The door ajar indicator system consists of the following components:

- Body control module (BCM)
- Instrument cluster
- Driver door latch
- Passenger door latch
- Left rear door latch
- Right rear door latch
- Driver window motor
- Passenger window motor
- Left rear side door window switch
- Right rear side door window switch

Driver and Passenger Door Ajar

The window motor supplies a 12 V signal to the door ajar switch within the door latch, when a door is open the door ajar switch closes pulling the 12 V signal low. When the window motor detects the drop in the 12 V signal circuit, it will then communicate this status to the BCM via local interconnect network (LIN) bus. The BCM communicates with the instrument cluster via serial data message. The instrument cluster, upon receipt of this serial data message, will illuminate the door ajar indicator and also send a serial data message to the radio to activate the door ajar audible warning when the vehicle speed is greater then 8 km/h (5 mph).

Rear Doors Ajar

The rear side door window switches each provide a 12 V signal to their respective door ajar switch signal circuits. The rear door ajar switches are integral to each rear door latch assembly. When a rear door is opened, the normally open door ajar switch closes. With the door ajar switch closed, ground is provided to the door ajar switch signal circuit and the voltage within the signal circuit drops. The rear side door window switches will detect the voltage drop and will send a serial data message to the body control module which will then send a message to the instrument cluster to command the door ajar message

Fuel Fill Door Description and Operation

Fuel Door Release System Components

- Body control module (BCM)
- Fuel door release actuator

The locking and unlocking of the fuel door is a function of the power door lock system. The fuel door release actuator is supplied by the driver door lock control circuit and the fuel door unlock control circuit. The BCM, upon receipt of a lock switch lock or unlock signal, will supply battery voltage to the door lock actuator lock or fuel door unlock control circuits. Since the opposite side of the lock actuator is connected to ground through the other lock actuator control circuit, the doors and fuel filler door will then lock or unlock as commanded.

Hood Ajar Indicator Description and Operation

Hood Ajar Switch

The body control module (BCM) applies B+ to the hood ajar signal circuit and monitors the voltage to determine the position of the hood. When the hood is open, the switch is open and voltage remains high. When the hood is closed, the switch is closed and the voltage is pulled low.

The BCM uses the hood ajar switch as a content theft deterrent alarm trigger.

Hood Ajar Indicator/Message

When the hood is ajar, a message is displayed on the DIC or the hood ajar indicator will be illuminated.

Liftgate Ajar Indicator Description and Operation

Rear Access Open

Manual Liftgate

The driver information center will display the Rear Access Open message when the body control module (BCM) detects that the liftgate is open. The instrument panel cluster receives a serial data message from the BCM requesting illumination. If the vehicle is in the forward or reverse gear position, the BCM activates an audible warning.

Power Liftgate

The rear gate module detects the rear gate latch unlatch switch is closed to ground indicating the liftgate is open. The driver information center receives a serial data message from the rear gate module indicating the liftgate ajar status and the driver information center display the Rear Access Open message

Rear Liftglass Open

Liftgate Window

The lighting control module will monitor the voltage on the liftglass ajar signal circuit, when the ajar switch is open, the voltage level within the signal circuit will be greater than 7 volts indicating the liftgate window is in the closed position. When the liftgate window is open or ajar, the ajar switch will close providing a ground path for the signal circuit, the lighting control module will detect the drop in voltage and will send a serial data message to the driver information center to display the Rear Liftglass Open message.

Liftgate Description and Operation

System Description

The power liftgate system consists of the following components:

- Rear gate module
- Body control module
- Liftgate position sensor (part of the power assist actuator)
- Interior liftgate rotary switch
- Exterior liftgate release switch
- Liftgate close switch
- Liftgate latch
- Liftgate power assist actuator
- Left and right liftgate object sensors
- Rear closure hands free module
- Upper and lower rear closure hands free sensors
- Keyless entry transmitter

Operation

The power liftgate operations will be suspended if the rear wiper motor has been activated and wiping the liftgate window, the transmission selector is not in P (park) or if the vehicle speed is above 3KPH

The tail lamps will then flash 3X to indicate that the body control module has received a request to power open or power close

The power liftgate can be commanded to power open and power close by the following methods:

- An open or close command from the interior liftgate rotary switch
- An open command from the exterior liftgate release switch
- A close command from the liftgate close switch
- An open or close request by pressing the appropriate button 2x quickly on the keyless entry transmitter (¾ or the MAX modes only)
- An open or closed commanded by a kicking motion of a foot and lower leg under the rear fascia – Sensor location may vary depending upon make and model, refer to owner's manual for the location of the sensors. (configured under personalization)
- The kick projected logo light shows where to perform the kicking motion (Diagnosed in the exterior lighting section)

The rear gate module will respond to a request by commanding the liftgate latch to release the liftgate and activate the liftgate motor in the liftgate power assist actuator and raise the liftgate to the open position or to lower and cinch the liftgate closed.

Power Liftgate System

The rear gate module continuously monitors power liftgate operation and calculates its location and direction of travel from an liftgate position sensor (part of the power assist actuator). One input returns the position of the liftgate relative to the x-axis and y-axis. The rear gate module then uses these 2 inputs together to calculate its angle relative to the liftgate. The interior liftgate rotary switch contains resistors which will incrementally drop the voltage level in the signal circuit as the switch rotated from the OFF position to the ¾ position or the MAX position, the front overhead console assembly will detect the change in voltage and will send a serial data message to the rear gate module which will monitor the x-axis and y-axis as the liftgate is in motion to stop the liftgate parallel to the vehicle roof if the rotary switch is in the ¾ setting or to open fully if the rotary switch is in the MAX setting.

The liftgate latch is a bi-directional motor and latch or unlatch operation is the result of the direction of the motor rotation. The rear gate module controls the liftgate latch through the control circuits by supplying power and ground in the appropriate polarity. The motor control circuits are monitored by the rear gate module prior to activation for a high or low condition and during motor operation for an insufficient current flow condition. The unlatch, primary, and neutral switches are part of the liftgate latch and are used by the rear gate module to determine the state of the latch during the process of latching or unlatching and will send the status of the latches to the body control module which is used to determine if the liftgate is closed or ajar. Each of the latch switch signal circuits are supplied battery voltage and monitored within the rear gate module. The latch switches share a common low reference circuit from the rear gate module and when the switch contacts close the signal circuit goes low and the rear gate module determines the switch to be active.

The exterior liftgate release switch circuit is supplied battery voltage by the body control module, when the switch is pressed the contacts close and the signal circuit goes low, the body control module will detect the voltage drop and will send a serial data message to the rear gate module requesting the rear gate open request (vehicle unlocked).

The liftgate close switch signal circuit is supplied battery voltage by the rear gate module. The switch shares a common low reference circuit from the rear gate module and when the switch is pressed the contacts close and the signal circuit goes low, the rear gate module will detect the voltage drop and will send a serial data message to the body control module requesting the rear gate close request.

For vehicles without the optional passive keyless entry, when the exterior liftgate release switch is pressed, the body control module will check the status of the vehicle door locks. If the vehicle doors are locked, the body control module will ignore the signal from the liftgate handle switch. If the vehicle doors are unlocked, the body control module will permit the liftgate to unlatch and power open when the exterior liftgate release switch is pressed.

For vehicles with the optional passive keyless entry system, the body control module monitors the proximity of the keyless entry transmitter. If the exterior liftgate release switch is pressed and the keyless entry transmitter is within range, the body control module will send a serial data message to the rear gate module and will permit the liftgate to unlatch and power open. If the doors are locked and the keyless entry transmitter is not within range, the body control module will ignore the signal from the exterior liftgate release switch and the liftgate will not power open.

Rear Closure Hands Free Sensor

The sensors are located behind the rear fascia (location may vary depending upon make and model, refer to owner's manual for the location of the sensors) and is designed to detect the motion of the operator's foot by way of a kicking motion. When the keyless entry transmitter is within 3 feet (1 meter) of the liftgate and the operator kicks his or her foot under the rear fascia, the sensors will detect the motion of the foot and the lower leg and if the procedure has been performed correctly the rear closure hands free module will send a serial data message to the body control module. The tail lamps will then flash 3x to indicate that the command has been received and the body control module and will allow the liftgate to perform the power open or power close function. The rear closure hands free functions can be modified within the Vehicle Personalization:

- Open and close with the kicking motion
- Open only with the kicking motion
- Hands free function disabled
- Keyless Access function disabled

Object Detection

The power liftgate system uses an object detection method which consists of liftgate side sensors fixed to both sides of the liftgate near the seal area. The liftgate side sensors consist of an internal fixed resistor and normally open switch contacts which when closed will bypass the resistor. The signal circuit is supplied 5 V through a resistor and monitored within the rear gate module, and during normal power liftgate operation the signal circuit should remain a fixed value. When an liftgate side sensor is presses one of the sensors the contacts close and the resistor is bypassed causing the signal circuit voltage at the module to go low. If the liftgate is being power closed at that time, the rear gate module will command the power liftgate to reverse direction. All power close liftgate operations will be suspended until the obstruction pressing on the liftgate side sensor is removed

The rear gate module continuously monitors power liftgate operation and calculates its location and direction of travel from an liftgate position sensor (part of the power assist actuator). One input returns the position of the liftgate relative to the x-axis and y-axis. The rear gate module then uses these 2 inputs together to calculate its position and motion, if the rear gate module detects a current spike and motion reduction in the liftgate position sensor during the power close operation, it will command the liftgate to reverse direction.

Manual Liftgate Operation

Note: The interior liftgate rotary switch must be in the ¾ position or the MAX position for the remote keyless entry transmitter (key fob) to command the liftgate, The OFF setting will disable the liftgate release of the remote keyless entry transmitter (key fob)

The operator has the option to disable the power liftgate operations by selecting the "OFF" position on the interior liftgate rotary switch. The releasing and cinching for the liftgate latch will function normally, however, the operator must use the exterior liftgate handle switch to activate the liftgate latch and manually pull the liftgate open and push the liftgate closed. All power liftgate operations will be suspended for as long as the liftgate rotary switch is in the "OFF" position.

Power Door Locks Description and Operation

Door Lock System Components

The power door lock system consists of the following components:

- Driver door lock switch
- Passenger door lock switch
- Left rear door lock switch
- Right rear door lock switch
- Driver front side door window control switch
- Passenger front side door window switch
- Driver front side door latch
- Passenger front side door latch
- Left rear side door latch
- Right rear side door latch
- Exterior door handle switches
- Body control module
- Lighting control module

Door Lock System Controls

The power door lock system can be controlled by any of the following:

- Power door lock switch activation
- Keyless entry lock or unlock command
- Delayed locking command
- Automatic door lock command
- When the OnStar® system is used to unlock the driver door

Door Lock and Unlock Operation

The driver or passenger front side door window control switch will monitor the voltage of their respective door lock switches, when the driver or passenger door lock switch is activated in the lock or unlock position the signal voltage will be pulled low, the corresponding front side door window control switch will detect the voltage drop in the signal circuit and will send a serial data message to the body control module requesting the door lock or unlock command.

The lighting control module will monitor the voltage of the left rear and right rear door lock switches, when the left rear or right rear door lock switch is activated in the lock or unlock position the signal voltage will be pulled low, the lighting control module will detect the voltage drop in the signal circuit and will send a serial data message to the body control module requesting the door lock or unlock command.

The body control module upon receipt of a lock or unlock request, will supply battery voltage to the door lock actuator lock or unlock control circuits. Since the opposite side of the lock actuator is connected to ground through the other lock actuator control circuit, the doors, and fuel filler door will then lock or unlock as commanded.

The following control circuits are used to operate the door lock actuators:

- Driver door unlock only
- Passenger and rear door unlock
- All door lock

This sequence and be modified through the personalization settings

Passive Door Lock/Unlock Operation

The exterior door handle switch signal circuits provide inputs to the body control module when the exterior door handle switches are activated. These inputs allow the body control module to detect a door lock or a door unlock request. The body control module provides a 7 V signal to each exterior door handle switch via the door handle switch signal circuits. When a door handle switch is pressed, the switch closes and the voltage signal within the signal circuit is pulled to ground. The body control module will detect the voltage drop and a low frequency antenna will transmit a challenge to the keyless entry transmitter. If the challenge is met, the keyless entry transmitter will respond, and the body control module will command the door(s) to be locked or unlocked

Rear Hatch/Gate Description and Operation

Liftgate/Liftgate Window Release Components

The liftgate release system consists of the following components:

- Body control module
- Lighting control module
- Rear gate module (TC2)
- Liftgate latch assembly
- Exterior liftgate release switch
- Exterior liftgate window release switch
- Liftgate window latch
- Liftgate window release relay

Liftgate Latch Assembly

Note: The function of the liftgate latch and the liftgate window latch will be disabled if the rear wiper motor has been activated and wiping the liftgate window

When the passenger door, right rear door and liftgate have been commanded to lock with a door lock switch or a keyless entry transmitter, the exterior liftgate release switch will become inoperative the same way the passenger door handles will become inoperative to prevent unauthorized access. Also the passenger and right rear doors must be commanded to unlock to enable the exterior liftgate release switch. When the exterior liftgate release switch is pressed, the body control module will provide B+ voltage to the liftgate latch unlatch control circuit and ground to the unlock control 2 circuit causing the liftgate latch assembly to perform the unlatch function releasing the liftgate and allowing the liftgate to be pulled open.

Liftgate Window Latch Assembly

Exterior Liftgate Window Release Switch

The lighting control module (TB4) or the rear gate module (TC2) monitors supplies a 12 V signal to the liftgate window unlatch switch so that when the switch is pressed, the voltage within the signal circuit is pulled low and in response, the lighting control module (TB4) or the rear gate module (TC2) will detect the voltage drop and send a serial data message to the body control module to command the liftgate window to release.

Liftgate Window Latch

When body control module receives a liftgate window release command from the liftgate window unlatch switch, the body control module applies voltage to the liftgate window unlatch relay control circuit, which energizes the coil side of the relay. The switch side of the liftgate window unlatch relay then momentarily closes, supplying a brief pulse of battery positive voltage to the liftgate window latch. The liftgate window latch is continuously grounded and when it receives the voltage pulse, it will become energized and the latch will activate releasing the liftgate window so that it may be manually raised to an open position.

Section 3

Driver Information and Entertainment

Image Display Cameras 3-3
Schematic and Routing Diagrams 3-3
Image Display Camera Schematics 3-4
Description and Operation 3-8
Rearview Camera Full Display Mirror Description and Operation 3-8
Rear Vision Camera Description and Operation 3-8
Surround Vision Camera Description and Operation 3-8

BLANK

Image Display Cameras

Schematic and Routing Diagrams

Image Display Camera Schematics (Rearview Driver Information Camera (UVB))

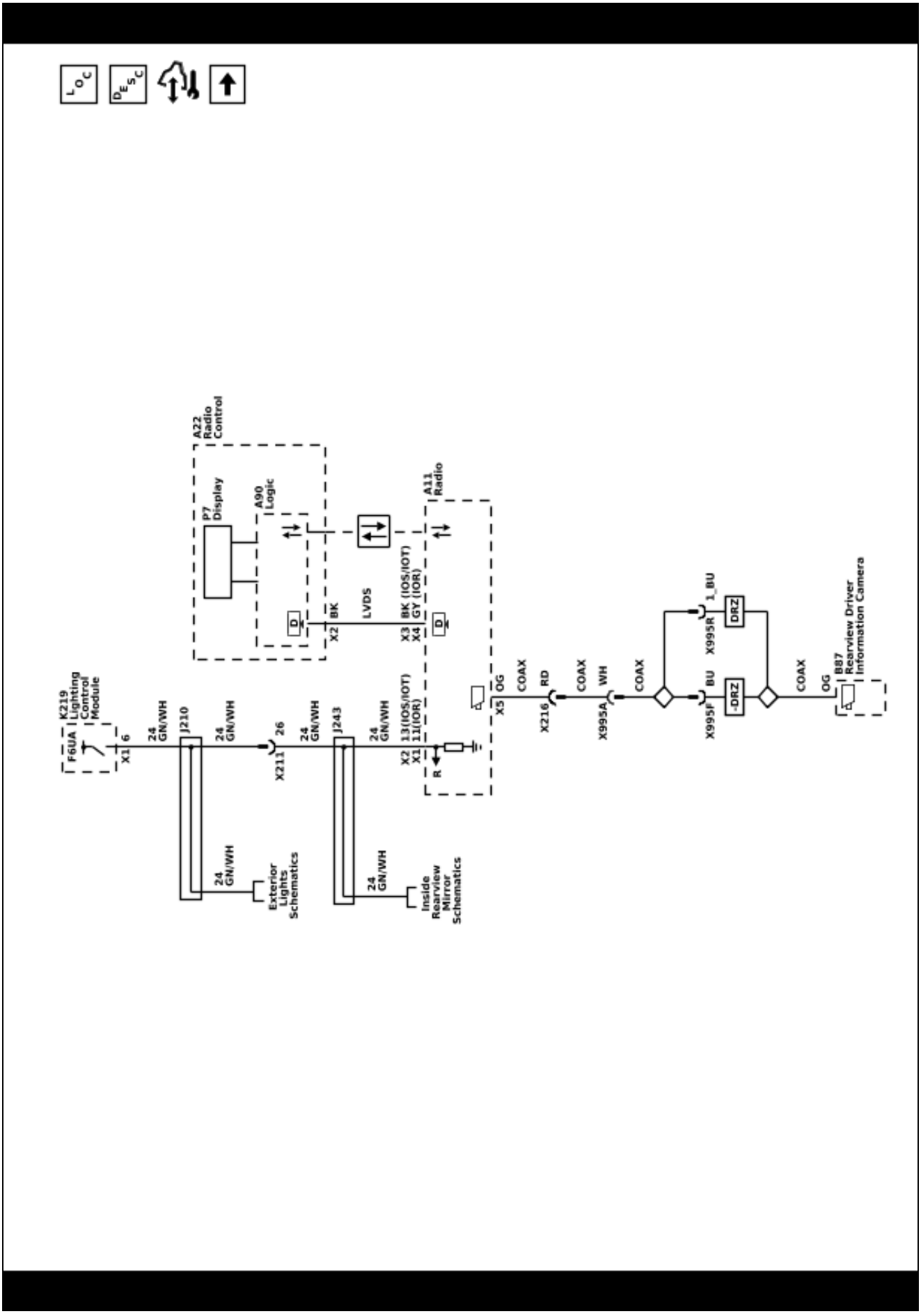

Image Display Camera Schematics (Inside Rearview Mirror Camera (DRZ))

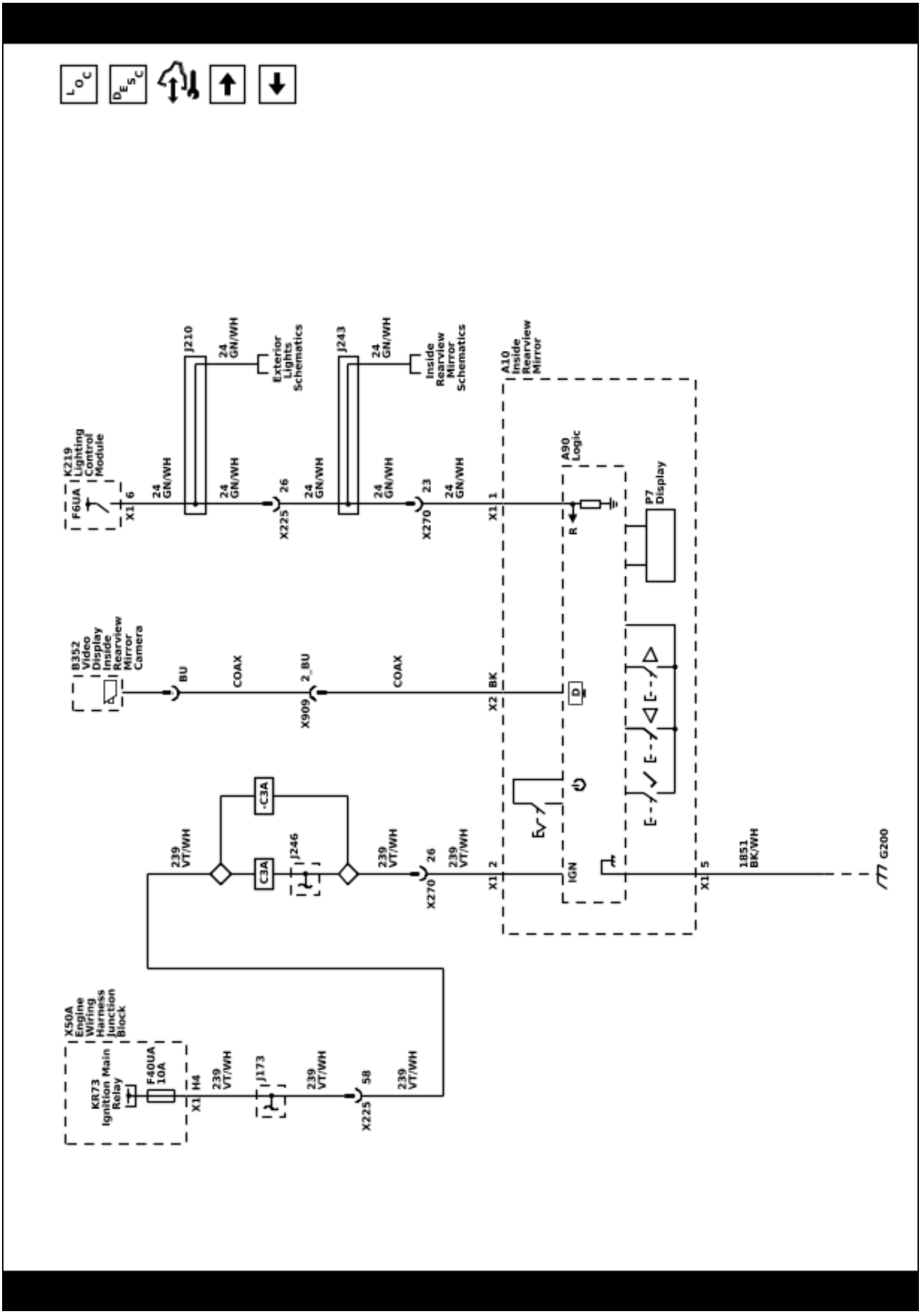

Image Display Camera Schematics (360 Degree Vision - Module Power, Ground, Serial Data, and Controls (UV2))

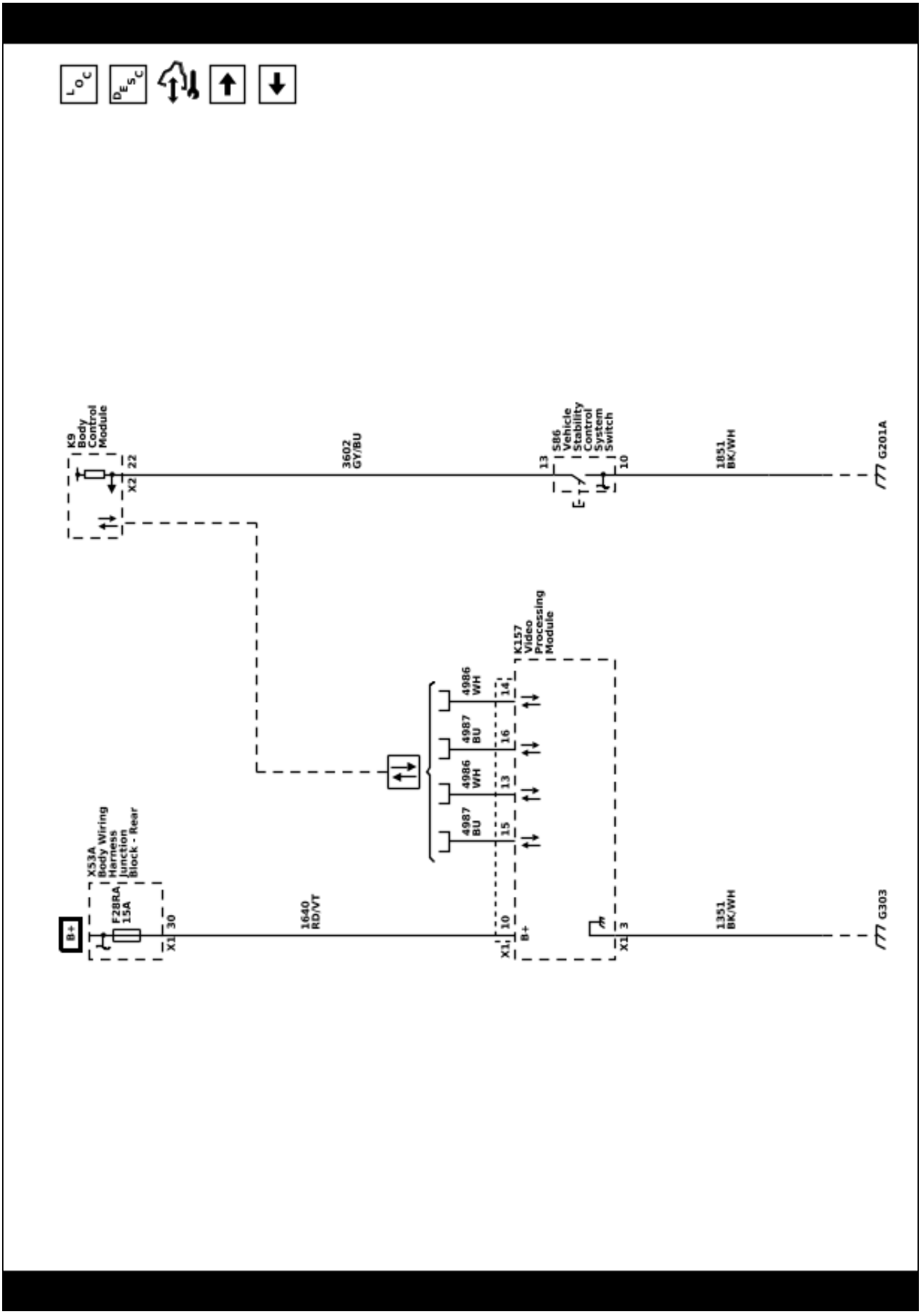

Image Display Camera Schematics (360 Degree Vision - Cameras and Display (UV2))

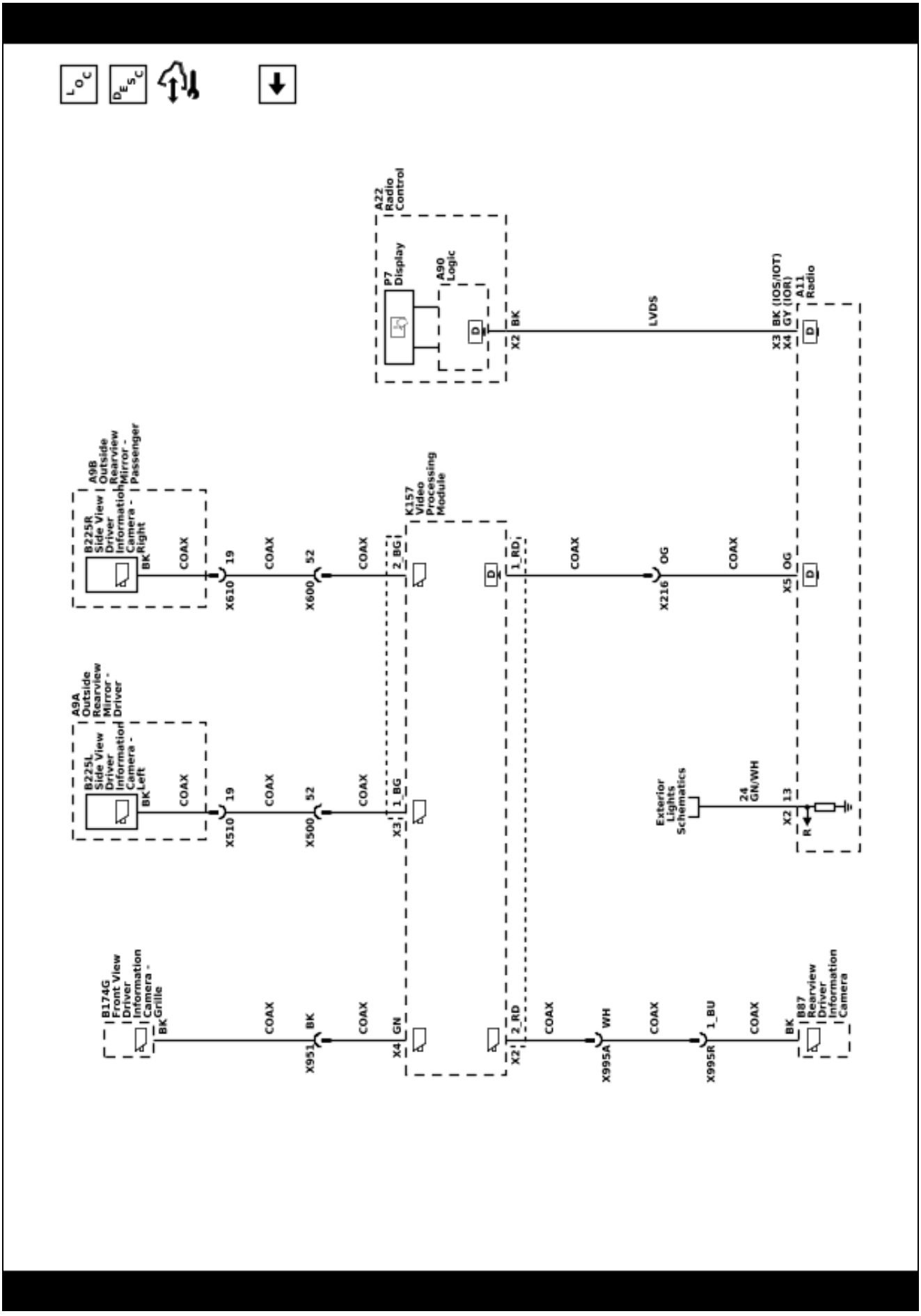

Description and Operation

Rearview Camera Full Display Mirror Description and Operation

If equipped, full display mirror provides a wider field of view than normally seen from the inside rearview mirror to assist when driving and changing lanes. When the tab under the inside rearview mirror is pulled rearward, a view of the area behind the vehicle displays on the mirror. The inside rearview camera full display mirror is connected to the outside rearview camera via a shielded coaxial cable.

When the tab under the inside rearview mirror is pulled rearward, a view of the area behind the vehicle displays on the mirror.

Adjust the rearview mirror for a clear view of the area behind the vehicle before turning on full display mirror. Use the three buttons on the bottom of the mirror to adjust the brightness, zoom, and tilt of the display. Make sure the light sensor is not covered when adjusting the brightness.

The inside rearview camera full display mirror may not work properly or display a clear image if:.

- It is dark.
- The sun or the beam of headlamps are shining directly into the camera lens.
- Ice, snow, mud, or anything else builds up on the camera lens. Clean the lens, rinse it with water, and wipe it with a soft cloth.

When the mirror detects that the camera is not sending a valid video signal, it “blue screens” with a “no video” decal for 3 seconds, then reverts back to the mirror.

Rear Vision Camera Description and Operation

Rear Vision Camera System Operation

The rear vision camera system consists of a video camera located at the rear of the vehicle and the Rado.

When the transmission is placed into REVERSE, a signal is sent to the Radio indicating that camera operation is requested. The rearview camera sends video information to the radio through a coax cable. The coax cable also provides power from the Radio to the rearview camera.

The following conditions may cause a degraded rear vision camera image:

- Ice, snow, or mud has built up on the rear vision camera
- Dark conditions
- Extreme light conditions, such as glare from the sun or the headlights of another vehicle
- Damage to the rear of the vehicle
- Extreme high temperatures or extreme temperature changes

If a malfunction is detected in the system, Service Rear Vision Camera may be displayed on the Info Display Module as an indicator to the customer that a problem exists that requires service.

Surround Vision Camera Description and Operation

Warning: The Surround Vision cameras have blind spots and will not display all objects near the corners of the vehicle. Folding outside mirrors that are out of position may not display surround view correctly. Always check around the vehicle when parking or backing.

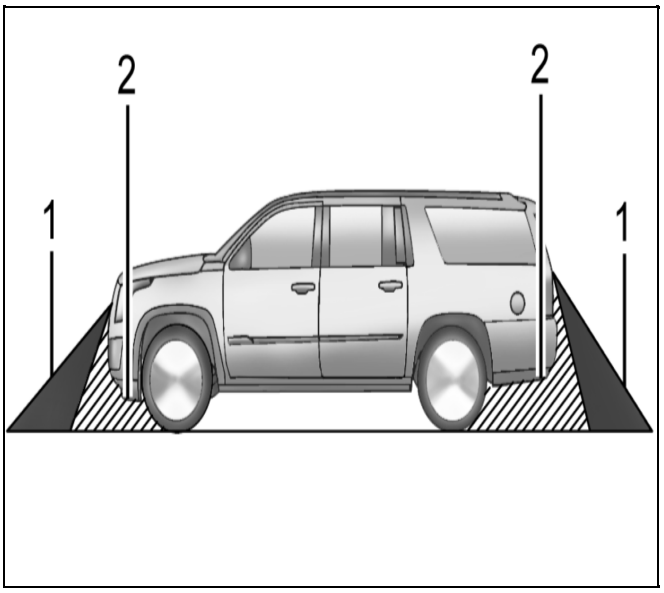

4291164

1. View Displayed by the Surround Vision Camera
2. Area Not Shown

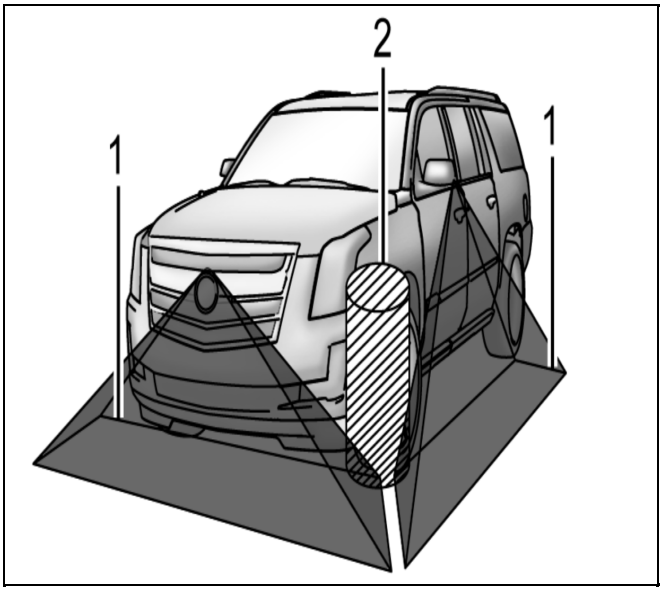

4291749

1. View Displayed by the Surround Vision Camera
2. Area Not Shown

The surround vision camera system consists of the following components:

- B87 Rearview Camera
- B174G Frontview Camera – Grille
- K157 Video Processing Control Module
- A11 Radio **OR** K74 Human Machine Interface Module
- B225L Sideview Camera – Left
- B225R Sideview Camera – Right
- X20 Memory Card Receptacle (with XVR)

When the vehicle is traveling at speeds slower than 6 mph (10kph) the video processing control module will power up the cameras and send a video signal to the radio or human machine interface module.

The following conditions may cause a degraded surround vision camera image:

- Ice, snow, or mud has built up on the rear vision camera
- Dark conditions
- Extreme light conditions, such as glare from the sun or the headlights of another vehicle
- Damage to the rear of the vehicle
- Extreme high temperatures or extreme temperature changes

Surround Vision displays an overhead view of the area surrounding the vehicle, along with the front or rear camera views in the center stack. The front camera is in the grille or near the front emblem, the side cameras are on the bottom of the outside rearview mirrors, and the rear vision camera is above the license plate.

Note: Images from the Sideview Cameras are only displayed when both front doors are properly closed.

Features of the Surround Vision System

- Rear camera (B87 Rearview Camera) view alongside overhead view is displayed in reverse
- Front camera (B174G Frontview Camera – Grille) view alongside overhead view is displayed after shifting out of reverse to Neutral or Drive
- Will display front view when front park assist object is within trigger range calibration value (30 cm (12 in) in a forward gear
- Image is removed from display when vehicle speed exceeds speed calibration (10kph/6 mph) or button press / screen touch

System Operation

The video processing control module is connected to each camera via a shielded coaxial cable. The coaxial cable provides power for the camera and also carries the video image from the cameras to the video processing control module for processing. The video processing control module will then send the processed image output to infotainment system via another coaxial cable.

The video processing control module receives CAN information from Rear Park Assist object detection module and Steering Wheel angle from body control module during Reverse. A warning triangle may display during the 360 surround view screen if Rear Parking Assist has detected an object during a reverse. This triangle changes from amber to red and increases in size the closer the object. Also a dynamic guideline is displayed in Reverse to show the projected path of the vehicle.

If equipped, the video processing control module system may have a memory card receptacle (with XVR) located in the trunk. The memory card receptacle interfaces with the video processing control module via a USB cable. The memory card receptacle also receives fused battery voltage and ground from the video processing control module. The video processing control module uses the memory card as a mass storage device, similar to a USB storage device.

BLANK

Section 4

Engine/Propulsion

12 V Starting and Charging 4-3
Schematic and Routing Diagrams 4-3
Starting and Charging Schematics 4-4
Description and Operation 4-8
Battery Description and Operation 4-8
Charging System Description and Operation 4-8
Electrical Power Management Description and Operation 4-11
Starting System Description and Operation 4-13
Stop/Start System Description and Operation 4-14

BLANK

12 V Starting and Charging

Schematic and Routing Diagrams

Starting and Charging Schematics (Starting (L84/L87))

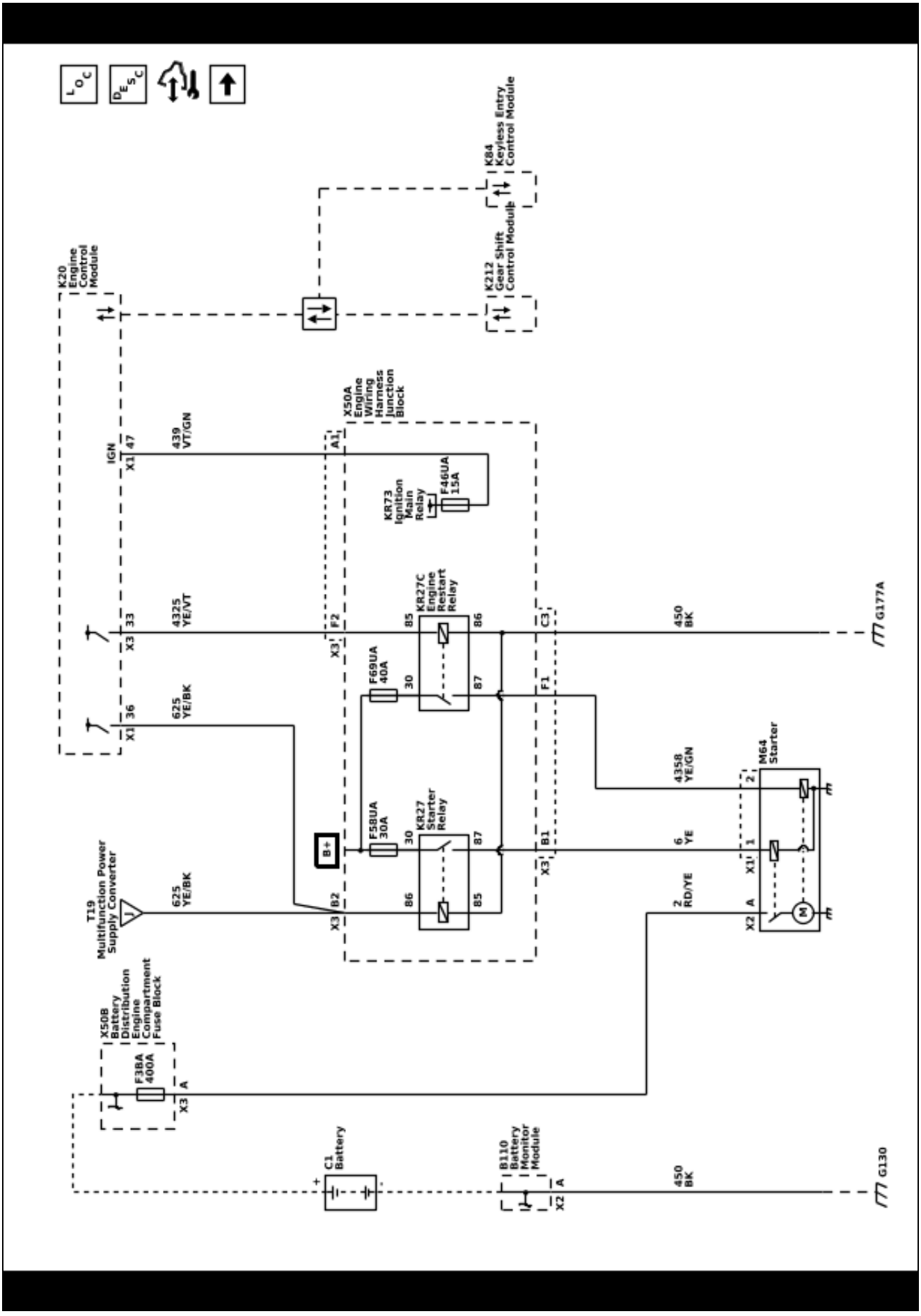

Starting and Charging Schematics (Starting (LM2))

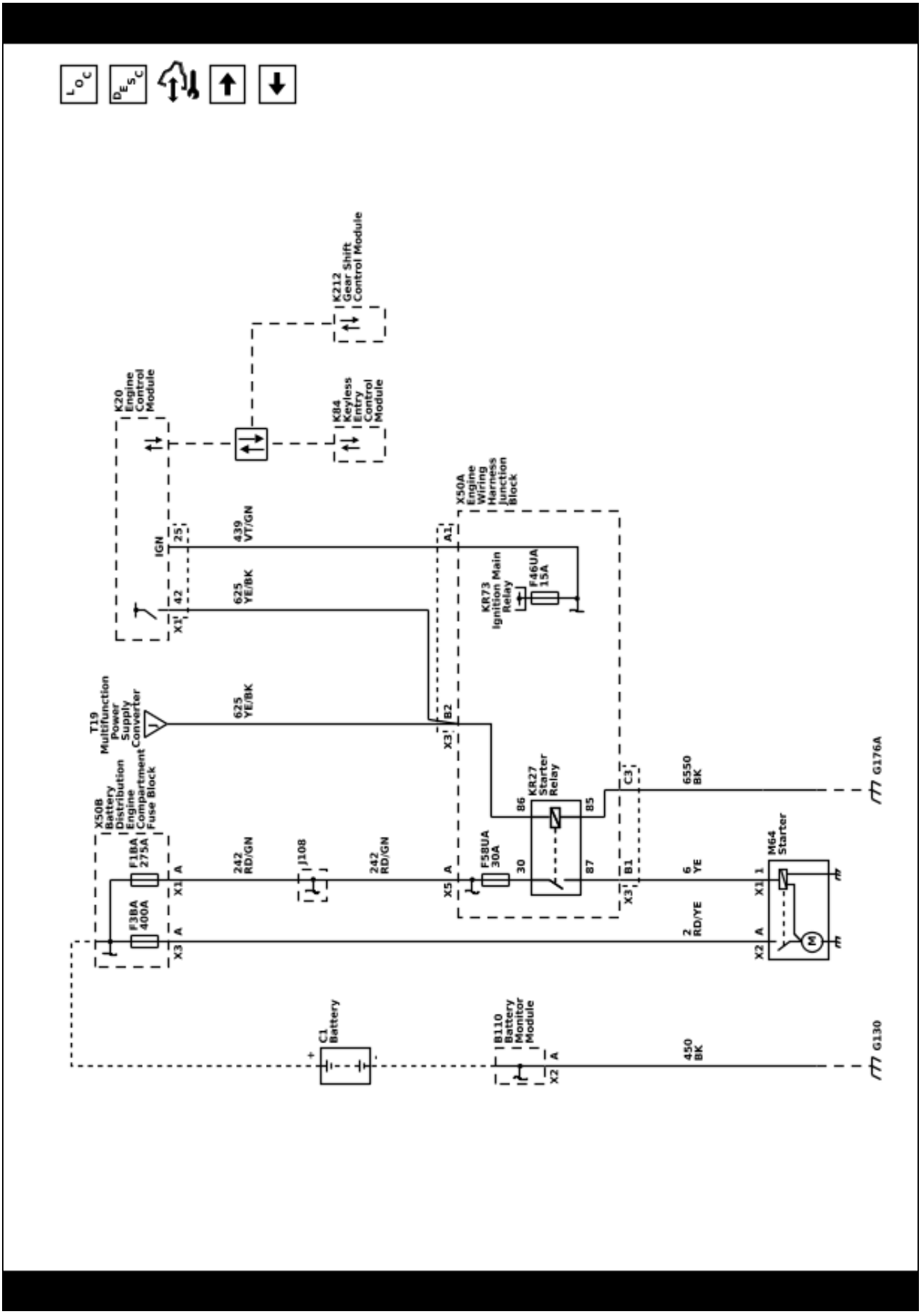

Starting and Charging Schematics (Charging)

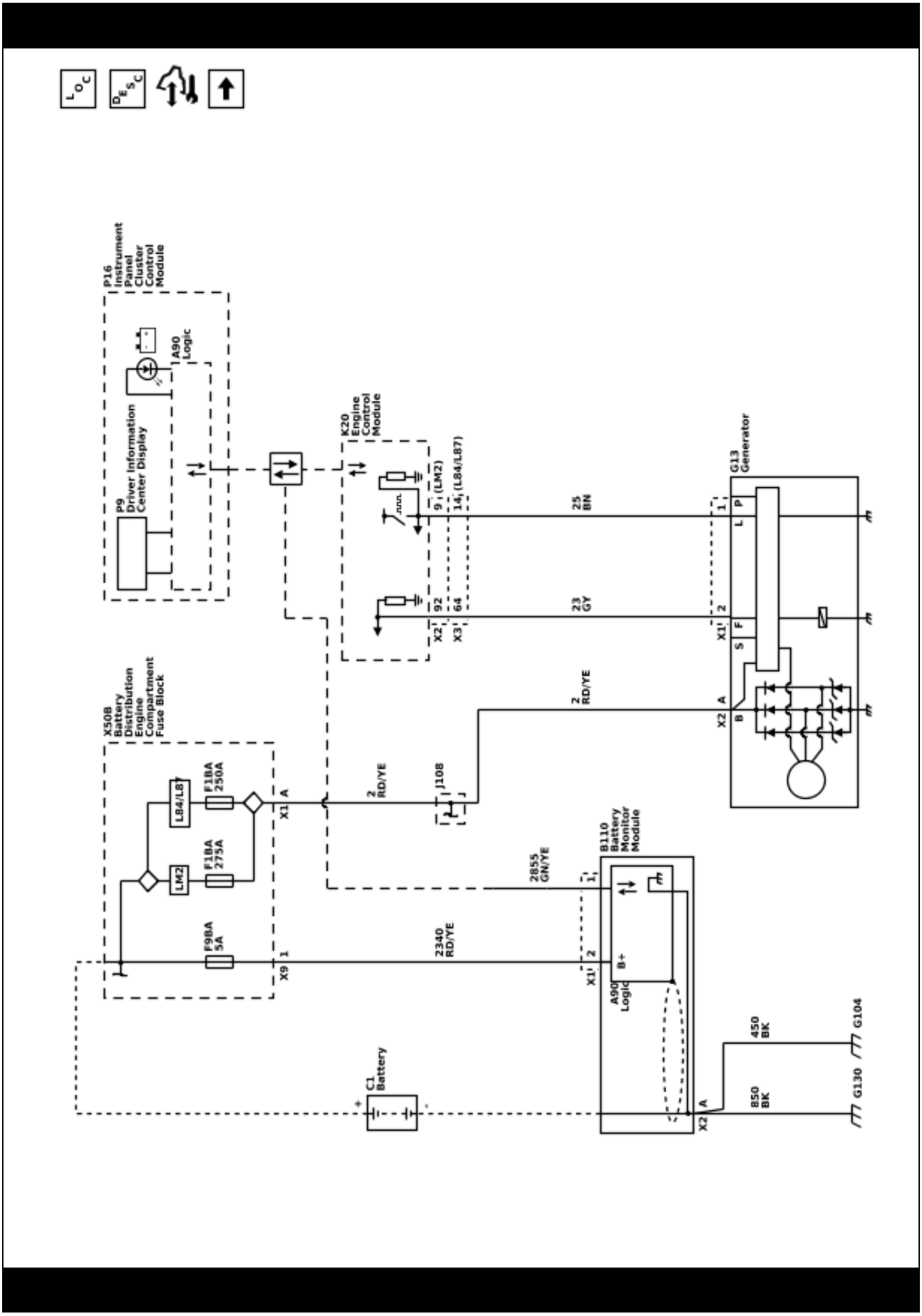

Starting and Charging Schematics (Stop/Start System)

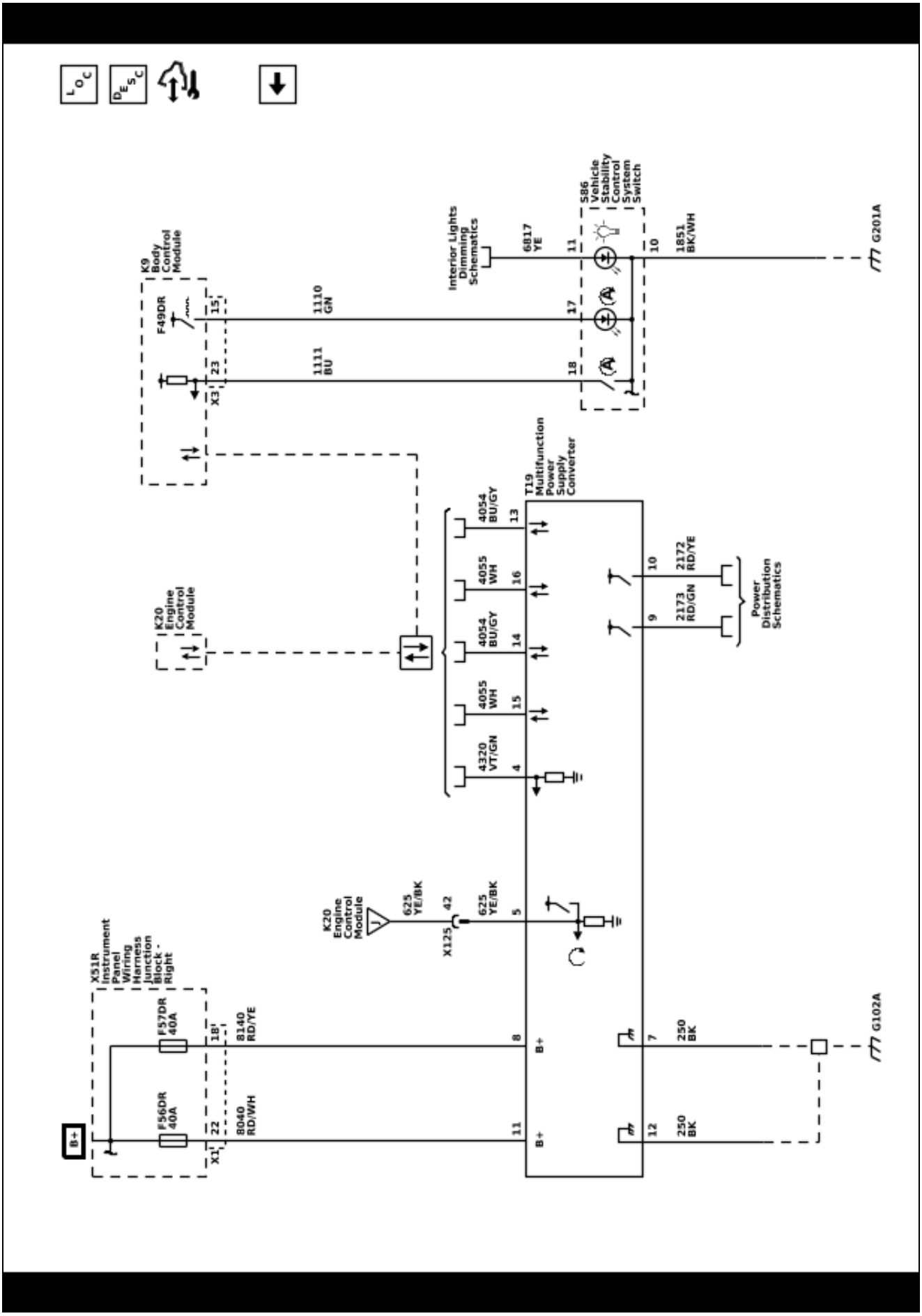

Description and Operation

Battery Description and Operation

Warning: Batteries produce explosive gases, contain corrosive acid, and supply levels of electrical current high enough to cause burns. Therefore, to reduce the risk of personal injury when working near a battery:

- ***Always shield your eyes and avoid leaning over the battery whenever possible.***
- ***Do not expose the battery to open flames or sparks.***
- ***Do not allow the battery electrolyte to contact the eyes or the skin. Flush immediately and thoroughly any contacted areas with water and get medical help.***
- ***Follow each step of the jump starting procedure in order.***
- ***Treat both the booster and the discharged batteries carefully when using the jumper cables.***

Batteries that are no longer wanted must be disposed of by an approved battery recycler and must never be thrown in the trash or sent to a landfill.

Batteries that are not part of the vehicle itself, not the battery under the hood, must only be transported on public streets for business purposes via approved hazardous material transportation procedures.

Battery storage, charging and testing facilities in repair shops must meet various requirements for ventilation, safety equipment, material segregation, etc.

The maintenance free battery is standard. There are no vent plugs in the cover. The battery is completely sealed except for 2 small vent holes in the side. These vent holes allow the small amount of gas that is produced in the battery to escape.

The battery has 3 functions as a major source of energy:

- Engine cranking
- Voltage stabilizer
- Alternate source of energy with generator overload

Battery Low Start Vehicle Message

The body control module (BCM) monitors battery positive voltage to determine battery state of charge. If one or more of the BCM battery positive voltage terminals measure less than approximately 11.6V compared to the BCM ground circuits, this message will display and four chimes may sound. Start the vehicle immediately. If the vehicle is not started and the battery continues to discharge, the climate controls, heated seats, and audio systems will shut off and the vehicle may require a jump start. These systems will function again after the vehicle is started.

Battery Ratings

A battery has 2 ratings:

- Cold cranking amperage
- Amperage hours

When a battery is replaced use a battery with similar ratings. See battery specification label on the original battery.

Amperage Hours

The amperage hour rating tells you how much amperage is available when discharged evenly over a 20 hour period. The amperage hour rating is cumulative, so in order to know how many constant amperage the battery will output for 20 h, you have to divide the amperage hour rating by 20. Example: If a battery has an amperage hour rating of 74, dividing by 20 = 3.75. Such a battery can carry a 3.75 A load for 20 hours before dropping to 10.5 V. (10.5 V is the fully discharged level, at which point the battery needs to be recharged.) A battery with an amperage hour rating of 55 will carry a 2.75 A load for 20 hours before dropping to 10.5 V.

Cold Cranking Amperage

The cold cranking amperage is an indication of the ability of the battery to crank the engine at cold temperatures. The cold cranking amperage rating is the minimum amperage the battery must maintain for 30 seconds at −18°C (0°F) while maintaining at least 7.2 V. See battery label for the cold cranking amperage rating of this battery.

Charging System Description and Operation

Electrical Power Management Overview

The electrical power management system is designed to monitor and control the charging system and send diagnostic messages to alert the driver of possible problems with the battery and generator. This electrical power management system primarily utilizes existing on-board computer capability to maximize the effectiveness of the generator, to manage the load, improve battery state-of-charge and life, and minimize the system's impact on fuel economy. The electrical power management system performs 3 functions:

- Monitor the battery voltage and estimate the battery condition
- Take corrective actions by boosting idle speeds, and adjusting the regulated voltage
- Perform diagnostics and driver notification

The battery condition is estimated during ignition/vehicle off and during ignition/vehicle on. During ignition/vehicle off the state-of-charge of the battery is determined by measuring the open-circuit voltage. The state-of-charge is a function of the acid concentration and the internal resistance of the battery, and is estimated by reading the battery open circuit voltage when the battery has been at rest for several hours.

Any time the ignition/vehicle is on, the vehicle algorithm continuously estimates battery state-of-charge based on adjusted net amp hours, battery capacity, initial state-of-charge, and calculated temperature.

While the engine is running, the battery degree of discharge is primarily determined by the integrated battery current sensor, to obtain net amp hours.

In addition, the electrical power management function is designed to perform regulated voltage control to improve battery state-of-charge, battery life, and fuel economy. This is accomplished by using knowledge of the battery state-of-charge and temperature to set the charging voltage to an optimum battery voltage level for recharging without detriment to battery life.

Charging System Components

G13 Generator

The engine drive belt drives the generator. When the rotor is spun, it induces an alternating current (AC) into the stator windings. The AC voltage is then sent through a series of diodes for rectification. The rectified voltage has been converted into a direct current (DC) for use by the vehicles electrical system to maintain electrical loads and the battery charge. The voltage regulator integral to the generator controls the output of the generator; It is not serviceable. The voltage regulator controls the amount of current provided to the rotor. If the generator has field control circuit fault, the generator defaults to an output voltage of 13.8 V.

The generator is serviced as a complete assembly. If there is a diagnosed fault in the generator, it must be replaced as an assembly.

Generator Pulley

The pulley drives the Generator via the engine drive belt. There are 2 types of pulleys:

1. Conventional solid Pulley which is bolted to the Generator stator shaft. This Pulley can be serviced separately.

2. One Way Clutch Pulley or Overrunning Alternator Decoupler Pulley allows the Generator to spin freely when the engine rapidly slows down on sudden deceleration. This part is not serviceable and the Generator needs to be replaced as an assembly.

K9 Body Control Module (BCM)

The K9 Body Control Module communicates with the K20 Engine Control Module and the instrument cluster for electrical power management operation. The BCM determines the output of the generator and sends the information to the ECM for control of the generator turn on signal circuit. It monitors the generator field duty cycle signal circuit information sent from the ECM for control of the generator. It monitors the battery current sensor, the battery positive voltage circuit, and estimates battery temperature to determine battery state of charge. The BCM also performs idle boost.

B110 Battery Monitor Module

The Battery Monitor Module communicates to the BCM via LIN. The BCM shares this information with the ECM. The purpose of the battery sensor module is to transmit battery information that the BCM/ECM can use to make decisions regarding stop/start, battery saver mode, and load shedding.

K20 Engine Control Module (ECM)

When the engine is running, the generator turn-on signal is sent to the generator from the ECM, turning on the regulator. The generator's voltage regulator controls current to the rotor, thereby controlling the output voltage. The rotor current is proportional to the electrical pulse width supplied by the regulator. When the engine is started, the regulator senses generator rotation by detecting AC voltage at the stator through an internal wire. Once the engine is running, the regulator varies the field current by controlling the pulse width. This regulates the generator output voltage for proper battery charging and electrical system operation. The generator field duty terminal is connected internally to the voltage regulator and externally to the ECM. When the voltage regulator detects a charging system problem, it grounds this circuit to signal the ECM that a problem exists. The ECM monitors the generator field duty cycle signal circuit, and receives control decisions based on information from the BCM.

P16 Instrument Cluster

As a means of displaying the charging system functions, some vehicles may be equipped with a voltmeter gauge on the instrument cluster and/or a system voltage display in the driver information center. These will indicate the current vehicle system voltage.

The instrument cluster also provides customer notification if there is a concern with the charging system. There are two means of notification: a charge indicator on the instrument cluster and/or a service system message displayed on the Driver Information Center (DIC) if equipped.

Charging System Operation

The purpose of the charging system is to maintain the battery charge and vehicle loads. There are 6 modes of operation and they include:

- Battery Sulfation Mode
- Charge Mode
- Fuel Economy Mode
- Head lamp Mode
- Start Up Mode
- Voltage Reduction Mode

The ECM Controls the Generator through the generator turn–on signal circuit, also known as the Generator L-terminal. The ECM monitors the generator performance though the Generator field duty cycle signal circuit, also known as the generator F-terminal.

The Generator turn–on signal (Generator L-terminal) is a Pulse Width Modulation (PWM) signal of 128 Hz with a duty cycle of 0–100%. Normal duty cycle is between 5–95%. 0–5% and 95–100% are for diagnostic purposes, with 0–5% monitoring for an open circuit and 95–100% monitoring for a short to ground at a fixed 13.8 V. The following table shows the commanded duty cycle and output voltage of the Generator:

Commanded Duty Cycle	Generator Output Voltage (+/- .25 V)
0–5%	13.8 V
10%	11 V
20%	11.56 V
30%	12.13 V
40%	12.69 V
50%	13.25 V
60%	13.81 V

Commanded Duty Cycle	Generator Output Voltage (+/- .25 V)
70%	14.38 V
80%	14.94 V
90%	15.5 V
95–100%	13.8 V

The Generator provides a PWM feedback signal of the Generator voltage output through the Generator field duty cycle signal circuit to the ECM. This information is sent to the Body Control Module (BCM). The Generator field duty cycle signal (Generator F-terminal) is a PWM signal of 60–460 Hz with a duty cycle of 0–100%. Normal duty cycle is between 5–100%. 0–5% is reserved for diagnostic purposes.

As the charging systems works to maintain the battery charge and manage vehicle electrical loads, it is normal for the voltmeter gauge on the instrument cluster or the system voltage displayed in the DIC to fluctuate or change. This does not indicate a malfunction. Depending on the battery state of charge and the vehicle electrical load, these values may be anywhere from 12.5 V to 15.5 V.

Charging System Modes

Battery Sulfation Mode

The BCM will enter this mode when the interpreted Generator output voltage is less than 13.2 V for 45 minutes. When this condition exists the BCM will enter Charge Mode for 2–3 minutes. The BCM will then determine which mode to enter depending on voltage requirements.

Charge Mode

The BCM will enter Charge Mode when ever one of the following conditions are met:

- Windshield wipers are ON for more than 3 s.
- Climate Control Voltage Boost Mode Request is true, as sensed by the HVAC control module via serial data. High speed cooling fan, rear defogger, and HVAC high speed blower operation can cause the BCM to enter the Charge Mode.
- The estimated battery temperature is less than 0° C (32°F).
- Battery State of Charge is less than 80%.
- Vehicle speed is greater than 145 km/h (90 mph)
- A current sensor malfunction exists.
- System voltage is determined to be below 12.56 V

When any one of these conditions is met, the system will set targeted generator output voltage to a charging voltage between 13.9–15.5 V, depending on the battery state of charge and estimated battery temperature.

Fuel Economy Mode

The BCM will enter Fuel Economy Mode when the estimated battery temperature is at least 0°C (32°F) but less than or equal to 80°C (176°F), the calculated battery current is less than 15 A and greater than −8 A, and the battery state-of-charge is greater than or equal to 80%. Its targeted generator output voltage is the open circuit voltage of the battery and can be between 12.5–13.1 V. When fuel economy mode is active, the generator is not charging, only maintaining open circuit battery voltage. The BCM will exit this mode and enter Charge Mode when any of the conditions described above are present.

Headlamp Mode

The BCM will enter Headlamp Mode when ever the head lamps are ON (high or low beams). Voltage will be regulated between 13.9–14.5 V.

Start Up Mode

When the engine is started the BCM sets a targeted generator output voltage of 14.5 V for 30 s.

Tow/Haul Mode (if applicable)

Pressing the Tow/Haul Mode button located on the center stack, the vehicle system voltage is raised and the remote (non-vehicle) battery will be charged. Having the headlamps on will raise the system voltage and if the Tow/Haul button is applied it will not serve any purpose. The voltage is regulated between 13.9-14.5 V.

Instrument Cluster Operation

Charge Indicator Operation

The instrument cluster illuminates the charge indicator and displays a warning message in the driver information center if equipped, when the one or more of the following occurs:

- The ECM detects that the generator output is less than 11 V or greater than 16 V. The instrument cluster receives a serial data message from the ECM requesting illumination.
- The instrument cluster determines that the system voltage is less than 11 V or greater than 16 V for more than 30 s. The instrument cluster receives a serial data message from the BCM indicating there is a system voltage range concern.
- The instrument cluster performs the displays test at the start of each ignition cycle. The indicator illuminates for approximately 3 s.

Driver Information Center Message: BATTERY NOT CHARGING SERVICE CHARGING SYSTEM or SERVICE BATTERY CHARGING SYSTEM

The BCM and the ECM will send a serial data message to the driver information center for the BATTERY NOT CHARGING SERVICE CHARGING SYSTEM or SERVICE BATTERY CHARGING SYSTEM message to be displayed. It is displayed when a charging system DTC is a current DTC. The message is turned off when the conditions for clearing the DTC have been met.

Voltmeter Gauge and/or System Voltage Display (if equipped)

As a means of displaying the charging system functions, some vehicles may be equipped with a voltmeter gauge on the instrument cluster and/or a system voltage display in the driver information center. These will indicate the current vehicle system voltage.

As the charging systems works to maintain the battery charge and manage vehicle electrical loads, it is normal for the voltmeter gauge on the instrument cluster or the system voltage display in the driver information center to fluctuate or change. This does not indicate a

malfunction. Depending on the battery state of charge and the vehicle electrical load, these values may be anywhere from 12.5 V to 15.5 V.

Electrical Power Management Description and Operation

Electrical Power Management

The electrical power management is used to monitor and control the charging system and alert the driver of possible problems within the charging system. The electrical power management system makes the most efficient use of the generator output, improves the battery state-of-charge, extends battery life, and manages system electrical loads.

The load shed operation is a means of reducing electrical loads during a low voltage or low battery state-of-charge condition.

The idle boost operation is a means of improving generator performance during a low voltage or low battery state-of-charge condition.

Each electrical power management function, either idle boost or load shed, is activated in incremental steps. For example, idle boost 1 must be active before idle boost 2 can be active. The criteria used by the body control module (BCM) to regulate electrical power management are outlined below:

Idle Boost and Load Shed With Current Sensor

Function	Battery Temperature Calculation	Battery Voltage Calculation	Amp-Hour Calculation	Action Taken
Idle Boost 1 Start	Less Than −15°C (5°F)	Less Than 13 V	—	First level Idle boost requested
Idle Boost 1 Start	—	—	Battery has a net loss greater than 0.6 Ah	First level Idle boost requested
Idle Boost 1 Start	—	Less Than 11 V	—	First level Idle boost requested
Idle Boost 1 End	Greater Than −10°C (14°F)	Greater Than 12 V	Battery has a net loss less than 0.2 Ah	First level Idle boost request cancelled
Idle Boost 2 Start	—	—	Battery has a net loss greater than 1.6 Ah	Second level Idle boost requested
Idle Boost 2 Start	—	Less Than 11 V	—	Second level Idle boost requested
Idle Boost 2 End	—	Greater Than 12 V	Battery has a net loss less than 0.8 Ah	Second level Idle boost request cancelled
Load Shed 1 Start	—	—	Battery has a net loss of 4 Ah	Rear Defrost, Heated Mirrors, Heated Seats, HVAC cycled OFF for 20% of their cycle
Load Shed 1 Start	—	Less Than 11 V	—	Rear Defrost, Heated Mirrors, Heated Seats, HVAC cycled OFF for 20% of their cycle
Load Shed 1 End	—	Greater Than 12 V	Battery has a net loss of less than 2 Ah	Clear Load Shed 1
Idle Boost 3 Start	—	—	Battery has a net loss of 10 Ah	Third level Idle boost requested
Idle Boost 3 Start	—	Less Than 11 V	—	Third level Idle boost requested
Idle Boost 3 End	—	Greater Than 12 V	Battery has a net loss of less than 6.0 Ah	Third level Idle boost request cancelled

Idle Boost and Load Shed With Current Sensor (cont'd)

Function	Battery Temperature Calculation	Battery Voltage Calculation	Amp-Hour Calculation	Action Taken
Load Shed 2 Start	—	—	Battery has a net loss greater than 12 Ah	Rear Defrost, Heated Mirrors, Heated Seats, HVAC cycled OFF for 50% of their cycle. The BATTERY SAVER ACTIVE message will be displayed on the DIC
Load Shed 2 Start	—	Less Than 11 V	—	Rear Defrost, Heated Mirrors, Heated Seats, HVAC cycled OFF for 50% of their cycle. The BATTERY SAVER ACTIVE message will be displayed on the DIC
Load Shed 2 End	—	Greater Than 12 V	Battery has a net loss of less than 8 Ah	Clear Load Shed 2
Load Shed 3 Start	—	Less Than 11.9 V	Battery has a net loss greater than 20 Ah	Rear Defrost, Heated Mirrors, Heated Seats, HVAC cycled OFF for 100% of their cycle. The BATTERY SAVER ACTIVE message will be displayed on the DIC
Load Shed 3 Start	—	Less Than 11 V	—	Rear Defrost, Heated Mirrors, Heated Seats, HVAC cycled OFF for 100% of their cycle. The BATTERY SAVER ACTIVE message will be displayed on the DIC
Load Shed 3 End	—	Greater Than 12.6 V	Battery has a net loss of less than 13 Ah	Clear Load Shed 3

Idle Boost and Load Shed Without Current Sensor (based on battery voltage)

Function	Battery Temperature Calculation	Battery Voltage Calculation	Action Taken
Idle Boost 1 Start	Less Than −15°C (5°F)	Less Than 13 V	First level Idle boost requested
Idle Boost 1 Start	—	Less Than 12.6 V	First level Idle boost requested
Idle Boost 1 End	Greater Than −15°C (5°F)	—	First level Idle boost request cancelled
Idle Boost 1 End	—	Greater Than 13 V	First level Idle boost request cancelled
Idle Boost 2 Start	—	Less Than 12.4 V	Second level Idle boost requested
Idle Boost 2 End	—	Greater Than 12.5 V	Second level Idle boost request cancelled
Load Shed 1 Start	—	Less Than 12.3 V	Rear Defrost, Heated Mirrors, Heated Seats, HVAC cycled OFF for 20% of their cycle
Load Shed 1 End	—	Greater Than 12.4 V	Clear Load Shed 1
Idle Boost 3 Start	—	Less Than 10 V	Third level Idle boost requested

Idle Boost and Load Shed Without Current Sensor (based on battery voltage) (cont'd)

Function	Battery Temperature Calculation	Battery Voltage Calculation	Action Taken
Idle Boost 3 End	—	Greater Than 12.3 V	Third level Idle boost request cancelled
Load Shed 2 Start	—	Less Than 12.1 V	Rear Defrost, Heated Mirrors, Heated Seats, HVAC cycled OFF for 50% of their cycle. The BATTERY SAVER ACTIVE message will be displayed on the DIC
Load Shed 2 End	—	Greater Than 12.2 V	Clear Load Shed 2
Load Shed 3 Start	—	Less Than 11.9 V	Rear Defrost, Heated Mirrors, Heated Seats, HVAC cycled OFF for 100% of their cycle. The BATTERY SAVER ACTIVE message will be displayed on the DIC
Load Shed 3 End	—	Greater Than 12.0 V	Clear Load Shed 3

Starting System Description and Operation

Starter Motor Operation (Without KL9)

The starter motors are non-repairable. They have pole pieces that are arranged around the armature. Both solenoid windings are energized. The pull-in winding circuit is completed to the ground through the starter motor. The windings work together magnetically to pull and hold in the plunger. The plunger moves the shift lever. This action causes the starter drive assembly to rotate on the armature shaft spline as it engages with the flywheel ring gear on the engine. Moving at the same time, the plunger also closes the solenoid switch contacts in the starter solenoid. Full battery voltage is applied directly to the starter motor and it cranks the engine.

As soon as the solenoid switch contacts close, current stops flowing thorough the pull-in winding because battery voltage is applied to both ends of the windings. The hold-in winding remains energized. Its magnetic field is strong enough to hold the plunger, shift lever, starter drive assembly, and solenoid switch contacts in place to continue cranking the engine. When the engine starts, pinion overrun protects the armature from excessive speed until the switch is opened.

When the crank signal is removed, the starter relay opens and battery voltage is removed from the starter solenoid S terminal. Current flows from the motor contacts through both windings to the ground at the end of the hold-in winding. However, the direction of the current flow through the pull-in winding is now opposite the direction of the current flow when the winding was first energized.

The magnetic fields of the pull-in and hold-in windings now oppose one another. This action of the windings, along with the help of the return spring, causes the starter drive assembly to disengage and the solenoid switch contacts to open simultaneously. As soon as the contacts open, the starter circuit is turned off.

Enhanced Starter Motor Operation (KL9)

The Engine Stop/Start system in GM vehicles automatically turns off the engine when the vehicle comes to a stop under certain driving conditions, and can quickly restart the engine in about 0.3 seconds when commanded to do so.

In order to smoothly restart the engine as quickly as possible while managing the greater number of engine starts, the Stop/Start system uses an enhanced starter motor that operates differently from a conventional starter motor. It has a high performance electric motor and a stronger pinion engagement mechanism than a conventional starter. It also has independent control of the pinion and motor.

The enhanced starter motor continues using the typical pinion engagement mechanism with a starter solenoid that drives the pinion gear to engage or disengage the flywheel of the engine. When engaged, the starter motor can rotate the engine flywheel and, in turn, the crankshaft.

On the enhanced starter of a Stop/Start system the operation is done in two separate functions inside the solenoid, Starter Motor and Pinion Actuator. Each function controlled individually by the ECM. There are two separate relays to control the two separate parts of the enhanced solenoid:

- KR27 Starter Motor Relay
- KR27C Starter Pinion Actuator Relay

The two individually-controlled relays allow for smooth engagement of the pinion gear into the flywheel with minimum noise and wear.

When the vehicle is coming to a stop, just before the engine stops rotating (at approximately 50 RPM) during stop/start operation, the ECM energizes the Starter Pinion Solenoid Actuator Relay to easily push the pinion gear into the flywheel gear without gear clash. (Fig. 8) When the engine stops rotating during Stop/Start operation (Auto Stop mode), the starter pinion gear is fully engaged, ready for the starter motor to become energized to quickly start the engine again.

A secondary need for the starter pinion to be driven into the flywheel gear before the engine stops rotating is to address quickly changing demands on the engine. For example, when a driver is slowing nearly to a stop — and the Stop/Start system is preparing for Auto Stop mode — but suddenly decides to release the brake and accelerate

In this situation, the engine has already stopped rotating, or nearly so. A conventional starter cannot restart the engine until the engine has completely stopped. However, with the enhanced starter, the starter pinion gear is fully engaged and ready to begin rotating the engine even before it fully stops turning. Otherwise, the engine would actually have to stop rotating before the pinion can engage smoothly to begin a restart.

To prevent a lag in engine operation, the ECM uses predictive speed matching of the flywheel gear speed and the pinion gear speed to engage the pinion gear into the flywheel gear without gear clash before the engine fully stops. By predicting how long it takes the starter motor to spin up using an algorithm, the pinion gear speed can be matched to the flywheel gear speed. The result is an almost instant restart that is possible at extremely low engine speeds.

Circuit Description

Keyless Start

When the Ignition mode switch is placed in the crank position, a discrete signal is supplied to the body control module (BCM) notifying it that the ignition is in the crank position. The BCM then sends a serial data message to the engine control module (ECM) that crank has been requested. The ECM then verifies that the clutch is fully depressed or the automatic transmission is in Park/Neutral. If it is, the ECM then supplies 12 V to the control circuit of the starter relay. When this occurs, battery positive voltage is supplied through the switch side of the crank relay to the S terminal of the starter solenoid.

Key Start

When the ignition switch is placed in the Start position, a discrete signal is supplied to the body control module (BCM) notifying it that the ignition is in the Start position. The BCM then sends a message to the engine control module (ECM) notifying it that CRANK has been requested. The ECM verifies that the transmission is in Park or Neutral. If it is, the ECM then supplies 12 V to the control circuit of the crank relay. When this occurs, battery positive voltage is supplied through the switch side of the crank relay to the S terminal of the starter solenoid.

Stop/Start System Description and Operation

The Stop/Start System is used to improve fuel efficiency in stop/start driving. The vehicle automatically shuts down the engine in appropriate conditions at a traffic light, for example, resulting in zero tail pipe emissions and saving fuel which otherwise is used idling the engine when stationary. The engine instantly restarts when the driver is ready to move away.

As soon as the driver prepares to move away (by releasing the brake pedal and/or depressing the accelerator pedal), the engine will start; it only takes the system around 0.3 s to start the engine.

To support the increased number of engine starts, the starter motor is upgraded with a high performance electric motor and a stronger pinion engagement mechanism with reduced noise levels.

Along with the upgraded starter motor, advanced battery technology is required to ensure the vehicles battery can handle the frequent charge and discharge cycles common with stop/start operation. There is battery sensor module connected to the battery which continually monitors the battery charge and healthy state. The Engine Control Module (ECM) uses this information from the battery sensor module to determine if the battery charge and health is sufficient for an Stop/Start condition.

The Stop/Start system can reduce fuel consumption and carbon dioxide (CO2) emissions by up to 5% in mixed driving conditions. In an urban environment and in heavy traffic with frequent stops the savings may increase to as much as 10%.

There are also sophisticated controls in place to help ensure the Stop/Start System does not compromise the needs of either the driver or vehicle. For the engine to shutdown, the vehicle must be below 5 km/h (3 MPH), the selector lever in position D, and brake pedal depressed. To restart, the driver simply releases the brake pedal and the enhanced starter motor engages the engine. When the engine has been shut down by the Stop/Start System, a control indicator will be illuminated in the Driver Information Center (DIC). When the engine is restarted, the control indicator in the DIC extinguishes.

To ensure neither the needs of the driver or vehicle are compromised the engine will not shut down in the following circumstances:

- Ambient and coolant temperature correlation does not match specified values.
- Ambient temperature is less than −10°C (14°F)
- Battery temperature is less than 0°C (32°F) or greater than 55°C (131°F)
- Driver seat belt is not fastened and the drivers door is not fully closed (not applicable to vehicles in North America)
- HVAC system demand is high
- HVAC defrost has been selected
- Battery charge is low

Likewise the engine will automatically restart if:

- Driver door opened and driver seat belt unbuckled (not applicable to vehicles in North America)
- Engine hood opened
- Battery charge is low
- HVAC demand increases
- Vehicle speed increases
- Brake booster vacuum has been reduced
- Engine coolant temperature is greater than 125° C (257°F)
- Economy mode turned OFF by driver
- Autostop time exceeded 2 min

When the Stop/Start System has shut down the engine, and the ambient temperature is below 15°C (59°F), the ECM will activate the Stop/Start auxiliary relay which controls the electric engine coolant pump motor to continually circulate the engine coolant through the engine while the engine is off. This is to ensure the engine and passenger compartment temperature is maintained while off. Once the Stop/Start System has restarted the engine, the ECM will turn off the electric coolant pump motor, thus allowing the engines internal coolant pump to circulate the engine coolant. The Stop/Start System is automatically activated each time the ignition switch is turned on.

Through the climate control system, the vehicle can be cycled between off, comfort, and eco air conditioning modes (if equipped). In comfort mode, the priority for Stop/Start operation is on customer comfort. Depending on ambient temp, humidity, cabin temperature and cabin temperature setpoint, the least amount of autostops occur in this mode. In eco mode, the priority is on fuel economy. There are more frequent autostops with some sacrificing of cabin temperature control. With the HVAC turned off, the maximum autostops occur since there will be no A/C compressor requests.

Autostop Criteria

The ECM will send an Autostop state message to the body control module (BCM) and shut down the engine when all of the following criteria is met. The BCM will transmit the Autostop state message to the instrument cluster which will display the Autostop indicator in the tachometer display.

- Initial minimum vehicle speed during drive cycle must be 19 km/h (12 MPH) or greater. Subsequent autostop minimum speed may vary from 2-10 km/h (1-6 MPH), depending on vehicle
- Ambient and engine coolant temperature correlation meets specified values.
- Ambient and transmission fluid temperature correlation meets specified values.
- Hood switch status is closed
- Driver door status is closed
- Driver seat belt status is buckled
- Brake booster vacuum is greater than 45 kPa (7 PSI)
- Transmission gear selector is in the Drive position
- Vehicle speed is less than 5 km/h (3 MPH)
- Engine speed is below 1,500 RPM
- Engine coolant temperature is less than 120° C (248°F)
- Ambient temperature is greater than −10°C (14°F)
- No A/C compressor request from HVAC (A/C or Defrost modes)
- Battery voltage greater than 12 V
- Battery state of charge greater than 75% (changes with state of health)

Autostop Enable Ambient and Engine Coolant Temperature Table

Ambient Temperature	inimum Coolant Temperature	Autostop Enable
−10°C (14°F)	60°C (140°F)	Yes
0°C (32°F)	50°C (122°F)	Yes
6°C (43°F)	40°C (104°F)	Yes
12°C (54°F)	30°C (86°F)	Yes
20°C (68°F)	18°C (64°F)	Yes
30°C (86°F)	18°C (64°F)	Yes

Autostart Criteria

The ECM will send an Autostart state message to the BCM. If all of the following conditions are true the ECM and BCM will restart the vehicle.

Driver Enabled Conditions that will engage Autostart:

- Driver removes pressure from the brake or depresses the accelerator pedal while the vehicle is in the forward Drive gear

System Enabled Conditions that will engage Autostart

Note: If one or more of the following conditions occur, the system will force the engine to restart.

- Brake booster vacuum is less than 40 kPa (6 PSI)
- A/C compressor request from HVAC (A/C or Defrost modes)
- Battery voltage less than 11 V,
- Battery state of charge is less than 73% (changes with state of health)
- Driver door status changes to open and driver seat belt status changes to unbuckled (not applicable to vehicles in North America)
- Hood switch status changes to open
- Autostop time exceeded 2 min

If the crank time exceeds 2 s, a manual ignition switch restart will be necessary.

System Components

Engine Control Module (ECM)

The ECM monitors the inputs from the Engine Coolant Temperature (ECT) sensor, Vehicle Speed Sensor (VSS), Battery Sensor Module, hood ajar switch, brake booster vacuum sensor, and engine speed to determine Autostart and Autostop conditions. The ECM also controls the auxiliary coolant pump motor (if equipped).

Transmission Control Module (TCM)

The TCM monitors the inputs from the transmission neutral safety switch to determine the driver selected gear. This information is transmitted to the ECM via serial data to support the Auto Stop Start algorithm.

Engine Coolant Temperature sensor (ECT)

The ECT sensor is used to determine engine operating temperature.

Intake Air Temperature Sensor (IAT)

The ECM uses this sensor to monitor ambient air temperature. If too cold, the Autostop will not occur.

Inside air temperature sensor

The HVAC control module monitors the passenger compartment temperature sensor to determine the temperature inside the passenger compartment. The HVAC control module sends this temperature reading to the ECM on the data communication circuit. The ECM uses this temperature values to determine if a restart is requires based on the temperature inside the passenger compartment.

Vehicle speed sensor

The vehicle speed sensor is used to determine vehicle speed. If vehicle speed is detected above a calculated value during an Autostop condition, the ECM will start the engine.

Hood Ajar Switch

If the hood switch is in the open position, the vehicle will not Autostop. If the hood is opened during Autostop, the vehicle will automatically restart.

Brake Booster Vacuum Sensor

The ECM monitors vacuum in order to ensure proper power assist for the brake pedal. If the ECM determines vacuum is too low, it will restart the engine.

Brake Pedal Position Sensor (BPPS) & Accelerator Pedal Position Sensor (APP)

The ECM monitors both the brake pedal position sensor and the accelerator pedal position sensor to determine the level of activation for each. While the accelerator pedal is in it's at rest position with no pressure applied by the operator, a partially depressed Brake pedal will cause the ECM to prepare the engine for an Autostop event. When the vehicle is in an auto stop event and the status of the brake pedal position sensor changes from meeting the autostop criteria to not meeting this criteria the engine will be restarted provided all of the other conditions to allow an autostart are met. If the Accelerator pedal is moved from its at rest position the vehicle will also enter an auto start event if all other conditions to support an autostart event, except for the brake pedal position, are met.

Transmission Gear Shift Position Switch

The transmission gear shift position switch is used to determine if the transmission is in the proper state to allow an auto stop/start event. The ECM will not allow Autostop until the brake is engaged, the transmission is in the forward gear position and then the vehicle slows to below the minimum speed required to allow and autostop while meeting all of the other minimum criteria to support an autostop event.

Coolant Pump Motor

The ECM will turn on the auxiliary coolant pump motor during Autostop to maintain engine operating temperature and HVAC temperature. Once the engine is running, the ECM will turn off the coolant pump motor.

Body Control Module (BCM)

The Body Control Module (BCM) monitors the Autostop Disable switch in order to enable or disable the system. It sends the appropriate messages to the ECM Via serial data to enable or disable the system.

Battery Sensor Module

The Battery Sensor Module monitors the battery current load, state of health, and state of charge, the information is sent to the BCM Via LIN then to the ECM Via Serial Data. If the module detects high current load, the battery is in a poor state of health or a low charge condition, the ECM will not allow Autostop to occur.

Autostop Disable Switch

The disable switch is an input to the BCM, it allows the customer to disable or re-enable the Autostop system. After the vehicle is turned off the Autostop system will turn back on the next time the vehicle is started.

Power Supply Transformer

The DC to DC converter monitors battery voltage and will maintain operating voltage to the radio, instrument cluster and instrument panel displays. The DC to DC converter will provide a boosted voltage to sensitive loads during Autostart to ensure proper operation of the driver informational displays.

Instrument Cluster

In order to differentiate between a normal engine shut down (engine speed 0 RPM) and when the engine has been shut down by the Stop/Start System, the tachometer needle will rest at the Autostop indicator icon (500 RPM point) indicating the engine has been shut down by the Stop/Start System. Once the engine is restarted, or the ECO button has disengaged Autostop, the tachometer will function normally.

Section 5

HVAC

Heating, Ventilation, and Air Conditioning 5-3
Description and Operation 5-3
Heating and Air Conditioning System Description and Operation 5-3
HVAC - Automatic 5-4
Schematic and Routing Diagrams 5-4
HVAC Schematics 5-5
Description and Operation 5-14
Automatic HVAC Description and Operation 5-14

BLANK

Heating, Ventilation, and Air Conditioning

Description and Operation

Heating and Air Conditioning System Description and Operation

Engine Coolant

Engine coolant is the key element of the heating system. The engine thermostat controls the normal engine operating coolant temperature. Coolant pumped out of the engine enters the heater core through the inlet heater hose. The air flowing through the Heating, Ventilation, and Air Conditioning (HVAC) module absorbs the heat of the coolant flowing through the heater core. The coolant then exits the heater core through the heater outlet hose and returns back to the engine block.

Air Conditioning

Refrigerant is the key element in an air conditioning system. R–1234yf is a very low temperature gas that can transfer the undesirable heat from the passenger compartment to the outside air.

The air conditioning compressor is belt driven and operates when the magnetic clutch is engaged. The compressor builds pressure in the air conditioning system. Compressing the refrigerant also adds heat to the refrigerant. The refrigerant is discharged from the compressor through the discharge hose, and forced to flow to the condenser and then through the rest of the air conditioning system. The air conditioning system is mechanically protected with the use of a high pressure relief valve. If the high pressure air conditioning switch were to fail or if the refrigerant system becomes restricted and refrigerant pressure continued to rise, the high pressure relief valve will pop open and release refrigerant from the system.

Compressed refrigerant enters the condenser in a high temperature, high pressure vapor state. As the refrigerant flows through the condenser, the heat of the refrigerant is transferred to the ambient air passing through the condenser. Cooling the refrigerant causes the refrigerant to condense and change from a vapor to a liquid state.

The condenser is located in front of the radiator for maximum heat transfer. The condenser is made of aluminum tubing and aluminum cooling fins, which allows rapid heat transfer for the refrigerant. The semi-cooled liquid refrigerant exits the condenser and flows through the liquid line, to the Thermal Expansion Valve (TXV).

The TXV is located at the evaporator inlet. The TXV is the dividing point for the high and the low side refrigerant pressures of the air conditioning system. As the refrigerant passes through the TXV, the refrigerant is lowered. Due to the pressure differential on the liquid refrigerant, the refrigerant will begin to boil at the TXV. The TXV also meters the amount of liquid refrigerant that can flow into the evaporator.

Refrigerant exiting the TXV flows into the evaporator core in a low pressure, liquid state. Ambient air is drawn through the HVAC module and passes through the evaporator core. Warm and moist air will cause the liquid refrigerant to boil inside the evaporator core.

The boiling refrigerant absorbs heat from the ambient air and draws moisture onto the evaporator. The refrigerant exits the evaporator through the suction line and back to the compressor, in a vapor state. This completes the air conditioning cycle of heat removal. At the compressor, the refrigerant is compressed again and the cycle of heat removal is repeated.

Vehicles equipped with R-1234yf may utilize an integral heat exchanger in the air conditioning line set. An integral heat exchanger transfers heat between liquid line and the suction line. It uses the cold vapor from the evaporator to cool the warm liquid refrigerant before it enters the TXV, resulting in increased cooling and higher efficiency.

The conditioned air is distributed through the HVAC module for passenger comfort. The moisture removed from the passenger compartment will also change form, or condense, and is discharged from the HVAC module as water.

Air Conditioning Cycling with Auxiliary

The auxiliary A/C system operates from the vehicles primary A/C system. The front or primary A/C system must be ON to allow the rear A/C system to function.

The liquid refrigerant, flows from the front system to the rear A/C system into the rear thermal expansion valve (TXV). The rear TXV is located at the rear evaporator inlet. The TXV is the dividing point for the high and the low pressure sides of the rear A/C system. As the refrigerant passes through the TXV, the pressure on the refrigerant is lowered. Due to the pressure differential on the liquid refrigerant, the refrigerant will begin to boil at the expansion device. The TXV also meters the amount of liquid refrigerant that can flow into the evaporator.

Refrigerant exiting the TXV flows into the evaporator core in a low pressure, liquid state. Ambient air is drawn through the rear A/C module and passes through the evaporator core. Warm and moist air will cause the liquid refrigerant to boil inside of the evaporator core. The boiling refrigerant absorbs heat from the ambient air and draws moisture onto the evaporator.

The refrigerant exits the evaporator through the suction line and back to the primary A/C systems suction line. Refrigerant in the primary A/C system suction line flows back to the compressor, in a vapor state, and completes the A/C cycle of heat removal. At the compressor, the refrigerant is compressed again and the cycle of heat removal is repeated.

The conditioned air is distributed through the rear A/C module for passenger comfort. The heat and moisture removed from the rear passenger compartment will also change form, or condense, and is discharged from the rear A/C module as water.

HVAC - Automatic

Schematic and Routing Diagrams

HVAC Schematics (HVAC Controls)

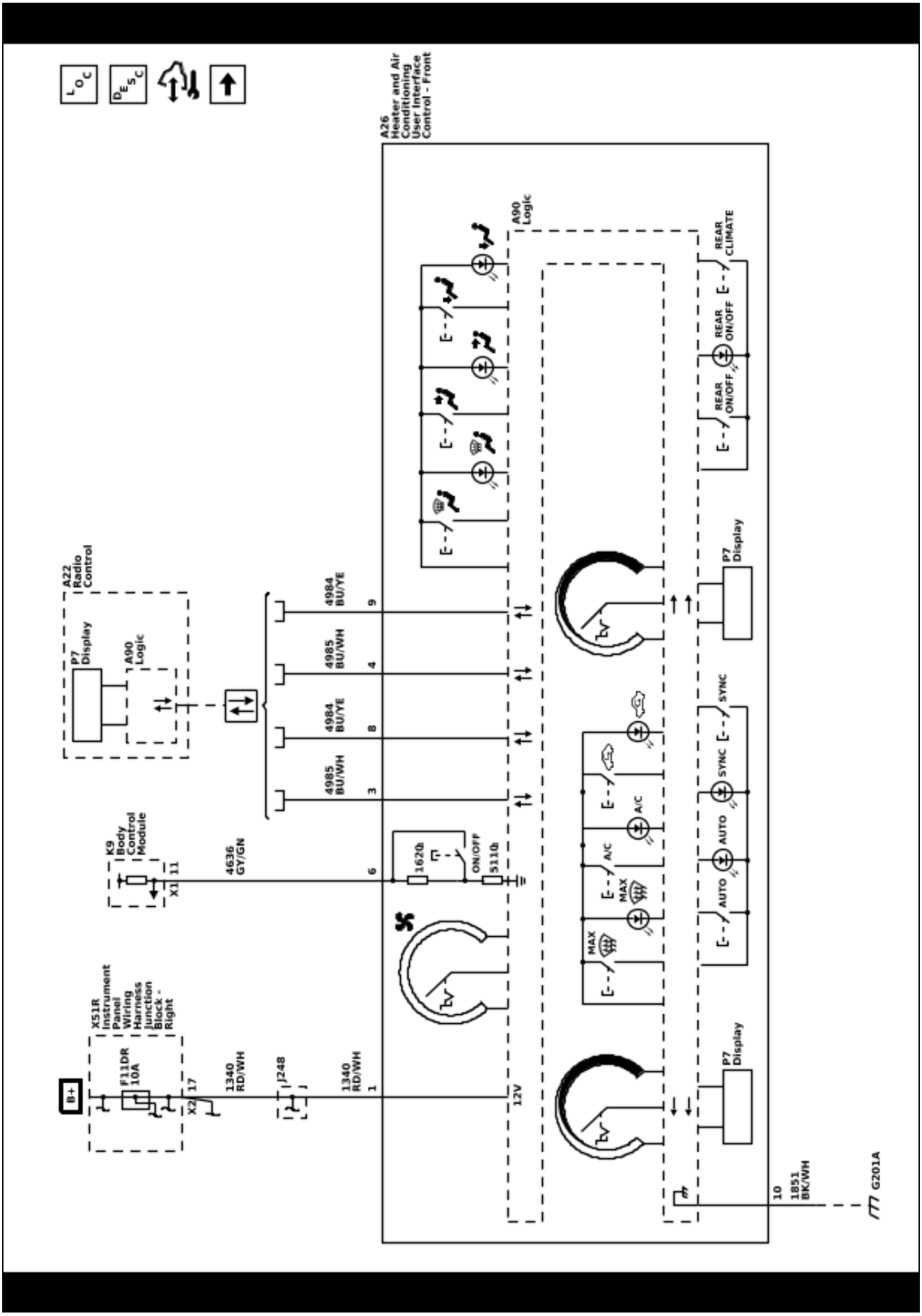

HVAC Schematics (Actuators)

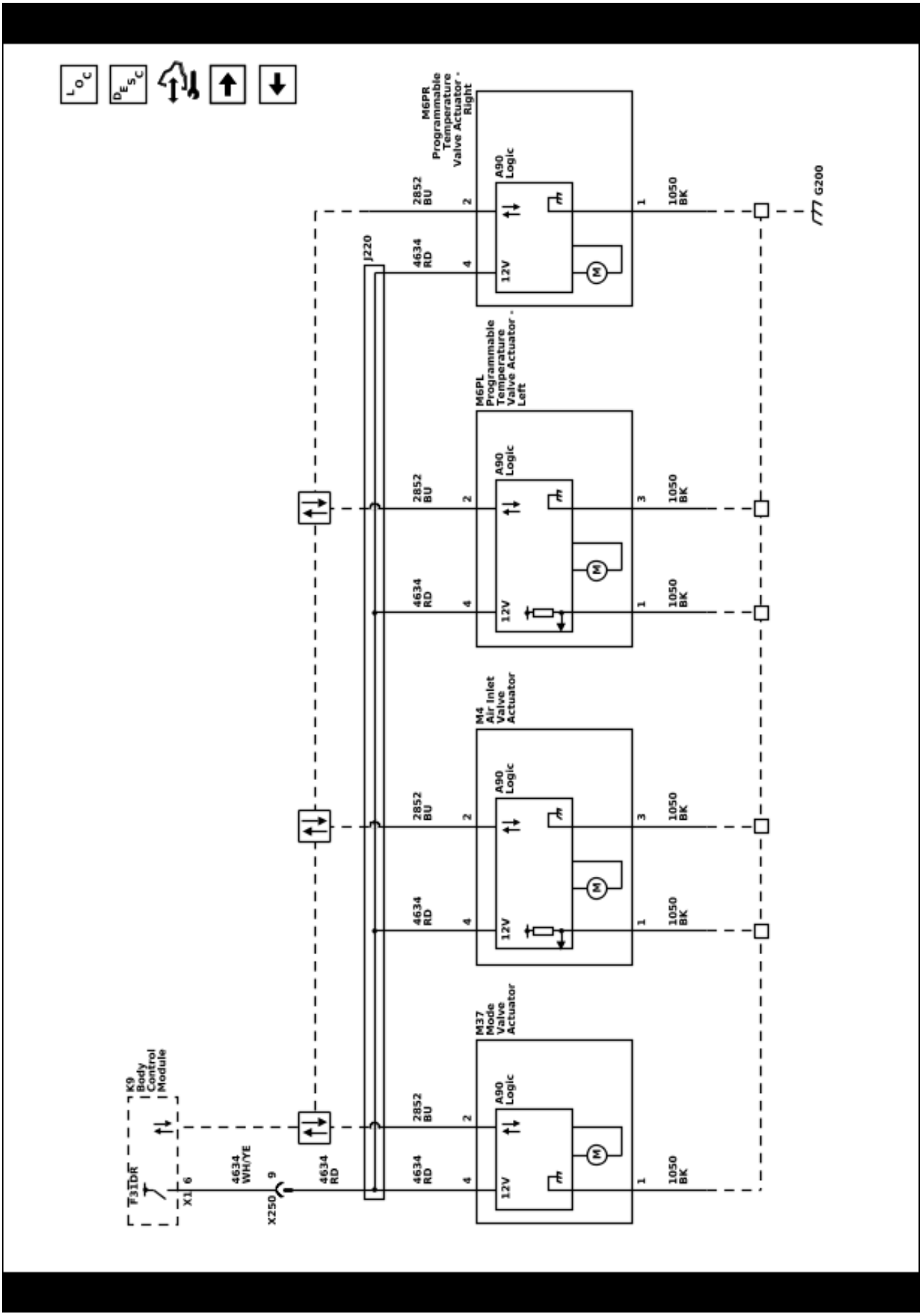

HVAC Schematics (Blower Motor)

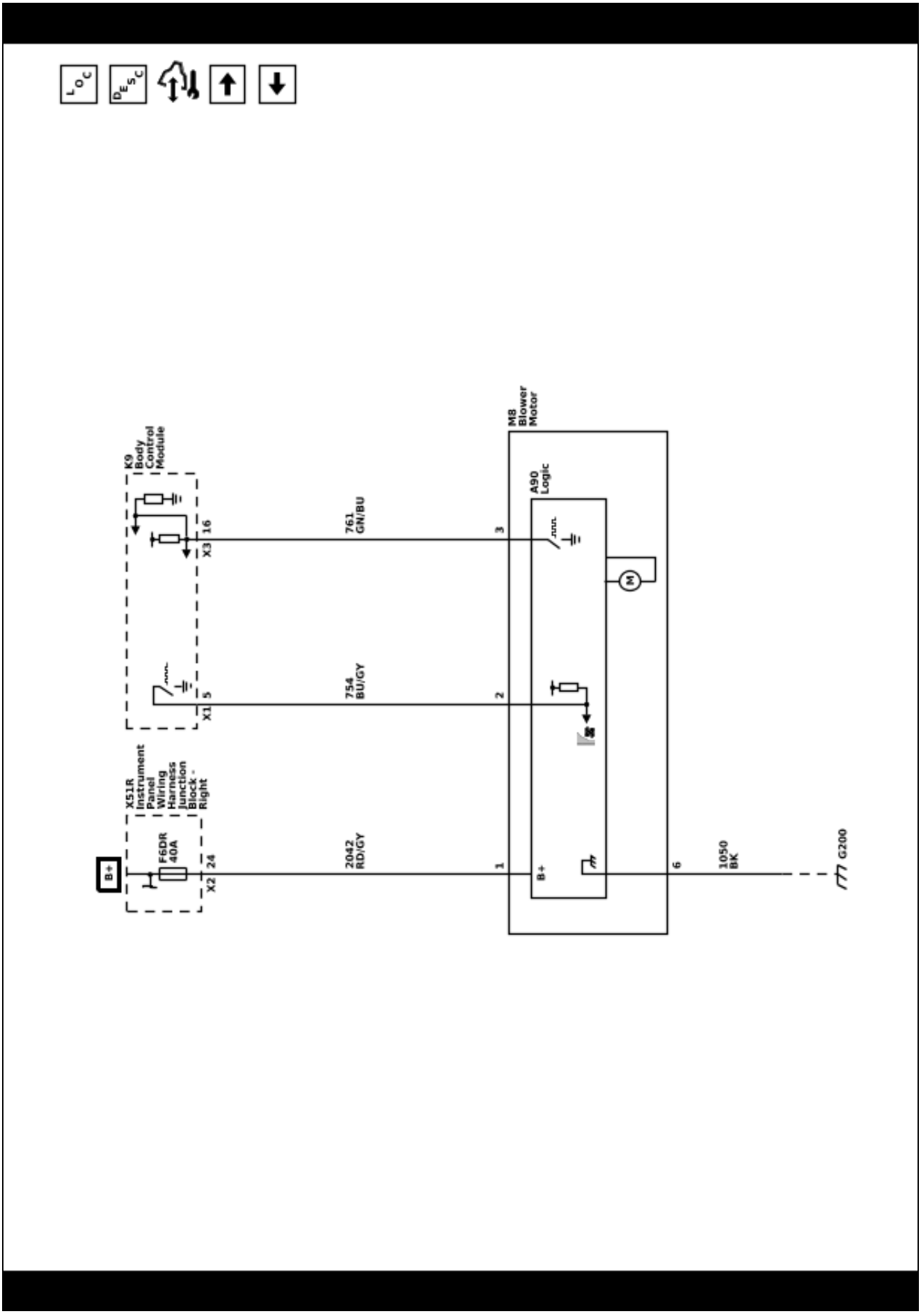

HVAC Schematics (Ambient Light/Sunload Sensor and A/C Evaporator Temperature Sensor)

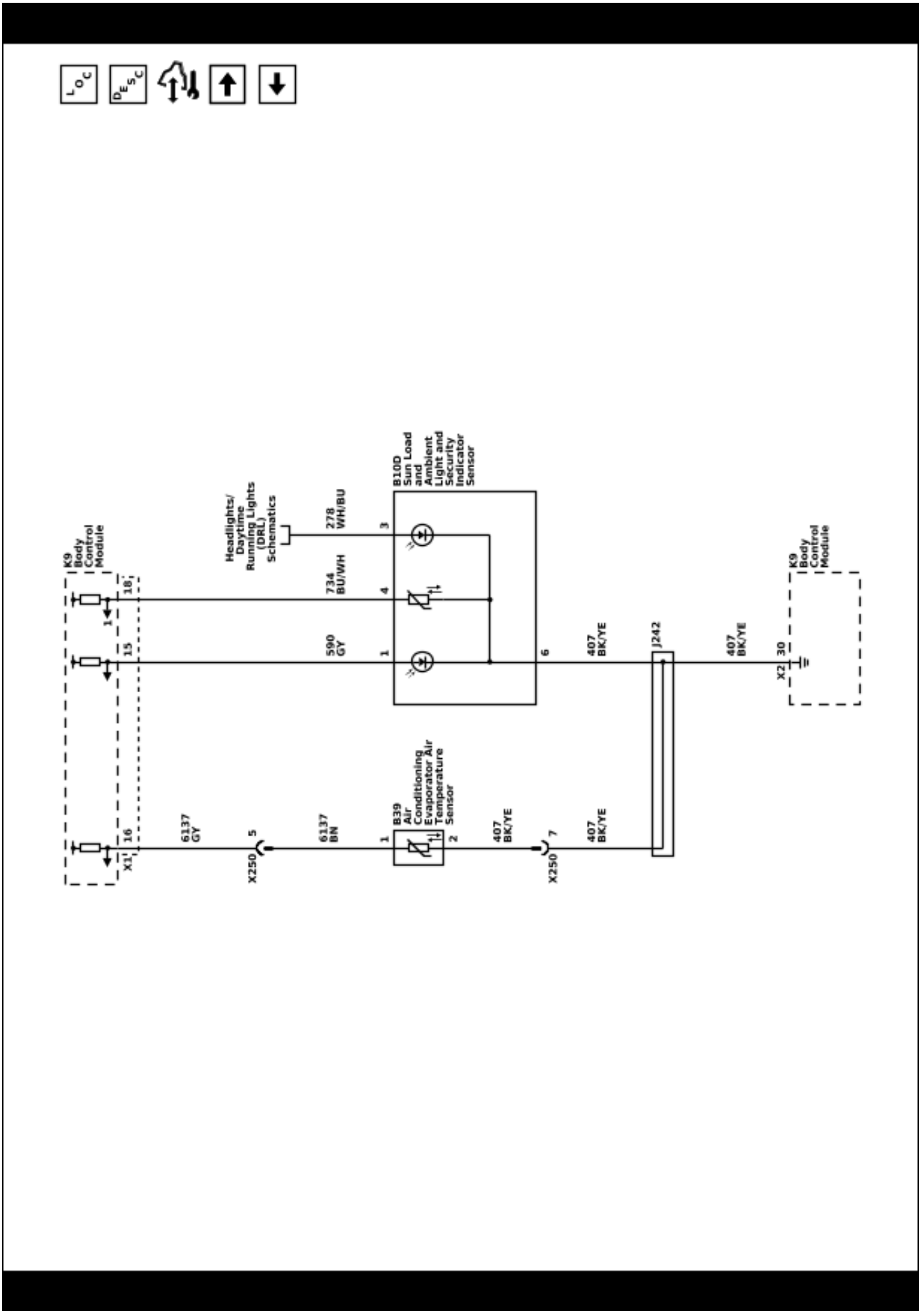

HVAC Schematics (A/C Compressor Controls (L84/L87))

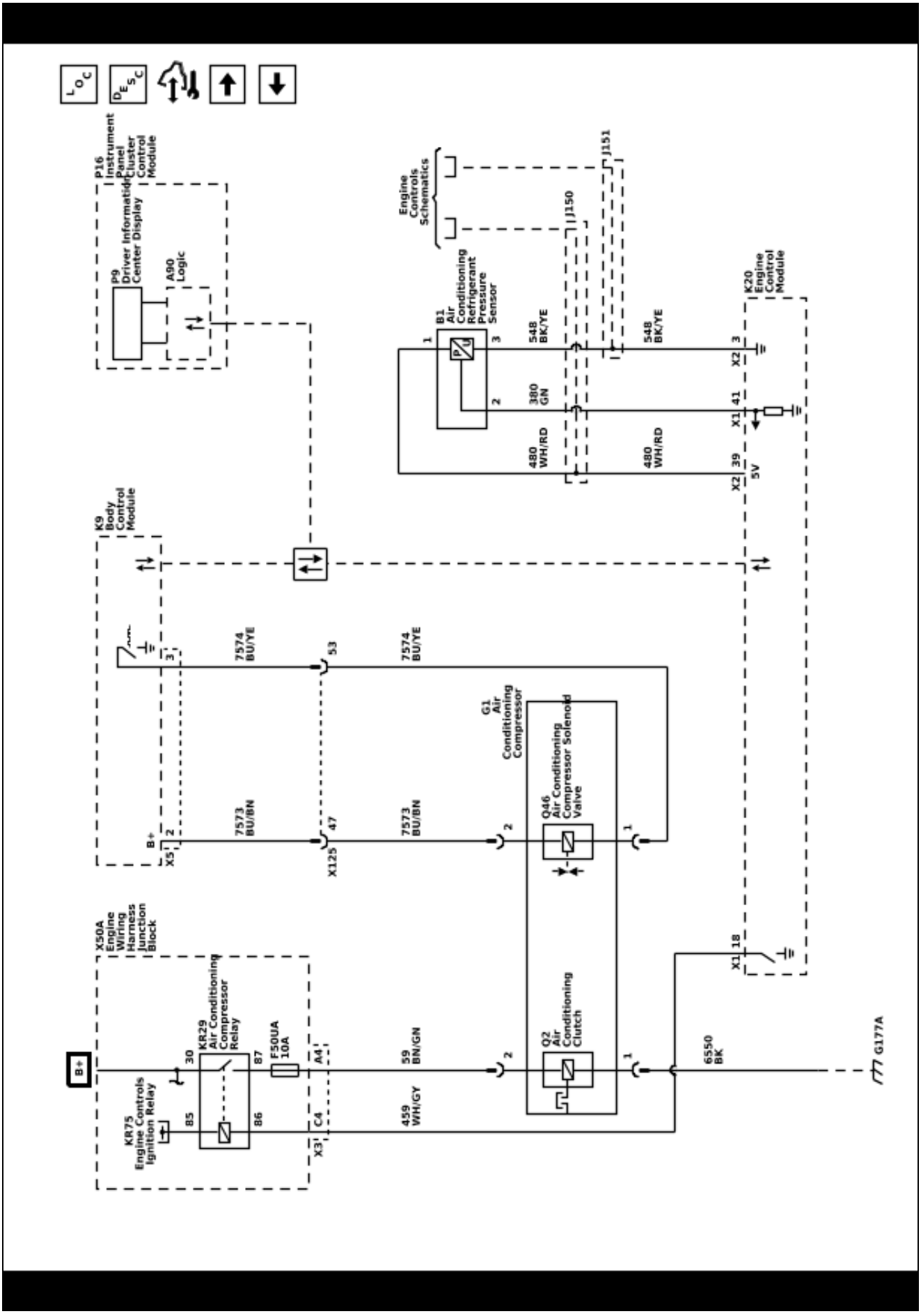

HVAC Schematics (A/C Compressor Controls (LM2))

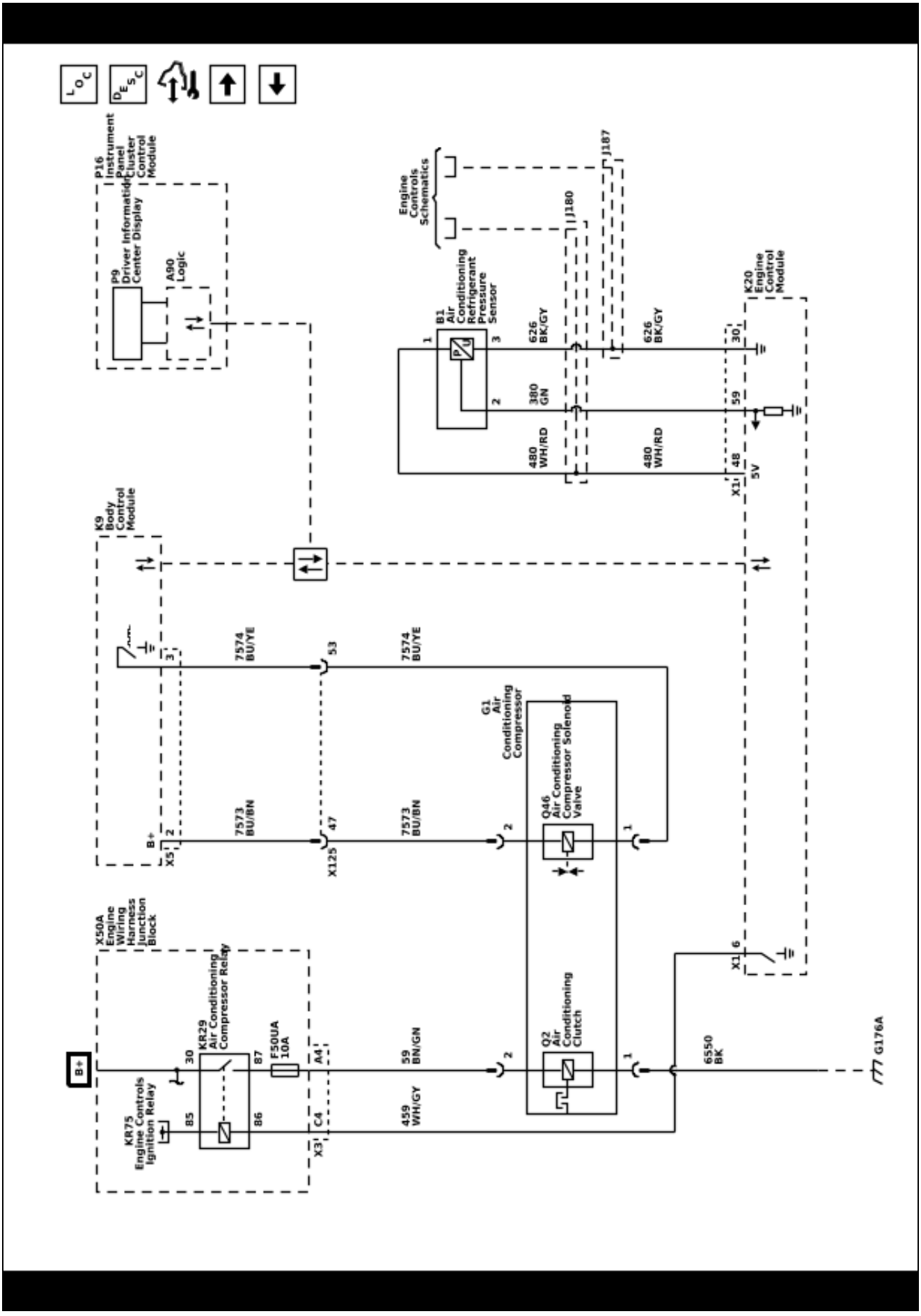

HVAC Schematics (Auxiliary HVAC Controls Power, Ground, and Serial Data (C69))

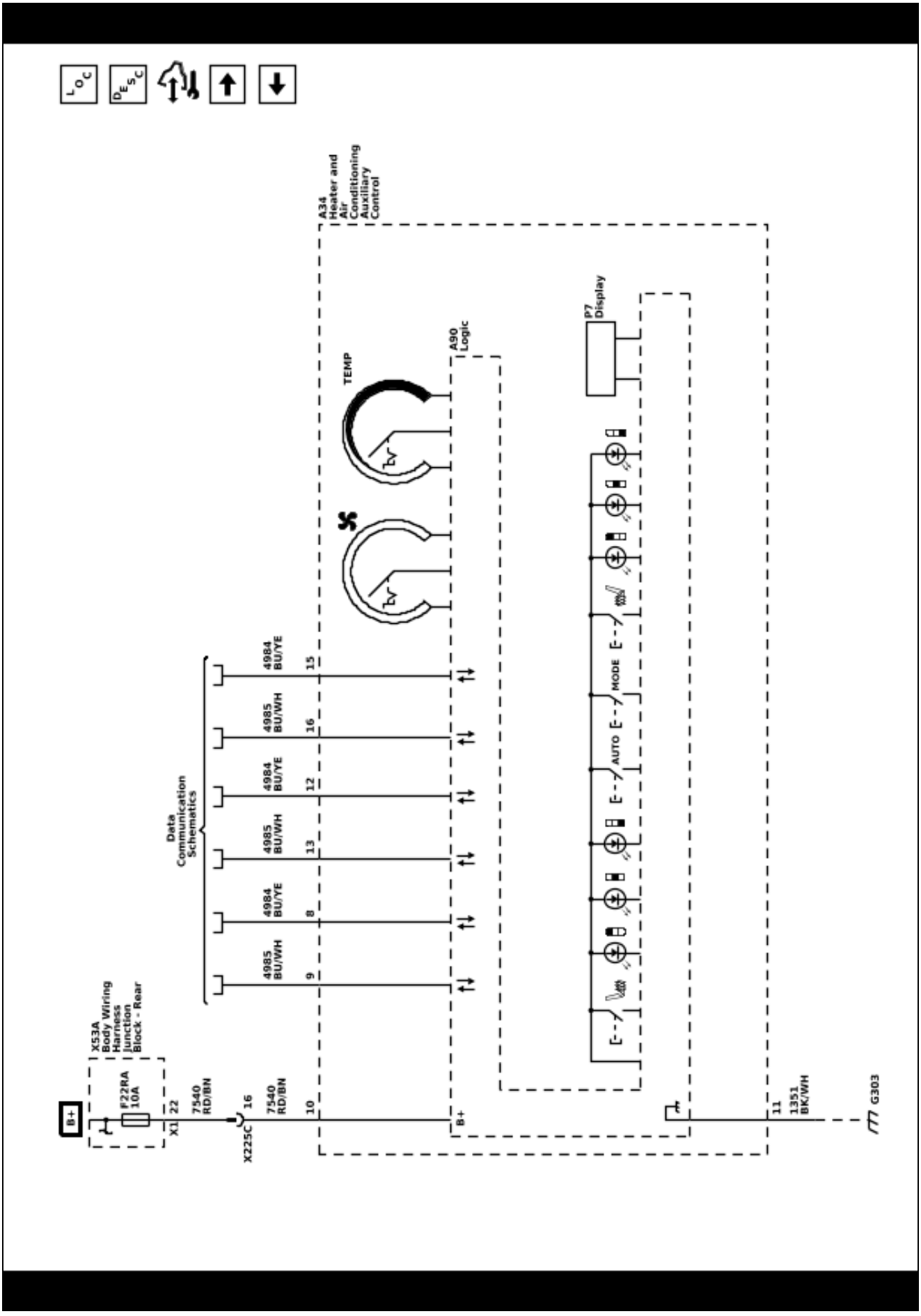

HVAC Schematics (Auxiliary HVAC Air Speed, Delivery, and Temperature (C69))

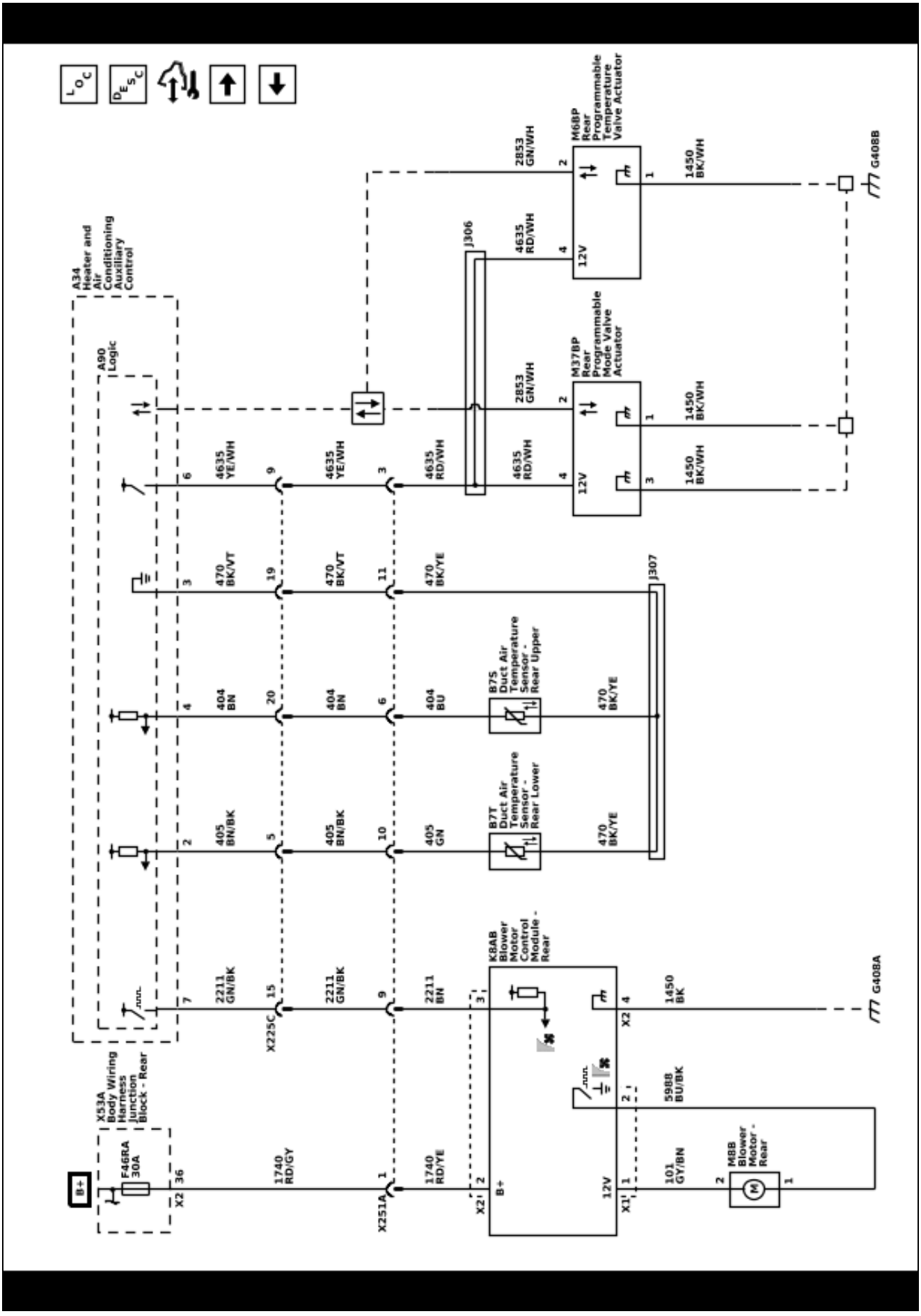

HVAC Schematics (Air Heater (C3A))

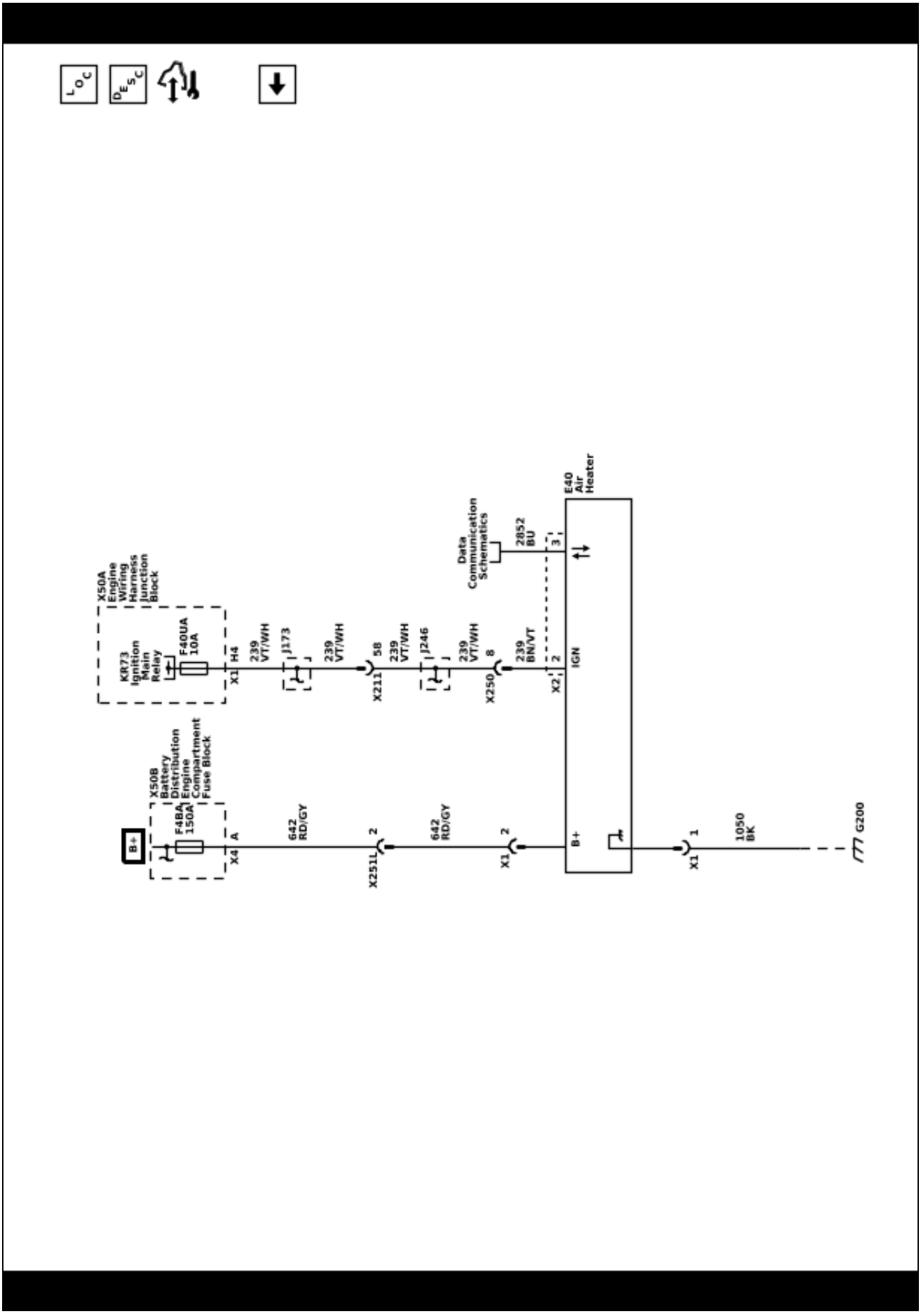

Description and Operation

Automatic HVAC Description and Operation

The air temperature and the air delivery description and operation are divided into the following:

- HVAC Control Components
- Air Speed and Blower Motor (Front)
- Air Speed and Blower Motor (Rear)
- Air Delivery (Front)
- Air Delivery (Rear)
- Heating and A/C Operation
- Recirculation Operation
- Automatic Operation
- Engine Coolant and A/C System Refrigerant

HVAC Control Components

K9 Body Control Module

The body control module (BCM) is a CAN device that interfaces between the operator and the HVAC system to maintain and control desired air temperature and air distribution settings. The BCM provides a device ON-Signal for the HVAC controls. The BCM provides blower, air delivery mode and air temperature control.

A26 Heater and Air Conditioning User Interface Control - Front

The HVAC control contains all switches which are required to control the functions of HVAC and serve as interface between the operator and the BCM. The selected values are passed to the BCM via serial data.

A34 HVAC Controls – Auxiliary (C69)

The HVAC controls – auxiliary contains all switches, buttons, and dials which are required to control the functions of the rear HVAC system and serve as interface between the operator and the BCM. Mode and temperature selections are passed to the BCM via serial data. Rear blower motor speed is controlled via a signal circuit from the HVAC controls – auxiliary to the blower motor control module- auxiliary.

Actuators (Front)

Doors in the HVAC case assembly are used to control air flow. The BCM operates the doors through the use of actuators, with one actuator being used for each door. The system has the following air control doors and associated actuators: mode, left and right temperature, and recirculation.

Each actuator used in the system is a LIN device controlled by the BCM. The BCM supplies a 12 V reference voltage to the actuators, and ground is provided by the wiring harness. When the BCM sends a request message to the actuator, the actuator then operates internal stepper motors to move the door to the required position.

Actuators Rear (C69)

Two additional actuators are added to the system to control the airflow and temperature for the rear seat passengers: rear temperature, and a rear mode.

Each actuator is a LIN device controlled by the BCM. The HVAC controls – auxiliary supplies a 12 V reference voltage to the actuators, and ground is provided by the wiring harness. When the BCM sends a request message to the actuator, the actuator then operates internal stepper motors to move the door to the required position.

Air Speed and M8 Blower Motor (Front)

The selected blower motor speed is passed from the controls to the BCM via serial data.

The motor uses a fused B+, ground, control, and speed output signal circuits to operate. The blower motor speed is controlled by increasing or decreasing the voltage drop on the ground side of the blower motor speed control circuit. The BCM provides a low side pulse width modulation (PWM) signal to the blower motor to request a specific motor speed. The blower motor internal circuitry translates the PWM signal and drives the motor accordingly.

The blower motor has a signal wire used to output a speed signal. The signal is monitored by the BCM. The BCM monitors the blower motor speed to modify the total commanded engine coolant flow rate, which is a percentage of available coolant flow sent to the heater core for occupant comfort and windshield defrosting. The HVAC Blower Speed is monitored so that the ECM can optimize engine coolant flow for fuel economy and emissions.

Afterblow

Afterblow is a feature that dries the evaporator core by operating the blower motor after the engine is turned OFF under certain conditions. This reduces the amount of microbial growth that can create undesirable odors. For additional information on afterblow, the default setting, and changing the setting, refer to Afterblow Configuration.

Air Speed and Blower Motor — Rear (C69)

An auxiliary blower motor is used to regulate the air speed from the rear passenger ducts. The rear blower speed may be selected from the front or rear HVAC controls. The selected value is sent to the A34 HVAC Controls – Auxiliary via serial data.

The K8 Blower Motor Control Module — Auxiliary controls the speed of the rear blower motor by increasing or decreasing the voltage drop on the ground side of the blower motor. The A34 HVAC Controls – Auxiliary provides a low side pulse width modulation (PWM) signal to the blower motor control module — auxiliary via the blower motor speed control circuit. As the requested blower speed increases, the HVAC controls — auxiliary increases the amount of time that the speed signal is modulated to ground. As the requested blower speed decreases, the amount of time that the signal is modulated to ground decreases.

Duct Air Temperature (Front)

Physical duct air temperature sensors are not used with the front system. The air temperature in the air distribution ducts is calculated by the BCM based on the engine coolant temperature, coolant flow, evaporator temperature, outside air temperature, solar

load, blower motor speed, air inlet door position, and temperature door position information. The BCM uses the values to calculate actuator position.

Duct Temperature Sensors– Rear (C69)

The air temperature sensors are 2-wire negative temperature co-efficient thermistors. The sensors operate within a temperature range of −40 to +85°C (−40 to +185°F). The sensors are installed in the air distribution ducts and measure the temperature of the air that streams from the ducts. The HVAC control module uses these values to calculate the mixed air door position.

A signal circuit to each sensor and a common low reference circuit is provided by the A34 HVAC Controls – Auxiliary.

B39 Air Conditioning Evaporator Air Temperature Sensor

The evaporator temperature sensor is a 2-wire negative temperature coefficient thermistor. The sensor operates within a temperature range of −40 to +85°C (−40 to +185°F). The sensor is installed near the evaporator core to measure the air temperature exiting the core.

Based on vehicle operating conditions and operator settings, the HVAC software algorithms will determine a target evaporator air temperature. The operation of the compressor solenoid will be adjusted as needed to quickly reach and maintain the targeted temperature.

B1 Air Conditioning Refrigerant Pressure Sensor

The A/C refrigerant pressure sensor is a 3-wire piezoelectric pressure transducer. A 5 V reference voltage, low reference, and signal circuits enable the sensor to operate. The A/C pressure signal can be between 0.2–4.8 V. When the A/C refrigerant pressure is low, the signal value is near 0 V. When the A/C refrigerant pressure is high, the signal value is near 5 V. The engine control module (ECM) converts the voltage signal to a pressure value. When pressure is too high or too low, the ECM will not allow the A/C compressor clutch to engage.

G1 Air Conditioning Compressor

The A/C compressor uses a conventional belt driven magnetic clutch to engage and mechanically turn the compressor. When the A/C switch is pressed, the BCM sends an A/C request message to the ECM via serial data. If specific criteria is met, the ECM then grounds the A/C compressor clutch relay control circuit, which will switch the A/C compressor clutch relay. With the relay contacts closed, battery voltage is supplied to the permanently grounded A/C compressor clutch. The A/C compressor clutch will then be activated.

This A/C system utilizes a variable displacement solenoid valve to alter the amount of displacement created by the turning of the compressor. The BCM provides both battery voltage and a pulse width modulated ground to the Q46 Air Conditioning Compressor Solenoid Valve. When the A/C switch is pressed, the BCM grounds the variable displacement solenoid using a (PWM) signal in order to determine the amount of compressor displacement. The performance of the A/C compressor is regulated based on cooling load.

B160 Inside Air Moisture and Windshield Temperature Sensor

The windshield temperature and inside moisture sensor includes the relative humidity sensor, windshield temperature sensor and humidity sensing element temperature sensor.

This sensor assembly provides information about:

- Relative humidity level at windshield (passenger compartment side)
- Temperature of the windshield (passenger compartment side)
- Temperature of the humidity sensor element

The relative humidity sensor measures the relative humidity of the passenger compartment side of the windshield. It also detects the temperature of the windshield surface on the passenger compartment side. Both values are used as control inputs for the BCM application to calculate the fog risk on windshield compartment side and ability to reduce fuel consumption by decreasing A/C compressor power to a minimum without causing any fog. The sensor will also enable partial recirculation mode in order to improve heat-up performance of the passenger compartment under cold ambient temperature conditions without the risk of mist build-up on the windshield. The humidity sensor element temperature sensor supplies the temperature of the humidity sensor element. It is only needed if the thermal contact between the humidity sensing element and the inside windshield surface is not sufficient.

The sensor is part of a LIN windshield sensor array, and the windshield temperature and humidity values are transmitted to the BCM via serial data.

B10B Sunload, Temperature and Ambient Light and Security Sensor

The ambient light/sunload sensor includes the solar sensor and passenger compartment temperature sensor.

The solar sensor is connected to a low reference and 5 V supply through the BCM. As the sunload increases, the sensor signal voltage also increases and vice versa. The signal provided to the BCM varies between 1.2–4.85 V.

The passenger compartment temperature sensor is a negative temperature coefficient thermistor, connected to a low reference and 5 V supply through the BCM. As the air temperature increases, the sensor resistance decreases. The signal varies between 0–5 V.

Bright or high intensity light can cause the vehicles interior temperature to increase. The HVAC system uses the sensor values and compensates for the increased temperature to maintain the system settings.

E40 Air Heater (C3A)

Some models are equipped with an auxiliary electric heater to assist in warming the passenger compartment when the engine coolant has not sufficiently warmed to operating temperature. The air heater is a LIN device. The heater uses an ignition circuit, battery voltage circuit, ground circuit, and a serial data signal from the BCM to operate.

The heater is a 12 V positive temperature coefficient heating element located in the HVAC case just downstream of the traditional heater core. The system will activate the heater when the outside temperature is less than approximately 8°C (46°F), the engine coolant temperature is less than approximately 75°C (167°F), and the temperature blend door is commanded to the full hot position.

Air Delivery (Front)

The BCM controls the distribution of air by the use of recirculation and mode door actuators. The modes that may be selected are:

- Defrost: windshield outlet
- Panel: dashboard outlets
- Floor: front footwell outlets
- Defog: defrost + floor
- Bi-level: panel + floor
- Tri-level: panel + defrost + floor
- Hi-level: panel + defrost

The desired air distribution mode can be selected with the air distribution switches at the HVAC control. The HVAC control delivers the values to the BCM via serial data. The BCM sends a request to the mode door actuator to move the door to the required position. Depending on the position of the door, air is distributed through various ducts leading to the outlets in the dash. When defrost airflow is active, the BCM will move the recirculation actuator to outside air, to aid in reducing window fogging. When defrost is selected the blower motor will be activated, regardless of the coolant temperature. A/C is available in all modes.

Refer to the owners manual for operation of the HVAC controls and mode selection.

Recirculation Operation

The recirculation switch is integrated into the HVAC control. The selected recirculation setting is sent to the BCM via serial data. The BCM controls the air intake using the recirculation actuator. In recirculation mode the recirculation door is positioned to block outside air from entering and circulate the air within the vehicle. In outside air mode the recirculation door is positioned to route outside air into the vehicle.

Recirculation is only available if the defrost mode is not active. When the defrost mode is active, the recirculation actuator positions the recirculation door so that outside air is circulated to the windshield to reduce fogging.

In automatic mode the values of the sensors are used as inputs for the BCM to calculate the fog risk on the passenger compartment side of the windshield. The A/C compressor and the defrost mode may be activated to prevent or remove fog on the passenger compartment side of the windshield.

In automatic mode, a partial recirculation mode may be commanded to accelerate cabin heating or cooling and reduce energy usage. The recirculation indicator remains illuminated at all times, regardless of the actual operating mode determined by the system.

Air Delivery — Rear (C69)

The BCM control module controls the distribution of air by the mode door actuator – auxiliary. The modes that may be selected are:

- AUTO
- Floor
- Bi-Level
- Vent

The desired rear air distribution mode can be selected with the Mode switch at the HVAC control – auxiliary. The HVAC control – auxiliary delivers the values to the BCM via serial data. The BCM controls the mode door actuator – auxiliary via LIN bus to move the door to the calculated position. Depending on the position of the door, air is distributed through various ducts.

Heating and A/C Operation

The purpose of the heating and A/C system is to provide heated and cooled air to the interior of the vehicle. The A/C system will also remove humidity from the interior and reduce windshield fogging. Regardless of the temperature setting, the following may affect the rate that the HVAC system can achieve the desired temperature:

- Recirculation setting
- Difference between inside and desired temperature
- Blower motor speed setting
- Mode setting
- Dashboard outlet open/closed position

When the A/C switch or the AUTO switch is pressed, the HVAC control sends a signal to the BCM via serial data. The BCM evaluates this signal and sends an A/C request signal to the ECM via CAN-Bus. The ECM checks all preconditions before releasing and if all conditions are met sends a release signal back to the BCM. The A/C compressor is activated by the BCM. The BCM supplies battery voltage to the A/C compressor solenoid. When the A/C switch is pressed, the BCM provides a pulse width modulation (PWM) signal to the A/C compressor solenoid in order to command the performance of the A/C compressor. The performance of the A/C compressor is regulated using evaporator temperature and engine load.

The A/C indicator does not indicate the compressor is currently active. The A/C indicator shows that A/C has been requested and the system will activate the compressor as needed.

The following conditions must be met in order to activate the A/C compressor:

- Battery voltage is between 9–18 V
- Engine coolant temperature is less than 124°C (255°F)
- Engine speed is greater than 600 RPM
- Engine speed is less than 5 500 RPM
- A/C high side pressure is between 269–2 929 kPa (39–425 PSI)
- Throttle position is less than 100%
- Evaporator temperature is greater than 3°C (38°F)
- ECM does not detect immoderate torque load

- ECM does not detect insufficient idle quality
- The ambient temperature is above 1°C (34°F)

The sensor information is used by the ECM to determine the following:

- The A/C high side pressure
- An A/C system load on the engine
- An immoderate A/C high side pressure
- The heat load at the A/C condenser

The air streams into the passenger compartment through the heater core and the evaporator core. The air temperature actuator drives the mixed air door to direct the airflow. If the interior temperature should be increased, the mixed air door is put into the position in which more air streams through the heater core. If the interior temperature should be decreased, the mixed air door is put into the position in which more air streams through the evaporator core.

Automatic Operation

In automatic operation, the BCM maintains the comfort level inside of the vehicle by controlling the A/C compressor solenoid, the blower motor, the air temperature actuators, mode actuator and recirculation actuator.

The automatic mode indicator shows that the system is in full automatic operation. If an individual setting is changed (excluding temperature), the automatic indicator will turn off, and that function will enter manual control. All other functions will remain under automatic control unless manually changed.

To put the HVAC system in automatic mode, the following is required:

1. The auto switch must be activated.
2. The air temperature switch must not be in either the full hot or full cold position.

Once the desired temperature is reached, the blower motor, mode, recirculation and temperature actuators automatically adjust to maintain the temperature selected. The BCM performs the following functions to maintain the desired air temperature:

- Monitors the following:
  - Ambient (outside) air temperature sensor
  - Passenger compartment temperature sensor
  - Calculated front duct air temperatures
  - Auxiliary duct air temperature sensors (C69)
  - Windshield temperature and inside moisture sensor
  - Evaporator temperature sensor
  - Ambient light/sunload sensor
- Regulate the blower motor speed
- Regulate the rear blower motor speed (C69)
- Position the air temperature actuators
- Position the mode door actuators
- Position the recirculation actuator
- Control of the A/C compressor solenoid

When the temperature setting is set to full hot, the blower speed will increase gradually as the coolant warms to normal operating temperature. When normal engine operating temperature is reached the blower stays on high speed and the air temperature actuators stays in the full heat position.

When the temperature setting is set to full cold, the blower will immediately operate at high speed and the air temperature actuators move to full cold position. The mode actuator moves to the panel position and the recirculation actuator moves to the recirculation position.

Under cold ambient temperatures, the automatic HVAC system provides heat in the most efficient manner. The operator can select an extreme temperature setting but the system will not warm the vehicle any faster. Under warm ambient temperatures, the automatic HVAC system also provides air conditioning in the most efficient manner. Selecting an extreme cool temperature will not cool the vehicle any faster.

In automatic mode the values of the windshield temperature and inside moisture sensor are used as control inputs for the BCM application to calculate the fog risk on the passenger compartment side of the windshield and ability to reduce fuel consumption by decreasing A/C compressor power to a minimum without causing any fog. The A/C compressor and the defrost mode are activated to prevent or remove fog on the passenger compartment side of the windshield. The sensor will also enable partial recirculation mode in order to improve heat-up performance of the passenger compartment under cold ambient temperature conditions without the risk of mist build-up on the windshield.

Engine Coolant and A/C System Refrigerant

For information on engine coolant, coolant flow, A/C refrigerant, and the A/C refrigerant cycle, refer to *Heating and Air Conditioning System Description and Operation on page 5-3*.

BLANK

Section 6

Power and Signal Distribution

Data Communications 6-3
Schematic and Routing Diagrams 6-3
Data Communication Schematics 6-4
Body Control System Schematics 6-24
Description and Operation 6-5
Data Link Communications Description and Operation 6-27

Electrical Component and Inline Harness Connector End Views 6-7
Component Locator 6-7
Electrical Center Identification Views 6-30
Component Connector End Views 6-78
Inline Harness Connector End Views 6-694

Electrical Component Locator and Harness Routing Views 6-848
Schematic and Routing Diagrams 6-848
Harness Routing Views 6-848
Component Locator 6-882
Front of Vehicle/Engine Compartment Component Views 6-882
Powertrain Component Views 6-890
Instrument Panel/Center Console Component Views 6-899
Passenger Compartment/Roof Component Views 6-908
Door Component Views 6-914
Luggage Compartment/Rear of Vehicle Component Views 6-922
Wheels/Vehicle Underbody Component Views 6-925
Ground Views 6-929

Power Outlets 6-944
Schematic and Routing Diagrams 6-944
Cigar Lighter/Power Outlet Schematics 6-945
Description and Operation 6-951
Mobile Device Wireless Charger Description and Operation 6-951
Power Outlets Description and Operation 6-951

Wiring Systems and Power Management 6-954
Schematic and Routing Diagrams 6-954
Power Distribution Schematics 6-955
Power Moding Schematics 6-981
Ground Distribution Schematics 6-983
Component Locator 6-1006
Master Electrical Component List 6-1006

BLANK

Data Communications

Schematic and Routing Diagrams

Data Communication Schematics (Data Link Connector and Serial Data Gateway Module Power and Ground)

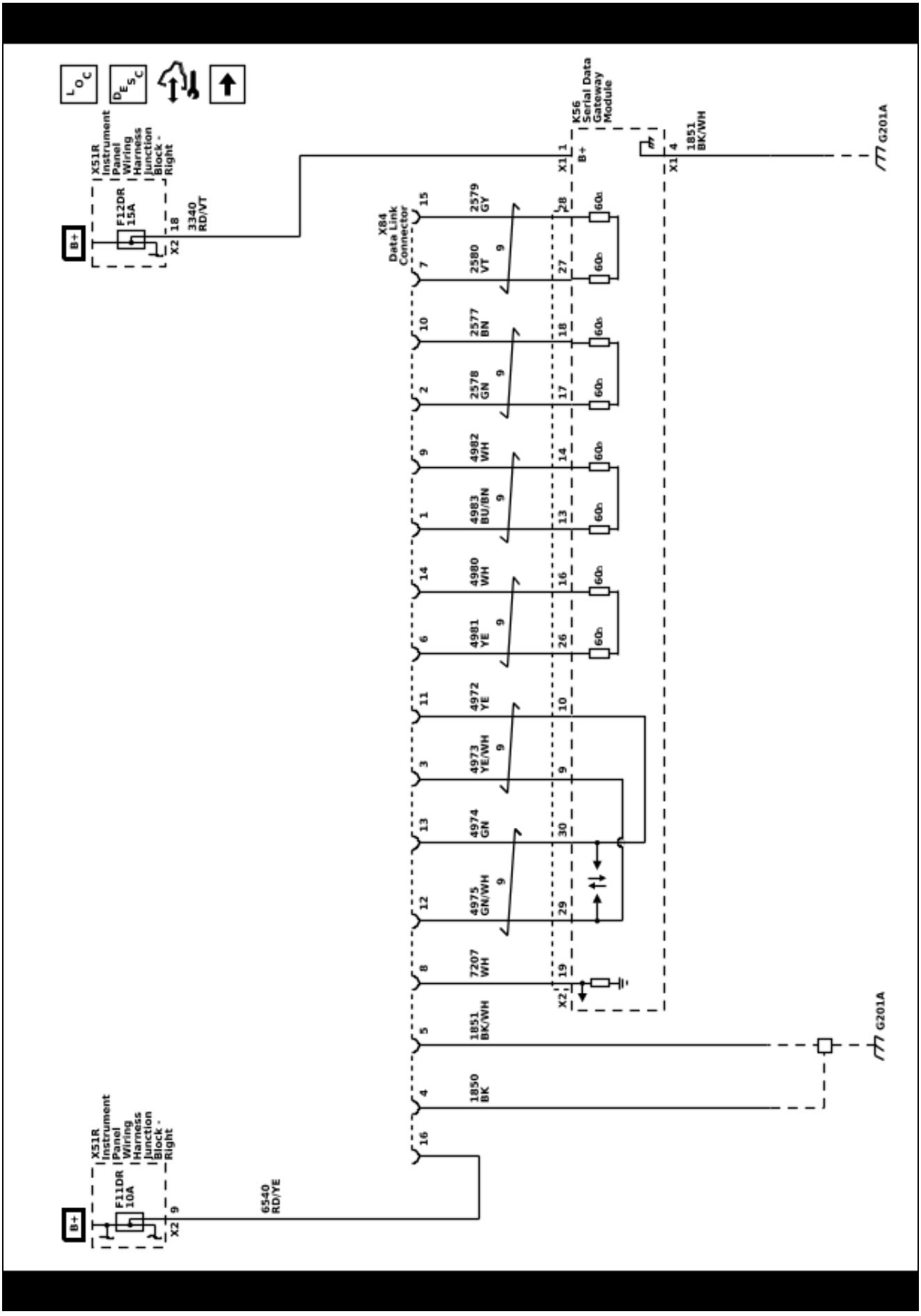

Data Communication Schematics (CAN 1 (1 of 2))

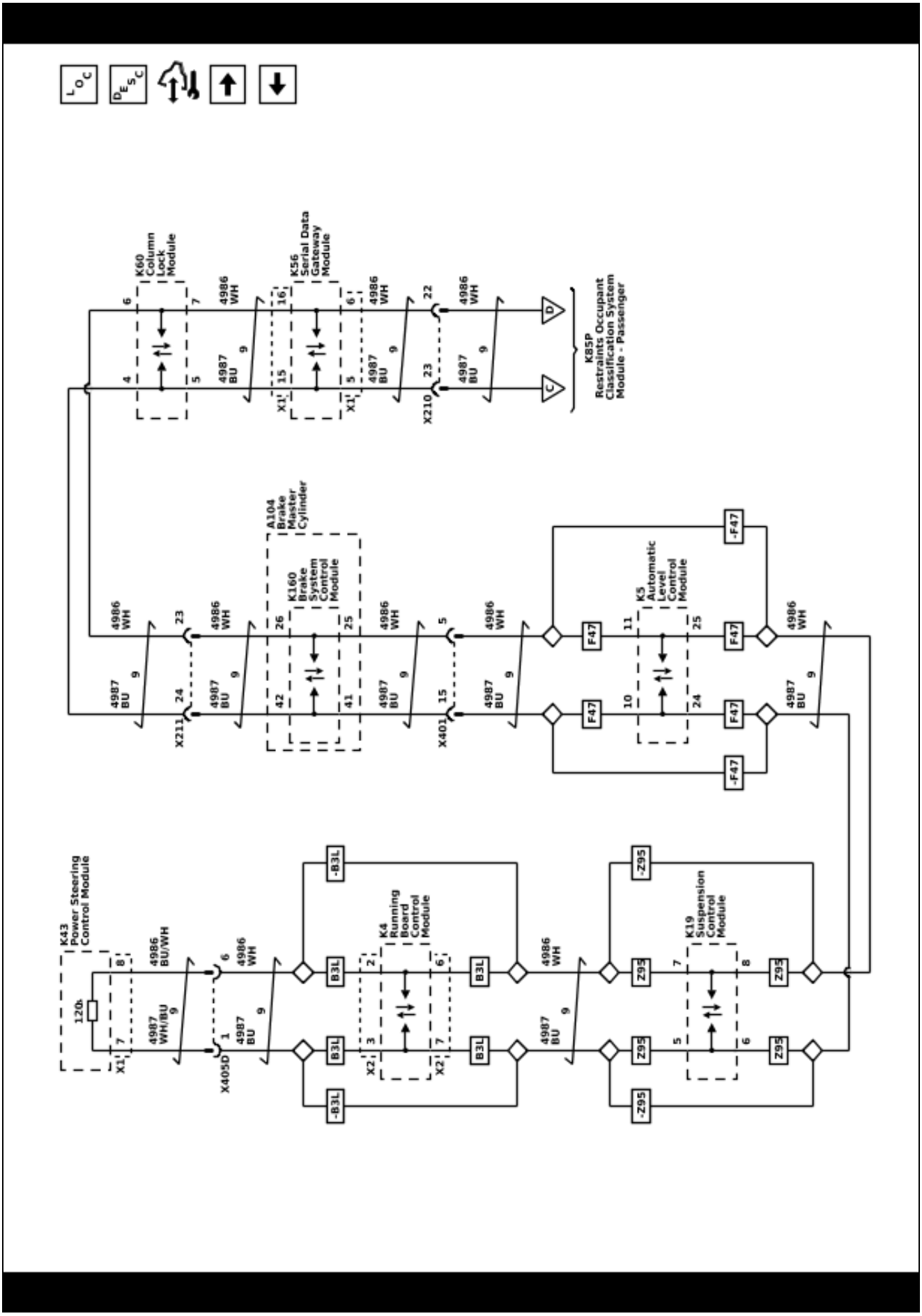

5862040

Data Communication Schematics (CAN 1 (2 of 2))

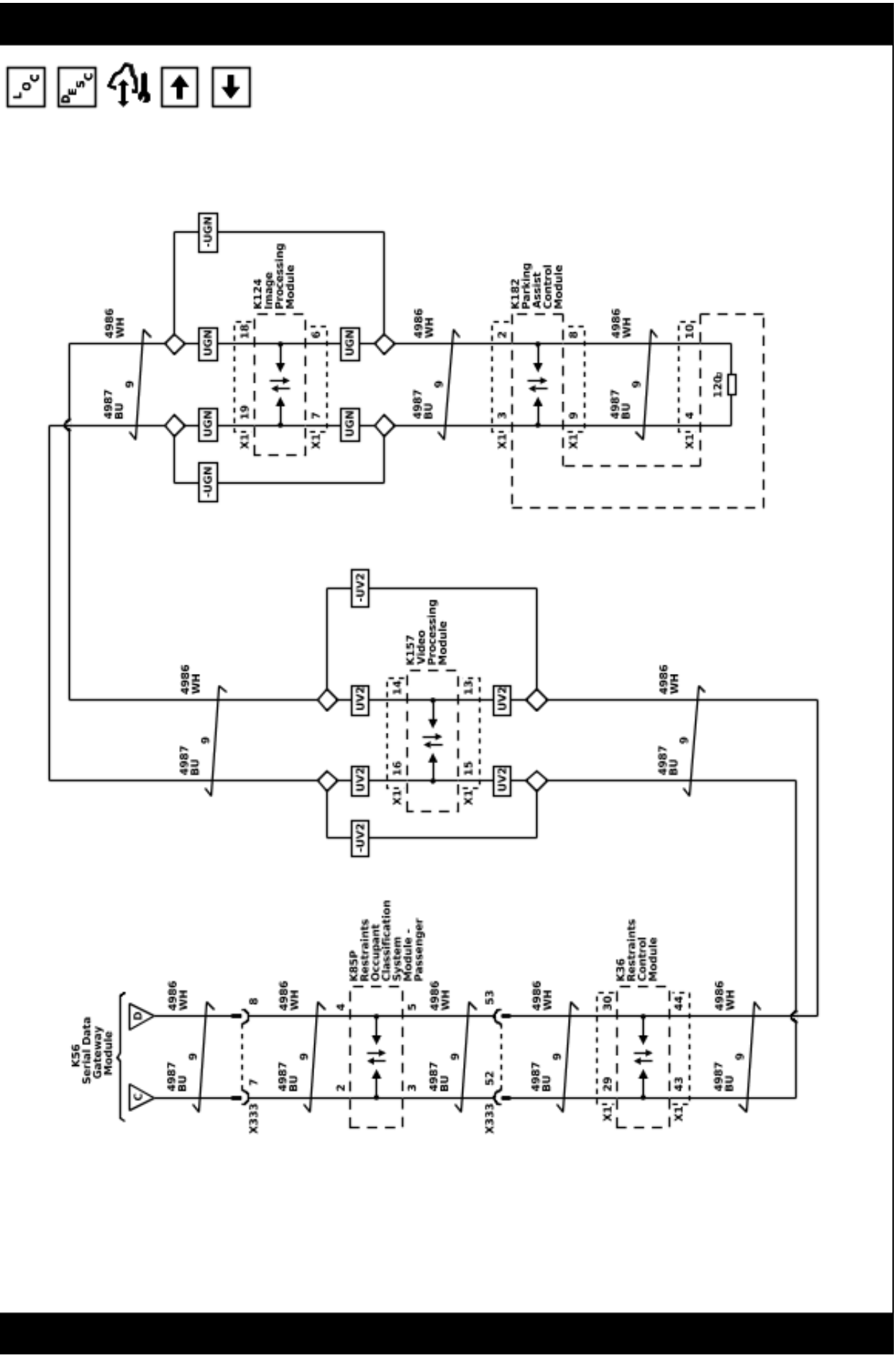

Data Communication Schematics (CAN 2 (1 of 2))

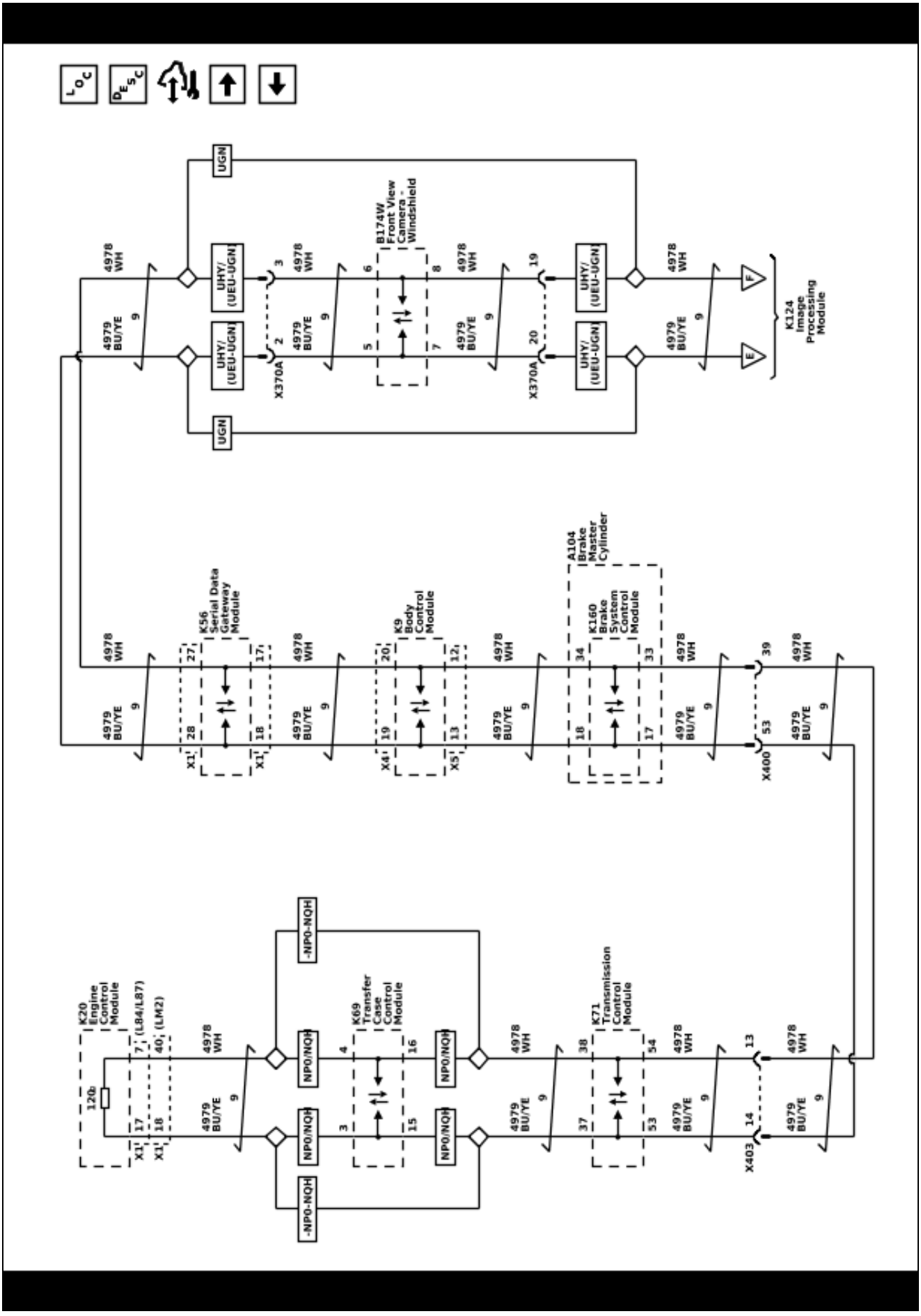

5862042

Data Communication Schematics (CAN 2 (2 of 2))

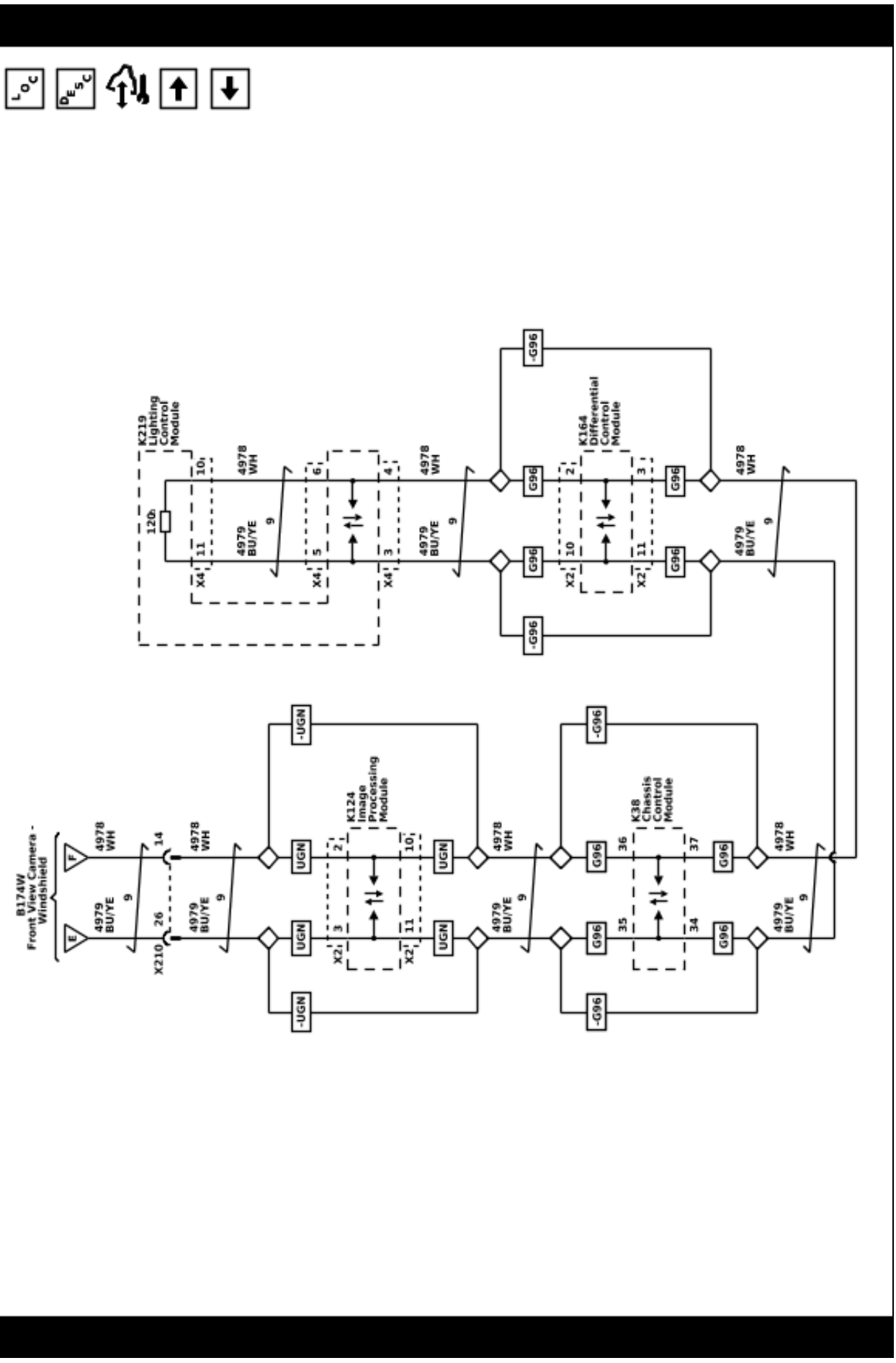

5862043

Data Communication Schematics (CAN 3)

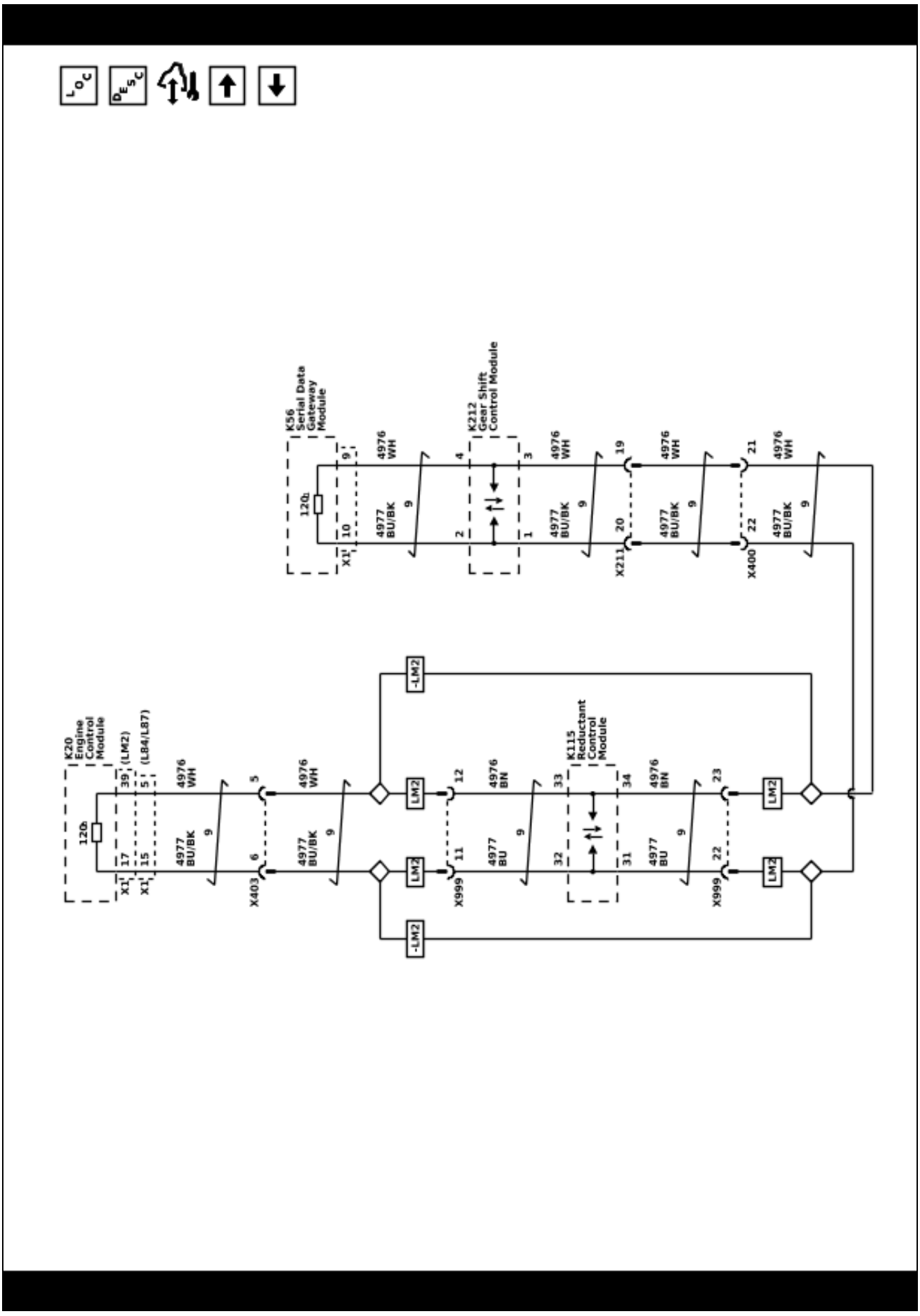

5862044

Data Communication Schematics (CAN 4 (1 of 2))

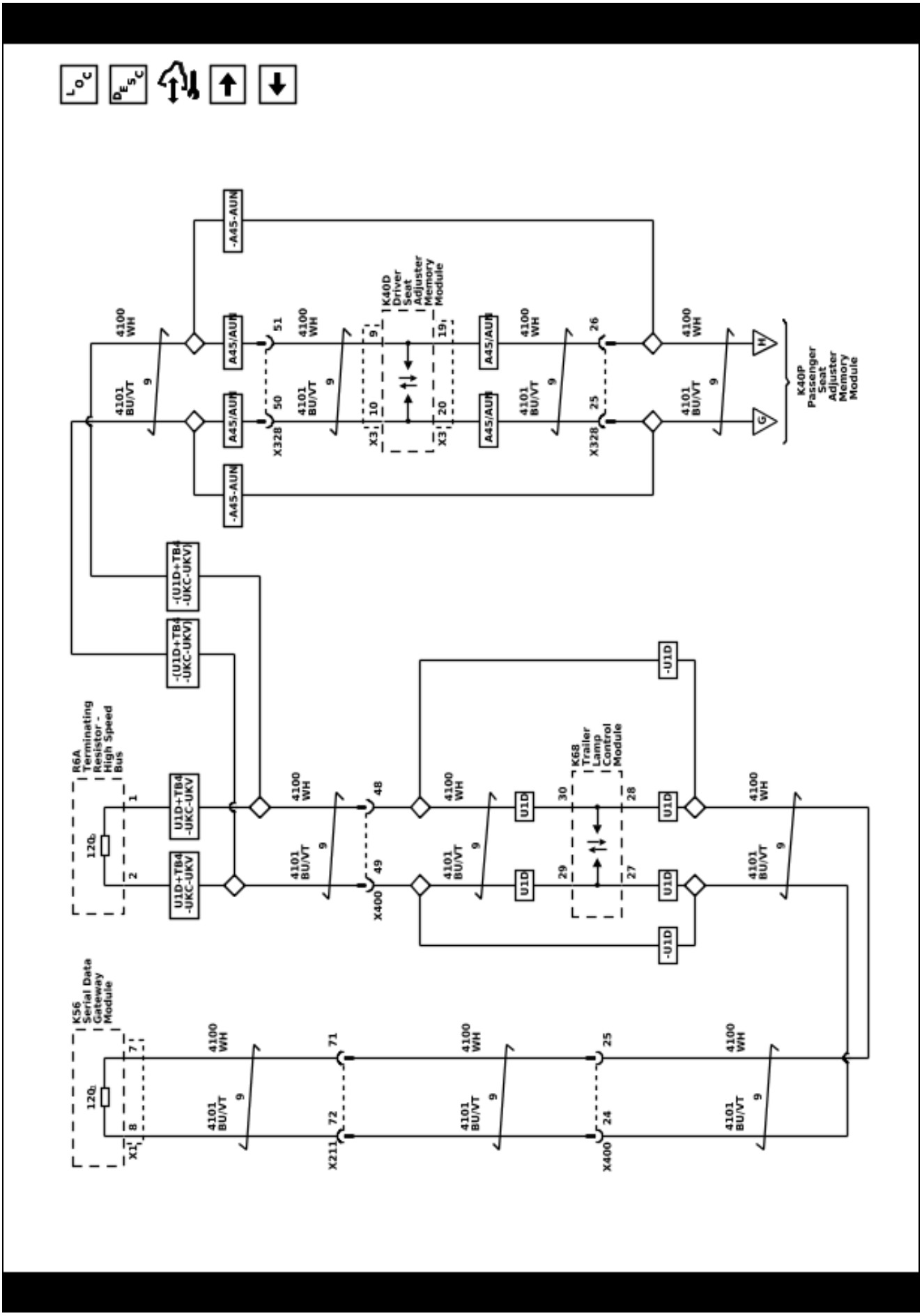

Data Communication Schematics (CAN 4 (2 of 2))

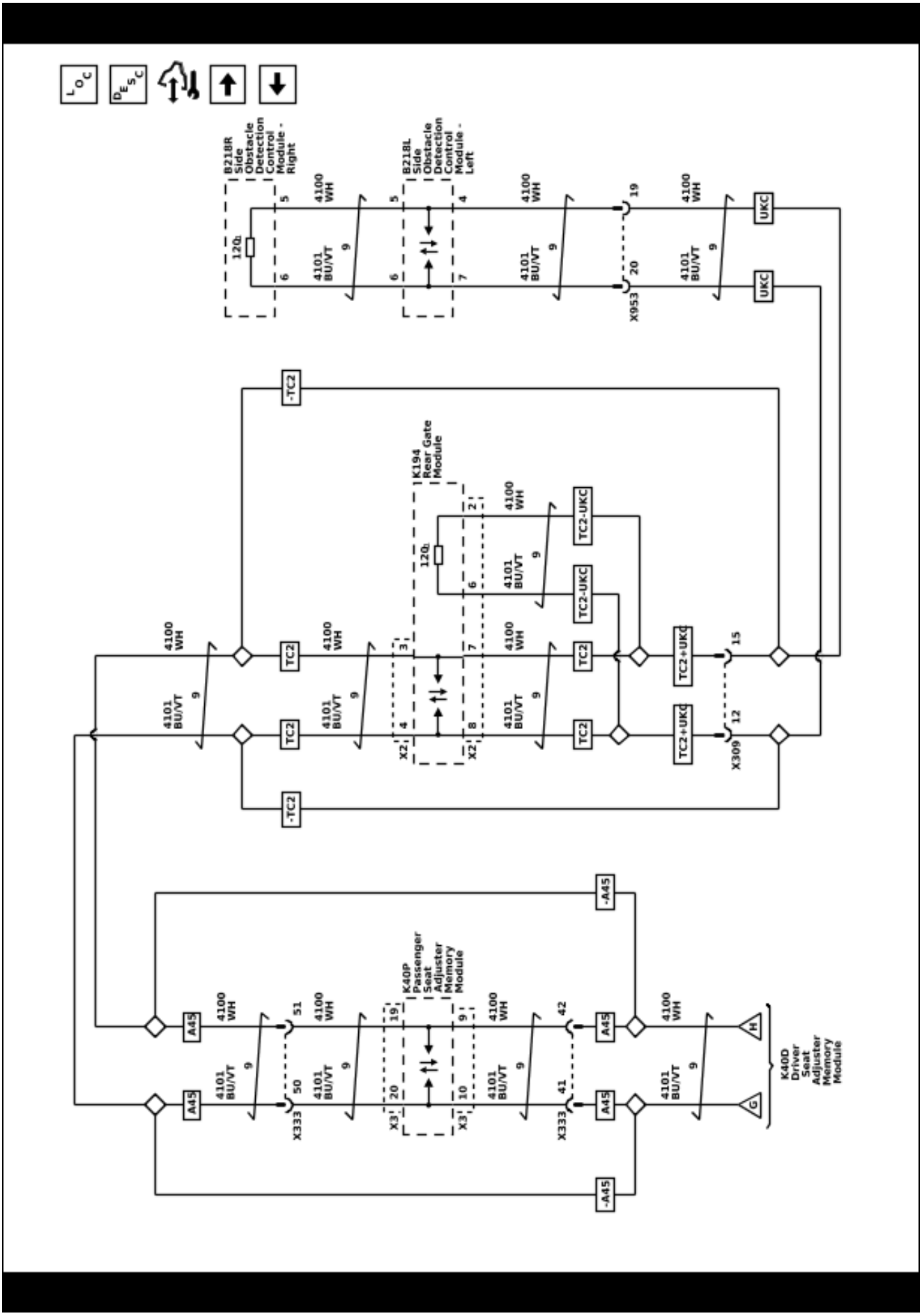

Data Communication Schematics (CAN 5)

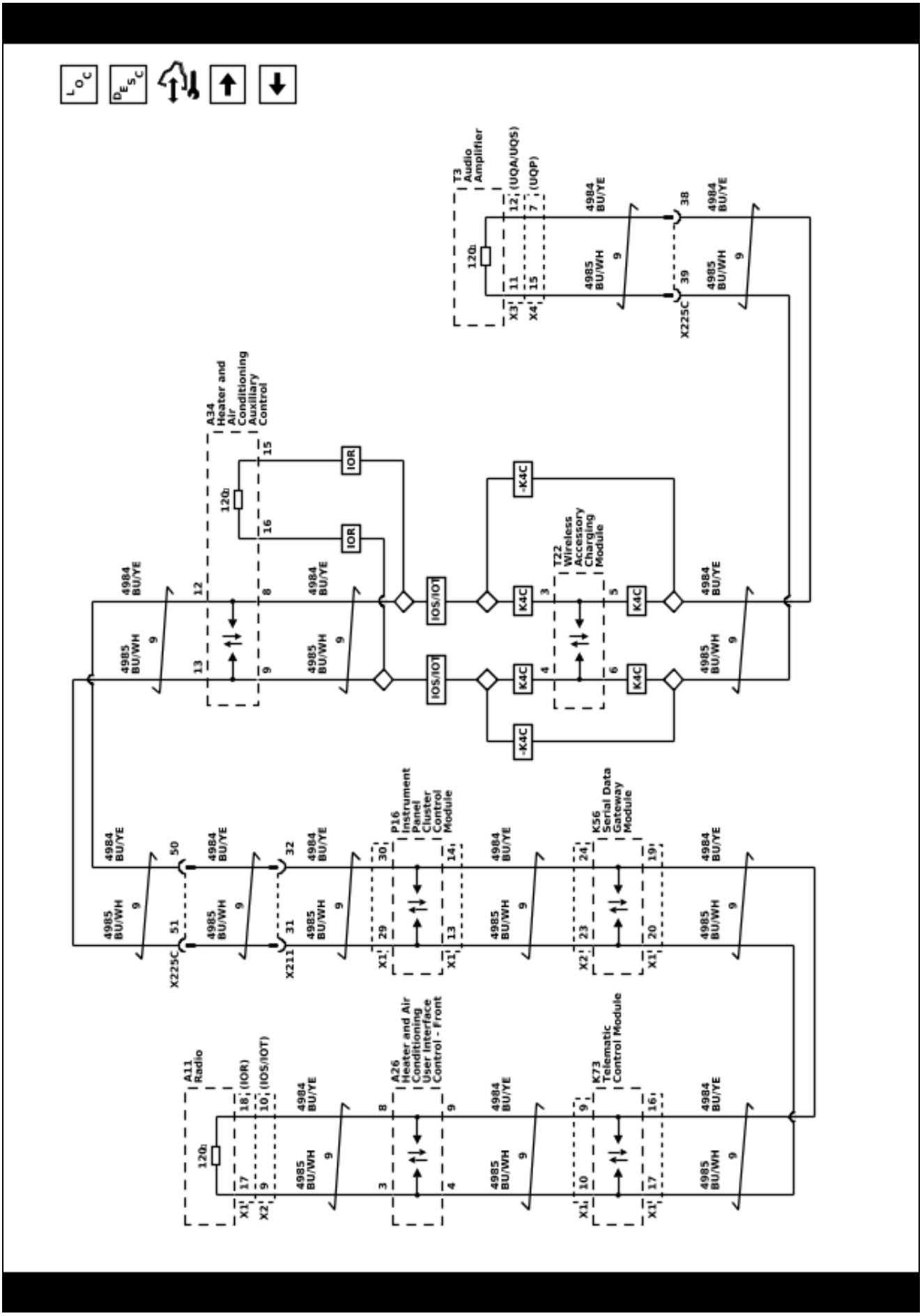

5862047

Data Communication Schematics (CAN 8 (UGN))

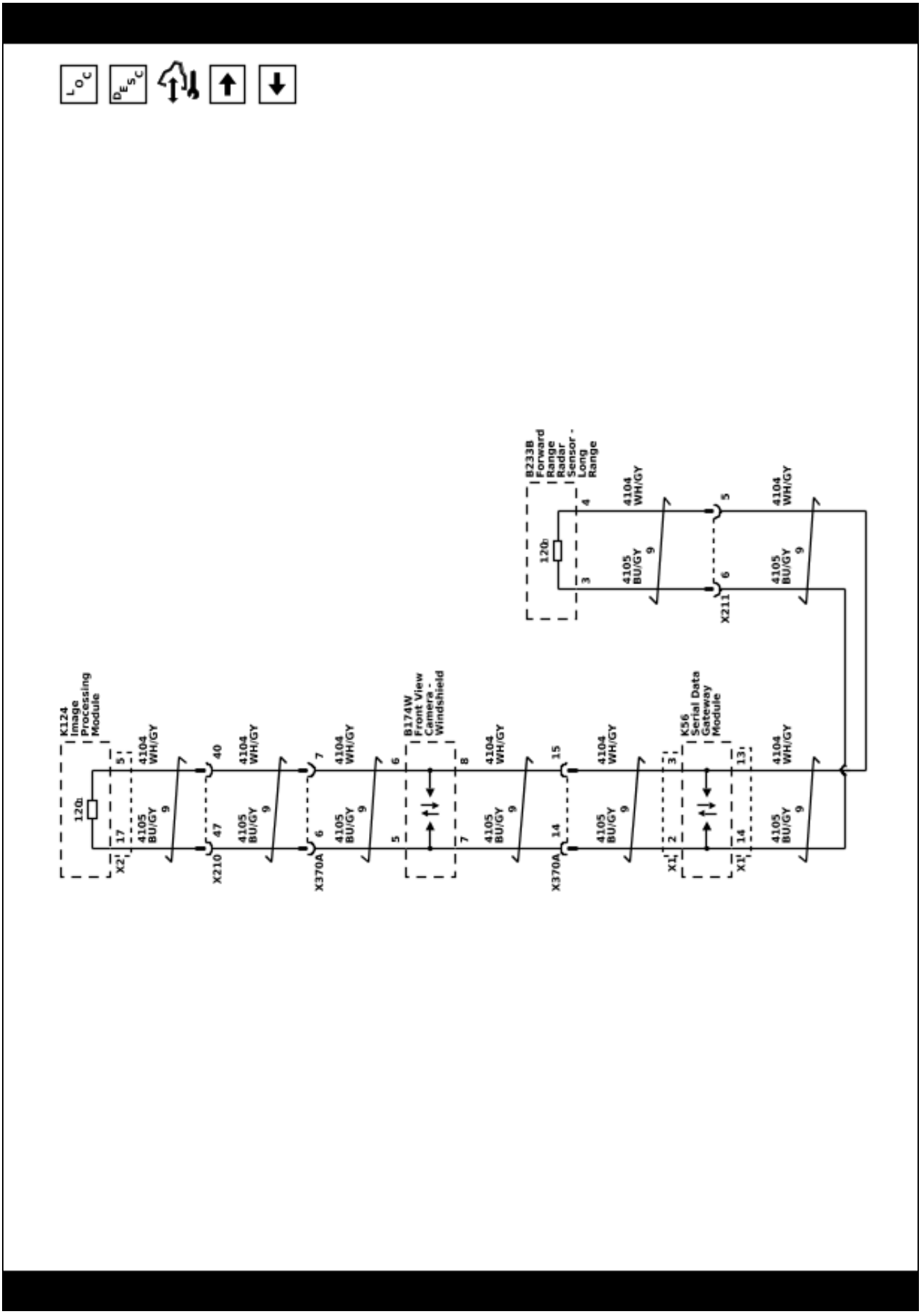

Data Communication Schematics (Powertrain CAN)

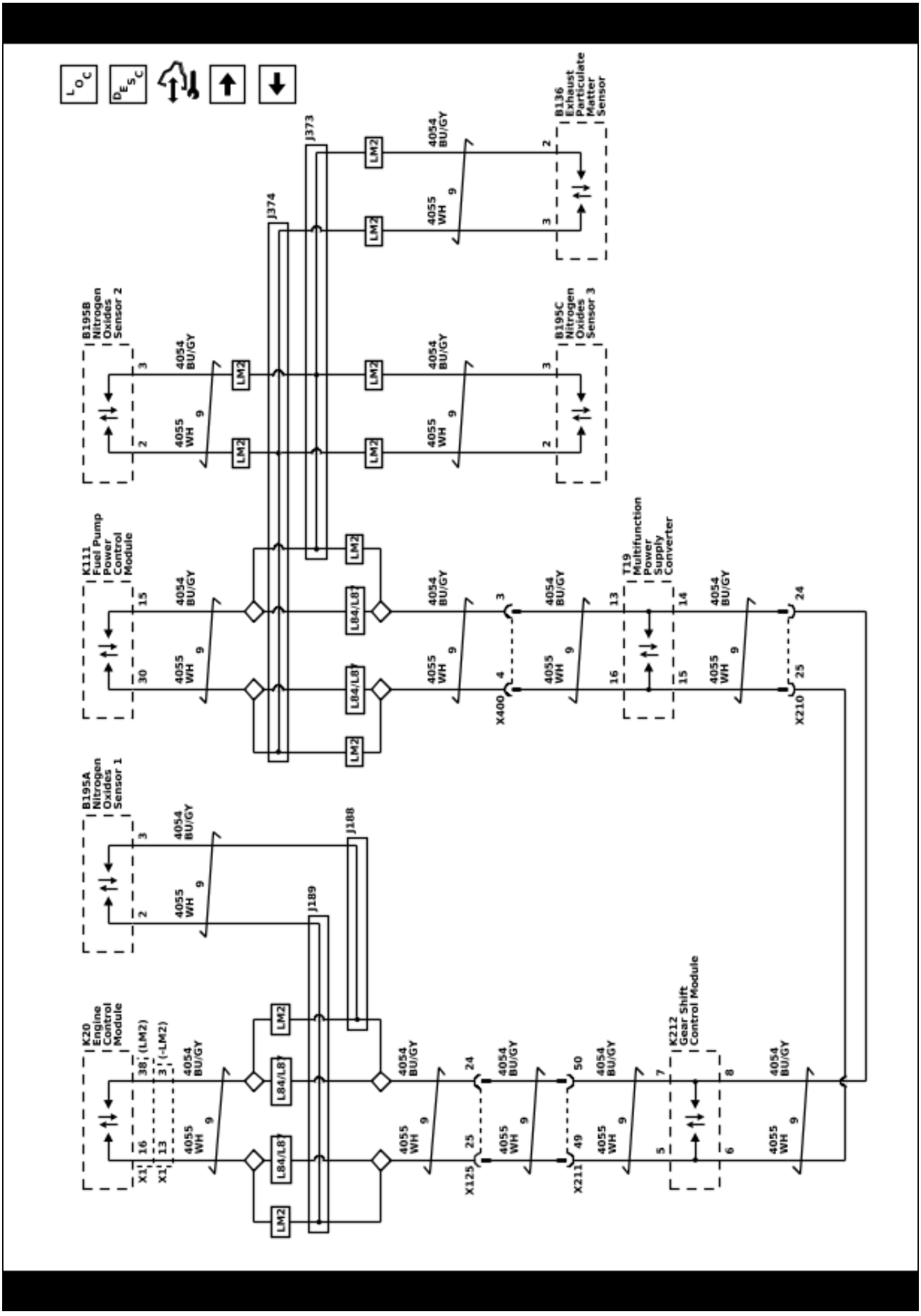

5862049

Data Communication Schematics (Powertrain CAN Enable)

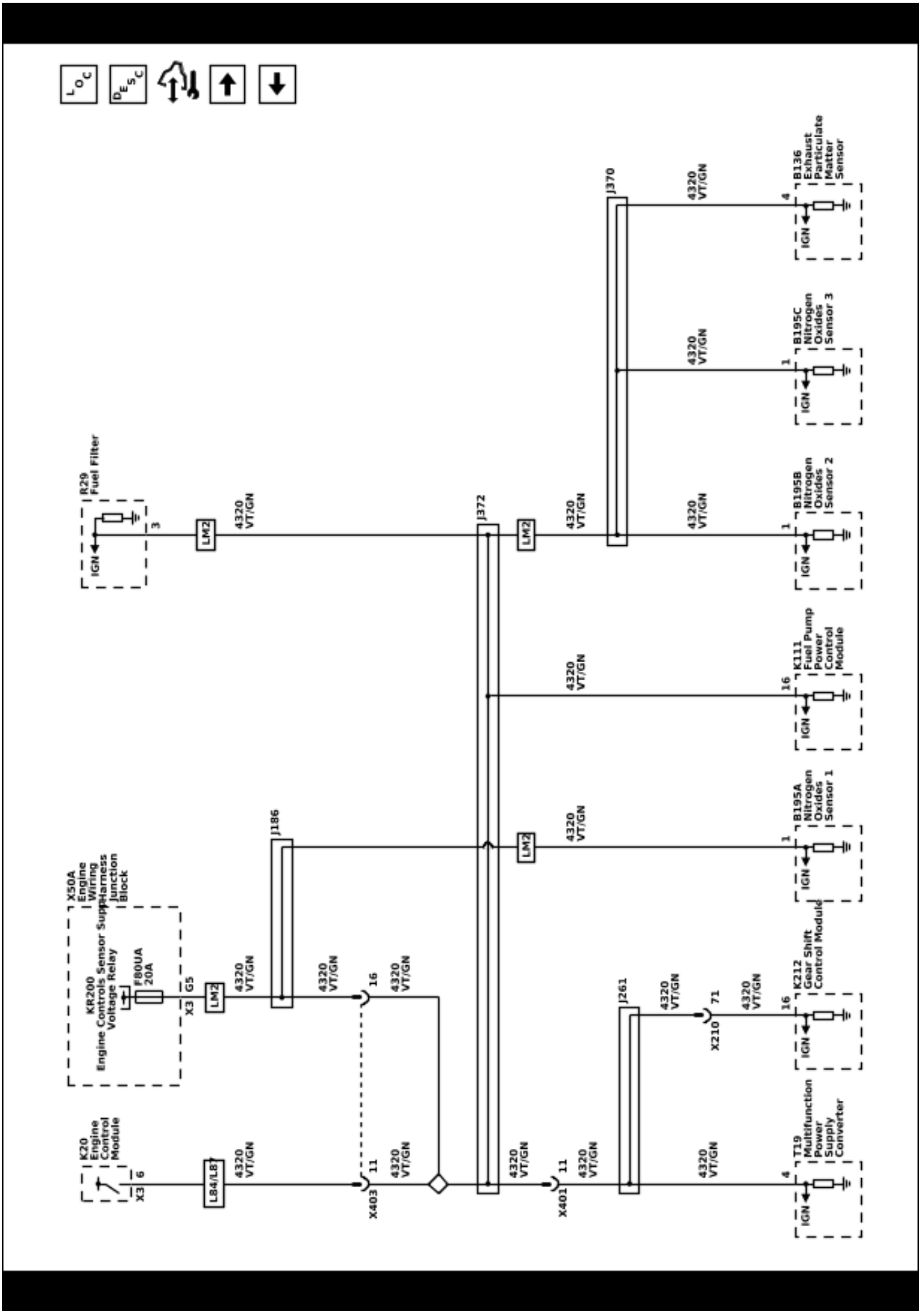

Data Communication Schematics (Body Control Module Local Interconnect Network (LIN) Busses 2, 3, and 4)

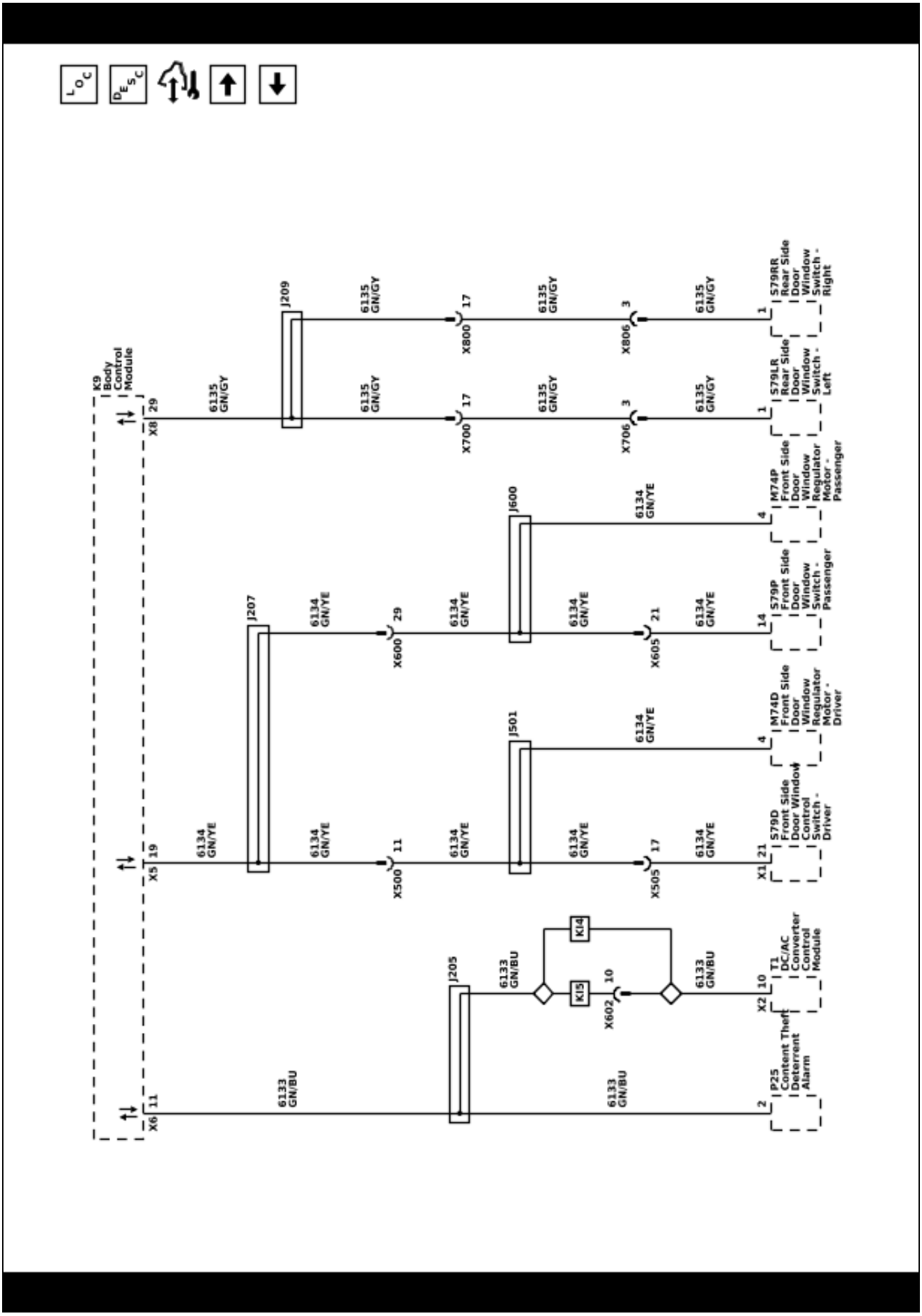

Data Communication Schematics (Body Control Module Local Interconnect Network (LIN) Busses 5, 6, 7, and 8)

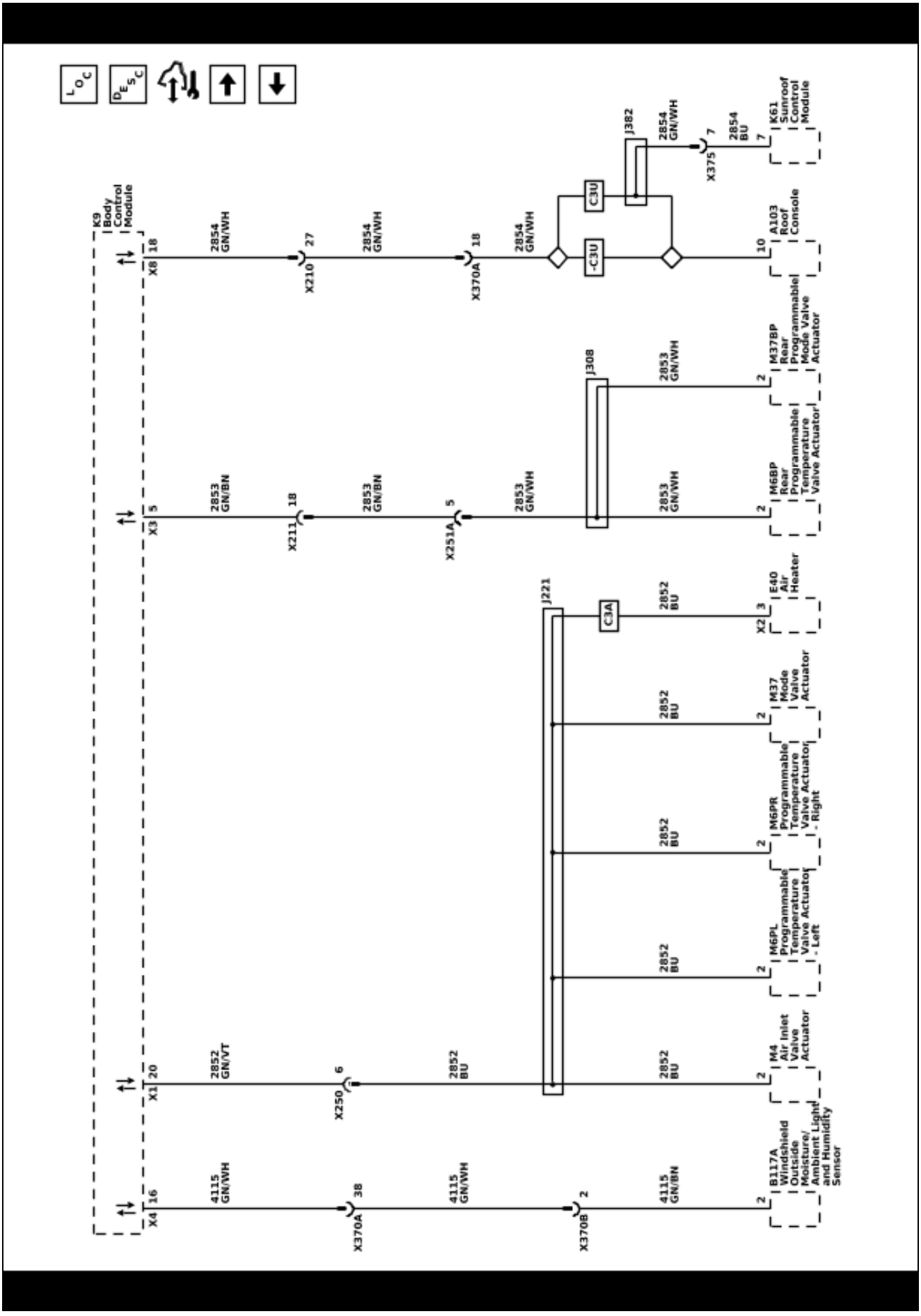

Data Communication Schematics (Body Control Module Local Interconnect Network (LIN) Busses 9, 10, and 11)

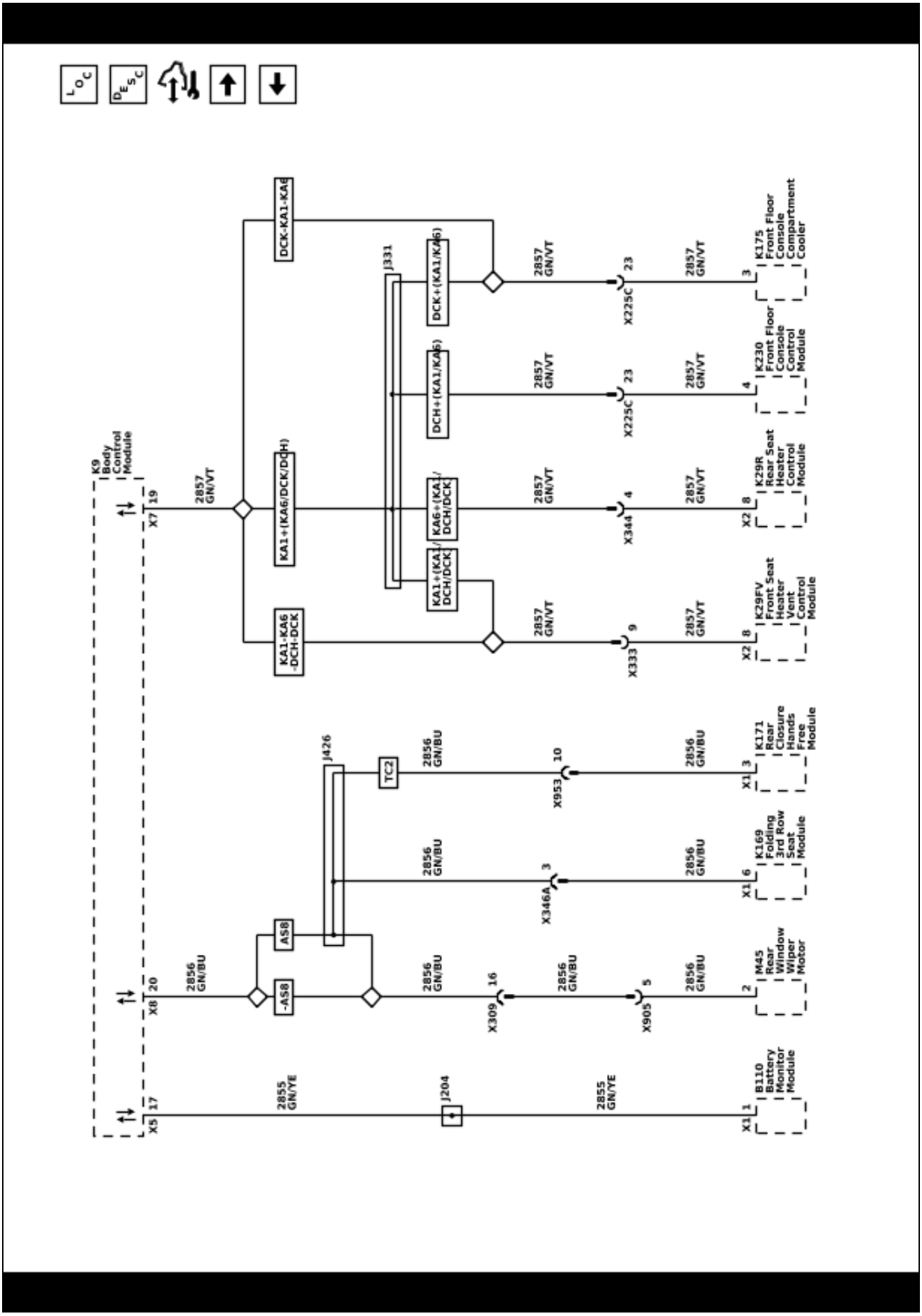

Data Communication Schematics (Body Control Module Local Interconnect Network (LIN) Busses 12 and 16)

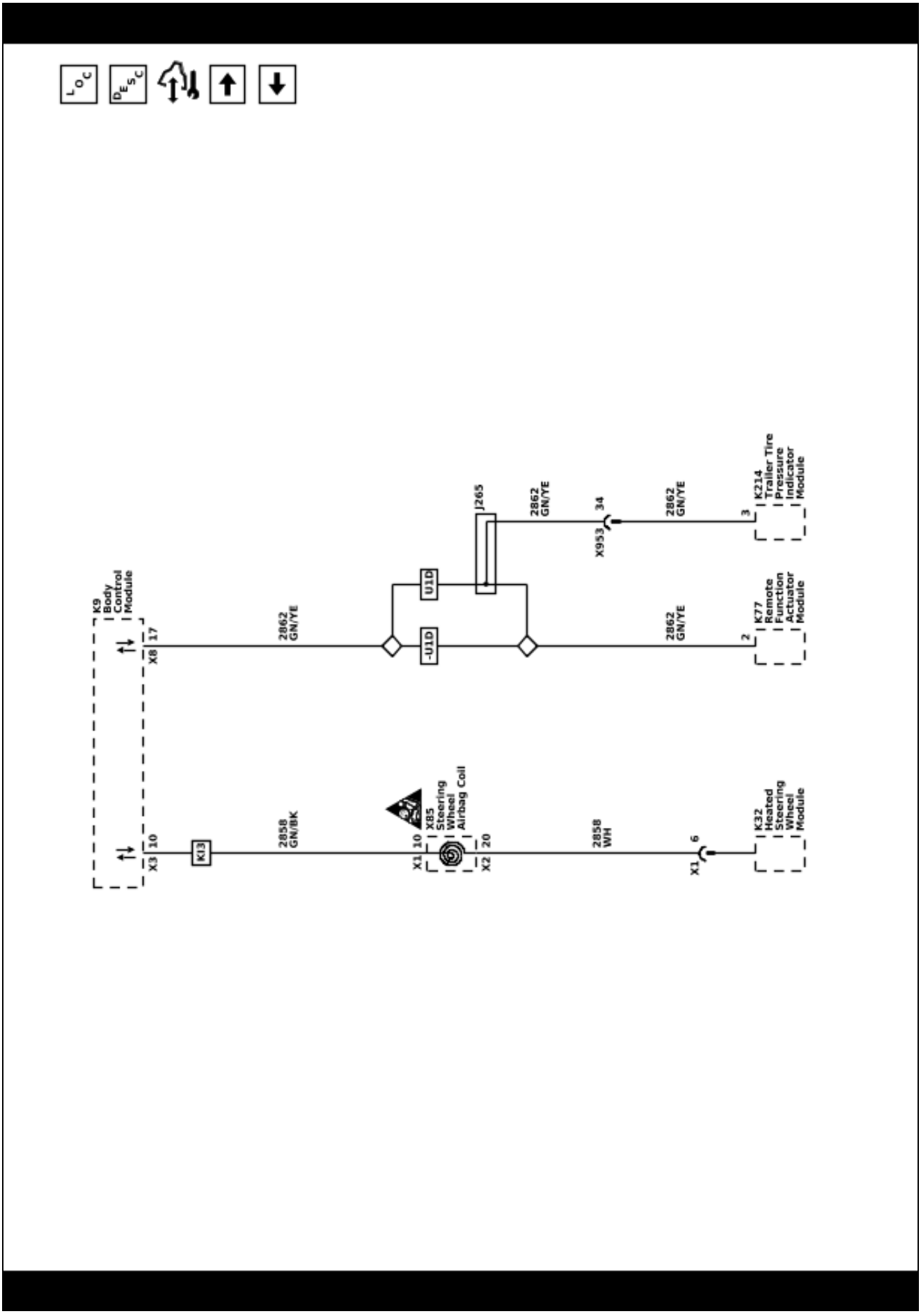

Data Communication Schematics (Brake System Control Module Local Interconnect Network (LIN) Busses)

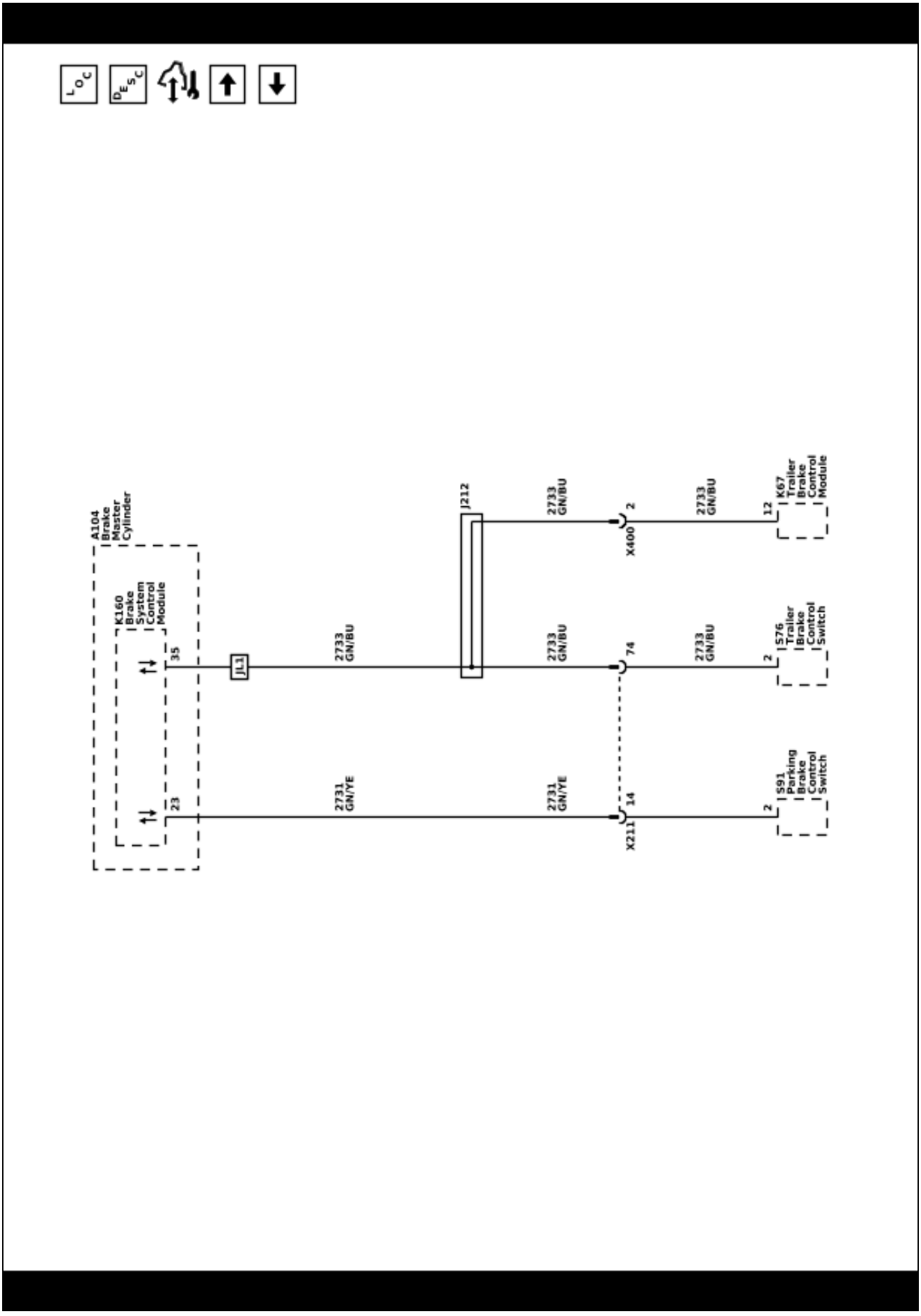

Data Communication Schematics (Engine Control Module Local Interconnect Network (LIN) Busses)

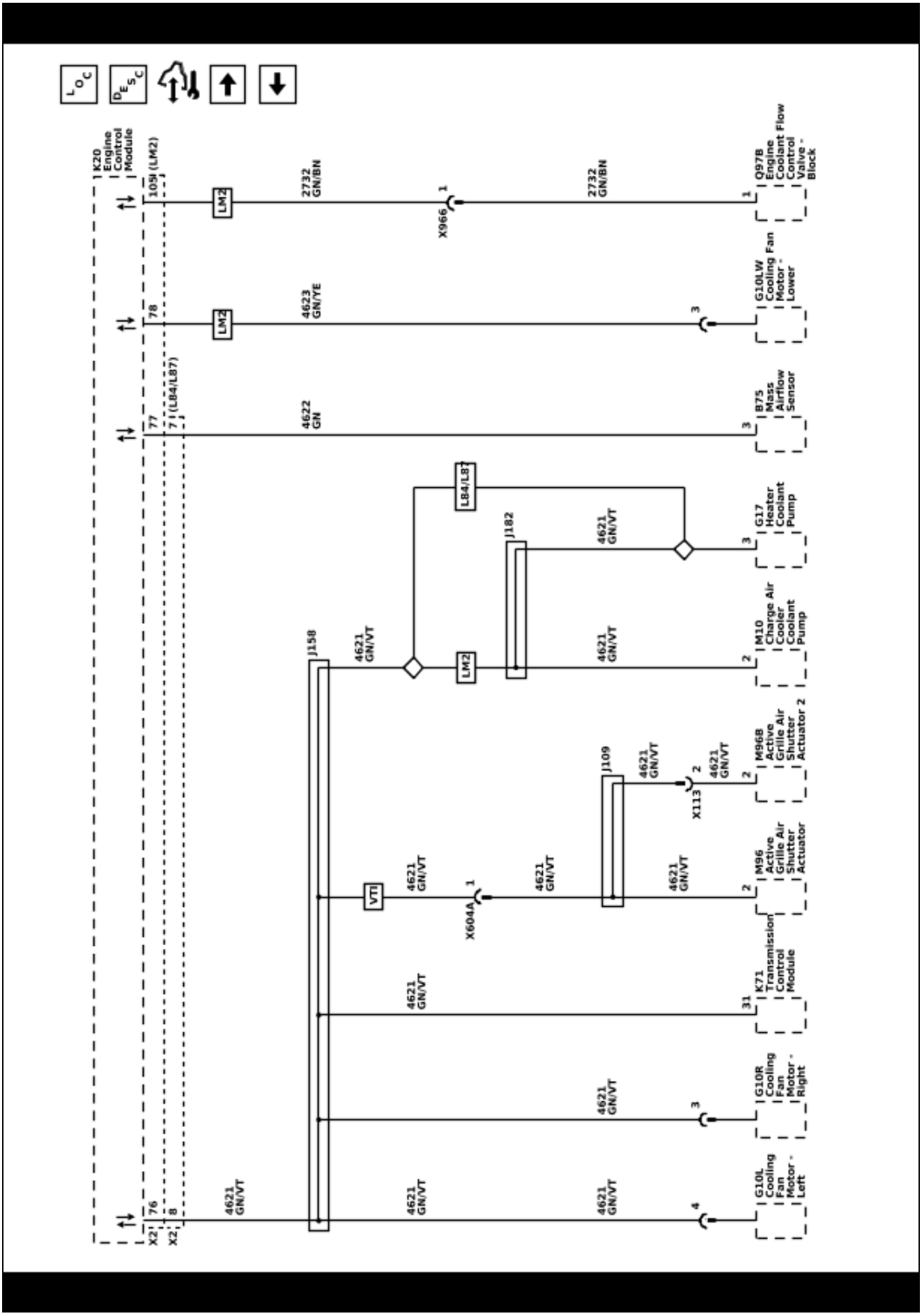

5862056

Data Communication Schematics (Instrument Panel Cluster, Seat Memory Module, and Near Field Communication Module Local Interconnect Network (LIN) Busses)

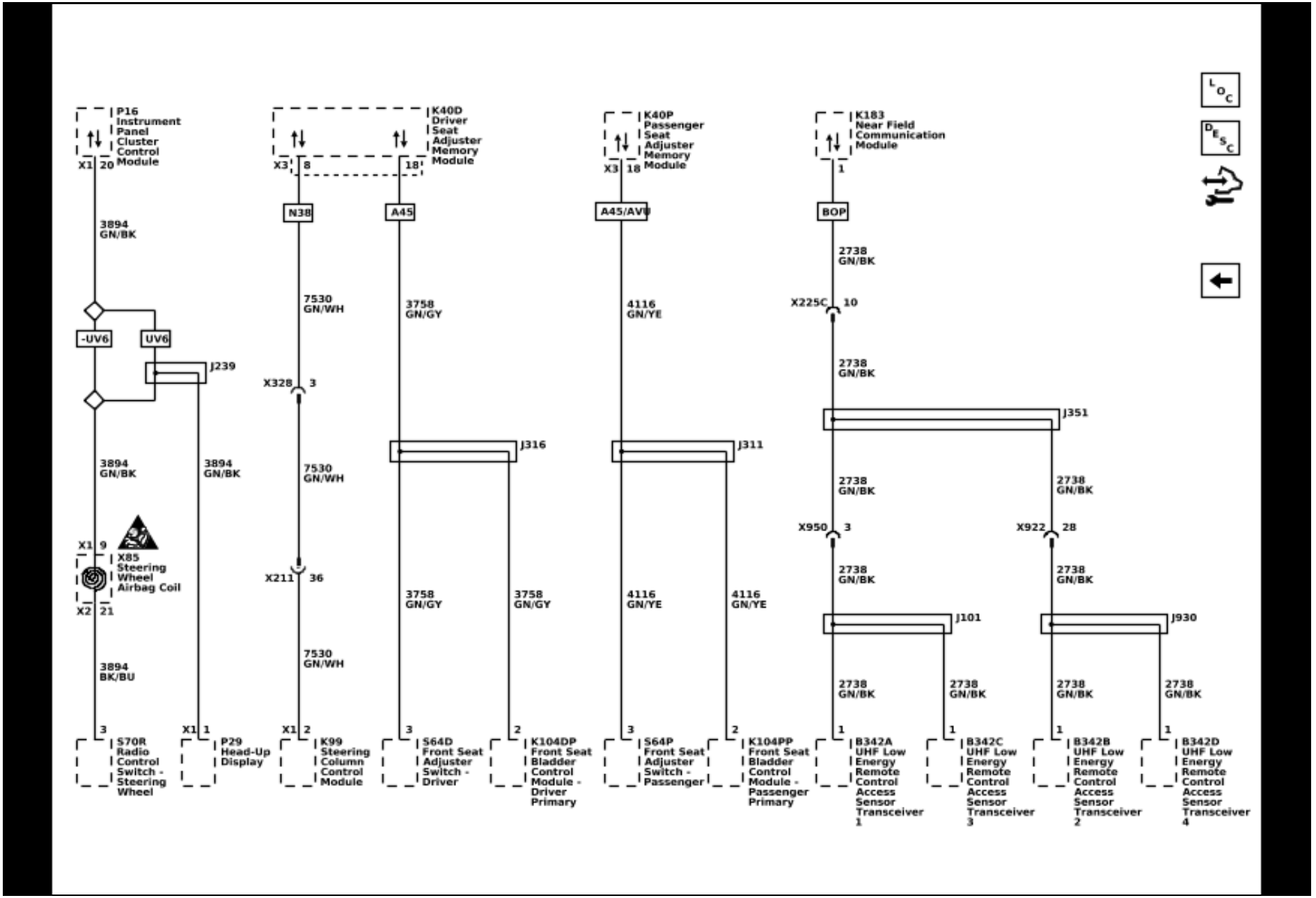

5862057

Data Communication Schematics (Ethernet Bus)

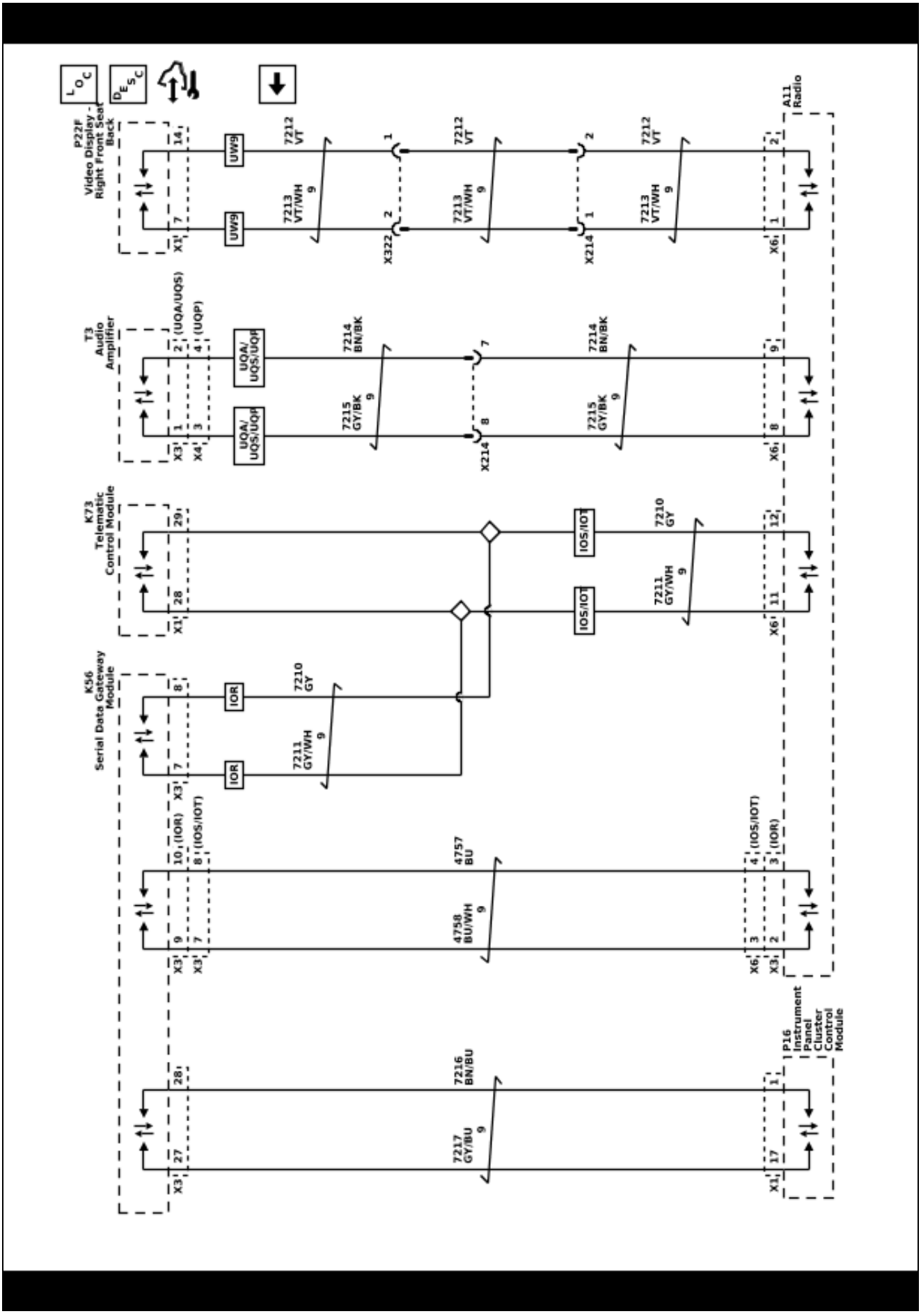

Body Control System Schematics (Power, Ground, Serial Data, and Subsystem References (1 of 3))

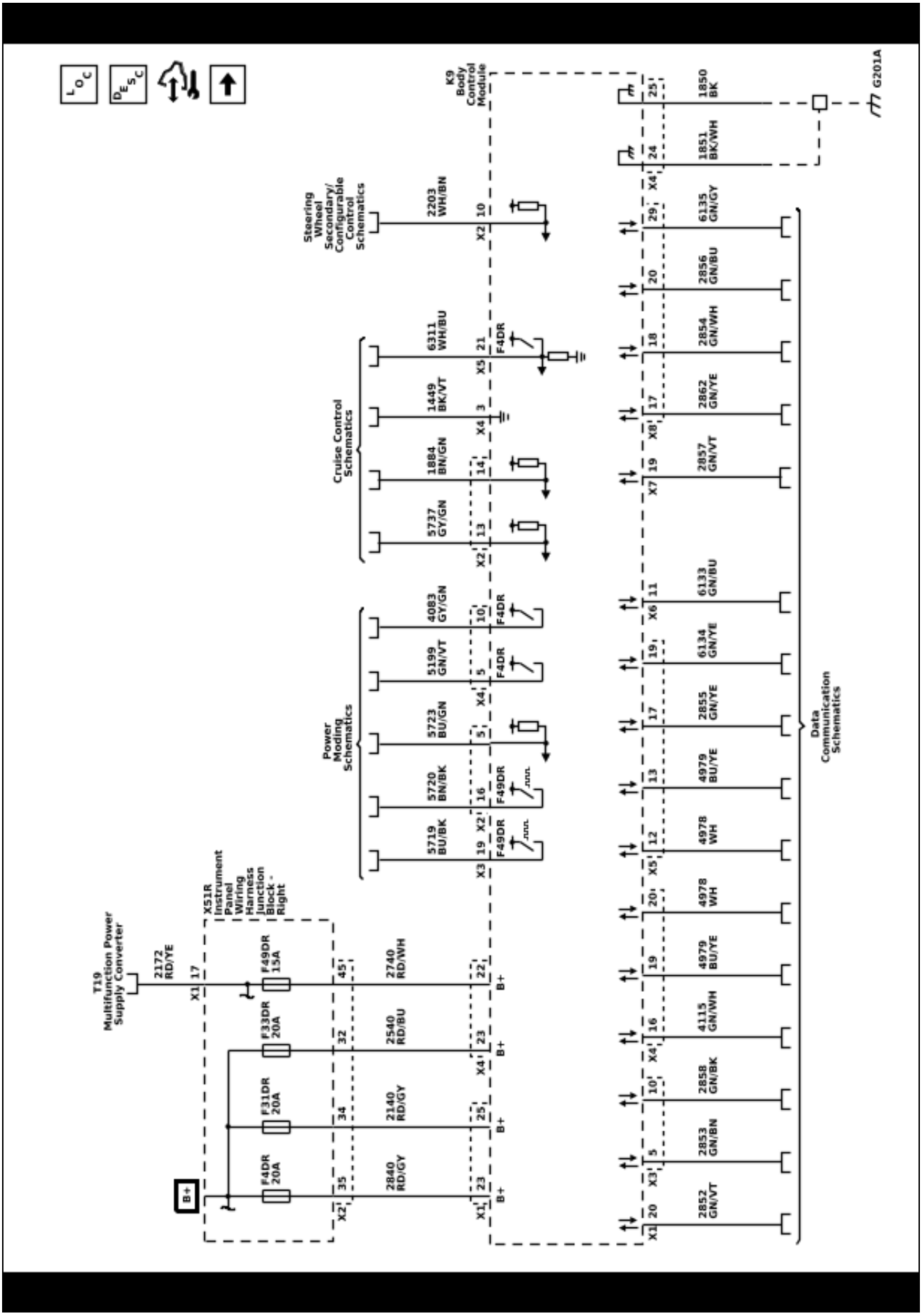

5862059

Body Control System Schematics (Subsystem References (2 of 3))

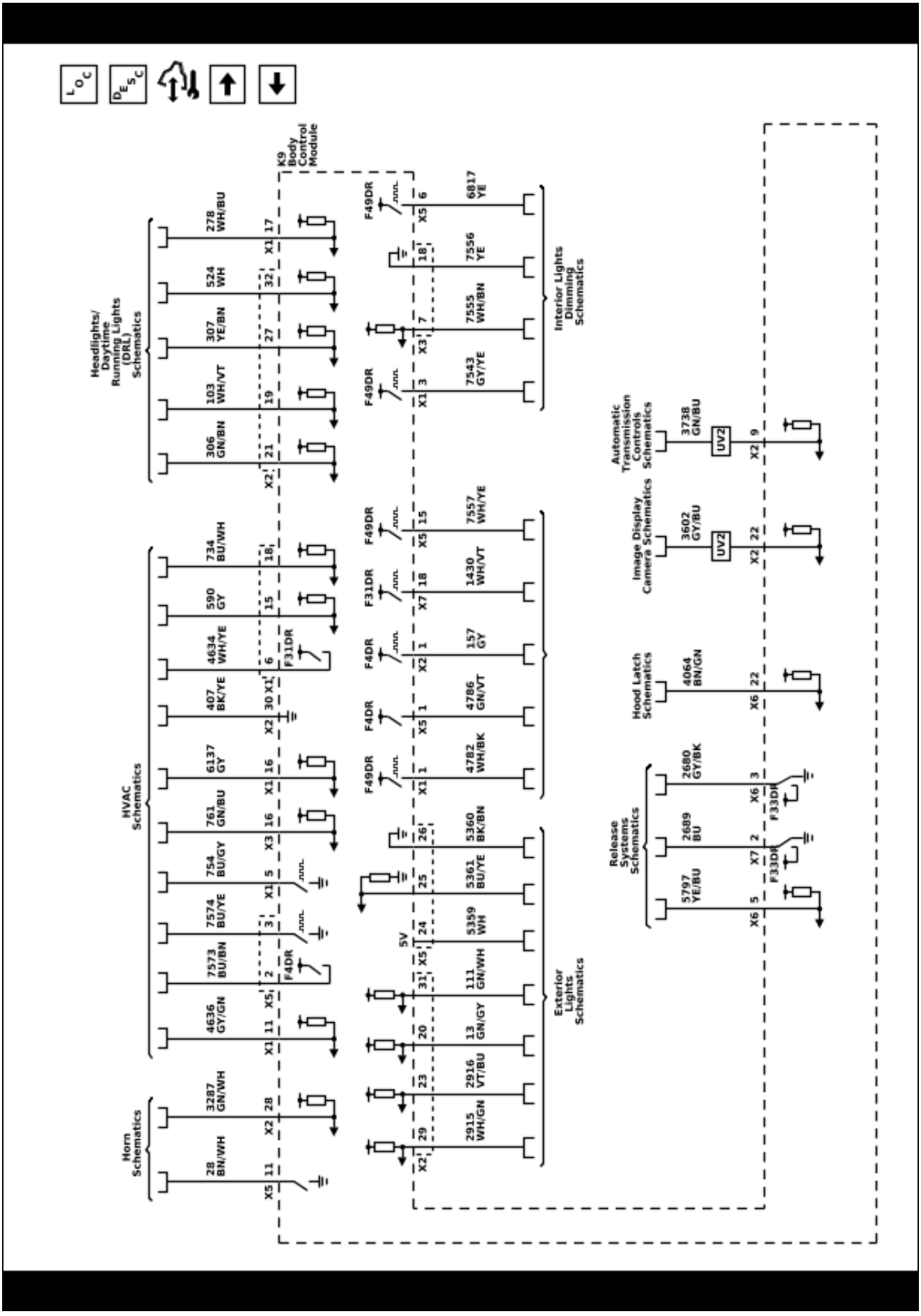

5862060

Body Control System Schematics (Subsystem References (3 of 3))

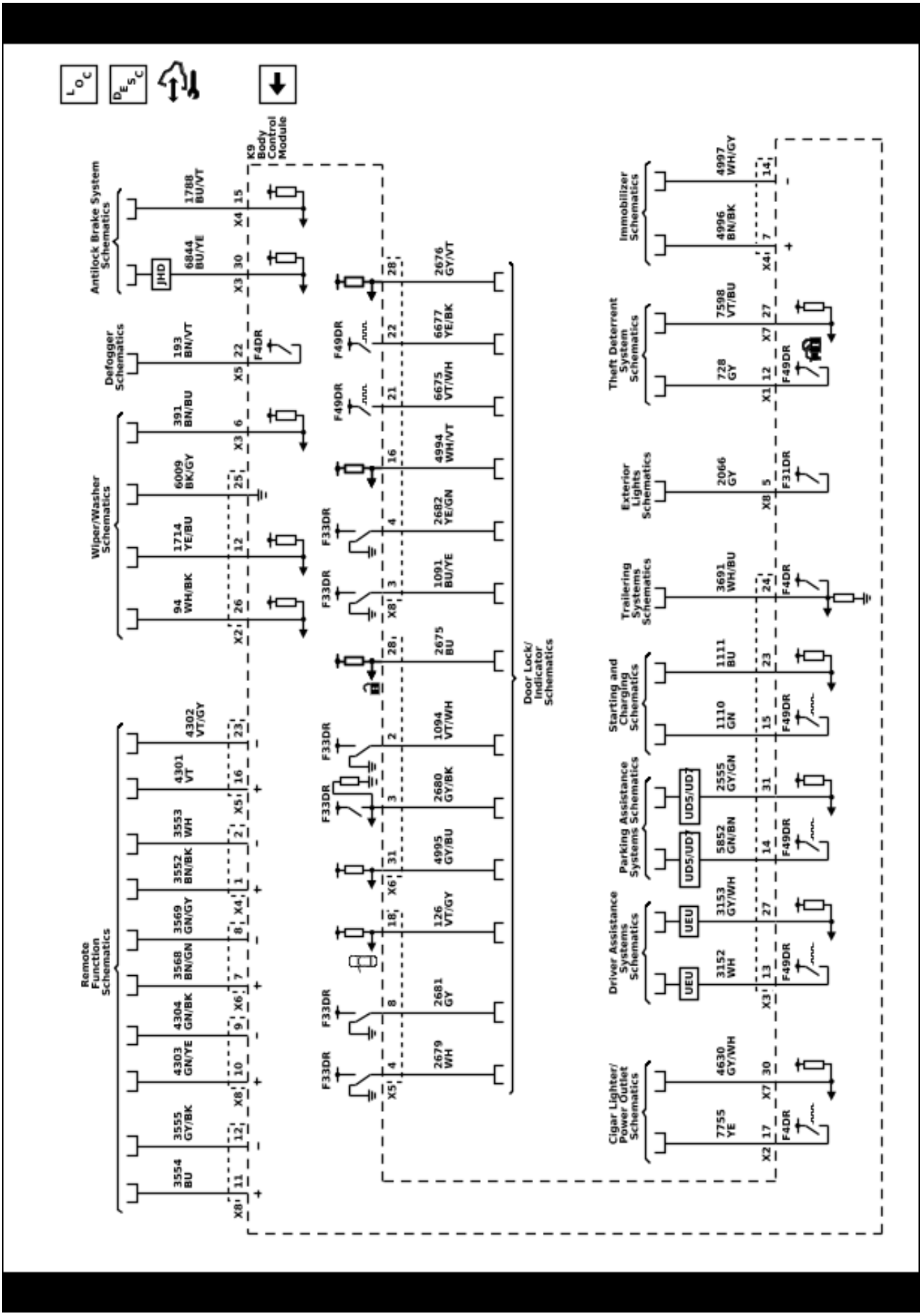

Description and Operation

Data Link Communications Description and Operation

Note: This is an overview of different serial data buses used by control modules to communicate with each others. Use *Data Communication Schematics on page 6-4* to find out which serial data buses are configured for a specific vehicle.

Data Link Communications Overview

There are many components in a vehicle that rely on information from other sources, transmit information to other sources, or both. Serial data communication networks provide a reliable, cost effective, way for various components of the vehicle to “talk” to one another and share information.

General Motors uses a number of different communication buses to insure the timely and efficient exchange of information between control modules. When compared to each other, some of these buses are different in nature as far as speed, signal characteristics, and behavior.

On the other hand, when other buses are compared to each other they have similar characteristics and simply operate in parallel. In this case they are used to group together components which have high interaction. Examples are the Controller Area Network (CAN), private CAN, and LIN buses. This allows them to communicate with each other on a bus with reduced message congestion insuring faster and the more timely exchange of information than if all vehicle control modules were on a single bus.

The majority of information that exists within a given network generally stays local; however some information will have to be shared on other networks. Control modules designated as Gateway’s perform the function of transferring information between the various buses. A Gateway module is connected to at least 2 buses and will interact with each network according to its message strategy and transmission models.

CAN provides the capability for a receiving control module to monitor message transmissions from other control modules in order to determine if messages of interest are not being received. The primary purpose is to allow reasonable default values to be substituted for the information no longer being received. Additionally, a control module may set a Diagnostic Trouble Code (DTC) to indicate that the control module it is expecting information from is no longer communicating.

K9 Body Control Module (BCM)

The body control system consists of the K9 Body Control Module, communications, and various input and outputs. Some inputs, outputs and messages require other control modules to interact with the K9 Body Control Module. The K9 Body Control Module also has discrete input and output terminals to control the vehicle's body functions. The K9 Body Control Module is wired to CAN bus and multiple Local Interconnect Network (LIN) buses and acts as a gateway between them.

The various K9 Body Control Module input and output circuits are illustrated in the corresponding functional areas on the K9 Body Control Module electrical schematics. Refer to the *Body Control System Schematics on page 6-24* for more detailed information.

K56 Serial Data Gateway Module

The K56 Serial Data Gateway Module gates messages between the CAN networks described in the Controller Area Network (CAN) Bus Description section below. The K56 Serial Data Gateway Module needs to know what CAN control modules are present on a given vehicle in order to enable/disable loss of communication DTCs and to know what CAN control modules to track for their communication status. The K56 Serial Data Gateway Module has the ability to learn the diagnostic addresses list of CAN control modules to identify what CAN control modules are equipped on the vehicle and what CAN buses they are on. If the K56 Serial Data Gateway Module is replaced, this learn/verification process will have to be done again through K56 Serial Data Gateway Module programming and setup procedure in SPS. This learn process will not cause any previously learned contents to be forgotten/overwritten. If the learn process is not done on a new K56 Serial Data Gateway Module, DTC U1977 will be set until the learn procedure is executed. If the learn is invalid due to control module internal malfunction or a K56 Serial Data Gateway Module swap, DTC U3000 42 or DTC U3002 56 will be set. If any of these DTCs sets, the K56 Serial Data Gateway Module will enable loss of communication for all CAN control modules. This will result in loss of communication DTCs being set against CAN control modules that are not equipped on the vehicle.

A fault can be localized by monitoring the normal mode messages on a CAN bus. The K56 Serial Data Gateway Module will monitor one signal per CAN control module per CAN bus to determine control module status. When a signal times out, a loss of communication event will be started.

Controller Area Network (CAN) Bus Description

The CAN buses are used where data needs to be exchanged at a high enough rate to minimize the delay between the occurrence of a change in sensor value and the reception of this information by a control device using the information to adjust vehicle system performance.

Each CAN serial data network consists of two twisted wires. One signal circuit is identified as CAN-High and the other signal circuit is identified as CAN-Low. At each end of the data bus there is a 120 Ω termination resistor between the CAN-High and CAN-Low circuits. Most CAN control modules have an internal resistance of 4.950K Ω. There may be one or two CAN control modules that have a higher internal resistance like the K60 Column Lock Module which has an internal resistance of 77.4K Ω. The internal resistance of CAN control modules causes lower terminating resistor reading when splitting the CAN network to check for faults. The more CAN control modules on the network the lower the terminating resistor will read.

The data to be transmitted over a CAN bus is represented by the voltage difference between the CAN-High signal voltage and the CAN-Low signal voltage. Data symbols (1's and 0's) are transmitted sequentially at the following rate:

- CAN 1 (circuits 4986 & 4987) = 500 Kbit/s
- CAN 2 (circuits 4978 & 4979) = 2 Mbit/s
- CAN 3 (circuits 4976 & 4977) = 500 Kbit/s
- CAN 4 (circuits 4100 & 4101) = 500 Kbit/s
- CAN 5 (circuits 4984 & 4985) = 500 Kbit/s
- CAN 6 (circuits 4980 & 4981) = 5 Mbit/s
- CAN 7 (circuits 4982 & 4983) = 5 Mbit/s
- CAN 8 (circuits 4104 & 4105) = 2 Mbit/s
- CAN 9 (circuits 4102 & 4103) = 2 Mbit/s

When the two wire bus is at rest the CAN-High and CAN-Low signal circuits are not being driven and this represents a logic "1". In this state both signal circuits are at the same voltage of 2.5 V. The differential voltage is approximately 0 V.

When a logic "0" is to be transmitted, the CAN-High signal circuit is driven higher to about 3.5 V and the CAN-Low circuit is driven lower to about 1.5 V. The differential voltage becomes approximately 2.0 (+/- 0.5) V.

The CAN 1, CAN 2, CAN 3, CAN 4, CAN 5, CAN 8, and CAN 9 buses are used to communicate between the K56 Serial Data Gateway Module and other CAN control modules.

The CAN 8, and CAN 9 buses are reserved for the following systems:

- The CAN 8 bus is reserved for most control modules and sensors related to active safety system, if applicable.
- The CAN 9 bus is reserved for most control modules and sensors related to Hybrid/EV system, if applicable.

The following CAN buses are between the X84 Data Link Connector and the K56 Serial Data Gateway Module:

- The CAN 6 bus is used for CAN diagnostics and programming.
- The CAN 7 bus is used for programming by assembly plant only.
- The Private Presentation CAN 1 bus (circuits 2577 & 2578) is used by Engineering to observe data communications on CAN buses not directly accessible at the X84 Data Link Connector. It requires special security access and will not be used in a service environment.
- The Private Presentation CAN 2 bus (circuits 2579 & 2580) is used by Engineering to observe data communications on CAN buses not directly accessible at the X84 Data Link Connector. It requires special security access and will not be used in a service environment.

Private Powertrain CAN Bus Description

The Private Powertrain CAN bus (circuits 4054 & 4055) is reserved for Powertrain components. It has a transmission rate of 500 Kbit/s. Sometimes communication is required between the Private Powertrain CAN bus and another CAN bus. This is accomplished by using the K20 Engine Control Module (for gas vehicles) or K16 Battery Energy Control Module (for electric vehicles) as the Gateway module. Since the Private Powertrain CAN bus and other CAN buses operate in the same manner, the diagnostics for each are similar.

Local Interconnect Network (LIN) Bus Description

The LIN Bus consists of a single wire with a transmission rate of 10.417 Kbit/s. This bus is used to exchange information between a master control module and other smart devices which provide supporting functionality. This type of configuration does not require the capacity or speed of a CAN bus and is thus relatively simpler.

The data symbols (1's and 0's) to be transmitted are represented by different voltage levels on the communication bus. When the LIN Bus is at rest and is not being driven, the signal is in a high voltage state of approximately Vbatt. This represents a logic "1". When a logic "0" is to be transmitted, the signal voltage is driven low to about ground (0.0 V).

Ethernet Bus Description

Ethernet is a data communication technology that uses a single twisted copper pair of wires at speeds of 100 Mbit/s and 1000 Mbit/s. The Ethernet system uses point-to-point communication that is connected via an Ethernet switch [Module <–> Switch <–> Module]. The Ethernet bus does not use terminating resistors.

The K56 Serial Data Gateway Module and the A11 Radio have an Ethernet switch that connects to other Ethernet modules. The K56 Serial Data Gateway Module and the A11 Radio communicate with other devices and systems in the vehicle via CAN and LIN buses. Diagnostic Trouble Codes will be read on CAN to diagnose Ethernet, LIN and system faults.

Note: Ethernet harness failures should only be repaired using an appropriate kit to perform de-pin/re-pin overlays or in cases where the wiring harness repair kits are not available, the entire harness should be replaced. No crimps or splicing should be performed on the Ethernet wiring harness.

Ethernet 1

Ethernet bus 1 consists of 2 twisted pair of wires [1 pair for Ethernet bus 1R (circuits 4972 & 4973) and 1 pair for Ethernet bus 1T (circuits 4974 & 4975)]. It is connected between X84 Data Link Connector (DLC) and K56 Serial Data Gateway Module. This bus is used for diagnostics and service programming of control modules using Ethernet instead of CAN. The K56 Serial Data Gateway Module will convert Ethernet serial data to CAN as necessary, and vice versa. There is an

Ethernet enable circuit (circuit 7207) which can be used to wake up the K56 Serial Data Gateway Module for Ethernet diagnostic and programming.

Ethernet 2

Ethernet bus 2 (circuits 4757 & 4758) is for connection between the A11 Radio and the K56 Serial Data Gateway Module.

Ethernet 3

Ethernet bus 3 (circuits 7208 & 7209) is for connection between the K56 Serial Data Gateway Module and K179 Automated Driving Mapping Module.

Ethernet 4

Ethernet bus 4 (circuits 7210 & 7211) is for connection between the following control modules:

- K56 Serial Data Gateway Module and K73 Communication Interface Module for vehicles equipped with IOR radio.
- A11 Radio and K73 Communication Interface Module for vehicles equipped with other radios.

Ethernet 5

Ethernet bus 5 (circuits 7212 & 7213) is for connection between the A11 Radio and P22F Video Display - Right Front Seat Back.

Ethernet 6

Ethernet bus 6 (circuits 7214 & 7215) is for connection between the A11 Radio and T3 Audio Amplifier.

Ethernet 7

Ethernet bus 7 (circuits 7216 & 7217) is for connection between the K56 Serial Data Gateway Module and P16 Instrument Panel Cluster Control Module.

Ethernet 11

Ethernet bus 11 (circuits 7224 & 7225) is for connection between the K124 Image Processing Module and K179 Automated Driving Mapping Module.

Ethernet 14

Ethernet bus 14 (circuits 7230 & 7231) is for connection between the A11 Radio and P29 Head-Up Display.

Ethernet 15

Ethernet bus 15 (circuits 7232 & 7233) is for connection between the K56 Serial Data Gateway Module, K161 Vehicle Performance Data Recorder, and P22F Video Display - Passenger Seat Back.

X84 Data Link Connector (DLC)

The X84 Data Link Connector is a standardized 16-cavity connector. Connector design and location is dictated by an industry wide standard, and is required to provide the following:

- Terminal 1: CAN Bus 7 Serial Data [+]
- Terminal 2: Private Presentation CAN Bus 1 Serial Data [+]
- Terminal 3: Ethernet Bus 1R [+]
- Terminal 4: Scan tool power ground
- Terminal 5: Common signal ground
- Terminal 6: CAN Bus 6 Serial Data [+]
- Terminal 7: Private Presentation CAN Bus 2 Serial Data [+]
- Terminal 8: Ethernet Bus 1 Enable Signal
- Terminal 9: CAN Bus 7 Serial Data [-]
- Terminal 10: Private Presentation CAN Bus 1 Serial Data [-]
- Terminal 11: Ethernet Bus 1R [-]
- Terminal 12: Ethernet Bus 1T [+]
- Terminal 13: Ethernet Bus 1T [-]
- Terminal 14: CAN Bus 6 Serial Data [-]
- Terminal 15: Private Presentation CAN Bus 2 Serial Data [-]
- Terminal 16: Scan tool power, B+

Serial Data Reference

The scan tool communicates over the various buses on the vehicle. When a scan tool is installed on a vehicle, the scan tool will try to communicate with every control module that could be optioned into the vehicle. If an option is not installed on the vehicle, the scan tool will display No Communication for that optional control module. In order to avert misdiagnoses of No Communication with a specific control module, refer to Data Link References for a list of control modules and the buses they communicate with. Use schematics and specific vehicle build RPO codes to determine optional control modules.

Electrical Component and Inline Harness Connector End Views

Component Locator

Electrical Center Identification Views

X50B Battery Distribution Engine Compartment Fuse Block Top View

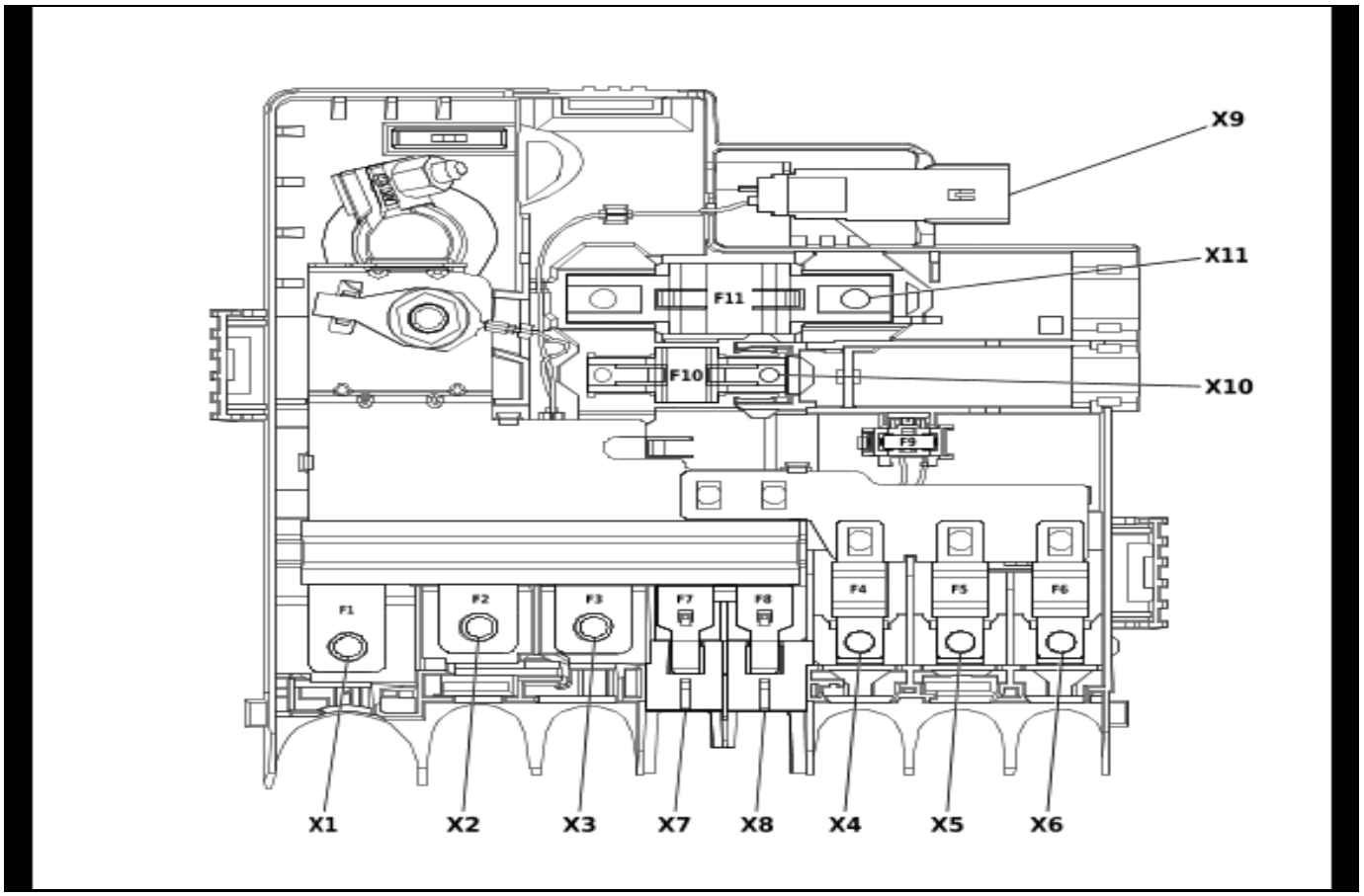

5070128

Usage Table

No.	Device Label Name	Device Assigned Name	Rating	Description
Fuses				
F1	—	F1BA	250A (L84/ L87) 275A (LM2)	• G13 Generator • X50A Engine Wiring Harness Junction Block
F2	—	F2BA	175A	• K43 Power Steering Control Module
F3	—	F3BA	400A	• M64 Starter Motor
F4	—	F4BA	150A	• E40 Air Heater (C3A)
F5	—	F5BA	70A	• K20 Engine Control Module (LM2)
F6	—	F6BA	80A	• G10R Cooling Fan Motor - Right (LM2)
F7	—	F7BA	60A	• X51R Instrument Panel Wiring Harness Junction Block - Right
F8	—	F8BA	60A	• K160 Brake System Control Module
F9	—	F9BA	5A	• B110 Battery Sensor Module

X50B Battery Distribution Engine Compartment Fuse Block X1 (L84/L87)

—

Connector Part Information

Harness Type: Starter Solenoid Cable
OEM Connector: 84386516
Service Connector: Service by Harness - See Part Catalog
Description: 1-Way

Terminal Part Information

Terminal Type ID	Terminated Lead	Diagnostic Test Probe	Terminal Removal Tool
I	Not required	Not Available	No Tool Required

X50B Battery Distribution Engine Compartment Fuse Block X1 (L84/L87)

Pin	Size	Color	Circuit	Function	Terminal Type ID	Option
A	35	RD / YE	2	Battery Positive Voltage	I	—
	35	RD / GN	242	Battery Positive Voltage		—

X50D Battery Distribution Fuse Block X1

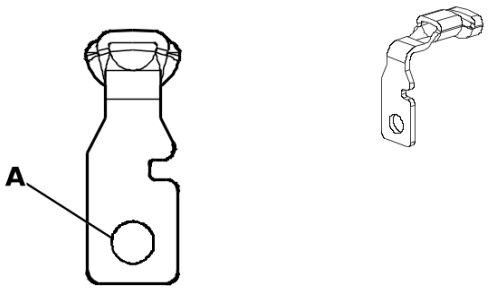

5194789

Connector Part Information

Harness Type: Body Wiring Harness
OEM Connector: 84385485
Service Connector: Service by Cable Assembly — See Part Catalog
Description: 1-Way Ring Terminal

Terminal Part Information

Terminal Type ID	Terminated Lead	Diagnostic Test Probe	Terminal Removal Tool
I	Not required	No Tool Required	No Tool Required

X50D Battery Distribution Fuse Block X1

Pin	Size	Color	Circuit	Function	Terminal Type ID	Option
A	16	RD / GY	642	Battery Positive Voltage	I	—

X50B Battery Distribution Engine Compartment Fuse Block X2

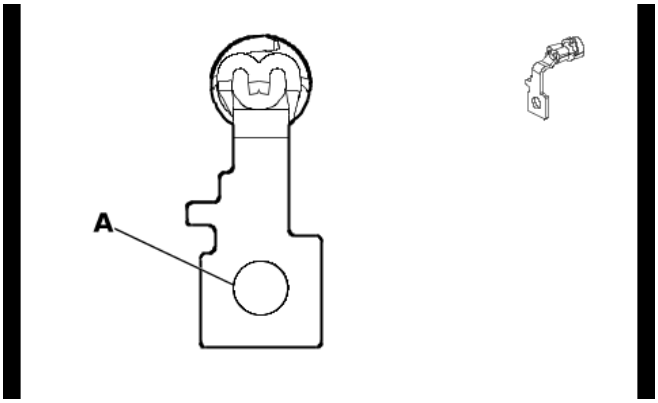

5664311

Connector Part Information

Harness Type: Power Steering Wiring Harness
OEM Connector: 84386514
Service Connector: Service by Cable Assembly — See Part Catalog
Description: 1-Way Ring Terminal

Terminal Part Information

Terminal Type ID	Terminated Lead	Diagnostic Test Probe	Terminal Removal Tool
I	Not required	No Tool Required	No Tool Required

X50B Battery Distribution Engine Compartment Fuse Block X2

Pin	Size	Color	Circuit	Function	Terminal Type ID	Option
A	25	RD / VT	3542	Battery Positive Voltage	I	—

X50B Battery Distribution Engine Compartment Fuse Block X3 (L84/L87)

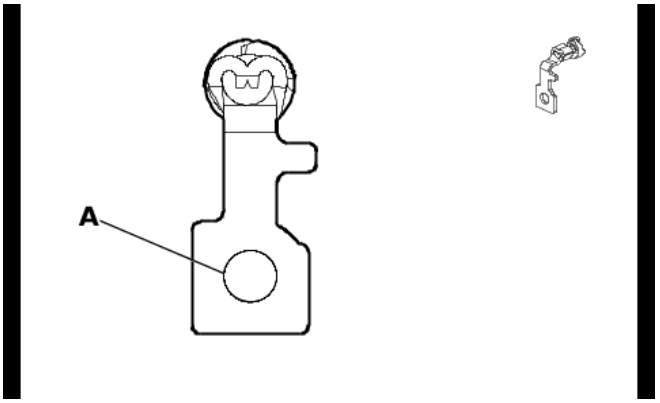

5881244

Connector Part Information

Harness Type: Starter Solenoid Cable
OEM Connector: 84386515
Service Connector: Service by Cable Assembly — See Part Catalog
Description: 1-Way Ring Terminal

Terminal Part Information

Terminal Type ID	Terminated Lead	Diagnostic Test Probe	Terminal Removal Tool
I	Not required	No Tool Required	No Tool Required

X50B Battery Distribution Engine Compartment Fuse Block X3 (L84/L87)

Pin	Size	Color	Circuit	Function	Terminal Type ID	Option
A	35	RD / YE	2	Battery Positive Voltage	I	—

X50B Battery Distribution Engine Compartment Fuse Block X3 (LM2)

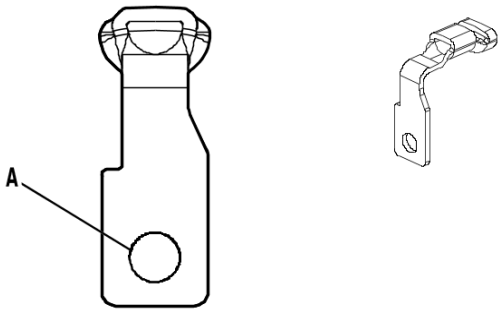

4994507

Connector Part Information

Harness Type: Engine Wiring Harness
OEM Connector: 35085183
Service Connector: Service by Cable Assembly — See Part Catalog
Description: 1-Way Ring Terminal

Terminal Part Information

Terminal Type ID	Terminated Lead	Diagnostic Test Probe	Terminal Removal Tool
I	Not required	No Tool Required	No Tool Required

X50B Battery Distribution Engine Compartment Fuse Block X3 (LM2)

Pin	Size	Color	Circuit	Function	Terminal Type ID	Option
A	10	RD / YE	1442	Battery Positive Voltage	I	—

X50B Battery Distribution Engine Compartment Fuse Block X5

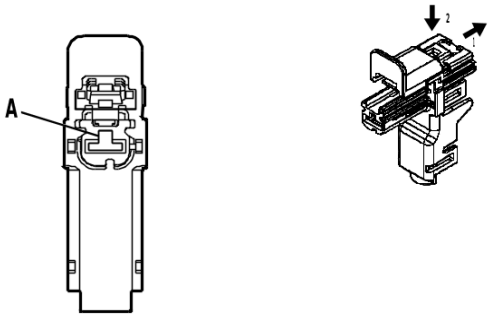

4994183

Connector Part Information

Harness Type: Body Wiring Harness
OEM Connector: 33297578
Service Connector: Service by Harness - See Part Catalog
Description: 1-Way F 6.3 Series(BK)

Terminal Part Information

Terminal Type ID	Terminated Lead	Diagnostic Test Probe	Terminal Removal Tool
I	Not required	J-35616-42 (RD)	No Tool Required

X50B Battery Distribution Engine Compartment Fuse Block X5

Pin	Size	Color	Circuit	Function	Terminal Type ID	Option
A	5	RD / YE	1442	Battery Positive Voltage	I	—

X50B Battery Distribution Engine Compartment Fuse Block X6

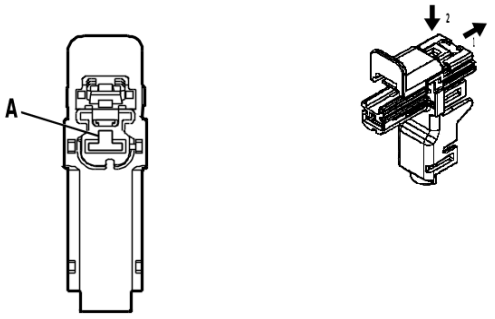

4994171

Connector Part Information

Harness Type: Body Wiring Harness
OEM Connector: 33297579
Service Connector: Service by Harness - See Part Catalog
Description: 1-Way F 6.3 Series(BU)

Terminal Part Information

Terminal Type ID	Terminated Lead	Diagnostic Test Probe	Terminal Removal Tool
I	Not required	J-35616-42 (RD)	No Tool Required

X50B Battery Distribution Engine Compartment Fuse Block X6

Pin	Size	Color	Circuit	Function	Terminal Type ID	Option
A	6	RD / WH	1642	Battery Positive Voltage	I	—

X50B Battery Distribution Engine Compartment Fuse Block X9

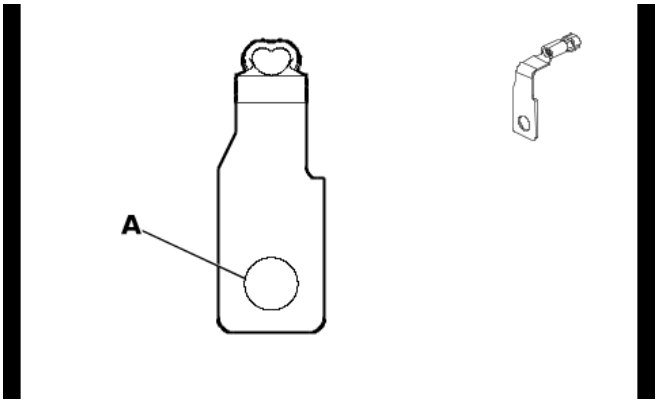

5373306

Connector Part Information

Harness Type: Engine Wiring Harness
OEM Connector: 35169508
Service Connector: Service by Cable Assembly — See Part Catalog
Description: 1-Way Ring Terminal

Terminal Part Information

Terminal Type ID	Terminated Lead	Diagnostic Test Probe	Terminal Removal Tool
I	Not required	No Tool Required	No Tool Required

X50B Battery Distribution Engine Compartment Fuse Block X9

Pin	Size	Color	Circuit	Function	Terminal Type ID	Option
A	6	BN / BU	104	Glow Plug Control	I	—

X50B Battery Distribution Engine Compartment Fuse Block X11

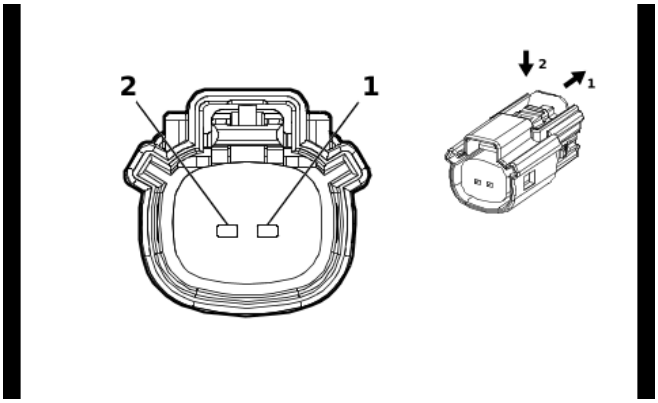

2474713

Connector Part Information

Harness Type: Body Wiring Harness
OEM Connector: 33471-0206
Service Connector: 13577534
Description: 2-Way F 1.5 Series, Sealed(BK)

Terminal Part Information

Terminal Type ID	Terminated Lead	Diagnostic Test Probe	Terminal Removal Tool
I	Not required	J-35616-2A (GY)	No Tool Required

X50B Battery Distribution Engine Compartment Fuse Block X11

Pin	Size	Color	Circuit	Function	Terminal Type ID	Option
1	0.75	RD / YE	2340	Battery Positive Voltage	I	—
2	—	—	—	Not Occupied	—	—

X50A Engine Wiring Harness Junction Block Label

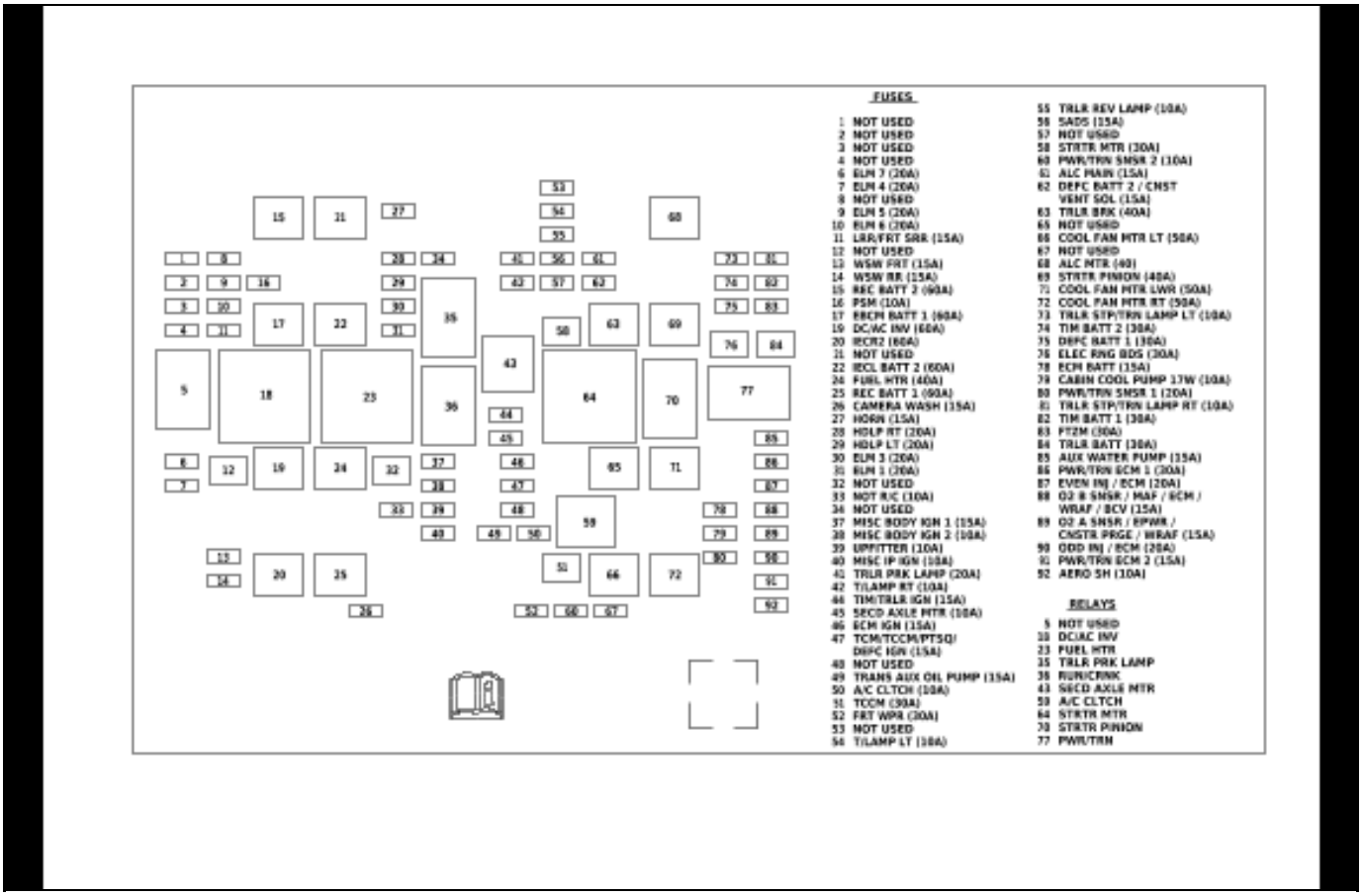

5873892

X50A Engine Wiring Harness Junction Block Top View

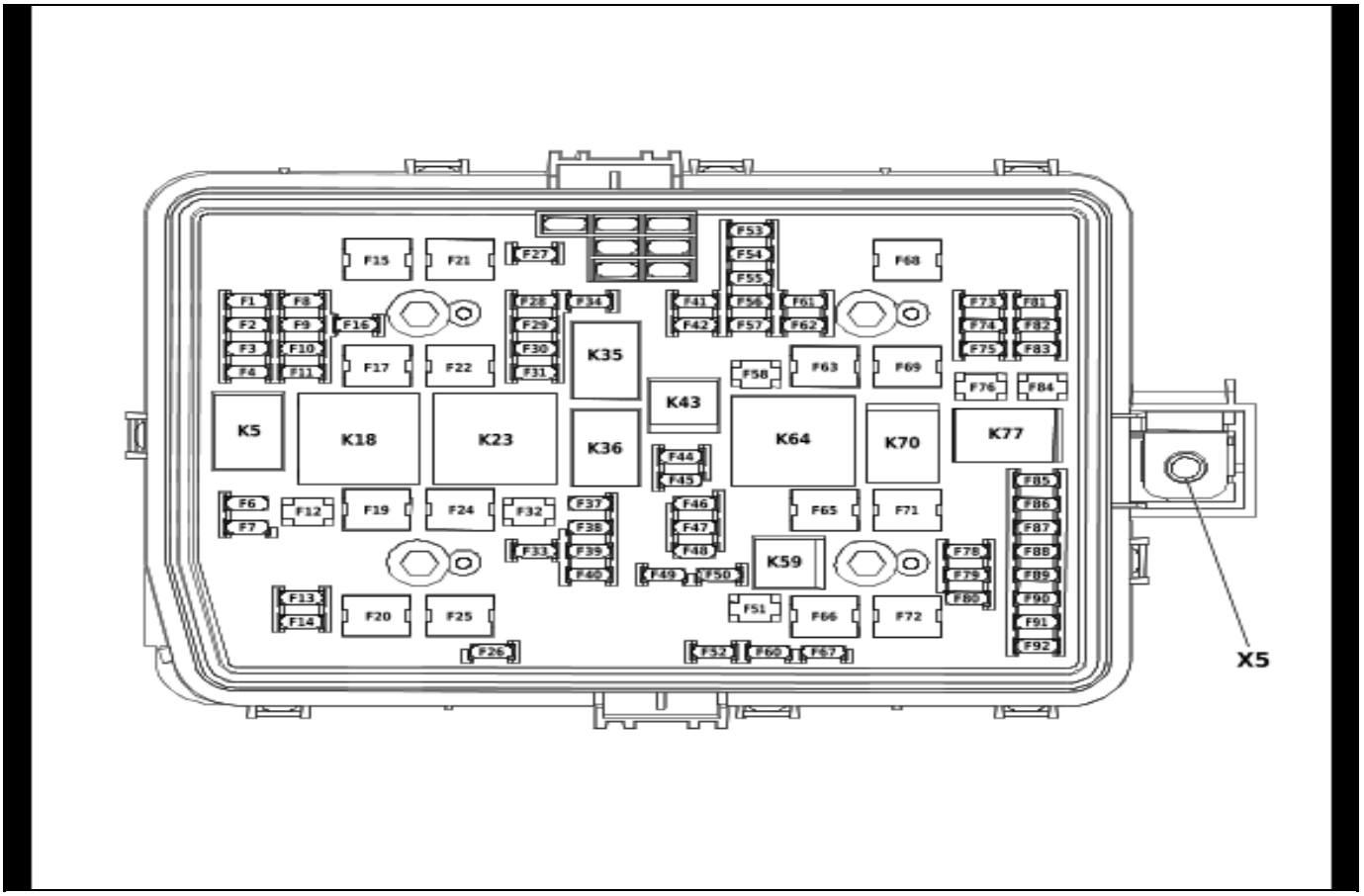

5619644

Usage Table

No.	Device Label Name	Device Assigned Name	Rating	Description
Fuses				
F1	NOT USED	F1UA	—	• Not Used
F2	NOT USED	F2UA	—	• Not Used
F3	NOT USED	F3UA	—	• Not Used
F4	NOT USED	F4UA	—	• Not Used
F6	ELM 7	F6UA	20A	• K219 Lighting Control Module
F7	ELM 4	F7UA	20A	• K219 Lighting Control Module
F8	NOT USED	F8UA	—	• Not Used
F9	ELM 5	F9UA	20A	• K219 Lighting Control Module
F10	ELM 6	F10UA	20A	• K219 Lighting Control Module
F11	LRR/FRT SRR	F11UA	15A	• B233B Radar Sensor Module - Long Range (UGN)
F12	NOT USED	F12UA	—	• Not Used
F13	WSW FRT	F13UA	15A	• KR11 Windshield Washer Pump Relay
F14	WSW RR	F14UA	15A	• KR6 Rear Window Washer Pump Relay
F15	REC BATT 2	F15UA	60A	• X53A Body Wiring Harness Junction Block - Rear
F16	PSM	F16UA	10A	• P25 Content Theft Deterrent Alarm
F17	EBCM BATT 2	F17UA	60A	• K160 Brake System Control Module • X400

Usage Table (cont'd)

No.	Device Label Name	Device Assigned Name	Rating	Description
F19	DC/AC INV	F19UA	60A	• T1 Accessory AC and DC Power Control Module (KI4/KI5)
F20	IECR2	F20UA	60A	• X51R Instrument Panel Wiring Harnes Junction Block - Right
F21	NOT USED	F21UA	—	• Not Used
F22	IECL BATT 2	F22UA	60A	• Not Used
F24	FUEL HTR	F24UA	40A	• KR22 Fuel Heater Relay (LM2)
F25	REC BATT 1	F25UA	60A	• X53A Body Wiring Harness Junction Block - Rear
F26	CAMERA WASH	F26UA	15A	• Not Used
F27	HORN	F27UA	15A	• P13 Horn
F28	HDLP RT	F28UA	20A	• E13RA Front Headlamp - Right
F29	HDLP LT	F29UA	20A	• E13LA Front Headlamp - Left
F30	ELM 3	F30UA	20A	• K219 Lighting Control Module
F31	ELM 1	F31UA	20A	• K219 Lighting Control Module
F32	NOT USED	F32UA	—	• Not Used
F33	NOT R/C	F33UA	10A	• K60 Column Lock Module
F34	NOT USED	F34UA	—	• Not Used
F37	MISC BODY IGN 1	F37UA	15A	• K38 Chassis Control Module (G96) • K160 Brake System Control Module • K212 Gear Shift Control Module • P16 Instrument Panel Cluster Control Module • P43 Forward Collision Alert Display (UEU-UV6) • X400
F38	MISC BODY IGN 2	F38UA	10A	• K219 Lighting Control Module • M73A Front Seat Back Ventilation Blower - Driver (KQV) • M73A Front Seat Back Ventilation Blower - Driver (KQV) • M73B Front Seat Back Ventilation Blower - Passenger (KQV) • M73D Front Seat Cushion Ventilation Blower - Driver (KQV) • M73P Front Seat Cushion Ventilation Blower - Passenger (KQV) • T1 Accessory AC and DC Power Control Module (KI4/KI5)
F39	UPFITTER	F39UA	10A	• W12FC Blunt Cut - Front Seat/Center Console (5W4/9C1) • W12RCL Blunt Cut - Left Rear Cargo Trim (5W4/9C1)
F40	MISC IP IGN	F40UA	10A	• A10 Inside Rearview Mirror (DD8/DRZ) • E40 Air Heater (C3A) • K36 Restraints Control Module • X51AX Instrument Panel Wiring Harness Junction Block - Auxiliary (5W4/9C1)
F41	TRLR PRK LAMP	F41UA	20A	• X88B Tow Vehicle Electrical Receptacle (Z82-U1D)
F42	T/LAMP RT	F42UA	10A	• Not Used
F44	TIM / TRLR IGN	F44UA	15A	• K68 Trailer Lamp Control Module (U1D-MBR) • X88B Tow Vehicle Electrical Receptacle (U1D+MBR)
F45	SECD AXLE MTR	F45UA	10A	• M26 Front Drive Axle Actuator (NP0/NQH)
F46	ECM IGN	F46UA	15A	• K20 Engine Control Module

Usage Table (cont'd)

No.	Device Label Name	Device Assigned Name	Rating	Description
F47	TCM / TCCM / PTSQ/ DEFC IGN	F47UA	15A	• K69 Transfer Case Control Module (NP0/NQH) • K71 Transmission Control Module • K115 Reductant Control Module (LM2)
F48	NOT USED	F48UA	—	• Not Used
F49	TRANS AUX OIL PUMP	F49UA	15A	• G5 Automatic Transmission Auxiliary Fluid Pump (MQC)
F50	A/C CLTCH	F50UA	10A	• Q2 Air Conditioning Clutch
F51	TCCM	F51UA	30A	• K69 Transfer Case Control Module (NP0/NQH)
F52	FRT WPR	F52UA	30A	• KR12B Windshield Wiper Motor Relay • KR12C Windshield Wiper Motor Speed Control Relay
F53	NOT USED	F53UA	—	• Not Used
F54	T/LAMP LT	F54UA	10A	• Not Used
F55	TRLR REV LAMP	F55UA	10A	• X88B Tow Vehicle Electrical Receptacle (Z82-U1D)
F56	SADS	F56UA	15A	• K19 Suspension Control Module (Z95)
F57	NOT USED	F57UA	—	• Not Used
F58	STRTR MTR	F58UA	30A	• KR27 Starter Relay
F60	PWR/TRN SNSR 2	F60UA	10A	• X403 (LM2)
F61	ALC MAIN	F61UA	15A	• K5 Automatic Level Control Module (F47)
F62	DEFC BATT 2 / CNSTR VENT SOL	F62UA	15A	• K115 Reductant Control Module (LM2) • Q13 Evaporative Emission Canister Vent Solenoid Valve (L84/L87)
F63	TRLR BRK	F63UA	40A	• K67 Trailer Brake Control Module (JL1) • W24 Blunt Cut - Trailer Brakes Provision (Z82-JL1)
F65	NOT USED	F65UA	60A	• X50UA Accessory Wiring Junction Block - Underhood (LM2)
F66	COOL FAN MTR LT	F66UA	50A	• G10L Cooling Fan Motor - Left
F67	NOT USED	F67UA	—	• Not Used
F68	ALC MTR	F68UA	40A	• K5 Automatic Level Control Module (F47)
F69	STRTR PINION	F69UA	40A	• KR27C Engine Restart Relay
F71	COOL FAN MTR LWR	F71UA	50A	• G10LW Engine Cooling Fan Motor - Lower (LM2)
F72	COOL FAN MTR RT	F72UA	50A	• G10R Engine Cooling Fan Motor - Right (L84/L87)
F73	TRLR STP/TRN LAMP LT	F73UA	10A	• X88B Tow Vehicle Electrical Receptacle (Z82-U1D)
F74	TIM 2	F74UA	30A	• K68 Trailer Lamp Control Module (U1D)
F75	DEFC BATT 1	F75UA	30A	• K115 Reductant Control Module (LM2)
F76	ELEC RNG BDS	F76UA	30A	• K4 Running Board Control Module (B3L)
F78	ECM BATT	F78UA	15A	• K20 Engine Control Module
F79	CABIN COOL PUMP 17W	F79UA	10A	• G17 Heater Coolant Pump

Usage Table (cont'd)

No.	Device Label Name	Device Assigned Name	Rating	Description
F80	PWR/TRN SNSR 1	F80UA	20A	• B136 Exhaust Particulate Matter Sensor (LM2) • B195A Nitrogen Oxides Sensor 1 (LM2) • B195B Nitrogen Oxides Sensor 2 (LM2) • B195C Nitrogen Oxides Sensor 3 (LM2) • K111 Fuel Pump Power Control Module (LM2) • K212 Gear Shift Control Module (LM2) • R29 Fuel Filter (LM2)
F81	TRLR STP/TRN LAMP RT	F81UA	10A	• X88B Tow Vehicle Electrical Receptacle (Z82-U1D)
F82	TIM BATT 1	F82UA	30A	• K68 Trailer Lamp Control Module (U1D)
F83	FTZM	F83UA	30A	• K111 Fuel Pump Driver Power Module
F84	TRLR BATT	F84UA	30A	• X88B Tow Vehicle Electrical Receptacle (Z82)
F85	AUX WATER PUMP	F85UA	15A	• M10 Charge Air Cooler Coolant Pump
F86	PWR/TRN ECM 1	F86UA	30A	• K20 Engine Control Module
F87	INJ B EVEN / ECM	F87UA	20A	• K20 Engine Control Module (L84/L87) • T8B Ignition Coil 2 (L84/L87) • T8D Ignition Coil 4 (L84/L87) • T8F Ignition Coil 6 (L84/L87) • T8H Ignition Coil 8 (L84/L87)
F88	O2 B SNSR / MAF/ ECM / WRAF / BCV	F88UA	15A	• B52D Heated Oxygen Sensor - Bank 1 Sensor 2 (L84/L87) • B52F Heated Oxygen Sensor - Bank 2 Sensor 2 (L84/L87) • B75 Mass Airflow Sensor • K20 Engine Control Module (L84/L87) • Q97B Engine Flow Control Valve - Block (LM2)
F89	O2 A SNSR / EPWR / CNSTR PRGE / WRAF	F89UA	15A	• B52C Heated Oxygen Sensor - Bank 1 Sensor 1 (L84/L87) • B52E Heated Oxygen Sensor - Bank 2 Sensor 1 (L84/L87) • Q12 Evaporative Emission Canister Purge Solenoid Valve (L84/L87) • Q44 Engine Oil Pressure Control Solenoid Valve (L84/L87)
F90	INJ A ODD / ECM	F90UA	20A	• K20 Engine Control Module • T8A Ignition Coil 1 (L84/L87) • T8C Ignition Coil 3 (L84/L87) • T8E Ignition Coil 5 (L84/L87) • T8G Ignition Coil 7 (L84/L87)
F91	PWR/TRN ECM 2	F91UA	15A	• K20 Engine Control Module (L84/L87)
F92	AERO SH	F92UA	10A	• M96 Active Grille Air Shutter Actuator (VTI/WMI) • M96B Active Grille Air Shutter 2 Actuator (WMI)
Relays				
K5	NOT USED	—	—	• Not Used
K18	DC/AC INV	KR202 Accessory AC and DC Power Control Module Relay	—	• F19UA
K23	FUEL HTR	KR22 Fuel Heater Relay	—	• Not Used

Usage Table (cont'd)

No.	Device Label Name	Device Assigned Name	Rating	Description
K35	TRLR PRK LAMP	KR125 Trailer Parking Lamp Relay	—	• F41UA
K36	RUN/CRNK	KR73 Ignition Main Relay	—	• F33UA • F37UA • F38UA • F39UA • F40UA • F44UA • F46UA • F47UA • F48UA
K43	SECD AXLE MTR	KR203 Front Drive Axle Actuator Relay	—	• F45UA
K59	A/C CLTCH	KR29 A/C Compressor Clutch Relay	—	• F50UA
K64	STRTR MTR	KR27 Starter Relay	—	• M64 Starter Motor
K70	STRTR PINION	KR27C Engine Restart Relay	—	• M64 Starter Motor
K77	PWR/TRN	KR75 Engine Controls Ignition Relay	—	• F60UA • F67UA • F80UA • F85UA • F86UA • F87UA • F88UA • F89UA • F90UA • F91UA • F92UA • KR29 Air Conditioning Compressor Relay • KR200 Engine Controls Sensor Supply Voltage Relay
Note: Relays listed below are non-serviceable Printed Circuit Board (PCB) relays and are internal to the block.				
—	—	KR3 Horn Relay	—	• F27UA
—	—	KR6 Rear Window Washer Pump Relay	—	• G24 Windshield Washer Pump
—	—	KR11 Windshield Washer Pump Relay	—	• G24 Windshield Washer Pump
—	—	KR12B Windshield Wiper Motor Relay	—	• M75 Windshield Wiper Motor
—	—	KR12C Windshield Wiper Motor Speed Control Relay	—	• M75 Windshield Wiper Motor
—	—	KR61 Trailer Back-up Lamp Relay	—	• F55UA
—	—	KR63L Trailer Stop/Turn Signal Lamp Relay - Left	—	• F73UA
—	—	KR63R Trailer Stop/Turn Signal Lamp Relay - Right	—	• F81UA

X50A Engine Wiring Harness Junction Block Bottom View

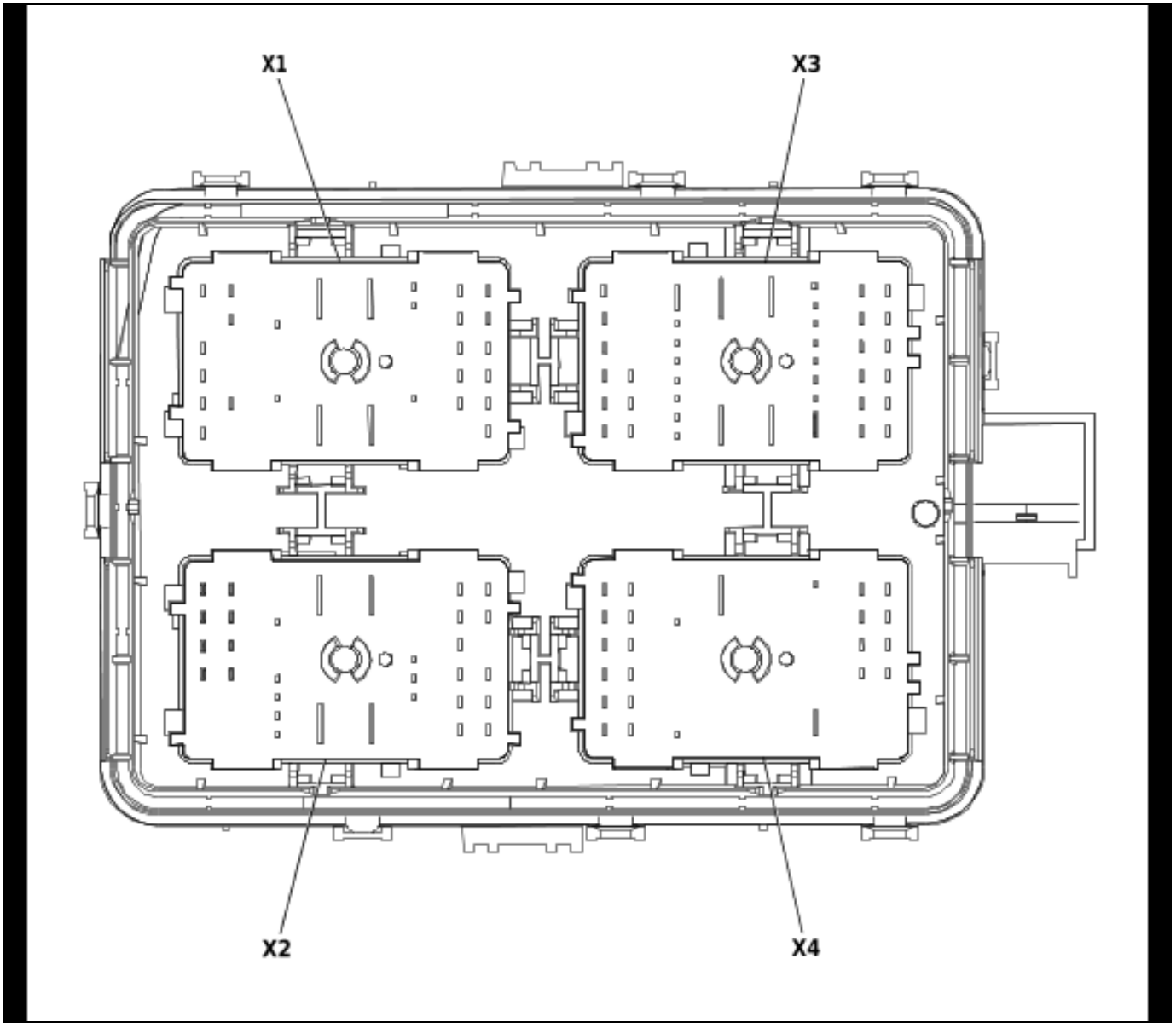

5041382

X50A Engine Wiring Harness Junction Block X1

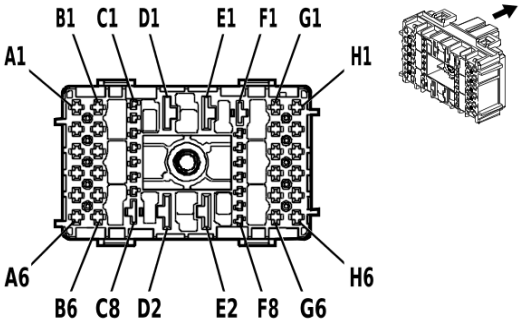

4994109

Connector Part Information

Harness Type: Body Wiring Harness
OEM Connector: 13523061
Service Connector: 19370824
Description: 44-Way F 1.5, 2.8, 6.3 CTS, 9.5 MCON-LL Series(BU)

Terminal Part Information

Terminal Type ID	Terminated Lead	Diagnostic Test Probe	Terminal Removal Tool
I	19369711	J-35616-14 (GN)	EL-38125-560A
II	84764079	J-35616-22 (RD)	J-38125-11A
III	84779405	J-35616-35 (VT)	J-38125-215A
IV	Not required	J-35616-22 (RD)	No Tool Required

X50A Engine Wiring Harness Junction Block X1

Pin	Size	Color	Circuit	Function	Terminal Type ID	Option
A1	1	RD / VT	7140	Battery Positive Voltage	III	—
A2	0.75	RD / BU	540	Battery Positive Voltage	III	—
A3	—	—	—	Not Occupied	—	—
A4	0.75	BK	250	Ground	III	—
A5	0.75	GY / VT	228	Windshield Washer Pump Control	III	—
A6	0.75	BU / VT	392	Rear Window Washer Pump Control	III	—
B1 - C2	—	—	—	Not Occupied	—	—
C3	0.5	WH / GN	4628	DC/AC Inverter Relay Control	I	—
C4	0.35	BN / GY	2268	Windshield Washer Relay Control	I	—
C5 - C6	—	—	—	Not Occupied	—	—
C7	0.35	GN / WH	2270	Rear Window Washer Relay Control	I	—
C8	—	—	—	Not Occupied	—	—
D1	5	BN / BK	4629	DC/AC Inverter Control	II	—
D2	10	RD / WH	342	Battery Positive Voltage	IV	—
E1	—	—	—	Not Occupied	—	—
E2	10	RD / GN	1942	Battery Positive Voltage	IV	—
F1 - F5	—	—	—	Not Occupied	—	—
F6	0.35	WH / VT	860	Windshield Wiper Switch High Signal	I	—
F7 - G2	—	—	—	Not Occupied	—	—

X50A Engine Wiring Harness Junction Block X1 (cont'd)

Pin	Size	Color	Circuit	Function	Terminal Type ID	Option
G3	0.35	BU / VT	807	Ignition Off/Accessory Ignition Voltage	III	—
G4	0.5	GN / VT	5199	Run/Crank Relay Coil Control	III	—
G5	2	BK	150	Ground	III	—
G6	0.35	GY	91	Windshield Wiper Motor Relay Coil Control	III	—
H1	0.5	VT / WH	639	Run/Crank Ignition 1 Voltage	III	—
H2	0.5	VT / WH	1139	Run/Crank Ignition 1 Voltage	III	—
H3	—	—	—	Not Occupied	—	—
H4	0.5	VT / WH	239	Run/Crank Ignition 1 Voltage	III	—
H5	2	WH	92	Windshield Wiper Motor High Speed Control	III	—
H6	2	YE / BN	95	Windshield Wiper Motor Low Speed Control	III	—

X50A Engine Wiring Harness Junction Block X2

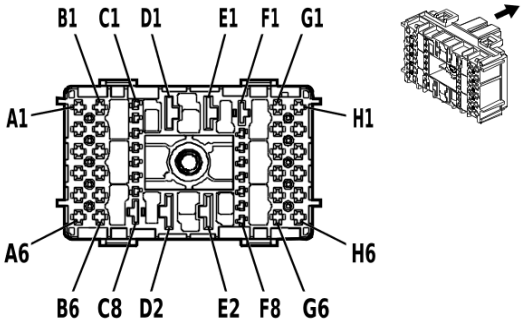

4994132

Connector Part Information

Harness Type: Body Wiring Harness
OEM Connector: 13523062
Service Connector: 19371174
Description: 44-Way F 1.5, 2.8, 6.3 CTS, 9.5 MCON-LL Series(GN)

Terminal Part Information

Terminal Type ID	Terminated Lead	Diagnostic Test Probe	Terminal Removal Tool
I	19369711	J-35616-14 (GN)	EL-38125-560A
II	84779405	J-35616-35 (VT)	J-38125-215A
III	Not required	J-35616-22 (RD)	No Tool Required

X50A Engine Wiring Harness Junction Block X2

Pin	Size	Color	Circuit	Function	Terminal Type ID	Option
A1 - B3	—	—	—	Not Occupied	—	—
B4	0.75	RD / GN	7740	Battery Positive Voltage	II	—
B5	0.75	RD / BU	840	Battery Positive Voltage	II	—
B6	—	—	—	Not Occupied	—	—
C1	0.35	YE / BU	318	Left Rear Trailer Stop/Turn Lamp Control	I	—
C2	0.35	GN / BN	319	Right Rear Trailer Stop/Turn Lamp Control	I	—
C3 - C6	—	—	—	Not Occupied	—	—
C7	0.5	RD / YE	2340	Battery Positive Voltage	I	—
C8	—	—	—	Not Occupied	—	—
D1	10	RD / WH	2942	Battery Positive Voltage	III	—
D2	10	RD / YE	442	Battery Positive Voltage	III	—
E1 - F2	—	—	—	Not Occupied	—	—
F3	0.35	BU / BN	38	Backup Lamp Relay Control	I	—
F4	0.35	BN / WH	28	Horn Relay Control	I	—
F5 - F8	—	—	—	Not Occupied	—	—
G1	0.75	BN / GY	29	Horn Control	II	—
G2	—	—	—	Not Occupied	—	—
G3	0.75	RD / YE	740	Battery Positive Voltage	II	—
G4	0.75	RD / WH	640	Battery Positive Voltage	II	—
G5	0.75	RD / BN	1440	Battery Positive Voltage	II	—

X50A Engine Wiring Harness Junction Block X2 (cont'd)

Pin	Size	Color	Circuit	Function	Terminal Type ID	Option
G6	0.75	RD / BN	1140	Battery Positive Voltage	II	—
H1 - H5	—	—	—	Not Occupied	—	—
H6	0.35	WH / BN	7055	Auxiliary Park Lamp Relay Control	II	—

X50A Engine Wiring Harness Junction Block X3 (L84/L87)

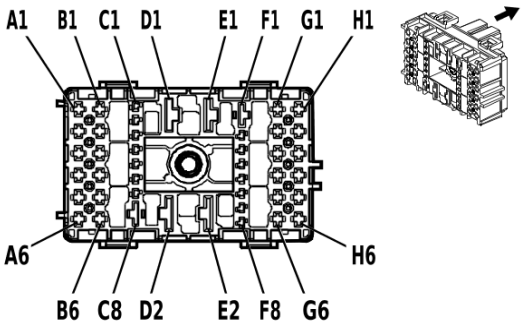

4992608

Connector Part Information

Harness Type: Engine Wiring Harness
OEM Connector: 33384584
Service Connector: 19371176
Description: 44-Way F 1.5, 2.8, 6.3 CTS, 9.5 MCON-LL Series(GY)

Terminal Part Information

Terminal Type ID	Terminated Lead	Diagnostic Test Probe	Terminal Removal Tool
I	19369711	J-35616-14 (GN)	EL-38125-560A
II	84764078	J-35616-42 (RD)	J-38125-215A
III	84764079	J-35616-22 (RD)	J-38125-11A
IV	84779405	J-35616-35 (VT)	J-38125-215A

X50A Engine Wiring Harness Junction Block X3 (L84/L87)

Pin	Size	Color	Circuit	Function	Terminal Type ID	Option
A1	0.75	VT / GN	439	Run/Crank Ignition 1 Voltage	IV	—
A2	0.5	VT / BK	2139	Run/Crank Ignition 1 Voltage	IV	—
A3	—	—	—	Not Occupied	—	—
A4	0.75	BN / GN	59	A/C Compressor Clutch Control	IV	—
A5	0.75	RD / VT	7940	Battery Positive Voltage	IV	—
A6	0.75	GN	8016	Secondary Axle Motor Control	IV	—
B1	2.5	YE	6	Starter Solenoid Crank Ignition Voltage	IV	—
B2	0.5	YE / BK	625	Starter Enable Relay Control	IV	—
B3	0.5	VT / GY	8017	Secondary Axle Motor Relay Control	IV	—
B4 - B5	—	—	—	Not Occupied	—	—
B6	2.5	RD / GY	1342	Battery Positive Voltage	IV	—
C1 - C2	—	—	—	Not Occupied	—	—
C3	0.75	BK	6550	Ground	I	—
C4	0.5	WH / GY	459	A/C Compressor Clutch Relay Control	I	—
C5 - D1	—	—	—	Not Occupied	—	—
D2	5	RD / BU	1842	Battery Positive Voltage	III	—
E1	—	—	—	Not Occupied	—	—
E2	5	RD / BN	1742	Battery Positive Voltage	III	—
F1	2.5	YE / GN	4358	Starter Pinion Solenoid Voltage	II	—

X50A Engine Wiring Harness Junction Block X3 (L84/L87) (cont'd)

Pin	Size	Color	Circuit	Function	Terminal Type ID	Option
F2	0.5	YE / VT	4325	Starter Pinion Solenoid Actuator Relay Control	I	—
F3	0.5	RD / BN	440	Battery Positive Voltage	I	—
F4	0.5	YE	5991	Powertrain Relay Coil Control	I	—
F5	0.5	RD / BN	5940	Battery Positive Voltage	I	—
F6	—	—	—	Not Occupied	—	—
F7	0.5	VT / BU	5705	Powertrain Main Relay Control	I	—
F8 - G5	—	—	—	Not Occupied	—	—
G6	0.75	VT / BU	5291	Powertrain Main Relay Fused Supply Voltage 2	IV	—
H1	2	VT	5290	Powertrain Main Relay Fused Supply Voltage 1	IV	—
H2	0.75	VT / BU	5292	Powertrain Main Relay Fused Supply Voltage 3	IV	—
H3	0.75	VT / BU	5294	Powertrain Main Relay Fused Supply Voltage 5	IV	—
H4	0.75	VT / BU	5293	Powertrain Main Relay Fused Supply Voltage 4	IV	—
H5	1	VT / BU	5291	Powertrain Main Relay Fused Supply Voltage 2	IV	—
H6	0.75	VT / BU	5290	Powertrain Main Relay Fused Supply Voltage 1	IV	—

X50A Engine Wiring Harness Junction Block X3 (LM2)

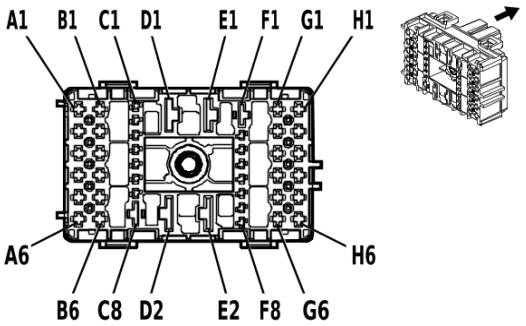

4992608

Connector Part Information

Harness Type: Engine Wiring Harness
OEM Connector: 33384584
Service Connector: 19371176
Description: 44-Way F 1.5, 2.8, 6.3 CTS, 9.5 MCON-LL Series(GY)

Terminal Part Information

Terminal Type ID	Terminated Lead	Diagnostic Test Probe	Terminal Removal Tool
I	19369711	J-35616-14 (GN)	EL-38125-560A
II	84779405	J-35616-35 (VT)	J-38125-215A

X50A Engine Wiring Harness Junction Block X3 (LM2)

Pin	Size	Color	Circuit	Function	Terminal Type ID	Option
A1	0.75	VT / GN	439	Run/Crank Ignition 1 Voltage	I	—
A2	0.5	VT / BK	2139	Run/Crank Ignition 1 Voltage	I	—
A3	—	—	—	Not Occupied	—	—
A4	0.75	BN / GN	59	A/C Compressor Clutch Control	I	—
A5	0.75	RD / VT	7940	Battery Positive Voltage	I	—
A6	0.75	GN	8016	Secondary Axle Motor Control	I	—
B1	2.5	YE	6	Starter Solenoid Crank Ignition Voltage	I	—
B2	0.5	YE / BK	625	Starter Enable Relay Control	I	—
B3	0.5	VT / GY	8017	Secondary Axle Motor Relay Control	I	—
B4 - B5	—	—	—	Not Occupied	—	—
B6	2.5	RD / GY	1342	Battery Positive Voltage	I	—
C1	0.5	BU	3017	Fuel Heater Relay 1 Control	I	—
C2	—	—	—	Not Occupied	—	—
C3	0.5	BK	6550	Ground	I	—
C4	0.5	WH / GY	459	A/C Compressor Clutch Relay Control	I	—
C5	0.5	GN / BU	3889	Powertrain Sensor Bus Relay Control	I	—
C6	1	VT / GN	4320	Powertrain Sensor Bus Enable	I	—
C7 - D1	—	—	—	Not Occupied	—	—
D2	5	RD / BU	1842	Battery Positive Voltage	I	—
E1	5	RD / BU	1542	Battery Positive Voltage	I	—
E2 - F2	—	—	—	Not Occupied	—	—

X50A Engine Wiring Harness Junction Block X3 (LM2) (cont'd)

Pin	Size	Color	Circuit	Function	Terminal Type ID	Option
F3	0.5	RD / BN	440	Battery Positive Voltage	I	—
F4	0.5	YE	5991	Powertrain Relay Coil Control	I	—
F5	0.5	RD / BN	5940	Battery Positive Voltage	I	—
F6	—	—	—	Not Occupied	—	—
F7	0.5	VT / BU	5705	Powertrain Main Relay Control	I	—
F8	—	—	—	Not Occupied	—	—
G1	0.75	VT / BU	5294	Powertrain Main Relay Fused Supply Voltage 5	I	—
G2 - G4	—	—	—	Not Occupied	—	—
G5	1	VT / GN	4320	Powertrain Sensor Bus Enable	I	—
G6	0.75	VT / BU	5291	Powertrain Main Relay Fused Supply Voltage 2	II	—
H1	2	VT	5290	Powertrain Main Relay Fused Supply Voltage 1	I	—
H2	—	—	—	Not Occupied	—	—
H3	0.75	VT / BU	5294	Powertrain Main Relay Fused Supply Voltage 5	I	—
H4 - H6	—	—	—	Not Occupied	—	—

X50A Engine Wiring Harness Junction Block X4

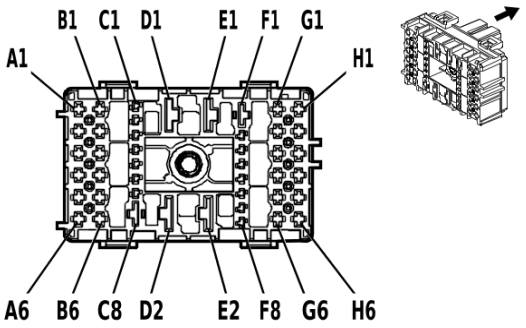

4993031

Connector Part Information

Harness Type: Chassis Wiring Harness
OEM Connector: 33384574
Service Connector: 19371188
Description: 44-Way F 1.5, 2.8, 6.3 CTS, 9.5 MCON-LL Series(BK)

Terminal Part Information

Terminal Type ID	Terminated Lead	Diagnostic Test Probe	Terminal Removal Tool
I	19369711	J-35616-14 (GN)	EL-38125-560A
II	84764078	J-35616-42 (RD)	J-38125-215A
III	84764079	J-35616-22 (RD)	J-38125-11A
IV	84779405	J-35616-35 (VT)	J-38125-215A

X50A Engine Wiring Harness Junction Block X4

Pin	Size	Color	Circuit	Function	Terminal Type ID	Option
A1 - A2	—	—	—	Not Occupied	—	—
A3	1	GY / BN	2109	Trailer Park Lamp Control	IV	—
A4	0.75	RD / BU	11340	Secondary Fused Battery Positive Voltage	IV	—
A5	—	—	—	Not Occupied	—	—
A6	1 0.75	VT / BK VT / BK	339 339	Run/Crank Ignition 1 Voltage Run/Crank Ignition 1 Voltage	IV IV	((MAS/ MBM/ MBR) + UET+ Z82) - (MAS/ MBM/ MBR) + UET
B1	0.75	RD / GY	11240	Secondary Fused Battery Positive Voltage	IV	—
B2	0.75	WH / GN	1624	Trailer Backup Lamp Control	IV	—
B3	0.75	RD / GN	2440	Battery Positive Voltage	IV	—
B4 - B6	—	—	—	Not Occupied	—	—
C1	0.75	RD / BN	2940	Battery Positive Voltage	I	—
C2 - C6	—	—	—	Not Occupied	—	—
C7	0.5	RD / WH	2040	Battery Positive Voltage	I	—
C8	3	BN / YE	2996	Fuel Heater Control 1	II	—
D1	—	—	—	Not Occupied	—	—
D2	6	RD / VT	1242	Battery Positive Voltage	III	—
E1 - E2	—	—	—	Not Occupied	—	—

X50A Engine Wiring Harness Junction Block X4 (cont'd)

Pin	Size	Color	Circuit	Function	Terminal Type ID	Option
F1	3	RD / BU	7640	Battery Positive Voltage	II	—
F2 - G2	—	—	—	Not Occupied	—	—
G3	0.75	YE / GY	1618	Left Rear Trailer Stop/Turn Lamp Control	IV	—
G4	2	RD / YE	5840	Battery Positive Voltage	IV	—
G5	2.5	BU	3921	Diesel Exhaust Fluid Heater Control 1	IV	—
G6	2.5	RD / YE	1142	Battery Positive Voltage	IV	—
H1 - H2	—	—	—	Not Occupied	—	—
H3	0.75	GN / VT	1619	Right Rear Trailer Stop/Turn Lamp Control	IV	—
H4	3	RD / VT	5640	Battery Positive Voltage	IV	—
H5	2.5	RD / VT	1940	Battery Positive Voltage	IV	—
H6	2.5 4	RD / GN RD / GN	742 742	Battery Positive Voltage Battery Positive Voltage	IV IV	((MAS/ MBM/ MBR) + UET+ Z82) - MAS- MBM- MBR+ Z82/ - UET+ Z8Z

X50A Engine Wiring Harness Junction Block X5 (L84/L84)

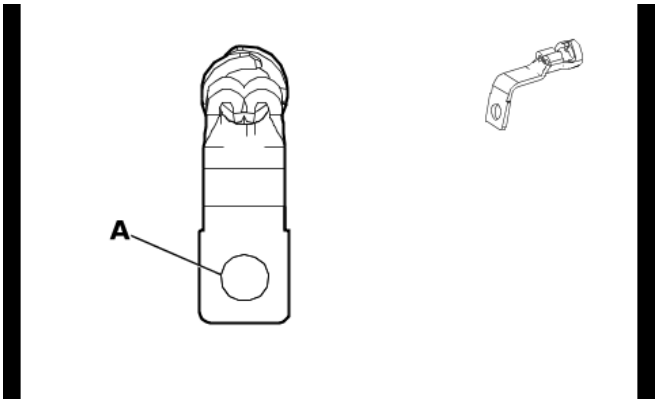

5525767

Connector Part Information

Harness Type: Starter Solenoid Cable
OEM Connector: 84386513
Service Connector: Service by Cable Assembly — See Part Catalog
Description: 1-Way Ring Terminal

Terminal Part Information

Terminal Type ID	Terminated Lead	Diagnostic Test Probe	Terminal Removal Tool
I	Not required	No Tool Required	No Tool Required

X50A Engine Wiring Harness Junction Block X5 (L84/L84)

Pin	Size	Color	Circuit	Function	Terminal Type ID	Option
A	35	RD / GN	242	Battery Positive Voltage	I	—

X51R Instrument Panel Wiring Harness Junction Block - Right Label

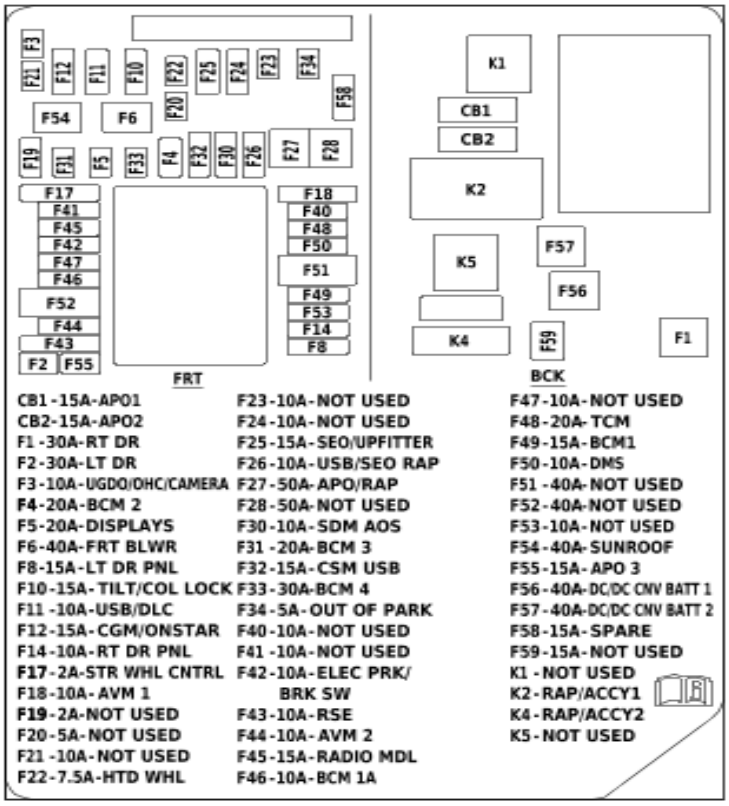

CB1-15A-APO1
CB2-15A-APO2
F1-30A-RT DR
F2-30A-LT DR
F3-10A-UGDO/DHC/CAMERA
F4-20A-BCM 2
F5-20A-DISPLAYS
F6-40A-FRT BLWR
F8-15A-LT DR PNL
F10-15A-TILT/COL LOCK
F11-10A-USB/DLC
F12-15A-CGM/ONSTAR
F14-10A-RT DR PNL
F17-2A-STR WHL CNTRL
F18-10A-AVM 1
F19-2A-NOT USED
F20-5A-NOT USED
F21-10A-NOT USED
F22-7.5A-HTD WHL
F23-10A-NOT USED
F24-10A-NOT USED
F25-15A-SEO/UPFITTER
F26-10A-USB/SEO RAP
F27-50A-APO/RAP
F28-50A-NOT USED
F30-10A-SDM AOS
F31-20A-BCM 3
F32-15A-CSM USB
F33-30A-BCM 4
F34-5A-OUT OF PARK
F40-10A-NOT USED
F41-10A-NOT USED
F42-10A-ELEC PRK/ BRK SW
F43-10A-RSE
F44-10A-AVM 2
F45-15A-RADIO MDL
F46-10A-BCM 1A
F47-10A-NOT USED
F48-20A-TCM
F49-15A-BCM1
F50-10A-DMS
F51-40A-NOT USED
F52-40A-NOT USED
F53-10A-NOT USED
F54-40A-SUNROOF
F55-15A-APO 3
F56-40A-DC/DC CNV BATT 1
F57-40A-DC/DC CNV BATT 2
F58-15A-SPARE
F59-15A-NOT USED
K1-NOT USED
K2-RAP/ACCY1
K4-RAP/ACCY2
K5-NOT USED

5873932

X51R Instrument Panel Wiring Harness Junction Block - Right Top View

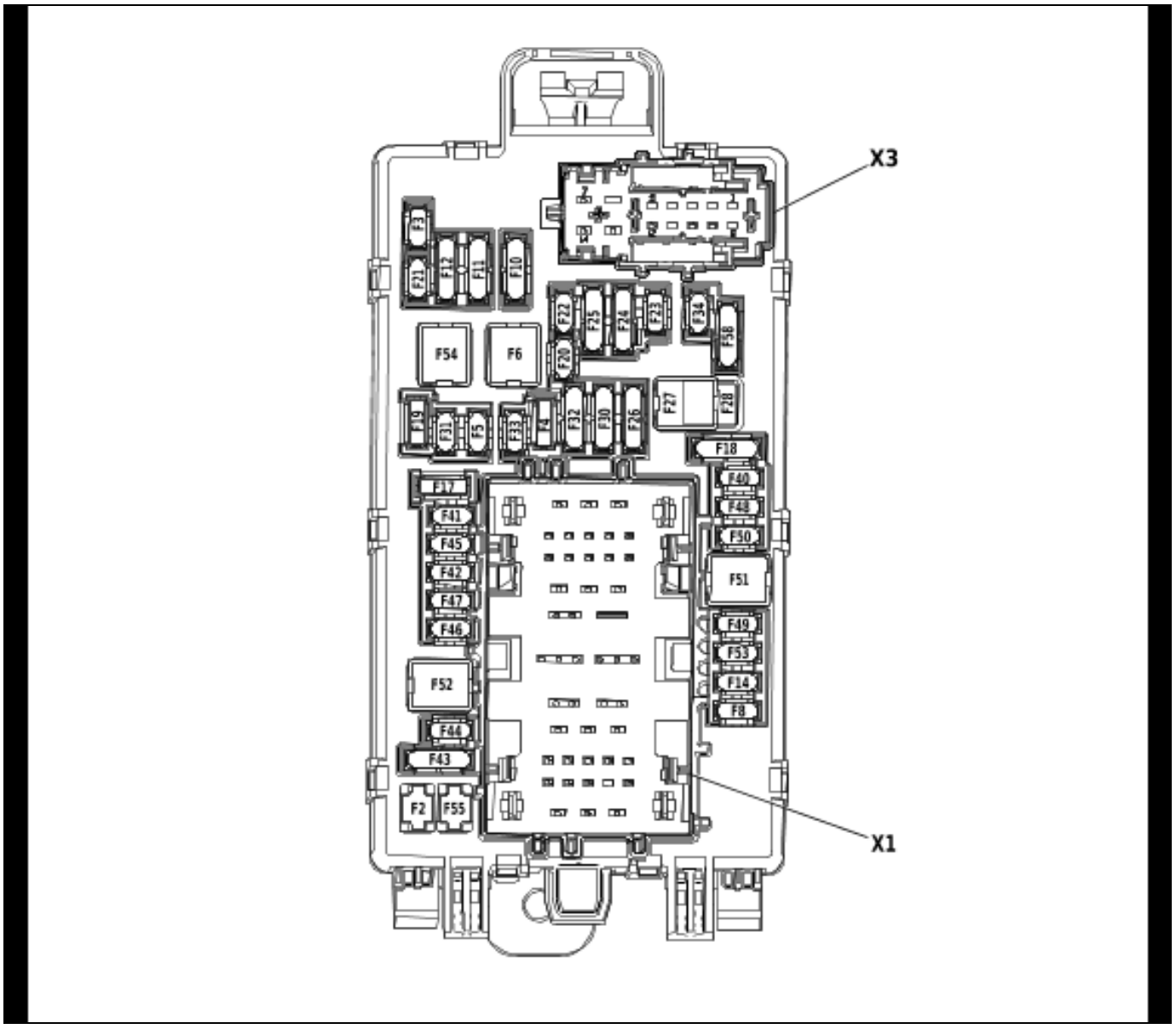

5041376

Usage Table

No.	Device Label Name	Device Assigned Name	Rating	Description
Fuses				
F2	LT DR	F2DR	30A	• M74D Front Side Door Window Regulator Motor - Driver • S79LR Rear Side Door Window Switch - Left
F3	UGDO/OHC/CAM-ERA	F3DR	10A	• A103 Roof Console • B117A Windshield Outside Moisture/Ambient Light and Humidity Sensor • B174W Front View Camera - Windhsield (UEU)
F4	BCM 2	F4DR	20A	• K9 Body Control Module
F5	DISPLAYS	F5DR	20A	• A26 Heater and Air Conditioning User Interface Control - Front • P16 Instrument Panel Cluster Control Module • P29 Head-Up Display (UV6)

Usage Table (cont'd)

No.	Device Label Name	Device Assigned Name	Rating	Description
F6	FRT BLWR	F6DR	40A	• M8 Blower Motor
F8	LT DR PNL	F8DR	15A	• S79D Front Side Door Window Control Switch - Driver
F10	TILT/COL LOCK	F10DR	15A	• K99 Steering Column Tilt Wheel and Telescope Control Module (N38)
F11	USB/DLC	F11DR	10A	• A22 Radio Control • K60 Column Lock Module • X84 Data Link Connector
F12	CGM/ONSTAR	F12DR	15A	• K56 Serial Data Gateway Module • K73 Telematic Control Module
F14	RT DR PNL	F14DR	10A	• S79P Front Side Door Window Switch - Passenger
F17	STR WHL CNTRL	F17DR	2A	• S70L Cruise Control Switch (KI3) • S70R Radio Control Switch - Steering Wheel (KI3)
F18	AVM 1	F18DR	10A	• Not used
F19	STR WHL CNTRL (SPARE)	F19DR	2A	• Not used
F20	NOT USED	F20DR	5A	• Not used
F21	NOT USED	F21DR	10A	• Not used
F22	HTD WHL	F22DR	7.5A	• K32 Steering Wheel Heating Control Module (KI3)
F23	NOT USED	F23DR	10A	• Not used
F24	NOT USED	F24DR	10A	• Not used
F25	SEO/UPFITTER	F25DR	15A	• Not used
F26	USB/SEO RAP	F26DR	10A	• X92BCL USB Receptacle - 3rd Row Seat Left • X92BCR USB Receptacle - 3rd Row Seat Right • X92CD Dual Charge Only Receptacle - Floor Console Rear
F27	APO/RAP	F27DR	50A	• CB1DR • CB2DR
F28	NOT USED	F28DR	50A	• CB1DR • CB2DR
F30	SDM AOS	F30DR	10A	• K36 Restraints Control Module • K85P Restraints Occupant Classification System Module - Passenger • S76 Trailer Brake Control Switch (JL1)
F31	BCM 3	F31DR	20A	• K9 Body Control Module
F32	CSM USB	F32DR	15A	• A11 Radio (IOS/IOT) • X92G USB 2 Port Receptacle (AZ3/D07/DCK/UW9)
F33	BCM 4	F33DR	30A	• K9 Body Control Module
F34	OUT OF PARK	F34DR	5A	• KR87 Transmission Park Position Relay
F40	NOT USED	F40DR	10A	• Not used
F41	NOT USED	F41DR	10A	• Not used
F42	ELEC PRK/BRK SW	F42DR	10A	• K212 Gear Shift Control Module • S91 Parking Brake Control Switch
F43	RSI / RSE	F43DR	10A	• P22F Video Display - Right Front Seat Back (UW9) • P22E Video Display - Left Front Seat Back (UW9) • X23 Multimedia Receptacle (D07/DCK/(DCK-UW9) • X83B Audio/Video Receptacle ((D07/DCK/DCH)+UW9)
F44	AVM 2	F44DR	10A	• X125

Usage Table (cont'd)

No.	Device Label Name	Device Assigned Name	Rating	Description
F45	RADIO MDL	F45DR	15A	• A11 Radio (IOR)
F46	BCM 1A	F46DR	10A	• Not used
F47	NOT USED	F47DR	10A	• Not used
F48	TCM	F48DR	20A	• K71 Transmission Control Module
F49	BCM 1	F49DR	15A	• K9 Body Control Module
F50	DMS	F50DR	10A	• Not used
F51	NOT USED	F51DR	40A	• Not used
F52	NOT USED	F52DR	40A	• Not used
F53	NOT USED	F53DR	10A	• Not used
F54	SUNROOF	F54DR	40A	• K61 Sunroof Control Module (C3U)
F55	APO 3	F55DR	15A	• E32 Cigarette Lighter Receptacle (DT4)
F56	DC/DC CNV BATT1	F56DR	40A	• T19 Multifunction Power Supply Transformer
F57	DC/DC CNV BATT2	F57DR	40A	• T19 Multifunction Power Supply Transformer
F58	SPARE	F58DR	15A	• Not used
F59	NOT USED	F59DR	15A	• Not used
Relays				
Note: Relays listed below are non-serviceable Printed Circuit Board (PCB) relays and are internal to the block.				
—	—	KR87 Transmission Park Position Relay	—	• S143L Rear Seat Back Folding Switch - 2nd Row Left (ATN/ATT) • S143R Rear Seat Back Folding Switch - 2nd Row Right (ATN/ATT) • S144A Rear Seat Back Folding Siwtch - 2nd Row Rear Compartment (ATN/ATT)

X51R Instrument Panel Wiring Harness Junction Block - Right Bottom View

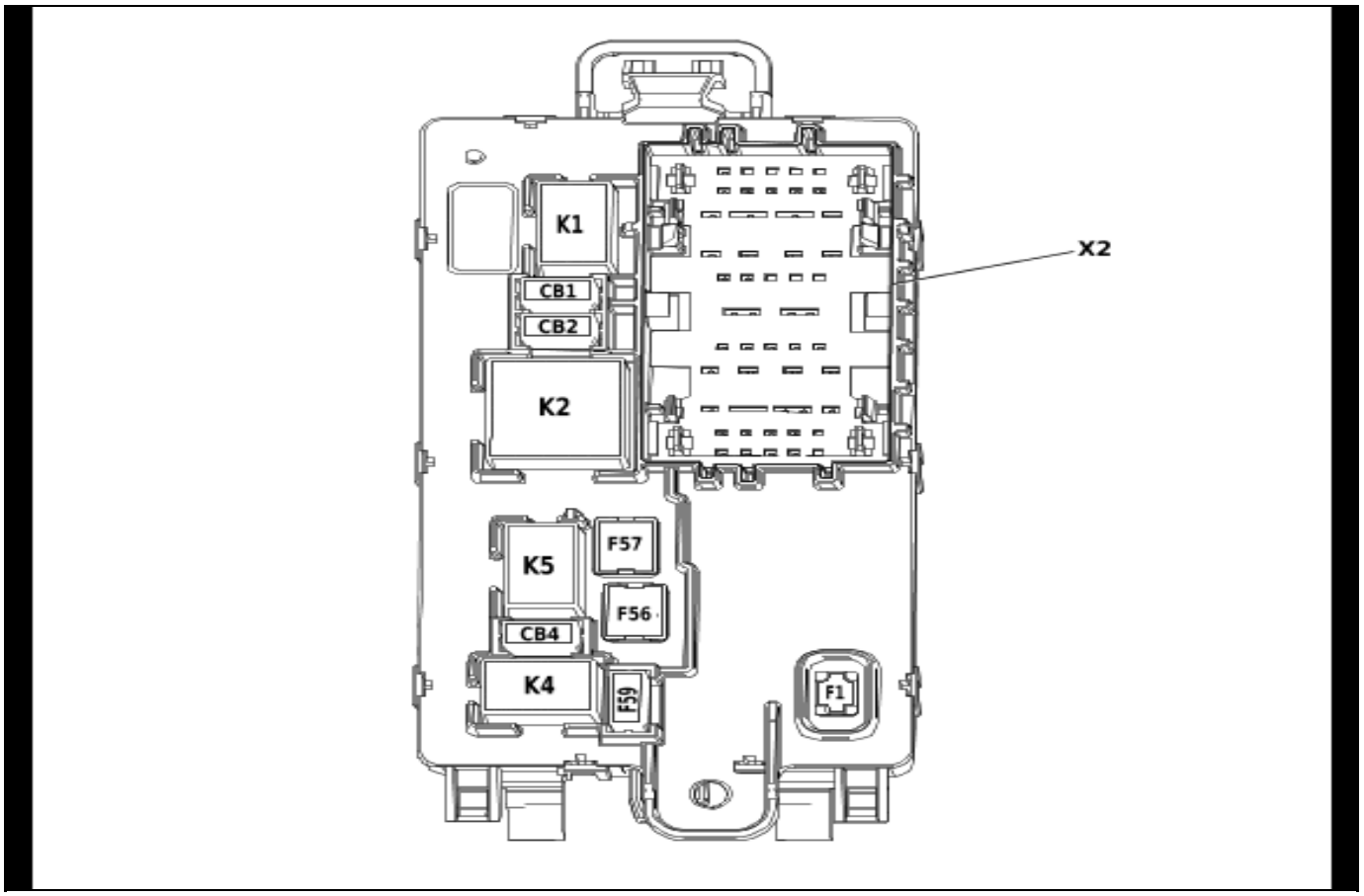

5619643

Usage Table

No.	Device Label Name	Device Assigned Name	Rating	Description
Circuit Breakers				
CB1	APO1	CB1DR	15A	• X80G Accessory Power Receptacle - Instrument Panel (AZ3) • X80H Accessory Power Receptacle - Floor Console Front (D07/DCK/DCH)
CB2	APO2	CB2DR	15A	• Not Used
Fuses				
F1	RT DR	F1DR	30A	• M74P Front Side Door Window Regulator Motor - Passenger • S79RR Rear Side Door Window Switch - Right
F56	DC/DC CNV BATT 1	F56DR	40A	• T19 Multifunction Power Supply Converter
F57	DC/DC CNV BATT 2	F57DR	40A	• T19 Multifunction Power Supply Converter
F59	NOT USED	F59DR	15A	• Not Used
Relays				
K1	NOT USED	—	—	• Not Used
K2	RAP/ACCY1	KR76A Accessory Time Delay Cutoff Relay 1	—	• F26DR • F27DR • F55DR • CB1DR • CB2DR

Usage Table (cont'd)

No.	Device Label Name	Device Assigned Name	Rating	Description
K4	RAP/ACCY2	KR76B Accessory Time Delay Cutoff Relay 2	—	• CB3DR • CB4DR
K5	NOT USED	—	—	• Not Used

X51R Instrument Panel Wiring Harness Junction Block - Right X1

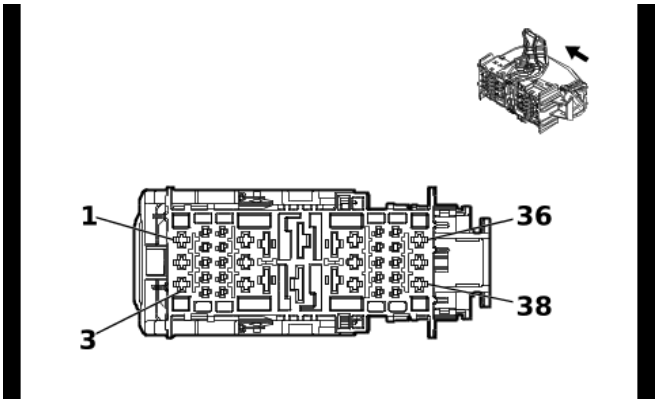

5402140

Connector Part Information

Harness Type: Body Wiring Harness
OEM Connector: 13534518
Service Connector: 84941450
Description: 38-Way F 1.5, 2.8, 6.3 CTS, 9.5 MCON-LL Series(BU)

Terminal Part Information

Terminal Type ID	Terminated Lead	Diagnostic Test Probe	Terminal Removal Tool
I	19332366	J-35616-35 (VT)	J-38125-212
II	19371175	J-35616-2A (GY)	J-38125-11A
III	84764078	J-35616-42 (RD)	J-38125-215A
IV	Not required	J-35616-22 (RD)	No Tool Required

X51R Instrument Panel Wiring Harness Junction Block - Right X1

Pin	Size	Color	Circuit	Function	Terminal Type ID	Option
1 - 2	—	—	—	Not Occupied	—	—
3	0.75	RD / GN	1840	Battery Positive Voltage	I	—
4	—	—	—	Not Occupied	—	—
5	0.5	RD / GN	4440	Battery Positive Voltage	II	—
6	0.5	VT	4701	Retained Accessory Power Control	II	—
7	—	—	—	Not Occupied	—	—
8	0.5	VT	4701	Retained Accessory Power Control	II	—
9	—	—	—	Not Occupied	—	—
10	0.35	GY / GN	4083	Retained Accessory Power Relay 2 Coil Control	II	—
11	0.5	RD / VT	340	Battery Positive Voltage	II	—
12	—	—	—	Not Occupied	—	—
13	0.35	YE / BK	5813	Park Enable Control	II	—
14 - 16	—	—	—	Not Occupied	—	—
17	2.5	RD / YE	2172	12V Regulated Supply Voltage 1	III	—
18	2.5	RD / YE	8140	Battery Positive Voltage	III	—
19	5	RD / YE	1442	Battery Positive Voltage	IV	—
20	10	RD / WH	342	Battery Positive Voltage	IV	—
21	2.5	RD / GN	2173	12V Regulated Supply Voltage 2	III	—
22	2.5	RD / WH	8040	Battery Positive Voltage	III	—

X51R Instrument Panel Wiring Harness Junction Block - Right X1 (cont'd)

Pin	Size	Color	Circuit	Function	Terminal Type ID	Option
23	2.5	RD / BN	4240	Battery Positive Voltage	I	—
24	2.5	RD / BN	4240	Battery Positive Voltage	I	—
25	2.5	RD / GY	3540	Battery Positive Voltage	I	—
26	0.5	RD / BN	3640	Battery Positive Voltage	II	—
27 - 28	—	—	—	Not Occupied	—	—
29	0.5	RD / BU	5240	Battery Positive Voltage	II	—
30	0.5	RD / VT	1940	Battery Positive Voltage	II	—
31	0.35	RD / WH	7240	Battery Positive Voltage	II	—
32	0.5	YE	6812	Out of Park Signal	II	—
33	0.35	GY / GN	4083	Retained Accessory Power Relay 2 Coil Control	II	—
34 - 36	—	—	—	Not Occupied	—	—
37	2.5	RD / GY	3540	Battery Positive Voltage	I	—
38	1.5	VT	1701	Retained Accessory Power Control	I	—

X51R Instrument Panel Wiring Harness Junction Block - Right X2

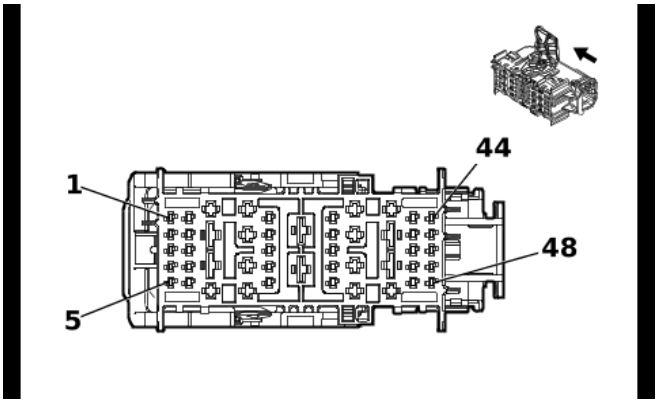

5403539

Connector Part Information

Harness Type: Instrument Panel Wiring Harness
OEM Connector: 35264616
Service Connector: 19371180
Description: 48-Way F 1.5, 2.8, 6.3 CTS Series(GN)

Terminal Part Information

Terminal Type ID	Terminated Lead	Diagnostic Test Probe	Terminal Removal Tool
I	19369711	J-35616-14 (GN)	EL-38125-560A
II	84764078	J-35616-42 (RD)	J-38125-215A
III	84779405	J-35616-35 (VT)	J-38125-215A

X51R Instrument Panel Wiring Harness Junction Block - Right X2

Pin	Size	Color	Circuit	Function	Terminal Type ID	Option
1	0.5	BK	1050	Ground	I	—
2 - 8	—	—	—	Not Occupied	—	—
9	0.5	RD / YE	6540	Battery Positive Voltage	I	—
10 - 13	—	—	—	Not Occupied	—	—
14	0.5	RD / BU	3240	Battery Positive Voltage	III	—
15	0.35	RD / BN	10040	Secondary Fused Battery Positive Voltage	III	—
16	1	RD / VT	4640	Battery Positive Voltage	III	—
17	0.35 0.35	RD / GY RD / WH	4140 1340	Battery Positive Voltage Battery Positive Voltage	III III	N06 UIJ/ UIM
18	0.35	RD / VT	3340	Battery Positive Voltage	III	—
19 - 23	—	—	—	Not Occupied	—	—
24	5	RD / GY	2042	Battery Positive Voltage	II	—
25	2.5	RD / BU	4540	Battery Positive Voltage	II	—
26	—	—	—	Not Occupied	—	—
27	0.5	RD / YE	2340	Battery Positive Voltage	I	—
28	0.35	RD / VT	4040	Battery Positive Voltage	I	—
29 - 30	—	—	—	Not Occupied	—	—

X51R Instrument Panel Wiring Harness Junction Block - Right X2 (cont'd)

Pin	Size	Color	Circuit	Function	Terminal Type ID	Option
31	1 1.5	VT VT	1001 1001	Retained Accessory Power Ignition Voltage Retained Accessory Power Ignition Voltage	III III	(KC5+ AZ3) / ((9C1/ 5W4) - D07) KC5+ (D07/ DCH/ DCK)
32	1.5	RD / BU	2540	Battery Positive Voltage	III	—
33	0.75	RD / WH	1340	Battery Positive Voltage	III	—
34	0.75	RD / GY	2140	Battery Positive Voltage	III	—
35	1	RD / GY	2840	Battery Positive Voltage	III	—
36	—	—	—	Not Occupied	—	—
37	0.75	RD / YE	2340	Battery Positive Voltage	II	—
38 - 40	—	—	—	Not Occupied	—	—
41	0.75	RD / GN	5140	Battery Positive Voltage	I	—
42	0.35	RD / GN	5140	Battery Positive Voltage	I	—
43 - 44	—	—	—	Not Occupied	—	—
45	0.5	RD / WH	2740	Battery Positive Voltage	I	—
46 - 48	—	—	—	Not Occupied	—	—

X51R Instrument Panel Wiring Harness Junction Block - Right X3

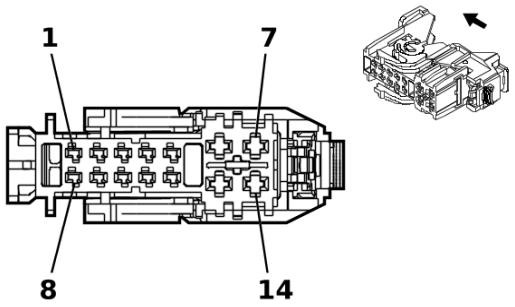

5190115

Connector Part Information

Harness Type: Instrument Panel Wiring Harness
OEM Connector: 33377074
Service Connector: 13525315
Description: 14-Way F 1.5, 2.8 MCP Series(GY)

Terminal Part Information

Terminal Type ID	Terminated Lead	Diagnostic Test Probe	Terminal Removal Tool
I	19332366	J-35616-35 (VT)	J-38125-212

X51R Instrument Panel Wiring Harness Junction Block - Right X3

Pin	Size	Color	Circuit	Function	Terminal Type ID	Option
1 - 6	—	—	—	Not Occupied	—	—
7	1	RD / YE	240	Battery Positive Voltage	I	—
8 - 14	—	—	—	Not Occupied	—	—

X53A Body Wiring Harness Junction Block - Rear Label

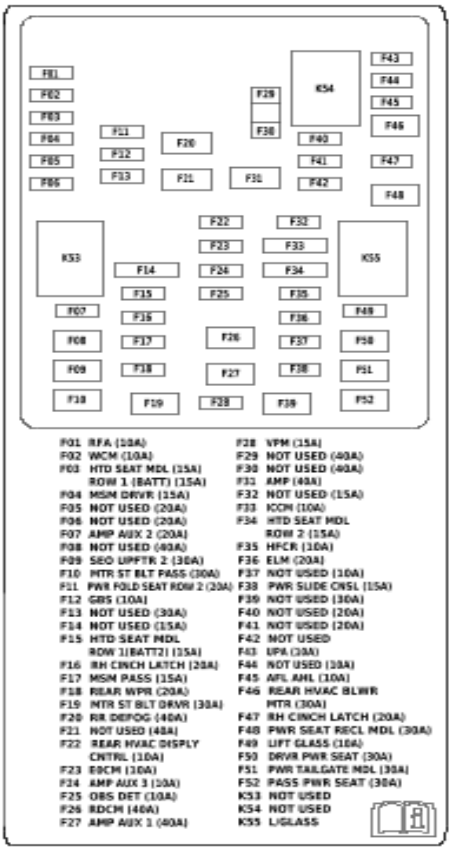

5873958

X53A Body Wiring Harness Junction Block - Rear Top View

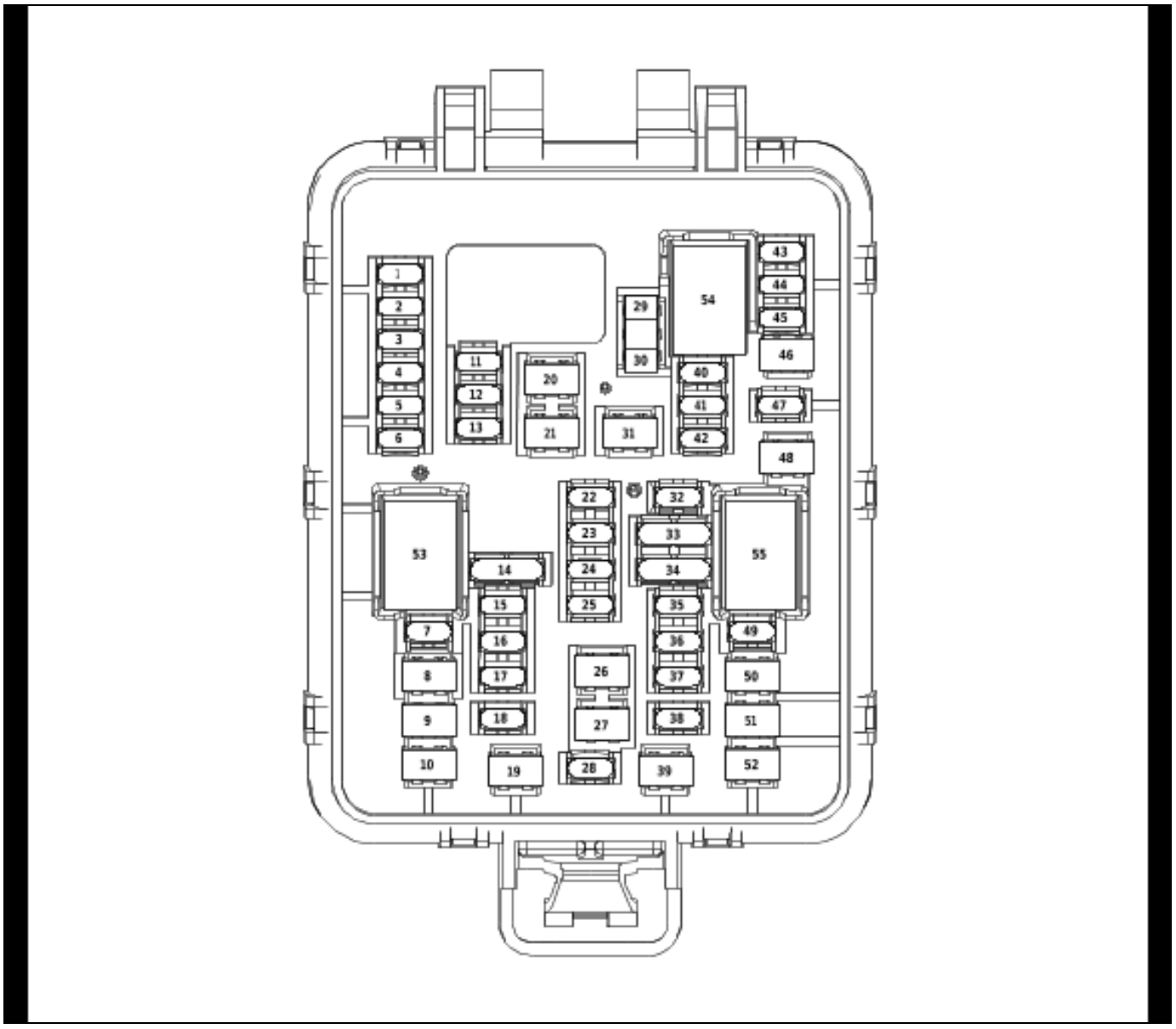

5331356

Usage Table

No.	Device Label Name	Device Assigned Name	Rating	Description
Fuses				
F01	RFA	F1RA	10A	• K77 Remote Function Actuator Module
F02	WCM	F2RA	10A	• K175 Front Floor Console Compartment Cooler (DCK) • T22 Wireless Accessory Charging Module (K4C)
F03	HTD SEAT MDL ROW 1 (BATT1)	F3RA	15A	• K29FV Front Seat Heater Vent Control Module (KA1/KQV)
F04	MSM DRVR	F4RA	15A	• K40D Driver Seat Adjuster Memory Module (A45/AUN) • K104DP Front Seat Bladder Control Module - Driver Primary (AVK) • S64D Front Seat Adjuster Switch - Driver (A45/AUN)
F05	NOT USED	F5RA	20A	• Not Used

Usage Table (cont'd)

No.	Device Label Name	Device Assigned Name	Rating	Description
F06	NOT USED	F6RA	20A	• Not Used
F07	AMP AUX	F7RA	20A	• Not Used
F08	NOT USED	F8RA	40A	• Not Used
F09	SEO UPFTR 2	F9RA	30A	• Not Used
F10	MTR ST BLT PASS	F10RA	30A	• M101R Front Seat Belt Retractor Motor - Right
F11	PWR FOLD SEAT ROW 2	F11RA	20A	• M107LR Folding Rear Seat Back Actuator - Left (ATN/ATT) • M107RR Folding Rear Seat Back Actuator - Right (ATN/ATT)
F12	GBS	F12RA	10A	• B159R Quarter Window Glass Breakage Sensor - Right (UTU/UTV)
F13	NOT USED	F13RA	30A	• Not Used
F14	NOT USED	F14RA	15A	• Not Used
F15	HTD SEAT MDL ROW 1 (BATT 2)	F15RA	15A	• K29FV Front Seat Heater Vent Control Module (KA1/KQV)
F16	RH CINCH LATCH	F16RA	20A	• Not Used
F17	MSM PASS	F17RA	15A	• K40P Passenger Seat Adjuster Memory Module (A45) • K104P Front Seat Bladder Control Module - Passenger (AVU-A45) • K104PP Front Seat Bladder Control Module - Passenger Primary (AVU+A45) • S64P Seat Adjuster Switch - Passenger
F18	REAR WPR	F18RA	20A	• M45 Rear Winodw Wiper Motor
F19	MTR ST BLT DRVR	F19RA	30A	• M101L Front Seat Belt Retractor Motor - Left
F20	RR DEFOG	F20RA	40A	• E18 Rear Window Defogger Grid • F12RA
F21	NOT USED	F21RA	40A	• Not Used
F22	REAR HVAC DIS-PLY CNTRL	F22RA	10A	• A34 Heater and Air Conditioning Auxiliary Control (KA6)
F23	EOCM	F23RA	10A	• K124 Image Processing Module (UGN)
F24	LOW PWR AMP	F24RA	10A	• Not Used
F25	OBS DET	F25RA	10A	• B218L Side Obstacle Detection Control Module - Left (UFG/UKC) • B218R Side Obstacle Detection Control Module - Right (UFG/UKC) • B233LR Short Range Radar Sensor - Left Rear (UGN/UVZ) • B233RR Short Range Radar Sensor - Right Rear (UGN/UVZ)
F26	DIFFERENTIAL CNTRL MDL	F26RA	40A	• K164 Differential Control Module (G96)
F27	AMP AUX 1	F27RA	40A	• Not Used
F28	VPM	F28RA	15A	• K157 Video Processing Module (UV2)
F29	NOT USED	F29RA	40A	• Not Used
F30	NOT USED	F30RA	40A	• Not Used
F31	AMP	F31RA	40A	• T3 Audio Amplifier (UQA/UQP/UQS)
F32	NOT USED	F32RA	15A	• Not Used
F33	ICCM	F33RA	10A	• K38 Chassis Control Module (G96)

Usage Table (cont'd)

No.	Device Label Name	Device Assigned Name	Rating	Description
F34	HTD SEAT MDL ROW 2	F34RA	15A	• K29R Rear Seat Heater Control Module (KA6)
F35	HANDSFREE L/ GATE MDL	F35RA	10A	• K171 Rear Closure Hands Free Module (TC2) • K214 Trailer Tire Pressure Indicator Module (U1D)
F36	ELM	F36RA	20A	• K219 Lighting Control Module
F37	NOT USED	F37RA	10A	• Not Used
F38	PWR SLIDE CNSL	F38RA	15A	• K230 Front Floor Console Control Module (DCH)
F39	NOT USED	F39RA	30A	• Not Used
F40	NOT USED	F40RA	20A	• Not Used
F41	NOT USED	F41RA	20A	• Not Used
F42	NOT USED	F42RA	30A	• Not Used
F43	PRK ASST MDL	F43RA	10A	• K182 Parking Assist Control Module (UD5/UD7)
F44	NOT USED	F44RA	10A	• Not Used
F45	AFL AHL	F45RA	10A	• Not Used
F46	REAR HVAC BLWR MTR	F46RA	30A	• K8AB Blower Control Module - Rear (C69)
F47	LH CINCH LATCH	F47RA	20A	• Not Used
F48	PWR SEAT RECL MDL	F48RA	30A	• K169 Folding 3rd Row Seat Module (AS8)
F49	L/GLASS	F49RA	10A	• M33 Liftgate Window Latch
F50	DRVR PWR SEAT	F50RA	30A	• K40D Driver Seat Adjuster Memory Module (A45) • S64D Front Seat Adjuster Switch - Driver • S65D Front Seat Lumbar Switch - Driver (AL9)
F51	PWR TAILGATE MDL	F51RA	30A	• K194 Rear Gate Module (TC2)
F52	PASS PWR SEAT	F52RA	30A	• K40P Passenger Seat Adjuster Memory Module (A45) • S64P Front Seat Adjuster Switch - Passenger • S65P Front Seat Lumbar Switch - Passenger (AT9)
Relays				
K53	NOT USED	—	—	• Not Used
K54	NOT USED	—	—	• Not Used
K55	L/GLASS	KR162 Liftgate Window Release Relay	—	• F49RA
Important: Relays listed below are non-serviceable Printed Circuit Board (PCB) relays and are internal to the block.				
—	—	KR5 Rear Defog- ger Relay	—	• F12RA • F20RA

X53A Body Wiring Harness Junction Block - Rear Bottom View

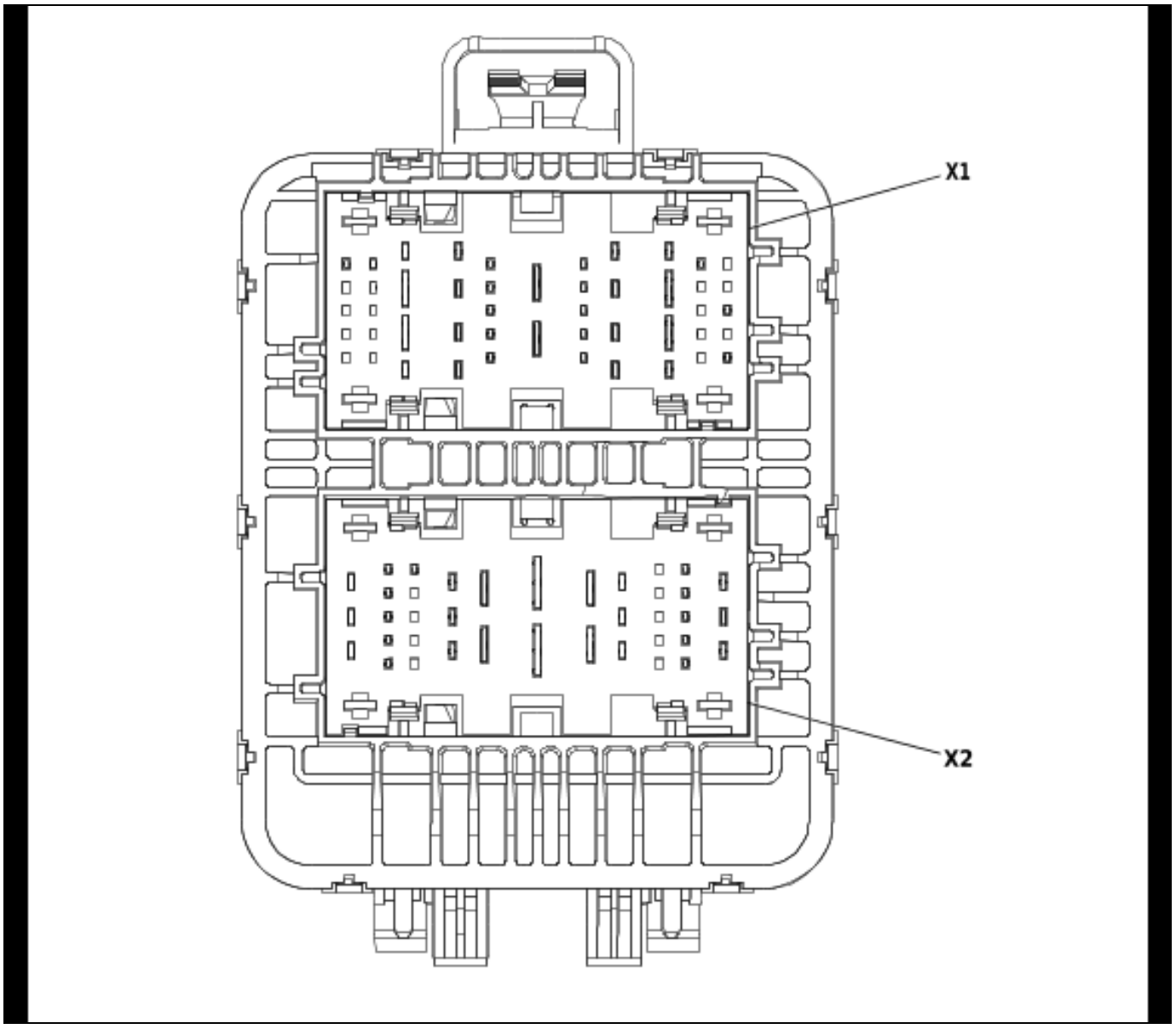

5331358

X53A Body Wiring Harness Junction Block - Rear X1

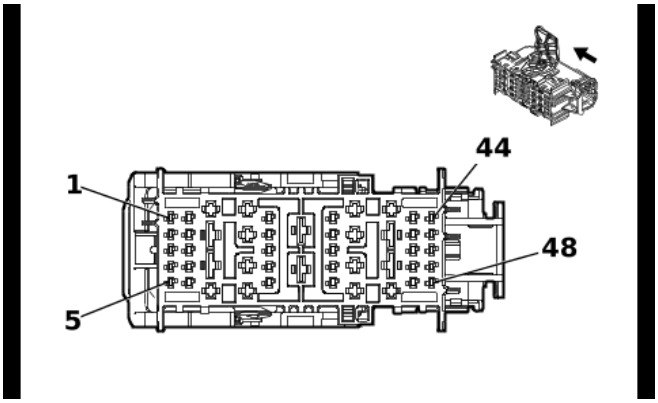

5403539

Connector Part Information

Harness Type: Body Wiring Harness
OEM Connector: 13534514
Service Connector: 19371180
Description: 48-Way F 1.5, 2.8, 6.3 CTS Series(GN)

Terminal Part Information

Terminal Type ID	Terminated Lead	Diagnostic Test Probe	Terminal Removal Tool
I	19369711	J-35616-14 (GN)	EL-38125-560A
II	84764078	J-35616-42 (RD)	J-38125-215A
III	84779405	J-35616-35 (VT)	J-38125-215A

X53A Body Wiring Harness Junction Block - Rear X1

Pin	Size	Color	Circuit	Function	Terminal Type ID	Option
1 - 4	—	—	—	Not Occupied	—	—
5	0.5	BK	2050	Ground	I	—
6 - 15	—	—	—	Not Occupied	—	—
16	0.75	RD / BU	3940	Battery Positive Voltage	III	—
17	0.75	RD / YE	3040	Battery Positive Voltage	III	—
18	—	—	—	Not Occupied	—	—
19	0.75	RD / GN	6140	Battery Positive Voltage	I	—
20	—	—	—	Not Occupied	—	—
21	1 0.5	RD / GN RD / BN	3140 4940	Battery Positive Voltage Battery Positive Voltage	I I	UGN+ UVZ/ UKL UKC/ UKV- UKL
22	0.5	RD / BN	7540	Battery Positive Voltage	I	—
23	0.5	RD / GN	3140	Battery Positive Voltage	I	—
24	3	RD / GY	5540	Battery Positive Voltage	II	—
25	—	—	—	Not Occupied	—	—
26	0.75	RD / WH	5740	Battery Positive Voltage	I	—
27 - 28	—	—	—	Not Occupied	—	—
29	0.5	RD / GY	4840	Battery Positive Voltage	I	—
30	0.5	RD / VT	1640	Battery Positive Voltage	I	—
31	1	RD / GN	1540	Battery Positive Voltage	III	—

X53A Body Wiring Harness Junction Block - Rear X1 (cont'd)

Pin	Size	Color	Circuit	Function	Terminal Type ID	Option
32	—	—	—	Not Occupied	—	—
33	1	RD / VT	8640	Battery Positive Voltage	III	—
34	—	—	—	Not Occupied	—	—
35	0.35	BU / GN	4089	Rear Closure Motor Control	III	—
36	2.5	RD / YE	5040	Battery Positive Voltage	II	—
37	2.5	RD / BN	3842	Battery Positive Voltage	II	—
38	2.5	RD / YE	7440	Battery Positive Voltage	III	—
39 - 42	—	—	—	Not Occupied	—	—
43	0.75	RD / BU	6740	Battery Positive Voltage	I	—
44	0.35	GY / YE	6188	Liftgate Window/Rear Compartment Lid Motor Unlatch Control	I	—
45	—	—	—	Not Occupied	—	—
46	0.5	RD / GN	2642	Battery Positive Voltage	I	—
47 - 48	—	—	—	Not Occupied	—	—

X53A Body Wiring Harness Junction Block - Rear X2

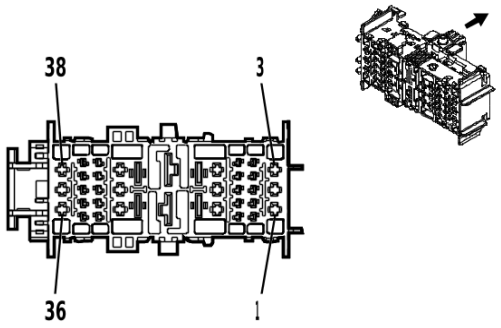

4994230

Connector Part Information

Harness Type: Body Wiring Harness
OEM Connector: 35473802
Service Connector: Service by Harness - See Part Catalog
Description: 38-Way F 1.5, 2.8, 6.3 CTS Series(GY)

Terminal Part Information

Terminal Type ID	Terminated Lead	Diagnostic Test Probe	Terminal Removal Tool
I	Not required	J-35616-22 (RD)	No Tool Required
II	Not required	J-35616-2A (GY)	No Tool Required
III	Not required	J-35616-35 (VT)	No Tool Required
IV	Not required	J-35616-40 (BU)	No Tool Required

X53A Body Wiring Harness Junction Block - Rear X2

Pin	Size	Color	Circuit	Function	Terminal Type ID	Option
1	0.75	RD / BN	2240	Battery Positive Voltage	III	—
2 - 3	—	—	—	Not Occupied	—	—
4	0.75	RD / BN	6640	Battery Positive Voltage	II	—
5	0.5	RD / VT	2640	Battery Positive Voltage	II	—
6	0.75	RD / VT	6340	Battery Positive Voltage	II	—
7	0.35	BN / VT	193	Rear Defogger Relay Control	II	—
8 - 13	—	—	—	Not Occupied	—	—
14	0.75	RD / GY	6240	Battery Positive Voltage	III	—
15	0.5	YE / BK	2930	Glass Breakage Sensor Supply Voltage	III	—
16	—	—	—	Not Occupied	—	—
17	2.5	BN / VT	293	Rear Defogger Grid Control	IV	—
18	—	—	—	Not Occupied	—	—
19	10	RD / GN	1942	Battery Positive Voltage	I	—
20	10	RD / WH	2942	Battery Positive Voltage	I	—
21	—	—	—	Not Occupied	—	—
22	3	RD / YE	3740	Battery Positive Voltage	IV	—
23 - 30	—	—	—	Not Occupied	—	—
31	0.5	RD / WH	4740	Battery Positive Voltage	II	—
32 - 35	—	—	—	Not Occupied	—	—

X53A Body Wiring Harness Junction Block - Rear X2 (cont'd)

Pin	Size	Color	Circuit	Function	Terminal Type ID	Option
36	3	RD / GY	1740	Battery Positive Voltage	III	—
37	—	—	—	Not Occupied	—	—
38	2.5	RD / GY	7840	Battery Positive Voltage	III	—

Component Connector End Views
A7 Fuel Tank Fuel Pump Module

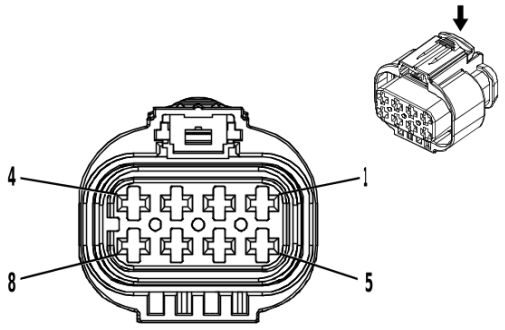

3749582

Connector Part Information

Harness Type: Chassis Wiring Harness
OEM Connector: 2-2109441-5
Service Connector: 19354078
Description: 8-Way F 2.8 Series, Sealed(L-GY)

Terminal Part Information

Terminal Type ID	Terminated Lead	Diagnostic Test Probe	Terminal Removal Tool
I	Not required	J-35616-35 (VT)	No Tool Required
II	Not required	J-35616-4A (PU)	No Tool Required

A7 Fuel Tank Fuel Pump Module

Pin	Size	Color	Circuit	Function	Terminal Type ID	Option
1	2.5	GY	120	Fuel Pump Control	I	—
2	2.5	YE / GY	4137	Fuel Pump Supply Voltage Phase 2	I	—
3	2.5	WH / BN	4138	Fuel Pump Supply Voltage Phase 3	I	—
4	0.5	BK	7444	Fuel Pump Assembly Shield Ground	II	—
5	0.5	BU / GN	1936	Primary Fuel Level Sensor Signal	II	—
6	0.5	BK / GN	6281	Fuel Level Sensor Low Reference	II	—
7 - 8	—	—	—	Not Occupied	—	—

A10 Inside Rearview Mirror X1

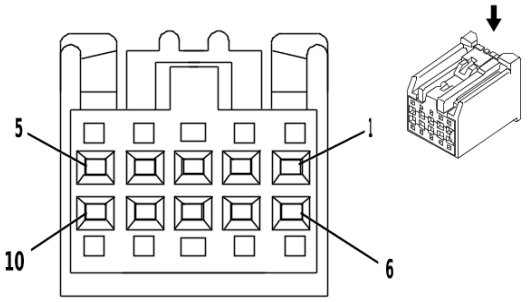

2180211

Connector Part Information

Harness Type: Headlining Trim Panel Wiring Harness
OEM Connector: 13577390
Service Connector: 13577390
Description: 10-Way F 0.64 Kaizen Series(BK)

Terminal Part Information

Terminal Type ID	Terminated Lead	Diagnostic Test Probe	Terminal Removal Tool
I	13575742	J-35616-64B (L-BU)	J-38125-215A

A10 Inside Rearview Mirror X1

Pin	Size	Color	Circuit	Function	Terminal Type ID	Option
1	0.35	GN / WH	24	Backup Lamp Control	I	—
2	0.5	VT / WH	239	Run/Crank Ignition 1 Voltage	I	—
3 - 4	—	—	—	Not Occupied	—	—
5	0.35	BK / WH	1851	Signal Ground	I	—
6 - 7	—	—	—	Not Occupied	—	—
8	0.35	BK / YE	1691	Automatic Day/Night Mirror Low Reference	I	—
9	0.35	YE / WH	1690	Mirror Dimming Signal	I	—
10	—	—	—	Not Occupied	—	—

A10 Inside Rearview Mirror X2 (DRZ)

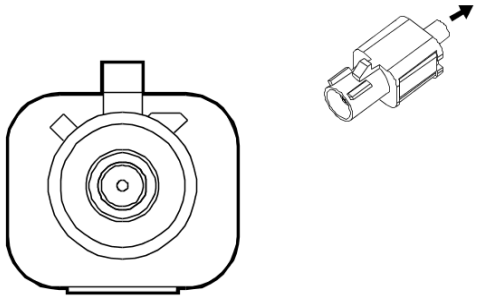

4496217

Connector Part Information

Harness Type: Antenna Coax
OEM Connector: 13532503
Service Connector: Service by Cable Assembly — See Part Catalog
Description: 1-Way M Coax Type

Terminal Part Information

Terminal Type ID	Terminated Lead	Diagnostic Test Probe	Terminal Removal Tool
I	Not required	No Tool Required	No Tool Required

A10 Inside Rearview Mirror X2 (DRZ)

Pin	Size	Color	Circuit	Function	Terminal Type ID	Option
—	—	Coax Cable	—	Full Display Mirror Rear Camera Coaxial Video Signal	I	—

A11 Radio X1 (IOR)

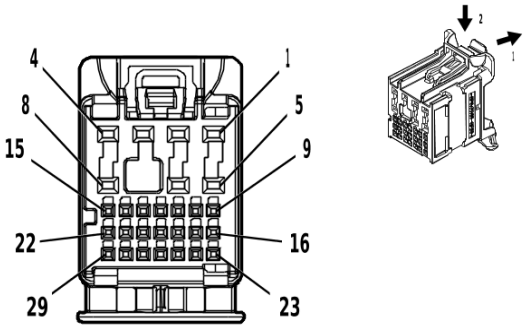

4584346

Connector Part Information

Harness Type: Instrument Panel Wiring Harness
OEM Connector: 160014-0012
Service Connector: 13534972
Description: 29-Way F 0.5 NANO, 1.2 MCON Series(GN)

Terminal Part Information

Terminal Type ID	Terminated Lead	Diagnostic Test Probe	Terminal Removal Tool
I	19370262	EL-35616-58 (BK)	EL-38125-58
II	84729890	J-35616-12 (BU)	J-38125-553

A11 Radio X1 (IOR)

Pin	Size	Color	Circuit	Function	Terminal Type ID	Option
1	0.75	RD / YE	2340	Battery Positive Voltage	II	—
2	0.75	RD / YE	2340	Battery Positive Voltage	II	—
3	0.75	BK / WH	1451	Signal Ground	II	—
4 - 5	—	—	—	Not Occupied	—	—
6	0.35	BK / WH	1451	Signal Ground	II	—
7	—	—	—	Not Occupied	—	—
8	0.75	GN / BK	116	Left Rear Speaker [-] Control	II	—
9 - 10	—	—	—	Not Occupied	—	—
11	0.35	GN / WH	24	Backup Lamp Control	I	—
12 - 16	—	—	—	Not Occupied	—	—
17	0.35	BU / WH	4985	AUTOSAR CAN Bus [+] 5 Serial Data	I	—
18	0.35	BU / YE	4984	AUTOSAR CAN Bus [-] 5 Serial Data	I	—
19 - 29	—	—	—	Not Occupied	—	—

A11 Radio X1 (IOS/IOT)

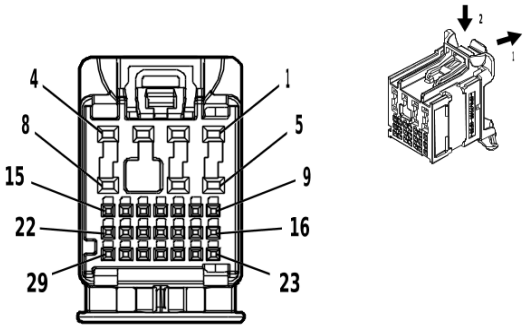

4496253

Connector Part Information

Harness Type: Instrument Panel Wiring Harness
OEM Connector: 160014-0014
Service Connector: 13534974
Description: 29-Way F 0.5 NANO, 1.2 MCON Series(BK)

Terminal Part Information

Terminal Type ID	Terminated Lead	Diagnostic Test Probe	Terminal Removal Tool
I	19370262	EL-35616-58 (BK)	EL-38125-58
II	84729890	J-35616-12 (BU)	J-38125-553

A11 Radio X1 (IOS/IOT)

Pin	Size	Color	Circuit	Function	Terminal Type ID	Option
1	0.5	RD / YE	2340	Battery Positive Voltage	II	—
2	—	—	—	Not Occupied	—	—
3	0.5	BK / WH	1451	Signal Ground	II	—
4 - 7	—	—	—	Not Occupied	—	—
8	0.75	GN / BK	116	Left Rear Speaker [-] Control	II	—
9	0.35 0.35	BU GY / YE	655 5149	Cellular Telephone Microphone Signal Voice Recognition Audio Signal	I I	(IOR/ IOK) UQS
10	0.35 0.35	BK / BN BK / GY	654 5152	Cellular Telephone Microphone Low Reference Voice Recognition Audio [-] Control	I I	(IOR/ IOK) UQS
11	0.35	VT / YE	7043	Microphone [+] Signal	I	—
12	0.35	BU / BK	7044	Microphone [-]	I	—
13 - 29	—	—	—	Not Occupied	—	—

A11 Radio X2 (IOR)

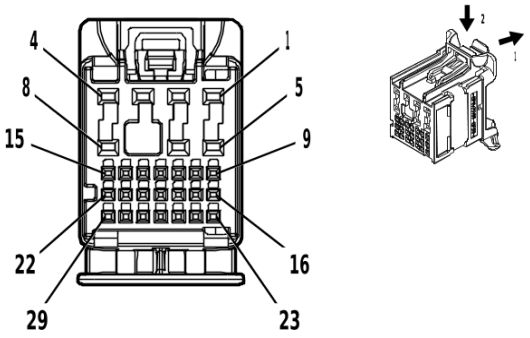

4584398

Connector Part Information

Harness Type: Instrument Panel Wiring Harness
OEM Connector: 160014-0013
Service Connector: 13534973
Description: 29-Way F 0.5 NANO, 1.2 MCON Series(GY)

Terminal Part Information

Terminal Type ID	Terminated Lead	Diagnostic Test Probe	Terminal Removal Tool
I	19370262	EL-35616-58 (BK)	EL-38125-58
II	84729890	J-35616-12 (BU)	J-38125-553

A11 Radio X2 (IOR)

Pin	Size	Color	Circuit	Function	Terminal Type ID	Option
1	0.75	GN	199	Left Rear Speaker [+] Control	II	—
2	0.5	BU	201	Left Front Speaker 1 [+] Control	II	—
3	0.5	YE	200	Right Front Speaker 1 [+] Control	II	—
4	0.75	BU / BK	115	Right Rear Speaker [-] Control	II	—
5	0.5	BN / BU	118	Left Front Speaker [-] Control 1	II	—
6	0.5	YE / BK	117	Right Front Speaker [-] Control 1	II	—
7	—	—	—	Not Occupied	—	—
8	0.75	WH	46	Right Rear Speaker [+] Control	II	—
9	0.35	BK / GY	5152	Voice Recognition Audio [-] Control	I	—
10	0.35	GY / YE	5149	Voice Recognition Audio Signal	I	—
11 - 29	—	—	—	Not Occupied	—	—

A11 Radio X2 (IOS/IOT)

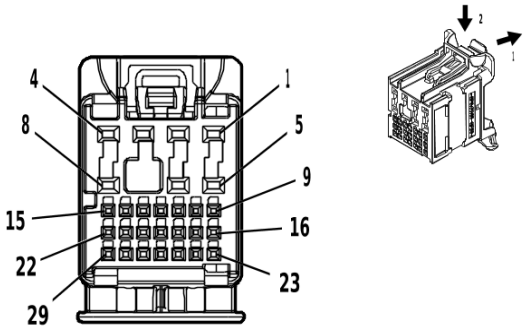

4578560

Connector Part Information

Harness Type: Instrument Panel Wiring Harness
OEM Connector: 160014-0011
Service Connector: 13534971
Description: 29-Way F 0.5 NANO, 1.2 MCON Series(GY)

Terminal Part Information

Terminal Type ID	Terminated Lead	Diagnostic Test Probe	Terminal Removal Tool
I	19370262	EL-35616-58 (BK)	EL-38125-58
II	84729890	J-35616-12 (BU)	J-38125-553

A11 Radio X2 (IOS/IOT)

Pin	Size	Color	Circuit	Function	Terminal Type ID	Option
1	0.75	GN	199	Left Rear Speaker [+] Control	II	—
2	0.5	BU	201	Left Front Speaker 1 [+] Control	II	—
3	0.5	YE / BK	117	Right Front Speaker [-] Control 1	II	—
4	0.75	BU / BK	115	Right Rear Speaker [-] Control	II	—
5	0.5	BN / BU	118	Left Front Speaker [-] Control 1	II	—
6	0.5	YE	200	Right Front Speaker 1 [+] Control	II	—
7	—	—	—	Not Occupied	—	—
8	0.75	WH	46	Right Rear Speaker [+] Control	II	—
9	0.35	BU / WH	4985	AUTOSAR CAN Bus [+] 5 Serial Data	I	—
10	0.35	BU / YE	4984	AUTOSAR CAN Bus [-] 5 Serial Data	I	—
11 - 12	—	—	—	Not Occupied	—	—
13	0.35	GN / WH	24	Backup Lamp Control	I	—
14	0.35	GN / YE	7066	Entertainment Remote Enable Signal	I	—
15 - 29	—	—	—	Not Occupied	—	—

A11 Radio X3 (IOR)

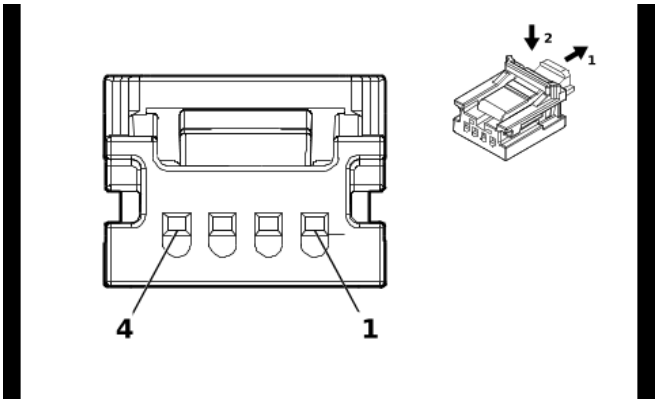

5493278

Connector Part Information

Harness Type: Instrument Panel Wiring Harness
OEM Connector: 34791-5140
Service Connector: 19354840
Description: 4-Way F Mini 50 Series(BK)

Terminal Part Information

Terminal Type ID	Terminated Lead	Diagnostic Test Probe	Terminal Removal Tool
I	Not required	EL-35616-58 (BK)	No Tool Required

A11 Radio X3 (IOR)

Pin	Size	Color	Circuit	Function	Terminal Type ID	Option
1	—	—	—	Not Occupied	—	—
2	0.35	BU / WH	4758	Ethernet Bus 2 [+]	I	—
3	0.35	BU	4757	Ethernet Bus 2 [-]	I	—
4	—	—	—	Not Occupied	—	—

A11 Radio X3 (IOS/IOT)

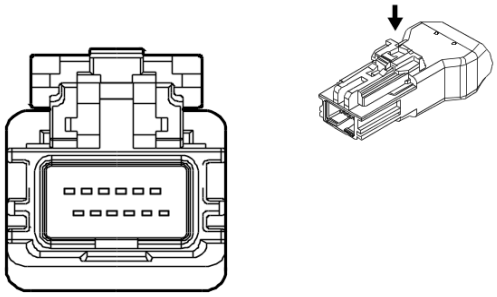

4527210

Connector Part Information

Harness Type: Instrument Panel Wiring Harness LVDS
OEM Connector: 13510919
Service Connector: Service by Cable Assembly — See Part Catalog
Description: 12-Way M 2.0 HSAL-2 Series(BK)

Terminal Part Information

Terminal Type ID	Terminated Lead	Diagnostic Test Probe	Terminal Removal Tool
I	Not required	No Tool Required	No Tool Required

A11 Radio X3 (IOS/IOT)

Pin	Size	Color	Circuit	Function	Terminal Type ID	Option
—	—	LVDS	—	(Infotainment) Infotainment Display Signal	I	—

A11 Radio X4 (IOR)

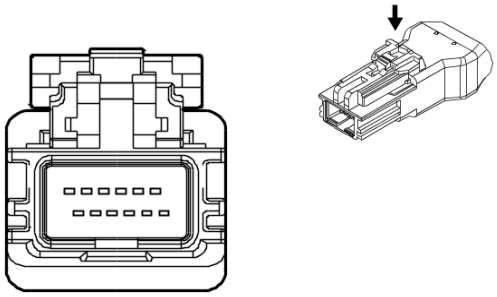

4527210

Connector Part Information

Harness Type: Instrument Panel Wiring Harness LVDS
OEM Connector: 13581658
Service Connector: Service by Cable Assembly — See Part Catalog
Description: 12-Way M 2.0 HSAL-2 Series(BK)

Terminal Part Information

Terminal Type ID	Terminated Lead	Diagnostic Test Probe	Terminal Removal Tool
I	Not required	No Tool Required	No Tool Required

A11 Radio X4 (IOR)

Pin	Size	Color	Circuit	Function	Terminal Type ID	Option
—	—	LVDS	—	Auxiliary Audio/Video Jack 2 USB Signal	I	—

A11 Radio X4 (IOS/IOT)

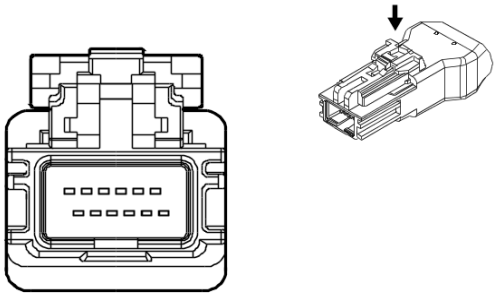

4578624

Connector Part Information

Harness Type: Instrument Panel Wiring Harness LVDS
OEM Connector: 13510920
Service Connector: Service by Cable Assembly — See Part Catalog
Description: 12-Way M 2.0 HSAL-2 Series(GY)

Terminal Part Information

Terminal Type ID	Terminated Lead	Diagnostic Test Probe	Terminal Removal Tool
I	Not required	No Tool Required	No Tool Required

A11 Radio X4 (IOS/IOT)

Pin	Size	Color	Circuit	Function	Terminal Type ID	Option
—	—	LVDS	—	Auxiliary Audio/Video Jack 2 USB Signal	I	—

A11 Radio X5 (IOR)

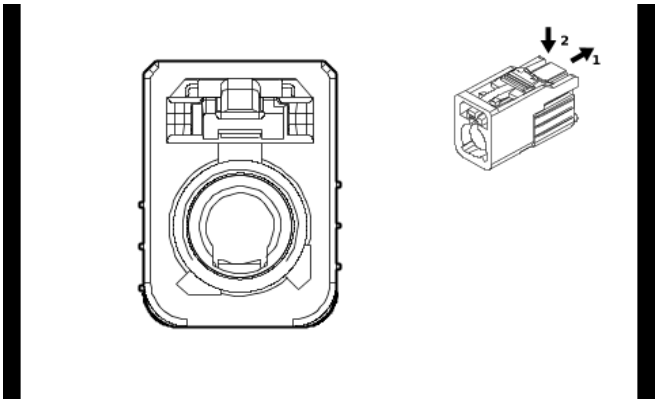

5191842

Connector Part Information

Harness Type: Instrument Panel Wiring Harness COAX
OEM Connector: 13516055
Service Connector: Service by Cable Assembly — See Part Catalog
Description: 1-Way F Coax Type(OG)

Terminal Part Information

Terminal Type ID	Terminated Lead	Diagnostic Test Probe	Terminal Removal Tool
I	Not required	No Tool Required	No Tool Required

A11 Radio X5 (IOR)

Pin	Size	Color	Circuit	Function	Terminal Type ID	Option
—	—	Coax Cable	—	Rear Vision Camera Coaxial Video Signal	I	—

A11 Radio X6 (IOR)

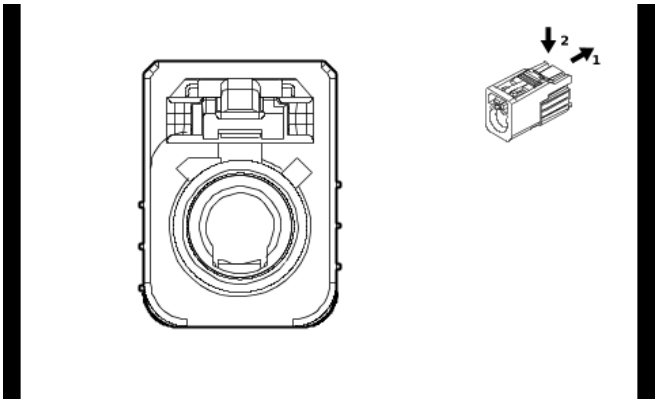

5660978

Connector Part Information

Harness Type: Instrument Panel Wiring Harness COAX
OEM Connector: 13516044
Service Connector: Service by Cable Assembly — See Part Catalog
Description: 1-Way F Coax Type(BK)

Terminal Part Information

Terminal Type ID	Terminated Lead	Diagnostic Test Probe	Terminal Removal Tool
I	Not required	No Tool Required	No Tool Required

A11 Radio X6 (IOR)

Pin	Size	Color	Circuit	Function	Terminal Type ID	Option
—	—	Coax Cable	—	(AM/FM) Antenna RF Signal	I	—

A11 Radio X6 (IOS/IOT)

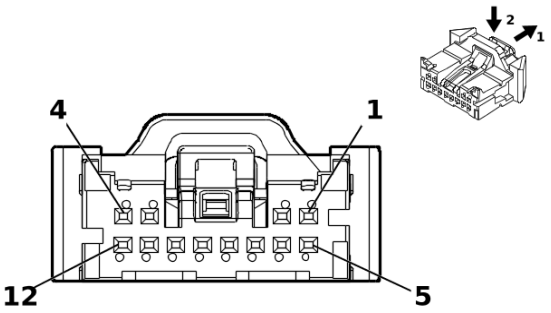

5360826

Connector Part Information

Harness Type: Instrument Panel Wiring Harness
OEM Connector: 35068239
Service Connector: 13529935
Description: 12-Way F 050 CTS Series(BK)

Terminal Part Information

Terminal Type ID	Terminated Lead	Diagnostic Test Probe	Terminal Removal Tool
I	84944580	EL-35616-58 (BK)	EL-38125-58

A11 Radio X6 (IOS/IOT)

Pin	Size	Color	Circuit	Function	Terminal Type ID	Option
1	0.35	VT / WH	7213	Ethernet Bus 5 [+]	I	—
2	0.35	VT	7212	Ethernet Bus 5 [-]	I	—
3	0.35	BU / WH	4758	Ethernet Bus 2 [+]	I	—
4	0.35	BU	4757	Ethernet Bus 2 [-]	I	—
5 - 7	—	—	—	Not Occupied	—	—
8	0.35	GY / BK	7215	Ethernet Bus 6 [+]	I	—
9	0.35	BN / BK	7214	Ethernet Bus 6 [-]	I	—
10	—	—	—	Not Occupied	—	—
11	0.35	GY / WH	7211	Ethernet Bus 4 [+]	I	—
12	0.35	GY	7210	Ethernet Bus 4 [-]	I	—

A11 Radio X7 (IOS/IOT)

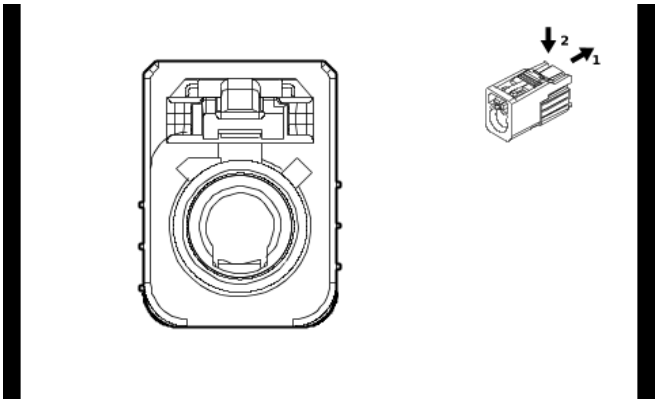

5660978

Connector Part Information

Harness Type: Instrument Panel Wiring Harness COAX
OEM Connector: 13516044
Service Connector: Service by Cable Assembly — See Part Catalog
Description: 1-Way F Coax Type(BK)

Terminal Part Information

Terminal Type ID	Terminated Lead	Diagnostic Test Probe	Terminal Removal Tool
I	Not required	No Tool Required	No Tool Required

A11 Radio X7 (IOS/IOT)

Pin	Size	Color	Circuit	Function	Terminal Type ID	Option
—	—	Coax Cable	—	(AM/FM) Antenna RF Signal	I	—

A11 Radio X8 (IOR)

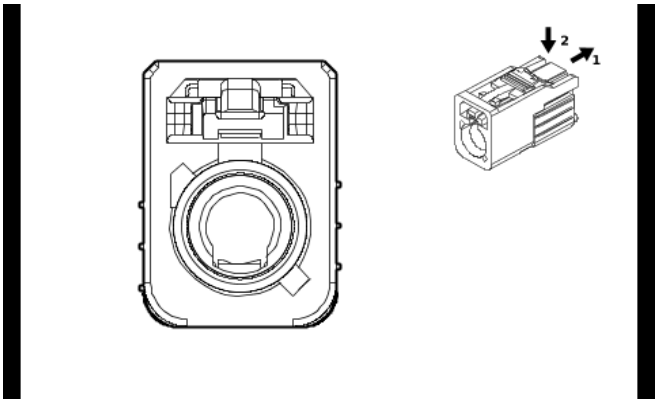

5518456

Connector Part Information

Harness Type: Instrument Panel Wiring Harness COAX
OEM Connector: 13516052
Service Connector: Service by Cable Assembly — See Part Catalog
Description: 1-Way F Coax Type(BG)

Terminal Part Information

Terminal Type ID	Terminated Lead	Diagnostic Test Probe	Terminal Removal Tool
I	Not required	No Tool Required	No Tool Required

A11 Radio X8 (IOR)

Pin	Size	Color	Circuit	Function	Terminal Type ID	Option
—	—	Coax Cable	—	WiFi Antenna Coaxial Signal	I	—

A11 Radio X9 (IOS/IOT)

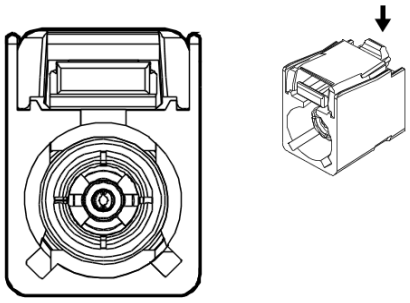

4624902

Connector Part Information

Harness Type: Instrument Panel Wiring Harness COAX
OEM Connector: 35281546
Service Connector: Service by Cable Assembly — See Part Catalog
Description: 1-Way F Coax Type

Terminal Part Information

Terminal Type ID	Terminated Lead	Diagnostic Test Probe	Terminal Removal Tool
I	Not required	No Tool Required	No Tool Required

A11 Radio X9 (IOS/IOT)

Pin	Size	Color	Circuit	Function	Terminal Type ID	Option
—	—	Coax Cable	—	(XM +/-HD) Coaxial Antenna XM Signal	I	—

A11 Radio X10 (IOS/IOT)

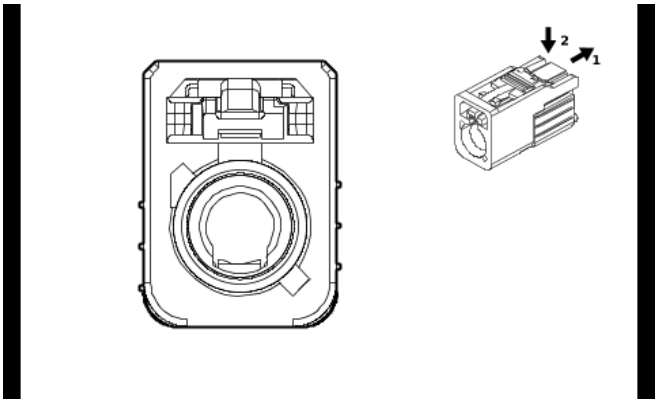

5518456

Connector Part Information

Harness Type: Instrument Panel Wiring Harness COAX
OEM Connector: 13516052
Service Connector: Service by Cable Assembly — See Part Catalog
Description: 1-Way F Coax Type(BG)

Terminal Part Information

Terminal Type ID	Terminated Lead	Diagnostic Test Probe	Terminal Removal Tool
I	Not required	No Tool Required	No Tool Required

A11 Radio X10 (IOS/IOT)

Pin	Size	Color	Circuit	Function	Terminal Type ID	Option
—	—	Coax Cable	—	WiFi Antenna Coaxial Signal	I	—

A16 Transfer Case Four Wheel Drive Actuator (NP0/NQH)

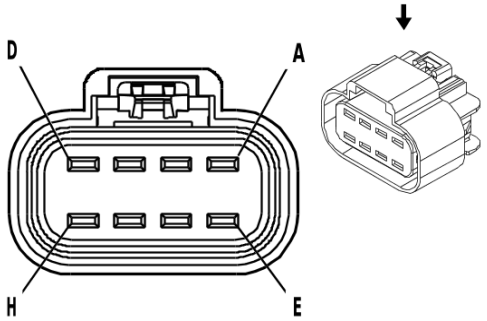

646372

Connector Part Information

Harness Type: Engine Wiring Harness
OEM Connector: 13538370
Service Connector: 19369184
Description: 8-Way F 280 GT Series, Sealed(BK)

Terminal Part Information

Terminal Type ID	Terminated Lead	Diagnostic Test Probe	Terminal Removal Tool
I	Not required	J-35616-4A (PU)	No Tool Required

A16 Transfer Case Four Wheel Drive Actuator (NP0/NQH)

Pin	Size	Color	Circuit	Function	Terminal Type ID	Option
A	2.5	YE / GY	1552	Transfer Case Motor Clockwise Control	I	—
B	0.5	BU	8013	Transfer Case Lock Solenoid Control 2	I	—
C	0.5	YE / BN	1569	Transfer Case Lock Solenoid Valve Control	I	—
D	2.5	YE / VT	1553	Transfer Case Motor Counter Clockwise Control	I	—
E	0.5	YE	7474	Incremental Encoder Direction Signal	I	—
F	0.5	BU / GY	7473	Incremental Encoder Impulse Signal	I	—
G	0.5	WH / GN	7475	Incremental Encoder Sensor 8V Reference	I	—
H	0.5	VT	7476	Incremental Encoder Sensor Low Reference	I	—

A22 Radio Control X1

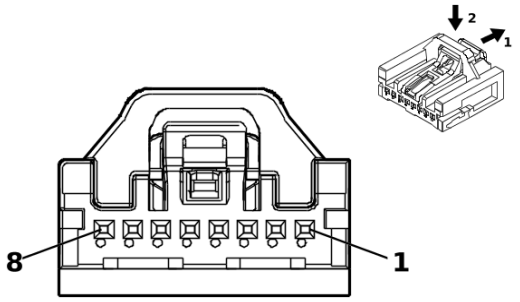

5200269

Connector Part Information

Harness Type: Instrument Panel Wiring Harness
OEM Connector: 35068228
Service Connector: 84769201
Description: 8-Way F Mini 50 Series(BK)

Terminal Part Information

Terminal Type ID	Terminated Lead	Diagnostic Test Probe	Terminal Removal Tool
I	Not required	EL-35616-58 (BK)	No Tool Required

A22 Radio Control X1

Pin	Size	Color	Circuit	Function	Terminal Type ID	Option
1	0.35	RD / WH	1340	Battery Positive Voltage	I	—
2 - 7	—	—	—	Not Occupied	—	—
8	0.35	BK / WH	1451	Signal Ground	I	—

A22 Radio Control X2 (UV2/UVB)

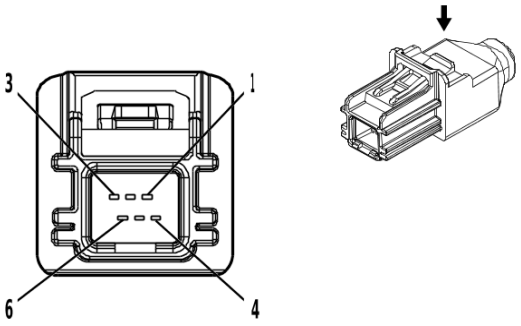

4806625

Connector Part Information

Harness Type: Instrument Panel Wiring Harness LVDS
OEM Connector: 13513606
Service Connector: Service by Cable Assembly — See Part Catalog
Description: 6-Way M HSAL-2 Series(BK)

Terminal Part Information

Terminal Type ID	Terminated Lead	Diagnostic Test Probe	Terminal Removal Tool
I	Not required	No Tool Required	No Tool Required

A22 Radio Control X2 (UV2/UVB)

Pin	Size	Color	Circuit	Function	Terminal Type ID	Option
—	—	LVDS	—	Performance Data Recorder Low Voltage Differential Signaling LVDS Signal	I	—

A23C Liftgate Latch (TB4)

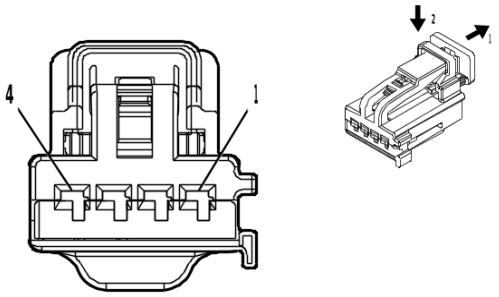

5137287

Connector Part Information

Harness Type: Liftgate Wiring Harness
OEM Connector: 15509333
Service Connector: Service by Harness - See Part Catalog
Description: 4-Way F 1.5 YESC Series(BK)

Terminal Part Information

Terminal Type ID	Terminated Lead	Diagnostic Test Probe	Terminal Removal Tool
I	Not required	J-35616-2A (GY)	No Tool Required

A23C Liftgate Latch (TB4)

Pin	Size	Color	Circuit	Function	Terminal Type ID	Option
1	0.35	VT / GY	1303	Liftgate Ajar Switch Signal 1	I	—
2	0.5	BK	2050	Ground	I	—
3	0.5	BU / WH	6128	Rear Closure Unlatch Actuator Unlatch Control	I	—
4	0.5	GY / BK	2680	Lock Actuators Unlock Control 2	I	—

A23C Liftgate Latch (TC2)

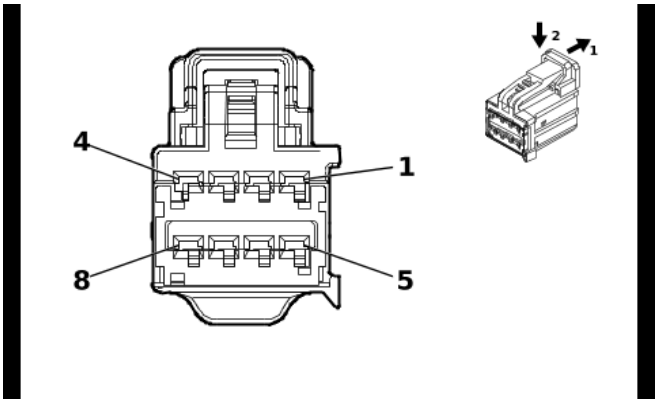

5377684

Connector Part Information

Harness Type: Liftgate Wiring Harness
OEM Connector: 15509366
Service Connector: Service by Harness - See Part Catalog
Description: 8-Way F 1.5 YESC Kaizen Series(BK)

Terminal Part Information

Terminal Type ID	Terminated Lead	Diagnostic Test Probe	Terminal Removal Tool
I	Not required	J-35616-2A (GY)	No Tool Required

A23C Liftgate Latch (TC2)

Pin	Size	Color	Circuit	Function	Terminal Type ID	Option
1 - 2	—	—	—	Not Occupied	—	—
3	1	BU / GY	4682	Rear Closure Cinch Latch Motor Release Control	I	—
4	1	BN	4681	Rear Closure Cinch Latch Motor Cinch Control	I	—
5	0.35	BK / VT	4656	Rear Closure Object Sensor Low Reference	I	—
6	0.35	GY / VT	4678	Rear Closure Latch Unlatch Status	I	—
7	0.35	YE / BK	8085	Rear Closure Latch Primary Status	I	—
8	0.35	WH / GN	8084	Rear Closure Latch Neutral Status	I	—

A23D Front Side Door Latch - Driver

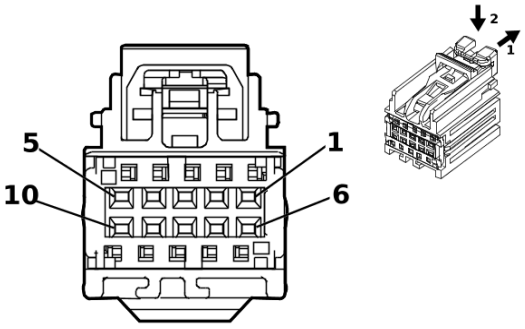

4622549

Connector Part Information

Harness Type: Front Side Door Door Wiring Harness - Driver
OEM Connector: 7289-5068-60
Service Connector: Service by Harness - See Part Catalog
Description: 10-Way F 0.64 YESC Kaizen Series(GN)

Terminal Part Information

Terminal Type ID	Terminated Lead	Diagnostic Test Probe	Terminal Removal Tool
I	Not required	J-35616-64B (L-BU)	No Tool Required

A23D Front Side Door Latch - Driver

Pin	Size	Color	Circuit	Function	Terminal Type ID	Option
1	0.35	GY	745	Left Front Door Ajar Switch Signal	I	—
2	0.35	VT / GY	126	Left Front Door Open Switch Signal	I	—
3	0.75	BK	1150	Ground	I	—
4	0.35	WH / VT	4258	Left Front Door Lock Status Signal	I	—
5 - 6	—	—	—	Not Occupied	—	—
7	0.75	GY	2681	Left Front Door Lock Actuator Lock Control	I	—
8	0.75	WH	2679	Lock Actuators Unlock Control 1	I	—
9 - 10	—	—	—	Not Occupied	—	—

A23LR Rear Side Door Latch - Left

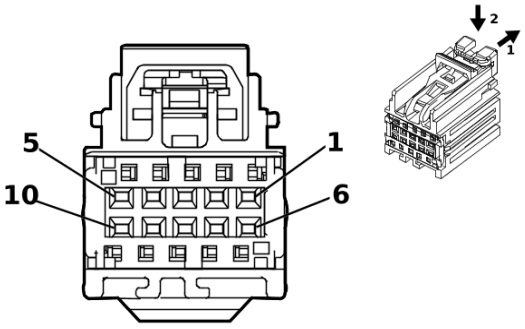

4622549

Connector Part Information

Harness Type: Rear Side Door Door Wiring Harness - Left
OEM Connector: 7289-5068-60
Service Connector: Service by Harness - See Part Catalog
Description: 10-Way F 0.64 YESC Kaizen Series(GN)

Terminal Part Information

Terminal Type ID	Terminated Lead	Diagnostic Test Probe	Terminal Removal Tool
I	Not required	J-35616-64B (L-BU)	No Tool Required

A23LR Rear Side Door Latch - Left

Pin	Size	Color	Circuit	Function	Terminal Type ID	Option
1	0.35	GY	747	Left Rear Door Ajar Switch Signal	I	—
2	—	—	—	Not Occupied	—	—
3	0.75	BK	1150	Ground	I	—
4	0.35	GN / BU	4648	Left Rear Door Lock Status Signal	I	—
5	—	—	—	Not Occupied	—	—
6	0.75	VT / BN	2754	Door Double Lock Actuator Lock Control 2	I	—
7	0.75	BU / YE	1091	Left Rear Door Lock Actuator Lock Control	I	—
8	0.75	WH	2679	Lock Actuators Unlock Control 1	I	—
9 - 10	—	—	—	Not Occupied	—	—

A23P Front Side Door Latch - Passenger

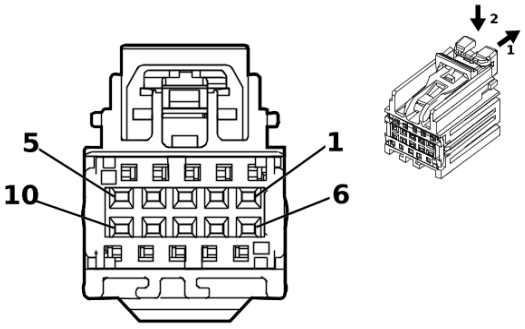

4622549

Connector Part Information

Harness Type: Front Side Door Door Wiring Harness - Passenger
OEM Connector: 7289-5068-60
Service Connector: Service by Harness - See Part Catalog
Description: 10-Way F 0.64 YESC Kaizen Series(GN)

Terminal Part Information

Terminal Type ID	Terminated Lead	Diagnostic Test Probe	Terminal Removal Tool
I	Not required	J-35616-64B (L-BU)	No Tool Required

A23P Front Side Door Latch - Passenger

Pin	Size	Color	Circuit	Function	Terminal Type ID	Option
1	—	—	—	Not Occupied	—	—
2	0.35	VT	4259	Right Front Door Lock Status Signal	I	—
3	0.75	BK	1250	Ground	I	—
4	—	—	—	Not Occupied	—	—
5	0.35	GY	746	Right Front Door Ajar Switch Signal	I	—
6 - 7	—	—	—	Not Occupied	—	—
8	0.75	GY / BK	2680	Lock Actuators Unlock Control 2	I	—
9	0.75	YE / GN	2682	Right Front Door Lock Actuator Lock Control	I	—
10	—	—	—	Not Occupied	—	—

A23RR Rear Side Door Latch - Right

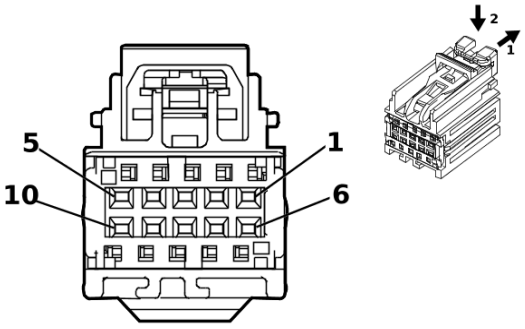

4622549

Connector Part Information

Harness Type: Rear Side Door Door Wiring Harness - Right
OEM Connector: 7289-5068-60
Service Connector: Service by Harness - See Part Catalog
Description: 10-Way F 0.64 YESC Kaizen Series(GN)

Terminal Part Information

Terminal Type ID	Terminated Lead	Diagnostic Test Probe	Terminal Removal Tool
I	Not required	J-35616-64B (L-BU)	No Tool Required

A23RR Rear Side Door Latch - Right

Pin	Size	Color	Circuit	Function	Terminal Type ID	Option
1	—	—	—	Not Occupied	—	—
2	0.35	WH / GY	4649	Right Rear Door Lock Status Signal	I	—
3	0.5	BK	1250	Ground	I	—
4	—	—	—	Not Occupied	—	—
5	0.35	GY	748	Right Rear Door Ajar Switch Signal	I	—
6 - 7	—	—	—	Not Occupied	—	—
8	0.75	GY / BK	2680	Lock Actuators Unlock Control 2	I	—
9	0.75	VT / WH	1094	Right Rear Door Lock Actuator Lock Control	I	—
10	0.75	VT / BN	2754	Door Double Lock Actuator Lock Control 2	I	—

A24D Front Side Door Outside Handle - Left

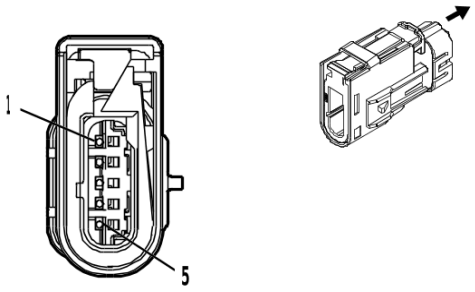

4808325

Connector Part Information

Harness Type: Front Side Door Door Wiring Harness - Driver
OEM Connector: SRVWSB-02A-DK
Service Connector: Service by Harness - See Part Catalog
Description: 5-Way M 1.2 Series, Sealed(BK)

Terminal Part Information

Terminal Type ID	Terminated Lead	Diagnostic Test Probe	Terminal Removal Tool
I	Not required	J-35616-13 (BU)	No Tool Required

A24D Front Side Door Outside Handle - Left

Pin	Size	Color	Circuit	Function	Terminal Type ID	Option
1	0.5	BU	2675	Left Front Exterior Door Handle Switch Unlock Signal	I	—
2 - 4	—	—	—	Not Occupied	—	—
5	0.75	BK	1150	Ground	I	—

A24LR Rear Side Door Outside Handle - Left

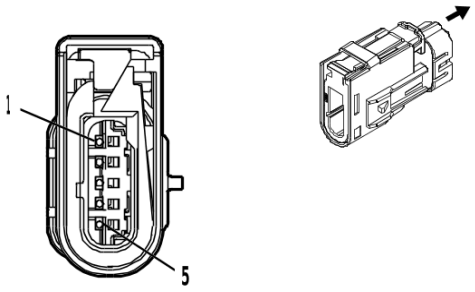

4808325

Connector Part Information

Harness Type: Rear Side Door Door Wiring Harness - Left
OEM Connector: SRVWSB-02A-DK
Service Connector: Service by Harness - See Part Catalog
Description: 5-Way M 1.2 Series, Sealed(BK)

Terminal Part Information

Terminal Type ID	Terminated Lead	Diagnostic Test Probe	Terminal Removal Tool
I	Not required	J-35616-13 (BU)	No Tool Required
II	Not required	J-35616-17 (L-GN)	No Tool Required

A24LR Rear Side Door Outside Handle - Left

Pin	Size	Color	Circuit	Function	Terminal Type ID	Option
1	0.35	WH / VT	4994	Left Rear Door Exterior Switch Unlock Signal	II	—
2 - 4	—	—	—	Not Occupied	—	—
5	0.5	BK	1150	Ground	I	—

A24P Front Side Door Outside Handle - Right

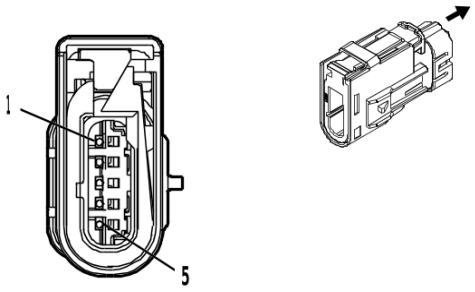

4808325

Connector Part Information

Harness Type: Front Side Door Door Wiring Harness - Passenger
OEM Connector: SRVWSB-02A-DK
Service Connector: Service by Harness - See Part Catalog
Description: 5-Way M 1.2 Series, Sealed(BK)

Terminal Part Information

Terminal Type ID	Terminated Lead	Diagnostic Test Probe	Terminal Removal Tool
I	Not required	J-35616-13 (BU)	No Tool Required
II	Not required	J-35616-17 (L-GN)	No Tool Required

A24P Front Side Door Outside Handle - Right

Pin	Size	Color	Circuit	Function	Terminal Type ID	Option
1	0.35	GY / VT	2676	Right Front Door Exterior Switch Unlock Signal	II	—
2 - 4	—	—	—	Not Occupied	—	—
5	0.5	BK / WH	1251	Signal Ground	I	—

A24RR Rear Side Door Outside Handle - Right

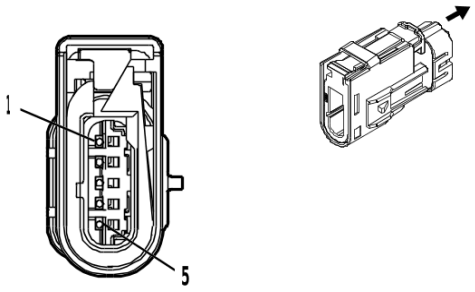

4808325

Connector Part Information

Harness Type: Rear Side Door Door Wiring Harness - Right
OEM Connector: SRVWSB-02A-DK
Service Connector: Service by Harness - See Part Catalog
Description: 5-Way M 1.2 Series, Sealed(BK)

Terminal Part Information

Terminal Type ID	Terminated Lead	Diagnostic Test Probe	Terminal Removal Tool
I	Not required	J-35616-13 (BU)	No Tool Required
II	Not required	J-35616-17 (L-GN)	No Tool Required

A24RR Rear Side Door Outside Handle - Right

Pin	Size	Color	Circuit	Function	Terminal Type ID	Option
1	0.35	GY / BU	4995	Right Rear Door Exterior Switch Unlock Signal	II	—
2 - 4	—	—	—	Not Occupied	—	—
5	0.5	BK	1250	Ground	I	—

A26 Heater and Air Conditioning User Interface Control - Front

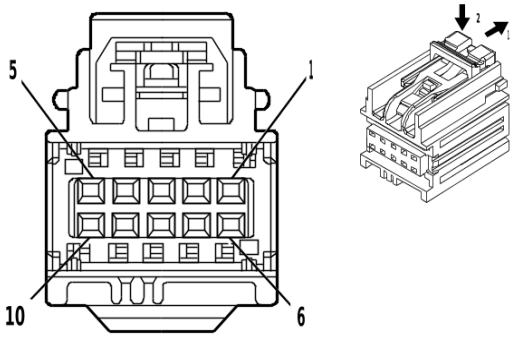

4891168

Connector Part Information

Harness Type: Instrument Panel Wiring Harness
OEM Connector: 7289-4885
Service Connector: 13509649
Description: 10-Way F 0.64 YESC Kaizen Series(NA)

Terminal Part Information

Terminal Type ID	Terminated Lead	Diagnostic Test Probe	Terminal Removal Tool
I	19300629	J-35616-64B (L-BU)	J-38125-215A

A26 Heater and Air Conditioning User Interface Control - Front

Pin	Size	Color	Circuit	Function	Terminal Type ID	Option
1	0.5	RD / WH	1340	Battery Positive Voltage	I	—
2	—	—	—	Not Occupied	—	—
3	0.35	BU / WH	4985	AUTOSAR CAN Bus [+] 5 Serial Data	I	—
4	0.35	BU / WH	4985	AUTOSAR CAN Bus [+] 5 Serial Data	I	—
5	—	—	—	Not Occupied	—	—
6	0.35	GY / GN	4636	HVAC System Enable Signal	I	—
7	—	—	—	Not Occupied	—	—
8	0.35	BU / YE	4984	AUTOSAR CAN Bus [-] 5 Serial Data	I	—
9	0.35	BU / YE	4984	AUTOSAR CAN Bus [-] 5 Serial Data	I	—
10	0.5	BK / WH	1851	Signal Ground	I	—

A34 Heater and Air Conditioning Auxiliary Control (C69+A50)

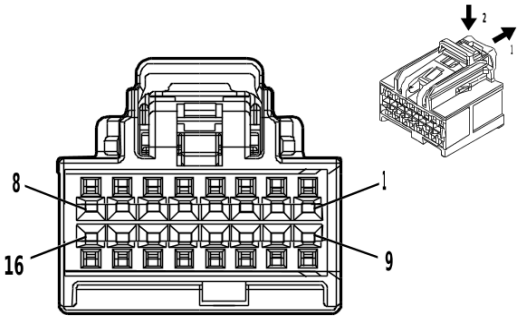

4873243

Connector Part Information

Harness Type: Front Floor Console Wiring Harness
OEM Connector: 35016343
Service Connector: Service by Harness - See Part Catalog
Description: 16-Way F 0.64 OCS Series(BK)

Terminal Part Information

Terminal Type ID	Terminated Lead	Diagnostic Test Probe	Terminal Removal Tool
I	Not required	J-35616-64B (L-BU)	No Tool Required

A34 Heater and Air Conditioning Auxiliary Control (C69+A50)

Pin	Size	Color	Circuit	Function	Terminal Type ID	Option
1	—	—	—	Not Occupied	—	—
2	0.35	BN / BK	405	Lower Duct Air Temperature Sensor Signal	I	—
3	0.75	BK / VT	470	Sensor Low Reference	I	—
4	0.35	BN	404	Upper Duct Air Temperature Sensor Signal	I	—
5	—	—	—	Not Occupied	—	—
6	0.75	YE / WH	4635	HVAC Remote Enable 2 Signal	I	—
7	0.5	GN / BK	2211	Rear Blower Motor Speed Control	I	—
8	0.35	BU / YE	4984	AUTOSAR CAN Bus [-] 5 Serial Data	I	—
9	0.35	BU / WH	4985	AUTOSAR CAN Bus [+] 5 Serial Data	I	—
10	0.5	RD / BN	7540	Battery Positive Voltage	I	—
11	0.5	BK / WH	1351	Signal Ground	I	—
12	0.35	BU / YE	4984	AUTOSAR CAN Bus [-] 5 Serial Data	I	—
13	0.35	BU / WH	4985	AUTOSAR CAN Bus [+] 5 Serial Data	I	—
14	—	—	—	Not Occupied	—	—
15	0.35	BU / YE	4984	AUTOSAR CAN Bus [-] 5 Serial Data	I	—
16	0.35	BU / WH	4985	AUTOSAR CAN Bus [+] 5 Serial Data	I	—

A34 Heater and Air Conditioning Auxiliary Control (C69+AZ3)

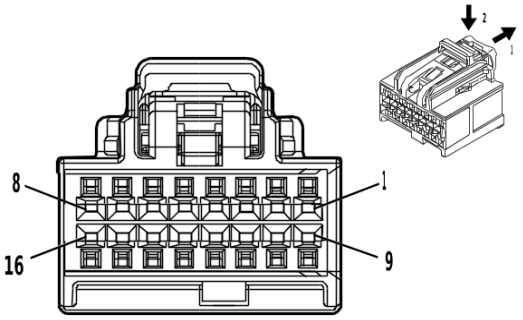

4873243

Connector Part Information

Harness Type: Front Seat Wiring Harness - Center
OEM Connector: 35016343
Service Connector: Service by Harness - See Part Catalog
Description: 16-Way F 0.64 OCS Series(BK)

Terminal Part Information

Terminal Type ID	Terminated Lead	Diagnostic Test Probe	Terminal Removal Tool
I	Not required	J-35616-64B (L-BU)	No Tool Required

A34 Heater and Air Conditioning Auxiliary Control (C69+AZ3)

Pin	Size	Color	Circuit	Function	Terminal Type ID	Option
1	—	—	—	Not Occupied	—	—
2	0.35	BN / BK	405	Lower Duct Air Temperature Sensor Signal	I	—
3	0.75	BK / VT	470	Sensor Low Reference	I	—
4	0.35	BN	404	Upper Duct Air Temperature Sensor Signal	I	—
5	—	—	—	Not Occupied	—	—
6	0.75	YE / WH	4635	HVAC Remote Enable 2 Signal	I	—
7	0.5	GN / BK	2211	Rear Blower Motor Speed Control	I	—
8	0.35	BU / YE	4984	AUTOSAR CAN Bus [-] 5 Serial Data	I	—
9	0.35	BU / WH	4985	AUTOSAR CAN Bus [+] 5 Serial Data	I	—
10	0.5	RD / BN	7540	Battery Positive Voltage	I	—
11	0.5	BK / WH	1351	Signal Ground	I	—
12	0.35	BU / YE	4984	AUTOSAR CAN Bus [-] 5 Serial Data	I	—
13	0.35	BU / WH	4985	AUTOSAR CAN Bus [+] 5 Serial Data	I	—
14	—	—	—	Not Occupied	—	—
15	0.35	BU / YE	4984	AUTOSAR CAN Bus [-] 5 Serial Data	I	—
16	0.35	BU / WH	4985	AUTOSAR CAN Bus [+] 5 Serial Data	I	—

A38 Reductant Tank Fluid Supply Pump Module (LM2)

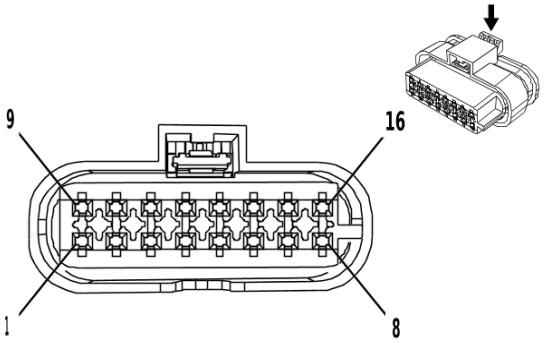

4259227

Connector Part Information

Harness Type: Emission Reduction Fluid Tank Reservoir Wire Harness
OEM Connector: 33210848
Service Connector: Service by Harness - See Part Catalog
Description: 16-Way F 1.2 MLK Series, Sealed(BK)

Terminal Part Information

Terminal Type ID	Terminated Lead	Diagnostic Test Probe	Terminal Removal Tool
I	Not required	J-35616-16 (LT GN)	No Tool Required

A38 Reductant Tank Fluid Supply Pump Module (LM2)

Pin	Size	Color	Circuit	Function	Terminal Type ID	Option
1	0.5	BK	3244	Diesel Exhaust Fluid Tank Temperature Sensor Signal	I	—
2	0.5	BN	3245	Diesel Exhaust Fluid Tank Temperature Sensor Low Reference	I	—
3	0.5	BU	3107	Diesel Exhaust Fluid Pressure Sensor Low Reference	I	—
4	0.5	BU	3108	Diesel Exhaust Fluid Pressure Sensor Signal	I	—
5	0.5	BN	3106	Diesel Exhaust Fluid Pressure Sensor 5 Volt Reference	I	—
6	—	—	—	Not Occupied	—	—
7	1.0	WH	3103	Diesel Exhaust Fluid Smart Pump Control	I	—
8	1.0	BN	3875	Diesel Exhaust Fluid Smart Pump Supply Voltage Phase 2	I	—
9	1.0	YE	3677	Diesel Exhaust Fluid Reservoir Heater Control	I	—
10	0.5	BN	3676	Diesel Exhaust Fluid Heating Tank 2 Heater Control	I	—
11	1.0	BU	4318	Diesel Exhaust Fluid Tank Heater Low Control	I	—
12 - 13	—	—	—	Not Occupied	—	—
14	1.0	BU	2937	Diesel Exhaust Fluid Pump Motor Stator Low Reference	I	—
15	1.0	BN	2936	Diesel Exhaust Fluid Heating Tank 2 Heater Control Low	I	—
16	1.0	YE	3876	Diesel Exhaust Fluid Smart Pump Supply Voltage Phase 3	I	—

A103 Roof Console

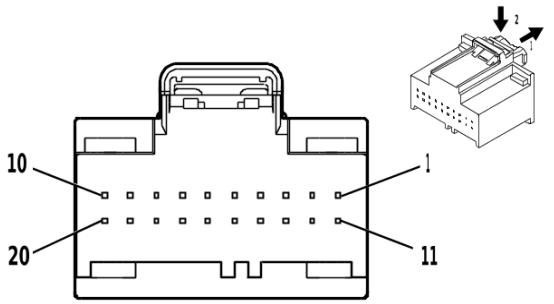

5112891

Connector Part Information

Harness Type: Headlining Trim Panel Wiring Harness
OEM Connector: 13525990
Service Connector: 13525990
Description: 20-Way F 0.64 Series(BK)

Terminal Part Information

Terminal Type ID	Terminated Lead	Diagnostic Test Probe	Terminal Removal Tool
I	13584547	J-35616-64B (L-BU)	J-38125-215A

A103 Roof Console

Pin	Size	Color	Circuit	Function	Terminal Type ID	Option
1	0.5	RD / YE	240	Battery Positive Voltage	I	—
2	0.5	BU / GN	4785	Interior Lamp Overhead Enable Signal	I	—
3	0.5	GY / WH	2369	Interior Lamp Overhead 2 Enable Signal	I	—
4	0.35	GN / YE	2903	Row 2 Dome Reading Lamp Interior Lamp Control	I	—
5	0.35	BN / BU	2905	Row 2 Dome Reading Lamp 2 Interior Lamp Control	I	—
6	0.35	WH / BN	2904	Row 2 Dome Reading Lamp Switch Signal	I	—
7	0.35	VT / GY	2906	Row 2 Dome Reading Lamp 2 Switch Signal	I	—
8	0.35	VT / YE	2908	Row 3 Dome Reading Lamp Switch Signal	I	—
9	0.35	YE / GY	2910	Row 3 Dome Reading Lamp 2 Switch Signal	I	—
10	0.35	GN / WH	2854	Body Control Module LIN Bus 8	I	—
11	0.35	BU / WH	2907	Row 3 Dome Reading Lamp Interior Lamp Control	I	—
12	0.35	BN / VT	2909	Row 3 Dome Reading Lamp 2 Interior Lamp Control	I	—
13	0.5	BK / BN	654	Cellular Telephone Microphone Low Reference	I	—
14	0.5	BU	655	Cellular Telephone Microphone Signal	I	—
15	0.35	GN / BK	2515	Telematics Switch Supply Voltage	I	—
16	0.35	GN / WH	2514	Telematics Switch Signal	I	—
17	0.35	YE / VT	2516	Telematics Switch Green LED Indicator Control	I	—
18	0.35	BN / WH	2517	Telematics Switch Red LED Indicator Control	I	—
19	—	—	—	Not Occupied	—	—

A103 Roof Console (cont'd)

Pin	Size	Color	Circuit	Function	Terminal Type ID	Option
20	0.35	BK	1850	Ground	I	—

B1 Air Conditioning Refrigerant Pressure Sensor

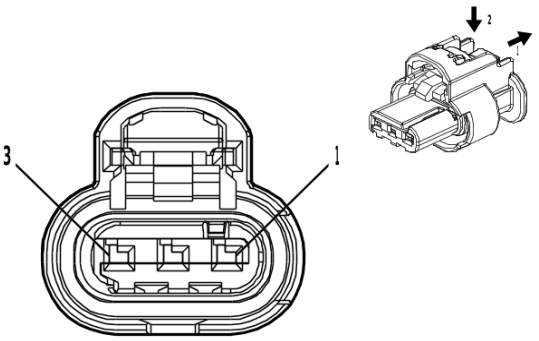

4581126

Connector Part Information

Harness Type: Engine Wiring Harness
OEM Connector: 1-2296695-1
Service Connector: 19371207
Description: 3-Way F 1.2 MCON-CB Series, Sealed(BK)

Terminal Part Information

Terminal Type ID	Terminated Lead	Diagnostic Test Probe	Terminal Removal Tool
I	Not required	J-35616-16 (LT GN)	No Tool Required

B1 Air Conditioning Refrigerant Pressure Sensor

Pin	Size	Color	Circuit	Function	Terminal Type ID	Option
1	0.5	WH / RD	480	Engine Control Vehicle Sensors 5 Volt Reference 1	I	—
2	0.5	GN	380	A/C Refrigerant Pressure Sensor Signal	I	—
3	0.5 0.5	BK / YE BK / GY	548 626	Engine Control Sensors Low Reference 1 Engine Control Vehicle Sensors Low Reference 1	I I	L84/ L87 LM2

B5LF Front Wheel Speed Sensor - Left

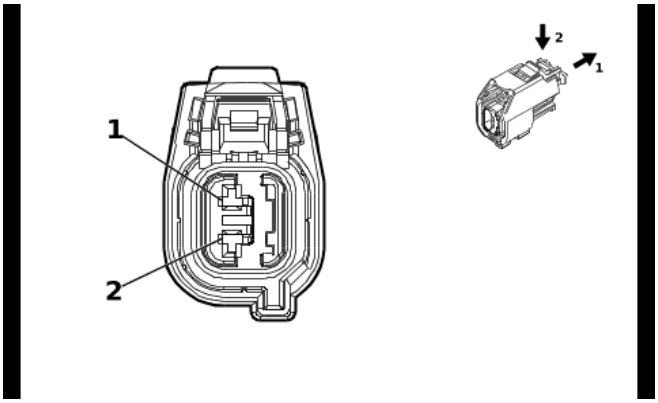

5666214

Connector Part Information

Harness Type: Chassis Wiring Harness
OEM Connector: 33189092
Service Connector: 85526683
Description: 2-Way F 1.5 OCS Series, Sealed(BK)

Terminal Part Information

Terminal Type ID	Terminated Lead	Diagnostic Test Probe	Terminal Removal Tool
I	Not required	J-35616-14 (GN)	No Tool Required

B5LF Front Wheel Speed Sensor - Left

Pin	Size	Color	Circuit	Function	Terminal Type ID	Option
1	0.5	GY / WH	7064	Left Front Wheel Speed Sensor Control	I	—
2	0.5	GY	830	Left Front Wheel Speed Sensor Signal	I	—

B5LR Rear Wheel Speed Sensor - Left

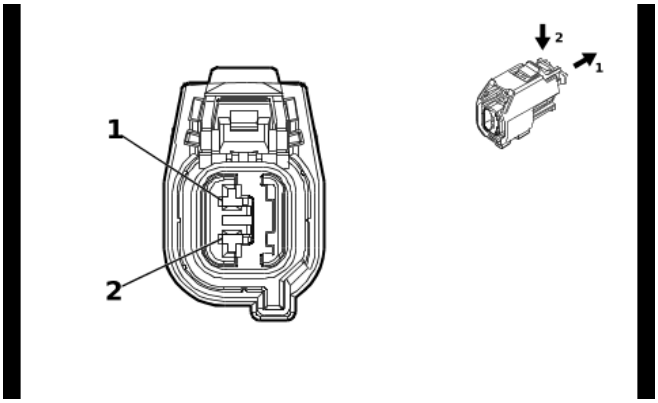

5666214

Connector Part Information

Harness Type: Chassis Wiring Harness
OEM Connector: 33189092
Service Connector: 85526683
Description: 2-Way F 1.5 OCS Series, Sealed(BK)

Terminal Part Information

Terminal Type ID	Terminated Lead	Diagnostic Test Probe	Terminal Removal Tool
I	Not required	J-35616-14 (GN)	No Tool Required

B5LR Rear Wheel Speed Sensor - Left

Pin	Size	Color	Circuit	Function	Terminal Type ID	Option
1	0.5	GY / BK	7127	Left Rear Wheel Speed Sensor Control	I	—
2	0.5	BU	884	Left Rear Wheel Speed Sensor Signal	I	—

B5RF Front Wheel Speed Sensor - Right

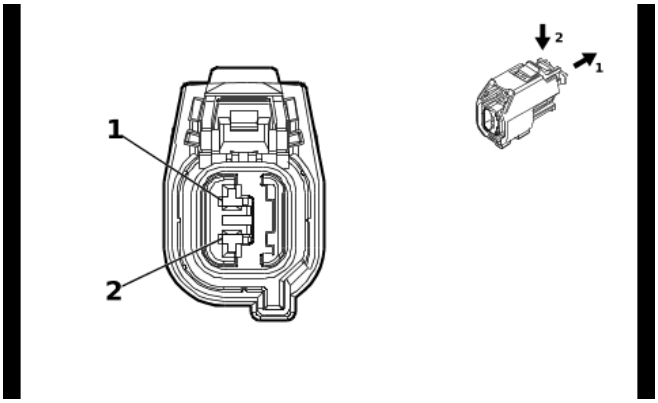

5666214

Connector Part Information

Harness Type: Chassis Wiring Harness
OEM Connector: 33189092
Service Connector: 85526683
Description: 2-Way F 1.5 OCS Series, Sealed(BK)

Terminal Part Information

Terminal Type ID	Terminated Lead	Diagnostic Test Probe	Terminal Removal Tool
I	Not required	J-35616-14 (GN)	No Tool Required

B5RF Front Wheel Speed Sensor - Right

Pin	Size	Color	Circuit	Function	Terminal Type ID	Option
1	0.5	GY / BN	7065	Right Front Wheel Speed Sensor Control	I	—
2	0.5	YE	872	Right Front Wheel Speed Sensor Signal	I	—

B5RR Rear Wheel Speed Sensor - Right

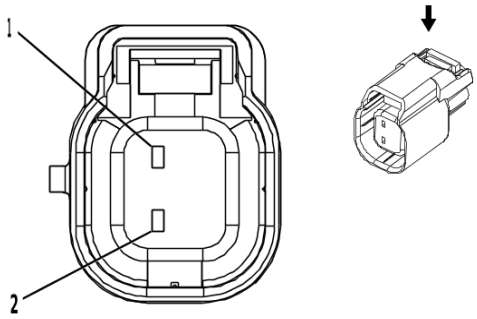

4115616

Connector Part Information

Harness Type: Chassis Wiring Harness
OEM Connector: 34062-0046
Service Connector: 19366860
Description: 2-Way F 1.5 Series, Sealed(BK)

Terminal Part Information

Terminal Type ID	Terminated Lead	Diagnostic Test Probe	Terminal Removal Tool
I	Not required	J-35616-14 (GN)	No Tool Required

B5RR Rear Wheel Speed Sensor - Right

Pin	Size	Color	Circuit	Function	Terminal Type ID	Option
1	0.5	GY / YE	7128	Right Rear Wheel Speed Sensor Control	I	—
2	0.5	VT	882	Right Rear Wheel Speed Sensor Signal	I	—

B9 Ambient Air Temperature Sensor

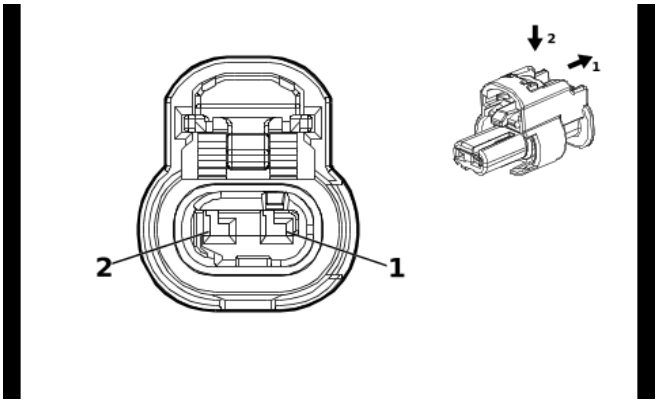

4649903

Connector Part Information

Harness Type: Active Grille Air Shutter
OEM Connector: 13512365
Service Connector: Service by Harness - See Part Catalog
Description: 2-Way F 1.2 MCON Series, Sealed(BK)

Terminal Part Information

Terminal Type ID	Terminated Lead	Diagnostic Test Probe	Terminal Removal Tool
I	Not Available	No Tool Required	Not Available

B9 Ambient Air Temperature Sensor

Pin	Size	Color	Circuit	Function	Terminal Type ID	Option
1	0.5	BK / BU	61	Ambient Air Temperature Sensor Low Reference	I	—
2	0.5	BU / GY	636	Ambient Air Temperature Sensor Signal	I	—

B10D Sun Load and Ambient Light and Security Indicator Sensor

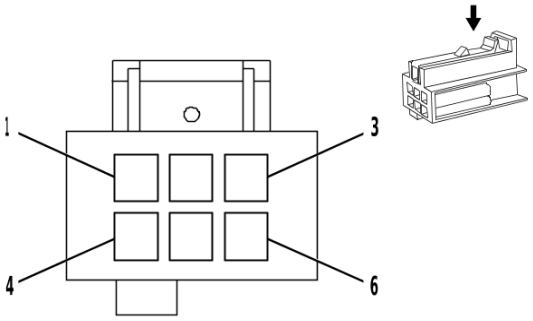

2282896

Connector Part Information

Harness Type: Instrument Panel Wiring Harness
OEM Connector: 15338980
Service Connector: 19333315
Description: 6-Way F 0.64 Micro-Quadlock Series(BK)

Terminal Part Information

Terminal Type ID	Terminated Lead	Diagnostic Test Probe	Terminal Removal Tool
I	Not required	J-35616-64B (L-BU)	No Tool Required

B10D Sun Load and Ambient Light and Security Indicator Sensor

Pin	Size	Color	Circuit	Function	Terminal Type ID	Option
1	0.35	GY	590	Driver Solar Sensor Signal	I	—
2	—	—	—	Not Occupied	—	—
3	0.35	WH / BU	278	Ambient Light Sensor Signal	I	—
4	0.35	BU / WH	734	Inside Air Temperature Sensor Signal	I	—
5	—	—	—	Not Occupied	—	—
6	0.35	BK / YE	407	Sensor Low Reference	I	—

B11LF Front Suspension 4 Corner Leveling System Position Sensor - Left (F47)

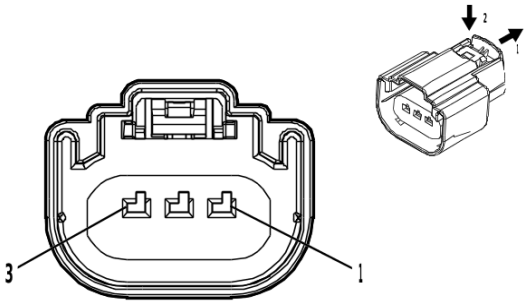

4569745

Connector Part Information

Harness Type: Chassis Wiring Harness
OEM Connector: 33343869
Service Connector: 19179750
Description: 3-Way F 1.5 MX Series, Sealed(BK)

Terminal Part Information

Terminal Type ID	Terminated Lead	Diagnostic Test Probe	Terminal Removal Tool
I	Not required	J-35616-14 (GN)	No Tool Required

B11LF Front Suspension 4 Corner Leveling System Position Sensor - Left (F47)

Pin	Size	Color	Circuit	Function	Terminal Type ID	Option
1	0.5	BU / RD	1205	Left Front Suspension Position Sensor Voltage Reference	I	—
2	0.5	BK / BU	1206	Left Front Suspension Position Sensor Low Reference	I	—
3	0.5	BN / WH	1207	Left Front Suspension Position Sensor Signal	I	—

B11LR Rear Suspension 2 or 4 Corner Air Leveling Position Sensor - Left (F47)

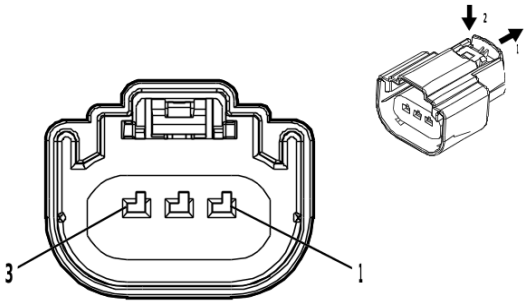

4569745

Connector Part Information

Harness Type: Chassis Wiring Harness
OEM Connector: 33343869
Service Connector: 19179750
Description: 3-Way F 1.5 MX Series, Sealed(BK)

Terminal Part Information

Terminal Type ID	Terminated Lead	Diagnostic Test Probe	Terminal Removal Tool
I	Not required	J-35616-14 (GN)	No Tool Required

B11LR Rear Suspension 2 or 4 Corner Air Leveling Position Sensor - Left (F47)

Pin	Size	Color	Circuit	Function	Terminal Type ID	Option
1	0.5	YE / RD	1208	Left Rear Suspension Position Sensor Voltage Reference	I	—
2	0.5	BK / GN	1209	Left Rear Suspension Position Sensor Low Reference	I	—
3	0.5	GN / WH	1210	Left Rear Suspension Position Sensor Signal	I	—

B11RF Front Suspension 4 Corner Leveling System Position Sensor - Right (F47)

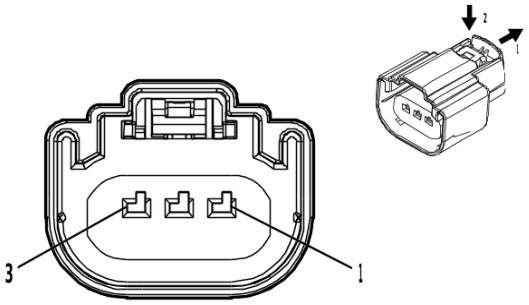

4569745

Connector Part Information

Harness Type: Chassis Wiring Harness
OEM Connector: 33343869
Service Connector: 19179750
Description: 3-Way F 1.5 MX Series, Sealed(BK)

Terminal Part Information

Terminal Type ID	Terminated Lead	Diagnostic Test Probe	Terminal Removal Tool
I	Not required	J-35616-14 (GN)	No Tool Required

B11RF Front Suspension 4 Corner Leveling System Position Sensor - Right (F47)

Pin	Size	Color	Circuit	Function	Terminal Type ID	Option
1	0.5	BN / RD	1211	Right Front Suspension Position Sensor Voltage Reference	I	—
2	0.5	BK / GY	1212	Right Front Suspension Position Sensor Low Reference	I	—
3	0.5	YE / WH	1213	Right Front Suspension Position Sensor Signal	I	—

B11RR Rear Suspension 2 or 4 Corner Air Leveling Position Sensor - Right (F47)

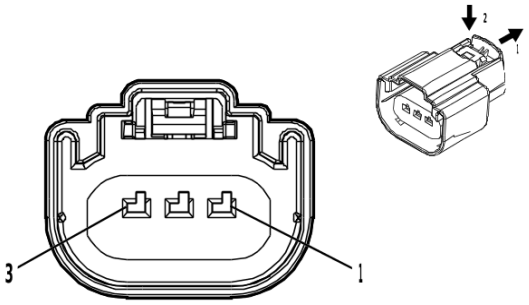

4569745

Connector Part Information

Harness Type: Chassis Wiring Harness
OEM Connector: 33343869
Service Connector: 19179750
Description: 3-Way F 1.5 MX Series, Sealed(BK)

Terminal Part Information

Terminal Type ID	Terminated Lead	Diagnostic Test Probe	Terminal Removal Tool
I	Not required	J-35616-14 (GN)	No Tool Required

B11RR Rear Suspension 2 or 4 Corner Air Leveling Position Sensor - Right (F47)

Pin	Size	Color	Circuit	Function	Terminal Type ID	Option
1	0.5	GN / RD	1214	Right Rear Suspension Position Sensor Voltage Reference	I	—
2	0.5	BK / YE	1215	Right Rear Suspension Position Sensor Low Reference	I	—
3	0.5	GN / GY	1216	Right Rear Suspension Position Sensor Signal	I	—

B13 Automatic Transmission Fluid Temperature Sensor (MQC)

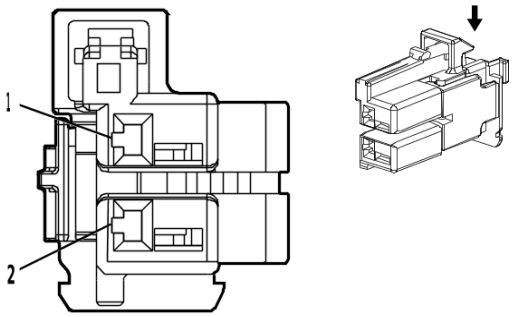

4672650

Connector Part Information

Harness Type: Automatic Transmission Wiring Harness
OEM Connector: 13514136
Service Connector: Service by Harness - See Part Catalog
Description: 2-Way F 1.2 MCON Series(BN)

Terminal Part Information

Terminal Type ID	Terminated Lead	Diagnostic Test Probe	Terminal Removal Tool
I	Not Available	No Tool Required	Not Available

B13 Automatic Transmission Fluid Temperature Sensor (MQC)

Pin	Size	Color	Circuit	Function	Terminal Type ID	Option
1	0.5	BU / BN	586	Transmission Fluid Temperature Sensor Low Reference	I	—
2	0.5	BN / YE	585	Transmission Fluid Temperature Sensor Signal	I	—

B14A Transmission Output Shaft Speed Sensor (MQC)

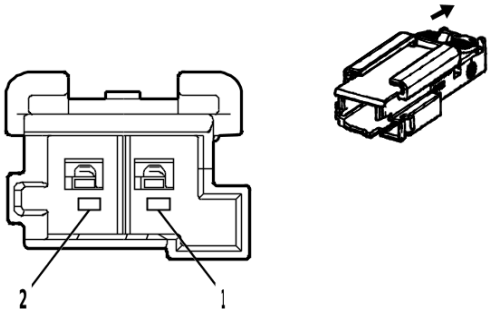

4672593

Connector Part Information

Harness Type: Automatic Transmission Wiring Harness
OEM Connector: 2272160-2
Service Connector: Service by Harness - See Part Catalog
Description: 2-Way M 1.2 MCON Series(BU)

Terminal Part Information

Terminal Type ID	Terminated Lead	Diagnostic Test Probe	Terminal Removal Tool
I	Not required	J-35616-13 (BU)	No Tool Required

B14A Transmission Output Shaft Speed Sensor (MQC)

Pin	Size	Color	Circuit	Function	Terminal Type ID	Option
1	0.5	YE / OG	6358	Output Speed Signal	I	—
2	0.5	GN	4170	Transmission Output Shaft Speed Sensor Circuit 9V Reference	I	—

B14C Transmission Input Shaft Speed Sensor (MQC)

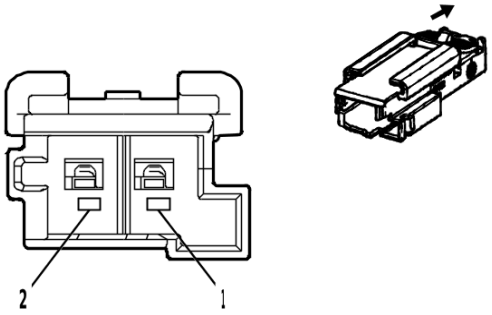

4672611

Connector Part Information

Harness Type: Automatic Transmission Wiring Harness
OEM Connector: 2272160-3
Service Connector: Service by Harness - See Part Catalog
Description: 2-Way M 1.2 MCON Series(GN)

Terminal Part Information

Terminal Type ID	Terminated Lead	Diagnostic Test Probe	Terminal Removal Tool
I	Not required	J-35616-13 (BU)	No Tool Required

B14C Transmission Input Shaft Speed Sensor (MQC)

Pin	Size	Color	Circuit	Function	Terminal Type ID	Option
1	0.5	WH / VT	6353	Input Speed Signal	I	—
2	0.5	BU	4171	Transmission Input Shaft Speed Sensor Circuit 9V Reference	I	—

B14DA Transmission Intermediate Speed Sensor 1 (MQC)

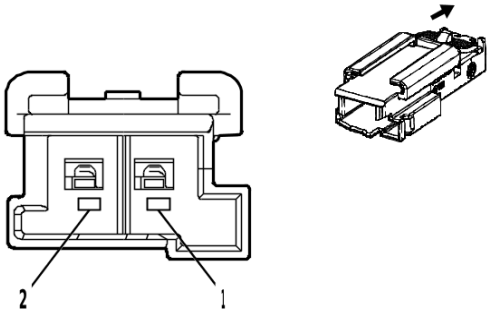

4663490

Connector Part Information

Harness Type: Automatic Transmission Wiring Harness
OEM Connector: 2272160-1
Service Connector: Service by Harness - See Part Catalog
Description: 2-Way M 1.2 MCON Series(NA)

Terminal Part Information

Terminal Type ID	Terminated Lead	Diagnostic Test Probe	Terminal Removal Tool
I	Not required	J-35616-13 (BU)	No Tool Required

B14DA Transmission Intermediate Speed Sensor 1 (MQC)

Pin	Size	Color	Circuit	Function	Terminal Type ID	Option
1	0.5	VT / GN	4510	Transmission Intermediate Speed Signal	I	—
2	0.5	GN	4170	Transmission Output Shaft Speed Sensor Circuit 9V Reference	I	—

B14DB Transmission Intermediate Speed Sensor 2 (MQC)

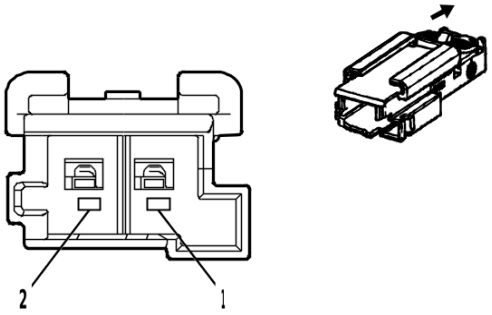

4672593

Connector Part Information

Harness Type: Automatic Transmission Wiring Harness
OEM Connector: 2272160-2
Service Connector: Service by Harness - See Part Catalog
Description: 2-Way M 1.2 MCON Series(BU)

Terminal Part Information

Terminal Type ID	Terminated Lead	Diagnostic Test Probe	Terminal Removal Tool
I	Not required	J-35616-13 (BU)	No Tool Required

B14DB Transmission Intermediate Speed Sensor 2 (MQC)

Pin	Size	Color	Circuit	Function	Terminal Type ID	Option
1	0.5	WH / BU	4510	Transmission Intermediate Speed Signal	I	—
2	0.5	BU	4171	Transmission Input Shaft Speed Sensor Circuit 9V Reference	I	—

B20A Brake Fluid Level Indicator Switch

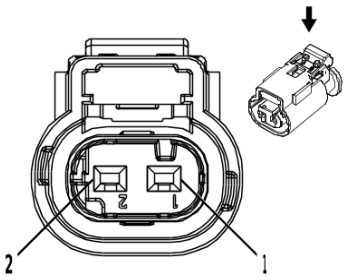

2717066

Connector Part Information

Harness Type: Body Wiring Harness
OEM Connector: 10010337
Service Connector: 13587326
Description: 2-Way F 1.2 Multilock Series, Sealed(BK)

Terminal Part Information

Terminal Type ID	Terminated Lead	Diagnostic Test Probe	Terminal Removal Tool
I	Not required	J-35616-12 (BU)	No Tool Required

B20A Brake Fluid Level Indicator Switch

Pin	Size	Color	Circuit	Function	Terminal Type ID	Option
1	0.5	GN / GY	333	Brake Fluid Level Signal	I	—
2	0.5	BK / WH	1151	Signal Ground	I	—

B22 Brake Pedal Position Sensor

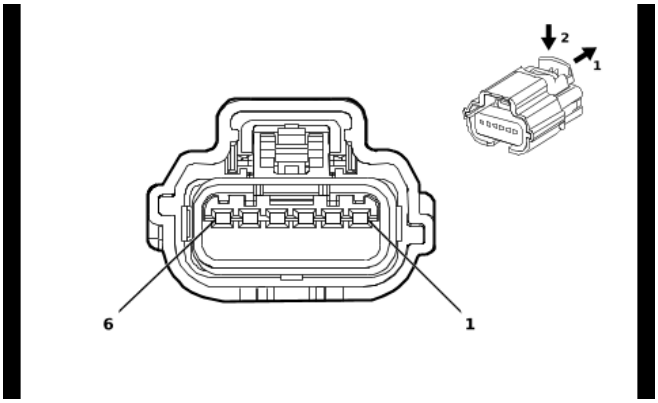

4773396

Connector Part Information

Harness Type: Body Wiring Harness
OEM Connector: 13526329
Service Connector: 84683650
Description: 6-Way F 64 Series, Sealed(NA)

Terminal Part Information

Terminal Type ID	Terminated Lead	Diagnostic Test Probe	Terminal Removal Tool
I	Not required	J-35616-64B (L-BU)	No Tool Required

B22 Brake Pedal Position Sensor

Pin	Size	Color	Circuit	Function	Terminal Type ID	Option
1	0.35	BK / BN	5360	Brake Apply Sensor Low Reference	I	—
2	0.35	WH	5359	Brake Apply Sensor Control	I	—
3	0.35	BU / YE	5361	Brake Apply Sensor Signal	I	—
4	0.5	WH / GN	5380	Brake Position Sensor Signal	I	—
5	0.5	BK / YE	5382	Brake Position Sensor Low Reference	I	—
6	0.5	WH / RD	5381	Brake Position Sensor 5V Reference	I	—

B23 Camshaft Position Sensor (L84/L87)

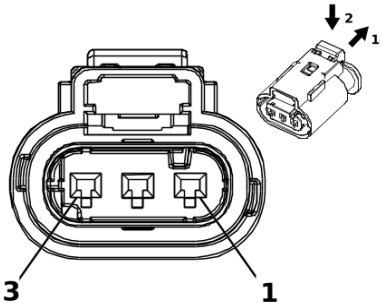

2717069

Connector Part Information

Harness Type: Camshaft Position Sensor Jumper Wiring Harness
OEM Connector: 13503570
Service Connector: Service by Harness - See Part Catalog
Description: 3-Way F 1.2 Multilock Series, Sealed(BK)

Terminal Part Information

Terminal Type ID	Terminated Lead	Diagnostic Test Probe	Terminal Removal Tool
I	Not Available	No Tool Required	Not Available

B23 Camshaft Position Sensor (L84/L87)

Pin	Size	Color	Circuit	Function	Terminal Type ID	Option
1	0.5	GY / BU	5300	Intake Camshaft Position Sensor 1 Voltage Reference	I	—
2	0.5	BK / GN	5301	Intake Camshaft Position Sensor Low Reference 1	I	—
3	0.5	YE / VT	5275	Intake Camshaft Position Sensor 1	I	—

B23E Camshaft Position Sensor - Exhaust (LM2)

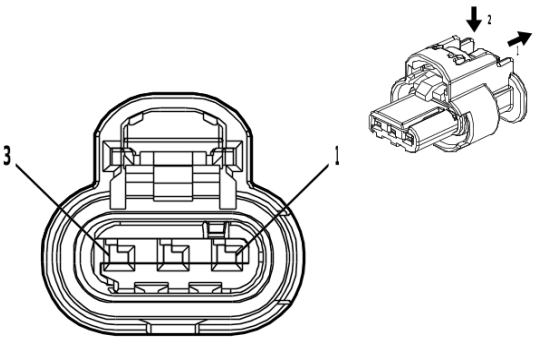

4581126

Connector Part Information

Harness Type: Engine Wiring Harness
OEM Connector: 1-2296695-1
Service Connector: 19371207
Description: 3-Way F 1.2 MCON-CB Series, Sealed(BK)

Terminal Part Information

Terminal Type ID	Terminated Lead	Diagnostic Test Probe	Terminal Removal Tool
I	Not required	J-35616-16 (LT GN)	No Tool Required

B23E Camshaft Position Sensor - Exhaust (LM2)

Pin	Size	Color	Circuit	Function	Terminal Type ID	Option
1	0.5	GY / YE	5297	Exhaust Camshaft Position Sensor 1 Voltage Reference	I	—
2	0.5	BK / GY	5296	Exhaust Camshaft Position Sensor Low Reference 1	I	—
3	0.5	VT / BK	5273	Exhaust Camshaft Position Sensor 1	I	—

B24 Mobile Telephone Microphone (IOR)

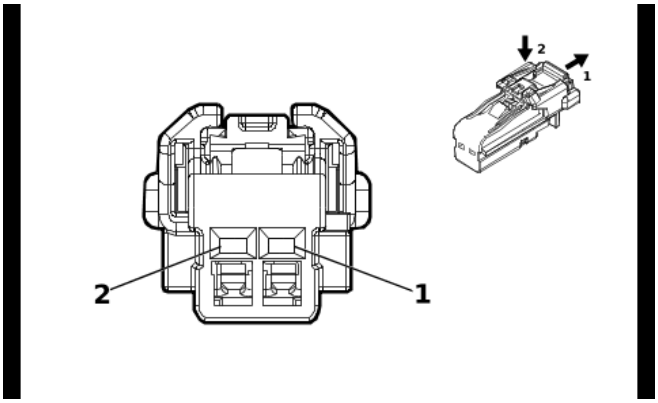

4115691

Connector Part Information

Harness Type: Headlining Trim Panel Wiring Harness
OEM Connector: 13532422
Service Connector: 19352066
Description: 2-Way F 1.2 MCON Series(BK)

Terminal Part Information

Terminal Type ID	Terminated Lead	Diagnostic Test Probe	Terminal Removal Tool
I	Not required	J-35616-16 (LT GN)	No Tool Required

B24 Mobile Telephone Microphone (IOR)

Pin	Size	Color	Circuit	Function	Terminal Type ID	Option
1	0.5	BK / BN	654	Cellular Telephone Microphone Low Reference	I	—
2	0.5	BU	655	Cellular Telephone Microphone Signal	I	—

B24D Mobile Telephone Microphone - Driver (IOK)

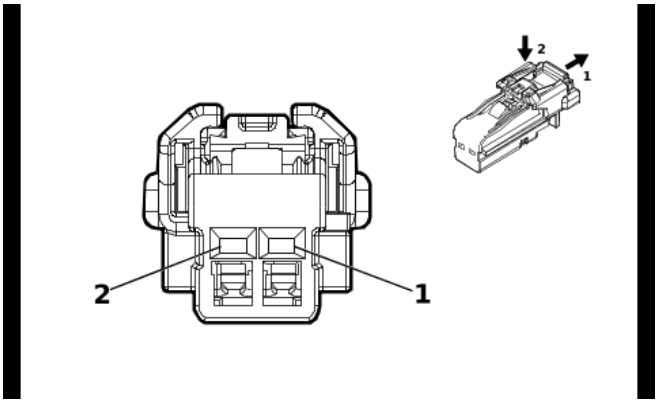

4115691

Connector Part Information

Harness Type: Headlining Trim Panel Wiring Harness
OEM Connector: 13532422
Service Connector: 19352066
Description: 2-Way F 1.2 MCON Series(BK)

Terminal Part Information

Terminal Type ID	Terminated Lead	Diagnostic Test Probe	Terminal Removal Tool
I	Not required	J-35616-16 (LT GN)	No Tool Required

B24D Mobile Telephone Microphone - Driver (IOK)

Pin	Size	Color	Circuit	Function	Terminal Type ID	Option
1	0.5	BK / BN	654	Cellular Telephone Microphone Low Reference	I	—
2	0.5	BU	655	Cellular Telephone Microphone Signal	I	—

B24P Mobile Telephone Microphone - Passenger (IOK)

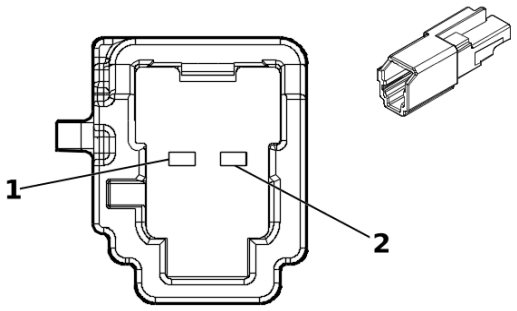

5360948

Connector Part Information

Harness Type: Headlining Trim Panel Wiring Harness
OEM Connector: 13530129
Service Connector: 84847259
Description: 2-Way M 1.2 MCON Series(GY)

Terminal Part Information

Terminal Type ID	Terminated Lead	Diagnostic Test Probe	Terminal Removal Tool
I	Not required	J-35616-17 (LT GN)	No Tool Required

B24P Mobile Telephone Microphone - Passenger (IOK)

Pin	Size	Color	Circuit	Function	Terminal Type ID	Option
1	0.5	BU / BK	7044	Microphone [-]	I	—
2	0.5	VT / YE	7043	Microphone [+] Signal	I	—

B26 Crankshaft Position Sensor (L84/L87)

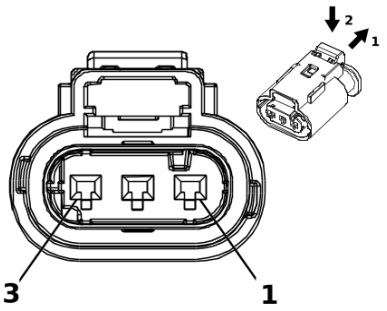

2717069

Connector Part Information

Harness Type: Engine Wiring Harness
OEM Connector: 13763990
Service Connector: 84601390
Description: 3-Way F 1.2 Multilock Series, Sealed(BK)

Terminal Part Information

Terminal Type ID	Terminated Lead	Diagnostic Test Probe	Terminal Removal Tool
I	Not required	J-35616-16 (LT GN)	No Tool Required

B26 Crankshaft Position Sensor (L84/L87)

Pin	Size	Color	Circuit	Function	Terminal Type ID	Option
1	0.5	GN	6271	Crankshaft Position Sensor Signal	I	—
2	0.5	BK / VT	6272	Crankshaft Position Sensor Low Reference	I	—
3	0.5	VT / BU	6270	Crankshaft Position Sensor Voltage	I	—

B26 Crankshaft Position Sensor (LM2)

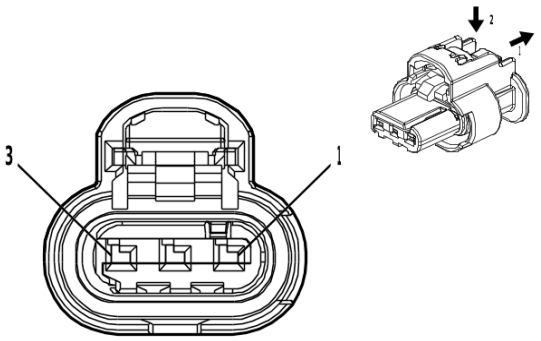

4581126

Connector Part Information

Harness Type: Engine Wiring Harness
OEM Connector: 33358800
Service Connector: 19371207
Description: 3-Way F 1.2 MCON-CB Series, Sealed(BK)

Terminal Part Information

Terminal Type ID	Terminated Lead	Diagnostic Test Probe	Terminal Removal Tool
I	Not required	J-35616-16 (LT GN)	No Tool Required

B26 Crankshaft Position Sensor (LM2)

Pin	Size	Color	Circuit	Function	Terminal Type ID	Option
1	0.5	VT / BU	6270	Crankshaft Position Sensor Voltage	I	—
2	0.5	BK / VT	6272	Crankshaft Position Sensor Low Reference	I	—
3	0.5	GN	6271	Crankshaft Position Sensor Signal	I	—

B34 Engine Coolant Temperature Sensor (L84/L87)

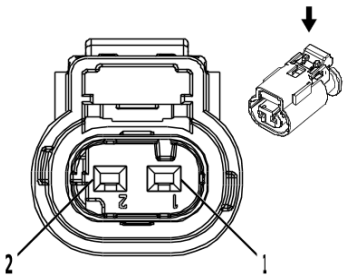

2717066

Connector Part Information

Harness Type: Valve Rocker Arm Oil Control Valve Extension Harness
OEM Connector: 1001-0337
Service Connector: Service by Harness - See Part Catalog
Description: 2-Way F

Terminal Part Information

Terminal Type ID	Terminated Lead	Diagnostic Test Probe	Terminal Removal Tool
I	Not Available	No Tool Required	Not Available

B34 Engine Coolant Temperature Sensor (L84/L87)

Pin	Size	Color	Circuit	Function	Terminal Type ID	Option
1	0.5	BU	410	Engine Coolant Temperature Sensor Signal	I	—
2	0.5	BK / YE	548	Engine Control Sensors Low Reference 1	I	—

B34 Engine Coolant Temperature Sensor (LM2)

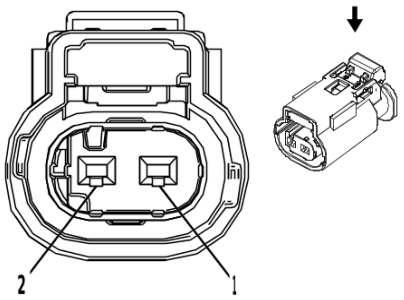

2830969

Connector Part Information

Harness Type: Engine Wiring Harness
OEM Connector: 10010339
Service Connector: 13587321
Description: 2-Way F 1.2 Multilock Series, Sealed(D-GY)

Terminal Part Information

Terminal Type ID	Terminated Lead	Diagnostic Test Probe	Terminal Removal Tool
I	Not required	J-35616-16 (LT GN)	No Tool Required

B34 Engine Coolant Temperature Sensor (LM2)

Pin	Size	Color	Circuit	Function	Terminal Type ID	Option
1	0.5	YE / BU	2408	Engine Inlet Coolant Temperature Signal	I	—
2	0.5	BK / YE	548	Engine Control Sensors Low Reference 1	I	—

B34B Engine Coolant Temperature Sensor 2 (LM2)

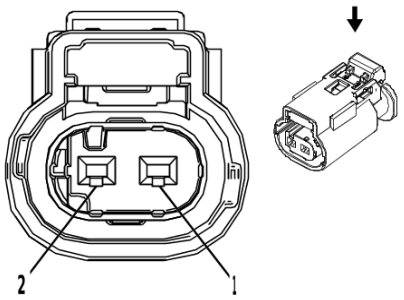

2830969

Connector Part Information

Harness Type: Engine Coolant Temperature Sensor Harness
OEM Connector: 10010339
Service Connector: Service by Harness - See Part Catalog
Description: 2-Way F 1.2 Multilock Series, Sealed(D-GY)

Terminal Part Information

Terminal Type ID	Terminated Lead	Diagnostic Test Probe	Terminal Removal Tool
I	Not required	J-35616-16 (L-GN)	No Tool Required

B34B Engine Coolant Temperature Sensor 2 (LM2)

Pin	Size	Color	Circuit	Function	Terminal Type ID	Option
1	0.5	VT	2988	Engine Outlet Coolant Temperature Signal	I	—
2	0.5	BK / GY	548	Engine Control Sensors Low Reference 1	I	—

B34E Engine Coolant Temperature Sensor 5 (LM2)

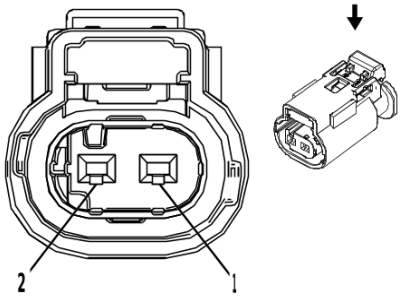

2830969

Connector Part Information

Harness Type: Engine Coolant Temperature Sensor Harness
OEM Connector: 10010339
Service Connector: Service by Harness - See Part Catalog
Description: 2-Way F 1.2 Multilock Series, Sealed(D-GY)

Terminal Part Information

Terminal Type ID	Terminated Lead	Diagnostic Test Probe	Terminal Removal Tool
I	Not required	J-35616-16 (L-GN)	No Tool Required

B34E Engine Coolant Temperature Sensor 5 (LM2)

Pin	Size	Color	Circuit	Function	Terminal Type ID	Option
1	0.5	GY / VT	2404	Engine Block Coolant Temperature Signal	I	—
2	0.5	BK / GN	626	Engine Control Vehicle Sensors Low Reference 1	I	—

B34K Charge Air Cooler Coolant Temperature Sensor - Inlet (LM2)

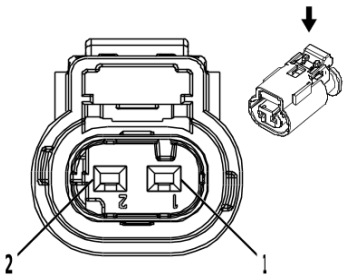

2717066

Connector Part Information

Harness Type: Engine Wiring Harness
OEM Connector: 10010337
Service Connector: 13587326
Description: 2-Way F 1.2 Multilock Series, Sealed(BK)

Terminal Part Information

Terminal Type ID	Terminated Lead	Diagnostic Test Probe	Terminal Removal Tool
I	Not required	J-35616-16 (LT GN)	No Tool Required

B34K Charge Air Cooler Coolant Temperature Sensor - Inlet (LM2)

Pin	Size	Color	Circuit	Function	Terminal Type ID	Option
1	0.5	BU / BK	1422	Engine Water Charge Air Coolant Temperature Signal	I	—
2	0.5	BK / GY	626	Engine Control Vehicle Sensors Low Reference 1	I	—

B35 Engine Oil Level Indicator Switch (L84/L87)

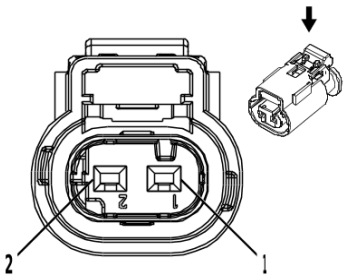

2717066

Connector Part Information

Harness Type: Engine Wiring Harness
OEM Connector: 10010337
Service Connector: 13587326
Description: 2-Way F 1.2 Multilock Series, Sealed(BK)

Terminal Part Information

Terminal Type ID	Terminated Lead	Diagnostic Test Probe	Terminal Removal Tool
I	Not required	J-35616-12 (BU)	No Tool Required
II	Not required	J-35616-16 (LT GN)	No Tool Required

B35 Engine Oil Level Indicator Switch (L84/L87)

Pin	Size	Color	Circuit	Function	Terminal Type ID	Option
1	0.5	BN / GN	1174	Oil Level Switch Signal	II	—
2	1	BK / WH	6151	Engine Control Module Ground	I	—

B36 Engine Oil Temperature Sensor (LM2)

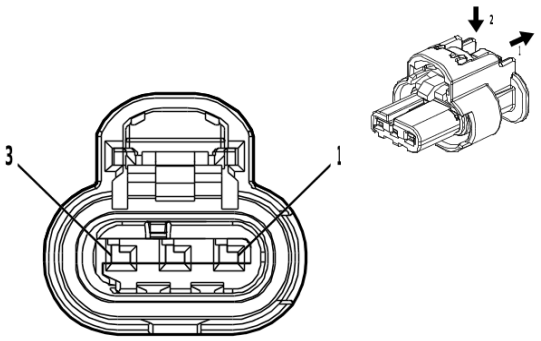

4994602

Connector Part Information

Harness Type: Engine Wiring Harness
OEM Connector: 1-2296695-3
Service Connector: 19371199
Description: 3-Way F 1.2 MCON-CB Series, Sealed(BK)

Terminal Part Information

Terminal Type ID	Terminated Lead	Diagnostic Test Probe	Terminal Removal Tool
I	Not required	J-35616-16 (LT GN)	No Tool Required

B36 Engine Oil Temperature Sensor (LM2)

Pin	Size	Color	Circuit	Function	Terminal Type ID	Option
1	0.5	BK / GY	626	Engine Control Vehicle Sensors Low Reference 1	I	—
2	0.5	BN / BU	357	Oil Temperature Sensor Signal	I	—
3	0.5	VT	7485	Engine Oil Temperature Sensor 2 Signal	I	—

B37B Engine Oil Pressure Sensor (L84/L87)

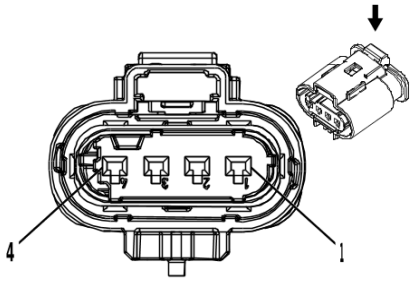

2717079

Connector Part Information

Harness Type: Engine Wiring Harness
OEM Connector: 13815341
Service Connector: 13587299
Description: 4-Way F 1.2 Multilock Series, Sealed(BK)

Terminal Part Information

Terminal Type ID	Terminated Lead	Diagnostic Test Probe	Terminal Removal Tool
I	Not required	J-35616-16 (LT GN)	No Tool Required

B37B Engine Oil Pressure Sensor (L84/L87)

Pin	Size	Color	Circuit	Function	Terminal Type ID	Option
1	0.5	BK / YE	548	Engine Control Sensors Low Reference 1	I	—
2	0.5	YE / BN	331	Oil Pressure Sensor Signal	I	—
3	0.5	WH / RD	480	Engine Control Vehicle Sensors 5 Volt Reference 1	I	—
4	0.5	BN / BU	357	Oil Temperature Sensor Signal	I	—

B37B Engine Oil Pressure Sensor (LM2)

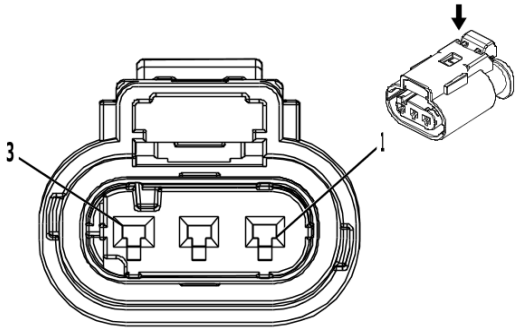

3240107

Connector Part Information

Harness Type: Engine Wiring Harness
OEM Connector: 13889776
Service Connector: 19301717
Description: 3-Way F 1.2 Multilock Series, Sealed(BK)

Terminal Part Information

Terminal Type ID	Terminated Lead	Diagnostic Test Probe	Terminal Removal Tool
I	Not required	J-35616-16 (LT GN)	No Tool Required

B37B Engine Oil Pressure Sensor (LM2)

Pin	Size	Color	Circuit	Function	Terminal Type ID	Option
1	0.5	YE / BN	331	Oil Pressure Sensor Signal	I	—
2	0.5	BK / YE	548	Engine Control Sensors Low Reference 1	I	—
3	0.5	WH / RD	480	Engine Control Vehicle Sensors 5 Volt Reference 1	I	—

B39 Air Conditioning Evaporator Air Temperature Sensor

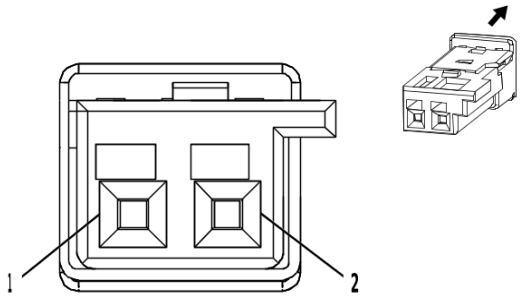

2780265

Connector Part Information

Harness Type: Heater Wiring Harness
OEM Connector: 13535799
Service Connector: Service by Harness - See Part Catalog
Description: 2-Way F 0.64 Micro-Quadlock Series(NA)

Terminal Part Information

Terminal Type ID	Terminated Lead	Diagnostic Test Probe	Terminal Removal Tool
I	Not required	No Tool Required	No Tool Required

B39 Air Conditioning Evaporator Air Temperature Sensor

Pin	Size	Color	Circuit	Function	Terminal Type ID	Option
1	0.35	BN	6137	A/C Evaporator Temperature Sensor Signal	I	—
2	0.35	BK / YE	407	Sensor Low Reference	I	—

B47 Fuel Pressure Sensor (L87)

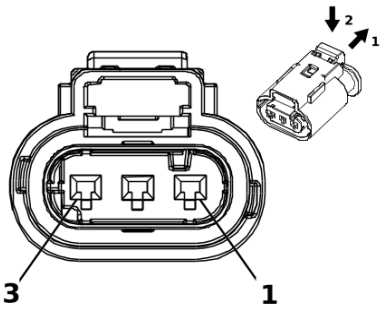

2717069

Connector Part Information

Harness Type: Chassis Wiring Harness
OEM Connector: 10010341
Service Connector: 84601390
Description: 3-Way F 1.2 Multilock Series, Sealed(BK)

Terminal Part Information

Terminal Type ID	Terminated Lead	Diagnostic Test Probe	Terminal Removal Tool
I	Not required	J-35616-12 (BU)	No Tool Required

B47 Fuel Pressure Sensor (L87)

Pin	Size	Color	Circuit	Function	Terminal Type ID	Option
1	0.5	BN / RD	7445	Fuel Line Pressure Sensor 5V Reference	I	—
2	0.5	BK / YE	7447	Fuel Pressure Sensor Low Reference	I	—
3	0.5	BU / WH	7446	Fuel Pressure Sensor Signal	I	—

B47 Fuel Pressure Sensor (LM2)

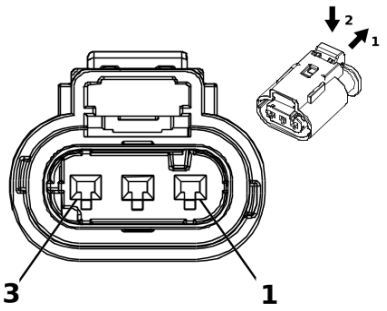

2717069

Connector Part Information

Harness Type: Chassis Wiring Harness
OEM Connector: 10010341
Service Connector: 84601390
Description: 3-Way F 1.2 Multilock Series, Sealed(BK)

Terminal Part Information

Terminal Type ID	Terminated Lead	Diagnostic Test Probe	Terminal Removal Tool
I	Not required	J-35616-12 (BU)	No Tool Required

B47 Fuel Pressure Sensor (LM2)

Pin	Size	Color	Circuit	Function	Terminal Type ID	Option
1	0.5	BN / RD	7445	Fuel Line Pressure Sensor 5V Reference	I	—
2	0.5	BK / YE	7447	Fuel Pressure Sensor Low Reference	I	—
3	0.5	BU / WH	7446	Fuel Pressure Sensor Signal	I	—

B47B Fuel Rail Pressure Sensor (L84/L87)

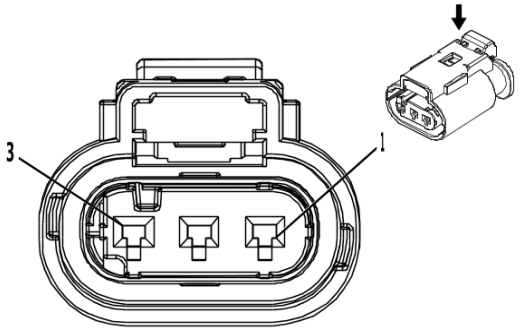

3240107

Connector Part Information

Harness Type: Fuel Injector Wiring Harness
OEM Connector: 10010344
Service Connector: Service by Harness - See Part Catalog
Description: 3-Way F 1.2 Multilock Series, Sealed(BK)

Terminal Part Information

Terminal Type ID	Terminated Lead	Diagnostic Test Probe	Terminal Removal Tool
I	Not Available	No Tool Required	Not Available

B47B Fuel Rail Pressure Sensor (L84/L87)

Pin	Size	Color	Circuit	Function	Terminal Type ID	Option
1	0.5	BK / GN	548	Engine Control Sensors Low Reference 1	I	—
2	0.5	BU / WH	2918	Fuel Rail Pressure Sensor Signal	I	—
3	0.5	BN / RD	480	Engine Control Vehicle Sensors 5 Volt Reference 1	I	—

B47B Fuel Rail Pressure Sensor (LM2)

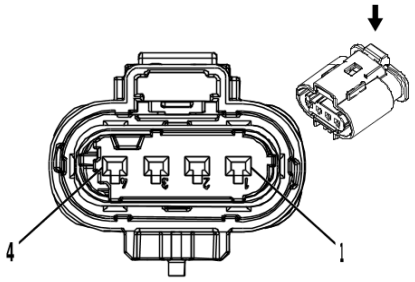

2717079

Connector Part Information

Harness Type: Engine Wiring Harness
OEM Connector: 10010346
Service Connector: 13587299
Description: 4-Way F 1.2 Multilock Series, Sealed(BK)

Terminal Part Information

Terminal Type ID	Terminated Lead	Diagnostic Test Probe	Terminal Removal Tool
I	Not required	J-35616-16 (LT GN)	No Tool Required

B47B Fuel Rail Pressure Sensor (LM2)

Pin	Size	Color	Circuit	Function	Terminal Type ID	Option
1	0.5	BN / RD	2917	Fuel Rail Pressure Sensor 5V Reference	I	—
2	0.5	BN / YE	2161	Fuel Rail Pressure Sensor 2 Signal	I	—
3	0.5	BK / GN	2919	Fuel Rail Pressure Sensor Low Reference	I	—
4	0.5	BU / WH	2918	Fuel Rail Pressure Sensor Signal	I	—

B51F Suspension Height Sensor - Front (-F47-Z95)

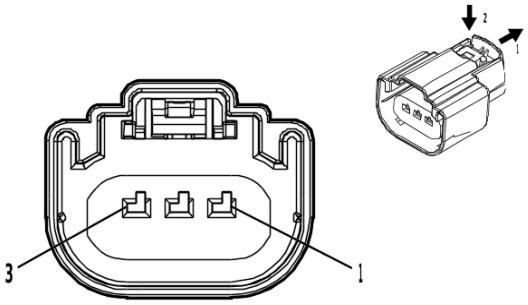

4569745

Connector Part Information

Harness Type: Chassis Wiring Harness
OEM Connector: 33343869
Service Connector: 19179750
Description: 3-Way F 1.5 MX Series, Sealed(BK)

Terminal Part Information

Terminal Type ID	Terminated Lead	Diagnostic Test Probe	Terminal Removal Tool
I	Not required	J-35616-14 (GN)	No Tool Required
II	Not required	J-35616-2A (GY)	No Tool Required

B51F Suspension Height Sensor - Front (-F47-Z95)

Pin	Size	Color	Circuit	Function	Terminal Type ID	Option
1	0.75	WH / RD	7524	Front Vehicle Level Sensor 5V Reference	II	—
2	0.5	BK / GY	7526	Front Axle Level Sensor Low Reference	I	—
3	0.5	BN / WH	7525	Front Vehicle Level Sensor Signal	I	—

B51R Suspension Height Sensor - Rear (-F47-Z95)

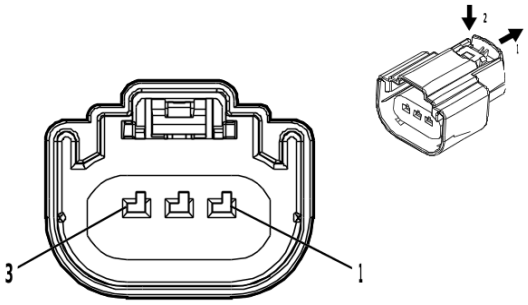

4569745

Connector Part Information

Harness Type: Chassis Wiring Harness
OEM Connector: 33343869
Service Connector: 19179750
Description: 3-Way F 1.5 MX Series, Sealed(BK)

Terminal Part Information

Terminal Type ID	Terminated Lead	Diagnostic Test Probe	Terminal Removal Tool
I	Not required	J-35616-14 (GN)	No Tool Required

B51R Suspension Height Sensor - Rear (-F47-Z95)

Pin	Size	Color	Circuit	Function	Terminal Type ID	Option
1	0.5	WH / RD	2165	Vehicle Level Control Position Sensor 5V Reference	I	—
2	0.5	BK / BN	2185	Vehicle Level Control Position Sensor Low Reference	I	—
3	0.5	BN	2184	Vehicle Level Control Position Sensor Signal	I	—

B52C Heated Oxygen Sensor - Bank 1 Sensor 1 (L84/L87)

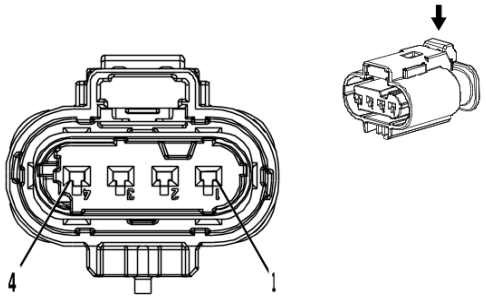

4381050

Connector Part Information

Harness Type: Engine Wiring Harness
OEM Connector: 10021267
Service Connector: 19354075
Description: 4-Way F 1.2 Multilock Series, Sealed(BK)

Terminal Part Information

Terminal Type ID	Terminated Lead	Diagnostic Test Probe	Terminal Removal Tool
I	Not required	J-35616-16 (LT GN)	No Tool Required

B52C Heated Oxygen Sensor - Bank 1 Sensor 1 (L84/L87)

Pin	Size	Color	Circuit	Function	Terminal Type ID	Option
1	0.5	GY / WH	3113	HO2S Heater Low Control Bank 1 Sensor 1	I	—
2	0.75	VT / BU	5293	Powertrain Main Relay Fused Supply Voltage 4	I	—
3	0.5	WH / BK	3111	HO2S Low Signal Bank 1 Sensor 1	I	—
4	0.5	VT / GY	3110	HO2S High Signal Bank 1 Sensor 1	I	—

B52D Heated Oxygen Sensor - Bank 1 Sensor 2 (L84/L87)

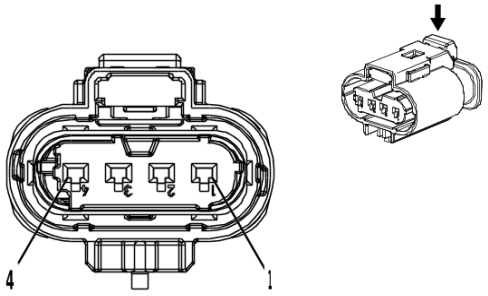

4036370

Connector Part Information

Harness Type: Engine Wiring Harness
OEM Connector: 10021266
Service Connector: 19330920
Description: 4-Way F 1.2 Multilock Series, Sealed(GY)

Terminal Part Information

Terminal Type ID	Terminated Lead	Diagnostic Test Probe	Terminal Removal Tool
I	Not required	J-35616-16 (LT GN)	No Tool Required

B52D Heated Oxygen Sensor - Bank 1 Sensor 2 (L84/L87)

Pin	Size	Color	Circuit	Function	Terminal Type ID	Option
1	0.75	GY / WH	3122	HO2S Heater Low Control Bank 1 Sensor 2	I	—
2	0.75	VT / BU	5294	Powertrain Main Relay Fused Supply Voltage 5	I	—
3	0.5	WH / YE	3121	HO2S Low Signal Bank 1 Sensor 2	I	—
4	0.5	VT / BU	3120	HO2S High Signal Bank 1 Sensor 2	I	—

B52E Heated Oxygen Sensor - Bank 2 Sensor 1 (L84/L87)

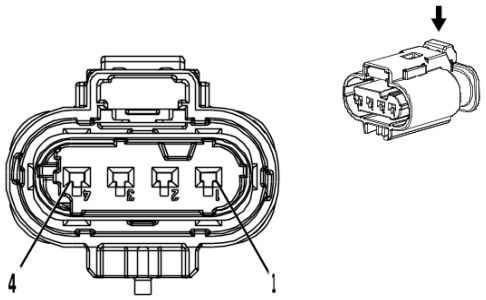

4381050

Connector Part Information

Harness Type: Engine Wiring Harness
OEM Connector: 10021267
Service Connector: 19354075
Description: 4-Way F 1.2 Multilock Series, Sealed(BK)

Terminal Part Information

Terminal Type ID	Terminated Lead	Diagnostic Test Probe	Terminal Removal Tool
I	Not required	J-35616-16 (LT GN)	No Tool Required

B52E Heated Oxygen Sensor - Bank 2 Sensor 1 (L84/L87)

Pin	Size	Color	Circuit	Function	Terminal Type ID	Option
1	0.5	GN / YE	3212	HO2S Heater Low Control Bank 2 Sensor 1	I	—
2	0.75	VT / BU	5293	Powertrain Main Relay Fused Supply Voltage 4	I	—
3	0.5	YE / WH	3211	HO2S Low Signal Bank 2 Sensor 1	I	—
4	0.5	VT / WH	3210	HO2S High Signal Bank 2 Sensor 1	I	—

B52F Heated Oxygen Sensor - Bank 2 Sensor 2 (L84/L87)

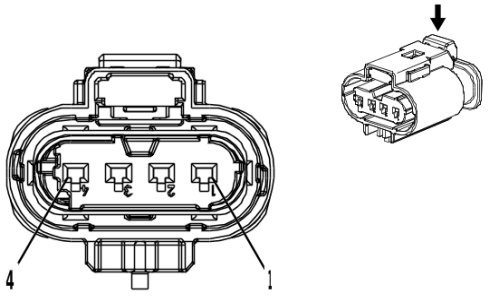

4036370

Connector Part Information

Harness Type: Engine Wiring Harness
OEM Connector: 10021266
Service Connector: 19330920
Description: 4-Way F 1.2 Multilock Series, Sealed(GY)

Terminal Part Information

Terminal Type ID	Terminated Lead	Diagnostic Test Probe	Terminal Removal Tool
I	Not required	J-35616-16 (LT GN)	No Tool Required

B52F Heated Oxygen Sensor - Bank 2 Sensor 2 (L84/L87)

Pin	Size	Color	Circuit	Function	Terminal Type ID	Option
1	0.75	WH / BN	3223	HO2S Heater Low Control Bank 2 Sensor 2	I	—
2	0.75	VT / BU	5294	Powertrain Main Relay Fused Supply Voltage 5	I	—
3	0.5	YE / BU	3221	HO2S Low Signal Bank 2 Sensor 2	I	—
4	0.5	VT / GN	3220	HO2S High Signal Bank 2 Sensor 2	I	—

B55 Engine Compartment Cover Switch

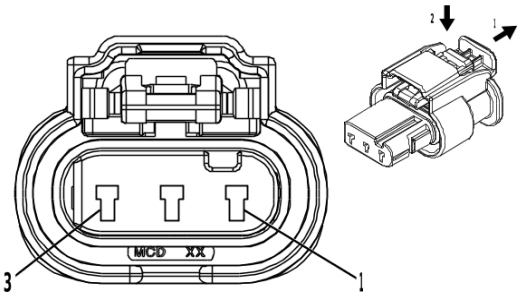

4421568

Connector Part Information

Harness Type: Body Wiring Harness
OEM Connector: 13506522
Service Connector: 19368220
Description: 3-Way F 1.2 MCON-LL Series, Sealed(BK)

Terminal Part Information

Terminal Type ID	Terminated Lead	Diagnostic Test Probe	Terminal Removal Tool
I	Not required	J-35616-16 (LT GN)	No Tool Required

B55 Engine Compartment Cover Switch

Pin	Size	Color	Circuit	Function	Terminal Type ID	Option
1	0.5	YE	4063	Hood Status A Signal	I	—
2	0.35	BN / GN	4064	Hood Status B Signal	I	—
3	0.75	BK	150	Ground	I	—

B58L Airbag Front End Discriminating Sensor - Left

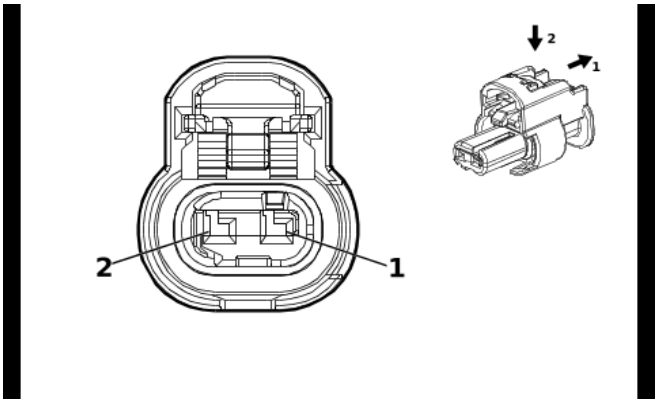

4649903

Connector Part Information

Harness Type: Body Wiring Harness
OEM Connector: 1-2296694-1
Service Connector: 85519075
Description: 2-Way F 1.2 MCON Series, Sealed(BK)

Terminal Part Information

Terminal Type ID	Terminated Lead	Diagnostic Test Probe	Terminal Removal Tool
I	Not required	J-35616-16 (LT GN)	No Tool Required

B58L Airbag Front End Discriminating Sensor - Left

Pin	Size	Color	Circuit	Function	Terminal Type ID	Option
1	0.5	OG / YE	354	Left Front Impact Discriminating Sensor Signal	I	—
2	0.5	BK / OG	5045	Left Front Impact Discriminating Sensor Low Reference	I	—

B58R Airbag Front End Discriminating Sensor - Right

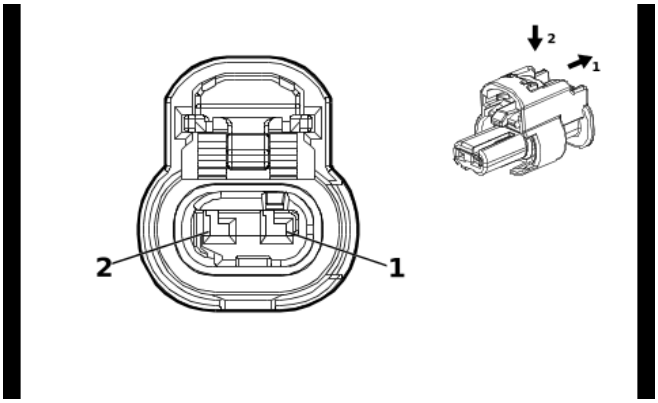

4649903

Connector Part Information

Harness Type: Body Wiring Harness
OEM Connector: 1-2296694-1
Service Connector: 85519075
Description: 2-Way F 1.2 MCON Series, Sealed(BK)

Terminal Part Information

Terminal Type ID	Terminated Lead	Diagnostic Test Probe	Terminal Removal Tool
I	Not required	J-35616-16 (LT GN)	No Tool Required

B58R Airbag Front End Discriminating Sensor - Right

Pin	Size	Color	Circuit	Function	Terminal Type ID	Option
1	0.5	OG / GN	1409	Right Front Impact Discriminating Sensor Signal	I	—
2	0.5	BK / OG	5600	Right Front Impact Discriminating Sensor Low Reference	I	—

B61P Seat Belt Tension Sensor - Passenger

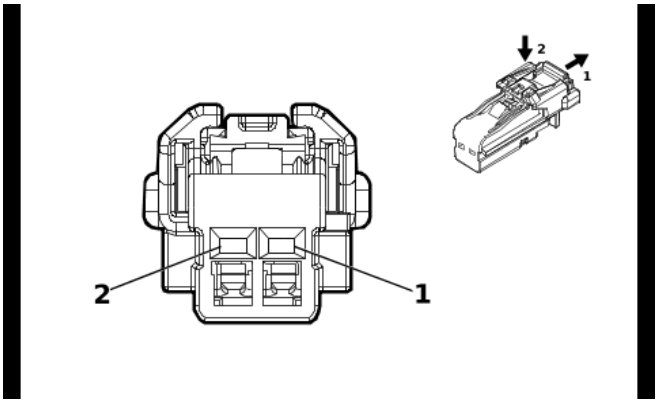

4115691

Connector Part Information

Harness Type: Body Wiring Harness
OEM Connector: 13532422
Service Connector: 19352066
Description: 2-Way F 1.2 MCON Series(BK)

Terminal Part Information

Terminal Type ID	Terminated Lead	Diagnostic Test Probe	Terminal Removal Tool
I	Not required	J-35616-16 (LT GN)	No Tool Required

B61P Seat Belt Tension Sensor - Passenger

Pin	Size	Color	Circuit	Function	Terminal Type ID	Option
1	0.5	GY / OG	3946	Passenger Automatic Locking Retractor Switch Low Reference	I	—
2	0.5	OG / BN	3947	Passenger Automatic Locking Retractor Switch Signal	I	—

B63LF Airbag Side Impact Sensor - Left Front Door

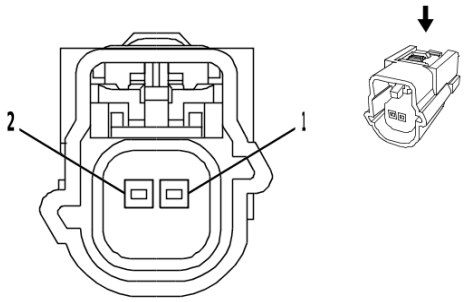

2179777

Connector Part Information

Harness Type: Front Side Door Door Wiring Harness - Driver
OEM Connector: 13610095
Service Connector: Service by Harness - See Part Catalog
Description: 2-Way F 0.64 Series, Sealed(GY)

Terminal Part Information

Terminal Type ID	Terminated Lead	Diagnostic Test Probe	Terminal Removal Tool
I	Not required	J-35616-64B (L-BU)	No Tool Required

B63LF Airbag Side Impact Sensor - Left Front Door

Pin	Size	Color	Circuit	Function	Terminal Type ID	Option
1	0.5	OG / GN	2132	Left Front Side Impact Sensor Signal	I	—
2	0.5	BK / OG	6628	Left Front Side Impact Sensor Low Reference	I	—

B63LR Airbag Side Impact Rear Sensor - Left Door

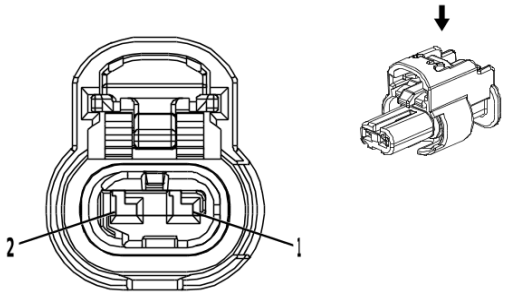

4335931

Connector Part Information

Harness Type: Body Wiring Harness
OEM Connector: 1-2296694-2
Service Connector: 19366843
Description: 2-Way F 1.2 MCON Series, Sealed(BK)

Terminal Part Information

Terminal Type ID	Terminated Lead	Diagnostic Test Probe	Terminal Removal Tool
I	Not required	J-35616-16 (LT GN)	No Tool Required

B63LR Airbag Side Impact Rear Sensor - Left Door

Pin	Size	Color	Circuit	Function	Terminal Type ID	Option
1	0.5	OG / BU	6622	Left Rear Side Impact Sensor Signal	I	—
2	0.5	BK / OG	6623	Left Rear Side Impact Sensor Low Reference	I	—

B63RF Airbag Side Impact Sensor - Right Front Door

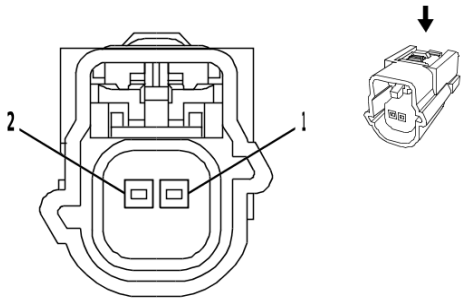

2179777

Connector Part Information

Harness Type: Front Side Door Door Wiring Harness - Passenger
OEM Connector: 13610095
Service Connector: Service by Harness - See Part Catalog
Description: 2-Way F 0.64 Series, Sealed(GY)

Terminal Part Information

Terminal Type ID	Terminated Lead	Diagnostic Test Probe	Terminal Removal Tool
I	Not required	J-35616-64B (L-BU)	No Tool Required

B63RF Airbag Side Impact Sensor - Right Front Door

Pin	Size	Color	Circuit	Function	Terminal Type ID	Option
1	0.5	BN / OG	2134	Right Front Side Impact Sensor Signal	I	—
2	0.5	BK / OG	6629	Right Front Side Impact Sensor Low Reference	I	—

B63RR Airbag Side Impact Rear Sensor - Right Door

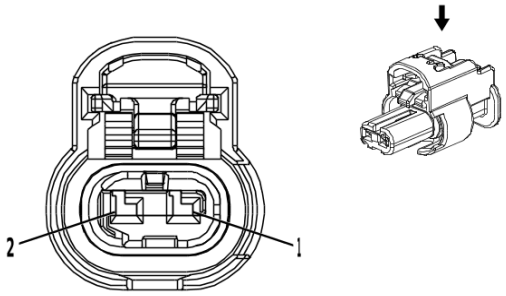

4335931

Connector Part Information

Harness Type: Body Wiring Harness
OEM Connector: 1-2296694-2
Service Connector: 19366843
Description: 2-Way F 1.2 MCON Series, Sealed(BK)

Terminal Part Information

Terminal Type ID	Terminated Lead	Diagnostic Test Probe	Terminal Removal Tool
I	Not required	J-35616-16 (LT GN)	No Tool Required

B63RR Airbag Side Impact Rear Sensor - Right Door

Pin	Size	Color	Circuit	Function	Terminal Type ID	Option
1	0.5	OG / WH	6626	Right Rear Side Impact Sensor Signal	I	—
2	0.5	BK / OG	6627	Right Rear Side Impact Sensor Low Reference	I	—

B65 Manifold Absolute Pressure and Intake Air Temperature Sensor (LM2)

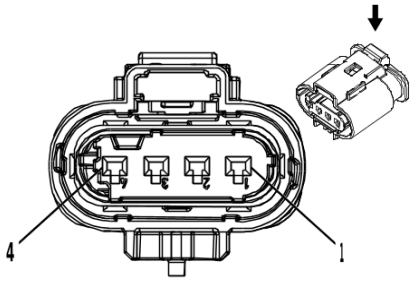

2717079

Connector Part Information

Harness Type: Engine Wiring Harness
OEM Connector: 10010346
Service Connector: 13587299
Description: 4-Way F 1.2 Multilock Series, Sealed(BK)

Terminal Part Information

Terminal Type ID	Terminated Lead	Diagnostic Test Probe	Terminal Removal Tool
I	Not required	J-35616-16 (LT GN)	No Tool Required

B65 Manifold Absolute Pressure and Intake Air Temperature Sensor (LM2)

Pin	Size	Color	Circuit	Function	Terminal Type ID	Option
1	0.5	WH / BU	7329	Pre-Throttle Air Temperature Signal	I	—
2	0.5	BU / RD	460	Engine Control Sensors 5 Volt Reference 1	I	—
3	0.5	BK / GN	580	Engine Control Sensors Low Reference 2	I	—
4	0.5	GN / WH	432	Manifold Absolute Pressure Sensor Signal	I	—

B68A Knock Sensor 1 (L84/L87)

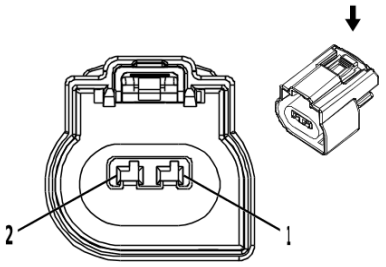

2717073

Connector Part Information

Harness Type: Engine Wiring Harness
OEM Connector: 34752-0204
Service Connector: 19301207
Description: 2-Way F 1.5 MX Series, Sealed(BK)

Terminal Part Information

Terminal Type ID	Terminated Lead	Diagnostic Test Probe	Terminal Removal Tool
I	Not required	J-35616-14 (GN)	No Tool Required

B68A Knock Sensor 1 (L84/L87)

Pin	Size	Color	Circuit	Function	Terminal Type ID	Option
1	0.75	BK / YE	1716	Knock Sensor Low Reference 1	I	—
2	0.75	VT / GY	496	Knock Sensor 1 Signal	I	—

B68B Knock Sensor 2 (L84/L87)

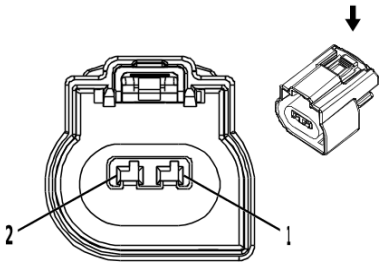

2717073

Connector Part Information

Harness Type: Engine Wiring Harness
OEM Connector: 34752-0204
Service Connector: 19301207
Description: 2-Way F 1.5 MX Series, Sealed(BK)

Terminal Part Information

Terminal Type ID	Terminated Lead	Diagnostic Test Probe	Terminal Removal Tool
I	Not required	J-35616-14 (GN)	No Tool Required

B68B Knock Sensor 2 (L84/L87)

Pin	Size	Color	Circuit	Function	Terminal Type ID	Option
1	0.75	WH / GY	1876	Knock Sensor 2 Signal	I	—
2	0.75	BK / GY	2303	Knock Sensor Low Reference 2	I	—

B70 Liftgate Close Switch (TC2)

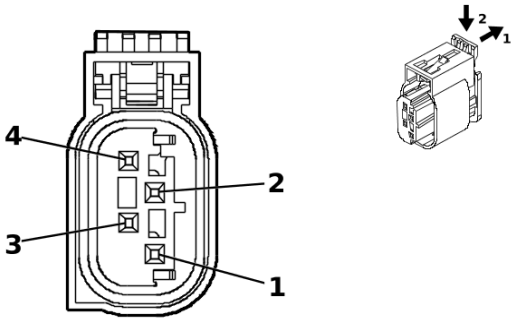

5215490

Connector Part Information

Harness Type: Liftgate Wiring Harness
OEM Connector: 13655424
Service Connector: Service by Harness - See Part Catalog
Description: 4-Way F 0.64 MTS Series, Sealed(BK)

Terminal Part Information

Terminal Type ID	Terminated Lead	Diagnostic Test Probe	Terminal Removal Tool
I	Not required	J-35616-64B (L-BU)	No Tool Required

B70 Liftgate Close Switch (TC2)

Pin	Size	Color	Circuit	Function	Terminal Type ID	Option
1	0.35	BK / VT	4656	Rear Closure Object Sensor Low Reference	I	—
2	0.35	GY / WH	4658	Rear Closure Switch LED Control	I	—
3	0.35	GN	4657	Rear Closure Switch Signal	I	—
4	—	—	—	Not Occupied	—	—

B74 Manifold Absolute Pressure Sensor (L84/L87)

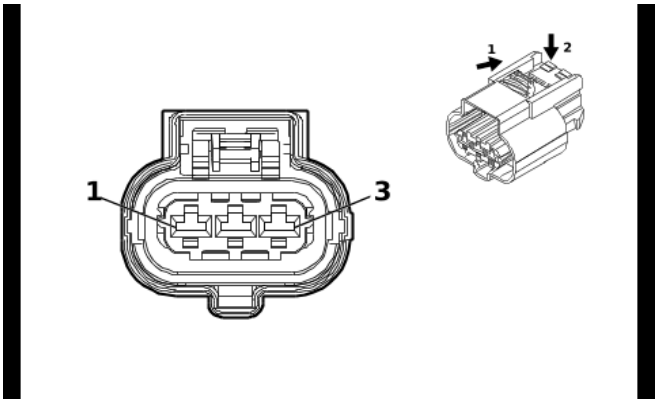

4900977

Connector Part Information

Harness Type: Engine Wiring Harness
OEM Connector: 35133579
Service Connector: 84815530
Description: 3-Way F 2.8 CTS Series, Sealed(BK)

Terminal Part Information

Terminal Type ID	Terminated Lead	Diagnostic Test Probe	Terminal Removal Tool
I	Not required	J-35616-35 (VT)	No Tool Required

B74 Manifold Absolute Pressure Sensor (L84/L87)

Pin	Size	Color	Circuit	Function	Terminal Type ID	Option
1	0.5	GY / RD	2704	Manifold Absolute Pressure Sensor 5V Reference	I	—
2	0.5	BK / GN	469	Manifold Absolute Pressure Sensor Low Reference	I	—
3	0.5	GN / WH	432	Manifold Absolute Pressure Sensor Signal	I	—

B75 Mass Airflow Sensor (LM2)

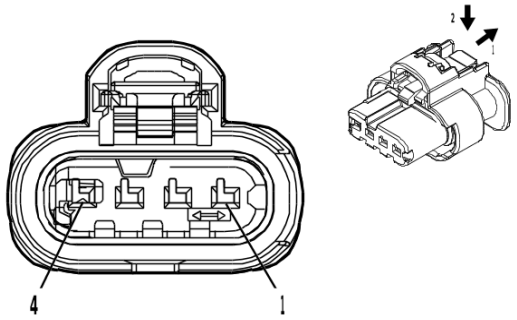

4934614

Connector Part Information

Harness Type: Engine Wiring Harness
OEM Connector: 1-2296696-2
Service Connector: 85519071
Description: 4-Way F 1.2 MCON-CB Series, Sealed(BK)

Terminal Part Information

Terminal Type ID	Terminated Lead	Diagnostic Test Probe	Terminal Removal Tool
I	Not required	J-35616-16 (LT GN)	No Tool Required

B75 Mass Airflow Sensor (LM2)

Pin	Size	Color	Circuit	Function	Terminal Type ID	Option
1	0.75	VT / BU	5294	Powertrain Main Relay Fused Supply Voltage 5	I	—
2	0.5	GN / WH	492	Mass Air Flow Sensor Signal	I	—
3	0.5	GN	4622	Engine Control Module LIN Bus 2	I	—
4	1	BK / WH	6151	Engine Control Module Ground	I	—

B75C Multifunction Intake Air Sensor (L84/L87)

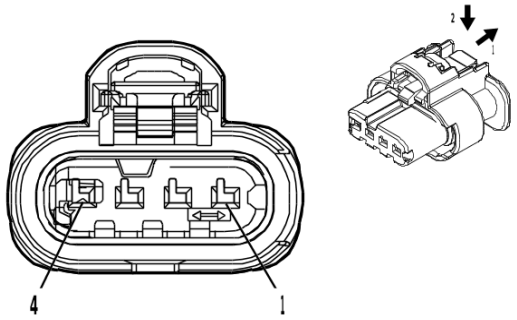

4934614

Connector Part Information

Harness Type: Engine Wiring Harness
OEM Connector: 1-2296696-2
Service Connector: 85519071
Description: 4-Way F 1.2 MCON-CB Series, Sealed(BK)

Terminal Part Information

Terminal Type ID	Terminated Lead	Diagnostic Test Probe	Terminal Removal Tool
I	Not required	J-35616-16 (LT GN)	No Tool Required

B75C Multifunction Intake Air Sensor (L84/L87)

Pin	Size	Color	Circuit	Function	Terminal Type ID	Option
1	0.75	VT / BU	5294	Powertrain Main Relay Fused Supply Voltage 5	I	—
2	0.5	GN / WH	492	Mass Air Flow Sensor Signal	I	—
3	0.5	GN	4622	Engine Control Module LIN Bus 2	I	—
4	1	BK / WH	6151	Engine Control Module Ground	I	—

B87 Rearview Driver Information Camera (UV2)

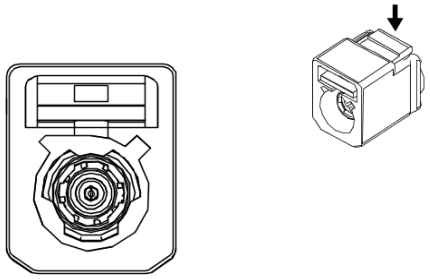

3293633

Connector Part Information

Harness Type: Rear License Plate Lamp Wiring Harness COAX
OEM Connector: 13519801
Service Connector: Service by Cable Assembly — See Part Catalog
Description: 1-Way F Coax Type(BK)

Terminal Part Information

Terminal Type ID	Terminated Lead	Diagnostic Test Probe	Terminal Removal Tool
I	Not required	No Tool Required	No Tool Required

B87 Rearview Driver Information Camera (UV2)

Pin	Size	Color	Circuit	Function	Terminal Type ID	Option
—	—	Coax Cable	—	Rear Vision Camera Coaxial Video Signal	I	—

B87 Rearview Driver Information Camera (UVB)

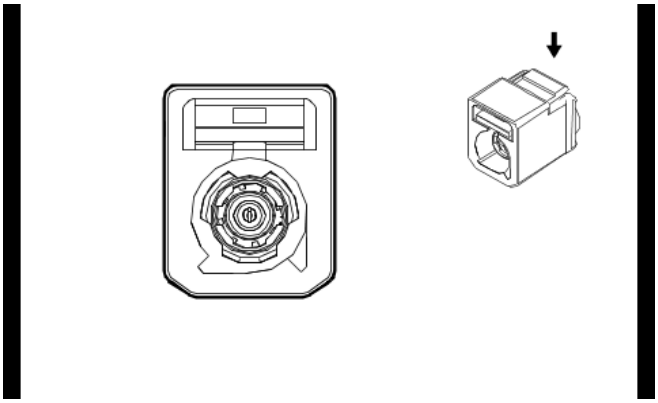

4895598

Connector Part Information

Harness Type: Rear License Plate Lamp Wiring Harness COAX
OEM Connector: 13519802
Service Connector: Service by Cable Assembly — See Part Catalog
Description: 1-Way F Coax Type(OG)

Terminal Part Information

Terminal Type ID	Terminated Lead	Diagnostic Test Probe	Terminal Removal Tool
I	Not required	No Tool Required	No Tool Required

B87 Rearview Driver Information Camera (UVB)

Pin	Size	Color	Circuit	Function	Terminal Type ID	Option
—	—	Coax Cable	—	Rear Vision Camera Coaxial Video Signal	I	—

B88CL Seat Belt Switch - 3rd Row Left (UH6)

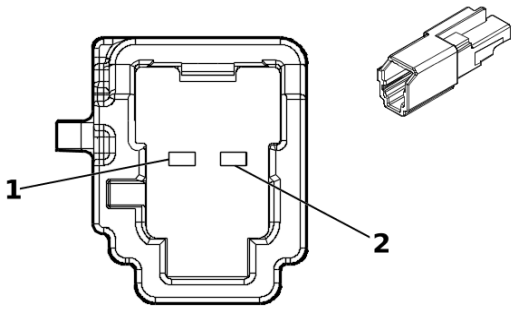

5360948

Connector Part Information

Harness Type: 3rd Row Seat Wiring Harness
OEM Connector: 6098-9073
Service Connector: Service by Harness - See Part Catalog
Description: 2-Way M 1.2 MCON Series(GY)

Terminal Part Information

Terminal Type ID	Terminated Lead	Diagnostic Test Probe	Terminal Removal Tool
I	Not required	J-35616-17 (L-GN)	No Tool Required

B88CL Seat Belt Switch - 3rd Row Left (UH6)

Pin	Size	Color	Circuit	Function	Terminal Type ID	Option
1	0.5	BK / OG	1363	Driver Seat Belt Switch Low Reference	I	—
2	0.5	GN / OG	3516	3rd Row Left Seat Belt Switch Signal	I	—

B88CM Seat Belt Switch - 3rd Row Middle (UH6)

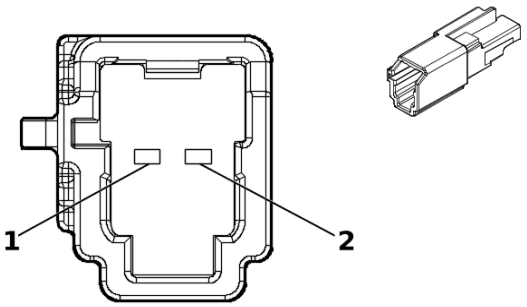

5355341

Connector Part Information

Harness Type: 3rd Row Seat Wiring Harness
OEM Connector: 6098-9070
Service Connector: Service by Harness - See Part Catalog
Description: 2-Way M 1.2 MCON Series(BK)

Terminal Part Information

Terminal Type ID	Terminated Lead	Diagnostic Test Probe	Terminal Removal Tool
I	Not required	J-35616-17 (L-GN)	No Tool Required

B88CM Seat Belt Switch - 3rd Row Middle (UH6)

Pin	Size	Color	Circuit	Function	Terminal Type ID	Option
1	0.5	BK / OG	1363	Driver Seat Belt Switch Low Reference	I	—
2	0.5	OG / GN	3700	3rd Row Center Seat Belt Switch Signal	I	—

B88CR Seat Belt Switch - 3rd Row Right (UH6)

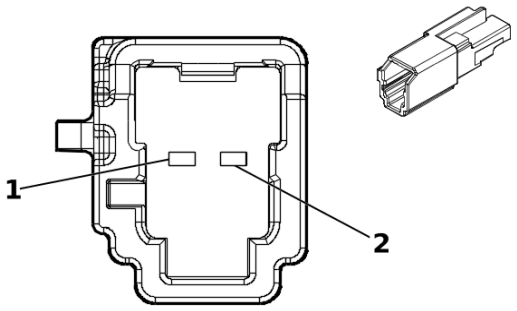

5360948

Connector Part Information

Harness Type: 3rd Row Seat Wiring Harness
OEM Connector: 6098-9073
Service Connector: Service by Harness - See Part Catalog
Description: 2-Way M 1.2 MCON Series(GY)

Terminal Part Information

Terminal Type ID	Terminated Lead	Diagnostic Test Probe	Terminal Removal Tool
I	Not required	J-35616-17 (L-GN)	No Tool Required

B88CR Seat Belt Switch - 3rd Row Right (UH6)

Pin	Size	Color	Circuit	Function	Terminal Type ID	Option
1	0.5	BK / OG	1363	Driver Seat Belt Switch Low Reference	I	—
2	0.5	VT / OG	3517	3rd Row Right Seat Belt Switch Signal	I	—

B88D Seat Belt Switch - Driver

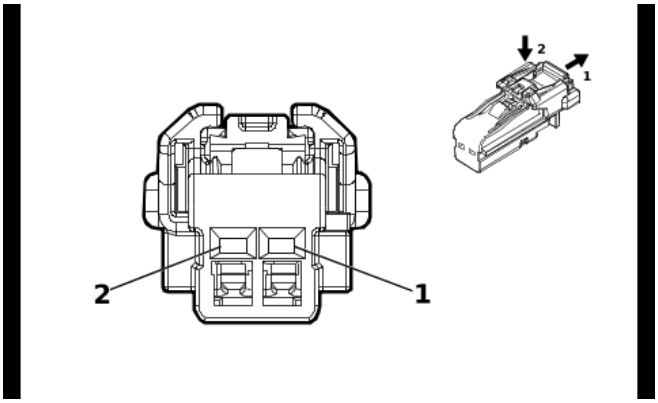

4115691

Connector Part Information

Harness Type: Front Seat Wiring Harness - Driver
OEM Connector: 6098-8988
Service Connector: Service by Harness - See Part Catalog
Description: 2-Way F 1.2 MCON Series(BK)

Terminal Part Information

Terminal Type ID	Terminated Lead	Diagnostic Test Probe	Terminal Removal Tool
I	Not required	J-35616-16 (L-GN)	No Tool Required

B88D Seat Belt Switch - Driver

Pin	Size	Color	Circuit	Function	Terminal Type ID	Option
1	0.5	BK / OG	1363	Driver Seat Belt Switch Low Reference	I	—
2	0.5	OG / GY	2652	Driver Seat Belt Sensor Signal	I	—

B88LR Seat Belt Switch - Left Rear (UH5)

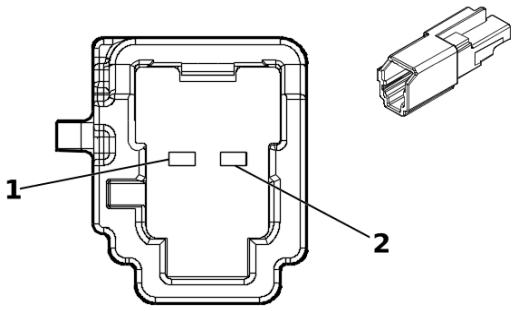

5360948

Connector Part Information

Harness Type: Rear Seat Wiring Harness - 2nd Row Left
OEM Connector: 6098-9073
Service Connector: Service by Harness - See Part Catalog
Description: 2-Way M 1.2 MCON Series(GY)

Terminal Part Information

Terminal Type ID	Terminated Lead	Diagnostic Test Probe	Terminal Removal Tool
I	Not required	J-35616-17 (L-GN)	No Tool Required

B88LR Seat Belt Switch - Left Rear (UH5)

Pin	Size	Color	Circuit	Function	Terminal Type ID	Option
1	0.5	BK / OG	1363	Driver Seat Belt Switch Low Reference	I	—
2	0.5	YE / OG	5161	Left Rear Seat Belt Switch Signal	I	—

B88MR Seat Belt Switch - Rear Middle (UH5)

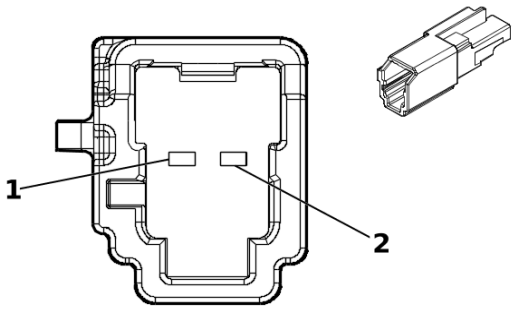

5360948

Connector Part Information

Harness Type: Rear Seat Wiring Harness - 2nd Row Left
OEM Connector: 6098-9073
Service Connector: Service by Harness - See Part Catalog
Description: 2-Way M 1.2 MCON Series(GY)

Terminal Part Information

Terminal Type ID	Terminated Lead	Diagnostic Test Probe	Terminal Removal Tool
I	Not required	J-35616-17 (L-GN)	No Tool Required

B88MR Seat Belt Switch - Rear Middle (UH5)

Pin	Size	Color	Circuit	Function	Terminal Type ID	Option
1	0.5	BK / OG	1363	Driver Seat Belt Switch Low Reference	I	—
2	0.5	BU / OG	5163	Rear Center Seat Belt Switch Signal	I	—

B88P Seat Belt Switch - Passenger

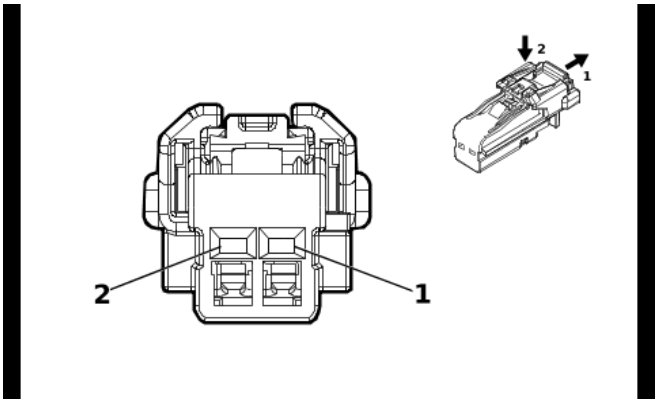

4115691

Connector Part Information

Harness Type: Front Seat Wiring Harness - Passenger
OEM Connector: 6098-8988
Service Connector: Service by Harness - See Part Catalog
Description: 2-Way F 1.2 MCON Series(BK)

Terminal Part Information

Terminal Type ID	Terminated Lead	Diagnostic Test Probe	Terminal Removal Tool
I	Not required	J-35616-16 (L-GN)	No Tool Required

B88P Seat Belt Switch - Passenger

Pin	Size	Color	Circuit	Function	Terminal Type ID	Option
1	0.5	BK / OG	1363	Driver Seat Belt Switch Low Reference	I	—
2	0.5	OG / VT	1362	Passenger Seat Belt Switch Signal	I	—

B88RR Seat Belt Switch - Right Rear (UH5)

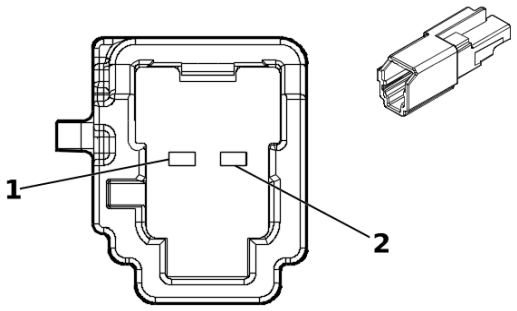

5360948

Connector Part Information

Harness Type: Rear Seat Wiring Harness - 2nd Row Right
OEM Connector: 6098-9073
Service Connector: Service by Harness - See Part Catalog
Description: 2-Way M 1.2 MCON Series(GY)

Terminal Part Information

Terminal Type ID	Terminated Lead	Diagnostic Test Probe	Terminal Removal Tool
I	Not required	J-35616-17 (L-GN)	No Tool Required

B88RR Seat Belt Switch - Right Rear (UH5)

Pin	Size	Color	Circuit	Function	Terminal Type ID	Option
1	0.5	BK / OG	1363	Driver Seat Belt Switch Low Reference	I	—
2	0.5	BN / OG	5162	Right Rear Seat Belt Switch Signal	I	—

B107 Accelerator Pedal Position Sensor

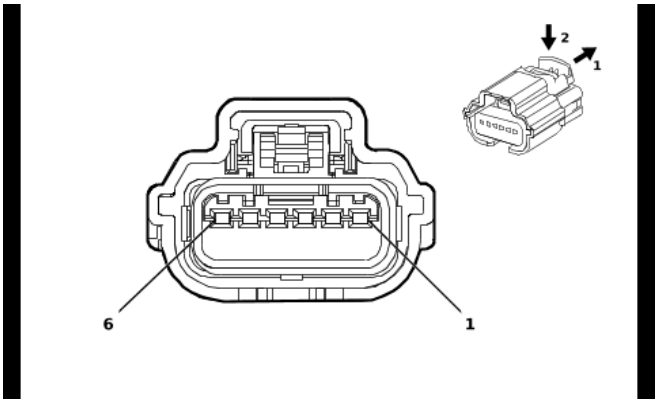

5157678

Connector Part Information

Harness Type: Body Wiring Harness
OEM Connector: 13526320
Service Connector: 84773558
Description: 6-Way F 64 Series, Sealed(BK)

Terminal Part Information

Terminal Type ID	Terminated Lead	Diagnostic Test Probe	Terminal Removal Tool
I	Not required	J-35616-64B (L-BU)	No Tool Required

B107 Accelerator Pedal Position Sensor

Pin	Size	Color	Circuit	Function	Terminal Type ID	Option
1	0.5	WH / RD	1164	Accelerator Pedal Position 5V Reference 1	I	—
2	0.5	YE / WH	1161	Accelerator Pedal Position Signal 1	I	—
3	0.5	BK / BU	1271	Accelerator Pedal Position Low Reference 1	I	—
4	0.5	BK / VT	1272	Accelerator Pedal Position Low Reference 2	I	—
5	0.5	GN / WH	1162	Accelerator Pedal Position Signal 2	I	—
6	0.5	BN / RD	1274	Accelerator Pedal Position 5V Reference 2	I	—

B110 Battery Monitor Module X1

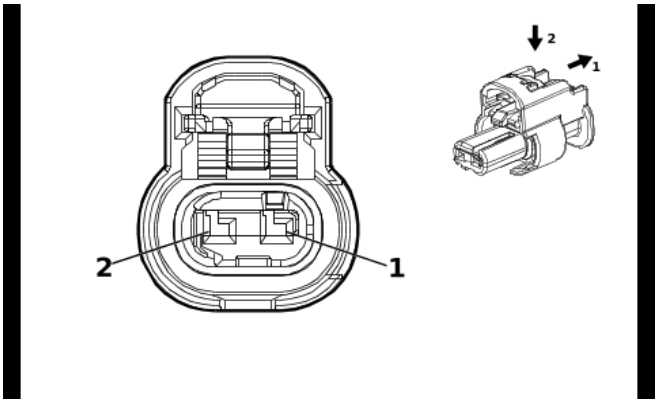

4649903

Connector Part Information

Harness Type: Body Wiring Harness
OEM Connector: 1-2296694-1
Service Connector: 85519075
Description: 2-Way F 1.2 MCON Series, Sealed(BK)

Terminal Part Information

Terminal Type ID	Terminated Lead	Diagnostic Test Probe	Terminal Removal Tool
I	Not required	J-35616-16 (LT GN)	No Tool Required

B110 Battery Monitor Module X1

Pin	Size	Color	Circuit	Function	Terminal Type ID	Option
1	0.35	GN / YE	2855	Body Control Module LIN Bus 9	I	—
2	0.75	RD / YE	2340	Battery Positive Voltage	I	—

B110 Battery Monitor Module X2

—

Connector Part Information

Harness Type: Starter Solenoid Cable
OEM Connector: 84892627
Service Connector: Service by Cable Assembly — See Part Catalog
Description: 1-Way Ring Terminal

Terminal Part Information

Terminal Type ID	Terminated Lead	Diagnostic Test Probe	Terminal Removal Tool
I	Not required	No Tool Required	No Tool Required

B110 Battery Monitor Module X2

Pin	Size	Color	Circuit	Function	Terminal Type ID	Option
A	35	BK	450	Ground	I	—
	35	BK	850	Ground		—

B117A Windshield Outside Moisture/Ambient Light and Humidity Sensor

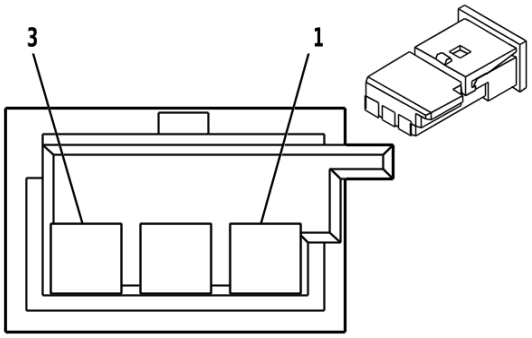

647970

Connector Part Information

Harness Type: Headlamp Automatic Control Ambient Light Sensor Wiring Harness
OEM Connector: 13153088
Service Connector: Service by Harness - See Part Catalog
Description: 3-Way F 0.64 Micro-Quadlock Series(BK)

Terminal Part Information

Terminal Type ID	Terminated Lead	Diagnostic Test Probe	Terminal Removal Tool
I	Not required	J-35616-64B (L-BU)	No Tool Required

B117A Windshield Outside Moisture/Ambient Light and Humidity Sensor

Pin	Size	Color	Circuit	Function	Terminal Type ID	Option
1	0.35	RD / YE	240	Battery Positive Voltage	I	—
2	0.35	GN / WH	4115	Body Control Module LIN Bus 5	I	—
3	0.35	BK / WH	1851	Signal Ground	I	—

B118 Windshield Washer Solvent Container Level Sensor

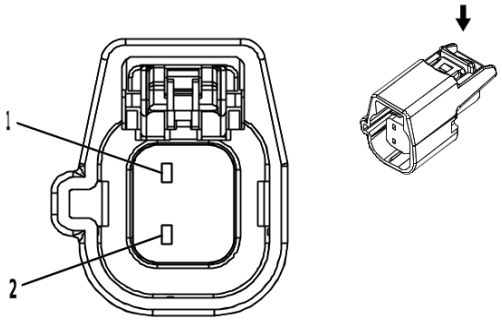

3958652

Connector Part Information

Harness Type: Body Wiring Harness
OEM Connector: 13593220
Service Connector: 13593220
Description: 2-Way F 1.5 Series, Sealed(L-GY)

Terminal Part Information

Terminal Type ID	Terminated Lead	Diagnostic Test Probe	Terminal Removal Tool
I	Not required	J-35616-14 (GN)	No Tool Required

B118 Windshield Washer Solvent Container Level Sensor

Pin	Size	Color	Circuit	Function	Terminal Type ID	Option
1	0.35	VT	185	Low Washer Fluid Indicator Control	I	—
2	0.75	BK	150	Ground	I	—

B130A Exhaust Gas Recirculation Temperature Sensor 1 (LM2)

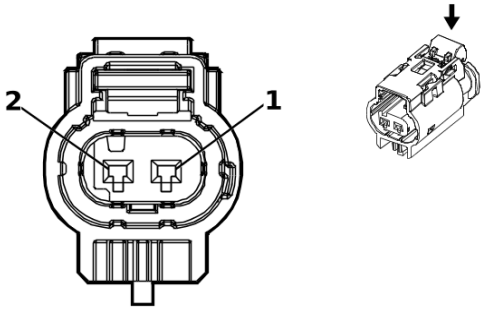

5207726

Connector Part Information

Harness Type: Engine Wiring Harness
OEM Connector: 10094237
Service Connector: 19332628
Description: 2-Way F 1.2 Multilock Series, Sealed(GY)

Terminal Part Information

Terminal Type ID	Terminated Lead	Diagnostic Test Probe	Terminal Removal Tool
I	Not required	J-35616-16 (LT GN)	No Tool Required

B130A Exhaust Gas Recirculation Temperature Sensor 1 (LM2)

Pin	Size	Color	Circuit	Function	Terminal Type ID	Option
1	0.5	BK / BU	6274	Exhaust Gas Recirculation Temperature Sensor Low Reference	I	—
2	0.5	WH / BN	3237	Exhaust Gas Recirculation Temperature Sensor Signal	I	—

B130C Exhaust Gas Recirculation Temperature Sensor 3 (LM2)

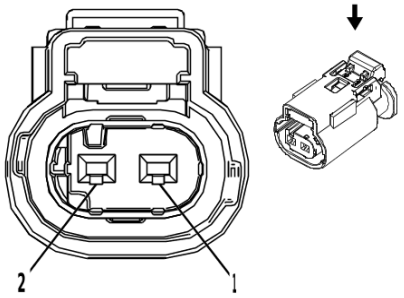

2830969

Connector Part Information

Harness Type: Engine Wiring Harness
OEM Connector: 10010339
Service Connector: 13587321
Description: 2-Way F 1.2 Multilock Series, Sealed(D-GY)

Terminal Part Information

Terminal Type ID	Terminated Lead	Diagnostic Test Probe	Terminal Removal Tool
I	Not required	J-35616-16 (LT GN)	No Tool Required

B130C Exhaust Gas Recirculation Temperature Sensor 3 (LM2)

Pin	Size	Color	Circuit	Function	Terminal Type ID	Option
1	0.5	WH / GY	3234	Exhaust Gas Recirculation Temperature Sensor 3 Signal	I	—
2	0.5	BK / GN	3235	Exhaust Gas Recirculation Temperature Sensor 3 Low Reference	I	—

B131A Exhaust Gas Temperature Sensor 1 (LM2)

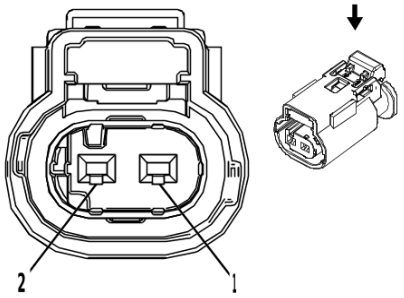

2830969

Connector Part Information

Harness Type: Engine Wiring Harness
OEM Connector: 10010339
Service Connector: 13587321
Description: 2-Way F 1.2 Multilock Series, Sealed(D-GY)

Terminal Part Information

Terminal Type ID	Terminated Lead	Diagnostic Test Probe	Terminal Removal Tool
I	Not required	J-35616-16 (LT GN)	No Tool Required

B131A Exhaust Gas Temperature Sensor 1 (LM2)

Pin	Size	Color	Circuit	Function	Terminal Type ID	Option
1	0.5	BU / WH	5277	Exhaust Gas Temperature Sensor 1 Signal	I	—
2	0.5	BK / BN	6782	Exhaust Gas Temperature Sensor 1 Low Reference	I	—

B131B Exhaust Gas Temperature Sensor 2 (LM2)

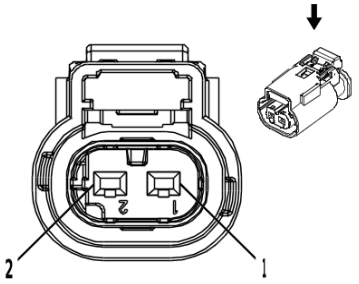

2717037

Connector Part Information

Harness Type: Engine Wiring Harness
OEM Connector: 10010338
Service Connector: 13587325
Description: 2-Way F 1.2 Multilock Series, Sealed(L-GY)

Terminal Part Information

Terminal Type ID	Terminated Lead	Diagnostic Test Probe	Terminal Removal Tool
I	Not required	J-35616-16 (LT GN)	No Tool Required

B131B Exhaust Gas Temperature Sensor 2 (LM2)

Pin	Size	Color	Circuit	Function	Terminal Type ID	Option
1	0.5	BU / GN	5377	Exhaust Gas Temperature Sensor 2 Signal	I	—
2	0.5	BK / BU	6783	Exhaust Gas Temperature Sensor 2 Low Reference	I	—

B131C Exhaust Gas Temperature Sensor 3 (LM2)

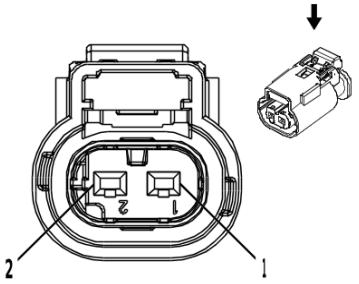

2717037

Connector Part Information

Harness Type: Engine Wiring Harness
OEM Connector: 10010338
Service Connector: 13587325
Description: 2-Way F 1.2 Multilock Series, Sealed(L-GY)

Terminal Part Information

Terminal Type ID	Terminated Lead	Diagnostic Test Probe	Terminal Removal Tool
I	Not required	J-35616-16 (LT GN)	No Tool Required

B131C Exhaust Gas Temperature Sensor 3 (LM2)

Pin	Size	Color	Circuit	Function	Terminal Type ID	Option
1	0.5	GY / GN	5378	Exhaust Gas Temperature Sensor 3 Signal	I	—
2	0.5	BK / GN	3657	Exhaust Gas Temperature Sensor 3 Low Reference	I	—

B136 Exhaust Particulate Matter Sensor (LM2)

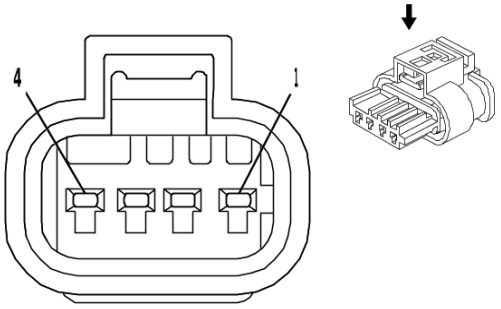

2487928

Connector Part Information

Harness Type: Chassis Wiring Harness
OEM Connector: 805-122-541
Service Connector: 13581092
Description: 4-Way F 1.2 Series, Sealed(BK)

Terminal Part Information

Terminal Type ID	Terminated Lead	Diagnostic Test Probe	Terminal Removal Tool
I	Not required	J-35616-16 (LT GN)	No Tool Required

B136 Exhaust Particulate Matter Sensor (LM2)

Pin	Size	Color	Circuit	Function	Terminal Type ID	Option
1	1	BK / WH	6151	Engine Control Module Ground	I	—
2	0.5	BU / GY	4054	Private Serial Data Powertrain CAN Bus [-] Serial Data	I	—
3	0.5	WH	4055	Private Serial Data Powertrain CAN Bus [+] Serial Data	I	—
4	1	VT / GN	4320	Powertrain Sensor Bus Enable	I	—

B137B Power Steering Shaft Torque/Position Sensor

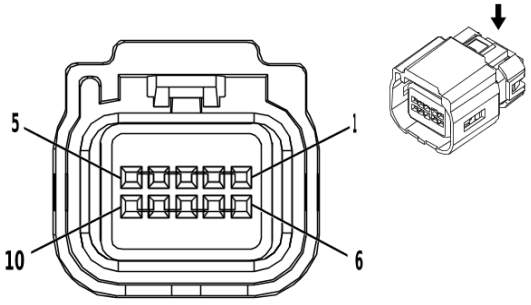

3608468

Connector Part Information

Harness Type: Power Steering Control Module Wiring Harness
OEM Connector: 38248369
Service Connector: Service by Harness - See Part Catalog
Description: 10-Way F 0.64 Kaizen Series, Sealed(BN)

Terminal Part Information

Terminal Type ID	Terminated Lead	Diagnostic Test Probe	Terminal Removal Tool
I	Not Available	No Tool Required	Not Available

B137B Power Steering Shaft Torque/Position Sensor

Pin	Size	Color	Circuit	Function	Terminal Type ID	Option
1	0.5	BU	8367	Handwheel Channel A Torque Pressure Sensor 1 SENT Signal	I	—
2	0.5	RD	8366	Handwheel Channel A High Reference	I	—
3	0.5	BK	8370	Handwheel Channel A Low Reference	I	—
4	0.5	WH / RD	8371	Handwheel Channel B High Reference	I	—
5	0.5	WH / BU	8372	Handwheel Channel B Torque Pressure Sensor 1 SENT Signal	I	—
6	0.5	VT	8368	Handwheel Channel A Torque Pressure Sensor 2 SENT Signal	I	—
7	0.5	OG	8369	Handwheel Channel A Angle Position Sensor SENT Signal	I	—
8	0.5	GY	8375	Handwheel Channel B Low Reference	I	—
9	0.5	YE	8374	Handwheel Channel B Angle Position Sensor SENT Signal	I	—
10	0.5	GN	8373	Handwheel Channel B Torque Pressure Sensor 2 SENT Signal	I	—

B139 Transfer Case Two/Four Wheel Drive Actuator Position Sensor (NP0/NQH)

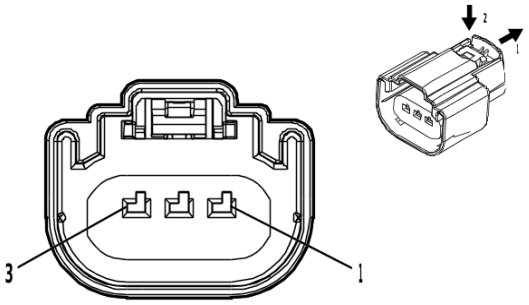

4569745

Connector Part Information

Harness Type: Engine Wiring Harness
OEM Connector: 33343869
Service Connector: 19179750
Description: 3-Way F 1.5 MX Series, Sealed(BK)

Terminal Part Information

Terminal Type ID	Terminated Lead	Diagnostic Test Probe	Terminal Removal Tool
I	Not required	J-35616-2A (GY)	No Tool Required

B139 Transfer Case Two/Four Wheel Drive Actuator Position Sensor (NP0/NQH)

Pin	Size	Color	Circuit	Function	Terminal Type ID	Option
1	0.5	WH / RD	7477	Gear Position Sensor 5V Reference	I	—
2	0.5	WH / GN	7479	Rotary Position Sensor Signal	I	—
3	0.5	YE / BK	7478	Gear Position Sensor Low Reference	I	—

B150 Fuel Tank Pressure Sensor (L84/L87)

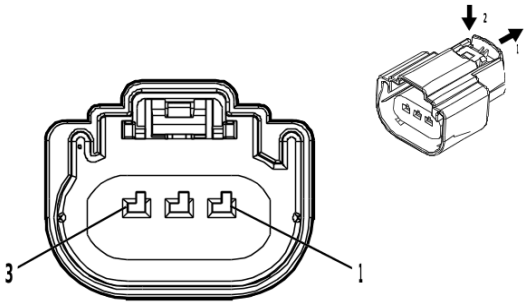

4589538

Connector Part Information

Harness Type: Chassis Wiring Harness
OEM Connector: 160073-3106
Service Connector: 84569854
Description: 3-Way F 1.5 MX Series, Sealed(GY)

Terminal Part Information

Terminal Type ID	Terminated Lead	Diagnostic Test Probe	Terminal Removal Tool
I	Not required	J-35616-14 (GN)	No Tool Required

B150 Fuel Tank Pressure Sensor (L84/L87)

Pin	Size	Color	Circuit	Function	Terminal Type ID	Option
1	0.5	BU	890	Fuel Tank Pressure Sensor Signal	I	—
2	0.5	BK / BN	6284	Fuel Tank Pressure Sensor Low Reference	I	—
3	0.5	YE / RD	2709	Fuel Tank Pressure Sensor 5V Reference	I	—

B159BL Body Side Rear Window Glass Breakage Sensor - Left (UTJ)

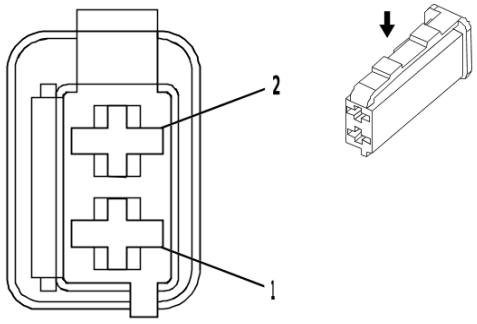

2339593

Connector Part Information

Harness Type: Body Wiring Harness
OEM Connector: 19179871
Service Connector: 13580951
Description: 2-Way F 1.6 Timer Series(BK)

Terminal Part Information

Terminal Type ID	Terminated Lead	Diagnostic Test Probe	Terminal Removal Tool
I	Not required	J-35616-14 (GN)	No Tool Required

B159BL Body Side Rear Window Glass Breakage Sensor - Left (UTJ)

Pin	Size	Color	Circuit	Function	Terminal Type ID	Option
1	0.5	BU / VT	7597	Glass Breakage Sensor Signal	I	—
2	0.35	VT / BU	7598	Glass Breakage Sensor 2 Signal	I	—

B159BR Body Side Rear Window Glass Breakage Sensor - Right (UTJ)

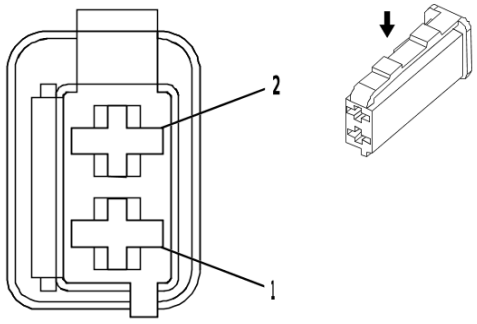

2339593

Connector Part Information

Harness Type: Body Wiring Harness
OEM Connector: 19179871
Service Connector: 13580951
Description: 2-Way F 1.6 Timer Series(BK)

Terminal Part Information

Terminal Type ID	Terminated Lead	Diagnostic Test Probe	Terminal Removal Tool
I	Not required	J-35616-14 (GN)	No Tool Required

B159BR Body Side Rear Window Glass Breakage Sensor - Right (UTJ)

Pin	Size	Color	Circuit	Function	Terminal Type ID	Option
1	0.5	YE / BK	2930	Glass Breakage Sensor Supply Voltage	I	—
2	0.5	BU / VT	7597	Glass Breakage Sensor Signal	I	—

B161LF Electronic Suspension Wheel Front Vertical Accelerometer - Left (Z95)

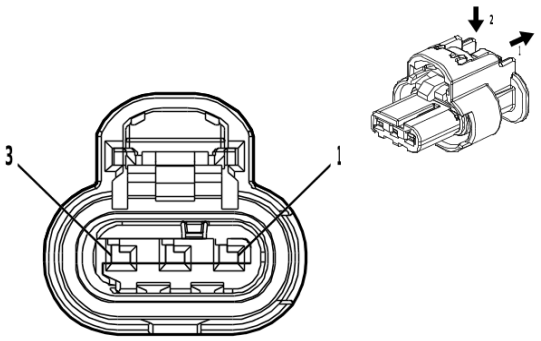

4778903

Connector Part Information

Harness Type: Chassis Wiring Harness
OEM Connector: 1-2296695-2
Service Connector: 19371206
Description: 3-Way F 1.2 MCON-CB Series, Sealed(BK)

Terminal Part Information

Terminal Type ID	Terminated Lead	Diagnostic Test Probe	Terminal Removal Tool
I	Not required	J-35616-16 (LT GN)	No Tool Required

B161LF Electronic Suspension Wheel Front Vertical Accelerometer - Left (Z95)

Pin	Size	Color	Circuit	Function	Terminal Type ID	Option
1	0.5	YE / RD	1817	Left Front Vertical Suspension Acceleration Sensor Voltage Reference	I	—
2	0.5	BK / BN	1099	Left Front Vertical Suspension Acceleration Sensor Low Reference	I	—
3	0.5	WH	1100	Left Front Vertical Suspension Acceleration Sensor Signal	I	—

B161RF Electronic Suspension Wheel Front Vertical Accelerometer - Right (Z95)

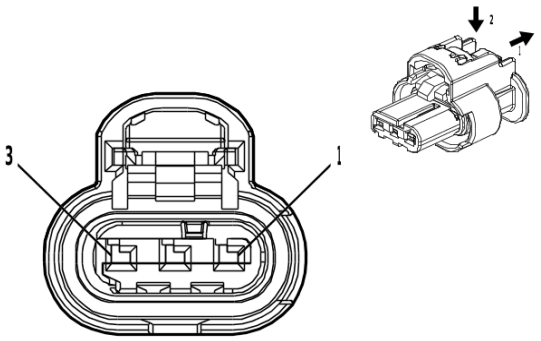

4778903

Connector Part Information

Harness Type: Chassis Wiring Harness
OEM Connector: 1-2296695-2
Service Connector: 19371206
Description: 3-Way F 1.2 MCON-CB Series, Sealed(BK)

Terminal Part Information

Terminal Type ID	Terminated Lead	Diagnostic Test Probe	Terminal Removal Tool
I	Not required	J-35616-16 (LT GN)	No Tool Required

B161RF Electronic Suspension Wheel Front Vertical Accelerometer - Right (Z95)

Pin	Size	Color	Circuit	Function	Terminal Type ID	Option
1	0.5	BN / RD	1819	Right Front Vertical Suspension Acceleration Sensor Voltage Reference	I	—
2	0.5	BK / GN	1105	Right Front Vertical Suspension Acceleration Sensor Low Reference	I	—
3	0.5	WH	1106	Right Front Vertical Suspension Acceleration Sensor Signal	I	—

B162LR Electronic Suspension Rear Vertical Accelerometer - Left (Z95)

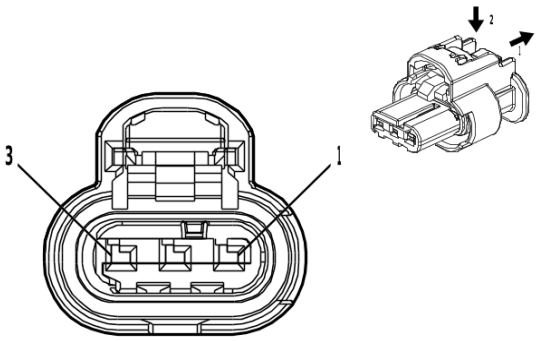

4778903

Connector Part Information

Harness Type: Chassis Wiring Harness
OEM Connector: 1-2296695-2
Service Connector: 19371206
Description: 3-Way F 1.2 MCON-CB Series, Sealed(BK)

Terminal Part Information

Terminal Type ID	Terminated Lead	Diagnostic Test Probe	Terminal Removal Tool
I	Not required	J-35616-16 (LT GN)	No Tool Required

B162LR Electronic Suspension Rear Vertical Accelerometer - Left (Z95)

Pin	Size	Color	Circuit	Function	Terminal Type ID	Option
1	0.5	VT / RD	1818	Left Rear Vertical Suspension Acceleration Sensor Voltage Reference	I	—
2	0.5	BK / VT	1833	Left Rear Vertical Suspension Acceleration Sensor Low Reference	I	—
3	0.5	YE / BN	1103	Left Rear Vertical Suspension Acceleration Sensor Signal	I	—

B162RR Electronic Suspension Rear Vertical Accelerometer - Right (Z95)

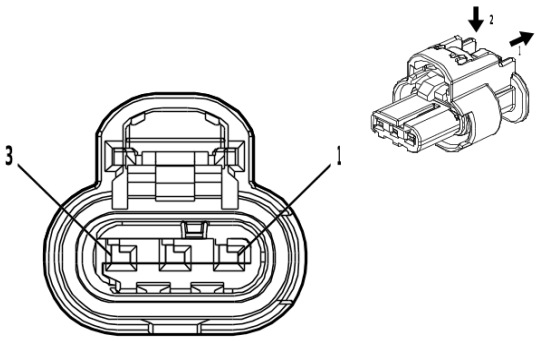

4778903

Connector Part Information

Harness Type: Chassis Wiring Harness
OEM Connector: 1-2296695-2
Service Connector: 19371206
Description: 3-Way F 1.2 MCON-CB Series, Sealed(BK)

Terminal Part Information

Terminal Type ID	Terminated Lead	Diagnostic Test Probe	Terminal Removal Tool
I	Not required	J-35616-16 (LT GN)	No Tool Required

B162RR Electronic Suspension Rear Vertical Accelerometer - Right (Z95)

Pin	Size	Color	Circuit	Function	Terminal Type ID	Option
1	0.5	GY / RD	1820	Right Rear Vertical Suspension Acceleration Sensor Voltage Reference	I	—
2	0.5	BK / BU	1108	Right Rear Vertical Suspension Acceleration Sensor Low Reference	I	—
3	0.5	YE / BU	1109	Right Rear Vertical Suspension Acceleration Sensor Signal	I	—

B172LF Front Disc Brake Pad Wear Sensor - Left (JBK)

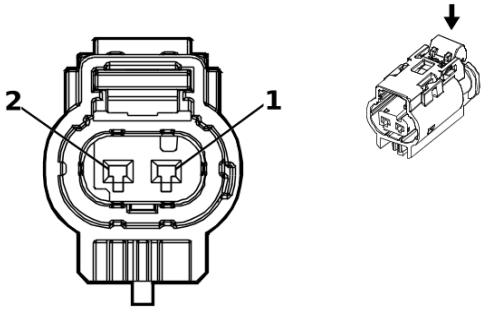

3747581

Connector Part Information

Harness Type: Front Wheel Speed Sensor Wiring Harness
OEM Connector: 13583195
Service Connector: Service by Harness - See Part Catalog
Description: 2-Way F 1.2 Multilock Series, Sealed(BK)

Terminal Part Information

Terminal Type ID	Terminated Lead	Diagnostic Test Probe	Terminal Removal Tool
I	Not Available	No Tool Required	Not Available

B172LF Front Disc Brake Pad Wear Sensor - Left (JBK)

Pin	Size	Color	Circuit	Function	Terminal Type ID	Option
1	0.75	BN / BU	1602	Front Brake Pad Wear Sensor Signal	I	—
2	0.5	BK	2050	Ground	I	—

B172LR Rear Disc Brake Pad Wear Sensor - Left (JBK)

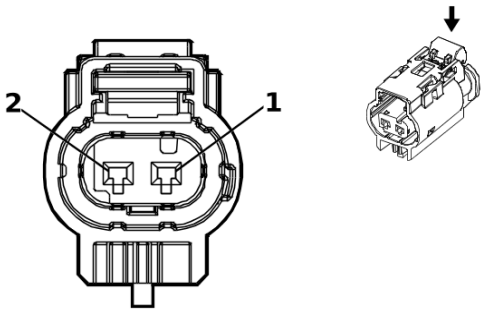

3747581

Connector Part Information

Harness Type: Chassis Rear Wiring Harness Extension Harness
OEM Connector: 10094234
Service Connector: Service by Harness - See Part Catalog
Description: 2-Way F 1.2 Multilock Series, Sealed(BK)

Terminal Part Information

Terminal Type ID	Terminated Lead	Diagnostic Test Probe	Terminal Removal Tool
I	Not required	J-35616-16 (L-GN)	No Tool Required

B172LR Rear Disc Brake Pad Wear Sensor - Left (JBK)

Pin	Size	Color	Circuit	Function	Terminal Type ID	Option
1	0.75	GN / YE	1616	Rear Brake Pad Wear Sensor Signal	I	—
2	0.75	BK	2050	Ground	I	—

B174G Front View Driver Information Camera - Grille (UV2/UVS)

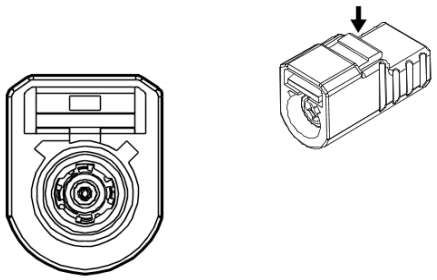

4883521

Connector Part Information

Harness Type: Front Object Alarm Sensor Wiring Harness COAX
OEM Connector: 35330759
Service Connector: Service by Cable Assembly — See Part Catalog
Description: 1-Way F Coax Type

Terminal Part Information

Terminal Type ID	Terminated Lead	Diagnostic Test Probe	Terminal Removal Tool
I	Not required	No Tool Required	No Tool Required

B174G Front View Driver Information Camera - Grille (UV2/UVS)

Pin	Size	Color	Circuit	Function	Terminal Type ID	Option
—	—	Coax Cable	—	Front Vision Camera 1 Coaxial Video Signal	I	—

B174W Front View Camera - Windshield (UEU)

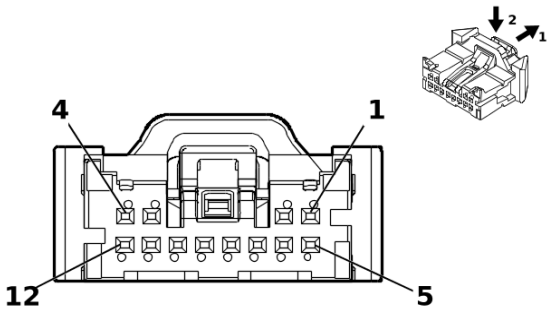

5360826

Connector Part Information

Harness Type: Headlining Trim Panel Wiring Harness
OEM Connector: 35068239
Service Connector: 13529935
Description: 12-Way F 050 CTS Series(BK)

Terminal Part Information

Terminal Type ID	Terminated Lead	Diagnostic Test Probe	Terminal Removal Tool
I	84944580	EL-35616-58 (BK)	EL-38125-58

B174W Front View Camera - Windshield (UEU)

Pin	Size	Color	Circuit	Function	Terminal Type ID	Option
1	0.35	BK / WH	1851	Signal Ground	I	—
2	—	—	—	Not Occupied	—	—
3	0.35	RD / YE	240	Battery Positive Voltage	I	—
4	—	—	—	Not Occupied	—	—
5	0.35 0.35	BU / GY BU / YE	4105 4979	AUTOSAR CAN Bus [+] 8 Serial Data AUTOSAR CAN Bus [+] 2 Serial Data	I I	(UEU+ UGN) (UEU+ UHY)
6	0.35 0.35	WH / GY WH	4104 4978	AUTOSAR CAN Bus [-] 8 Serial Data AUTOSAR CAN Bus [-] 2 Serial Data	I I	(UEU+ UGN) (UEU+ UHY)
7	0.35 0.35	BU / YE BU / GY	4979 4105	AUTOSAR CAN Bus [+] 2 Serial Data AUTOSAR CAN Bus [+] 8 Serial Data	I I	(UEU+ UHY) (UGN/ UVZ)
8	0.35 0.35	WH WH / GY	4978 4104	AUTOSAR CAN Bus [-] 2 Serial Data AUTOSAR CAN Bus [-] 8 Serial Data	I I	(UEU+ UHY) (UGN/ UVZ)
9 - 12	—	—	—	Not Occupied	—	—

B193A Charge Air Cooler Air Temperature Sensor - Inlet (LM2)

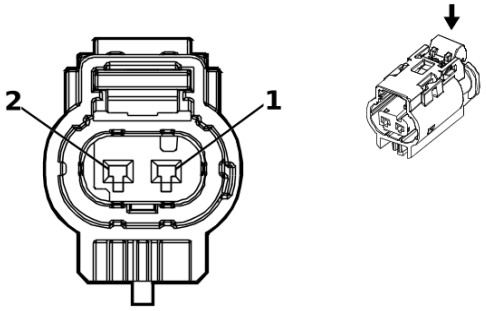

3747581

Connector Part Information

Harness Type: Engine Wiring Harness
OEM Connector: 10094234
Service Connector: 84727362
Description: 2-Way F 1.2 Multilock Series, Sealed(BK)

Terminal Part Information

Terminal Type ID	Terminated Lead	Diagnostic Test Probe	Terminal Removal Tool
I	Not required	J-35616-16 (LT GN)	No Tool Required

B193A Charge Air Cooler Air Temperature Sensor - Inlet (LM2)

Pin	Size	Color	Circuit	Function	Terminal Type ID	Option
1	0.5	YE / BK	3682	Charge Air Cooler Inlet Temperature Sensor Low Reference	I	—
2	0.5	GN	3683	Charge Air Cooler Inlet Temperature Sensor Signal	I	—

B193B Charge Air Cooler Air Temperature Sensor - Outlet (LM2)

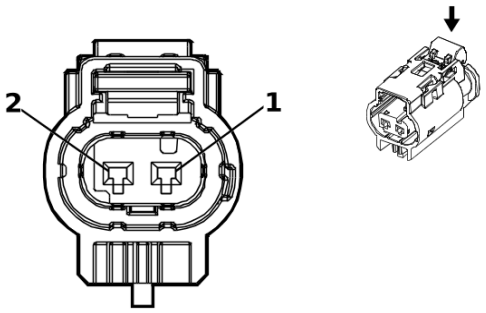

3747581

Connector Part Information

Harness Type: Engine Wiring Harness
OEM Connector: 10094234
Service Connector: 84727362
Description: 2-Way F 1.2 Multilock Series, Sealed(BK)

Terminal Part Information

Terminal Type ID	Terminated Lead	Diagnostic Test Probe	Terminal Removal Tool
I	Not required	J-35616-16 (LT GN)	No Tool Required

B193B Charge Air Cooler Air Temperature Sensor - Outlet (LM2)

Pin	Size	Color	Circuit	Function	Terminal Type ID	Option
1	0.5	YE / BU	3680	Charge Air Cooler Outlet Temperature Sensor Low Reference	I	—
2	0.5	BN	3681	Charge Air Cooler Outlet Temperature Sensor Signal	I	—

B195A Nitrogen Oxides Sensor 1 (LM2)

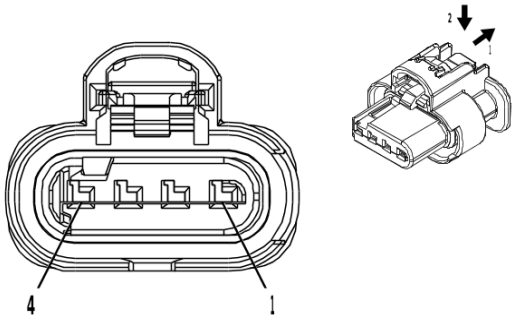

4210809

Connector Part Information

Harness Type: Engine Wiring Harness
OEM Connector: 1-2296696-1
Service Connector: 85518225
Description: 4-Way F 1.2 MCON-CB Series, Sealed(BK)

Terminal Part Information

Terminal Type ID	Terminated Lead	Diagnostic Test Probe	Terminal Removal Tool
I	Not required	J-35616-16 (LT GN)	No Tool Required

B195A Nitrogen Oxides Sensor 1 (LM2)

Pin	Size	Color	Circuit	Function	Terminal Type ID	Option
1	1	VT / GN	4320	Powertrain Sensor Bus Enable	I	—
2	0.5	WH	4055	Private Serial Data Powertrain CAN Bus [+] Serial Data	I	—
3	0.5	BU / GY	4054	Private Serial Data Powertrain CAN Bus [-] Serial Data	I	—
4	1	BK / WH	6151	Engine Control Module Ground	I	—

B195B Nitrogen Oxides Sensor 2 (LM2)

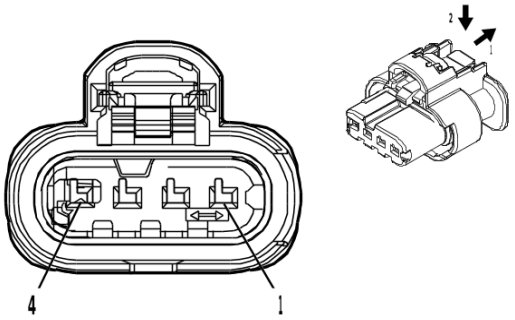

4934614

Connector Part Information

Harness Type: Chassis Wiring Harness
OEM Connector: 1-2296696-2
Service Connector: 85519071
Description: 4-Way F 1.2 MCON-CB Series, Sealed(BK)

Terminal Part Information

Terminal Type ID	Terminated Lead	Diagnostic Test Probe	Terminal Removal Tool
I	Not required	J-35616-16 (LT GN)	No Tool Required

B195B Nitrogen Oxides Sensor 2 (LM2)

Pin	Size	Color	Circuit	Function	Terminal Type ID	Option
1	1	VT / GN	4320	Powertrain Sensor Bus Enable	I	—
2	0.5	WH	4055	Private Serial Data Powertrain CAN Bus [+] Serial Data	I	—
3	0.5	BU / GY	4054	Private Serial Data Powertrain CAN Bus [-] Serial Data	I	—
4	1	BK / WH	6151	Engine Control Module Ground	I	—

B195C Nitrogen Oxides Sensor 3 (LM2)

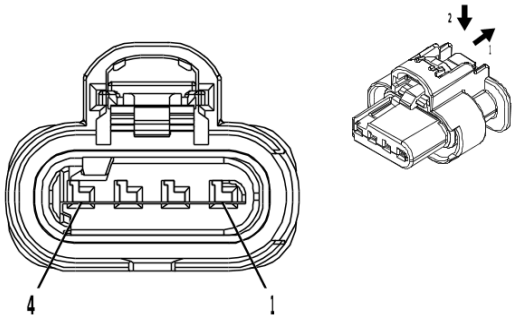

4210809

Connector Part Information

Harness Type: Chassis Wiring Harness
OEM Connector: 1-2296696-1
Service Connector: 85518225
Description: 4-Way F 1.2 MCON-CB Series, Sealed(BK)

Terminal Part Information

Terminal Type ID	Terminated Lead	Diagnostic Test Probe	Terminal Removal Tool
I	Not required	J-35616-16 (LT GN)	No Tool Required

B195C Nitrogen Oxides Sensor 3 (LM2)

Pin	Size	Color	Circuit	Function	Terminal Type ID	Option
1	1	VT / GN	4320	Powertrain Sensor Bus Enable	I	—
2	0.5	WH	4055	Private Serial Data Powertrain CAN Bus [+] Serial Data	I	—
3	0.5	BU / GY	4054	Private Serial Data Powertrain CAN Bus [-] Serial Data	I	—
4	1	BK / WH	6151	Engine Control Module Ground	I	—

B203 Radiator Coolant Temperature Sensor (LM2)

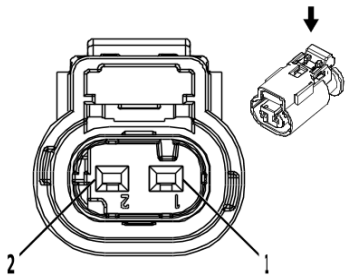

2717066

Connector Part Information

Harness Type: Engine Wiring Harness
OEM Connector: 10010337
Service Connector: 13587326
Description: 2-Way F 1.2 Multilock Series, Sealed(BK)

Terminal Part Information

Terminal Type ID	Terminated Lead	Diagnostic Test Probe	Terminal Removal Tool
I	Not required	J-35616-16 (LT GN)	No Tool Required

B203 Radiator Coolant Temperature Sensor (LM2)

Pin	Size	Color	Circuit	Function	Terminal Type ID	Option
1	0.5	YE / BK	3000	Coolant Temperature Sensor 2 Signal	I	—
2	0.5	BK / GN	580	Engine Control Sensors Low Reference 2	I	—

B212 Reductant Tank Fluid Sensor (LM2)

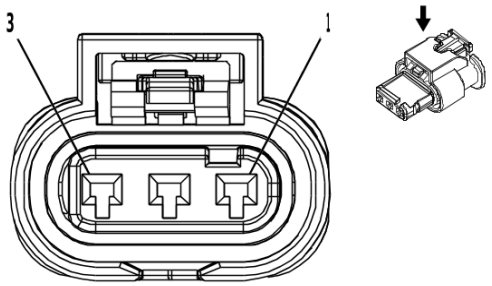

2750649

Connector Part Information

Harness Type: Emission Reduction Fluid Tank Reservoir Wire Harness
OEM Connector: 13722729
Service Connector: Service by Harness - See Part Catalog
Description: 3-Way F 1.2 MCON Series, Sealed(BK)

Terminal Part Information

Terminal Type ID	Terminated Lead	Diagnostic Test Probe	Terminal Removal Tool
I	Not required	J-35616-16 (LT GN)	No Tool Required

B212 Reductant Tank Fluid Sensor (LM2)

Pin	Size	Color	Circuit	Function	Terminal Type ID	Option
1	0.5	BK	7290	Diesel Exhaust Fluid Sensor Voltage Reference 1	I	—
2	0.5	YE / GN	7284	Diesel Exhaust Fluid Liquid Quality Temperature Signal	I	—
3	0.5	BK / YE	8434	Diesel Exhaust Fluid Sensor Low Reference	I	—

B218L Side Obstacle Detection Control Module - Left (UKC/UKV)

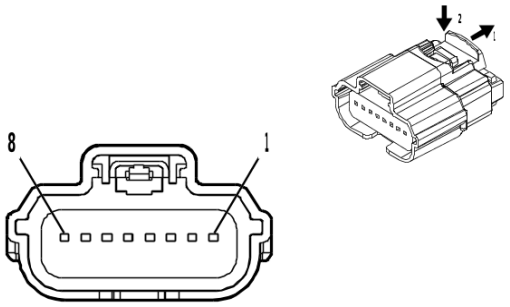

4708234

Connector Part Information

Harness Type: Rear Object Alarm Sensor Wiring Harness
OEM Connector: 31404-9110
Service Connector: Service by Harness - See Part Catalog
Description: 8-Way F 64 Series, Sealed(BK)

Terminal Part Information

Terminal Type ID	Terminated Lead	Diagnostic Test Probe	Terminal Removal Tool
I	Not required	J-35616-64B (L-BU)	No Tool Required

B218L Side Obstacle Detection Control Module - Left (UKC/UKV)

Pin	Size	Color	Circuit	Function	Terminal Type ID	Option
1	0.5	WH	4087	Private Serial Data Side Obstacle Detection CAN Bus [-] Serial Data	I	—
2	0.5	BU / VT	4088	Private Serial Data Side Obstacle Detection CAN Bus [+] Serial Data	I	—
3	0.5	BK	1450	Ground	I	—
4	0.35	WH	4100	AUTOSAR CAN Bus [-] 4 Serial Data	I	—
5	0.5	WH	4100	AUTOSAR CAN Bus [-] 4 Serial Data	I	—
6	0.5	BU / VT	4101	AUTOSAR CAN Bus [+] 4 Serial Data	I	—
7	0.35	BU / VT	4101	AUTOSAR CAN Bus [+] 4 Serial Data	I	—
8	0.5	RD / BN	4940	Battery Positive Voltage	I	—

B218R Side Obstacle Detection Control Module - Right (UKC/UKV)

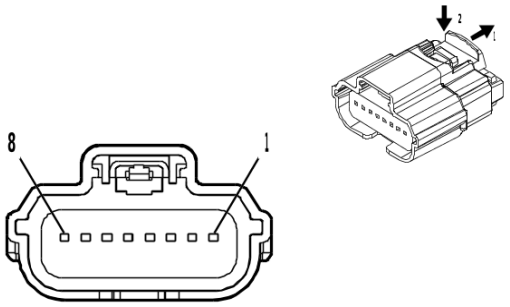

4708234

Connector Part Information

Harness Type: Rear Object Alarm Sensor Wiring Harness
OEM Connector: 31404-9532
Service Connector: Service by Harness - See Part Catalog
Description: 8-Way F 64 Series, Sealed(BK)

Terminal Part Information

Terminal Type ID	Terminated Lead	Diagnostic Test Probe	Terminal Removal Tool
I	Not required	J-35616-64B (L-BU)	No Tool Required

B218R Side Obstacle Detection Control Module - Right (UKC/UKV)

Pin	Size	Color	Circuit	Function	Terminal Type ID	Option
1	0.5	WH	4087	Private Serial Data Side Obstacle Detection CAN Bus [-] Serial Data	I	—
2	0.5	BU / VT	4088	Private Serial Data Side Obstacle Detection CAN Bus [+] Serial Data	I	—
3	0.5	BK	1450	Ground	I	—
4	—	—	—	Not Occupied	—	—
5	0.5	WH	4100	AUTOSAR CAN Bus [-] 4 Serial Data	I	—
6	0.5	BU / VT	4101	AUTOSAR CAN Bus [+] 4 Serial Data	I	—
7	—	—	—	Not Occupied	—	—
8	0.5	RD / BN	4940	Battery Positive Voltage	I	—

B225L Sideview Camera - Left (UV2)

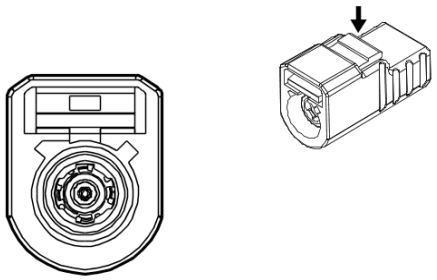

4883521

Connector Part Information

Harness Type: Driver Outside Rearview Mirror COAX
OEM Connector: 13514007
Service Connector: Service by Cable Assembly — See Part Catalog
Description: 1-Way F Coax Type(BK)

Terminal Part Information

Terminal Type ID	Terminated Lead	Diagnostic Test Probe	Terminal Removal Tool
I	Not required	No Tool Required	No Tool Required

B225L Sideview Camera - Left (UV2)

Pin	Size	Color	Circuit	Function	Terminal Type ID	Option
—	—	Coax Cable	—	Coaxial Antenna TV1 Signal	I	—

B225R Sideview Camera - Right (UV2)

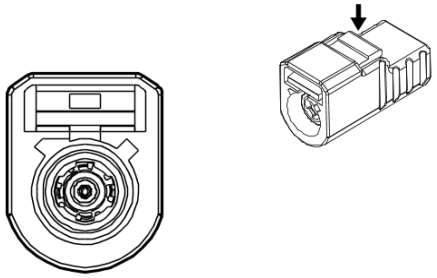

4883521

Connector Part Information

Harness Type: Passenger Outside Rearview Mirror COAX
OEM Connector: 13514007
Service Connector: Service by Cable Assembly — See Part Catalog
Description: 1-Way F Coax Type(BK)

Terminal Part Information

Terminal Type ID	Terminated Lead	Diagnostic Test Probe	Terminal Removal Tool
I	Not required	No Tool Required	No Tool Required

B225R Sideview Camera - Right (UV2)

Pin	Size	Color	Circuit	Function	Terminal Type ID	Option
—	—	Coax Cable	—	Coaxial Antenna TV2 Signal	I	—

B233B Forward Range Radar Sensor - Long Range (UGN)

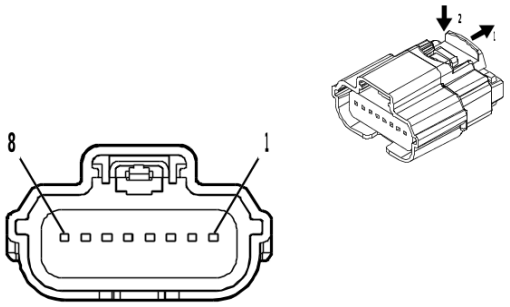

4708234

Connector Part Information

Harness Type: Body Wiring Harness
OEM Connector: 13526723
Service Connector: 84677313
Description: 8-Way F 64 Series, Sealed(BK)

Terminal Part Information

Terminal Type ID	Terminated Lead	Diagnostic Test Probe	Terminal Removal Tool
I	Not required	J-35616-64B (L-BU)	No Tool Required

B233B Forward Range Radar Sensor - Long Range (UGN)

Pin	Size	Color	Circuit	Function	Terminal Type ID	Option
1 - 2	—	—	—	Not Occupied	—	—
3	0.5	BU / GY	4105	AUTOSAR CAN Bus [+] 8 Serial Data	I	—
4	0.5	WH / GY	4104	AUTOSAR CAN Bus [-] 8 Serial Data	I	—
5	0.5	RD / GN	3140	Battery Positive Voltage	I	—
6 - 7	—	—	—	Not Occupied	—	—
8	0.75	BK / WH	251	Signal Ground	I	—

B233LR Short Range Radar Rear Sensor - Left (UGN+UVZ)

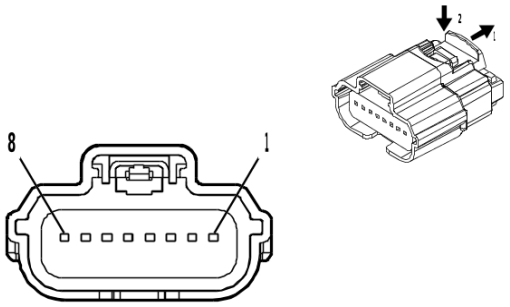

4708234

Connector Part Information

Harness Type: Rear Object Alarm Sensor Wiring Harness
OEM Connector: 31404-9552
Service Connector: Service by Harness - See Part Catalog
Description: 8-Way F 64 Series, Sealed(BK)

Terminal Part Information

Terminal Type ID	Terminated Lead	Diagnostic Test Probe	Terminal Removal Tool
I	Not required	J-35616-64B (L-BU)	No Tool Required

B233LR Short Range Radar Rear Sensor - Left (UGN+UVZ)

Pin	Size	Color	Circuit	Function	Terminal Type ID	Option
1	0.5	BK	1450	Ground	I	—
2 - 3	—	—	—	Not Occupied	—	—
4	0.75	RD / GN	3140	Battery Positive Voltage	I	—
5	0.35	WH / GY	4104	AUTOSAR CAN Bus [-] 8 Serial Data	I	—
6	0.35	BU / GY	4105	AUTOSAR CAN Bus [+] 8 Serial Data	I	—
7	0.5	WH / GY	4104	AUTOSAR CAN Bus [-] 8 Serial Data	I	—
8	0.5	BU / GY	4105	AUTOSAR CAN Bus [+] 8 Serial Data	I	—

B233RR Short Range Radar Rear Sensor - Right (UGN+UVZ)

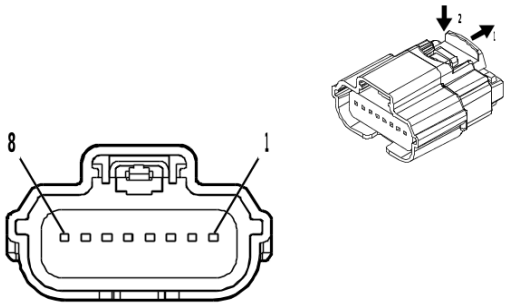

4708234

Connector Part Information

Harness Type: Rear Object Alarm Sensor Wiring Harness
OEM Connector: 31404-9110
Service Connector: Service by Harness - See Part Catalog
Description: 8-Way F 64 Series, Sealed(BK)

Terminal Part Information

Terminal Type ID	Terminated Lead	Diagnostic Test Probe	Terminal Removal Tool
I	Not required	J-35616-64B (L-BU)	No Tool Required

B233RR Short Range Radar Rear Sensor - Right (UGN+UVZ)

Pin	Size	Color	Circuit	Function	Terminal Type ID	Option
1	0.5	BK	1450	Ground	I	—
2	0.5	BK	1450	Ground	I	—
3	0.5	BK	1450	Ground	I	—
4	0.75	RD / GN	3140	Battery Positive Voltage	I	—
5	0.5	WH / GY	4104	AUTOSAR CAN Bus [-] 8 Serial Data	I	—
6	0.5	BU / GY	4105	AUTOSAR CAN Bus [+] 8 Serial Data	I	—
7	0.5	WH / GY	4104	AUTOSAR CAN Bus [-] 8 Serial Data	I	—
8	0.5	BU / GY	4105	AUTOSAR CAN Bus [+] 8 Serial Data	I	—

B271 Engine Metal Temperature Sensor (LM2)

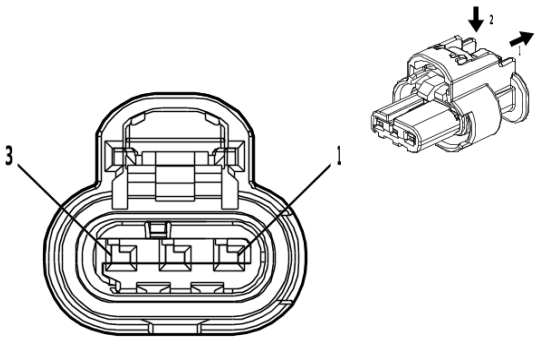

4994602

Connector Part Information

Harness Type: Engine Wiring Harness
OEM Connector: 1-2296695-3
Service Connector: 19371199
Description: 3-Way F 1.2 MCON-CB Series, Sealed(BK)

Terminal Part Information

Terminal Type ID	Terminated Lead	Diagnostic Test Probe	Terminal Removal Tool
I	Not required	J-35616-16 (LT GN)	No Tool Required

B271 Engine Metal Temperature Sensor (LM2)

Pin	Size	Color	Circuit	Function	Terminal Type ID	Option
1	0.5	BK / GY	626	Engine Control Vehicle Sensors Low Reference 1	I	—
2	0.5	GN / YE	37	Engine Block Temperature Sensor Signal	I	—
3	0.5	BN / YE	1372	Engine Metal Temperature Sensor Signal 2	I	—

B275A Rear Closure Hands Free Sensor - Upper (TC2)

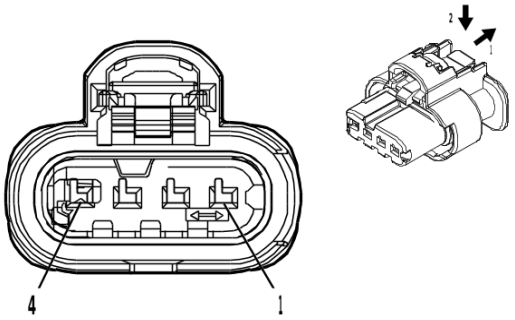

4934614

Connector Part Information

Harness Type: Rear Closure Hands Free Module
OEM Connector: 13514087
Service Connector: Service by Harness - See Part Catalog
Description: 4-Way F 1.2 MCON-CB Series, Sealed(BK)

Terminal Part Information

Terminal Type ID	Terminated Lead	Diagnostic Test Probe	Terminal Removal Tool
I	Not Available	No Tool Required	Not Available

B275A Rear Closure Hands Free Sensor - Upper (TC2)

Pin	Size	Color	Circuit	Function	Terminal Type ID	Option
1 - 2	—	—	—	Not Occupied	—	—
3	0.5	BK / BU	4897	Hands Free Closure Release Sensor Low Reference 1	I	—
4	0.5	GY / VT	4898	Hands-Free Liftgate Sensor Signal 1	I	—

B275B Rear Closure Hands Free Sensor - Lower (TC2)

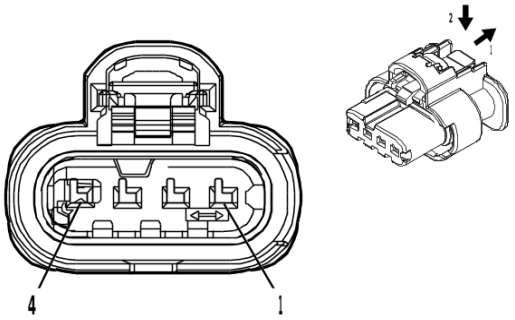

4934614

Connector Part Information

Harness Type: Rear Closure Hands Free Module
OEM Connector: 13514087
Service Connector: Service by Harness - See Part Catalog
Description: 4-Way F 1.2 MCON-CB Series, Sealed(BK)

Terminal Part Information

Terminal Type ID	Terminated Lead	Diagnostic Test Probe	Terminal Removal Tool
I	Not Available	No Tool Required	Not Available

B275B Rear Closure Hands Free Sensor - Lower (TC2)

Pin	Size	Color	Circuit	Function	Terminal Type ID	Option
1	0.5	WH / GY	4900	Hands-Free Liftgate Sensor Signal 2	I	—
2	0.5	BK / YE	4899	Hands Free Closure Release Sensor Low Reference 2	I	—
3 - 4	—	—	—	Not Occupied	—	—

B306A Parking Assist Alarm Sensor - Front Left Outer (UD5/UD7)

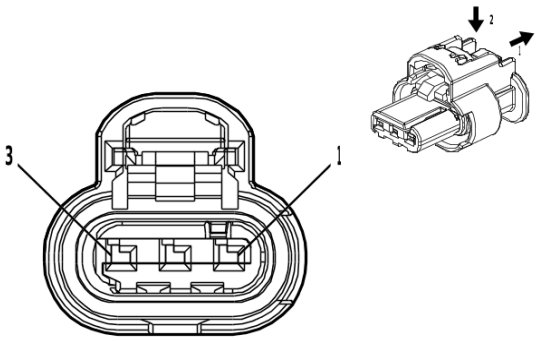

4581126

Connector Part Information

Harness Type: Front Object Alarm Sensor Wiring Harness
OEM Connector: 1-2296695-1
Service Connector: Service by Harness - See Part Catalog
Description: 3-Way F 1.2 MCON-CB Series, Sealed(BK)

Terminal Part Information

Terminal Type ID	Terminated Lead	Diagnostic Test Probe	Terminal Removal Tool
I	Not required	J-35616-16 (L-GN)	No Tool Required

B306A Parking Assist Alarm Sensor - Front Left Outer (UD5/UD7)

Pin	Size	Color	Circuit	Function	Terminal Type ID	Option
1	0.5	BN	6581	Front Parking Assist Display Control	I	—
2	0.5	VT / WH	5215	Left Front Outer Parking Assist Sensor	I	—
3	0.5	BK / BU	5214	Front Parking Assist Sensor Low Reference	I	—

B306B Parking Assist Alarm Sensor - Front Left Middle (UD5/UD7)

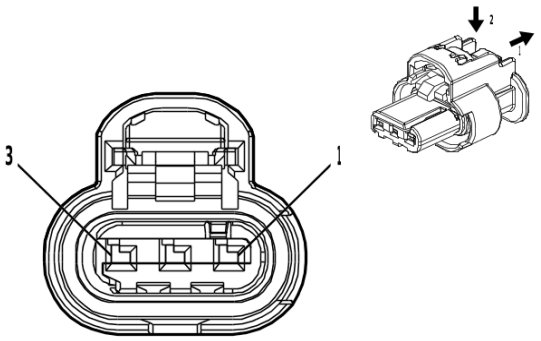

4581126

Connector Part Information

Harness Type: Front Object Alarm Sensor Wiring Harness
OEM Connector: 1-2296695-1
Service Connector: Service by Harness - See Part Catalog
Description: 3-Way F 1.2 MCON-CB Series, Sealed(BK)

Terminal Part Information

Terminal Type ID	Terminated Lead	Diagnostic Test Probe	Terminal Removal Tool
I	Not required	J-35616-16 (L-GN)	No Tool Required

B306B Parking Assist Alarm Sensor - Front Left Middle (UD5/UD7)

Pin	Size	Color	Circuit	Function	Terminal Type ID	Option
1	0.5	BN	6581	Front Parking Assist Display Control	I	—
2	0.5	YE / GY	5216	Left Front Middle Parking Assist Sensor	I	—
3	0.5	BK / BU	5214	Front Parking Assist Sensor Low Reference	I	—

B306C Parking Assist Alarm Sensor - Front Right Middle (UD5/UD7)

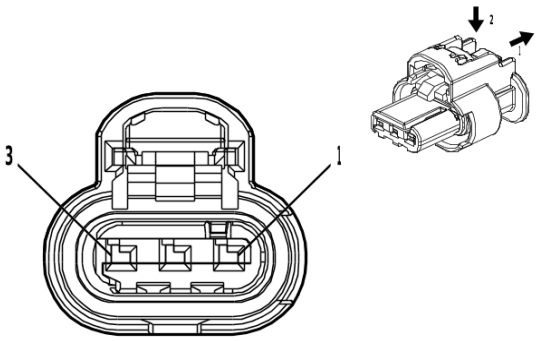

4581126

Connector Part Information

Harness Type: Front Object Alarm Sensor Wiring Harness
OEM Connector: 1-2296695-1
Service Connector: Service by Harness - See Part Catalog
Description: 3-Way F 1.2 MCON-CB Series, Sealed(BK)

Terminal Part Information

Terminal Type ID	Terminated Lead	Diagnostic Test Probe	Terminal Removal Tool
I	Not required	J-35616-16 (L-GN)	No Tool Required

B306C Parking Assist Alarm Sensor - Front Right Middle (UD5/UD7)

Pin	Size	Color	Circuit	Function	Terminal Type ID	Option
1	0.5	BN	6581	Front Parking Assist Display Control	I	—
2	0.5	VT / GY	5218	Right Front Middle Parking Assist Sensor	I	—
3	0.5	BK / BU	5214	Front Parking Assist Sensor Low Reference	I	—

B306D Parking Assist Alarm Sensor - Front Right Outer (UD5/UD7)

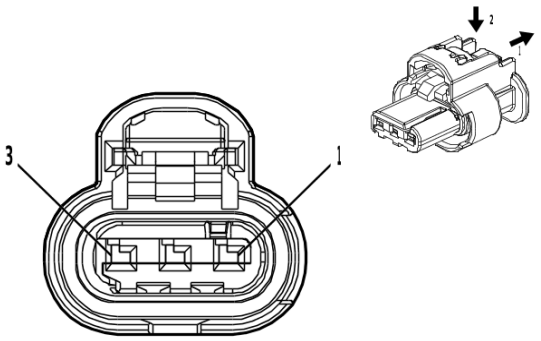

4581126

Connector Part Information

Harness Type: Front Object Alarm Sensor Wiring Harness
OEM Connector: 1-2296695-1
Service Connector: Service by Harness - See Part Catalog
Description: 3-Way F 1.2 MCON-CB Series, Sealed(BK)

Terminal Part Information

Terminal Type ID	Terminated Lead	Diagnostic Test Probe	Terminal Removal Tool
I	Not required	J-35616-16 (L-GN)	No Tool Required

B306D Parking Assist Alarm Sensor - Front Right Outer (UD5/UD7)

Pin	Size	Color	Circuit	Function	Terminal Type ID	Option
1	0.5	BN	6581	Front Parking Assist Display Control	I	—
2	0.5	WH / GY	5217	Right Front Outer Parking Assist Sensor	I	—
3	0.5	BK / BU	5214	Front Parking Assist Sensor Low Reference	I	—

B306E Parking Assist Alarm Sensor - Rear Left Outer (UD5/UD7)

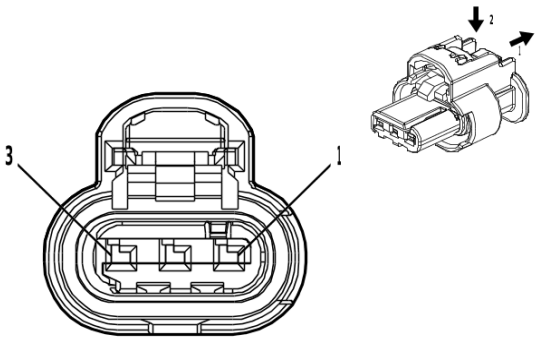

4581126

Connector Part Information

Harness Type: Rear Object Alarm Sensor Wiring Harness
OEM Connector: 1-2296695-1
Service Connector: Service by Harness - See Part Catalog
Description: 3-Way F 1.2 MCON-CB Series, Sealed(BK)

Terminal Part Information

Terminal Type ID	Terminated Lead	Diagnostic Test Probe	Terminal Removal Tool
I	Not required	J-35616-16 (L-GN)	No Tool Required

B306E Parking Assist Alarm Sensor - Rear Left Outer (UD5/UD7)

Pin	Size	Color	Circuit	Function	Terminal Type ID	Option
1	0.5	BN / WH	2374	Object Sensor Voltage Reference	I	—
2	0.5	YE	2375	Left Rear Outer Parking Assist Sensor Signal	I	—
3	0.5	BK / GY	2379	Object Sensor Low Reference	I	—

B306F Parking Assist Alarm Sensor - Rear Left Middle (UD5/UD7)

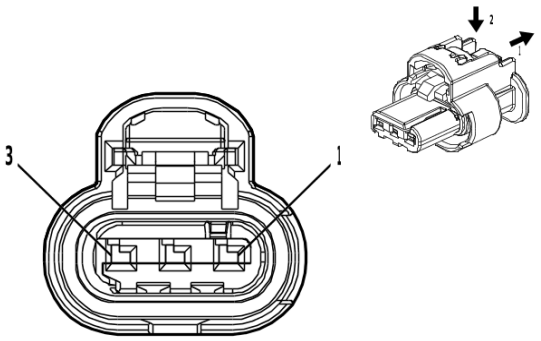

4581126

Connector Part Information

Harness Type: Rear Object Alarm Sensor Wiring Harness
OEM Connector: 1-2296695-1
Service Connector: Service by Harness - See Part Catalog
Description: 3-Way F 1.2 MCON-CB Series, Sealed(BK)

Terminal Part Information

Terminal Type ID	Terminated Lead	Diagnostic Test Probe	Terminal Removal Tool
I	Not required	J-35616-16 (L-GN)	No Tool Required

B306F Parking Assist Alarm Sensor - Rear Left Middle (UD5/UD7)

Pin	Size	Color	Circuit	Function	Terminal Type ID	Option
1	0.5	BN / WH	2374	Object Sensor Voltage Reference	I	—
2	0.5	YE / BU	2376	Left Rear Middle Parking Assist Sensor Signal	I	—
3	0.5	BK / GY	2379	Object Sensor Low Reference	I	—

B306G Parking Assist Alarm Sensor - Rear Right Middle (UD5/UD7)

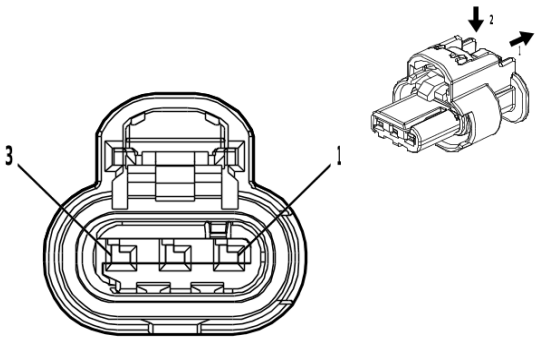

4581126

Connector Part Information

Harness Type: Rear Object Alarm Sensor Wiring Harness
OEM Connector: 1-2296695-1
Service Connector: Service by Harness - See Part Catalog
Description: 3-Way F 1.2 MCON-CB Series, Sealed(BK)

Terminal Part Information

Terminal Type ID	Terminated Lead	Diagnostic Test Probe	Terminal Removal Tool
I	Not required	J-35616-16 (L-GN)	No Tool Required

B306G Parking Assist Alarm Sensor - Rear Right Middle (UD5/UD7)

Pin	Size	Color	Circuit	Function	Terminal Type ID	Option
1	0.5	BN / WH	2374	Object Sensor Voltage Reference	I	—
2	0.5	YE / WH	2377	Right Rear Middle Parking Assist Sensor Signal	I	—
3	0.5	BK / GY	2379	Object Sensor Low Reference	I	—

B306H Parking Assist Alarm Sensor - Rear Right Outer (UD5/UD7)

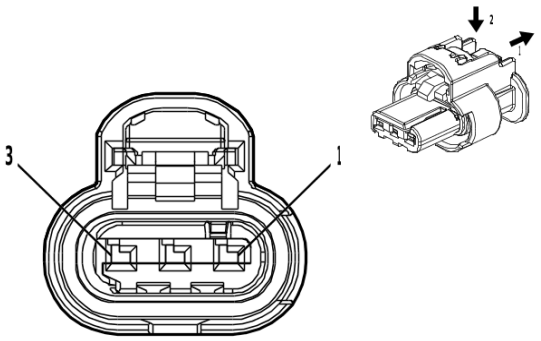

4581126

Connector Part Information

Harness Type: Rear Object Alarm Sensor Wiring Harness
OEM Connector: 1-2296695-1
Service Connector: Service by Harness - See Part Catalog
Description: 3-Way F 1.2 MCON-CB Series, Sealed(BK)

Terminal Part Information

Terminal Type ID	Terminated Lead	Diagnostic Test Probe	Terminal Removal Tool
I	Not required	J-35616-16 (L-GN)	No Tool Required

B306H Parking Assist Alarm Sensor - Rear Right Outer (UD5/UD7)

Pin	Size	Color	Circuit	Function	Terminal Type ID	Option
1	0.5	BN / WH	2374	Object Sensor Voltage Reference	I	—
2	0.5	YE / VT	2378	Right Rear Outer Parking Assist Sensor Signal	I	—
3	0.5	BK / GY	2379	Object Sensor Low Reference	I	—

B312LF Active Noise Cancellation Microphone - Left Front (UQP)

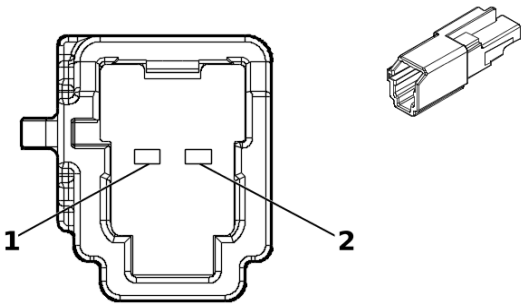

5355341

Connector Part Information

Harness Type: Headlining Trim Panel Wiring Harness
OEM Connector: 13530128
Service Connector: 84815531
Description: 2-Way M 1.2 MCON Series(BK)

Terminal Part Information

Terminal Type ID	Terminated Lead	Diagnostic Test Probe	Terminal Removal Tool
I	Not required	J-35616-17 (LT GN)	No Tool Required

B312LF Active Noise Cancellation Microphone - Left Front (UQP)

Pin	Size	Color	Circuit	Function	Terminal Type ID	Option
1	0.5	GN / BK	3008	Active Noise Cancellation Microphone 1 Feedback Signal	I	—
2	0.5	GN / BN	3005	Active Noise Cancellation Microphone 1 Signal	I	—

B315A Transmission Range Control Valve 1 Position Switch (MQC)

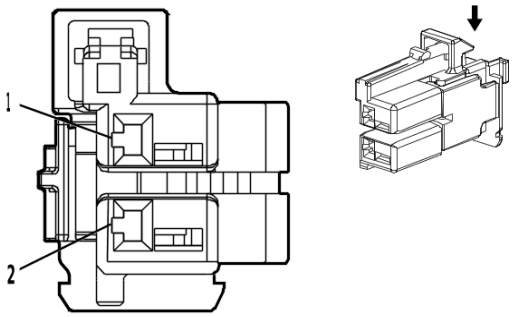

4672650

Connector Part Information

Harness Type: Automatic Transmission Wiring Harness
OEM Connector: 2289523-1
Service Connector: Service by Harness - See Part Catalog
Description: 2-Way F 1.2 MCON Series(BN)

Terminal Part Information

Terminal Type ID	Terminated Lead	Diagnostic Test Probe	Terminal Removal Tool
I	Not required	J-35616-16 (LT GN)	No Tool Required

B315A Transmission Range Control Valve 1 Position Switch (MQC)

Pin	Size	Color	Circuit	Function	Terminal Type ID	Option
1	0.5	BU	4171	Transmission Input Shaft Speed Sensor Circuit 9V Reference	I	—
2	0.5	BK / GY	3706	Electronic Transmission Range Select Switch Analog Signal 1	I	—

B316 Transmission Park Valve Position Switch (MQC)

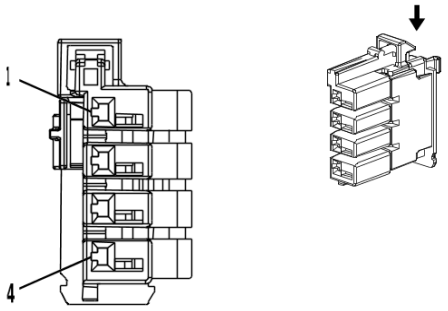

4364148

Connector Part Information

Harness Type: Automatic Transmission Wiring Harness
OEM Connector: 2289524-1
Service Connector: Service by Harness - See Part Catalog
Description: 4-Way F 1.2 MCON Series(BN)

Terminal Part Information

Terminal Type ID	Terminated Lead	Diagnostic Test Probe	Terminal Removal Tool
I	Not required	J-35616-16 (LT GN)	No Tool Required

B316 Transmission Park Valve Position Switch (MQC)

Pin	Size	Color	Circuit	Function	Terminal Type ID	Option
1	—	—	—	Not Occupied	—	—
2	0.5	GN	4170	Transmission Output Shaft Speed Sensor Circuit 9V Reference	I	—
3	0.5	YE	6317	Electronic Transmission Range Select Out of Park Switch Signal	I	—
4	0.5	YE / GY	6319	Electronic Transmission Range Select Out of Park Switch 2 Signal	I	—

B321 Crankcase Pressure Sensor (LM2)

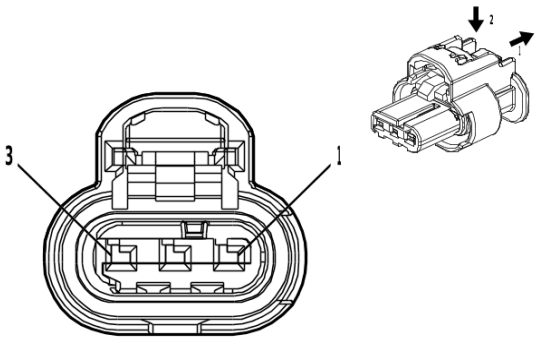

4778903

Connector Part Information

Harness Type: Engine Wiring Harness
OEM Connector: 1-2296695-2
Service Connector: 19371206
Description: 3-Way F 1.2 MCON-CB Series, Sealed(BK)

Terminal Part Information

Terminal Type ID	Terminated Lead	Diagnostic Test Probe	Terminal Removal Tool
I	Not required	J-35616-16 (LT GN)	No Tool Required

B321 Crankcase Pressure Sensor (LM2)

Pin	Size	Color	Circuit	Function	Terminal Type ID	Option
1	0.5	WH / RD	480	Engine Control Vehicle Sensors 5 Volt Reference 1	I	—
2	0.5	YE / GY	3926	Crankcase Differential Pressure Sensor Signal	I	—
3	0.5	BK / YE	548	Engine Control Sensors Low Reference 1	I	—

B345P Exhaust Pressure Differential Sensor - Particulate Filter (LM2)

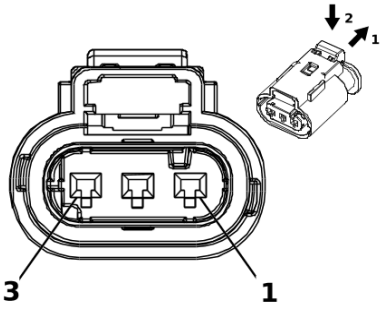

2717069

Connector Part Information

Harness Type: Engine Wiring Harness
OEM Connector: 10010341
Service Connector: 84601390
Description: 3-Way F 1.2 Multilock Series, Sealed(BK)

Terminal Part Information

Terminal Type ID	Terminated Lead	Diagnostic Test Probe	Terminal Removal Tool
I	Not required	J-35616-16 (LT GN)	No Tool Required

B345P Exhaust Pressure Differential Sensor - Particulate Filter (LM2)

Pin	Size	Color	Circuit	Function	Terminal Type ID	Option
1	0.5	WH / RD	480	Engine Control Vehicle Sensors 5 Volt Reference 1	I	—
2	0.5	BU	6053	Exhaust Pressure Sensor 1 Signal	I	—
3	0.5	BK / GN	580	Engine Control Sensors Low Reference 2	I	—

B345R Exhaust Pressure Differential Sensor - Exhaust Gas Recirculation (LM2)

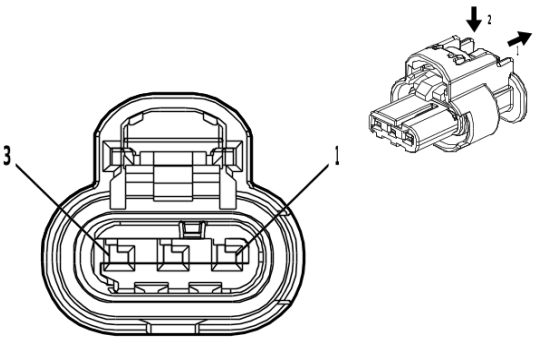

4778903

Connector Part Information

Harness Type: Engine Wiring Harness
OEM Connector: 1-2296695-2
Service Connector: 19371206
Description: 3-Way F 1.2 MCON-CB Series, Sealed(BK)

Terminal Part Information

Terminal Type ID	Terminated Lead	Diagnostic Test Probe	Terminal Removal Tool
I	Not required	J-35616-16 (LT GN)	No Tool Required

B345R Exhaust Pressure Differential Sensor - Exhaust Gas Recirculation (LM2)

Pin	Size	Color	Circuit	Function	Terminal Type ID	Option
1	0.5	WH / RD	480	Engine Control Vehicle Sensors 5 Volt Reference 1	I	—
2	0.5	VT / GY	7246	Exhaust Gas Recirculation Differential Pressure Signal 1	I	—
3	0.5	BK / GN	580	Engine Control Sensors Low Reference 2	I	—

B352 Video Display Inside Rearview Mirror Camera (DRZ)

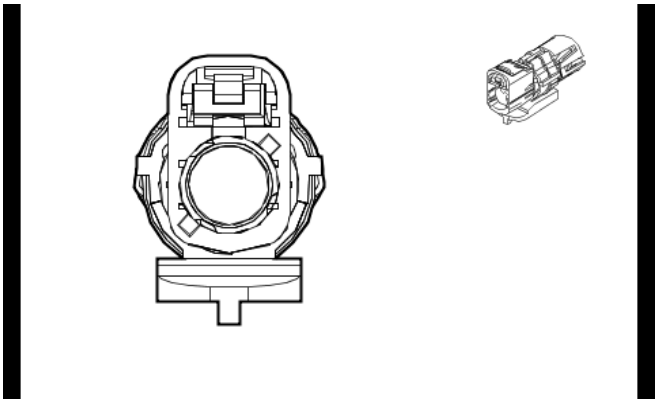

5633894

Connector Part Information

Harness Type: Rear License Plate Lamp Wiring Harness LVDS
OEM Connector: 35187049
Service Connector: Service by Cable Assembly — See Part Catalog
Description: 1-Way F Coax Type, Sealed(BU)

Terminal Part Information

Terminal Type ID	Terminated Lead	Diagnostic Test Probe	Terminal Removal Tool
I	Not required	No Tool Required	No Tool Required

B352 Video Display Inside Rearview Mirror Camera (DRZ)

Pin	Size	Color	Circuit	Function	Terminal Type ID	Option
—	—	LVDS	—	(Head Up Display) Head Up Display Signal	I	—

B355LF Communication Interface Module Microphone - Left Front

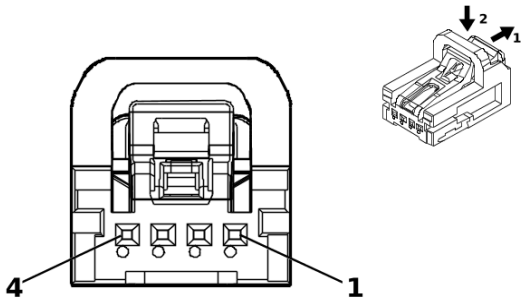

5200696

Connector Part Information

Harness Type: Headlining Trim Panel Wiring Harness
OEM Connector: 13529932
Service Connector: 84769202
Description: 4-Way F Mini 50 Series(BK)

Terminal Part Information

Terminal Type ID	Terminated Lead	Diagnostic Test Probe	Terminal Removal Tool
I	Not required	EL-35616-58 (BK)	No Tool Required

B355LF Communication Interface Module Microphone - Left Front

Pin	Size	Color	Circuit	Function	Terminal Type ID	Option
1	0.35	BU	8579	Automotive Audio Bus A2B Serial Data 1 [-]	I	—
2	0.35	GN	8580	Automotive Audio Bus A2B Serial Data 1 [+]	I	—
3	0.35	GN	8580	Automotive Audio Bus A2B Serial Data 1 [+]	I	—
4	0.35	BU	8579	Automotive Audio Bus A2B Serial Data 1 [-]	I	—

B355RF Communication Interface Module Microphone - Right Front (UQH)

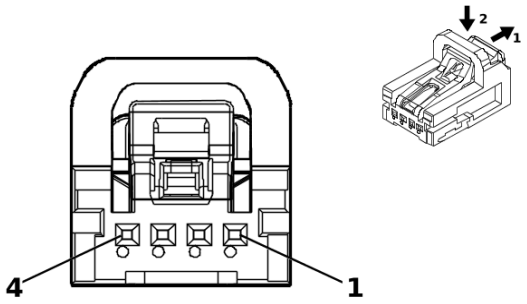

5200696

Connector Part Information

Harness Type: Headlining Trim Panel Wiring Harness
OEM Connector: 13529932
Service Connector: 84769202
Description: 4-Way F Mini 50 Series(BK)

Terminal Part Information

Terminal Type ID	Terminated Lead	Diagnostic Test Probe	Terminal Removal Tool
I	Not required	EL-35616-58 (BK)	No Tool Required

B355RF Communication Interface Module Microphone - Right Front (UQH)

Pin	Size	Color	Circuit	Function	Terminal Type ID	Option
1	0.35	BU	8579	Automotive Audio Bus A2B Serial Data 1 [-]	I	—
2	0.35	GN	8580	Automotive Audio Bus A2B Serial Data 1 [+]	I	—
3	0.35	GN	8580	Automotive Audio Bus A2B Serial Data 1 [+]	I	—
4	0.35	BU	8579	Automotive Audio Bus A2B Serial Data 1 [-]	I	—

B377LL 3rd Row Seat Back Latch Unlatched Switch - Left Seat Left Side (AS8)

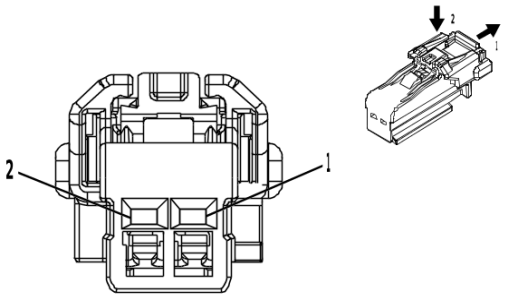

4373379

Connector Part Information

Harness Type: 3rd Row Seat Wiring Harness
OEM Connector: 6098-8989
Service Connector: Service by Harness - See Part Catalog
Description: 2-Way F 1.2 MCON Series(GY)

Terminal Part Information

Terminal Type ID	Terminated Lead	Diagnostic Test Probe	Terminal Removal Tool
I	Not required	J-35616-16 (L-GN)	No Tool Required

B377LL 3rd Row Seat Back Latch Unlatched Switch - Left Seat Left Side (AS8)

Pin	Size	Color	Circuit	Function	Terminal Type ID	Option
1	0.5	BN / GN	2694	Left 3rd Row Seat Left Latch Signal	I	—
2	0.5	BK / BU	5474	3rd Row Seat Sensor Low Reference	I	—

B377LR 3rd Row Seat Back Latch Unlatched Switch - Left Seat Right Side (AS8)

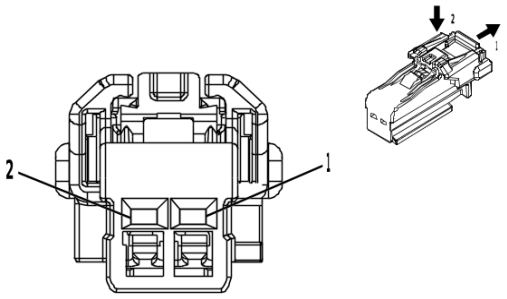

4373379

Connector Part Information

Harness Type: 3rd Row Seat Wiring Harness
OEM Connector: 6098-8989
Service Connector: Service by Harness - See Part Catalog
Description: 2-Way F 1.2 MCON Series(GY)

Terminal Part Information

Terminal Type ID	Terminated Lead	Diagnostic Test Probe	Terminal Removal Tool
I	Not required	J-35616-16 (L-GN)	No Tool Required

B377LR 3rd Row Seat Back Latch Unlatched Switch - Left Seat Right Side (AS8)

Pin	Size	Color	Circuit	Function	Terminal Type ID	Option
1	0.5	GY / BU	2695	Left 3rd Row Seat Right Latch Signal	I	—
2	0.5	BK / BU	5474	3rd Row Seat Sensor Low Reference	I	—

B377RL 3rd Row Seat Back Latch Unlatched Switch - Right Seat Left Side (AS8)

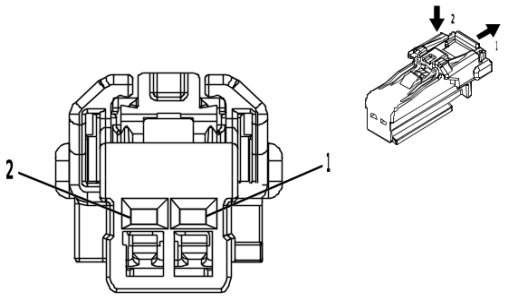

4373379

Connector Part Information

Harness Type: 3rd Row Seat Wiring Harness
OEM Connector: 6098-8989
Service Connector: Service by Harness - See Part Catalog
Description: 2-Way F 1.2 MCON Series(GY)

Terminal Part Information

Terminal Type ID	Terminated Lead	Diagnostic Test Probe	Terminal Removal Tool
I	Not required	J-35616-16 (L-GN)	No Tool Required

B377RL 3rd Row Seat Back Latch Unlatched Switch - Right Seat Left Side (AS8)

Pin	Size	Color	Circuit	Function	Terminal Type ID	Option
1	0.5	VT / BN	2696	Right 3rd Row Seat Left Latch Signal	I	—
2	0.5	BK / BU	5474	3rd Row Seat Sensor Low Reference	I	—

B377RR 3rd Row Seat Back Latch Unlatched Switch - Right Seat Right Side (AS8)

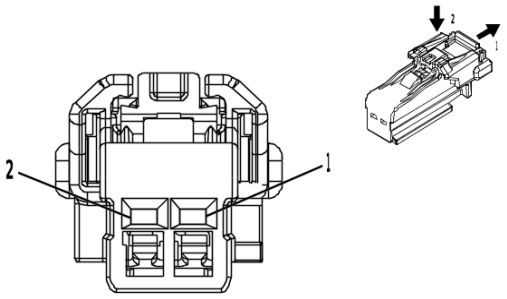

4373379

Connector Part Information

Harness Type: 3rd Row Seat Wiring Harness
OEM Connector: 6098-8989
Service Connector: Service by Harness - See Part Catalog
Description: 2-Way F 1.2 MCON Series(GY)

Terminal Part Information

Terminal Type ID	Terminated Lead	Diagnostic Test Probe	Terminal Removal Tool
I	Not required	J-35616-16 (L-GN)	No Tool Required

B377RR 3rd Row Seat Back Latch Unlatched Switch - Right Seat Right Side (AS8)

Pin	Size	Color	Circuit	Function	Terminal Type ID	Option
1	0.5	WH / BK	2697	Right 3rd Row Seat Right Latch Signal	I	—
2	0.5	BK / BU	5474	3rd Row Seat Sensor Low Reference	I	—

E2LF Front Side Marker Lamp - Left

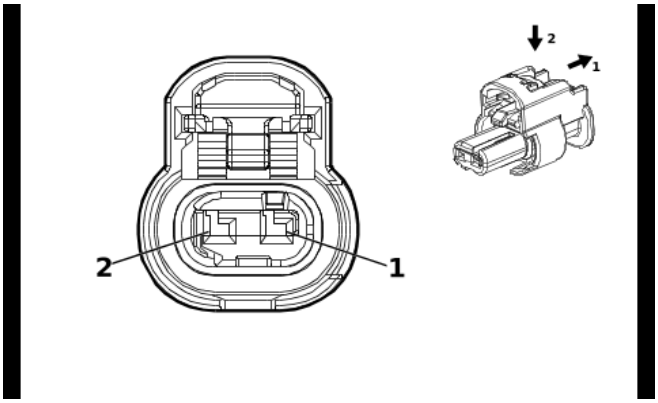

4649903

Connector Part Information

Harness Type: Front Object Alarm Sensor Wiring Harness
OEM Connector: 1-2296694-1
Service Connector: Service by Harness - See Part Catalog
Description: 2-Way F 1.2 MCON Series, Sealed(BK)

Terminal Part Information

Terminal Type ID	Terminated Lead	Diagnostic Test Probe	Terminal Removal Tool
I	Not required	J-35616-16 (L-GN)	No Tool Required

E2LF Front Side Marker Lamp - Left

Pin	Size	Color	Circuit	Function	Terminal Type ID	Option
1	0.5	WH / YE	1254	Left Front Park Lamp Control	I	—
2	0.5	BK	150	Ground	I	—

E2RF Front Side Marker Lamp - Right

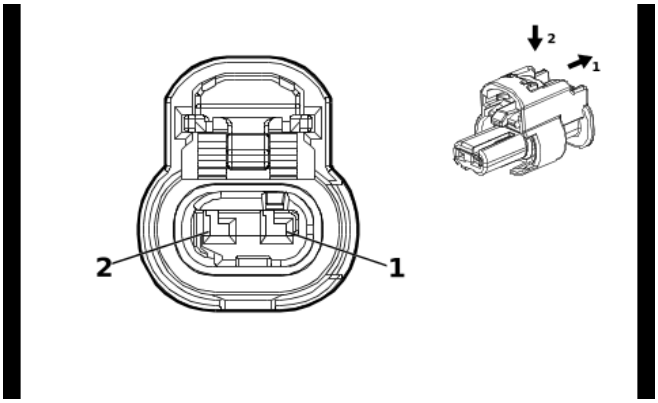

4649903

Connector Part Information

Harness Type: Front Object Alarm Sensor Wiring Harness
OEM Connector: 1-2296694-1
Service Connector: Service by Harness - See Part Catalog
Description: 2-Way F 1.2 MCON Series, Sealed(BK)

Terminal Part Information

Terminal Type ID	Terminated Lead	Diagnostic Test Probe	Terminal Removal Tool
I	Not required	J-35616-16 (L-GN)	No Tool Required

E2RF Front Side Marker Lamp - Right

Pin	Size	Color	Circuit	Function	Terminal Type ID	Option
1	0.5	BU / GN	1253	Right Front Park Lamp Control	I	—
2	0.5	BK	250	Ground	I	—

E6 High Mount Stop Lamp

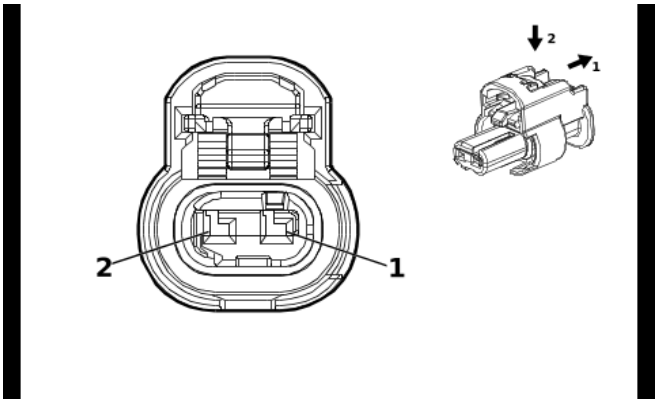

4649903

Connector Part Information

Harness Type: Center High Mounted Stop Lamp Jumper
OEM Connector: 13512365
Service Connector: Service by Harness - See Part Catalog
Description: 2-Way F 1.2 MCON Series, Sealed(BK)

Terminal Part Information

Terminal Type ID	Terminated Lead	Diagnostic Test Probe	Terminal Removal Tool
I	Not Available	No Tool Required	Not Available

E6 High Mount Stop Lamp

Pin	Size	Color	Circuit	Function	Terminal Type ID	Option
1	—	BK	2050	Ground	I	—
2	—	BN / YE	820	Center High Mounted Stop Lamp Supply Voltage	I	—

E7 Rear License Plate Lamp

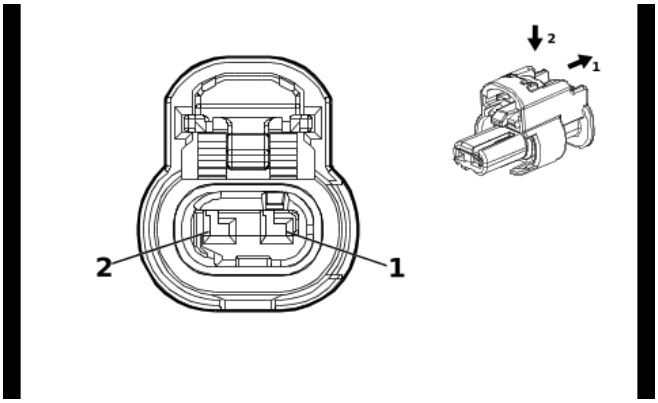

4649903

Connector Part Information

Harness Type: Rear License Plate Lamp Wiring Harness
OEM Connector: 1-2296694-1
Service Connector: Service by Harness - See Part Catalog
Description: 2-Way F 1.2 MCON Series, Sealed(BK)

Terminal Part Information

Terminal Type ID	Terminated Lead	Diagnostic Test Probe	Terminal Removal Tool
I	Not required	J-35616-16 (L-GN)	No Tool Required

E7 Rear License Plate Lamp

Pin	Size	Color	Circuit	Function	Terminal Type ID	Option
1	0.35	BK	2050	Ground	I	—
2	0.35	GN / YE	6846	Rear License Plate Lamp Control	I	—

E8A Front Side Door Sill Plate Illumination Lamp - Left (S0M)

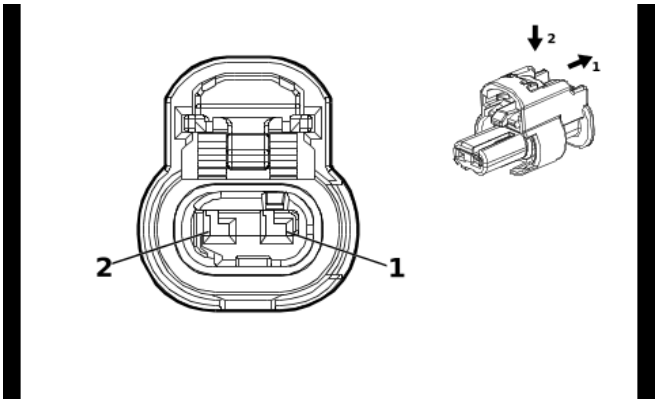

4649903

Connector Part Information

Harness Type: Accessory Wiring Harness
OEM Connector: 1-2296694-1
Service Connector: Service by Harness - See Part Catalog
Description: 2-Way F 1.2 MCON Series, Sealed(BK)

Terminal Part Information

Terminal Type ID	Terminated Lead	Diagnostic Test Probe	Terminal Removal Tool
I	Not Available	No Tool Required	Not Available

E8A Front Side Door Sill Plate Illumination Lamp - Left (S0M)

Pin	Size	Color	Circuit	Function	Terminal Type ID	Option
1	0.35	VT / GN	7558	Front Footwell Accent Lighting Control	I	—
2	0.35	BK	1150	Ground	I	—

E8B Front Side Door Sill Plate Illumination Lamp - Right (S0M)

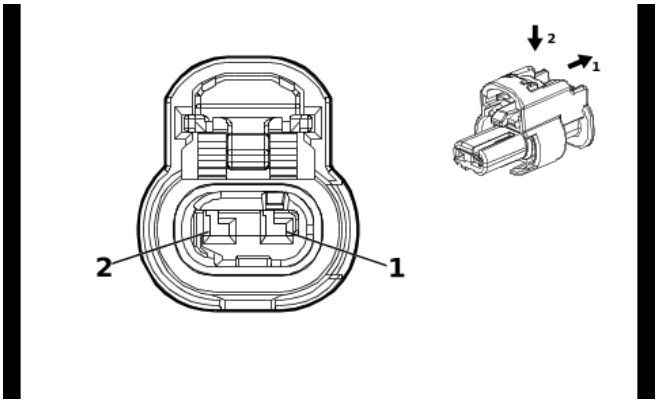

4649903

Connector Part Information

Harness Type: Accessory Wiring Harness
OEM Connector: 1-2296694-1
Service Connector: Service by Harness - See Part Catalog
Description: 2-Way F 1.2 MCON Series, Sealed(BK)

Terminal Part Information

Terminal Type ID	Terminated Lead	Diagnostic Test Probe	Terminal Removal Tool
I	Not Available	No Tool Required	Not Available

E8B Front Side Door Sill Plate Illumination Lamp - Right (S0M)

Pin	Size	Color	Circuit	Function	Terminal Type ID	Option
1	0.35	VT / GN	7558	Front Footwell Accent Lighting Control	I	—
2	0.35	BK	1250	Ground	I	—

E8Q Rear Side Door Sill Plate Illumination Lamp - Left (S0M)

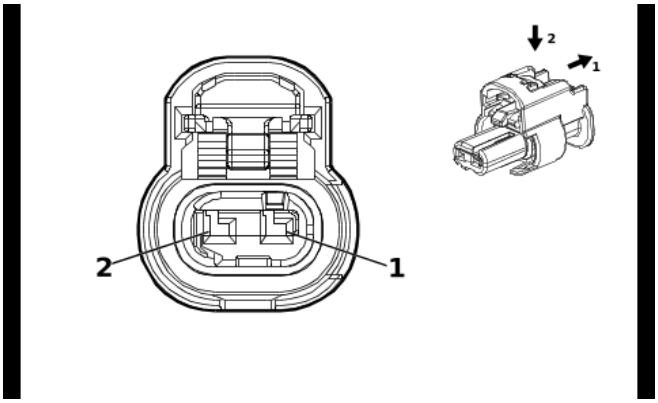

4649903

Connector Part Information

Harness Type: Accessory Wiring Harness
OEM Connector: 1-2296694-1
Service Connector: Service by Harness - See Part Catalog
Description: 2-Way F 1.2 MCON Series, Sealed(BK)

Terminal Part Information

Terminal Type ID	Terminated Lead	Diagnostic Test Probe	Terminal Removal Tool
I	Not Available	No Tool Required	Not Available

E8Q Rear Side Door Sill Plate Illumination Lamp - Left (S0M)

Pin	Size	Color	Circuit	Function	Terminal Type ID	Option
1	0.35	YE / BU	4783	Rear Footwell Accent Lighting Control	I	—
2	0.35	BK	1150	Ground	I	—

E8R Rear Side Door Sill Plate Illumination Lamp - Right (S0M)

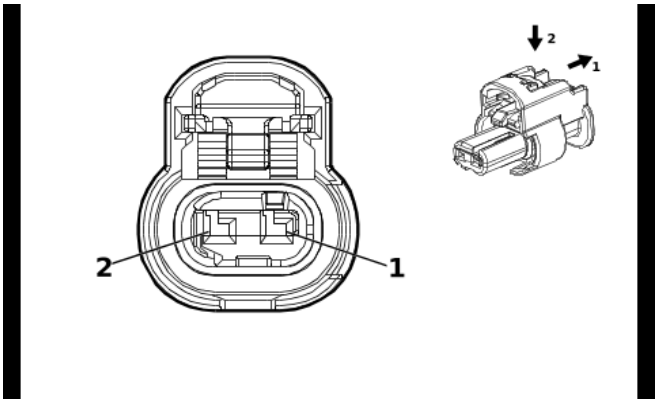

4649903

Connector Part Information

Harness Type: Accessory Wiring Harness
OEM Connector: 1-2296694-1
Service Connector: Service by Harness - See Part Catalog
Description: 2-Way F 1.2 MCON Series, Sealed(BK)

Terminal Part Information

Terminal Type ID	Terminated Lead	Diagnostic Test Probe	Terminal Removal Tool
I	Not Available	No Tool Required	Not Available

E8R Rear Side Door Sill Plate Illumination Lamp - Right (S0M)

Pin	Size	Color	Circuit	Function	Terminal Type ID	Option
1	0.35	YE / BU	4783	Rear Footwell Accent Lighting Control	I	—
2	0.35	BK	1250	Ground	I	—

E8SR Cargo Center Courtesy Lamp

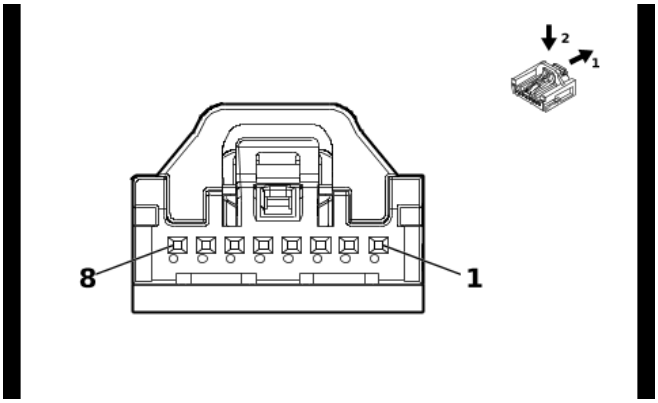

5810859

Connector Part Information

Harness Type: Roof Wiring Harness
OEM Connector: 35068230
Service Connector: Service by Harness - See Part Catalog
Description: 8-Way F Mini 50 Series(GY)

Terminal Part Information

Terminal Type ID	Terminated Lead	Diagnostic Test Probe	Terminal Removal Tool
I	Not required	EL-35616-58 (BK)	No Tool Required

E8SR Cargo Center Courtesy Lamp

Pin	Size	Color	Circuit	Function	Terminal Type ID	Option
1	0.35	WH / VT	1430	Exterior Courtesy Lamp Control	I	—
2	—	—	—	Not Occupied	—	—
3	0.35	BK	2050	Ground	I	—
4 - 8	—	—	—	Not Occupied	—	—

E8VA Front Floor Courtesy Lamp - Left

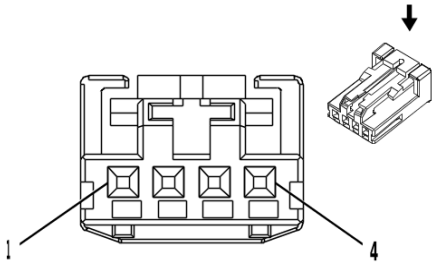

2717162

Connector Part Information

Harness Type: Instrument Panel Wiring Harness
OEM Connector: 1-936119-1
Service Connector: 19367524
Description: 4-Way F 0.64 Micro-Quadlock Series(BK)

Terminal Part Information

Terminal Type ID	Terminated Lead	Diagnostic Test Probe	Terminal Removal Tool
I	Not required	J-35616-64B (L-BU)	No Tool Required

E8VA Front Floor Courtesy Lamp - Left

Pin	Size	Color	Circuit	Function	Terminal Type ID	Option
1	0.35	BK	1050	Ground	I	—
2	0.35	WH / BK	4782	Instrument Panel Accent Lighting Control	I	—
3	0.35	GY	157	Interior Lamp Control	I	—
4	—	—	—	Not Occupied	—	—

E8VB Rear Floor Courtesy Lamp - Left

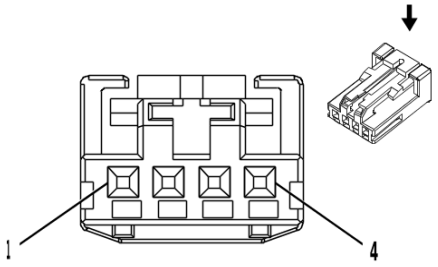

2717162

Connector Part Information

Harness Type: Front Seat Wiring Harness - Driver
OEM Connector: 1-936119-1
Service Connector: Service by Harness - See Part Catalog
Description: 4-Way F 0.64 Micro-Quadlock Series(BK)

Terminal Part Information

Terminal Type ID	Terminated Lead	Diagnostic Test Probe	Terminal Removal Tool
I	Not required	J-35616-64B (L-BU)	No Tool Required

E8VB Rear Floor Courtesy Lamp - Left

Pin	Size	Color	Circuit	Function	Terminal Type ID	Option
1	0.5	BK	1150	Ground	I	—
2	—	—	—	Not Occupied	—	—
3	0.5	GY	157	Interior Lamp Control	I	—
4	—	—	—	Not Occupied	—	—

E8VC Front Floor Courtesy Lamp - Right

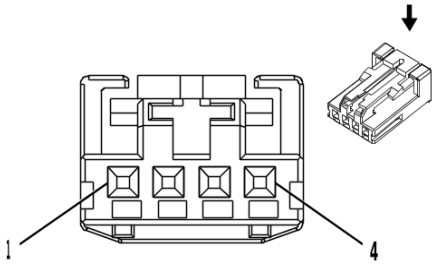

2717162

Connector Part Information

Harness Type: Instrument Panel Wiring Harness
OEM Connector: 1-936119-1
Service Connector: 19367524
Description: 4-Way F 0.64 Micro-Quadlock Series(BK)

Terminal Part Information

Terminal Type ID	Terminated Lead	Diagnostic Test Probe	Terminal Removal Tool
I	Not required	J-35616-64B (L-BU)	No Tool Required

E8VC Front Floor Courtesy Lamp - Right

Pin	Size	Color	Circuit	Function	Terminal Type ID	Option
1	0.35	BK	1850	Ground	I	—
2	0.35	WH / BK	4782	Instrument Panel Accent Lighting Control	I	—
3	0.35	GY	157	Interior Lamp Control	I	—
4	—	—	—	Not Occupied	—	—

E8VD Rear Floor Courtesy Lamp - Right

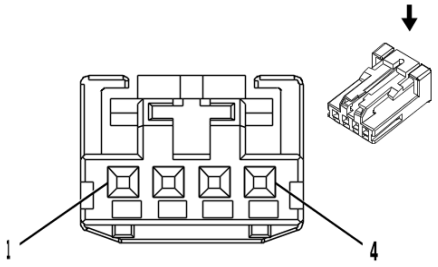

2717162

Connector Part Information

Harness Type: Front Seat Wiring Harness - Passenger
OEM Connector: 1-936119-1
Service Connector: Service by Harness - See Part Catalog
Description: 4-Way F 0.64 Micro-Quadlock Series(BK)

Terminal Part Information

Terminal Type ID	Terminated Lead	Diagnostic Test Probe	Terminal Removal Tool
I	Not required	J-35616-64B (L-BU)	No Tool Required

E8VD Rear Floor Courtesy Lamp - Right

Pin	Size	Color	Circuit	Function	Terminal Type ID	Option
1	0.5	BK	1250	Ground	I	—
2	—	—	—	Not Occupied	—	—
3	0.5	GY	157	Interior Lamp Control	I	—
4	—	—	—	Not Occupied	—	—

E8ZL Assist Step Lamp - Left (B3L)

—

Connector Part Information

Harness Type: Left Assist Step
OEM Connector: Not Available
Service Connector: Service by Harness - See Part Catalog
Description: 2-Way

Terminal Part Information

Terminal Type ID	Terminated Lead	Diagnostic Test Probe	Terminal Removal Tool
I	Not Available	No Tool Required	Not Available

E8ZL Assist Step Lamp - Left (B3L)

Pin	Size	Color	Circuit	Function	Terminal Type ID	Option
1	0.5	BK	1650	Ground	I	—
2	0.5	BN	4748	Left Running Board Step Courtesy Lamp Control	I	—

E8ZR Assist Step Lamp - Right (B3L)

—

Connector Part Information

Harness Type: Right Assist Step
OEM Connector: Not Available
Service Connector: Service by Harness - See Part Catalog
Description: 2-Way

Terminal Part Information

Terminal Type ID	Terminated Lead	Diagnostic Test Probe	Terminal Removal Tool
I	Not Available	No Tool Required	Not Available

E8ZR Assist Step Lamp - Right (B3L)

Pin	Size	Color	Circuit	Function	Terminal Type ID	Option
1	0.5	BK	1650	Ground	I	—
2	0.5	GY / VT	4749	Right Running Board Step Courtesy Lamp Control	I	—

E12A Glow Plug 1 (LM2)

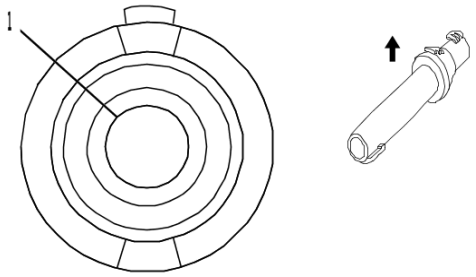

2231591

Connector Part Information

Harness Type: Diesel Glow Plug Wiring Harness
OEM Connector: 284818-1
Service Connector: Service by Harness - See Part Catalog
Description: 1-Way F 4.0 Series(BK)

Terminal Part Information

Terminal Type ID	Terminated Lead	Diagnostic Test Probe	Terminal Removal Tool
I	Not required	J-35616-37 (L-BU)	No Tool Required

E12A Glow Plug 1 (LM2)

Pin	Size	Color	Circuit	Function	Terminal Type ID	Option
1	2.5	GY / RD	1581	Glow Plug 1 Control	I	—

E12B Glow Plug 2 (LM2)

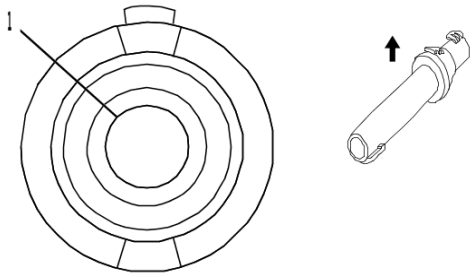

2231591

Connector Part Information

Harness Type: Diesel Glow Plug Wiring Harness
OEM Connector: 284818-1
Service Connector: Service by Harness - See Part Catalog
Description: 1-Way F 4.0 Series(BK)

Terminal Part Information

Terminal Type ID	Terminated Lead	Diagnostic Test Probe	Terminal Removal Tool
I	Not required	J-35616-37 (L-BU)	No Tool Required

E12B Glow Plug 2 (LM2)

Pin	Size	Color	Circuit	Function	Terminal Type ID	Option
1	2.5	GY / BK	1582	Glow Plug 2 Control	I	—

E12C Glow Plug 3 (LM2)

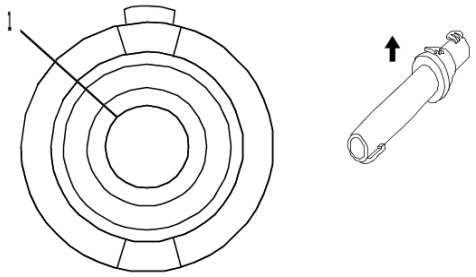

2231591

Connector Part Information

Harness Type: Diesel Glow Plug Wiring Harness
OEM Connector: 284818-1
Service Connector: Service by Harness - See Part Catalog
Description: 1-Way F 4.0 Series(BK)

Terminal Part Information

Terminal Type ID	Terminated Lead	Diagnostic Test Probe	Terminal Removal Tool
I	Not required	J-35616-37 (L-BU)	No Tool Required

E12C Glow Plug 3 (LM2)

Pin	Size	Color	Circuit	Function	Terminal Type ID	Option
1	2.5	GY / GN	1583	Glow Plug 3 Control	I	—

E12D Glow Plug 4 (LM2)

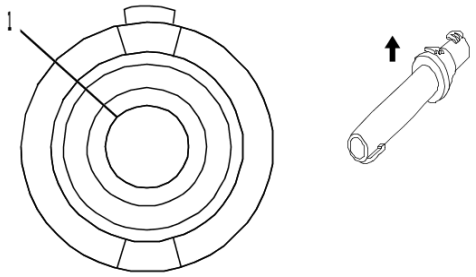

2231591

Connector Part Information

Harness Type: Diesel Glow Plug Wiring Harness
OEM Connector: 284818-1
Service Connector: Service by Harness - See Part Catalog
Description: 1-Way F 4.0 Series(BK)

Terminal Part Information

Terminal Type ID	Terminated Lead	Diagnostic Test Probe	Terminal Removal Tool
I	Not required	J-35616-37 (L-BU)	No Tool Required

E12D Glow Plug 4 (LM2)

Pin	Size	Color	Circuit	Function	Terminal Type ID	Option
1	2.5	GY / YE	1584	Glow Plug 4 Control	I	—

E12E Glow Plug 5 (LM2)

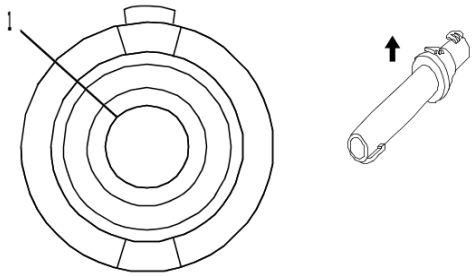

2231591

Connector Part Information

Harness Type: Diesel Glow Plug Wiring Harness
OEM Connector: 284818-1
Service Connector: Service by Harness - See Part Catalog
Description: 1-Way F 4.0 Series(BK)

Terminal Part Information

Terminal Type ID	Terminated Lead	Diagnostic Test Probe	Terminal Removal Tool
I	Not required	J-35616-37 (L-BU)	No Tool Required

E12E Glow Plug 5 (LM2)

Pin	Size	Color	Circuit	Function	Terminal Type ID	Option
1	2.5	GY / WH	1585	Glow Plug 5 Control	I	—

E12F Glow Plug 6 (LM2)

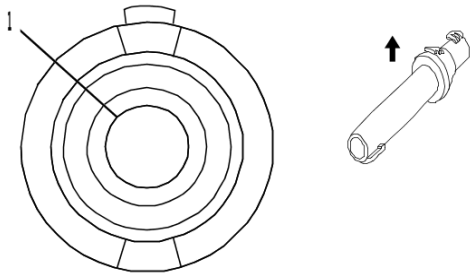

2231591

Connector Part Information

Harness Type: Diesel Glow Plug Wiring Harness
OEM Connector: 284818-1
Service Connector: Service by Harness - See Part Catalog
Description: 1-Way F 4.0 Series(BK)

Terminal Part Information

Terminal Type ID	Terminated Lead	Diagnostic Test Probe	Terminal Removal Tool
I	Not required	J-35616-37 (L-BU)	No Tool Required

E12F Glow Plug 6 (LM2)

Pin	Size	Color	Circuit	Function	Terminal Type ID	Option
1	2.5	GY	1586	Glow Plug 6 Control	I	—

E13LA Front Headlamp - Left

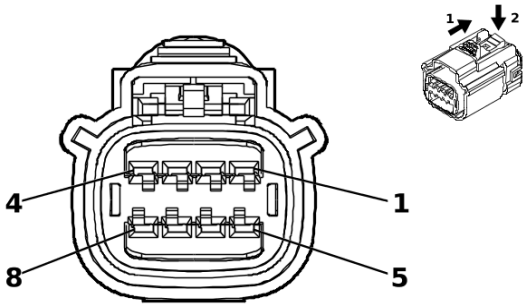

5253496

Connector Part Information

Harness Type: Body Wiring Harness
OEM Connector: 15514667
Service Connector: 84766296
Description: 8-Way F 1.5 OCS Series, Sealed(BK)

Terminal Part Information

Terminal Type ID	Terminated Lead	Diagnostic Test Probe	Terminal Removal Tool
I	Not required	J-35616-2A (GY)	No Tool Required

E13LA Front Headlamp - Left

Pin	Size	Color	Circuit	Function	Terminal Type ID	Option
1	0.75	BK	150	Ground	I	—
2	0.75	RD / WH	640	Battery Positive Voltage	I	—
3	0.35	YE	712	Left Headlamp Low Beam Control	I	—
4	0.35	WH	711	Left Headlamp High Beam Control	I	—
5	0.5	GY / BU	7538	Left Front DRL Control	I	—
6	0.5	BU / WH	1314	Left Front Turn Signal Lamp Control	I	—
7	0.35	VT / BK	6568	Front Turn Signal Lamp Feedback Signal	I	—
8	0.5	WH / YE	1254	Left Front Park Lamp Control	I	—

E13RA Front Headlamp - Right

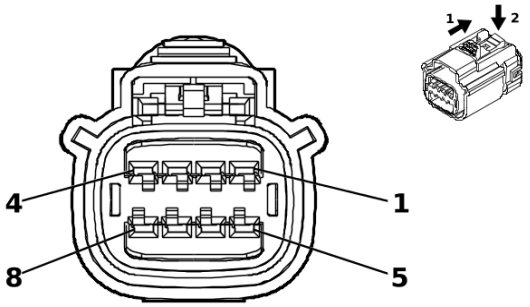

5253496

Connector Part Information

Harness Type: Body Wiring Harness
OEM Connector: 15514667
Service Connector: 84766296
Description: 8-Way F 1.5 OCS Series, Sealed(BK)

Terminal Part Information

Terminal Type ID	Terminated Lead	Diagnostic Test Probe	Terminal Removal Tool
I	Not required	J-35616-2A (GY)	No Tool Required

E13RA Front Headlamp - Right

Pin	Size	Color	Circuit	Function	Terminal Type ID	Option
1	0.75	BK	250	Ground	I	—
2	0.75	RD / YE	740	Battery Positive Voltage	I	—
3	0.5	YE	312	Right Headlamp Low Beam Control	I	—
4	0.35	WH	311	Right Headlamp High Beam Control	I	—
5	0.5	BU / BN	7539	Right Front DRL Control	I	—
6	0.5	GN / VT	1315	Right Front Turn Signal Lamp Control	I	—
7	0.35	WH / YE	7545	Right Front Turn Signal Lamp Feedback Signal	I	—
8	0.5	BU / GN	1253	Right Front Park Lamp Control	I	—

E14A Front Seat Back Heater - Driver (KA1/KQV)

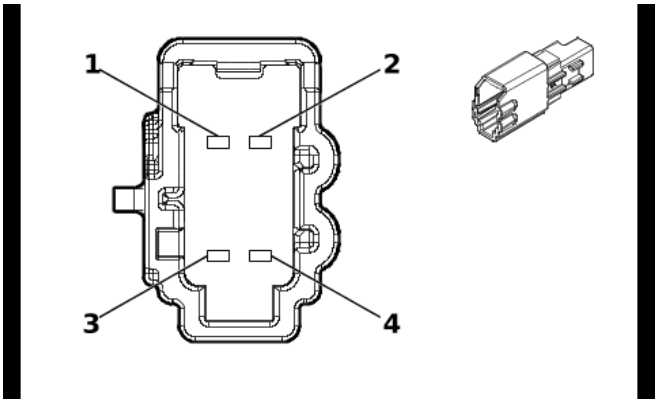

5423974

Connector Part Information

Harness Type: Front Seat Wiring Harness - Driver
OEM Connector: 6098-9049
Service Connector: Service by Harness - See Part Catalog
Description: 4-Way M 1.2 MCON Series(GY)

Terminal Part Information

Terminal Type ID	Terminated Lead	Diagnostic Test Probe	Terminal Removal Tool
I	Not required	J-35616-17 (L-GN)	No Tool Required

E14A Front Seat Back Heater - Driver (KA1/KQV)

Pin	Size	Color	Circuit	Function	Terminal Type ID	Option
1	0.75	BN	2432	Driver Seat Back Heating Element Control	I	—
2	0.5	BU	2425	Driver Seat Back Heating Temperature Sensor Signal	I	—
3	0.5	BK / YE	2080	Driver Heated Seat Thermistor Low Reference	I	—
4	0.75	BN / BK	2078	Driver Seat Heating Element Low Reference	I	—

E14B Front Seat Cushion Heater - Driver (KA1/KQV)

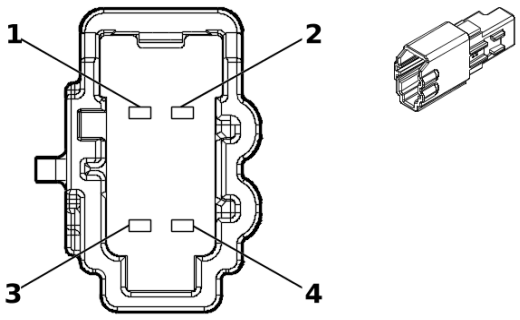

5360963

Connector Part Information

Harness Type: Front Seat Wiring Harness - Driver
OEM Connector: 6098-9046
Service Connector: Service by Harness - See Part Catalog
Description: 4-Way M 1.2 MCON Series(BK)

Terminal Part Information

Terminal Type ID	Terminated Lead	Diagnostic Test Probe	Terminal Removal Tool
I	Not required	J-35616-17 (L-GN)	No Tool Required

E14B Front Seat Cushion Heater - Driver (KA1/KQV)

Pin	Size	Color	Circuit	Function	Terminal Type ID	Option
1	0.75	BN / VT	2077	Driver Seat Heating Element Control	I	—
2	0.5	YE / GY	2079	Driver Seat Heating Temperature Sensor Signal	I	—
3	0.5	BK / YE	2080	Driver Heated Seat Thermistor Low Reference	I	—
4	0.75	BN / BK	2078	Driver Seat Heating Element Low Reference	I	—

E14C Front Seat Back Heater - Passenger (KA1)

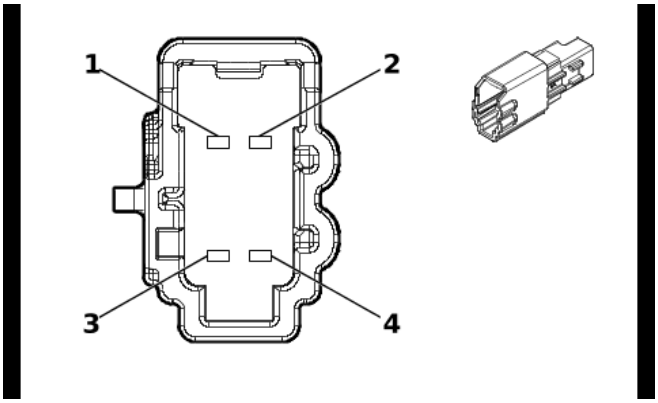

5423974

Connector Part Information

Harness Type: Front Seat Wiring Harness - Passenger
OEM Connector: 6098-9049
Service Connector: Service by Harness - See Part Catalog
Description: 4-Way M 1.2 MCON Series(GY)

Terminal Part Information

Terminal Type ID	Terminated Lead	Diagnostic Test Probe	Terminal Removal Tool
I	Not required	J-35616-17 (L-GN)	No Tool Required

E14C Front Seat Back Heater - Passenger (KA1)

Pin	Size	Color	Circuit	Function	Terminal Type ID	Option
1	0.75	WH / BN	2481	Passenger Seat Back Heating Element Control	I	—
2	0.5	WH / BU	2436	Passenger Seat Back Heating Temperature Sensor Signal	I	—
3	0.5	BK / GN	2482	Passenger Heated Back Thermistor Low Reference	I	—
4	0.75	GY / BK	2480	Passenger Seat Heating Element Low Reference	I	—

E14D Front Seat Cushion Heater - Passenger (KA1/KQV)

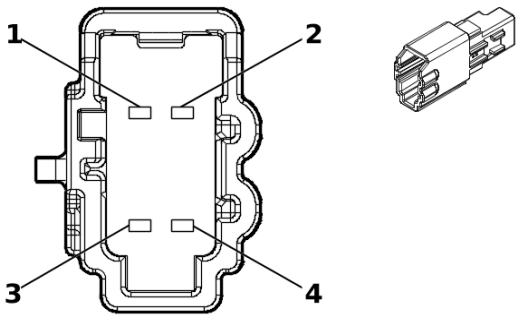

5360963

Connector Part Information

Harness Type: Front Seat Wiring Harness - Passenger
OEM Connector: 6098-9046
Service Connector: Service by Harness - See Part Catalog
Description: 4-Way M 1.2 MCON Series(BK)

Terminal Part Information

Terminal Type ID	Terminated Lead	Diagnostic Test Probe	Terminal Removal Tool
I	Not required	J-35616-17 (L-GN)	No Tool Required

E14D Front Seat Cushion Heater - Passenger (KA1/KQV)

Pin	Size	Color	Circuit	Function	Terminal Type ID	Option
1	0.75	BN / BU	2479	Passenger Seat Heating Element Control	I	—
2	0.5	WH / GY	2434	Passenger Seat Heating Temperature Sensor Signal	I	—
3	0.5	BK / GY	2435	Passenger Heated Seat Thermistor Low Reference	I	—
4	0.75	GY / BK	2480	Passenger Seat Heating Element Low Reference	I	—

E14F Rear Seat Cushion Heater - Left Rear (KA6)

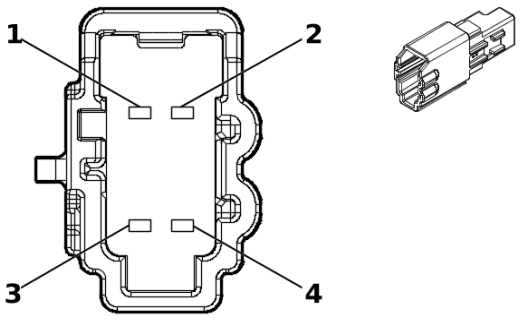

5360963

Connector Part Information

Harness Type: Rear Seat Wiring Harness - 2nd Row Left
OEM Connector: 6098-9046
Service Connector: Service by Harness - See Part Catalog
Description: 4-Way M 1.2 MCON Series(BK)

Terminal Part Information

Terminal Type ID	Terminated Lead	Diagnostic Test Probe	Terminal Removal Tool
I	Not required	J-35616-17 (L-GN)	No Tool Required

E14F Rear Seat Cushion Heater - Left Rear (KA6)

Pin	Size	Color	Circuit	Function	Terminal Type ID	Option
1	0.75	GY	2294	Left Rear Seat Cushion Heating Element Control	I	—
2	0.5	WH / BU	7047	Left Rear Seat Cushion Temperature Sensor Signal	I	—
3	0.5	BU / WH	7048	Left Rear Cushion Thermistor Feedback Signal	I	—
4	0.75	BU / BK	2446	Left Rear Seat Heating Element Low Reference	I	—

E14H Rear Seat Cushion Heater - Right Rear (KA6)

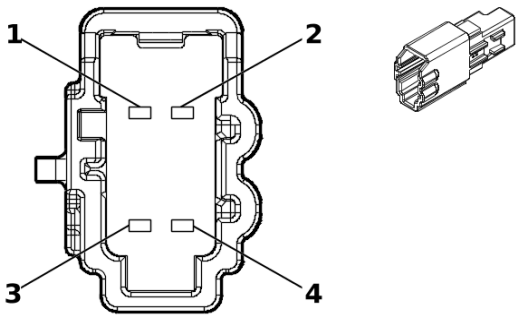

5360963

Connector Part Information

Harness Type: Rear Seat Wiring Harness - 2nd Row Right
OEM Connector: 6098-9046
Service Connector: Service by Harness - See Part Catalog
Description: 4-Way M 1.2 MCON Series(BK)

Terminal Part Information

Terminal Type ID	Terminated Lead	Diagnostic Test Probe	Terminal Removal Tool
I	Not required	J-35616-17 (L-GN)	No Tool Required

E14H Rear Seat Cushion Heater - Right Rear (KA6)

Pin	Size	Color	Circuit	Function	Terminal Type ID	Option
1	0.75	GN / BN	2296	Right Rear Seat Cushion Heating Element Control	I	—
2	0.5	YE / WH	7053	Right Rear Seat Cushion Temperature Sensor Signal	I	—
3	0.5	WH / BK	7054	Right Rear Cushion Thermistor Feedback Signal	I	—
4	0.75	GN / BK	2457	Right Rear Seat Heating Element Low Reference	I	—

E18 Rear Window Defogger Grid X1

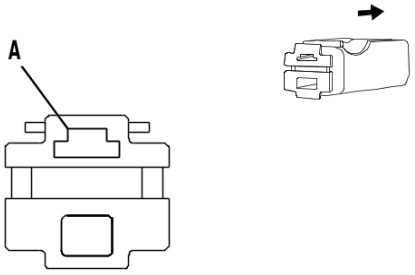

4248834

Connector Part Information

Harness Type: Liftgate Wiring Harness
OEM Connector: 7123-5014-30
Service Connector: Service by Harness - See Part Catalog
Description: 1-Way F 250 Series(BK)

Terminal Part Information

Terminal Type ID	Terminated Lead	Diagnostic Test Probe	Terminal Removal Tool
I	Not required	J-35616-42 (RD)	No Tool Required

E18 Rear Window Defogger Grid X1

Pin	Size	Color	Circuit	Function	Terminal Type ID	Option
A	2.5	BN / VT	293	Rear Defogger Grid Control	I	—

E18 Rear Window Defogger Grid X2

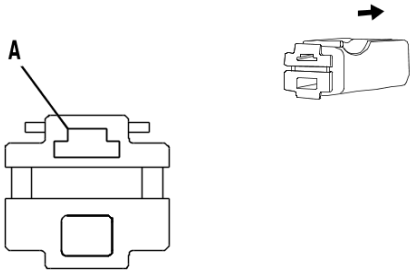

4248834

Connector Part Information

Harness Type: Liftgate Wiring Harness
OEM Connector: 7123-5014-30
Service Connector: Service by Harness - See Part Catalog
Description: 1-Way F 250 Series(BK)

Terminal Part Information

Terminal Type ID	Terminated Lead	Diagnostic Test Probe	Terminal Removal Tool
I	Not required	J-35616-42 (RD)	No Tool Required

E18 Rear Window Defogger Grid X2

Pin	Size	Color	Circuit	Function	Terminal Type ID	Option
A	2.5	BK	2050	Ground	I	—

E28 Front Floor Console Compartment Lamp (D07/DCH)

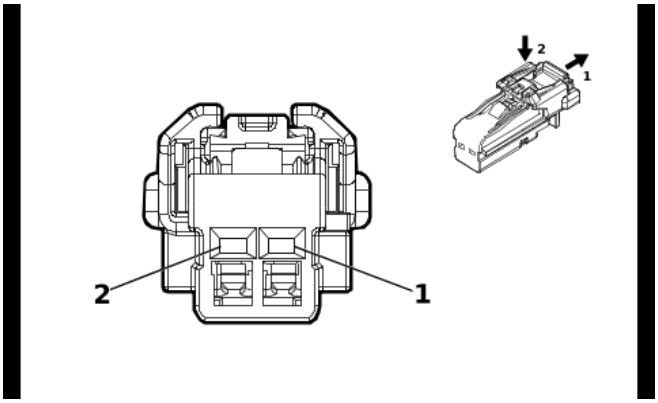

4115691

Connector Part Information

Harness Type: Front Floor Console Wiring Harness
OEM Connector: 6098-8988
Service Connector: Service by Harness - See Part Catalog
Description: 2-Way F 1.2 MCON Series(BK)

Terminal Part Information

Terminal Type ID	Terminated Lead	Diagnostic Test Probe	Terminal Removal Tool
I	Not required	J-35616-16 (L-GN)	No Tool Required

E28 Front Floor Console Compartment Lamp (D07/DCH)

Pin	Size	Color	Circuit	Function	Terminal Type ID	Option
1	0.75	BK	1250	Ground	I	—
2	0.75	GN / VT	4786	Dome/Reading Lamp Enable Signal	I	—

E29LF Front Fog Lamp - Left (T40)

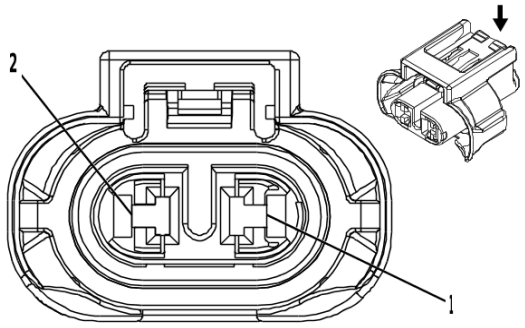

3404058

Connector Part Information

Harness Type: Front Object Alarm Sensor Wiring Harness
OEM Connector: 13930730
Service Connector: Service by Harness - See Part Catalog
Description: 2-Way F 2.8 APEX Series, Sealed(BK)

Terminal Part Information

Terminal Type ID	Terminated Lead	Diagnostic Test Probe	Terminal Removal Tool
I	Not required	J-35616-4A (PU)	No Tool Required

E29LF Front Fog Lamp - Left (T40)

Pin	Size	Color	Circuit	Function	Terminal Type ID	Option
1	0.5	BN / GY	5061	Left Front Fog Lamp Control	I	—
2	0.5	BK	150	Ground	I	—

E29RF Front Fog Lamp - Right (T40)

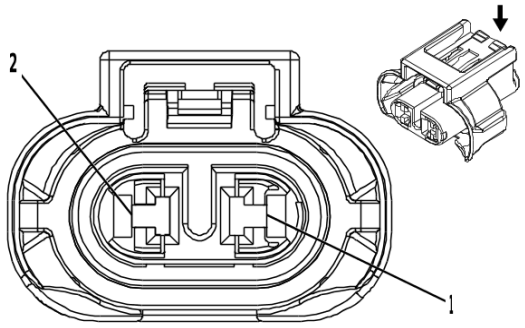

3404058

Connector Part Information

Harness Type: Front Object Alarm Sensor Wiring Harness
OEM Connector: 13930730
Service Connector: Service by Harness - See Part Catalog
Description: 2-Way F 2.8 APEX Series, Sealed(BK)

Terminal Part Information

Terminal Type ID	Terminated Lead	Diagnostic Test Probe	Terminal Removal Tool
I	Not required	J-35616-4A (PU)	No Tool Required

E29RF Front Fog Lamp - Right (T40)

Pin	Size	Color	Circuit	Function	Terminal Type ID	Option
1	0.5	BN / GN	5062	Right Front Fog Lamp Control	I	—
2	0.5	BK	250	Ground	I	—

E31L Sunshade Mirror Lamp - Left

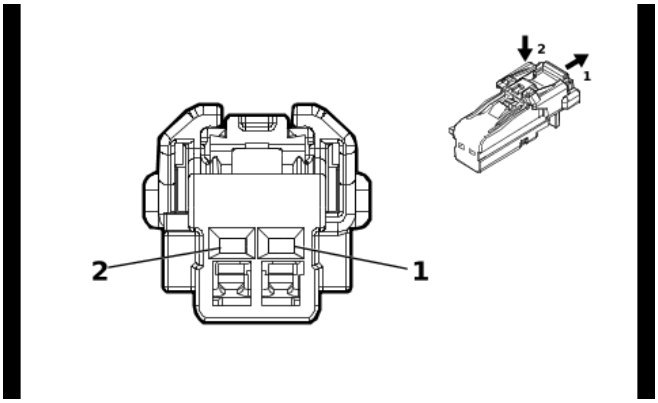

5377746

Connector Part Information

Harness Type: Headlining Trim Panel Wiring Harness
OEM Connector: 35327306
Service Connector: 84867147
Description: 2-Way F 1.2 MCON Series(BN)

Terminal Part Information

Terminal Type ID	Terminated Lead	Diagnostic Test Probe	Terminal Removal Tool
I	Not required	J-35616-16 (LT GN)	No Tool Required

E31L Sunshade Mirror Lamp - Left

Pin	Size	Color	Circuit	Function	Terminal Type ID	Option
1	0.5	BU / GN	4785	Interior Lamp Overhead Enable Signal	I	—
2	0.5	BK	1850	Ground	I	—

E31R Sunshade Mirror Lamp - Right

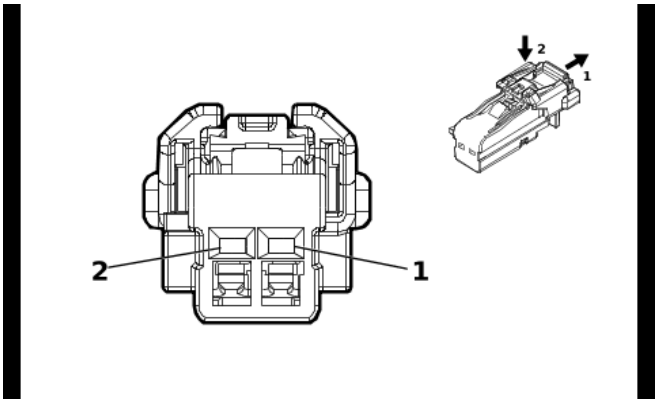

5377746

Connector Part Information

Harness Type: Headlining Trim Panel Wiring Harness
OEM Connector: 35327306
Service Connector: 84867147
Description: 2-Way F 1.2 MCON Series(BN)

Terminal Part Information

Terminal Type ID	Terminated Lead	Diagnostic Test Probe	Terminal Removal Tool
I	Not required	J-35616-16 (LT GN)	No Tool Required

E31R Sunshade Mirror Lamp - Right

Pin	Size	Color	Circuit	Function	Terminal Type ID	Option
1	0.5	GY / WH	2369	Interior Lamp Overhead 2 Enable Signal	I	—
2	0.5	BK	1850	Ground	I	—

E32 Cigarette Lighter Receptacle (DT4)

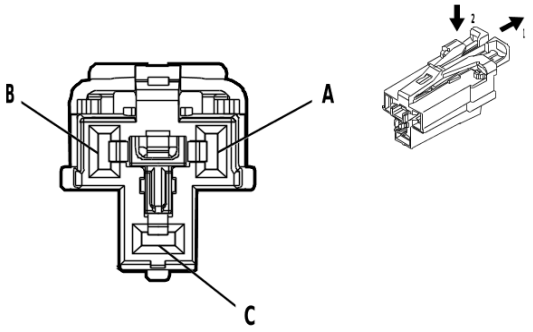

4872413

Connector Part Information

Harness Type: Front Floor Console Wiring Harness
OEM Connector: 33386302
Service Connector: Service by Harness - See Part Catalog
Description: 3-Way F 2.8 APEX Series(GY)

Terminal Part Information

Terminal Type ID	Terminated Lead	Diagnostic Test Probe	Terminal Removal Tool
I	Not required	J-35616-2A (GY)	No Tool Required
II	Not required	J-35616-35 (VT)	No Tool Required

E32 Cigarette Lighter Receptacle (DT4)

Pin	Size	Color	Circuit	Function	Terminal Type ID	Option
A	1.5	VT	1701	Retained Accessory Power Control	II	—
B	—	—	—	Not Occupied	—	—
C	1	BK	1250	Ground	I	—

E37B Dome/Reading Lamps - 2nd Row (C3U)

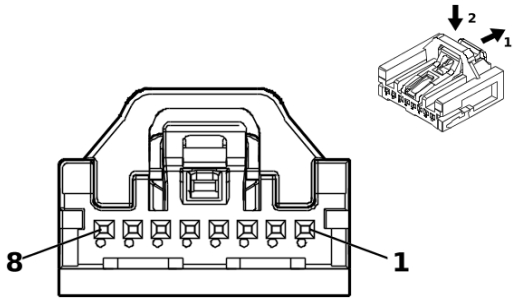

5200269

Connector Part Information

Harness Type: Headlining Trim Panel Wiring Harness
OEM Connector: 13529931
Service Connector: 84769201
Description: 8-Way F Mini 50 Series(BK)

Terminal Part Information

Terminal Type ID	Terminated Lead	Diagnostic Test Probe	Terminal Removal Tool
I	Not required	EL-35616-58 (BK)	No Tool Required

E37B Dome/Reading Lamps - 2nd Row (C3U)

Pin	Size	Color	Circuit	Function	Terminal Type ID	Option
1	0.35	BU / WH	2907	Row 3 Dome Reading Lamp Interior Lamp Control	I	- C3U
2	0.35	BN / VT	2909	Row 3 Dome Reading Lamp 2 Interior Lamp Control	I	C3U
3	0.35	BK	1850	Ground	I	—
4	0.35	VT / YE	2908	Row 3 Dome Reading Lamp Switch Signal	I	- C3U
5	0.35	YE / GY	2910	Row 3 Dome Reading Lamp 2 Switch Signal	I	C3U
6 - 8	—	—	—	Not Occupied	—	—

E37H Roof Rail Rear Seat Position Reading and Courtesy Lamp - Left (C3U)

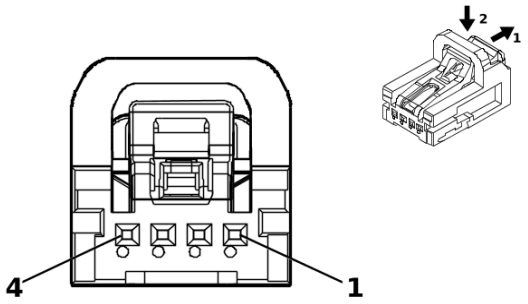

5200696

Connector Part Information

Harness Type: Headlining Trim Panel Wiring Harness
OEM Connector: 13529932
Service Connector: 84769202
Description: 4-Way F Mini 50 Series(BK)

Terminal Part Information

Terminal Type ID	Terminated Lead	Diagnostic Test Probe	Terminal Removal Tool
I	Not required	EL-35616-58 (BK)	No Tool Required

E37H Roof Rail Rear Seat Position Reading and Courtesy Lamp - Left (C3U)

Pin	Size	Color	Circuit	Function	Terminal Type ID	Option
1	0.35	GN / YE	2903	Row 2 Dome Reading Lamp Interior Lamp Control	I	—
2	—	—	—	Not Occupied	—	—
3	0.35	BK	1850	Ground	I	—
4	0.35	WH / BN	2904	Row 2 Dome Reading Lamp Switch Signal	I	—

E37J Roof Rail Rear Seat Position Reading and Courtesy Lamp - Right (C3U)

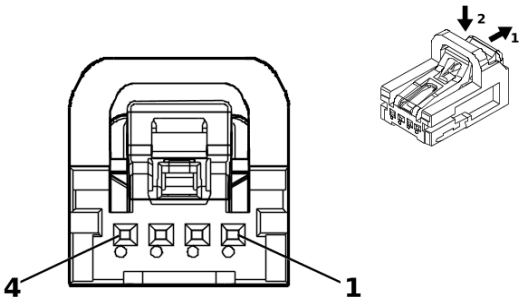

5200696

Connector Part Information

Harness Type: Headlining Trim Panel Wiring Harness
OEM Connector: 13529932
Service Connector: 84769202
Description: 4-Way F Mini 50 Series(BK)

Terminal Part Information

Terminal Type ID	Terminated Lead	Diagnostic Test Probe	Terminal Removal Tool
I	Not required	EL-35616-58 (BK)	No Tool Required

E37J Roof Rail Rear Seat Position Reading and Courtesy Lamp - Right (C3U)

Pin	Size	Color	Circuit	Function	Terminal Type ID	Option
1	0.35	BN / BU	2905	Row 2 Dome Reading Lamp 2 Interior Lamp Control	I	—
2	—	—	—	Not Occupied	—	—
3	0.35	BK	1850	Ground	I	—
4	0.35	VT / GY	2906	Row 2 Dome Reading Lamp 2 Switch Signal	I	—

E37SMA Rear Seat Position Center Reading and Courtesy Lamp - 2nd Row (-C3U)

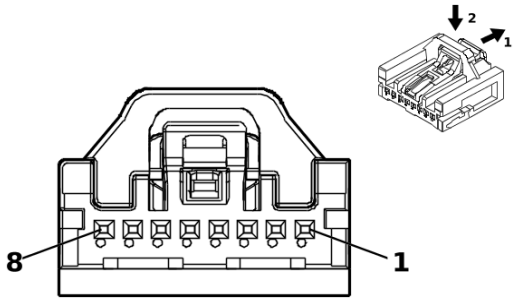

5200269

Connector Part Information

Harness Type: Headlining Trim Panel Wiring Harness
OEM Connector: 13529931
Service Connector: 84769201
Description: 8-Way F Mini 50 Series(BK)

Terminal Part Information

Terminal Type ID	Terminated Lead	Diagnostic Test Probe	Terminal Removal Tool
I	Not required	EL-35616-58 (BK)	No Tool Required

E37SMA Rear Seat Position Center Reading and Courtesy Lamp - 2nd Row (-C3U)

Pin	Size	Color	Circuit	Function	Terminal Type ID	Option
1	0.35	GN / YE	2903	Row 2 Dome Reading Lamp Interior Lamp Control	I	C3U
2	0.35	BN / BU	2905	Row 2 Dome Reading Lamp 2 Interior Lamp Control	I	- C3U
3	0.35	BK	1850	Ground	I	—
4	0.35	WH / BN	2904	Row 2 Dome Reading Lamp Switch Signal	I	C3U
5	0.35	VT / GY	2906	Row 2 Dome Reading Lamp 2 Switch Signal	I	- C3U
6 - 8	—	—	—	Not Occupied	—	—

E37SMB Rear Seat Position Center Reading and Courtesy Lamp - 3rd Row (-C3U)

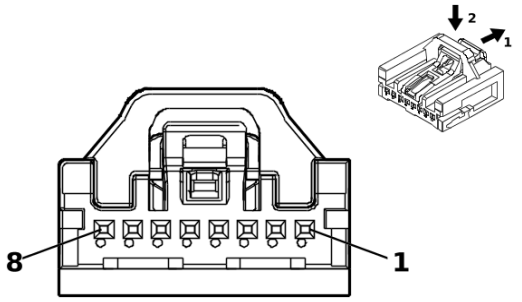

5200269

Connector Part Information

Harness Type: Headlining Trim Panel Wiring Harness
OEM Connector: 13529931
Service Connector: 84769201
Description: 8-Way F Mini 50 Series(BK)

Terminal Part Information

Terminal Type ID	Terminated Lead	Diagnostic Test Probe	Terminal Removal Tool
I	Not required	EL-35616-58 (BK)	No Tool Required

E37SMB Rear Seat Position Center Reading and Courtesy Lamp - 3rd Row (-C3U)

Pin	Size	Color	Circuit	Function	Terminal Type ID	Option
1	0.35	BU / WH	2907	Row 3 Dome Reading Lamp Interior Lamp Control	I	—
2	0.35	BN / VT	2909	Row 3 Dome Reading Lamp 2 Interior Lamp Control	I	—
3	0.35	BK	1850	Ground	I	—
4	0.35	VT / YE	2908	Row 3 Dome Reading Lamp Switch Signal	I	—
5	0.35	YE / GY	2910	Row 3 Dome Reading Lamp 2 Switch Signal	I	—
6 - 8	—	—	—	Not Occupied	—	—

E40 Air Heater X1 (C3A)

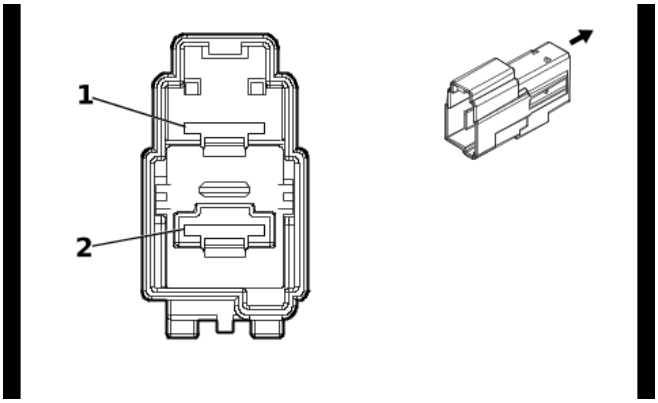

5375411

Connector Part Information

Harness Type: Heater Wiring Harness
OEM Connector: 13528404
Service Connector: Service by Harness - See Part Catalog
Description: 2-Way M 9.5 Y-Type Series(BK)

Terminal Part Information

Terminal Type ID	Terminated Lead	Diagnostic Test Probe	Terminal Removal Tool
I	Not Available	No Tool Required	Not Available

E40 Air Heater X1 (C3A)

Pin	Size	Color	Circuit	Function	Terminal Type ID	Option
1	16	BK	1050	Ground	I	—
2	16	RD / GY	642	Battery Positive Voltage	I	—

E40 Air Heater X2 (C3A)

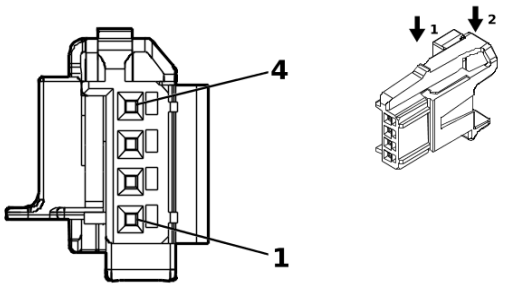

5191926

Connector Part Information

Harness Type: Heater Wiring Harness
OEM Connector: 2294399-1
Service Connector: Service by Harness - See Part Catalog
Description: 4-Way F 0.64 Micro-Quadlock Series(BK)

Terminal Part Information

Terminal Type ID	Terminated Lead	Diagnostic Test Probe	Terminal Removal Tool
I	Not required	No Tool Required	No Tool Required

E40 Air Heater X2 (C3A)

Pin	Size	Color	Circuit	Function	Terminal Type ID	Option
1	—	—	—	Not Occupied	—	—
2	0.35	VT / WH	239	Run/Crank Ignition 1 Voltage	I	—
3	0.35	GN / VT	2852	Body Control Module LIN Bus 6	I	—
4	0.35	BK	1050	Ground	I	—

E42L Rear Body Structure Stop Lamp - Left

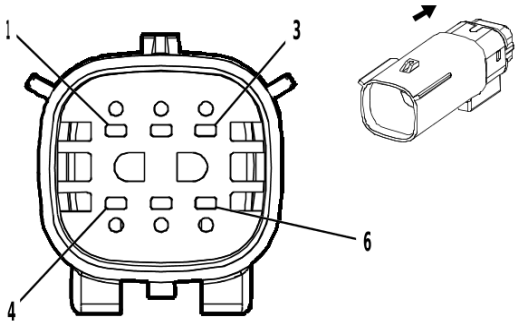

1986159

Connector Part Information

Harness Type: Chassis Wiring Harness
OEM Connector: 33482-3601
Service Connector: 19367742
Description: 6-Way M 1.5 MX Series, Sealed(BK)

Terminal Part Information

Terminal Type ID	Terminated Lead	Diagnostic Test Probe	Terminal Removal Tool
I	Not required	J-35616-3 (GY)	No Tool Required

E42L Rear Body Structure Stop Lamp - Left

Pin	Size	Color	Circuit	Function	Terminal Type ID	Option
1	0.5	BN / BU	6993	Left Rear Park Lamp Control	I	—
2	0.5	GY / YE	7542	Left Rear Stop Lamp Control	I	X88
	0.5	BU / WH	1334	Left Rear Turn Signal Lamp Control 2	I	Z88
3	0.5	GN / WH	24	Backup Lamp Control	I	—
4	0.5	BU / WH	1334	Left Rear Turn Signal Lamp Control 2	I	—
5	0.5	WH / VT	6567	Rear Turn Signal Lamp Feedback Signal	I	—
6	1.5	BK	1950	Ground	I	—

E42R Rear Body Structure Stop Lamp - Right

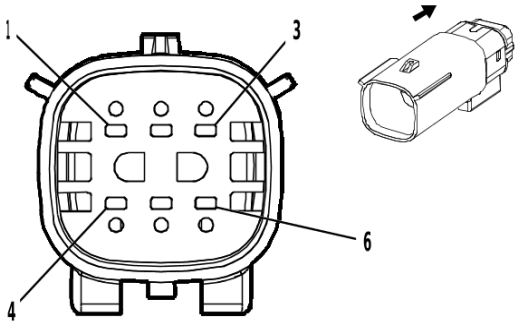

1986159

Connector Part Information

Harness Type: Chassis Wiring Harness
OEM Connector: 33482-3601
Service Connector: 19367742
Description: 6-Way M 1.5 MX Series, Sealed(BK)

Terminal Part Information

Terminal Type ID	Terminated Lead	Diagnostic Test Probe	Terminal Removal Tool
I	Not required	J-35616-3 (GY)	No Tool Required

E42R Rear Body Structure Stop Lamp - Right

Pin	Size	Color	Circuit	Function	Terminal Type ID	Option
1	0.5	BN / GY	6995	Right Rear Park Lamp Control	I	—
2	0.5	WH / YE	7541	Right Rear Stop Lamp Control	I	X88
	0.5	BU / VT	1335	Right Rear Turn Signal Lamp Control 2	I	Z88
3	0.5	GN / WH	24	Backup Lamp Control	I	X88
	0.5	GN	1324	Backup Lamp Control	I	Z88
4	0.5	BU / VT	1335	Right Rear Turn Signal Lamp Control 2	I	—
5	0.5	WH / BK	7544	Right Rear Turn Signal Lamp Feedback Signal	I	—
6	0.75	BK	2050	Ground	I	—

E52 Reductant Heater 2 - Injector Supply Pipe (LM2)

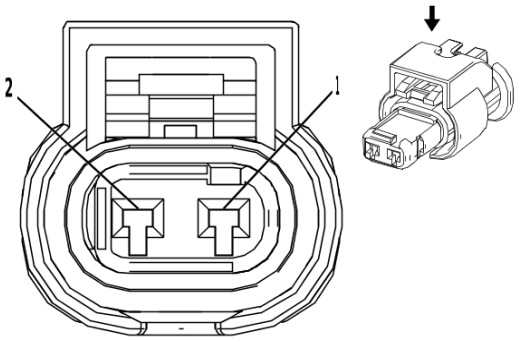

2474752

Connector Part Information

Harness Type: Emission Reduction Fluid Tank Reservoir Wire Harness
OEM Connector: 13927761
Service Connector: Service by Harness - See Part Catalog
Description: 2-Way F 1.2 MCP Series, Sealed(BK with BK Inner Connector)

Terminal Part Information

Terminal Type ID	Terminated Lead	Diagnostic Test Probe	Terminal Removal Tool
I	Not required	J-35616-16 (LT GN)	No Tool Required

E52 Reductant Heater 2 - Injector Supply Pipe (LM2)

Pin	Size	Color	Circuit	Function	Terminal Type ID	Option
1	0.5	WH	3199	Diesel Exhaust Fluid Pressure Line Heater Control	I	—
2	0.5	BN	4319	Diesel Exhaust Fluid Line Heater Low Control	I	—

E55LF Front Side Door Map Pocket Illumination Lamp - Left

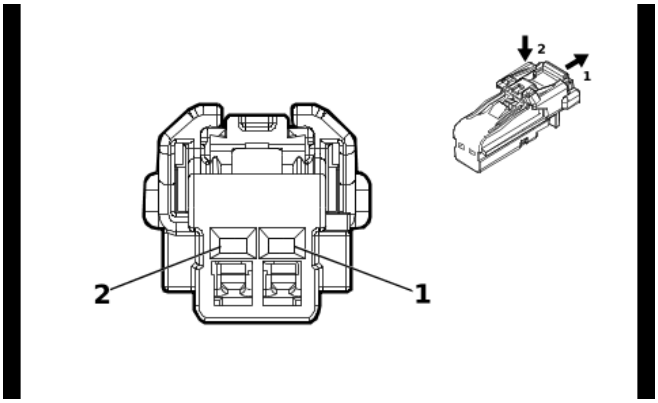

4115691

Connector Part Information

Harness Type: Front Side Door Door Lock Door Wiring Harness - Driver
OEM Connector: 6098-8988
Service Connector: Service by Harness - See Part Catalog
Description: 2-Way F 1.2 MCON Series(BK)

Terminal Part Information

Terminal Type ID	Terminated Lead	Diagnostic Test Probe	Terminal Removal Tool
I	Not required	J-35616-16 (L-GN)	No Tool Required

E55LF Front Side Door Map Pocket Illumination Lamp - Left

Pin	Size	Color	Circuit	Function	Terminal Type ID	Option
1	0.35	GY / VT	2767	LED Ambient Lighting Control Left Front Door	I	—
2	0.35	BK	1150	Ground	I	—

E55LR Rear Side Door Pocket Illumination Lamp - Left

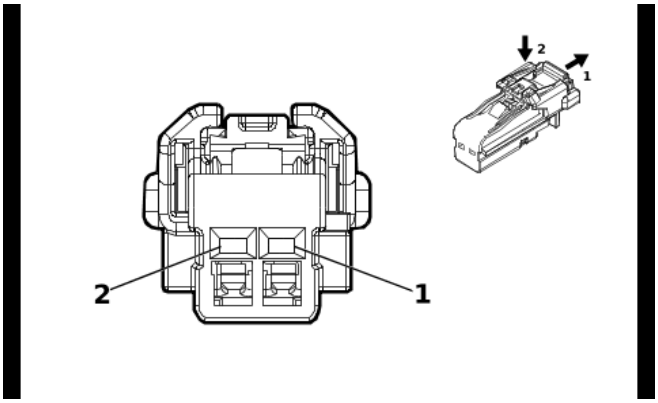

4115691

Connector Part Information

Harness Type: Rear Side Door Door Lock Door Wiring Harness - Left
OEM Connector: 6098-8988
Service Connector: Service by Harness - See Part Catalog
Description: 2-Way F 1.2 MCON Series(BK)

Terminal Part Information

Terminal Type ID	Terminated Lead	Diagnostic Test Probe	Terminal Removal Tool
I	Not required	J-35616-16 (L-GN)	No Tool Required

E55LR Rear Side Door Pocket Illumination Lamp - Left

Pin	Size	Color	Circuit	Function	Terminal Type ID	Option
1	0.35	WH / YE	7557	Interior Door Handle Accent Lighting Control	I	—
2	0.35	BK	1150	Ground	I	—

E55RF Front Side Door Map Pocket Illumination Lamp - Right

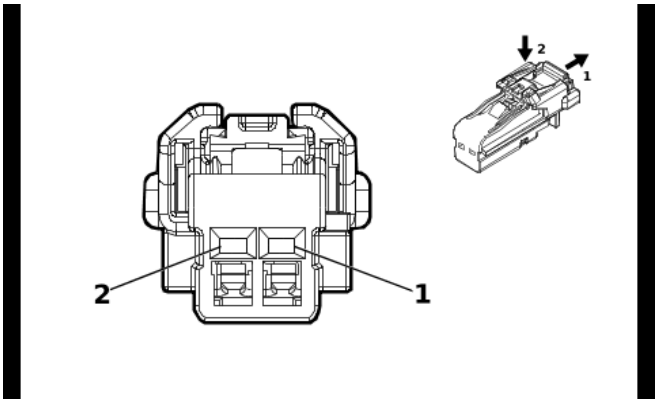

4115691

Connector Part Information

Harness Type: Front Side Door Door Lock Door Wiring Harness - Passenger
OEM Connector: 6098-8988
Service Connector: Service by Harness - See Part Catalog
Description: 2-Way F 1.2 MCON Series(BK)

Terminal Part Information

Terminal Type ID	Terminated Lead	Diagnostic Test Probe	Terminal Removal Tool
I	Not required	J-35616-16 (L-GN)	No Tool Required

E55RF Front Side Door Map Pocket Illumination Lamp - Right

Pin	Size	Color	Circuit	Function	Terminal Type ID	Option
1	0.35	WH / BN	2768	LED Ambient Lighting Control Right Front Door	I	—
2	0.35	BK	1250	Ground	I	—

E55RR Rear Side Door Pocket Illumination Lamp - Right

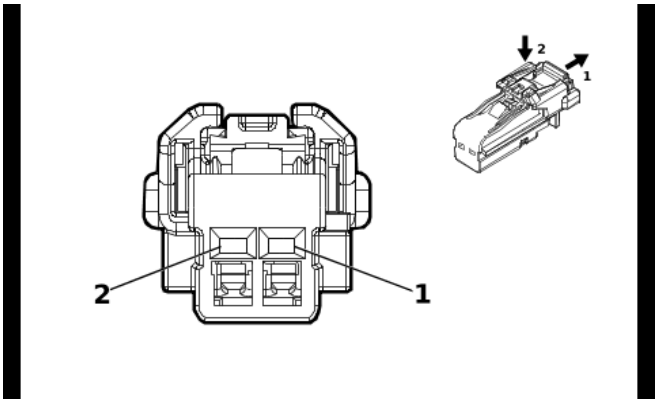

4115691

Connector Part Information

Harness Type: Rear Side Door Door Lock Door Wiring Harness - Right
OEM Connector: 6098-8988
Service Connector: Service by Harness - See Part Catalog
Description: 2-Way F 1.2 MCON Series(BK)

Terminal Part Information

Terminal Type ID	Terminated Lead	Diagnostic Test Probe	Terminal Removal Tool
I	Not required	J-35616-16 (L-GN)	No Tool Required

E55RR Rear Side Door Pocket Illumination Lamp - Right

Pin	Size	Color	Circuit	Function	Terminal Type ID	Option
1	0.35	WH / YE	7557	Interior Door Handle Accent Lighting Control	I	—
2	0.35	BK	1250	Ground	I	—

E63D Front Side Door Inside Handle Illumination Lamp - Left

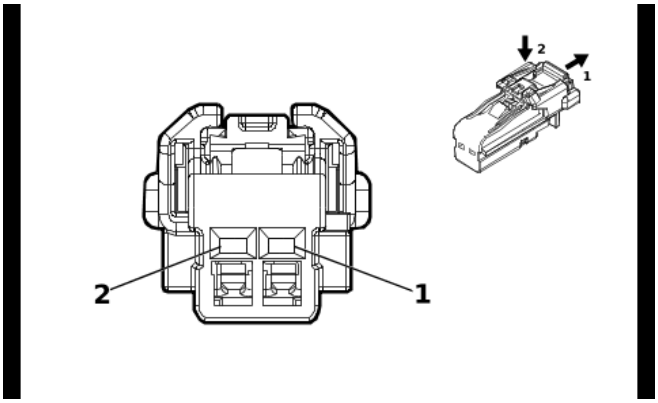

4115691

Connector Part Information

Harness Type: Front Side Door Door Lock Door Wiring Harness - Driver
OEM Connector: 6098-8988
Service Connector: Service by Harness - See Part Catalog
Description: 2-Way F 1.2 MCON Series(BK)

Terminal Part Information

Terminal Type ID	Terminated Lead	Diagnostic Test Probe	Terminal Removal Tool
I	Not required	J-35616-16 (LT GN)	No Tool Required

E63D Front Side Door Inside Handle Illumination Lamp - Left

Pin	Size	Color	Circuit	Function	Terminal Type ID	Option
1	0.35	GY / VT	2767	LED Ambient Lighting Control Left Front Door	I	—
2	0.35	BK	1150	Ground	I	—

E63LR Rear Side Door Inside Handle Illumination Lamp - Left

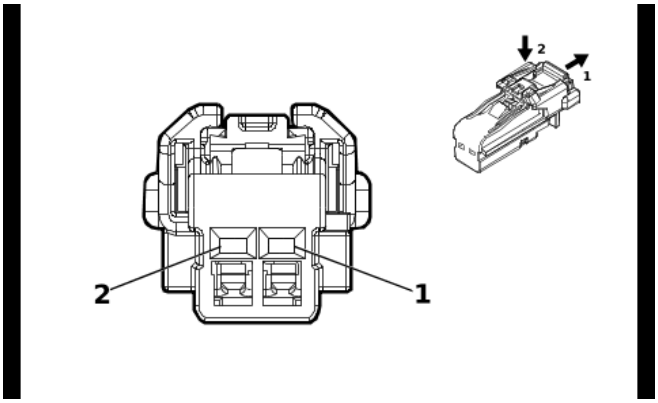

4115691

Connector Part Information

Harness Type: Rear Side Door Door Lock Door Wiring Harness - Left
OEM Connector: 6098-8988
Service Connector: Service by Harness - See Part Catalog
Description: 2-Way F 1.2 MCON Series(BK)

Terminal Part Information

Terminal Type ID	Terminated Lead	Diagnostic Test Probe	Terminal Removal Tool
I	Not required	J-35616-16 (L-GN)	No Tool Required

E63LR Rear Side Door Inside Handle Illumination Lamp - Left

Pin	Size	Color	Circuit	Function	Terminal Type ID	Option
1	0.35	WH / YE	7557	Interior Door Handle Accent Lighting Control	I	—
2	0.35	BK	1150	Ground	I	—

E63P Front Side Door Inside Handle Illumination Lamp - Right

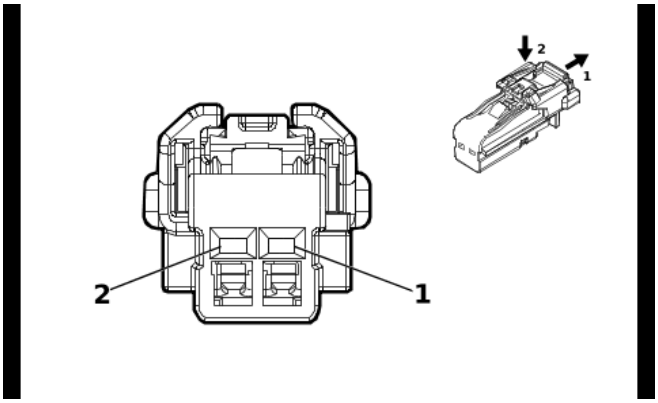

4115691

Connector Part Information

Harness Type: Front Side Door Door Lock Door Wiring Harness - Passenger
OEM Connector: 6098-8988
Service Connector: Service by Harness - See Part Catalog
Description: 2-Way F 1.2 MCON Series(BK)

Terminal Part Information

Terminal Type ID	Terminated Lead	Diagnostic Test Probe	Terminal Removal Tool
I	Not required	J-35616-16 (LT GN)	No Tool Required

E63P Front Side Door Inside Handle Illumination Lamp - Right

Pin	Size	Color	Circuit	Function	Terminal Type ID	Option
1	0.35	WH / BN	2768	LED Ambient Lighting Control Right Front Door	I	—
2	0.35	BK	1250	Ground	I	—

E63RR Rear Side Door Inside Handle Illumination Lamp - Right

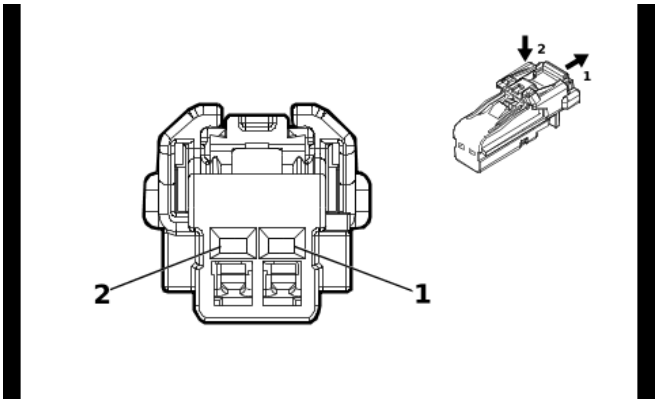

4115691

Connector Part Information

Harness Type: Rear Side Door Door Lock Door Wiring Harness - Right
OEM Connector: 6098-8988
Service Connector: Service by Harness - See Part Catalog
Description: 2-Way F 1.2 MCON Series(BK)

Terminal Part Information

Terminal Type ID	Terminated Lead	Diagnostic Test Probe	Terminal Removal Tool
I	Not required	J-35616-16 (L-GN)	No Tool Required

E63RR Rear Side Door Inside Handle Illumination Lamp - Right

Pin	Size	Color	Circuit	Function	Terminal Type ID	Option
1	0.35	WH / YE	7557	Interior Door Handle Accent Lighting Control	I	—
2	0.35	BK	1250	Ground	I	—

E72 Rear Closure Hands Free Lamp

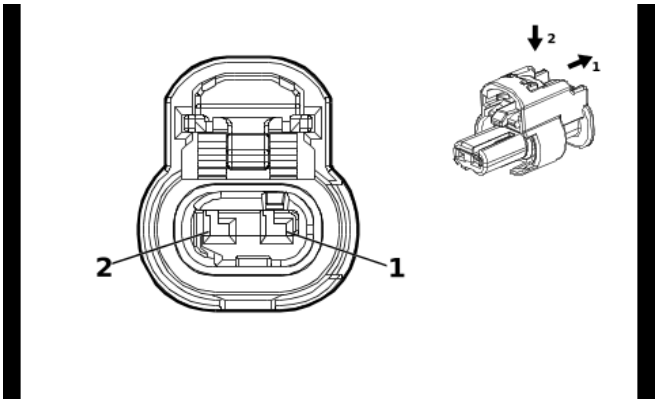

4649903

Connector Part Information

Harness Type: Rear Object Alarm Sensor Wiring Harness
OEM Connector: 1-2296694-1
Service Connector: Service by Harness - See Part Catalog
Description: 2-Way F 1.2 MCON Series, Sealed(BK)

Terminal Part Information

Terminal Type ID	Terminated Lead	Diagnostic Test Probe	Terminal Removal Tool
I	Not required	J-35616-16 (L-GN)	No Tool Required

E72 Rear Closure Hands Free Lamp

Pin	Size	Color	Circuit	Function	Terminal Type ID	Option
1	0.5	GY	2066	Hands-Free Liftgate Sensor Lamp Control	I	—
2	0.5	BK	1450	Ground	I	—

E88 Front Floor Console Bin Lamp

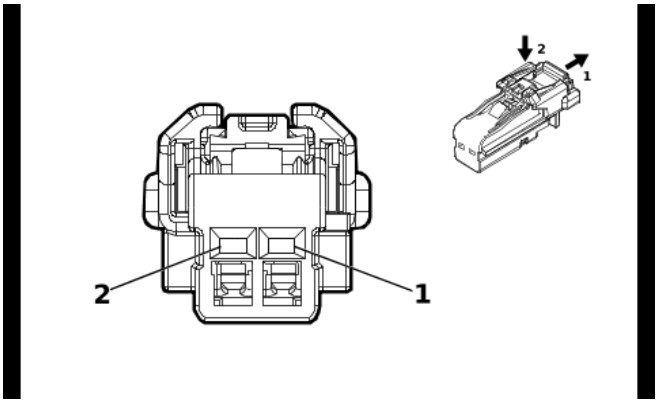

4115691

Connector Part Information

Harness Type: Instrument Panel Wiring Harness
OEM Connector: 6098-8988
Service Connector: 19352066
Description: 2-Way F 1.2 MCON Series(BK)

Terminal Part Information

Terminal Type ID	Terminated Lead	Diagnostic Test Probe	Terminal Removal Tool
I	Not required	J-35616-16 (LT GN)	No Tool Required

E88 Front Floor Console Bin Lamp

Pin	Size	Color	Circuit	Function	Terminal Type ID	Option
1	0.35	BK	1850	Ground	I	—
2	0.35	WH / BK	4782	Instrument Panel Accent Lighting Control	I	—

E93L Rear Fascia Lower Signal Lamp - Left (T79)

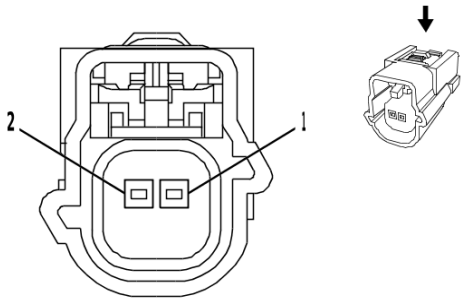

2179777

Connector Part Information

Harness Type: Rear Object Alarm Sensor Wiring Harness
OEM Connector: 13610095
Service Connector: Service by Harness - See Part Catalog
Description: 2-Way F 0.64 Series, Sealed(GY)

Terminal Part Information

Terminal Type ID	Terminated Lead	Diagnostic Test Probe	Terminal Removal Tool
I	Not required	J-35616-64B (L-BU)	No Tool Required

E93L Rear Fascia Lower Signal Lamp - Left (T79)

Pin	Size	Color	Circuit	Function	Terminal Type ID	Option
1	0.5	YE / GY	122	Rear Fog Lamp Control	I	—
2	0.5	BK	1450	Ground	I	—

E93R Rear Fascia Lower Signal Lamp - Right (T79)

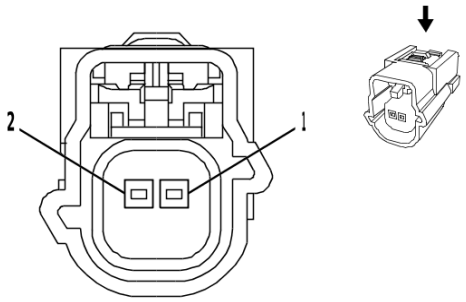

2179777

Connector Part Information

Harness Type: Rear Object Alarm Sensor Wiring Harness
OEM Connector: 13610095
Service Connector: Service by Harness - See Part Catalog
Description: 2-Way F 0.64 Series, Sealed(GY)

Terminal Part Information

Terminal Type ID	Terminated Lead	Diagnostic Test Probe	Terminal Removal Tool
I	Not required	J-35616-64B (L-BU)	No Tool Required

E93R Rear Fascia Lower Signal Lamp - Right (T79)

Pin	Size	Color	Circuit	Function	Terminal Type ID	Option
1	0.5	YE / GY	122	Rear Fog Lamp Control	I	—
2	0.5	BK	1450	Ground	I	—

E103L Rear Closure Signal Lamp - Left

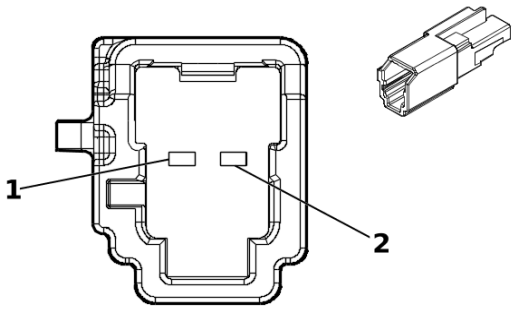

5360948

Connector Part Information

Harness Type: Liftgate Wiring Harness
OEM Connector: 6098-9073
Service Connector: Service by Harness - See Part Catalog
Description: 2-Way M 1.2 MCON Series(GY)

Terminal Part Information

Terminal Type ID	Terminated Lead	Diagnostic Test Probe	Terminal Removal Tool
I	Not required	J-35616-17 (L-GN)	No Tool Required

E103L Rear Closure Signal Lamp - Left

Pin	Size	Color	Circuit	Function	Terminal Type ID	Option
1	0.35	BN / BU	6993	Left Rear Park Lamp Control	I	—
2	0.35	BK	2050	Ground	I	—

E103R Rear Closure Signal Lamp - Right

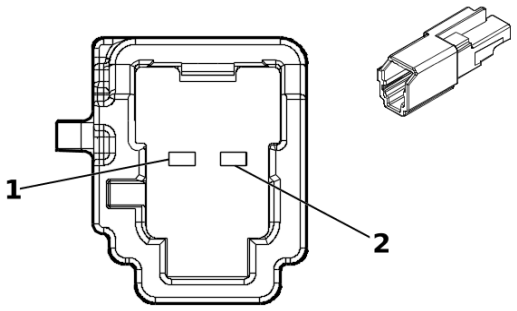

5360948

Connector Part Information

Harness Type: Liftgate Wiring Harness
OEM Connector: 6098-9073
Service Connector: Service by Harness - See Part Catalog
Description: 2-Way M 1.2 MCON Series(GY)

Terminal Part Information

Terminal Type ID	Terminated Lead	Diagnostic Test Probe	Terminal Removal Tool
I	Not required	J-35616-17 (L-GN)	No Tool Required

E103R Rear Closure Signal Lamp - Right

Pin	Size	Color	Circuit	Function	Terminal Type ID	Option
1	0.5	BN / GY	6995	Right Rear Park Lamp Control	I	—
2	0.5	BK	2050	Ground	I	—

F101 Instrument Panel Airbag X1

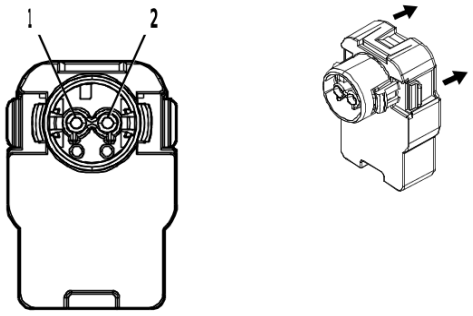

4823732

Connector Part Information

Harness Type: Instrument Panel Airbag Jumper
OEM Connector: 13598467
Service Connector: Service by Harness - See Part Catalog
Description: 2-Way F ABX-5 Series(PK with YE Cover)

Terminal Part Information

Terminal Type ID	Terminated Lead	Diagnostic Test Probe	Terminal Removal Tool
I	Not Available	No Tool Required	Not Available

F101 Instrument Panel Airbag X1

Pin	Size	Color	Circuit	Function	Terminal Type ID	Option
1	0.5	YE / OG	3025	Passenger Instrument Panel Air Bag Stage 1 High Control	I	—
2	0.5	OG / WH	3024	Passenger Instrument Panel Air Bag Stage 1 Low Control	I	—

F101 Instrument Panel Airbag X2

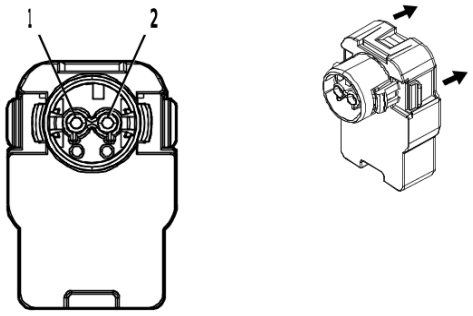

4772246

Connector Part Information

Harness Type: Instrument Panel Airbag Jumper
OEM Connector: 1-1801930-2
Service Connector: Service by Harness - See Part Catalog
Description: 2-Way F ABX-5 Series(PU with YE Cover)

Terminal Part Information

Terminal Type ID	Terminated Lead	Diagnostic Test Probe	Terminal Removal Tool
I	Not Available	No Tool Required	Not Available

F101 Instrument Panel Airbag X2

Pin	Size	Color	Circuit	Function	Terminal Type ID	Option
1	0.5	GY / OG	3027	Passenger Instrument Panel Air Bag Stage 2 High Control	I	—
2	0.5	OG / VT	3026	Passenger Instrument Panel Air Bag Stage 2 Low Control	I	—

F105LA Front and Rear and 3rd Row Roof Rail Airbag - Left

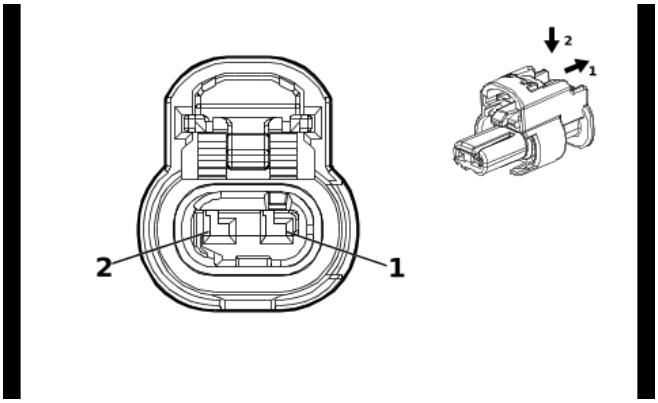

4036662

Connector Part Information

Harness Type: Body Wiring Harness
OEM Connector: 33386204
Service Connector: 19369032
Description: 2-Way F 1.2 MCON-CB Series, Sealed(BK)

Terminal Part Information

Terminal Type ID	Terminated Lead	Diagnostic Test Probe	Terminal Removal Tool
I	Not required	J-35616-16 (LT GN)	No Tool Required

F105LA Front and Rear and 3rd Row Roof Rail Airbag - Left

Pin	Size	Color	Circuit	Function	Terminal Type ID	Option
1	0.5	OG / GN	5019	Left Front Roof Rail Air Bag High Control	I	—
2	0.5	VT / OG	5020	Left Front Roof Rail Air Bag Low Control	I	—

F105RA Front and Rear and 3rd Row Roof Rail Airbag - Right

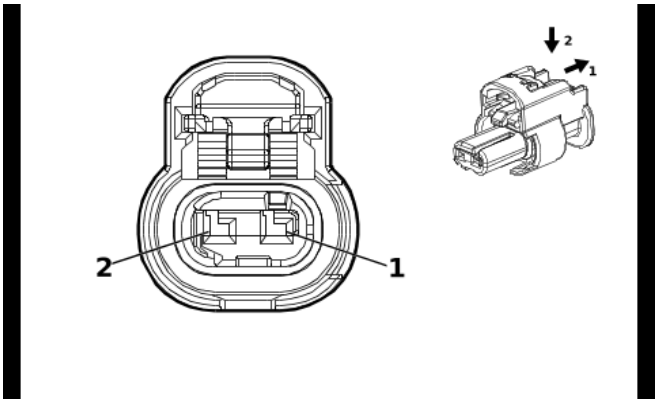

4036662

Connector Part Information

Harness Type: Body Wiring Harness
OEM Connector: 33386204
Service Connector: 19369032
Description: 2-Way F 1.2 MCON-CB Series, Sealed(BK)

Terminal Part Information

Terminal Type ID	Terminated Lead	Diagnostic Test Probe	Terminal Removal Tool
I	Not required	J-35616-16 (LT GN)	No Tool Required

F105RA Front and Rear and 3rd Row Roof Rail Airbag - Right

Pin	Size	Color	Circuit	Function	Terminal Type ID	Option
1	0.5	OG / GY	5021	Right Front Roof Rail Air Bag High Control	I	—
2	0.5	WH / OG	5022	Right Front Roof Rail Air Bag Low Control	I	—

F106D Front Seat Outboard Seat Back Airbag - Driver

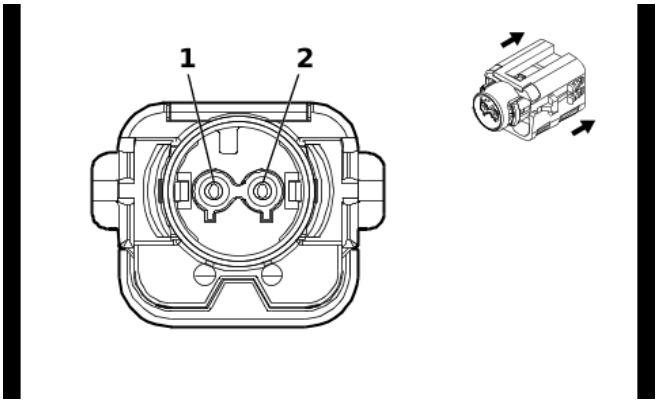

5499727

Connector Part Information

Harness Type: Front Seat Wiring Harness - Driver
OEM Connector: 35212936
Service Connector: Service by Harness - See Part Catalog
Description: 2-Way F ABX-5 Series(PK with YE Cover)

Terminal Part Information

Terminal Type ID	Terminated Lead	Diagnostic Test Probe	Terminal Removal Tool
I	Not required	J-35616-10 (GN)	No Tool Required

F106D Front Seat Outboard Seat Back Airbag - Driver

Pin	Size	Color	Circuit	Function	Terminal Type ID	Option
1	0.5	OG / BU	4962	Driver Seat Back Air Bag High Control	I	—
2	0.5	BK / OG	4963	Driver Seat Back Air Bag Low Control	I	—

F106DA Front Seat Inboard Seat Back Airbag - Driver

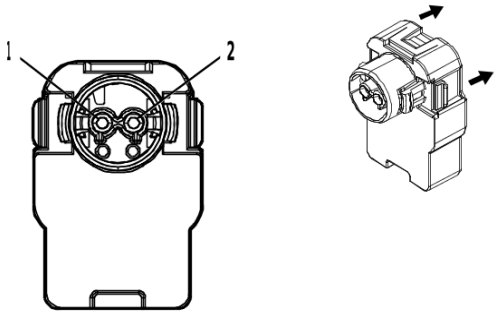

4823720

Connector Part Information

Harness Type: Front Seat Wiring Harness - Driver
OEM Connector: 1-1802365-3
Service Connector: Service by Harness - See Part Catalog
Description: 2-Way F ABX-5 Series(GY with YE Cover)

Terminal Part Information

Terminal Type ID	Terminated Lead	Diagnostic Test Probe	Terminal Removal Tool
I	Not required	J-35616-10 (GN)	No Tool Required

F106DA Front Seat Inboard Seat Back Airbag - Driver

Pin	Size	Color	Circuit	Function	Terminal Type ID	Option
1	0.5	OG / BN	4207	Driver Inboard Seat Side Air Bag High Control	I	—
2	0.5	GY / OG	4208	Driver Inboard Seat Side Air Bag Low Control	I	—

F106P Front Seat Outboard Seat Back Airbag - Passenger

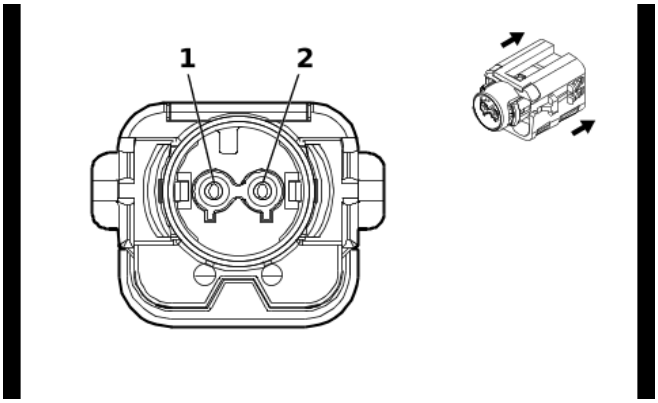

5499727

Connector Part Information

Harness Type: Front Seat Wiring Harness - Passenger
OEM Connector: 35212936
Service Connector: Service by Harness - See Part Catalog
Description: 2-Way F ABX-5 Series(PK with YE Cover)

Terminal Part Information

Terminal Type ID	Terminated Lead	Diagnostic Test Probe	Terminal Removal Tool
I	Not required	J-35616-10 (GN)	No Tool Required

F106P Front Seat Outboard Seat Back Airbag - Passenger

Pin	Size	Color	Circuit	Function	Terminal Type ID	Option
1	0.5	OG / GY	4956	Passenger Seat Back Air Bag High Control	I	—
2	0.5	BU / OG	4957	Passenger Seat Back Air Bag Low Control	I	—

F107 Steering Wheel Airbag X1

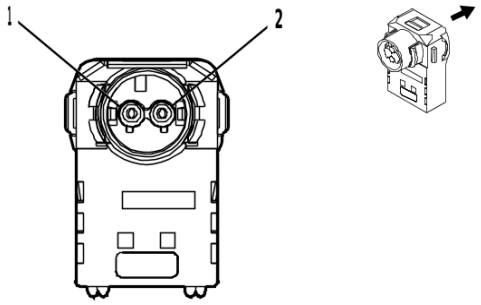

4231869

Connector Part Information

Harness Type: Steering Wheel Horn Switch Wiring Harness
OEM Connector: 33345777
Service Connector: Service by Harness - See Part Catalog
Description: 2-Way F ABX-5 Series(PK with YE Cover)

Terminal Part Information

Terminal Type ID	Terminated Lead	Diagnostic Test Probe	Terminal Removal Tool
I	Not Available	No Tool Required	Not Available

F107 Steering Wheel Airbag X1

Pin	Size	Color	Circuit	Function	Terminal Type ID	Option
1	0.5	YE / OG	3021	Steering Wheel Air Bag Stage 1 High Control	I	—
2	0.5	OG / WH	3020	Steering Wheel Air Bag Stage 1 Low Control	I	—

F107 Steering Wheel Airbag X2

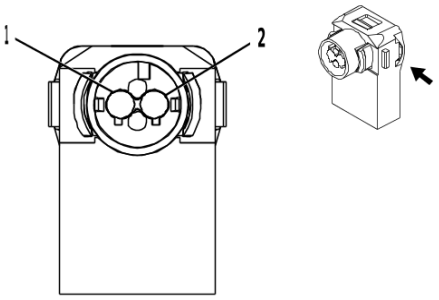

4241364

Connector Part Information

Harness Type: Steering Wheel Horn Switch Wiring Harness
OEM Connector: 33345778
Service Connector: Service by Harness - See Part Catalog
Description: 2-Way F ABX-5 Series(PU with YE Cover)

Terminal Part Information

Terminal Type ID	Terminated Lead	Diagnostic Test Probe	Terminal Removal Tool
I	Not Available	No Tool Required	Not Available

F107 Steering Wheel Airbag X2

Pin	Size	Color	Circuit	Function	Terminal Type ID	Option
1	0.5	GY / OG	3023	Steering Wheel Air Bag Stage 2 High Control	I	—
2	0.5	OG / VT	3022	Steering Wheel Air Bag Stage 2 Low Control	I	—

F112D Front Seat Belt Retractor - Driver

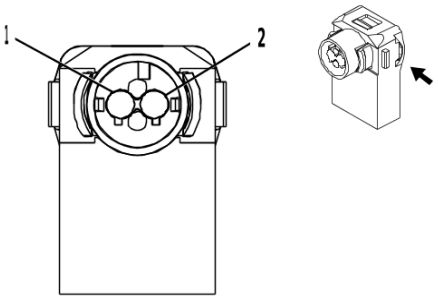

4241364

Connector Part Information

Harness Type: Body Wiring Harness
OEM Connector: 33345778
Service Connector: 19355490
Description: 2-Way F ABX-5 Series(PU with YE Cover)

Terminal Part Information

Terminal Type ID	Terminated Lead	Diagnostic Test Probe	Terminal Removal Tool
I	Not required	J-35616-64B (L-BU)	No Tool Required

F112D Front Seat Belt Retractor - Driver

Pin	Size	Color	Circuit	Function	Terminal Type ID	Option
1	0.5	OG / WH	3477	Driver Seat Belt Retractor Pretensioner High Control	I	—
2	0.5	VT / OG	3478	Driver Seat Belt Retractor Pretensioner Low Control	I	—

F112P Front Seat Belt Retractor - Passenger

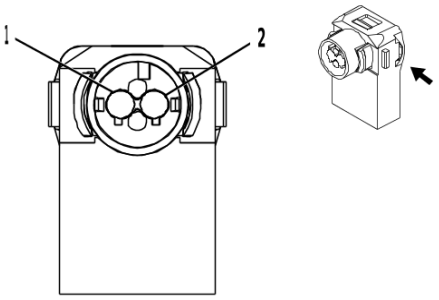

4241364

Connector Part Information

Harness Type: Body Wiring Harness
OEM Connector: 33345778
Service Connector: 19355490
Description: 2-Way F ABX-5 Series(PU with YE Cover)

Terminal Part Information

Terminal Type ID	Terminated Lead	Diagnostic Test Probe	Terminal Removal Tool
I	Not required	J-35616-64B (L-BU)	No Tool Required

F112P Front Seat Belt Retractor - Passenger

Pin	Size	Color	Circuit	Function	Terminal Type ID	Option
1	0.5	OG / GN	3475	Passenger Seat Belt Retractor Pretensioner High Control	I	—
2	0.5	WH / OG	3476	Passenger Seat Belt Retractor Pretensioner Low Control	I	—

F113D Front Seat Belt Anchor Plate Tensioner - Driver

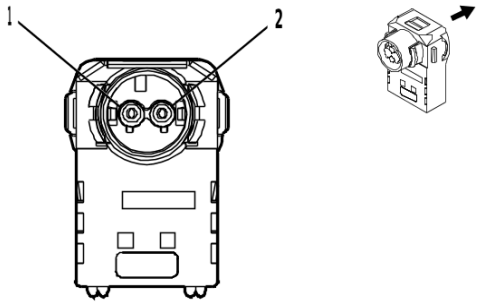

4231869

Connector Part Information

Harness Type: Body Wiring Harness
OEM Connector: 33345777
Service Connector: 19355489
Description: 2-Way F ABX-5 Series(PK with YE Cover)

Terminal Part Information

Terminal Type ID	Terminated Lead	Diagnostic Test Probe	Terminal Removal Tool
I	Not required	J-35616-64B (L-BU)	No Tool Required

F113D Front Seat Belt Anchor Plate Tensioner - Driver

Pin	Size	Color	Circuit	Function	Terminal Type ID	Option
1	0.5	OG / YE	3481	Driver Seat Belt Anchor Pretensioner High Control	I	—
2	0.5	VT / OG	3482	Driver Seat Belt Anchor Pretensioner Low Control	I	—

F113P Front Seat Belt Anchor Plate Tensioner - Passenger

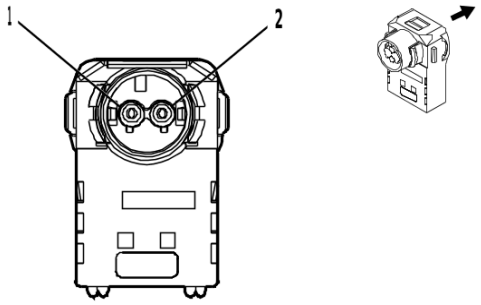

4231869

Connector Part Information

Harness Type: Body Wiring Harness
OEM Connector: 33345777
Service Connector: 19355489
Description: 2-Way F ABX-5 Series(PK with YE Cover)

Terminal Part Information

Terminal Type ID	Terminated Lead	Diagnostic Test Probe	Terminal Removal Tool
I	Not required	J-35616-64B (L-BU)	No Tool Required

F113P Front Seat Belt Anchor Plate Tensioner - Passenger

Pin	Size	Color	Circuit	Function	Terminal Type ID	Option
1	0.5	OG / BN	3479	Passenger Seat Belt Anchor Pretensioner High Control	I	—
2	0.5	GY / OG	3480	Passenger Seat Belt Anchor Pretensioner Low Control	I	—

G4 Automatic Level Control Air Compressor (F47)

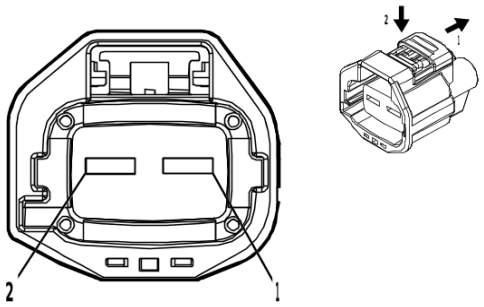

4584202

Connector Part Information

Harness Type: Chassis Wiring Harness
OEM Connector: 7287-6196-10
Service Connector: 19368222
Description: 2-Way F 6.3 Series, Sealed(D-GY)

Terminal Part Information

Terminal Type ID	Terminated Lead	Diagnostic Test Probe	Terminal Removal Tool
I	Not required	J-35616-42 (RD)	No Tool Required

G4 Automatic Level Control Air Compressor (F47)

Pin	Size	Color	Circuit	Function	Terminal Type ID	Option
1	2.5	GN / BN	2357	Vehicle Level Control Compressor Motor Control	I	—
2	2.5	GY / BN	2693	Leveling Compressor Motor Low Reference	I	—

G5 Transmission Fluid Pump - Electric/Auxiliary (MQC)

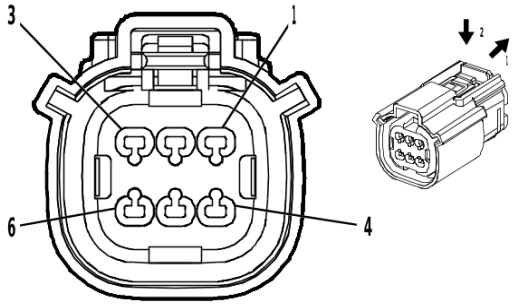

4574736

Connector Part Information

Harness Type: Automatic Transmission Wiring Harness
OEM Connector: 160038-3009
Service Connector: Service by Harness - See Part Catalog
Description: 6-Way F 1.5 MX Series, Sealed(WH)

Terminal Part Information

Terminal Type ID	Terminated Lead	Diagnostic Test Probe	Terminal Removal Tool
I	Not required	J-35616-2A (GY)	No Tool Required

G5 Transmission Fluid Pump - Electric/Auxiliary (MQC)

Pin	Size	Color	Circuit	Function	Terminal Type ID	Option
1	1.5	GN / VT	8640	Battery Positive Voltage	I	—
2	—	—	—	Not Occupied	—	—
3	0.5	BN	6387	Transmission High Side Driver 1 Control	I	—
4	0.5	GY / OG	2968	Transmission Auxiliary Fluid Pump Control	I	—
5	—	—	—	Not Occupied	—	—
6	1.5	BK / YE	6550	Ground	I	—

G10L Cooling Fan Motor - Left

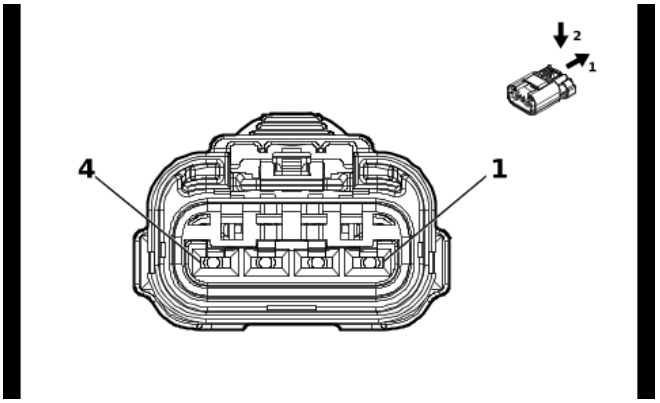

5838592

Connector Part Information

Harness Type: Engine Wiring Harness
OEM Connector: 35243535
Service Connector: Service by Harness - See Part Catalog
Description: 4-Way F 2.8 APEX Series, Sealed(BK)

Terminal Part Information

Terminal Type ID	Terminated Lead	Diagnostic Test Probe	Terminal Removal Tool
I	Not required	J-35616-4A (PU)	No Tool Required

G10L Cooling Fan Motor - Left

Pin	Size	Color	Circuit	Function	Terminal Type ID	Option
1	5	BK	450	Ground	I	—
2	5	RD / BU	1842	Battery Positive Voltage	I	—
3	—	—	—	Not Occupied	—	—
4	0.75	GN / VT	4621	Engine Control Module LIN Bus 1	I	—

G10LW Cooling Fan Motor - Lower (LM2)

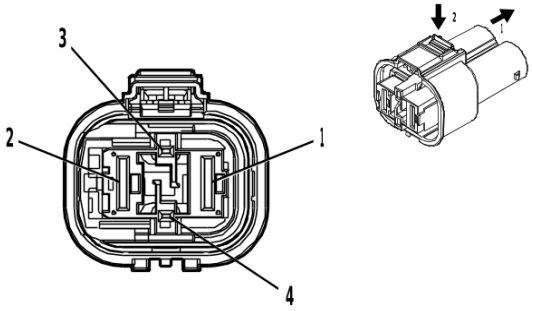

4847569

Connector Part Information

Harness Type: Engine Wiring Harness
OEM Connector: 4-2286732-1
Service Connector: 84766431
Description: 4-Way F 1.2, 9.5 MCON Series, Sealed(BK)

Terminal Part Information

Terminal Type ID	Terminated Lead	Diagnostic Test Probe	Terminal Removal Tool
I	Not required	J-35616-16 (LT GN)	No Tool Required
II	Not required	J-35616-22 (RD)	No Tool Required

G10LW Cooling Fan Motor - Lower (LM2)

Pin	Size	Color	Circuit	Function	Terminal Type ID	Option
1	5	RD / BU	1542	Battery Positive Voltage	II	—
2	5	BK	450	Ground	II	—
3	0.5	GN / YE	4623	Engine Control Module LIN Bus 3	I	—
4	—	—	—	Not Occupied	—	—

G10R Cooling Fan Motor - Right (L84/L87)

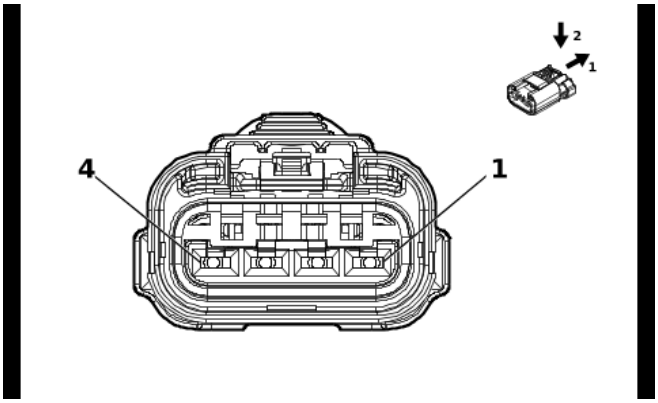

5838592

Connector Part Information

Harness Type: Engine Wiring Harness
OEM Connector: 35243535
Service Connector: Service by Harness - See Part Catalog
Description: 4-Way F 2.8 APEX Series, Sealed(BK)

Terminal Part Information

Terminal Type ID	Terminated Lead	Diagnostic Test Probe	Terminal Removal Tool
I	Not required	J-35616-4A (PU)	No Tool Required

G10R Cooling Fan Motor - Right (L84/L87)

Pin	Size	Color	Circuit	Function	Terminal Type ID	Option
1	5	BK	450	Ground	I	—
2	5	RD / BN	1742	Battery Positive Voltage	I	—
3	—	—	—	Not Occupied	—	—
4	0.75	GN / VT	4621	Engine Control Module LIN Bus 1	I	—

G10R Cooling Fan Motor - Right (LM2)

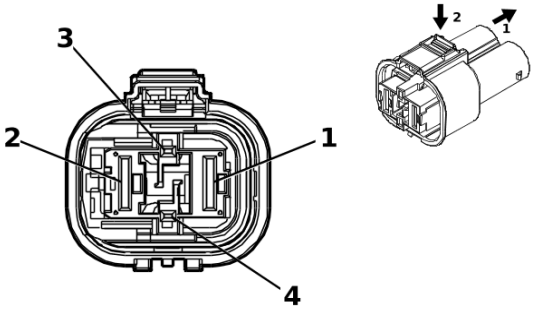

5187743

Connector Part Information

Harness Type: Engine Wiring Harness
OEM Connector: 35194180
Service Connector: Service by Harness - See Part Catalog
Description: 4-Way F 1.2, 9.5 MCON Series(GY)

Terminal Part Information

Terminal Type ID	Terminated Lead	Diagnostic Test Probe	Terminal Removal Tool
I	Not required	J-35616-16 (LT GN)	No Tool Required
II	Not required	J-35616-22 (RD)	No Tool Required

G10R Cooling Fan Motor - Right (LM2)

Pin	Size	Color	Circuit	Function	Terminal Type ID	Option
1	10	RD / YE	1442	Battery Positive Voltage	II	—
2	8	BK	450	Ground	II	—
3	0.5	GN / VT	4621	Engine Control Module LIN Bus 1	I	—
4	—	—	—	Not Occupied	—	—

G13 Generator X1

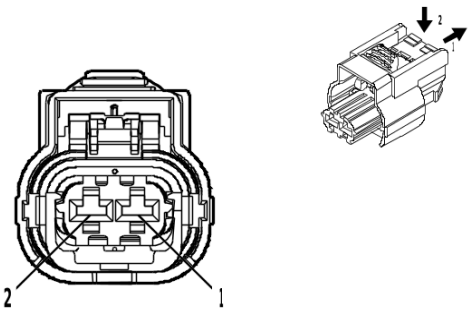

4992524

Connector Part Information

Harness Type: Engine Wiring Harness
OEM Connector: 35182447
Service Connector: 84941154
Description: 2-Way F 2.8 CTS Series, Sealed(BK)

Terminal Part Information

Terminal Type ID	Terminated Lead	Diagnostic Test Probe	Terminal Removal Tool
I	Not required	J-35616-35 (VT)	No Tool Required

G13 Generator X1

Pin	Size	Color	Circuit	Function	Terminal Type ID	Option
1	0.5	BN	25	Charge Indicator Control	I	—
2	0.5	GY	23	Generator Field Duty Cycle Signal	I	—

G13 Generator X2 (L84/L87)

—

Connector Part Information

Harness Type: Starter Solenoid Cable
OEM Connector: 84238913
Service Connector: Service by Cable Assembly — See Part Catalog
Description: 1-Way Ring Terminal

Terminal Part Information

Terminal Type ID	Terminated Lead	Diagnostic Test Probe	Terminal Removal Tool
I	Not required	No Tool Required	No Tool Required

G13 Generator X2 (L84/L87)

Pin	Size	Color	Circuit	Function	Terminal Type ID	Option
A	35	RD / YE	2	Battery Positive Voltage	I	—

G17 Heater Coolant Pump

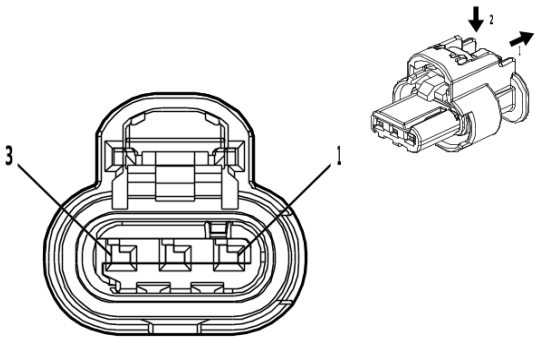

4581126

Connector Part Information

Harness Type: Engine Wiring Harness
OEM Connector: 1-2296695-1
Service Connector: 19371207
Description: 3-Way F 1.2 MCON-CB Series, Sealed(BK)

Terminal Part Information

Terminal Type ID	Terminated Lead	Diagnostic Test Probe	Terminal Removal Tool
I	Not required	J-35616-16 (LT GN)	No Tool Required

G17 Heater Coolant Pump

Pin	Size	Color	Circuit	Function	Terminal Type ID	Option
1	0.75	BK	6550	Ground	I	L84/ L87
	0.5	BK	6550	Ground	I	LM2
2	0.5	RD / BN	5940	Battery Positive Voltage	I	—
3	0.5	GN / VT	4621	Engine Control Module LIN Bus 1	I	—

G18 Fuel Pump - High Pressure (L84/L87)

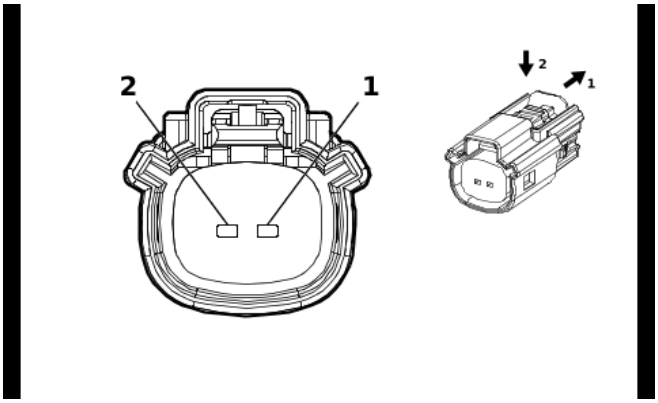

2474713

Connector Part Information

Harness Type: Fuel Injector Wiring Harness
OEM Connector: 13583151
Service Connector: Service by Harness - See Part Catalog
Description: 2-Way F 1.5 MX Series, Sealed(BK)

Terminal Part Information

Terminal Type ID	Terminated Lead	Diagnostic Test Probe	Terminal Removal Tool
I	Not Available	No Tool Required	Not Available

G18 Fuel Pump - High Pressure (L84/L87)

Pin	Size	Color	Circuit	Function	Terminal Type ID	Option
1	0.75	VT / BK	7300	High Pressure Fuel Pump Low Control	I	—
2	0.75	YE	7301	High Pressure Fuel Pump High Control	I	—

G24 Windshield Washer Pump

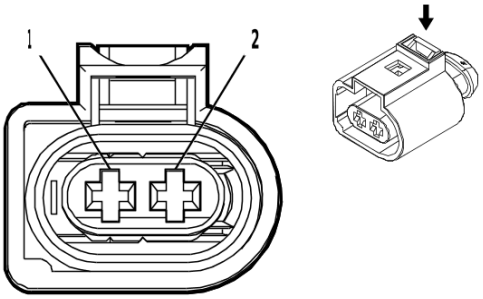

2474738

Connector Part Information

Harness Type: Body Wiring Harness
OEM Connector: 1-1355200-1
Service Connector: 85005016
Description: 2-Way F 2.8 MDK5 Series, Sealed(BK)

Terminal Part Information

Terminal Type ID	Terminated Lead	Diagnostic Test Probe	Terminal Removal Tool
I	Not required	J-35616-4A (PU)	No Tool Required

G24 Windshield Washer Pump

Pin	Size	Color	Circuit	Function	Terminal Type ID	Option
1	0.75	BU / VT	392	Rear Window Washer Pump Control	I	—
2	0.75	GY / VT	228	Windshield Washer Pump Control	I	—

G31D Front Seat Back Lumbar Pump - Driver (AVK+A45)

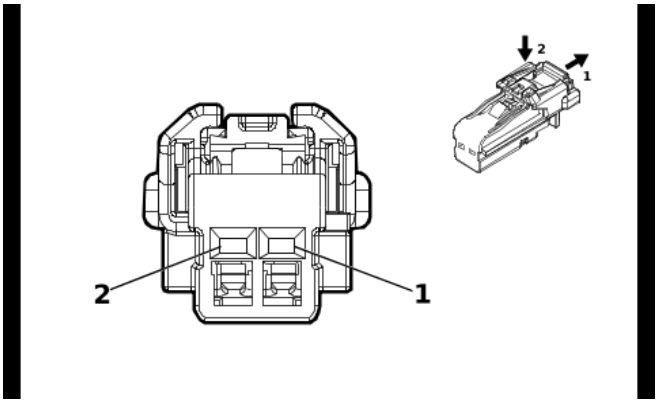

4115691

Connector Part Information

Harness Type: Front Seat Wiring Harness - Driver
OEM Connector: 6098-8988
Service Connector: Service by Harness - See Part Catalog
Description: 2-Way F 1.2 MCON Series(BK)

Terminal Part Information

Terminal Type ID	Terminated Lead	Diagnostic Test Probe	Terminal Removal Tool
I	Not required	J-35616-16 (L-GN)	No Tool Required

G31D Front Seat Back Lumbar Pump - Driver (AVK+A45)

Pin	Size	Color	Circuit	Function	Terminal Type ID	Option
1	0.75	WH / BU	4891	Driver Seat Lumbar/Bolster Pump Control	I	—
2	0.75	BN / BK	2305	Driver Seat Bolster Pump Low Reference	I	—

G31P Front Seat Back Lumbar Pump - Passenger (AVK-A45)

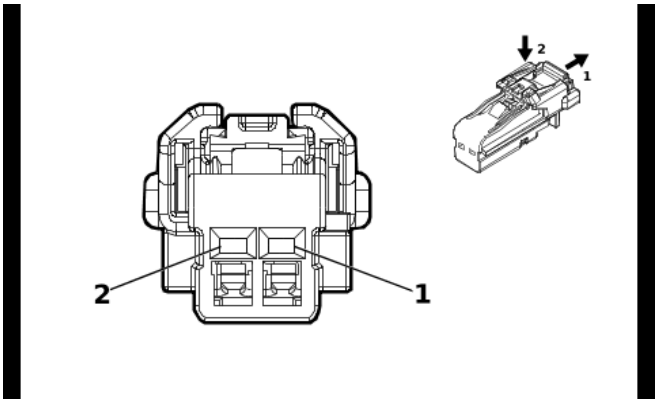

4115691

Connector Part Information

Harness Type: Front Seat Wiring Harness - Passenger
OEM Connector: 6098-8988
Service Connector: Service by Harness - See Part Catalog
Description: 2-Way F 1.2 MCON Series(BK)

Terminal Part Information

Terminal Type ID	Terminated Lead	Diagnostic Test Probe	Terminal Removal Tool
I	Not required	J-35616-16 (L-GN)	No Tool Required

G31P Front Seat Back Lumbar Pump - Passenger (AVK-A45)

Pin	Size	Color	Circuit	Function	Terminal Type ID	Option
1	0.75	GY / WH	4890	Passenger Seat Lumbar/Bolster Pump Control	I	—
2	0.75	BK	1250	Ground	I	—

K4 Running Board Control Module X1 (B3L)

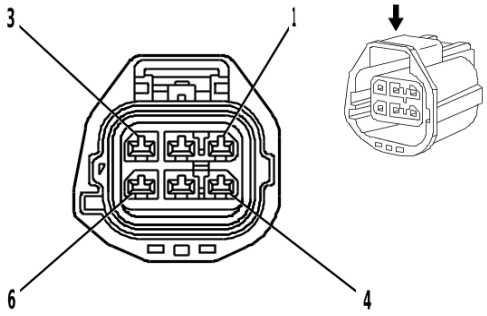

1420587

Connector Part Information

Harness Type: Chassis Wiring Harness
OEM Connector: 7287-9814-10
Service Connector: 19368306
Description: 6-Way F 2.8 Series, Sealed(GY)

Terminal Part Information

Terminal Type ID	Terminated Lead	Diagnostic Test Probe	Terminal Removal Tool
I	Not required	J-35616-35 (VT)	No Tool Required

K4 Running Board Control Module X1 (B3L)

Pin	Size	Color	Circuit	Function	Terminal Type ID	Option
1	2.5	RD / YE	1142	Battery Positive Voltage	I	—
2	2	GY	7472	Left Running Board Step Motor Control Retract	I	—
3	2	BU	7470	Right Running Board Step Motor Control Extend	I	—
4	2.5	BK	1650	Ground	I	—
5	2	WH / BN	7471	Left Running Board Step Motor Control Extend	I	—
6	2	GN	7469	Right Left Running Board Step Motor Control Retract	I	—

K4 Running Board Control Module X2 (B3L)

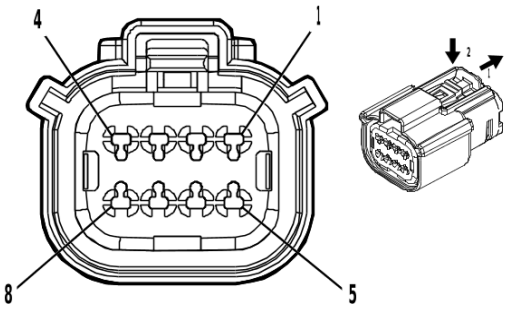

4846407

Connector Part Information

Harness Type: Chassis Wiring Harness
OEM Connector: 33472-4846
Service Connector: 84928314
Description: 8-Way F 1.5 MX Series, Sealed(BK)

Terminal Part Information

Terminal Type ID	Terminated Lead	Diagnostic Test Probe	Terminal Removal Tool
I	Not required	J-35616-14 (GN)	No Tool Required

K4 Running Board Control Module X2 (B3L)

Pin	Size	Color	Circuit	Function	Terminal Type ID	Option
1	—	—	—	Not Occupied	—	—
2	0.5	WH	4986	AUTOSAR CAN Bus [-] 1 Serial Data	I	—
3	0.5	BU	4987	AUTOSAR CAN Bus [+] 1 Serial Data	I	—
4 - 5	—	—	—	Not Occupied	—	—
6	0.5	WH	4986	AUTOSAR CAN Bus [-] 1 Serial Data	I	—
7	0.5	BU	4987	AUTOSAR CAN Bus [+] 1 Serial Data	I	—
8	—	—	—	Not Occupied	—	—

K4 Running Board Control Module X3 (B3L)

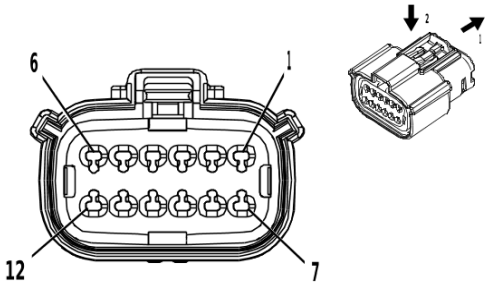

2871860

Connector Part Information

Harness Type: Chassis Wiring Harness
OEM Connector: 33472-6223
Service Connector: 19352907
Description: 12-Way F 1.5 MX Series, Sealed(BK)

Terminal Part Information

Terminal Type ID	Terminated Lead	Diagnostic Test Probe	Terminal Removal Tool
I	19368973	J-35616-2A (GY)	J-38125-217

K4 Running Board Control Module X3 (B3L)

Pin	Size	Color	Circuit	Function	Terminal Type ID	Option
1	0.5	GN / RD	7464	Right Running Board Step Motor Hall Sensor 5V Reference	I	—
2	0.5	VT	7465	Right Running Board Step Motor Hall Sensor Signal	I	—
3	0.5	YE / BK	7463	Right Running Board Step Motor Hall Sensor Low Reference	I	—
4	0.5	BN	4748	Left Running Board Step Courtesy Lamp Control	I	—
5	0.5	GY / VT	4749	Right Running Board Step Courtesy Lamp Control	I	—
6	—	—	—	Not Occupied	—	—
7	0.5	VT / RD	7468	Left Running Board Step Motor Hall Sensor 5V Reference	I	—
8	0.5	YE	7467	Left Running Board Step Motor Hall Sensor Signal	I	—
9	0.5	YE / BN	7466	Left Running Board Step Motor Hall Sensor Low Reference	I	—
10 - 12	—	—	—	Not Occupied	—	—

K5 Automatic Level Control Module (F47)

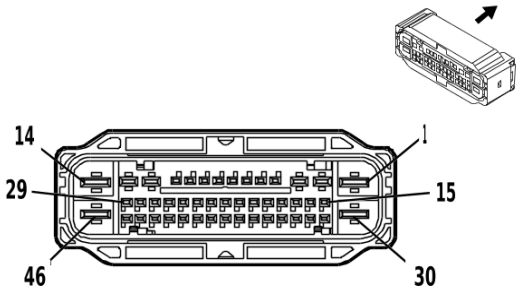

4162046

Connector Part Information

Harness Type: Chassis Wiring Harness
OEM Connector: 35449380
Service Connector: 19333026
Description: 46-Way F 1.2 OCS, 2.8, 6.3 CTS Series, Sealed(GY)

Terminal Part Information

Terminal Type ID	Terminated Lead	Diagnostic Test Probe	Terminal Removal Tool
I	13575368	J-35616-35 (VT)	J-38125-557
II	19370818	J-35616-12 (BU)	J-38125-215A
III	84634921	J-35616-42 (RD)	J-38125-212

K5 Automatic Level Control Module (F47)

Pin	Size	Color	Circuit	Function	Terminal Type ID	Option
1	3	RD / BU	7640	Battery Positive Voltage	III	—
2	0.75	RD / BN	2940	Battery Positive Voltage	I	—
3 - 6	—	—	—	Not Occupied	—	—
7	0.5	WH / GN	320	Vehicle Level Control Exhaust Solenoid Valve Control	II	—
8	—	—	—	Not Occupied	—	—
9	0.5	WH / BU	3261	Vehicle Level Control Exhaust Solenoid Valve Control	II	—
10	0.5	BU	4987	AUTOSAR CAN Bus [+] 1 Serial Data	II	—
11	0.5	WH	4986	AUTOSAR CAN Bus [-] 1 Serial Data	II	—
12	—	—	—	Not Occupied	—	—
13	0.75	BK	2150	Ground	I	—
14	3	BK	2150	Ground	III	—
15 - 17	—	—	—	Not Occupied	—	—
18	0.5	BK / BU	1206	Left Front Suspension Position Sensor Low Reference	II	—
19	0.5	BN / WH	1207	Left Front Suspension Position Sensor Signal	II	—
20	0.5	BU / RD	1205	Left Front Suspension Position Sensor Voltage Reference	II	—
21	0.5	YE / RD	1208	Left Rear Suspension Position Sensor Voltage Reference	II	—
22	0.5	GN / WH	1210	Left Rear Suspension Position Sensor Signal	II	—

K5 Automatic Level Control Module (F47) (cont'd)

Pin	Size	Color	Circuit	Function	Terminal Type ID	Option
23	0.5	BK / GN	1209	Left Rear Suspension Position Sensor Low Reference	II	—
24	0.5	BU	4987	AUTOSAR CAN Bus [+] 1 Serial Data	II	—
25	0.5	WH	4986	AUTOSAR CAN Bus [-] 1 Serial Data	II	—
26 - 29	—	—	—	Not Occupied	—	—
30	2.5	GN / BN	2357	Vehicle Level Control Compressor Motor Control	III	—
31 - 33	—	—	—	Not Occupied	—	—
34	0.5	BK / GY	1212	Right Front Suspension Position Sensor Low Reference	II	—
35	0.5	YE / WH	1213	Right Front Suspension Position Sensor Signal	II	—
36	0.5	BN / RD	1211	Right Front Suspension Position Sensor Voltage Reference	II	—
37	0.5	GN / RD	1214	Right Rear Suspension Position Sensor Voltage Reference	II	—
38	0.5	GN / GY	1216	Right Rear Suspension Position Sensor Signal	II	—
39	0.5	BK / YE	1215	Right Rear Suspension Position Sensor Low Reference	II	—
40 - 45	—	—	—	Not Occupied	—	—
46	2.5	GY / BN	2693	Leveling Compressor Motor Low Reference	III	—

K8AB Blower Motor Control Module - Rear X1 (C69)

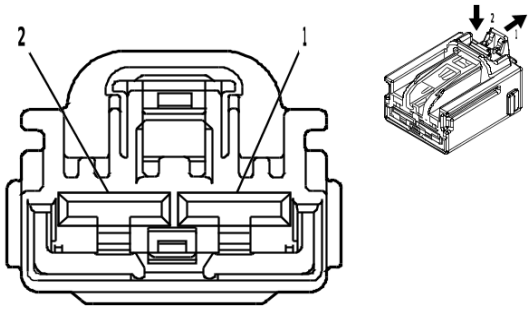

5116029

Connector Part Information

Harness Type: Rear Blower Motor
OEM Connector: 13514655
Service Connector: Service by Harness - See Part Catalog
Description: 2-Way F 6.3 Series(GY)

Terminal Part Information

Terminal Type ID	Terminated Lead	Diagnostic Test Probe	Terminal Removal Tool
I	Not Available	No Tool Required	Not Available

K8AB Blower Motor Control Module - Rear X1 (C69)

Pin	Size	Color	Circuit	Function	Terminal Type ID	Option
1	2.5	GY / BN	101	Blower Motor Control 2	I	—
2	2.5	BU / BK	5988	Rear Blower Motor Low Reference	I	—

K8AB Blower Motor Control Module - Rear X2 (C69)

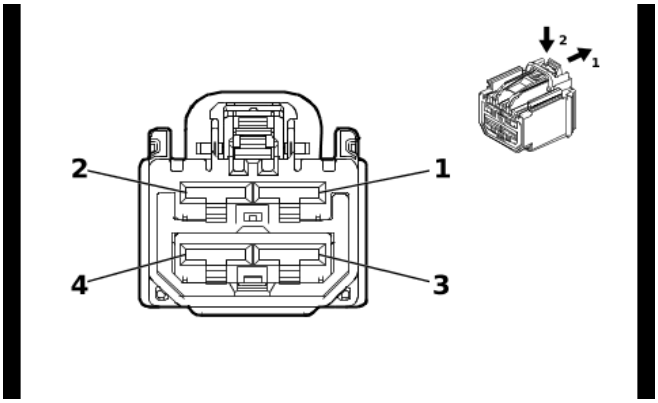

5492913

Connector Part Information

Harness Type: Auxiliary Heater and Air Conditioning Wiring Harness
OEM Connector: 13524647
Service Connector: Service by Harness - See Part Catalog
Description: 4-Way F 6.3 YESC Series(GY)

Terminal Part Information

Terminal Type ID	Terminated Lead	Diagnostic Test Probe	Terminal Removal Tool
I	Not Available	No Tool Required	Not Available

K8AB Blower Motor Control Module - Rear X2 (C69)

Pin	Size	Color	Circuit	Function	Terminal Type ID	Option
1	—	—	—	Not Occupied	—	—
2	3.0	RD / YE	1740	Battery Positive Voltage	I	—
3	0.5	BN	2211	Rear Blower Motor Speed Control	I	—
4	3.0	BK	1450	Ground	I	—

K9 Body Control Module X1

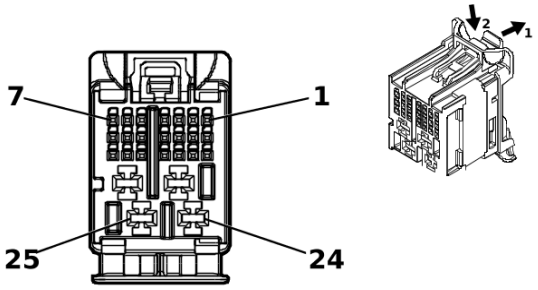

5203995

Connector Part Information

Harness Type: Instrument Panel Wiring Harness
OEM Connector: 160027-0013
Service Connector: 13534967
Description: 25-Way F 0.5 MQS, 2.8 MCP Series(BK with GY Inner Connector)

Terminal Part Information

Terminal Type ID	Terminated Lead	Diagnostic Test Probe	Terminal Removal Tool
I	13575435	J-35616-4A (PU)	J-38125-557
II	19370262	EL-35616-58 (BK)	EL-38125-58

K9 Body Control Module X1

Pin	Size	Color	Circuit	Function	Terminal Type ID	Option
1	0.35	WH / BK	4782	Instrument Panel Accent Lighting Control	II	—
2	—	—	—	Not Occupied	—	—
3	0.35	GY / YE	7543	Hazard Warning Indicator LED Dimming Signal	II	—
4	0.35	VT / GN	7558	Front Footwell Accent Lighting Control	II	5RU
5	0.35	BU / GY	754	Blower Motor Speed Control	II	—
6	0.35	WH / YE	4634	HVAC Remote Enable Signal	II	—
7 - 10	—	—	—	Not Occupied	—	—
11	0.35	GY / GN	4636	HVAC System Enable Signal	II	—
12	0.35	GY	728	Security Indicator Control	II	—
13	0.35	YE	6812	Out of Park Signal	II	—
14	—	—	—	Not Occupied	—	—
15	0.35	GY	590	Driver Solar Sensor Signal	II	—
16	0.35	GY	6137	A/C Evaporator Temperature Sensor Signal	II	—
17	0.35	WH / BU	278	Ambient Light Sensor Signal	II	—
18	0.35	BU / WH	734	Inside Air Temperature Sensor Signal	II	—
19	—	—	—	Not Occupied	—	—
20	0.35	GN / VT	2852	Body Control Module LIN Bus 6	II	—
21 - 22	—	—	—	Not Occupied	—	—
23	1	RD / GY	2840	Battery Positive Voltage	I	—
24	—	—	—	Not Occupied	—	—
25	0.75	RD / GY	2140	Battery Positive Voltage	I	—

K9 Body Control Module X2

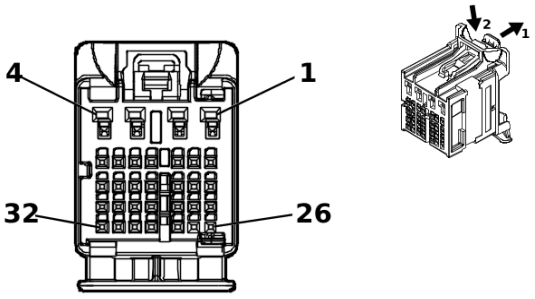

5204222

Connector Part Information

Harness Type: Instrument Panel Wiring Harness
OEM Connector: 160028-0015
Service Connector: 13534980
Description: 32-Way F 0.5 MQS, 1.2 OCS Series(PK with GY Inner Connector)

Terminal Part Information

Terminal Type ID	Terminated Lead	Diagnostic Test Probe	Terminal Removal Tool
I	19370262	EL-35616-58 (BK)	EL-38125-58
II	84729890	J-35616-12 (BU)	J-38125-553

K9 Body Control Module X2

Pin	Size	Color	Circuit	Function	Terminal Type ID	Option
1	0.35	GY	157	Interior Lamp Control	II	—
2 - 4	—	—	—	Not Occupied	—	—
5	0.35	BU / GN	5723	Ignition Mode Switch Mode Voltage	I	—
6 - 8	—	—	—	Not Occupied	—	—
9	0.35	GN / BU	3738	Tap Up/Tap Down Switch Signal 2	I	—
10	0.35	WH / BN	2203	Enhanced Driver Mode 2 Switch Signal	I	—
11	—	—	—	Not Occupied	—	—
12	0.35	YE / BU	1714	Windshield Wiper Switch Low Signal	I	—
13	0.35	GY / GN	5737	Distance Sensing Cruise Control Gap Up/Down Switch Signal	I	—
14	0.35	BN / GN	1884	Cruise Control Set/Coast/Resume/Accelerate Switch Signal	I	—
15	—	—	—	Not Occupied	—	—
16	0.35	BN / BK	5720	Ignition Mode Switch Accessory LED Signal	I	—
17	0.35	YE	7755	AC Power Outlet Status Indicator Control	I	—
18	—	—	—	Not Occupied	—	—
19	0.35	WH / VT	103	Headlamp Switch On Signal	I	—
20	0.35	GN / GY	13	Headlamp Switch Park Lamp Signal	I	—
21	0.35	GN / BN	306	Headlamp Switch Off Signal	I	—
22	0.35	GY / BU	3602	Curb View Enable Signal	I	—
23	0.35	VT / BU	2916	Right Turn Signal Switch Signal	I	—
24	—	—	—	Not Occupied	—	—

K9 Body Control Module X2 (cont'd)

Pin	Size	Color	Circuit	Function	Terminal Type ID	Option
25	0.35	BK / GY	6009	Windshield Wiper Switch Low Reference	I	—
26	0.35	WH / BK	94	Windshield Washer Switch Signal	I	—
27	0.35	YE / BN	307	Headlamp Switch Flash Signal	I	—
28	0.35	GN / WH	3287	Horn Switch Signal	I	—
29	0.35	WH / GN	2915	Left Turn Signal Switch Signal	I	—
30	0.35	BK / YE	407	Sensor Low Reference	I	—
31	0.35	GN / WH	111	Hazard Warning Switch Signal	I	—
32	0.35	WH	524	High Beam Select Switch High Beam Signal	I	—

K9 Body Control Module X3

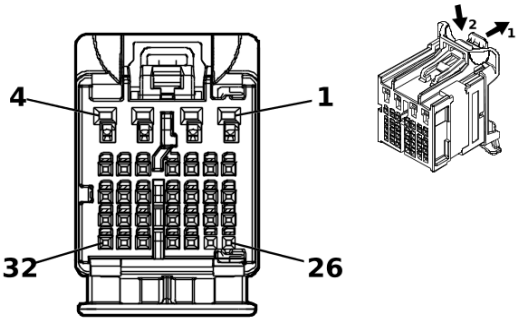

5203925

Connector Part Information

Harness Type: Instrument Panel Wiring Harness
OEM Connector: 160028-0012
Service Connector: 13534977
Description: 32-Way F 0.5 MQS, 1.2 OCS Series(BU with GY Inner Connector)

Terminal Part Information

Terminal Type ID	Terminated Lead	Diagnostic Test Probe	Terminal Removal Tool
I	19370262	EL-35616-58 (BK)	EL-38125-58

K9 Body Control Module X3

Pin	Size	Color	Circuit	Function	Terminal Type ID	Option
1 - 4	—	—	—	Not Occupied	—	—
5	0.35	GN / BN	2853	Body Control Module LIN Bus 7	I	—
6	0.35	BN / BU	391	Rear Window Wiper Switch Signal	I	—
7	0.35	WH / BN	7555	Headlamp Switch Signal	I	—
8 - 9	—	—	—	Not Occupied	—	—
10	0.35	GN / BK	2858	Body Control Module LIN Bus 12	I	—
11 - 12	—	—	—	Not Occupied	—	—
13	0.35	WH	3152	Lane Departure Warning Indicator Control	I	—
14	0.35	GN / BN	5852	Rear Parking Assist Disable LED Signal	I	—
15	0.35	GN	1110	Stop/Start Indicator Control	I	—
16	0.35	GN / BU	761	Blower Speed Feedback Signal	I	—
17	—	—	—	Not Occupied	—	—
18	0.35	YE	7556	Headlamp Switch Reference	I	—
19	0.35	BU / BK	5719	Ignition Mode Switch Start LED Signal	I	—
20 - 22	—	—	—	Not Occupied	—	—
23	0.35	BU	1111	Stop/Start Switch Signal	I	—
24	0.35	WH / BU	3691	Trailer Brake Apply Signal	I	—
25 - 26	—	—	—	Not Occupied	—	—
27	0.35	GY / WH	3153	Lane Departure Warning Disable Switch Signal	I	—
28 - 29	—	—	—	Not Occupied	—	—
30	0.35	BU / YE	6844	ABS/Traction Control Hill Descent Control Switch Signal	I	—

K9 Body Control Module X3 (cont'd)

Pin	Size	Color	Circuit	Function	Terminal Type ID	Option
31	0.35	GY / GN	2555	Rear Parking Assist Disable Signal	I	—
32	—	—	—	Not Occupied	—	—

K9 Body Control Module X4

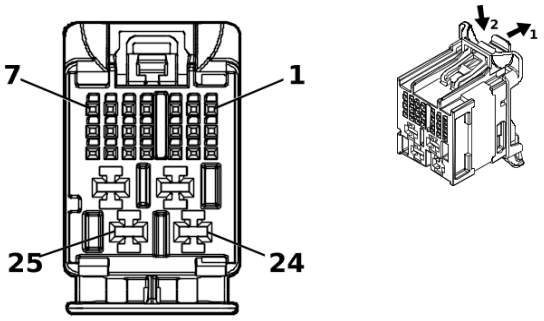

5203893

Connector Part Information

Harness Type: Instrument Panel Wiring Harness
OEM Connector: 160027-0018
Service Connector: 13534970
Description: 25-Way F 0.5 MQS, 2.8 MCP Series(GY)

Terminal Part Information

Terminal Type ID	Terminated Lead	Diagnostic Test Probe	Terminal Removal Tool
I	13575435	J-35616-4A (PU)	J-38125-557
II	19370262	EL-35616-58 (BK)	EL-38125-58

K9 Body Control Module X4

Pin	Size	Color	Circuit	Function	Terminal Type ID	Option
1	0.35	BN / BK	3552	Interior Passive Entry Antenna 1 High Signal	II	—
2	0.35	WH	3553	Interior Passive Entry Antenna 1 Low Signal	II	—
3	0.35	BK / VT	1449	Steering Wheel Resistor Ladder Low Reference	II	—
4	—	—	—	Not Occupied	—	—
5	0.35	GN / VT	5199	Run/Crank Relay Coil Control	II	—
6	—	—	—	Not Occupied	—	—
7	0.35	BN / BK	4996	Immobilizer Antenna Signal [+]	II	—
8 - 9	—	—	—	Not Occupied	—	—
10	0.35	GY / GN	4083	Retained Accessory Power Relay 2 Coil Control	II	—
11 - 13	—	—	—	Not Occupied	—	—
14	0.35	WH / GY	4997	Immobilizer Antenna Low Signal	II	—
15	0.35	BU / VT	1788	Traction Control Switch Signal 1	II	—
16	0.35	GN / WH	4115	Body Control Module LIN Bus 5	II	—
17 - 18	—	—	—	Not Occupied	—	—
19	0.35	BU / YE	4979	AUTOSAR CAN Bus [+] 2 Serial Data	II	—
20	0.35	WH	4978	AUTOSAR CAN Bus [-] 2 Serial Data	II	—
21	—	—	—	Not Occupied	—	—
22	0.5	RD / WH	2740	Battery Positive Voltage	I	—
23	1.5	RD / BU	2540	Battery Positive Voltage	I	—
24	2.5	BK / WH	1851	Signal Ground	I	—
25	2.5	BK	1850	Ground	I	—

K9 Body Control Module X5

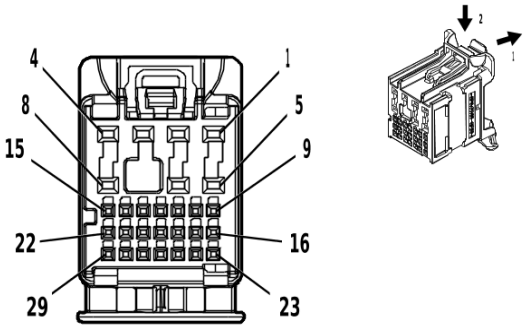

4584346

Connector Part Information

Harness Type: Body Wiring Harness
OEM Connector: 13534972
Service Connector: 13534972
Description: 29-Way F 0.5 NANO, 1.2 MCON Series(GN)

Terminal Part Information

Terminal Type ID	Terminated Lead	Diagnostic Test Probe	Terminal Removal Tool
I	19370262	EL-35616-58 (BK)	EL-38125-58
II	84729890	J-35616-12 (BU)	J-38125-553

K9 Body Control Module X5

Pin	Size	Color	Circuit	Function	Terminal Type ID	Option
1	0.75	GN / VT	4786	Dome/Reading Lamp Enable Signal	II	—
2	0.5	BU / BN	7573	A/C Compressor Solenoid Valve Control	II	—
3	0.5	BU / YE	7574	A/C Compressor Solenoid Valve Control	II	—
4	0.75	WH	2679	Lock Actuators Unlock Control 1	II	—
5	0.5	GY	157	Interior Lamp Control	II	—
6	0.5	YE	6817	LED Backlight Dimming Control 1	II	—
7	—	—	—	Not Occupied	—	—
8	0.75	GY	2681	Left Front Door Lock Actuator Lock Control	II	—
9 - 10	—	—	—	Not Occupied	—	—
11	0.35	BN / WH	28	Horn Relay Control	I	—
12	0.35	WH	4978	AUTOSAR CAN Bus [-] 2 Serial Data	I	—
13	0.35	BU / YE	4979	AUTOSAR CAN Bus [+] 2 Serial Data	I	—
14	—	—	—	Not Occupied	—	—
15	0.35	WH / YE	7557	Interior Door Handle Accent Lighting Control	I	—
16	0.35	VT	4301	Passive Entry Left Front Antenna Signal High	I	—
17	0.35	GN / YE	2855	Body Control Module LIN Bus 9	I	—
18	0.35	VT / GY	126	Left Front Door Open Switch Signal	I	—
19	0.35	GN / YE	6134	Body Control Module LIN Bus 3	I	—
20	—	—	—	Not Occupied	—	—
21	0.35	WH / BU	6311	Cruise/ETC/TCC Brake Signal	I	—
22	0.35	BN / VT	193	Rear Defogger Relay Control	I	—

K9 Body Control Module X5 (cont'd)

Pin	Size	Color	Circuit	Function	Terminal Type ID	Option
23	0.35	VT / WH	4302	Passive Entry Left Front Antenna Signal Low	I	—
24	0.35	WH	5359	Brake Apply Sensor Control	I	—
25	0.35	BU / YE	5361	Brake Apply Sensor Signal	I	—
26	0.35	BK / BN	5360	Brake Apply Sensor Low Reference	I	—
27 - 29	—	—	—	Not Occupied	—	—

K9 Body Control Module X6

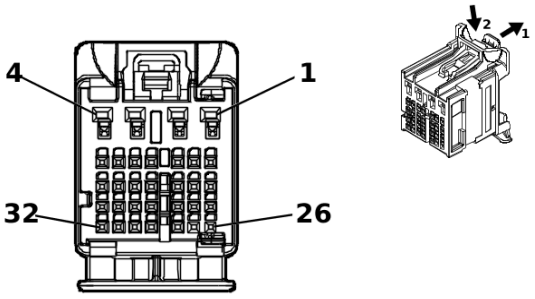

5202291

Connector Part Information

Harness Type: Body Wiring Harness
OEM Connector: 13534981
Service Connector: 13534981
Description: 32-Way F 0.5 MQS, 1.2 OCS Series(BN with GY Inner Connector)

Terminal Part Information

Terminal Type ID	Terminated Lead	Diagnostic Test Probe	Terminal Removal Tool
I	19370262	EL-35616-58 (BK)	EL-38125-58
II	84729890	J-35616-12 (BU)	J-38125-553

K9 Body Control Module X6

Pin	Size	Color	Circuit	Function	Terminal Type ID	Option
1	—	—	—	Not Occupied	—	—
2	0.75	VT / WH	1094	Right Rear Door Lock Actuator Lock Control	II	—
3	0.75	GY / BK	2680	Lock Actuators Unlock Control 2	II	—
4	—	—	—	Not Occupied	—	—
5	0.35	YE / BU	5797	Rear Closure Handle Switch Open Signal	I	—
6	—	—	—	Not Occupied	—	—
7	0.35	BN / GN	3568	Rear Closure Passive Entry Antenna High Signal	I	—
8	0.35	GN / GY	3569	Rear Closure Passive Entry Antenna Low Signal	I	—
9 - 10	—	—	—	Not Occupied	—	—
11	0.35	GN / BU	6133	Body Control Module LIN Bus 2	I	—
12 - 21	—	—	—	Not Occupied	—	—
22	0.35	BN / GN	4064	Hood Status B Signal	I	—
23 - 27	—	—	—	Not Occupied	—	—
28	0.35	BU	2675	Left Front Exterior Door Handle Switch Unlock Signal	I	—
29 - 30	—	—	—	Not Occupied	—	—
31	0.35	GY / BU	4995	Right Rear Door Exterior Switch Unlock Signal	I	—
32	—	—	—	Not Occupied	—	—

K9 Body Control Module X7

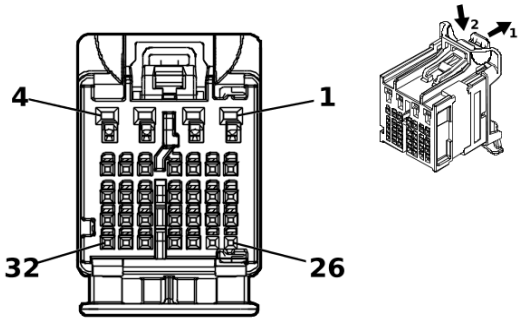

5202294

Connector Part Information

Harness Type: Body Wiring Harness
OEM Connector: 13534979
Service Connector: 13534979
Description: 32-Way F 0.5 MQS, 1.2 OCS Series(PU with GY Inner Connector)

Terminal Part Information

Terminal Type ID	Terminated Lead	Diagnostic Test Probe	Terminal Removal Tool
I	19370262	EL-35616-58 (BK)	EL-38125-58
II	84729890	J-35616-12 (BU)	J-38125-553

K9 Body Control Module X7

Pin	Size	Color	Circuit	Function	Terminal Type ID	Option
1	—	—	—	Not Occupied	—	—
2	0.5	BU	2689	Fuel Door Actuator Lock Control	II	—
3 - 16	—	—	—	Not Occupied	—	—
17	0.35	GY / YE	6188	Liftgate Window/Rear Compartment Lid Motor Unlatch Control	I	—
18	0.35	WH / VT	1430	Exterior Courtesy Lamp Control	I	—
19	0.35	GN / VT	2857	Body Control Module LIN Bus 11	I	—
20 - 23	—	—	—	Not Occupied	—	—
24	0.5	YE / BU	4783	Rear Footwell Accent Lighting Control	I	5RU
25 - 26	—	—	—	Not Occupied	—	—
27	0.35	VT / BU	7598	Glass Breakage Sensor 2 Signal	I	—
28 - 29	—	—	—	Not Occupied	—	—
30	0.35	GY / WH	4630	AC Power Outlet Switch Signal	I	—
31 - 32	—	—	—	Not Occupied	—	—

K9 Body Control Module X8

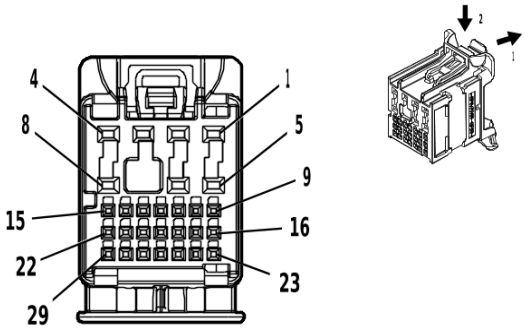

4578560

Connector Part Information

Harness Type: Body Wiring Harness
OEM Connector: 13534971
Service Connector: 13534971
Description: 29-Way F 0.5 NANO, 1.2 MCON Series(GY)

Terminal Part Information

Terminal Type ID	Terminated Lead	Diagnostic Test Probe	Terminal Removal Tool
I	19370262	EL-35616-58 (BK)	EL-38125-58
II	84729890	J-35616-12 (BU)	J-38125-553

K9 Body Control Module X8

Pin	Size	Color	Circuit	Function	Terminal Type ID	Option
1	0.5	BU / WH	6128	Rear Closure Unlatch Actuator Unlatch Control	II	—
2	—	—	—	Not Occupied	—	—
3	0.75	BU / YE	1091	Left Rear Door Lock Actuator Lock Control	II	—
4	0.75	YE / GN	2682	Right Front Door Lock Actuator Lock Control	II	—
5	0.35	GY	2066	Hands-Free Liftgate Sensor Lamp Control	II	—
6 - 8	—	—	—	Not Occupied	—	—
9	0.35	GN / BK	4304	Passive Entry Right Front Door Antenna Signal Low	I	—
10	0.35	GN / YE	4303	Passive Entry Right Front Door Antenna Signal High	I	—
11	0.35	BU	3554	Interior Passive Entry Antenna 2 High Signal	I	—
12	0.35	GY / BK	3555	Interior Passive Entry Antenna 2 Low Signal	I	—
13 - 15	—	—	—	Not Occupied	—	—
16	0.35	WH / VT	4994	Left Rear Door Exterior Switch Unlock Signal	I	—
17	0.35	GN / YE	2862	Body Control Module LIN Bus 16	I	—
18	0.35	GN / WH	2854	Body Control Module LIN Bus 8	I	—
19	—	—	—	Not Occupied	—	—
20	0.35	GN / BU	2856	Body Control Module LIN Bus 10	I	—
21	0.35	VT / WH	6675	Left Rear Door Lock Indicator Control	I	—
22	0.35	YE / BK	6677	Right Rear Door Lock Indicator Control	I	—
23 - 27	—	—	—	Not Occupied	—	—
28	0.35	GY / VT	2676	Right Front Door Exterior Switch Unlock Signal	I	—

K9 Body Control Module X8 (cont'd)

Pin	Size	Color	Circuit	Function	Terminal Type ID	Option
29	0.35	GN / GY	6135	Body Control Module LIN Bus 4	I	—

K19 Suspension Control Module (Z95)

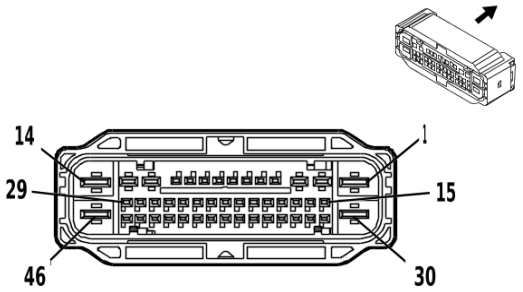

4162046

Connector Part Information

Harness Type: Chassis Wiring Harness
OEM Connector: 35435461
Service Connector: 19333026
Description: 46-Way F 1.2 OCS, 2.8, 6.3 CTS Series, Sealed(GY)

Terminal Part Information

Terminal Type ID	Terminated Lead	Diagnostic Test Probe	Terminal Removal Tool
I	19370818	J-35616-12 (BU)	J-38125-215A
II	84634921	J-35616-42 (RD)	J-38125-212

K19 Suspension Control Module (Z95)

Pin	Size	Color	Circuit	Function	Terminal Type ID	Option
1	0.75	RD / GN	2440	Battery Positive Voltage	II	—
2 - 4	—	—	—	Not Occupied	—	—
5	0.5	BU	4987	AUTOSAR CAN Bus [+] 1 Serial Data	I	—
6	0.5	BU	4987	AUTOSAR CAN Bus [+] 1 Serial Data	I	—
7	0.5	WH	4986	AUTOSAR CAN Bus [-] 1 Serial Data	I	—
8	0.5	WH	4986	AUTOSAR CAN Bus [-] 1 Serial Data	I	—
9	—	—	—	Not Occupied	—	—
10	0.5	BN / BU	1116	Right Front Shock Absorber Actuator Control	I	—
11	0.5	GY / WH	1117	Right Front Shock Absorber Actuator Control	I	—
12 - 13	—	—	—	Not Occupied	—	—
14	0.75	BK	2150	Ground	II	—
15	0.5	BN / WH	1107	Left Front Shock Absorber Actuator Control	I	—
16 - 21	—	—	—	Not Occupied	—	—
22	0.5	BU / GY	1114	Left Rear Shock Absorber Actuator Control	I	—
23	0.5	BK / BN	1099	Left Front Vertical Suspension Acceleration Sensor Low Reference	I	—
24	0.5	WH	1100	Left Front Vertical Suspension Acceleration Sensor Signal	I	—
25	0.5	YE / RD	1817	Left Front Vertical Suspension Acceleration Sensor Voltage Reference	I	—
26	0.5	VT / RD	1818	Left Rear Vertical Suspension Acceleration Sensor Voltage Reference	I	—

K19 Suspension Control Module (Z95) (cont'd)

Pin	Size	Color	Circuit	Function	Terminal Type ID	Option
27	0.5	YE / BN	1103	Left Rear Vertical Suspension Acceleration Sensor Signal	I	—
28	0.5	BK / VT	1833	Left Rear Vertical Suspension Acceleration Sensor Low Reference	I	—
29	0.5	BN / GN	1118	Right Rear Shock Absorber Actuator Control	I	—
30	—	—	—	Not Occupied	—	—
31	0.5	GY / BU	1113	Left Front Shock Absorber Actuator Control	I	—
32 - 37	—	—	—	Not Occupied	—	—
38	0.5	GN / VT	1115	Left Rear Shock Absorber Actuator Control	I	—
39	0.5	BK / GN	1105	Right Front Vertical Suspension Acceleration Sensor Low Reference	I	—
40	0.5	WH	1106	Right Front Vertical Suspension Acceleration Sensor Signal	I	—
41	0.5	BN / RD	1819	Right Front Vertical Suspension Acceleration Sensor Voltage Reference	I	—
42	0.5	GY / RD	1820	Right Rear Vertical Suspension Acceleration Sensor Voltage Reference	I	—
43	0.5	YE / BU	1109	Right Rear Vertical Suspension Acceleration Sensor Signal	I	—
44	0.5	BK / BU	1108	Right Rear Vertical Suspension Acceleration Sensor Low Reference	I	—
45	0.5	GN / GY	1119	Right Rear Shock Absorber Actuator Control	I	—
46	—	—	—	Not Occupied	—	—

K20 Engine Control Module X1 (L84/L87)

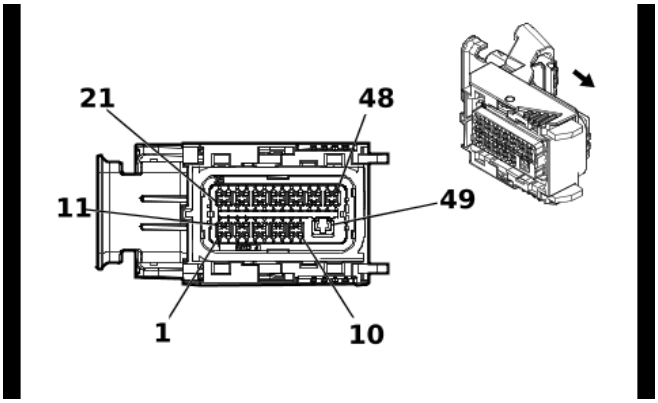

5663663

Connector Part Information

Harness Type: Engine Wiring Harness
OEM Connector: 34576-7833
Service Connector: 19368142
Description: 49-Way F 0.64, 2.8 Series, Sealed(BK with BU Terminal Position Assurance)

Terminal Part Information

Terminal Type ID	Terminated Lead	Diagnostic Test Probe	Terminal Removal Tool
I	13587518	J-35616-35 (VT)	J-38125-11A
II	19351723	J-35616-64B (L-BU)	J-38125-213

K20 Engine Control Module X1 (L84/L87)

Pin	Size	Color	Circuit	Function	Terminal Type ID	Option
1	0.5	GN / WH	492	Mass Air Flow Sensor Signal	II	—
2	—	—	—	Not Occupied	—	—
3	0.5	BU / GY	4054	Private Serial Data Powertrain CAN Bus [-] Serial Data	II	—
4	—	—	—	Not Occupied	—	—
5	0.5	WH	4976	AUTOSAR CAN Bus [-] 3 Serial Data	II	—
6	0.5	WH / BU	6311	Cruise/ETC/TCC Brake Signal	II	—
7	0.5	WH	4978	AUTOSAR CAN Bus [-] 2 Serial Data	II	—
8	—	—	—	Not Occupied	—	—
9	0.5	YE	5991	Powertrain Relay Coil Control	II	—
10	—	—	—	Not Occupied	—	—
11	0.5	YE	4063	Hood Status A Signal	II	—
12	0.5	BU / GY	636	Ambient Air Temperature Sensor Signal	II	—
13	0.5	WH	4055	Private Serial Data Powertrain CAN Bus [+] Serial Data	II	—
14	0.5	WH / GN	5380	Brake Position Sensor Signal	II	—
15	0.5	BU / BK	4977	AUTOSAR CAN Bus [+] 3 Serial Data	II	—
16	—	—	—	Not Occupied	—	—
17	0.5	BU / YE	4979	AUTOSAR CAN Bus [+] 2 Serial Data	II	—
18	0.5	WH / GY	459	A/C Compressor Clutch Relay Control	II	—
19 - 20	—	—	—	Not Occupied	—	—
21	0.75	GN / BU	428	EVAP Canister Purge Solenoid Control	II	—

K20 Engine Control Module X1 (L84/L87) (cont'd)

Pin	Size	Color	Circuit	Function	Terminal Type ID	Option
22 - 23	—	—	—	Not Occupied	—	—
24	0.5	BK / BU	1271	Accelerator Pedal Position Low Reference 1	II	—
25 - 27	—	—	—	Not Occupied	—	—
28	0.5	BN / GN	1174	Oil Level Switch Signal	II	—
29	—	—	—	Not Occupied	—	—
30	0.5	BK / VT	1272	Accelerator Pedal Position Low Reference 2	II	—
31	—	—	—	Not Occupied	—	—
32	0.75	VT / BU	5291	Powertrain Main Relay Fused Supply Voltage 2	II	—
33	—	—	—	Not Occupied	—	—
34	0.5	RD / BN	440	Battery Positive Voltage	II	—
35	—	—	—	Not Occupied	—	—
36	0.5	YE / BK	625	Starter Enable Relay Control	II	—
37	0.5	GN / GY	465	Fuel Pump Primary Relay Control	II	—
38	0.5	WH / RD	1164	Accelerator Pedal Position 5V Reference 1	II	—
39	0.5	YE / WH	1161	Accelerator Pedal Position Signal 1	II	—
40	0.5	YE / BN	331	Oil Pressure Sensor Signal	II	—
41	0.5	GN	380	A/C Refrigerant Pressure Sensor Signal	II	—
42 - 43	—	—	—	Not Occupied	—	—
44	0.5	GN / WH	1162	Accelerator Pedal Position Signal 2	II	—
45	0.5	BN / RD	1274	Accelerator Pedal Position 5V Reference 2	II	—
46	—	—	—	Not Occupied	—	—
47	0.75	VT / GN	439	Run/Crank Ignition 1 Voltage	II	—
48	0.75	VT / BU	5290	Powertrain Main Relay Fused Supply Voltage 1	II	—
49	2	VT	5290	Powertrain Main Relay Fused Supply Voltage 1	I	—

K20 Engine Control Module X2 (L84/L87)

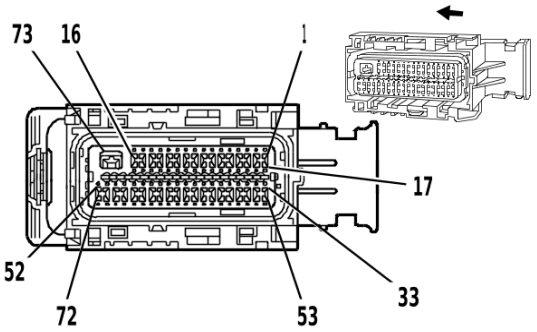

1673472

Connector Part Information

Harness Type: Engine Wiring Harness
OEM Connector: 34566-9423
Service Connector: 19333090
Description: 73-Way F 0.64, 2.8 Series, Sealed(BK with BK Terminal Position Assurance)

Terminal Part Information

Terminal Type ID	Terminated Lead	Diagnostic Test Probe	Terminal Removal Tool
I	13587518	J-35616-35 (VT)	J-38125-11A
II	19354746	J-35616-64B (L-BU)	J-38125-215A

K20 Engine Control Module X2 (L84/L87)

Pin	Size	Color	Circuit	Function	Terminal Type ID	Option
1	0.5	GN / YE	3212	HO2S Heater Low Control Bank 2 Sensor 1	II	—
2	0.5	GY	5493	Cylinder Deactivation Solenoid Valve Control 3	II	—
3	0.5	BK / YE	548	Engine Control Sensors Low Reference 1	II	—
4 - 6	—	—	—	Not Occupied	—	—
7	0.5	GN	4622	Engine Control Module LIN Bus 2	II	—
8	0.75	GN / VT	4621	Engine Control Module LIN Bus 1	II	—
9	—	—	—	Not Occupied	—	—
10	0.5	VT / GY	3110	HO2S High Signal Bank 1 Sensor 1	II	—
11	0.5	WH / BK	3111	HO2S Low Signal Bank 1 Sensor 1	II	—
12	0.5	YE / BU	2124	Ignition Control 4	II	—
13	0.5	BN / BU	2126	Ignition Control 6	II	—
14	0.5	VT / BU	5294	Powertrain Main Relay Fused Supply Voltage 5	II	—
15	0.5	VT / BU	5294	Powertrain Main Relay Fused Supply Voltage 5	II	—
16	0.5	VT / BU	5294	Powertrain Main Relay Fused Supply Voltage 5	II	—
17	0.5	GY / WH	3113	HO2S Heater Low Control Bank 1 Sensor 1	II	—
18	0.5	YE / GY	2493	Cylinder Shutoff Solenoid Enable Signal 3	II	—
19 - 25	—	—	—	Not Occupied	—	—
26	0.5	VT / WH	3210	HO2S High Signal Bank 2 Sensor 1	II	—
27	0.5	YE / WH	3211	HO2S Low Signal Bank 2 Sensor 1	II	—
28	0.5	GN / BU	2123	Ignition Control 3	II	—
29	0.5	BU / GY	2125	Ignition Control 5	II	—

K20 Engine Control Module X2 (L84/L87) (cont'd)

Pin	Size	Color	Circuit	Function	Terminal Type ID	Option
30	0.75	BK / GY	2130	Ignition Control Low Reference Bank 2	II	—
31	0.5	BN	5496	Cylinder Deactivation Solenoid Valve Control 6	II	—
32	0.5	YE / BN	2496	Cylinder Shutoff Solenoid Enable Signal 6	II	—
33	0.75	WH / BN	3223	HO2S Heater Low Control Bank 2 Sensor 2	II	—
34	—	—	—	Not Occupied	—	—
35	0.5	BU	179	Engine Oil Pump Control	II	—
36	0.5	YE / GN	2494	Cylinder Shutoff Solenoid Enable Signal 4	II	—
37	0.75	VT / BU	5294	Powertrain Main Relay Fused Supply Voltage 5	II	—
38	—	—	—	Not Occupied	—	—
39	0.5	WH / RD	480	Engine Control Vehicle Sensors 5 Volt Reference 1	II	—
40 - 45	—	—	—	Not Occupied	—	—
46	0.5	YE / BU	3221	HO2S Low Signal Bank 2 Sensor 2	II	—
47	0.5	VT / GN	3220	HO2S High Signal Bank 2 Sensor 2	II	—
48 - 49	—	—	—	Not Occupied	—	—
50	0.75	BK / GY	2303	Knock Sensor Low Reference 2	II	—
51	0.75	BK / YE	1716	Knock Sensor Low Reference 1	II	—
52	0.5	BN / WH	582	Throttle Actuator Close Control	II	—
53	0.75	GY / WH	3122	HO2S Heater Low Control Bank 1 Sensor 2	II	—
54	0.5	VT	5495	Cylinder Deactivation Solenoid Valve Control 5	II	—
55	0.5	WH / VT	2495	Cylinder Shutoff Solenoid Enable Signal 5	II	—
56	0.5	YE / BU	5494	Cylinder Deactivation Solenoid Valve Control 4	II	—
57	0.5	GN	5492	Cylinder Deactivation Solenoid Valve Control 2	II	—
58	0.5	WH / GN	2492	Cylinder Shutoff Solenoid Enable Signal 2	II	—
59 - 65	—	—	—	Not Occupied	—	—
66	0.5	WH / YE	3121	HO2S Low Signal Bank 1 Sensor 2	II	—
67	0.5	VT / BU	3120	HO2S High Signal Bank 1 Sensor 2	II	—
68 - 69	—	—	—	Not Occupied	—	—
70	0.75	WH / GY	1876	Knock Sensor 2 Signal	II	—
71	0.75	VT / GY	496	Knock Sensor 1 Signal	II	—
72	0.5	YE	581	Throttle Actuator Open Control	II	—
73	2.5	BK / WH	6151	Engine Control Module Ground	I	—

K20 Engine Control Module X3 (L84/L87)

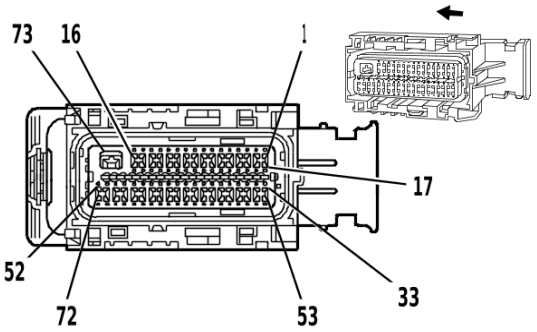

1673472

Connector Part Information

Harness Type: Engine Wiring Harness
OEM Connector: 34566-9663
Service Connector: 19333091
Description: 73-Way F 0.64, 2.8 Series, Sealed(BK with GY Terminal Position Assurance)

Terminal Part Information

Terminal Type ID	Terminated Lead	Diagnostic Test Probe	Terminal Removal Tool
I	13587518	J-35616-35 (VT)	J-38125-11A
II	19354746	J-35616-64B (L-BU)	J-38125-215A

K20 Engine Control Module X3 (L84/L87)

Pin	Size	Color	Circuit	Function	Terminal Type ID	Option
1	0.5	WH	5497	Cylinder Deactivation Solenoid Valve Control 7	II	—
2	0.5	GN / GY	2497	Cylinder Shutoff Solenoid Enable Signal 7	II	—
3 - 4	—	—	—	Not Occupied	—	—
5	0.5	VT / BN	5284	Intake Camshaft Position Actuator Solenoid Valve 1	II	—
6	0.5	VT / GN	4320	Powertrain Sensor Bus Enable	II	—
7	—	—	—	Not Occupied	—	—
8	0.5	YE / VT	5275	Intake Camshaft Position Sensor 1	II	—
9	0.5	GY / BU	5300	Intake Camshaft Position Sensor 1 Voltage Reference	II	—
10	0.5	GN	6271	Crankshaft Position Sensor Signal	II	—
11	—	—	—	Not Occupied	—	—
12	0.75	BU / WH	2122	Ignition Control 2	II	—
13	0.5	VT / WH	2128	Ignition Control 8	II	—
14	0.5	BN	25	Charge Indicator Control	II	—
15	—	—	—	Not Occupied	—	—
16	0.75	YE	7301	High Pressure Fuel Pump High Control	II	—
17 - 20	—	—	—	Not Occupied	—	—
21	0.5	BK / BN	6753	Camshaft Position Actuator Solenoid Valve W Low Reference	II	—
22 - 23	—	—	—	Not Occupied	—	—

K20 Engine Control Module X3 (L84/L87) (cont'd)

Pin	Size	Color	Circuit	Function	Terminal Type ID	Option
24	0.5	BK / GN	5301	Intake Camshaft Position Sensor Low Reference 1	II	—
25	0.5	VT / BU	6270	Crankshaft Position Sensor Voltage	II	—
26	0.5	BK / VT	6272	Crankshaft Position Sensor Low Reference	II	—
27	—	—	—	Not Occupied	—	—
28	0.5	GN / GY	2127	Ignition Control 7	II	—
29	0.5	BU / VT	2121	Ignition Control 1	II	—
30	0.5	BK / BU	2129	Ignition Control Low Reference Bank 1	II	—
31	—	—	—	Not Occupied	—	—
32	0.75	VT / BK	7300	High Pressure Fuel Pump Low Control	II	—
33	0.5	YE / VT	4325	Starter Pinion Solenoid Actuator Relay Control	II	—
34	0.5	WH / BU	2491	Cylinder Shutoff Solenoid Enable Signal 1	II	—
35	0.5	WH / YE	2498	Cylinder Shutoff Solenoid Enable Signal 8	II	—
36	0.5	BK / BN	2752	Throttle Position Sensor Low Reference	II	—
37	0.5	BK / GN	469	Manifold Absolute Pressure Sensor Low Reference	II	—
38 - 39	—	—	—	Not Occupied	—	—
40	0.5	BN / BU	357	Oil Temperature Sensor Signal	II	—
41 - 43	—	—	—	Not Occupied	—	—
44	0.75	VT / BU	5292	Powertrain Main Relay Fused Supply Voltage 3	II	—
45	0.75	GN	4803	Direct Fuel Injector High Voltage Control Cylinder 3	II	—
46	0.75	GY / BU	4804	Direct Fuel Injector High Voltage Control Cylinder 4	II	—
47	0.75	WH / GN	4805	Direct Fuel Injector High Voltage Control Cylinder 5	II	—
48	0.75	VT / GN	4806	Direct Fuel Injector High Voltage Control Cylinder 6	II	—
49	0.75	BU	4802	Direct Fuel Injector High Voltage Control Cylinder 2	II	—
50	0.75	YE / GY	4807	Direct Fuel Injector High Voltage Control Cylinder 7	II	—
51	0.75	GY	4808	Direct Fuel Injector High Voltage Control Cylinder 8	II	—
52	0.75	BN	4801	Direct Fuel Injector High Voltage Control Cylinder 1	II	—
53	0.5	BU	5491	Cylinder Deactivation Solenoid Valve Control 1	II	—
54	0.5	YE	5498	Cylinder Deactivation Solenoid Valve Control 8	II	—
55	0.5	BN / RD	2701	Throttle Position Sensor 5V Reference	II	—
56	0.5	BU / WH	3630	Throttle Position Sensor SENT 1 Signal	II	—
57	0.5	GY / RD	2704	Manifold Absolute Pressure Sensor 5V Reference	II	—
58	0.5	GN / WH	432	Manifold Absolute Pressure Sensor Signal	II	—
59 - 60	—	—	—	Not Occupied	—	—
61	0.5	BU	410	Engine Coolant Temperature Sensor Signal	II	—
62	—	—	—	Not Occupied	—	—
63	0.5	BU / WH	2918	Fuel Rail Pressure Sensor Signal	II	—
64	0.5	GY	23	Generator Field Duty Cycle Signal	II	—

K20 Engine Control Module X3 (L84/L87) (cont'd)

Pin	Size	Color	Circuit	Function	Terminal Type ID	Option
65	0.75	GN / GY	4903	Direct Fuel Injector High Voltage Supply Cylinder 3	II	—
66	0.75	BU / WH	4904	Direct Fuel Injector High Voltage Supply Cylinder 4	II	—
67	0.75	GN / WH	4905	Direct Fuel Injector High Voltage Supply Cylinder 5	II	—
68	0.75	VT / GY	4906	Direct Fuel Injector High Voltage Supply Cylinder 6	II	—
69	0.75	BU / GY	4902	Direct Fuel Injector High Voltage Supply Cylinder 2	II	—
70	0.75	WH / YE	4907	Direct Fuel Injector High Voltage Supply Cylinder 7	II	—
71	0.75	GY / WH	4908	Direct Fuel Injector High Voltage Supply Cylinder 8	II	—
72	0.75	BN / WH	4901	Direct Fuel Injector High Voltage Supply Cylinder 1	II	—
73	2.5	BK / WH	6151	Engine Control Module Ground	I	—

K20 Engine Control Module X1 (LM2)

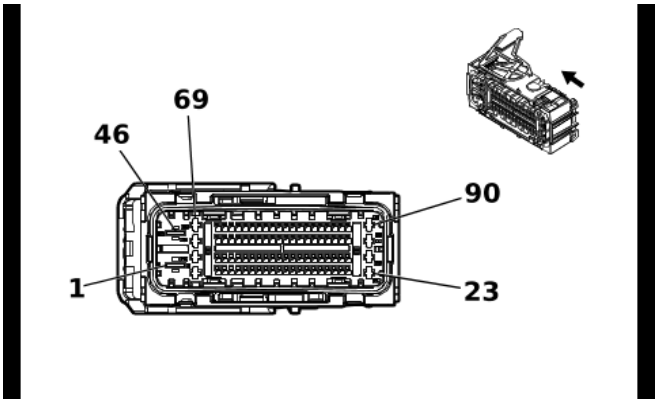

5492269

Connector Part Information

Harness Type: Engine Wiring Harness
OEM Connector: 1-2344715-5
Service Connector: 84941451
Description: 90-Way F 0.64 GEN-Y, 2.8, 6.3 MCP Series, Sealed(BK with BU Terminal Position Assurance)

Terminal Part Information

Terminal Type ID	Terminated Lead	Diagnostic Test Probe	Terminal Removal Tool
I	19367373	J-35616-64B (L-BU)	J-38125-215A
II	19371214	J-35616-4A (PU)	J-38125-215A
III	84616649	J-35616-40 (BU)	J-38125-556

K20 Engine Control Module X1 (LM2)

Pin	Size	Color	Circuit	Function	Terminal Type ID	Option
1	6	BN / BU	104	Glow Plug Control	III	—
2	2.5	GY / VT	1586	Glow Plug 6 Control	II	—
3 - 5	—	—	—	Not Occupied	—	—
6	0.5	WH / GY	459	A/C Compressor Clutch Relay Control	I	—
7	0.5	RD / BN	440	Battery Positive Voltage	I	—
8	0.5	GN / WH	492	Mass Air Flow Sensor Signal	I	—
9	—	—	—	Not Occupied	—	—
10	0.5	WH / BU	6311	Cruise/ETC/TCC Brake Signal	I	—
11	0.5	GY	2973	Coolant Flow Control Valve Position Signal	I	—
12	0.5	GN / GY	7316	Intake Manifold Runner Valve Actuator Control	I	—
13 - 14	—	—	—	Not Occupied	—	—
15	0.5	BN / GN	4305	Exhaust Flow Control Valve 1	I	—
16	0.5	WH	4055	Private Serial Data Powertrain CAN Bus [+] Serial Data	I	—
17	0.5	BU / BK	4977	AUTOSAR CAN Bus [+] 3 Serial Data	I	—
18	0.5	BU / YE	4979	AUTOSAR CAN Bus [+] 2 Serial Data	I	—
19	0.5	BK / GN	580	Engine Control Sensors Low Reference 2	I	—
20	—	—	—	Not Occupied	—	—
21	0.75	GY / BK	1330	Variable Geometry Turbocharger Position Sensor Motor Close Control	I	—

K20 Engine Control Module X1 (LM2) (cont'd)

Pin	Size	Color	Circuit	Function	Terminal Type ID	Option
22	0.75	WH / BN	1313	Variable Geometry Turbocharger Position Sensor Motor Open Control	I	—
23	2.5	GY / GN	1583	Glow Plug 3 Control	II	—
24	2.5	GY / WH	1585	Glow Plug 5 Control	II	—
25	0.75	VT / GN	439	Run/Crank Ignition 1 Voltage	I	—
26	0.5	YE	5991	Powertrain Relay Coil Control	I	—
27	—	—	—	Not Occupied	—	—
28	0.35	GN / BN	507	Wait To Start Indicator Control	I	—
29	—	—	—	Not Occupied	—	—
30	0.5	BK / GY	626	Engine Control Vehicle Sensors Low Reference 1	I	—
31 - 33	—	—	—	Not Occupied	—	—
34	0.5	VT / YE	5947	Turbocharger Vane Position Sensor Signal	I	—
35	0.5	BN / WH	5763	Exhaust Gas Recirculation Position Signal	I	—
36	0.5	BU / GY	2978	Coolant Diverter Valve Position Signal	I	—
37	—	—	—	Not Occupied	—	—
38	0.5	BU / GY	4054	Private Serial Data Powertrain CAN Bus [-] Serial Data	I	—
39	0.5	WH	4976	AUTOSAR CAN Bus [-] 3 Serial Data	I	—
40	0.5	WH	4978	AUTOSAR CAN Bus [-] 2 Serial Data	I	—
41	—	—	—	Not Occupied	—	—
42	0.5	YE / BK	625	Starter Enable Relay Control	I	—
43	0.5	VT / BK	5746	Exhaust Gas Recirculation Valve Low Control	I	—
44	0.5	WH / VT	5764	Exhaust Gas Recirculation Valve High Control	I	—
45	2.5	GY / BN	1582	Glow Plug 2 Control	II	—
46	2.5	BK / WH	6151	Engine Control Module Ground	III	—
47	2.5	GY / YE	1584	Glow Plug 4 Control	II	—
48	0.5	WH / RD	480	Engine Control Vehicle Sensors 5 Volt Reference 1	I	—
49	0.5	GN / WH	1162	Accelerator Pedal Position Signal 2	I	—
50	0.5	BK / VT	1272	Accelerator Pedal Position Low Reference 2	I	—
51	0.5	BK / BU	1271	Accelerator Pedal Position Low Reference 1	I	—
52	0.5	WH / GN	5380	Brake Position Sensor Signal	I	—
53 - 54	—	—	—	Not Occupied	—	—
55	0.5	YE	4063	Hood Status A Signal	I	—
56 - 58	—	—	—	Not Occupied	—	—
59	0.5	GN	380	A/C Refrigerant Pressure Sensor Signal	I	—
60	0.5	YE / BN	331	Oil Pressure Sensor Signal	I	—
61	0.5	YE / GY	3926	Crankcase Differential Pressure Sensor Signal	I	—
62 - 63	—	—	—	Not Occupied	—	—
64	0.5	GN / BU	3889	Powertrain Sensor Bus Relay Control	I	—
65	—	—	—	Not Occupied	—	—
66	0.5	BN	1421	Exhaust Restrictor Motor Closed Control	I	—
67	0.5	YE / BN	1420	Exhaust Restrictor Motor Open Control	I	—
68	2.5	GY / BU	1581	Glow Plug 1 Control	II	—
69	0.75	VT / BU	5291	Powertrain Main Relay Fused Supply Voltage 2	II	—

K20 Engine Control Module X1 (LM2) (cont'd)

Pin	Size	Color	Circuit	Function	Terminal Type ID	Option
70	0.5	BU / RD	460	Engine Control Sensors 5 Volt Reference 1	I	—
71	0.5	BN / RD	1274	Accelerator Pedal Position 5V Reference 2	I	—
72	0.5	WH / RD	1164	Accelerator Pedal Position 5V Reference 1	I	—
73	0.5	YE / WH	1161	Accelerator Pedal Position Signal 1	I	—
74	0.5	BU / GY	636	Ambient Air Temperature Sensor Signal	I	—
75	0.5	VT	7485	Engine Oil Temperature Sensor 2 Signal	I	—
76 - 77	—	—	—	Not Occupied	—	—
78	0.5	GY / VT	2404	Engine Block Coolant Temperature Signal	I	—
79 - 83	—	—	—	Not Occupied	—	—
84	0.5	VT / GY	7246	Exhaust Gas Recirculation Differential Pressure Signal 1	I	—
85	—	—	—	Not Occupied	—	—
86	0.5	GN / GY	465	Fuel Pump Primary Relay Control	I	—
87	0.75	VT / BU	5294	Powertrain Main Relay Fused Supply Voltage 5	I	—
88	0.75	GY / BN	2972	Coolant Flow Control Actuator Control Close	I	—
89	0.75	GY / BU	2971	Coolant Flow Control Actuator Control Open	I	—
90	2	VT	5290	Powertrain Main Relay Fused Supply Voltage 1	II	—

K20 Engine Control Module X2 (LM2)

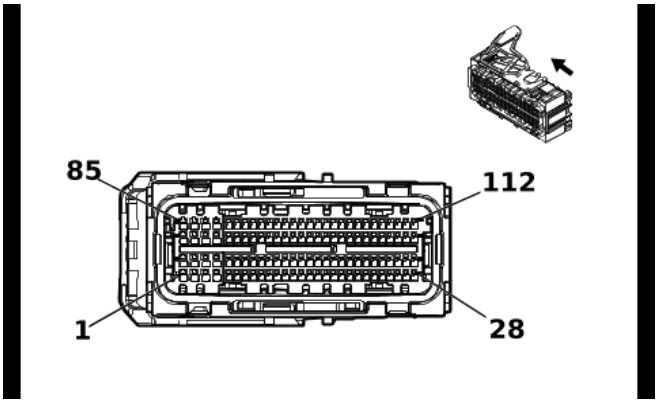

5491584

Connector Part Information

Harness Type: Engine Wiring Harness
OEM Connector: 2344717-8
Service Connector: 84941452
Description: 112-Way F 0.64 GEN-Y, 1.2 MCON Series, Sealed(BK with BK Terminal Position Assurance)

Terminal Part Information

Terminal Type ID	Terminated Lead	Diagnostic Test Probe	Terminal Removal Tool
I	19367373	J-35616-64B (L-BU)	J-38125-215A
II	84963773	J-35616-12 (BU)	J-38125-215A

K20 Engine Control Module X2 (LM2)

Pin	Size	Color	Circuit	Function	Terminal Type ID	Option
1	1.5	GN	4803	Direct Fuel Injector High Voltage Control Cylinder 3	II	—
2	1.5	GY / BU	4804	Direct Fuel Injector High Voltage Control Cylinder 4	II	—
3	0.75	YE	2420	Fuel High Pressure Pump Low Enable Signal	II	—
4	0.75	YE / VT	7245	High Pressure Fuel Pump Low Enable Signal	II	—
5	0.5	GY / YE	5297	Exhaust Camshaft Position Sensor 1 Voltage Reference	I	—
6	0.5	GN	6271	Crankshaft Position Sensor Signal	I	—
7	0.5	VT / BU	6270	Crankshaft Position Sensor Voltage	I	—
8	—	—	—	Not Occupied	—	—
9	0.5	BN	25	Charge Indicator Control	I	—
10	—	—	—	Not Occupied	—	—
11	0.5	BK / GN	3235	Exhaust Gas Recirculation Temperature Sensor 3 Low Reference	I	—
12	0.5	YE / BU	3680	Charge Air Cooler Outlet Temperature Sensor Low Reference	I	—
13	0.5	YE / BK	3682	Charge Air Cooler Inlet Temperature Sensor Low Reference	I	—
14	0.5	BK / BU	6274	Exhaust Gas Recirculation Temperature Sensor Low Reference	I	—
15	—	—	—	Not Occupied	—	—
16	0.5	BK / GN	3657	Exhaust Gas Temperature Sensor 3 Low Reference	I	—

K20 Engine Control Module X2 (LM2) (cont'd)

Pin	Size	Color	Circuit	Function	Terminal Type ID	Option
17	—	—	—	Not Occupied	—	—
18	0.5	BK / BU	6783	Exhaust Gas Temperature Sensor 2 Low Reference	I	—
19	—	—	—	Not Occupied	—	—
20	0.5	BK / BN	6782	Exhaust Gas Temperature Sensor 1 Low Reference	I	—
21 - 22	—	—	—	Not Occupied	—	—
23	0.75	BN / WH	3100	Diesel Exhaust Fluid Dosing Valve Low Control	I	—
24	0.5	BK / YE	2834	Fuel Rail Pressure Solenoid Valve Low Reference	I	—
25	0.5	BU	179	Engine Oil Pump Control	I	—
26	—	—	—	Not Occupied	—	—
27	0.5	BN / WH	582	Throttle Actuator Close Control	I	—
28	0.5	YE	581	Throttle Actuator Open Control	I	—
29	1.5	GN / GY	4903	Direct Fuel Injector High Voltage Supply Cylinder 3	II	—
30	1.5	BU / WH	4904	Direct Fuel Injector High Voltage Supply Cylinder 4	II	—
31	0.75	GY	2419	Fuel High Pressure Pump High Side Supply Voltage	II	—
32	0.75	GY / BN	7244	High Pressure Fuel Pump High Side Control	II	—
33	0.5	BK / GY	5296	Exhaust Camshaft Position Sensor Low Reference 1	I	—
34	0.5	VT / BK	5273	Exhaust Camshaft Position Sensor 1	I	—
35	0.5	BK / VT	6272	Crankshaft Position Sensor Low Reference	I	—
36	—	—	—	Not Occupied	—	—
37	0.5	BU	3017	Fuel Heater Relay 1 Control	I	—
38	—	—	—	Not Occupied	—	—
39	0.5	WH / GY	3234	Exhaust Gas Recirculation Temperature Sensor 3 Signal	I	—
40	0.5	BN	3681	Charge Air Cooler Outlet Temperature Sensor Signal	I	—
41	0.5	GN	3683	Charge Air Cooler Inlet Temperature Sensor Signal	I	—
42	0.5	WH / BN	3237	Exhaust Gas Recirculation Temperature Sensor Signal	I	—
43	—	—	—	Not Occupied	—	—
44	0.5	GY / GN	5378	Exhaust Gas Temperature Sensor 3 Signal	I	—
45	—	—	—	Not Occupied	—	—
46	0.5	BU / GN	5377	Exhaust Gas Temperature Sensor 2 Signal	I	—
47	—	—	—	Not Occupied	—	—
48	0.5	BU / WH	5277	Exhaust Gas Temperature Sensor 1 Signal	I	—
49 - 50	—	—	—	Not Occupied	—	—
51	0.75	BN	3099	Diesel Exhaust Fluid Dosing Valve High Control	I	—
52	0.5	BU / WH	2530	Fuel Rail Pressure Solenoid Valve Control	I	—
53	0.5	YE / BN	106	Oil Pump Motor Control	I	—
54	—	—	—	Not Occupied	—	—
55	0.75	BK / BU	1408	Variable Swirl Valve Close Control	I	—
56	0.75	BK / GN	1389	Variable Swirl Valve Open Control	I	—

K20 Engine Control Module X2 (LM2) (cont'd)

Pin	Size	Color	Circuit	Function	Terminal Type ID	Option
57	1.5	VT / GY	4906	Direct Fuel Injector High Voltage Supply Cylinder 6	II	—
58	1.5	BN / WH	4901	Direct Fuel Injector High Voltage Supply Cylinder 1	II	—
59	1.5	GN / WH	4905	Direct Fuel Injector High Voltage Supply Cylinder 5	II	—
60	1.5	BU / GY	4902	Direct Fuel Injector High Voltage Supply Cylinder 2	II	—
61 - 65	—	—	—	Not Occupied	—	—
66	0.5	BN / RD	2917	Fuel Rail Pressure Sensor 5V Reference	I	—
67	0.5	BK / GN	2919	Fuel Rail Pressure Sensor Low Reference	I	—
68	—	—	—	Not Occupied	—	—
69	0.5	BN / BU	357	Oil Temperature Sensor Signal	I	—
70	0.5	YE / BK	3000	Coolant Temperature Sensor 2 Signal	I	—
71	—	—	—	Not Occupied	—	—
72	0.5	BN / YE	1372	Engine Metal Temperature Sensor Signal 2	I	—
73	0.5	WH / BU	7329	Pre-Throttle Air Temperature Signal	I	—
74	0.5	BU	6053	Exhaust Pressure Sensor 1 Signal	I	—
75	0.5	BK / YE	548	Engine Control Sensors Low Reference 1	I	—
76	0.75	GN / VT	4621	Engine Control Module LIN Bus 1	I	—
77	0.5	GN	4622	Engine Control Module LIN Bus 2	I	—
78	0.5	GN / YE	4623	Engine Control Module LIN Bus 3	I	—
79 - 82	—	—	—	Not Occupied	—	—
83	0.75	BU / BN	2977	Coolant Diverter Valve Actuator Control Close	I	—
84	0.75	BU	2976	Coolant Diverter Valve Actuator Control Open	I	—
85	1.5	VT / GN	4806	Direct Fuel Injector High Voltage Control Cylinder 6	II	—
86	1.5	BN	4801	Direct Fuel Injector High Voltage Control Cylinder 1	II	—
87	1.5	BU	4802	Direct Fuel Injector High Voltage Control Cylinder 2	II	—
88	1.5	WH / GN	4805	Direct Fuel Injector High Voltage Control Cylinder 5	II	—
89	—	—	—	Not Occupied	—	—
90	0.5	BU / WH	3630	Throttle Position Sensor SENT 1 Signal	I	—
91	0.5	BU / GN	4012	Exhaust Gas Recirculation 2 Valve Position Sensor Signal	I	—
92	0.5	GY	23	Generator Field Duty Cycle Signal	I	—
93	—	—	—	Not Occupied	—	—
94	0.5	BU / WH	2918	Fuel Rail Pressure Sensor Signal	I	—
95	0.5	YE / BU	2408	Engine Inlet Coolant Temperature Signal	I	—
96	0.5	BN / YE	2161	Fuel Rail Pressure Sensor 2 Signal	I	—
97	0.5	VT	2988	Engine Outlet Coolant Temperature Signal	I	—
98 - 100	—	—	—	Not Occupied	—	—
101	0.5	GN / WH	432	Manifold Absolute Pressure Sensor Signal	I	—
102	0.5	GN / YE	37	Engine Block Temperature Sensor Signal	I	—
103	0.5	BU / BK	1422	Engine Water Charge Air Coolant Temperature Signal	I	—

K20 Engine Control Module X2 (LM2) (cont'd)

Pin	Size	Color	Circuit	Function	Terminal Type ID	Option
104	—	—	—	Not Occupied	—	—
105	0.5	GN / BN	2732	Engine Control Module LIN Bus 4	I	—
106 - 110	—	—	—	Not Occupied	—	—
111	0.5	BU / BN	4013	Exhaust Gas Recirculation 2 Valve Close Control	I	—
112	0.5	BU / WH	4014	Exhaust Gas Recirculation 2 Valve Open Control	I	—

K29FV Front Seat Heater Vent Control Module X1 (KA1/KQV)

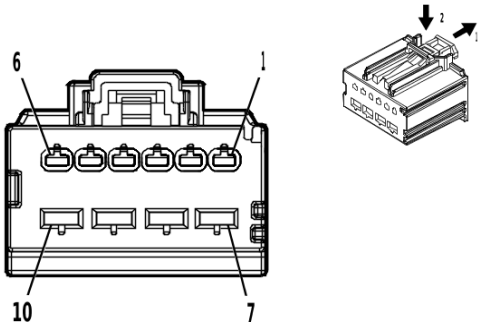

5035058

Connector Part Information

Harness Type: Front Seat Wiring Harness - Passenger
OEM Connector: 31372-1600
Service Connector: Service by Harness - See Part Catalog
Description: 10-Way F 1.5, 2.8 MX Series(BK)

Terminal Part Information

Terminal Type ID	Terminated Lead	Diagnostic Test Probe	Terminal Removal Tool
I	Not required	J-35616-2A (GY)	No Tool Required
II	Not required	J-35616-4A (PU)	No Tool Required

K29FV Front Seat Heater Vent Control Module X1 (KA1/KQV)

Pin	Size	Color	Circuit	Function	Terminal Type ID	Option
1	0.75	WH / BN	2481	Passenger Seat Back Heating Element Control	I	—
2	0.75	BN / BU	2479	Passenger Seat Heating Element Control	I	—
3	0.75	GY / BK	2480	Passenger Seat Heating Element Low Reference	I	—
4	0.75	BN / BK	2078	Driver Seat Heating Element Low Reference	I	—
5	0.75	BN	2432	Driver Seat Back Heating Element Control	I	—
6	0.75	BN / VT	2077	Driver Seat Heating Element Control	I	—
7	0.75	RD / GN	6140	Battery Positive Voltage	II	—
8	1.5	BK	1250	Ground	II	—
9	—	—	—	Not Occupied	—	—
10	0.75	RD / BN	6640	Battery Positive Voltage	II	—

K29FV Front Seat Heater Vent Control Module X2 (KA1/KQV)

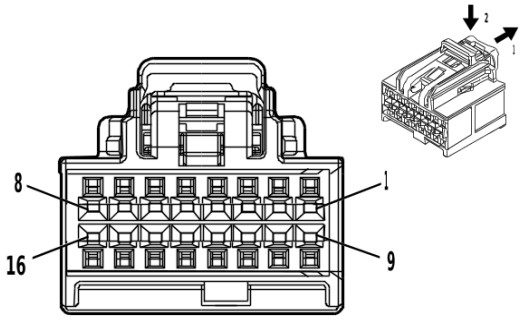

4873243

Connector Part Information

Harness Type: Front Seat Wiring Harness - Passenger
OEM Connector: 35016343
Service Connector: Service by Harness - See Part Catalog
Description: 16-Way F 0.64 OCS Series(BK)

Terminal Part Information

Terminal Type ID	Terminated Lead	Diagnostic Test Probe	Terminal Removal Tool
I	Not required	J-35616-64B (L-BU)	No Tool Required

K29FV Front Seat Heater Vent Control Module X2 (KA1/KQV)

Pin	Size	Color	Circuit	Function	Terminal Type ID	Option
1	0.5	BK / YE	2080	Driver Heated Seat Thermistor Low Reference	I	—
2	0.5	BK / GY	2435	Passenger Heated Seat Thermistor Low Reference	I	—
3	0.5	BU	2425	Driver Seat Back Heating Temperature Sensor Signal	I	—
4	0.5	WH / BU	2436	Passenger Seat Back Heating Temperature Sensor Signal	I	—
5	0.5	WH / GY	2434	Passenger Seat Heating Temperature Sensor Signal	I	—
6	0.5	YE / GY	2079	Driver Seat Heating Temperature Sensor Signal	I	—
7	—	—	—	Not Occupied	—	—
8	0.5	GN / VT	2857	Body Control Module LIN Bus 11	I	—
9	0.5	GN / VT	5906	Driver Seat Blower Motor Control 1	I	—
10	0.5	VT / WH	5908	Passenger Seat Blower Motor Control 1	I	—
11	—	—	—	Not Occupied	—	—
12	0.5	BK / GN	2482	Passenger Heated Back Thermistor Low Reference	I	—
13 - 16	—	—	—	Not Occupied	—	—

K29R Rear Seat Heater Control Module X1 (KA6)

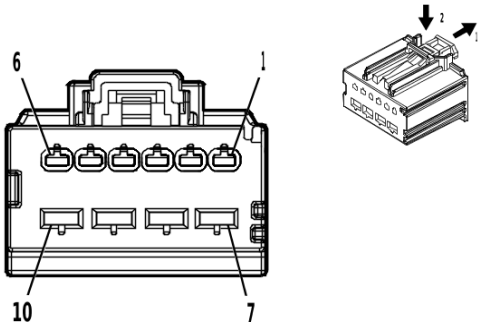

5035058

Connector Part Information

Harness Type: Rear Seat Wiring Harness - 2nd Row Right
OEM Connector: 31372-1600
Service Connector: Service by Harness - See Part Catalog
Description: 10-Way F 1.5, 2.8 MX Series(BK)

Terminal Part Information

Terminal Type ID	Terminated Lead	Diagnostic Test Probe	Terminal Removal Tool
I	Not required	J-35616-2A (GY)	No Tool Required
II	Not required	J-35616-4A (PU)	No Tool Required

K29R Rear Seat Heater Control Module X1 (KA6)

Pin	Size	Color	Circuit	Function	Terminal Type ID	Option
1	—	—	—	Not Occupied	—	—
2	0.75	GN / BN	2296	Right Rear Seat Cushion Heating Element Control	I	—
3	0.75	GN / BK	2457	Right Rear Seat Heating Element Low Reference	I	—
4	0.75	BU / BK	2446	Left Rear Seat Heating Element Low Reference	I	—
5	—	—	—	Not Occupied	—	—
6	0.75	GY	2294	Left Rear Seat Cushion Heating Element Control	I	—
7	0.75	RD / BU	6740	Battery Positive Voltage	II	—
8	0.75	BK	1450	Ground	II	—
9	—	—	—	Not Occupied	—	—
10	0.75	RD / WH	5740	Battery Positive Voltage	II	—

K29R Rear Seat Heater Control Module X2 (KA6)

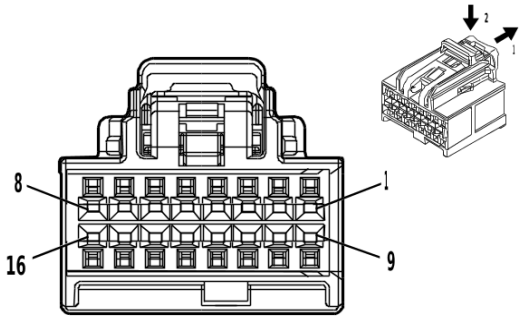

4873243

Connector Part Information

Harness Type: Rear Seat Wiring Harness - 2nd Row Right
OEM Connector: 35016343
Service Connector: Service by Harness - See Part Catalog
Description: 16-Way F 0.64 OCS Series(BK)

Terminal Part Information

Terminal Type ID	Terminated Lead	Diagnostic Test Probe	Terminal Removal Tool
I	Not required	J-35616-64B (L-BU)	No Tool Required

K29R Rear Seat Heater Control Module X2 (KA6)

Pin	Size	Color	Circuit	Function	Terminal Type ID	Option
1	0.5	BU / WH	7048	Left Rear Cushion Thermistor Feedback Signal	I	—
2	0.5	WH / BK	7054	Right Rear Cushion Thermistor Feedback Signal	I	—
3 - 4	—	—	—	Not Occupied	—	—
5	0.5	YE / WH	7053	Right Rear Seat Cushion Temperature Sensor Signal	I	—
6	0.5	WH / BU	7047	Left Rear Seat Cushion Temperature Sensor Signal	I	—
7	0.75	BK	1450	Ground	I	—
8	0.5	GN / VT	2857	Body Control Module LIN Bus 11	I	—
9 - 16	—	—	—	Not Occupied	—	—

K32 Heated Steering Wheel Module X1 (KI3)

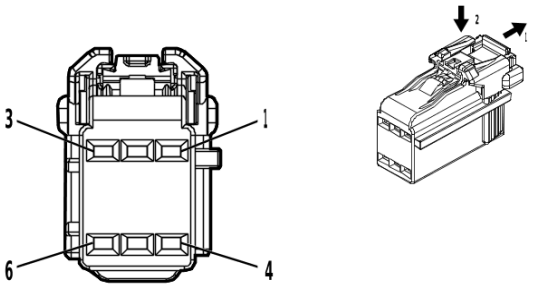

4862126

Connector Part Information

Harness Type: Steering Wheel Horn Switch Wiring Harness
OEM Connector: 13532426
Service Connector: Service by Harness - See Part Catalog
Description: 6-Way F 1.2 Series(BK)

Terminal Part Information

Terminal Type ID	Terminated Lead	Diagnostic Test Probe	Terminal Removal Tool
I	Not Available	No Tool Required	Not Available

K32 Heated Steering Wheel Module X1 (KI3)

Pin	Size	Color	Circuit	Function	Terminal Type ID	Option
1	0.35	GN	5883	Steering Wheel Heating Switch Signal	I	—
2	0.35	GY / OG	5884	Steering Wheel Heating Switch LED Control	I	—
3	0.5	OG	10040	Secondary Fused Battery Positive Voltage	I	—
4	0.5	BK	6050	Steering Wheel Ground	I	—
5	0.35	BK	6051	Steering Wheel Ground	I	—
6	0.35	WH	2858	Body Control Module LIN Bus 12	I	—

K32 Heated Steering Wheel Module X2 (KI3)

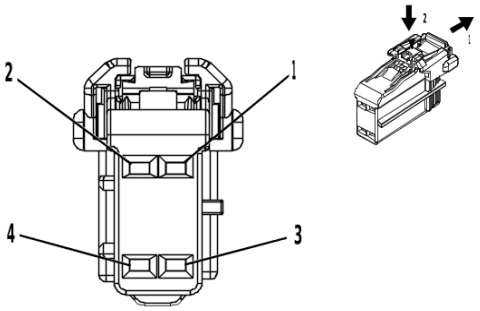

4115727

Connector Part Information

Harness Type: Steering Wheel Horn Switch Wiring Harness
OEM Connector: 13595574
Service Connector: Service by Harness - See Part Catalog
Description: 4-Way F 1.2 Series(BK)

Terminal Part Information

Terminal Type ID	Terminated Lead	Diagnostic Test Probe	Terminal Removal Tool
I	Not Available	No Tool Required	Not Available

K32 Heated Steering Wheel Module X2 (KI3)

Pin	Size	Color	Circuit	Function	Terminal Type ID	Option
1	0.35	WH / YE	5888	Steering Wheel Heating High Control	I	—
2	0.35	GY / YE	5887	Steering Wheel Heating Low Control	I	—
3	0.35	VT / BU	5886	Steering Wheel Heating Temperature Sensor Signal	I	—
4	0.35	YE / RD	5885	Steering Wheel Heating Voltage Reference	I	—

K36 Restraints Control Module X1

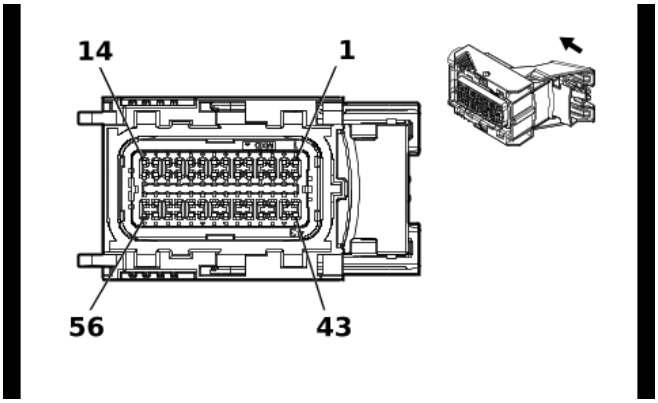

5377109

Connector Part Information

Harness Type: Body Wiring Harness
OEM Connector: 160099-0007
Service Connector: 26314571
Description: 56-Way F 0.64 Series, Sealed(BU)

Terminal Part Information

Terminal Type ID	Terminated Lead	Diagnostic Test Probe	Terminal Removal Tool
I	19332366	J-35616-35 (VT)	J-38125-212

K36 Restraints Control Module X1

Pin	Size	Color	Circuit	Function	Terminal Type ID	Option
1 - 6	—	—	—	Not Occupied	—	—
7	0.5	BK / OG	5045	Left Front Impact Discriminating Sensor Low Reference	I	—
8	0.5	OG / YE	354	Left Front Impact Discriminating Sensor Signal	I	—
9	0.5	OG / GN	1409	Right Front Impact Discriminating Sensor Signal	I	—
10	0.5	BK / OG	5600	Right Front Impact Discriminating Sensor Low Reference	I	—
11	0.5	WH / OG	3476	Passenger Seat Belt Retractor Pretensioner Low Control	I	—
12	0.5	OG / GN	3475	Passenger Seat Belt Retractor Pretensioner High Control	I	—
13	0.5	YE / OG	3025	Passenger Instrument Panel Air Bag Stage 1 High Control	I	—
14	0.5	OG / WH	3024	Passenger Instrument Panel Air Bag Stage 1 Low Control	I	—
15 - 24	—	—	—	Not Occupied	—	—
25	0.5	VT / OG	3478	Driver Seat Belt Retractor Pretensioner Low Control	I	—
26	0.5	OG / WH	3477	Driver Seat Belt Retractor Pretensioner High Control	I	—
27	0.5	OG / VT	3021	Steering Wheel Air Bag Stage 1 High Control	I	—
28	0.5	BN / OG	3020	Steering Wheel Air Bag Stage 1 Low Control	I	—
29	0.5	BU	4987	AUTOSAR CAN Bus [+] 1 Serial Data	I	—
30	0.5	WH	4986	AUTOSAR CAN Bus [-] 1 Serial Data	I	—
31	—	—	—	Not Occupied	—	—

K36 Restraints Control Module X1 (cont'd)

Pin	Size	Color	Circuit	Function	Terminal Type ID	Option
32	0.5	OG / BN	3479	Passenger Seat Belt Anchor Pretensioner High Control	I	—
33	0.5	GY / OG	3480	Passenger Seat Belt Anchor Pretensioner Low Control	I	—
34 - 37	—	—	—	Not Occupied	—	—
38	0.5	OG / VT	3026	Passenger Instrument Panel Air Bag Stage 2 Low Control	I	—
39	0.5	GY / OG	3027	Passenger Instrument Panel Air Bag Stage 2 High Control	I	—
40 - 41	—	—	—	Not Occupied	—	—
42	0.75	BK / WH	1351	Signal Ground	I	—
43	0.5	BU	4987	AUTOSAR CAN Bus [+] 1 Serial Data	I	AX7
	0.35	BU	4987	AUTOSAR CAN Bus [+] 1 Serial Data	I	- AX7
44	0.5	WH	4986	AUTOSAR CAN Bus [-] 1 Serial Data	I	AX7
	0.35	WH	4986	AUTOSAR CAN Bus [-] 1 Serial Data	I	- AX7
45	—	—	—	Not Occupied	—	—
46	0.5	VT / OG	3482	Driver Seat Belt Anchor Pretensioner Low Control	I	—
47	0.5	OG / YE	3481	Driver Seat Belt Anchor Pretensioner High Control	I	—
48 - 49	—	—	—	Not Occupied	—	—
50	0.5	BN / WH	3895	Roof Rail Air Bag Disable Switch Low Reference	I	—
51	0.5	BU / WH	3119	Roof Rail Air Bag Disable Switch Signal	I	—
52	—	—	—	Not Occupied	—	—
53	0.5	WH / OG	3022	Steering Wheel Air Bag Stage 2 Low Control	I	—
54	0.5	OG / GN	3023	Steering Wheel Air Bag Stage 2 High Control	I	—
55	0.5	VT / WH	239	Run/Crank Ignition 1 Voltage	I	—
56	0.5	RD / GN	4440	Battery Positive Voltage	I	—

K36 Restraints Control Module X2

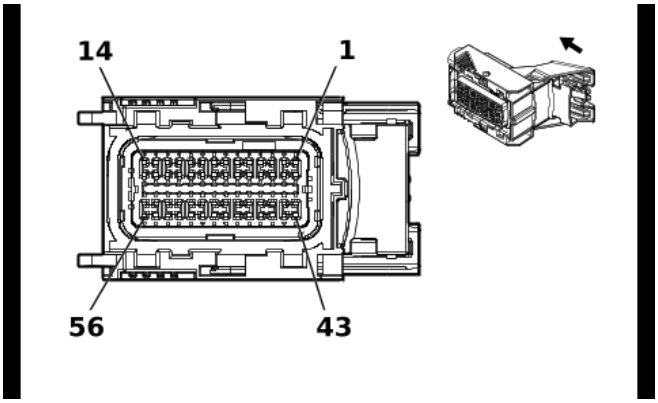

5377124

Connector Part Information

Harness Type: Body Wiring Harness
OEM Connector: 12683274
Service Connector: 85004498
Description: 56-Way F 0.64 Series, Sealed(BK)

Terminal Part Information

Terminal Type ID	Terminated Lead	Diagnostic Test Probe	Terminal Removal Tool
I	19354746	J-35616-64B (L-BU)	J-38125-215A

K36 Restraints Control Module X2

Pin	Size	Color	Circuit	Function	Terminal Type ID	Option
1 - 8	—	—	—	Not Occupied	—	—
9	0.5	VT / OG	3517	3rd Row Right Seat Belt Switch Signal	I	—
10	0.5	BU / OG	5163	Rear Center Seat Belt Switch Signal	I	—
11	0.5	YE / OG	5161	Left Rear Seat Belt Switch Signal	I	—
12	0.5	OG / GY	2652	Driver Seat Belt Sensor Signal	I	—
13	0.5	BK / OG	6627	Right Rear Side Impact Sensor Low Reference	I	—
14	0.5	OG / WH	6626	Right Rear Side Impact Sensor Signal	I	—
15 - 20	—	—	—	Not Occupied	—	—
21	0.5	OG / GN	3700	3rd Row Center Seat Belt Switch Signal	I	—
22	0.5	GN / OG	3516	3rd Row Left Seat Belt Switch Signal	I	—
23	0.5	BK / OG	1363	Driver Seat Belt Switch Low Reference	I	—
24	0.5	BN / OG	5162	Right Rear Seat Belt Switch Signal	I	—
25	0.5	OG / VT	1362	Passenger Seat Belt Switch Signal	I	—
26	—	—	—	Not Occupied	—	—
27	0.5	BK / OG	6628	Left Front Side Impact Sensor Low Reference	I	—
28	0.5	OG / GN	2132	Left Front Side Impact Sensor Signal	I	—
29 - 36	—	—	—	Not Occupied	—	—
37	0.5	OG / GY	5021	Right Front Roof Rail Air Bag High Control	I	—
38	0.5	WH / OG	5022	Right Front Roof Rail Air Bag Low Control	I	—
39	0.5	BU / OG	4957	Passenger Seat Back Air Bag Low Control	I	—
40	0.5	OG / GY	4956	Passenger Seat Back Air Bag High Control	I	—
41	0.5	BK / OG	6629	Right Front Side Impact Sensor Low Reference	I	—

K36 Restraints Control Module X2 (cont'd)

Pin	Size	Color	Circuit	Function	Terminal Type ID	Option
42	0.5	BN / OG	2134	Right Front Side Impact Sensor Signal	I	—
43 - 44	—	—	—	Not Occupied	—	—
45	0.5	GY / OG	4208	Driver Inboard Seat Side Air Bag Low Control	I	—
46	0.5	OG / BN	4207	Driver Inboard Seat Side Air Bag High Control	I	—
47 - 50	—	—	—	Not Occupied	—	—
51	0.5	OG / GN	5019	Left Front Roof Rail Air Bag High Control	I	—
52	0.5	VT / OG	5020	Left Front Roof Rail Air Bag Low Control	I	—
53	0.5	BK / OG	4963	Driver Seat Back Air Bag Low Control	I	—
54	0.5	OG / BU	4962	Driver Seat Back Air Bag High Control	I	—
55	0.5	BK / OG	6623	Left Rear Side Impact Sensor Low Reference	I	—
56	0.5	OG / BU	6622	Left Rear Side Impact Sensor Signal	I	—

K38 Chassis Control Module

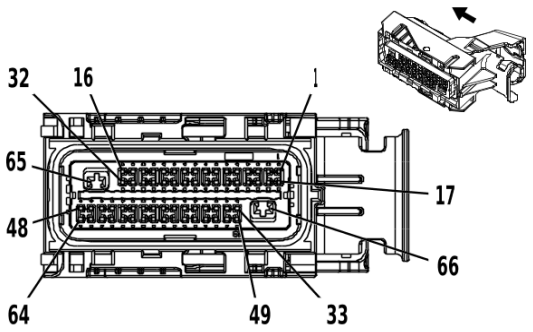

3621452

Connector Part Information

Harness Type: Body Wiring Harness
OEM Connector: 12642692
Service Connector: 19329822
Description: 66-Way F 0.64, 2.8 Series, Sealed(BK with BK Terminal Position Assurance)

Terminal Part Information

Terminal Type ID	Terminated Lead	Diagnostic Test Probe	Terminal Removal Tool
I	13587518	J-35616-35 (VT)	J-38125-11A
II	19351723	J-35616-64B (L-BU)	J-38125-213

K38 Chassis Control Module

Pin	Size	Color	Circuit	Function	Terminal Type ID	Option
1 - 5	—	—	—	Not Occupied	—	—
6	0.5	VT / WH	639	Run/Crank Ignition 1 Voltage	II	—
7 - 33	—	—	—	Not Occupied	—	—
34	0.35	BU / YE	4979	AUTOSAR CAN Bus [+] 2 Serial Data	II	—
35	0.35	BU / YE	4979	AUTOSAR CAN Bus [+] 2 Serial Data	II	—
36	0.35	WH	4978	AUTOSAR CAN Bus [-] 2 Serial Data	II	—
37	0.35	WH	4978	AUTOSAR CAN Bus [-] 2 Serial Data	II	—
38 - 64	—	—	—	Not Occupied	—	—
65	0.5	BK	2050	Ground	I	—
66	0.5	RD / GN	2642	Battery Positive Voltage	I	—

K40D Driver Seat Adjuster Memory Module X1 (A45/AUN)

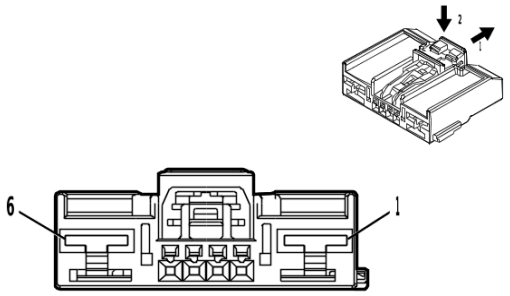

4650258

Connector Part Information

Harness Type: Front Seat Wiring Harness - Driver
OEM Connector: 7289-7139-30
Service Connector: Service by Harness - See Part Catalog
Description: 6-Way F 0.64, 6.3 Series(BK)

Terminal Part Information

Terminal Type ID	Terminated Lead	Diagnostic Test Probe	Terminal Removal Tool
I	Not required	J-35616-42 (RD)	No Tool Required
II	Not required	No Tool Required	No Tool Required

K40D Driver Seat Adjuster Memory Module X1 (A45/AUN)

Pin	Size	Color	Circuit	Function	Terminal Type ID	Option
1	2.5	BK	1150	Ground	I	—
2	—	—	—	Not Occupied	—	—
3	0.75	RD / BN	2240	Battery Positive Voltage	II	—
4 - 5	—	—	—	Not Occupied	—	—
6	2.5	RD / YE	5040	Battery Positive Voltage	I	—

K40D Driver Seat Adjuster Memory Module X2 (A45/AUN)

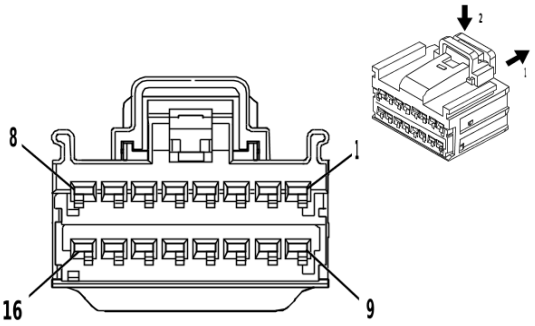

4332214

Connector Part Information

Harness Type: Front Seat Wiring Harness - Driver
OEM Connector: 15512506
Service Connector: Service by Harness - See Part Catalog
Description: 16-Way F 1.5 OCS Series(BK)

Terminal Part Information

Terminal Type ID	Terminated Lead	Diagnostic Test Probe	Terminal Removal Tool
I	Not required	J-35616-2A (GY)	No Tool Required

K40D Driver Seat Adjuster Memory Module X2 (A45/AUN)

Pin	Size	Color	Circuit	Function	Terminal Type ID	Option
1	1.5	YE / BU	285	Driver Seat Horizontal Motor Forward Control	I	—
2	—	—	—	Not Occupied	—	—
3	1.5	GN / YE	276	Driver Seat Recline Motor Forward Control	I	—
4 - 5	—	—	—	Not Occupied	—	—
6	1.5	BU / VT	287	Driver Seat Front Vertical Motor Down Control	I	—
7	1.5	YE	282	Driver Seat Rear Vertical Motor Up Control	I	—
8	—	—	—	Not Occupied	—	—
9	1.5	BU / YE	277	Driver Seat Recline Motor Rearward Control	I	—
10	—	—	—	Not Occupied	—	—
11	1.5	GY / GN	284	Driver Seat Horizontal Motor Rearward Control	I	—
12	—	—	—	Not Occupied	—	—
13	1.5	GY / BU	283	Driver Seat Rear Vertical Motor Down Control	I	—
14 - 15	—	—	—	Not Occupied	—	—
16	1.5	GN / BN	286	Driver Seat Front Vertical Motor Up Control	I	—

K40D Driver Seat Adjuster Memory Module X3 (A45/AUN)

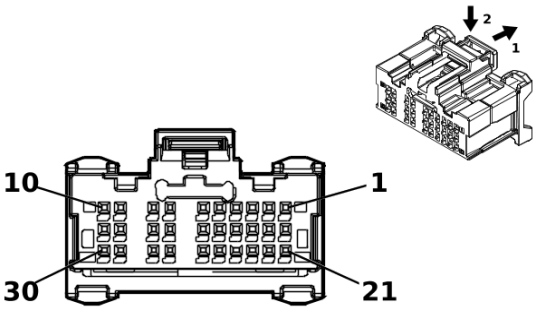

5202284

Connector Part Information

Harness Type: Front Seat Wiring Harness - Driver
OEM Connector: 2309644-1
Service Connector: Service by Harness - See Part Catalog
Description: 30-Way F 0.5 MQS Series(BK)

Terminal Part Information

Terminal Type ID	Terminated Lead	Diagnostic Test Probe	Terminal Removal Tool
I	Not required	EL-35616-58 (BK)	No Tool Required

K40D Driver Seat Adjuster Memory Module X3 (A45/AUN)

Pin	Size	Color	Circuit	Function	Terminal Type ID	Option
1	—	—	—	Not Occupied	—	—
2	0.35	BU / GN	614	Seat Memory Switch Set Signal	I	—
3 - 4	—	—	—	Not Occupied	—	—
5	0.35	BN	3038	Driver Seat Right Rear Haptic Movement Motor Control	I	—
6	0.35	YE / BN	3037	Driver Seat Left Rear Haptic Movement Motor Control	I	—
7	—	—	—	Not Occupied	—	—
8	0.35	GN / WH	7530	Driver Seat Memory Control Module LIN Bus 1	I	—
9	0.35	WH	4100	AUTOSAR CAN Bus [-] 4 Serial Data	I	—
10	0.35	BU / VT	4101	AUTOSAR CAN Bus [+] 4 Serial Data	I	—
11 - 15	—	—	—	Not Occupied	—	—
16	0.35	WH	615	Seat Memory Switch Signal 1	I	—
17	—	—	—	Not Occupied	—	—
18	0.35	GN / GY	3758	Driver Seat Memory Control Module LIN Bus 2	I	—
19	0.35	WH	4100	AUTOSAR CAN Bus [-] 4 Serial Data	I	—
20	0.35	BU / VT	4101	AUTOSAR CAN Bus [+] 4 Serial Data	I	—
21 - 30	—	—	—	Not Occupied	—	—

K43 Power Steering Control Module X1

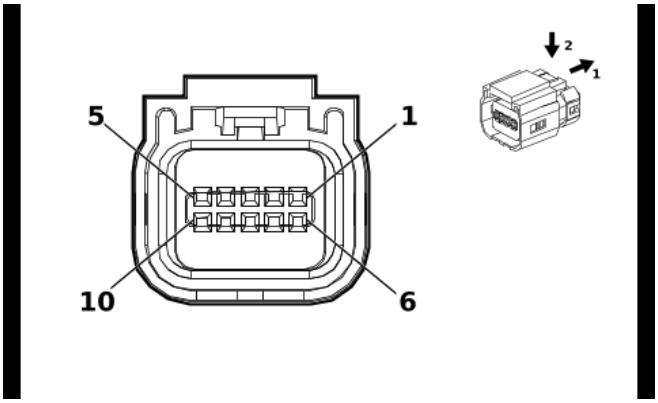

2586629

Connector Part Information

Harness Type: Power Steering Wiring Harness Extension Harness
OEM Connector: 13524780
Service Connector: Service by Harness - See Part Catalog
Description: —

Terminal Part Information

Terminal Type ID	Terminated Lead	Diagnostic Test Probe	Terminal Removal Tool
I	Not Available	No Tool Required	Not Available

K43 Power Steering Control Module X1

Pin	Size	Color	Circuit	Function	Terminal Type ID	Option
1 - 6	—	—	—	Not Occupied	—	—
7	0.5	WH / BU	4987	AUTOSAR CAN Bus [+] 1 Serial Data	I	—
8	0.5	BU / WH	4986	AUTOSAR CAN Bus [-] 1 Serial Data	I	—
9 - 10	—	—	—	Not Occupied	—	—

K43 Power Steering Control Module X2

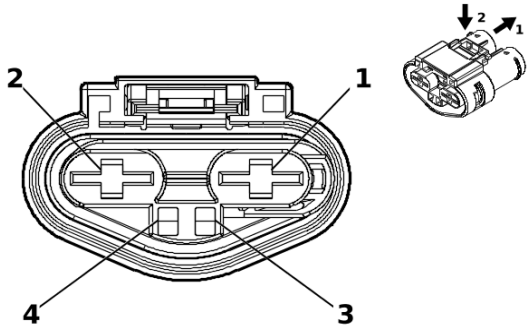

5330342

Connector Part Information

Harness Type: Power Steering Wiring Harness
OEM Connector: 13508902
Service Connector: Service by Harness - See Part Catalog
Description: 4-Way F 1.2, 2.8 MAK Series, Sealed(BK)

Terminal Part Information

Terminal Type ID	Terminated Lead	Diagnostic Test Probe	Terminal Removal Tool
I	Not Available	No Tool Required	Not Available

K43 Power Steering Control Module X2

Pin	Size	Color	Circuit	Function	Terminal Type ID	Option
1	25	RD / VT	3542	Battery Positive Voltage	I	—
2	25	BK	350	Ground	I	—
3 - 4	—	—	—	Not Occupied	—	—

K43 Power Steering Control Module X3

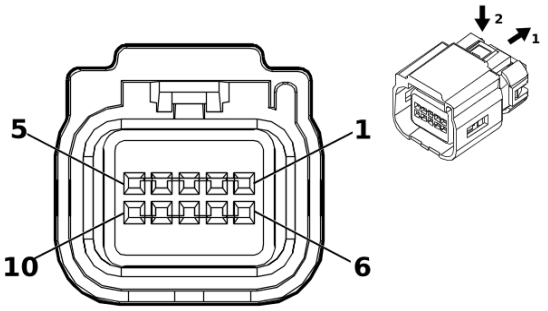

3608469

Connector Part Information

Harness Type: Power Steering Control Module Wiring Harness
OEM Connector: 13817799
Service Connector: Service by Harness - See Part Catalog
Description: 10-Way F 0.64 Kaizen Series, Sealed(GY)

Terminal Part Information

Terminal Type ID	Terminated Lead	Diagnostic Test Probe	Terminal Removal Tool
I	Not Available	No Tool Required	Not Available

K43 Power Steering Control Module X3

Pin	Size	Color	Circuit	Function	Terminal Type ID	Option
1	0.5	BU	8367	Handwheel Channel A Torque Pressure Sensor 1 SENT Signal	I	—
2	0.5	RD	8366	Handwheel Channel A High Reference	I	—
3	0.5	BK	8370	Handwheel Channel A Low Reference	I	—
4	0.5	WH / RD	8371	Handwheel Channel B High Reference	I	—
5	0.5	WH / BU	8372	Handwheel Channel B Torque Pressure Sensor 1 SENT Signal	I	—
6	0.5	VT	8368	Handwheel Channel A Torque Pressure Sensor 2 SENT Signal	I	—
7	0.5	OG	8369	Handwheel Channel A Angle Position Sensor SENT Signal	I	—
8	0.5	GY	8375	Handwheel Channel B Low Reference	I	—
9	0.5	YE	8374	Handwheel Channel B Angle Position Sensor SENT Signal	I	—
10	0.5	GN	8373	Handwheel Channel B Torque Pressure Sensor 2 SENT Signal	I	—

K56 Serial Data Gateway Module X1

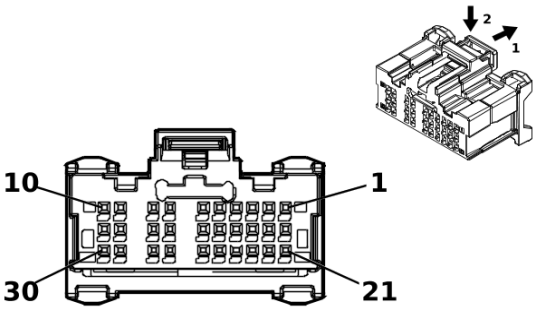

5202284

Connector Part Information

Harness Type: Instrument Panel Wiring Harness
OEM Connector: 2309644-1
Service Connector: 84766507
Description: 30-Way F 0.5 MQS Series(BK)

Terminal Part Information

Terminal Type ID	Terminated Lead	Diagnostic Test Probe	Terminal Removal Tool
I	19370262	EL-35616-58 (BK)	EL-38125-58

K56 Serial Data Gateway Module X1

Pin	Size	Color	Circuit	Function	Terminal Type ID	Option
1	0.35	RD / VT	3340	Battery Positive Voltage	I	—
2	0.35	BU / GY	4105	AUTOSAR CAN Bus [+] 8 Serial Data	I	—
3	0.35	WH / GY	4104	AUTOSAR CAN Bus [-] 8 Serial Data	I	—
4	0.35	BK / WH	1851	Signal Ground	I	—
5	0.35	BU	4987	AUTOSAR CAN Bus [+] 1 Serial Data	I	—
6	0.35	WH	4986	AUTOSAR CAN Bus [-] 1 Serial Data	I	—
7	0.35	WH	4100	AUTOSAR CAN Bus [-] 4 Serial Data	I	—
8	0.35	BU / VT	4101	AUTOSAR CAN Bus [+] 4 Serial Data	I	—
9	0.35	WH	4976	AUTOSAR CAN Bus [-] 3 Serial Data	I	—
10	0.35	BU / BK	4977	AUTOSAR CAN Bus [+] 3 Serial Data	I	—
11 - 12	—	—	—	Not Occupied	—	—
13	0.35	WH / GY	4104	AUTOSAR CAN Bus [-] 8 Serial Data	I	—
14	0.35	BU / GY	4105	AUTOSAR CAN Bus [+] 8 Serial Data	I	—
15	0.35	BU	4987	AUTOSAR CAN Bus [+] 1 Serial Data	I	—
16	0.35	WH	4986	AUTOSAR CAN Bus [-] 1 Serial Data	I	—
17	0.35	WH	4978	AUTOSAR CAN Bus [-] 2 Serial Data	I	—
18	0.35	BU / YE	4979	AUTOSAR CAN Bus [+] 2 Serial Data	I	—
19	0.35	BU / YE	4984	AUTOSAR CAN Bus [-] 5 Serial Data	I	—
20	0.35	BU / WH	4985	AUTOSAR CAN Bus [+] 5 Serial Data	I	—
21 - 26	—	—	—	Not Occupied	—	—
27	0.35	WH	4978	AUTOSAR CAN Bus [-] 2 Serial Data	I	—
28	0.35	BU / YE	4979	AUTOSAR CAN Bus [+] 2 Serial Data	I	—

K56 Serial Data Gateway Module X1 (cont'd)

Pin	Size	Color	Circuit	Function	Terminal Type ID	Option
29 - 30	—	—	—	Not Occupied	—	—

K56 Serial Data Gateway Module X2

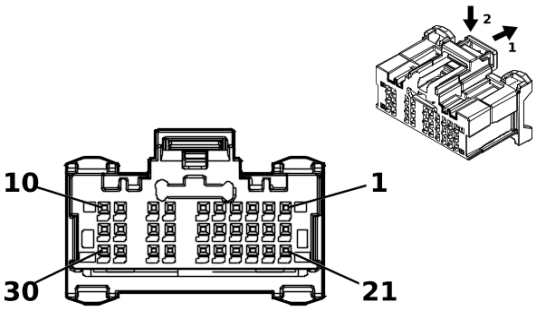

5203942

Connector Part Information

Harness Type: Instrument Panel Wiring Harness
OEM Connector: 2309644-2
Service Connector: 84766509
Description: 30-Way F 0.5 MQS Series(BK with GY Terminal Position Assurance)

Terminal Part Information

Terminal Type ID	Terminated Lead	Diagnostic Test Probe	Terminal Removal Tool
I	19370262	EL-35616-58 (BK)	EL-38125-58

K56 Serial Data Gateway Module X2

Pin	Size	Color	Circuit	Function	Terminal Type ID	Option
1 - 4	—	—	—	Not Occupied	—	—
5	0.35	BK / GY	3559	Passive Start Switch 2 Low Reference	I	—
6	—	—	—	Not Occupied	—	—
7	0.35	GN / VT	5199	Run/Crank Relay Coil Control	I	—
8	—	—	—	Not Occupied	—	—
9	0.35	YE / WH	4973	Ethernet Bus 1R [+]	I	—
10	0.35	YE	4972	Ethernet Bus 1R [-]	I	—
11 - 12	—	—	—	Not Occupied	—	—
13	0.35	BU / BN	4983	AUTOSAR CAN Bus [+] 7 Serial Data	I	—
14	0.35	WH	4982	AUTOSAR CAN Bus [-] 7 Serial Data	I	—
15	0.35	GN / BK	3558	Passive Start Switch Signal 2	I	—
16	0.35	WH	4980	AUTOSAR CAN Bus [-] 6 Serial Data	I	—
17	0.35	GN	2578	Private Serial Data Presentation CAN Bus [+] 1 Serial Data	I	—
18	0.35	BN	2577	Private Serial Data Presentation CAN Bus [-] 1 Serial Data	I	—
19	0.35	WH	7207	Ethernet Bus 1 Enable Signal	I	—
20 - 22	—	—	—	Not Occupied	—	—
23	0.35	BU / WH	4985	AUTOSAR CAN Bus [+] 5 Serial Data	I	—
24	0.35	BU / YE	4984	AUTOSAR CAN Bus [-] 5 Serial Data	I	—
25	—	—	—	Not Occupied	—	—
26	0.35	YE	4981	AUTOSAR CAN Bus [+] 6 Serial Data	I	—

K56 Serial Data Gateway Module X2 (cont'd)

Pin	Size	Color	Circuit	Function	Terminal Type ID	Option
27	0.35	VT	2580	Private Serial Data Presentation CAN Bus [+] 2 Serial Data	I	—
28	0.35	GY	2579	Private Serial Data Presentation CAN Bus [-] 2 Serial Data	I	—
29	0.35	GN / WH	4975	Ethernet Bus 1T [+]	I	—
30	0.35	GN	4974	Ethernet Bus 1T [-]	I	—

K56 Serial Data Gateway Module X3

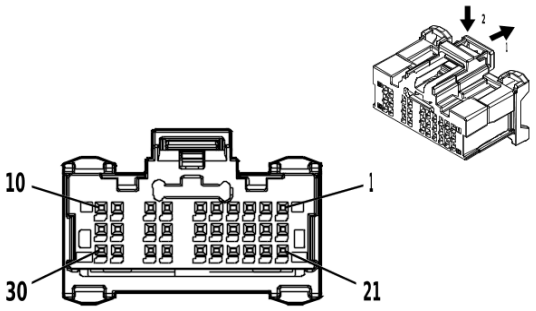

4900333

Connector Part Information

Harness Type: Instrument Panel Wiring Harness
OEM Connector: 2309644-3
Service Connector: 13519319
Description: 30-Way F 0.5 MQS Series(BK with GY Terminal Position Assurance)

Terminal Part Information

Terminal Type ID	Terminated Lead	Diagnostic Test Probe	Terminal Removal Tool
I	19370262	EL-35616-58 (BK)	EL-38125-58

K56 Serial Data Gateway Module X3

Pin	Size	Color	Circuit	Function	Terminal Type ID	Option
1 - 6	—	—	—	Not Occupied	—	—
7	0.35 0.35	BU / WH GY / WH	4758 7211	Ethernet Bus 2 [+] Ethernet Bus 4 [+]	I I	(IOK/ IOV) + (IOV) (IOR+ UDA/ IOR/ UE1/ IOR + UER)
8	0.35 0.35	BU GY	4757 7210	Ethernet Bus 2 [-] Ethernet Bus 4 [-]	I I	(IOK/ IOV) + (IOV) (IOR+ UDA/ IOR/ UE1/ IOR + UER)
9	0.35	BU / WH	4758	Ethernet Bus 2 [+]	I	—
10	0.35	BU	4757	Ethernet Bus 2 [-]	I	—
11 - 26	—	—	—	Not Occupied	—	—
27	0.35	GY / BU	7217	Ethernet Bus 7 [+]	I	—
28	0.35	BN / BU	7216	Ethernet Bus 7 [-]	I	—
29 - 30	—	—	—	Not Occupied	—	—

K60 Column Lock Module

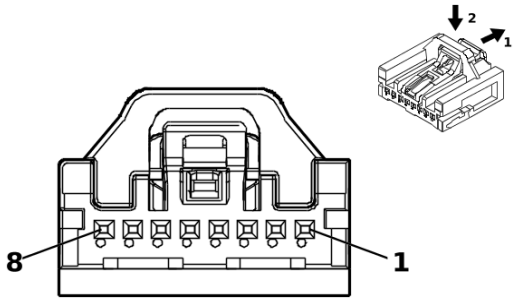

5200269

Connector Part Information

Harness Type: Instrument Panel Wiring Harness
OEM Connector: 35068228
Service Connector: 84769201
Description: 8-Way F Mini 50 Series(BK)

Terminal Part Information

Terminal Type ID	Terminated Lead	Diagnostic Test Probe	Terminal Removal Tool
I	Not required	EL-35616-58 (BK)	No Tool Required

K60 Column Lock Module

Pin	Size	Color	Circuit	Function	Terminal Type ID	Option
1	0.35	RD / GY	4140	Battery Positive Voltage	I	—
2	—	—	—	Not Occupied	—	—
3	0.35	BK	1850	Ground	I	—
4	0.35	BU	4987	AUTOSAR CAN Bus [+] 1 Serial Data	I	—
5	0.35	BU	4987	AUTOSAR CAN Bus [+] 1 Serial Data	I	—
6	0.35	WH	4986	AUTOSAR CAN Bus [-] 1 Serial Data	I	—
7	0.35	WH	4986	AUTOSAR CAN Bus [-] 1 Serial Data	I	—
8	0.35	BU / VT	807	Ignition Off/Accessory Ignition Voltage	I	—

K61 Sunroof Control Module (C3U)

—

Connector Part Information

Harness Type: Sunroof Wiring Harness
OEM Connector: 7289-9550-30
Service Connector: Service by Harness - See Part Catalog
Description: 18-Way F

Terminal Part Information

Terminal Type ID	Terminated Lead	Diagnostic Test Probe	Terminal Removal Tool
I	Not Available	No Tool Required	Not Available

K61 Sunroof Control Module (C3U)

Pin	Size	Color	Circuit	Function	Terminal Type ID	Option
2	2.0	BK	1050	Ground	I	—
7	0.35	GN / WH	2854	Body Control Module LIN Bus 8	I	—
8	2.0	BU / BN	1050	Ground	I	—
10	2.0	OG	4540	Battery Positive Voltage	I	—
11	2.0	RD	4540	Battery Positive Voltage	I	—
12	0.35	BK / BN	128	Sunroof Switch Low Reference	I	—
13	0.35	RD / WH	5033	Sunroof Obstruction Sensor Voltage Reference	I	—
14	0.35	VT	5124	Sunroof Obstruction Sensor Signal 2	I	—
15	0.35	YE	5034	Sunroof Obstruction Sensor Signal 1	I	—
17	1.5	BU	3782	Front Sunshade Motor Close Control	I	—
18	1.5	PK	3781	Front Sunroof Sunshade Motor Open Control	I	—

K67 Trailer Brake Control Module (JL1)

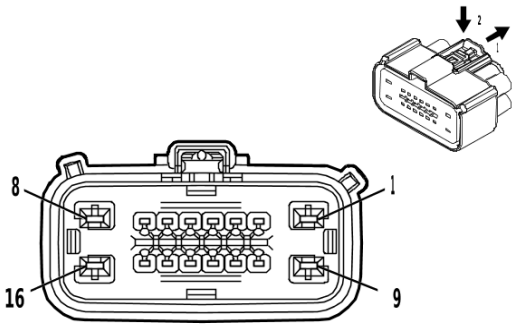

4624589

Connector Part Information

Harness Type: Chassis Wiring Harness
OEM Connector: 34985-4016
Service Connector: 13599889
Description: 16-Way F 1.5, 2.8 MX Series, Sealed(GY)

Terminal Part Information

Terminal Type ID	Terminated Lead	Diagnostic Test Probe	Terminal Removal Tool
I	13576377	J-35616-35 (VT)	J-38125-12A
II	85528055	J-35616-14 (GN)	J-38125-217

K67 Trailer Brake Control Module (JL1)

Pin	Size	Color	Circuit	Function	Terminal Type ID	Option
1	3	RD / VT	1242	Battery Positive Voltage	I	—
2	0.5	WH / BK	2223	Trailer Brake Apply Signal	II	—
3 - 4	—	—	—	Not Occupied	—	—
5	0.5	YE / BK	2224	Trailer Brake Enable Signal	II	—
6 - 7	—	—	—	Not Occupied	—	—
8	2.5	BU	47	Trailer Auxiliary Control	I	—
9	2.5	BK	1950	Ground	I	—
10 - 11	—	—	—	Not Occupied	—	—
12	0.75	GN / BU	2733	Electronic Brake Control Module LIN Bus 2	II	—
13 - 16	—	—	—	Not Occupied	—	—

K68 Trailer Lamp Control Module (U1D)

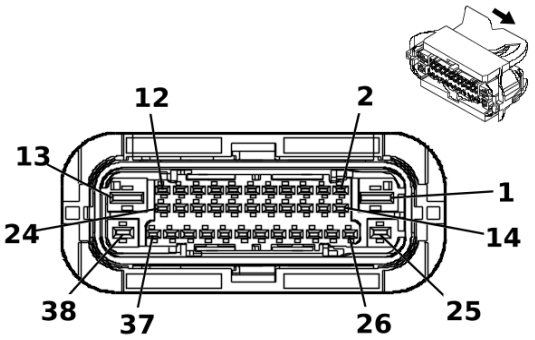

5199340

Connector Part Information

Harness Type: Chassis Wiring Harness
OEM Connector: 33235465
Service Connector: 84769286
Description: 38-Way F 1.5, 2.8, 4.8 MCP Series, Sealed(BK with BN Inner Connector)

Terminal Part Information

Terminal Type ID	Terminated Lead	Diagnostic Test Probe	Terminal Removal Tool
I	19368624	J-35616-35 (VT)	J-38125-212
II	19369235	J-35616-14 (GN)	J-38125-212
III	85158596	J-35616-40 (BU)	J-38125-212

K68 Trailer Lamp Control Module (U1D)

Pin	Size	Color	Circuit	Function	Terminal Type ID	Option
1	3	RD / VT	5640	Battery Positive Voltage	III	—
2	0.5 0.75	BU / WH BU / WH	5186 5186	Left Trailer Turn Signal Lamp Control Left Trailer Turn Signal Lamp Control	II II	((MAS/ MBM/ MBR) + UET+ Z82) - MAS- MBM- MBR+ UET+ Z82
3	0.5 0.75	YE / GY YE / GY	5187 5187	Right Trailer Turn Signal Lamp Control Right Trailer Turn Signal Lamp Control	II II	((MAS/ MBM/ MBR) + UET+ Z82) - MAS- MBM- MBR+ UET+ Z82
4	0.5	BN / YE	5188	Trailer Stop Lamp Control	II	—
5	0.5	BN / GY	5184	Left Trailer Park Lamp Control	II	—
6	0.5	GY	5185	Right Trailer Park Lamp Control	II	—
7	0.5 0.75	GN / WH GN / WH	5189 5189	Trailer Backup Lamp Control Trailer Backup Lamp Control	II II	((MAS/ MBM/ MBR) + UET+ Z82) - MAS- MBM- MBR+ UET+ Z82
8	0.5	YE / WH	5190	Trailer Fog Lamp Control	II	—
9	—	—	—	Not Occupied	—	—
10	0.75	VT / BK	339	Run/Crank Ignition 1 Voltage	II	—

K68 Trailer Lamp Control Module (U1D) (cont'd)

Pin	Size	Color	Circuit	Function	Terminal Type ID	Option
11	0.5	BN / YE	820	Center High Mounted Stop Lamp Supply Voltage	II	—
12	0.75	GN / BU	5992	Trailer Connected Signal	II	—
13	2.5	BK	2050	Ground	III	—
14 - 24	—	—	—	Not Occupied	—	—
25	0.75	BN / GY	5184	Left Trailer Park Lamp Control	I	—
26	—	—	—	Not Occupied	—	—
27	0.5	BU	4101	AUTOSAR CAN Bus [+] 4 Serial Data	II	—
28	0.5	WH / GN	4100	AUTOSAR CAN Bus [-] 4 Serial Data	II	—
29	0.5	BU / VT	4101	AUTOSAR CAN Bus [+] 4 Serial Data	II	—
30	0.5	WH	4100	AUTOSAR CAN Bus [-] 4 Serial Data	II	—
31 - 37	—	—	—	Not Occupied	—	—
38	2	RD / YE	5840	Battery Positive Voltage	I	—

K69 Transfer Case Control Module (NP0/NQH)

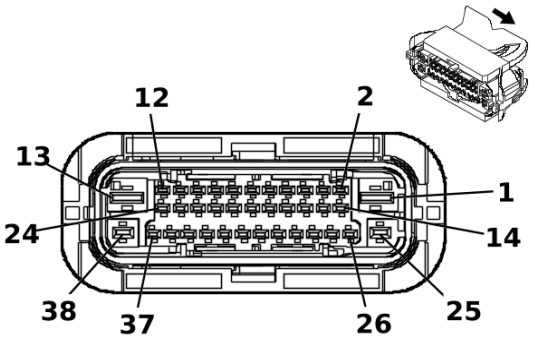

5199340

Connector Part Information

Harness Type: Engine Wiring Harness
OEM Connector: 33235465
Service Connector: 84769286
Description: 38-Way F 1.5, 2.8, 4.8 MCP Series, Sealed(BK with BN Inner Connector)

Terminal Part Information

Terminal Type ID	Terminated Lead	Diagnostic Test Probe	Terminal Removal Tool
I	19368624	J-35616-35 (VT)	J-38125-212
II	19369235	J-35616-14 (GN)	J-38125-212
III	85158596	J-35616-40 (BU)	J-38125-212

K69 Transfer Case Control Module (NP0/NQH)

Pin	Size	Color	Circuit	Function	Terminal Type ID	Option
1	2.5	RD / GY	1342	Battery Positive Voltage	III	—
2	—	—	—	Not Occupied	—	—
3	0.5	BU / YE	4979	AUTOSAR CAN Bus [+] 2 Serial Data	II	—
4	0.5	WH	4978	AUTOSAR CAN Bus [-] 2 Serial Data	II	—
5	0.5	WH / GN	7479	Rotary Position Sensor Signal	II	—
6	—	—	—	Not Occupied	—	—
7	0.5	YE	7474	Incremental Encoder Direction Signal	II	—
8	—	—	—	Not Occupied	—	—
9	0.5	YE / WH	1695	4WD Locked Range Indicator Control	II	—
10	—	—	—	Not Occupied	—	—
11	0.5	VT / GY	8017	Secondary Axle Motor Relay Control	II	—
12	0.5	GY / BK	1570	Front Axle Actuator Control	II	—
13	2.5	YE / VT	1553	Transfer Case Motor Counter Clockwise Control	III	—
14	—	—	—	Not Occupied	—	—
15	0.5	BU / YE	4979	AUTOSAR CAN Bus [+] 2 Serial Data	II	—
16	0.5	WH	4978	AUTOSAR CAN Bus [-] 2 Serial Data	II	—
17	—	—	—	Not Occupied	—	—
18	0.5	VT / BK	2139	Run/Crank Ignition 1 Voltage	II	—
19	0.5	BU / GY	7473	Incremental Encoder Impulse Signal	II	—
20	0.5	WH / RD	7477	Gear Position Sensor 5V Reference	II	—

K69 Transfer Case Control Module (NP0/NQH) (cont'd)

Pin	Size	Color	Circuit	Function	Terminal Type ID	Option
21 - 23	—	—	—	Not Occupied	—	—
24	0.5	BK	8015	Transfer Case Motor Low Reference	II	—
25	2.5	BK	6550	Ground	I	—
26	—	—	—	Not Occupied	—	—
27	0.5	BK	8014	Transfer Case Lock Solenoid Low Reference	II	—
28 - 29	—	—	—	Not Occupied	—	—
30	0.5	YE / BK	7478	Gear Position Sensor Low Reference	II	—
31	0.5	WH / GN	7475	Incremental Encoder Sensor 8V Reference	II	—
32	—	—	—	Not Occupied	—	—
33	0.5	BU	8013	Transfer Case Lock Solenoid Control 2	II	—
34	0.5	YE / BN	1569	Transfer Case Lock Solenoid Valve Control	II	—
35	—	—	—	Not Occupied	—	—
36	0.5	VT	7476	Incremental Encoder Sensor Low Reference	II	—
37	—	—	—	Not Occupied	—	—
38	2.5	YE / GY	1552	Transfer Case Motor Clockwise Control	I	—

K71 Transmission Control Module

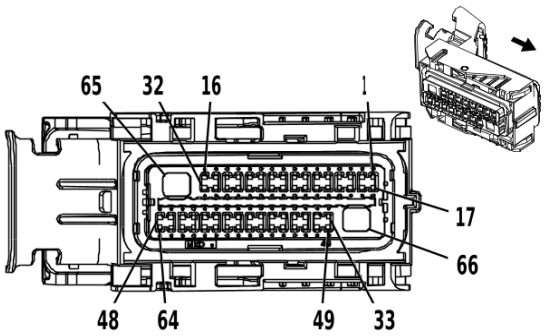

4024881

Connector Part Information

Harness Type: Engine Wiring Harness
OEM Connector: 34822-0513
Service Connector: 19330900
Description: 66-Way F 0.64, 2.8 Series, Sealed(BK with BK Terminal Position Assurance)

Terminal Part Information

Terminal Type ID	Terminated Lead	Diagnostic Test Probe	Terminal Removal Tool
I	13587518	J-35616-35 (VT)	J-38125-11A
II	19351723	J-35616-64B (L-BU)	J-38125-213

K71 Transmission Control Module

Pin	Size	Color	Circuit	Function	Terminal Type ID	Option
1	0.5	VT / WH	422	Torque Converter Clutch Solenoid Valve Control	II	—
2	0.5	GY / GN	6403	Clutch Solenoid Valve D Control	II	—
3	0.5	WH / BU	4507	Transmission Clutch H Control	II	—
4	0.5	WH	4508	Transmission Clutch G Control	II	—
5 - 6	—	—	—	Not Occupied	—	—
7	0.5	YE / GN	4170	Transmission Output Shaft Speed Sensor Circuit 9V Reference	II	—
8	0.5	YE / BU	4171	Transmission Input Shaft Speed Sensor Circuit 9V Reference	II	—
9 - 11	—	—	—	Not Occupied	—	—
12	0.5	GN / YE	6353	Input Speed Signal	II	—
13	0.5	GN / VT	4510	Transmission Intermediate Speed Signal	II	—
14	0.5	GY / BU	6358	Output Speed Signal	II	—
15	0.5	BN / BU	6254	Transmission Input Speed Sensor Signal	II	—
16	—	—	—	Not Occupied	—	—
17	0.5	GN / WH	1530	Transmission Line Pressure Control Solenoid Valve Control	II	—
18	0.5	YE / BN	6404	Clutch Solenoid Valve E Control	II	—
19	0.5	GY	6402	Clutch Solenoid Valve C Control	II	—
20	0.5	VT	4509	Transmission Clutch F Control	II	—
21	0.5	YE	2159	Park Inhibit Solenoid Assembly Control	II	—
22	0.5	GN / BK	7819	Default Disable Solenoid Control	II	—

K71 Transmission Control Module (cont'd)

Pin	Size	Color	Circuit	Function	Terminal Type ID	Option
23	—	—	—	Not Occupied	—	—
24	0.5	GN	2968	Transmission Auxiliary Fluid Pump Control	II	—
25 - 27	—	—	—	Not Occupied	—	—
28	0.5	BK / BN	586	Transmission Fluid Temperature Sensor Low Reference	II	—
29 - 30	—	—	—	Not Occupied	—	—
31	0.75	GN / VT	4621	Engine Control Module LIN Bus 1	II	—
32	—	—	—	Not Occupied	—	—
33	0.5	GN / GY	6387	Transmission High Side Driver 1 Control	II	—
34	—	—	—	Not Occupied	—	—
35	0.5	VT / BK	2139	Run/Crank Ignition 1 Voltage	II	—
36	—	—	—	Not Occupied	—	—
37	0.5	BU / YE	4979	AUTOSAR CAN Bus [+] 2 Serial Data	II	—
38	0.5	WH	4978	AUTOSAR CAN Bus [-] 2 Serial Data	II	—
39 - 48	—	—	—	Not Occupied	—	—
49	0.5	GY / BN	6388	Transmission High Side Driver 2 Control	II	—
50 - 52	—	—	—	Not Occupied	—	—
53	0.5	BU / YE	4979	AUTOSAR CAN Bus [+] 2 Serial Data	II	—
54	0.5	WH	4978	AUTOSAR CAN Bus [-] 2 Serial Data	II	—
55 - 58	—	—	—	Not Occupied	—	—
59	0.5	VT / WH	6319	Electronic Transmission Range Select Out of Park Switch 2 Signal	II	—
60	—	—	—	Not Occupied	—	—
61	0.5	WH / YE	6317	Electronic Transmission Range Select Out of Park Switch Signal	II	—
62	0.5	BN	3706	Electronic Transmission Range Select Switch Analog Signal 1	II	—
63	0.5	BN / WH	585	Transmission Fluid Temperature Sensor Signal	II	—
64	—	—	—	Not Occupied	—	—
65	1	BK / WH	6151	Engine Control Module Ground	I	—
66	1	RD / GN	1840	Battery Positive Voltage	I	—

K73 Telematic Control Module X1

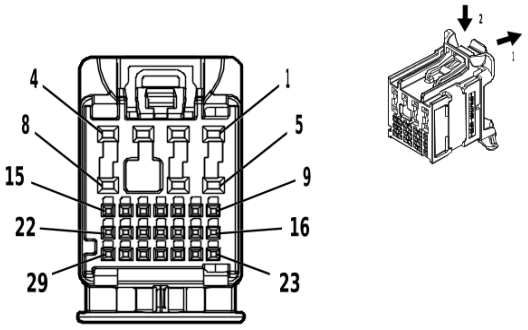

4496253

Connector Part Information

Harness Type: Instrument Panel Wiring Harness
OEM Connector: 160014-0014
Service Connector: 13534974
Description: 29-Way F 0.5 NANO, 1.2 MCON Series(BK)

Terminal Part Information

Terminal Type ID	Terminated Lead	Diagnostic Test Probe	Terminal Removal Tool
I	19370262	EL-35616-58 (BK)	EL-38125-58
II	84729890	J-35616-12 (BU)	J-38125-553

K73 Telematic Control Module X1

Pin	Size	Color	Circuit	Function	Terminal Type ID	Option
1	0.5	RD / BU	3240	Battery Positive Voltage	II	—
2 - 3	—	—	—	Not Occupied	—	—
4	0.5	BK / WH	1451	Signal Ground	II	—
5	—	—	—	Not Occupied	—	—
6	0.5	GN / BK	2515	Telematics Switch Supply Voltage	II	—
7 - 8	—	—	—	Not Occupied	—	—
9	0.35	BU / YE	4984	AUTOSAR CAN Bus [-] 5 Serial Data	I	—
10	0.35	BU / WH	4985	AUTOSAR CAN Bus [+] 5 Serial Data	I	—
11	0.35	GN / WH	2514	Telematics Switch Signal	I	—
12	—	—	—	Not Occupied	—	—
13	0.35	Bare	1792	Low Reference	I	—
14	0.35	BK / GY	5152	Voice Recognition Audio [-] Control	I	—
15	0.35	GY / YE	5149	Voice Recognition Audio Signal	I	—
16	0.35	BU / YE	4984	AUTOSAR CAN Bus [-] 5 Serial Data	I	—
17	0.35	BU / WH	4985	AUTOSAR CAN Bus [+] 5 Serial Data	I	—
18	0.35	WH / BK	4769	Emergency Call Backup Speaker [-] Control	I	—
19	0.35	YE / VT	2516	Telematics Switch Green LED Indicator Control	I	—
20	—	—	—	Not Occupied	—	—
21	0.35	BK / BN	654	Cellular Telephone Microphone Low Reference	I	—
22	0.35	BU	655	Cellular Telephone Microphone Signal	I	—
23 - 24	—	—	—	Not Occupied	—	—

K73 Telematic Control Module X1 (cont'd)

Pin	Size	Color	Circuit	Function	Terminal Type ID	Option
25	0.35	GY / GN	4770	Emergency Call Backup Speaker [+] Control	I	—
26	0.35	BN / WH	2517	Telematics Switch Red LED Indicator Control	I	—
27	—	—	—	Not Occupied	—	—
28	0.35	GY / WH	7211	Ethernet Bus 4 [+]	I	—
29	0.35	GY	7210	Ethernet Bus 4 [-]	I	—

K73 Telematic Control Module X2

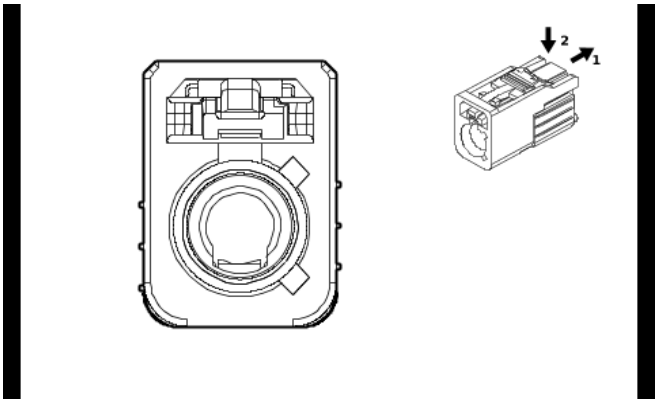

5630760

Connector Part Information

Harness Type: Instrument Panel Wiring Harness COAX
OEM Connector: 13516047
Service Connector: Service by Cable Assembly — See Part Catalog
Description: 1-Way F Coax Type(VT)

Terminal Part Information

Terminal Type ID	Terminated Lead	Diagnostic Test Probe	Terminal Removal Tool
I	Not required	No Tool Required	No Tool Required

K73 Telematic Control Module X2

Pin	Size	Color	Circuit	Function	Terminal Type ID	Option
—	—	Coax Cable	—	(Cell only) Coaxial Antenna Cell Phone Signal	I	—

K73 Telematic Control Module X3

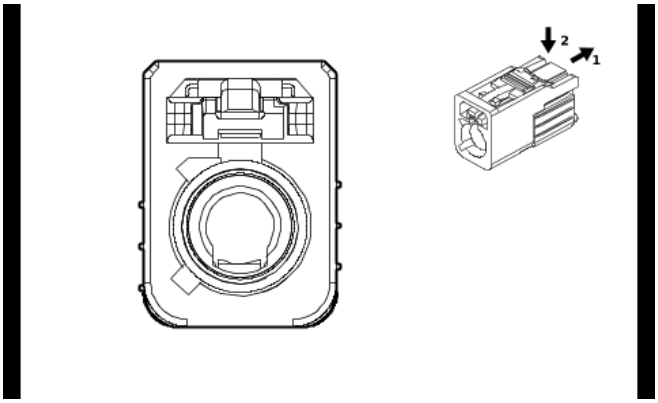

5630785

Connector Part Information

Harness Type: Instrument Panel Wiring Harness COAX
OEM Connector: 13516049
Service Connector: Service by Cable Assembly — See Part Catalog
Description: 1-Way F Coax Type(BN)

Terminal Part Information

Terminal Type ID	Terminated Lead	Diagnostic Test Probe	Terminal Removal Tool
I	Not required	No Tool Required	No Tool Required

K73 Telematic Control Module X3

Pin	Size	Color	Circuit	Function	Terminal Type ID	Option
—	—	Coax Cable	—	(GPS/Cell) Coaxial Antenna Cell/GPS combined Signal	I	—

K77 Remote Function Actuator Module (ATH)

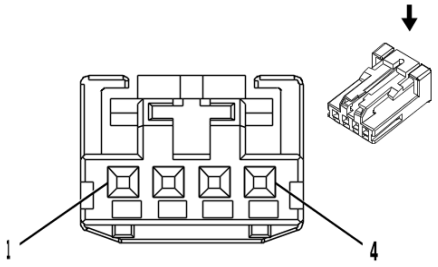

2717162

Connector Part Information

Harness Type: Body Wiring Harness
OEM Connector: 13582963
Service Connector: 19367524
Description: 4-Way F 0.64 Micro-Quadlock Series(BK)

Terminal Part Information

Terminal Type ID	Terminated Lead	Diagnostic Test Probe	Terminal Removal Tool
I	Not required	J-35616-64B (L-BU)	No Tool Required

K77 Remote Function Actuator Module (ATH)

Pin	Size	Color	Circuit	Function	Terminal Type ID	Option
1	0.5	RD / VT	2640	Battery Positive Voltage	I	—
2	0.5	GN / YE	2862	Body Control Module LIN Bus 16	I	—
3	—	—	—	Not Occupied	—	—
4	0.5	BK / WH	1351	Signal Ground	I	—

K85P Restraints Occupant Classification System Module - Passenger

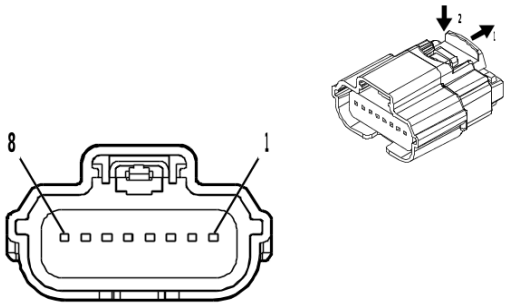

4708234

Connector Part Information

Harness Type: Front Seat Wiring Harness - Passenger
OEM Connector: 31404-9110
Service Connector: Service by Harness - See Part Catalog
Description: 8-Way F 64 Series, Sealed(BK)

Terminal Part Information

Terminal Type ID	Terminated Lead	Diagnostic Test Probe	Terminal Removal Tool
I	Not required	J-35616-64B (L-BU)	No Tool Required

K85P Restraints Occupant Classification System Module - Passenger

Pin	Size	Color	Circuit	Function	Terminal Type ID	Option
1	0.5	RD / GN	4440	Battery Positive Voltage	I	—
2	0.5	BU	4987	AUTOSAR CAN Bus [+] 1 Serial Data	I	—
3	0.5	BU	4987	AUTOSAR CAN Bus [+] 1 Serial Data	I	—
4	0.5	WH	4986	AUTOSAR CAN Bus [-] 1 Serial Data	I	—
5	0.5	WH	4986	AUTOSAR CAN Bus [-] 1 Serial Data	I	—
6	0.35	BK / WH	1351	Signal Ground	I	—
7	0.35	OG / BN	3947	Passenger Automatic Locking Retractor Switch Signal	I	—
8	0.35	GY / OG	3946	Passenger Automatic Locking Retractor Switch Low Reference	I	—

K99 Steering Column Control Module X1 (N38)

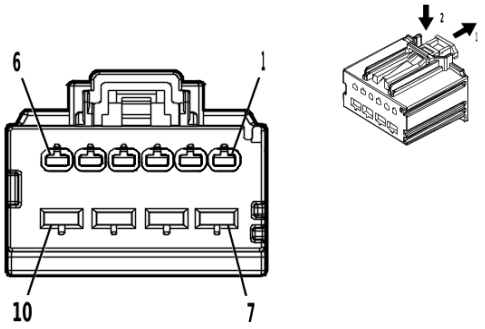

5035058

Connector Part Information

Harness Type: Instrument Panel Wiring Harness
OEM Connector: 31372-1600
Service Connector: 13525907
Description: 10-Way F 1.5, 2.8 MX Series(BK)

Terminal Part Information

Terminal Type ID	Terminated Lead	Diagnostic Test Probe	Terminal Removal Tool
I	13575832	J-35616-4A (PU)	J-38125-11A
II	19300432	J-35616-14 (GN)	J-38125-557

K99 Steering Column Control Module X1 (N38)

Pin	Size	Color	Circuit	Function	Terminal Type ID	Option
1	0.35	VT / BK	2020	Steering Column Tilt and Telescope Switch Feedback Signal	II	—
2	0.35	GN / WH	7530	Driver Seat Memory Control Module LIN Bus 1	II	—
3	0.35	GN / BN	2095	Steering Column Tilt and Telescope Switch Rearward Signal	II	—
4	0.35	BN / GY	2096	Steering Column Tilt and Telescope Switch Up Signal	II	—
5	0.35	YE / BN	2097	Steering Column Tilt and Telescope Switch Down Signal	II	—
6	0.35	BU / YE	2094	Steering Column Tilt and Telescope Switch Forward Signal	II	—
7	1	RD / VT	4640	Battery Positive Voltage	I	—
8	1	BK	1850	Ground	I	—
9 - 10	—	—	—	Not Occupied	—	—

K99 Steering Column Tilt Wheel and Telescope Control Module X2 (N38)

—

Connector Part Information

Harness Type: Steering Column Tilt and Telescope Wheel Actuator Motor Harness
OEM Connector: 31372-1400
Service Connector: Service by Harness - See Part Catalog
Description: 8-Way

Terminal Part Information

Terminal Type ID	Terminated Lead	Diagnostic Test Probe	Terminal Removal Tool
I	Not Available	No Tool Required	Not Available

K99 Steering Column Tilt Wheel and Telescope Control Module X2 (N38)

Pin	Size	Color	Circuit	Function	Terminal Type ID	Option
1	0.35	VT / GY	2153	Steering Column Telescope Motor Signal	I	—
2	0.35	YE / BK	2152	Steering Column Telescope Motor Low Reference	I	—
3	0.35	YE	2154	Steering Column Tilt Motor Signal	I	—
4	0.35	WH / BK	2157	Steering Column Tilt Motor Low Reference	I	—
7	1	BU / BK	2098	Steering Column Telescope Motor Forward Control	I	—
8	1	YE / BN	2110	Steering Column Telescope Motor Rearward Control	I	—
9	1	BN / GY	2112	Steering Column Tilt Motor Down Control	I	—
10	1	GY / VT	2111	Steering Column Tilt Motor Up Control	I	—

K104DP Front Seat Bladder Control Module - Driver Primary (AVK)

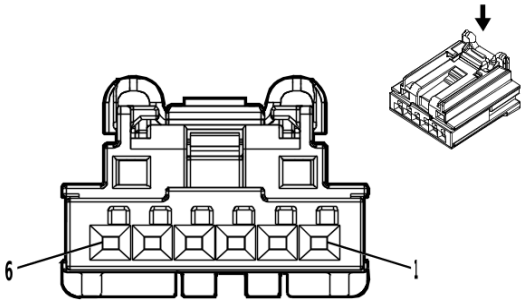

5020940

Connector Part Information

Harness Type: Front Seat Wiring Harness - Driver
OEM Connector: 2035363-6
Service Connector: Service by Harness - See Part Catalog
Description: 6-Way F 0.64 Generation Y Series(BK)

Terminal Part Information

Terminal Type ID	Terminated Lead	Diagnostic Test Probe	Terminal Removal Tool
I	Not required	J-35616-64B (L-BU)	No Tool Required

K104DP Front Seat Bladder Control Module - Driver Primary (AVK)

Pin	Size	Color	Circuit	Function	Terminal Type ID	Option
1	0.75	RD / BN	2240	Battery Positive Voltage	I	—
2	0.5	GN / GY	3758	Driver Seat Memory Control Module LIN Bus 2	I	—
3	0.75	WH / BU	4891	Driver Seat Lumbar/Bolster Pump Control	I	—
4	0.75	BK	1150	Ground	I	—
5	0.75	BN / BK	2305	Driver Seat Bolster Pump Low Reference	I	—
6	—	—	—	Not Occupied	—	—

K104P Front Seat Bladder Control Module - Passenger (AVK-A45)

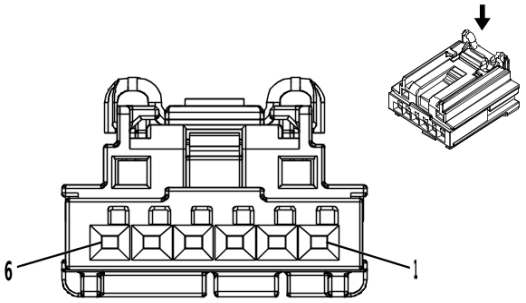

3960313

Connector Part Information

Harness Type: Front Seat Wiring Harness - Passenger
OEM Connector: 2035363-4
Service Connector: Service by Harness - See Part Catalog
Description: 6-Way F 0.64 Generation Y Series(BK)

Terminal Part Information

Terminal Type ID	Terminated Lead	Diagnostic Test Probe	Terminal Removal Tool
I	Not required	J-35616-64B (L-BU)	No Tool Required

K104P Front Seat Bladder Control Module - Passenger (AVK-A45)

Pin	Size	Color	Circuit	Function	Terminal Type ID	Option
1	0.75	RD / BU	3940	Battery Positive Voltage	I	—
2	—	—	—	Not Occupied	—	—
3	0.75	GY / WH	4890	Passenger Seat Lumbar/Bolster Pump Control	I	—
4	0.75	BK	1250	Ground	I	—
5	0.5	BK / BU	2194	Passenger Seat Position Switch Low Reference	I	—
6	0.5	YE / GN	1068	Passenger Seat Lumbar Support Switch Analog Signal	I	—

K104PP Front Seat Bladder Control Module - Passenger Primary (AVU)

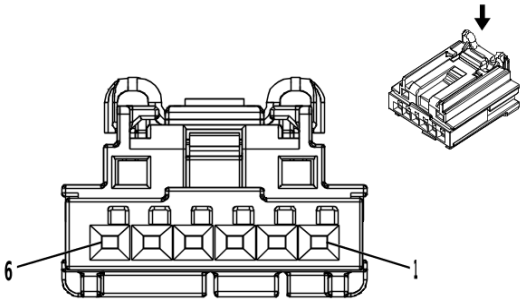

3960313

Connector Part Information

Harness Type: Front Seat Wiring Harness - Passenger
OEM Connector: 13583825
Service Connector: Service by Harness - See Part Catalog
Description: 6-Way F 0.64 Generation Y Series(BK)

Terminal Part Information

Terminal Type ID	Terminated Lead	Diagnostic Test Probe	Terminal Removal Tool
I	Not Available	No Tool Required	Not Available

K104PP Front Seat Bladder Control Module - Passenger Primary (AVU)

Pin	Size	Color	Circuit	Function	Terminal Type ID	Option
1	0.75	RD / BU	3940	Battery Positive Voltage	I	—
2	0.5	GN / YE	4116	Passenger Seat Memory Control Module LIN Bus 2	I	—
3	0.75	GY / WH	4890	Passenger Seat Lumbar/Bolster Pump Control	I	—
4	0.75	BK	1250	Ground	I	—
5	0.75	GY / BK	2306	Passenger Seat Bolster Pump Low Reference	I	—
6	—	—	—	Not Occupied	—	—

K111 Fuel Pump Power Control Module

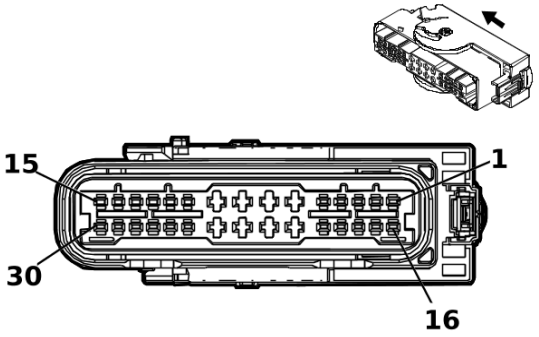

3240109

Connector Part Information

Harness Type: Chassis Wiring Harness
OEM Connector: 8-2109446-7
Service Connector: 85140064
Description: 30-Way F 1.5, 2.8 MCP Series, Sealed(GN)

Terminal Part Information

Terminal Type ID	Terminated Lead	Diagnostic Test Probe	Terminal Removal Tool
I	19329958	J-35616-2A (GY)	J-38125-11A
II	19371214	J-35616-4A (PU)	J-38125-215A

K111 Fuel Pump Power Control Module

Pin	Size	Color	Circuit	Function	Terminal Type ID	Option
1	—	—	—	Not Occupied	—	—
2	0.5	BU / YE	6861	Water In Fuel Sensor Signal	I	—
3	0.5	BK / BU	6863	Water In Fuel Sensor Low Reference	I	—
4	0.5	BN / GY	7072	Fuel Temperature Sensor 1 Signal	I	—
5 - 6	—	—	—	Not Occupied	—	—
7	2.5	RD / VT	1940	Battery Positive Voltage	II	—
8	2.5	GY	120	Fuel Pump Control	II	—
9	2.5	YE / GY	4137	Fuel Pump Supply Voltage Phase 2	II	—
10	0.5	YE / RD	2709	Fuel Tank Pressure Sensor 5V Reference	I	—
11	0.5	BU	890	Fuel Tank Pressure Sensor Signal	I	—
12	0.5	BN / RD	7445	Fuel Line Pressure Sensor 5V Reference	I	—
13	0.5	BU / GN	1936	Primary Fuel Level Sensor Signal	I	—
14	—	—	—	Not Occupied	—	—
15	0.5	BU / GY	4054	Private Serial Data Powertrain CAN Bus [-] Serial Data	I	—
16	0.75	VT / GN	4320	Powertrain Sensor Bus Enable	I	—
17	—	—	—	Not Occupied	—	—
18	0.5	GN / GY	465	Fuel Pump Primary Relay Control	I	—
19	0.5	BN / WH	7073	Fuel Temperature Sensor 1 Low Reference	I	—
20	—	—	—	Not Occupied	—	—
21	0.5	WH	1310	EVAP Vent Solenoid Valve Control	II	—

K111 Fuel Pump Power Control Module (cont'd)

Pin	Size	Color	Circuit	Function	Terminal Type ID	Option
22	2.5	BK	1950	Ground	II	—
23	0.5	BK	7444	Fuel Pump Assembly Shield Ground	II	—
24	2.5	WH / BN	4138	Fuel Pump Supply Voltage Phase 3	II	—
25	0.5	BK / BN	6284	Fuel Tank Pressure Sensor Low Reference	I	—
26	0.5	BU / WH	7446	Fuel Pressure Sensor Signal	I	—
27	0.5	BK / YE	7447	Fuel Pressure Sensor Low Reference	I	—
28	0.5	BK / GN	6281	Fuel Level Sensor Low Reference	I	—
29	—	—	—	Not Occupied	—	—
30	0.5	WH	4055	Private Serial Data Powertrain CAN Bus [+] Serial Data	I	—

K115 Reductant Control Module (LM2)

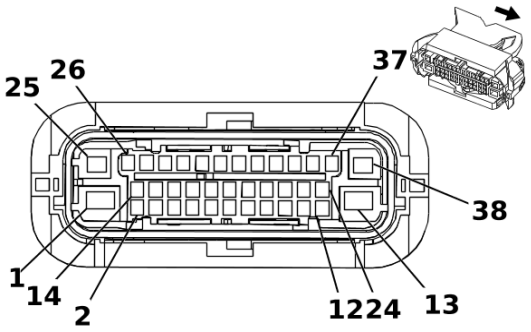

3240110

Connector Part Information

Harness Type: Emission Reduction Fluid Tank Reservoir Wire Harness
OEM Connector: 13582126
Service Connector: Service by Harness - See Part Catalog
Description: 38-Way F 1.5 CTS, 2.8 MCP, 4.8 MCP Series, Sealed(BK with BK Inner Connector)

Terminal Part Information

Terminal Type ID	Terminated Lead	Diagnostic Test Probe	Terminal Removal Tool
I	Not required	J-35616-14 (GN)	No Tool Required
II	Not required	J-35616-40 (BU)	No Tool Required
III	Not required	J-35616-4A (PU)	No Tool Required

K115 Reductant Control Module (LM2)

Pin	Size	Color	Circuit	Function	Terminal Type ID	Option
1	3.0	BK	3440	Battery Positive Voltage	II	—
2	1.0	BN	3676	Diesel Exhaust Fluid Heating Tank 2 Heater Control	I	—
3	—	—	—	Not Occupied	—	—
4	1.0	YE	3677	Diesel Exhaust Fluid Reservoir Heater Control	I	—
5	—	—	—	Not Occupied	—	—
6	0.5	BK	3244	Diesel Exhaust Fluid Tank Temperature Sensor Signal	I	—
7	0.5	BK	7290	Diesel Exhaust Fluid Sensor Voltage Reference 1	I	—
8	0.5	BN	7284	Diesel Exhaust Fluid Liquid Quality Temperature Signal	I	—
9	0.5	BK	8434	Diesel Exhaust Fluid Sensor Low Reference	I	—
10	—	—	—	Not Occupied	—	—
11	1.0	YE	3876	Diesel Exhaust Fluid Smart Pump Supply Voltage Phase 3	I	—
12	—	—	—	Not Occupied	—	—
13	3.0	WH	1650	Ground	II	—
14	1.0	BN	2936	Diesel Exhaust Fluid Heating Tank 2 Heater Control Low	I	—
15	—	—	—	Not Occupied	—	—
16	1.0	BU	4318	Diesel Exhaust Fluid Tank Heater Low Control	I	—

K115 Reductant Control Module (LM2) (cont'd)

Pin	Size	Color	Circuit	Function	Terminal Type ID	Option
17	—	—	—	Not Occupied	—	—
18	0.5	BN	3245	Diesel Exhaust Fluid Tank Temperature Sensor Low Reference	I	—
19	0.5	BN	3106	Diesel Exhaust Fluid Pressure Sensor 5 Volt Reference	I	—
20	0.5	BU	3108	Diesel Exhaust Fluid Pressure Sensor Signal	I	—
21	0.5	BU	3107	Diesel Exhaust Fluid Pressure Sensor Low Reference	I	—
22 - 23	—	—	—	Not Occupied	—	—
24	1.0	BN	3875	Diesel Exhaust Fluid Smart Pump Supply Voltage Phase 2	I	—
25	2.0	BK	1650	Ground	III	—
26	1.0	WH	3199	Diesel Exhaust Fluid Pressure Line Heater Control	I	—
27	—	—	—	Not Occupied	—	—
28	1.0	BN	4319	Diesel Exhaust Fluid Line Heater Low Control	I	—
29	—	—	—	Not Occupied	—	—
30	0.5	BN	2139	Run/Crank Ignition 1 Voltage	I	—
31	0.5	BU	4977	AUTOSAR CAN Bus [+] 3 Serial Data	I	—
32	0.5	BU	4977	AUTOSAR CAN Bus [+] 3 Serial Data	I	—
33	0.5	BN	4976	AUTOSAR CAN Bus [-] 3 Serial Data	I	—
34	0.5	BN	4976	AUTOSAR CAN Bus [-] 3 Serial Data	I	—
35	—	—	—	Not Occupied	—	—
36	1.0	BU	2937	Diesel Exhaust Fluid Pump Motor Stator Low Reference	I	—
37	1.0	WH	3103	Diesel Exhaust Fluid Smart Pump Control	I	—
38	2.0	RD	2040	Battery Positive Voltage	III	—

K124 Image Processing Module X1 (UGN)

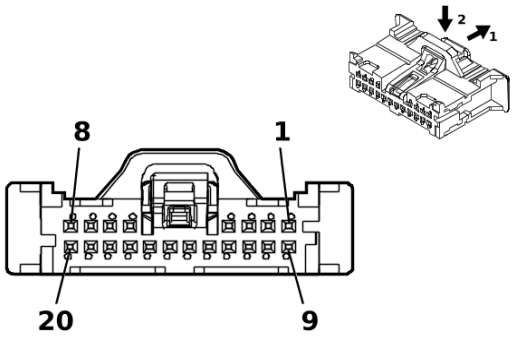

5200955

Connector Part Information

Harness Type: Body Wiring Harness
OEM Connector: 13529921
Service Connector: 84769280
Description: 20-Way F Mini 50 Series(BK)

Terminal Part Information

Terminal Type ID	Terminated Lead	Diagnostic Test Probe	Terminal Removal Tool
I	84944580	EL-35616-58 (BK)	EL-38125-58

K124 Image Processing Module X1 (UGN)

Pin	Size	Color	Circuit	Function	Terminal Type ID	Option
1	0.35	BK / WH	1351	Signal Ground	I	—
2	0.35	RD / GN	3140	Battery Positive Voltage	I	—
3 - 5	—	—	—	Not Occupied	—	—
6	0.35	WH	4986	AUTOSAR CAN Bus [-] 1 Serial Data	I	—
7	0.35	BU	4987	AUTOSAR CAN Bus [+] 1 Serial Data	I	—
8 - 17	—	—	—	Not Occupied	—	—
18	0.35	WH	4986	AUTOSAR CAN Bus [-] 1 Serial Data	I	—
19	0.35	BU	4987	AUTOSAR CAN Bus [+] 1 Serial Data	I	—
20	—	—	—	Not Occupied	—	—

K124 Image Processing Module X2 (UGN)

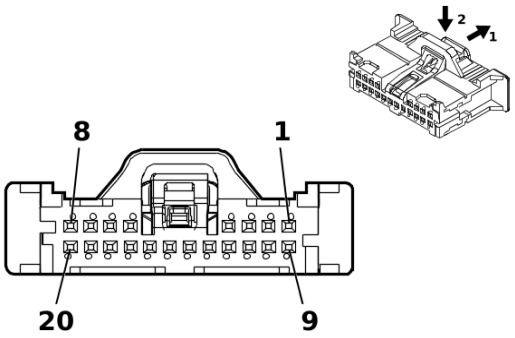

5360760

Connector Part Information

Harness Type: Body Wiring Harness
OEM Connector: 35068197
Service Connector: 13529922
Description: 20-Way F 050 CTS Series(GY)

Terminal Part Information

Terminal Type ID	Terminated Lead	Diagnostic Test Probe	Terminal Removal Tool
I	19333221	EL-35616-58 (BK)	EL-38125-58

K124 Image Processing Module X2 (UGN)

Pin	Size	Color	Circuit	Function	Terminal Type ID	Option
1	—	—	—	Not Occupied	—	—
2	0.35	WH	4978	AUTOSAR CAN Bus [-] 2 Serial Data	I	—
3	0.35	BU / YE	4979	AUTOSAR CAN Bus [+] 2 Serial Data	I	—
4	—	—	—	Not Occupied	—	—
5	0.35	WH / GY	4104	AUTOSAR CAN Bus [-] 8 Serial Data	I	—
6 - 9	—	—	—	Not Occupied	—	—
10	0.35	WH	4978	AUTOSAR CAN Bus [-] 2 Serial Data	I	—
11	0.35	BU / YE	4979	AUTOSAR CAN Bus [+] 2 Serial Data	I	—
12 - 16	—	—	—	Not Occupied	—	—
17	0.35	BU / GY	4105	AUTOSAR CAN Bus [+] 8 Serial Data	I	—
18 - 20	—	—	—	Not Occupied	—	—

K157 Video Processing Module X1 (UV2)

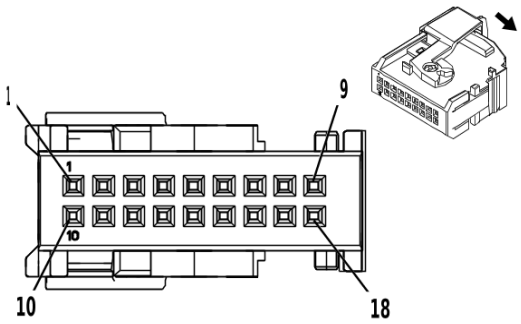

4329088

Connector Part Information

Harness Type: Body Wiring Harness
OEM Connector: 1-2282182-1
Service Connector: 84976200
Description: 18-Way F Micro-Quadlock Series(BK)

Terminal Part Information

Terminal Type ID	Terminated Lead	Diagnostic Test Probe	Terminal Removal Tool
I	19300632	J-35616-64B (L-BU)	J-38125-215A

K157 Video Processing Module X1 (UV2)

Pin	Size	Color	Circuit	Function	Terminal Type ID	Option
1 - 2	—	—	—	Not Occupied	—	—
3	0.5	BK / WH	1351	Signal Ground	I	—
4 - 9	—	—	—	Not Occupied	—	—
10	0.5	RD / VT	1640	Battery Positive Voltage	I	—
11 - 12	—	—	—	Not Occupied	—	—
13	0.5	WH	4986	AUTOSAR CAN Bus [-] 1 Serial Data	I	—
14	0.35	WH	4986	AUTOSAR CAN Bus [-] 1 Serial Data	I	—
15	0.5	BU	4987	AUTOSAR CAN Bus [+] 1 Serial Data	I	—
16	0.35	BU	4987	AUTOSAR CAN Bus [+] 1 Serial Data	I	—
17 - 18	—	—	—	Not Occupied	—	—

K157 Video Processing Module X2 (UV2)

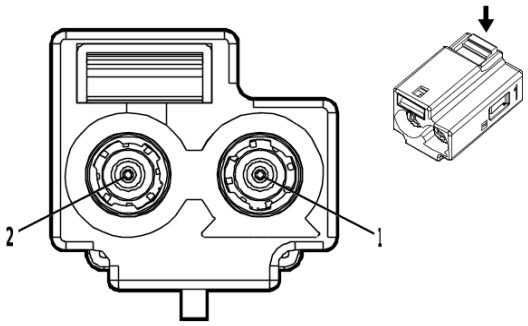

4877749

Connector Part Information

Harness Type: Body Wiring Harness
OEM Connector: 35294086
Service Connector: Not Available
Description: 2-Way F Coax Type

Terminal Part Information

Terminal Type ID	Terminated Lead	Diagnostic Test Probe	Terminal Removal Tool
I	Not Available	No Tool Required	Not Available

K157 Video Processing Module X2 (UV2)

Pin	Size	Color	Circuit	Function	Terminal Type ID	Option
1	—	Coax Cable	—	Combined Camera Signal #2	I	—
2	—	Coax Cable	—	Rear Vision Camera Signal	I	—

K157 Video Processing Module X3 (UV2)

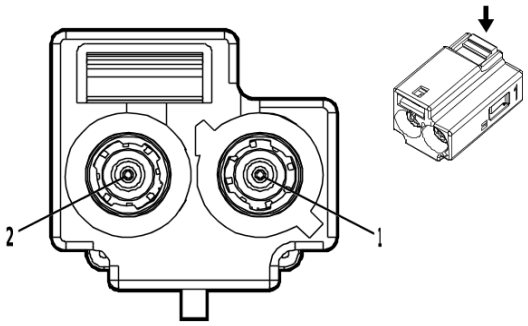

4883153

Connector Part Information

Harness Type: Body Wiring Harness
OEM Connector: 35294088
Service Connector: Not Available
Description: 2-Way F Coax Type

Terminal Part Information

Terminal Type ID	Terminated Lead	Diagnostic Test Probe	Terminal Removal Tool
I	Not Available	No Tool Required	Not Available

K157 Video Processing Module X3 (UV2)

Pin	Size	Color	Circuit	Function	Terminal Type ID	Option
1	—	Coax Cable	—	Left Side Vision Camera Video Signal	I	—
2	—	Coax Cable	—	Right Side Vision Camera Video Signal	I	—

K157 Video Processing Module X4 (UV2)

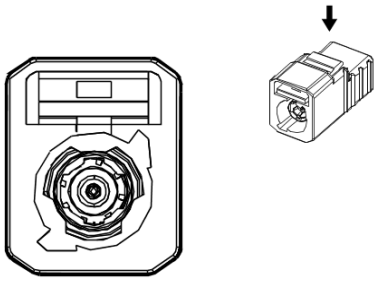

4883187

Connector Part Information

Harness Type: Body Wiring Harness COAX
OEM Connector: 35294087
Service Connector: Service by Cable Assembly — See Part Catalog
Description: 1-Way F Coax Type

Terminal Part Information

Terminal Type ID	Terminated Lead	Diagnostic Test Probe	Terminal Removal Tool
I	Not required	No Tool Required	No Tool Required

K157 Video Processing Module X4 (UV2)

Pin	Size	Color	Circuit	Function	Terminal Type ID	Option
—	—	Coax Cable	—	Front Vision Camera 1 Coaxial Video Signal	I	—

K160 Brake System Control Module

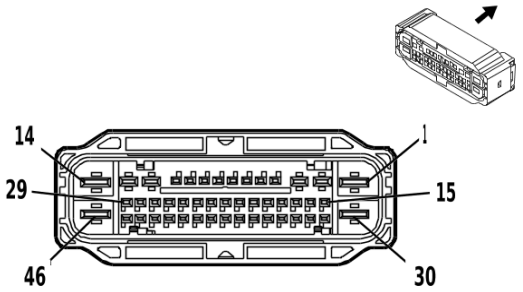

4162046

Connector Part Information

Harness Type: Body Wiring Harness
OEM Connector: 13508920
Service Connector: 19333026
Description: 46-Way F 1.2 OCS, 2.8, 6.3 CTS Series, Sealed(GY)

Terminal Part Information

Terminal Type ID	Terminated Lead	Diagnostic Test Probe	Terminal Removal Tool
I	13575368	J-35616-35 (VT)	J-38125-557
II	19370818	J-35616-12 (BU)	J-38125-215A
III	84634921	J-35616-42 (RD)	J-38125-212

K160 Brake System Control Module

Pin	Size	Color	Circuit	Function	Terminal Type ID	Option
1	6	BK	150	Ground	III	—
2	2.5	WH	2001	Left Park Brake Motor Apply Control	I	—
3	2.5	GY / BK	4369	Left Park Brake Motor Low Reference	I	—
4	0.5	GY / WH	7064	Left Front Wheel Speed Sensor Control	II	—
5	0.5	GY	830	Left Front Wheel Speed Sensor Signal	II	—
6 - 8	—	—	—	Not Occupied	—	—
9	0.5	VT / WH	639	Run/Crank Ignition 1 Voltage	II	—
10	0.5	GY / BN	7065	Right Front Wheel Speed Sensor Control	II	—
11	0.5	YE	872	Right Front Wheel Speed Sensor Signal	II	—
12	2.5	GN / VT	1988	Right Park Brake Motor Apply Control	I	—
13	2.5	GY	4368	Right Park Brake Motor Low Reference	I	—
14	6	RD / YE	442	Battery Positive Voltage	III	—
15	0.5	GY / BK	7127	Left Rear Wheel Speed Sensor Control	II	—
16	0.5	BU	884	Left Rear Wheel Speed Sensor Signal	II	—
17	0.35	BU / YE	4979	AUTOSAR CAN Bus [+] 2 Serial Data	II	—
18	0.35	BU / YE	4979	AUTOSAR CAN Bus [+] 2 Serial Data	II	—
19 - 22	—	—	—	Not Occupied	—	—
23	0.5	GN / YE	2731	Electronic Brake Control Module LIN Bus 1	II	—
24	—	—	—	Not Occupied	—	—
25	0.35	WH	4986	AUTOSAR CAN Bus [-] 1 Serial Data	II	—

K160 Brake System Control Module (cont'd)

Pin	Size	Color	Circuit	Function	Terminal Type ID	Option
26	0.35	WH	4986	AUTOSAR CAN Bus [-] 1 Serial Data	II	—
27	—	—	—	Not Occupied	—	—
28	0.5	GY / YE	7128	Right Rear Wheel Speed Sensor Control	II	—
29	0.5	VT	882	Right Rear Wheel Speed Sensor Signal	II	—
30	6	BK	150	Ground	III	—
31 - 32	—	—	—	Not Occupied	—	—
33	0.35	WH	4978	AUTOSAR CAN Bus [-] 2 Serial Data	II	—
34	0.35	WH	4978	AUTOSAR CAN Bus [-] 2 Serial Data	II	—
35	0.75	GN / BU	2733	Electronic Brake Control Module LIN Bus 2	II	—
36	0.5	WH / BK	2223	Trailer Brake Apply Signal	II	—
37	0.5	YE / BK	2224	Trailer Brake Enable Signal	II	—
38	0.5	GN / GY	333	Brake Fluid Level Signal	II	—
39	0.75	BN / BU	1602	Front Brake Pad Wear Sensor Signal	II	—
40	—	—	—	Not Occupied	—	—
41	0.35	BU	4987	AUTOSAR CAN Bus [+] 1 Serial Data	II	—
42	0.35	BU	4987	AUTOSAR CAN Bus [+] 1 Serial Data	II	—
43	—	—	—	Not Occupied	—	—
44	0.75	GN / YE	1616	Rear Brake Pad Wear Sensor Signal	II	—
45	—	—	—	Not Occupied	—	—
46	6	RD / WH	1642	Battery Positive Voltage	III	—

K164 Differential Control Module X1 (G96)

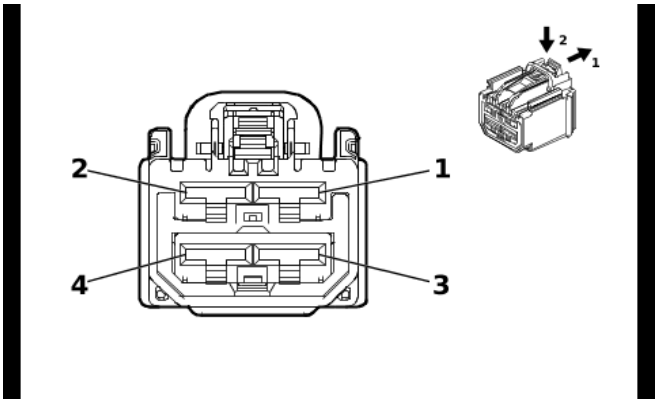

5492913

Connector Part Information

Harness Type: Body Wiring Harness
OEM Connector: 7289-7459-40
Service Connector: 84766433
Description: 4-Way F 6.3 YESC Series(GY)

Terminal Part Information

Terminal Type ID	Terminated Lead	Diagnostic Test Probe	Terminal Removal Tool
I	Not required	J-35616-42 (RD)	No Tool Required

K164 Differential Control Module X1 (G96)

Pin	Size	Color	Circuit	Function	Terminal Type ID	Option
1	4	GY / BN	7968	Axle Differential Lock Control High	I	—
2	3	BK	2050	Ground	I	—
3	3	RD / GY	5540	Battery Positive Voltage	I	—
4	4	YE / WH	7969	Axle Differential Lock Control Low	I	—

K164 Differential Control Module X2 (G96)

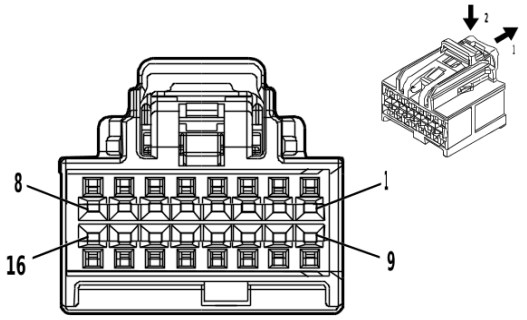

4873243

Connector Part Information

Harness Type: Body Wiring Harness
OEM Connector: 13519738
Service Connector: 13519738
Description: 16-Way F 0.64 OCS Series(BK)

Terminal Part Information

Terminal Type ID	Terminated Lead	Diagnostic Test Probe	Terminal Removal Tool
I	19354230	J-35616-64B (L-BU)	J-38125-215A

K164 Differential Control Module X2 (G96)

Pin	Size	Color	Circuit	Function	Terminal Type ID	Option
1	—	—	—	Not Occupied	—	—
2	0.35	WH	4978	AUTOSAR CAN Bus [-] 2 Serial Data	I	—
3	0.35	WH	4978	AUTOSAR CAN Bus [-] 2 Serial Data	I	—
4	0.35	BU / WH	7978	Axle Differential Lock Motor Temperature Sensor Signal	I	—
5	0.35	GY	7976	Axle Differential Lock Motor Position Sensor Signal 2	I	—
6	0.35	GN / BN	7975	Axle Differential Lock Motor Position Sensor Signal 1	I	—
7	0.35	VT / BK	7972	Axle Differential Lock Motor Brake Control Low	I	—
8	0.5	Bare	7970	Axle Differential Lock Control Shield	I	—
9	—	—	—	Not Occupied	—	—
10	0.35	BU / YE	4979	AUTOSAR CAN Bus [+] 2 Serial Data	I	—
11	0.35	BU / YE	4979	AUTOSAR CAN Bus [+] 2 Serial Data	I	—
12	0.35	BK / YE	7977	Axle Differential Lock Motor Temperature Sensor Low Reference	I	—
13	0.35	BK / VT	7974	Axle Differential Lock Motor Position Sensor Low Reference	I	—
14	0.75	WH / RD	7973	Axle Differential Lock Motor Position Sensor High Reference	I	—
15	—	—	—	Not Occupied	—	—
16	0.35	WH	7971	Axle Differential Lock Motor Brake Control High	I	—

K169 Folding 3rd Row Seat Module X1 (AS8)

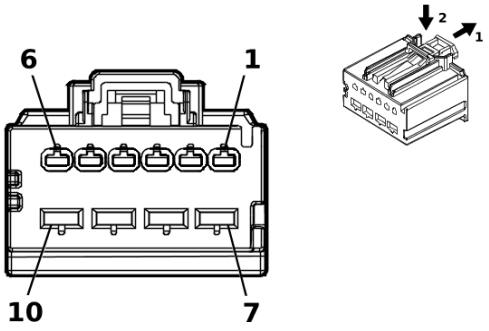

5190551

Connector Part Information

Harness Type: 3rd Row Seat Wiring Harness
OEM Connector: 31372-1700
Service Connector: Service by Harness - See Part Catalog
Description: 10-Way F 1.5, 2.8 MX Series(GY)

Terminal Part Information

Terminal Type ID	Terminated Lead	Diagnostic Test Probe	Terminal Removal Tool
I	Not required	J-35616-2A (GY)	No Tool Required
II	Not required	J-35616-4A (PU)	No Tool Required

K169 Folding 3rd Row Seat Module X1 (AS8)

Pin	Size	Color	Circuit	Function	Terminal Type ID	Option
1	0.75	GN / BN	8921	Right 3rd Row Folding Seat Back Unlatch Motor Control High	I	—
2	0.75	BU / VT	8920	Right 3rd Row Folding Seat Back Unlatch Motor Control Low	I	—
3	0.5	YE / BN	4214	3rd Row Left Seat Recline Position Sensor Signal	I	—
4	0.75	BK / BU	5474	3rd Row Seat Sensor Low Reference	I	—
5	0.5	WH / VT	4213	3rd Row Right Seat Recline Position Sensor Signal	I	—
6	0.5	GN / BU	2856	Body Control Module LIN Bus 10	I	—
7	1.5	BU	4217	3rd Row Right Seat Recline Motor Forward Control	II	—
8	1.5	GY / OG	4218	3rd Row Right Seat Recline Rearward Control	II	—
9	—	—	—	Not Occupied	—	—
10	2.5	BK	2050	Ground	II	—

K169 Folding 3rd Row Seat Module X2 (AS8)

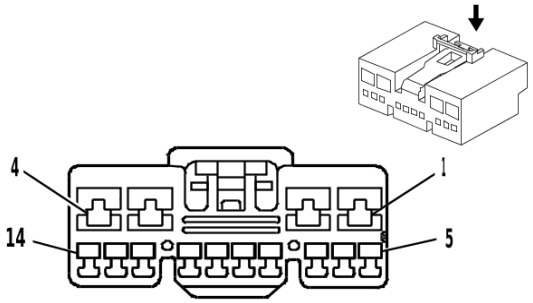

1469285

Connector Part Information

Harness Type: 3rd Row Seat Wiring Harness
OEM Connector: 7283-8397-40
Service Connector: Service by Harness - See Part Catalog
Description: 14-Way F 0.64, 2.8 YESC Series(L-GY)

Terminal Part Information

Terminal Type ID	Terminated Lead	Diagnostic Test Probe	Terminal Removal Tool
I	Not required	J-35616-4A (PU)	No Tool Required
II	Not required	J-35616-64B (L-BU)	No Tool Required

K169 Folding 3rd Row Seat Module X2 (AS8)

Pin	Size	Color	Circuit	Function	Terminal Type ID	Option
1	2.5	RD / GY	7840	Battery Positive Voltage	I	—
2	—	—	—	Not Occupied	—	—
3	1.5	VT / BK	4221	3rd Row Left Seat Recline Motor Forward Control	I	—
4	1.5	BN	4222	3rd Row Left Seat Recline Motor Rearward Control	I	—
5	0.5	WH / BK	2697	Right 3rd Row Seat Right Latch Signal	II	—
6	0.5	YE / BU	2698	Left 3rd Row Seat Recline Switch Signal	II	—
7	0.5	GN / GY	2699	Right 3rd Row Seat Recline Switch Signal	II	—
8	0.5	VT / BN	2696	Right 3rd Row Seat Left Latch Signal	II	—
9	0.5	GY / BU	2695	Left 3rd Row Seat Right Latch Signal	II	—
10	0.5	BN / GN	2694	Left 3rd Row Seat Left Latch Signal	II	—
11	0.75	GY / WH	8922	Left 3rd Row Folding Seat Back Unlatch Motor Control Low	II	—
12	0.75	YE / BK	8923	Left 3rd Row Folding Seat Back Unlatch Motor Control High	II	—
13 - 14	—	—	—	Not Occupied	—	—

K171 Rear Closure Hands Free Module X1 (TC2)

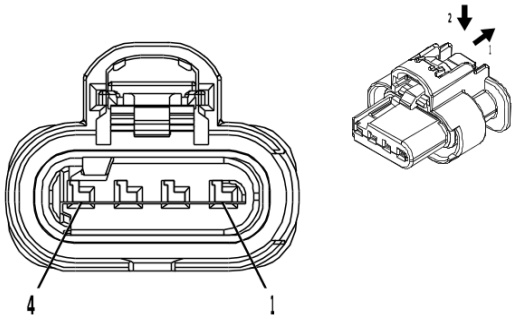

4210809

Connector Part Information

Harness Type: Rear Object Alarm Sensor Wiring Harness
OEM Connector: 1-2296696-1
Service Connector: Service by Harness - See Part Catalog
Description: 4-Way F 1.2 MCON-CB Series, Sealed(BK)

Terminal Part Information

Terminal Type ID	Terminated Lead	Diagnostic Test Probe	Terminal Removal Tool
I	Not required	J-35616-16 (L-GN)	No Tool Required

K171 Rear Closure Hands Free Module X1 (TC2)

Pin	Size	Color	Circuit	Function	Terminal Type ID	Option
1	0.5	BK	1450	Ground	I	—
2	—	—	—	Not Occupied	—	—
3	0.5	GN / BU	2856	Body Control Module LIN Bus 10	I	—
4	0.5	RD / GY	4840	Battery Positive Voltage	I	—

K171 Rear Closure Hands Free Module X2 (TC2)

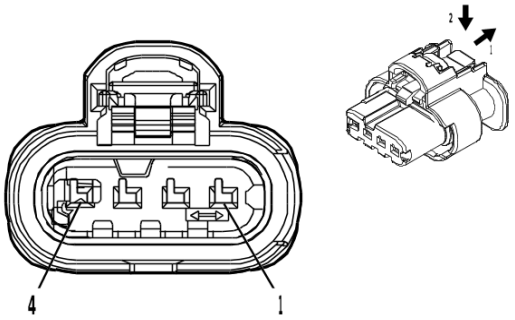

4934614

Connector Part Information

Harness Type: Rear Closure Hands Free
OEM Connector: 13514087
Service Connector: Service by Harness - See Part Catalog
Description: 4-Way F 1.2 MCON-CB Series, Sealed(BK)

Terminal Part Information

Terminal Type ID	Terminated Lead	Diagnostic Test Probe	Terminal Removal Tool
I	Not Available	No Tool Required	Not Available

K171 Rear Closure Hands Free Module X2 (TC2)

Pin	Size	Color	Circuit	Function	Terminal Type ID	Option
1	0.5	WH / GY	4900	Hands-Free Liftgate Sensor Signal 2	I	—
2	0.5	BK / YE	4899	Hands Free Closure Release Sensor Low Reference 2	I	—
3	0.5	BK / BU	4897	Hands Free Closure Release Sensor Low Reference 1	I	—
4	0.5	GY / VT	4898	Hands-Free Liftgate Sensor Signal 1	I	—

K175 Front Floor Console Compartment Cooler (DCK)

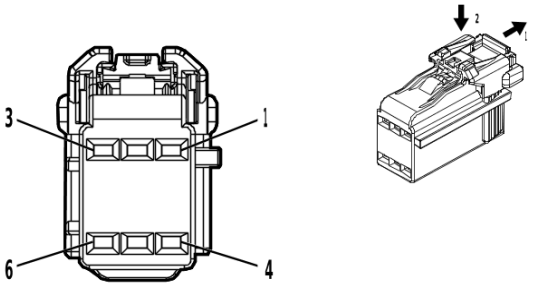

4862126

Connector Part Information

Harness Type: Front Floor Console Wiring Harness
OEM Connector: 6098-8996
Service Connector: Service by Harness - See Part Catalog
Description: 6-Way F 1.2 Series(BK)

Terminal Part Information

Terminal Type ID	Terminated Lead	Diagnostic Test Probe	Terminal Removal Tool
I	Not required	J-35616-16 (L-GN)	No Tool Required

K175 Front Floor Console Compartment Cooler (DCK)

Pin	Size	Color	Circuit	Function	Terminal Type ID	Option
1	0.35	RD / VT	6340	Battery Positive Voltage	I	—
2	0.75	BK	1250	Ground	I	—
3	0.35	GN / VT	2857	Body Control Module LIN Bus 11	I	—
4	0.35	GN / WH	7846	Refrigerator On Indicator Control	I	—
5	0.35	BU / GN	7845	Refrigerator Freeze Indicator Control	I	—
6	0.35	BN / BK	7844	Refrigerator Enable Signal	I	—

K182 Parking Assist Control Module X1 (UD5/UD7)

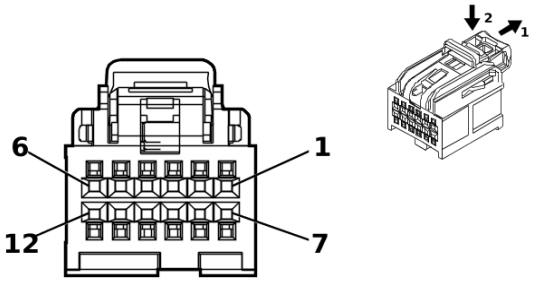

4975223

Connector Part Information

Harness Type: Body Wiring Harness
OEM Connector: 35016616
Service Connector: 13519750
Description: 12-Way F 0.64 OCS Series(BK)

Terminal Part Information

Terminal Type ID	Terminated Lead	Diagnostic Test Probe	Terminal Removal Tool
I	19300660	J-35616-64B (L-BU)	J-38125-215A

K182 Parking Assist Control Module X1 (UD5/UD7)

Pin	Size	Color	Circuit	Function	Terminal Type ID	Option
1	0.5	RD / WH	4740	Battery Positive Voltage	I	—
2	0.35	WH	4986	AUTOSAR CAN Bus [-] 1 Serial Data	I	—
3	0.35	BU	4987	AUTOSAR CAN Bus [+] 1 Serial Data	I	—
4	0.35	BU	4987	AUTOSAR CAN Bus [+] 1 Serial Data	I	—
5	—	—	—	Not Occupied	—	—
6	0.5	BK / WH	1351	Signal Ground	I	—
7	—	—	—	Not Occupied	—	—
8	0.35	WH	4986	AUTOSAR CAN Bus [-] 1 Serial Data	I	—
9	0.35	BU	4987	AUTOSAR CAN Bus [+] 1 Serial Data	I	—
10	0.35	WH	4986	AUTOSAR CAN Bus [-] 1 Serial Data	I	—
11 - 12	—	—	—	Not Occupied	—	—

K182 Parking Assist Control Module X2 (UD5/UD7)

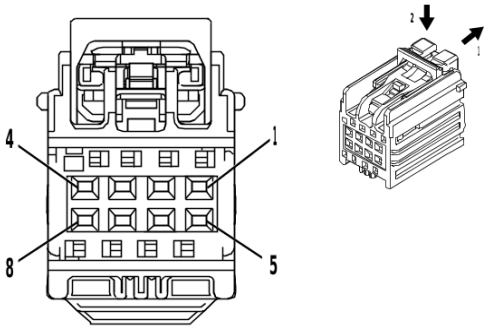

4280711

Connector Part Information

Harness Type: Body Wiring Harness
OEM Connector: 13593893
Service Connector: 19355209
Description: 8-Way F YESC Kaizen Series(GY)

Terminal Part Information

Terminal Type ID	Terminated Lead	Diagnostic Test Probe	Terminal Removal Tool
I	Not required	J-35616-64B (L-BU)	No Tool Required

K182 Parking Assist Control Module X2 (UD5/UD7)

Pin	Size	Color	Circuit	Function	Terminal Type ID	Option
1	—	—	—	Not Occupied	—	—
2	0.5	YE / WH	2377	Right Rear Middle Parking Assist Sensor Signal	I	—
3	0.5	YE	2375	Left Rear Outer Parking Assist Sensor Signal	I	—
4	0.5	BN / WH	2374	Object Sensor Voltage Reference	I	—
5	0.5	YE / VT	2378	Right Rear Outer Parking Assist Sensor Signal	I	—
6	0.5	YE / BU	2376	Left Rear Middle Parking Assist Sensor Signal	I	—
7	—	—	—	Not Occupied	—	—
8	0.5	BK / GY	2379	Object Sensor Low Reference	I	—

K182 Parking Assist Control Module X3 (UD5/UD7)

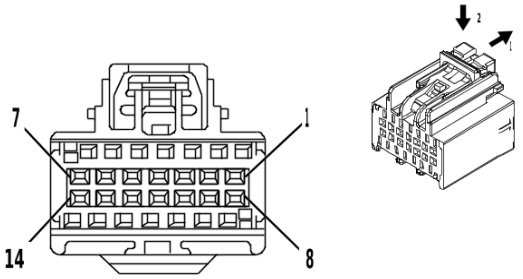

4547098

Connector Part Information

Harness Type: Body Wiring Harness
OEM Connector: 13593897
Service Connector: 19354933
Description: 14-Way F 0.64 Kaizen Series(BU)

Terminal Part Information

Terminal Type ID	Terminated Lead	Diagnostic Test Probe	Terminal Removal Tool
I	19303553	J-35616-64B (L-BU)	J-38125-215A

K182 Parking Assist Control Module X3 (UD5/UD7)

Pin	Size	Color	Circuit	Function	Terminal Type ID	Option
1 - 4	—	—	—	Not Occupied	—	—
5	0.5	YE / GY	5216	Left Front Middle Parking Assist Sensor	I	—
6	0.5	WH / GY	5217	Right Front Outer Parking Assist Sensor	I	—
7	0.5	BN	6581	Front Parking Assist Display Control	I	—
8 - 10	—	—	—	Not Occupied	—	—
11	0.5	VT / WH	5215	Left Front Outer Parking Assist Sensor	I	—
12	0.5	VT / GY	5218	Right Front Middle Parking Assist Sensor	I	—
13	—	—	—	Not Occupied	—	—
14	0.5	BK / BU	5214	Front Parking Assist Sensor Low Reference	I	—

K194 Rear Gate Module X1 (TC2)

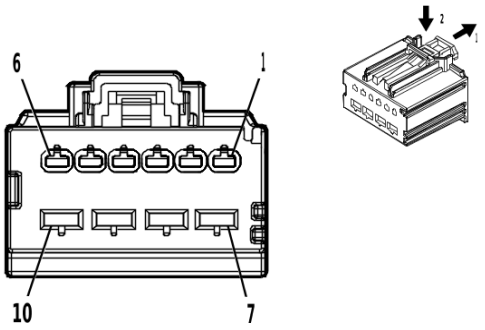

5035058

Connector Part Information

Harness Type: Body Wiring Harness
OEM Connector: 13525907
Service Connector: 13525907
Description: 10-Way F 1.5, 2.8 MX Series(BK)

Terminal Part Information

Terminal Type ID	Terminated Lead	Diagnostic Test Probe	Terminal Removal Tool
I	13575832	J-35616-4A (PU)	J-38125-11A

K194 Rear Gate Module X1 (TC2)

Pin	Size	Color	Circuit	Function	Terminal Type ID	Option
1 - 6	—	—	—	Not Occupied	—	—
7	2.5	RD / BN	3842	Battery Positive Voltage	I	—
8 - 9	—	—	—	Not Occupied	—	—
10	2.5	BK	2050	Ground	I	—

K194 Rear Gate Module X2 (TC2)

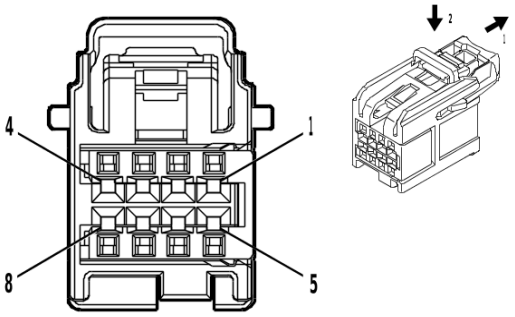

4935776

Connector Part Information

Harness Type: Body Wiring Harness
OEM Connector: 13591515
Service Connector: 19370429
Description: 8-Way F 0.64 OCS Series(BK)

Terminal Part Information

Terminal Type ID	Terminated Lead	Diagnostic Test Probe	Terminal Removal Tool
I	Not required	J-35616-64B (L-BU)	No Tool Required

K194 Rear Gate Module X2 (TC2)

Pin	Size	Color	Circuit	Function	Terminal Type ID	Option
1	—	—	—	Not Occupied	—	—
2	0.35	WH	4100	AUTOSAR CAN Bus [-] 4 Serial Data	I	—
3	0.35	WH	4100	AUTOSAR CAN Bus [-] 4 Serial Data	I	—
4	0.35	BU / VT	4101	AUTOSAR CAN Bus [+] 4 Serial Data	I	—
5	—	—	—	Not Occupied	—	—
6	0.35	BU / VT	4101	AUTOSAR CAN Bus [+] 4 Serial Data	I	—
7	0.35	WH	4100	AUTOSAR CAN Bus [-] 4 Serial Data	I	—
8	0.35	BU / VT	4101	AUTOSAR CAN Bus [+] 4 Serial Data	I	—

K194 Rear Gate Module X3 (TC2)

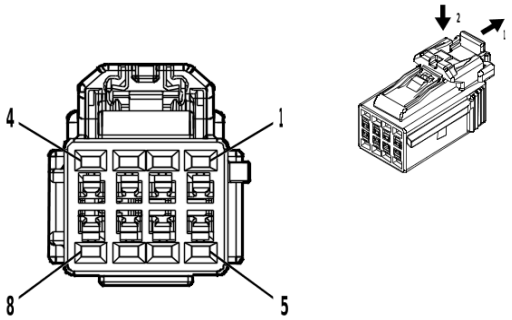

5086387

Connector Part Information

Harness Type: Left Liftgate Actuator
OEM Connector: 13533339
Service Connector: Service by Harness - See Part Catalog
Description: 8-Way F 1.2 Series(BK)

Terminal Part Information

Terminal Type ID	Terminated Lead	Diagnostic Test Probe	Terminal Removal Tool
I	Not Available	No Tool Required	Not Available

K194 Rear Gate Module X3 (TC2)

Pin	Size	Color	Circuit	Function	Terminal Type ID	Option
1	1.5	WH	4689	Rear Closure Open/Close Motor Open Control	I	—
2	—	—	—	Not Occupied	—	—
3	0.35	BU / WH	4685	Rear Closure Position Sensor Signal 1	I	—
4	0.35	BN / RD	4683	Rear Closure Position Sensor Voltage Reference	I	—
5	1.5	BN / WH	4690	Rear Closure Open/Close Motor Close Control	I	—
6	0.35	BK / GN	4687	Rear Closure Position Sensor Low Reference	I	—
7	0.35	BN / YE	4686	Rear Closure Position Sensor Signal 2	I	—
8	—	—	—	Not Occupied	—	—

K194 Rear Gate Module X4 (TC2)

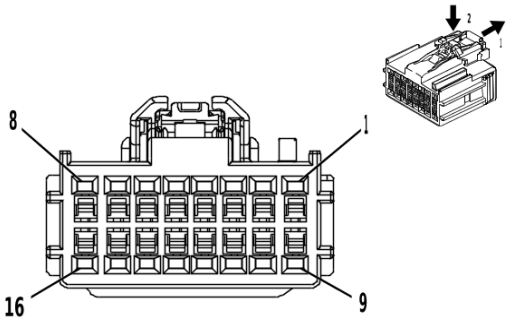

4115730

Connector Part Information

Harness Type: Body Wiring Harness
OEM Connector: 35029309
Service Connector: 13533121
Description: 16-Way F 1.2 OCS Series(BK)

Terminal Part Information

Terminal Type ID	Terminated Lead	Diagnostic Test Probe	Terminal Removal Tool
I	19371240	J-35616-12 (BU)	J-38125-215A
II	84962854	J-35616-12 (BU)	J-38125-215A

K194 Rear Gate Module X4 (TC2)

Pin	Size	Color	Circuit	Function	Terminal Type ID	Option
1	1	BN	4681	Rear Closure Cinch Latch Motor Cinch Control	I	—
2 - 3	—	—	—	Not Occupied	—	—
4	0.35	GY / VT	4678	Rear Closure Latch Unlatch Status	II	—
5	—	—	—	Not Occupied	—	—
6	0.35	WH / GN	8084	Rear Closure Latch Neutral Status	II	—
7	—	—	—	Not Occupied	—	—
8	0.35	GY / WH	4658	Rear Closure Switch LED Control	II	—
9	1	BU / GY	4682	Rear Closure Cinch Latch Motor Release Control	I	—
10	0.35	BK / VT	4656	Rear Closure Object Sensor Low Reference	II	—
11 - 12	—	—	—	Not Occupied	—	—
13	0.35	YE / BK	8085	Rear Closure Latch Primary Status	II	—
14	0.35	GY / GN	6190	Liftgate Window/Rear Compartment Lid, Exterior Unlatch Signal	II	—
15	—	—	—	Not Occupied	—	—
16	0.35	GN	4657	Rear Closure Switch Signal	II	—

K212 Gear Shift Control Module

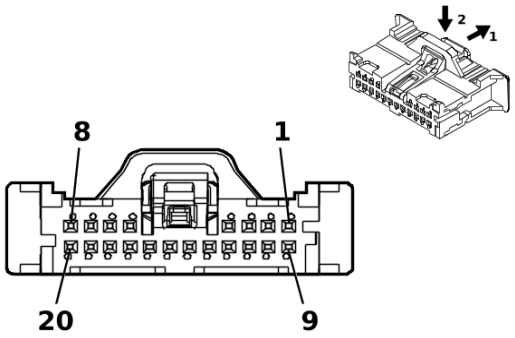

5200955

Connector Part Information

Harness Type: Instrument Panel Wiring Harness
OEM Connector: 35068196
Service Connector: 84769280
Description: 20-Way F Mini 50 Series(BK)

Terminal Part Information

Terminal Type ID	Terminated Lead	Diagnostic Test Probe	Terminal Removal Tool
I	84944580	EL-35616-58 (BK)	EL-38125-58

K212 Gear Shift Control Module

Pin	Size	Color	Circuit	Function	Terminal Type ID	Option
1	0.35	BU / BK	4977	AUTOSAR CAN Bus [+] 3 Serial Data	I	—
2	0.35	BU / BK	4977	AUTOSAR CAN Bus [+] 3 Serial Data	I	—
3	0.35	WH	4976	AUTOSAR CAN Bus [-] 3 Serial Data	I	—
4	0.35	WH	4976	AUTOSAR CAN Bus [-] 3 Serial Data	I	—
5	0.35	WH	4055	Private Serial Data Powertrain CAN Bus [+] Serial Data	I	—
6	0.35	GY	4055	Private Serial Data Powertrain CAN Bus [+] Serial Data	I	—
7	0.35	BU / GY	4054	Private Serial Data Powertrain CAN Bus [-] Serial Data	I	—
8	0.35	GY / BU	4054	Private Serial Data Powertrain CAN Bus [-] Serial Data	I	—
9	0.35	RD / GN	5140	Battery Positive Voltage	I	—
10	—	—	—	Not Occupied	—	—
11	0.35	GN / BU	3738	Tap Up/Tap Down Switch Signal 2	I	—
12	0.35	BK	1050	Ground	I	—
13 - 15	—	—	—	Not Occupied	—	—
16	0.35	VT / GN	4320	Powertrain Sensor Bus Enable	I	—
17	0.35	VT / WH	639	Run/Crank Ignition 1 Voltage	I	—
18 - 19	—	—	—	Not Occupied	—	—
20	0.35	BK	1050	Ground	I	—

K214 Trailer Tire Pressure Indicator Module (PTT)

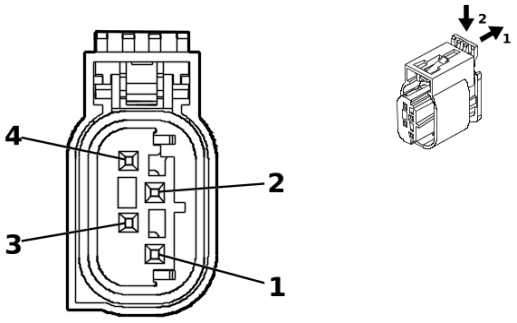

5215490

Connector Part Information

Harness Type: Rear Object Alarm Sensor Wiring Harness
OEM Connector: 13655424
Service Connector: Service by Harness - See Part Catalog
Description: 4-Way F 0.64 MTS Series, Sealed(BK)

Terminal Part Information

Terminal Type ID	Terminated Lead	Diagnostic Test Probe	Terminal Removal Tool
I	Not required	J-35616-64B (L-BU)	No Tool Required

K214 Trailer Tire Pressure Indicator Module (PTT)

Pin	Size	Color	Circuit	Function	Terminal Type ID	Option
1	0.5	RD / GY	4840	Battery Positive Voltage	I	—
2	0.5	BK	1450	Ground	I	—
3	0.5	GN / YE	2862	Body Control Module LIN Bus 16	I	—
4	—	—	—	Not Occupied	—	—

K219 Lighting Control Module X1

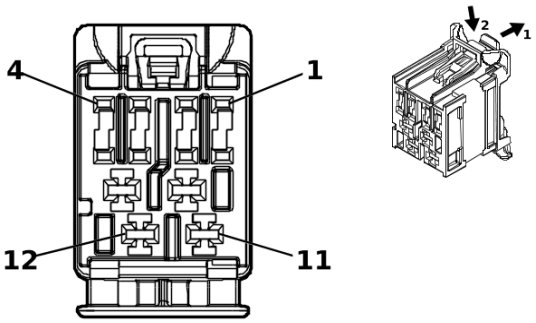

5203784

Connector Part Information

Harness Type: Body Wiring Harness
OEM Connector: 13509990
Service Connector: 13509990
Description: 12-Way F 1.2, 2.8 Series(PU)

Terminal Part Information

Terminal Type ID	Terminated Lead	Diagnostic Test Probe	Terminal Removal Tool
I	13575435	J-35616-4A (PU)	J-38125-557
II	84729890	J-35616-12 (BU)	J-38125-553

K219 Lighting Control Module X1

Pin	Size	Color	Circuit	Function	Terminal Type ID	Option
1	0.35	YE	712	Left Headlamp Low Beam Control	II	—
2	—	—	—	Not Occupied	—	—
3	0.5	BN / GY	5061	Left Front Fog Lamp Control	II	—
4	—	—	—	Not Occupied	—	—
5	0.5	BU / WH	1314	Left Front Turn Signal Lamp Control	II	—
6	0.5	GN / WH	24	Backup Lamp Control	II	—
7	0.5	WH / GN	5966	Approach Lamp Control	II	—
8	0.5	YE / GY	122	Rear Fog Lamp Control	II	—
9	1	RD / VT	7140	Battery Positive Voltage	I	—
10	0.5	BN / BU	6993	Left Rear Park Lamp Control	I	—
11 - 12	—	—	—	Not Occupied	—	—

K219 Lighting Control Module X2

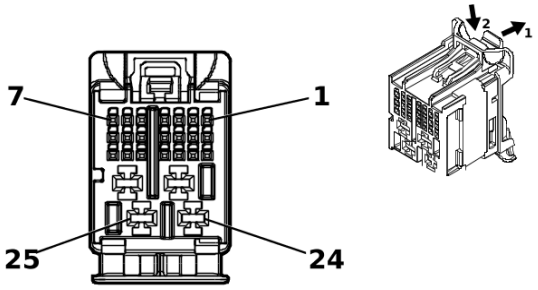

5203807

Connector Part Information

Harness Type: Body Wiring Harness
OEM Connector: 13534966
Service Connector: 13534966
Description: 25-Way F 0.5 MQS, 2.8 MCP Series(GY with GY Inner Connector)

Terminal Part Information

Terminal Type ID	Terminated Lead	Diagnostic Test Probe	Terminal Removal Tool
I	13575435	J-35616-4A (PU)	J-38125-557
II	19370262	EL-35616-58 (BK)	EL-38125-58

K219 Lighting Control Module X2

Pin	Size	Color	Circuit	Function	Terminal Type ID	Option
1	0.35	GN / YE	6846	Rear License Plate Lamp Control	II	—
2	0.35	GN / WH	2270	Rear Window Washer Relay Control	II	—
3	0.35	BN / GY	2268	Windshield Washer Relay Control	II	—
4	0.35	BU / BN	38	Backup Lamp Relay Control	II	—
5 - 9	—	—	—	Not Occupied	—	—
10	0.35	BN / GN	196	Windshield Wiper Motor Park Switch Signal	II	—
11	0.35	VT / BK	6568	Front Turn Signal Lamp Feedback Signal	II	—
12	0.35	GY	91	Windshield Wiper Motor Relay Coil Control	II	—
13	—	—	—	Not Occupied	—	—
14	0.35	VT	185	Low Washer Fluid Indicator Control	II	—
15 - 18	—	—	—	Not Occupied	—	—
19	0.35	WH / BN	7055	Auxiliary Park Lamp Relay Control	II	—
20	0.35	WH / YE	7545	Right Front Turn Signal Lamp Feedback Signal	II	—
21	0.35	WH / VT	860	Windshield Wiper Switch High Signal	II	—
22	0.75	RD / GN	7740	Battery Positive Voltage	I	—
23	0.75	RD / BU	840	Battery Positive Voltage	I	—
24 - 25	—	—	—	Not Occupied	—	—

K219 Lighting Control Module X3

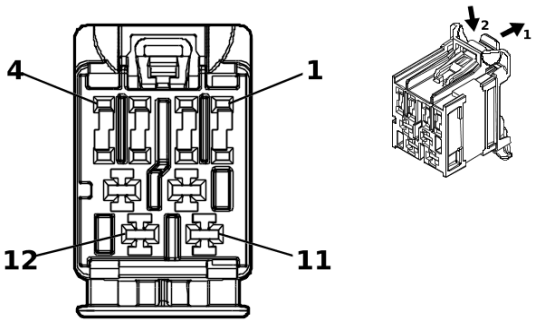

5203797

Connector Part Information

Harness Type: Body Wiring Harness
OEM Connector: 160026-0002
Service Connector: 13509989
Description: 12-Way F 1.2, 2.8 Series(GN)

Terminal Part Information

Terminal Type ID	Terminated Lead	Diagnostic Test Probe	Terminal Removal Tool
I	13575435	J-35616-4A (PU)	J-38125-557
II	84729890	J-35616-12 (BU)	J-38125-553

K219 Lighting Control Module X3

Pin	Size	Color	Circuit	Function	Terminal Type ID	Option
1	—	—	—	Not Occupied	—	—
2	0.5	BN / GN	5062	Right Front Fog Lamp Control	II	—
3	—	—	—	Not Occupied	—	—
4	0.5	YE	312	Right Headlamp Low Beam Control	II	—
5	—	—	—	Not Occupied	—	—
6	0.5	BU / VT	1335	Right Rear Turn Signal Lamp Control 2	II	—
7	0.5	GN / WH	1324	Backup Lamp Control	II	—
8	—	—	—	Not Occupied	—	—
9	0.75	RD / BU	540	Battery Positive Voltage	I	—
10	0.75	RD / BN	1440	Battery Positive Voltage	I	—
11	—	—	—	Not Occupied	—	—
12	0.5	BN / GY	6995	Right Rear Park Lamp Control	I	—

K219 Lighting Control Module X4

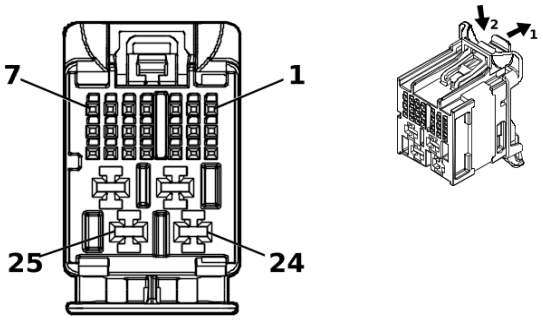

5203416

Connector Part Information

Harness Type: Body Wiring Harness
OEM Connector: 13534969
Service Connector: 13534969
Description: 25-Way F 0.5 MQS, 2.8 MCP Series(PU with GY Inner Connector)

Terminal Part Information

Terminal Type ID	Terminated Lead	Diagnostic Test Probe	Terminal Removal Tool
I	13575435	J-35616-4A (PU)	J-38125-557
II	19370262	EL-35616-58 (BK)	EL-38125-58

K219 Lighting Control Module X4

Pin	Size	Color	Circuit	Function	Terminal Type ID	Option
1 - 2	—	—	—	Not Occupied	—	—
3	0.35	BU / YE	4979	AUTOSAR CAN Bus [+] 2 Serial Data	II	—
4	0.35	WH	4978	AUTOSAR CAN Bus [-] 2 Serial Data	II	—
5	0.35	BU / YE	4979	AUTOSAR CAN Bus [+] 2 Serial Data	II	—
6	0.35	WH	4978	AUTOSAR CAN Bus [-] 2 Serial Data	II	—
7	0.35	WH / BU	6311	Cruise/ETC/TCC Brake Signal	II	—
8 - 9	—	—	—	Not Occupied	—	—
10	0.35	WH	4978	AUTOSAR CAN Bus [-] 2 Serial Data	II	—
11	0.35	BU / YE	4979	AUTOSAR CAN Bus [+] 2 Serial Data	II	—
12 - 14	—	—	—	Not Occupied	—	—
15	0.35	VT / BU	4001	Left Rear Door Lock Switch Lock Control	II	—
16	0.35	WH / YE	4002	Left Rear Door Lock Switch Unlock Control	II	—
17	0.35	GN / BN	4003	Right Rear Door Lock Switch Lock Control	II	—
18	0.35	BU / GY	4004	Right Rear Door Lock Switch Unlock Control	II	—
19	—	—	—	Not Occupied	—	—
20	0.35	BU / YE	2279	Liftgate Window Ajar Switch Signal	II	—
21	0.35	VT / GY	1303	Liftgate Ajar Switch Signal 1	II	—
22	0.75	RD / BN	1140	Battery Positive Voltage	I	—
23	1	BK / WH	1151	Signal Ground	I	—
24	1	RD / GN	1540	Battery Positive Voltage	I	—
25	1	BK / WH	1151	Signal Ground	I	—

K219 Lighting Control Module X5

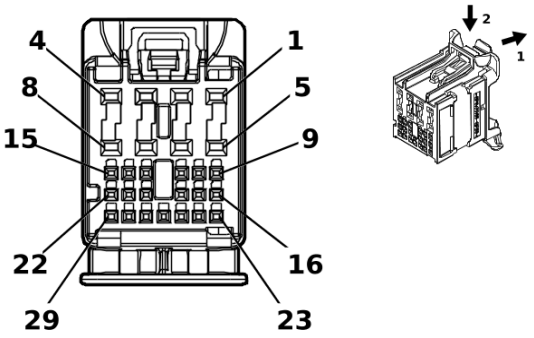

5203373

Connector Part Information

Harness Type: Body Wiring Harness
OEM Connector: 13534975
Service Connector: 13534975
Description: 29-Way F 0.5 NANO, 1.2 MCON Series(BU with GY Inner Connector)

Terminal Part Information

Terminal Type ID	Terminated Lead	Diagnostic Test Probe	Terminal Removal Tool
I	19370262	EL-35616-58 (BK)	EL-38125-58
II	84729890	J-35616-12 (BU)	J-38125-553

K219 Lighting Control Module X5

Pin	Size	Color	Circuit	Function	Terminal Type ID	Option
1	0.5	GY / BU	7538	Left Front DRL Control	II	—
2	0.5	BU / GN	1253	Right Front Park Lamp Control	II	—
3	0.5	GY / YE	7542	Left Rear Stop Lamp Control	II	—
4	0.5	WH / YE	7541	Right Rear Stop Lamp Control	II	—
5	0.5	BU / BN	7539	Right Front DRL Control	II	—
6	0.5	WH / YE	1254	Left Front Park Lamp Control	II	—
7	0.5	GN / VT	1315	Right Front Turn Signal Lamp Control	II	—
8	0.5	BU / WH	1334	Left Rear Turn Signal Lamp Control 2	II	—
9	0.35	GN / GY	2115	Right Turn Signal Lamp Control 2	I	—
10	0.35	WH / GY	2114	Left Turn Signal Lamp Control 2	I	—
11	0.35	GY	1715	Windshield Wiper Switch High Signal	I	—
13	0.35	GN / BN	319	Right Rear Trailer Stop/Turn Lamp Control	I	—
14	—	—	—	Not Occupied	—	—
15	0.35	GY / GN	6190	Liftgate Window/Rear Compartment Lid, Exterior Unlatch Signal	I	—
16	0.35	WH	311	Right Headlamp High Beam Control	I	—
17	—	—	—	Not Occupied	—	—
18	0.35	VT / WH	1139	Run/Crank Ignition 1 Voltage	I	—
20 - 22	—	—	—	Not Occupied	—	—
23	0.35	WH / VT	6567	Rear Turn Signal Lamp Feedback Signal	I	—
24	0.35	WH / BK	7544	Right Rear Turn Signal Lamp Feedback Signal	I	—

K219 Lighting Control Module X5 (cont'd)

Pin	Size	Color	Circuit	Function	Terminal Type ID	Option
25	0.35	BN / YE	820	Center High Mounted Stop Lamp Supply Voltage	I	—
26 - 27	—	—	—	Not Occupied	—	—
28	0.35	WH	711	Left Headlamp High Beam Control	I	—
29	0.35	YE / BU	318	Left Rear Trailer Stop/Turn Lamp Control	I	—

K230 Front Floor Console Control Module (DCH)

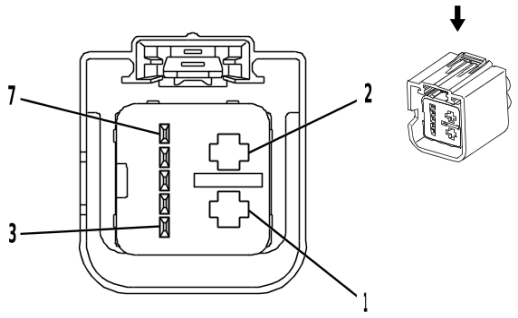

2282932

Connector Part Information

Harness Type: Front Floor Console Wiring Harness
OEM Connector: 1-1732115-2
Service Connector: Service by Harness - See Part Catalog
Description: 7-Way F 0.64, 2.8 Kaizen Timer Series, Sealed(GY)

Terminal Part Information

Terminal Type ID	Terminated Lead	Diagnostic Test Probe	Terminal Removal Tool
I	Not required	J-35616-4A (PU)	No Tool Required
II	Not required	J-35616-64B (L-BU)	No Tool Required

K230 Front Floor Console Control Module (DCH)

Pin	Size	Color	Circuit	Function	Terminal Type ID	Option
1	1	BK	1250	Ground	I	—
2	1	RD / VT	8640	Battery Positive Voltage	I	—
3	—	—	—	Not Occupied	—	—
4	0.5	GN / VT	2857	Body Control Module LIN Bus 11	II	—
5 - 7	—	—	—	Not Occupied	—	—

M4 Air Inlet Valve Actuator

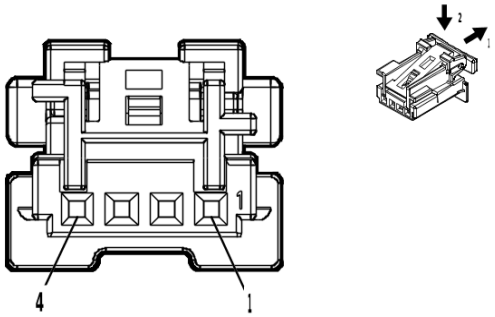

4997407

Connector Part Information

Harness Type: Heater Wiring Harness
OEM Connector: 2294218-1
Service Connector: Service by Harness - See Part Catalog
Description: 4-Way F 0.64 Micro-Quadlock Series(BK)

Terminal Part Information

Terminal Type ID	Terminated Lead	Diagnostic Test Probe	Terminal Removal Tool
I	Not required	No Tool Required	No Tool Required

M4 Air Inlet Valve Actuator

Pin	Size	Color	Circuit	Function	Terminal Type ID	Option
1	0.35	BK	1050	Ground	I	—
2	0.35	GN / VT	2852	Body Control Module LIN Bus 6	I	—
3	0.35	BK	1050	Ground	I	—
4	0.35	WH / YE	4634	HVAC Remote Enable Signal	I	—

M6BP Rear Programmable Temperature Valve Actuator (C69)

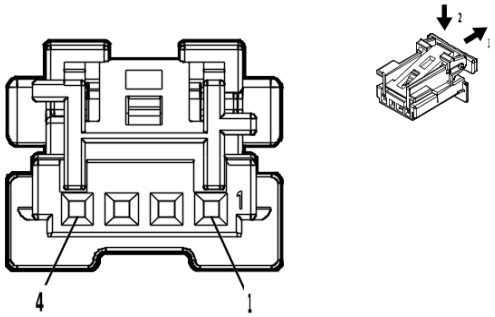

4997407

Connector Part Information

Harness Type: Auxiliary Heater and Air Conditioning Wiring Harness
OEM Connector: 13511018
Service Connector: Service by Harness - See Part Catalog
Description: 4-Way F 0.64 Micro-Quadlock Series(BK)

Terminal Part Information

Terminal Type ID	Terminated Lead	Diagnostic Test Probe	Terminal Removal Tool
I	Not Available	No Tool Required	Not Available

M6BP Rear Programmable Temperature Valve Actuator (C69)

Pin	Size	Color	Circuit	Function	Terminal Type ID	Option
1	0.35	BK / WH	1450	Ground	I	—
2	0.35	GN / BN	2853	Body Control Module LIN Bus 7	I	—
3	—	—	—	Not Occupied	—	—
4	0.35	RD / WH	4635	HVAC Remote Enable 2 Signal	I	—

M6PL Programmable Temperature Valve Actuator - Left

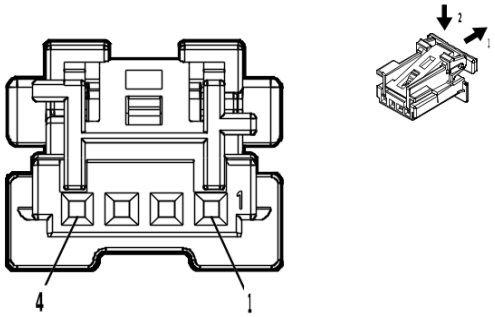

4997407

Connector Part Information

Harness Type: Heater Wiring Harness
OEM Connector: 2294218-1
Service Connector: Service by Harness - See Part Catalog
Description: 4-Way F 0.64 Micro-Quadlock Series(BK)

Terminal Part Information

Terminal Type ID	Terminated Lead	Diagnostic Test Probe	Terminal Removal Tool
I	Not required	No Tool Required	No Tool Required

M6PL Programmable Temperature Valve Actuator - Left

Pin	Size	Color	Circuit	Function	Terminal Type ID	Option
1	0.35	BK	1050	Ground	I	—
2	0.35	GN / VT	2852	Body Control Module LIN Bus 6	I	—
3	0.35	BK	1050	Ground	I	—
4	0.35	WH / YE	4634	HVAC Remote Enable Signal	I	—

M6PR Programmable Temperature Valve Actuator - Right

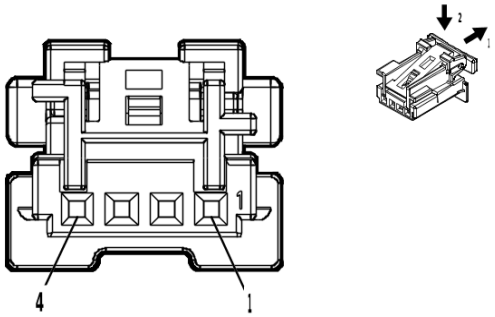

4997407

Connector Part Information

Harness Type: Heater Wiring Harness
OEM Connector: 2294218-1
Service Connector: Service by Harness - See Part Catalog
Description: 4-Way F 0.64 Micro-Quadlock Series(BK)

Terminal Part Information

Terminal Type ID	Terminated Lead	Diagnostic Test Probe	Terminal Removal Tool
I	Not required	No Tool Required	No Tool Required

M6PR Programmable Temperature Valve Actuator - Right

Pin	Size	Color	Circuit	Function	Terminal Type ID	Option
1	0.35	BK	1050	Ground	I	—
2	0.35	GN / VT	2852	Body Control Module LIN Bus 6	I	—
3	—	—	—	Not Occupied	—	—
4	0.35	WH / YE	4634	HVAC Remote Enable Signal	I	—

M8 Blower Motor

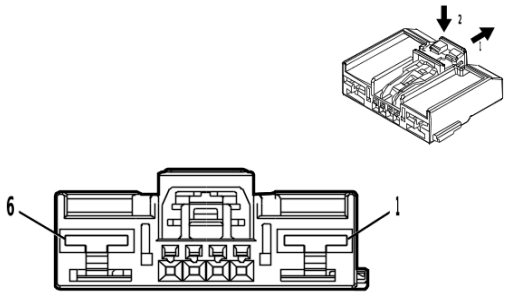

4650258

Connector Part Information

Harness Type: Instrument Panel Wiring Harness
OEM Connector: 7289-7139-30
Service Connector: 19356432
Description: 6-Way F 0.64, 6.3 Series(BK)

Terminal Part Information

Terminal Type ID	Terminated Lead	Diagnostic Test Probe	Terminal Removal Tool
I	Not required	J-35616-42 (RD)	No Tool Required
II	Not required	J-35616-64B (L-BU)	No Tool Required

M8 Blower Motor

Pin	Size	Color	Circuit	Function	Terminal Type ID	Option
1	5	RD / GY	2042	Battery Positive Voltage	I	—
2	0.35	BU / GY	754	Blower Motor Speed Control	II	—
3	0.35	GN / BU	761	Blower Speed Feedback Signal	II	—
4 - 5	—	—	—	Not Occupied	—	—
6	5	BK	1050	Ground	I	—

M8B Blower Motor - Rear (C69)

—

Connector Part Information

Harness Type: Rear Blower Motor
OEM Connector: Not Available
Service Connector: Service by Harness - See Part Catalog
Description: 2-Way

Terminal Part Information

Terminal Type ID	Terminated Lead	Diagnostic Test Probe	Terminal Removal Tool
I	Not Available	No Tool Required	Not Available

M8B Blower Motor - Rear (C69)

Pin	Size	Color	Circuit	Function	Terminal Type ID	Option
1	2.5	BU / BK	5988	Rear Blower Motor Low Reference	I	—
2	2.5	GY / BN	101	Blower Motor Control 2	I	—

M10 Charge Air Cooler Coolant Pump (LM2)

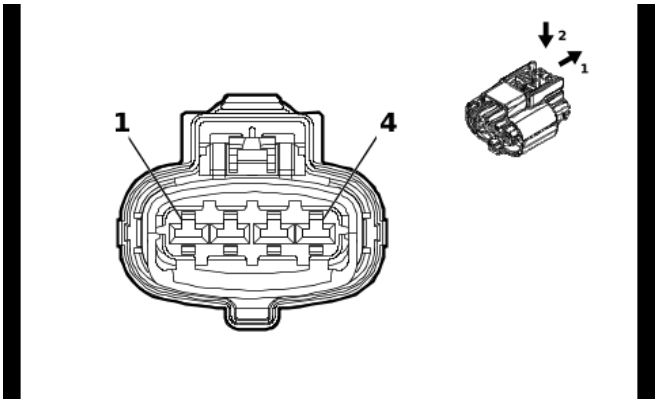

5869064

Connector Part Information

Harness Type: Engine Wiring Harness
OEM Connector: 35133588
Service Connector: 19371209
Description: 4-Way F 2.8 CTS Series, Sealed(BK)

Terminal Part Information

Terminal Type ID	Terminated Lead	Diagnostic Test Probe	Terminal Removal Tool
I	Not required	J-35616-4A (PU)	No Tool Required

M10 Charge Air Cooler Coolant Pump (LM2)

Pin	Size	Color	Circuit	Function	Terminal Type ID	Option
1	0.75	VT / BU	5294	Powertrain Main Relay Fused Supply Voltage 5	I	—
2	0.5	GN / VT	4621	Engine Control Module LIN Bus 1	I	—
3	—	—	—	Not Occupied	—	—
4	0.75	BK	6550	Ground	I	—

M26 Front Drive Axle Actuator (NP0/NQH)

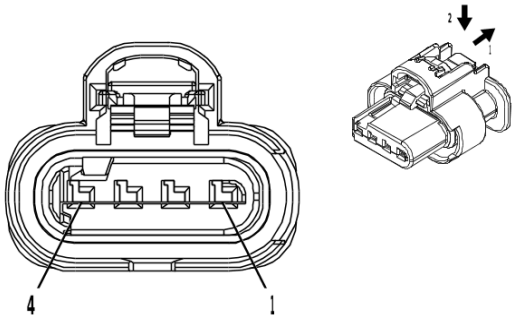

4210809

Connector Part Information

Harness Type: Transfer Case Selector Shift Control Switch Wiring Harness Extension Harness
OEM Connector: 1-2296696-1
Service Connector: Service by Harness - See Part Catalog
Description: 4-Way F 1.2 MCON-CB Series, Sealed(BK)

Terminal Part Information

Terminal Type ID	Terminated Lead	Diagnostic Test Probe	Terminal Removal Tool
I	Not required	J-35616-16 (L-GN)	No Tool Required

M26 Front Drive Axle Actuator (NP0/NQH)

Pin	Size	Color	Circuit	Function	Terminal Type ID	Option
1	0.5	GN	8016	Secondary Axle Motor Control	I	—
2	0.5	GY / BK	1570	Front Axle Actuator Control	I	—
3	0.5	YE / WH	1695	4WD Locked Range Indicator Control	I	—
4	0.5	BK	450	Ground	I	—

M31L Liftgate Power Assist Actuator - Left (TC2)

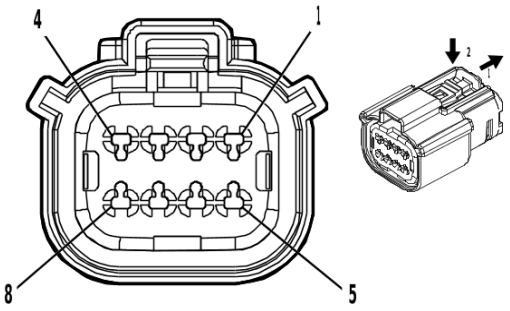

4846407

Connector Part Information

Harness Type: Left Liftgate Power Assist Actuator
OEM Connector: 13520074
Service Connector: Service by Harness - See Part Catalog
Description: 8-Way F 1.5 MX Series, Sealed(BK)

Terminal Part Information

Terminal Type ID	Terminated Lead	Diagnostic Test Probe	Terminal Removal Tool
I	Not Available	No Tool Required	Not Available

M31L Liftgate Power Assist Actuator - Left (TC2)

Pin	Size	Color	Circuit	Function	Terminal Type ID	Option
1	1.5	WH	4689	Rear Closure Open/Close Motor Open Control	I	—
2	—	—	—	Not Occupied	—	—
3	0.35	BU / WH	4686	Rear Closure Position Sensor Signal 2	I	—
4	0.35	BN / RD	4683	Rear Closure Position Sensor Voltage Reference	I	—
5	1.5	BN / WH	4690	Rear Closure Open/Close Motor Close Control	I	—
6	0.35	BK / GN	4687	Rear Closure Position Sensor Low Reference	I	—
7	0.35	BN / YE	4685	Rear Closure Position Sensor Signal 1	I	—
8	—	—	—	Not Occupied	—	—

M33 Liftgate Window Latch

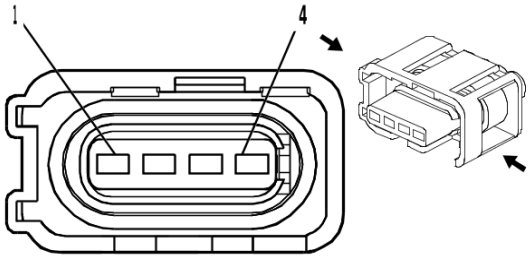

1711027

Connector Part Information

Harness Type: Liftgate Wiring Harness
OEM Connector: 15489983
Service Connector: Service by Harness - See Part Catalog
Description: 4-Way F Micro-Pack Timer III Series, Sealed(NA)

Terminal Part Information

Terminal Type ID	Terminated Lead	Diagnostic Test Probe	Terminal Removal Tool
I	Not required	J-35616-16 (L-GN)	No Tool Required

M33 Liftgate Window Latch

Pin	Size	Color	Circuit	Function	Terminal Type ID	Option
1	0.35	BU / GN	4089	Rear Closure Motor Control	I	—
2	0.35	BK	2050	Ground	I	—
3	0.35	BU / YE	2279	Liftgate Window Ajar Switch Signal	I	—
4	0.35	BK	2050	Ground	I	—

M37 Mode Valve Actuator

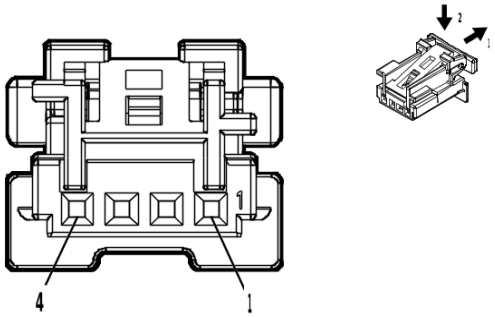

4997407

Connector Part Information

Harness Type: Heater Wiring Harness
OEM Connector: 2294218-1
Service Connector: Service by Harness - See Part Catalog
Description: 4-Way F 0.64 Micro-Quadlock Series(BK)

Terminal Part Information

Terminal Type ID	Terminated Lead	Diagnostic Test Probe	Terminal Removal Tool
I	Not required	No Tool Required	No Tool Required

M37 Mode Valve Actuator

Pin	Size	Color	Circuit	Function	Terminal Type ID	Option
1	0.35	BK	1050	Ground	I	—
2	0.35	GN / VT	2852	Body Control Module LIN Bus 6	I	—
3	—	—	—	Not Occupied	—	—
4	0.35	WH / YE	4634	HVAC Remote Enable Signal	I	—

M37BP Rear Programmable Mode Valve Actuator (C69)

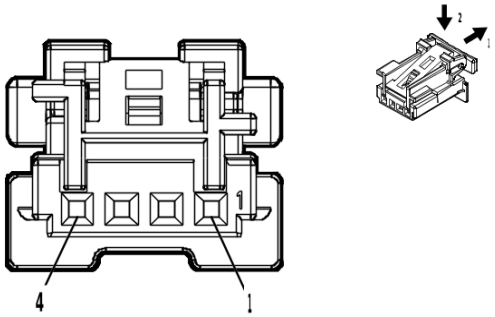

4997407

Connector Part Information

Harness Type: Auxiliary Heater and Air Conditioning Wiring Harness
OEM Connector: 13511018
Service Connector: Service by Harness - See Part Catalog
Description: 4-Way F 0.64 Micro-Quadlock Series(BK)

Terminal Part Information

Terminal Type ID	Terminated Lead	Diagnostic Test Probe	Terminal Removal Tool
I	Not Available	No Tool Required	Not Available

M37BP Rear Programmable Mode Valve Actuator (C69)

Pin	Size	Color	Circuit	Function	Terminal Type ID	Option
1	0.35	BK / WH	1450	Ground	I	—
2	0.35	GN / WH	2853	Body Control Module LIN Bus 7	I	—
3	0.35	BK / WH	1450	Ground	I	—
4	0.35	YE / WH	4635	HVAC Remote Enable 2 Signal	I	—

M45 Rear Window Wiper Motor

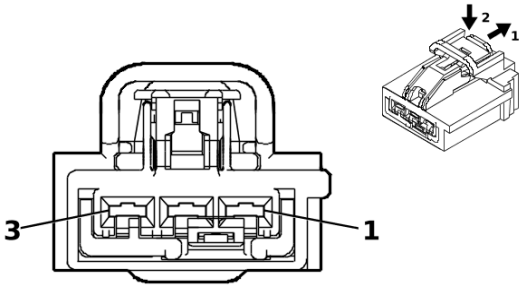

5215435

Connector Part Information

Harness Type: Liftgate Wiring Harness
OEM Connector: 7289-9738-40
Service Connector: Service by Harness - See Part Catalog
Description: 3-Way F 2.8 YESC Series(GY)

Terminal Part Information

Terminal Type ID	Terminated Lead	Diagnostic Test Probe	Terminal Removal Tool
I	Not required	J-35616-4A (PU)	No Tool Required

M45 Rear Window Wiper Motor

Pin	Size	Color	Circuit	Function	Terminal Type ID	Option
1	0.75	BK	2050	Ground	I	—
2	0.35	GN / BU	2856	Body Control Module LIN Bus 10	I	—
3	0.75	RD / YE	3040	Battery Positive Voltage	I	—

M50D Front Seat Tilt Adjuster Actuator - Driver (A45/AUN)

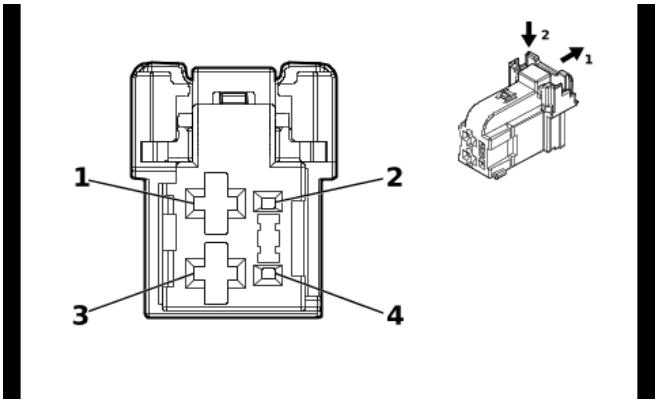

5410027

Connector Part Information

Harness Type: Front Seat Wiring Harness - Driver
OEM Connector: 2316171-1
Service Connector: Service by Harness - See Part Catalog
Description: 4-Way F 0.64, 2.8 Series(BK)

Terminal Part Information

Terminal Type ID	Terminated Lead	Diagnostic Test Probe	Terminal Removal Tool
I	Not required	J-35616-35 (VT)	No Tool Required

M50D Front Seat Tilt Adjuster Actuator - Driver (A45/AUN)

Pin	Size	Color	Circuit	Function	Terminal Type ID	Option
1	1.5	BU / VT	287	Driver Seat Front Vertical Motor Down Control	I	—
2	—	—	—	Not Occupied	—	—
3	1.5	GN / BN	286	Driver Seat Front Vertical Motor Up Control	I	—
4	—	—	—	Not Occupied	—	—

M50D Front Seat Tilt Adjuster Actuator - Driver (-A45-AUN)

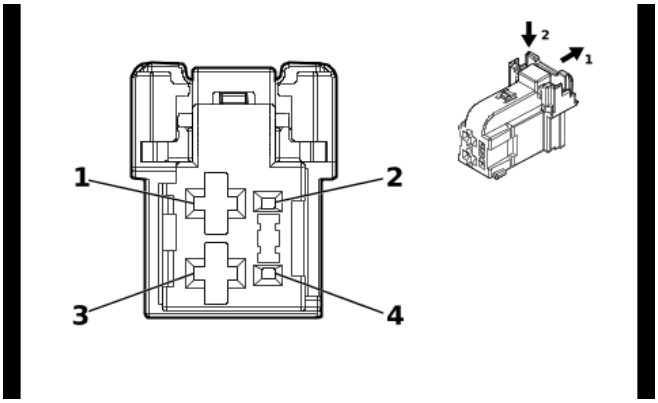

5410027

Connector Part Information

Harness Type: Front Seat Wiring Harness - Driver
OEM Connector: 2316171-1
Service Connector: Service by Harness - See Part Catalog
Description: 4-Way F 0.64, 2.8 Series(BK)

Terminal Part Information

Terminal Type ID	Terminated Lead	Diagnostic Test Probe	Terminal Removal Tool
I	Not required	J-35616-35 (VT)	No Tool Required

M50D Front Seat Tilt Adjuster Actuator - Driver (-A45-AUN)

Pin	Size	Color	Circuit	Function	Terminal Type ID	Option
1	1.5	BU / VT	287	Driver Seat Front Vertical Motor Down Control	I	—
2	—	—	—	Not Occupied	—	—
3	1.5	GN / BN	286	Driver Seat Front Vertical Motor Up Control	I	—
4	—	—	—	Not Occupied	—	—

M50P Front Seat Tilt Adjuster Actuator - Passenger

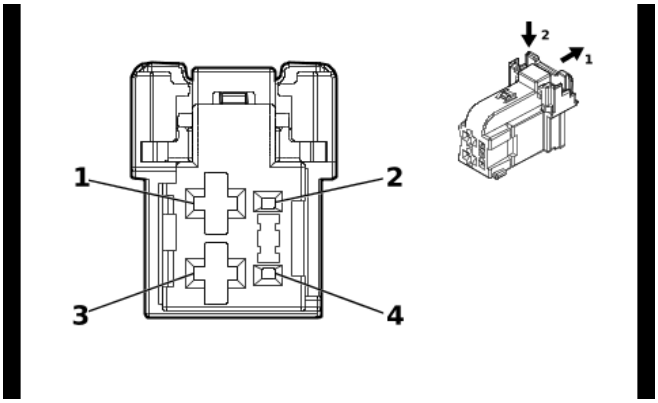

5410027

Connector Part Information

Harness Type: Front Seat Wiring Harness - Passenger
OEM Connector: 2316171-1
Service Connector: Service by Harness - See Part Catalog
Description: 4-Way F 0.64, 2.8 Series(BK)

Terminal Part Information

Terminal Type ID	Terminated Lead	Diagnostic Test Probe	Terminal Removal Tool
I	Not required	J-35616-35 (VT)	No Tool Required

M50P Front Seat Tilt Adjuster Actuator - Passenger

Pin	Size	Color	Circuit	Function	Terminal Type ID	Option
1	1.5	GN / VT	297	Passenger Seat Front Vertical Motor Up Control	I	—
2	—	—	—	Not Occupied	—	—
3	1.5	GN / BU	298	Passenger Seat Front Vertical Motor Down Control	I	—
4	—	—	—	Not Occupied	—	—

M51D Front Seat Adjuster Actuator - Driver

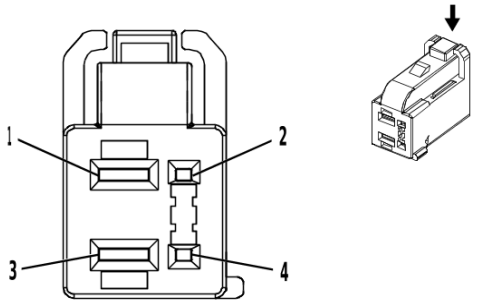

3683652

Connector Part Information

Harness Type: Front Seat Wiring Harness - Driver
OEM Connector: 13583828
Service Connector: Service by Harness - See Part Catalog
Description: 4-Way F 0.64, 2.8 Series(BK)

Terminal Part Information

Terminal Type ID	Terminated Lead	Diagnostic Test Probe	Terminal Removal Tool
I	Not required	No Tool Required	No Tool Required

M51D Front Seat Adjuster Actuator - Driver

Pin	Size	Color	Circuit	Function	Terminal Type ID	Option
1	1.5	GY / GN	284	Driver Seat Horizontal Motor Rearward Control	I	—
2	—	—	—	Not Occupied	—	—
3	1.5	YE / BU	285	Driver Seat Horizontal Motor Forward Control	I	—
4	—	—	—	Not Occupied	—	—

M51P Front Seat Adjuster Actuator - Passenger

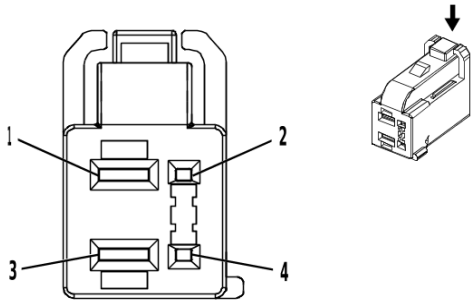

3683652

Connector Part Information

Harness Type: Front Seat Wiring Harness - Passenger
OEM Connector: 13583828
Service Connector: Service by Harness - See Part Catalog
Description: 4-Way F 0.64, 2.8 Series(BK)

Terminal Part Information

Terminal Type ID	Terminated Lead	Diagnostic Test Probe	Terminal Removal Tool
I	Not required	No Tool Required	No Tool Required

M51P Front Seat Adjuster Actuator - Passenger

Pin	Size	Color	Circuit	Function	Terminal Type ID	Option
1	1.5	YE / BU	290	Passenger Seat Horizontal Motor Rearward Control	I	—
2	—	—	—	Not Occupied	—	—
3	1.5	YE / WH	296	Passenger Seat Horizontal Motor Forward Control	I	—
4	—	—	—	Not Occupied	—	—

M53D Front Seat Back Lumbar Motor - Driver

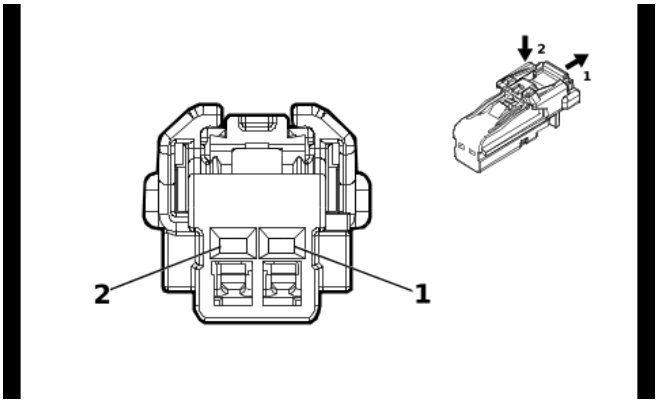

4115691

Connector Part Information

Harness Type: Front Seat Wiring Harness - Driver
OEM Connector: 6098-8988
Service Connector: Service by Harness - See Part Catalog
Description: 2-Way F 1.2 MCON Series(BK)

Terminal Part Information

Terminal Type ID	Terminated Lead	Diagnostic Test Probe	Terminal Removal Tool
I	Not required	J-35616-16 (L-GN)	No Tool Required

M53D Front Seat Back Lumbar Motor - Driver

Pin	Size	Color	Circuit	Function	Terminal Type ID	Option
1	0.75	BU	611	Driver Seat Lumbar Support Motor Forward Control	I	—
2	0.75	VT	610	Driver Seat Lumbar Support Motor Backward Control	I	—

M53P Front Seat Back Lumbar Motor - Passenger

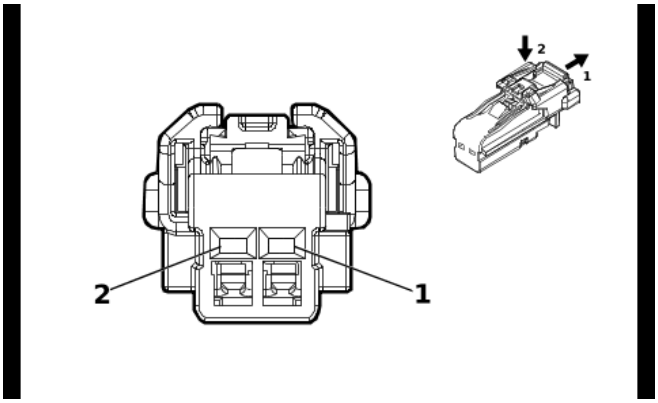

4115691

Connector Part Information

Harness Type: Front Seat Wiring Harness - Passenger
OEM Connector: 6098-8988
Service Connector: Service by Harness - See Part Catalog
Description: 2-Way F 1.2 MCON Series(BK)

Terminal Part Information

Terminal Type ID	Terminated Lead	Diagnostic Test Probe	Terminal Removal Tool
I	Not required	J-35616-16 (L-GN)	No Tool Required

M53P Front Seat Back Lumbar Motor - Passenger

Pin	Size	Color	Circuit	Function	Terminal Type ID	Option
1	0.75	BU	211	Passenger Seat Lumbar Support Motor Forward Control	I	—
2	0.75	VT	210	Passenger Seat Lumbar Support Motor Backward Control	I	—

M55D Front Seat Vertical Adjuster Actuator - Driver

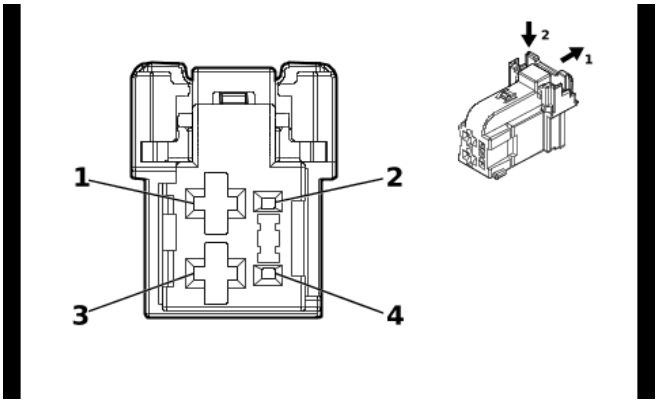

5410027

Connector Part Information

Harness Type: Front Seat Wiring Harness - Driver
OEM Connector: 2316171-1
Service Connector: Service by Harness - See Part Catalog
Description: 4-Way F 0.64, 2.8 Series(BK)

Terminal Part Information

Terminal Type ID	Terminated Lead	Diagnostic Test Probe	Terminal Removal Tool
I	Not required	J-35616-35 (VT)	No Tool Required

M55D Front Seat Vertical Adjuster Actuator - Driver

Pin	Size	Color	Circuit	Function	Terminal Type ID	Option
1	1.5	GY / BU	283	Driver Seat Rear Vertical Motor Down Control	I	—
2	—	—	—	Not Occupied	—	—
3	1.5	YE	282	Driver Seat Rear Vertical Motor Up Control	I	—
4	—	—	—	Not Occupied	—	—

M55P Front Seat Vertical Adjuster Actuator - Passenger

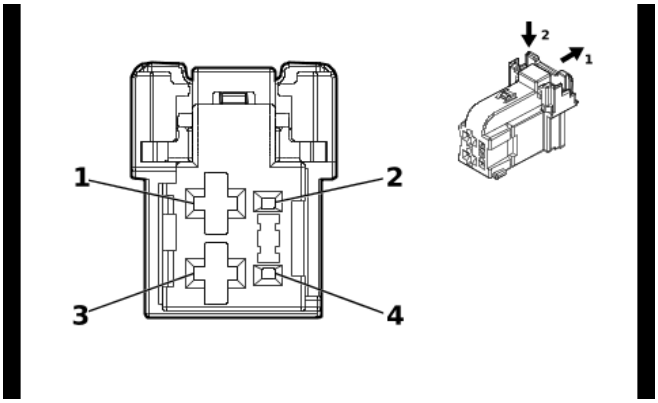

5410027

Connector Part Information

Harness Type: Front Seat Wiring Harness - Passenger
OEM Connector: 2316171-1
Service Connector: Service by Harness - See Part Catalog
Description: 4-Way F 0.64, 2.8 Series(BK)

Terminal Part Information

Terminal Type ID	Terminated Lead	Diagnostic Test Probe	Terminal Removal Tool
I	Not required	J-35616-35 (VT)	No Tool Required

M55P Front Seat Vertical Adjuster Actuator - Passenger

Pin	Size	Color	Circuit	Function	Terminal Type ID	Option
1	1.5	BU / WH	289	Passenger Seat Rear Vertical Motor Down Control	I	—
2	—	—	—	Not Occupied	—	—
3	1.5	GN / WH	288	Passenger Seat Rear Vertical Motor Up Control	I	—
4	—	—	—	Not Occupied	—	—

M56D Front Seat Recliner Actuator - Driver

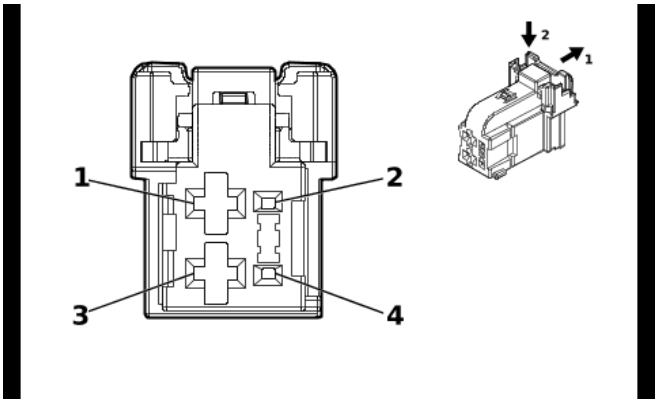

5410027

Connector Part Information

Harness Type: Front Seat Wiring Harness - Driver
OEM Connector: 2316171-1
Service Connector: Service by Harness - See Part Catalog
Description: 4-Way F 0.64, 2.8 Series(BK)

Terminal Part Information

Terminal Type ID	Terminated Lead	Diagnostic Test Probe	Terminal Removal Tool
I	Not required	J-35616-35 (VT)	No Tool Required

M56D Front Seat Recliner Actuator - Driver

Pin	Size	Color	Circuit	Function	Terminal Type ID	Option
1	1.5	GN / YE	276	Driver Seat Recline Motor Forward Control	I	—
2	—	—	—	Not Occupied	—	—
3	1.5	BU / YE	277	Driver Seat Recline Motor Rearward Control	I	—
4	—	—	—	Not Occupied	—	—

M56P Front Seat Recliner Actuator - Passenger

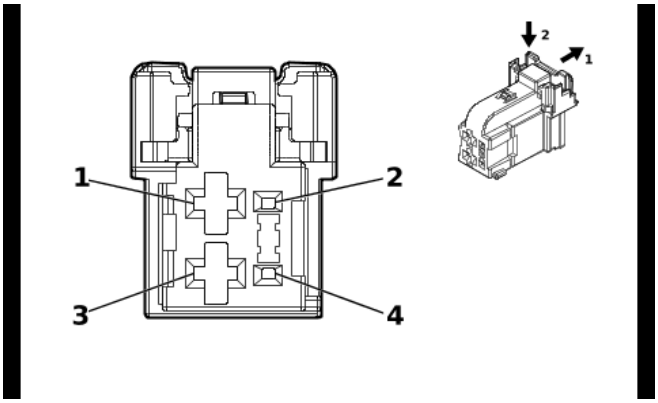

5410027

Connector Part Information

Harness Type: Front Seat Wiring Harness - Passenger
OEM Connector: 2316171-1
Service Connector: Service by Harness - See Part Catalog
Description: 4-Way F 0.64, 2.8 Series(BK)

Terminal Part Information

Terminal Type ID	Terminated Lead	Diagnostic Test Probe	Terminal Removal Tool
I	Not required	J-35616-35 (VT)	No Tool Required

M56P Front Seat Recliner Actuator - Passenger

Pin	Size	Color	Circuit	Function	Terminal Type ID	Option
1	1.5	GN	76	Passenger Seat Recline Motor Forward Control	I	—
2	—	—	—	Not Occupied	—	—
3	1.5	BU / BN	77	Passenger Seat Recline Motor Rearward Control	I	—
4	—	—	—	Not Occupied	—	—

M64 Starter X1 (L84/L87)

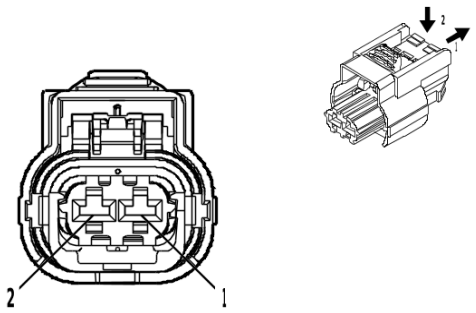

4992524

Connector Part Information

Harness Type: Engine Wiring Harness
OEM Connector: 35182447
Service Connector: 84941154
Description: 2-Way F 2.8 CTS Series, Sealed(BK)

Terminal Part Information

Terminal Type ID	Terminated Lead	Diagnostic Test Probe	Terminal Removal Tool
I	Not required	J-35616-4A (PU)	No Tool Required

M64 Starter X1 (L84/L87)

Pin	Size	Color	Circuit	Function	Terminal Type ID	Option
1	2.5	YE	6	Starter Solenoid Crank Ignition Voltage	I	—
2	2.5	YE / GN	4358	Starter Pinion Solenoid Voltage	I	—

M64 Starter X1 (LM2)

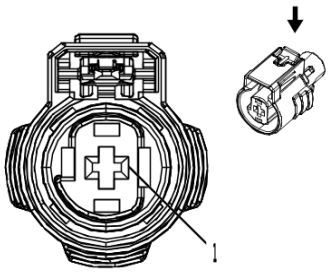

2717134

Connector Part Information

Harness Type: Engine Wiring Harness
OEM Connector: 15526411
Service Connector: 19300471
Description: 1-Way F 2.8 MCP Series, Sealed(BK)

Terminal Part Information

Terminal Type ID	Terminated Lead	Diagnostic Test Probe	Terminal Removal Tool
I	Not required	J-35616-4A (PU)	No Tool Required

M64 Starter X1 (LM2)

Pin	Size	Color	Circuit	Function	Terminal Type ID	Option
1	2.5	YE	6	Starter Solenoid Crank Ignition Voltage	I	—

M64 Starter X2 (L84/L87)

—

Connector Part Information

Harness Type: Starter Solenoid Cable
OEM Connector: 84406835
Service Connector: Service by Cable Assembly — See Part Catalog
Description: 1-Way F Ring Terminal

Terminal Part Information

Terminal Type ID	Terminated Lead	Diagnostic Test Probe	Terminal Removal Tool
I	Not required	No Tool Required	No Tool Required

M64 Starter X2 (L84/L87)

Pin	Size	Color	Circuit	Function	Terminal Type ID	Option
A	35	RD / YE	2	Battery Positive Voltage	I	—

M65 Steering Column Telescope Actuator (N38)

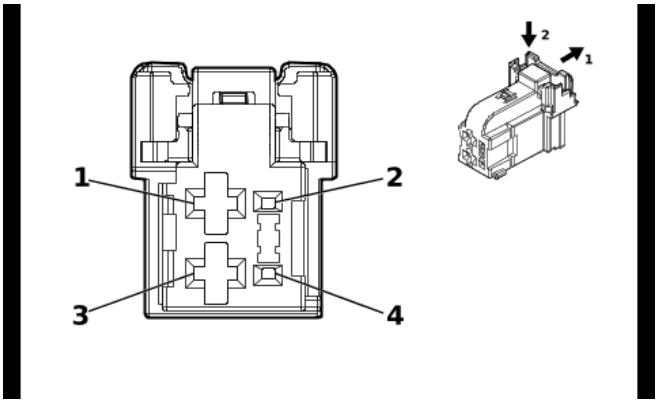

5410027

Connector Part Information

Harness Type: Steering Column Tilt and Telescope Wheel Actuator Motor Harness
OEM Connector: 2316171-1
Service Connector: Service by Harness - See Part Catalog
Description: 4-Way F 0.64, 2.8 Series(BK)

Terminal Part Information

Terminal Type ID	Terminated Lead	Diagnostic Test Probe	Terminal Removal Tool
I	Not Available	No Tool Required	Not Available

M65 Steering Column Telescope Actuator (N38)

Pin	Size	Color	Circuit	Function	Terminal Type ID	Option
1	1	BU / BK	2098	Steering Column Telescope Motor Forward Control	I	—
2	0.35	YE / BN	2153	Steering Column Telescope Motor Signal	I	—
3	1	VT / GY	2110	Steering Column Telescope Motor Rearward Control	I	—
4	0.35	YE / BK	2152	Steering Column Telescope Motor Low Reference	I	—

M68 Steering Column Tilt Wheel Actuator (N38)

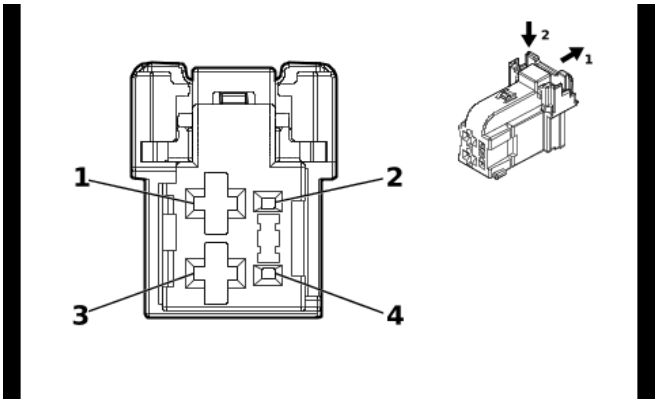

5410027

Connector Part Information

Harness Type: Steering Column Tilt and Telescope Wheel Actuator Motor Harness
OEM Connector: 2316171-1
Service Connector: Service by Harness - See Part Catalog
Description: 4-Way F 0.64, 2.8 Series(BK)

Terminal Part Information

Terminal Type ID	Terminated Lead	Diagnostic Test Probe	Terminal Removal Tool
I	Not Available	No Tool Required	Not Available

M68 Steering Column Tilt Wheel Actuator (N38)

Pin	Size	Color	Circuit	Function	Terminal Type ID	Option
1	1	GY / VT	2112	Steering Column Tilt Motor Down Control	I	—
2	0.35	BN / GY	2154	Steering Column Tilt Motor Signal	I	—
3	1	YE	2111	Steering Column Tilt Motor Up Control	I	—
4	0.35	WH / BK	2157	Steering Column Tilt Motor Low Reference	I	—

M73A Front Seat Back Ventilation Blower - Driver (KQV)

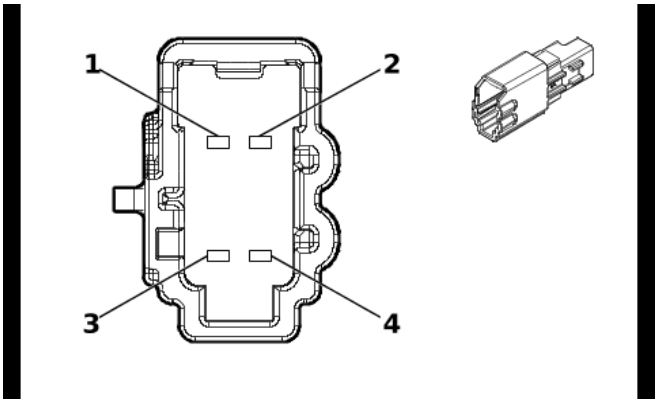

5423974

Connector Part Information

Harness Type: Front Seat Wiring Harness - Driver
OEM Connector: 6098-9049
Service Connector: Service by Harness - See Part Catalog
Description: 4-Way M 1.2 MCON Series(GY)

Terminal Part Information

Terminal Type ID	Terminated Lead	Diagnostic Test Probe	Terminal Removal Tool
I	Not required	J-35616-17 (L-GN)	No Tool Required

M73A Front Seat Back Ventilation Blower - Driver (KQV)

Pin	Size	Color	Circuit	Function	Terminal Type ID	Option
1	0.5	VT / WH	1139	Run/Crank Ignition 1 Voltage	I	—
2	0.5	GN / VT	5906	Driver Seat Blower Motor Control 1	I	—
3	0.5	BK	1150	Ground	I	—
4	—	—	—	Not Occupied	—	—

M73B Front Seat Back Ventilation Blower - Passenger (KQV)

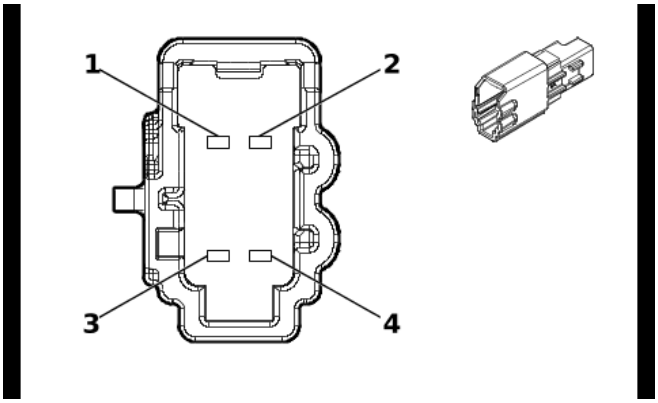

5423974

Connector Part Information

Harness Type: Front Seat Wiring Harness - Passenger
OEM Connector: 6098-9049
Service Connector: Service by Harness - See Part Catalog
Description: 4-Way M 1.2 MCON Series(GY)

Terminal Part Information

Terminal Type ID	Terminated Lead	Diagnostic Test Probe	Terminal Removal Tool
I	Not required	J-35616-17 (L-GN)	No Tool Required

M73B Front Seat Back Ventilation Blower - Passenger (KQV)

Pin	Size	Color	Circuit	Function	Terminal Type ID	Option
1	0.5	VT / WH	1139	Run/Crank Ignition 1 Voltage	I	—
2	0.5	VT / WH	5908	Passenger Seat Blower Motor Control 1	I	—
3	0.5	BK	1250	Ground	I	—
4	—	—	—	Not Occupied	—	—

M73D Front Seat Cushion Ventilation Blower - Driver (KQV)

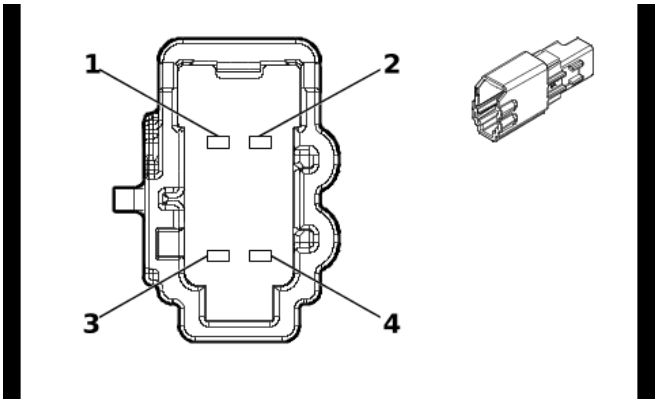

5423974

Connector Part Information

Harness Type: Front Seat Wiring Harness - Driver
OEM Connector: 6098-9049
Service Connector: Service by Harness - See Part Catalog
Description: 4-Way M 1.2 MCON Series(GY)

Terminal Part Information

Terminal Type ID	Terminated Lead	Diagnostic Test Probe	Terminal Removal Tool
I	Not required	J-35616-17 (L-GN)	No Tool Required

M73D Front Seat Cushion Ventilation Blower - Driver (KQV)

Pin	Size	Color	Circuit	Function	Terminal Type ID	Option
1	0.5	VT / WH	1139	Run/Crank Ignition 1 Voltage	I	—
2	0.5	GN / VT	5906	Driver Seat Blower Motor Control 1	I	—
3	0.5	BK	1150	Ground	I	—
4	—	—	—	Not Occupied	—	—

M73P Front Seat Cushion Ventilation Blower - Passenger (KQV)

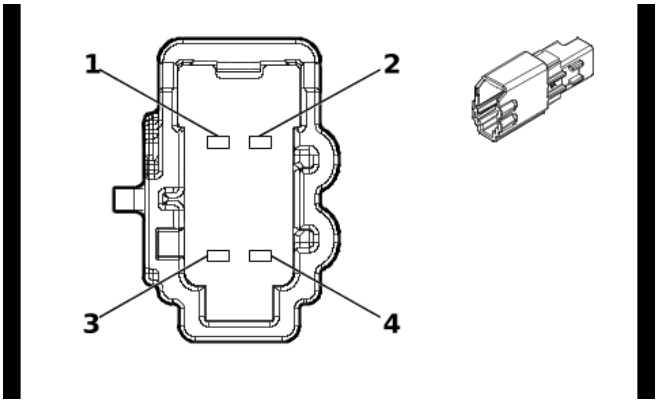

5423974

Connector Part Information

Harness Type: Front Seat Wiring Harness - Passenger
OEM Connector: 6098-9049
Service Connector: Service by Harness - See Part Catalog
Description: 4-Way M 1.2 MCON Series(GY)

Terminal Part Information

Terminal Type ID	Terminated Lead	Diagnostic Test Probe	Terminal Removal Tool
I	Not required	J-35616-17 (L-GN)	No Tool Required

M73P Front Seat Cushion Ventilation Blower - Passenger (KQV)

Pin	Size	Color	Circuit	Function	Terminal Type ID	Option
1	0.5	VT / WH	1139	Run/Crank Ignition 1 Voltage	I	—
2	0.5	VT / WH	5908	Passenger Seat Blower Motor Control 1	I	—
3	0.5	BK	1250	Ground	I	—
4	—	—	—	Not Occupied	—	—

M74D Front Side Door Window Regulator Motor - Driver

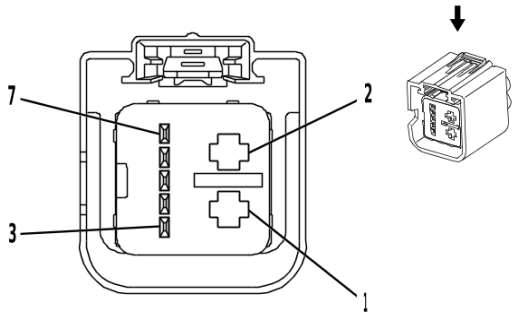

2282932

Connector Part Information

Harness Type: Front Side Door Door Wiring Harness - Driver
OEM Connector: 1-1732115-1
Service Connector: Service by Harness - See Part Catalog
Description: 7-Way F 0.64, 2.8 Kaizen Timer Series, Sealed(GY)

Terminal Part Information

Terminal Type ID	Terminated Lead	Diagnostic Test Probe	Terminal Removal Tool
I	Not required	J-35616-4A (PU)	No Tool Required
II	Not required	J-35616-64B (L-BU)	No Tool Required

M74D Front Side Door Window Regulator Motor - Driver

Pin	Size	Color	Circuit	Function	Terminal Type ID	Option
1	2.5	BK	1150	Ground	I	—
2	2.5	RD / GY	3540	Battery Positive Voltage	I	—
3	0.35	GY / GN	2763	Window Switch Left Front Up Signal	II	—
4	0.35	GN / YE	6134	Body Control Module LIN Bus 3	II	—
5	0.35	GN	2766	Power Window Switch Left Front Express Signal	II	—
6	0.35	GY	745	Left Front Door Ajar Switch Signal	II	—
7	0.35	WH / BN	2764	Window Switch Left Front Down Signal	II	—

M74LR Rear Side Door Window Regulator Motor - Left

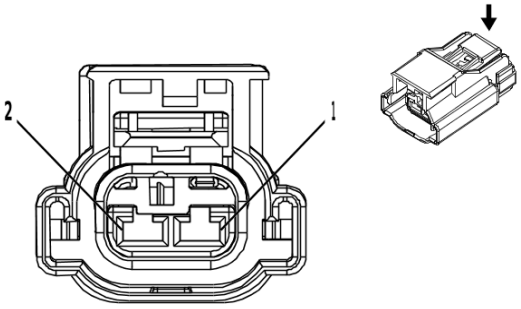

2716333

Connector Part Information

Harness Type: Rear Side Door Door Wiring Harness - Left
OEM Connector: 13863838
Service Connector: Service by Harness - See Part Catalog
Description: 2-Way F 2.8 Series, Sealed(BK)

Terminal Part Information

Terminal Type ID	Terminated Lead	Diagnostic Test Probe	Terminal Removal Tool
I	Not required	J-35616-35 (VT)	No Tool Required

M74LR Rear Side Door Window Regulator Motor - Left

Pin	Size	Color	Circuit	Function	Terminal Type ID	Option
1	2	BU / VT	668	Left Rear Window Motor Up Control	I	—
2	2	YE / BU	669	Left Rear Window Motor Down Control	I	—

M74P Front Side Door Window Regulator Motor - Passenger

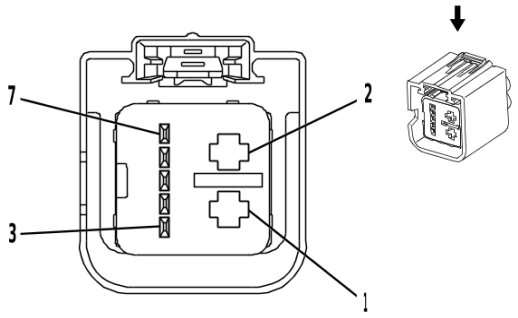

2282932

Connector Part Information

Harness Type: Front Side Door Door Wiring Harness - Passenger
OEM Connector: 1-1732115-1
Service Connector: Service by Harness - See Part Catalog
Description: 7-Way F 0.64, 2.8 Kaizen Timer Series, Sealed(GY)

Terminal Part Information

Terminal Type ID	Terminated Lead	Diagnostic Test Probe	Terminal Removal Tool
I	Not required	J-35616-4A (PU)	No Tool Required
II	Not required	J-35616-64B (L-BU)	No Tool Required

M74P Front Side Door Window Regulator Motor - Passenger

Pin	Size	Color	Circuit	Function	Terminal Type ID	Option
1	2.5	BK	1250	Ground	I	—
2	2.5	RD / BN	4240	Battery Positive Voltage	I	—
3	0.35	GN	1184	Window Switch Right Front Up Signal	II	—
4	0.35	GN / YE	6134	Body Control Module LIN Bus 3	II	—
5	0.35	VT / GY	2765	Window Switch Right Front Express Signal	II	—
6	0.35	GY	746	Right Front Door Ajar Switch Signal	II	—
7	0.35	BN	5295	Window Switch Right Front Down Signal	II	—

M74RR Rear Side Door Window Regulator Motor - Right

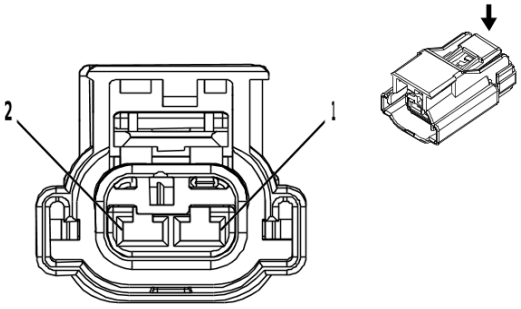

2716333

Connector Part Information

Harness Type: Rear Side Door Door Wiring Harness - Right
OEM Connector: 13863838
Service Connector: Service by Harness - See Part Catalog
Description: 2-Way F 2.8 Series, Sealed(BK)

Terminal Part Information

Terminal Type ID	Terminated Lead	Diagnostic Test Probe	Terminal Removal Tool
I	Not required	J-35616-35 (VT)	No Tool Required

M74RR Rear Side Door Window Regulator Motor - Right

Pin	Size	Color	Circuit	Function	Terminal Type ID	Option
1	2	BU / GY	670	Right Rear Window Motor Up Control	I	—
2	2	GN / BK	671	Right Rear Window Motor Down Control	I	—

M75 Windshield Wiper Motor

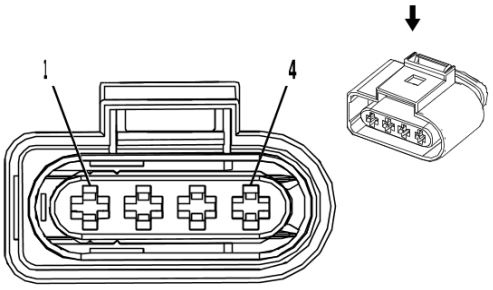

2474722

Connector Part Information

Harness Type: Body Wiring Harness
OEM Connector: 638245-2
Service Connector: 19367598
Description: 4-Way F Junior Power Timer Series, Sealed(BK)

Terminal Part Information

Terminal Type ID	Terminated Lead	Diagnostic Test Probe	Terminal Removal Tool
I	Not required	J-35616-4A (PU)	No Tool Required

M75 Windshield Wiper Motor

Pin	Size	Color	Circuit	Function	Terminal Type ID	Option
1	2	WH	92	Windshield Wiper Motor High Speed Control	I	—
2	2	YE / BN	95	Windshield Wiper Motor Low Speed Control	I	—
3	0.35	BN / GN	196	Windshield Wiper Motor Park Switch Signal	I	—
4	2	BK	150	Ground	I	—

M81 Sunroof Sunshade Motor (C3U)

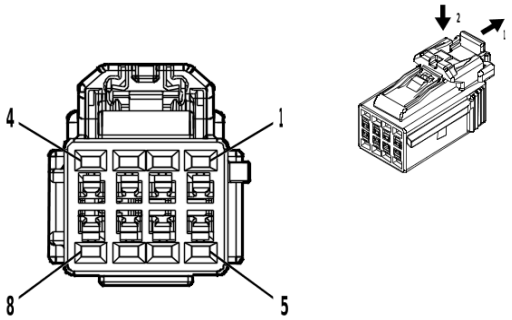

5086387

Connector Part Information

Harness Type: Sunroof Wiring Harness
OEM Connector: 6098-8443
Service Connector: Service by Harness - See Part Catalog
Description: 8-Way F 1.2 Series(BK)

Terminal Part Information

Terminal Type ID	Terminated Lead	Diagnostic Test Probe	Terminal Removal Tool
I	Not required	J-35616-16 (LT GN)	No Tool Required

M81 Sunroof Sunshade Motor (C3U)

Pin	Size	Color	Circuit	Function	Terminal Type ID	Option
1	1.5	BU / BN	3781	Front Sunroof Sunshade Motor Open Control	I	—
2	0.35	GN / VT	5124	Sunroof Obstruction Sensor Signal 2	I	—
3	0.35	RD / WH	5033	Sunroof Obstruction Sensor Voltage Reference	I	—
4	—	—	—	Not Occupied	—	—
5	1.5	BU	3782	Front Sunshade Motor Close Control	I	—
6	0.35	YE	5034	Sunroof Obstruction Sensor Signal 1	I	—
7	0.35	BK / BN	128	Sunroof Switch Low Reference	I	—
8	—	—	—	Not Occupied	—	—

M95L Assist Step Motor - Left (B3L)

—

Connector Part Information

Harness Type: Left Assist Step Motor
OEM Connector: 13583215
Service Connector: Service by Harness - See Part Catalog
Description: 7-Way

Terminal Part Information

Terminal Type ID	Terminated Lead	Diagnostic Test Probe	Terminal Removal Tool
I	Not Available	No Tool Required	Not Available

M95L Assist Step Motor - Left (B3L)

Pin	Size	Color	Circuit	Function	Terminal Type ID	Option
1	0.5	VT / RD	7468	Left Running Board Step Motor Hall Sensor 5V Reference	I	—
2	0.5	BN / WH	7466	Left Running Board Step Motor Hall Sensor Low Reference	I	—
4	0.5	YE	7467	Left Running Board Step Motor Hall Sensor Signal	I	—
6	2.0	WH / BN	7471	Left Running Board Step Motor Control Extend	I	—
7	2.0	GY	7472	Left Running Board Step Motor Control Retract	I	—

M95R Assist Step Motor - Right (B3L)

—

Connector Part Information

Harness Type: Right Assist Step Motor
OEM Connector: 13583215
Service Connector: Service by Harness - See Part Catalog
Description: 7-Way

Terminal Part Information

Terminal Type ID	Terminated Lead	Diagnostic Test Probe	Terminal Removal Tool
I	Not Available	No Tool Required	Not Available

M95R Assist Step Motor - Right (B3L)

Pin	Size	Color	Circuit	Function	Terminal Type ID	Option
1	0.35	BU	7470	Right Running Board Step Motor Control Extend	I	—
4	0.35	YE / BK	7463	Right Running Board Step Motor Hall Sensor Low Reference	I	—
5	0.35	GN / RD	7464	Right Running Board Step Motor Hall Sensor 5V Reference	I	—
6	2.0	GN	7469	Right Left Running Board Step Motor Control Retract	I	—
7	2.0	VT	7465	Right Running Board Step Motor Hall Sensor Signal	I	—

M96 Active Grille Air Shutter Actuator (VTI/WMI)

—

Connector Part Information

Harness Type: Active Grille Air Shutter
OEM Connector: Not Available
Service Connector: Service by Harness - See Part Catalog
Description: 3-Way

Terminal Part Information

Terminal Type ID	Terminated Lead	Diagnostic Test Probe	Terminal Removal Tool
I	Not Available	No Tool Required	Not Available

M96 Active Grille Air Shutter Actuator (VTI/WMI)

Pin	Size	Color	Circuit	Function	Terminal Type ID	Option
1	0.5	VT / BU	5705	Powertrain Main Relay Control	I	—
2	0.75	GN / VT	4621	Engine Control Module LIN Bus 1	I	—
3	0.5	BK	450	Ground	I	L84/ L87
	0.5	BK	6550	Ground	I	LM2

M96B Active Grille Air Shutter Actuator 2 (VTI)

—

Connector Part Information

Harness Type: Active Grille Air Shutter
OEM Connector: Not Available
Service Connector: Service by Harness - See Part Catalog
Description: 2-Way

Terminal Part Information

Terminal Type ID	Terminated Lead	Diagnostic Test Probe	Terminal Removal Tool
I	Not Available	No Tool Required	Not Available

M96B Active Grille Air Shutter Actuator 2 (VTI)

Pin	Size	Color	Circuit	Function	Terminal Type ID	Option
1	0.5	VT / BU	5705	Powertrain Main Relay Control	I	—
2	0.75	GN / VT	4621	Engine Control Module LIN Bus 1	I	—

M97 Fuel Tank Filler Door Lock Actuator

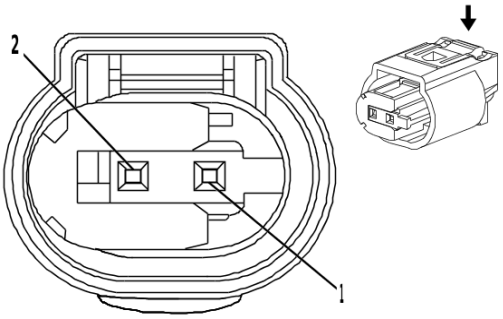

1869767

Connector Part Information

Harness Type: Fuel Tank Filler Door Lock Release Wiring Harness
OEM Connector: 13623700
Service Connector: Service by Harness - See Part Catalog
Description: 2-Way F 0.64 Micro-Quadlock Series, Sealed(BK)

Terminal Part Information

Terminal Type ID	Terminated Lead	Diagnostic Test Probe	Terminal Removal Tool
I	Not required	J-35616-64B (L-BU)	No Tool Required

M97 Fuel Tank Filler Door Lock Actuator

Pin	Size	Color	Circuit	Function	Terminal Type ID	Option
1	0.5	BU / BK	2679	Lock Actuators Unlock Control 1	I	—
2	0.5	VT / GY	2689	Fuel Door Actuator Lock Control	I	—

M103 Turbocharger Vane Position Actuator (LM2)

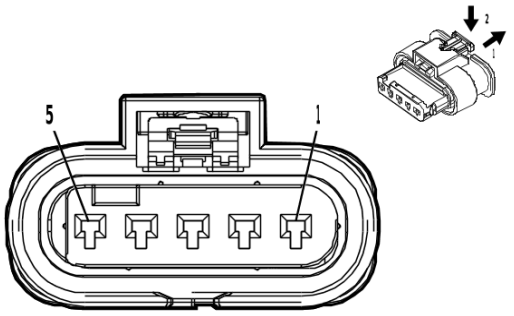

3338689

Connector Part Information

Harness Type: Engine Wiring Harness
OEM Connector: 1-1718806-1
Service Connector: 19119351
Description: 5-Way F 1.2 MCON-LL Series, Sealed(BK)

Terminal Part Information

Terminal Type ID	Terminated Lead	Diagnostic Test Probe	Terminal Removal Tool
I	Not required	J-35616-16 (LT GN)	No Tool Required

M103 Turbocharger Vane Position Actuator (LM2)

Pin	Size	Color	Circuit	Function	Terminal Type ID	Option
1	0.75	WH / BN	1313	Variable Geometry Turbocharger Position Sensor Motor Open Control	I	—
2	0.5	VT / YE	5947	Turbocharger Vane Position Sensor Signal	I	—
3	0.5	BK / GN	580	Engine Control Sensors Low Reference 2	I	—
4	0.5	BU / RD	460	Engine Control Sensors 5 Volt Reference 1	I	—
5	0.75	GY / BK	1330	Variable Geometry Turbocharger Position Sensor Motor Close Control	I	—

M104L Parking Brake Actuator - Left

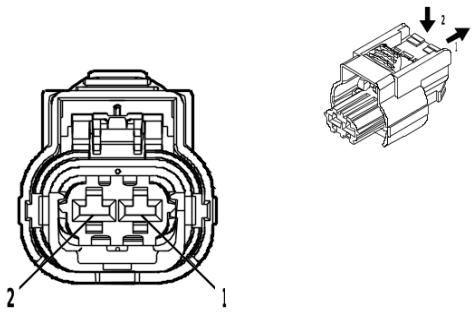

4992524

Connector Part Information

Harness Type: Chassis Rear Wiring Harness Extension Harness
OEM Connector: 35182447
Service Connector: Service by Harness - See Part Catalog
Description: 2-Way F 2.8 CTS Series, Sealed(BK)

Terminal Part Information

Terminal Type ID	Terminated Lead	Diagnostic Test Probe	Terminal Removal Tool
I	Not required	J-35616-35 (VT)	No Tool Required

M104L Parking Brake Actuator - Left

Pin	Size	Color	Circuit	Function	Terminal Type ID	Option
1	2.5	WH	2001	Left Park Brake Motor Apply Control	I	Z95
2	2.5	GY / BK	4369	Left Park Brake Motor Low Reference	I	—

M104R Parking Brake Actuator - Right

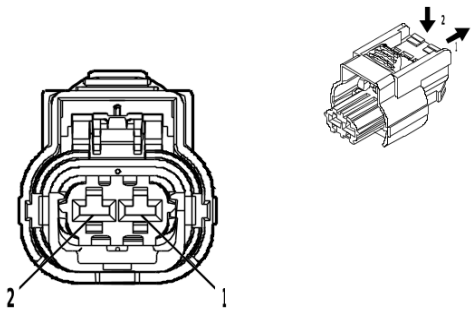

4992524

Connector Part Information

Harness Type: Chassis Rear Wiring Harness Extension Harness
OEM Connector: 35182447
Service Connector: Service by Harness - See Part Catalog
Description: 2-Way F 2.8 CTS Series, Sealed(BK)

Terminal Part Information

Terminal Type ID	Terminated Lead	Diagnostic Test Probe	Terminal Removal Tool
I	Not required	J-35616-35 (VT)	No Tool Required

M104R Parking Brake Actuator - Right

Pin	Size	Color	Circuit	Function	Terminal Type ID	Option
1	2.5	GN / VT	1988	Right Park Brake Motor Apply Control	I	—
2	2.5	GY	4368	Right Park Brake Motor Low Reference	I	—

M107LR Folding Rear Seat Back Actuator - Left (ATN/ATT)

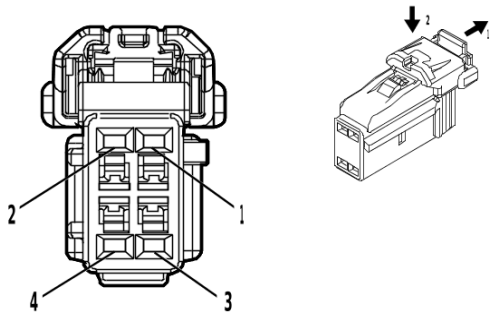

4872683

Connector Part Information

Harness Type: Rear Seat Wiring Harness - 2nd Row Left
OEM Connector: 6098-8435
Service Connector: Service by Harness - See Part Catalog
Description: 4-Way F 1.2 Series(BK)

Terminal Part Information

Terminal Type ID	Terminated Lead	Diagnostic Test Probe	Terminal Removal Tool
I	Not required	J-35616-16 (L-GN)	No Tool Required

M107LR Folding Rear Seat Back Actuator - Left (ATN/ATT)

Pin	Size	Color	Circuit	Function	Terminal Type ID	Option
1	0.75	RD / GY	6240	Battery Positive Voltage	I	—
2	0.75	BK	1150	Ground	I	—
3	0.5	GN	6808	Left Rear Folding Seat Motor Control	I	—
4	—	—	—	Not Occupied	—	—

M107RR Folding Rear Seat Back Actuator - Right (ATN/ATT)

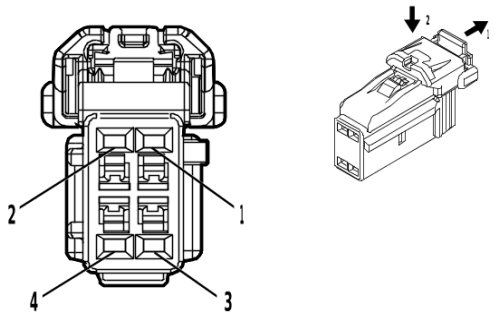

4872683

Connector Part Information

Harness Type: Rear Seat Wiring Harness - 2nd Row Right
OEM Connector: 6098-8435
Service Connector: Service by Harness - See Part Catalog
Description: 4-Way F 1.2 Series(BK)

Terminal Part Information

Terminal Type ID	Terminated Lead	Diagnostic Test Probe	Terminal Removal Tool
I	Not required	J-35616-16 (L-GN)	No Tool Required

M107RR Folding Rear Seat Back Actuator - Right (ATN/ATT)

Pin	Size	Color	Circuit	Function	Terminal Type ID	Option
1	0.75	RD / GY	6240	Battery Positive Voltage	I	—
2	0.75	BK	1450	Ground	I	—
3	0.75	BN / WH	6809	Right Rear Folding Seat Motor Control	I	—
4	—	—	—	Not Occupied	—	—

M108LR 3rd Row Seat Back Pivot Actuator Motor - Left (AS8)

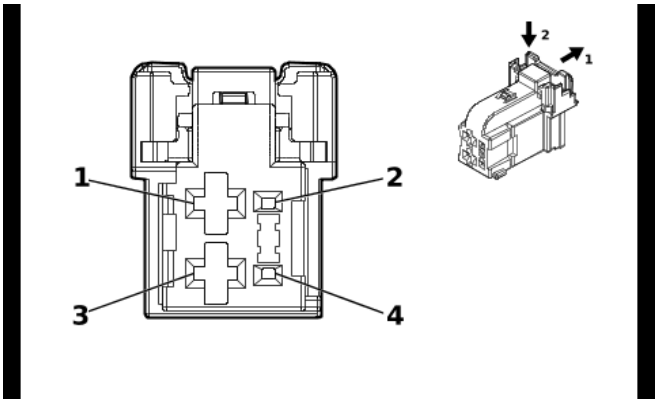

5410027

Connector Part Information

Harness Type: 3rd Row Seat Wiring Harness
OEM Connector: 2316171-1
Service Connector: Service by Harness - See Part Catalog
Description: 4-Way F 0.64, 2.8 Series(BK)

Terminal Part Information

Terminal Type ID	Terminated Lead	Diagnostic Test Probe	Terminal Removal Tool
I	Not required	J-35616-35 (VT)	No Tool Required
II	Not required	J-35616-64B (L-BU)	No Tool Required

M108LR 3rd Row Seat Back Pivot Actuator Motor - Left (AS8)

Pin	Size	Color	Circuit	Function	Terminal Type ID	Option
1	1.5	BN	4222	3rd Row Left Seat Recline Motor Rearward Control	I	—
2	0.5	YE / BN	4214	3rd Row Left Seat Recline Position Sensor Signal	II	—
3	1.5	VT / BK	4221	3rd Row Left Seat Recline Motor Forward Control	I	—
4	0.5	BK / BU	5474	3rd Row Seat Sensor Low Reference	II	—

M108RR 3rd Row Seat Back Pivot Actuator Motor - Right (AS8)

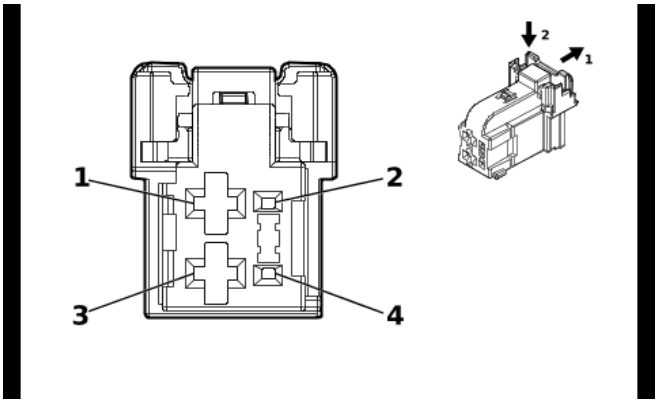

5410027

Connector Part Information

Harness Type: 3rd Row Seat Wiring Harness
OEM Connector: 2316171-1
Service Connector: Service by Harness - See Part Catalog
Description: 4-Way F 0.64, 2.8 Series(BK)

Terminal Part Information

Terminal Type ID	Terminated Lead	Diagnostic Test Probe	Terminal Removal Tool
I	Not required	J-35616-35 (VT)	No Tool Required
II	Not required	J-35616-64B (L-BU)	No Tool Required

M108RR 3rd Row Seat Back Pivot Actuator Motor - Right (AS8)

Pin	Size	Color	Circuit	Function	Terminal Type ID	Option
1	1.5	GY / OG	4218	3rd Row Right Seat Recline Rearward Control	I	—
2	0.5	WH / VT	4213	3rd Row Right Seat Recline Position Sensor Signal	II	—
3	1.5	BU	4217	3rd Row Right Seat Recline Motor Forward Control	I	—
4	0.5	BK / BU	5474	3rd Row Seat Sensor Low Reference	II	—

M109LR Folding 3rd Row Seat Back Actuator - Left (AS8)

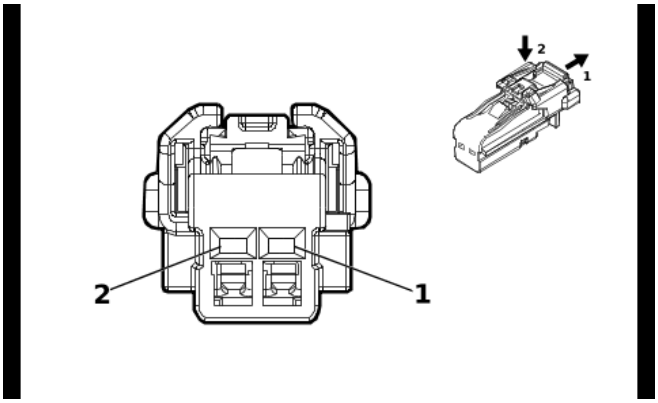

4115691

Connector Part Information

Harness Type: 3rd Row Seat Wiring Harness
OEM Connector: 6098-8988
Service Connector: Service by Harness - See Part Catalog
Description: 2-Way F 1.2 MCON Series(BK)

Terminal Part Information

Terminal Type ID	Terminated Lead	Diagnostic Test Probe	Terminal Removal Tool
I	Not required	J-35616-16 (L-GN)	No Tool Required

M109LR Folding 3rd Row Seat Back Actuator - Left (AS8)

Pin	Size	Color	Circuit	Function	Terminal Type ID	Option
1	0.75	YE / BK	8923	Left 3rd Row Folding Seat Back Unlatch Motor Control High	I	—
2	0.75	GY / WH	8922	Left 3rd Row Folding Seat Back Unlatch Motor Control Low	I	—

M109RR Folding 3rd Row Seat Back Actuator - Right (AS8)

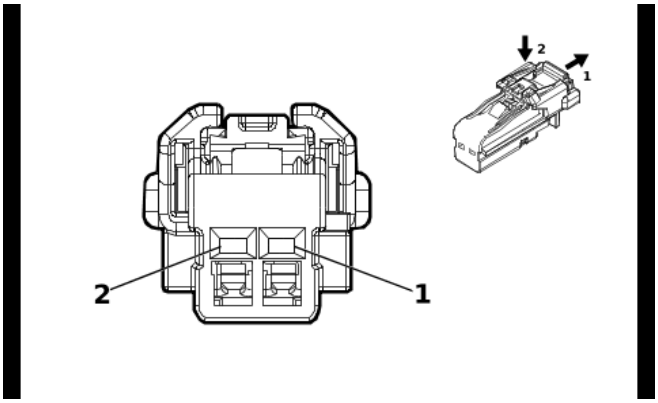

4115691

Connector Part Information

Harness Type: 3rd Row Seat Wiring Harness
OEM Connector: 6098-8988
Service Connector: Service by Harness - See Part Catalog
Description: 2-Way F 1.2 MCON Series(BK)

Terminal Part Information

Terminal Type ID	Terminated Lead	Diagnostic Test Probe	Terminal Removal Tool
I	Not required	J-35616-16 (L-GN)	No Tool Required

M109RR Folding 3rd Row Seat Back Actuator - Right (AS8)

Pin	Size	Color	Circuit	Function	Terminal Type ID	Option
1	0.75	GN / BN	8921	Right 3rd Row Folding Seat Back Unlatch Motor Control High	I	—
2	0.75	BU / VT	8920	Right 3rd Row Folding Seat Back Unlatch Motor Control Low	I	—

M122 Exhaust Pressure Regulator Valve (LM2)

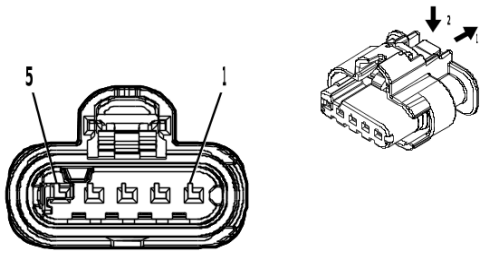

4997783

Connector Part Information

Harness Type: Engine Wiring Harness
OEM Connector: 1-2296697-1
Service Connector: 19371195
Description: 5-Way F 1.2 MCON-CB Series, Sealed(BK)

Terminal Part Information

Terminal Type ID	Terminated Lead	Diagnostic Test Probe	Terminal Removal Tool
I	Not required	J-35616-16 (LT GN)	No Tool Required

M122 Exhaust Pressure Regulator Valve (LM2)

Pin	Size	Color	Circuit	Function	Terminal Type ID	Option
1	0.5	BK / YE	548	Engine Control Sensors Low Reference 1	I	—
2	0.5	BN / GN	4305	Exhaust Flow Control Valve 1	I	—
3	0.5	BU / RD	460	Engine Control Sensors 5 Volt Reference 1	I	—
4	0.5	BN	1421	Exhaust Restrictor Motor Closed Control	I	—
5	0.5	YE / BN	1420	Exhaust Restrictor Motor Open Control	I	—

M123 Transmission Park Valve Lock Solenoid Actuator (MQC)

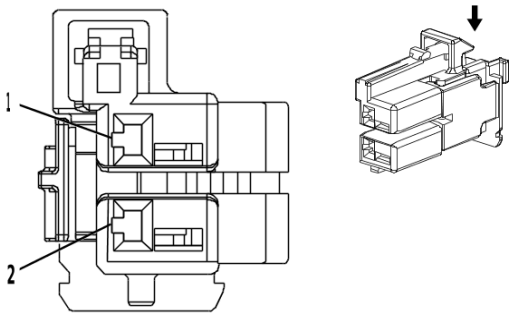

4364736

Connector Part Information

Harness Type: Automatic Transmission Wiring Harness
OEM Connector: 2289523-2
Service Connector: Service by Harness - See Part Catalog
Description: 2-Way F 1.2 MCON Series(BU)

Terminal Part Information

Terminal Type ID	Terminated Lead	Diagnostic Test Probe	Terminal Removal Tool
I	Not required	J-35616-16 (LT GN)	No Tool Required

M123 Transmission Park Valve Lock Solenoid Actuator (MQC)

Pin	Size	Color	Circuit	Function	Terminal Type ID	Option
1	0.5	BN	6387	Transmission High Side Driver 1 Control	I	—
2	0.5	OG	2159	Park Inhibit Solenoid Assembly Control	I	—

M135 Differential Lock Motor (G96)

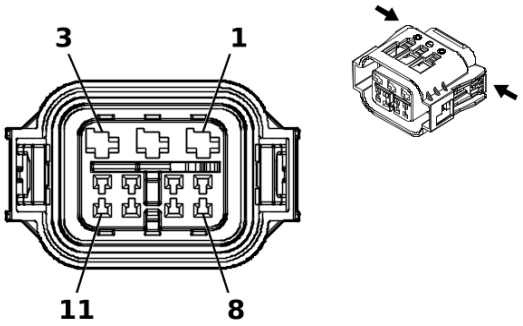

5202126

Connector Part Information

Harness Type: Differential Carrier Lock Wiring Harness
OEM Connector: 10090636
Service Connector: Service by Harness - See Part Catalog
Description: 11-Way F 1.2 Multilock, 2.8 SLK Series, Sealed(BK)

Terminal Part Information

Terminal Type ID	Terminated Lead	Diagnostic Test Probe	Terminal Removal Tool
I	Not required	J-35616-16 (L-GN)	No Tool Required
II	Not required	J-35616-4A (PU)	No Tool Required

M135 Differential Lock Motor (G96)

Pin	Size	Color	Circuit	Function	Terminal Type ID	Option
1	—	—	—	Not Occupied	—	—
2	2.5	YE / WH	7969	Axle Differential Lock Control Low	II	—
3	2.5	GY / BN	7968	Axle Differential Lock Control High	II	—
4	0.5	WH / RD	7973	Axle Differential Lock Motor Position Sensor High Reference	I	—
5	0.5	BU / WH	7978	Axle Differential Lock Motor Temperature Sensor Signal	I	—
6	0.5	GN / BN	7975	Axle Differential Lock Motor Position Sensor Signal 1	I	—
7	0.5	WH	7971	Axle Differential Lock Motor Brake Control High	I	—
8	0.5	BK / YE	7977	Axle Differential Lock Motor Temperature Sensor Low Reference	I	—
9	0.5	BK / VT	7974	Axle Differential Lock Motor Position Sensor Low Reference	I	—
10	0.5	GY	7976	Axle Differential Lock Motor Position Sensor Signal 2	I	—
11	0.5	VT / BK	7972	Axle Differential Lock Motor Brake Control Low	I	—

P13 Horn

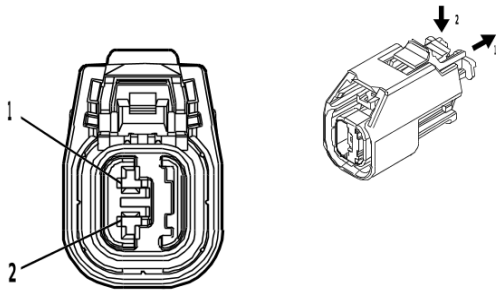

4889830

Connector Part Information

Harness Type: Body Wiring Harness
OEM Connector: 33164011
Service Connector: 19371210
Description: 2-Way F 1.5 OCS Series, Sealed(BK)

Terminal Part Information

Terminal Type ID	Terminated Lead	Diagnostic Test Probe	Terminal Removal Tool
I	Not required	J-35616-2A (GY)	No Tool Required

P13 Horn

Pin	Size	Color	Circuit	Function	Terminal Type ID	Option
1	0.75	BK	250	Ground	I	—
2	0.75	BN / GY	29	Horn Control	I	—

P16 Instrument Panel Cluster Control Module X1

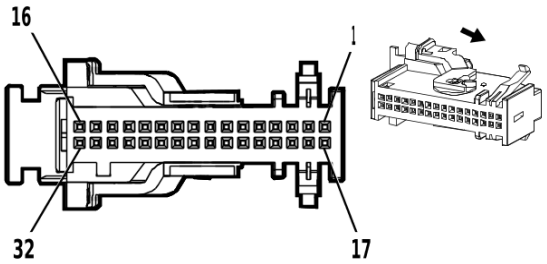

4806665

Connector Part Information

Harness Type: Instrument Panel Wiring Harness
OEM Connector: 13594078
Service Connector: 13511333
Description: 32-Way F 0.64 Micro-Quadlock Series(BK)

Terminal Part Information

Terminal Type ID	Terminated Lead	Diagnostic Test Probe	Terminal Removal Tool
I	19300632	J-35616-64B (L-BU)	J-38125-215A

P16 Instrument Panel Cluster Control Module X1

Pin	Size	Color	Circuit	Function	Terminal Type ID	Option
1	0.35	BN / BU	7216	Ethernet Bus 7 [-]	I	—
2 - 6	—	—	—	Not Occupied	—	—
7	0.5	RD / WH	1340	Battery Positive Voltage	I	—
8	0.5	VT / WH	639	Run/Crank Ignition 1 Voltage	I	—
9 - 10	—	—	—	Not Occupied	—	—
11	0.35	GY / BK	4787	Day Night LED Control	I	—
12	0.35	GY / YE	3885	Forward Collision Alert LED Control	I	—
13	0.35	BU / WH	4985	AUTOSAR CAN Bus [+] 5 Serial Data	I	—
14	0.35	BU / YE	4984	AUTOSAR CAN Bus [-] 5 Serial Data	I	—
15 - 16	—	—	—	Not Occupied	—	—
17	0.35	GY / BU	7217	Ethernet Bus 7 [+]	I	—
18	—	—	—	Not Occupied	—	—
19	0.75	BK / WH	1851	Signal Ground	I	—
20	0.35	GN / BK	3894	Instrument Cluster LIN Bus 1	I	—
21 - 28	—	—	—	Not Occupied	—	—
29	0.35	BU / WH	4985	AUTOSAR CAN Bus [+] 5 Serial Data	I	—
30	0.35	BU / YE	4984	AUTOSAR CAN Bus [-] 5 Serial Data	I	—
31	—	—	—	Not Occupied	—	—
32	0.35	GN / BN	507	Wait To Start Indicator Control	I	—

P16 Instrument Panel Cluster Control Module X2 (UV6)

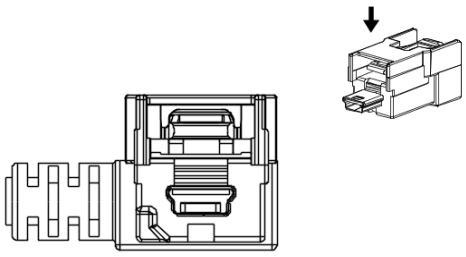

4058778

Connector Part Information

Harness Type: Instrument Panel Wiring Harness LVDS
OEM Connector: 13580199
Service Connector: Service by Cable Assembly — See Part Catalog
Description: 5-Way M 2.0 Mini-B USB Type(GY)

Terminal Part Information

Terminal Type ID	Terminated Lead	Diagnostic Test Probe	Terminal Removal Tool
I	Not required	No Tool Required	No Tool Required

P16 Instrument Panel Cluster Control Module X2 (UV6)

Pin	Size	Color	Circuit	Function	Terminal Type ID	Option
—	—	LVDS	—	(Head Up Display) Head Up Display Signal	I	—

P18 Door Lock Status Indicator

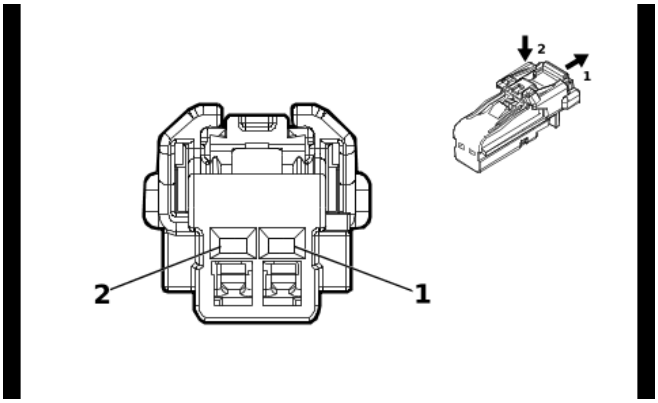

4115691

Connector Part Information

Harness Type: Front Side Door Door Lock Door Wiring Harness - Driver
OEM Connector: 6098-8988
Service Connector: Service by Harness - See Part Catalog
Description: 2-Way F 1.2 MCON Series(BK)

Terminal Part Information

Terminal Type ID	Terminated Lead	Diagnostic Test Probe	Terminal Removal Tool
I	Not required	J-35616-16 (L-GN)	No Tool Required

P18 Door Lock Status Indicator

Pin	Size	Color	Circuit	Function	Terminal Type ID	Option
1	0.35	GY	728	Security Indicator Control	I	—
2	0.35	BK	1150	Ground	I	—

P19AFC Front Floor Speaker - Console (UQA/UQS)

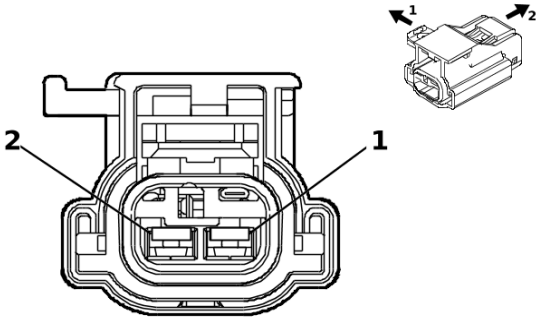

5219859

Connector Part Information

Harness Type: Body Wiring Harness
OEM Connector: 13518463
Service Connector: 84867145
Description: 2-Way F 2.8 APEX Series(BK)

Terminal Part Information

Terminal Type ID	Terminated Lead	Diagnostic Test Probe	Terminal Removal Tool
I	Not required	J-35616-35 (VT)	No Tool Required

P19AFC Front Floor Speaker - Console (UQA/UQS)

Pin	Size	Color	Circuit	Function	Terminal Type ID	Option
1	2.5	GN / BK	1794	Left/Rear Subwoofer [-] Control	I	—
2	2.5	BU / GY	346	Left/Rear Subwoofer [+] Control	I	—

P19AG Radio Front Side Door Speaker - Left

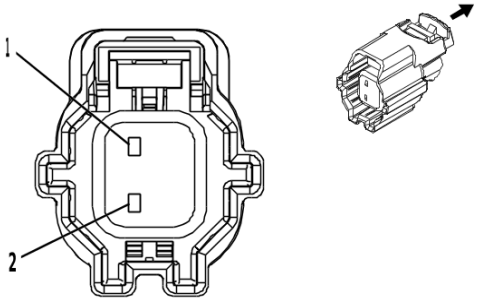

4223204

Connector Part Information

Harness Type: Front Side Door Door Wiring Harness - Driver
OEM Connector: 34062-0044
Service Connector: Service by Harness - See Part Catalog
Description: 2-Way F 1.5 MX Series, Sealed(BK)

Terminal Part Information

Terminal Type ID	Terminated Lead	Diagnostic Test Probe	Terminal Removal Tool
I	Not required	J-35616-2A (GY)	No Tool Required

P19AG Radio Front Side Door Speaker - Left

Pin	Size	Color	Circuit	Function	Terminal Type ID	Option
1	0.75	BN / BU	118	Left Front Speaker [-] Control 1	I	—
2	0.75	BU	201	Left Front Speaker 1 [+] Control	I	—

P19AH Radio Front Side Door Speaker - Right

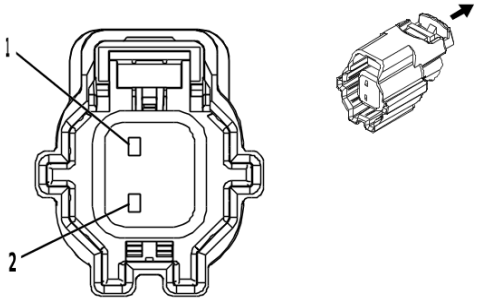

4223204

Connector Part Information

Harness Type: Front Side Door Door Wiring Harness - Passenger
OEM Connector: 34062-0044
Service Connector: Service by Harness - See Part Catalog
Description: 2-Way F 1.5 MX Series, Sealed(BK)

Terminal Part Information

Terminal Type ID	Terminated Lead	Diagnostic Test Probe	Terminal Removal Tool
I	Not required	J-35616-2A (GY)	No Tool Required

P19AH Radio Front Side Door Speaker - Right

Pin	Size	Color	Circuit	Function	Terminal Type ID	Option
1	0.75	YE / BK	117	Right Front Speaker [-] Control 1	I	—
2	0.75	YE	200	Right Front Speaker 1 [+] Control	I	—

P19AL Radio Rear Side Door Speaker - Left (UQF/UQA/UQS/UQP/UQH)

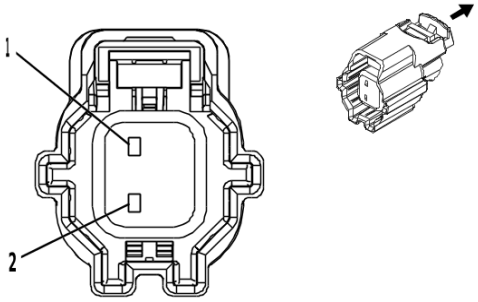

4223204

Connector Part Information

Harness Type: Rear Side Door Door Wiring Harness - Left
OEM Connector: 34062-0044
Service Connector: Service by Harness - See Part Catalog
Description: 2-Way F 1.5 MX Series, Sealed(BK)

Terminal Part Information

Terminal Type ID	Terminated Lead	Diagnostic Test Probe	Terminal Removal Tool
I	Not required	J-35616-2A (GY)	No Tool Required

P19AL Radio Rear Side Door Speaker - Left (UQF/UQA/UQS/UQP/UQH)

Pin	Size	Color	Circuit	Function	Terminal Type ID	Option
1	0.75	GN / BK	116	Left Rear Speaker [-] Control	I	—
2	0.75	GN	199	Left Rear Speaker [+] Control	I	—

P19ALU Radio Rear Side Door Upper Speaker - Left (UQP)

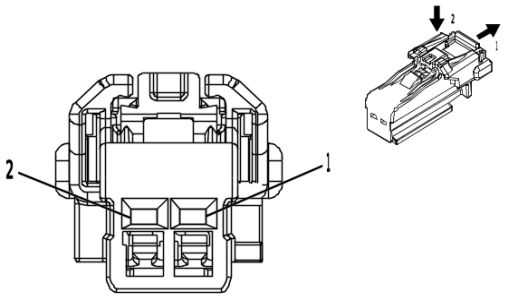

4373379

Connector Part Information

Harness Type: Rear Side Door Door Lock Door Wiring Harness - Left
OEM Connector: 6098-8989
Service Connector: Service by Harness - See Part Catalog
Description: 2-Way F 1.2 MCON Series(GY)

Terminal Part Information

Terminal Type ID	Terminated Lead	Diagnostic Test Probe	Terminal Removal Tool
I	Not required	J-35616-16 (L-GN)	No Tool Required

P19ALU Radio Rear Side Door Upper Speaker - Left (UQP)

Pin	Size	Color	Circuit	Function	Terminal Type ID	Option
1	0.75	GN / BK	116	Left Rear Speaker [-] Control	I	—
2	0.75	GN	199	Left Rear Speaker [+] Control	I	—

P19AM Radio Rear Side Door Speaker - Right

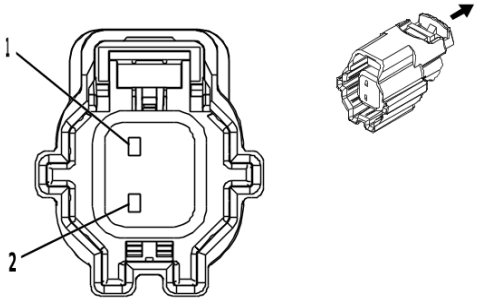

4223204

Connector Part Information

Harness Type: Rear Side Door Door Wiring Harness - Right
OEM Connector: 34062-0044
Service Connector: Service by Harness - See Part Catalog
Description: 2-Way F 1.5 MX Series, Sealed(BK)

Terminal Part Information

Terminal Type ID	Terminated Lead	Diagnostic Test Probe	Terminal Removal Tool
I	Not required	J-35616-2A (GY)	No Tool Required

P19AM Radio Rear Side Door Speaker - Right

Pin	Size	Color	Circuit	Function	Terminal Type ID	Option
1	0.75	BU / BK	115	Right Rear Speaker [-] Control	I	—
2	0.75	WH	46	Right Rear Speaker [+] Control	I	—

P19AMU Radio Rear Side Door Upper Speaker - Right (UQP)

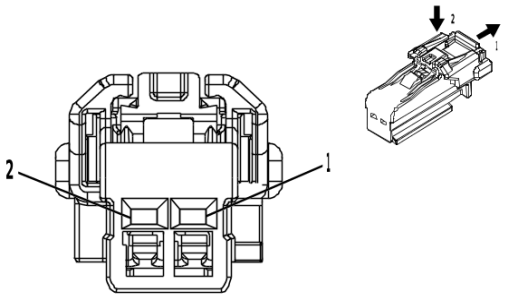

4373379

Connector Part Information

Harness Type: Body Wiring Harness
OEM Connector: 13532423
Service Connector: 19369632
Description: 2-Way F 1.2 MCON Series(GY)

Terminal Part Information

Terminal Type ID	Terminated Lead	Diagnostic Test Probe	Terminal Removal Tool
I	Not required	J-35616-16 (LT GN)	No Tool Required

P19AMU Radio Rear Side Door Upper Speaker - Right (UQP)

Pin	Size	Color	Circuit	Function	Terminal Type ID	Option
1	0.75	BU / BK	115	Right Rear Speaker [-] Control	I	—
2	0.75	WH	46	Right Rear Speaker [+] Control	I	—

P19AN Radio Rear Surround Speaker - Left (UQP)

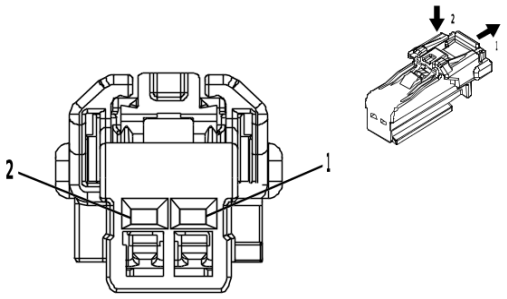

4373379

Connector Part Information

Harness Type: Body Wiring Harness
OEM Connector: 13532423
Service Connector: 19369632
Description: 2-Way F 1.2 MCON Series(GY)

Terminal Part Information

Terminal Type ID	Terminated Lead	Diagnostic Test Probe	Terminal Removal Tool
I	Not required	J-35616-16 (LT GN)	No Tool Required

P19AN Radio Rear Surround Speaker - Left (UQP)

Pin	Size	Color	Circuit	Function	Terminal Type ID	Option
1	0.75	BN / WH	8575	Left Rear D-Pillar Speaker [-] Control	I	—
2	0.75	WH / GN	8576	Left Rear D-Pillar Speaker [+] Control	I	—

P19AN Radio Rear Surround Speaker - Left (UQS)

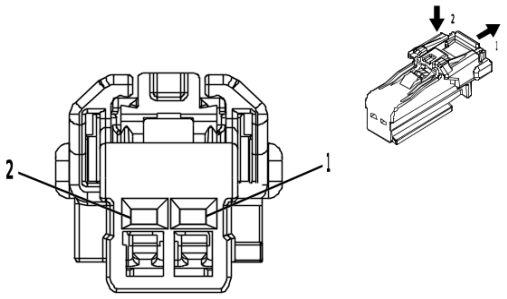

4373379

Connector Part Information

Harness Type: Body Wiring Harness
OEM Connector: 13532423
Service Connector: 19369632
Description: 2-Way F 1.2 MCON Series(GY)

Terminal Part Information

Terminal Type ID	Terminated Lead	Diagnostic Test Probe	Terminal Removal Tool
I	Not required	J-35616-16 (LT GN)	No Tool Required

P19AN Radio Rear Surround Speaker - Left (UQS)

Pin	Size	Color	Circuit	Function	Terminal Type ID	Option
1	0.75	WH / BN	1891	Rear/Left Rear Surround Speaker [-] Control	I	—
2	0.75	GY	8365	Rear Surround Speaker Series [+] to [-]	I	—

P19B Radio Front Center Speaker (UQP)

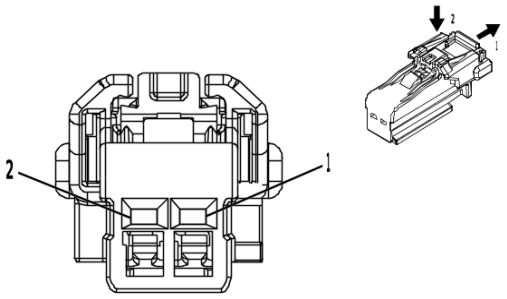

4373379

Connector Part Information

Harness Type: Instrument Panel Wiring Harness
OEM Connector: 6098-8989
Service Connector: 19369632
Description: 2-Way F 1.2 MCON Series(GY)

Terminal Part Information

Terminal Type ID	Terminated Lead	Diagnostic Test Probe	Terminal Removal Tool
I	Not required	J-35616-16 (LT GN)	No Tool Required

P19B Radio Front Center Speaker (UQP)

Pin	Size	Color	Circuit	Function	Terminal Type ID	Option
1	0.75	BU / YE	1960	Front Center Speaker [-] Control	I	—
2	0.75	YE / WH	1860	Front Center Speaker [+] Control	I	—

P19H Radio Windshield Side Garnish Molding Speaker - Left Front (UQP)

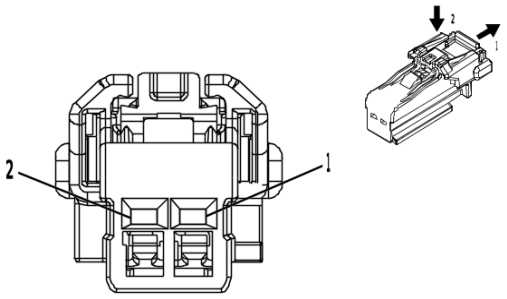

4373379

Connector Part Information

Harness Type: Instrument Panel Wiring Harness
OEM Connector: 6098-8989
Service Connector: 19369632
Description: 2-Way F 1.2 MCON Series(GY)

Terminal Part Information

Terminal Type ID	Terminated Lead	Diagnostic Test Probe	Terminal Removal Tool
I	Not required	J-35616-16 (LT GN)	No Tool Required

P19H Radio Windshield Side Garnish Molding Speaker - Left Front (UQP)

Pin	Size	Color	Circuit	Function	Terminal Type ID	Option
1	0.75	GY / BK	1974	Left Front Speaker [-] Control 2	I	—
2	0.75	BU / VT	1874	Left Front Speaker [+] Control 2	I	—

P19J Radio Front Speaker - Instrument Panel Left (-GFW)

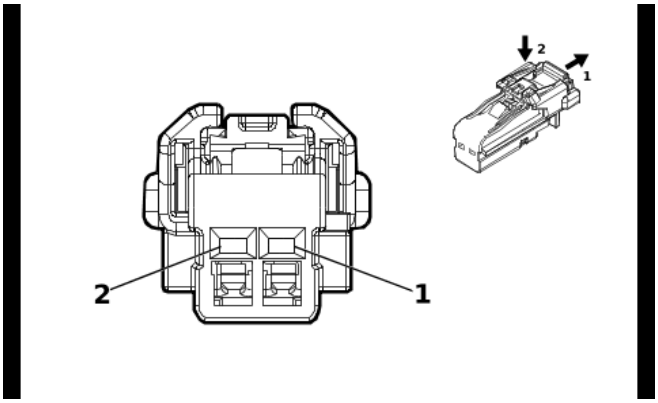

4115691

Connector Part Information

Harness Type: Instrument Panel Wiring Harness
OEM Connector: 35311666
Service Connector: 19352066
Description: 2-Way F 1.2 MCON Series(BK)

Terminal Part Information

Terminal Type ID	Terminated Lead	Diagnostic Test Probe	Terminal Removal Tool
I	Not required	J-35616-16 (LT GN)	No Tool Required

P19J Radio Front Speaker - Instrument Panel Left (-GFW)

Pin	Size	Color	Circuit	Function	Terminal Type ID	Option
1	0.5	BN / BU	118	Left Front Speaker [-] Control 1	I	—
2	0.5	BU	201	Left Front Speaker 1 [+] Control	I	—

P19J Radio Front Speaker - Instrument Panel Left (GFW)

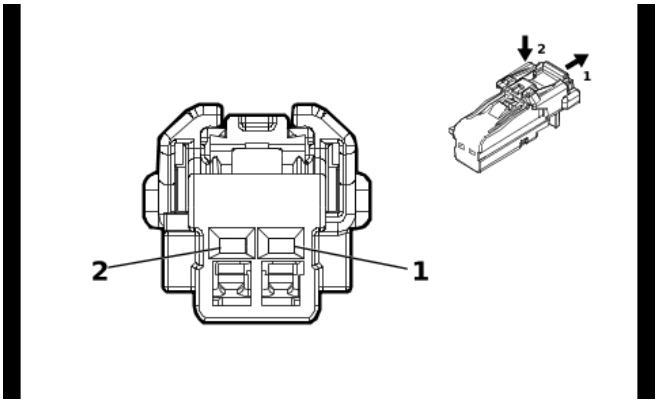

5377746

Connector Part Information

Harness Type: Instrument Panel Wiring Harness
OEM Connector: 35327306
Service Connector: 84867147
Description: 2-Way F 1.2 MCON Series(BN)

Terminal Part Information

Terminal Type ID	Terminated Lead	Diagnostic Test Probe	Terminal Removal Tool
I	Not required	J-35616-16 (LT GN)	No Tool Required

P19J Radio Front Speaker - Instrument Panel Left (GFW)

Pin	Size	Color	Circuit	Function	Terminal Type ID	Option
1	0.5	BN / BU	118	Left Front Speaker [-] Control 1	I	—
2	0.5	BU	201	Left Front Speaker 1 [+] Control	I	—

P19LA Radio Rear Compartment Speaker (UQH)

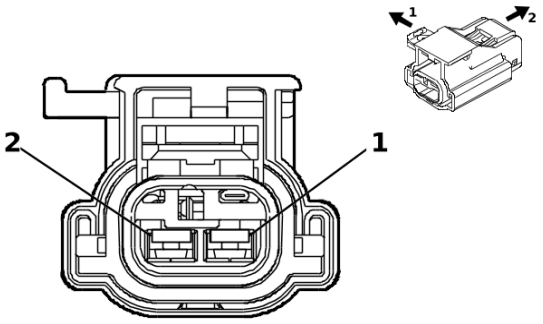

5219859

Connector Part Information

Harness Type: Body Wiring Harness
OEM Connector: 13518463
Service Connector: 84867145
Description: 2-Way F 2.8 APEX Series(BK)

Terminal Part Information

Terminal Type ID	Terminated Lead	Diagnostic Test Probe	Terminal Removal Tool
I	Not required	J-35616-35 (VT)	No Tool Required

P19LA Radio Rear Compartment Speaker (UQH)

Pin	Size	Color	Circuit	Function	Terminal Type ID	Option
1	2.5	GY / BK	315	Right Subwoofer [-] Control	I	—
2	2.5	GN / VT	1795	Right Subwoofer [+] Control	I	—

P19M Radio Body Rear Corner Upper Garnish Molding Speaker - Left (UQA)

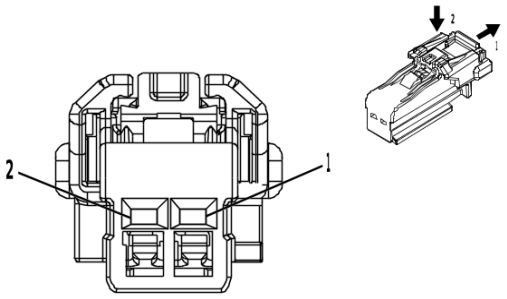

4373379

Connector Part Information

Harness Type: Body Wiring Harness
OEM Connector: 13532423
Service Connector: 19369632
Description: 2-Way F 1.2 MCON Series(GY)

Terminal Part Information

Terminal Type ID	Terminated Lead	Diagnostic Test Probe	Terminal Removal Tool
I	Not required	J-35616-16 (LT GN)	No Tool Required

P19M Radio Body Rear Corner Upper Garnish Molding Speaker - Left (UQA)

Pin	Size	Color	Circuit	Function	Terminal Type ID	Option
1	0.75	GN / BK	116	Left Rear Speaker [-] Control	I	—
2	0.75	GN	199	Left Rear Speaker [+] Control	I	—

P19RHA Radio Roof Speaker - Left Front (UQH)

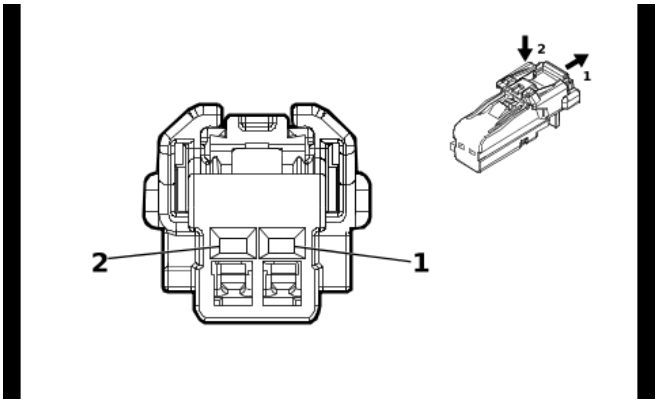

5490513

Connector Part Information

Harness Type: Headlining Trim Panel Wiring Harness
OEM Connector: 6098-8991
Service Connector: 84941158
Description: 2-Way F 1.2 Series(GN)

Terminal Part Information

Terminal Type ID	Terminated Lead	Diagnostic Test Probe	Terminal Removal Tool
I	Not required	J-35616-16 (LT GN)	No Tool Required

P19RHA Radio Roof Speaker - Left Front (UQH)

Pin	Size	Color	Circuit	Function	Terminal Type ID	Option
1	0.75	BU / WH	8571	Left Front Headliner Speaker [-] Control	I	—
2	0.75	GN / BN	8572	Left Front Headliner Speaker [+] Control	I	—

P19RHC Radio Roof Speaker - Left Rear (UQH)

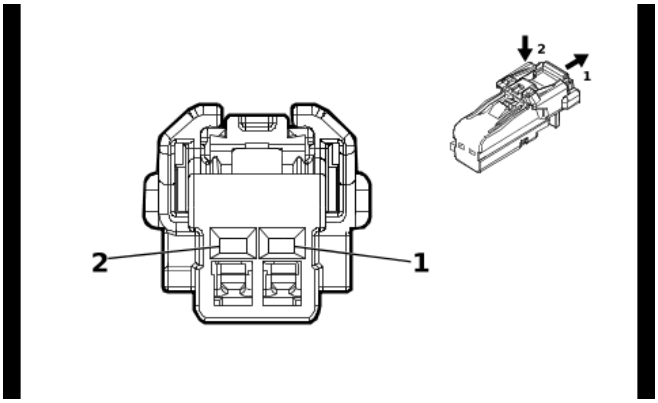

5490513

Connector Part Information

Harness Type: Headlining Trim Panel Wiring Harness
OEM Connector: 6098-8991
Service Connector: 84941158
Description: 2-Way F 1.2 Series(GN)

Terminal Part Information

Terminal Type ID	Terminated Lead	Diagnostic Test Probe	Terminal Removal Tool
I	Not required	J-35616-16 (LT GN)	No Tool Required

P19RHC Radio Roof Speaker - Left Rear (UQH)

Pin	Size	Color	Circuit	Function	Terminal Type ID	Option
1	0.75	GN / WH	8567	Left Rear Headliner Speaker [-] Control	I	—
2	0.75	GY / BN	8568	Left Rear Headliner Speaker [+] Control	I	—

P19RHD Radio Roof Speaker - Right Rear (UQH)

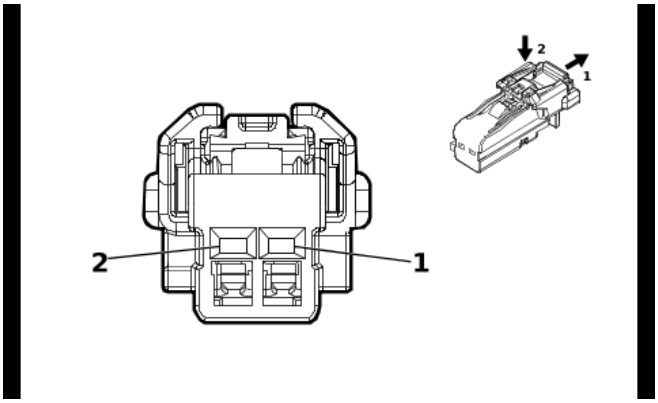

5490513

Connector Part Information

Harness Type: Headlining Trim Panel Wiring Harness
OEM Connector: 6098-8991
Service Connector: 84941158
Description: 2-Way F 1.2 Series(GN)

Terminal Part Information

Terminal Type ID	Terminated Lead	Diagnostic Test Probe	Terminal Removal Tool
I	Not required	J-35616-16 (LT GN)	No Tool Required

P19RHD Radio Roof Speaker - Right Rear (UQH)

Pin	Size	Color	Circuit	Function	Terminal Type ID	Option
1	0.75	BN	8569	Right Rear Headliner Speaker [-] Control	I	—
2	0.75	VT / GY	8570	Right Rear Headliner Speaker [+] Control	I	—

P19V Radio Windshield Side Garnish Molding Speaker - Right Front (UQP)

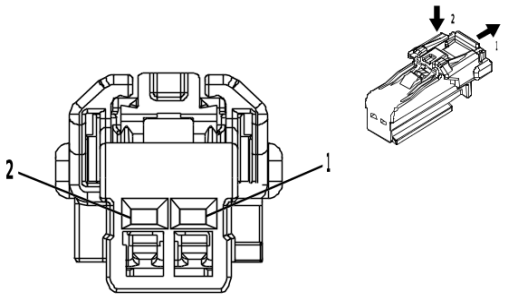

4373379

Connector Part Information

Harness Type: Instrument Panel Wiring Harness
OEM Connector: 6098-8989
Service Connector: 19369632
Description: 2-Way F 1.2 MCON Series(GY)

Terminal Part Information

Terminal Type ID	Terminated Lead	Diagnostic Test Probe	Terminal Removal Tool
I	Not required	J-35616-16 (LT GN)	No Tool Required

P19V Radio Windshield Side Garnish Molding Speaker - Right Front (UQP)

Pin	Size	Color	Circuit	Function	Terminal Type ID	Option
1	0.75	BN / BK	1975	Right Front Speaker [-] Control 2	I	—
2	0.75	GN / BU	1875	Right Front Speaker [+] Control 2	I	—

P19W Radio Front Speaker - Instrument Panel Right (-GFW)

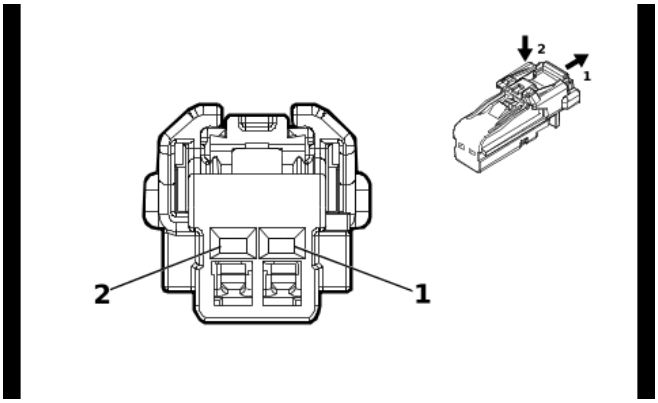

4115691

Connector Part Information

Harness Type: Instrument Panel Wiring Harness
OEM Connector: 35311666
Service Connector: 19352066
Description: 2-Way F 1.2 MCON Series(BK)

Terminal Part Information

Terminal Type ID	Terminated Lead	Diagnostic Test Probe	Terminal Removal Tool
I	Not required	J-35616-16 (LT GN)	No Tool Required

P19W Radio Front Speaker - Instrument Panel Right (-GFW)

Pin	Size	Color	Circuit	Function	Terminal Type ID	Option
1	0.5	YE / BK	117	Right Front Speaker [-] Control 1	I	—
2	0.5	YE	200	Right Front Speaker 1 [+] Control	I	—

P19W Radio Front Speaker - Instrument Panel Right (GFW)

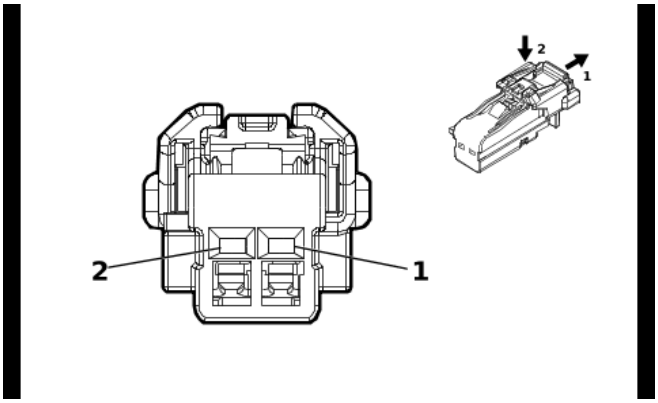

5377746

Connector Part Information

Harness Type: Instrument Panel Wiring Harness
OEM Connector: 35327306
Service Connector: 84867147
Description: 2-Way F 1.2 MCON Series(BN)

Terminal Part Information

Terminal Type ID	Terminated Lead	Diagnostic Test Probe	Terminal Removal Tool
I	Not required	J-35616-16 (LT GN)	No Tool Required

P19W Radio Front Speaker - Instrument Panel Right (GFW)

Pin	Size	Color	Circuit	Function	Terminal Type ID	Option
1	0.5	YE / BK	117	Right Front Speaker [-] Control 1	I	—
2	0.5	YE	200	Right Front Speaker 1 [+] Control	I	—

P19Z Radio Body Rear Corner Upper Garnish Molding Speaker - Right (UQA)

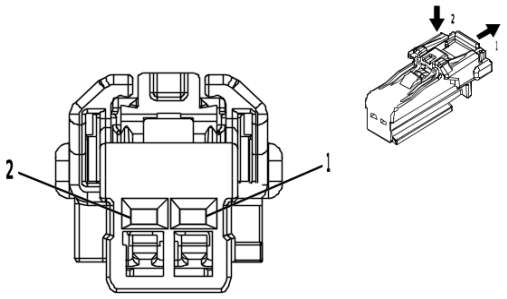

4373379

Connector Part Information

Harness Type: Body Wiring Harness
OEM Connector: 13532423
Service Connector: 19369632
Description: 2-Way F 1.2 MCON Series(GY)

Terminal Part Information

Terminal Type ID	Terminated Lead	Diagnostic Test Probe	Terminal Removal Tool
I	Not required	J-35616-16 (LT GN)	No Tool Required

P19Z Radio Body Rear Corner Upper Garnish Molding Speaker - Right (UQA)

Pin	Size	Color	Circuit	Function	Terminal Type ID	Option
1	0.75	GY / WH	8577	Right Rear D-Pillar Speaker [-] Control	I	—
2	0.75	VT	8578	Right Rear D-Pillar Speaker [+] Control	I	—

P19Z Radio Body Rear Corner Upper Garnish Molding Speaker - Right (UQA/UQP)

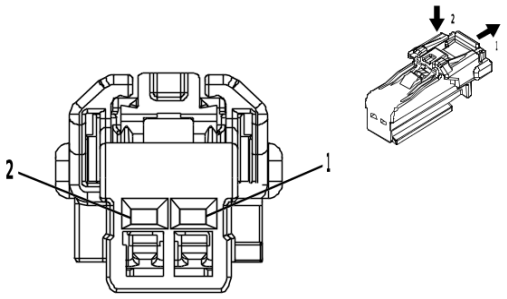

4373379

Connector Part Information

Harness Type: Rear Side Door Door Lock Door Wiring Harness - Right
OEM Connector: 6098-8989
Service Connector: Service by Harness - See Part Catalog
Description: 2-Way F 1.2 MCON Series(GY)

Terminal Part Information

Terminal Type ID	Terminated Lead	Diagnostic Test Probe	Terminal Removal Tool
I	Not required	J-35616-16 (L-GN)	No Tool Required

P19Z Radio Body Rear Corner Upper Garnish Molding Speaker - Right (UQA/UQP)

Pin	Size	Color	Circuit	Function	Terminal Type ID	Option
1	0.75	BU / BK	115	Right Rear Speaker [-] Control	I	—
2	0.75	WH	46	Right Rear Speaker [+] Control	I	—

P19Z Radio Body Rear Corner Upper Garnish Molding Speaker - Right (UQS)

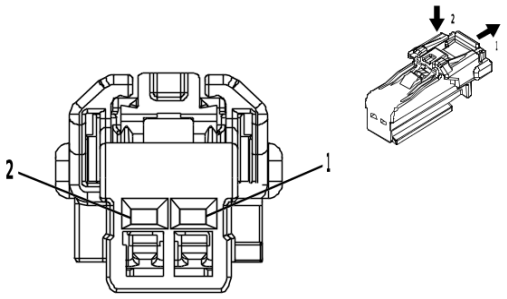

4373379

Connector Part Information

Harness Type: Body Wiring Harness
OEM Connector: 13532423
Service Connector: 19369632
Description: 2-Way F 1.2 MCON Series(GY)

Terminal Part Information

Terminal Type ID	Terminated Lead	Diagnostic Test Probe	Terminal Removal Tool
I	Not required	J-35616-16 (LT GN)	No Tool Required

P19Z Radio Body Rear Corner Upper Garnish Molding Speaker - Right (UQS)

Pin	Size	Color	Circuit	Function	Terminal Type ID	Option
1	0.75	GY	8365	Rear Surround Speaker Series [+] to [-]	I	—
2	0.75	VT / BU	1889	Rear/Left Rear Surround Speaker [+] Control	I	—

P22E Video Display - Left Front Seat Back (UW9)

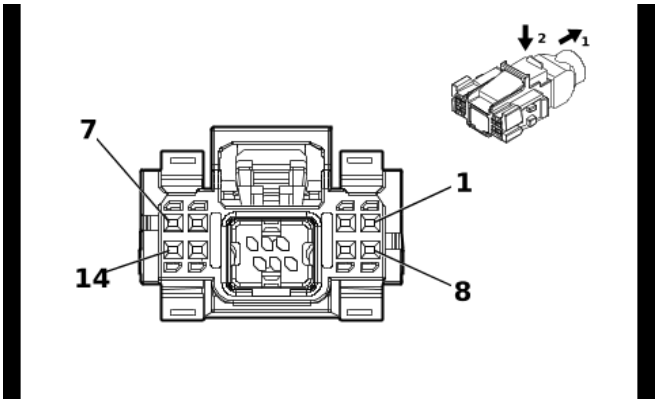

5500325

Connector Part Information

Harness Type: Front Seat Wiring Harness - Driver
OEM Connector: 13532130
Service Connector: Service by Harness - See Part Catalog
Description: 14-Way F 0.5 MQS, High Speed Autolink Series Series(GY)

Terminal Part Information

Terminal Type ID	Terminated Lead	Diagnostic Test Probe	Terminal Removal Tool
I	Not required	EL-35616-58 (BK)	No Tool Required

P22E Video Display - Left Front Seat Back (UW9)

Pin	Size	Color	Circuit	Function	Terminal Type ID	Option
1	0.35	RD / BN	3640	Battery Positive Voltage	I	—
2	0.35	BK / WH	1451	Signal Ground	I	—
3	0.01	Bare	4819	Rear Seat Infotainment Display 2 LVDS (Low Voltage Differential Signaling) Low Reference	I	—
4	0.01	BU	4820	Passenger Seat Back Video Display Signal [+]	I	—
5	0.01	WH	4821	Rear Seat Infotainment Display 2 LVDS (Low Voltage Differential Signaling) Signal [-]	I	—
6	0.35	GN / YE	7066	Entertainment Remote Enable Signal	I	—
7 - 14	—	—	—	Not Occupied	—	—

P22F Video Display - Right Front Seat Back X1 (UW9)

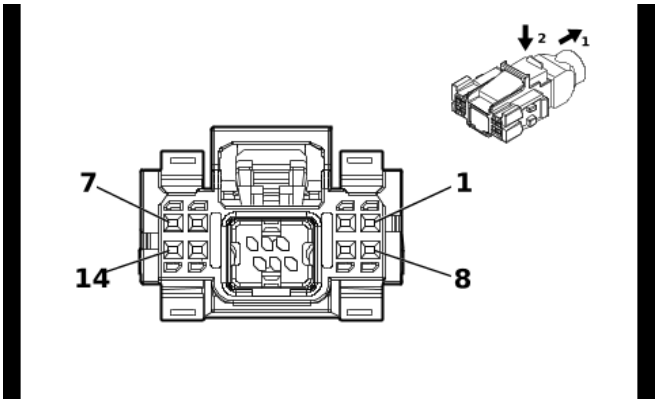

5404342

Connector Part Information

Harness Type: Front Seat Wiring Harness - Passenger
OEM Connector: 13532129
Service Connector: Service by Harness - See Part Catalog
Description: 14-Way F 0.5 MQS, High Speed Autolink Series Series(BK)

Terminal Part Information

Terminal Type ID	Terminated Lead	Diagnostic Test Probe	Terminal Removal Tool
I	Not required	EL-35616-58 (BK)	No Tool Required
II	Not required	No Tool Required	No Tool Required

P22F Video Display - Right Front Seat Back X1 (UW9)

Pin	Size	Color	Circuit	Function	Terminal Type ID	Option
1	0.35	RD / BN	3640	Battery Positive Voltage	I	—
2	0.35	BK / WH	1451	Signal Ground	I	—
3	0.01	Bare	4819	Rear Seat Infotainment Display 2 LVDS (Low Voltage Differential Signaling) Low Reference	II	—
4	0.01	BU	4820	Passenger Seat Back Video Display Signal [+]	II	—
5	0.01	WH	4821	Rear Seat Infotainment Display 2 LVDS (Low Voltage Differential Signaling) Signal [-]	II	—
6	0.35	GN / YE	7066	Entertainment Remote Enable Signal	I	—
7	0.35	VT / WH	7213	Ethernet Bus 5 [+]	I	—
8	0.35	RD / BN	3640	Battery Positive Voltage	I	—
9	0.35	BK / WH	1451	Signal Ground	I	—
10 - 13	—	—	—	Not Occupied	—	—
14	0.35	VT	7212	Ethernet Bus 5 [-]	I	—

P22F Video Display - Right Front Seat Back X2 (UW9)

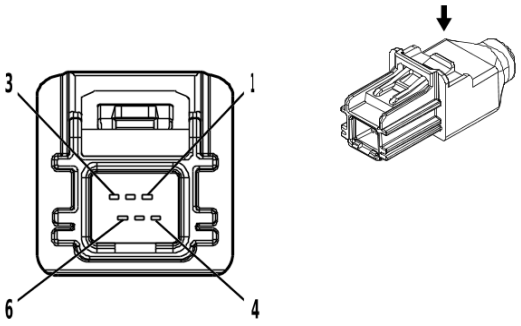

4806625

Connector Part Information

Harness Type: Front Seat Wiring Harness - Passenger LVDS
OEM Connector: 13522802
Service Connector: Service by Cable Assembly — See Part Catalog
Description: 6-Way M HSAL-2 Series(BK)

Terminal Part Information

Terminal Type ID	Terminated Lead	Diagnostic Test Probe	Terminal Removal Tool
I	Not required	No Tool Required	No Tool Required

P22F Video Display - Right Front Seat Back X2 (UW9)

Pin	Size	Color	Circuit	Function	Terminal Type ID	Option
—	—	LVDS	—	(Head Up Display) Head Up Display Signal	I	—

P25 Content Theft Deterrent Alarm (UTJ)

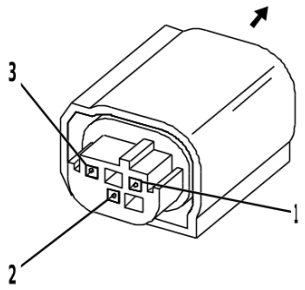

2179784

Connector Part Information

Harness Type: Body Wiring Harness
OEM Connector: 1563458-1
Service Connector: 84999471
Description: 3-Way F 0.64 Micro-Quadlock Series, Sealed(BK)

Terminal Part Information

Terminal Type ID	Terminated Lead	Diagnostic Test Probe	Terminal Removal Tool
I	Not required	J-35616-64B (L-BU)	No Tool Required

P25 Content Theft Deterrent Alarm (UTJ)

Pin	Size	Color	Circuit	Function	Terminal Type ID	Option
1	0.75	BK	150	Ground	I	—
2	0.5	GN / BU	6133	Body Control Module LIN Bus 2	I	—
3	0.5	RD / YE	2340	Battery Positive Voltage	I	—

P29 Head-Up Display X1 (UV6)

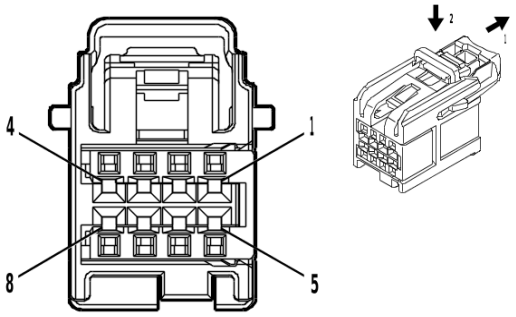

4935776

Connector Part Information

Harness Type: Instrument Panel Wiring Harness
OEM Connector: 15526972
Service Connector: 19370429
Description: 8-Way F 0.64 OCS Series(BK)

Terminal Part Information

Terminal Type ID	Terminated Lead	Diagnostic Test Probe	Terminal Removal Tool
I	Not required	J-35616-64B (L-BU)	No Tool Required

P29 Head-Up Display X1 (UV6)

Pin	Size	Color	Circuit	Function	Terminal Type ID	Option
1	0.35	GN / BK	3894	Instrument Cluster LIN Bus 1	I	—
2	—	—	—	Not Occupied	—	—
3	0.35	YE / WH	622	Head-Up Display Switch Signal	I	—
4	0.5	BK	1850	Ground	I	—
5	—	—	—	Not Occupied	—	—
6	0.5	RD / WH	1340	Battery Positive Voltage	I	—
7	—	—	—	Not Occupied	—	—
8	0.35	BK / GN	5699	Head-Up Display Switch Low Reference	I	—

P29 Head-Up Display X2 (UV6)

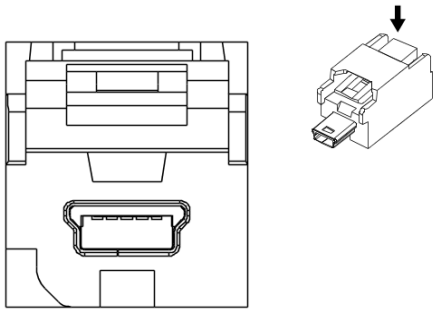

3214018

Connector Part Information

Harness Type: Instrument Panel Wiring Harness LVDS
OEM Connector: 13871470
Service Connector: Service by Cable Assembly — See Part Catalog
Description: 5-Way M 2.0 Mini-B USB Type(GY)

Terminal Part Information

Terminal Type ID	Terminated Lead	Diagnostic Test Probe	Terminal Removal Tool
I	Not required	No Tool Required	No Tool Required

P29 Head-Up Display X2 (UV6)

Pin	Size	Color	Circuit	Function	Terminal Type ID	Option
—	—	LVDS	—	(Head Up Display) Head Up Display Signal	I	—

P43 Forward Collision Alert Display (UEU-UV6)

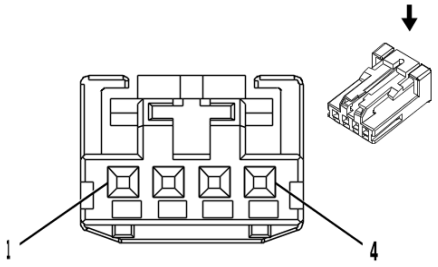

2717162

Connector Part Information

Harness Type: Instrument Panel Wiring Harness
OEM Connector: 1-936119-1
Service Connector: 19367524
Description: 4-Way F 0.64 Micro-Quadlock Series(BK)

Terminal Part Information

Terminal Type ID	Terminated Lead	Diagnostic Test Probe	Terminal Removal Tool
I	Not required	J-35616-64B (L-BU)	No Tool Required

P43 Forward Collision Alert Display (UEU-UV6)

Pin	Size	Color	Circuit	Function	Terminal Type ID	Option
1	0.5	VT / WH	639	Run/Crank Ignition 1 Voltage	I	—
2	0.35	GY / YE	3885	Forward Collision Alert LED Control	I	—
3	0.35	GY / BK	4787	Day Night LED Control	I	—
4	0.35	BK / WH	1851	Signal Ground	I	—

P45L Front Seat Lane Departure Warning Actuator - Left (HS1)

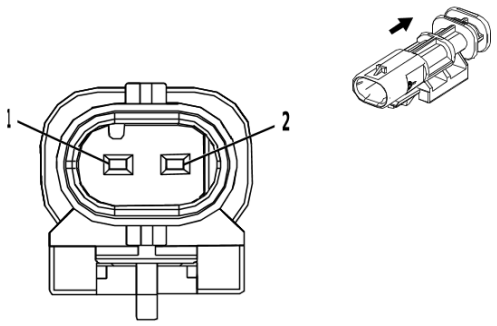

2474755

Connector Part Information

Harness Type: Front Seat Wiring Harness - Driver
OEM Connector: 13591337
Service Connector: Service by Harness - See Part Catalog
Description: 2-Way M 1.2 Multilock Series, Sealed(BK)

Terminal Part Information

Terminal Type ID	Terminated Lead	Diagnostic Test Probe	Terminal Removal Tool
I	Not required	J-35616-13 (BU)	No Tool Required

P45L Front Seat Lane Departure Warning Actuator - Left (HS1)

Pin	Size	Color	Circuit	Function	Terminal Type ID	Option
1	0.5	BK	1150	Ground	I	—
2	0.35	YE / BN	3037	Driver Seat Left Rear Haptic Movement Motor Control	I	—

P45R Front Seat Lane Departure Warning Actuator - Right (HS1)

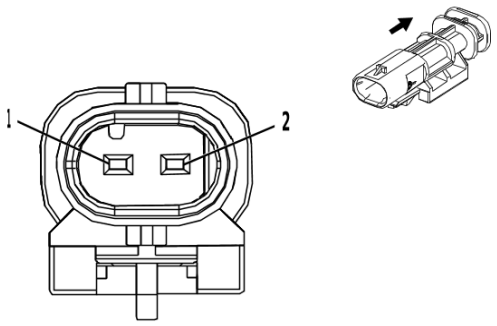

2474755

Connector Part Information

Harness Type: Front Seat Wiring Harness - Driver
OEM Connector: 13591337
Service Connector: Service by Harness - See Part Catalog
Description: 2-Way M 1.2 Multilock Series, Sealed(BK)

Terminal Part Information

Terminal Type ID	Terminated Lead	Diagnostic Test Probe	Terminal Removal Tool
I	Not required	J-35616-13 (BU)	No Tool Required

P45R Front Seat Lane Departure Warning Actuator - Right (HS1)

Pin	Size	Color	Circuit	Function	Terminal Type ID	Option
1	0.5	BK	1150	Ground	I	—
2	0.35	BN	3038	Driver Seat Right Rear Haptic Movement Motor Control	I	—

P50 Regulatory Emergency Call Backup Speaker

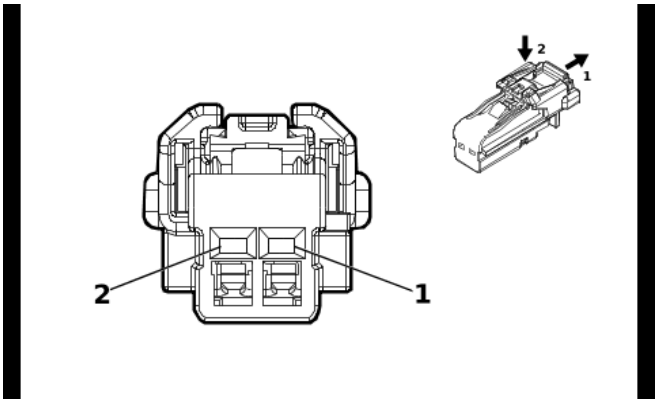

4115691

Connector Part Information

Harness Type: Instrument Panel Wiring Harness
OEM Connector: 6098-8988
Service Connector: 19352066
Description: 2-Way F 1.2 MCON Series(BK)

Terminal Part Information

Terminal Type ID	Terminated Lead	Diagnostic Test Probe	Terminal Removal Tool
I	Not required	J-35616-16 (LT GN)	No Tool Required

P50 Regulatory Emergency Call Backup Speaker

Pin	Size	Color	Circuit	Function	Terminal Type ID	Option
1	0.35	WH / BK	4769	Emergency Call Backup Speaker [-] Control	I	—
2	0.35	GY / GN	4770	Emergency Call Backup Speaker [+] Control	I	—

Q2 Air Conditioning Clutch

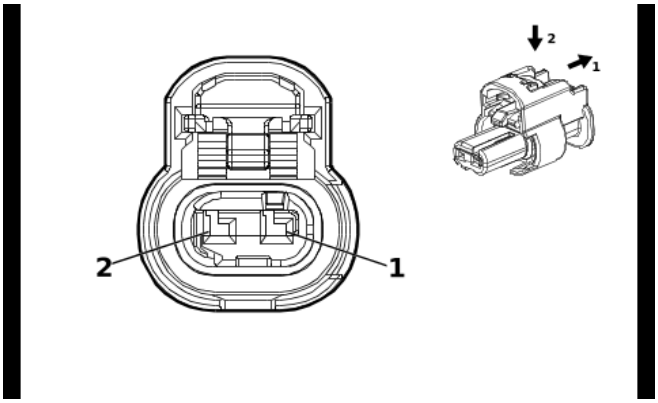

4649903

Connector Part Information

Harness Type: Engine Wiring Harness
OEM Connector: 1-2296694-1
Service Connector: 85519075
Description: 2-Way F 1.2 MCON Series, Sealed(BK)

Terminal Part Information

Terminal Type ID	Terminated Lead	Diagnostic Test Probe	Terminal Removal Tool
I	Not required	J-35616-16 (LT GN)	No Tool Required

Q2 Air Conditioning Clutch

Pin	Size	Color	Circuit	Function	Terminal Type ID	Option
1	0.75	BK	6550	Ground	I	—
2	0.75	BN / GN	59	A/C Compressor Clutch Control	I	—

Q4 Automatic Level Control Solenoid Valve (F47)

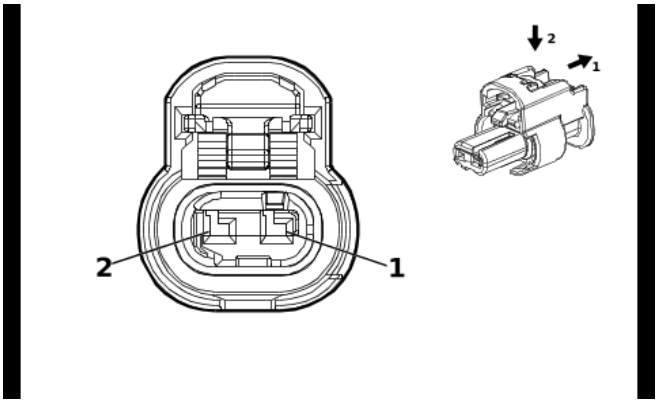

4649903

Connector Part Information

Harness Type: Chassis Wiring Harness
OEM Connector: 1-2296694-1
Service Connector: 85519075
Description: 2-Way F 1.2 MCON Series, Sealed(BK)

Terminal Part Information

Terminal Type ID	Terminated Lead	Diagnostic Test Probe	Terminal Removal Tool
I	Not required	J-35616-16 (LT GN)	No Tool Required

Q4 Automatic Level Control Solenoid Valve (F47)

Pin	Size	Color	Circuit	Function	Terminal Type ID	Option
1	0.5	WH / BU	3261	Vehicle Level Control Exhaust Solenoid Valve Control	I	—
2	0.5	WH / GN	320	Vehicle Level Control Exhaust Solenoid Valve Control	I	—

Q6 Camshaft Position Actuator Solenoid Valve (L84/L87)

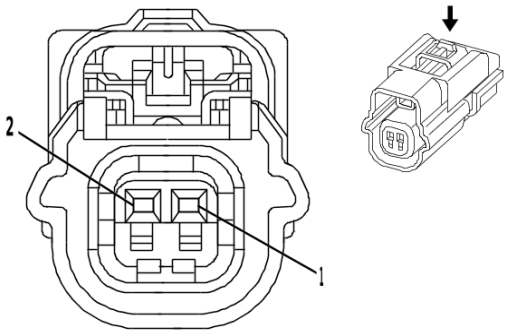

1664592

Connector Part Information

Harness Type: Camshaft Position Sensor Jumper Wiring Harness
OEM Connector: 89047381
Service Connector: Service by Harness - See Part Catalog
Description: 2-Way F 0.64 Kaizen Series, Sealed(BK)

Terminal Part Information

Terminal Type ID	Terminated Lead	Diagnostic Test Probe	Terminal Removal Tool
I	Not Available	No Tool Required	Not Available

Q6 Camshaft Position Actuator Solenoid Valve (L84/L87)

Pin	Size	Color	Circuit	Function	Terminal Type ID	Option
1	0.5	BK / BN	6753	Camshaft Position Actuator Solenoid Valve W Low Reference	I	—
2	0.5	VT / BN	5284	Intake Camshaft Position Actuator Solenoid Valve 1	I	—

Q12 Evaporative Emission Canister Purge Solenoid Valve (L84/L87)

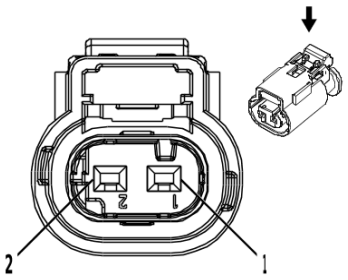

2717066

Connector Part Information

Harness Type: Engine Wiring Harness
OEM Connector: 10010337
Service Connector: 13587326
Description: 2-Way F 1.2 Multilock Series, Sealed(BK)

Terminal Part Information

Terminal Type ID	Terminated Lead	Diagnostic Test Probe	Terminal Removal Tool
I	Not required	J-35616-16 (LT GN)	No Tool Required

Q12 Evaporative Emission Canister Purge Solenoid Valve (L84/L87)

Pin	Size	Color	Circuit	Function	Terminal Type ID	Option
1	0.75	VT / BU	5293	Powertrain Main Relay Fused Supply Voltage 4	I	—
2	0.75	GN / BU	428	EVAP Canister Purge Solenoid Control	I	—

Q13 Evaporative Emission Canister Vent Solenoid Valve (L84/L87)

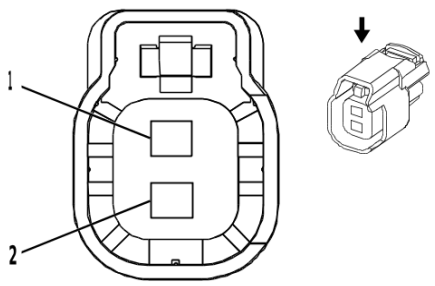

2422378

Connector Part Information

Harness Type: Chassis Wiring Harness
OEM Connector: 34062-0028
Service Connector: 13579002
Description: 2-Way F 1.5 Series, Sealed(BK)

Terminal Part Information

Terminal Type ID	Terminated Lead	Diagnostic Test Probe	Terminal Removal Tool
I	Not required	J-35616-14 (GN)	No Tool Required

Q13 Evaporative Emission Canister Vent Solenoid Valve (L84/L87)

Pin	Size	Color	Circuit	Function	Terminal Type ID	Option
1	0.5	WH	1310	EVAP Vent Solenoid Valve Control	I	—
2	0.5	RD / WH	2040	Battery Positive Voltage	I	—

Q14A Exhaust Gas Recirculation Valve 1 (LM2)

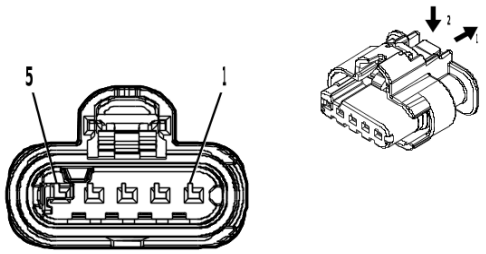

4997783

Connector Part Information

Harness Type: Engine Wiring Harness
OEM Connector: 1-2296697-1
Service Connector: 19371195
Description: 5-Way F 1.2 MCON-CB Series, Sealed(BK)

Terminal Part Information

Terminal Type ID	Terminated Lead	Diagnostic Test Probe	Terminal Removal Tool
I	Not required	J-35616-16 (LT GN)	No Tool Required

Q14A Exhaust Gas Recirculation Valve 1 (LM2)

Pin	Size	Color	Circuit	Function	Terminal Type ID	Option
1	0.5	BU / RD	460	Engine Control Sensors 5 Volt Reference 1	I	—
2	0.5	BN / WH	5763	Exhaust Gas Recirculation Position Signal	I	—
3	0.5	BK / YE	548	Engine Control Sensors Low Reference 1	I	—
4	0.5	WH / VT	5764	Exhaust Gas Recirculation Valve High Control	I	—
5	0.5	VT / BK	5746	Exhaust Gas Recirculation Valve Low Control	I	—

Q14B Exhaust Gas Recirculation Valve 2 (LM2)

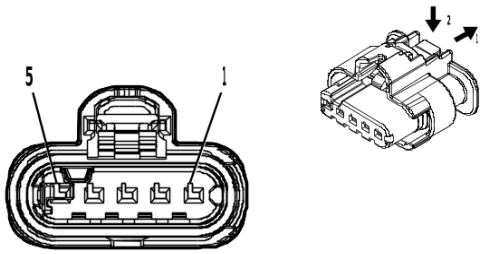

4997783

Connector Part Information

Harness Type: Engine Wiring Harness
OEM Connector: 1-2296697-1
Service Connector: 19371195
Description: 5-Way F 1.2 MCON-CB Series, Sealed(BK)

Terminal Part Information

Terminal Type ID	Terminated Lead	Diagnostic Test Probe	Terminal Removal Tool
I	Not required	J-35616-16 (LT GN)	No Tool Required

Q14B Exhaust Gas Recirculation Valve 2 (LM2)

Pin	Size	Color	Circuit	Function	Terminal Type ID	Option
1	0.5	BK / YE	548	Engine Control Sensors Low Reference 1	I	—
2	0.5	BU / GN	4012	Exhaust Gas Recirculation 2 Valve Position Sensor Signal	I	—
3	0.5	BU / RD	460	Engine Control Sensors 5 Volt Reference 1	I	—
4	0.5	BU / WH	4014	Exhaust Gas Recirculation 2 Valve Open Control	I	—
5	0.5	BU / BN	4013	Exhaust Gas Recirculation 2 Valve Close Control	I	—

Q17A Fuel Injector 1 (L84/L87)

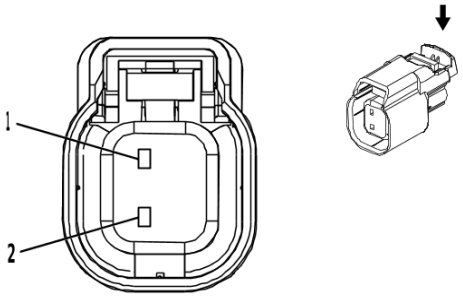

2792100

Connector Part Information

Harness Type: Fuel Injector Wiring Harness
OEM Connector: 13581410
Service Connector: Service by Harness - See Part Catalog
Description: 2-Way F 1.5 Series, Sealed(BK)

Terminal Part Information

Terminal Type ID	Terminated Lead	Diagnostic Test Probe	Terminal Removal Tool
I	Not Available	No Tool Required	Not Available

Q17A Fuel Injector 1 (L84/L87)

Pin	Size	Color	Circuit	Function	Terminal Type ID	Option
1	0.75	BN / WH	4901	Direct Fuel Injector High Voltage Supply Cylinder 1	I	—
2	0.75	BN	4801	Direct Fuel Injector High Voltage Control Cylinder 1	I	—

Q17A Fuel Injector 1 (LM2)

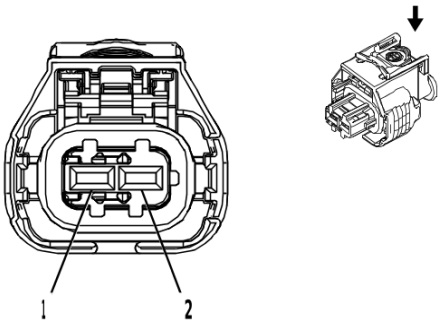

2845578

Connector Part Information

Harness Type: Fuel Injector Wiring Harness
OEM Connector: 1928405715
Service Connector: Service by Harness - See Part Catalog
Description: 2-Way F 2.8 Series, Sealed(BK)

Terminal Part Information

Terminal Type ID	Terminated Lead	Diagnostic Test Probe	Terminal Removal Tool
I	Not required	J-35616-35 (VT)	No Tool Required

Q17A Fuel Injector 1 (LM2)

Pin	Size	Color	Circuit	Function	Terminal Type ID	Option
1	1.5	BN / WH	4901	Direct Fuel Injector High Voltage Supply Cylinder 1	I	—
2	1.5	BN	4801	Direct Fuel Injector High Voltage Control Cylinder 1	I	—

Q17B Fuel Injector 2 (L84/L87)

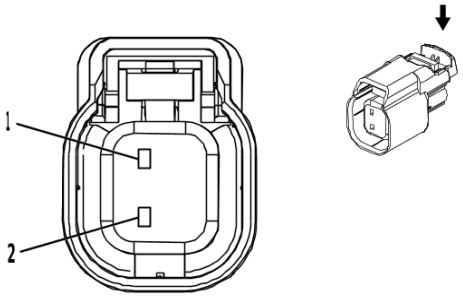

2792100

Connector Part Information

Harness Type: Fuel Injector Wiring Harness
OEM Connector: 13581410
Service Connector: Service by Harness - See Part Catalog
Description: 2-Way F 1.5 Series, Sealed(BK)

Terminal Part Information

Terminal Type ID	Terminated Lead	Diagnostic Test Probe	Terminal Removal Tool
I	Not Available	No Tool Required	Not Available

Q17B Fuel Injector 2 (L84/L87)

Pin	Size	Color	Circuit	Function	Terminal Type ID	Option
1	0.75	BU / GY	4902	Direct Fuel Injector High Voltage Supply Cylinder 2	I	—
2	0.75	BU	4802	Direct Fuel Injector High Voltage Control Cylinder 2	I	—

Q17B Fuel Injector 2 (LM2)

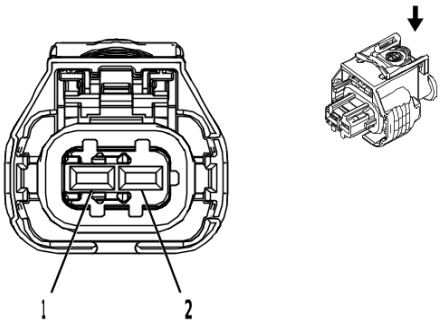

2845578

Connector Part Information

Harness Type: Fuel Injector Wiring Harness
OEM Connector: 1928405715
Service Connector: Service by Harness - See Part Catalog
Description: 2-Way F 2.8 Series, Sealed(BK)

Terminal Part Information

Terminal Type ID	Terminated Lead	Diagnostic Test Probe	Terminal Removal Tool
I	Not required	J-35616-35 (VT)	No Tool Required

Q17B Fuel Injector 2 (LM2)

Pin	Size	Color	Circuit	Function	Terminal Type ID	Option
1	1.5	BU / GY	4902	Direct Fuel Injector High Voltage Supply Cylinder 2	I	—
2	1.5	BU	4802	Direct Fuel Injector High Voltage Control Cylinder 2	I	—

Q17C Fuel Injector 3 (L84/L87)

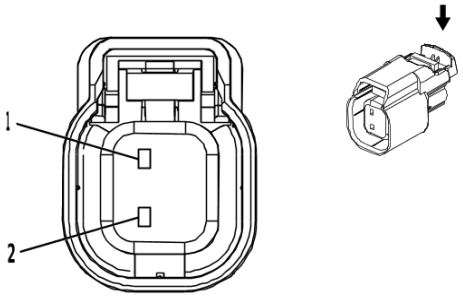

2792100

Connector Part Information

Harness Type: Fuel Injector Wiring Harness
OEM Connector: 13581410
Service Connector: Service by Harness - See Part Catalog
Description: 2-Way F 1.5 Series, Sealed(BK)

Terminal Part Information

Terminal Type ID	Terminated Lead	Diagnostic Test Probe	Terminal Removal Tool
I	Not Available	No Tool Required	Not Available

Q17C Fuel Injector 3 (L84/L87)

Pin	Size	Color	Circuit	Function	Terminal Type ID	Option
1	0.75	GN / GY	4903	Direct Fuel Injector High Voltage Supply Cylinder 3	I	—
2	0.75	GN	4803	Direct Fuel Injector High Voltage Control Cylinder 3	I	—

Q17C Fuel Injector 3 (LM2)

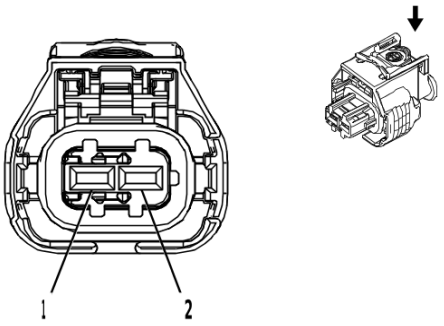

2845578

Connector Part Information

Harness Type: Fuel Injector Wiring Harness
OEM Connector: 1928405715
Service Connector: Service by Harness - See Part Catalog
Description: 2-Way F 2.8 Series, Sealed(BK)

Terminal Part Information

Terminal Type ID	Terminated Lead	Diagnostic Test Probe	Terminal Removal Tool
I	Not required	J-35616-35 (VT)	No Tool Required

Q17C Fuel Injector 3 (LM2)

Pin	Size	Color	Circuit	Function	Terminal Type ID	Option
1	1.5	GN / GY	4903	Direct Fuel Injector High Voltage Supply Cylinder 3	I	—
2	1.5	GN	4803	Direct Fuel Injector High Voltage Control Cylinder 3	I	—

Q17D Fuel Injector 4 (L84/L87)

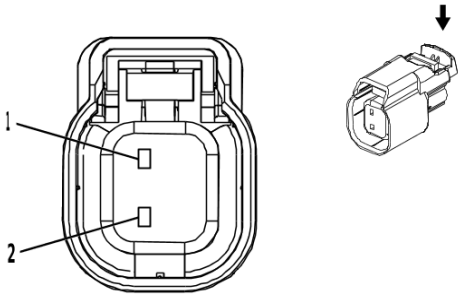

2792100

Connector Part Information

Harness Type: Fuel Injector Wiring Harness
OEM Connector: 13581410
Service Connector: Service by Harness - See Part Catalog
Description: 2-Way F 1.5 Series, Sealed(BK)

Terminal Part Information

Terminal Type ID	Terminated Lead	Diagnostic Test Probe	Terminal Removal Tool
I	Not Available	No Tool Required	Not Available

Q17D Fuel Injector 4 (L84/L87)

Pin	Size	Color	Circuit	Function	Terminal Type ID	Option
1	0.75	BU / WH	4904	Direct Fuel Injector High Voltage Supply Cylinder 4	I	—
2	0.75	GY / BU	4804	Direct Fuel Injector High Voltage Control Cylinder 4	I	—

Q17D Fuel Injector 4 (LM2)

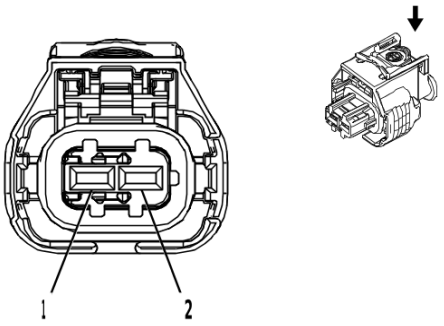

2845578

Connector Part Information

Harness Type: Fuel Injector Wiring Harness
OEM Connector: 1928405715
Service Connector: Service by Harness - See Part Catalog
Description: 2-Way F 2.8 Series, Sealed(BK)

Terminal Part Information

Terminal Type ID	Terminated Lead	Diagnostic Test Probe	Terminal Removal Tool
I	Not required	J-35616-35 (VT)	No Tool Required

Q17D Fuel Injector 4 (LM2)

Pin	Size	Color	Circuit	Function	Terminal Type ID	Option
1	1.5	BU / WH	4904	Direct Fuel Injector High Voltage Supply Cylinder 4	I	—
2	1.5	GY / BU	4804	Direct Fuel Injector High Voltage Control Cylinder 4	I	—

Q17E Fuel Injector 5 (L84/L87)

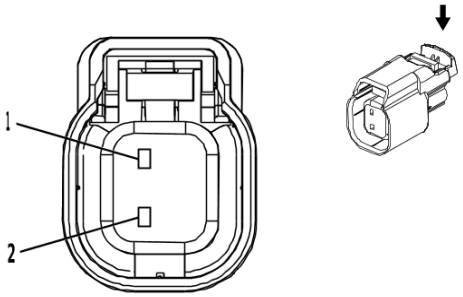

2792100

Connector Part Information

Harness Type: Fuel Injector Wiring Harness
OEM Connector: 13581410
Service Connector: Service by Harness - See Part Catalog
Description: 2-Way F 1.5 Series, Sealed(BK)

Terminal Part Information

Terminal Type ID	Terminated Lead	Diagnostic Test Probe	Terminal Removal Tool
I	Not Available	No Tool Required	Not Available

Q17E Fuel Injector 5 (L84/L87)

Pin	Size	Color	Circuit	Function	Terminal Type ID	Option
1	0.75	GN / WH	4905	Direct Fuel Injector High Voltage Supply Cylinder 5	I	—
2	0.75	WH / GN	4805	Direct Fuel Injector High Voltage Control Cylinder 5	I	—

Q17E Fuel Injector 5 (LM2)

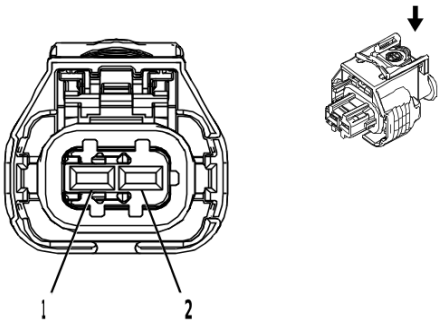

2845578

Connector Part Information

Harness Type: Fuel Injector Wiring Harness
OEM Connector: 1928405715
Service Connector: Service by Harness - See Part Catalog
Description: 2-Way F 2.8 Series, Sealed(BK)

Terminal Part Information

Terminal Type ID	Terminated Lead	Diagnostic Test Probe	Terminal Removal Tool
I	Not required	J-35616-35 (VT)	No Tool Required

Q17E Fuel Injector 5 (LM2)

Pin	Size	Color	Circuit	Function	Terminal Type ID	Option
1	1.5	GN / WH	4905	Direct Fuel Injector High Voltage Supply Cylinder 5	I	—
2	1.5	WH / GN	4805	Direct Fuel Injector High Voltage Control Cylinder 5	I	—

Q17F Fuel Injector 6 (L84/L87)

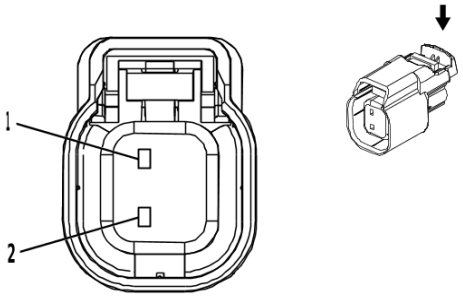

2792100

Connector Part Information

Harness Type: Fuel Injector Wiring Harness
OEM Connector: 13581410
Service Connector: Service by Harness - See Part Catalog
Description: 2-Way F 1.5 Series, Sealed(BK)

Terminal Part Information

Terminal Type ID	Terminated Lead	Diagnostic Test Probe	Terminal Removal Tool
I	Not Available	No Tool Required	Not Available

Q17F Fuel Injector 6 (L84/L87)

Pin	Size	Color	Circuit	Function	Terminal Type ID	Option
1	0.75	VT / GY	4906	Direct Fuel Injector High Voltage Supply Cylinder 6	I	—
2	0.75	VT / GN	4806	Direct Fuel Injector High Voltage Control Cylinder 6	I	—

Q17F Fuel Injector 6 (LM2)

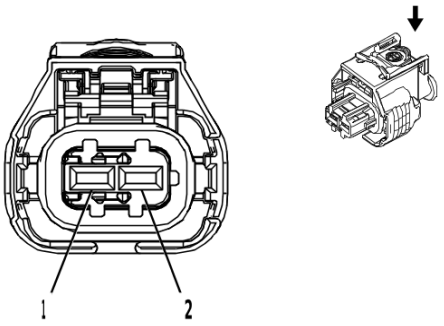

2845578

Connector Part Information

Harness Type: Fuel Injector Wiring Harness
OEM Connector: 1928405715
Service Connector: Service by Harness - See Part Catalog
Description: 2-Way F 2.8 Series, Sealed(BK)

Terminal Part Information

Terminal Type ID	Terminated Lead	Diagnostic Test Probe	Terminal Removal Tool
I	Not required	J-35616-35 (VT)	No Tool Required

Q17F Fuel Injector 6 (LM2)

Pin	Size	Color	Circuit	Function	Terminal Type ID	Option
1	1.5	VT / GY	4906	Direct Fuel Injector High Voltage Supply Cylinder 6	I	—
2	1.5	VT / GN	4806	Direct Fuel Injector High Voltage Control Cylinder 6	I	—

Q17G Fuel Injector 7 (L84/L87)

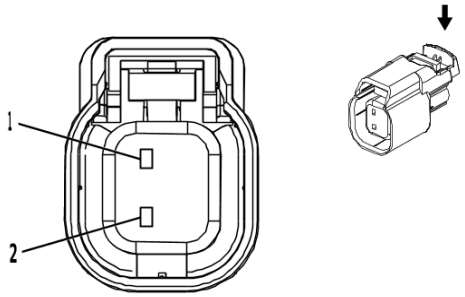

2792100

Connector Part Information

Harness Type: Fuel Injector Wiring Harness
OEM Connector: 13581410
Service Connector: Service by Harness - See Part Catalog
Description: 2-Way F 1.5 Series, Sealed(BK)

Terminal Part Information

Terminal Type ID	Terminated Lead	Diagnostic Test Probe	Terminal Removal Tool
I	Not Available	No Tool Required	Not Available

Q17G Fuel Injector 7 (L84/L87)

Pin	Size	Color	Circuit	Function	Terminal Type ID	Option
1	0.75	WH / YE	4907	Direct Fuel Injector High Voltage Supply Cylinder 7	I	—
2	0.75	YE / GY	4807	Direct Fuel Injector High Voltage Control Cylinder 7	I	—

Q17H Fuel Injector 8 (L84/L87)

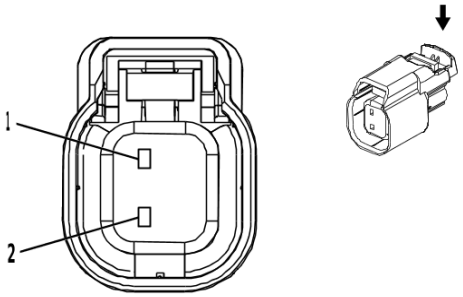

2792100

Connector Part Information

Harness Type: Fuel Injector Wiring Harness
OEM Connector: 13581410
Service Connector: Service by Harness - See Part Catalog
Description: 2-Way F 1.5 Series, Sealed(BK)

Terminal Part Information

Terminal Type ID	Terminated Lead	Diagnostic Test Probe	Terminal Removal Tool
I	Not Available	No Tool Required	Not Available

Q17H Fuel Injector 8 (L84/L87)

Pin	Size	Color	Circuit	Function	Terminal Type ID	Option
1	0.75	GY / WH	4908	Direct Fuel Injector High Voltage Supply Cylinder 8	I	—
2	0.75	GY	4808	Direct Fuel Injector High Voltage Control Cylinder 8	I	—

Q18A Fuel Pressure Regulator 1 (LM2)

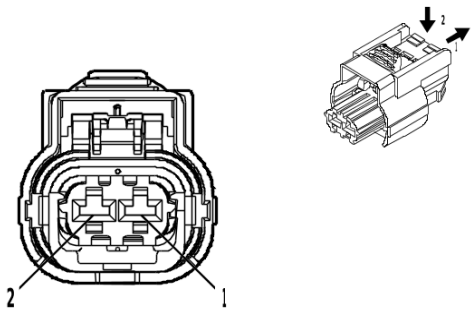

4992524

Connector Part Information

Harness Type: Engine Wiring Harness
OEM Connector: 35182447
Service Connector: 84941154
Description: 2-Way F 2.8 CTS Series, Sealed(BK)

Terminal Part Information

Terminal Type ID	Terminated Lead	Diagnostic Test Probe	Terminal Removal Tool
I	Not required	J-35616-4A (PU)	No Tool Required

Q18A Fuel Pressure Regulator 1 (LM2)

Pin	Size	Color	Circuit	Function	Terminal Type ID	Option
1	0.75	YE / VT	7245	High Pressure Fuel Pump Low Enable Signal	I	—
2	0.75	GY / BN	7244	High Pressure Fuel Pump High Side Control	I	—

Q18B Fuel Pressure Regulator 2 (LM2)

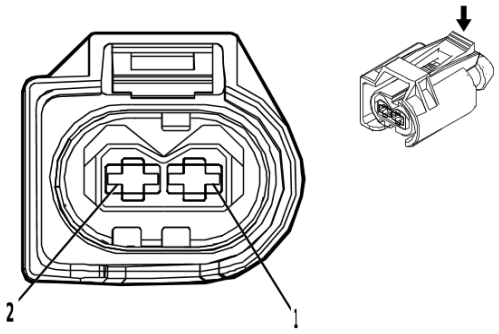

5095463

Connector Part Information

Harness Type: Engine Wiring Harness
OEM Connector: 33163309
Service Connector: 84616656
Description: 2-Way F 2.8 Series, Sealed(BK)

Terminal Part Information

Terminal Type ID	Terminated Lead	Diagnostic Test Probe	Terminal Removal Tool
I	Not required	J-35616-4A (PU)	No Tool Required

Q18B Fuel Pressure Regulator 2 (LM2)

Pin	Size	Color	Circuit	Function	Terminal Type ID	Option
1	0.5	BK / YE	2834	Fuel Rail Pressure Solenoid Valve Low Reference	I	—
2	0.5	BU / WH	2530	Fuel Rail Pressure Solenoid Valve Control	I	—

Q18C Fuel Pressure Regulator 3 (LM2)

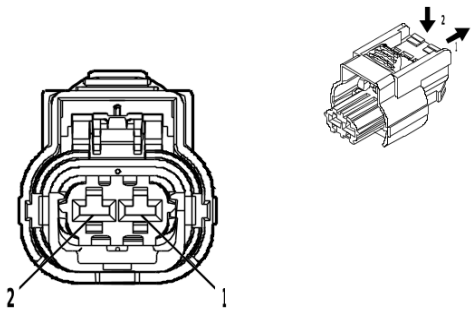

4992524

Connector Part Information

Harness Type: Engine Wiring Harness
OEM Connector: 35182447
Service Connector: 84941154
Description: 2-Way F 2.8 CTS Series, Sealed(BK)

Terminal Part Information

Terminal Type ID	Terminated Lead	Diagnostic Test Probe	Terminal Removal Tool
I	Not required	J-35616-4A (PU)	No Tool Required

Q18C Fuel Pressure Regulator 3 (LM2)

Pin	Size	Color	Circuit	Function	Terminal Type ID	Option
1	0.75	YE	2420	Fuel High Pressure Pump Low Enable Signal	I	—
2	0.75	GY	2419	Fuel High Pressure Pump High Side Supply Voltage	I	—

Q22 Intake Manifold Tuning Solenoid Valve (LM2)

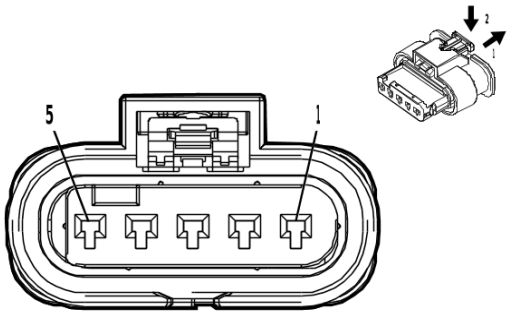

3338689

Connector Part Information

Harness Type: Engine Wiring Harness
OEM Connector: 1-1718806-1
Service Connector: 19119351
Description: 5-Way F 1.2 MCON-LL Series, Sealed(BK)

Terminal Part Information

Terminal Type ID	Terminated Lead	Diagnostic Test Probe	Terminal Removal Tool
I	Not required	J-35616-16 (LT GN)	No Tool Required

Q22 Intake Manifold Tuning Solenoid Valve (LM2)

Pin	Size	Color	Circuit	Function	Terminal Type ID	Option
1	0.5	BK / GN	580	Engine Control Sensors Low Reference 2	I	—
2	0.5	GN / GY	7316	Intake Manifold Runner Valve Actuator Control	I	—
3	0.5	WH / RD	480	Engine Control Vehicle Sensors 5 Volt Reference 1	I	—
4	0.75	BK / BU	1408	Variable Swirl Valve Close Control	I	—
5	0.75	BK / GN	1389	Variable Swirl Valve Open Control	I	—

Q37LFB Front Shock Absorber Actuator - Left (Z95)

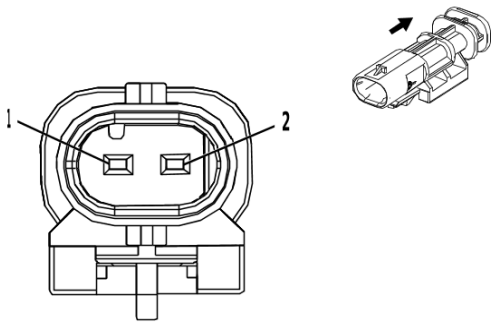

2474755

Connector Part Information

Harness Type: Chassis Wiring Harness
OEM Connector: 2203314-1
Service Connector: 85533165
Description: 2-Way M 1.2 Multilock Series, Sealed(BK)

Terminal Part Information

Terminal Type ID	Terminated Lead	Diagnostic Test Probe	Terminal Removal Tool
I	Not required	J-35616-17 (LT GN)	No Tool Required

Q37LFB Front Shock Absorber Actuator - Left (Z95)

Pin	Size	Color	Circuit	Function	Terminal Type ID	Option
1	0.5	BN / WH	1107	Left Front Shock Absorber Actuator Control	I	—
2	0.5	GY / BU	1113	Left Front Shock Absorber Actuator Control	I	—

Q37LRB Rear Shock Absorber Actuator - Left (Z95)

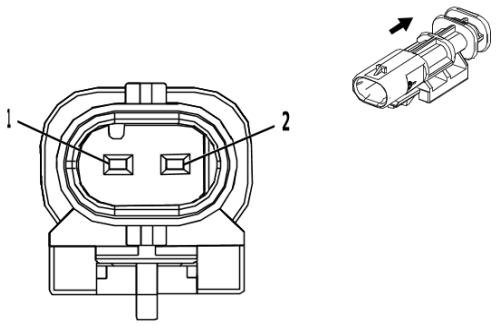

2474755

Connector Part Information

Harness Type: Chassis Wiring Harness
OEM Connector: 2203314-1
Service Connector: 85533165
Description: 2-Way M 1.2 Multilock Series, Sealed(BK)

Terminal Part Information

Terminal Type ID	Terminated Lead	Diagnostic Test Probe	Terminal Removal Tool
I	Not required	J-35616-17 (LT GN)	No Tool Required

Q37LRB Rear Shock Absorber Actuator - Left (Z95)

Pin	Size	Color	Circuit	Function	Terminal Type ID	Option
1	0.5	BU / GY	1114	Left Rear Shock Absorber Actuator Control	I	—
2	0.5	GN / VT	1115	Left Rear Shock Absorber Actuator Control	I	—

Q37RFB Front Shock Absorber Actuator - Right (Z95)

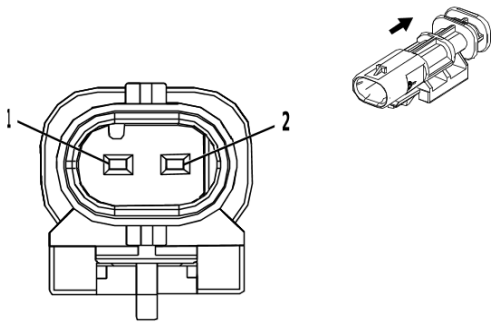

2474755

Connector Part Information

Harness Type: Chassis Wiring Harness
OEM Connector: 2203314-1
Service Connector: 85533165
Description: 2-Way M 1.2 Multilock Series, Sealed(BK)

Terminal Part Information

Terminal Type ID	Terminated Lead	Diagnostic Test Probe	Terminal Removal Tool
I	Not required	J-35616-17 (LT GN)	No Tool Required

Q37RFB Front Shock Absorber Actuator - Right (Z95)

Pin	Size	Color	Circuit	Function	Terminal Type ID	Option
1	0.5	BN / BU	1116	Right Front Shock Absorber Actuator Control	I	—
2	0.5	GY / WH	1117	Right Front Shock Absorber Actuator Control	I	—

Q37RRB Rear Shock Absorber Actuator - Right (Z95)

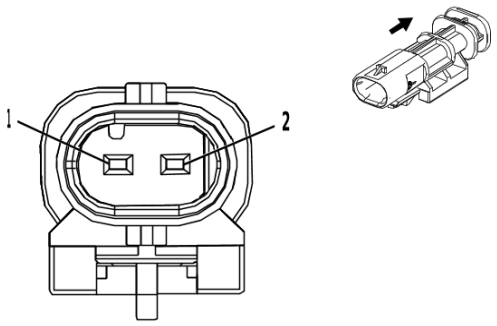

2474755

Connector Part Information

Harness Type: Chassis Wiring Harness
OEM Connector: 2203314-1
Service Connector: 85533165
Description: 2-Way M 1.2 Multilock Series, Sealed(BK)

Terminal Part Information

Terminal Type ID	Terminated Lead	Diagnostic Test Probe	Terminal Removal Tool
I	Not required	J-35616-17 (LT GN)	No Tool Required

Q37RRB Rear Shock Absorber Actuator - Right (Z95)

Pin	Size	Color	Circuit	Function	Terminal Type ID	Option
1	0.5	BN / GN	1118	Right Rear Shock Absorber Actuator Control	I	—
2	0.5	GN / GY	1119	Right Rear Shock Absorber Actuator Control	I	—

Q38 Throttle Body

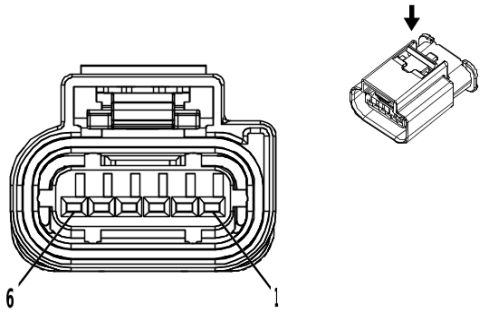

3747579

Connector Part Information

Harness Type: Engine Wiring Harness
OEM Connector: 2272975-5
Service Connector: 19352911
Description: 6-Way F 1.2 MCON Series, Sealed(BK)

Terminal Part Information

Terminal Type ID	Terminated Lead	Diagnostic Test Probe	Terminal Removal Tool
I	Not required	J-35616-16 (LT GN)	No Tool Required

Q38 Throttle Body

Pin	Size	Color	Circuit	Function	Terminal Type ID	Option
1	0.5	YE	581	Throttle Actuator Open Control	I	—
2	0.5	BN / WH	582	Throttle Actuator Close Control	I	—
3	0.5	BU / WH	3630	Throttle Position Sensor SENT 1 Signal	I	—
4	0.5 0.5	BK / BN BK / GN	2752 580	Throttle Position Sensor Low Reference Engine Control Sensors Low Reference 2	I I	L84/ L87 LM2
5	0.5 0.5	BN / RD WH / RD	2701 480	Throttle Position Sensor 5V Reference Engine Control Vehicle Sensors 5 Volt Reference 1	I I	L84/ L87 LM2
6	—	—	—	Not Occupied	—	—

Q44 Engine Oil Pressure Control Solenoid Valve (L87)

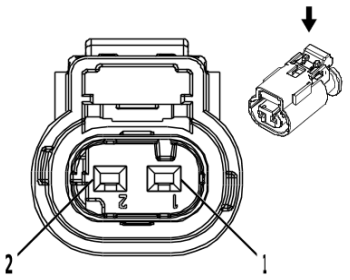

2717066

Connector Part Information

Harness Type: Oil Pump Flow Control Solenoid Valve Wire
OEM Connector: 13503566
Service Connector: Service by Harness - See Part Catalog
Description: 2-Way F 1.2 Multilock Series, Sealed(BK)

Terminal Part Information

Terminal Type ID	Terminated Lead	Diagnostic Test Probe	Terminal Removal Tool
I	Not Available	No Tool Required	Not Available

Q44 Engine Oil Pressure Control Solenoid Valve (L87)

Pin	Size	Color	Circuit	Function	Terminal Type ID	Option
1	0.5	VT / BU	5293	Powertrain Main Relay Fused Supply Voltage 4	I	—
2	0.5	BU	179	Engine Oil Pump Control	I	—

Q44 Engine Oil Pressure Control Solenoid Valve (LM2)

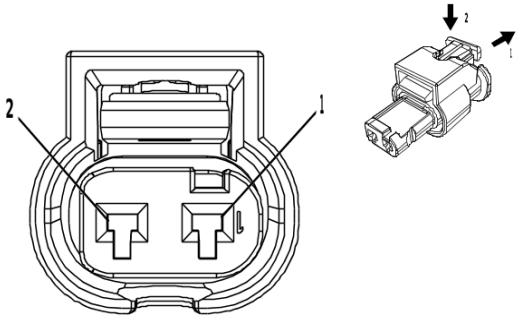

4284830

Connector Part Information

Harness Type: Oil Pump Flow Control Solenoid Valve Harness
OEM Connector: 13587570
Service Connector: Service by Harness - See Part Catalog
Description: 2-Way F 1.2 MCON Series, Sealed(BN)

Terminal Part Information

Terminal Type ID	Terminated Lead	Diagnostic Test Probe	Terminal Removal Tool
I	Not Available	No Tool Required	Not Available

Q44 Engine Oil Pressure Control Solenoid Valve (LM2)

Pin	Size	Color	Circuit	Function	Terminal Type ID	Option
1	0.5	BU	179	Engine Oil Pump Control	I	—
2	0.5	YE / BN	106	Oil Pump Motor Control	I	—

Q46 Air Conditioning Compressor Solenoid Valve

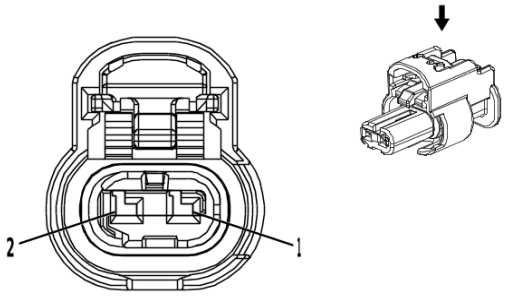

4335931

Connector Part Information

Harness Type: Engine Wiring Harness
OEM Connector: 1-2296694-2
Service Connector: 19366843
Description: 2-Way F 1.2 MCON Series, Sealed(BK)

Terminal Part Information

Terminal Type ID	Terminated Lead	Diagnostic Test Probe	Terminal Removal Tool
I	Not required	J-35616-16 (LT GN)	No Tool Required

Q46 Air Conditioning Compressor Solenoid Valve

Pin	Size	Color	Circuit	Function	Terminal Type ID	Option
1	0.5	BU / YE	7574	A/C Compressor Solenoid Valve Control	I	—
2	0.5	BU / BN	7573	A/C Compressor Solenoid Valve Control	I	—

Q61 Reductant Fluid Injector (LM2)

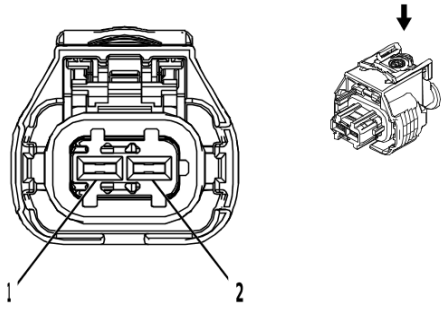

2577394

Connector Part Information

Harness Type: Engine Wiring Harness
OEM Connector: 1928405714
Service Connector: 84941154
Description: 2-Way F 2.8 Series, Sealed(BK)

Terminal Part Information

Terminal Type ID	Terminated Lead	Diagnostic Test Probe	Terminal Removal Tool
I	Not required	J-35616-35 (VT)	No Tool Required

Q61 Reductant Fluid Injector (LM2)

Pin	Size	Color	Circuit	Function	Terminal Type ID	Option
1	0.75	BN / WH	3100	Diesel Exhaust Fluid Dosing Valve Low Control	I	—
2	0.75	BN	3099	Diesel Exhaust Fluid Dosing Valve High Control	I	—

Q74 Engine Coolant Bypass Valve (LM2)

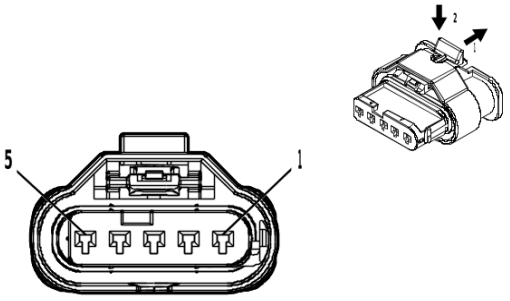

4994456

Connector Part Information

Harness Type: Engine Wiring Harness
OEM Connector: 2-2236898-5
Service Connector: 19371191
Description: 5-Way F 1.2 MCON-LL Series, Sealed(NA)

Terminal Part Information

Terminal Type ID	Terminated Lead	Diagnostic Test Probe	Terminal Removal Tool
I	Not required	J-35616-16 (LT GN)	No Tool Required

Q74 Engine Coolant Bypass Valve (LM2)

Pin	Size	Color	Circuit	Function	Terminal Type ID	Option
1	0.75	BU	2976	Coolant Diverter Valve Actuator Control Open	I	—
2	0.75	BU / BN	2977	Coolant Diverter Valve Actuator Control Close	I	—
3	0.5	WH / RD	480	Engine Control Vehicle Sensors 5 Volt Reference 1	I	—
4	0.5	BU / GY	2978	Coolant Diverter Valve Position Signal	I	—
5	0.5	BK / GN	580	Engine Control Sensors Low Reference 2	I	—

Q77A Transmission Control Solenoid Valve 1 (MQC)

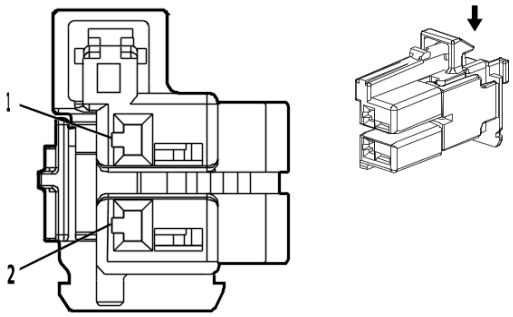

4672650

Connector Part Information

Harness Type: Automatic Transmission Wiring Harness
OEM Connector: 2289523-1
Service Connector: Service by Harness - See Part Catalog
Description: 2-Way F 1.2 MCON Series(BN)

Terminal Part Information

Terminal Type ID	Terminated Lead	Diagnostic Test Probe	Terminal Removal Tool
I	Not required	J-35616-16 (LT GN)	No Tool Required

Q77A Transmission Control Solenoid Valve 1 (MQC)

Pin	Size	Color	Circuit	Function	Terminal Type ID	Option
1	0.5	WH	6388	Transmission High Side Driver 2 Control	I	—
2	0.5	BU / GN	6404	Clutch Solenoid Valve E Control	I	—

Q77B Transmission Control Solenoid Valve 2 (MQC)

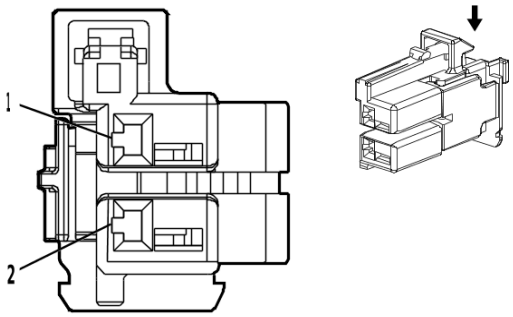

4672650

Connector Part Information

Harness Type: Automatic Transmission Wiring Harness
OEM Connector: 2289523-1
Service Connector: Service by Harness - See Part Catalog
Description: 2-Way F 1.2 MCON Series(BN)

Terminal Part Information

Terminal Type ID	Terminated Lead	Diagnostic Test Probe	Terminal Removal Tool
I	Not required	J-35616-16 (LT GN)	No Tool Required

Q77B Transmission Control Solenoid Valve 2 (MQC)

Pin	Size	Color	Circuit	Function	Terminal Type ID	Option
1	0.5	WH	6388	Transmission High Side Driver 2 Control	I	—
2	0.5	GN / BN	6403	Clutch Solenoid Valve D Control	I	—

Q77C Transmission Control Solenoid Valve 3 (MQC)

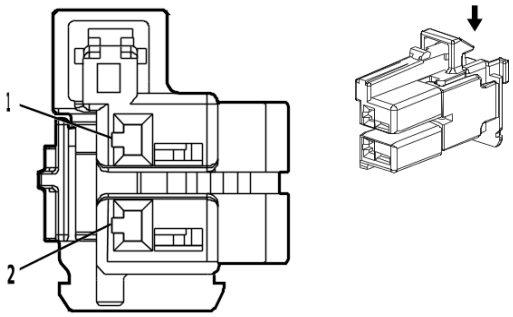

4672650

Connector Part Information

Harness Type: Automatic Transmission Wiring Harness
OEM Connector: 2289523-1
Service Connector: Service by Harness - See Part Catalog
Description: 2-Way F 1.2 MCON Series(BN)

Terminal Part Information

Terminal Type ID	Terminated Lead	Diagnostic Test Probe	Terminal Removal Tool
I	Not required	J-35616-16 (LT GN)	No Tool Required

Q77C Transmission Control Solenoid Valve 3 (MQC)

Pin	Size	Color	Circuit	Function	Terminal Type ID	Option
1	0.5	WH	6388	Transmission High Side Driver 2 Control	I	—
2	0.5	GY	6402	Clutch Solenoid Valve C Control	I	—

Q77D Transmission Control Solenoid Valve 4 (MQC)

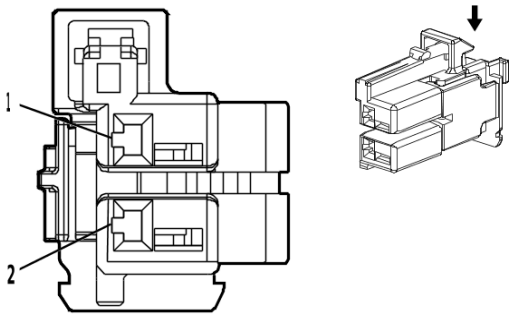

4672650

Connector Part Information

Harness Type: Automatic Transmission Wiring Harness
OEM Connector: 2289523-1
Service Connector: Service by Harness - See Part Catalog
Description: 2-Way F 1.2 MCON Series(BN)

Terminal Part Information

Terminal Type ID	Terminated Lead	Diagnostic Test Probe	Terminal Removal Tool
I	Not required	J-35616-16 (LT GN)	No Tool Required

Q77D Transmission Control Solenoid Valve 4 (MQC)

Pin	Size	Color	Circuit	Function	Terminal Type ID	Option
1	0.5	WH	6388	Transmission High Side Driver 2 Control	I	—
2	0.5	BN / WH	4509	Transmission Clutch F Control	I	—

Q77E Transmission Control Solenoid Valve 5 (MQC)

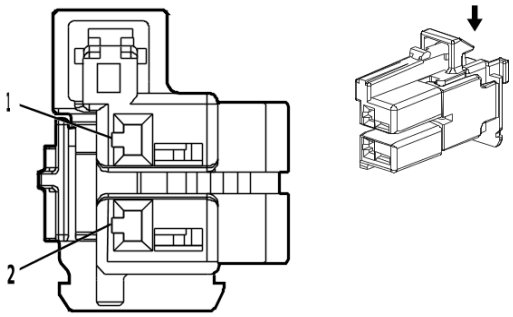

4672650

Connector Part Information

Harness Type: Automatic Transmission Wiring Harness
OEM Connector: 2289523-1
Service Connector: Service by Harness - See Part Catalog
Description: 2-Way F 1.2 MCON Series(BN)

Terminal Part Information

Terminal Type ID	Terminated Lead	Diagnostic Test Probe	Terminal Removal Tool
I	Not required	J-35616-16 (LT GN)	No Tool Required

Q77E Transmission Control Solenoid Valve 5 (MQC)

Pin	Size	Color	Circuit	Function	Terminal Type ID	Option
1	0.5	WH	6388	Transmission High Side Driver 2 Control	I	—
2	0.5	YE / VT	4507	Transmission Clutch H Control	I	—

Q77F Transmission Control Solenoid Valve 6 (MQC)

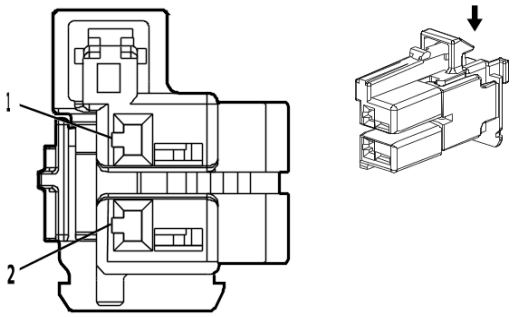

4672650

Connector Part Information

Harness Type: Automatic Transmission Wiring Harness
OEM Connector: 2289523-1
Service Connector: Service by Harness - See Part Catalog
Description: 2-Way F 1.2 MCON Series(BN)

Terminal Part Information

Terminal Type ID	Terminated Lead	Diagnostic Test Probe	Terminal Removal Tool
I	Not required	J-35616-16 (LT GN)	No Tool Required

Q77F Transmission Control Solenoid Valve 6 (MQC)

Pin	Size	Color	Circuit	Function	Terminal Type ID	Option
1	0.5	WH	6388	Transmission High Side Driver 2 Control	I	—
2	0.5	BU / GY	4508	Transmission Clutch G Control	I	—

Q77G Transmission Control Solenoid Valve 7 (MQC)

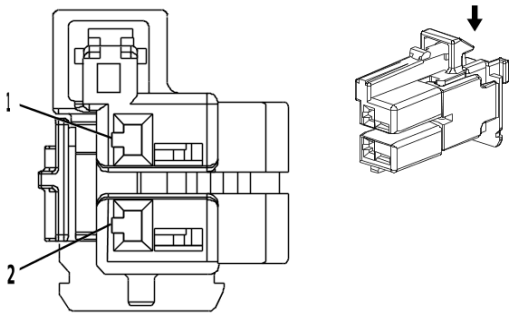

4364736

Connector Part Information

Harness Type: Automatic Transmission Wiring Harness
OEM Connector: 2289523-2
Service Connector: Service by Harness - See Part Catalog
Description: 2-Way F 1.2 MCON Series(BU)

Terminal Part Information

Terminal Type ID	Terminated Lead	Diagnostic Test Probe	Terminal Removal Tool
I	Not required	J-35616-16 (LT GN)	No Tool Required

Q77G Transmission Control Solenoid Valve 7 (MQC)

Pin	Size	Color	Circuit	Function	Terminal Type ID	Option
1	0.5	BN	6387	Transmission High Side Driver 1 Control	I	—
2	0.5	GN / OG	1530	Transmission Line Pressure Control Solenoid Valve Control	I	—

Q77H Transmission Control Solenoid Valve 8 (MQC)

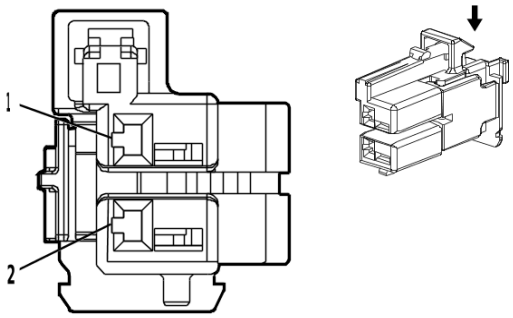

4672683

Connector Part Information

Harness Type: Automatic Transmission Wiring Harness
OEM Connector: 2289523-3
Service Connector: Service by Harness - See Part Catalog
Description: 2-Way F 1.2 MCON Series(GN)

Terminal Part Information

Terminal Type ID	Terminated Lead	Diagnostic Test Probe	Terminal Removal Tool
I	Not required	J-35616-16 (LT GN)	No Tool Required

Q77H Transmission Control Solenoid Valve 8 (MQC)

Pin	Size	Color	Circuit	Function	Terminal Type ID	Option
1	0.5	BN	6387	Transmission High Side Driver 1 Control	I	—
2	0.5	GY / BN	422	Torque Converter Clutch Solenoid Valve Control	I	—

Q77J Transmission Control Solenoid Valve 9 (MQC)

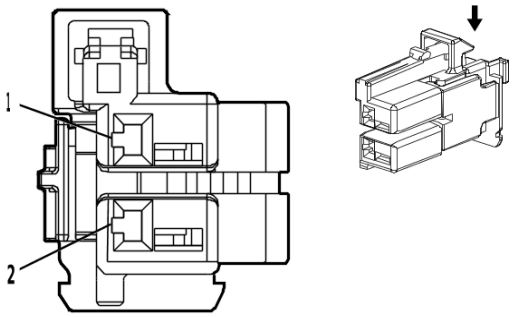

4672650

Connector Part Information

Harness Type: Automatic Transmission Wiring Harness
OEM Connector: 2289523-1
Service Connector: Service by Harness - See Part Catalog
Description: 2-Way F 1.2 MCON Series(BN)

Terminal Part Information

Terminal Type ID	Terminated Lead	Diagnostic Test Probe	Terminal Removal Tool
I	Not required	J-35616-16 (LT GN)	No Tool Required

Q77J Transmission Control Solenoid Valve 9 (MQC)

Pin	Size	Color	Circuit	Function	Terminal Type ID	Option
1	0.5	WH	6388	Transmission High Side Driver 2 Control	I	—
2	0.5	VT	7819	Default Disable Solenoid Control	I	—

Q83AA Valve Lifter Oil Solenoid Valve - Cylinder 1 (L82/L84/L87)

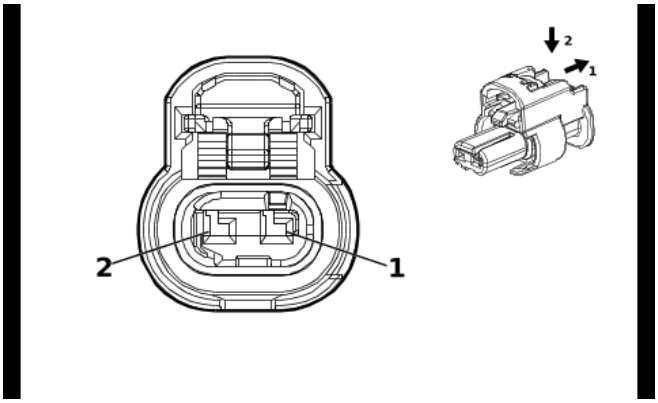

4036662

Connector Part Information

Harness Type: Valve Rocker Arm Oil Control Valve Harness
OEM Connector: 13514238
Service Connector: Service by Harness - See Part Catalog
Description: 2-Way F 1.2 MCON-CB Series, Sealed(BK)

Terminal Part Information

Terminal Type ID	Terminated Lead	Diagnostic Test Probe	Terminal Removal Tool
I	Not Available	No Tool Required	Not Available

Q83AA Valve Lifter Oil Solenoid Valve - Cylinder 1 (L82/L84/L87)

Pin	Size	Color	Circuit	Function	Terminal Type ID	Option
1	0.5	WH / BU	2491	Cylinder Shutoff Solenoid Enable Signal 1	I	—
2	0.5	BU	5491	Cylinder Deactivation Solenoid Valve Control 1	I	—

Q83AB Valve Lifter Oil Solenoid Valve - Cylinder 2 (L84/L87)

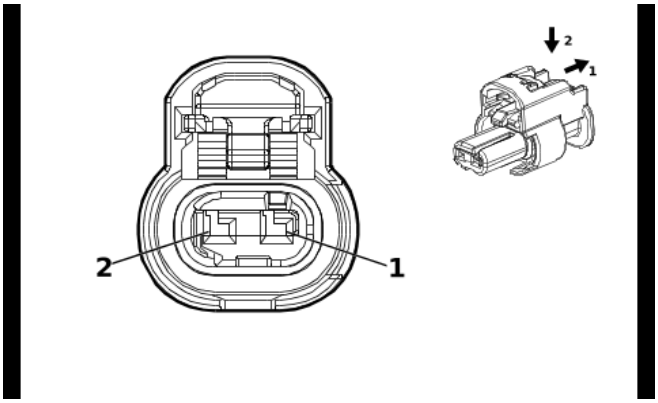

4036662

Connector Part Information

Harness Type: Valve Rocker Arm Oil Control Valve Harness
OEM Connector: 13514238
Service Connector: Service by Harness - See Part Catalog
Description: 2-Way F 1.2 MCON-CB Series, Sealed(BK)

Terminal Part Information

Terminal Type ID	Terminated Lead	Diagnostic Test Probe	Terminal Removal Tool
I	Not Available	No Tool Required	Not Available

Q83AB Valve Lifter Oil Solenoid Valve - Cylinder 2 (L84/L87)

Pin	Size	Color	Circuit	Function	Terminal Type ID	Option
1	0.5	WH / GN	2492	Cylinder Shutoff Solenoid Enable Signal 2	I	—
2	0.5	GN	5492	Cylinder Deactivation Solenoid Valve Control 2	I	—

Q83AC Valve Lifter Oil Solenoid Valve - Cylinder 3 (L84/L87)

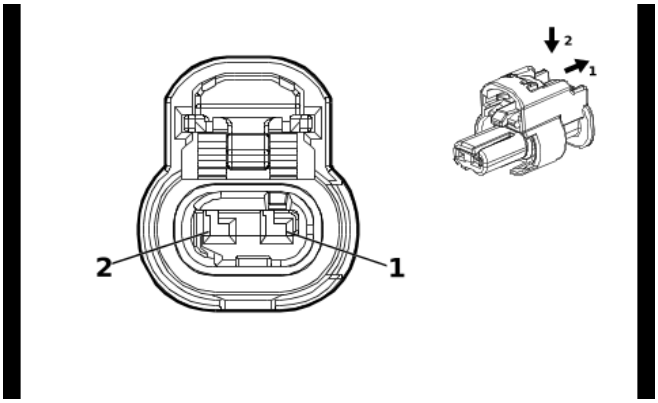

4036662

Connector Part Information

Harness Type: Valve Rocker Arm Oil Control Valve Harness
OEM Connector: 13514238
Service Connector: Service by Harness - See Part Catalog
Description: 2-Way F 1.2 MCON-CB Series, Sealed(BK)

Terminal Part Information

Terminal Type ID	Terminated Lead	Diagnostic Test Probe	Terminal Removal Tool
I	Not Available	No Tool Required	Not Available

Q83AC Valve Lifter Oil Solenoid Valve - Cylinder 3 (L84/L87)

Pin	Size	Color	Circuit	Function	Terminal Type ID	Option
1	0.5	YE / GY	2493	Cylinder Shutoff Solenoid Enable Signal 3	I	—
2	0.5	GY	5493	Cylinder Deactivation Solenoid Valve Control 3	I	—

Q83AD Valve Lifter Oil Solenoid Valve - Cylinder 4 (L82/L84/L87)

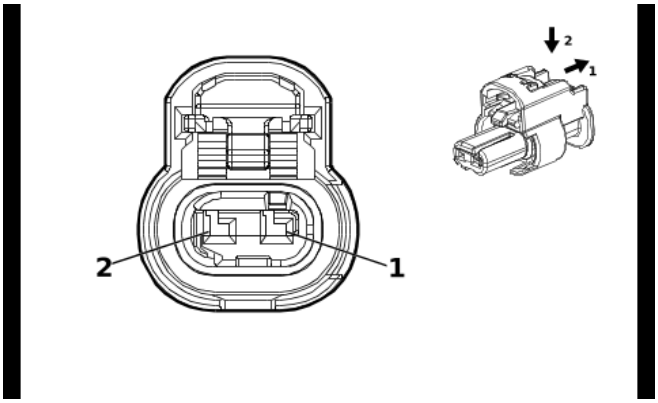

4036662

Connector Part Information

Harness Type: Valve Rocker Arm Oil Control Valve Harness
OEM Connector: 13514238
Service Connector: Service by Harness - See Part Catalog
Description: 2-Way F 1.2 MCON-CB Series, Sealed(BK)

Terminal Part Information

Terminal Type ID	Terminated Lead	Diagnostic Test Probe	Terminal Removal Tool
I	Not Available	No Tool Required	Not Available

Q83AD Valve Lifter Oil Solenoid Valve - Cylinder 4 (L82/L84/L87)

Pin	Size	Color	Circuit	Function	Terminal Type ID	Option
1	0.5	YE / GN	2494	Cylinder Shutoff Solenoid Enable Signal 4	I	—
2	0.5	YE / BU	5494	Cylinder Deactivation Solenoid Valve Control 4	I	—

Q83AE Valve Lifter Oil Solenoid Valve - Cylinder 5 (L84/L87)

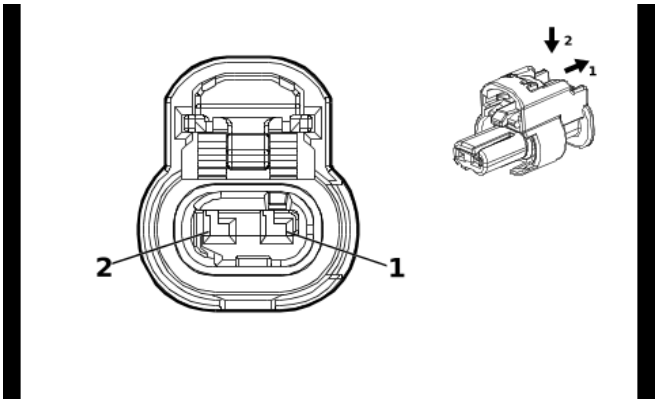

4036662

Connector Part Information

Harness Type: Valve Rocker Arm Oil Control Valve Harness
OEM Connector: 13514238
Service Connector: Service by Harness - See Part Catalog
Description: 2-Way F 1.2 MCON-CB Series, Sealed(BK)

Terminal Part Information

Terminal Type ID	Terminated Lead	Diagnostic Test Probe	Terminal Removal Tool
I	Not Available	No Tool Required	Not Available

Q83AE Valve Lifter Oil Solenoid Valve - Cylinder 5 (L84/L87)

Pin	Size	Color	Circuit	Function	Terminal Type ID	Option
1	0.5	WH / VT	2495	Cylinder Shutoff Solenoid Enable Signal 5	I	—
2	0.5	VT	5495	Cylinder Deactivation Solenoid Valve Control 5	I	—

Q83AF Valve Lifter Oil Solenoid Valve - Cylinder 6 (L82/L84/L87)

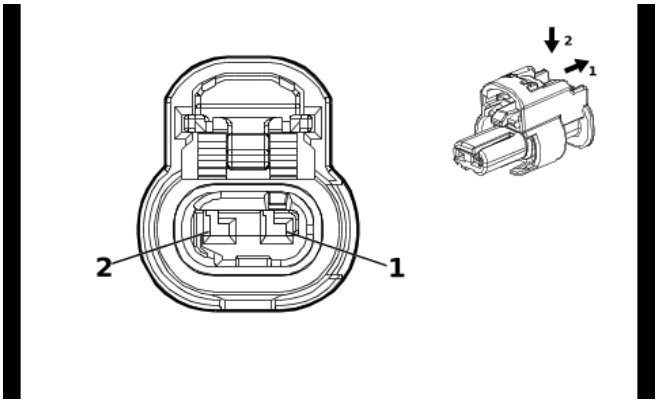

4036662

Connector Part Information

Harness Type: Valve Rocker Arm Oil Control Valve Harness
OEM Connector: 13514238
Service Connector: Service by Harness - See Part Catalog
Description: 2-Way F 1.2 MCON-CB Series, Sealed(BK)

Terminal Part Information

Terminal Type ID	Terminated Lead	Diagnostic Test Probe	Terminal Removal Tool
I	Not Available	No Tool Required	Not Available

Q83AF Valve Lifter Oil Solenoid Valve - Cylinder 6 (L82/L84/L87)

Pin	Size	Color	Circuit	Function	Terminal Type ID	Option
1	0.5	YE / BN	2496	Cylinder Shutoff Solenoid Enable Signal 6	I	—
2	0.5	BN	5496	Cylinder Deactivation Solenoid Valve Control 6	I	—

Q83AG Valve Lifter Oil Solenoid Valve - Cylinder 7 (L82/L84/L87)

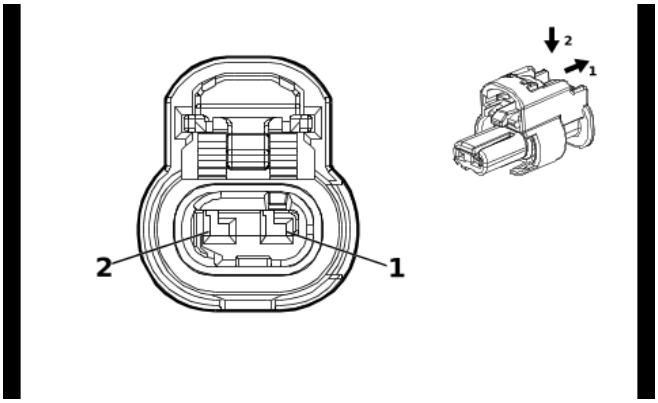

4036662

Connector Part Information

Harness Type: Valve Rocker Arm Oil Control Valve Harness
OEM Connector: 13514238
Service Connector: Service by Harness - See Part Catalog
Description: 2-Way F 1.2 MCON-CB Series, Sealed(BK)

Terminal Part Information

Terminal Type ID	Terminated Lead	Diagnostic Test Probe	Terminal Removal Tool
I	Not Available	No Tool Required	Not Available

Q83AG Valve Lifter Oil Solenoid Valve - Cylinder 7 (L82/L84/L87)

Pin	Size	Color	Circuit	Function	Terminal Type ID	Option
1	0.5	GN / GY	2497	Cylinder Shutoff Solenoid Enable Signal 7	I	—
2	0.5	WH	5497	Cylinder Deactivation Solenoid Valve Control 7	I	—

Q83AH Valve Lifter Oil Solenoid Valve - Cylinder 8 (L84/L87)

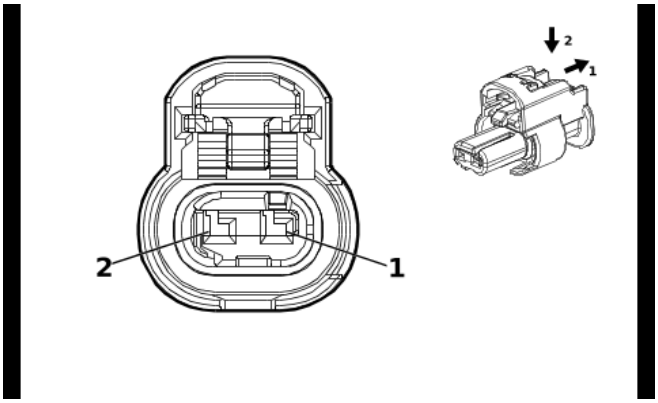

4036662

Connector Part Information

Harness Type: Valve Rocker Arm Oil Control Valve Harness
OEM Connector: 13514238
Service Connector: Service by Harness - See Part Catalog
Description: 2-Way F 1.2 MCON-CB Series, Sealed(BK)

Terminal Part Information

Terminal Type ID	Terminated Lead	Diagnostic Test Probe	Terminal Removal Tool
I	Not Available	No Tool Required	Not Available

Q83AH Valve Lifter Oil Solenoid Valve - Cylinder 8 (L84/L87)

Pin	Size	Color	Circuit	Function	Terminal Type ID	Option
1	0.5	WH / YE	2498	Cylinder Shutoff Solenoid Enable Signal 8	I	—
2	0.5	YE	5498	Cylinder Deactivation Solenoid Valve Control 8	I	—

Q97B Engine Coolant Flow Control Valve - Block (LM2)

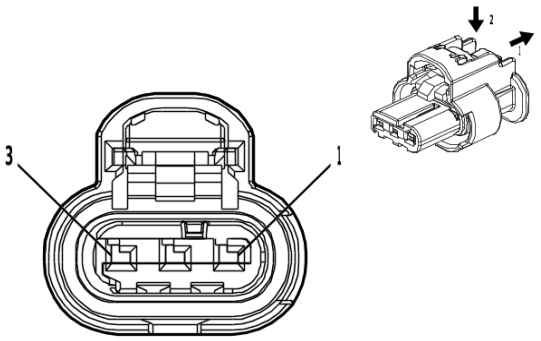

4778903

Connector Part Information

Harness Type: Engine Wiring Harness
OEM Connector: 13514591
Service Connector: Service by Harness - See Part Catalog
Description: 3-Way F 1.2 MCON-CB Series, Sealed(BK)

Terminal Part Information

Terminal Type ID	Terminated Lead	Diagnostic Test Probe	Terminal Removal Tool
I	Not Available	No Tool Required	Not Available

Q97B Engine Coolant Flow Control Valve - Block (LM2)

Pin	Size	Color	Circuit	Function	Terminal Type ID	Option
1	0.5	GN / BN	2732	Engine Control Module LIN Bus 4	I	—
2	0.5	BK	6550	Ground	I	—
3	0.5	VT / BU	5294	Powertrain Main Relay Fused Supply Voltage 5	I	—

Q97M Engine Coolant Flow Control Valve - Main (LM2)

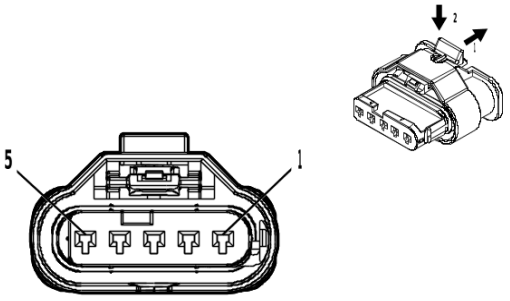

4994456

Connector Part Information

Harness Type: Engine Wiring Harness
OEM Connector: 2-2236898-5
Service Connector: 19371191
Description: 5-Way F 1.2 MCON-LL Series, Sealed(NA)

Terminal Part Information

Terminal Type ID	Terminated Lead	Diagnostic Test Probe	Terminal Removal Tool
I	Not required	J-35616-16 (LT GN)	No Tool Required

Q97M Engine Coolant Flow Control Valve - Main (LM2)

Pin	Size	Color	Circuit	Function	Terminal Type ID	Option
1	0.75	GY / BN	2972	Coolant Flow Control Actuator Control Close	I	—
2	0.75	GY / BU	2971	Coolant Flow Control Actuator Control Open	I	—
3	0.5	WH / RD	480	Engine Control Vehicle Sensors 5 Volt Reference 1	I	—
4	0.5	GY	2973	Coolant Flow Control Valve Position Signal	I	—
5	0.5	BK / GN	580	Engine Control Sensors Low Reference 2	I	—

R6A Terminating Resistor - High Speed Bus (U1D+TB4-UKC-UVC)

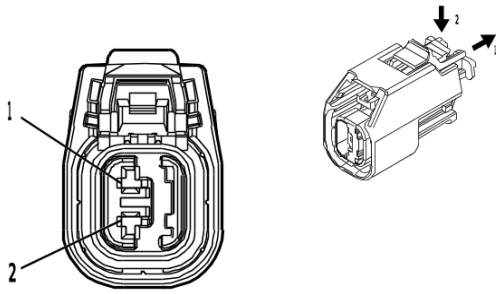

4889830

Connector Part Information

Harness Type: Body Wiring Harness
OEM Connector: 33164011
Service Connector: 19371210
Description: 2-Way F 1.5 OCS Series, Sealed(BK)

Terminal Part Information

Terminal Type ID	Terminated Lead	Diagnostic Test Probe	Terminal Removal Tool
I	Not required	J-35616-2A (GY)	No Tool Required

R6A Terminating Resistor - High Speed Bus (U1D+TB4-UKC-UVC)

Pin	Size	Color	Circuit	Function	Terminal Type ID	Option
1	0.5	WH	4100	AUTOSAR CAN Bus [-] 4 Serial Data	I	—
2	0.5	BU / VT	4101	AUTOSAR CAN Bus [+] 4 Serial Data	I	—

R29 Fuel Filter (LM2)

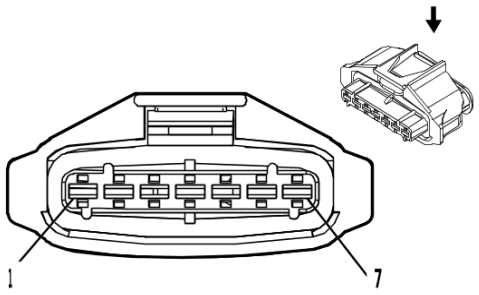

2537256

Connector Part Information

Harness Type: Chassis Wiring Harness
OEM Connector: 10774827
Service Connector: 19354080
Description: 7-Way F 2.8 Junior Power Timer Series, Sealed(BK)

Terminal Part Information

Terminal Type ID	Terminated Lead	Diagnostic Test Probe	Terminal Removal Tool
I	Not required	J-35616-35 (VT)	No Tool Required

R29 Fuel Filter (LM2)

Pin	Size	Color	Circuit	Function	Terminal Type ID	Option
1	2.5	BK	1950	Ground	I	—
2	2.5	BN / YE	2996	Fuel Heater Control 1	I	—
3	0.75	VT / GN	4320	Powertrain Sensor Bus Enable	I	—
4	0.5	BK / BU	6863	Water In Fuel Sensor Low Reference	I	—
5	0.5	BU / YE	6861	Water In Fuel Sensor Signal	I	—
6	0.5	BN / GY	7072	Fuel Temperature Sensor 1 Signal	I	—
7	0.5	BN / WH	7073	Fuel Temperature Sensor 1 Low Reference	I	—

S13D Door Lock Switch - Driver

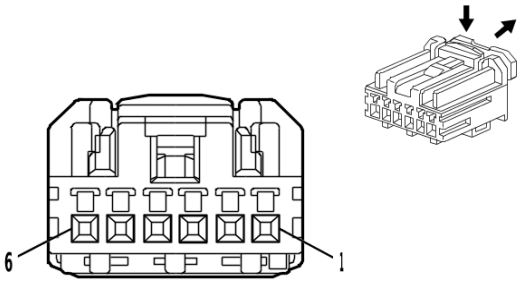

4650256

Connector Part Information

Harness Type: Front Side Door Door Lock Door Wiring Harness - Driver
OEM Connector: HCMPB-C06A-K
Service Connector: Service by Harness - See Part Catalog
Description: 6-Way F 0.64 HCM Series(BK)

Terminal Part Information

Terminal Type ID	Terminated Lead	Diagnostic Test Probe	Terminal Removal Tool
I	Not required	J-35616-64B (L-BU)	No Tool Required

S13D Door Lock Switch - Driver

Pin	Size	Color	Circuit	Function	Terminal Type ID	Option
1	0.35	BN / GY	4784	Left Front Door LED Backlight Dimming Control	I	—
2	0.35	BN / YE	2771	Left Front Door Lock Switch Lock Signal	I	—
3	0.35	BN / WH	2772	Left Front Door Lock Switch Unlock Signal	I	—
4	0.35	BK	1150	Ground	I	—
5	0.35	VT / YE	4244	Left Front Door Lock Indicator Control	I	—
6	—	—	—	Not Occupied	—	—

S13LR Door Lock Switch - Left Rear

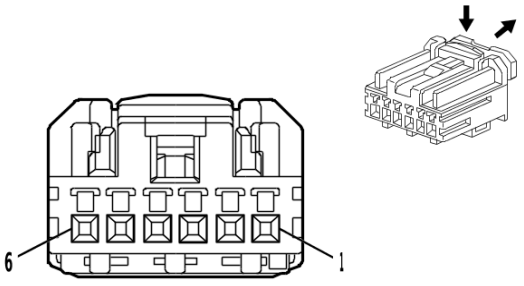

4650256

Connector Part Information

Harness Type: Rear Side Door Door Lock Door Wiring Harness - Left
OEM Connector: HCMPB-C06A-K
Service Connector: Service by Harness - See Part Catalog
Description: 6-Way F 0.64 HCM Series(BK)

Terminal Part Information

Terminal Type ID	Terminated Lead	Diagnostic Test Probe	Terminal Removal Tool
I	Not required	J-35616-16 (L-GN)	No Tool Required

S13LR Door Lock Switch - Left Rear

Pin	Size	Color	Circuit	Function	Terminal Type ID	Option
1	0.35	YE	6817	LED Backlight Dimming Control 1	I	—
2	0.35	VT / BU	4001	Left Rear Door Lock Switch Lock Control	I	—
3	0.35	WH / YE	4002	Left Rear Door Lock Switch Unlock Control	I	—
4	0.35	BK	1150	Ground	I	—
5	0.35	VT / WH	6675	Left Rear Door Lock Indicator Control	I	—
6	—	—	—	Not Occupied	—	—

S13P Door Lock Switch - Passenger

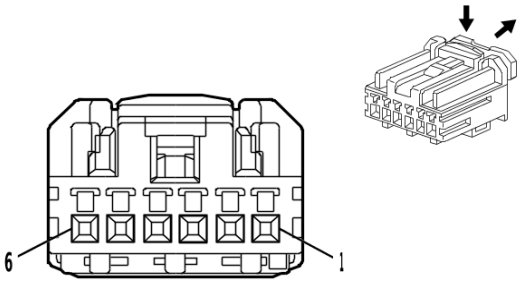

4650256

Connector Part Information

Harness Type: Front Side Door Door Lock Door Wiring Harness - Passenger
OEM Connector: HCMPB-C06A-K
Service Connector: Service by Harness - See Part Catalog
Description: 6-Way F 0.64 HCM Series(BK)

Terminal Part Information

Terminal Type ID	Terminated Lead	Diagnostic Test Probe	Terminal Removal Tool
I	Not required	J-35616-64B (L-BU)	No Tool Required

S13P Door Lock Switch - Passenger

Pin	Size	Color	Circuit	Function	Terminal Type ID	Option
1	0.35	GY / VT	4638	LED Backlight Dimming Control Right Front Door	I	—
2	0.35	YE / VT	2773	Right Front Door Lock Switch Lock Control	I	—
3	0.35	BN / VT	2774	Right Front Door Lock Switch Unlock Control	I	—
4	0.35	BK	1250	Ground	I	—
5	0.35	YE / BU	4245	Right Front Door Lock Indicator Control	I	—
6	—	—	—	Not Occupied	—	—

S13RR Door Lock Switch - Right Rear

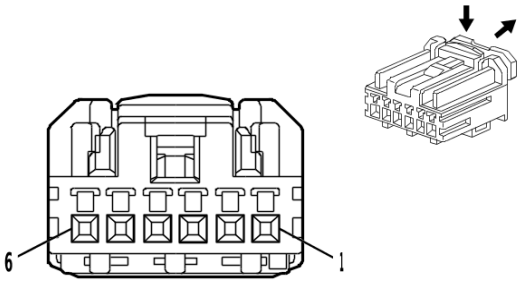

4650256

Connector Part Information

Harness Type: Rear Side Door Door Lock Door Wiring Harness - Right
OEM Connector: HCMPB-C06A-K
Service Connector: Service by Harness - See Part Catalog
Description: 6-Way F 0.64 HCM Series(BK)

Terminal Part Information

Terminal Type ID	Terminated Lead	Diagnostic Test Probe	Terminal Removal Tool
I	Not required	J-35616-16 (L-GN)	No Tool Required
II	Not required	J-35616-64B (L-BU)	No Tool Required

S13RR Door Lock Switch - Right Rear

Pin	Size	Color	Circuit	Function	Terminal Type ID	Option
1	0.5	YE	6817	LED Backlight Dimming Control 1	II	—
2	0.35	GN / BN	4003	Right Rear Door Lock Switch Lock Control	I	—
3	0.35	BU / GY	4004	Right Rear Door Lock Switch Unlock Control	I	—
4	0.35	BK	1250	Ground	I	—
5	0.5	YE / BK	6677	Right Rear Door Lock Indicator Control	II	—
6	—	—	—	Not Occupied	—	—

S26 Hazard Warning Switch

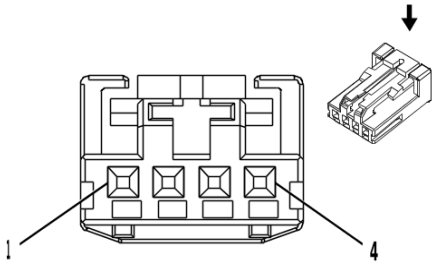

2717162

Connector Part Information

Harness Type: Instrument Panel Wiring Harness
OEM Connector: 1-936119-1
Service Connector: 19367524
Description: 4-Way F 0.64 Micro-Quadlock Series(BK)

Terminal Part Information

Terminal Type ID	Terminated Lead	Diagnostic Test Probe	Terminal Removal Tool
I	Not required	J-35616-64B (L-BU)	No Tool Required

S26 Hazard Warning Switch

Pin	Size	Color	Circuit	Function	Terminal Type ID	Option
1	0.35	GN / WH	111	Hazard Warning Switch Signal	I	—
2	0.35	BK	1850	Ground	I	—
3	—	—	—	Not Occupied	—	—
4	0.35	GY / YE	7543	Hazard Warning Indicator LED Dimming Signal	I	—

S27 Head-Up Display Switch (UV6)

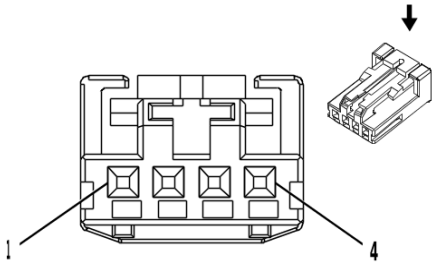

2717162

Connector Part Information

Harness Type: Instrument Panel Wiring Harness
OEM Connector: 1-936119-1
Service Connector: 19367524
Description: 4-Way F 0.64 Micro-Quadlock Series(BK)

Terminal Part Information

Terminal Type ID	Terminated Lead	Diagnostic Test Probe	Terminal Removal Tool
I	Not required	J-35616-64B (L-BU)	No Tool Required

S27 Head-Up Display Switch (UV6)

Pin	Size	Color	Circuit	Function	Terminal Type ID	Option
1	0.35	YE	6817	LED Backlight Dimming Control 1	I	—
2	0.35	BK	1850	Ground	I	—
3	0.35	BK / GN	5699	Head-Up Display Switch Low Reference	I	—
4	0.35	YE / WH	622	Head-Up Display Switch Signal	I	—

S30 Headlamp Switch

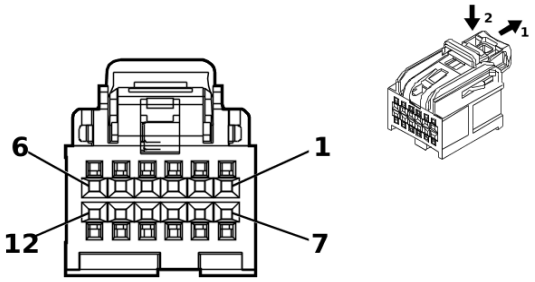

4975223

Connector Part Information

Harness Type: Instrument Panel Wiring Harness
OEM Connector: 35016616
Service Connector: 13519750
Description: 12-Way F 0.64 OCS Series(BK)

Terminal Part Information

Terminal Type ID	Terminated Lead	Diagnostic Test Probe	Terminal Removal Tool
I	19300660	J-35616-64B (L-BU)	J-38125-215A

S30 Headlamp Switch

Pin	Size	Color	Circuit	Function	Terminal Type ID	Option
1	0.35	WH / VT	103	Headlamp Switch On Signal	I	—
2	0.5	YE	6817	LED Backlight Dimming Control 1	I	—
3	0.35	GN / BN	306	Headlamp Switch Off Signal	I	—
4	—	—	—	Not Occupied	—	—
5	0.35	GN / GY	13	Headlamp Switch Park Lamp Signal	I	—
6 - 7	—	—	—	Not Occupied	—	—
8	0.35	BK	1850	Ground	I	—
9 - 10	—	—	—	Not Occupied	—	—
11	0.35	WH / BN	7555	Headlamp Switch Signal	I	—
12	0.35	YE	7556	Headlamp Switch Reference	I	—

S33 Steering Wheel Horn Contact

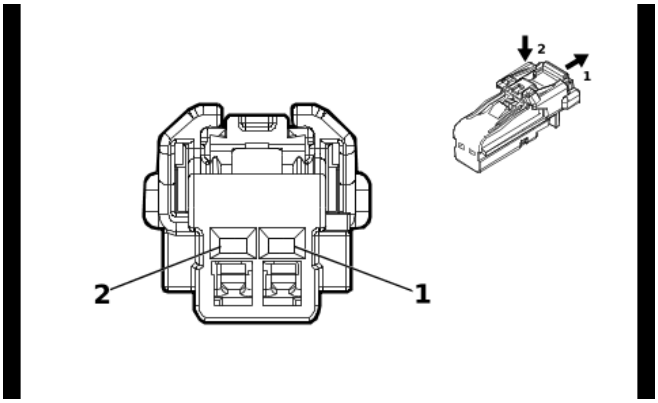

4115691

Connector Part Information

Harness Type: Steering Wheel Horn Switch Wiring Harness
OEM Connector: 13517403
Service Connector: Service by Harness - See Part Catalog
Description: 2-Way F 1.2 Series(BK)

Terminal Part Information

Terminal Type ID	Terminated Lead	Diagnostic Test Probe	Terminal Removal Tool
I	Not required	J-35616-16 (LT GN)	No Tool Required

S33 Steering Wheel Horn Contact

Pin	Size	Color	Circuit	Function	Terminal Type ID	Option
1	0.35	BK / WH	6051	Steering Wheel Ground	I	—
2	0.35	GN / WH	3287	Horn Switch Signal	I	—

S38 On/Off Vehicle Switch

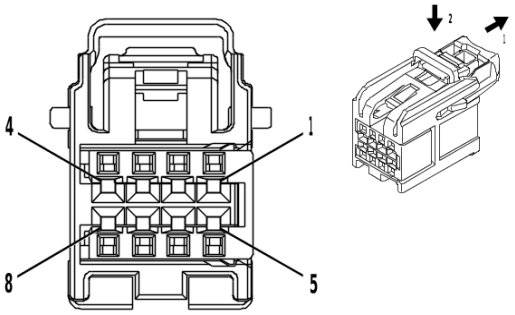

4232228

Connector Part Information

Harness Type: Instrument Panel Wiring Harness
OEM Connector: 15526973
Service Connector: 19353873
Description: 8-Way F 0.64 OCS Series(GY)

Terminal Part Information

Terminal Type ID	Terminated Lead	Diagnostic Test Probe	Terminal Removal Tool
I	Not required	J-35616-64B (L-BU)	No Tool Required

S38 On/Off Vehicle Switch

Pin	Size	Color	Circuit	Function	Terminal Type ID	Option
1	0.35	BU / BK	5719	Ignition Mode Switch Start LED Signal	I	—
2	0.35	BN / BK	5720	Ignition Mode Switch Accessory LED Signal	I	—
3	0.5	BK / WH	1851	Signal Ground	I	—
4	0.35	BU / GN	5723	Ignition Mode Switch Mode Voltage	I	—
5	0.35	YE	6817	LED Backlight Dimming Control 1	I	—
6	—	—	—	Not Occupied	—	—
7	0.35	BK / GY	3559	Passive Start Switch 2 Low Reference	I	—
8	0.35	GN / BK	3558	Passive Start Switch Signal 2	I	—

S45A Liftgate Release Switch - Exterior

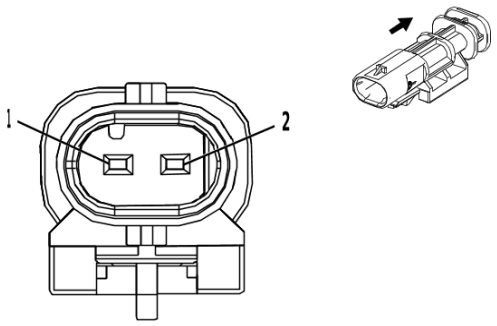

2474755

Connector Part Information

Harness Type: Liftgate Wiring Harness
OEM Connector: 2203314-1
Service Connector: Service by Harness - See Part Catalog
Description: 2-Way M 1.2 Multilock Series, Sealed(BK)

Terminal Part Information

Terminal Type ID	Terminated Lead	Diagnostic Test Probe	Terminal Removal Tool
I	Not required	J-35616-17 (L-GN)	No Tool Required

S45A Liftgate Release Switch - Exterior

Pin	Size	Color	Circuit	Function	Terminal Type ID	Option
1	0.35	YE / BU	5797	Rear Closure Handle Switch Open Signal	I	—
2	0.35	BK	2050	Ground	I	—

S47D Front Seat Adjuster Memory Switch - Driver (A45/AUN)

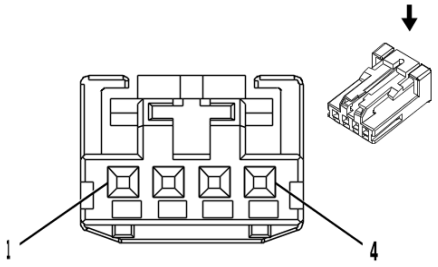

2717162

Connector Part Information

Harness Type: Front Side Door Door Lock Door Wiring Harness - Driver
OEM Connector: 1-936119-1
Service Connector: Service by Harness - See Part Catalog
Description: 4-Way F 0.64 Micro-Quadlock Series(BK)

Terminal Part Information

Terminal Type ID	Terminated Lead	Diagnostic Test Probe	Terminal Removal Tool
I	Not required	J-35616-64B (L-BU)	No Tool Required

S47D Front Seat Adjuster Memory Switch - Driver (A45/AUN)

Pin	Size	Color	Circuit	Function	Terminal Type ID	Option
1	0.35	BN / GY	4784	Left Front Door LED Backlight Dimming Control	I	—
2	0.35	BK / WH	1151	Signal Ground	I	—
3	0.35	WH	615	Seat Memory Switch Signal 1	I	—
4	0.35	BU / GN	614	Seat Memory Switch Set Signal	I	—

S64D Front Seat Adjuster Switch - Driver (A45/AUN)

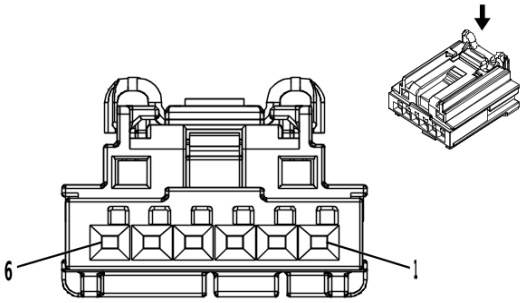

3960313

Connector Part Information

Harness Type: Front Seat Wiring Harness - Driver
OEM Connector: 2035363-4
Service Connector: Service by Harness - See Part Catalog
Description: 6-Way F 0.64 Generation Y Series(BK)

Terminal Part Information

Terminal Type ID	Terminated Lead	Diagnostic Test Probe	Terminal Removal Tool
I	Not required	J-35616-64B (L-BU)	No Tool Required

S64D Front Seat Adjuster Switch - Driver (A45/AUN)

Pin	Size	Color	Circuit	Function	Terminal Type ID	Option
1	0.5	RD / BN	2240	Battery Positive Voltage	I	—
2	—	—	—	Not Occupied	—	—
3	0.5 0.35	GN / GY GN / GY	3758 3758	Driver Seat Memory Control Module LIN Bus 2 Driver Seat Memory Control Module LIN Bus 2	I I	A45+ AVK/ AUN+ AVK A45- AVK/ AUN- AVK
4	0.5	BK	1150	Ground	I	—
5	0.5	BU / YE	2818	Driver Seat Auxiliary Adjustment Switch Signal	I	—
6	0.5	BK / VT	2817	Auxiliary Driver Seat Adjustment Switch Low Reference	I	—

S64D Front Seat Adjuster Switch - Driver (-A45-AUN)

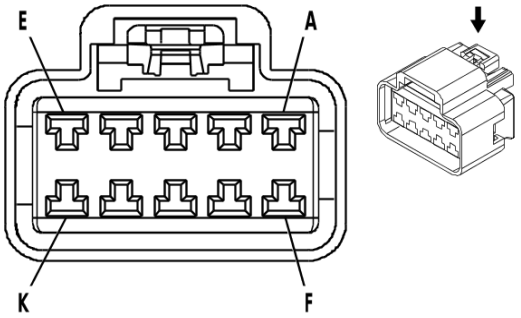

623046

Connector Part Information

Harness Type: Front Seat Wiring Harness - Driver
OEM Connector: 35058909
Service Connector: Service by Harness - See Part Catalog
Description: 10-Way F 280 GT Series(BK)

Terminal Part Information

Terminal Type ID	Terminated Lead	Diagnostic Test Probe	Terminal Removal Tool
I	Not required	J-35616-4A (PU)	No Tool Required

S64D Front Seat Adjuster Switch - Driver (-A45-AUN)

Pin	Size	Color	Circuit	Function	Terminal Type ID	Option
A	2.5	RD / YE	5040	Battery Positive Voltage	I	—
B	1.5	BU / YE	277	Driver Seat Recline Motor Rearward Control	I	—
C	1.5	YE / BU	285	Driver Seat Horizontal Motor Forward Control	I	—
D	1.5	GY / GN	284	Driver Seat Horizontal Motor Rearward Control	I	—
E	1.5	GY / BU	283	Driver Seat Rear Vertical Motor Down Control	I	—
F	1.5	GN / BN	286	Driver Seat Front Vertical Motor Up Control	I	—
G	1.5	YE	282	Driver Seat Rear Vertical Motor Up Control	I	—
H	1.5	GN / YE	276	Driver Seat Recline Motor Forward Control	I	—
J	2.5	BK	1150	Ground	I	—
K	1.5	BU / VT	287	Driver Seat Front Vertical Motor Down Control	I	—

S64P Front Seat Adjuster Switch - Passenger

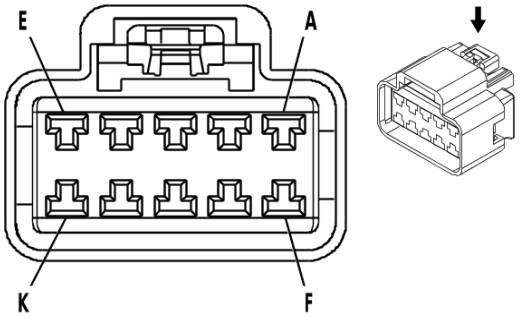

623046

Connector Part Information

Harness Type: Front Seat Wiring Harness - Passenger
OEM Connector: 35058909
Service Connector: Service by Harness - See Part Catalog
Description: 10-Way F 280 GT Series(BK)

Terminal Part Information

Terminal Type ID	Terminated Lead	Diagnostic Test Probe	Terminal Removal Tool
I	Not required	J-35616-4A (PU)	No Tool Required

S64P Front Seat Adjuster Switch - Passenger

Pin	Size	Color	Circuit	Function	Terminal Type ID	Option
A	1.5	BU / WH	289	Passenger Seat Rear Vertical Motor Down Control	I	—
B	1.5	YE / BU	290	Passenger Seat Horizontal Motor Rearward Control	I	—
C	1.5	YE / WH	296	Passenger Seat Horizontal Motor Forward Control	I	—
D	1.5	BU / BN	77	Passenger Seat Recline Motor Rearward Control	I	—
E	2.5	BK	1250	Ground	I	—
F	1.5 1.5	BU / WH GN / BU	289 298	Passenger Seat Rear Vertical Motor Down Control Passenger Seat Front Vertical Motor Down Control	I I	A7J- AKE A7K- AKE
G	2.5	RD / YE	7440	Battery Positive Voltage	I	—
H	1.5	GN	76	Passenger Seat Recline Motor Forward Control	I	—
J	1.5	GN / WH	288	Passenger Seat Rear Vertical Motor Up Control	I	—
K	1.5 1.5	GN / WH GN / VT	288 297	Passenger Seat Rear Vertical Motor Up Control Passenger Seat Front Vertical Motor Up Control	I I	A7J- AKE A7K- AKE

S65D Front Seat Lumbar Switch - Driver (A2X+AL9)

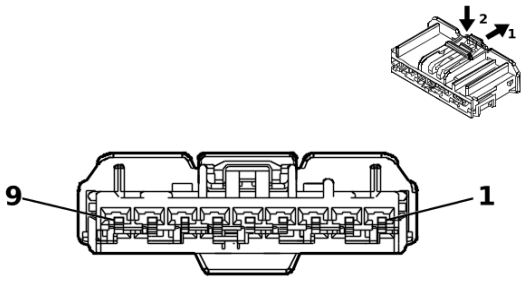

5204289

Connector Part Information

Harness Type: Front Seat Wiring Harness - Driver
OEM Connector: 7289-6875-40
Service Connector: Service by Harness - See Part Catalog
Description: 9-Way F 2.8 YESC Series(GY)

Terminal Part Information

Terminal Type ID	Terminated Lead	Diagnostic Test Probe	Terminal Removal Tool
I	Not required	J-35616-4A (PU)	No Tool Required

S65D Front Seat Lumbar Switch - Driver (A2X+AL9)

Pin	Size	Color	Circuit	Function	Terminal Type ID	Option
1	1.5	BK	1150	Ground	I	—
2	—	—	—	Not Occupied	—	—
3	1.5	RD / YE	5040	Battery Positive Voltage	I	—
4	—	—	—	Not Occupied	—	—
5	0.75	BU	611	Driver Seat Lumbar Support Motor Forward Control	I	—
6	—	—	—	Not Occupied	—	—
7	0.75	VT	610	Driver Seat Lumbar Support Motor Backward Control	I	—
8 - 9	—	—	—	Not Occupied	—	—

S65D Front Seat Lumbar Switch - Driver (AVK+(A45/AUN))

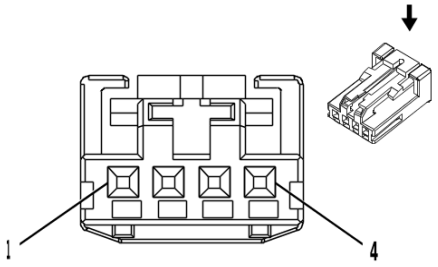

2717162

Connector Part Information

Harness Type: Front Seat Wiring Harness - Driver
OEM Connector: 1-936119-1
Service Connector: Service by Harness - See Part Catalog
Description: 4-Way F 0.64 Micro-Quadlock Series(BK)

Terminal Part Information

Terminal Type ID	Terminated Lead	Diagnostic Test Probe	Terminal Removal Tool
I	Not required	J-35616-64B (L-BU)	No Tool Required

S65D Front Seat Lumbar Switch - Driver (AVK+(A45/AUN))

Pin	Size	Color	Circuit	Function	Terminal Type ID	Option
1 - 2	—	—	—	Not Occupied	—	—
3	0.5	BU / YE	2818	Driver Seat Auxiliary Adjustment Switch Signal	I	—
4	0.5	BK / VT	2817	Auxiliary Driver Seat Adjustment Switch Low Reference	I	—

S65P Front Seat Lumbar Switch - Passenger X1

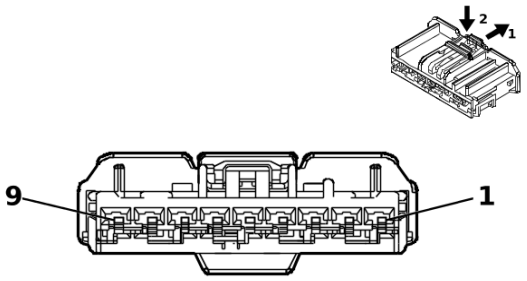

5204289

Connector Part Information

Harness Type: Front Seat Wiring Harness - Passenger
OEM Connector: 7289-6875-40
Service Connector: Service by Harness - See Part Catalog
Description: 9-Way F 2.8 YESC Series(GY)

Terminal Part Information

Terminal Type ID	Terminated Lead	Diagnostic Test Probe	Terminal Removal Tool
I	Not required	J-35616-4A (PU)	No Tool Required

S65P Front Seat Lumbar Switch - Passenger X1

Pin	Size	Color	Circuit	Function	Terminal Type ID	Option
1	2	BK	1250	Ground	I	—
2	—	—	—	Not Occupied	—	—
3	2.5	RD / YE	7440	Battery Positive Voltage	I	—
4	—	—	—	Not Occupied	—	—
5	0.75	BU	211	Passenger Seat Lumbar Support Motor Forward Control	I	—
6	—	—	—	Not Occupied	—	—
7	0.75	VT	210	Passenger Seat Lumbar Support Motor Backward Control	I	—
8 - 9	—	—	—	Not Occupied	—	—

S65P Front Seat Lumbar Switch - Passenger X2

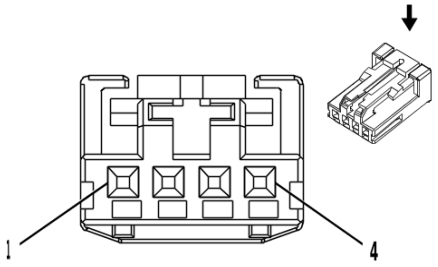

2717162

Connector Part Information

Harness Type: Front Seat Wiring Harness - Passenger
OEM Connector: 1-936119-1
Service Connector: Service by Harness - See Part Catalog
Description: 4-Way F 0.64 Micro-Quadlock Series(BK)

Terminal Part Information

Terminal Type ID	Terminated Lead	Diagnostic Test Probe	Terminal Removal Tool
I	Not required	J-35616-64B (L-BU)	No Tool Required

S65P Front Seat Lumbar Switch - Passenger X2

Pin	Size	Color	Circuit	Function	Terminal Type ID	Option
1 - 2	—	—	—	Not Occupied	—	—
3	0.5	YE / GN	1068	Passenger Seat Lumbar Support Switch Analog Signal	I	—
4	0.5	BK / BU	2194	Passenger Seat Position Switch Low Reference	I	—

S70E Radio Favorites Switch - Steering Wheel

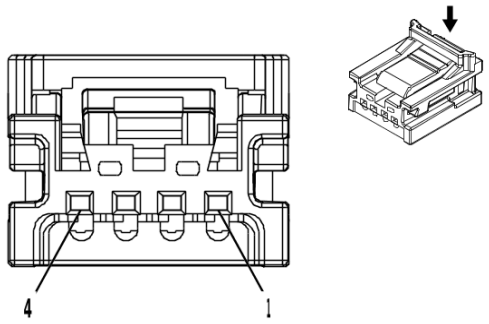

4215060

Connector Part Information

Harness Type: Steering Wheel Horn Switch Wiring Harness
OEM Connector: 13507113
Service Connector: Service by Harness - See Part Catalog
Description: 4-Way F Mini 50 Series(BK)

Terminal Part Information

Terminal Type ID	Terminated Lead	Diagnostic Test Probe	Terminal Removal Tool
I	Not required	EL-35616-58 (BK)	No Tool Required

S70E Radio Favorites Switch - Steering Wheel

Pin	Size	Color	Circuit	Function	Terminal Type ID	Option
1	0.35	YE / BK	6051	Steering Wheel Ground	I	—
2	0.35	WH / YE	4313	Radio Favorite Forward Switch Signal	I	—
3	0.35	YE / BU	4312	Radio Favorite Back Switch Signal	I	—
4	—	—	—	Not Occupied	—	—

S70F Radio Volume Switch - Steering Wheel

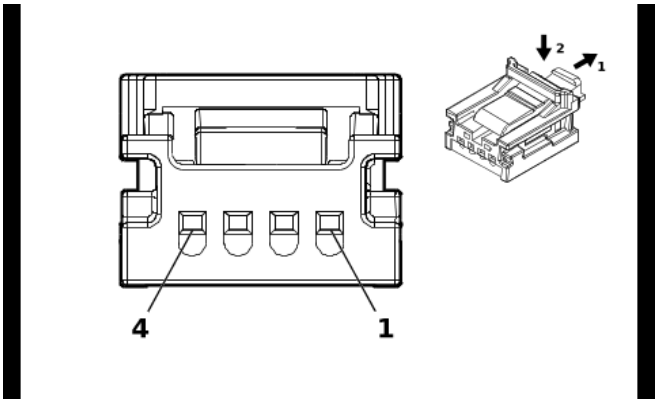

5493584

Connector Part Information

Harness Type: Steering Wheel Horn Switch Wiring Harness
OEM Connector: 13507115
Service Connector: Service by Harness - See Part Catalog
Description: 4-Way F Mini 50 Series(GY)

Terminal Part Information

Terminal Type ID	Terminated Lead	Diagnostic Test Probe	Terminal Removal Tool
I	Not required	EL-35616-58 (BK)	No Tool Required

S70F Radio Volume Switch - Steering Wheel

Pin	Size	Color	Circuit	Function	Terminal Type ID	Option
1	0.35	BK / WH	6051	Steering Wheel Ground	I	—
2	0.35	BU / RD	4314	Radio Volume Down Switch Signal	I	—
3	0.35	GN / BN	4315	Radio Volume Up Switch Signal	I	—
4	—	—	—	Not Occupied	—	—

S70L Cruise Control Switch

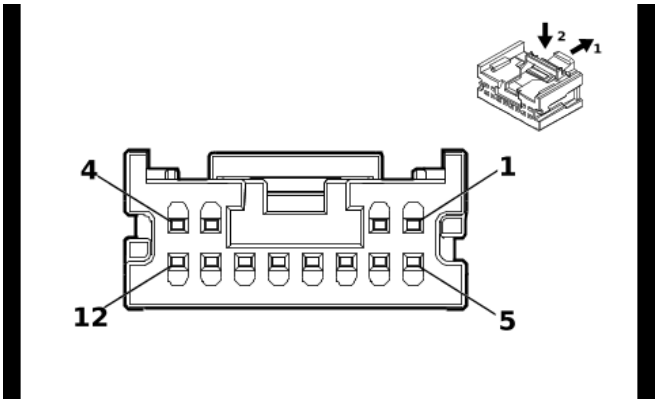

4539608

Connector Part Information

Harness Type: Steering Wheel Horn Switch Wiring Harness
OEM Connector: 13507122
Service Connector: Service by Harness - See Part Catalog
Description: 12-Way F 0.64 Series(GY)

Terminal Part Information

Terminal Type ID	Terminated Lead	Diagnostic Test Probe	Terminal Removal Tool
I	Not required	EL-35616-58 (BK)	No Tool Required

S70L Cruise Control Switch

Pin	Size	Color	Circuit	Function	Terminal Type ID	Option
1	0.35	GN / GN	5140	Battery Positive Voltage	I	—
2	0.35	YE / BK	3893	Steering Wheel LED Backlight Dimming Control	I	—
3	0.35	GN / OG	1884	Cruise Control Set/Coast/Resume/Accelerate Switch Signal	I	—
4	0.35	GY / GN	5737	Distance Sensing Cruise Control Gap Up/Down Switch Signal	I	—
5	—	—	—	Not Occupied	—	—
6	0.35	BK	6051	Steering Wheel Ground	I	—
7	0.35	GY / OG	5884	Steering Wheel Heating Switch LED Control	I	KI3
8	0.35	YE / GY	5883	Steering Wheel Heating Switch Signal	I	KI3
9	0.35	BK / RD	3892	Indicator Dimming Control 2	I	—
10	0.35	BK / VT	1449	Steering Wheel Resistor Ladder Low Reference	I	KI3
11 - 12	—	—	—	Not Occupied	—	—

S70R Radio Control Switch - Steering Wheel

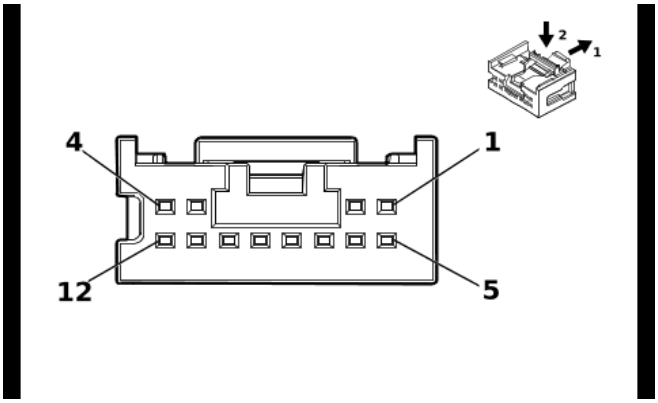

5634582

Connector Part Information

Harness Type: Steering Wheel Horn Switch Wiring Harness
OEM Connector: 13507114
Service Connector: Service by Harness - See Part Catalog
Description: 12-Way F Mini 50 Series(GY)

Terminal Part Information

Terminal Type ID	Terminated Lead	Diagnostic Test Probe	Terminal Removal Tool
I	Not required	EL-35616-58 (BK)	No Tool Required

S70R Radio Control Switch - Steering Wheel

Pin	Size	Color	Circuit	Function	Terminal Type ID	Option
1	0.35	GN	5140	Battery Positive Voltage	I	—
2	0.35	PK	3893	Steering Wheel LED Backlight Dimming Control	I	—
3	0.35	GN / BK	3894	Instrument Cluster LIN Bus 1	I	—
4 - 5	—	—	—	Not Occupied	—	—
6	0.35	BK / WH	6051	Steering Wheel Ground	I	—
7	0.35	WH / YE	4313	Radio Favorite Forward Switch Signal	I	—
8	0.35	YE / BU	4312	Radio Favorite Back Switch Signal	I	—
9	0.35	BK / RD	3892	Indicator Dimming Control 2	I	—
10	0.35	BU / RD	4315	Radio Volume Up Switch Signal	I	—
11	0.35	GN / BN	4314	Radio Volume Down Switch Signal	I	—
12	—	—	—	Not Occupied	—	—

S71 Steering Column Tilt Wheel and Telescope Switch (N38)

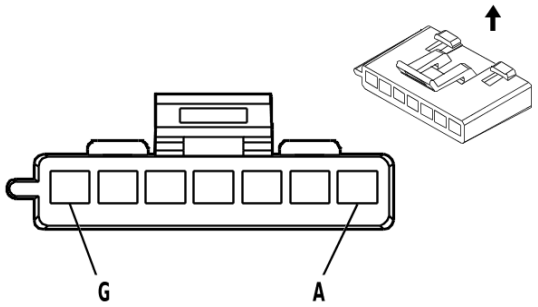

73146

Connector Part Information

Harness Type: Instrument Panel Wiring Harness
OEM Connector: 12052854
Service Connector: 15862656
Description: 7-Way F 280 Metri-Pack Series(BK)

Terminal Part Information

Terminal Type ID	Terminated Lead	Diagnostic Test Probe	Terminal Removal Tool
I	Not required	J-35616-4A (PU)	No Tool Required

S71 Steering Column Tilt Wheel and Telescope Switch (N38)

Pin	Size	Color	Circuit	Function	Terminal Type ID	Option
A	0.35	BU / YE	2094	Steering Column Tilt and Telescope Switch Forward Signal	I	—
B	0.35	YE / BN	2097	Steering Column Tilt and Telescope Switch Down Signal	I	—
C	0.35	BN / GY	2096	Steering Column Tilt and Telescope Switch Up Signal	I	—
D - E	—	—	—	Not Occupied	—	—
F	0.35	GN / BN	2095	Steering Column Tilt and Telescope Switch Rearward Signal	I	—
G	0.35	VT / BK	2020	Steering Column Tilt and Telescope Switch Feedback Signal	I	—

S76 Trailer Brake Control Switch (JL1)

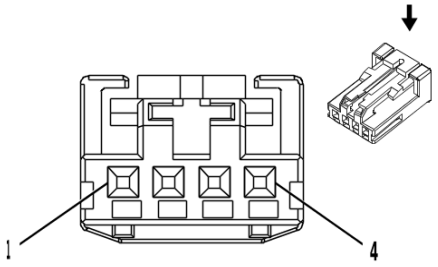

2717162

Connector Part Information

Harness Type: Instrument Panel Wiring Harness
OEM Connector: 1-936119-2
Service Connector: 84867143
Description: 4-Way F 0.64 Micro-Quadlock Series(YE)

Terminal Part Information

Terminal Type ID	Terminated Lead	Diagnostic Test Probe	Terminal Removal Tool
I	Not required	J-35616-64B (L-BU)	No Tool Required

S76 Trailer Brake Control Switch (JL1)

Pin	Size	Color	Circuit	Function	Terminal Type ID	Option
1	0.35	RD / VT	4040	Battery Positive Voltage	I	—
2	0.35	GN / BU	2733	Electronic Brake Control Module LIN Bus 2	I	—
3	0.35	BK	1850	Ground	I	—
4	—	—	—	Not Occupied	—	—

S78 Turn Signal Switch

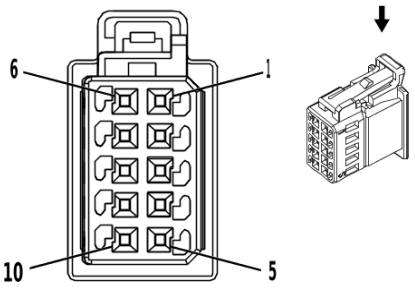

2830955

Connector Part Information

Harness Type: Instrument Panel Wiring Harness
OEM Connector: 1488973-1
Service Connector: 19299776
Description: 10-Way F 0.64 Micro-Quadlock Series(BK)

Terminal Part Information

Terminal Type ID	Terminated Lead	Diagnostic Test Probe	Terminal Removal Tool
I	19300632	J-35616-64B (L-BU)	J-38125-215A

S78 Turn Signal Switch

Pin	Size	Color	Circuit	Function	Terminal Type ID	Option
1	0.35	WH / GN	2915	Left Turn Signal Switch Signal	I	—
2	0.35	VT / BU	2916	Right Turn Signal Switch Signal	I	—
3	0.35	BK	1850	Ground	I	—
4	0.35	BN / BU	391	Rear Window Wiper Switch Signal	I	—
5	0.35	WH / BK	94	Windshield Washer Switch Signal	I	—
6	0.35	YE / BN	307	Headlamp Switch Flash Signal	I	—
7	0.35	WH	524	High Beam Select Switch High Beam Signal	I	—
8	0.35	BK / GY	6009	Windshield Wiper Switch Low Reference	I	—
9	0.35	GY	1715	Windshield Wiper Switch High Signal	I	—
10	0.35	YE / BU	1714	Windshield Wiper Switch Low Signal	I	—

S79D Front Side Door Window Control Switch - Driver X1

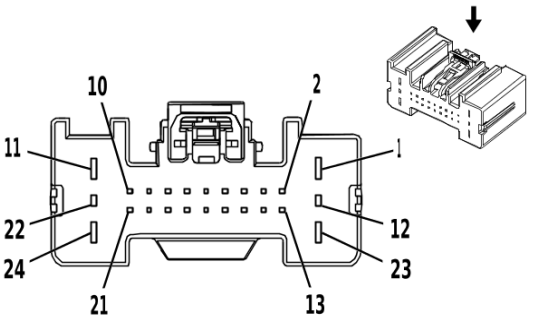

2871905

Connector Part Information

Harness Type: Front Side Door Door Lock Door Wiring Harness - Driver
OEM Connector: 7287-3260-30
Service Connector: Service by Harness - See Part Catalog
Description: 24-Way F 0.64, 1.5, 2.8 Series(BK)

Terminal Part Information

Terminal Type ID	Terminated Lead	Diagnostic Test Probe	Terminal Removal Tool
I	Not required	J-35616-2A (GY)	No Tool Required
II	Not required	J-35616-4A (PU)	No Tool Required
III	Not required	J-35616-64B (L-BU)	No Tool Required

S79D Front Side Door Window Control Switch - Driver X1

Pin	Size	Color	Circuit	Function	Terminal Type ID	Option
1	0.35	WH / BN	2764	Window Switch Left Front Down Signal	II	—
2	0.35	GN	2766	Power Window Switch Left Front Express Signal	III	—
3	0.35	BN / YE	2771	Left Front Door Lock Switch Lock Signal	III	—
4	0.35	BN / WH	2772	Left Front Door Lock Switch Unlock Signal	III	—
5	0.35	GY / VT	2767	LED Ambient Lighting Control Left Front Door	III	—
6	0.35	VT / YE	4244	Left Front Door Lock Indicator Control	III	—
7	0.35	BN / GY	4784	Left Front Door LED Backlight Dimming Control	III	—
8	0.35	GY / YE	1760	Left Side Object Detection LED Control	III	—
9	0.35	WH / GN	2786	Left Front Mirror Motor Fold In Control	III	—
10	0.35	YE / BN	2789	Left Front Mirror Motor Common Control	III	—
11	0.5	BK	1150	Ground	II	—
12	0.35	GY / WH	2785	Left Front Mirror Motor Fold Out Control	I	—
13 - 16	—	—	—	Not Occupied	—	—
17	0.35	WH / VT	4258	Left Front Door Lock Status Signal	III	—
18	0.35	VT / BU	2788	Left Front Mirror Motor Up [+] Down [-] Control	III	—
19	0.35	BN / BK	2790	Left Front Mirror Motor Right [+] Left [-] Control	III	—
20	—	—	—	Not Occupied	—	—
21	0.35	GN / YE	6134	Body Control Module LIN Bus 3	III	—
22	0.35	WH	606	Left Outside Rearview Mirror Heater Control	I	—
23	0.35	GY / GN	2763	Window Switch Left Front Up Signal	II	—

S79D Front Side Door Window Control Switch - Driver X1 (cont'd)

Pin	Size	Color	Circuit	Function	Terminal Type ID	Option
24	0.5	RD / VT	1940	Battery Positive Voltage	II	—

S79D Front Side Door Window Control Switch - Driver X2

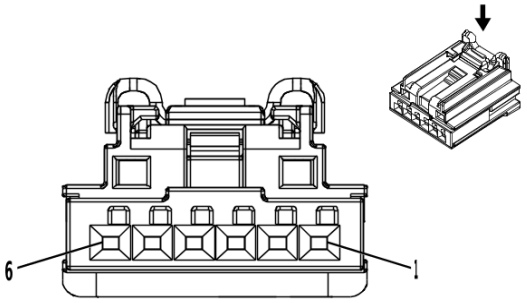

4145138

Connector Part Information

Harness Type: Front Side Door Door Lock Door Wiring Harness - Driver
OEM Connector: 2035363-2
Service Connector: Service by Harness - See Part Catalog
Description: 6-Way F 0.64 Generation Y Series(BK)

Terminal Part Information

Terminal Type ID	Terminated Lead	Diagnostic Test Probe	Terminal Removal Tool
I	Not required	J-35616-64B (L-BU)	No Tool Required

S79D Front Side Door Window Control Switch - Driver X2

Pin	Size	Color	Circuit	Function	Terminal Type ID	Option
1	0.35	WH / YE	2792	Left Front Mirror Position Sensor Left [-] Right [+] Signal	I	—
2	0.35	GY / BN	2787	Left Front Mirror Position Sensor Up [+] Down [-] Signal	I	—
3	0.35	VT / RD	2791	Left Front Mirror Position Sensor High Reference	I	—
4	0.35	BK / BN	673	Left Outside Rearview Mirror Position Sensor Low Reference	I	—
5 - 6	—	—	—	Not Occupied	—	—

S79LR Rear Side Door Window Switch - Left

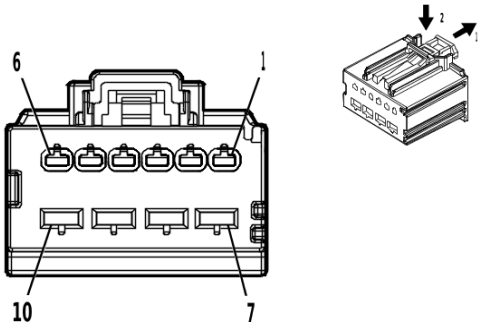

5035058

Connector Part Information

Harness Type: Rear Side Door Door Lock Door Wiring Harness - Left
OEM Connector: 31372-1600
Service Connector: Service by Harness - See Part Catalog
Description: 10-Way F 1.5, 2.8 MX Series(BK)

Terminal Part Information

Terminal Type ID	Terminated Lead	Diagnostic Test Probe	Terminal Removal Tool
I	Not required	J-35616-14 (GN)	No Tool Required
II	Not required	J-35616-4A (PU)	No Tool Required

S79LR Rear Side Door Window Switch - Left

Pin	Size	Color	Circuit	Function	Terminal Type ID	Option
1	0.35	GN / GY	6135	Body Control Module LIN Bus 4	I	—
2	0.35	GY	747	Left Rear Door Ajar Switch Signal	I	—
3	0.5	BK	1150	Ground	I	—
4	0.35	GN / BU	4648	Left Rear Door Lock Status Signal	I	—
5 - 6	—	—	—	Not Occupied	—	—
7	2.5	BK	1150	Ground	II	—
8	2.5	RD / GY	3540	Battery Positive Voltage	II	—
9	2	BU / VT	668	Left Rear Window Motor Up Control	II	—
10	2	YE / BU	669	Left Rear Window Motor Down Control	II	—

S79P Front Side Door Window Switch - Passenger

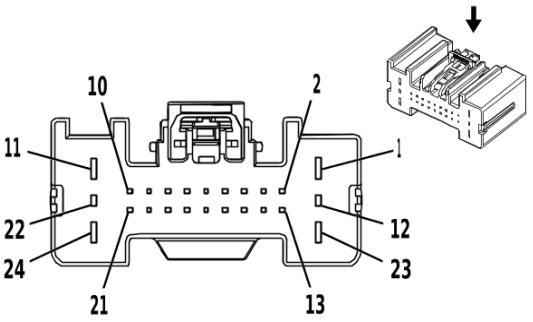

2871905

Connector Part Information

Harness Type: Front Side Door Door Lock Door Wiring Harness - Passenger
OEM Connector: 7287-3260-30
Service Connector: Service by Harness - See Part Catalog
Description: 24-Way F 0.64, 1.5, 2.8 Series(BK)

Terminal Part Information

Terminal Type ID	Terminated Lead	Diagnostic Test Probe	Terminal Removal Tool
I	Not required	J-35616-2A (GY)	No Tool Required
II	Not required	J-35616-4A (PU)	No Tool Required
III	Not required	J-35616-64B (L-BU)	No Tool Required

S79P Front Side Door Window Switch - Passenger

Pin	Size	Color	Circuit	Function	Terminal Type ID	Option
1	0.5	BK	1250	Ground	II	—
2	0.35	YE / RD	2799	Right Front Mirror Position Sensor High Reference	III	—
3	0.35	GN / BK	2798	Right Front Mirror Motor Right [+] Left [-] Control	III	—
4	0.35	YE / VT	2796	Right Front Mirror Motor Up [+] Down [-] Control	III	—
5	0.35	WH / BN	2768	LED Ambient Lighting Control Right Front Door	III	—
6	0.35	YE / BU	4245	Right Front Door Lock Indicator Control	III	—
7	0.35	GY / VT	4638	LED Backlight Dimming Control Right Front Door	III	—
8	0.35	GY	1761	Right Side Object Detection LED Control	III	—
9	0.35	BU / GY	2794	Right Front Mirror Motor Fold In Control	III	—
10	0.35	YE / WH	2793	Right Front Mirror Motor Fold Out Control	III	—
11	0.35	GN	1184	Window Switch Right Front Up Signal	II	—
12	0.35	BN / VT	607	Right Outside Rearview Mirror Heater Control	I	—
13	—	—	—	Not Occupied	—	—
14	0.35	GN / YE	6134	Body Control Module LIN Bus 3	III	—
15	0.35	VT / WH	2800	Right Front Mirror Position Sensor Left [-] Right [+] Signal	III	—
16	0.35	BU / YE	2795	Right Front Mirror Position Sensor Up [+] Down [-] Signal	III	—
17	0.35	YE / VT	2773	Right Front Door Lock Switch Lock Control	III	—

S79P Front Side Door Window Switch - Passenger (cont'd)

Pin	Size	Color	Circuit	Function	Terminal Type ID	Option
18	0.35	BN / VT	2774	Right Front Door Lock Switch Unlock Control	III	—
19	0.35	VT	4259	Right Front Door Lock Status Signal	III	—
20	0.35	VT / GY	2765	Window Switch Right Front Express Signal	III	—
21	0.35	WH	2797	Right Front Mirror Motor Common Control	III	—
22	0.35	BK / GN	675	Right Outside Rearview Mirror Position Sensor Low Reference	I	—
23	0.5	RD / BU	5240	Battery Positive Voltage	II	—
24	0.35	BN	5295	Window Switch Right Front Down Signal	II	—

S79RR Rear Side Door Window Switch - Right

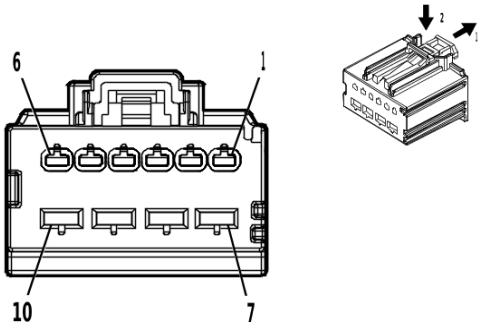

5035058

Connector Part Information

Harness Type: Rear Side Door Door Lock Door Wiring Harness - Right
OEM Connector: 31372-1600
Service Connector: Service by Harness - See Part Catalog
Description: 10-Way F 1.5, 2.8 MX Series(BK)

Terminal Part Information

Terminal Type ID	Terminated Lead	Diagnostic Test Probe	Terminal Removal Tool
I	Not required	J-35616-14 (GN)	No Tool Required
II	Not required	J-35616-4A (PU)	No Tool Required

S79RR Rear Side Door Window Switch - Right

Pin	Size	Color	Circuit	Function	Terminal Type ID	Option
1	0.35	GN / GY	6135	Body Control Module LIN Bus 4	I	—
2	0.35	GY	748	Right Rear Door Ajar Switch Signal	I	—
3	—	—	—	Not Occupied	—	—
4	0.35	WH / GY	4649	Right Rear Door Lock Status Signal	I	—
5 - 6	—	—	—	Not Occupied	—	—
7	2.5	BK	1250	Ground	II	—
8	2.5	RD / BN	4240	Battery Positive Voltage	II	—
9	2	BU / GY	670	Right Rear Window Motor Up Control	II	—
10	2	GN / BK	671	Right Rear Window Motor Down Control	II	—

S86 Vehicle Stability Control System Switch

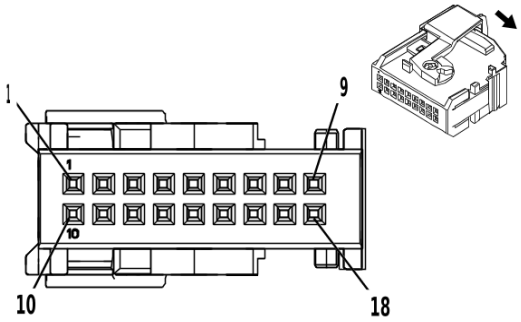

4329088

Connector Part Information

Harness Type: Instrument Panel Wiring Harness
OEM Connector: 3-2282182-1
Service Connector: 84976200
Description: 18-Way F Micro-Quadlock Series(BK)

Terminal Part Information

Terminal Type ID	Terminated Lead	Diagnostic Test Probe	Terminal Removal Tool
I	19300632	J-35616-64B (L-BU)	J-38125-215A

S86 Vehicle Stability Control System Switch

Pin	Size	Color	Circuit	Function	Terminal Type ID	Option
1	0.35	BU / VT	1788	Traction Control Switch Signal 1	I	—
2	0.35	GY / WH	4630	AC Power Outlet Switch Signal	I	—
3	0.35	YE	7755	AC Power Outlet Status Indicator Control	I	—
4	0.35	GY / WH	3153	Lane Departure Warning Disable Switch Signal	I	—
5	0.35	WH	3152	Lane Departure Warning Indicator Control	I	—
6	0.35	GY / GN	2555	Rear Parking Assist Disable Signal	I	—
7	0.35	GN / BN	5852	Rear Parking Assist Disable LED Signal	I	—
8	0.5	BU / WH	3119	Roof Rail Air Bag Disable Switch Signal	I	—
9	0.35	BU / YE	6844	ABS/Traction Control Hill Descent Control Switch Signal	I	—
10	0.35	BK / WH	1851	Signal Ground	I	—
11	0.5	YE	6817	LED Backlight Dimming Control 1	I	—
12	—	—	—	Not Occupied	—	—
13	0.35	GY / BU	3602	Curb View Enable Signal	I	—
14	0.5	BN / WH	3895	Roof Rail Air Bag Disable Switch Low Reference	I	—
15 - 16	—	—	—	Not Occupied	—	—
17	0.35	GN	1110	Stop/Start Indicator Control	I	—
18	0.35	BU	1111	Stop/Start Switch Signal	I	—

S91 Parking Brake Control Switch

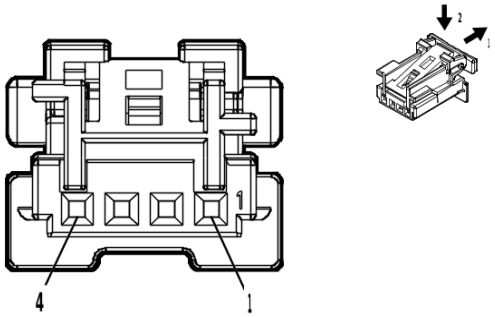

4997407

Connector Part Information

Harness Type: Instrument Panel Wiring Harness
OEM Connector: 2294218-1
Service Connector: 19371192
Description: 4-Way F 0.64 Micro-Quadlock Series(BK)

Terminal Part Information

Terminal Type ID	Terminated Lead	Diagnostic Test Probe	Terminal Removal Tool
I	Not required	J-35616-64B (L-BU)	No Tool Required

S91 Parking Brake Control Switch

Pin	Size	Color	Circuit	Function	Terminal Type ID	Option
1	0.35	RD / GN	5140	Battery Positive Voltage	I	—
2	0.5	GN / YE	2731	Electronic Brake Control Module LIN Bus 1	I	—
3	—	—	—	Not Occupied	—	—
4	0.5	BK / WH	1851	Signal Ground	I	—

S126 Ride Control Switch

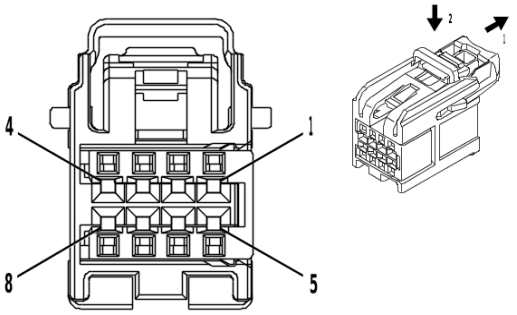

4232228

Connector Part Information

Harness Type: Instrument Panel Wiring Harness
OEM Connector: 15526973
Service Connector: 19353873
Description: 8-Way F 0.64 OCS Series(GY)

Terminal Part Information

Terminal Type ID	Terminated Lead	Diagnostic Test Probe	Terminal Removal Tool
I	Not required	J-35616-64B (L-BU)	No Tool Required

S126 Ride Control Switch

Pin	Size	Color	Circuit	Function	Terminal Type ID	Option
1	0.35	WH / BN	2203	Enhanced Driver Mode 2 Switch Signal	I	—
2	—	—	—	Not Occupied	—	—
3	0.35	BK / VT	1449	Steering Wheel Resistor Ladder Low Reference	I	—
4	0.35	YE	6817	LED Backlight Dimming Control 1	I	—
5	0.35	BK	1850	Ground	I	—
6 - 8	—	—	—	Not Occupied	—	—

S141 Liftgate Window Release Switch - Exterior

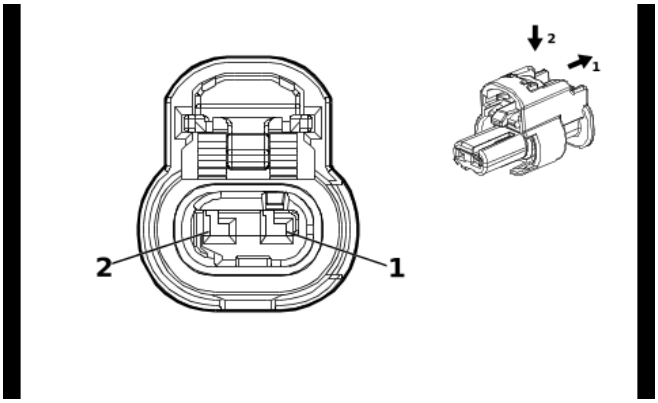

4649903

Connector Part Information

Harness Type: Rear License Plate Lamp Wiring Harness
OEM Connector: 1-2296694-1
Service Connector: Service by Harness - See Part Catalog
Description: 2-Way F 1.2 MCON Series, Sealed(BK)

Terminal Part Information

Terminal Type ID	Terminated Lead	Diagnostic Test Probe	Terminal Removal Tool
I	Not required	J-35616-16 (L-GN)	No Tool Required

S141 Liftgate Window Release Switch - Exterior

Pin	Size	Color	Circuit	Function	Terminal Type ID	Option
1	0.35	GY / GN	6190	Liftgate Window/Rear Compartment Lid, Exterior Unlatch Signal	I	—
2	0.35	BK	2050	Ground	I	—

S143L Rear Seat Back Folding Switch - 2nd Row Left (ATN/ATT)

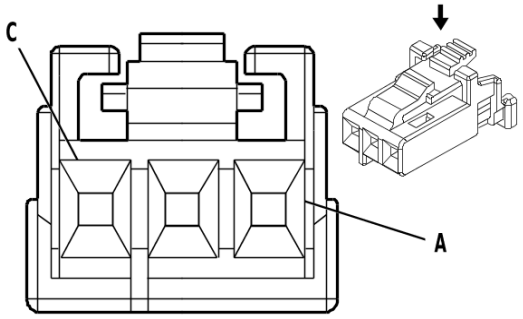

1376712

Connector Part Information

Harness Type: Body Wiring Harness
OEM Connector: 15417063
Service Connector: 88987857
Description: 3-Way F 0.64 Micro-Pack Series(BK)

Terminal Part Information

Terminal Type ID	Terminated Lead	Diagnostic Test Probe	Terminal Removal Tool
I	Not required	J-35616-64B (L-BU)	No Tool Required

S143L Rear Seat Back Folding Switch - 2nd Row Left (ATN/ATT)

Pin	Size	Color	Circuit	Function	Terminal Type ID	Option
A	0.35	YE / BK	5813	Park Enable Control	I	—
B	—	—	—	Not Occupied	—	—
C	0.5	GN	6808	Left Rear Folding Seat Motor Control	I	—

S143R Rear Seat Back Folding Switch - 2nd Row Right (ATN/ATT)

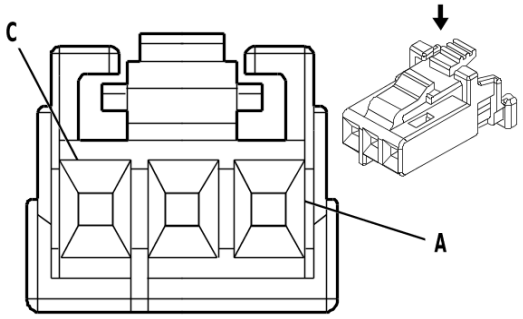

1376712

Connector Part Information

Harness Type: Body Wiring Harness
OEM Connector: 15417063
Service Connector: 88987857
Description: 3-Way F 0.64 Micro-Pack Series(BK)

Terminal Part Information

Terminal Type ID	Terminated Lead	Diagnostic Test Probe	Terminal Removal Tool
I	Not required	J-35616-64B (L-BU)	No Tool Required

S143R Rear Seat Back Folding Switch - 2nd Row Right (ATN/ATT)

Pin	Size	Color	Circuit	Function	Terminal Type ID	Option
A	0.35	YE / BK	5813	Park Enable Control	I	—
B	—	—	—	Not Occupied	—	—
C	0.5	BN / WH	6809	Right Rear Folding Seat Motor Control	I	—

S144A Rear Seat Back Folding Switch - 2nd Row Rear Compartment (ATN/ATT)

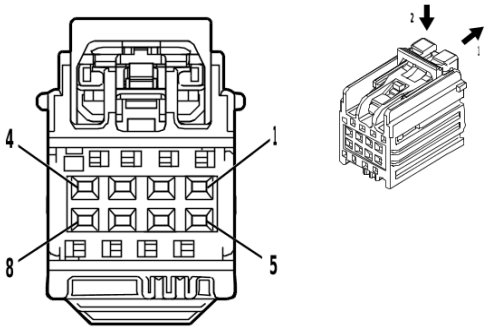

4808677

Connector Part Information

Harness Type: Body Wiring Harness
OEM Connector: 7289-2894-30
Service Connector: 19368548
Description: 8-Way F 0.64 YESC Series(BK)

Terminal Part Information

Terminal Type ID	Terminated Lead	Diagnostic Test Probe	Terminal Removal Tool
I	Not required	J-35616-64B (L-BU)	No Tool Required

S144A Rear Seat Back Folding Switch - 2nd Row Rear Compartment (ATN/ATT)

Pin	Size	Color	Circuit	Function	Terminal Type ID	Option
1	—	—	—	Not Occupied	—	—
2	0.35	YE / BK	5813	Park Enable Control	I	—
3	—	—	—	Not Occupied	—	—
4	0.5	GN	6808	Left Rear Folding Seat Motor Control	I	—
5	0.75	BN / WH	6809	Right Rear Folding Seat Motor Control	I	—
6 - 8	—	—	—	Not Occupied	—	—

S144B 3rd Row Seat Folding Switch - Rear Compartment (AS8)

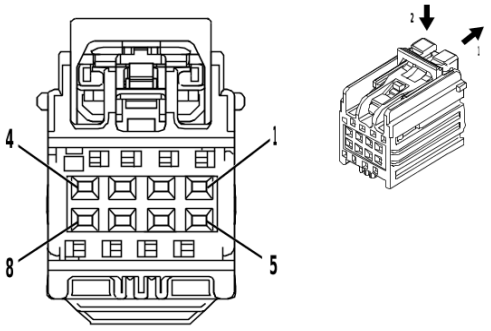

4280711

Connector Part Information

Harness Type: Body Wiring Harness
OEM Connector: 13593893
Service Connector: 19355209
Description: 8-Way F YESC Kaizen Series(GY)

Terminal Part Information

Terminal Type ID	Terminated Lead	Diagnostic Test Probe	Terminal Removal Tool
I	Not required	J-35616-64B (L-BU)	No Tool Required

S144B 3rd Row Seat Folding Switch - Rear Compartment (AS8)

Pin	Size	Color	Circuit	Function	Terminal Type ID	Option
1	0.5	YE / BU	2698	Left 3rd Row Seat Recline Switch Signal	I	—
2 - 3	—	—	—	Not Occupied	—	—
4	0.5	BK / BU	5474	3rd Row Seat Sensor Low Reference	I	—
5	—	—	—	Not Occupied	—	—
6	0.5	GN / GY	2699	Right 3rd Row Seat Recline Switch Signal	I	—
7 - 8	—	—	—	Not Occupied	—	—

S145 Beverage Cooler Switch (DCK)

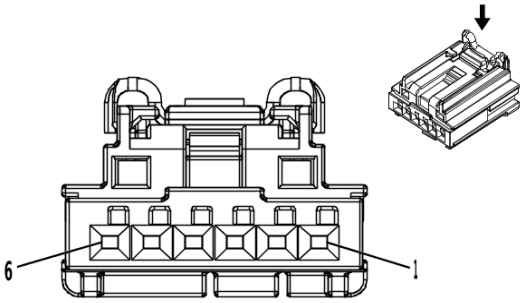

3960313

Connector Part Information

Harness Type: Front Floor Console Wiring Harness
OEM Connector: 2035363-4
Service Connector: Service by Harness - See Part Catalog
Description: 6-Way F 0.64 Generation Y Series(BK)

Terminal Part Information

Terminal Type ID	Terminated Lead	Diagnostic Test Probe	Terminal Removal Tool
I	Not required	J-35616-64B (L-BU)	No Tool Required

S145 Beverage Cooler Switch (DCK)

Pin	Size	Color	Circuit	Function	Terminal Type ID	Option
1	0.75	BK	1250	Ground	I	—
2	0.35	YE	6817	LED Backlight Dimming Control 1	I	—
3	0.35	GN / WH	7846	Refrigerator On Indicator Control	I	—
4	0.35	BN / BK	7844	Refrigerator Enable Signal	I	—
5	0.35	BU / GN	7845	Refrigerator Freeze Indicator Control	I	—
6	—	—	—	Not Occupied	—	—

T1 DC/AC Converter Control Module X1 (KI4/KI5)

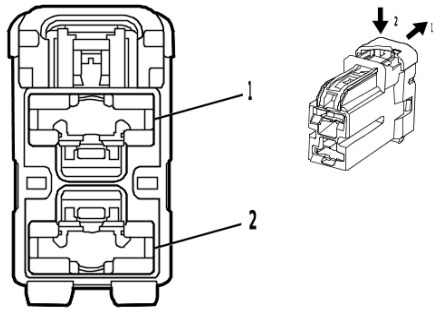

2453116

Connector Part Information

Harness Type: Body Wiring Harness
OEM Connector: 13512002
Service Connector: Service by Harness - See Part Catalog
Description: 2-Way F 9.5 Series(BK)

Terminal Part Information

Terminal Type ID	Terminated Lead	Diagnostic Test Probe	Terminal Removal Tool
I	Not required	J-35616-22 (RD)	No Tool Required

T1 DC/AC Converter Control Module X1 (KI4/KI5)

Pin	Size	Color	Circuit	Function	Terminal Type ID	Option
1	5	BN / BK	4629	DC/AC Inverter Control	I	—
2	5	BK	1450	Ground	I	—

T1 DC/AC Converter Control Module X2 (KI5)

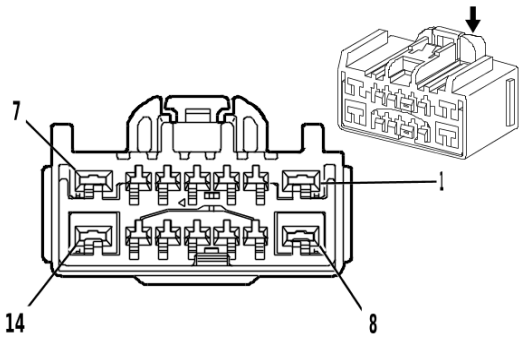

1540775

Connector Part Information

Harness Type: Body Rear Wiring Harness Extension Harness
OEM Connector: 7289-7631-90
Service Connector: Service by Harness - See Part Catalog
Description: 14-Way F 1.5, 2.8 YESC Series(BU)

Terminal Part Information

Terminal Type ID	Terminated Lead	Diagnostic Test Probe	Terminal Removal Tool
I	Not required	J-35616-2A (GY)	No Tool Required
II	Not required	J-35616-4A (PU)	No Tool Required

T1 DC/AC Converter Control Module X2 (KI5)

Pin	Size	Color	Circuit	Function	Terminal Type ID	Option
1	0.75	BN	686	230 VAC Outlet Phase A	II	—
2	0.5	VT / RD	4049	AC Power Outlet Sensor High Reference	I	—
3	0.5	VT / WH	1139	Run/Crank Ignition 1 Voltage	I	—
4	0.5	WH / GN	4628	DC/AC Inverter Relay Control	I	—
5	0.5	BU / BN	6807	DC/AC Inverter Control	I	—
6	—	—	—	Not Occupied	—	—
7	0.75	BN / WH	2262	230V AC Phase A 2	II	—
8	0.75	BU	6865	230V AC Phase B	II	—
9	0.5	Bare	2526	230V AC Outlet Low Reference	I	—
10	0.5	GN / BU	6133	Body Control Module LIN Bus 2	I	—
11	—	—	—	Not Occupied	—	—
12	0.5	GN / BN	2266	DC/AC Inverter Control 2	I	—
13	0.5	Bare	2544	230V AC Outlet 2 Low Reference	I	—
14	0.75	BU / WH	2263	230V AC Phase B 2	II	—

T3 Audio Amplifier X1 (UQA/UQS/UQP)

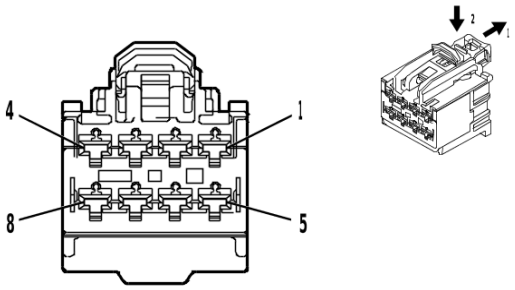

4875738

Connector Part Information

Harness Type: Body Wiring Harness
OEM Connector: 33223792
Service Connector: 19369366
Description: 8-Way F 2.8 OCS Series(BK)

Terminal Part Information

Terminal Type ID	Terminated Lead	Diagnostic Test Probe	Terminal Removal Tool
I	Not required	J-35616-4A (PU)	No Tool Required

T3 Audio Amplifier X1 (UQA/UQS/UQP)

Pin	Size	Color	Circuit	Function	Terminal Type ID	Option
1	2.5 2.5	BU / GY GN / VT	346 1795	Left/Rear Subwoofer [+] Control Right Subwoofer [+] Control	I I	UQA- UQH/ - UQH+ UQS - UQH+ UQP+ Z75
2	0.75	YE	200	Right Front Speaker 1 [+] Control	I	—
3	0.75	BU	201	Left Front Speaker 1 [+] Control	I	—
4	3	RD / YE	3740	Battery Positive Voltage	I	—
5	2.5 2.5	GN / BK GY / BK	1794 315	Left/Rear Subwoofer [-] Control Right Subwoofer [-] Control	I I	UQA- UQH/ - UQH+ UQS - UQH+ UQP+ Z75
6	0.75	YE / BK	117	Right Front Speaker [-] Control 1	I	—
7	0.75	BN / BU	118	Left Front Speaker [-] Control 1	I	—
8	2.5	BK / WH	1451	Signal Ground	I	—

T3 Audio Amplifier X2 (UQA/UQS/UQP)

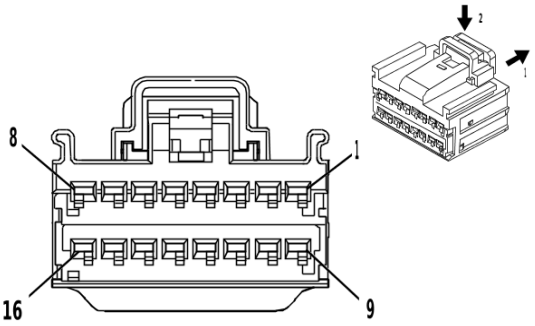

4332214

Connector Part Information

Harness Type: Body Wiring Harness
OEM Connector: 15512506
Service Connector: 13591061
Description: 16-Way F 1.5 OCS Series(BK)

Terminal Part Information

Terminal Type ID	Terminated Lead	Diagnostic Test Probe	Terminal Removal Tool
I	84757974	J-35616-2A (GY)	J-38125-215A

T3 Audio Amplifier X2 (UQA/UQS/UQP)

Pin	Size	Color	Circuit	Function	Terminal Type ID	Option
1	1	BU / YE	1960	Front Center Speaker [-] Control	I	—
2	0.75	BN / BK	1975	Right Front Speaker [-] Control 2	I	—
3	0.75	BU / VT	1874	Left Front Speaker [+] Control 2	I	—
4	0.75	WH	46	Right Rear Speaker [+] Control	I	—
5	0.75	GN	199	Left Rear Speaker [+] Control	I	—
6	0.75 0.75	VT VT / BU	8578 1889	Right Rear D-Pillar Speaker [+] Control Rear/Left Rear Surround Speaker [+] Control	I I	UQP/ Z88 UQS
7	0.75 1	WH / GN YE / WH	8576 1860	Left Rear D-Pillar Speaker [+] Control Front Center Speaker [+] Control	I I	UQP/ Z88 UQS
8	—	—	—	Not Occupied	—	—
9	1	YE / WH	1860	Front Center Speaker [+] Control	I	—
10	0.75	GN / BU	1875	Right Front Speaker [+] Control 2	I	—
11	0.75	GY / BK	1974	Left Front Speaker [-] Control 2	I	—
12	0.75	BU / BK	115	Right Rear Speaker [-] Control	I	—
13	0.75	GN / BK	116	Left Rear Speaker [-] Control	I	—
14	0.75 0.75	GY / WH WH / BN	8577 1891	Right Rear D-Pillar Speaker [-] Control Rear/Left Rear Surround Speaker [-] Control	I I	UQP/ Z88 UQS
15	0.75 1	BN / WH BU / YE	8575 1960	Left Rear D-Pillar Speaker [-] Control Front Center Speaker [-] Control	I I	UQP/ Z88 UQS
16	—	—	—	Not Occupied	—	—

T3 Audio Amplifier X3 (UQA/UQS/UQP)

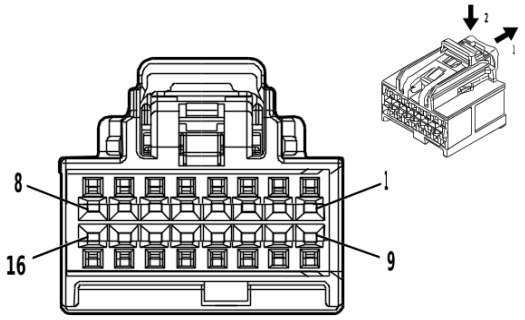

4873243

Connector Part Information

Harness Type: Body Wiring Harness
OEM Connector: 13519738
Service Connector: 13519738
Description: 16-Way F 0.64 OCS Series(BK)

Terminal Part Information

Terminal Type ID	Terminated Lead	Diagnostic Test Probe	Terminal Removal Tool
I	19354230	J-35616-64B (L-BU)	J-38125-215A

T3 Audio Amplifier X3 (UQA/UQS/UQP)

Pin	Size	Color	Circuit	Function	Terminal Type ID	Option
1	0.35	GY / BK	7215	Ethernet Bus 6 [+]	I	—
2	0.35	BN / BK	7214	Ethernet Bus 6 [-]	I	—
3	—	—	—	Not Occupied	—	—
4	0.5	GN / BN	3005	Active Noise Cancellation Microphone 1 Signal	I	—
5	0.5	GN / BN	3005	Active Noise Cancellation Microphone 1 Signal	I	—
6 - 10	—	—	—	Not Occupied	—	—
11	0.5	BU / WH	4985	AUTOSAR CAN Bus [+] 5 Serial Data	I	—
12	0.5 0.5	BU / YE GN / BK	4984 3008	AUTOSAR CAN Bus [-] 5 Serial Data Active Noise Cancellation Microphone 1 Feedback Signal	I I	(UQA/ UQS) (UQP+ Z88)
13	0.5	GN / BK	3008	Active Noise Cancellation Microphone 1 Feedback Signal	I	—
14 - 16	—	—	—	Not Occupied	—	—

T3 Audio Amplifier X4 (UQP)

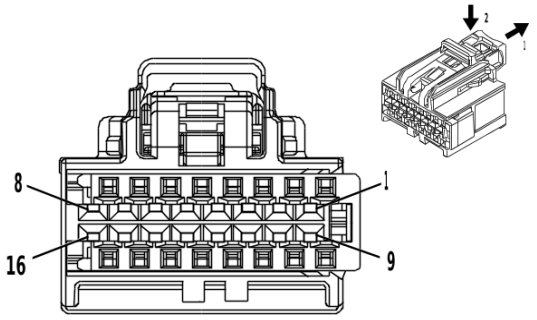

4256181

Connector Part Information

Harness Type: Body Wiring Harness
OEM Connector: 13519740
Service Connector: 13519740
Description: 16-Way F 0.64 OCS Series(BN)

Terminal Part Information

Terminal Type ID	Terminated Lead	Diagnostic Test Probe	Terminal Removal Tool
I	84619127	J-35616-64B (L-BU)	J-38125-215A

T3 Audio Amplifier X4 (UQP)

Pin	Size	Color	Circuit	Function	Terminal Type ID	Option
1 - 2	—	—	—	Not Occupied	—	—
3	0.35	GY / BK	7215	Ethernet Bus 6 [+]	I	—
4	0.35	BN / BK	7214	Ethernet Bus 6 [-]	I	—
5 - 6	—	—	—	Not Occupied	—	—
7	0.35	BU / YE	4984	AUTOSAR CAN Bus [-] 5 Serial Data	I	—
8 - 14	—	—	—	Not Occupied	—	—
15	0.35	BU / WH	4985	AUTOSAR CAN Bus [+] 5 Serial Data	I	—
16	—	—	—	Not Occupied	—	—

T4P High Frequency Antenna X1

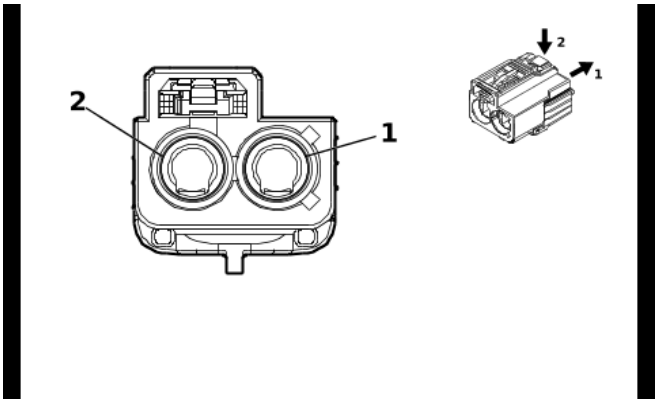

5661671

Connector Part Information

Harness Type: Instrument Panel Wiring Harness
OEM Connector: 13516425
Service Connector: Not Available
Description: 2-Way F Coax Type(VT)

Terminal Part Information

Terminal Type ID	Terminated Lead	Diagnostic Test Probe	Terminal Removal Tool
I	Not Available	No Tool Required	Not Available

T4P High Frequency Antenna X1

Pin	Size	Color	Circuit	Function	Terminal Type ID	Option
1	—	Coax Cable	—	(GPS/Cell) Coaxial Antenna Cell/GPS combined Signal	I	—
2	—	Coax Cable	—	(Cell only) Coaxial Antenna Cell Phone Signal	I	—

T4TA Auxiliary Wireless Communication Interface Antenna (VV4)

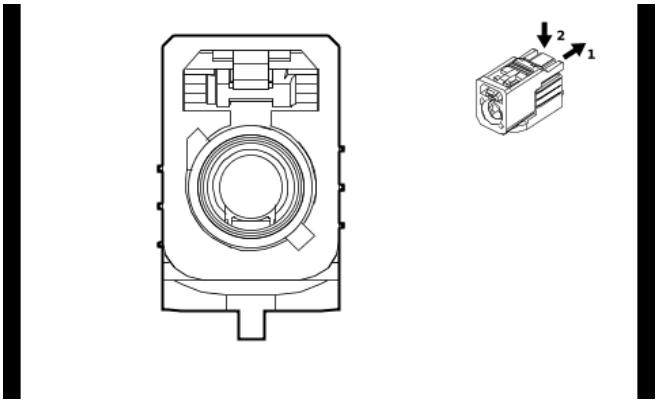

5518436

Connector Part Information

Harness Type: Instrument Panel Wiring Harness COAX
OEM Connector: 13516416
Service Connector: Service by Cable Assembly — See Part Catalog
Description: 1-Way F Coax Type(BG)

Terminal Part Information

Terminal Type ID	Terminated Lead	Diagnostic Test Probe	Terminal Removal Tool
I	Not required	No Tool Required	No Tool Required

T4TA Auxiliary Wireless Communication Interface Antenna (VV4)

Pin	Size	Color	Circuit	Function	Terminal Type ID	Option
—	—	Coax Cable	—	WiFi Antenna Coaxial Signal	I	—

T8A Ignition Coil 1 (L84/L87)

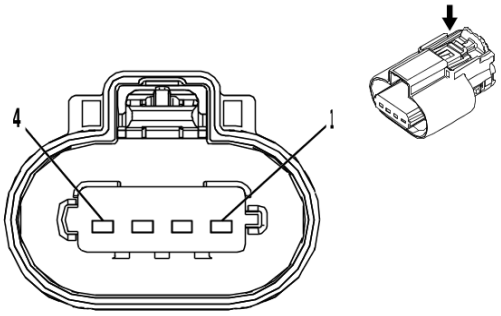

3240115

Connector Part Information

Harness Type: Engine Wiring Harness
OEM Connector: 34770-0402
Service Connector: 19367596
Description: 4-Way F 1.5 MX Series, Sealed(BK)

Terminal Part Information

Terminal Type ID	Terminated Lead	Diagnostic Test Probe	Terminal Removal Tool
I	Not required	J-35616-14 (GN)	No Tool Required

T8A Ignition Coil 1 (L84/L87)

Pin	Size	Color	Circuit	Function	Terminal Type ID	Option
1	0.75	BK	6150	Engine Odd Bank Ground	I	—
2	0.5	BK / BU	2129	Ignition Control Low Reference Bank 1	I	—
3	0.5	BU / VT	2121	Ignition Control 1	I	—
4	0.75	VT / BU	5291	Powertrain Main Relay Fused Supply Voltage 2	I	—

T8B Ignition Coil 2 (L84/L87)

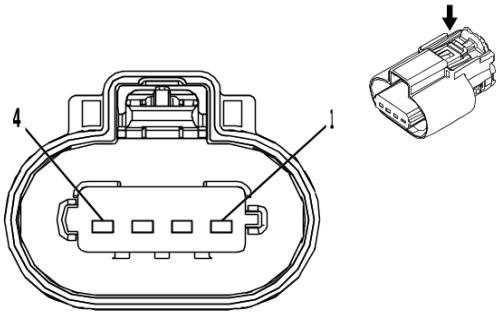

3240115

Connector Part Information

Harness Type: Engine Wiring Harness
OEM Connector: 34770-0402
Service Connector: 19367596
Description: 4-Way F 1.5 MX Series, Sealed(BK)

Terminal Part Information

Terminal Type ID	Terminated Lead	Diagnostic Test Probe	Terminal Removal Tool
I	Not required	J-35616-14 (GN)	No Tool Required

T8B Ignition Coil 2 (L84/L87)

Pin	Size	Color	Circuit	Function	Terminal Type ID	Option
1	0.75	BK	6450	Engine Even Bank Ground	I	—
2	0.75	BK / GY	2130	Ignition Control Low Reference Bank 2	I	—
3	0.75	BU / WH	2122	Ignition Control 2	I	—
4	0.75	VT / BU	5292	Powertrain Main Relay Fused Supply Voltage 3	I	—

T8C Ignition Coil 3 (L84/L87)

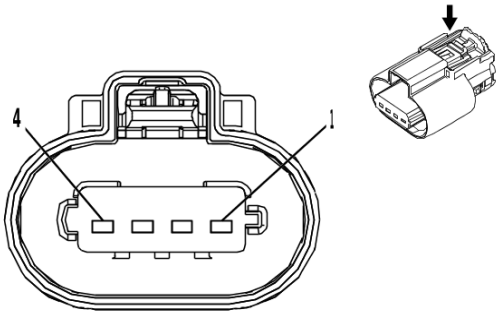

3240115

Connector Part Information

Harness Type: Engine Wiring Harness
OEM Connector: 34770-0402
Service Connector: 19367596
Description: 4-Way F 1.5 MX Series, Sealed(BK)

Terminal Part Information

Terminal Type ID	Terminated Lead	Diagnostic Test Probe	Terminal Removal Tool
I	Not required	J-35616-14 (GN)	No Tool Required

T8C Ignition Coil 3 (L84/L87)

Pin	Size	Color	Circuit	Function	Terminal Type ID	Option
1	0.75	BK	6150	Engine Odd Bank Ground	I	—
2	0.5	BK / BU	2129	Ignition Control Low Reference Bank 1	I	—
3	0.5	GN / BU	2123	Ignition Control 3	I	—
4	0.75	VT / BU	5291	Powertrain Main Relay Fused Supply Voltage 2	I	—

T8D Ignition Coil 4 (L84/L87)

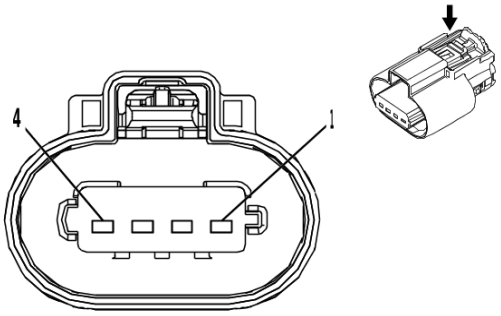

3240115

Connector Part Information

Harness Type: Engine Wiring Harness
OEM Connector: 34770-0402
Service Connector: 19367596
Description: 4-Way F 1.5 MX Series, Sealed(BK)

Terminal Part Information

Terminal Type ID	Terminated Lead	Diagnostic Test Probe	Terminal Removal Tool
I	Not required	J-35616-14 (GN)	No Tool Required

T8D Ignition Coil 4 (L84/L87)

Pin	Size	Color	Circuit	Function	Terminal Type ID	Option
1	0.75	BK	6450	Engine Even Bank Ground	I	—
2	0.75	BK / GY	2130	Ignition Control Low Reference Bank 2	I	—
3	0.5	YE / BU	2124	Ignition Control 4	I	—
4	0.75	VT / BU	5292	Powertrain Main Relay Fused Supply Voltage 3	I	—

T8E Ignition Coil 5 (L84/L87)

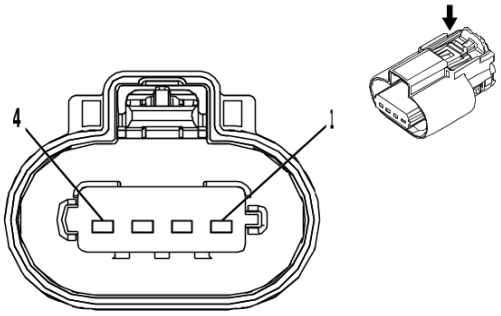

3240115

Connector Part Information

Harness Type: Engine Wiring Harness
OEM Connector: 34770-0402
Service Connector: 19367596
Description: 4-Way F 1.5 MX Series, Sealed(BK)

Terminal Part Information

Terminal Type ID	Terminated Lead	Diagnostic Test Probe	Terminal Removal Tool
I	Not required	J-35616-14 (GN)	No Tool Required

T8E Ignition Coil 5 (L84/L87)

Pin	Size	Color	Circuit	Function	Terminal Type ID	Option
1	0.75	BK	6150	Engine Odd Bank Ground	I	—
2	0.5	BK / BU	2129	Ignition Control Low Reference Bank 1	I	—
3	0.5	BU / GY	2125	Ignition Control 5	I	—
4	0.75	VT / BU	5291	Powertrain Main Relay Fused Supply Voltage 2	I	—

T8F Ignition Coil 6 (L84/L87)

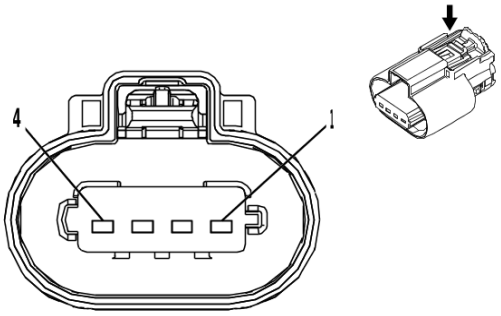

3240115

Connector Part Information

Harness Type: Engine Wiring Harness
OEM Connector: 34770-0402
Service Connector: 19367596
Description: 4-Way F 1.5 MX Series, Sealed(BK)

Terminal Part Information

Terminal Type ID	Terminated Lead	Diagnostic Test Probe	Terminal Removal Tool
I	Not required	J-35616-14 (GN)	No Tool Required

T8F Ignition Coil 6 (L84/L87)

Pin	Size	Color	Circuit	Function	Terminal Type ID	Option
1	0.75	BK	6450	Engine Even Bank Ground	I	—
2	0.75	BK / GY	2130	Ignition Control Low Reference Bank 2	I	—
3	0.5	BN / BU	2126	Ignition Control 6	I	—
4	0.75	VT / BU	5292	Powertrain Main Relay Fused Supply Voltage 3	I	—

T8G Ignition Coil 7 (L84/L87)

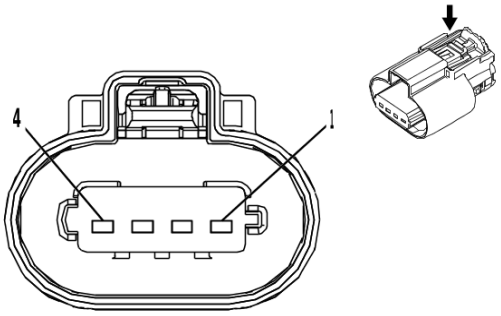

3240115

Connector Part Information

Harness Type: Engine Wiring Harness
OEM Connector: 34770-0402
Service Connector: 19367596
Description: 4-Way F 1.5 MX Series, Sealed(BK)

Terminal Part Information

Terminal Type ID	Terminated Lead	Diagnostic Test Probe	Terminal Removal Tool
I	Not required	J-35616-14 (GN)	No Tool Required

T8G Ignition Coil 7 (L84/L87)

Pin	Size	Color	Circuit	Function	Terminal Type ID	Option
1	0.75	BK	6150	Engine Odd Bank Ground	I	—
2	0.5	BK / BU	2129	Ignition Control Low Reference Bank 1	I	—
3	0.5	GN / GY	2127	Ignition Control 7	I	—
4	0.75	VT / BU	5291	Powertrain Main Relay Fused Supply Voltage 2	I	—

T8H Ignition Coil 8 (L84/L87)

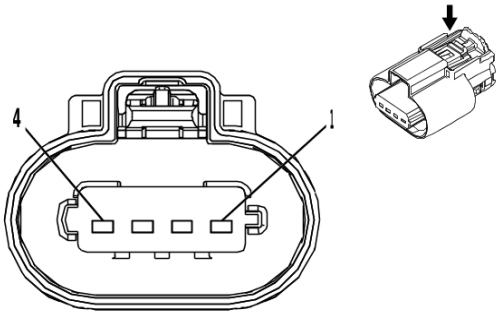

3240115

Connector Part Information

Harness Type: Engine Wiring Harness
OEM Connector: 34770-0402
Service Connector: 19367596
Description: 4-Way F 1.5 MX Series, Sealed(BK)

Terminal Part Information

Terminal Type ID	Terminated Lead	Diagnostic Test Probe	Terminal Removal Tool
I	Not required	J-35616-14 (GN)	No Tool Required

T8H Ignition Coil 8 (L84/L87)

Pin	Size	Color	Circuit	Function	Terminal Type ID	Option
1	0.75	BK	6450	Engine Even Bank Ground	I	—
2	0.75	BK / GY	2130	Ignition Control Low Reference Bank 2	I	—
3	0.5	VT / WH	2128	Ignition Control 8	I	—
4	0.75	VT / BU	5292	Powertrain Main Relay Fused Supply Voltage 3	I	—

T10E Low Frequency Rear Compartment Antenna

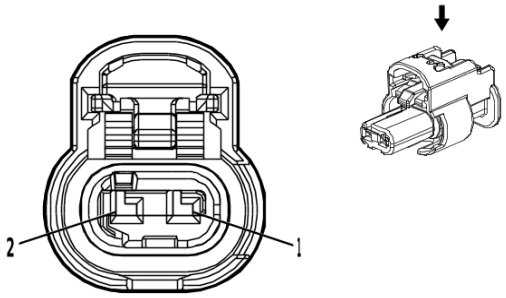

4690744

Connector Part Information

Harness Type: Body Wiring Harness
OEM Connector: 1-2296694-3
Service Connector: 19366871
Description: 2-Way F 1.2 MCON Series, Sealed(BK)

Terminal Part Information

Terminal Type ID	Terminated Lead	Diagnostic Test Probe	Terminal Removal Tool
I	Not required	J-35616-16 (LT GN)	No Tool Required

T10E Low Frequency Rear Compartment Antenna

Pin	Size	Color	Circuit	Function	Terminal Type ID	Option
1	0.35	BU	3554	Interior Passive Entry Antenna 2 High Signal	I	—
2	0.35	GY / BK	3555	Interior Passive Entry Antenna 2 Low Signal	I	—

T10G Low Frequency Rear Bumper Antenna

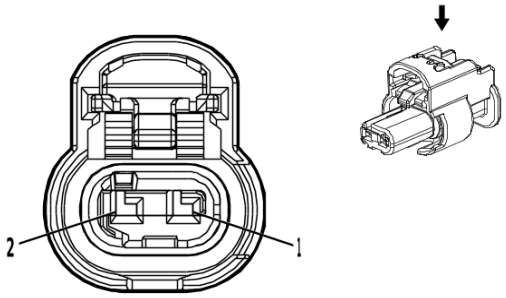

4690744

Connector Part Information

Harness Type: Rear Object Alarm Sensor Wiring Harness
OEM Connector: 1-2296694-3
Service Connector: Service by Harness - See Part Catalog
Description: 2-Way F 1.2 MCON Series, Sealed(BK)

Terminal Part Information

Terminal Type ID	Terminated Lead	Diagnostic Test Probe	Terminal Removal Tool
I	Not required	J-35616-16 (L-GN)	No Tool Required

T10G Low Frequency Rear Bumper Antenna

Pin	Size	Color	Circuit	Function	Terminal Type ID	Option
1	0.5	BN / GN	3568	Rear Closure Passive Entry Antenna High Signal	I	—
2	0.5	GN / GY	3569	Rear Closure Passive Entry Antenna Low Signal	I	—

T10J Low Frequency Instrument Panel Antenna (AZ3)

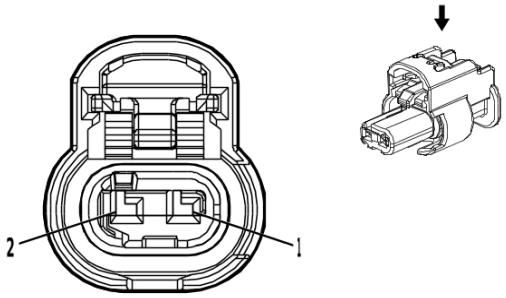

4690744

Connector Part Information

Harness Type: Instrument Panel Wiring Harness
OEM Connector: 1-2296694-3
Service Connector: 19366871
Description: 2-Way F 1.2 MCON Series, Sealed(BK)

Terminal Part Information

Terminal Type ID	Terminated Lead	Diagnostic Test Probe	Terminal Removal Tool
I	Not required	J-35616-16 (LT GN)	No Tool Required

T10J Low Frequency Instrument Panel Antenna (AZ3)

Pin	Size	Color	Circuit	Function	Terminal Type ID	Option
1	0.35	BN / BK	3552	Interior Passive Entry Antenna 1 High Signal	I	—
2	0.35	WH	3553	Interior Passive Entry Antenna 1 Low Signal	I	—

T10KA Low Frequency Console Number 2 Antenna (D07/DCH/DCK)

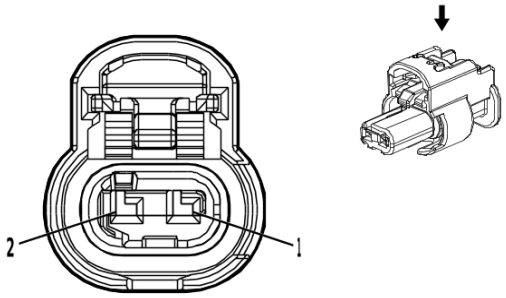

4690744

Connector Part Information

Harness Type: Front Floor Console Wiring Harness
OEM Connector: 1-2296694-3
Service Connector: Service by Harness - See Part Catalog
Description: 2-Way F 1.2 MCON Series, Sealed(BK)

Terminal Part Information

Terminal Type ID	Terminated Lead	Diagnostic Test Probe	Terminal Removal Tool
I	Not required	J-35616-16 (L-GN)	No Tool Required

T10KA Low Frequency Console Number 2 Antenna (D07/DCH/DCK)

Pin	Size	Color	Circuit	Function	Terminal Type ID	Option
1	0.35	BN / BK	3552	Interior Passive Entry Antenna 1 High Signal	I	—
2	0.35	WH	3553	Interior Passive Entry Antenna 1 Low Signal	I	—

T10L Low Frequency Body Side Antenna - Left

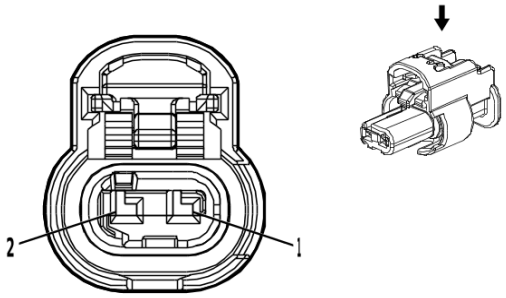

4690744

Connector Part Information

Harness Type: Rear Side Door Door Wiring Harness - Left
OEM Connector: 1-2296694-3
Service Connector: Service by Harness - See Part Catalog
Description: 2-Way F 1.2 MCON Series, Sealed(BK)

Terminal Part Information

Terminal Type ID	Terminated Lead	Diagnostic Test Probe	Terminal Removal Tool
I	Not required	J-35616-16 (L-GN)	No Tool Required

T10L Low Frequency Body Side Antenna - Left

Pin	Size	Color	Circuit	Function	Terminal Type ID	Option
1	0.5	VT	4301	Passive Entry Left Front Antenna Signal High	I	—
2	0.5	VT / GY	4302	Passive Entry Left Front Antenna Signal Low	I	—

T10R Low Frequency Body Side Antenna - Right

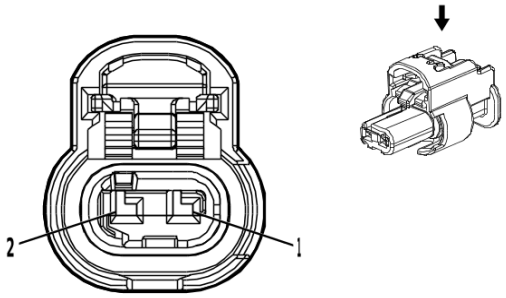

4690744

Connector Part Information

Harness Type: Rear Side Door Door Wiring Harness - Right
OEM Connector: 1-2296694-3
Service Connector: Service by Harness - See Part Catalog
Description: 2-Way F 1.2 MCON Series, Sealed(BK)

Terminal Part Information

Terminal Type ID	Terminated Lead	Diagnostic Test Probe	Terminal Removal Tool
I	Not required	J-35616-16 (L-GN)	No Tool Required

T10R Low Frequency Body Side Antenna - Right

Pin	Size	Color	Circuit	Function	Terminal Type ID	Option
1	0.5	GN / YE	4303	Passive Entry Right Front Door Antenna Signal High	I	—
2	0.5	GN / BK	4304	Passive Entry Right Front Door Antenna Signal Low	I	—

T10U Low Frequency Console Antenna - Front

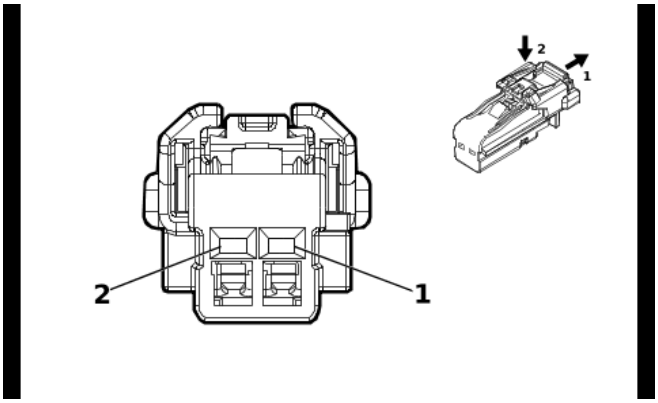

4115691

Connector Part Information

Harness Type: Front Floor Console Wiring Harness
OEM Connector: 6098-8988
Service Connector: Service by Harness - See Part Catalog
Description: 2-Way F 1.2 MCON Series(BK)

Terminal Part Information

Terminal Type ID	Terminated Lead	Diagnostic Test Probe	Terminal Removal Tool
I	Not required	J-35616-16 (L-GN)	No Tool Required

T10U Low Frequency Console Antenna - Front

Pin	Size	Color	Circuit	Function	Terminal Type ID	Option
1	0.5	BN / BK	4996	Immobilizer Antenna Signal [+]	I	—
2	0.5	WH / GY	4997	Immobilizer Antenna Low Signal	I	—

T12 Automatic Transmission X1

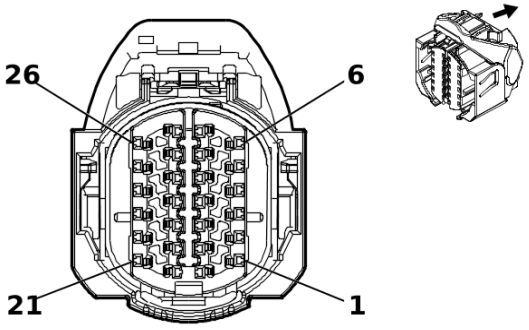

5275597

Connector Part Information

Harness Type: Engine Wiring Harness
OEM Connector: 2327375-1
Service Connector: 13528029
Description: 26-Way F 1.2 MCON Series, Sealed(BK)

Terminal Part Information

Terminal Type ID	Terminated Lead	Diagnostic Test Probe	Terminal Removal Tool
I	19331733	J-35616-12 (BU)	J-38125-215A

T12 Automatic Transmission X1

Pin	Size	Color	Circuit	Function	Terminal Type ID	Option
1	0.5	GN / YE	6353	Input Speed Signal	I	—
2	0.5	GN / VT	4510	Transmission Intermediate Speed Signal	I	—
3	0.5	BN / BU	6254	Transmission Input Speed Sensor Signal	I	—
4	0.5	GY / BU	6358	Output Speed Signal	I	—
5	0.5	WH / YE	6317	Electronic Transmission Range Select Out of Park Switch Signal	I	—
6	0.5	VT / WH	6319	Electronic Transmission Range Select Out of Park Switch 2 Signal	I	—
7	0.5	YE / GN	4170	Transmission Output Shaft Speed Sensor Circuit 9V Reference	I	—
8	0.5	YE / BU	4171	Transmission Input Shaft Speed Sensor Circuit 9V Reference	I	—
9	0.5	GY / BN	6388	Transmission High Side Driver 2 Control	I	—
10	0.75	RD / VT	7940	Battery Positive Voltage	I	—
11	0.5	GN / GY	6387	Transmission High Side Driver 1 Control	I	—
12	0.5	YE	2159	Park Inhibit Solenoid Assembly Control	I	—
13	0.5	BN / WH	585	Transmission Fluid Temperature Sensor Signal	I	—
14	0.5	YE / BN	6404	Clutch Solenoid Valve E Control	I	—
15	0.5	GY / GN	6403	Clutch Solenoid Valve D Control	I	—
16	0.5	GY	6402	Clutch Solenoid Valve C Control	I	—
17	0.75	BK	6550	Ground	I	—
18	0.5	GN	2968	Transmission Auxiliary Fluid Pump Control	I	—
19	0.5	GN / BK	7819	Default Disable Solenoid Control	I	—

T12 Automatic Transmission X1 (cont'd)

Pin	Size	Color	Circuit	Function	Terminal Type ID	Option
20	0.5	BN	3706	Electronic Transmission Range Select Switch Analog Signal 1	I	—
21	0.5	VT	4509	Transmission Clutch F Control	I	—
22	0.5	WH / BU	4507	Transmission Clutch H Control	I	—
23	0.5	WH	4508	Transmission Clutch G Control	I	—
24	0.5	GN / WH	1530	Transmission Line Pressure Control Solenoid Valve Control	I	—
25	0.5	VT / WH	422	Torque Converter Clutch Solenoid Valve Control	I	—
26	0.5	BK / BN	586	Transmission Fluid Temperature Sensor Low Reference	I	—

T12 Automatic Transmission Assembly X2 (MQC)

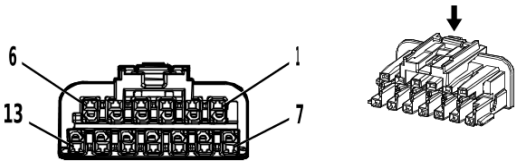

4757907

Connector Part Information

Harness Type: Automatic Transmission Wiring Harness
OEM Connector: 2203990-1
Service Connector: Service by Harness - See Part Catalog
Description: 13-Way F 1.2 MCON Series(BN)

Terminal Part Information

Terminal Type ID	Terminated Lead	Diagnostic Test Probe	Terminal Removal Tool
I	Not required	J-35616-14 (GN)	No Tool Required
II	Not required	J-35616-16 (LT GN)	No Tool Required
III	Not required	J-35616-2A (GY)	No Tool Required
IV	Not required	J-35616-4A (PU)	No Tool Required

T12 Automatic Transmission Assembly X2 (MQC)

Pin	Size	Color	Circuit	Function	Terminal Type ID	Option
1	0.5	YE / GY	6319	Electronic Transmission Range Select Out of Park Switch 2 Signal	II	—
2	0.5	YE	6317	Electronic Transmission Range Select Out of Park Switch Signal	IV	—
3	0.5	YE / OG	6358	Output Speed Signal	II	—
4	0.5	WH / BU	4510	Transmission Intermediate Speed Signal	IV	—
5	0.5	VT / GN	4510	Transmission Intermediate Speed Signal	II	—
6	0.5	WH / VT	6353	Input Speed Signal	III	—
7	0.5	BN / YE	585	Transmission Fluid Temperature Sensor Signal	II	—
8	0.5	OG	2159	Park Inhibit Solenoid Assembly Control	II	—
9	0.5	BN	6387	Transmission High Side Driver 1 Control	II	—
10	1.5	GN / VT	8640	Battery Positive Voltage	II	—
11	0.5	WH	6388	Transmission High Side Driver 2 Control	I	—
12	0.5	BU	4171	Transmission Input Shaft Speed Sensor Circuit 9V Reference	II	—
13	0.5	GN	4170	Transmission Output Shaft Speed Sensor Circuit 9V Reference	II	—

T12 Automatic Transmission Assembly X3 (MQC)

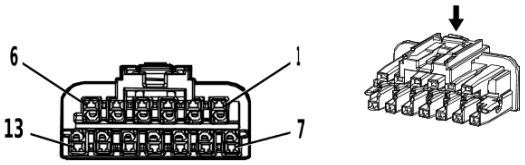

4757999

Connector Part Information

Harness Type: Automatic Transmission Wiring Harness
OEM Connector: 2203990-2
Service Connector: Service by Harness - See Part Catalog
Description: 13-Way F 1.2 MCON Series(BN)

Terminal Part Information

Terminal Type ID	Terminated Lead	Diagnostic Test Probe	Terminal Removal Tool
I	Not required	J-35616-16 (LT GN)	No Tool Required

T12 Automatic Transmission Assembly X3 (MQC)

Pin	Size	Color	Circuit	Function	Terminal Type ID	Option
1	0.5	BN / WH	4509	Transmission Clutch F Control	I	—
2	0.5	YE / VT	4507	Transmission Clutch H Control	I	—
3	0.5	BU / GY	4508	Transmission Clutch G Control	I	—
4	0.5	GN / OG	1530	Transmission Line Pressure Control Solenoid Valve Control	I	—
5	0.5	GY / BN	422	Torque Converter Clutch Solenoid Valve Control	I	—
6	0.5	BU / BN	586	Transmission Fluid Temperature Sensor Low Reference	I	—
7	0.5	BU / GN	6404	Clutch Solenoid Valve E Control	I	—
8	0.5	GN / BN	6403	Clutch Solenoid Valve D Control	I	—
9	0.5	GY	6402	Clutch Solenoid Valve C Control	I	—
10	1.5	BK / YE	6550	Ground	I	—
11	0.5	GY / OG	2968	Transmission Auxiliary Fluid Pump Control	I	—
12	0.5	VT	7819	Default Disable Solenoid Control	I	—
13	0.5	BK / GY	3706	Electronic Transmission Range Select Switch Analog Signal 1	I	—

T19 Multifunction Power Supply Converter

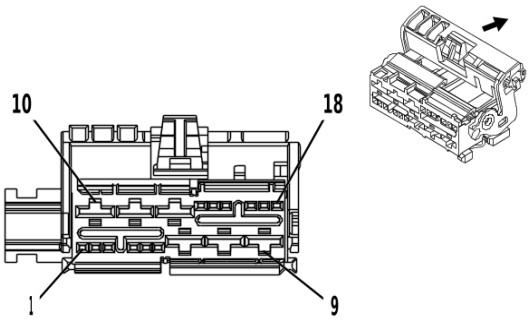

3825662

Connector Part Information

Harness Type: Body Wiring Harness
OEM Connector: 13532325
Service Connector: 84789277
Description: 18-Way F 0.64 MTS, 6.3 MCP Series(BK)

Terminal Part Information

Terminal Type ID	Terminated Lead	Diagnostic Test Probe	Terminal Removal Tool
I	19300632	J-35616-64B (L-BU)	J-38125-215A
II	19367600	J-35616-42 (RD)	J-38125-556

T19 Multifunction Power Supply Converter

Pin	Size	Color	Circuit	Function	Terminal Type ID	Option
1 - 3	—	—	—	Not Occupied	—	—
4	0.35	VT / GN	4320	Powertrain Sensor Bus Enable	I	—
5	0.35	YE / BK	625	Starter Enable Relay Control	I	—
6	—	—	—	Not Occupied	—	—
7	2.5	BK	250	Ground	II	—
8	2.5	RD / YE	8140	Battery Positive Voltage	II	—
9	2.5	RD / GN	2173	12V Regulated Supply Voltage 2	II	—
10	2.5	RD / YE	2172	12V Regulated Supply Voltage 1	II	—
11	2.5	RD / WH	8040	Battery Positive Voltage	II	—
12	2.5	BK	250	Ground	II	—
13	0.35	BU / GY	4054	Private Serial Data Powertrain CAN Bus [-] Serial Data	I	—
14	0.35	BU / GY	4054	Private Serial Data Powertrain CAN Bus [-] Serial Data	I	—
15	0.35	WH	4055	Private Serial Data Powertrain CAN Bus [+] Serial Data	I	—
16	0.35	WH	4055	Private Serial Data Powertrain CAN Bus [+] Serial Data	I	—
17 - 18	—	—	—	Not Occupied	—	—

T22 Wireless Accessory Charging Module (K4C)

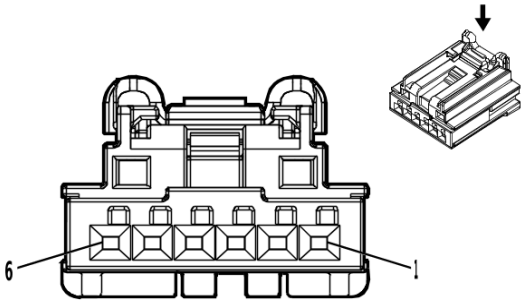

5020940

Connector Part Information

Harness Type: Front Floor Console Wiring Harness
OEM Connector: 2035363-6
Service Connector: Service by Harness - See Part Catalog
Description: 6-Way F 0.64 Generation Y Series(BK)

Terminal Part Information

Terminal Type ID	Terminated Lead	Diagnostic Test Probe	Terminal Removal Tool
I	Not required	J-35616-64B (L-BU)	No Tool Required

T22 Wireless Accessory Charging Module (K4C)

Pin	Size	Color	Circuit	Function	Terminal Type ID	Option
1	0.75	RD / VT	6340	Battery Positive Voltage	I	—
2	0.75	BK	1250	Ground	I	—
3	0.35	BU / YE	4984	AUTOSAR CAN Bus [-] 5 Serial Data	I	—
4	0.35	BU / WH	4985	AUTOSAR CAN Bus [+] 5 Serial Data	I	—
5	0.35	BU / YE	4984	AUTOSAR CAN Bus [-] 5 Serial Data	I	—
6	0.35	BU / WH	4985	AUTOSAR CAN Bus [+] 5 Serial Data	I	—

T35AF Radio Antenna Amplifier - AM/FM X1

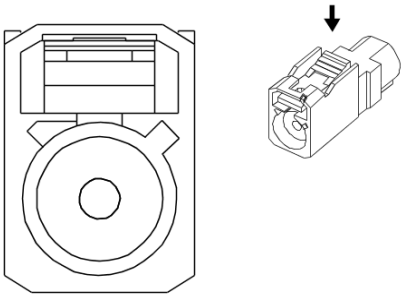

4476531

Connector Part Information

Harness Type: Antenna Coax
OEM Connector: 13532492
Service Connector: Service by Cable Assembly — See Part Catalog
Description: 1-Way F Coax Type

Terminal Part Information

Terminal Type ID	Terminated Lead	Diagnostic Test Probe	Terminal Removal Tool
I	Not required	No Tool Required	No Tool Required

T35AF Radio Antenna Amplifier - AM/FM X1

Pin	Size	Color	Circuit	Function	Terminal Type ID	Option
—	—	Coax Cable	—	(AM/FM) Antenna RF Signal	I	—

T35AF Radio Antenna Amplifier - AM/FM X2

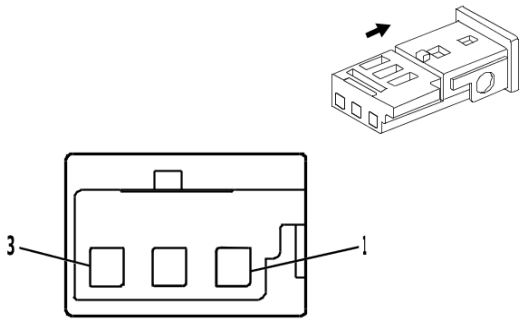

2173553

Connector Part Information

Harness Type: Antenna Coax
OEM Connector: Not Available
Service Connector: Service by Harness - See Part Catalog
Description: 3-Way F

Terminal Part Information

Terminal Type ID	Terminated Lead	Diagnostic Test Probe	Terminal Removal Tool
I	Not Available	No Tool Required	Not Available

T35AF Radio Antenna Amplifier - AM/FM X2

Pin	Size	Color	Circuit	Function	Terminal Type ID	Option
1	0.35	BK	6002	Coaxial Antenna Diversity Signal	I	—
2 - 3	—	—	—	Not Occupied	—	—

T35X Radio Antenna - XM (U2K)

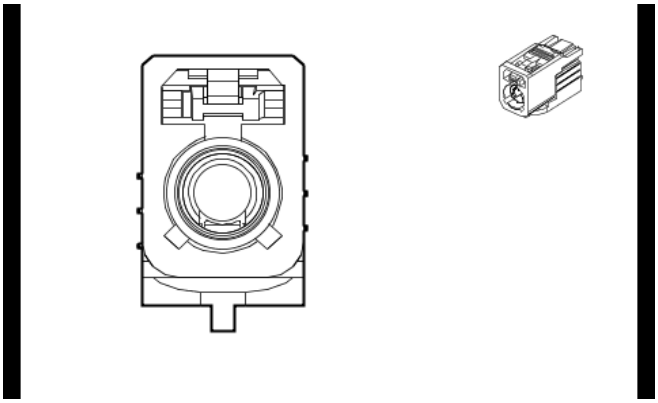

5661657

Connector Part Information

Harness Type: Instrument Panel Wiring Harness COAX
OEM Connector: 13516417
Service Connector: Service by Cable Assembly — See Part Catalog
Description: 1-Way F Coax Type(YE)

Terminal Part Information

Terminal Type ID	Terminated Lead	Diagnostic Test Probe	Terminal Removal Tool
I	Not required	No Tool Required	No Tool Required

T35X Radio Antenna - XM (U2K)

Pin	Size	Color	Circuit	Function	Terminal Type ID	Option
—	—	Coax Cable	—	(XM +/-HD) Coaxial Antenna XM Signal	I	—

X23 Multimedia Receptacle X1

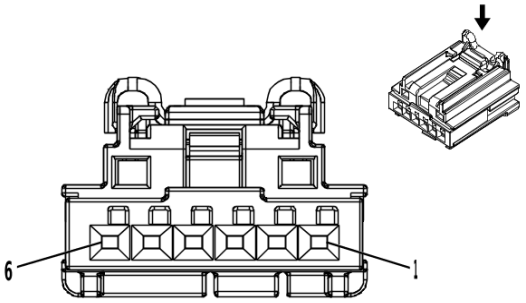

3960313

Connector Part Information

Harness Type: Front Floor Console Wiring Harness
OEM Connector: 2035363-4
Service Connector: Service by Harness - See Part Catalog
Description: 6-Way F 0.64 Generation Y Series(BK)

Terminal Part Information

Terminal Type ID	Terminated Lead	Diagnostic Test Probe	Terminal Removal Tool
I	Not required	J-35616-64B (L-BU)	No Tool Required

X23 Multimedia Receptacle X1

Pin	Size	Color	Circuit	Function	Terminal Type ID	Option
1	0.35	RD / WH	7240	Battery Positive Voltage	I	—
2	0.35	YE	6817	LED Backlight Dimming Control 1	I	—
3	0.35	BK / WH	1451	Signal Ground	I	—
4 - 6	—	—	—	Not Occupied	—	—

X23 Multimedia Receptacle X2 (MCR)

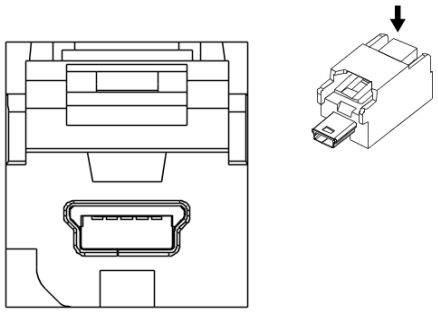

3214018

Connector Part Information

Harness Type: Front Floor Console Wiring Harness LVDS
OEM Connector: 13584747
Service Connector: Service by Cable Assembly — See Part Catalog
Description: 5-Way M 2.0 Mini-B USB Type(GY)

Terminal Part Information

Terminal Type ID	Terminated Lead	Diagnostic Test Probe	Terminal Removal Tool
I	Not required	No Tool Required	No Tool Required

X23 Multimedia Receptacle X2 (MCR)

Pin	Size	Color	Circuit	Function	Terminal Type ID	Option
—	—	LVDS	—	Auxiliary Audio/Video Jack 2 USB Signal	I	—

X23 Multimedia Receptacle X3 (UW9)

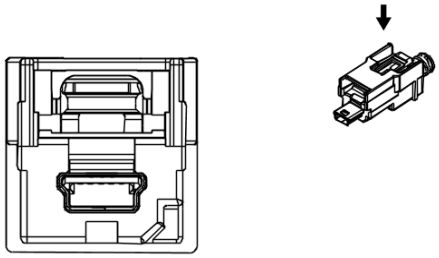

2807425

Connector Part Information

Harness Type: Front Floor Console Wiring Harness LVDS
OEM Connector: 13584746
Service Connector: Service by Cable Assembly — See Part Catalog
Description: 5-Way M 2.0 Mini-B USB Type(BK)

Terminal Part Information

Terminal Type ID	Terminated Lead	Diagnostic Test Probe	Terminal Removal Tool
I	Not required	No Tool Required	No Tool Required

X23 Multimedia Receptacle X3 (UW9)

Pin	Size	Color	Circuit	Function	Terminal Type ID	Option
—	—	LVDS	—	Rear Seat Infotainment Auxiliary Audio/Video Jack USB Signal	I	—

X80G Accessory Power Receptacle - Instrument Panel (AZ3)

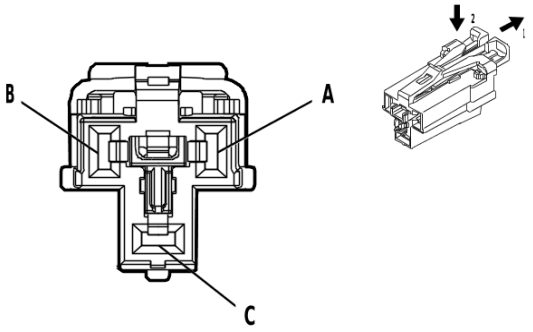

4872413

Connector Part Information

Harness Type: Instrument Panel Wiring Harness
OEM Connector: 33386302
Service Connector: 19369281
Description: 3-Way F 2.8 APEX Series(GY)

Terminal Part Information

Terminal Type ID	Terminated Lead	Diagnostic Test Probe	Terminal Removal Tool
I	Not required	J-35616-2A (GY)	No Tool Required

X80G Accessory Power Receptacle - Instrument Panel (AZ3)

Pin	Size	Color	Circuit	Function	Terminal Type ID	Option
A	1	VT	1001	Retained Accessory Power Ignition Voltage	I	—
B	0.5	YE	6817	LED Backlight Dimming Control 1	I	—
C	1	BK	1850	Ground	I	—

X80H Accessory Power Receptacle - Floor Console Front (D07/DCH/DCK)

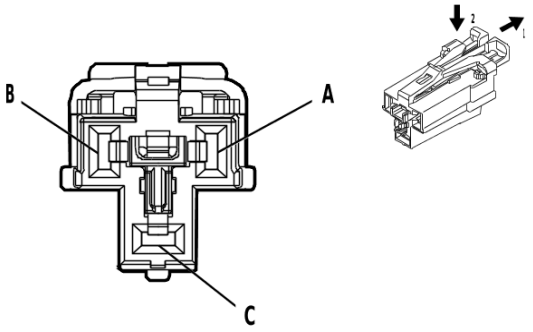

4872413

Connector Part Information

Harness Type: Front Floor Console Wiring Harness
OEM Connector: 33386302
Service Connector: Service by Harness - See Part Catalog
Description: 3-Way F 2.8 APEX Series(GY)

Terminal Part Information

Terminal Type ID	Terminated Lead	Diagnostic Test Probe	Terminal Removal Tool
I	Not required	J-35616-2A (GY)	No Tool Required
II	Not required	J-35616-35 (VT)	No Tool Required

X80H Accessory Power Receptacle - Floor Console Front (D07/DCH/DCK)

Pin	Size	Color	Circuit	Function	Terminal Type ID	Option
A	1.5	VT	1001	Retained Accessory Power Ignition Voltage	II	—
B	0.5	YE	6817	LED Backlight Dimming Control 1	II	D07/ DCK
	0.5	YE	6817	LED Backlight Dimming Control 1	I	DCH
C	1	BK	1250	Ground	I	—

X81AC Accessory Power Receptacle - Floor Console 110V AC X2 (KI4+(D07/DCH/DCK))

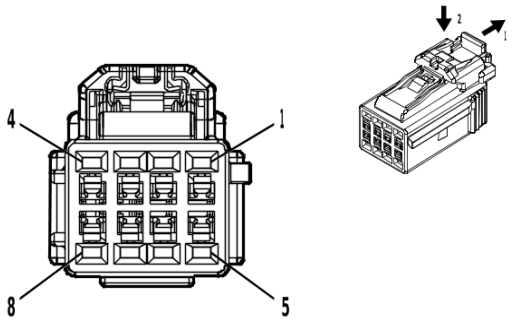

5086387

Connector Part Information

Harness Type: Front Floor Console Wiring Harness
OEM Connector: 6098-8443
Service Connector: Service by Harness - See Part Catalog
Description: 8-Way F 1.2 Series(BK)

Terminal Part Information

Terminal Type ID	Terminated Lead	Diagnostic Test Probe	Terminal Removal Tool
I	Not required	J-35616-16 (L-GN)	No Tool Required

X81AC Accessory Power Receptacle - Floor Console 110V AC X2 (KI4+(D07/DCH/DCK))

Pin	Size	Color	Circuit	Function	Terminal Type ID	Option
1	0.75	BK	5683	120V AC Phase A	I	—
2	—	—	—	Not Occupied	—	—
3	0.5	VT / RD	4049	AC Power Outlet Sensor High Reference	I	—
4	0.75	BU / BN	6807	DC/AC Inverter Control	I	—
5	0.75	RD	5684	120V AC Phase B	I	—
6	—	—	—	Not Occupied	—	—
7	0.75	BK	1250	Ground	I	—
8	0.5	YE	6817	LED Backlight Dimming Control 1	I	—

X81AC Accessory Power Receptacle - Floor Console 110V AC X2 (KI4+AZ3)

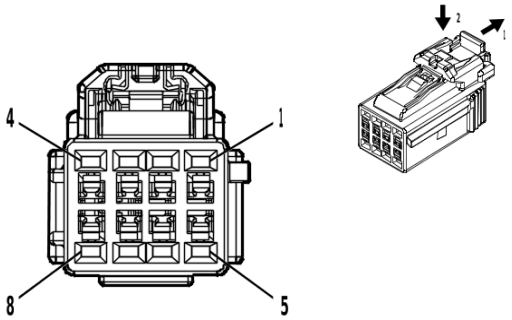

5086387

Connector Part Information

Harness Type: Front Seat Wiring Harness - Center
OEM Connector: 6098-8443
Service Connector: Service by Harness - See Part Catalog
Description: 8-Way F 1.2 Series(BK)

Terminal Part Information

Terminal Type ID	Terminated Lead	Diagnostic Test Probe	Terminal Removal Tool
I	Not required	J-35616-16 (LT GN)	No Tool Required

X81AC Accessory Power Receptacle - Floor Console 110V AC X2 (KI4+AZ3)

Pin	Size	Color	Circuit	Function	Terminal Type ID	Option
1	0.75	BK	5683	120V AC Phase A	I	—
2	—	—	—	Not Occupied	—	—
3	0.5	VT / RD	4049	AC Power Outlet Sensor High Reference	I	—
4	0.75	BU / BN	6807	DC/AC Inverter Control	I	—
5	0.75	RD	5684	120V AC Phase B	I	—
6	—	—	—	Not Occupied	—	—
7	0.75	BK	1250	Ground	I	—
8	0.5	YE	6817	LED Backlight Dimming Control 1	I	—

X81RA Quarter Lower Rear Trim Panel Accessory Power Receptacle - 110V AC (KI4)

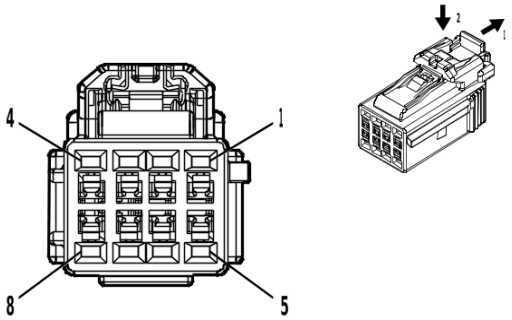

5086387

Connector Part Information

Harness Type: Body Wiring Harness
OEM Connector: 13533339
Service Connector: 84613126
Description: 8-Way F 1.2 Series(BK)

Terminal Part Information

Terminal Type ID	Terminated Lead	Diagnostic Test Probe	Terminal Removal Tool
I	Not required	J-35616-16 (LT GN)	No Tool Required

X81RA Quarter Lower Rear Trim Panel Accessory Power Receptacle - 110V AC (KI4)

Pin	Size	Color	Circuit	Function	Terminal Type ID	Option
1	0.5	BK / WH	2264	120V AC Phase A 2	I	—
2	—	—	—	Not Occupied	—	—
3	0.5	VT / RD	4049	AC Power Outlet Sensor High Reference	I	—
4	0.75	GN / BN	2266	DC/AC Inverter Control 2	I	—
5	0.5	RD / WH	2265	120V AC Phase B 2	I	—
6	—	—	—	Not Occupied	—	—
7	0.5	BK	1450	Ground	I	—
8	0.5	YE	6817	LED Backlight Dimming Control 1	I	—

X81RB Quarter Lower Rear Trim Panel Accessory Power Receptacle - 220V AC (KI5)

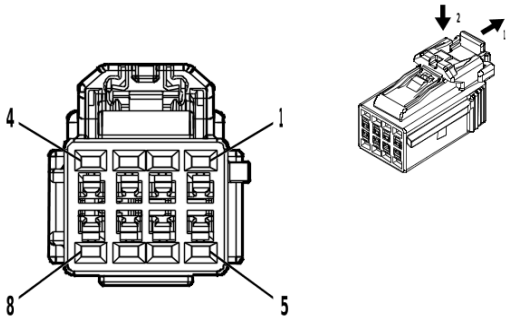

5086387

Connector Part Information

Harness Type: Body Wiring Harness
OEM Connector: 13533339
Service Connector: 84613126
Description: 8-Way F 1.2 Series(BK)

Terminal Part Information

Terminal Type ID	Terminated Lead	Diagnostic Test Probe	Terminal Removal Tool
I	Not required	J-35616-16 (LT GN)	No Tool Required

X81RB Quarter Lower Rear Trim Panel Accessory Power Receptacle - 220V AC (KI5)

Pin	Size	Color	Circuit	Function	Terminal Type ID	Option
1	0.5	BK / WH	2264	120V AC Phase A 2	I	—
2	—	—	—	Not Occupied	—	—
3	0.5	VT / RD	4049	AC Power Outlet Sensor High Reference	I	—
4	0.75	GN / BN	2266	DC/AC Inverter Control 2	I	—
5	0.5	RD / WH	2265	120V AC Phase B 2	I	—
6	—	—	—	Not Occupied	—	—
7	0.5	BK	1450	Ground	I	—
8	0.5	YE	6817	LED Backlight Dimming Control 1	I	—

X83B Audio/Video Receptacle X1 (UW9)

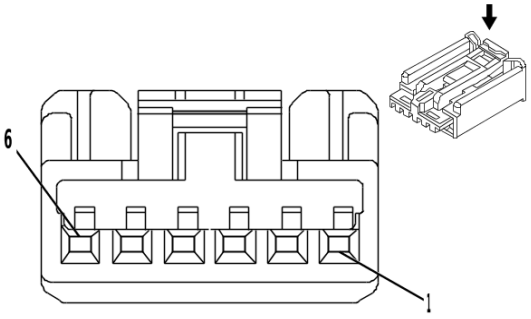

1862240

Connector Part Information

Harness Type: Front Floor Console Wiring Harness
OEM Connector: AIT2PB-06-1AK
Service Connector: Service by Harness - See Part Catalog
Description: 6-Way F 0.64 Kaizen Series(BK)

Terminal Part Information

Terminal Type ID	Terminated Lead	Diagnostic Test Probe	Terminal Removal Tool
I	Not required	J-35616-64B (L-BU)	No Tool Required

X83B Audio/Video Receptacle X1 (UW9)

Pin	Size	Color	Circuit	Function	Terminal Type ID	Option
1	—	—	—	Not Occupied	—	—
2	0.5	YE	6817	LED Backlight Dimming Control 1	I	—
3	—	—	—	Not Occupied	—	—
4	0.35	BK / WH	1451	Signal Ground	I	—
5	—	—	—	Not Occupied	—	—
6	0.35	RD / WH	7240	Battery Positive Voltage	I	—

X83B Audio/Video Receptacle X2 (UW9)

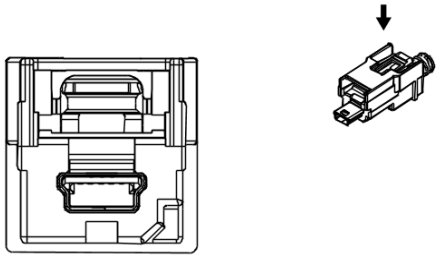

2807425

Connector Part Information

Harness Type: Front Floor Console Wiring Harness USB
OEM Connector: 13580202
Service Connector: Service by Cable Assembly — See Part Catalog
Description: 5-Way M 2.0 Mini-B USB Type(BK)

Terminal Part Information

Terminal Type ID	Terminated Lead	Diagnostic Test Probe	Terminal Removal Tool
I	Not required	No Tool Required	No Tool Required

X83B Audio/Video Receptacle X2 (UW9)

Pin	Size	Color	Circuit	Function	Terminal Type ID	Option
—	—	USB	—	USB Serial Data	I	—

X83B Audio/Video Receptacle X3 (UW9)

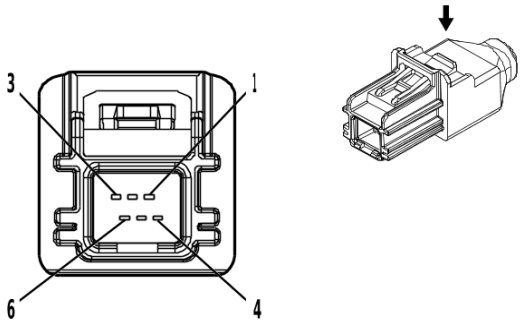

4806625

Connector Part Information

Harness Type: Front Floor Console Wiring Harness LVDS
OEM Connector: 13522806
Service Connector: Service by Cable Assembly — See Part Catalog
Description: 6-Way M HSAL-2 Series(BK)

Terminal Part Information

Terminal Type ID	Terminated Lead	Diagnostic Test Probe	Terminal Removal Tool
I	Not required	No Tool Required	No Tool Required

X83B Audio/Video Receptacle X3 (UW9)

Pin	Size	Color	Circuit	Function	Terminal Type ID	Option
—	—	LVDS	—	Auxiliary Video Signal	I	—

X84 Data Link Connector

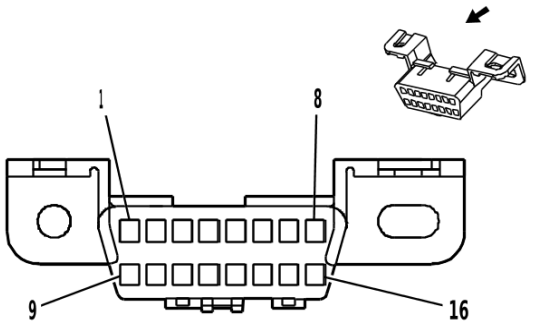

68793

Connector Part Information

Harness Type: Instrument Panel Wiring Harness
OEM Connector: 12110250
Service Connector: 12110250
Description: 16-Way F 150 Metri-Pack Series(BK)

Terminal Part Information

Terminal Type ID	Terminated Lead	Diagnostic Test Probe	Terminal Removal Tool
I	13580059	J-35616-14 (GN)	J-38125-12A

X84 Data Link Connector

Pin	Size	Color	Circuit	Function	Terminal Type ID	Option
1	0.35	BU / BN	4983	AUTOSAR CAN Bus [+] 7 Serial Data	I	—
2	0.35	GN	2578	Private Serial Data Presentation CAN Bus [+] 1 Serial Data	I	—
3	0.35	YE / WH	4973	Ethernet Bus 1R [+]	I	—
4	1	BK	1850	Ground	I	—
5	0.75	BK / WH	1851	Signal Ground	I	—
6	0.35	YE	4981	AUTOSAR CAN Bus [+] 6 Serial Data	I	—
7	0.35	VT	2580	Private Serial Data Presentation CAN Bus [+] 2 Serial Data	I	—
8	0.35	WH	7207	Ethernet Bus 1 Enable Signal	I	—
9	0.35	WH	4982	AUTOSAR CAN Bus [-] 7 Serial Data	I	—
10	0.35	BN	2577	Private Serial Data Presentation CAN Bus [-] 1 Serial Data	I	—
11	0.35	YE	4972	Ethernet Bus 1R [-]	I	—
12	0.35	GN / WH	4975	Ethernet Bus 1T [+]	I	—
13	0.35	GN	4974	Ethernet Bus 1T [-]	I	—
14	0.35	WH	4980	AUTOSAR CAN Bus [-] 6 Serial Data	I	—
15	0.35	GY	2579	Private Serial Data Presentation CAN Bus [-] 2 Serial Data	I	—
16	0.5	RD / YE	6540	Battery Positive Voltage	I	—

X85 Steering Wheel Airbag Coil X1

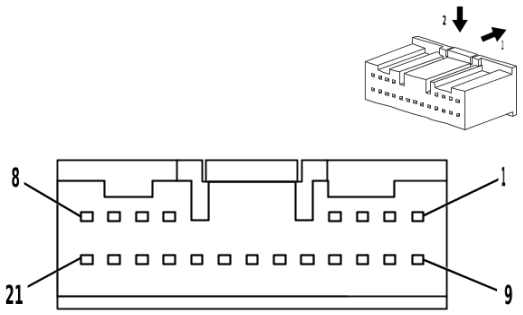

3960237

Connector Part Information

Harness Type: Instrument Panel Wiring Harness
OEM Connector: ATLCPB-21B-2AY
Service Connector: 13510218
Description: 21-Way F 0.64 Series(YE)

Terminal Part Information

Terminal Type ID	Terminated Lead	Diagnostic Test Probe	Terminal Removal Tool
I	13575742	J-35616-64B (L-BU)	J-38125-215A
II	13575865	J-35616-64B (L-BU)	J-38125-215A

X85 Steering Wheel Airbag Coil X1

Pin	Size	Color	Circuit	Function	Terminal Type ID	Option
1	0.75	BK / WH	1851	Signal Ground	I	—
2	0.35	GN / WH	3287	Horn Switch Signal	I	—
3 - 4	—	—	—	Not Occupied	—	—
5	0.5	OG / GN	3023	Steering Wheel Air Bag Stage 2 High Control	II	—
6	0.5	WH / OG	3022	Steering Wheel Air Bag Stage 2 Low Control	II	—
7	0.5	BN / OG	3020	Steering Wheel Air Bag Stage 1 Low Control	II	—
8	0.5	OG / VT	3021	Steering Wheel Air Bag Stage 1 High Control	II	—
9	0.35	GN / BK	3894	Instrument Cluster LIN Bus 1	I	—
10	0.35	GN / BK	2858	Body Control Module LIN Bus 12	I	—
11	0.35	BN / GN	1884	Cruise Control Set/Coast/Resume/Accelerate Switch Signal	I	—
12	0.35	BK / VT	1449	Steering Wheel Resistor Ladder Low Reference	I	—
13	—	—	—	Not Occupied	—	—
14	0.75	RD / GN	5140	Battery Positive Voltage	I	—
15	0.35	GY / GN	5737	Distance Sensing Cruise Control Gap Up/Down Switch Signal	I	—
16 - 19	—	—	—	Not Occupied	—	—
20	0.5	BK	1850	Ground	I	—
21	0.35	RD / BN	10040	Secondary Fused Battery Positive Voltage	I	—

X85 Steering Wheel Airbag Coil X2

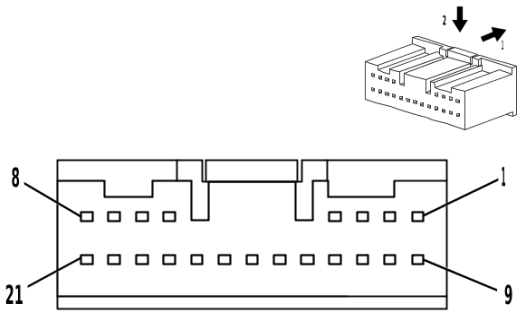

3960237

Connector Part Information

Harness Type: Steering Wheel Horn Switch Wiring Harness
OEM Connector: 13510218
Service Connector: Service by Harness - See Part Catalog
Description: 21-Way F 0.64 Series(YE)

Terminal Part Information

Terminal Type ID	Terminated Lead	Diagnostic Test Probe	Terminal Removal Tool
I	Not required	J-35616-64B (L-BU)	No Tool Required

X85 Steering Wheel Airbag Coil X2

Pin	Size	Color	Circuit	Function	Terminal Type ID	Option
1	0.35	BK	6051	Steering Wheel Ground	I	—
2	0.35	GN / WH	3287	Horn Switch Signal	I	—
3 - 4	—	—	—	Not Occupied	—	—
5	0.5	GY / GN	3023	Steering Wheel Air Bag Stage 2 High Control	I	—
6	0.5	WH / VT	3022	Steering Wheel Air Bag Stage 2 Low Control	I	—
7	0.5	BN / WH	3020	Steering Wheel Air Bag Stage 1 Low Control	I	—
8	0.5	YE / VT	3021	Steering Wheel Air Bag Stage 1 High Control	I	—
9	0.5	OG / BN	10040	Secondary Fused Battery Positive Voltage	I	KI3
10	0.5	BK	6050	Steering Wheel Ground	I	KI3
11 - 14	—	—	—	Not Occupied	—	—
15	0.35	GY / GN	5737	Distance Sensing Cruise Control Gap Up/Down Switch Signal	I	—
16	0.35 0.35	GN GN / GN	5140 5140	Battery Positive Voltage Battery Positive Voltage	I I	— —
17	—	—	—	Not Occupied	—	—
18	0.35	BK / VT	1449	Steering Wheel Resistor Ladder Low Reference	I	—
19	0.35	BN / GN	1884	Cruise Control Set/Coast/Resume/Accelerate Switch Signal	I	—
20	0.35	GN / BK	2858	Body Control Module LIN Bus 12	I	KI3
21	0.35	GN / BK	3894	Instrument Cluster LIN Bus 1	I	—

X88B Tow Vehicle Electrical Receptacle X1 (U1D+(MAS/MBM/MBR))

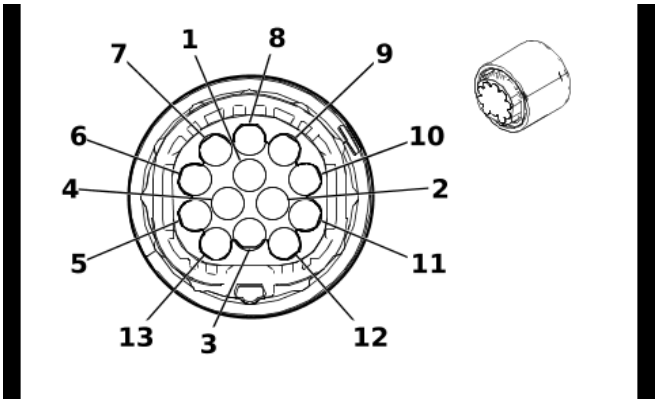

5499621

Connector Part Information

Harness Type: Chassis Wiring Harness
OEM Connector: 35383017
Service Connector: Service by Harness - See Part Catalog
Description: 13-Way F 2.5 Series(BK)

Terminal Part Information

Terminal Type ID	Terminated Lead	Diagnostic Test Probe	Terminal Removal Tool
I	Not required	J-35616-37 (L-BU)	No Tool Required

X88B Tow Vehicle Electrical Receptacle X1 (U1D+(MAS/MBM/MBR))

Pin	Size	Color	Circuit	Function	Terminal Type ID	Option
1	0.5	BU / WH	5186	Left Trailer Turn Signal Lamp Control	I	—
2	0.5	YE / WH	5190	Trailer Fog Lamp Control	I	—
3	2.5	BK	2350	Ground	I	—
4	0.5	YE / GY	5187	Right Trailer Turn Signal Lamp Control	I	—
5	0.5	GY	5185	Right Trailer Park Lamp Control	I	—
6	0.5	BN / YE	5188	Trailer Stop Lamp Control	I	—
7	0.5	BN / GY	5184	Left Trailer Park Lamp Control	I	—
8	0.5	GN / WH	5189	Trailer Backup Lamp Control	I	—
9	2.5	RD / GN	742	Battery Positive Voltage	I	—
10	1	VT / BK	339	Run/Crank Ignition 1 Voltage	I	—
11	1	BK	2350	Ground	I	—
12	—	—	—	Not Occupied	—	—
13	2.5	BK	2350	Ground	I	—

X88B Tow Vehicle Electrical Receptacle X1 (UET-(MAS/MBM/MBR))

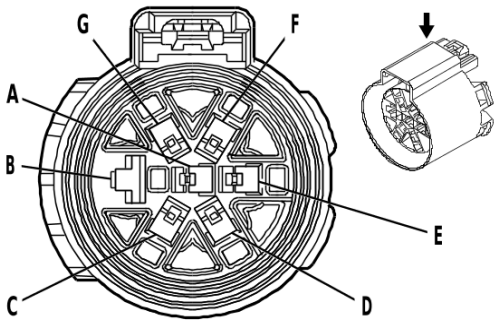

2056936

Connector Part Information

Harness Type: Chassis Wiring Harness
OEM Connector: 13857223
Service Connector: 15306164
Description: 7-Way F 280, 630 Metri-Pack Series, Sealed(BK)

Terminal Part Information

Terminal Type ID	Terminated Lead	Diagnostic Test Probe	Terminal Removal Tool
I	Not required	J-35616-42 (RD)	No Tool Required
II	Not required	J-35616-4A (PU)	No Tool Required

X88B Tow Vehicle Electrical Receptacle X1 (UET-(MAS/MBM/MBR))

Pin	Size	Color	Circuit	Function	Terminal Type ID	Option
A	0.75 0.75	GN / WH WH / GN	5189 1624	Trailer Backup Lamp Control Trailer Backup Lamp Control	II II	- MAS- MBM- MBR+ UET+ Z82 - UET+ Z82
B	3	BK	1950	Ground	I	—
C	2.5	BU	47	Trailer Auxiliary Control	II	—
D	0.75 0.75	YE / GY GN / VT	5187 1619	Right Trailer Turn Signal Lamp Control Right Rear Trailer Stop/Turn Lamp Control	II II	- MAS- MBM- MBR+ UET+ Z82 - UET+ Z82
E	4	RD / GN	742	Battery Positive Voltage	II	—
F	0.75 1	BN / GY GY / BN	5184 2109	Left Trailer Park Lamp Control Trailer Park Lamp Control	II II	- MAS- MBM- MBR+ UET+ Z82 - UET+ Z82
G	0.75 0.75	BU / WH YE / GY	5186 1618	Left Trailer Turn Signal Lamp Control Left Rear Trailer Stop/Turn Lamp Control	II II	- MAS- MBM- MBR+ UET+ Z82 - UET+ Z82

X92BCL USB Receptacle - 3rd Row Seat Left (USS)

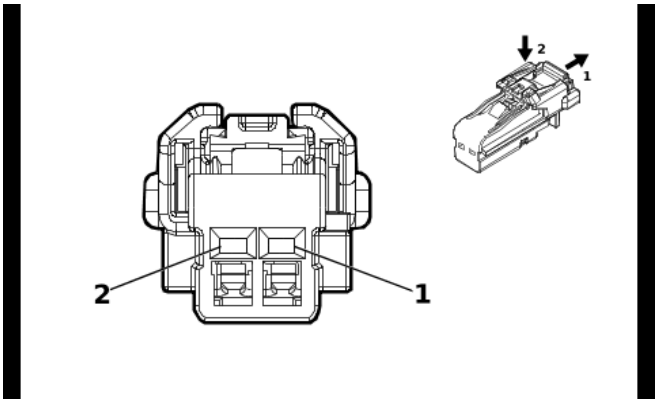

4115691

Connector Part Information

Harness Type: Body Wiring Harness
OEM Connector: 13532422
Service Connector: 19352066
Description: 2-Way F 1.2 MCON Series(BK)

Terminal Part Information

Terminal Type ID	Terminated Lead	Diagnostic Test Probe	Terminal Removal Tool
I	Not required	J-35616-16 (LT GN)	No Tool Required

X92BCL USB Receptacle - 3rd Row Seat Left (USS)

Pin	Size	Color	Circuit	Function	Terminal Type ID	Option
1	0.5	VT	4701	Retained Accessory Power Control	I	—
2	0.5	BK	1150	Ground	I	—

X92BCR USB Receptacle - 3rd Row Seat Right (USS)

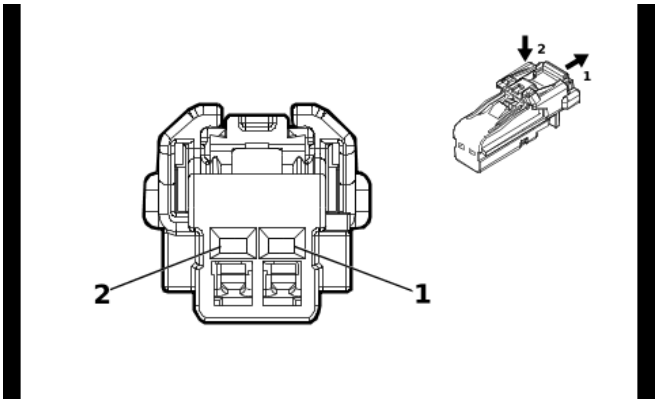

4115691

Connector Part Information

Harness Type: Body Wiring Harness
OEM Connector: 13532422
Service Connector: 19352066
Description: 2-Way F 1.2 MCON Series(BK)

Terminal Part Information

Terminal Type ID	Terminated Lead	Diagnostic Test Probe	Terminal Removal Tool
I	Not required	J-35616-16 (LT GN)	No Tool Required

X92BCR USB Receptacle - 3rd Row Seat Right (USS)

Pin	Size	Color	Circuit	Function	Terminal Type ID	Option
1	0.5	VT	4701	Retained Accessory Power Control	I	—
2	0.5	BK	1450	Ground	I	—

X92CD Dual Charge Only Receptacle - Floor Console Rear (USS-UW9+(D07/DCH/DCK))

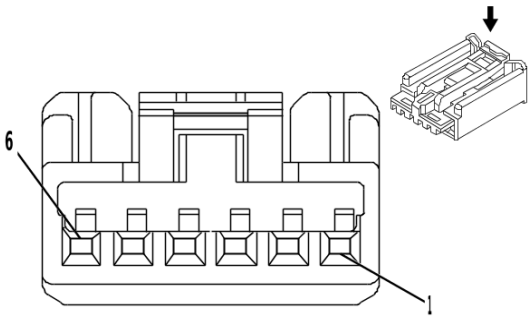

1862240

Connector Part Information

Harness Type: Front Floor Console Wiring Harness
OEM Connector: AIT2PB-06-1AK
Service Connector: Service by Harness - See Part Catalog
Description: 6-Way F 0.64 Kaizen Series(BK)

Terminal Part Information

Terminal Type ID	Terminated Lead	Diagnostic Test Probe	Terminal Removal Tool
I	Not required	J-35616-64B (L-BU)	No Tool Required

X92CD Dual Charge Only Receptacle - Floor Console Rear (USS-UW9+(D07/DCH/DCK))

Pin	Size	Color	Circuit	Function	Terminal Type ID	Option
1	—	—	—	Not Occupied	—	—
2	0.5	YE	6817	LED Backlight Dimming Control 1	I	—
3	—	—	—	Not Occupied	—	—
4	0.75	BK	1250	Ground	I	—
5	—	—	—	Not Occupied	—	—
6	0.5	VT	4701	Retained Accessory Power Control	I	—

X92CD Dual Charge Only Receptacle - Floor Console Rear (USS-UW9+AZ3)

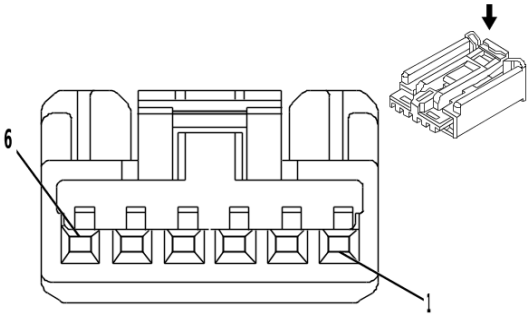

1862240

Connector Part Information

Harness Type: Front Seat Wiring Harness - Center
OEM Connector: AIT2PB-06-1AK
Service Connector: Service by Harness - See Part Catalog
Description: 6-Way F 0.64 Kaizen Series(BK)

Terminal Part Information

Terminal Type ID	Terminated Lead	Diagnostic Test Probe	Terminal Removal Tool
I	Not required	J-35616-64B (L-BU)	No Tool Required

X92CD Dual Charge Only Receptacle - Floor Console Rear (USS-UW9+AZ3)

Pin	Size	Color	Circuit	Function	Terminal Type ID	Option
1	—	—	—	Not Occupied	—	—
2	0.5	YE	6817	LED Backlight Dimming Control 1	I	—
3	—	—	—	Not Occupied	—	—
4	0.75	BK	1250	Ground	I	—
5	—	—	—	Not Occupied	—	—
6	0.5	VT	4701	Retained Accessory Power Control	I	—

X92G USB 2 Port Receptacle X1 ((D07/DCH/DCK))

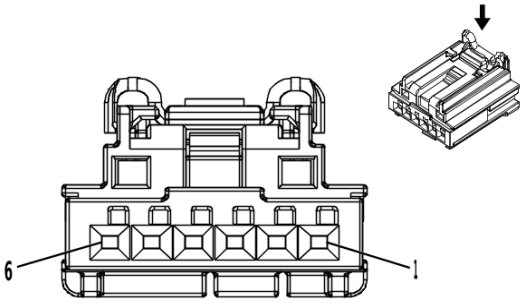

3960313

Connector Part Information

Harness Type: Front Floor Console Wiring Harness
OEM Connector: 2035363-4
Service Connector: Service by Harness - See Part Catalog
Description: 6-Way F 0.64 Generation Y Series(BK)

Terminal Part Information

Terminal Type ID	Terminated Lead	Diagnostic Test Probe	Terminal Removal Tool
I	Not required	J-35616-64B (L-BU)	No Tool Required

X92G USB 2 Port Receptacle X1 ((D07/DCH/DCK))

Pin	Size	Color	Circuit	Function	Terminal Type ID	Option
1	0.5	RD / YE	2340	Battery Positive Voltage	I	—
2	0.5	YE	6817	LED Backlight Dimming Control 1	I	—
3	0.75	BK / WH	1451	Signal Ground	I	UQH
	0.35	BK / WH	1451	Signal Ground	I	- UQH
4 - 6	—	—	—	Not Occupied	—	—

X92G USB 2 Port Receptacle X1 (AZ3)

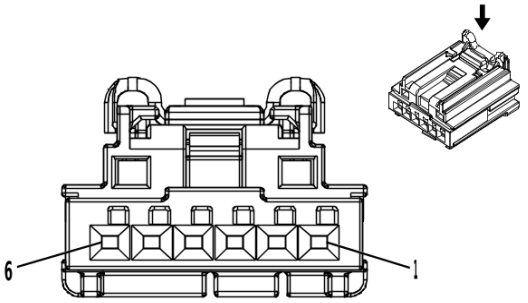

3960313

Connector Part Information

Harness Type: Instrument Panel Wiring Harness
OEM Connector: 2035363-4
Service Connector: 19332786
Description: 6-Way F 0.64 Generation Y Series(BK)

Terminal Part Information

Terminal Type ID	Terminated Lead	Diagnostic Test Probe	Terminal Removal Tool
I	Not required	J-35616-64B (L-BU)	No Tool Required

X92G USB 2 Port Receptacle X1 (AZ3)

Pin	Size	Color	Circuit	Function	Terminal Type ID	Option
1	0.5	RD / YE	2340	Battery Positive Voltage	I	—
2	0.5	YE	6817	LED Backlight Dimming Control 1	I	—
3	0.35	BK / WH	1451	Signal Ground	I	—
4 - 6	—	—	—	Not Occupied	—	—

X92G USB 2 Port Receptacle X2

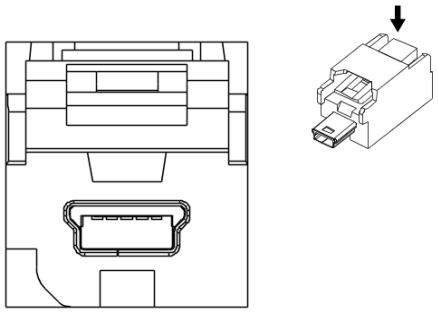

3214018

Connector Part Information

Harness Type: Front Floor Console Wiring Harness LVDS
OEM Connector: 13584747
Service Connector: Service by Cable Assembly — See Part Catalog
Description: 5-Way M 2.0 Mini-B USB Type(GY)

Terminal Part Information

Terminal Type ID	Terminated Lead	Diagnostic Test Probe	Terminal Removal Tool
I	Not required	No Tool Required	No Tool Required

X92G USB 2 Port Receptacle X2

Pin	Size	Color	Circuit	Function	Terminal Type ID	Option
—	—	LVDS	—	Rear Seat Infotainment Auxiliary Audio/Video Jack Signal	I	—

X92G USB 2 Port Receptacle X3

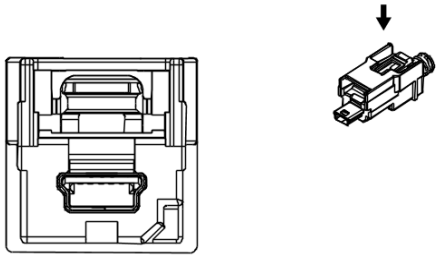

2807425

Connector Part Information

Harness Type: Front Floor Console Wiring Harness USB
OEM Connector: 13584746
Service Connector: Service by Cable Assembly — See Part Catalog
Description: 5-Way M 2.0 Mini-B USB Type(BK)

Terminal Part Information

Terminal Type ID	Terminated Lead	Diagnostic Test Probe	Terminal Removal Tool
I	Not required	No Tool Required	No Tool Required

X92G USB 2 Port Receptacle X3

Pin	Size	Color	Circuit	Function	Terminal Type ID	Option
—	—	USB	—	USB Serial Data	I	—

Inline Harness Connector End Views

X125 Engine Wiring Harness to Body Wiring Harness (L84/L87)

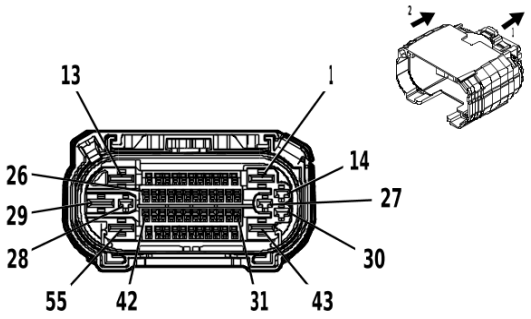

4992329

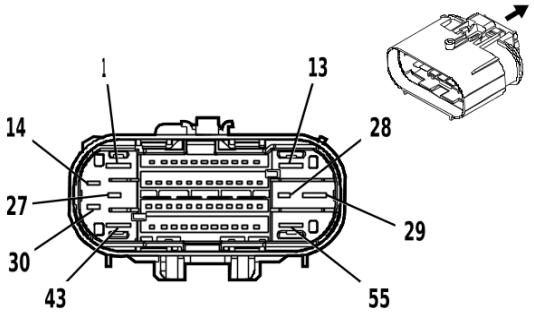

4994369

Connector Part Information

Harness Type: Engine Wiring Harness
OEM Connector: 35179598
Service Connector: 19371184
Description: 55-Way F 1.2 OCS, 2.8, 6.3 CTS Series, Sealed(GY)

Connector Part Information

Harness Type: Body Wiring Harness
OEM Connector: 35205185
Service Connector: 84727363
Description: 55-Way M 1.2 OCS, 2.8, 6.3 CTS Series, Sealed(GY)

Terminal Part Information

Terminal Type ID	Terminated Lead	Diagnostic Test Probe	Terminal Removal Tool
I	19370818	J-35616-12 (BU)	J-38125-215A
II	19371217	J-35616-12 (BU)	J-38125-215A
III	84634921	J-35616-42 (RD)	J-38125-212
IV	84847992	J-35616-32 (OG)	J-38125-36
V	84867140	J-35616-13 (BU)	J-38125-215A

X125 Engine Wiring Harness to Body Wiring Harness (L84/L87)

Pin	Size	Color	Circuit	Terminal Type ID	Option	Function	Pin	Size	Color	Circuit	Terminal Type ID	Option
1 - 2	—	—	—	—	—	Not Occupied	1 - 2	—	—	—	—	—
3	0.5	BK / BU	1271	I	—	Accelerator Pedal Position Low Reference 1	3	0.5	BK / BU	1271	V	—
4	—	—	—	—	—	Not Occupied	4	—	—	—	—	—
5	0.5	GN / WH	1162	I	—	Accelerator Pedal Position Signal 2	5	0.5	GN / WH	1162	V	—
6	—	—	—	—	—	Wait To Start Indicator Control	6	0.35	GN / BN	507	V	—
7 - 14	—	—	—	—	—	Not Occupied	7 - 14	—	—	—	—	—
15	0.5	YE	4063	I	—	Hood Status A Signal	15	0.5	YE	4063	V	—
16 - 23	—	—	—	—	—	Not Occupied	16 - 23	—	—	—	—	—

X125 Engine Wiring Harness to Body Wiring Harness (L84/L87) (cont'd)

Pin	Size	Color	Circuit	Terminal Type ID	Option	Function	Pin	Size	Color	Circuit	Terminal Type ID	Option
24	0.5	BU / GY	4054	I	—	Private Serial Data Powertrain CAN Bus [-] Serial Data	24	0.35	BU / GY	4054	V	—
25	0.5	WH	4055	I	—	Private Serial Data Powertrain CAN Bus [+] Serial Data	25	0.35	WH	4055	V	—
26 - 30	—	—	—	—	—	Not Occupied	26 - 30	—	—	—	—	—
31	0.5	WH / BU	6311	I	—	Cruise/ETC/ TCC Brake Signal	31	0.5	WH / BU	6311	V	—
32 - 34	—	—	—	—	—	Not Occupied	32 - 34	—	—	—	—	—
35	0.5	BK / YE	548	I	—	Engine Control Sensors Low Reference 1	35	0.5	BK / YE	5382	V	—
36	0.5	WH / GN	5380	I	—	Brake Position Sensor Signal	36	0.5	WH / GN	5380	V	—
37	0.5	WH / RD	480	I	—	Engine Control Vehicle Sensors 5 Volt Reference 1	37	0.5	WH / RD	5381	V	—
38 - 39	—	—	—	—	—	Not Occupied	38 - 39	—	—	—	—	—
40	0.5	BK / VT	1272	I	—	Accelerator Pedal Position Low Reference 2	40	0.5	BK / VT	1272	V	—
41	—	—	—	—	—	Not Occupied	41	—	—	—	—	—
42	0.5	YE / BK	625	I	—	Starter Enable Relay Control	42	0.35	YE / BK	625	V	—
43	4	BK / WH	6151	III	—	Engine Control Module Ground	43	4	BK / WH	6151	IV	—
44	1	RD / GN	1840	II	—	Battery Positive Voltage	44	0.75	RD / GN	1840	V	—
45 - 46	—	—	—	—	—	Not Occupied	45 - 46	—	—	—	—	—
47	0.5	BU / BN	7573	I	—	A/C Compressor Solenoid Valve Control	47	0.5	BU / BN	7573	V	—
48	—	—	—	—	—	Battery Positive Voltage	48	0.5	RD / VT	340	V	—
49	0.5	YE / WH	1161	I	—	Accelerator Pedal Position Signal 1	49	0.5	YE / WH	1161	V	—

X125 Engine Wiring Harness to Body Wiring Harness (L84/L87) (cont'd)

Pin	Size	Color	Circuit	Terminal Type ID	Option	Function	Pin	Size	Color	Circuit	Terminal Type ID	Option
50	0.5	WH / RD	1164	I	—	Accelerator Pedal Position 5V Reference 1	50	0.5	WH / RD	1164	V	—
51	0.5	BN / RD	1274	I	—	Accelerator Pedal Position 5V Reference 2	51	0.5	BN / RD	1274	V	—
52	—	—	—	—	—	Not Occupied	52	—	—	—	—	—
53	0.5	BU / YE	7574	I	—	A/C Compressor Solenoid Valve Control	53	0.5	BU / YE	7574	V	—
54 - 55	—	—	—	—	—	Not Occupied	54 - 55	—	—	—	—	—

X125 Engine Wiring Harness to Body Wiring Harness (LM2)

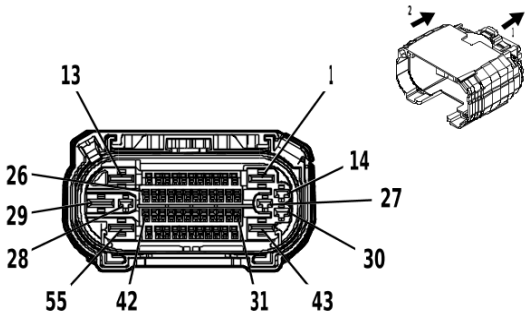

4992329

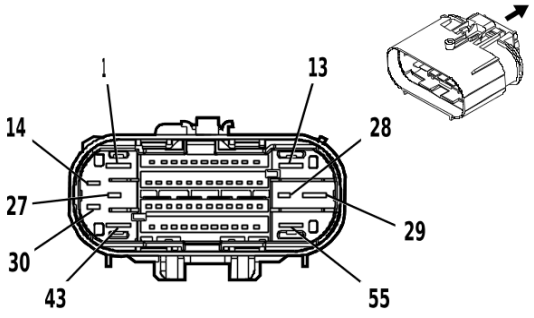

4994369

Connector Part Information

Harness Type: Engine Wiring Harness

OEM Connector: 35434344

Service Connector: 19371184

Description: 55-Way F 1.2 OCS, 2.8, 6.3 CTS Series, Sealed(GY)

Connector Part Information

Harness Type: Body Wiring Harness

OEM Connector: 35205185

Service Connector: 84727363

Description: 55-Way M 1.2 OCS, 2.8, 6.3 CTS Series, Sealed(GY)

Terminal Part Information

Terminal Type ID	Terminated Lead	Diagnostic Test Probe	Terminal Removal Tool
I	19370818	J-35616-12 (BU)	J-38125-215A
II	19371217	J-35616-12 (BU)	J-38125-215A
III	84634921	J-35616-42 (RD)	J-38125-212
IV	84847992	J-35616-32 (OG)	J-38125-36
V	84867140	J-35616-13 (BU)	J-38125-215A

X125 Engine Wiring Harness to Body Wiring Harness (LM2)

Pin	Size	Color	Circuit	Terminal Type ID	Option	Function	Pin	Size	Color	Circuit	Terminal Type ID	Option
1 - 2	—	—	—	—	—	Not Occupied	1 - 2	—	—	—	—	—
3	0.5	BK / BU	1271	I	—	Accelerator Pedal Position Low Reference 1	3	0.5	BK / BU	1271	V	—
4	—	—	—	—	—	Not Occupied	4	—	—	—	—	—
5	0.5	GN / WH	1162	I	—	Accelerator Pedal Position Signal 2	5	0.5	GN / WH	1162	V	—
6	0.35	GN / BN	507	I	—	Wait To Start Indicator Control	6	0.35	GN / BN	507	V	—
7 - 14	—	—	—	—	—	Not Occupied	7 - 14	—	—	—	—	—
15	0.5	YE	4063	I	—	Hood Status A Signal	15	0.5	YE	4063	V	—
16 - 23	—	—	—	—	—	Not Occupied	16 - 23	—	—	—	—	—

X125 Engine Wiring Harness to Body Wiring Harness (LM2) (cont'd)

Pin	Size	Color	Circuit	Terminal Type ID	Option	Function	Pin	Size	Color	Circuit	Terminal Type ID	Option
24	0.5	BU / GY	4054	I	—	Private Serial Data Powertrain CAN Bus [-] Serial Data	24	0.35	BU / GY	4054	V	—
25	0.5	WH	4055	I	—	Private Serial Data Powertrain CAN Bus [+] Serial Data	25	0.35	WH	4055	V	—
26 - 30	—	—	—	—	—	Not Occupied	26 - 30	—	—	—	—	—
31	0.5	WH / BU	6311	I	—	Cruise/ETC/ TCC Brake Signal	31	0.5	WH / BU	6311	V	—
32 - 34	—	—	—	—	—	Not Occupied	32 - 34	—	—	—	—	—
35	0.5	BK / GY	626	I	—	Engine Control Vehicle Sensors Low Reference 1	35	0.5	BK / YE	5382	V	—
36	0.5	WH / GN	5380	I	—	Brake Position Sensor Signal	36	0.5	WH / GN	5380	V	—
37	0.5	WH / RD	480	I	—	Engine Control Vehicle Sensors 5 Volt Reference 1	37	0.5	WH / RD	5381	V	—
38 - 39	—	—	—	—	—	Not Occupied	38 - 39	—	—	—	—	—
40	0.5	BK / VT	1272	I	—	Accelerator Pedal Position Low Reference 2	40	0.5	BK / VT	1272	V	—
41	—	—	—	—	—	Not Occupied	41	—	—	—	—	—
42	0.5	YE / BK	625	I	—	Starter Enable Relay Control	42	0.35	YE / BK	625	V	—
43	4	BK / WH	6151	III	—	Engine Control Module Ground	43	4	BK / WH	6151	IV	—
44	1	RD / GN	1840	II	—	Battery Positive Voltage	44	0.75	RD / GN	1840	V	—
45 - 46	—	—	—	—	—	Not Occupied	45 - 46	—	—	—	—	—
47	0.5	BU / BN	7573	I	—	A/C Compressor Solenoid Valve Control	47	0.5	BU / BN	7573	V	—
48	—	—	—	—	—	Not Occupied	48	—	—	—	—	—
49	0.5	YE / WH	1161	I	—	Accelerator Pedal Position Signal 1	49	0.5	YE / WH	1161	V	—

X125 Engine Wiring Harness to Body Wiring Harness (LM2) (cont'd)

Pin	Size	Color	Circuit	Terminal Type ID	Option	Function	Pin	Size	Color	Circuit	Terminal Type ID	Option
50	0.5	WH / RD	1164	I	—	Accelerator Pedal Position 5V Reference 1	50	0.5	WH / RD	1164	V	—
51	0.5	BN / RD	1274	I	—	Accelerator Pedal Position 5V Reference 2	51	0.5	BN / RD	1274	V	—
52	—	—	—	—	—	Not Occupied	52	—	—	—	—	—
53	0.5	BU / YE	7574	I	—	A/C Compressor Solenoid Valve Control	53	0.5	BU / YE	7574	V	—
54 - 55	—	—	—	—	—	Not Occupied	54 - 55	—	—	—	—	—

X128C Engine Wiring Harness to Camshaft Position Sensor Jumper Wiring Harness (L84/L87)

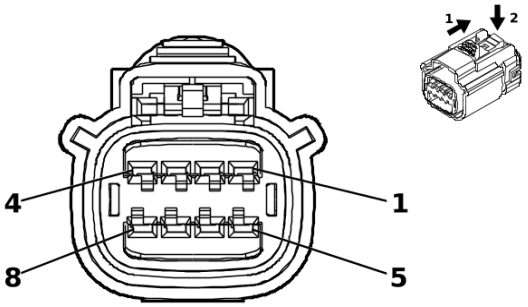

5253496

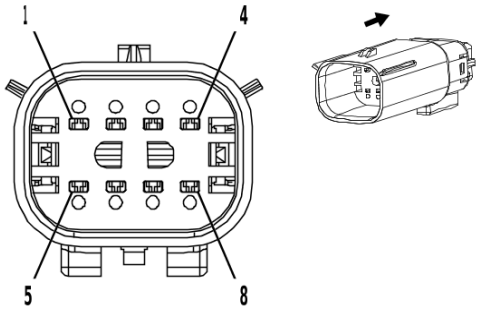

2667653

Connector Part Information

Harness Type: Engine Wiring Harness
OEM Connector: 15514667
Service Connector: 84766296
Description: 8-Way F 1.5 OCS Series, Sealed(BK)

Connector Part Information

Harness Type: Camshaft Position Sensor Jumper Wiring Harness
OEM Connector: Not Available
Service Connector: Service by Harness - See Part Catalog
Description: 8-Way M (BK)

Terminal Part Information

Terminal Type ID	Terminated Lead	Diagnostic Test Probe	Terminal Removal Tool
I	Not required	J-35616-14 (GN)	No Tool Required
II	Not required	J-35616-2A (GY)	No Tool Required
III	Not required	No Tool Required	No Tool Required

X128C Engine Wiring Harness to Camshaft Position Sensor Jumper Wiring Harness (L84/L87)

Pin	Size	Color	Circuit	Terminal Type ID	Option	Function	Pin	Size	Color	Circuit	Terminal Type ID	Option
1	0.5	GY / BU	5300	I	—	Intake Camshaft Position Sensor 1 Voltage Reference	1	0.5	GY / BU	5300	III	—
2	0.5	BK / GN	5301	I	—	Intake Camshaft Position Sensor Low Reference 1	2	0.5	BK / GN	5301	III	—
3	0.5	YE / VT	5275	I	—	Intake Camshaft Position Sensor 1	3	0.5	YE / VT	5275	III	—
4	0.5	BU	179	I	—	Engine Oil Pump Control	4	0.5	BU	179	III	—
5	0.5	VT / BN	5284	I	—	Intake Camshaft Position Actuator Solenoid Valve 1	5	0.5	VT / BN	5284	III	—
6	0.5	BK / BN	6753	I	—	Camshaft Position Actuator Sole-	6	0.5	BK / BN	6753	III	—

X128C Engine Wiring Harness to Camshaft Position Sensor Jumper Wiring Harness (L84/ L87) (cont'd)

Pin	Size	Color	Circuit	Terminal Type ID	Option	Function	Pin	Size	Color	Circuit	Terminal Type ID	Option
						noid Valve W Low Reference						
7	0.75	VT / BU	5293	II	—	Powertrain Main Relay Fused Supply Voltage 4	7	0.75	VT / BU	5293	III	—
8	—	—	—	—	—	Not Occupied	8	—	—	—	—	—

X129 Camshaft Position Sensor Jumper Wiring Harness to Valve Rocker Arm Oil Control Valve Extension Harness (L87)

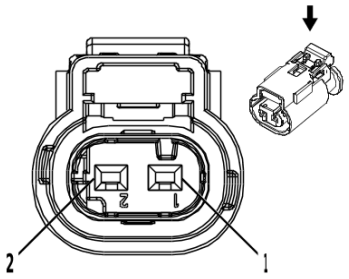

2717066

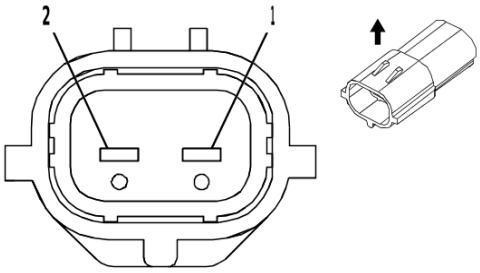

2684367

Connector Part Information

Harness Type: Camshaft Position Sensor Jumper Wiring Harness

OEM Connector: 13503566

Service Connector: Service by Harness - See Part Catalog

Description: 2-Way F 1.2 Multilock Series, Sealed(BK)

Connector Part Information

Harness Type: Valve Rocker Arm Oil Control Valve Extension Harness

OEM Connector: 12698857

Service Connector: Service by Harness - See Part Catalog

Description: 2-Way M (BK)

Terminal Part Information

Terminal Type ID	Terminated Lead	Diagnostic Test Probe	Terminal Removal Tool
I	Not Available	No Tool Required	Not Available
II	Not Available	No Tool Required	Not Available

X129 Camshaft Position Sensor Jumper Wiring Harness to Valve Rocker Arm Oil Control Valve Extension Harness (L87)

Pin	Size	Color	Circuit	Terminal Type ID	Option	Function	Pin	Size	Color	Circuit	Terminal Type ID	Option
1	0.5	VT / BU	5293	I	—	Powertrain Main Relay Fused Supply Voltage 4	1	0.5	VT / BU	5293	II	—
2	0.5	BU	179	I	—	Engine Oil Pump Control	2	0.5	BU	179	II	—

X129 Engine Wiring Harness to Oil Pump Flow Control Solenoid Valve Harness (LM2)

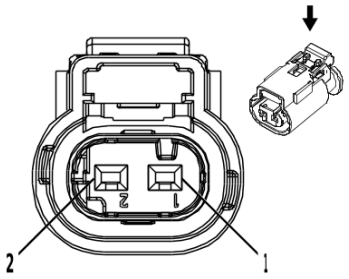

2717066

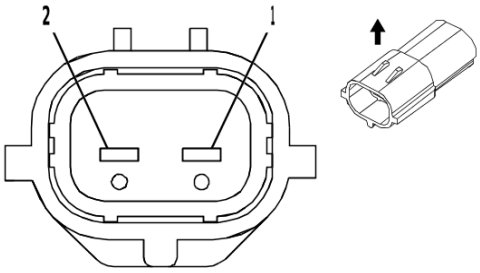

2684367

Connector Part Information

Harness Type: Engine Wiring Harness
OEM Connector: 10010337
Service Connector: 13587326
Description: 2-Way F 1.2 Multilock Series, Sealed(BK)

Connector Part Information

Harness Type: Oil Pump Flow Control Solenoid Valve Harness
OEM Connector: Not Available
Service Connector: Service by Harness - See Part Catalog
Description: 2-Way M (BK)

Terminal Part Information

Terminal Type ID	Terminated Lead	Diagnostic Test Probe	Terminal Removal Tool
I	Not required	J-35616-16 (LT GN)	No Tool Required
II	Not required	No Tool Required	No Tool Required

X129 Engine Wiring Harness to Oil Pump Flow Control Solenoid Valve Harness (LM2)

Pin	Size	Color	Circuit	Terminal Type ID	Option	Function	Pin	Size	Color	Circuit	Terminal Type ID	Option
1	0.5	YE / BN	106	I	—	Oil Pump Motor Control	1	0.5	YE / BN	106	II	—
2	0.5	BU	179	I	—	Engine Oil Pump Control	2	0.5	BU	179	II	—

X160 Engine Wiring Harness to Fuel Injector Wiring Harness (L84/L87)

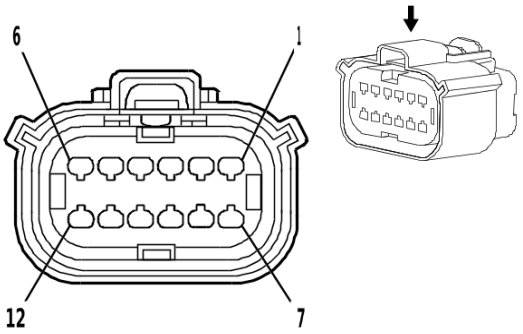

1825165

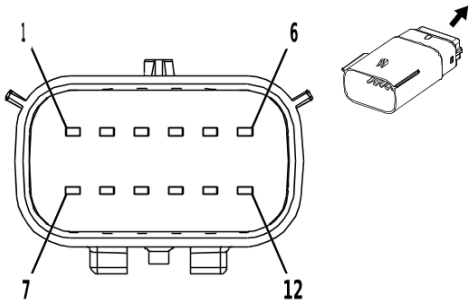

2687960

Connector Part Information

Harness Type: Engine Wiring Harness
OEM Connector: 13595088
Service Connector: 19352907
Description: 12-Way F 1.5 Series, Sealed(BK)

Connector Part Information

Harness Type: Fuel Injector Wiring Harness
OEM Connector: Not Available
Service Connector: Service by Harness - See Part Catalog
Description: 12-Way M (BK)

Terminal Part Information

Terminal Type ID	Terminated Lead	Diagnostic Test Probe	Terminal Removal Tool
I	19368973	J-35616-2A (GY)	J-38125-217
II	Not required	No Tool Required	No Tool Required

X160 Engine Wiring Harness to Fuel Injector Wiring Harness (L84/L87)

Pin	Size	Color	Circuit	Terminal Type ID	Option	Function	Pin	Size	Color	Circuit	Terminal Type ID	Option
1	0.75	BN / WH	4901	I	—	Direct Fuel Injector High Voltage Supply Cylinder 1	1	0.75	BN / WH	4901	II	—
2	0.75	GN / GY	4903	I	—	Direct Fuel Injector High Voltage Supply Cylinder 3	2	0.75	GN / GY	4903	II	—
3	0.75	GN / WH	4905	I	—	Direct Fuel Injector High Voltage Supply Cylinder 5	3	0.75	GN / WH	4905	II	—
4	0.75	WH / YE	4907	I	—	Direct Fuel Injector High Voltage Supply Cylinder 7	4	0.75	WH / YE	4907	II	—
5	0.75	BN	4801	I	—	Direct Fuel Injector High Voltage Control Cylinder 1	5	0.75	BN	4801	II	—
6	—	—	—	—	—	Not Occupied	6	—	—	—	—	—

X160 Engine Wiring Harness to Fuel Injector Wiring Harness (L84/L87) (cont'd)

Pin	Size	Color	Circuit	Terminal Type ID	Option	Function	Pin	Size	Color	Circuit	Terminal Type ID	Option
7	0.75	GN	4803	I	—	Direct Fuel Injector High Voltage Control Cylinder 3	7	0.75	GN	4803	II	—
8	0.75	WH / GN	4805	I	—	Direct Fuel Injector High Voltage Control Cylinder 5	8	0.75	WH / GN	4805	II	—
9	0.75	YE / GY	4807	I	—	Direct Fuel Injector High Voltage Control Cylinder 7	9	0.75	YE / GY	4807	II	—
10	0.5	WH / RD	480	I	—	Engine Control Vehicle Sensors 5 Volt Reference 1	10	0.5	WH / RD	480	II	—
11	0.5	BU / WH	2918	I	—	Fuel Rail Pressure Sensor Signal	11	0.5	BU / WH	2918	II	—
12	0.5	BK / YE	548	I	—	Engine Control Sensors Low Reference 1	12	0.5	BK / YE	548	II	—

X160 Engine Wiring Harness to Fuel Injector Wiring Harness (LM2)

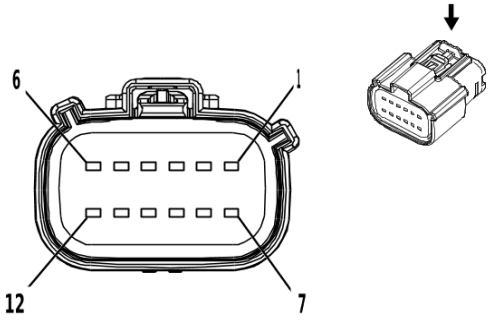

2871866

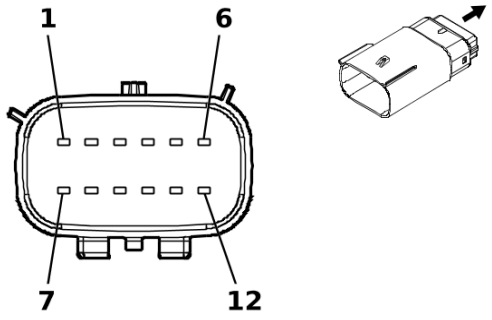

5187933

Connector Part Information

Harness Type: Engine Wiring Harness
OEM Connector: 33221171
Service Connector: 19333239
Description: 12-Way F 1.5 MX Series, Sealed(D-GY)

Connector Part Information

Harness Type: Fuel Injector Wiring Harness
OEM Connector: 33482-6261
Service Connector: Service by Harness - See Part Catalog
Description: 12-Way M 1.5 MX Series, Sealed(GY)

Terminal Part Information

Terminal Type ID	Terminated Lead	Diagnostic Test Probe	Terminal Removal Tool
I	85528055	J-35616-14 (GN)	J-38125-217
II	Not required	J-35616-3 (GY)	No Tool Required

X160 Engine Wiring Harness to Fuel Injector Wiring Harness (LM2)

Pin	Size	Color	Circuit	Terminal Type ID	Option	Function	Pin	Size	Color	Circuit	Terminal Type ID	Option
1	1.5	BN / WH	4901	I	—	Direct Fuel Injector High Voltage Supply Cylinder 1	1	1.5	BN / WH	4901	II	—
2	1.5	BN	4801	I	—	Direct Fuel Injector High Voltage Control Cylinder 1	2	1.5	BN	4801	II	—
3	1.5	BU / GY	4902	I	—	Direct Fuel Injector High Voltage Supply Cylinder 2	3	1.5	BU / GY	4902	II	—
4	1.5	BU	4802	I	—	Direct Fuel Injector High Voltage Control Cylinder 2	4	1.5	BU	4802	II	—
5	1.5	GN / GY	4903	I	—	Direct Fuel Injector High Voltage Supply Cylinder 3	5	1.5	GN / GY	4903	II	—
6	1.5	GN	4803	I	—	Direct Fuel Injector High Voltage Control Cylinder 3	6	1.5	GN	4803	II	—

X160 Engine Wiring Harness to Fuel Injector Wiring Harness (LM2) (cont'd)

Pin	Size	Color	Circuit	Terminal Type ID	Option	Function	Pin	Size	Color	Circuit	Terminal Type ID	Option
7	1.5	BU / WH	4904	I	—	Direct Fuel Injector High Voltage Supply Cylinder 4	7	1.5	BU / WH	4904	II	—
8	1.5	GY / BU	4804	I	—	Direct Fuel Injector High Voltage Control Cylinder 4	8	1.5	GY / BU	4804	II	—
9	1.5	GN / WH	4905	I	—	Direct Fuel Injector High Voltage Supply Cylinder 5	9	1.5	GN / WH	4905	II	—
10	1.5	WH / GN	4805	I	—	Direct Fuel Injector High Voltage Control Cylinder 5	10	1.5	WH / GN	4805	II	—
11	1.5	VT / GY	4906	I	—	Direct Fuel Injector High Voltage Supply Cylinder 6	11	1.5	VT / GY	4906	II	—
12	1.5	VT / GN	4806	I	—	Direct Fuel Injector High Voltage Control Cylinder 6	12	1.5	VT / GN	4806	II	—

X161 Engine Wiring Harness to Fuel Injector Wiring Harness (L84/L87)

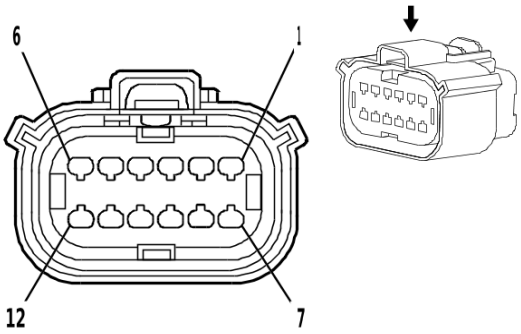

1825165

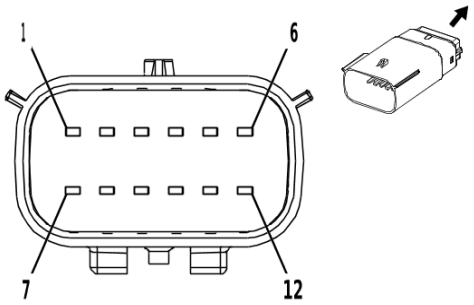

2687960

Connector Part Information

Harness Type: Engine Wiring Harness
OEM Connector: 33472-1226
Service Connector: 19352907
Description: 12-Way F 1.5 MX Series, Sealed(BK)

Connector Part Information

Harness Type: Fuel Injector Wiring Harness
OEM Connector: Not Available
Service Connector: Service by Harness - See Part Catalog
Description: 12-Way M (BK)

Terminal Part Information

Terminal Type ID	Terminated Lead	Diagnostic Test Probe	Terminal Removal Tool
I	19368973	J-35616-2A (GY)	J-38125-217
II	Not required	No Tool Required	No Tool Required

X161 Engine Wiring Harness to Fuel Injector Wiring Harness (L84/L87)

Pin	Size	Color	Circuit	Terminal Type ID	Option	Function	Pin	Size	Color	Circuit	Terminal Type ID	Option
1	0.75	BU / GY	4902	I	—	Direct Fuel Injector High Voltage Supply Cylinder 2	1	0.75	BU / GY	4902	II	—
2	0.75	BU / WH	4904	I	—	Direct Fuel Injector High Voltage Supply Cylinder 4	2	0.75	BU / WH	4904	II	—
3	0.75	VT / GY	4906	I	—	Direct Fuel Injector High Voltage Supply Cylinder 6	3	0.75	VT / GY	4906	II	—
4	0.75	GY / WH	4908	I	—	Direct Fuel Injector High Voltage Supply Cylinder 8	4	0.75	GY / WH	4908	II	—
5	0.75	BU	4802	I	—	Direct Fuel Injector High Voltage Control Cylinder 2	5	0.75	BU	4802	II	—
6 - 7	—	—	—	—	—	Not Occupied	6 - 7	—	—	—	—	—

X161 Engine Wiring Harness to Fuel Injector Wiring Harness (L84/L87) (cont'd)

Pin	Size	Color	Circuit	Terminal Type ID	Option	Function	Pin	Size	Color	Circuit	Terminal Type ID	Option
8	0.75	GY / BU	4804	I	—	Direct Fuel Injector High Voltage Control Cylinder 4	8	0.75	GY / BU	4804	II	—
9	0.75	VT / GN	4806	I	—	Direct Fuel Injector High Voltage Control Cylinder 6	9	0.75	VT / GN	4806	II	—
10	0.75	GY	4808	I	—	Direct Fuel Injector High Voltage Control Cylinder 8	10	0.75	GY	4808	II	—
11	0.75	VT / BK	7300	I	—	High Pressure Fuel Pump Low Control	11	0.75	VT / BK	7300	II	—
12	0.75	YE	7301	I	—	High Pressure Fuel Pump High Control	12	0.75	YE	7301	II	—

X163 Engine Wiring Harness to Diesel Glow Plug Wiring Harness (LM2)

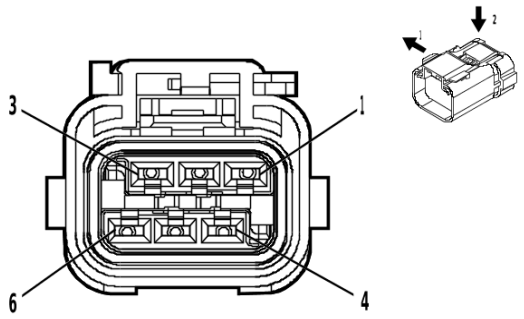

4997615

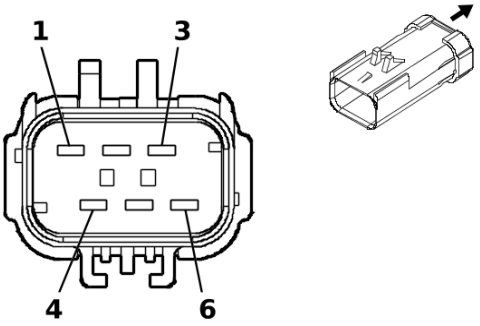

5187846

Connector Part Information

Harness Type: Engine Wiring Harness
OEM Connector: 15419838
Service Connector: 19371212
Description: 6-Way F 2.8 APEX Series, Sealed(BK)

Connector Part Information

Harness Type: Diesel Glow Plug Wiring Harness
OEM Connector: 54200612
Service Connector: Service by Harness - See Part Catalog
Description: 6-Way M 2.8 APEX Series, Sealed(BK)

Terminal Part Information

Terminal Type ID	Terminated Lead	Diagnostic Test Probe	Terminal Removal Tool
I	Not required	J-35616-4A (PU)	No Tool Required
II	Not required	J-35616-5 (PU)	No Tool Required

X163 Engine Wiring Harness to Diesel Glow Plug Wiring Harness (LM2)

Pin	Size	Color	Circuit	Terminal Type ID	Option	Function	Pin	Size	Color	Circuit	Terminal Type ID	Option
1	2.5	GY / BU	1581	I	—	Glow Plug 1 Control	1	2.5	GY / RD	1581	II	—
2	2.5	GY / BN	1582	I	—	Glow Plug 2 Control	2	2.5	GY / BK	1582	II	—
3	2.5	GY / GN	1583	I	—	Glow Plug 3 Control	3	2.5	GY / GN	1583	II	—
4	2.5	GY / YE	1584	I	—	Glow Plug 4 Control	4	2.5	GY / YE	1584	II	—
5	2.5	GY / WH	1585	I	—	Glow Plug 5 Control	5	2.5	GY / WH	1585	II	—
6	2.5	GY / VT	1586	I	—	Glow Plug 6 Control	6	2.5	GY	1586	II	—

X176 Automatic Transmission Wiring Harness to Automatic Transmission Wiring Harness (MQC)

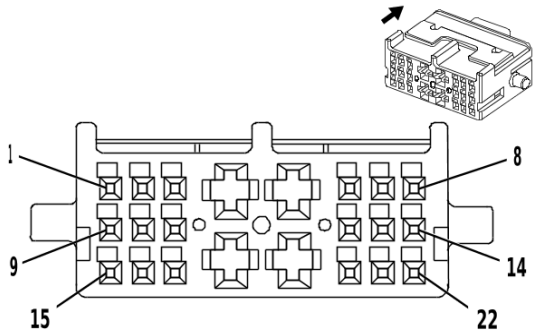

3977748

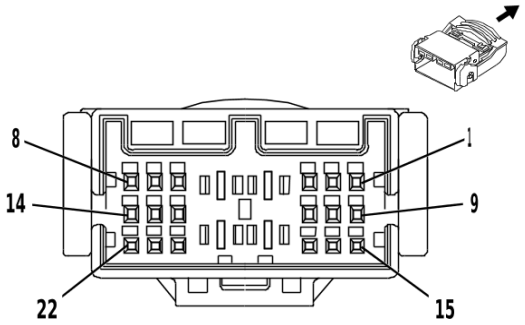

3977770

Connector Part Information

Harness Type: Automatic Transmission Wiring Harness
OEM Connector: 1897543-1
Service Connector: Service by Harness - See Part Catalog
Description: 22-Way F 0.64 Micro-Quadlock, 2.8 Micro-Power Series(NA)

Connector Part Information

Harness Type: Automatic Transmission Wiring Harness
OEM Connector: 1897540-1
Service Connector: Service by Harness - See Part Catalog
Description: 22-Way M 0.64 Micro-Quadlock, 2.8 Micro-Power Series(NA)

Terminal Part Information

Terminal Type ID	Terminated Lead	Diagnostic Test Probe	Terminal Removal Tool
I	Not required	J-35616-64B (L-BU)	No Tool Required
II	Not required	J-35616-14 (GN)	No Tool Required
III	Not required	J-35616-2A (GY)	No Tool Required
IV	Not required	J-35616-65B (LT BU)	No Tool Required

X176 Automatic Transmission Wiring Harness to Automatic Transmission Wiring Harness (MQC)

Pin	Size	Color	Circuit	Terminal Type ID	Option	Function	Pin	Size	Color	Circuit	Terminal Type ID	Option
1	0.5	VT	7819	I	—	Default Disable Solenoid Control	1	0.5	VT	7819	IV	—
2	0.5	GN / OG	1530	I	—	Transmission Line Pressure Control Solenoid Valve Control	2	0.5	GN / OG	1530	IV	—
3	0.5	GY / BN	422	I	—	Torque Converter Clutch Solenoid Valve Control	3	0.5	GY / BN	422	IV	—
4	0.5	BN	6387	I	—	Transmission High Side Driver 1 Control	4	0.5	BN	6387	IV	—
5	—	—	—	—	—	Not Occupied	5	—	—	—	—	—
6	0.5	YE	6317	I	—	Electronic Transmission Range Select	6	0.5	YE	6317	IV	—

X176 Automatic Transmission Wiring Harness to Automatic Transmission Wiring Harness (MQC) (cont'd)

Pin	Size	Color	Circuit	Terminal Type ID	Option	Function	Pin	Size	Color	Circuit	Terminal Type ID	Option
						Out of Park Switch Signal						
7	0.5	YE / GY	6319	I	—	Electronic Transmission Range Select Out of Park Switch 2 Signal	7	0.5	YE / GY	6319	IV	—
8	0.5	GN	4170	I	—	Transmission Output Shaft Speed Sensor Circuit 9V Reference	8	0.5	GN	4170	IV	—
9	0.5	OG	2159	I	—	Park Inhibit Solenoid Assembly Control	9	0.5	OG	2159	IV	—
10	0.5	BK / GY	3706	I	—	Electronic Transmission Range Select Switch Analog Signal 1	10	0.5	BK / GY	3706	IV	—
11	0.5	BU	4171	I	—	Transmission Input Shaft Speed Sensor Circuit 9V Reference	11	0.5	BU	4171	IV	—
12	—	—	—	—	—	Not Occupied	12	—	—	—	—	—
13	0.5	BU / BN	586	I	—	Transmission Fluid Temperature Sensor Low Reference	13	0.5	BU / BN	586	IV	—
14	0.5	BN / YE	585	I	—	Transmission Fluid Temperature Sensor Signal	14	0.5	BN / YE	585	IV	—
15	0.5	BU / GN	6404	I	—	Clutch Solenoid Valve E Control	15	0.5	BU / GN	6404	IV	—
16	0.5	GN / BN	6403	I	—	Clutch Solenoid Valve D Control	16	0.5	GN / BN	6403	II	—
17	0.5	GY	6402	I	—	Clutch Solenoid Valve C Control	17	0.5	GY	6402	IV	—
18	0.5	WH	6388	I	—	Transmission High Side Driver 2 Control	18	0.5	WH	6388	IV	—
19	—	—	—	—	—	Not Occupied	19	—	—	—	—	—
20	0.5	BN / WH	4509	I	—	Transmission Clutch F Control	20	0.5	BN / WH	4509	III	—

X176 Automatic Transmission Wiring Harness to Automatic Transmission Wiring Harness (MQC) (cont'd)

Pin	Size	Color	Circuit	Terminal Type ID	Option	Function	Pin	Size	Color	Circuit	Terminal Type ID	Option
21	0.5	YE / VT	4507	I	—	Transmission Clutch H Control	21	0.5	YE / VT	4507	IV	—
22	0.5	BU / GY	4508	I	—	Transmission Clutch G Control	22	0.5	BU / GY	4508	IV	—

X177 Automatic Transmission Wiring Harness to Automatic Transmission Wiring Harness (MQC)

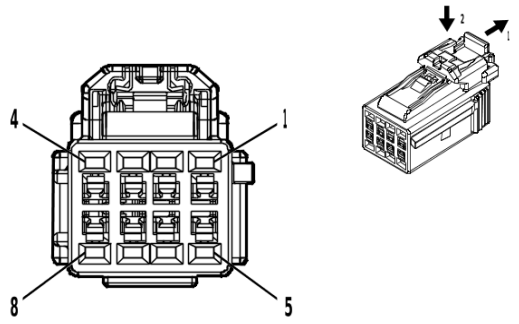

5086387

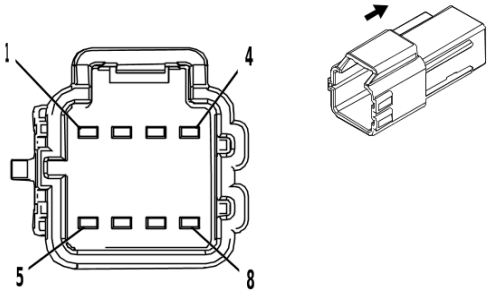

4331672

Connector Part Information

Harness Type: Automatic Transmission Wiring Harness
OEM Connector: 6098-8632
Service Connector: Service by Harness - See Part Catalog
Description: 8-Way F 1.2 Series

Connector Part Information

Harness Type: Automatic Transmission Wiring Harness
OEM Connector: 6098-8630
Service Connector: Service by Harness - See Part Catalog
Description: 8-Way M 1.2 Series

Terminal Part Information

Terminal Type ID	Terminated Lead	Diagnostic Test Probe	Terminal Removal Tool
I	Not required	J-35616-16 (LT GN)	No Tool Required
II	Not required	J-35616-16 (LT GN)	No Tool Required

X177 Automatic Transmission Wiring Harness to Automatic Transmission Wiring Harness (MQC)

Pin	Size	Color	Circuit	Terminal Type ID	Option	Function	Pin	Size	Color	Circuit	Terminal Type ID	Option
1	0.5	GY / BU	6387	I	—	Transmission High Side Driver 1 Control	1	0.5	BN	6387	II	—
2	0.5	YE / GN	1530	I	—	Transmission Line Pressure Control Solenoid Valve Control	2	0.5	GN / OG	1530	II	—
3	0.5	YE / GN	422	I	—	Torque Converter Clutch Solenoid Valve Control	3	0.5	GY / BN	422	II	—
4	0.5	YE / BU	7819	I	—	Default Disable Solenoid Control	4	0.5	VT	7819	II	—
5	0.5	GN / YE	3706	I	—	Electronic Transmission Range Select Switch Analog Signal 1	5	0.5	BK / GY	3706	II	—
6	0.5	GN / VT	4171	I	—	Transmission Input Shaft Speed Sensor Circuit 9V Reference	6	0.5	BU	4171	II	—

X177 Automatic Transmission Wiring Harness to Automatic Transmission Wiring Harness (MQC) (cont'd)

Pin	Size	Color	Circuit	Terminal Type ID	Option	Function	Pin	Size	Color	Circuit	Terminal Type ID	Option
7	0.5	WH	6388	I	—	Transmission High Side Driver 2 Control	7	0.5	WH	6388	II	—
8	—	—	—	—	—	Not Occupied	8	—	—	—	—	—

X210 Instrument Panel Wiring Harness to Body Wiring Harness

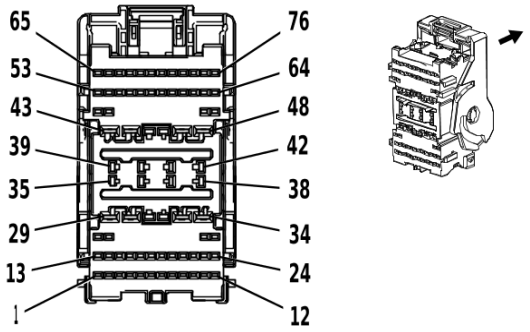

3960183

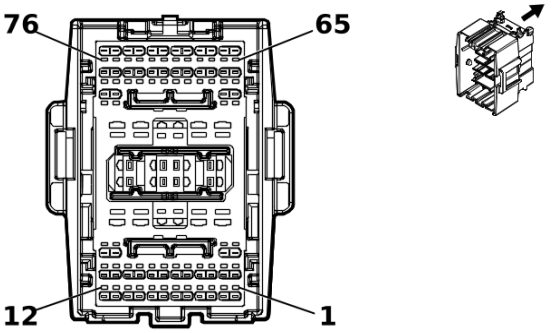

5277492

Connector Part Information

Harness Type: Instrument Panel Wiring Harness
OEM Connector: 6098-8758
Service Connector: 84581287
Description: 76-Way F 1.2, 1.5, 2.8 YESC Series(BK)

Connector Part Information

Harness Type: Body Wiring Harness
OEM Connector: 6098-8817
Service Connector: 13526160
Description: 76-Way M 1.2 MCON-CB, 1.5, 2.8 YESC Series(BK)

Terminal Part Information

Terminal Type ID	Terminated Lead	Diagnostic Test Probe	Terminal Removal Tool
I	13575708	J-35616-2A (GY)	J-38125-11A
II	13587516	J-35616-4A (PU)	J-38125-11A
III	84962854	J-35616-12 (BU)	J-38125-215A
IV	84616651	J-35616-13 (BU)	J-38125-215A
V	84888592	J-35616-5 (PU)	J-38125-11A
VI	85119177	J-35616-3 (GY)	J-38125-553

X210 Instrument Panel Wiring Harness to Body Wiring Harness

Pin	Size	Color	Circuit	Terminal Type ID	Option	Function	Pin	Size	Color	Circuit	Terminal Type ID	Option
1 - 8	—	—	—	—	—	Not Occupied	1 - 8	—	—	—	—	—
9	0.75 0.75	GN / BU WH	1875 46	III III	UQA UQF	Right Front Speaker [+] Control 2 Right Rear Speaker [+] Control	9	0.75 0.75	GN / BU WH	1875 46	IV IV	UQA UQF
10	0.75 0.75	BN / BK BU / BK	1975 115	III III	UQA UQF	Right Front Speaker [-] Control 2 Right Rear Speaker [-] Control	10	0.75 0.75	BN / BK BU / BK	1975 115	IV IV	UQA UQF
11	0.5	GN / BN	3005	III	—	Active Noise Cancellation Microphone 1 Signal	11	0.5	GN / BN	3005	IV	—

X210 Instrument Panel Wiring Harness to Body Wiring Harness (cont'd)

Pin	Size	Color	Circuit	Terminal Type ID	Option	Function	Pin	Size	Color	Circuit	Terminal Type ID	Option
12	0.5	GN / BK	3008	III	—	Active Noise Cancellation Microphone 1 Feedback Signal	12	0.5	GN / BK	3008	IV	—
13	—	—	—	—	—	Not Occupied	13	—	—	—	—	—
14	0.5 0.35	WH WH	4978 4978	III III	(G96-TR7-UGN) TR7	AUTOSAR CAN Bus [-] 2 Serial Data AUTOSAR CAN Bus [-] 2 Serial Data	14	0.35	WH	4978	IV	—
15	0.5	YE / BK	117	III	—	Right Front Speaker [-] Control 1 Right Front Speaker [-] Control 1	15	0.75 0.5	YE / BK YE / BK	117 117	IV IV	UQA/ UQS ((IOR/ IOK) + UQF)
16	0.5	YE	200	III	—	Right Front Speaker 1 [+] Control Right Front Speaker 1 [+] Control	16	0.75 0.5	YE YE	200 200	IV IV	UQA/ UQS ((IOR/ IOK) + UQF)
17	0.35	YE	6812	III	—	Out of Park Signal	17	0.5	YE	6812	IV	—
18 - 19	—	—	—	—	—	Not Occupied	18 - 19	—	—	—	—	—
20	0.75	GN / BK	116	III	—	Left Rear Speaker [-] Control	20	0.75	GN / BK	116	IV	—
21	0.75	GN	199	III	—	Left Rear Speaker [+] Control	21	0.75	GN	199	IV	—
22	0.35	WH	4986	III	—	AUTOSAR CAN Bus [-] 1 Serial Data	22	0.35	WH	4986	IV	—
23	0.35	BU	4987	III	—	AUTOSAR CAN Bus [+] 1 Serial Data	23	0.35	BU	4987	IV	—
24	0.35	GY / BU	4054	III	—	Private Serial Data Powertrain CAN Bus [-] Serial Data	24	0.35	BU / GY	4054	IV	—
25	0.35	GY	4055	III	—	Private Serial Data Powertrain CAN Bus [+] Serial Data	25	0.35	WH	4055	IV	—
26	0.5 0.35	BU / YE BU / YE	4979 4979	III III	(G96-TR7-UGN) TR7	AUTOSAR CAN Bus [+] 2 Serial Data AUTOSAR CAN Bus [+] 2 Serial Data	26	0.35	BU / YE	4979	IV	—
27	0.35	GN / WH	2854	III	—	Body Control Module LIN Bus 8	27	0.35	GN / WH	2854	IV	—

X210 Instrument Panel Wiring Harness to Body Wiring Harness (cont'd)

Pin	Size	Color	Circuit	Terminal Type ID	Option	Function	Pin	Size	Color	Circuit	Terminal Type ID	Option
28 - 39	—	—	—	—	—	Not Occupied	28 - 39	—	—	—	—	—
40	0.35	WH / GY	4104	I	—	AUTOSAR CAN Bus [-] 8 Serial Data	40	0.35	WH / GY	4104	VI	—
41 - 43	—	—	—	—	—	Not Occupied	41 - 43	—	—	—	—	—
44	0.35	GN / YE	7066	II	—	Entertainment Remote Enable Signal	44	0.35	GN / YE	7066	V	—
45 - 46	—	—	—	—	—	Not Occupied	45 - 46	—	—	—	—	—
47	0.35	BU / GY	4105	II	—	AUTOSAR CAN Bus [+] 8 Serial Data	47	0.35	BU / GY	4105	V	—
48 - 50	—	—	—	—	—	Not Occupied	48 - 50	—	—	—	—	—
51	0.35	BU / VT	807	III	—	Ignition Off/ Accessory Ignition Voltage	51	0.35	BU / VT	807	IV	—
52 - 59	—	—	—	—	—	Not Occupied	52 - 59	—	—	—	—	—
60	0.35	YE / WH	1690	III	—	Mirror Dimming Signal	60	0.35	YE / WH	1690	IV	—
61 - 62	—	—	—	—	—	Not Occupied	61 - 62	—	—	—	—	—
63	0.35	BK / YE	1691	III	—	Automatic Day/Night Mirror Low Reference	63	0.35	BK / YE	1691	IV	—
64 - 70	—	—	—	—	—	Not Occupied	64 - 70	—	—	—	—	—
71	0.35	VT / GN	4320	III	—	Powertrain Sensor Bus Enable	71	0.75	VT / GN	4320	IV	—
72 - 75	—	—	—	—	—	Not Occupied	72 - 75	—	—	—	—	—
76	0.35	GY / GN	4083	III	—	Retained Accessory Power Relay 2 Coil Control	76	0.35	GY / GN	4083	IV	—

X211 Instrument Panel Wiring Harness to Body Wiring Harness

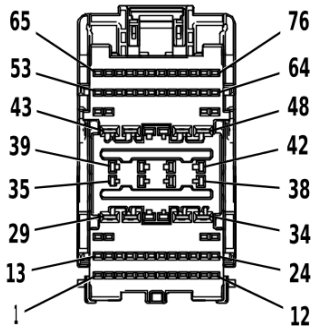

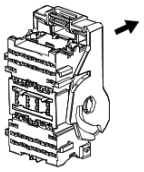

3960183

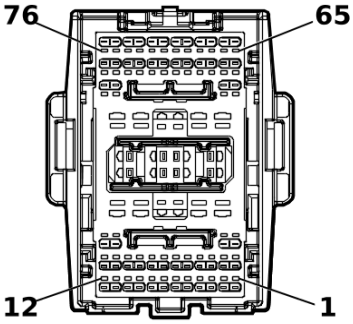

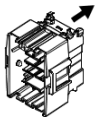

5277492

Connector Part Information

Harness Type: Instrument Panel Wiring Harness
OEM Connector: 6098-8758
Service Connector: 84581287
Description: 76-Way F 1.2, 1.5, 2.8 YESC Series(BK)

Connector Part Information

Harness Type: Body Wiring Harness
OEM Connector: 6098-8817
Service Connector: 13526160
Description: 76-Way M 1.2 MCON-CB, 1.5, 2.8 YESC Series(BK)

Terminal Part Information

Terminal Type ID	Terminated Lead	Diagnostic Test Probe	Terminal Removal Tool
I	13575708	J-35616-2A (GY)	J-38125-11A
II	13587516	J-35616-4A (PU)	J-38125-11A
III	84962854	J-35616-12 (BU)	J-38125-215A
IV	84616651	J-35616-13 (BU)	J-38125-215A
V	84888592	J-35616-5 (PU)	J-38125-11A
VI	85119177	J-35616-3 (GY)	J-38125-553

X211 Instrument Panel Wiring Harness to Body Wiring Harness

Pin	Size	Color	Circuit	Terminal Type ID	Option	Function	Pin	Size	Color	Circuit	Terminal Type ID	Option
1	0.35	BN / BK	4996	III	—	Immobilizer Antenna Signal [+]	1	0.5	BN / BK	4996	IV	—
2	0.35	WH / GY	4997	III	—	Immobilizer Antenna Low Signal	2	0.5	WH / GY	4997	IV	—
3	—	—	—	—	—	Not Occupied	3	—	—	—	—	—
4	0.5	BN / WH	3895	III	—	Roof Rail Air Bag Disable Switch Low Reference	4	0.5	BN / WH	3895	IV	—
5	0.35	WH / GY	4104	III	—	AUTOSAR CAN Bus [-] 8 Serial Data	5	0.5	WH / GY	4104	IV	—
6	0.35	BU / GY	4105	III	—	AUTOSAR CAN Bus [+] 8 Serial Data	6	0.5	BU / GY	4105	IV	—
7	0.35	GY	1715	III	—	Windshield Wiper Switch High Signal	7	0.35	GY	1715	IV	—

X211 Instrument Panel Wiring Harness to Body Wiring Harness (cont'd)

Pin	Size	Color	Circuit	Terminal Type ID	Option	Function	Pin	Size	Color	Circuit	Terminal Type ID	Option
8 - 13	—	—	—	—	—	Not Occupied	8 - 13	—	—	—	—	—
14	0.5	GN / YE	2731	III	—	Electronic Brake Control Module LIN Bus 1	14	0.5	GN / YE	2731	IV	—
15	0.35	GN / VT	5199	III	—	Run/Crank Relay Coil Control	15	0.5	GN / VT	5199	IV	—
16	0.5	VT / WH	639	III	—	Run/Crank Ignition 1 Voltage	16	0.5	VT / WH	639	IV	—
17	0.5	BU / WH	3119	III	—	Roof Rail Air Bag Disable Switch Signal	17	0.5	BU / WH	3119	IV	—
18	0.35	GN / BN	2853	III	—	Body Control Module LIN Bus 7	18	0.35	GN / BN	2853	IV	—
19	0.35	WH	4976	III	—	AUTOSAR CAN Bus [-] 3 Serial Data	19	0.35	WH	4976	IV	—
20	0.35	BU / BK	4977	III	—	AUTOSAR CAN Bus [+] 3 Serial Data	20	0.35	BU / BK	4977	IV	—
21	0.5	OG / VT	3026	III	—	Passenger Instrument Panel Air Bag Stage 2 Low Control	21	0.5	OG / VT	3026	IV	—
22	0.5	GY / OG	3027	III	—	Passenger Instrument Panel Air Bag Stage 2 High Control	22	0.5	GY / OG	3027	IV	—
23	0.35	WH	4986	III	—	AUTOSAR CAN Bus [-] 1 Serial Data	23	0.35	WH	4986	IV	—
24	0.35	BU	4987	III	—	AUTOSAR CAN Bus [+] 1 Serial Data	24	0.35	BU	4987	IV	—
25	—	—	—	—	—	Not Occupied	25	—	—	—	—	—
26	0.5	GN / WH	24	III	—	Backup Lamp Control	26	0.5	GN / WH	24	IV	—
27 - 28	—	—	—	—	—	Not Occupied	27 - 28	—	—	—	—	—
29	—	—	—	—	—	Ground	29	2	BK	1950	V	—
30	1.5	BK / WH	1451	II	—	Signal Ground	30	0.75	BK / WH	1451	V	—
31	0.35	BU / WH	4985	I	—	AUTOSAR CAN Bus [+] 5 Serial Data	31	0.35	BU / WH	4985	VI	—
32	0.35	BU / YE	4984	I	—	AUTOSAR CAN Bus [-] 5 Serial Data	32	0.35	BU / YE	4984	VI	—
33	—	—	—	—	—	Not Occupied	33	—	—	—	—	—

X211 Instrument Panel Wiring Harness to Body Wiring Harness (cont'd)

Pin	Size	Color	Circuit	Terminal Type ID	Option	Function	Pin	Size	Color	Circuit	Terminal Type ID	Option
34	2.5	RD / VT	1242	II	—	Battery Positive Voltage	34	2	RD / VT	1242	V	—
35	—	—	—	—	—	Not Occupied	35	—	—	—	—	—
36	0.35	GN / WH	7530	I	—	Driver Seat Memory Control Module LIN Bus 1	36	0.5	GN / WH	7530	VI	—
37 - 39	—	—	—	—	—	Not Occupied	37 - 39	—	—	—	—	—
40	0.75	BU / VT	1874	I	—	Left Front Speaker [+] Control 2	40	0.75	BU / VT	1874	VI	—
41	0.75	GY / BK	1974	I	—	Left Front Speaker [-] Control 2	41	0.75	GY / BK	1974	VI	—
42	—	—	—	—	—	Not Occupied	42	—	—	—	—	—
43	0.75	BU / YE	1960	II	—	Front Center Speaker [-] Control	43	1	BU / YE	1960	V	—
44	0.75	YE / WH	1860	II	—	Front Center Speaker [+] Control	44	1	YE / WH	1860	V	—
45 - 46	—	—	—	—	—	Not Occupied	45 - 46	—	—	—	—	—
47	0.35	GN / BN	507	II	—	Wait To Start Indicator Control	47	0.35	GN / BN	507	V	—
48	2.5	BU	47	II	—	Trailer Auxiliary Control	48	2.5	BU	47	V	—
49	0.35	WH	4055	III	—	Private Serial Data Powertrain CAN Bus [+] Serial Data	49	0.35	WH	4055	IV	—
50	0.35	BU / GY	4054	III	—	Private Serial Data Powertrain CAN Bus [-] Serial Data	50	0.35	BU / GY	4054	IV	—
51 - 52	—	—	—	—	—	Not Occupied	51 - 52	—	—	—	—	—
53	0.35	GY	728	III	—	Security Indicator Control	53	0.5	GY	728	IV	—
54	0.5	YE	6817	III	—	LED Backlight Dimming Control 1	54	0.5	YE	6817	IV	—
55	0.5	BN / BU	118	III	—	Left Front Speaker [-] Control 1 Left Front Speaker [-] Control 1	55	0.75 0.5	BN / BU BN / BU	118 118	IV IV	UQH ((IOR/ IOK) + UQF)

X211 Instrument Panel Wiring Harness to Body Wiring Harness (cont'd)

Pin	Size	Color	Circuit	Terminal Type ID	Option	Function	Pin	Size	Color	Circuit	Terminal Type ID	Option
56	0.5	YE / OG	3025	III	—	Passenger Instrument Panel Air Bag Stage 1 High Control	56	0.5	YE / OG	3025	IV	—
57	0.35	GY / WH	4630	III	—	AC Power Outlet Switch Signal	57	0.35	GY / WH	4630	IV	—
58	0.5	VT / WH	239	III	—	Run/Crank Ignition 1 Voltage	58	0.5	VT / WH	239	IV	—
59 - 62	—	—	—	—	—	Not Occupied	59 - 62	—	—	—	—	—
63	0.5	OG / VT	3021	III	—	Steering Wheel Air Bag Stage 1 High Control	63	0.5	OG / VT	3021	IV	—
64	0.5	BN / OG	3020	III	—	Steering Wheel Air Bag Stage 1 Low Control	64	0.5	BN / OG	3020	IV	—
65	0.5	OG / GN	3023	III	—	Steering Wheel Air Bag Stage 2 High Control	65	0.5	OG / GN	3023	IV	—
66	0.5	WH / OG	3022	III	—	Steering Wheel Air Bag Stage 2 Low Control	66	0.5	WH / OG	3022	IV	—
67	0.5	BU	201	III	—	Left Front Speaker 1 [+] Control Left Front Speaker 1 [+] Control	67	0.75 0.5	BU BU	201 201	IV IV	UQH ((IOR/ IOK) + UQF)
68	0.5	OG / WH	3024	III	—	Passenger Instrument Panel Air Bag Stage 1 Low Control	68	0.5	OG / WH	3024	IV	—
69 - 70	—	—	—	—	—	Not Occupied	69 - 70	—	—	—	—	—
71	0.35	WH	4100	III	—	AUTOSAR CAN Bus [-] 4 Serial Data	71	0.35	WH	4100	IV	—
72	0.35	BU / VT	4101	III	—	AUTOSAR CAN Bus [+] 4 Serial Data	72	0.35	BU / VT	4101	IV	—
73	—	—	—	—	—	Not Occupied	73	—	—	—	—	—
74	0.35	GN / BU	2733	III	—	Electronic Brake Control Module LIN Bus 2	74	0.75	GN / BU	2733	IV	—
75 - 76	—	—	—	—	—	Not Occupied	75 - 76	—	—	—	—	—

X214 Instrument Panel Wiring Harness to Body Wiring Harness

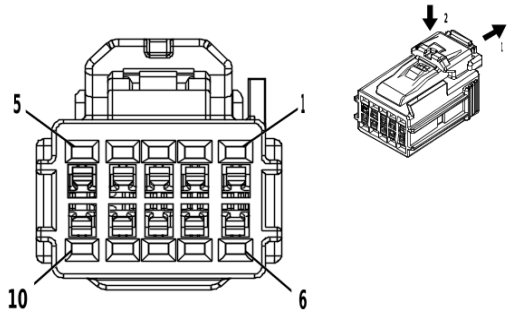

4254030

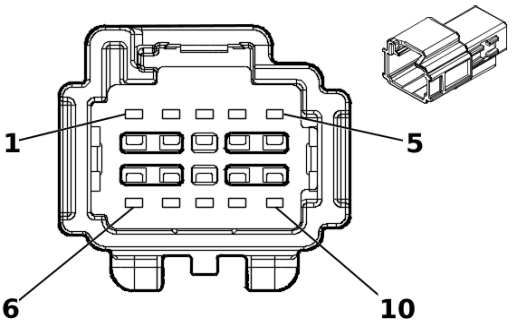

5355759

Connector Part Information

Harness Type: Instrument Panel Wiring Harness
OEM Connector: 6098-9004
Service Connector: 13532428
Description: 10-Way F 1.2 Series(BK)

Connector Part Information

Harness Type: Body Wiring Harness
OEM Connector: 13530136
Service Connector: 13530136
Description: 10-Way M 1.2 MCON Series(BK)

Terminal Part Information

Terminal Type ID	Terminated Lead	Diagnostic Test Probe	Terminal Removal Tool
I	84962854	J-35616-12 (BU)	J-38125-215A
II	84616651	J-35616-13 (BU)	J-38125-215A

X214 Instrument Panel Wiring Harness to Body Wiring Harness

Pin	Size	Color	Circuit	Terminal Type ID	Option	Function	Pin	Size	Color	Circuit	Terminal Type ID	Option
1	0.35	VT / WH	7213	I	—	Ethernet Bus 5 [+]	1	0.35	VT / WH	7213	II	—
2	0.35	VT	7212	I	—	Ethernet Bus 5 [-]	2	0.35	VT	7212	II	—
3 - 6	—	—	—	—	—	Not Occupied	3 - 6	—	—	—	—	—
7	0.35	BN / BK	7214	I	—	Ethernet Bus 6 [-]	7	0.35	BN / BK	7214	II	—
8	0.35	GY / BK	7215	I	—	Ethernet Bus 6 [+]	8	0.35	GY / BK	7215	II	—
9 - 10	—	—	—	—	—	Not Occupied	9 - 10	—	—	—	—	—

X216 Instrument Panel Wiring Harness to Body Wiring Harness (UV2)

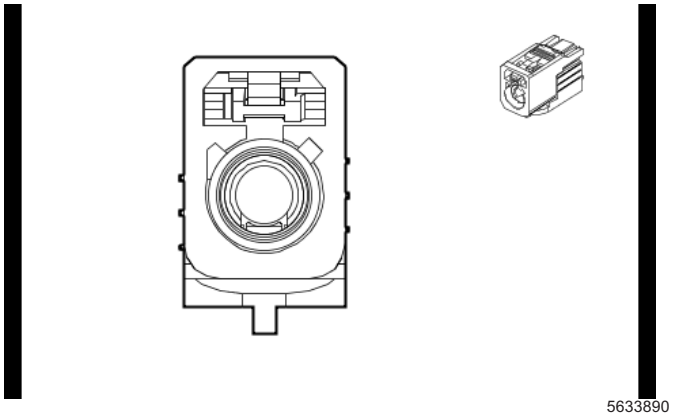
5633890

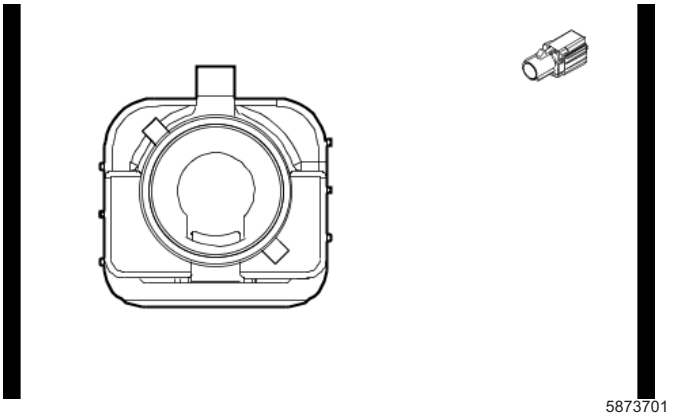
5873701

Connector Part Information

Harness Type: Instrument Panel Wiring Harness COAX

OEM Connector: 13516410

Service Connector: Service by Cable Assembly — See Part Catalog

Description: 1-Way F Coax Type(BU)

Connector Part Information

Harness Type: Body Wiring Harness COAX

OEM Connector: 13516061

Service Connector: Service by Cable Assembly — See Part Catalog

Description: 1-Way M Coax Type(BU)

Terminal Part Information

Terminal Type ID	Terminated Lead	Diagnostic Test Probe	Terminal Removal Tool
I	Not required	No Tool Required	No Tool Required

X216 Instrument Panel Wiring Harness to Body Wiring Harness (UV2)

Pin	Size	Color	Circuit	Terminal Type ID	Option	Function	Pin	Size	Color	Circuit	Terminal Type ID	Option
—	—	Coax Cable	—	I	—	Video Processing Module Coaxial Video Signal	—	—	Coax Cable	—	I	—

X216 Instrument Panel Wiring Harness to Body Wiring Harness (UVB)

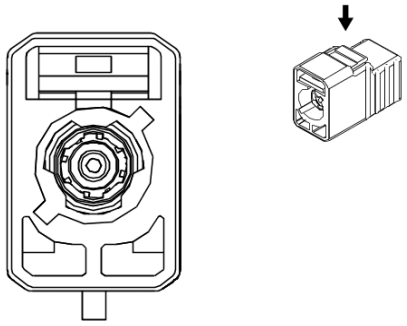

3293625

—

Connector Part Information

Harness Type: Instrument Panel Wiring Harness COAX

OEM Connector: 35212629

Service Connector: Service by Cable Assembly — See Part Catalog

Description: 1-Way F Coax Type

Connector Part Information

Harness Type: Body Wiring Harness COAX

OEM Connector: 35294085

Service Connector: Service by Cable Assembly — See Part Catalog

Description: 1-Way M Coax Type

Terminal Part Information

Terminal Type ID	Terminated Lead	Diagnostic Test Probe	Terminal Removal Tool
I	Not required	No Tool Required	No Tool Required

X216 Instrument Panel Wiring Harness to Body Wiring Harness (UVB)

Pin	Size	Color	Circuit	Terminal Type ID	Option	Function	Pin	Size	Color	Circuit	Terminal Type ID	Option
—	—	Coax Cable	—	I	—	Rear Vision Camera Co-axial Video Signal	—	—	Coax Cable	—	I	—

X221 Instrument Panel Wiring Harness to Passenger Instrument Panel Airbag Wiring Harness

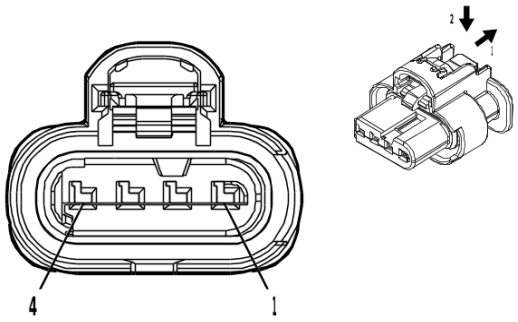

—

4900699

Connector Part Information

Harness Type: Instrument Panel Wiring Harness
OEM Connector: 2296700-3
Service Connector: 19371193
Description: 4-Way F 1.2 MCON-CB Series, Sealed(YE)

Connector Part Information

Harness Type: Passenger Instrument Panel Airbag Wiring Harness
OEM Connector: Not Available
Service Connector: Service by Harness - See Part Catalog
Description: 4-Way M (YE)

Terminal Part Information

Terminal Type ID	Terminated Lead	Diagnostic Test Probe	Terminal Removal Tool
I	Not required	J-35616-16 (LT GN)	No Tool Required
II	Not required	No Tool Required	No Tool Required

X221 Instrument Panel Wiring Harness to Passenger Instrument Panel Airbag Wiring Harness

Pin	Size	Color	Circuit	Terminal Type ID	Option	Function	Pin	Size	Color	Circuit	Terminal Type ID	Option
1	0.5	YE / OG	3025	I	—	Passenger Instrument Panel Air Bag Stage 1 High Control	1	0.5	YE / OG	3025	II	—
2	0.5	OG / WH	3024	I	—	Passenger Instrument Panel Air Bag Stage 1 Low Control	2	0.5	OG / WH	3024	II	—
3	0.5	GY / OG	3027	I	—	Passenger Instrument Panel Air Bag Stage 2 High Control	3	0.5	GY / OG	3027	II	—
4	0.5	OG / VT	3026	I	—	Passenger Instrument Panel Air Bag Stage 2 Low Control	4	0.5	OG / VT	3026	II	—

X225B Instrument Panel Wiring Harness to Front Floor Console Wiring Harness

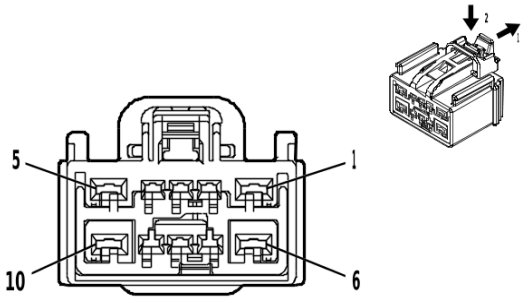

5020939

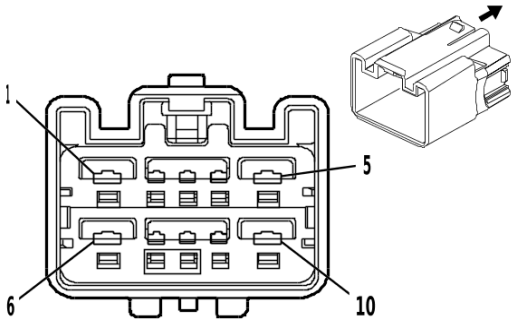

1851890

Connector Part Information

Harness Type: Instrument Panel Wiring Harness
OEM Connector: 7289-9153-40
Service Connector: 13518747
Description: 10-Way F 1.5, 2.8 Kaizen Series(L-GY)

Connector Part Information

Harness Type: Front Floor Console Wiring Harness
OEM Connector: 7282-6459-40
Service Connector: Service by Harness - See Part Catalog
Description: 10-Way M YESC Kaizen Series(L-GY)

Terminal Part Information

Terminal Type ID	Terminated Lead	Diagnostic Test Probe	Terminal Removal Tool
I	13587516	J-35616-4A (PU)	J-38125-11A
II	19332534	J-35616-14 (GN)	J-38125-557
III	Not required	J-35616-3 (GY)	No Tool Required
IV	Not required	J-35616-5 (PU)	No Tool Required

X225B Instrument Panel Wiring Harness to Front Floor Console Wiring Harness

Pin	Size	Color	Circuit	Terminal Type ID	Option	Function	Pin	Size	Color	Circuit	Terminal Type ID	Option
1	1.5	VT	1001	I	—	Retained Accessory Power Ignition Voltage	1	1.5	VT	1001	IV	—
2	0.5	RD / YE	2340	II	—	Battery Positive Voltage	2	0.5	RD / YE	2340	III	—
3	0.35	BN / BK	4996	II	—	Immobilizer Antenna Signal [+]	3	0.5	BN / BK	4996	III	—
4	0.35	WH / GY	4997	II	—	Immobilizer Antenna Low Signal	4	0.5	WH / GY	4997	III	—
5 - 7	—	—	—	—	—	Not Occupied	5 - 7	—	—	—	—	—
8	0.35	BN / BK	3552	II	—	Interior Passive Entry Antenna 1 High Signal	8	0.35	BN / BK	3552	III	—
9	0.35	WH	3553	II	—	Interior Passive Entry Antenna 1 Low Signal	9	0.35	WH	3553	III	—
10	—	—	—	—	—	Not Occupied	10	—	—	—	—	—

X225C Front Floor Console Wiring Harness to Body Wiring Harness (D07/DCH/DCK)

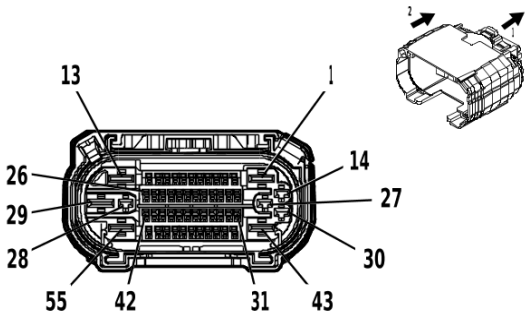

4992168

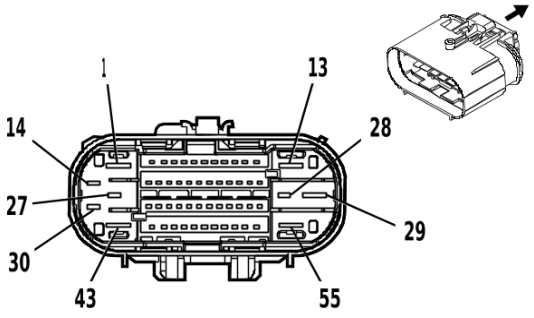

4993301

Connector Part Information

Harness Type: Front Floor Console Wiring Harness

OEM Connector: 35412726

Service Connector: Service by Harness - See Part Catalog

Description: 55-Way F 1.2 OCS, 2.8, 6.3 CTS Series, Sealed(BK)

Connector Part Information

Harness Type: Body Wiring Harness

OEM Connector: 35492953

Service Connector: 84727364

Description: 55-Way M 1.2 OCS, 2.8, 6.3 CTS Series, Sealed(BK)

Terminal Part Information

Terminal Type ID	Terminated Lead	Diagnostic Test Probe	Terminal Removal Tool
I	Not required	J-35616-16 (L-GN)	No Tool Required
II	Not required	J-35616-35 (VT)	No Tool Required
III	Not required	J-35616-42 (RD)	No Tool Required
IV	Not required	J-35616-43 (RD)	No Tool Required
V	84847992	J-35616-32 (OG)	J-38125-36
VI	84867140	J-35616-13 (BU)	J-38125-215A
VII	84867141	J-35616-13 (BU)	J-38125-215A
VIII	84992391	J-35616-5 (PU)	J-38125-215A

X225C Front Floor Console Wiring Harness to Body Wiring Harness (D07/DCH/DCK)

Pin	Size	Color	Circuit	Terminal Type ID	Option	Function	Pin	Size	Color	Circuit	Terminal Type ID	Option
1	0.5	BK / WH	1351	IV	—	Signal Ground	1	0.5	BK / WH	1351	V	—
2	0.75	BK / WH	1451	I	—	Signal Ground	2	0.75	BK / WH	1451	VI	—
3	0.5	VT / RD	4049	I	—	AC Power Outlet Sensor High Reference	3	0.5	VT / RD	4049	VI	—
4	0.35 0.75	RD / VT RD / VT	6340 6340	I I	DCK-K4C K4C	Battery Positive Voltage Battery Positive Voltage	4	0.75	RD / VT	6340	VI	—
5	0.35	BN / BK	405	I	—	Lower Duct Air Temperature Sensor Signal	5	0.5	BN / BK	405	VI	—
6	—	—	—	—	—	Not Occupied	6	—	—	—	—	—

X225C Front Floor Console Wiring Harness to Body Wiring Harness (D07/DCH/DCK) (cont'd)

Pin	Size	Color	Circuit	Terminal Type ID	Option	Function	Pin	Size	Color	Circuit	Terminal Type ID	Option
7	0.35	RD / WH	7240	I	—	Battery Positive Voltage	7	0.35	RD / WH	7240	VI	—
8	—	—	—	—	—	Not Occupied	8	—	—	—	—	—
9	0.75	YE / WH	4635	I	—	HVAC Remote Enable 2 Signal	9	0.5	YE / WH	4635	VI	—
10 - 13	—	—	—	—	—	Not Occupied	10 - 13	—	—	—	—	—
14	0.5	VT	4701	II	—	Retained Accessory Power Control	14	0.5	VT	4701	VIII	—
15	0.5	GN / BK	2211	I	—	Rear Blower Motor Speed Control	15	0.5	GN / BK	2211	VI	—
16	0.5	RD / BN	7540	I	—	Battery Positive Voltage	16	0.5	RD / BN	7540	VI	—
17 - 18	—	—	—	—	—	Not Occupied	17 - 18	—	—	—	—	—
19	0.75	BK / VT	470	I	—	Sensor Low Reference	19	0.5	BK / VT	470	VI	—
20	0.35	BN	404	I	—	Upper Duct Air Temperature Sensor Signal	20	0.5	BN	404	VI	—
21 - 22	—	—	—	—	—	Not Occupied	21 - 22	—	—	—	—	—
23	0.5 0.35	GN / VT GN / VT	2857 2857	I I	DCH DCK	Body Control Module LIN Bus 11 Body Control Module LIN Bus 11	23	0.5 0.35	GN / VT GN / VT	2857 2857	VI VI	DCH DCK
24 - 25	—	—	—	—	—	Not Occupied	24 - 25	—	—	—	—	—
26	0.75	BK	5683	I	—	120V AC Phase A	26	0.75	BK	5683	VI	—
27	1.5	VT	1701	II	DT4	Retained Accessory Power Control	27	1.5	VT	1701	VIII	DT4
28	1	RD / VT	8640	II	—	Battery Positive Voltage	28	1	RD / VT	8640	VIII	—
29 - 34	—	—	—	—	—	Not Occupied	29 - 34	—	—	—	—	—
35	0.75	BU / BN	6807	I	—	DC/AC Inverter Control	35	0.75	BU / BN	6807	VI	—
36 - 37	—	—	—	—	—	Not Occupied	36 - 37	—	—	—	—	—

X225C Front Floor Console Wiring Harness to Body Wiring Harness (D07/DCH/DCK) (cont'd)

Pin	Size	Color	Circuit	Terminal Type ID	Option	Function	Pin	Size	Color	Circuit	Terminal Type ID	Option
38	0.35	BU / YE	4984	I	—	AUTOSAR CAN Bus [-] 5 Serial Data	38	0.5 0.35	BU / YE BU / YE	4984 4984	VI VI	UQA/ UQS UQP+ Z88
39	0.35	BU / WH	4985	I	—	AUTOSAR CAN Bus [+] 5 Serial Data	39	0.5 0.35	BU / WH BU / WH	4985 4985	VI VI	UQA/ UQS UQP+ Z88
40	0.5	YE	6817	I	—	LED Back-light Dim-ming Control 1	40	0.5	YE	6817	VI	—
41	—	—	—	—	—	Not Occu-pied	41	—	—	—	—	—
42	0.75	RD	5684	I	—	120V AC Phase B	42	0.75	RD	5684	VI	—
43	—	—	—	—	—	Not Occu-pied	43	—	—	—	—	—
44	0.75	GN / VT	4786	I	D07/ DCH	Dome/Read-ing Lamp En-able Signal	44	0.75	GN / VT	4786	VI	—
45 - 49	—	—	—	—	—	Not Occu-pied	45 - 49	—	—	—	—	—
50	0.35	BU / YE	4984	I	—	AUTOSAR CAN Bus [-] 5 Serial Data	50	0.35	BU / YE	4984	VI	—
51	0.35	BU / WH	4985	I	—	AUTOSAR CAN Bus [+] 5 Serial Data	51	0.35	BU / WH	4985	VI	—
52 - 53	—	—	—	—	—	Not Occu-pied	52 - 53	—	—	—	—	—
54	1	BK / WH	2519	I	—	120V AC Outlet Low Reference	54	1	BK / WH	2519	VII	—
55	2	BK	1250	III	—	Ground	55	2	BK	1250	V	—

X225D Front Seat Wiring Harness - Center to Body Wiring Harness (AZ3)

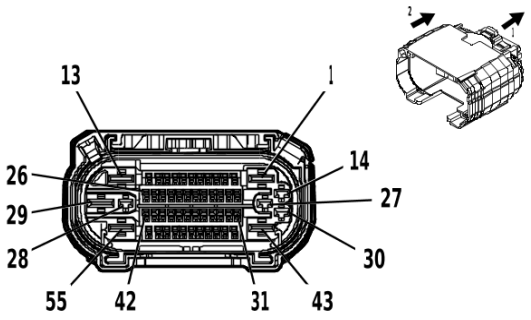

4992168

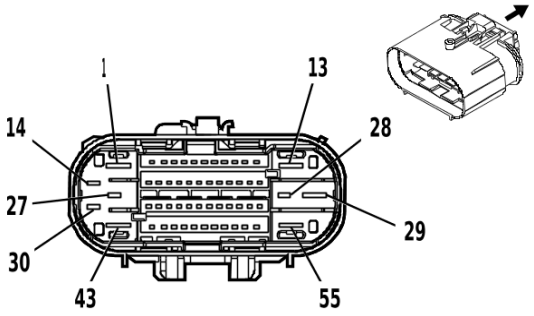

4993301

Connector Part Information

Harness Type: Front Seat Wiring Harness - Center

OEM Connector: 35398413

Service Connector: Service by Harness - See Part Catalog

Description: 55-Way F 1.2 OCS, 2.8, 6.3 CTS Series, Sealed(BK)

Connector Part Information

Harness Type: Body Wiring Harness

OEM Connector: 35492953

Service Connector: 84727364

Description: 55-Way M 1.2 OCS, 2.8, 6.3 CTS Series, Sealed(BK)

Terminal Part Information

Terminal Type ID	Terminated Lead	Diagnostic Test Probe	Terminal Removal Tool
I	Not required	J-35616-16 (L-GN)	No Tool Required
II	Not required	J-35616-35 (VT)	No Tool Required
III	Not required	J-35616-42 (RD)	No Tool Required
IV	Not required	J-35616-43 (RD)	No Tool Required
V	84847992	J-35616-32 (OG)	J-38125-36
VI	84867140	J-35616-13 (BU)	J-38125-215A
VII	84867141	J-35616-13 (BU)	J-38125-215A
VIII	84992391	J-35616-5 (PU)	J-38125-215A

X225D Front Seat Wiring Harness - Center to Body Wiring Harness (AZ3)

Pin	Size	Color	Circuit	Terminal Type ID	Option	Function	Pin	Size	Color	Circuit	Terminal Type ID	Option
1	0.5	BK / WH	1351	IV	—	Signal Ground	1	0.5	BK / WH	1351	V	—
2	—	—	—	—	—	Signal Ground	2	0.75	BK / WH	1451	VI	—
3	0.5	VT / RD	4049	I	—	AC Power Outlet Sensor High Reference	3	0.5	VT / RD	4049	VI	—
4	—	—	—	—	—	Battery Positive Voltage	4	0.75	RD / VT	6340	VI	—
5	0.35	BN / BK	405	I	—	Lower Duct Air Temperature Sensor Signal	5	0.5	BN / BK	405	VI	—
6	—	—	—	—	—	Not Occupied	6	—	—	—	—	—
7	—	—	—	—	—	Battery Positive Voltage	7	0.35	RD / WH	7240	VI	—

X225D Front Seat Wiring Harness - Center to Body Wiring Harness (AZ3) (cont'd)

Pin	Size	Color	Circuit	Terminal Type ID	Option	Function	Pin	Size	Color	Circuit	Terminal Type ID	Option
8	—	—	—	—	—	Not Occupied	8	—	—	—	—	—
9	0.75	YE / WH	4635	I	—	HVAC Remote Enable 2 Signal	9	0.5	YE / WH	4635	VI	—
10	—	—	—	—	—	Virtual Key Module LIN Bus 1	10	0.5	GN / BK	2738	VI	—
11 - 13	—	—	—	—	—	Not Occupied	11 - 13	—	—	—	—	—
14	0.5	VT	4701	II	—	Retained Accessory Power Control	14	0.5	VT	4701	VIII	—
15	0.5	GN / BK	2211	I	—	Rear Blower Motor Speed Control	15	0.5	GN / BK	2211	VI	—
16	0.5	RD / BN	7540	I	—	Battery Positive Voltage	16	0.5	RD / BN	7540	VI	—
17 - 18	—	—	—	—	—	Not Occupied	17 - 18	—	—	—	—	—
19	0.75	BK / VT	470	I	—	Sensor Low Reference	19	0.5	BK / VT	470	VI	—
20	0.35	BN	404	I	—	Upper Duct Air Temperature Sensor Signal	20	0.5	BN	404	VI	—
21 - 22	—	—	—	—	—	Not Occupied	21 - 22	—	—	—	—	—
23						Body Control Module LIN Bus 11	23	0.35 0.5	GN / VT GN / VT	2857 2857	VI VI	- DCH DCH
24 - 25	—	—	—	—	—	Not Occupied	24 - 25	—	—	—	—	—
26	0.75	BK	5683	I	—	120V AC Phase A	26	0.75	BK	5683	VI	—
27	—	—	—	—	—	Retained Accessory Power Control	27	1.5	VT	1701	VIII	—
28	—	—	—	—	—	Battery Positive Voltage	28	1	RD / VT	8640	VIII	—
29 - 32	—	—	—	—	—	Not Occupied	29 - 32	—	—	—	—	—
33	0.5	BN / BK	4996	I	—	Immobilizer Antenna Signal [+]	33	0.5	BN / BK	4996	VI	—
34	0.5	WH / GY	4997	I	—	Immobilizer Antenna Low Signal	34	0.5	WH / GY	4997	VI	—
35	0.75	BU / BN	6807	I	—	DC/AC Inverter Control	35	0.75	BU / BN	6807	VI	—

X225D Front Seat Wiring Harness - Center to Body Wiring Harness (AZ3) (cont'd)

Pin	Size	Color	Circuit	Terminal Type ID	Option	Function	Pin	Size	Color	Circuit	Terminal Type ID	Option
36 - 37	—	—	—	—	—	Not Occupied	36 - 37	—	—	—	—	—
38	—	—	—	—	—	AUTOSAR CAN Bus [-] 5 Serial Data	38	0.5	BU / YE	4984	VI	—
39	—	—	—	—	—	AUTOSAR CAN Bus [+] 5 Serial Data	39	0.5	BU / WH	4985	VI	—
40	0.5	YE	6817	I	—	LED Backlight Dimming Control 1	40	0.5	YE	6817	VI	—
41	—	—	—	—	—	Not Occupied	41	—	—	—	—	—
42	0.75	RD	5684	I	—	120V AC Phase B	42	0.75	RD	5684	VI	—
43	—	—	—	—	—	Not Occupied	43	—	—	—	—	—
44	—	—	—	—	—	Dome/Reading Lamp Enable Signal	44	0.75	GN / VT	4786	VI	—
45 - 49	—	—	—	—	—	Not Occupied	45 - 49	—	—	—	—	—
50	0.35	BU / YE	4984	I	—	AUTOSAR CAN Bus [-] 5 Serial Data	50	0.35	BU / YE	4984	VI	—
51	0.35	BU / WH	4985	I	—	AUTOSAR CAN Bus [+] 5 Serial Data	51	0.35	BU / WH	4985	VI	—
52 - 53	—	—	—	—	—	Not Occupied	52 - 53	—	—	—	—	—
54	1	BK	2519	I	—	120V AC Outlet Low Reference	54	1	BK / WH	2519	VII	—
55	2 0.75	BK BK	1250 1250	III IV	(D07/ DCK/ AZ3/ DCH) Z75	Ground Ground	55	2	BK	1250	V	—

X226 Front Floor Console Wiring Harness to Body Wiring Harness (UW9)

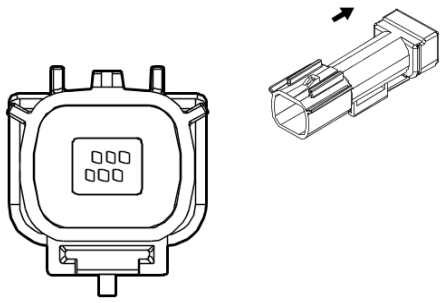

4477041

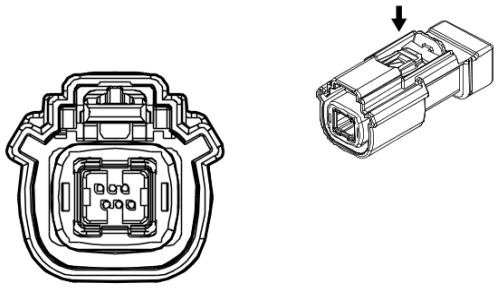

4477145

Connector Part Information

Harness Type: Front Floor Console Wiring Harness LVDS

OEM Connector: 13581666

Service Connector: Service by Cable Assembly — See Part Catalog

Description: 6-Way F HSAL-2 Series, Sealed(BK)

Connector Part Information

Harness Type: Body Wiring Harness LVDS

OEM Connector: 35350903

Service Connector: Service by Cable Assembly — See Part Catalog

Description: 6-Way M HSAL-2 Series, Sealed(BK)

Terminal Part Information

Terminal Type ID	Terminated Lead	Diagnostic Test Probe	Terminal Removal Tool
I	Not required	No Tool Required	No Tool Required

X226 Front Floor Console Wiring Harness to Body Wiring Harness (UW9)

Pin	Size	Color	Circuit	Terminal Type ID	Option	Function	Pin	Size	Color	Circuit	Terminal Type ID	Option
—	—	LVDS	—	I	—	Auxiliary Video Signal	—	—	LVDS	—	I	—

X250 Instrument Panel Wiring Harness to Heater Wiring Harness

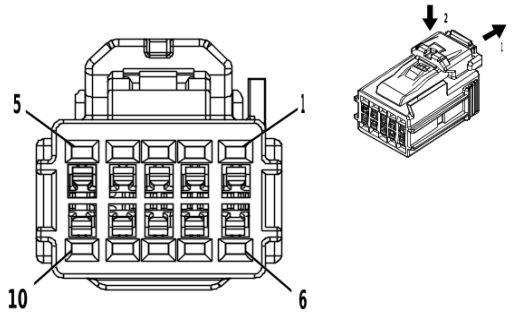

4254030

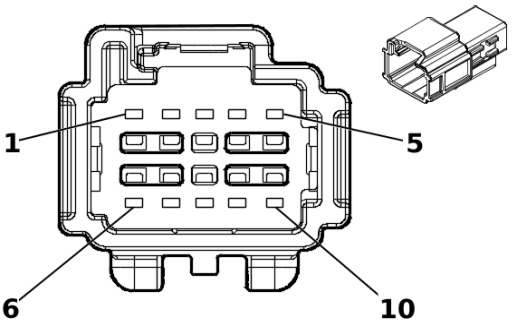

5355759

Connector Part Information

Harness Type: Instrument Panel Wiring Harness
OEM Connector: 6098-9004
Service Connector: 13532428
Description: 10-Way F 1.2 Series(BK)

Connector Part Information

Harness Type: Heater Wiring Harness
OEM Connector: 6098-9079
Service Connector: Service by Harness - See Part Catalog
Description: 10-Way M 1.2 MCON Series(BK)

Terminal Part Information

Terminal Type ID	Terminated Lead	Diagnostic Test Probe	Terminal Removal Tool
I	84962854	J-35616-12 (BU)	J-38125-215A
II	Not Available	No Tool Required	Not Available

X250 Instrument Panel Wiring Harness to Heater Wiring Harness

Pin	Size	Color	Circuit	Terminal Type ID	Option	Function	Pin	Size	Color	Circuit	Terminal Type ID	Option
1	—	—	—	—	—	Not Occupied	1	—	—	—	—	—
2	0.5	BK	1050	I	—	Ground	2	0.5	BK	1050	II	—
3 - 4	—	—	—	—	—	Not Occupied	3 - 4	—	—	—	—	—
5	0.35	GY	6137	I	—	A/C Evaporator Temperature Sensor Signal	5	0.35	GY	6137	II	—
6	0.35	GN / VT	2852	I	—	Body Control Module LIN Bus 6	6	0.35	GN / VT	2852	II	—
7	0.35	BK / YE	407	I	—	Sensor Low Reference	7	0.35	BK / YE	407	II	—
8	0.5 0.35	VT / WH VT / WH	239 239	I I	(C3A- DD8- DRZ) C3A+ DD8/ C3A + DRZ/ C3A	Run/Crank Ignition 1 Voltage Run/Crank Ignition 1 Voltage	8	0.5 0.35	VT / WH VT / WH	239 239	II II	(C3A- DD8- DRZ) C3A+ DD8/ C3A + DRZ/ C3A
9	0.35	WH / YE	4634	I	—	HVAC Remote Enable Signal	9	0.35	WH / YE	4634	II	—
10	—	—	—	—	—	Not Occupied	10	—	—	—	—	—

X251A Body Wiring Harness to Auxiliary Heater and Air Conditioning Wiring Harness (C69)

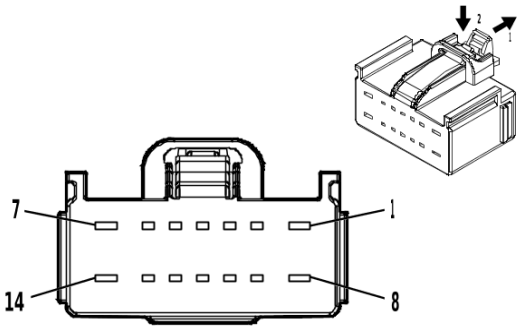

4934172

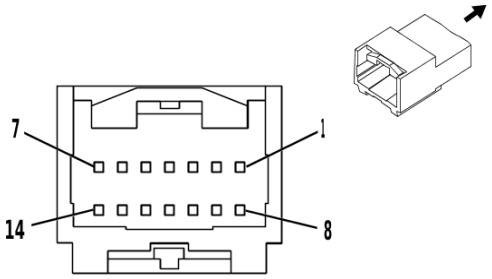

2871900

Connector Part Information

Harness Type: Body Wiring Harness
OEM Connector: 13513605
Service Connector: 13513605
Description: 14-Way F 1.5, 2.8 YESC Series(GY)

Connector Part Information

Harness Type: Auxiliary Heater and Air Conditioning Wiring Harness
OEM Connector: Not Available
Service Connector: Service by Harness - See Part Catalog
Description: 14-Way M (GY)

Terminal Part Information

Terminal Type ID	Terminated Lead	Diagnostic Test Probe	Terminal Removal Tool
I	13575850	J-35616-14 (GN)	J-38125-557
II	Not required	J-35616-4A (PU)	No Tool Required
III	Not required	No Tool Required	No Tool Required

X251A Body Wiring Harness to Auxiliary Heater and Air Conditioning Wiring Harness (C69)

Pin	Size	Color	Circuit	Terminal Type ID	Option	Function	Pin	Size	Color	Circuit	Terminal Type ID	Option
1	3	RD / GY	1740	II	—	Battery Positive Voltage	1	3	RD / GY	1740	III	—
2	—	—	—	—	—	Not Occupied	2	—	—	—	—	—
3	0.5	YE / WH	4635	I	—	HVAC Remote Enable 2 Signal	3	0.5	YE / WH	4635	III	—
4	0.5	BK	1450	I	—	Ground	4	0.5	BK	1450	III	—
5	0.35	GN / BN	2853	I	—	Body Control Module LIN Bus 7	5	0.35	GN / BN	2853	III	—
6	0.5	BN	404	I	—	Upper Duct Air Temperature Sensor Signal	6	0.5	BN	404	III	—
7 - 8	—	—	—	—	—	Not Occupied	7 - 8	—	—	—	—	—
9	0.5	GN / BK	2211	I	—	Rear Blower Motor Speed Control	9	0.5	GN / BK	2211	III	—

X251A Body Wiring Harness to Auxiliary Heater and Air Conditioning Wiring Harness (C69) (cont'd)

Pin	Size	Color	Circuit	Terminal Type ID	Option	Function	Pin	Size	Color	Circuit	Terminal Type ID	Option
10	0.5	BN / BK	405	I	—	Lower Duct Air Temperature Sensor Signal	10	0.5	BN / BK	405	III	—
11	0.5	BK / VT	470	I	—	Sensor Low Reference	11	0.5	BK / VT	470	III	—
12 - 13	—	—	—	—	—	Not Occupied	12 - 13	—	—	—	—	—
14	3	BK	1450	II	—	Ground	14	3	BK	1450	III	—

X251L Air Heater Jumper Wiring Harness to Body Wiring Harness (C3A)

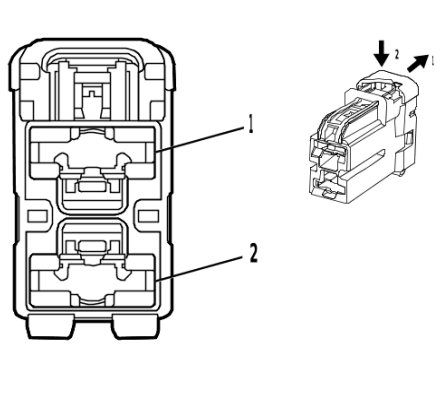

2453116

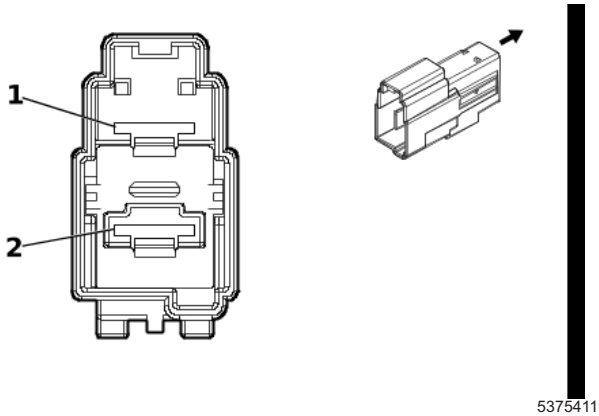

5375411

Connector Part Information

Harness Type: Air Heater Jumper Wiring Harness
OEM Connector: Not Available
Service Connector: Service by Harness - See Part Catalog
Description: 2-Way F

Connector Part Information

Harness Type: Body Wiring Harness
OEM Connector: 7288-8751-30
Service Connector: Service by Harness - See Part Catalog
Description: 2-Way M 9.5 Y-Type Series(BK)

Terminal Part Information

Terminal Type ID	Terminated Lead	Diagnostic Test Probe	Terminal Removal Tool
I	Not required	No Tool Required	No Tool Required
II	Not required	J-35616-21 (RD)	No Tool Required

X251L Air Heater Jumper Wiring Harness to Body Wiring Harness (C3A)

Pin	Size	Color	Circuit	Terminal Type ID	Option	Function	Pin	Size	Color	Circuit	Terminal Type ID	Option
1	—	—	—	—	—	Not Occupied	1	—	—	—	—	—
2	16	RD / GY	642	I	—	Battery Positive Voltage	2	16	RD / GY	642	II	—

X255A Front Floor Console Wiring Harness to Instrument Panel Wiring Harness (USR)

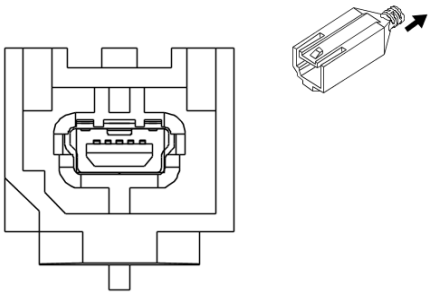

3273655

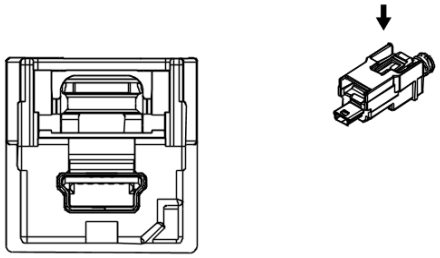

2807425

Connector Part Information

Harness Type: Front Floor Console Wiring Harness LVDS

OEM Connector: 13584760

Service Connector: Service by Cable Assembly — See Part Catalog

Description: 5-Way F 2.0 Mini-B USB Type(BK)

Connector Part Information

Harness Type: Instrument Panel Wiring Harness LVDS

OEM Connector: 13576672

Service Connector: Service by Cable Assembly — See Part Catalog

Description: 5-Way M 2.0 Mini-B USB Type(BK)

Terminal Part Information

Terminal Type ID	Terminated Lead	Diagnostic Test Probe	Terminal Removal Tool
I	Not required	No Tool Required	No Tool Required

X255A Front Floor Console Wiring Harness to Instrument Panel Wiring Harness (USR)

Pin	Size	Color	Circuit	Terminal Type ID	Option	Function	Pin	Size	Color	Circuit	Terminal Type ID	Option
—	—	LVDS	—	I	—	Auxiliary Audio/Video Jack 2 USB Signal	—	—	LVDS	—	I	—

X309 Body Wiring Harness to Body Wiring Harness

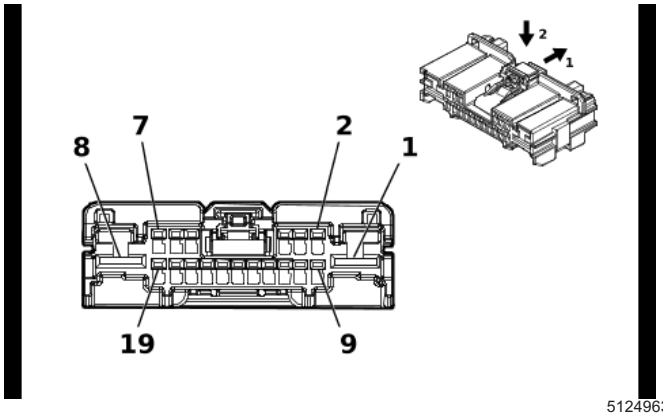

5124963

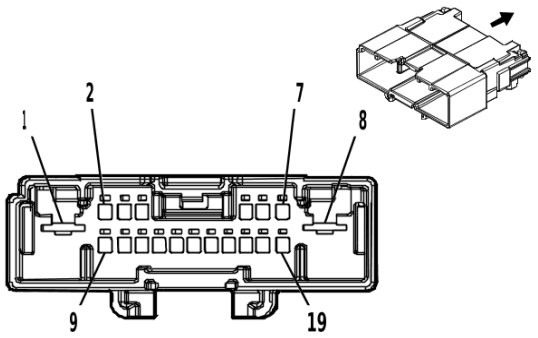

4879946

Connector Part Information

Harness Type: Body Wiring Harness
OEM Connector: 13526847
Service Connector: 13526847
Description: 19-Way F 1.2, 6.3 Series(BK)

Connector Part Information

Harness Type: Body Wiring Harness
OEM Connector: 13597288
Service Connector: 13597288
Description: 19-Way M 1.2, 6.3 Series(BK)

Terminal Part Information

Terminal Type ID	Terminated Lead	Diagnostic Test Probe	Terminal Removal Tool
I	19371240	J-35616-12 (BU)	J-38125-215A
II	84962854	J-35616-12 (BU)	J-38125-215A
III	84616651	J-35616-13 (BU)	J-38125-215A
IV	84726946	J-35616-13 (BU)	J-38125-215A

X309 Body Wiring Harness to Body Wiring Harness

Pin	Size	Color	Circuit	Terminal Type ID	Option	Function	Pin	Size	Color	Circuit	Terminal Type ID	Option
1 - 5	—	—	—	—	—	Not Occupied	1 - 5	—	—	—	—	—
6	0.5	RD / WH	4740	II	—	Battery Positive Voltage	6	0.5	RD / WH	4740	III	—
7	1	RD / GN	3140	I	—	Battery Positive Voltage	7	1	RD / GN	3140	IV	—
8 - 9	—	—	—	—	—	Not Occupied	8 - 9	—	—	—	—	—
10	0.5	RD / BN	4940	II	—	Battery Positive Voltage	10	0.5	RD / BN	4940	III	—
11	0.35	WH	4100	II	—	AUTOSAR CAN Bus [-] 4 Serial Data	11	0.35	WH	4100	III	—
12	0.35	BU / VT	4101	II	—	AUTOSAR CAN Bus [+] 4 Serial Data	12	0.35	BU / VT	4101	III	—
13	—	—	—	—	—	Not Occupied	13	—	—	—	—	—
14	0.75	GY / WH	8577	II	—	Right Rear D-Pillar Speaker [-] Control	14	0.75	GY / WH	8577	III	—

X309 Body Wiring Harness to Body Wiring Harness (cont'd)

Pin	Size	Color	Circuit	Terminal Type ID	Option	Function	Pin	Size	Color	Circuit	Terminal Type ID	Option
15	0.75	VT	8578	II	—	Right Rear D-Pillar Speaker [+] Control	15	0.75	VT	8578	III	—
16 - 17	—	—	—	—	—	Not Occupied	16 - 17	—	—	—	—	—
18	0.5	RD / GY	4840	II	—	Battery Positive Voltage	18	0.5	RD / GY	4840	III	—
19	—	—	—	—	—	Not Occupied	19	—	—	—	—	—

X328 Front Seat Wiring Harness - Driver to Body Wiring Harness

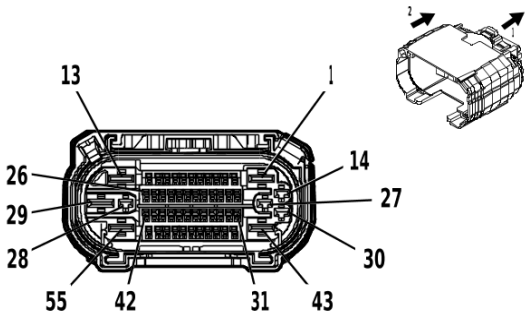

4992168

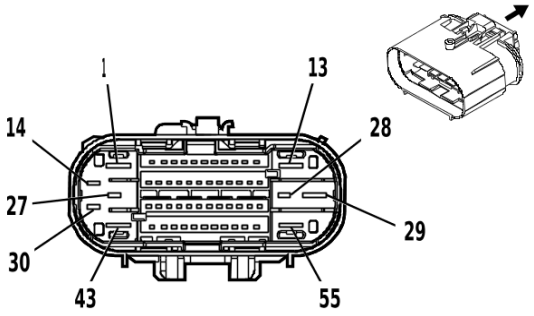

4993301

Connector Part Information

Harness Type: Front Seat Wiring Harness - Driver

OEM Connector: 35327294

Service Connector: Service by Harness - See Part Catalog

Description: 55-Way F 1.2 OCS, 2.8, 6.3 CTS Series, Sealed(BK)

Connector Part Information

Harness Type: Body Wiring Harness

OEM Connector: 35379192

Service Connector: 84727364

Description: 55-Way M 1.2 OCS, 2.8, 6.3 CTS Series, Sealed(BK)

Terminal Part Information

Terminal Type ID	Terminated Lead	Diagnostic Test Probe	Terminal Removal Tool
I	Not required	J-35616-16 (L-GN)	No Tool Required
II	Not required	J-35616-42 (RD)	No Tool Required
III	Not required	No Tool Required	No Tool Required
IV	84847992	J-35616-32 (OG)	J-38125-36
V	84867140	J-35616-13 (BU)	J-38125-215A

X328 Front Seat Wiring Harness - Driver to Body Wiring Harness

Pin	Size	Color	Circuit	Terminal Type ID	Option	Function	Pin	Size	Color	Circuit	Terminal Type ID	Option
1	2.5	BK	1150	II	—	Ground	1	2.5	BK	1150	IV	—
2	—	—	—	—	—	Not Occupied	2	—	—	—	—	—
3	0.35	GN / WH	7530	I	—	Driver Seat Memory Control Module LIN Bus 1	3	0.5	GN / WH	7530	V	—
4	0.75	RD / BN	2240	I	—	Battery Positive Voltage	4	0.75	RD / BN	2240	V	—
5	0.35	WH	615	I	—	Seat Memory Switch Signal 1	5	0.5	WH	615	V	—
6	0.35	BU / GN	614	I	—	Seat Memory Switch Set Signal	6	0.5	BU / GN	614	V	—
7 - 9	—	—	—	—	—	Not Occupied	7 - 9	—	—	—	—	—
10	0.5	BK / YE	2080	I	—	Driver Heated Seat Thermistor Low Reference	10	0.5	BK / YE	2080	V	—

X328 Front Seat Wiring Harness - Driver to Body Wiring Harness (cont'd)

Pin	Size	Color	Circuit	Terminal Type ID	Option	Function	Pin	Size	Color	Circuit	Terminal Type ID	Option
11	0.5	YE / GY	2079	I	—	Driver Seat Heating Temperature Sensor Signal	11	0.5	YE / GY	2079	V	—
12	0.75	RD / BN	3640	I	UW9	Battery Positive Voltage	12	0.75	RD / BN	3640	V	UW9
13 - 14	—	—	—	—	—	Not Occupied	13 - 14	—	—	—	—	—
15	0.75	BN / VT	2077	I	—	Driver Seat Heating Element Control	15	0.75	BN / VT	2077	V	—
16	0.75	BN / BK	2078	I	—	Driver Seat Heating Element Low Reference	16	0.75	BN / BK	2078	V	—
17	—	—	—	—	—	Not Occupied	17	—	—	—	—	—
18	0.5	BU	2425	I	—	Driver Seat Back Heating Temperature Sensor Signal	18	0.5	BU	2425	V	—
19	0.75	BN	2432	I	—	Driver Seat Back Heating Element Control	19	0.75	BN	2432	V	—
20	0.5	GN / VT	5906	I	—	Driver Seat Blower Motor Control 1	20	0.5	GN / VT	5906	V	—
21	0.5	VT / WH	1139	I	—	Run/Crank Ignition 1 Voltage	21	0.5	VT / WH	1139	V	—
22	0.35	BK / WH	1451	I	—	Signal Ground	22	0.75	BK / WH	1451	V	—
23 - 24	—	—	—	—	—	Not Occupied	23 - 24	—	—	—	—	—
25	0.35	BU / VT	4101	I	—	AUTOSAR CAN Bus [+] 4 Serial Data	25	0.35	BU / VT	4101	V	—
26	0.35	WH	4100	I	—	AUTOSAR CAN Bus [-] 4 Serial Data	26	0.35	WH	4100	V	—
27 - 28	—	—	—	—	—	Not Occupied	27 - 28	—	—	—	—	—
29	2.5	RD / YE	5040	II	—	Battery Positive Voltage	29	2.5	RD / YE	5040	IV	—
30	—	—	—	—	—	Not Occupied	30	—	—	—	—	—
31	0.5	GY	157	I	—	Interior Lamp Control	31	0.5	GY	157	V	—
32	0.5	OG / GY	2652	I	—	Driver Seat Belt Sensor Signal	32	0.5	OG / GY	2652	V	—

X328 Front Seat Wiring Harness - Driver to Body Wiring Harness (cont'd)

Pin	Size	Color	Circuit	Terminal Type ID	Option	Function	Pin	Size	Color	Circuit	Terminal Type ID	Option
33	0.5	BK / OG	1363	I	—	Driver Seat Belt Switch Low Reference	33	0.5	BK / OG	1363	V	—
34	—	—	—	—	—	Not Occupied	34	—	—	—	—	—
35	0.5	OG / BU	4962	III	—	Driver Seat Back Air Bag High Control	35	0.5	OG / BU	4962	V	—
36	0.5	BK / OG	4963	III	—	Driver Seat Back Air Bag Low Control	36	0.5	BK / OG	4963	V	—
37	0.35	GN / YE	7066	I	—	Entertainment Remote Enable Signal	37	0.35	GN / YE	7066	V	—
38 - 49	—	—	—	—	—	Not Occupied	38 - 49	—	—	—	—	—
50	0.35	BU / VT	4101	I	—	AUTOSAR CAN Bus [+] 4 Serial Data	50	0.35	BU / VT	4101	V	—
51	0.35	WH	4100	I	—	AUTOSAR CAN Bus [-] 4 Serial Data	51	0.35	WH	4100	V	—
52	0.5	OG / BN	4207	III	—	Driver Inboard Seat Side Air Bag High Control	52	0.5	OG / BN	4207	V	—
53	0.5	GY / OG	4208	III	—	Driver Inboard Seat Side Air Bag Low Control	53	0.5	GY / OG	4208	V	—
54 - 55	—	—	—	—	—	Not Occupied	54 - 55	—	—	—	—	—

X329 Body Wiring Harness to Front Seat Wiring Harness - Driver (UW9)

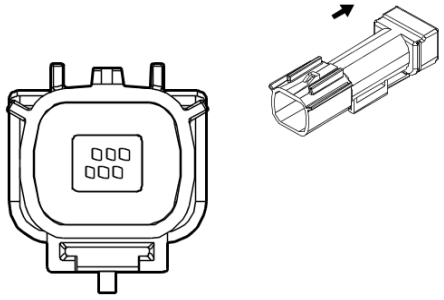

4477041

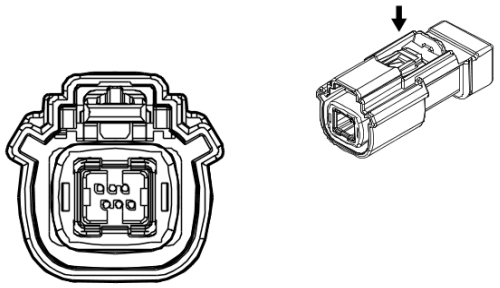

4477145

Connector Part Information

Harness Type: Body Wiring Harness LVDS

OEM Connector: 13581666

Service Connector: Service by Cable Assembly — See Part Catalog

Description: 6-Way F HSAL-2 Series, Sealed(BK)

Connector Part Information

Harness Type: Front Seat Wiring Harness - Driver LVDS

OEM Connector: 13586870

Service Connector: Service by Cable Assembly — See Part Catalog

Description: 6-Way M HSAL-2 Series, Sealed(BK)

Terminal Part Information

Terminal Type ID	Terminated Lead	Diagnostic Test Probe	Terminal Removal Tool
I	Not required	No Tool Required	No Tool Required

X329 Body Wiring Harness to Front Seat Wiring Harness - Driver (UW9)

Pin	Size	Color	Circuit	Terminal Type ID	Option	Function	Pin	Size	Color	Circuit	Terminal Type ID	Option
1	—	—	—	—	—	Rear Seat Infotainment Display 2 LVDS (Low Voltage Differential Signaling) Low Reference	1	0.01	Bare	4819	II	—
2	—	—	—	—	—	Passenger Seat Back Video Display Signal [+]	2	0.01	BU	4820	II	—
3	—	—	—	—	—	Rear Seat Infotainment Display 2 LVDS (Low Voltage Differential Signaling) Signal [-]	3	0.01	WH	4821	II	—
BK	0.01	—	LVDS	I	—	Low Voltage Differential Signaling Cable	BK	—	—	—	—	—
LV-DS	—	—	—	—	—	Not Occupied	LV-DS	—	—	—	—	—

X333 Front Seat Wiring Harness - Passenger to Body Wiring Harness

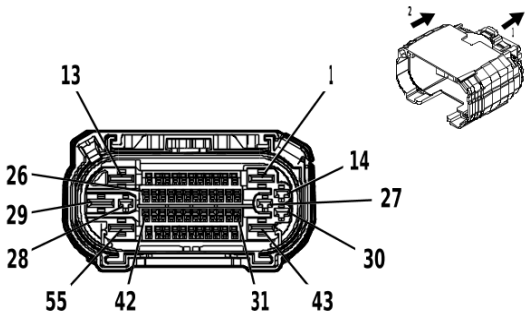

4992168

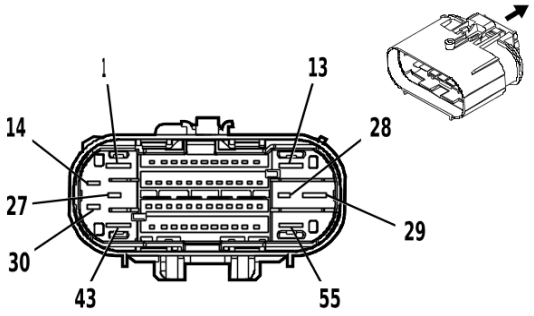

4993301

Connector Part Information

Harness Type: Front Seat Wiring Harness - Passenger

OEM Connector: 35327295

Service Connector: Service by Harness - See Part Catalog

Description: 55-Way F 1.2 OCS, 2.8, 6.3 CTS Series, Sealed(BK)

Connector Part Information

Harness Type: Body Wiring Harness

OEM Connector: 35501906

Service Connector: 84727364

Description: 55-Way M 1.2 OCS, 2.8, 6.3 CTS Series, Sealed(BK)

Terminal Part Information

Terminal Type ID	Terminated Lead	Diagnostic Test Probe	Terminal Removal Tool
I	Not required	J-35616-16 (L-GN)	No Tool Required
II	Not required	J-35616-35 (VT)	No Tool Required
III	Not required	J-35616-42 (RD)	No Tool Required
IV	Not required	J-35616-43 (RD)	No Tool Required
V	Not required	No Tool Required	No Tool Required
VI	84847992	J-35616-32 (OG)	J-38125-36
VII	84867140	J-35616-13 (BU)	J-38125-215A
VIII	84992391	J-35616-5 (PU)	J-38125-215A

X333 Front Seat Wiring Harness - Passenger to Body Wiring Harness

Pin	Size	Color	Circuit	Terminal Type ID	Option	Function	Pin	Size	Color	Circuit	Terminal Type ID	Option
1	2.5	BK	1250	III	—	Ground	1	2.5	BK	1250	VI	—
2 - 3	—	—	—	—	—	Not Occupied	2 - 3	—	—	—	—	—
4	0.75	RD / BU	3940	I	—	Battery Positive Voltage	4	0.75	RD / BU	3940	VII	—
5 - 6	—	—	—	—	—	Not Occupied	5 - 6	—	—	—	—	—
7	0.5	BU	4987	I	—	AUTOSAR CAN Bus [+] 1 Serial Data	7	0.35	BU	4987	VII	—
8	0.5	WH	4986	I	—	AUTOSAR CAN Bus [-] 1 Serial Data	8	0.35	WH	4986	VII	—
9	0.5	GN / VT	2857	I	—	Body Control Module LIN Bus 11	9	0.5	GN / VT	2857	VII	—
10	—	—	—	—	—	Not Occupied	10	—	—	—	—	—

X333 Front Seat Wiring Harness - Passenger to Body Wiring Harness (cont'd)

Pin	Size	Color	Circuit	Terminal Type ID	Option	Function	Pin	Size	Color	Circuit	Terminal Type ID	Option
11	0.35	BK / WH	1451	I	—	Signal Ground	11	0.75	BK / WH	1451	VII	—
12	0.75	RD / BN	3640	I	UW9	Battery Positive Voltage	12	0.75	RD / BN	3640	VII	UW9
13	0.75	RD / GN	6140	IV	—	Battery Positive Voltage	13	0.75	RD / GN	6140	VI	—
14	0.5	YE / GY	2079	II	—	Driver Seat Heating Temperature Sensor Signal	14	0.5	YE / GY	2079	VIII	—
15	0.75	BN / VT	2077	I	—	Driver Seat Heating Element Control	15	0.75	BN / VT	2077	VII	—
16	0.75	BN / BK	2078	I	—	Driver Seat Heating Element Low Reference	16	0.75	BN / BK	2078	VII	—
17	0.5	BK / YE	2080	I	—	Driver Heated Seat Thermistor Low Reference	17	0.5	BK / YE	2080	VII	—
18	0.5	BU	2425	I	—	Driver Seat Back Heating Temperature Sensor Signal	18	0.5	BU	2425	VII	—
19	0.75	BN	2432	I	—	Driver Seat Back Heating Element Control	19	0.75	BN	2432	VII	—
20	0.5	GN / VT	5906	I	—	Driver Seat Blower Motor Control 1	20	0.5	GN / VT	5906	VII	—
21	0.5	VT / WH	1139	I	—	Run/Crank Ignition 1 Voltage	21	0.5	VT / WH	1139	VII	—
22	0.5	RD / GN	4440	I	—	Battery Positive Voltage	22	0.5	RD / GN	4440	VII	—
23	—	—	—	—	—	Not Occupied	23	—	—	—	—	—
24	0.35	GY / OG	3946	I	—	Passenger Automatic Locking Retractor Switch Low Reference	24	0.5	GY / OG	3946	VII	—
25	0.35	OG / BN	3947	I	—	Passenger Automatic Locking Retractor Switch Signal	25	0.5	OG / BN	3947	VII	—
26	0.35	BK / WH	1351	I	—	Signal Ground	26	0.5	BK / WH	1351	VII	—
27	0.75	RD / BN	6640	II	—	Battery Positive Voltage	27	0.75	RD / BN	6640	VIII	—
28	—	—	—	—	—	Not Occupied	28	—	—	—	—	—

X333 Front Seat Wiring Harness - Passenger to Body Wiring Harness (cont'd)

Pin	Size	Color	Circuit	Terminal Type ID	Option	Function	Pin	Size	Color	Circuit	Terminal Type ID	Option
29	2.5	RD / YE	7440	III	—	Battery Positive Voltage	29	2.5	RD / YE	7440	VI	—
30	—	—	—	—	—	Not Occupied	30	—	—	—	—	—
31	0.5	GY	157	I	—	Interior Lamp Control	31	0.5	GY	157	VII	—
32	0.5	OG / VT	1362	I	—	Passenger Seat Belt Switch Signal	32	0.5	OG / VT	1362	VII	—
33	0.5	BK / OG	1363	I	—	Driver Seat Belt Switch Low Reference	33	0.5	BK / OG	1363	VII	—
34	—	—	—	—	—	Not Occupied	34	—	—	—	—	—
35	0.5	OG / GY	4956	V	—	Passenger Seat Back Air Bag High Control	35	0.5	OG / GY	4956	VII	—
36	0.5	BU / OG	4957	V	—	Passenger Seat Back Air Bag Low Control	36	0.5	BU / OG	4957	VII	—
37	0.35	GN / YE	7066	I	—	Entertainment Remote Enable Signal	37	0.35	GN / YE	7066	VII	—
38 - 51	—	—	—	—	—	Not Occupied	38 - 51	—	—	—	—	—
52	0.5	BU	4987	I	—	AUTOSAR CAN Bus [+] 1 Serial Data	52	0.5	BU	4987	VII	—
53	0.5	WH	4986	I	—	AUTOSAR CAN Bus [-] 1 Serial Data	53	0.5	WH	4986	VII	—
54 - 55	—	—	—	—	—	Not Occupied	54 - 55	—	—	—	—	—

X334E Front Seat Wiring Harness - Passenger to Body Wiring Harness

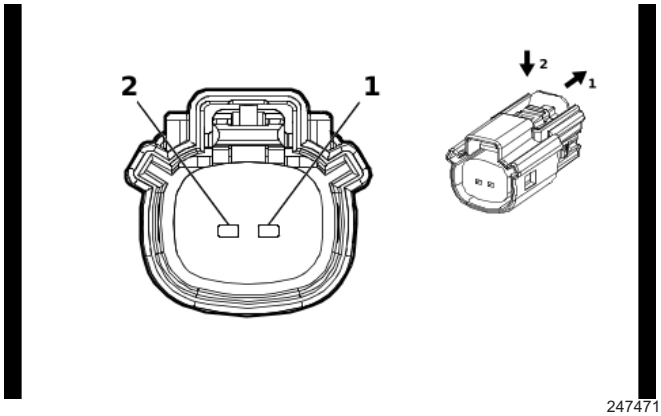

2474713

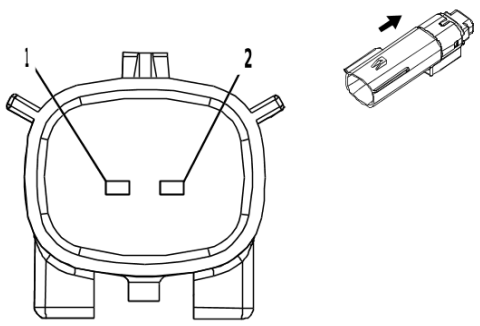

3338703

Connector Part Information

Harness Type: Front Seat Wiring Harness - Passenger
OEM Connector: 33471-0206
Service Connector: Service by Harness - See Part Catalog
Description: 2-Way F 1.5 Series, Sealed(BK)

Connector Part Information

Harness Type: Body Wiring Harness
OEM Connector: 33481-2201
Service Connector: 84867146
Description: 2-Way M 1.5 MX Series, Sealed(BK)

Terminal Part Information

Terminal Type ID	Terminated Lead	Diagnostic Test Probe	Terminal Removal Tool
I	Not required	J-35616-2A (GY)	No Tool Required
II	Not required	J-35616-3 (GY)	No Tool Required

X334E Front Seat Wiring Harness - Passenger to Body Wiring Harness

Pin	Size	Color	Circuit	Terminal Type ID	Option	Function	Pin	Size	Color	Circuit	Terminal Type ID	Option
1	0.35	VT	7212	I	—	Ethernet Bus 5 [-]	1	0.35	VT	7212	II	—
2	0.35	VT / WH	7213	I	—	Ethernet Bus 5 [+]	2	0.35	VT / WH	7213	II	—

X334L Front Seat Wiring Harness - Passenger to Body Wiring Harness (UW9)

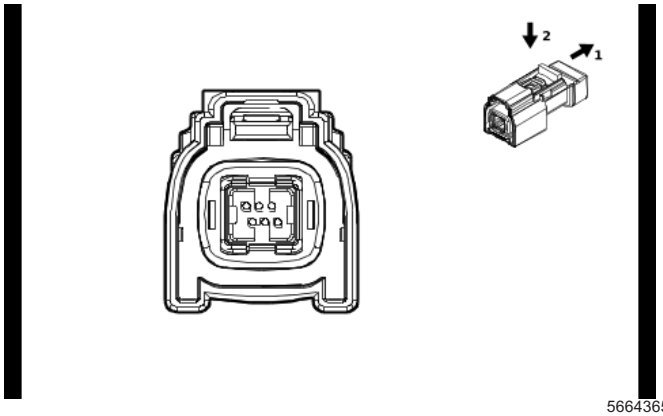

5664365

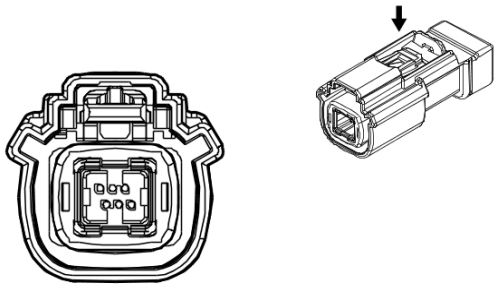

4477145

Connector Part Information

Harness Type: Front Seat Wiring Harness - Passenger LVDS

OEM Connector: 13527114

Service Connector: Service by Cable Assembly — See Part Catalog

Description: 6-Way F HSAL-2 Series, Sealed(GY)

Connector Part Information

Harness Type: Body Wiring Harness LVDS

OEM Connector: 13586870

Service Connector: Service by Cable Assembly — See Part Catalog

Description: 6-Way M HSAL-2 Series, Sealed(BK)

Terminal Part Information

Terminal Type ID	Terminated Lead	Diagnostic Test Probe	Terminal Removal Tool
I	Not required	No Tool Required	No Tool Required

X334L Front Seat Wiring Harness - Passenger to Body Wiring Harness (UW9)

Pin	Size	Color	Circuit	Terminal Type ID	Option	Function	Pin	Size	Color	Circuit	Terminal Type ID	Option
1	0.01	Bare	4828	I	—	Rear Seat Infotainment Auxiliary Audio/Video Jack LVDS (Low Voltage Differential Signaling) Low Reference	1	—	—	—	—	—
2	0.01	BU	4829	I	—	Rear Seat Infotainment Auxiliary Audio/Video Jack LVDS (Low Voltage Differential Signaling) Signal [+]	2	—	—	—	—	—
3	0.01	WH	4830	I	—	Rear Seat Infotainment Auxiliary Audio/Video Jack LVDS (Low Voltage Differential Signaling) Signal [-]	3	—	—	—	—	—

X334L Front Seat Wiring Harness - Passenger to Body Wiring Harness (UW9) (cont'd)

Pin	Size	Color	Circuit	Terminal Type ID	Option	Function	Pin	Size	Color	Circuit	Terminal Type ID	Option
4	0.01	RD	2466	I	—	Rear Seat Infotainment Auxiliary Audio/Video Jack LVDS (Low Voltage Differential Signaling) B Signal [+]	4	—	—	—	—	—
5	0.01	BK	2467	I	—	Rear Seat Infotainment Auxiliary Audio/Video Jack LVDS (Low Voltage Differential Signaling) 2 Signal [-]	5	—	—	—	—	—
6	0.01	Bare	2465	I	—	Rear Seat Infotainment Auxiliary Audio/Video Jack LVDS (Low Voltage Differential Signaling) B Low Reference	6	—	—	—	—	—
BK	—	—	—	—	—	Low Voltage Differential Signaling Cable	BK	—	—	LVDS	II	—
LVDS	—	—	—	—	—	Not Occupied	LVDS	—	—	—	—	—

X334U Body Wiring Harness to Front Seat Wiring Harness - Passenger (UW9)

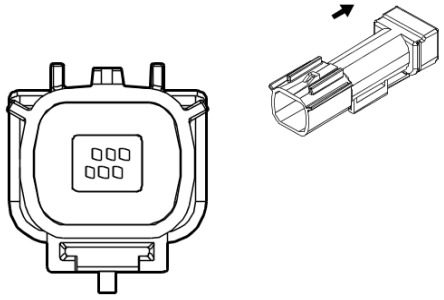

4477041

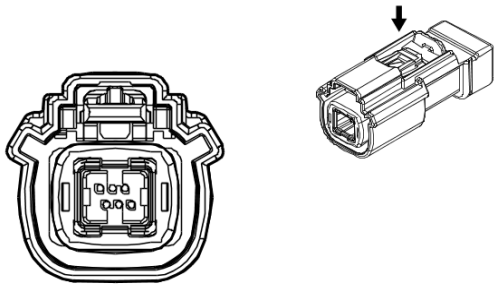

4477145

Connector Part Information

Harness Type: Body Wiring Harness LVDS

OEM Connector: 13581666

Service Connector: Service by Cable Assembly — See Part Catalog

Description: 6-Way F HSAL-2 Series, Sealed(BK)

Connector Part Information

Harness Type: Front Seat Wiring Harness - Passenger LVDS

OEM Connector: 13586870

Service Connector: Service by Cable Assembly — See Part Catalog

Description: 6-Way M HSAL-2 Series, Sealed(BK)

Terminal Part Information

Terminal Type ID	Terminated Lead	Diagnostic Test Probe	Terminal Removal Tool
I	Not required	No Tool Required	No Tool Required

X334U Body Wiring Harness to Front Seat Wiring Harness - Passenger (UW9)

Pin	Size	Color	Circuit	Terminal Type ID	Option	Function	Pin	Size	Color	Circuit	Terminal Type ID	Option
BK	—	—	LVDS	I	—	Low Voltage Differential Signaling Cable	BK	—	—	—	—	—
LV-DS	—	—	—	—	—	Not Occupied	LV-DS	—	—	—	—	—

X340 Body Wiring Harness to Rear Seat Wiring Harness - 2nd Row Left

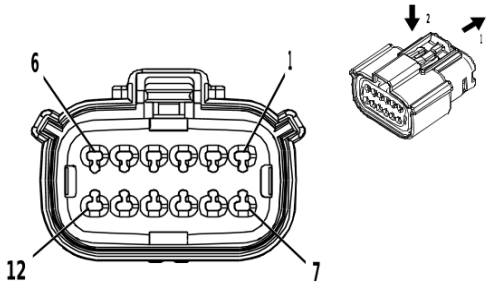

2871860

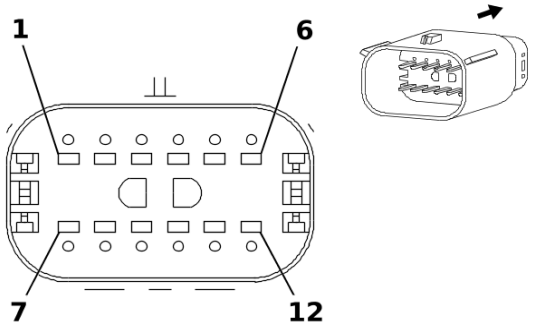

1825167

Connector Part Information

Harness Type: Body Wiring Harness
OEM Connector: 13586054
Service Connector: 19352907
Description: 12-Way F 1.5 MX Series, Sealed(BK)

Connector Part Information

Harness Type: Rear Seat Wiring Harness - 2nd Row Left
OEM Connector: 33482-6260
Service Connector: Service by Harness - See Part Catalog
Description: 12-Way M 1.5 MX Series, Sealed(BK)

Terminal Part Information

Terminal Type ID	Terminated Lead	Diagnostic Test Probe	Terminal Removal Tool
I	19368973	J-35616-2A (GY)	J-38125-217
II	Not required	J-35616-3 (GY)	No Tool Required

X340 Body Wiring Harness to Rear Seat Wiring Harness - 2nd Row Left

Pin	Size	Color	Circuit	Terminal Type ID	Option	Function	Pin	Size	Color	Circuit	Terminal Type ID	Option
1	0.75	RD / GY	6240	I	—	Battery Positive Voltage	1	0.75	RD / GY	6240	II	—
2	0.75	GY	2294	I	—	Left Rear Seat Cushion Heating Element Control	2	0.75	GY	2294	II	—
3	0.75	BU / BK	2446	I	—	Left Rear Seat Heating Element Low Reference	3	0.75	BU / BK	2446	II	—
4	0.5	WH / BU	7047	I	—	Left Rear Seat Cushion Temperature Sensor Signal	4	0.5	WH / BU	7047	II	—
5	0.5	BU / WH	7048	I	—	Left Rear Cushion Thermistor Feedback Signal	5	0.5	BU / WH	7048	II	—
6	0.5	GN	6808	I	—	Left Rear Folding Seat Motor Control	6	0.5	GN	6808	II	—
7	0.75	BK	2050	I	—	Ground	7	0.75	BK	1150	II	—

X340 Body Wiring Harness to Rear Seat Wiring Harness - 2nd Row Left (cont'd)

Pin	Size	Color	Circuit	Terminal Type ID	Option	Function	Pin	Size	Color	Circuit	Terminal Type ID	Option
8	0.5	YE / OG	5161	I	—	Left Rear Seat Belt Switch Signal	8	0.5	YE / OG	5161	II	—
9	0.5	BK / OG	1363	I	—	Driver Seat Belt Switch Low Reference	9	0.5	BK / OG	1363	II	—
10	0.5	BU / OG	5163	I	—	Rear Center Seat Belt Switch Signal	10	0.5	BU / OG	5163	II	—
11 - 12	—	—	—	—	—	Not Occupied	11 - 12	—	—	—	—	—

X344 Body Wiring Harness to Rear Seat Wiring Harness - 2nd Row Right

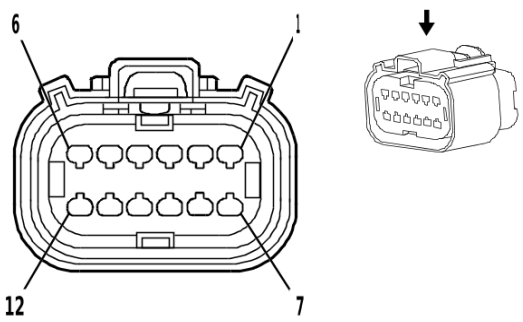

2913819

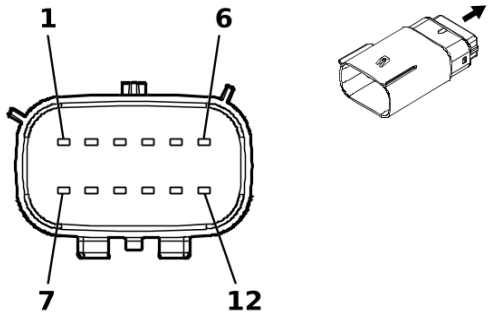

5187933

Connector Part Information

Harness Type: Body Wiring Harness
OEM Connector: 13586052
Service Connector: 19333239
Description: 12-Way F 1.5 MX Series, Sealed(D-GY)

Connector Part Information

Harness Type: Rear Seat Wiring Harness - 2nd Row Right
OEM Connector: 33482-6261
Service Connector: Service by Harness - See Part Catalog
Description: 12-Way M 1.5 MX Series, Sealed(GY)

Terminal Part Information

Terminal Type ID	Terminated Lead	Diagnostic Test Probe	Terminal Removal Tool
I	85528055	J-35616-14 (GN)	J-38125-217
II	Not required	J-35616-3 (GY)	No Tool Required

X344 Body Wiring Harness to Rear Seat Wiring Harness - 2nd Row Right

Pin	Size	Color	Circuit	Terminal Type ID	Option	Function	Pin	Size	Color	Circuit	Terminal Type ID	Option
1	0.75	RD / WH	5740	I	—	Battery Positive Voltage	1	0.75	RD / WH	5740	II	—
2	0.75	RD / BU	6740	I	—	Battery Positive Voltage	2	0.75	RD / BU	6740	II	—
3	0.75	GY	2294	I	—	Left Rear Seat Cushion Heating Element Control	3	0.75	GY	2294	II	—
4	0.5	GN / VT	2857	I	—	Body Control Module LIN Bus 11	4	0.5	GN / VT	2857	II	—
5	0.75	RD / GY	6240	I	—	Battery Positive Voltage	5	0.75	RD / GY	6240	II	—
6	0.5	BN / WH	6809	I	—	Right Rear Folding Seat Motor Control	6	0.75	BN / WH	6809	II	—
7	0.75	BU / BK	2446	I	—	Left Rear Seat Heating Element Low Reference	7	0.75	BU / BK	2446	II	—
8	0.75	BK	1450	I	—	Ground	8	0.75	BK	1450	II	—
9	0.5	WH / BU	7047	I	—	Left Rear Seat Cushion Temperature Sensor Signal	9	0.5	WH / BU	7047	II	—

X344 Body Wiring Harness to Rear Seat Wiring Harness - 2nd Row Right (cont'd)

Pin	Size	Color	Circuit	Terminal Type ID	Option	Function	Pin	Size	Color	Circuit	Terminal Type ID	Option
10	0.5	BU / WH	7048	I	—	Left Rear Cushion Thermistor Feedback Signal	10	0.5	BU / WH	7048	II	—
11	0.5	BN / OG	5162	I	—	Right Rear Seat Belt Switch Signal	11	0.5	BN / OG	5162	II	—
12	0.5	BK / OG	1363	I	—	Driver Seat Belt Switch Low Reference	12	0.5	BK / OG	1363	II	—

X346A Body Wiring Harness to 3rd Row Seat Wiring Harness (AS8)

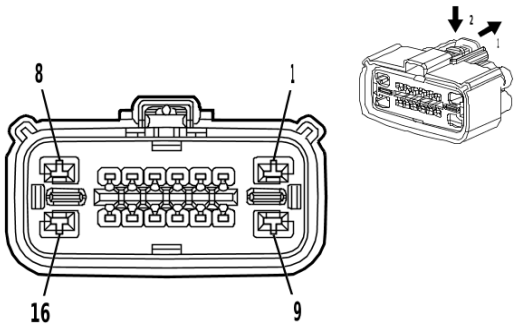

4283035

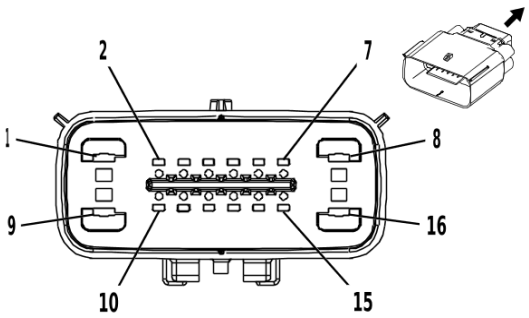

2373686

Connector Part Information

Harness Type: Body Wiring Harness
OEM Connector: 34985-4010
Service Connector: 19352906
Description: 16-Way F 1.5, 2.8 MX Series, Sealed(BK)

Connector Part Information

Harness Type: 3rd Row Seat Wiring Harness
OEM Connector: 34986-2096
Service Connector: Service by Harness - See Part Catalog
Description: 16-Way M 1.5, 2.8 MX Series, Sealed(BK)

Terminal Part Information

Terminal Type ID	Terminated Lead	Diagnostic Test Probe	Terminal Removal Tool
I	13576377	J-35616-35 (VT)	J-38125-12A
II	85528055	J-35616-14 (GN)	J-38125-217
III	Not required	J-35616-3 (GY)	No Tool Required
IV	Not required	J-35616-5 (PU)	No Tool Required

X346A Body Wiring Harness to 3rd Row Seat Wiring Harness (AS8)

Pin	Size	Color	Circuit	Terminal Type ID	Option	Function	Pin	Size	Color	Circuit	Terminal Type ID	Option
1	2.5	RD / GY	7840	I	—	Battery Positive Voltage	1	2.5	RD / GY	7840	IV	—
2	—	—	—	—	—	Not Occupied	2	—	—	—	—	—
3	0.5	GN / BU	2856	II	—	Body Control Module LIN Bus 10	3	0.5	GN / BU	2856	III	—
4	0.5	BK / BU	5474	II	—	3rd Row Seat Sensor Low Reference	4	0.75	BK / BU	5474	III	—
5	—	—	—	—	—	Not Occupied	5	—	—	—	—	—
6	0.5	YE / BU	2698	II	—	Left 3rd Row Seat Recline Switch Signal	6	0.5	YE / BU	2698	III	—
7	0.5	GN / GY	2699	II	—	Right 3rd Row Seat Recline Switch Signal	7	0.5	GN / GY	2699	III	—
8	—	—	—	—	—	Not Occupied	8	—	—	—	—	—
9	2.5	BK	2050	I	—	Ground	9	2.5	BK	2050	IV	—

X346A Body Wiring Harness to 3rd Row Seat Wiring Harness (AS8) (cont'd)

Pin	Size	Color	Circuit	Terminal Type ID	Option	Function	Pin	Size	Color	Circuit	Terminal Type ID	Option
10	—	—	—	—	—	Not Occupied	10	—	—	—	—	—
11	0.5	GN / OG	3516	II	—	3rd Row Left Seat Belt Switch Signal	11	0.5	GN / OG	3516	III	—
12	0.5	VT / OG	3517	II	—	3rd Row Right Seat Belt Switch Signal	12	0.5	VT / OG	3517	III	—
13	0.5	OG / GN	3700	II	—	3rd Row Center Seat Belt Switch Signal	13	0.5	OG / GN	3700	III	—
14	—	—	—	—	—	Not Occupied	14	—	—	—	—	—
15	0.5	BK / OG	1363	II	—	Driver Seat Belt Switch Low Reference	15	0.5	BK / OG	1363	III	—
16	—	—	—	—	—	Not Occupied	16	—	—	—	—	—

X353 Fuel Tank Filler Door Lock Release Wiring Harness to Chassis Wiring Harness

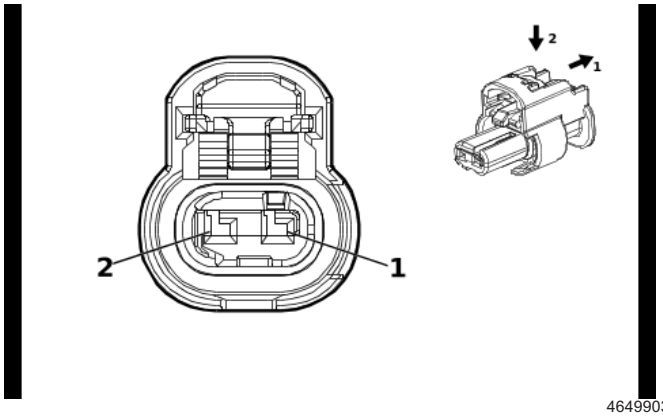

4649903

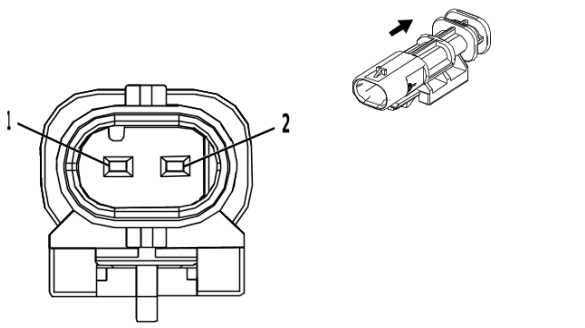

2474755

Connector Part Information

Harness Type: Fuel Tank Filler Door Lock Release Wiring Harness

OEM Connector: 1-2296694-1

Service Connector: Service by Harness - See Part Catalog

Description: 2-Way F 1.2 MCON Series, Sealed(BK)

Connector Part Information

Harness Type: Chassis Wiring Harness

OEM Connector: 2203314-1

Service Connector: 85533165

Description: 2-Way M 1.2 Multilock Series, Sealed(BK)

Terminal Part Information

Terminal Type ID	Terminated Lead	Diagnostic Test Probe	Terminal Removal Tool
I	Not required	J-35616-16 (LT GN)	No Tool Required
II	Not required	J-35616-17 (LT GN)	No Tool Required

X353 Fuel Tank Filler Door Lock Release Wiring Harness to Chassis Wiring Harness

Pin	Size	Color	Circuit	Terminal Type ID	Option	Function	Pin	Size	Color	Circuit	Terminal Type ID	Option
1	0.5	BU / BK	2679	I	—	Lock Actuators Unlock Control 1	1	0.5	WH	2679	II	—
2	0.5	VT / GY	2689	I	—	Fuel Door Actuator Lock Control	2	0.5	BU	2689	II	—

X370A Headlining Trim Panel Wiring Harness to Instrument Panel Wiring Harness

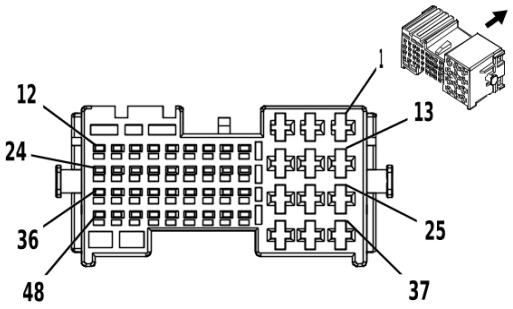

3277913

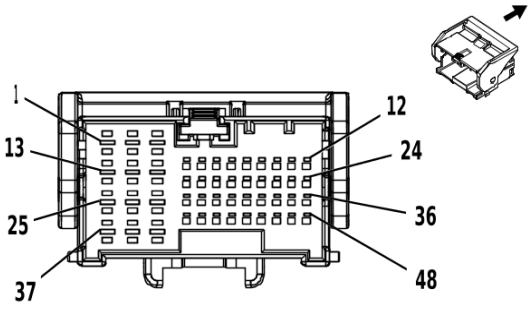

3277901

Connector Part Information

Harness Type: Headlining Trim Panel Wiring Harness
OEM Connector: 2109452-2
Service Connector: 19329739
Description: 48-Way F 1.2 MCON, 2.8 MCP Series(BK)

Connector Part Information

Harness Type: Instrument Panel Wiring Harness
OEM Connector: 5-2109455-2
Service Connector: 19329740
Description: 48-Way M 1.2 MCON, 2.8 MCP Series(BK)

Terminal Part Information

Terminal Type ID	Terminated Lead	Diagnostic Test Probe	Terminal Removal Tool
I	13575435	J-35616-4A (PU)	J-38125-557
II	19329758	J-35616-12 (BU)	J-38125-215A
III	13575574	J-35616-5 (PU)	J-38125-215A
IV	19329749	J-35616-13 (BU)	J-38125-215A

X370A Headlining Trim Panel Wiring Harness to Instrument Panel Wiring Harness

Pin	Size	Color	Circuit	Terminal Type ID	Option	Function	Pin	Size	Color	Circuit	Terminal Type ID	Option
1	2.5	RD / BU	4540	I	—	Battery Positive Voltage	1	2.5	RD / BU	4540	III	—
2	0.35	BU / YE	4979	I	—	AUTOSAR CAN Bus [+] 2 Serial Data	2	0.35	BU / YE	4979	III	—
3	0.35	WH	4978	I	—	AUTOSAR CAN Bus [-] 2 Serial Data	3	0.35	WH	4978	III	—
4	0.5	GN / BK	3008	II	—	Active Noise Cancellation Microphone 1 Feedback Signal	4	0.5	GN / BK	3008	IV	—
5	0.5	GN / BN	3005	II	—	Active Noise Cancellation Microphone 1 Signal	5	0.5	GN / BN	3005	IV	—
6	0.35	BU / GY	4105	II	—	AUTOSAR CAN Bus [+] 8 Serial Data	6	0.35	BU / GY	4105	IV	—
7	0.35	WH / GY	4104	II	—	AUTOSAR CAN Bus [-] 8 Serial Data	7	0.35	WH / GY	4104	IV	—

X370A Headlining Trim Panel Wiring Harness to Instrument Panel Wiring Harness (cont'd)

Pin	Size	Color	Circuit	Terminal Type ID	Option	Function	Pin	Size	Color	Circuit	Terminal Type ID	Option
8	0.35	BU / VT	8900	II	—	Police Microphone Input Signal	8	—	—	—	—	—
9	0.35	YE / VT	2516	II	—	Telematics Switch Green LED Indicator Control	9	0.35	YE / VT	2516	IV	—
10	0.35	GN / WH	2514	II	—	Telematics Switch Signal	10	0.35	GN / WH	2514	IV	—
11	0.35	GN / BK	2515	II	—	Telematics Switch Supply Voltage	11	0.5	GN / BK	2515	IV	—
12	0.35	BN / WH	2517	II	—	Telematics Switch Red LED Indicator Control	12	0.35	BN / WH	2517	IV	—
13	0.5	RD / YE	240	I	—	Battery Positive Voltage	13	1	RD / YE	240	III	—
14	0.35	BU / GY	4105	I	—	AUTOSAR CAN Bus [+] 8 Serial Data	14	0.35	BU / GY	4105	III	—
15	0.35	WH / GY	4104	I	—	AUTOSAR CAN Bus [-] 8 Serial Data	15	0.35	WH / GY	4104	III	—
16 - 17	—	—	—	—	—	Not Occupied	16 - 17	—	—	—	—	—
18	0.35	GN / WH	2854	II	—	Body Control Module LIN Bus 8	18	0.35	GN / WH	2854	IV	—
19	0.35	WH	4978	II	—	AUTOSAR CAN Bus [-] 2 Serial Data	19	0.5	WH	4978	IV	—
20	0.35	BU / YE	4979	II	—	AUTOSAR CAN Bus [+] 2 Serial Data	20	0.5	BU / YE	4979	IV	—
21	0.5	BU	655	II	—	Cellular Telephone Microphone Signal	21	0.35	BU	655	IV	—
22	0.5	BK / BN	654	II	—	Cellular Telephone Microphone Low Reference	22	0.35	BK / BN	654	IV	—
23	0.35	GN / WH	24	II	—	Backup Lamp Control	23	0.5	GN / WH	24	IV	—
24	—	—	—	—	—	Not Occupied	24	—	—	—	—	—
25	0.5	BK	1850	I	—	Ground	25	0.5	BK	1050	III	—
26	0.5	VT / WH	239	I	—	Run/Crank Ignition 1 Voltage	26	0.5	VT / WH	239	III	—
27	—	—	—	—	—	Not Occupied	27	—	—	—	—	—
28	0.35	BU	8579	II	—	Automotive Audio Bus A2B Serial Data 1 [-]	28	—	—	—	—	—

X370A Headlining Trim Panel Wiring Harness to Instrument Panel Wiring Harness (cont'd)

Pin	Size	Color	Circuit	Terminal Type ID	Option	Function	Pin	Size	Color	Circuit	Terminal Type ID	Option
29	0.35	GN	8580	II	—	Automotive Audio Bus A2B Serial Data 1 [+]	29	—	—	—	—	—
30	0.5	VT / YE	7043	II	—	Microphone [+] Signal	30	0.35	VT / YE	7043	IV	—
31	0.5 0.35	BK / WH BK / WH	1851 1851	II II	(CE1-DD8-DRZ-UEU-UGN) (DD8/DRZ/UEU/UGN)	Signal Ground Signal Ground	31	0.35	BK / WH	1851	IV	—
32	0.35	BK / YE	1691	II	—	Automatic Day/Night Mirror Low Reference	32	0.35	BK / YE	1691	IV	—
33	0.35	YE / WH	1690	II	—	Mirror Dimming Signal	33	0.35	YE / WH	1690	IV	—
34	0.35	BU / WH	8899	II	—	Police Microphone Data Signal	34	—	—	—	—	—
35	0.75	BN	8569	II	—	Right Rear Headliner Speaker [-] Control	35	—	—	—	—	—
36	0.75	VT / GY	8570	II	—	Right Rear Headliner Speaker [+] Control	36	—	—	—	—	—
37	2.5	BK	1850	I	—	Ground	37	2.5	BK	1050	III	—
38	0.5	GN / WH	4115	I	—	Body Control Module LIN Bus 5	38	0.35	GN / WH	4115	III	—
39	—	—	—	—	—	Not Occupied	39	—	—	—	—	—
40	0.35	GN	8580	II	—	Automotive Audio Bus A2B Serial Data 1 [+]	40	—	—	—	—	—
41	0.35	BU	8579	II	—	Automotive Audio Bus A2B Serial Data 1 [-]	41	—	—	—	—	—
42	0.5	BU / BK	7044	II	—	Microphone [-]	42	0.35	BU / BK	7044	IV	—
43	0.75	BU / WH	8571	II	—	Left Front Headliner Speaker [-] Control	43	—	—	—	—	—
44	0.75	GN / BN	8572	II	—	Left Front Headliner Speaker [+] Control	44	—	—	—	—	—
45	0.75	GY / GN	8574	II	—	Right Front Headliner Speaker [+] Control	45	—	—	—	—	—

X370A Headlining Trim Panel Wiring Harness to Instrument Panel Wiring Harness (cont'd)

Pin	Size	Color	Circuit	Terminal Type ID	Option	Function	Pin	Size	Color	Circuit	Terminal Type ID	Option
46	0.75	BN / VT	8573	II	—	Right Front Headliner Speaker [-] Control	46	—	—	—	—	—
47	0.75	GN / WH	8567	II	—	Left Rear Headliner Speaker [-] Control	47	—	—	—	—	—
48	0.75	GY / BN	8568	II	—	Left Rear Headliner Speaker [+] Control	48	—	—	—	—	—

X370B Headlamp Automatic Control Ambient Light Sensor Wiring Harness to Headlining Trim Panel Wiring Harness

—

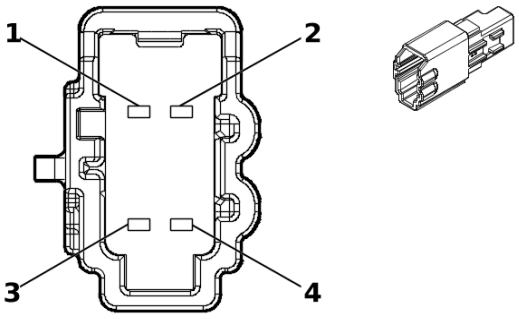

5360963

Connector Part Information

Harness Type: Headlamp Automatic Control Ambient Light Sensor Wiring Harness
OEM Connector: Not Available
Service Connector: Service by Harness - See Part Catalog
Description: 4-Way F

Connector Part Information

Harness Type: Headlining Trim Panel Wiring Harness
OEM Connector: 13530132
Service Connector: 84847258
Description: 4-Way M 1.2 MCON Series(BK)

Terminal Part Information

Terminal Type ID	Terminated Lead	Diagnostic Test Probe	Terminal Removal Tool
I	Not Available	No Tool Required	Not Available
II	Not required	J-35616-17 (LT GN)	No Tool Required

X370B Headlamp Automatic Control Ambient Light Sensor Wiring Harness to Headlining Trim Panel Wiring Harness

Pin	Size	Color	Circuit	Terminal Type ID	Option	Function	Pin	Size	Color	Circuit	Terminal Type ID	Option
1	0.5	RD / YE	240	I	—	Battery Positive Voltage	1	0.5	RD / YE	240	II	—
2	0.5	GN / WH	4115	I	—	Body Control Module LIN Bus 5	2	0.5	GN / WH	4115	II	—
3	0.5	BK / WH	1851	I	—	Signal Ground	3	0.5	BK / WH	1851	II	—

X372 Headlining Trim Panel Wiring Harness to Headlining Trim Panel Jumper Wiring Harness

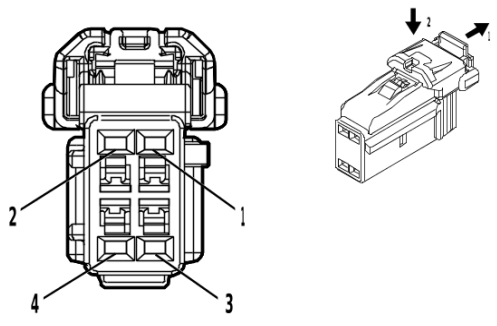

4872683

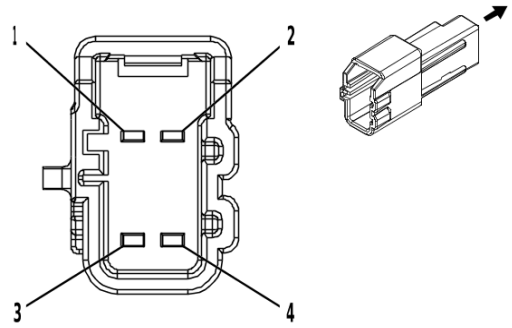

4210503

Connector Part Information

Harness Type: Headlining Trim Panel Wiring Harness
OEM Connector: 13533335
Service Connector: 19369633
Description: 4-Way F 1.2 Series(BK)

Connector Part Information

Harness Type: Headlining Trim Panel Jumper Wiring Harness
OEM Connector: Not Available
Service Connector: Service by Harness - See Part Catalog
Description: 4-Way M (BK)

Terminal Part Information

Terminal Type ID	Terminated Lead	Diagnostic Test Probe	Terminal Removal Tool
I	Not required	J-35616-16 (LT GN)	No Tool Required
II	Not required	No Tool Required	No Tool Required

X372 Headlining Trim Panel Wiring Harness to Headlining Trim Panel Jumper Wiring Harness

Pin	Size	Color	Circuit	Terminal Type ID	Option	Function	Pin	Size	Color	Circuit	Terminal Type ID	Option
1	0.35	BK	1850	I	—	Ground	1	0.35	BK	1850	II	—
2	0.35	BU / WH	8899	I	—	Police Microphone Data Signal	2	0.35	BU / WH	8899	II	—
3	0.35	BU / VT	8900	I	—	Police Microphone Input Signal	3	0.35	BU / VT	8900	II	—
4	—	—	—	—	—	Not Occupied	4	—	—	—	—	—

X375 Sunroof Wiring Harness to Headlining Trim Panel Wiring Harness (C3U)

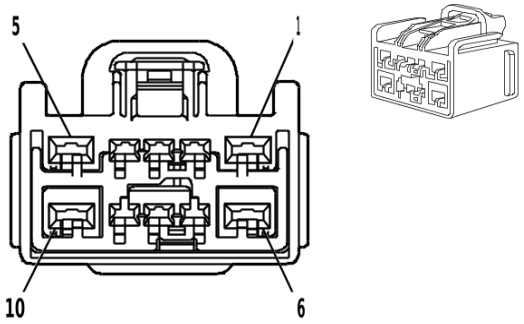

1851891

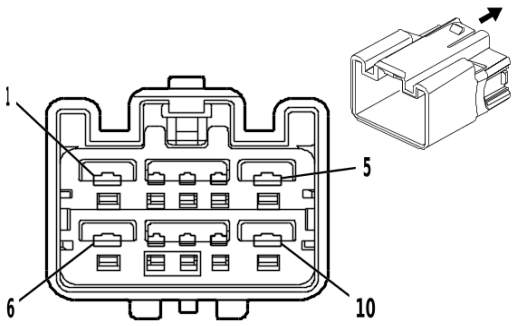

1851890

Connector Part Information

Harness Type: Sunroof Wiring Harness
OEM Connector: Not Available
Service Connector: Service by Harness - See Part Catalog
Description: 10-Way F

Connector Part Information

Harness Type: Headlining Trim Panel Wiring Harness
OEM Connector: 7282-6459-40
Service Connector: 89047070
Description: 10-Way M YESC Kaizen Series(L-GY)

Terminal Part Information

Terminal Type ID	Terminated Lead	Diagnostic Test Probe	Terminal Removal Tool
I	Not required	No Tool Required	No Tool Required
II	13578907	J-35616-3 (GY)	J-38125-215A
III	13578908	J-35616-5 (PU)	J-38125-11A

X375 Sunroof Wiring Harness to Headlining Trim Panel Wiring Harness (C3U)

Pin	Size	Color	Circuit	Terminal Type ID	Option	Function	Pin	Size	Color	Circuit	Terminal Type ID	Option
1	2.5	RD / BU	4540	I	—	Battery Positive Voltage	1	2.5	RD / BU	4540	III	—
2 - 4	—	—	—	—	—	Not Occupied	2 - 4	—	—	—	—	—
5	2.5	BK	1850	I	—	Ground	5	2.5	BK	1850	III	—
6	—	—	—	—	—	Not Occupied	6	—	—	—	—	—
7	0.35	GN / WH	2854	I	—	Body Control Module LIN Bus 8	7	0.35	GN / WH	2854	II	—
8 - 10	—	—	—	—	—	Not Occupied	8 - 10	—	—	—	—	—

X385 Headlining Trim Panel Wiring Harness to Beacon Wiring Harness

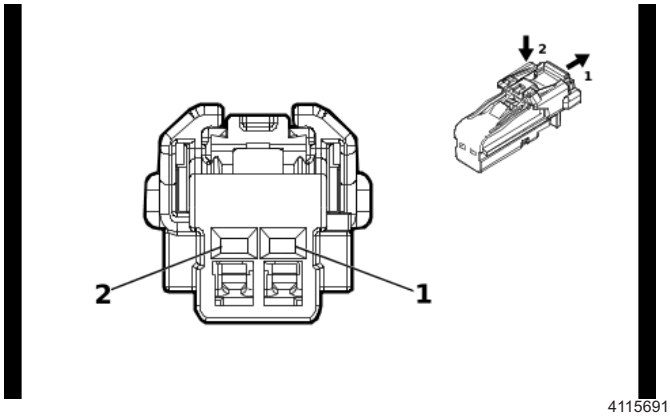

4115691

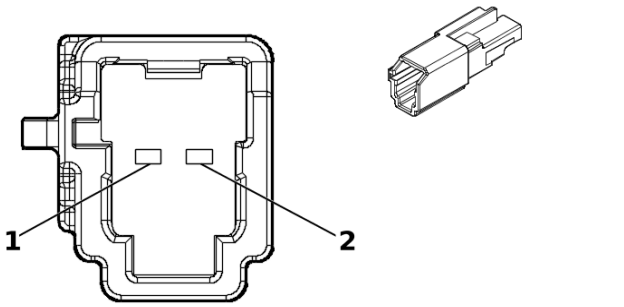

5355341

Connector Part Information

Harness Type: Headlining Trim Panel Wiring Harness
OEM Connector: 13532422
Service Connector: 19352066
Description: 2-Way F 1.2 MCON Series(BK)

Connector Part Information

Harness Type: Beacon Wiring Harness
OEM Connector: Not Available
Service Connector: Service by Harness - See Part Catalog
Description: 2-Way M (BK)

Terminal Part Information

Terminal Type ID	Terminated Lead	Diagnostic Test Probe	Terminal Removal Tool
I	Not required	J-35616-16 (LT GN)	No Tool Required
II	Not required	No Tool Required	No Tool Required

X385 Headlining Trim Panel Wiring Harness to Beacon Wiring Harness

Pin	Size	Color	Circuit	Terminal Type ID	Option	Function	Pin	Size	Color	Circuit	Terminal Type ID	Option
1	0.5	BK	1850	I	—	Ground	1	0.5	BK	1850	II	—
2	0.5	RD / YE	240	I	—	Battery Positive Voltage	2	0.5	RD / YE	240	II	—

X396 Instrument Panel Wiring Harness to Antenna Coax

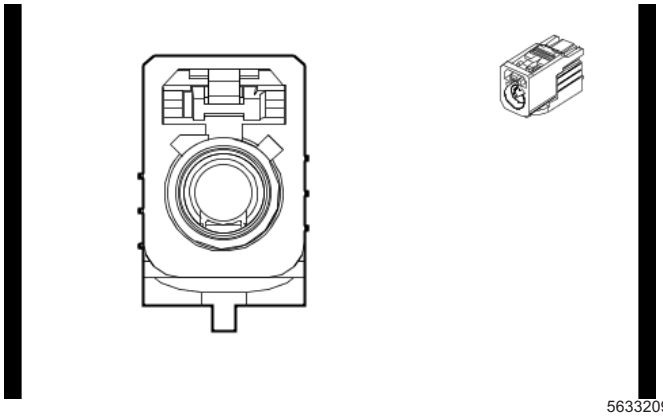

5633209

—

Connector Part Information

Harness Type: Instrument Panel Wiring Harness COAX

OEM Connector: 13516408

Service Connector: Service by Cable Assembly — See Part Catalog

Description: 1-Way F Coax Type(BK)

Connector Part Information

Harness Type: Antenna Coax

OEM Connector: Not Available

Service Connector: Service by Cable Assembly — See Part Catalog

Description: 1-Way M (BK)

Terminal Part Information

Terminal Type ID	Terminated Lead	Diagnostic Test Probe	Terminal Removal Tool
I	Not required	No Tool Required	No Tool Required

X396 Instrument Panel Wiring Harness to Antenna Coax

Pin	Size	Color	Circuit	Terminal Type ID	Option	Function	Pin	Size	Color	Circuit	Terminal Type ID	Option
—	—	Coax Cable	—	I	—	(AM/FM) Antenna RF Signal	—	—	Coax Cable	—	I	—

X400 Chassis Wiring Harness to Body Wiring Harness

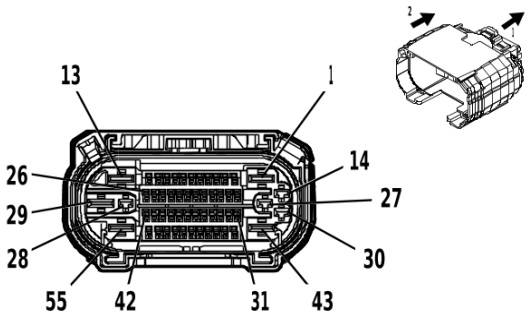

4992168

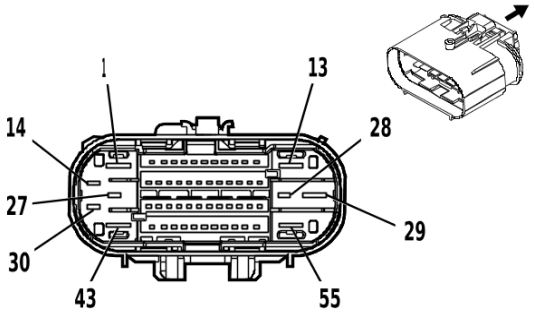

4993301

Connector Part Information

Harness Type: Chassis Wiring Harness

OEM Connector: 35333113

Service Connector: 19371185

Description: 55-Way F 1.2 OCS, 2.8, 6.3 CTS Series, Sealed(BK)

Connector Part Information

Harness Type: Body Wiring Harness

OEM Connector: 35501904

Service Connector: 84727364

Description: 55-Way M 1.2 OCS, 2.8, 6.3 CTS Series, Sealed(BK)

Terminal Part Information

Terminal Type ID	Terminated Lead	Diagnostic Test Probe	Terminal Removal Tool
I	19332901	J-35616-35 (VT)	J-38125-212
II	19370818	J-35616-12 (BU)	J-38125-215A
III	84634921	J-35616-42 (RD)	J-38125-212
IV	84847992	J-35616-32 (OG)	J-38125-36
V	84867140	J-35616-13 (BU)	J-38125-215A
VI	84992391	J-35616-5 (PU)	J-38125-215A

X400 Chassis Wiring Harness to Body Wiring Harness

Pin	Size	Color	Circuit	Terminal Type ID	Option	Function	Pin	Size	Color	Circuit	Terminal Type ID	Option
1	4	GN / VT	1988	III	—	Right Park Brake Motor Apply Control	1	2.5	GN / VT	1988	IV	—
2	0.75	GN / BU	2733	II	JL1	Electronic Brake Control Module LIN Bus 2	2	0.75	GN / BU	2733	V	JL1
3	0.5	BU / GY	4054	II	—	Private Serial Data Powertrain CAN Bus [-] Serial Data	3	0.35	BU / GY	4054	V	—
4	0.5	WH	4055	II	—	Private Serial Data Powertrain CAN Bus [+] Serial Data	4	0.35	WH	4055	V	—
5 - 8	—	—	—	—	—	Not Occupied	5 - 8	—	—	—	—	—
9	—	—	—	—	—	Run/Crank Ignition 1 Voltage	9	0.5	VT / WH	639	V	—

X400 Chassis Wiring Harness to Body Wiring Harness (cont'd)

Pin	Size	Color	Circuit	Terminal Type ID	Option	Function	Pin	Size	Color	Circuit	Terminal Type ID	Option
10	0.5	WH / VT	6567	II	—	Rear Turn Signal Lamp Feedback Signal	10	0.35	WH / VT	6567	V	—
11	0.75	GN / YE	1616	II	JBK	Rear Brake Pad Wear Sensor Signal	11	0.75	GN / YE	1616	V	JBK
12	0.75	BN / BU	1602	II	JBK	Front Brake Pad Wear Sensor Signal	12	0.75	BN / BU	1602	V	JBK
13	4	WH	2001	III	—	Left Park Brake Motor Apply Control	13	2.5	WH	2001	IV	—
14	2.5	BU	47	I	—	Trailer Auxiliary Control	14	2.5	BU	47	VI	—
15	—	—	—	—	—	Not Occupied	15	—	—	—	—	—
16	0.5	GY / YE	7128	II	—	Right Rear Wheel Speed Sensor Control	16	0.5	GY / YE	7128	V	—
17	0.5	VT	882	II	—	Right Rear Wheel Speed Sensor Signal	17	0.5	VT	882	V	—
18 - 20	—	—	—	—	—	Not Occupied	18 - 20	—	—	—	—	—
21	0.5	WH	4976	II	—	AUTOSAR CAN Bus [-] 3 Serial Data	21	0.35	WH	4976	V	—
22	0.5	BU / BK	4977	II	—	AUTOSAR CAN Bus [+] 3 Serial Data	22	0.35	BU / BK	4977	V	—
23	0.5	WH / BK	7544	II	—	Right Rear Turn Signal Lamp Feedback Signal	23	0.35	WH / BK	7544	V	—
24	0.5 0.5	BU BU / VT	4101 4101	II II	— —	AUTOSAR CAN Bus [+] 4 Serial Data AUTOSAR CAN Bus [+] 4 Serial Data	24	0.35	BU / VT	4101	V	—
25	0.5 0.5	WH WH / GN	4100 4100	II II	— —	AUTOSAR CAN Bus [-] 4 Serial Data AUTOSAR CAN Bus [-] 4 Serial Data	25	0.35	WH	4100	V	—
26	0.5	BK	7970	II	—	Axle Differential Lock Control Shield	26	0.5	BK	7970	V	—
27	—	—	—	—	—	Not Occupied	27	—	—	—	—	—

X400 Chassis Wiring Harness to Body Wiring Harness (cont'd)

Pin	Size	Color	Circuit	Terminal Type ID	Option	Function	Pin	Size	Color	Circuit	Terminal Type ID	Option
28	2.5	GY / BN	7968	I	—	Axle Differential Lock Control High	28	2.5	GY / BN	7968	VI	—
29	4	GY / BK	4369	III	—	Left Park Brake Motor Low Reference	29	2.5	GY / BK	4369	IV	—
30	2.5	YE / WH	7969	I	—	Axle Differential Lock Control Low	30	2.5	YE / WH	7969	VI	—
31	0.5	BK / YE	7977	II	—	Axle Differential Lock Motor Temperature Sensor Low Reference	31	0.35	BK / YE	7977	V	—
32	0.5	BU / WH	7978	II	—	Axle Differential Lock Motor Temperature Sensor Signal	32	0.35	BU / WH	7978	V	—
33	0.5	YE	872	II	—	Right Front Wheel Speed Sensor Signal	33	0.5	YE	872	V	—
34	0.5	GY / BN	7065	II	—	Right Front Wheel Speed Sensor Control	34	0.5	GY / BN	7065	V	—
35	0.5	WH	7971	II	—	Axle Differential Lock Motor Brake Control High	35	0.35	WH	7971	V	—
36	0.5	VT / BK	7972	II	—	Axle Differential Lock Motor Brake Control Low	36	0.35	VT / BK	7972	V	—
37	0.5	GY	830	II	—	Left Front Wheel Speed Sensor Signal	37	0.5	GY	830	V	—
38	0.5	GY / WH	7064	II	—	Left Front Wheel Speed Sensor Control	38	0.5	GY / WH	7064	V	—
39	0.5	WH	4978	II	—	AUTOSAR CAN Bus [-] 2 Serial Data	39	0.35	WH	4978	V	—
40	0.5	WH	2679	II	—	Lock Actuators Unlock Control 1	40	0.75	WH	2679	V	—
41	0.5	BU	2689	II	—	Fuel Door Actuator Lock Control	41	0.5	BU	2689	V	—
42	—	—	—	—	—	Not Occupied	42	—	—	—	—	—
43	4	GY	4368	III	—	Right Park Brake Motor Low Reference	43	2.5	GY	4368	IV	—

X400 Chassis Wiring Harness to Body Wiring Harness (cont'd)

Pin	Size	Color	Circuit	Terminal Type ID	Option	Function	Pin	Size	Color	Circuit	Terminal Type ID	Option
44	—	—	—	—	—	Not Occupied	44	—	—	—	—	—
45	0.5	BN / YE	820	II	—	Center High Mounted Stop Lamp Supply Voltage	45	0.5	BN / YE	820	V	—
46	0.5	GY / BK	7127	II	—	Left Rear Wheel Speed Sensor Control	46	0.5	GY / BK	7127	V	—
47	0.5	BU	884	II	—	Left Rear Wheel Speed Sensor Signal	47	0.5	BU	884	V	—
48	0.5	WH	4100	II	—	AUTOSAR CAN Bus [-] 4 Serial Data	48	0.5 0.35	WH WH	4100 4100	V V	UET A45/ AUN
49	0.5	BU / VT	4101	II	—	AUTOSAR CAN Bus [+] 4 Serial Data	49	0.5 0.35	BU / VT BU / VT	4101 4101	V V	UET A45/ AUN
50	0.5	GY	7976	II	—	Axle Differential Lock Motor Position Sensor Signal 2	50	0.35	GY	7976	V	—
51	0.5	BK / VT	7974	II	—	Axle Differential Lock Motor Position Sensor Low Reference	51	0.35	BK / VT	7974	V	—
52	0.5	GN / BN	7975	II	—	Axle Differential Lock Motor Position Sensor Signal 1	52	0.35	GN / BN	7975	V	—
53	0.5	BU / YE	4979	II	—	AUTOSAR CAN Bus [+] 2 Serial Data	53	0.35	BU / YE	4979	V	—
54	0.75	WH / RD	7973	II	G96	Axle Differential Lock Motor Position Sensor High Reference	54	0.75	WH / RD	7973	V	G96
55	—	—	—	—	—	Battery Positive Voltage	55	4	RD / YE	442	IV	—

X401 Body Wiring Harness to Chassis Wiring Harness

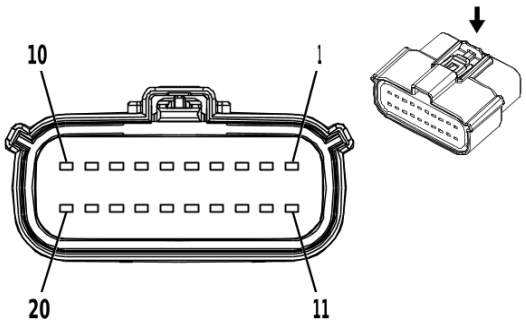

2871898

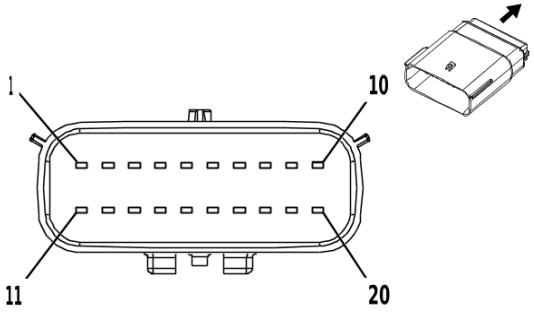

2871861

Connector Part Information

Harness Type: Body Wiring Harness
OEM Connector: 13504367
Service Connector: 19300557
Description: 20-Way F 1.5 Series, Sealed(BK)

Connector Part Information

Harness Type: Chassis Wiring Harness
OEM Connector: 33482-2101
Service Connector: 19351705
Description: 20-Way M 1.5 Series, Sealed(BK)

Terminal Part Information

Terminal Type ID	Terminated Lead	Diagnostic Test Probe	Terminal Removal Tool
I	19368973	J-35616-2A (GY)	J-38125-217
II	19119395	J-35616-3 (GY)	J-38125-217
III	19119842	J-35616-3 (GY)	J-38125-217

X401 Body Wiring Harness to Chassis Wiring Harness

Pin	Size	Color	Circuit	Terminal Type ID	Option	Function	Pin	Size	Color	Circuit	Terminal Type ID	Option
1	0.5	WH / BK	2223	I	—	Trailer Brake Apply Signal	1	0.5	WH / BK	2223	II	—
2	0.5	YE / BK	2224	I	—	Trailer Brake Enable Signal	2	0.5	YE / BK	2224	II	—
3	—	—	—	—	—	Not Occupied	3	—	—	—	—	—
4	0.5	BU / WH	1334	I	—	Left Rear Turn Signal Lamp Control 2	4	0.5	BU / WH	1334	II	—
5	0.35	WH	4986	I	—	AUTOSAR CAN Bus [-] 1 Serial Data	5	0.5	WH	4986	II	—
6	—	—	—	—	—	Not Occupied	6	—	—	—	—	—
7	0.5	GN / WH	24	I	—	Backup Lamp Control	7	0.5	GN / WH	24	II	—
8	2	BK	1950	I	—	Ground	8	1.5	BK	1950	III	—
9	—	—	—	—	—	Not Occupied	9	—	—	—	—	—
10	—	—	—	—	—	Animation Lighting Control	10	0.5	YE / GN	2024	II	—

X401 Body Wiring Harness to Chassis Wiring Harness (cont'd)

Pin	Size	Color	Circuit	Terminal Type ID	Option	Function	Pin	Size	Color	Circuit	Terminal Type ID	Option
11	0.75	VT / GN	4320	I	—	Powertrain Sensor Bus Enable Powertrain Sensor Bus Enable	11	0.5 0.75	VT / GN VT / GN	4320 4320	II II	FHX FJW
12	0.5	BU / VT	1335	I	—	Right Rear Turn Signal Lamp Control 2	12	0.5	BU / VT	1335	II	—
13	—	—	—	—	—	Not Occupied	13	—	—	—	—	—
14	0.5	BN / GY	6995	I	—	Right Rear Park Lamp Control	14	0.5	BN / GY	6995	II	—
15	0.35	BU	4987	I	—	AUTOSAR CAN Bus [+] 1 Serial Data	15	0.5	BU	4987	II	—
16	0.5	GN / WH	1324	I	—	Backup Lamp Control	16	0.5	GN	1324	II	—
17	0.5	BN / BU	6993	I	—	Left Rear Park Lamp Control	17	0.5	BN / BU	6993	II	—
18	2	RD / VT	1242	I	—	Battery Positive Voltage	18	2	RD / VT	1242	III	—
19	0.5	WH / YE	7541	I	—	Right Rear Stop Lamp Control	19	0.5	WH / YE	7541	II	—
20	0.5	GY / YE	7542	I	—	Left Rear Stop Lamp Control	20	0.5	GY / YE	7542	II	—

X403 Engine Wiring Harness to Chassis Wiring Harness (L84/L87)

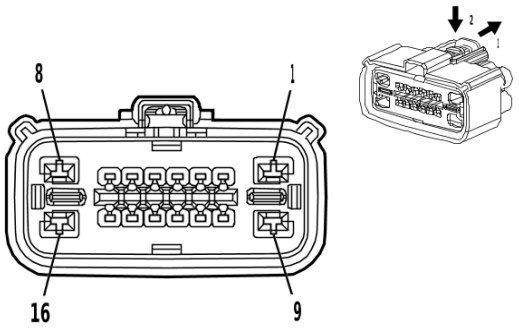

4283035

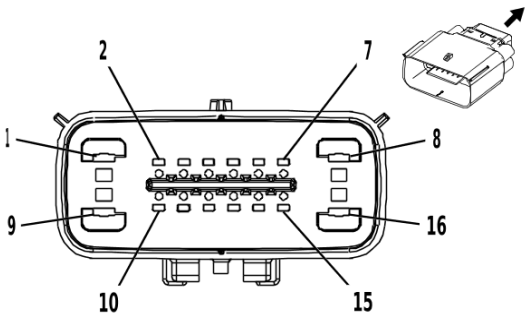

2373686

Connector Part Information

Harness Type: Engine Wiring Harness
OEM Connector: 35382404
Service Connector: Service by Harness - See Part Catalog
Description: 16-Way F 1.5, 2.8 MX Series, Sealed(BK)

Connector Part Information

Harness Type: Chassis Wiring Harness
OEM Connector: 34986-1601
Service Connector: 19331031
Description: 16-Way M 1.5, 2.8 MX Series, Sealed(BK)

Terminal Part Information

Terminal Type ID	Terminated Lead	Diagnostic Test Probe	Terminal Removal Tool
I	Not required	J-35616-14 (GN)	No Tool Required
II	19119395	J-35616-3 (GY)	J-38125-217
III	19366658	J-35616-5 (PU)	J-38125-12A

X403 Engine Wiring Harness to Chassis Wiring Harness (L84/L87)

Pin	Size	Color	Circuit	Terminal Type ID	Option	Function	Pin	Size	Color	Circuit	Terminal Type ID	Option
1	—	—	—	—	—	Engine Control Module Ground	1	1.5	BK / WH	6151	III	—
2	—	—	—	—	—	Powertrain Sensor Bus Enable	2	0.5	VT / GN	4320	II	—
3	0.5	GN / GY	465	I	—	Fuel Pump Primary Relay Control	3	0.5	GN / GY	465	II	—
4	—	—	—	—	—	Not Occupied	4	—	—	—	—	—
5	0.5	WH	4976	I	—	AUTOSAR CAN Bus [-] 3 Serial Data	5	0.5	WH	4976	II	—
6	0.5	BU / BK	4977	I	—	AUTOSAR CAN Bus [+] 3 Serial Data	6	0.5	BU / BK	4977	II	—
7 - 10	—	—	—	—	—	Not Occupied	7 - 10	—	—	—	—	—
11	0.5	VT / GN	4320	I	—	Powertrain Sensor Bus Enable	11	0.5	VT / GN	4320	II	—
12	—	—	—	—	—	Not Occupied	12	—	—	—	—	—

X403 Engine Wiring Harness to Chassis Wiring Harness (L84/L87) (cont'd)

Pin	Size	Color	Circuit	Terminal Type ID	Option	Function	Pin	Size	Color	Circuit	Terminal Type ID	Option
13	0.5	WH	4978	I	—	AUTOSAR CAN Bus [-] 2 Serial Data	13	0.5	WH	4978	II	—
14	0.5	BU / YE	4979	I	—	AUTOSAR CAN Bus [+] 2 Serial Data	14	0.5	BU / YE	4979	II	—
15	—	—	—	—	—	Not Occu-pied	15	—	—	—	—	—
16	—	—	—	—	—	Powertrain Sensor Bus Enable	16	1	VT / GN	4320	III	—

X403 Engine Wiring Harness to Chassis Wiring Harness (LM2)

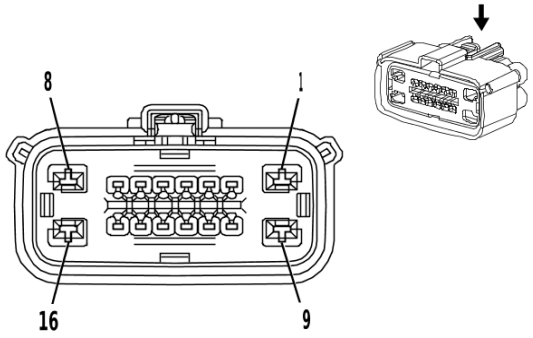

3684497

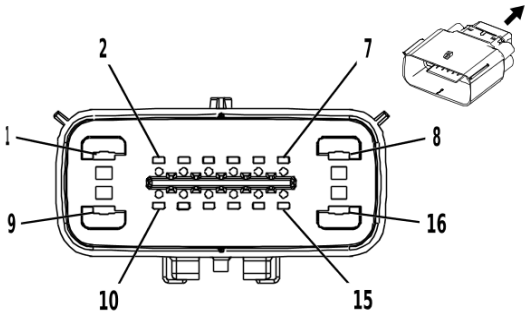

2373686

Connector Part Information

Harness Type: Engine Wiring Harness
OEM Connector: 33218250
Service Connector: 19352906
Description: 16-Way F 1.5, 2.8 MX Series, Sealed(BK)

Connector Part Information

Harness Type: Chassis Wiring Harness
OEM Connector: 34986-1601
Service Connector: 19331031
Description: 16-Way M 1.5, 2.8 MX Series, Sealed(BK)

Terminal Part Information

Terminal Type ID	Terminated Lead	Diagnostic Test Probe	Terminal Removal Tool
I	13576377	J-35616-35 (VT)	J-38125-12A
II	85528055	J-35616-14 (GN)	J-38125-217
III	19366658	J-35616-5 (PU)	J-38125-12A

X403 Engine Wiring Harness to Chassis Wiring Harness (LM2)

Pin	Size	Color	Circuit	Terminal Type ID	Option	Function	Pin	Size	Color	Circuit	Terminal Type ID	Option
1	1.5	BK / WH	6151	I	—	Engine Control Module Ground	1	1.5	BK / WH	6151	III	—
2	1	VT / GN	4320	II	—	Powertrain Sensor Bus Enable	2	0.5	VT / GN	4320	III	—
3	0.5	GN / GY	465	II	—	Fuel Pump Primary Relay Control	3	0.5	GN / GY	465	III	—
4	—	—	—	—	—	Not Occupied	4	—	—	—	—	—
5	0.5	WH	4976	II	—	AUTOSAR CAN Bus [-] 3 Serial Data	5	0.5	WH	4976	III	—
6	0.5	BU / BK	4977	II	—	AUTOSAR CAN Bus [+] 3 Serial Data	6	0.5	BU / BK	4977	III	—
7 - 8	—	—	—	—	—	Not Occupied	7 - 8	—	—	—	—	—
9	0.5	VT / BK	2139	I	—	Run/Crank Ignition 1 Voltage	9	0.5	VT / BK	2139	III	—
10	—	—	—	—	—	Not Occupied	10	—	—	—	—	—

X403 Engine Wiring Harness to Chassis Wiring Harness (LM2) (cont'd)

Pin	Size	Color	Circuit	Terminal Type ID	Option	Function	Pin	Size	Color	Circuit	Terminal Type ID	Option
11	—	—	—	—	—	Powertrain Sensor Bus Enable	11	0.5	VT / GN	4320	III	—
12	—	—	—	—	—	Not Occupied	12	—	—	—	—	—
13	0.5	WH	4978	II	—	AUTOSAR CAN Bus [-] 2 Serial Data	13	0.5	WH	4978	III	—
14	0.5	BU / YE	4979	II	—	AUTOSAR CAN Bus [+] 2 Serial Data	14	0.5	BU / YE	4979	III	—
15	—	—	—	—	—	Not Occupied	15	—	—	—	—	—
16	1	VT / GN	4320	I	—	Powertrain Sensor Bus Enable	16	1	VT / GN	4320	III	—

X404L Left Assist Step Harness to Chassis Wiring Harness (B3L)

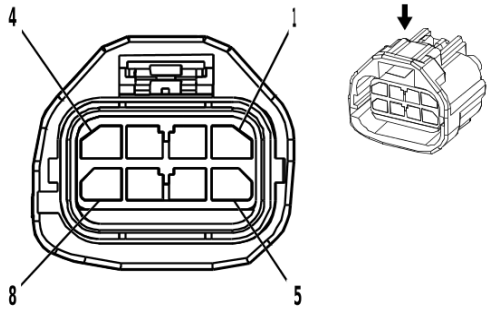

1401778

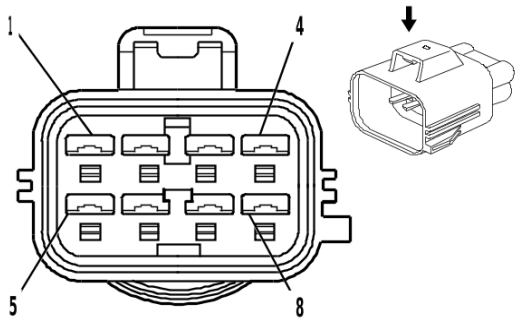

1856785

Connector Part Information

Harness Type: Left Assist Step Harness
OEM Connector: Not Available
Service Connector: Service by Harness - See Part Catalog
Description: 8-Way F

Connector Part Information

Harness Type: Chassis Wiring Harness
OEM Connector: 7282-5574-10
Service Connector: 19367561
Description: 8-Way M 2.8 YESC Series, Sealed(D-GY)

Terminal Part Information

Terminal Type ID	Terminated Lead	Diagnostic Test Probe	Terminal Removal Tool
I	Not required	No Tool Required	No Tool Required
II	Not required	J-35616-5 (PU)	No Tool Required

X404L Left Assist Step Harness to Chassis Wiring Harness (B3L)

Pin	Size	Color	Circuit	Terminal Type ID	Option	Function	Pin	Size	Color	Circuit	Terminal Type ID	Option
1	2	WH / BN	7471	I	—	Left Running Board Step Motor Control Extend	1	2	WH / BN	7471	II	—
2	0.5	VT / RD	7468	I	—	Left Running Board Step Motor Hall Sensor 5V Reference	2	0.5	VT / RD	7468	II	—
3	0.5	YE	7467	I	—	Left Running Board Step Motor Hall Sensor Signal	3	0.5	YE	7467	II	—
4	0.5	YE / BN	7466	I	—	Left Running Board Step Motor Hall Sensor Low Reference	4	0.5	YE / BN	7466	II	—
5	2	GY	7472	I	—	Left Running Board Step Motor Control Retract Left Running Board Step Motor Control Retract	5	2 2	GY GY	7472 7472	II II	LWB SWB
6	—	—	—	—	—	Not Occupied	6	—	—	—	—	—

X404L Left Assist Step Harness to Chassis Wiring Harness (B3L) (cont'd)

Pin	Size	Color	Circuit	Terminal Type ID	Option	Function	Pin	Size	Color	Circuit	Terminal Type ID	Option
7	0.5	BN	4748	I	—	Left Running Board Step Courtesy Lamp Control	7	0.5	BN	4748	II	LWB
						Left Running Board Step Courtesy Lamp Control		0.5	BN	4748	II	SWB
8	1	BK	1650	I	—	Ground	8	1	BK	1650	II	—

X404R Right Assist Step Harness to Chassis Wiring Harness (B3L)

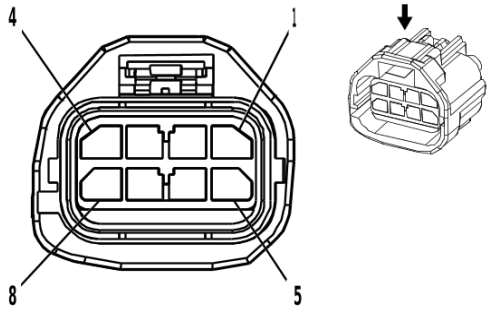

1401778

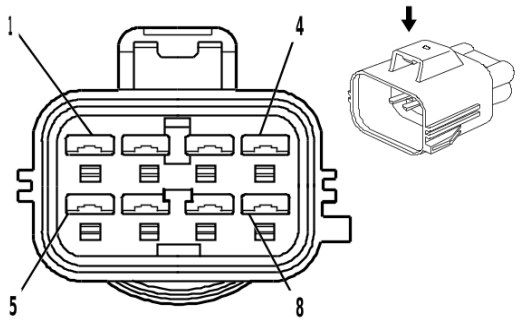

1856785

Connector Part Information

Harness Type: Right Assist Step Harness
OEM Connector: Not Available
Service Connector: Service by Harness - See Part Catalog
Description: 8-Way F

Connector Part Information

Harness Type: Chassis Wiring Harness
OEM Connector: 7282-5574-10
Service Connector: 19367561
Description: 8-Way M 2.8 YESC Series, Sealed(D-GY)

Terminal Part Information

Terminal Type ID	Terminated Lead	Diagnostic Test Probe	Terminal Removal Tool
I	Not required	No Tool Required	No Tool Required
II	Not required	J-35616-5 (PU)	No Tool Required

X404R Right Assist Step Harness to Chassis Wiring Harness (B3L)

Pin	Size	Color	Circuit	Terminal Type ID	Option	Function	Pin	Size	Color	Circuit	Terminal Type ID	Option
1	2	BU	7470	I	—	Right Running Board Step Motor Control Extend	1	2	BU	7470	II	—
2	0.5	GN / RD	7464	I	—	Right Running Board Step Motor Hall Sensor 5V Reference	2	0.5	GN / RD	7464	II	—
3	0.5	VT	7465	I	—	Right Running Board Step Motor Hall Sensor Signal	3	0.5	VT	7465	II	—
4	0.5	YE / BK	7463	I	—	Right Running Board Step Motor Hall Sensor Low Reference	4	0.5	YE / BK	7463	II	—
5	2	GN	7469	I	—	Right Left Running Board Step Motor Control Retract	5	2	GN	7469	II	—
6	—	—	—	—	—	Not Occupied	6	—	—	—	—	—

X404R Right Assist Step Harness to Chassis Wiring Harness (B3L) (cont'd)

Pin	Size	Color	Circuit	Terminal Type ID	Option	Function	Pin	Size	Color	Circuit	Terminal Type ID	Option
7	0.5	GY / VT	4749	I	—	Right Running Board Step Courtesy Lamp Control	7	0.5	GY / VT	4749	II	—
8	1	BK	1650	I	—	Ground	8	1	BK	1650	II	—

X405D Chassis Wiring Harness to Power Steering Wiring Harness Extension Harness

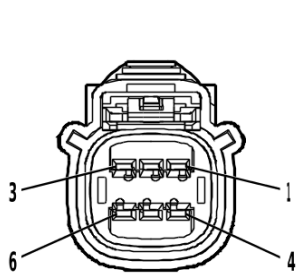

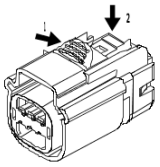

5004419

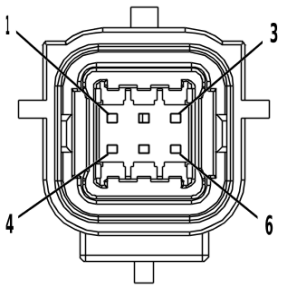

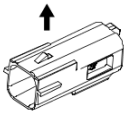

4053925

Connector Part Information

Harness Type: Chassis Wiring Harness
OEM Connector: 35325491
Service Connector: Service by Harness - See Part Catalog
Description: 6-Way F 1.5 OCS Series, Sealed(BK)

Connector Part Information

Harness Type: Power Steering Wiring Harness Extension Harness
OEM Connector: Not Available
Service Connector: Service by Harness - See Part Catalog
Description: 6-Way M (BK)

Terminal Part Information

Terminal Type ID	Terminated Lead	Diagnostic Test Probe	Terminal Removal Tool
I	Not required	J-35616-2A (GY)	No Tool Required
II	Not Available	No Tool Required	Not Available

X405D Chassis Wiring Harness to Power Steering Wiring Harness Extension Harness

Pin	Size	Color	Circuit	Terminal Type ID	Option	Function	Pin	Size	Color	Circuit	Terminal Type ID	Option
1	0.5	BU	4987	I	—	AUTOSAR CAN Bus [+] 1 Serial Data	1	0.5	BU	4987	II	—
2 - 5	—	—	—	—	—	Not Occu-pied	2 - 5	—	—	—	—	—
6	0.5	WH	4986	I	—	AUTOSAR CAN Bus [-] 1 Serial Data	6	0.5	WH	4986	II	—

X405P Power Steering Wiring Harness to Power Steering Wiring Harness

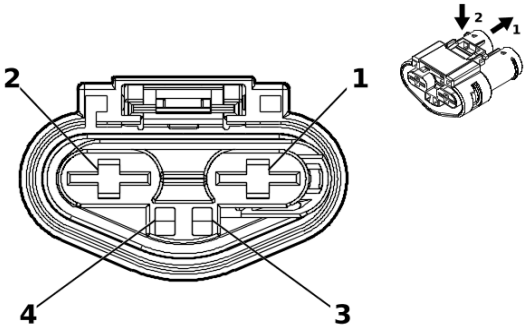

5330342

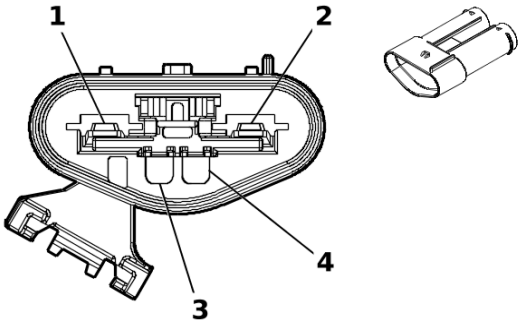

5330353

Connector Part Information

Harness Type: Power Steering Wiring Harness
OEM Connector: 13508902
Service Connector: Service by Harness - See Part Catalog
Description: 4-Way F 1.2, 2.8 MAK Series, Sealed(BK)

Connector Part Information

Harness Type: Power Steering Wiring Harness
OEM Connector: 13582138
Service Connector: Service by Harness - See Part Catalog
Description: 4-Way M 1.2, 2.8 MAK Series, Sealed(BK)

Terminal Part Information

Terminal Type ID	Terminated Lead	Diagnostic Test Probe	Terminal Removal Tool
I	Not Available	No Tool Required	Not Available
II	Not required	No Tool Required	No Tool Required

X405P Power Steering Wiring Harness to Power Steering Wiring Harness

Pin	Size	Color	Circuit	Terminal Type ID	Option	Function	Pin	Size	Color	Circuit	Terminal Type ID	Option
1	—	BK	350	I	—	Ground	1	—	BK	350	II	—
2	—	RD / VT	3542	I	—	Battery Positive Voltage	2	—	RD / VT	3542	II	—
3 - 4	—	—	—	—	—	Not Occupied	3 - 4	—	—	—	—	—

X415A Transfer Case Selector Shift Control Switch Wiring Harness Extension Harness to Engine Wiring Harness (NP0/NQH)

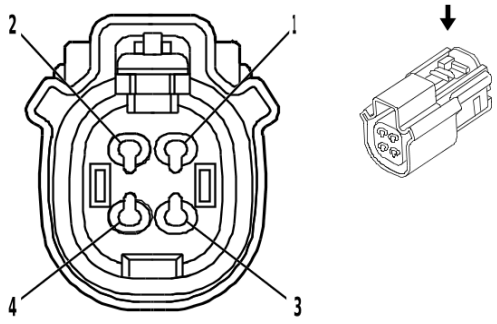

1960031

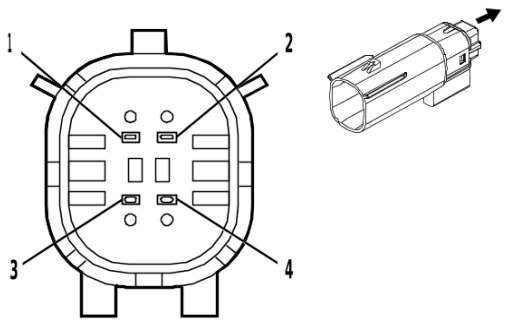

2368875

Connector Part Information

Harness Type: Transfer Case Selector Shift Control Switch Wiring Harness Extension Harness

OEM Connector: 33472-4006

Service Connector: Service by Harness - See Part Catalog

Description: 4-Way F 1.5 MX Series, Sealed(BK)

Connector Part Information

Harness Type: Engine Wiring Harness

OEM Connector: 33482-4001

Service Connector: 84838880

Description: 4-Way M 1.5 MX Series, Sealed(BK)

Terminal Part Information

Terminal Type ID	Terminated Lead	Diagnostic Test Probe	Terminal Removal Tool
I	Not required	J-35616-14 (GN)	No Tool Required
II	Not required	J-35616-3 (GY)	No Tool Required

X415A Transfer Case Selector Shift Control Switch Wiring Harness Extension Harness to Engine Wiring Harness (NP0/NQH)

Pin	Size	Color	Circuit	Terminal Type ID	Option	Function	Pin	Size	Color	Circuit	Terminal Type ID	Option
1	0.5	BK	450	I	—	Ground Ground	1	0.75 0.5	BK BK	6550 6550	II II	(NP0/ NQH) + (L84/ L87) LM2+ (NP0/ NQH)
2	0.5	YE / WH	1695	I	—	4WD Locked Range Indicator Control	2	0.5	YE / WH	1695	II	—
3	0.5	GN	8016	I	—	Secondary Axle Motor Control	3	0.75	GN	8016	II	—
4	0.5	GY / BK	1570	I	—	Front Axle Actuator Control	4	0.5	GY / BK	1570	II	—

X415R Chassis Wiring Harness to Differential Carrier Lock Wiring Harness (G96)

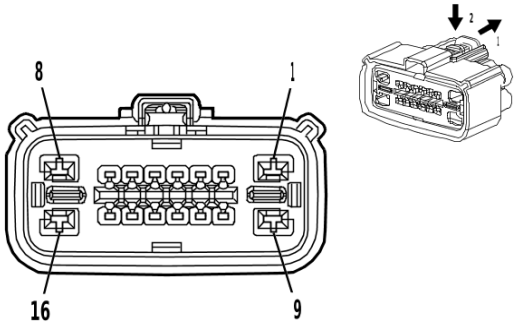

4283035

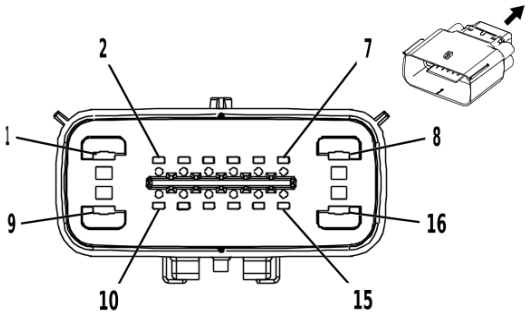

2373686

Connector Part Information

Harness Type: Chassis Wiring Harness
OEM Connector: 34985-4156
Service Connector: 19352906
Description: 16-Way F 1.5, 2.8 MX Series, Sealed(BK)

Connector Part Information

Harness Type: Differential Carrier Lock Wiring Harness
OEM Connector: 34986-1601
Service Connector: Service by Harness - See Part Catalog
Description: 16-Way M 1.5, 2.8 MX Series, Sealed(BK)

Terminal Part Information

Terminal Type ID	Terminated Lead	Diagnostic Test Probe	Terminal Removal Tool
I	13576377	J-35616-35 (VT)	J-38125-12A
II	85528055	J-35616-14 (GN)	J-38125-217
III	Not required	J-35616-3 (GY)	No Tool Required
IV	Not required	J-35616-5 (PU)	No Tool Required

X415R Chassis Wiring Harness to Differential Carrier Lock Wiring Harness (G96)

Pin	Size	Color	Circuit	Terminal Type ID	Option	Function	Pin	Size	Color	Circuit	Terminal Type ID	Option
1	2.5	GY / BN	7968	I	—	Axle Differential Lock Control High	1	2.5	GY / BN	7968	IV	—
2	0.5	WH	7971	II	—	Axle Differential Lock Motor Brake Control High	2	0.5	WH	7971	III	—
3	0.5	GN / BN	7975	II	—	Axle Differential Lock Motor Position Sensor Signal 1	3	0.5	GN / BN	7975	III	—
4	0.5	BK / VT	7974	II	—	Axle Differential Lock Motor Position Sensor Low Reference	4	0.5	BK / VT	7974	III	—
5	0.5	VT / BK	7972	II	—	Axle Differential Lock Motor Brake Control Low	5	0.5	VT / BK	7972	III	—

X415R Chassis Wiring Harness to Differential Carrier Lock Wiring Harness (G96) (cont'd)

Pin	Size	Color	Circuit	Terminal Type ID	Option	Function	Pin	Size	Color	Circuit	Terminal Type ID	Option
6	0.75	WH / RD	7973	II	—	Axle Differential Lock Motor Position Sensor High Reference	6	0.5	WH / RD	7973	III	—
7	0.5	BK / YE	7977	II	—	Axle Differential Lock Motor Temperature Sensor Low Reference	7	0.5	BK / YE	7977	III	—
8	—	—	—	—	—	Not Occupied	8	—	—	—	—	—
9	2.5	YE / WH	7969	I	—	Axle Differential Lock Control Low	9	2.5	YE / WH	7969	IV	—
10	0.5	BK	7970	II	—	Axle Differential Lock Control Shield	10	0.5	BK	7970	III	—
11	0.5	GY	7976	II	—	Axle Differential Lock Motor Position Sensor Signal 2	11	0.5	GY	7976	III	—
12	0.5	BU / WH	7978	II	—	Axle Differential Lock Motor Temperature Sensor Signal	12	0.5	BU / WH	7978	III	—
13 - 16	—	—	—	—	—	Not Occupied	13 - 16	—	—	—	—	—

X500 Front Side Door Door Wiring Harness - Driver to Body Wiring Harness

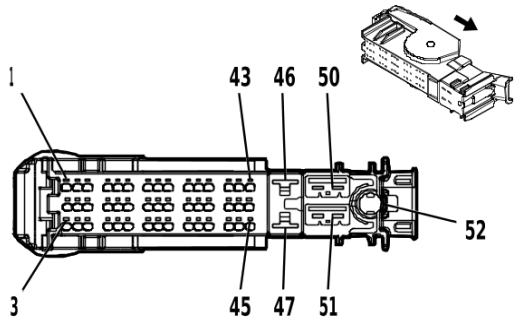

4992530

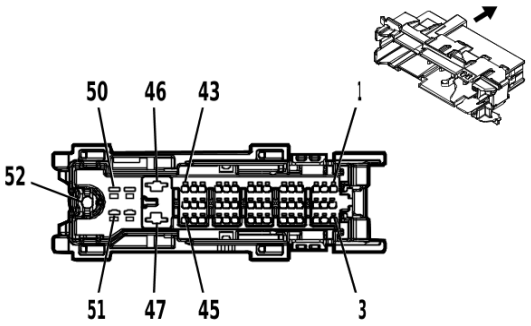

4993484

Connector Part Information

Harness Type: Front Side Door Door Wiring Harness - Driver
OEM Connector: 6098-8365
Service Connector: Service by Harness - See Part Catalog
Description: 52-Way F 1.2, 2.8, 6.3, Coaxial Series(BK)

Connector Part Information

Harness Type: Body Wiring Harness
OEM Connector: 13527236
Service Connector: 13527236
Description: 52-Way M 1.2, 2.8, 6.3, Coaxial Series(BK)

Terminal Part Information

Terminal Type ID	Terminated Lead	Diagnostic Test Probe	Terminal Removal Tool
I	Not required	J-35616-16 (L-GN)	No Tool Required
II	Not required	J-35616-42 (RD)	No Tool Required
III	Not required	No Tool Required	No Tool Required
IV	19301536	J-35616-43 (RD)	J-38125-11A
V	84616651	J-35616-13 (BU)	J-38125-215A
VI	Service by Cable	No Tool Required	J-35616-12A

X500 Front Side Door Door Wiring Harness - Driver to Body Wiring Harness

Pin	Size	Color	Circuit	Terminal Type ID	Option	Function	Pin	Size	Color	Circuit	Terminal Type ID	Option
1	0.5	RD / VT	1940	I	—	Battery Positive Voltage	1	0.5	RD / VT	1940	V	—
2	0.75	GY	2681	I	—	Left Front Door Lock Actuator Lock Control	2	0.75	GY	2681	V	—
3 - 4	—	—	—	—	—	Not Occupied	3 - 4	—	—	—	—	—
5	0.5	BK / WH	1151	I	—	Signal Ground	5	0.5	BK / WH	1151	V	—
6	—	—	—	—	—	Not Occupied	6	—	—	—	—	—
7	0.75	BK / VT	8871	I	—	Police Left Mirror Light Low Reference	7	—	—	—	—	—
8	0.75	VT	8870	I	—	Police Left Mirror Light Control	8	—	—	—	—	—
9	—	—	—	—	—	Not Occupied	9	—	—	—	—	—

X500 Front Side Door Door Wiring Harness - Driver to Body Wiring Harness (cont'd)

Pin	Size	Color	Circuit	Terminal Type ID	Option	Function	Pin	Size	Color	Circuit	Terminal Type ID	Option
10	0.75	BN / BU	118	I	—	Left Front Speaker [-] Control 1 Left Front Speaker [-] Control 1	10	0.5 0.75	BN / BU BN / BU	118 118	V V	(IOK+ UQF) - IOR (UQA/ UQS)
11	0.35	GN / YE	6134	I	—	Body Control Module LIN Bus 3	11	0.5	GN / YE	6134	V	—
12	0.35	VT / GY	126	I	—	Left Front Door Open Switch Signal	12	0.35	VT / GY	126	V	—
13	0.75	BU	201	I	—	Left Front Speaker 1 [+] Control Left Front Speaker 1 [+] Control	13	0.5 0.75	BU BU	201 201	V V	(IOK+ UQF) - IOR (UQA/ UQS)
14	0.5	BU	2675	I	—	Left Front Exterior Door Handle Switch Unlock Signal	14	0.35	BU	2675	V	—
15	—	—	—	—	—	Not Occupied	15	—	—	—	—	—
16	0.35	YE / WH	1690	I	—	Mirror Dimming Signal	16	0.35	YE / WH	1690	V	—
17	0.35	BK / YE	1691	I	—	Automatic Day/Night Mirror Low Reference	17	0.35	BK / YE	1691	V	—
18	—	—	—	—	—	Not Occupied	18	—	—	—	—	—
19	0.75	WH	2679	I	—	Lock Actuators Unlock Control 1	19	0.75	WH	2679	V	—
20 - 22	—	—	—	—	—	Not Occupied	20 - 22	—	—	—	—	—
23	0.75	BU / VT	8873	I	—	Police Left Mirror Light Steady Burn Control	23	—	—	—	—	—
24 - 26	—	—	—	—	—	Not Occupied	24 - 26	—	—	—	—	—
27	0.35	WH / GY	2114	I	—	Left Turn Signal Lamp Control 2	27	0.35	WH / GY	2114	V	—
28 - 30	—	—	—	—	—	Not Occupied	28 - 30	—	—	—	—	—
31	0.35	WH / GN	5966	I	—	Approach Lamp Control	31	0.5	WH / GN	5966	V	—
32	—	—	—	—	—	Not Occupied	32	—	—	—	—	—
33	0.35	GY	728	I	—	Security Indicator Control	33	0.5	GY	728	V	—

X500 Front Side Door Door Wiring Harness - Driver to Body Wiring Harness (cont'd)

Pin	Size	Color	Circuit	Terminal Type ID	Option	Function	Pin	Size	Color	Circuit	Terminal Type ID	Option
34	—	—	—	—	—	Not Occupied	34	—	—	—	—	—
35	0.5	BK / OG	6628	I	—	Left Front Side Impact Sensor Low Reference	35	0.5	BK / OG	6628	V	—
36	0.5	OG / GN	2132	I	—	Left Front Side Impact Sensor Signal	36	0.5	OG / GN	2132	V	—
37 - 40	—	—	—	—	—	Not Occupied	37 - 40	—	—	—	—	—
41	0.5	WH	615	I	—	Seat Memory Switch Signal 1	41	0.5	WH	615	V	—
42	0.5	BU / GN	614	I	—	Seat Memory Switch Set Signal	42	0.5	BU / GN	614	V	—
43	0.75	YE / VT	8874	I	—	Police Left Mirror Light Flash Enable Signal	43	—	—	—	—	—
44	0.75	WH / VT	8872	I	—	Police Left Mirror Light Synchronization Signal	44	—	—	—	—	—
45	—	—	—	—	—	Not Occupied	45	—	—	—	—	—
46	2.5	RD / GY	3540	II	—	Battery Positive Voltage	46	2.5	RD / GY	3540	IV	—
47	2.5	BK	1150	II	—	Ground	47	2.5	BK	1150	IV	—
48 - 51	—	—	—	—	—	Not Occupied	48 - 51	—	—	—	—	—
52	0	—	4725	III	—	Left Sideview Camera LVDS (Low Voltage Differential Signaling) Coaxial Signal	52	0	—	4725	VI	—

X505 Front Side Door Door Wiring Harness - Driver to Front Side Door Door Lock Door Wiring Harness - Driver

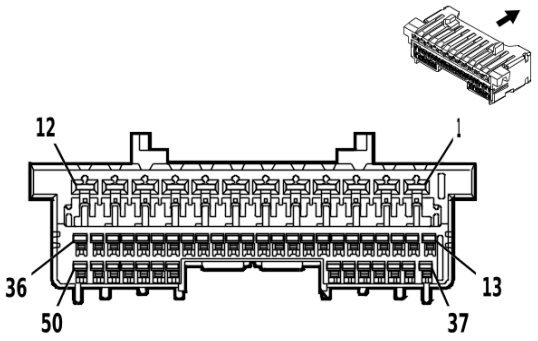

4997556

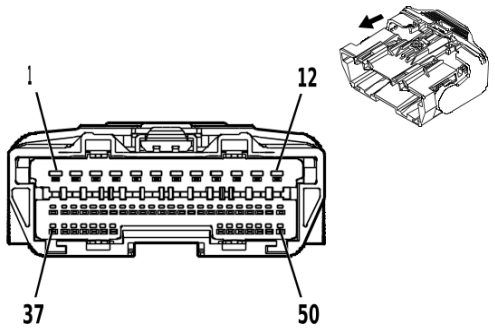

5022037

Connector Part Information

Harness Type: Front Side Door Door Wiring Harness - Driver
OEM Connector: 35283943
Service Connector: Service by Harness - See Part Catalog
Description: 50-Way F 1.2, 2.8 OCS Series(BK)

Connector Part Information

Harness Type: Front Side Door Door Lock Door Wiring Harness - Driver
OEM Connector: 33390111
Service Connector: Service by Harness - See Part Catalog
Description: 50-Way M 1.2, 2.8 OCS Series(BK)

Terminal Part Information

Terminal Type ID	Terminated Lead	Diagnostic Test Probe	Terminal Removal Tool
I	Not required	J-35616-16 (L-GN)	No Tool Required
II	Not required	J-35616-4A (PU)	No Tool Required
III	Not required	J-35616-17 (L-GN)	No Tool Required
IV	Not required	J-35616-5 (PU)	No Tool Required

X505 Front Side Door Door Wiring Harness - Driver to Front Side Door Door Lock Door Wiring Harness - Driver

Pin	Size	Color	Circuit	Terminal Type ID	Option	Function	Pin	Size	Color	Circuit	Terminal Type ID	Option
1 - 2	—	—	—	—	—	Not Occupied	1 - 2	—	—	—	—	—
3	0.35	VT / BU	2788	II	—	Left Front Mirror Motor Up [+] Down [-] Control	3	0.35	VT / BU	2788	IV	—
4	0.35	VT / RD	2791	II	—	Left Front Mirror Position Sensor High Reference	4	0.35	VT / RD	2791	IV	—
5	—	—	—	—	—	Not Occupied	5	—	—	—	—	—
6	0.35	GY	728	II	—	Security Indicator Control	6	0.35	GY	728	IV	—
7 - 8	—	—	—	—	—	Not Occupied	7 - 8	—	—	—	—	—
9	0.35	WH / YE	2792	II	—	Left Front Mirror Position Sensor Left [-] Right [+] Signal	9	0.35	WH / YE	2792	IV	—

X505 Front Side Door Door Wiring Harness - Driver to Front Side Door Door Lock Door Wiring Harness - Driver (cont'd)

Pin	Size	Color	Circuit	Terminal Type ID	Option	Function	Pin	Size	Color	Circuit	Terminal Type ID	Option
10	0.35	WH / BN	2764	II	—	Window Switch Left Front Down Signal	10	0.35	WH / BN	2764	IV	—
11 - 14	—	—	—	—	—	Not Occupied	11 - 14	—	—	—	—	—
15	0.5	WH	615	I	—	Seat Memory Switch Signal 1	15	0.35	WH	615	III	—
16	0.75	BK	1150	I	—	Ground	16	0.35	BK	1150	III	—
17	0.35	GN / YE	6134	I	—	Body Control Module LIN Bus 3	17	0.35	GN / YE	6134	III	—
18	0.35	GN	2766	I	—	Power Window Switch Left Front Express Signal	18	0.35	GN	2766	III	—
19	—	—	—	—	—	Not Occupied	19	—	—	—	—	—
20	0.5	RD / VT	1940	I	—	Battery Positive Voltage	20	0.5	RD / VT	1940	III	—
21	0.35	YE / BN	2789	I	—	Left Front Mirror Motor Common Control	21	0.35	YE / BN	2789	III	—
22	—	—	—	—	—	Not Occupied	22	—	—	—	—	—
23	0.35	WH / VT	4258	I	—	Left Front Door Lock Status Signal	23	0.35	WH / VT	4258	III	—
24	0.35	BK / BN	673	I	—	Left Outside Rearview Mirror Position Sensor Low Reference	24	0.35	BK / BN	673	III	—
25	0.35	GY / GN	2763	I	—	Window Switch Left Front Up Signal	25	0.35	GY / GN	2763	III	—
26	—	—	—	—	—	Not Occupied	26	—	—	—	—	—
27	0.35	BN / BK	2790	I	—	Left Front Mirror Motor Right [+] Left [-] Control	27	0.35	BN / BK	2790	III	—
28 - 30	—	—	—	—	—	Not Occupied	28 - 30	—	—	—	—	—
31	0.35	GY / YE	1760	I	—	Left Side Object Detection LED Control	31	0.35	GY / YE	1760	III	—
32 - 35	—	—	—	—	—	Not Occupied	32 - 35	—	—	—	—	—
36	0.5	BK / WH	1151	I	—	Signal Ground	36	0.35	BK / WH	1151	III	—

X505 Front Side Door Door Wiring Harness - Driver to Front Side Door Door Lock Door Wiring Harness - Driver (cont'd)

Pin	Size	Color	Circuit	Terminal Type ID	Option	Function	Pin	Size	Color	Circuit	Terminal Type ID	Option
37	—	—	—	—	—	Not Occupied	37	—	—	—	—	—
38	0.35	WH	606	I	—	Left Outside Rearview Mirror Heater Control	38	0.35	WH	606	III	—
39	0.35	GY / WH	2785	I	—	Left Front Mirror Motor Fold Out Control	39	0.35	GY / WH	2785	III	—
40 - 42	—	—	—	—	—	Not Occupied	40 - 42	—	—	—	—	—
43	0.35	WH / GN	2786	I	—	Left Front Mirror Motor Fold In Control	43	0.35	WH / GN	2786	III	—
44	—	—	—	—	—	Not Occupied	44	—	—	—	—	—
45	0.5	BU / GN	614	I	—	Seat Memory Switch Set Signal	45	0.35	BU / GN	614	III	—
46	0.35	GY / BN	2787	I	—	Left Front Mirror Position Sensor Up [+] Down [-] Signal	46	0.35	GY / BN	2787	III	—
47 - 50	—	—	—	—	—	Not Occupied	47 - 50	—	—	—	—	—

X510 Front Side Door Door Wiring Harness - Driver to Outside Rearview Mirror - Driver

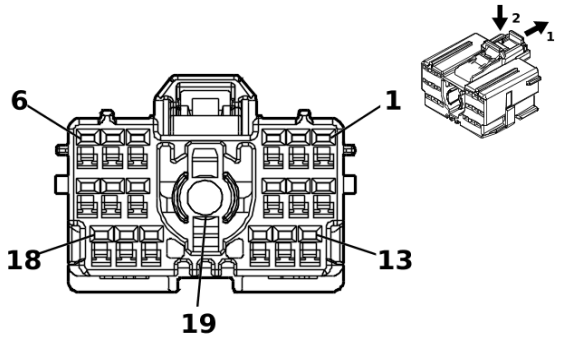

5253439

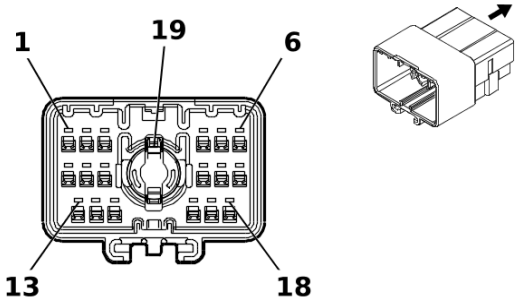

4969165

Connector Part Information

Harness Type: Front Side Door Door Wiring Harness - Driver
OEM Connector: 6098-8386
Service Connector: Service by Harness - See Part Catalog
Description: 19-Way F 1.2 MCON, Coaxial Series(BK)

Connector Part Information

Harness Type: Outside Rearview Mirror - Driver
OEM Connector: Not Available
Service Connector: Service by Harness - See Part Catalog
Description: 19-Way M (BK)

Terminal Part Information

Terminal Type ID	Terminated Lead	Diagnostic Test Probe	Terminal Removal Tool
I	Not required	J-35616-16 (L-GN)	No Tool Required
II	Not required	No Tool Required	No Tool Required
III	Not required	No Tool Required	No Tool Required

X510 Front Side Door Door Wiring Harness - Driver to Outside Rearview Mirror - Driver

Pin	Size	Color	Circuit	Terminal Type ID	Option	Function	Pin	Size	Color	Circuit	Terminal Type ID	Option
1	0.35	BN / BK	2790	I	—	Left Front Mirror Motor Right [+] Left [-] Control	1	0.35	BN / BK	2790	III	—
2	0.35	VT / BU	2788	I	—	Left Front Mirror Motor Up [+] Down [-] Control	2	0.35	VT / BU	2788	III	—
3	0.35	WH / GN	2786	I	—	Left Front Mirror Motor Fold In Control	3	0.35	WH / GN	2786	III	—
4	0.35	GY / YE	1760	I	—	Left Side Object Detection LED Control	4	0.35	GY / YE	1760	III	—
5	0.35	WH / GN	5966	I	—	Approach Lamp Control	5	0.35	WH / GN	5966	III	—
6	0.35	WH / YE	2792	I	—	Left Front Mirror Position Sensor Left [-] Right [+] Signal	6	0.35	WH / YE	2792	III	—

X510 Front Side Door Door Wiring Harness - Driver to Outside Rearview Mirror - Driver (cont'd)

Pin	Size	Color	Circuit	Terminal Type ID	Option	Function	Pin	Size	Color	Circuit	Terminal Type ID	Option
7	0.35	WH	606	I	—	Left Outside Rearview Mirror Heater Control	7	0.35	WH	606	III	—
8	0.35	WH / GY	2114	I	—	Left Turn Signal Lamp Control 2	8	0.35	WH / GY	2114	III	—
9	0.75	BK	1150	I	—	Ground	9	0.75	BK	1150	III	—
10	0.35	VT / RD	2791	I	—	Left Front Mirror Position Sensor High Reference	10	0.35	VT / RD	2791	III	—
11	0.35	GY / BN	2787	I	—	Left Front Mirror Position Sensor Up [+] Down [-] Signal	11	0.35	GY / BN	2787	III	—
12	0.35	BK / YE	1691	I	—	Automatic Day/Night Mirror Low Reference	12	0.35	BK / YE	1691	III	—
13	—	—	—	—	—	Not Occupied	13	—	—	—	—	—
14	0.35	YE / BN	2789	I	—	Left Front Mirror Motor Common Control	14	0.35	YE / BN	2789	III	—
15	0.35	GY / WH	2785	I	—	Left Front Mirror Motor Fold Out Control	15	0.35	GY / WH	2785	III	—
16	—	—	—	—	—	Not Occupied	16	—	—	—	—	—
17	0.35	YE / WH	1690	I	—	Mirror Dimming Signal	17	0.35	YE / WH	1690	III	—
18	0.35	BK / BN	673	I	—	Left Outside Rearview Mirror Position Sensor Low Reference	18	0.35	BK / BN	673	III	—
19	0	—	4725	II	—	Left Sideview Camera LVDS (Low Voltage Differential Signaling) Coaxial Signal	19	0	—	4725	III	—

X600 Front Side Door Door Wiring Harness - Passenger to Body Wiring Harness

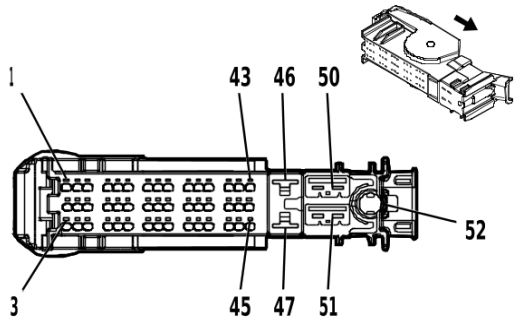

4992530

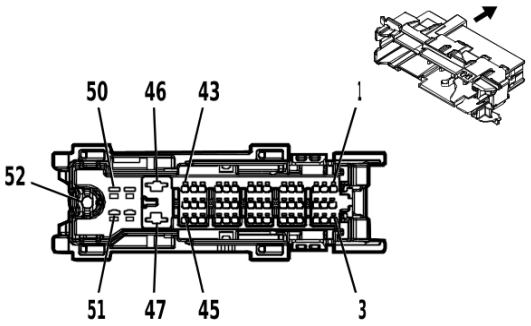

4993484

Connector Part Information

Harness Type: Front Side Door Door Wiring Harness - Passenger
OEM Connector: 6098-8365
Service Connector: Service by Harness - See Part Catalog
Description: 52-Way F 1.2, 2.8, 6.3, Coaxial Series(BK)

Connector Part Information

Harness Type: Body Wiring Harness
OEM Connector: 13527236
Service Connector: 13527236
Description: 52-Way M 1.2, 2.8, 6.3, Coaxial Series(BK)

Terminal Part Information

Terminal Type ID	Terminated Lead	Diagnostic Test Probe	Terminal Removal Tool
I	Not required	J-35616-16 (L-GN)	No Tool Required
II	Not required	J-35616-42 (RD)	No Tool Required
III	Not required	J-35616-4A (PU)	No Tool Required
IV	Not required	No Tool Required	No Tool Required
V	19301536	J-35616-43 (RD)	J-38125-11A
VI	84616651	J-35616-13 (BU)	J-38125-215A
VII	84888592	J-35616-5 (PU)	J-38125-11A
VIII	Service by Cable	No Tool Required	J-35616-12A

X600 Front Side Door Door Wiring Harness - Passenger to Body Wiring Harness

Pin	Size	Color	Circuit	Terminal Type ID	Option	Function	Pin	Size	Color	Circuit	Terminal Type ID	Option
1 - 3	—	—	—	—	—	Not Occupied	1 - 3	—	—	—	—	—
4	0.35	GN / GY	2115	I	—	Right Turn Signal Lamp Control 2	4	0.35	GN / GY	2115	VI	—
5	0.5	BK / WH	1251	I	—	Signal Ground	5	0.5	BK / WH	1251	VI	—
6 - 7	—	—	—	—	—	Not Occupied	6 - 7	—	—	—	—	—
8	0.75	BK / GY	8881	I	—	Police Right Mirror Light Low Reference	8	—	—	—	—	—
9	—	—	—	—	—	Not Occupied	9	—	—	—	—	—

X600 Front Side Door Door Wiring Harness - Passenger to Body Wiring Harness (cont'd)

Pin	Size	Color	Circuit	Terminal Type ID	Option	Function	Pin	Size	Color	Circuit	Terminal Type ID	Option
10	0.75	YE / BK	117	I	—	Right Front Speaker [-] Control 1 Right Front Speaker [-] Control 1	10	0.5 0.75	YE / BK YE / BK	117 117	VI VI	((IOR/ IOK) + UQF) (UQA/ UQS)
11	0.75	GY	8880	I	—	Police Right Mirror Light Control	11	—	—	—	—	—
12	—	—	—	—	—	Not Occupied	12	—	—	—	—	—
13	0.75	YE	200	I	—	Right Front Speaker 1 [+] Control Right Front Speaker 1 [+] Control	13	0.5 0.75	YE YE	200 200	VI VI	((IOR/ IOK) + UQF) (UQA/ UQS)
14 - 17	—	—	—	—	—	Not Occupied	14 - 17	—	—	—	—	—
18	0.75	YE / GY	8884	I	—	Police Right Mirror Light Flash Enable Signal	18	—	—	—	—	—
19	0.75	GY / BK	2680	I	—	Lock Actuators Unlock Control 2	19	0.75	GY / BK	2680	VI	—
20	0.5	BN / OG	2134	I	—	Right Front Side Impact Sensor Signal	20	0.5	BN / OG	2134	VI	—
21	0.5	BK / OG	6629	I	—	Right Front Side Impact Sensor Low Reference	21	0.5	BK / OG	6629	VI	—
22	0.75	YE / GN	2682	I	—	Right Front Door Lock Actuator Lock Control	22	0.75	YE / GN	2682	VI	—
23 - 28	—	—	—	—	—	Not Occupied	23 - 28	—	—	—	—	—
29	0.35	GN / YE	6134	I	—	Body Control Module LIN Bus 3	29	0.5	GN / YE	6134	VI	—
30	0.35	WH / GN	5966	I	—	Approach Lamp Control	30	0.5	WH / GN	5966	VI	—
31 - 36	—	—	—	—	—	Not Occupied	31 - 36	—	—	—	—	—
37	0.75	WH / GY	8882	I	—	Police Right Mirror Light Synchronization Signal	37	—	—	—	—	—
38 - 39	—	—	—	—	—	Not Occupied	38 - 39	—	—	—	—	—

X600 Front Side Door Door Wiring Harness - Passenger to Body Wiring Harness (cont'd)

Pin	Size	Color	Circuit	Terminal Type ID	Option	Function	Pin	Size	Color	Circuit	Terminal Type ID	Option
40	0.75	BU / GY	8883	I	—	Police Right Mirror Light Steady Burn Control	40	—	—	—	—	—
41 - 44	—	—	—	—	—	Not Occupied	41 - 44	—	—	—	—	—
45	0.35	GY / VT	2676	I	—	Right Front Door Exterior Switch Unlock Signal	45	0.35	GY / VT	2676	VI	—
46	2.5	RD / BN	4240	II	—	Battery Positive Voltage	46	2.5	RD / BN	4240	V	—
47	2.5	BK	1250	II	—	Ground	47	2.5	BK	1250	V	—
48	0.5	RD / BU	5240	III	—	Battery Positive Voltage	48	0.5	RD / BU	5240	VII	—
49 - 51	—	—	—	—	—	Not Occupied	49 - 51	—	—	—	—	—
52	0	—	4724	IV	—	Right Sideview Camera LVDS (Low Voltage Differential Signaling) Coaxial Signal	52	0	—	4724	VIII	—

X602 Body Wiring Harness to Body Rear Wiring Harness Extension Harness (KI5)

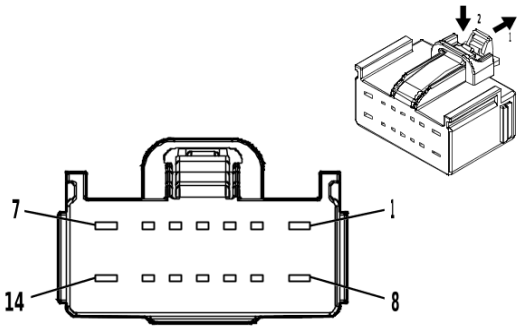

4934172

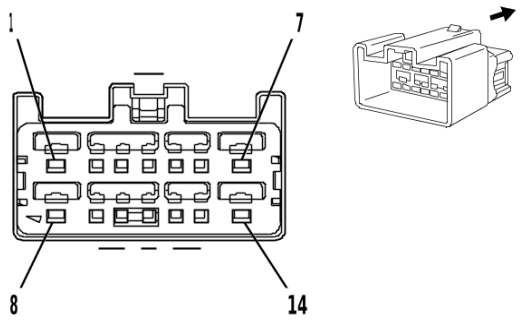

1283905

Connector Part Information

Harness Type: Body Wiring Harness
OEM Connector: 7289-7630-30
Service Connector: 13513604
Description: 14-Way F 1.5, 2.8 YESC Series(BK)

Connector Part Information

Harness Type: Body Rear Wiring Harness Extension Harness
OEM Connector: 7282-6447-40
Service Connector: Service by Harness - See Part Catalog
Description: 14-Way M 1.5, 2.8 YESC Series(L-GY)

Terminal Part Information

Terminal Type ID	Terminated Lead	Diagnostic Test Probe	Terminal Removal Tool
I	13575850	J-35616-14 (GN)	J-38125-557
II	84962855	J-35616-4A (PU)	J-38125-11A
III	Not required	J-35616-3 (GY)	No Tool Required
IV	Not required	J-35616-5 (PU)	No Tool Required

X602 Body Wiring Harness to Body Rear Wiring Harness Extension Harness (KI5)

Pin	Size	Color	Circuit	Terminal Type ID	Option	Function	Pin	Size	Color	Circuit	Terminal Type ID	Option
1	0.75	BK	5683	II	—	120V AC Phase A	1	0.75	BN	686	IV	—
2	0.5	VT / RD	4049	I	—	AC Power Outlet Sensor High Reference	2	0.5	VT / RD	4049	III	—
3	0.5	VT / WH	1139	I	—	Run/Crank Ignition 1 Voltage	3	0.5	VT / WH	1139	III	—
4	0.5	WH / GN	4628	I	—	DC/AC Inverter Relay Control	4	0.5	WH / GN	4628	III	—
5	0.75	BU / BN	6807	I	—	DC/AC Inverter Control	5	0.5	BU / BN	6807	III	—
6	—	—	—	—	—	Not Occupied	6	—	—	—	—	—
7	0.5	BK / WH	2264	II	—	120V AC Phase A 2	7	0.75	BN / WH	2262	IV	—
8	0.75	RD	5684	II	—	120V AC Phase B	8	0.75	BU	6865	IV	—
9	0.5	Bare	2519	I	—	120V AC Outlet Low Reference	9	0.5	Bare	2526	III	—

X602 Body Wiring Harness to Body Rear Wiring Harness Extension Harness (KI5) (cont'd)

Pin	Size	Color	Circuit	Terminal Type ID	Option	Function	Pin	Size	Color	Circuit	Terminal Type ID	Option
10	0.35 0.5	GN / BU GN / BU	6133 6133	I I	- UTJ/ - UTR UTJ+ UTR	Body Control Module LIN Bus 2 Body Control Module LIN Bus 2	10	0.5	GN / BU	6133	III	—
11	—	—	—	—	—	Not Occupied	11	—	—	—	—	—
12	0.75	GN / BN	2266	I	—	DC/AC Inverter Control 2	12	0.5	GN / BN	2266	III	—
13	0.5	Bare	2521	I	—	120V AC Outlet 2 Low Reference	13	0.5	Bare	2544	III	—
14	0.5	RD / WH	2265	II	—	120V AC Phase B 2	14	0.75	BU / WH	2263	IV	—

X604A Engine Wiring Harness to Active Grille Air Shutter Harness (VTI+(L84/L87))

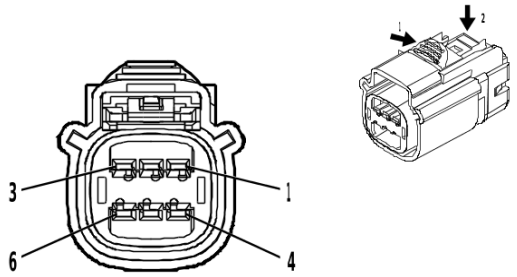

5004419

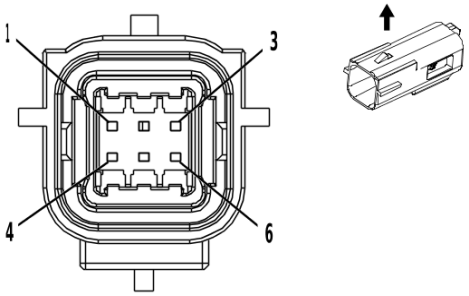

4053925

Connector Part Information

Harness Type: Engine Wiring Harness
OEM Connector: 15513504
Service Connector: 84999473
Description: 6-Way F 1.5 OCS Series, Sealed(BK)

Connector Part Information

Harness Type: Active Grille Air Shutter Harness
OEM Connector: Not Available
Service Connector: Service by Harness - See Part Catalog
Description: 6-Way M (BK)

Terminal Part Information

Terminal Type ID	Terminated Lead	Diagnostic Test Probe	Terminal Removal Tool
I	Not required	J-35616-2A (GY)	No Tool Required
II	Not required	No Tool Required	No Tool Required

X604A Engine Wiring Harness to Active Grille Air Shutter Harness (VTI+(L84/L87))

Pin	Size	Color	Circuit	Terminal Type ID	Option	Function	Pin	Size	Color	Circuit	Terminal Type ID	Option
1	0.5	GN / VT	4621	I	—	Engine Control Module LIN Bus 1	1	0.5	GN / VT	4621	II	—
2	0.75	BK	6550	I	—	Ground	2	0.75	BK	6550	II	—
3	0.5	VT / BU	5705	I	—	Powertrain Main Relay Control	3	0.5	VT / BU	5705	II	—
4	—	—	—	—	—	Not Occupied	4	—	—	—	—	—
5	0.5	BU / GY	636	I	—	Ambient Air Temperature Sensor Signal	5	0.5	BU / GY	636	II	—
6	0.5	BK / YE	548	I	—	Engine Control Sensors Low Reference 1	6	0.5	BK / YE	548	II	—

X604A Engine Wiring Harness to Active Grille Air Shutter Harness (VTI+LM2)

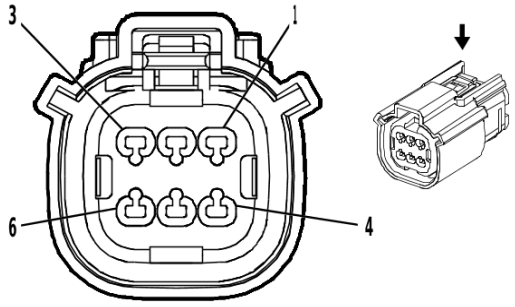

1986157

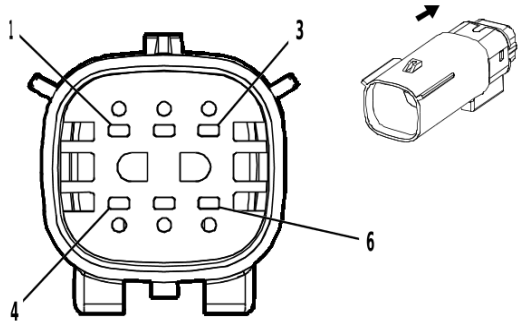

1986159

Connector Part Information

Harness Type: Engine Wiring Harness
OEM Connector: 13609714
Service Connector: 13578533
Description: 6-Way F 1.5 MX Series, Sealed(BK)

Connector Part Information

Harness Type: Active Grille Air Shutter Harness
OEM Connector: Not Available
Service Connector: Service by Harness - See Part Catalog
Description: 6-Way M (BK)

Terminal Part Information

Terminal Type ID	Terminated Lead	Diagnostic Test Probe	Terminal Removal Tool
I	Not required	J-35616-14 (GN)	No Tool Required
II	Not required	No Tool Required	No Tool Required

X604A Engine Wiring Harness to Active Grille Air Shutter Harness (VTI+LM2)

Pin	Size	Color	Circuit	Terminal Type ID	Option	Function	Pin	Size	Color	Circuit	Terminal Type ID	Option
1	0.5	GN / VT	4621	I	—	Engine Control Module LIN Bus 1	1	0.5	GN / VT	4621	II	—
2	0.5	BK	6550	I	—	Ground	2	0.5	BK	6550	II	—
3	0.5	VT / BU	5705	I	—	Powertrain Main Relay Control	3	0.5	VT / BU	5705	II	—
4	—	—	—	—	—	Not Occupied	4	—	—	—	—	—
5	0.5	BU / GY	636	I	—	Ambient Air Temperature Sensor Signal	5	0.5	BU / GY	636	II	—
6	0.5	BK / GY	626	I	—	Engine Control Vehicle Sensors Low Reference 1	6	0.5	BK / GY	626	II	—

X605 Front Side Door Door Wiring Harness - Passenger to Front Side Door Door Lock Door Wiring Harness - Passenger

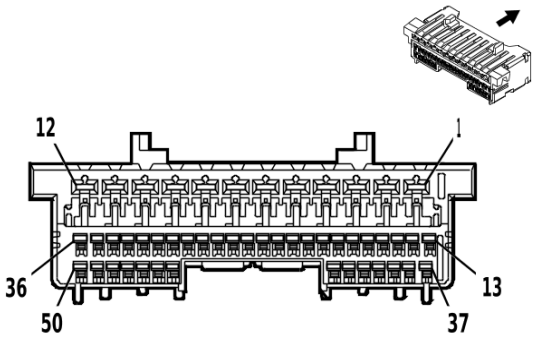

4997556

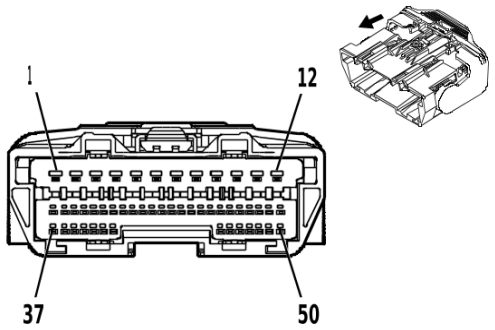

5022037

Connector Part Information

Harness Type: Front Side Door Door Wiring Harness - Passenger

OEM Connector: 35283943

Service Connector: Service by Harness - See Part Catalog

Description: 50-Way F 1.2, 2.8 OCS Series(BK)

Connector Part Information

Harness Type: Front Side Door Door Lock Door Wiring Harness - Passenger

OEM Connector: 33390111

Service Connector: Service by Harness - See Part Catalog

Description: 50-Way M 1.2, 2.8 OCS Series(BK)

Terminal Part Information

Terminal Type ID	Terminated Lead	Diagnostic Test Probe	Terminal Removal Tool
I	Not required	J-35616-16 (L-GN)	No Tool Required
II	Not required	J-35616-4A (PU)	No Tool Required
III	Not required	J-35616-17 (L-GN)	No Tool Required
IV	Not required	J-35616-5 (PU)	No Tool Required

X605 Front Side Door Door Wiring Harness - Passenger to Front Side Door Door Lock Door Wiring Harness - Passenger

Pin	Size	Color	Circuit	Terminal Type ID	Option	Function	Pin	Size	Color	Circuit	Terminal Type ID	Option
1 - 2	—	—	—	—	—	Not Occupied	1 - 2	—	—	—	—	—
3	0.35	BN / VT	607	II	—	Right Outside Rearview Mirror Heater Control	3	0.35	BN / VT	607	IV	—
4	0.35	BK / GN	675	II	—	Right Outside Rearview Mirror Position Sensor Low Reference	4	0.35	BK / GN	675	IV	—
5	0.35	GN	1184	II	—	Window Switch Right Front Up Signal	5	0.35	GN	1184	IV	—
6	0.35	GY	1761	II	—	Right Side Object Detection LED Control	6	0.35	GY	1761	IV	—

X605 Front Side Door Door Wiring Harness - Passenger to Front Side Door Door Lock Door Wiring Harness - Passenger (cont'd)

Pin	Size	Color	Circuit	Terminal Type ID	Option	Function	Pin	Size	Color	Circuit	Terminal Type ID	Option
7	0.35	VT / GY	2765	II	—	Window Switch Right Front Express Signal	7	0.35	VT / GY	2765	IV	—
8	0.35	YE / WH	2793	II	—	Right Front Mirror Motor Fold Out Control	8	0.35	YE / WH	2793	IV	—
9	0.35	BU / GY	2794	II	—	Right Front Mirror Motor Fold In Control	9	0.35	BU / GY	2794	IV	—
10	0.35	BU / YE	2795	II	—	Right Front Mirror Position Sensor Up [+] Down [-] Signal	10	0.35	BU / YE	2795	IV	—
11	0.35	YE / VT	2796	II	—	Right Front Mirror Motor Up [+] Down [-] Control	11	0.35	YE / VT	2796	IV	—
12	0.35	WH	2797	II	—	Right Front Mirror Motor Common Control	12	0.35	WH	2797	IV	—
13	0.35	GN / BK	2798	I	—	Right Front Mirror Motor Right [+] Left [-] Control	13	0.35	GN / BK	2798	III	—
14	0.35	YE / RD	2799	I	—	Right Front Mirror Position Sensor High Reference	14	0.35	YE / RD	2799	III	—
15	0.35	VT / WH	2800	I	—	Right Front Mirror Position Sensor Left [-] Right [+] Signal	15	0.35	VT / WH	2800	III	—
16	—	—	—	—	—	Not Occupied	16	—	—	—	—	—
17	0.35	VT	4259	I	—	Right Front Door Lock Status Signal	17	0.35	VT	4259	III	—
18	0.5	BK	1250	I	—	Ground	18	0.35	BK	1250	III	—
19	0.5	RD / BU	5240	I	—	Battery Positive Voltage	19	0.5	RD / BU	5240	III	—
20	0.35	BN	5295	I	—	Window Switch Right Front Down Signal	20	0.35	BN	5295	III	—
21	0.35	GN / YE	6134	I	—	Body Control Module LIN Bus 3	21	0.35	GN / YE	6134	III	—
22 - 50	—	—	—	—	—	Not Occupied	22 - 50	—	—	—	—	—

X610 Front Side Door Door Wiring Harness - Passenger to Front Side Door Door Wiring Harness - Passenger

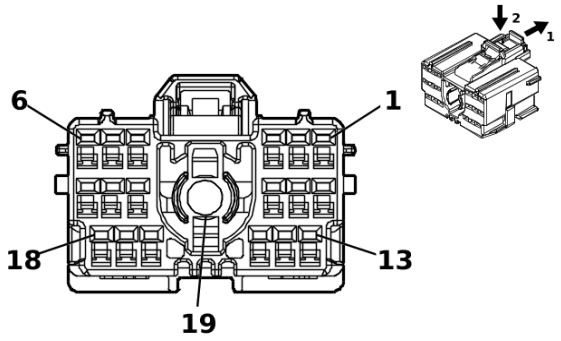

5253439

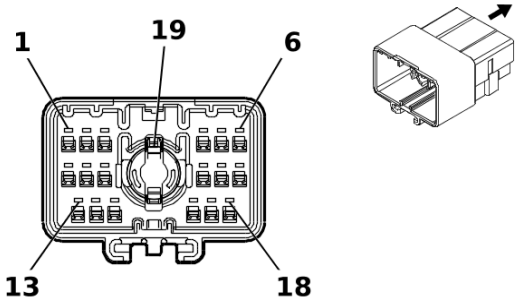

4969165

Connector Part Information

Harness Type: Front Side Door Door Wiring Harness - Passenger

OEM Connector: 6098-8386

Service Connector: Service by Harness - See Part Catalog

Description: 19-Way F 1.2 MCON, Coaxial Series(BK)

Connector Part Information

Harness Type: Front Side Door Door Wiring Harness - Passenger

OEM Connector: Not Available

Service Connector: Service by Harness - See Part Catalog

Description: 19-Way M (BK)

Terminal Part Information

Terminal Type ID	Terminated Lead	Diagnostic Test Probe	Terminal Removal Tool
I	Not required	J-35616-16 (L-GN)	No Tool Required
II	Not required	No Tool Required	No Tool Required
III	Not required	No Tool Required	No Tool Required

X610 Front Side Door Door Wiring Harness - Passenger to Front Side Door Door Wiring Harness - Passenger

Pin	Size	Color	Circuit	Terminal Type ID	Option	Function	Pin	Size	Color	Circuit	Terminal Type ID	Option
1	0.35	GN / BK	2798	I	—	Right Front Mirror Motor Right [+] Left [-] Control	1	0.35	GN / BK	2798	III	—
2	0.35	YE / VT	2796	I	—	Right Front Mirror Motor Up [+] Down [-] Control	2	0.35	YE / VT	2796	III	—
3	0.35	BU / GY	2794	I	—	Right Front Mirror Motor Fold In Control	3	0.35	BU / GY	2794	III	—
4	0.35	GY	1761	I	—	Right Side Object Detection LED Control	4	0.35	GY	1761	III	—
5	0.35	WH / GN	5966	I	—	Approach Lamp Control	5	0.35	WH / GN	5966	III	—
6	0.35	VT / WH	2800	I	—	Right Front Mirror Position Sensor Left [-] Right [+] Signal	6	0.35	VT / WH	2800	III	—

X610 Front Side Door Door Wiring Harness - Passenger to Front Side Door Door Wiring Harness - Passenger (cont'd)

Pin	Size	Color	Circuit	Terminal Type ID	Option	Function	Pin	Size	Color	Circuit	Terminal Type ID	Option
7	0.35	BN / VT	607	I	—	Right Outside Rearview Mirror Heater Control	7	0.35	BN / VT	607	III	—
8	0.35	GN / GY	2115	I	—	Right Turn Signal Lamp Control 2	8	0.35	GN / GY	2115	III	—
9	0.5	BK	1250	I	—	Ground	9	0.5	BK	1250	III	—
10	0.35	YE / RD	2799	I	—	Right Front Mirror Position Sensor High Reference	10	0.35	YE / RD	2799	III	—
11	0.35	BU / YE	2795	I	—	Right Front Mirror Position Sensor Up [+] Down [-] Signal	11	0.35	BU / YE	2795	III	—
12 - 13	—	—	—	—	—	Not Occupied	12 - 13	—	—	—	—	—
14	0.35	WH	2797	I	—	Right Front Mirror Motor Common Control	14	0.35	WH	2797	III	—
15	0.35	YE / WH	2793	I	—	Right Front Mirror Motor Fold Out Control	15	0.35	YE / WH	2793	III	—
16 - 17	—	—	—	—	—	Not Occupied	16 - 17	—	—	—	—	—
18	0.35	BK / GN	675	I	—	Right Outside Rearview Mirror Position Sensor Low Reference	18	0.35	BK / GN	675	III	—
19	0	—	4724	II	—	Right Sideview Camera LVDS (Low Voltage Differential Signaling) Coaxial Signal	19	0	—	4724	III	—

X618A Center High Mounted Stop Lamp Jumper Harness to Body Wiring Harness

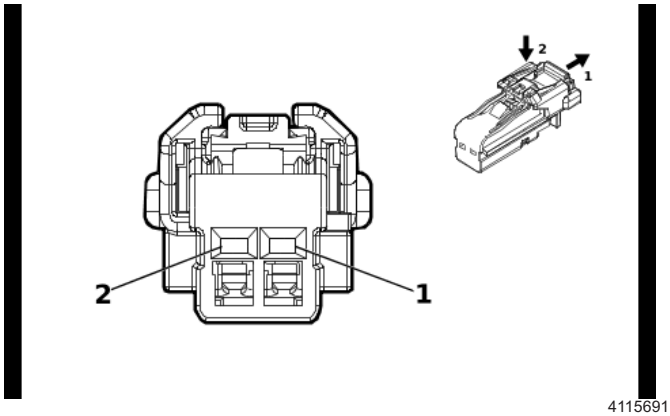

4115691

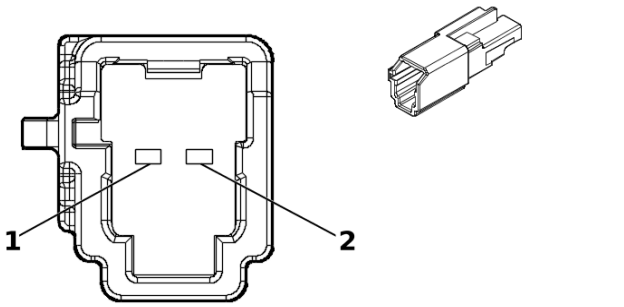

5355341

Connector Part Information

Harness Type: Center High Mounted Stop Lamp Jumper Harness
OEM Connector: Not Available
Service Connector: Service by Harness - See Part Catalog
Description: 2-Way F

Connector Part Information

Harness Type: Body Wiring Harness
OEM Connector: 13530128
Service Connector: 84815531
Description: 2-Way M 1.2 MCON Series(BK)

Terminal Part Information

Terminal Type ID	Terminated Lead	Diagnostic Test Probe	Terminal Removal Tool
I	Not required	No Tool Required	No Tool Required
II	Not required	J-35616-17 (LT GN)	No Tool Required

X618A Center High Mounted Stop Lamp Jumper Harness to Body Wiring Harness

Pin	Size	Color	Circuit	Terminal Type ID	Option	Function	Pin	Size	Color	Circuit	Terminal Type ID	Option
1	0.5	BK	2050	I	—	Ground	1	0.5	BK	2050	II	—
2	0.5	BN / YE	820	I	—	Center High Mounted Stop Lamp Supply Voltage	2	0.5	BN / YE	820	II	—

X618B Roof Wiring Harness to Body Wiring Harness

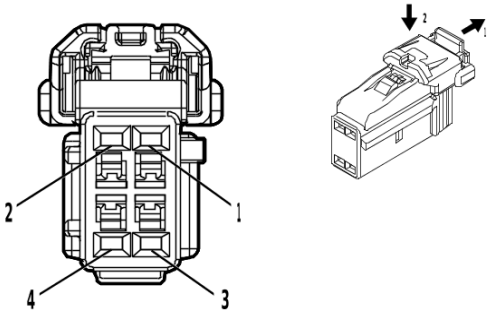

4872683

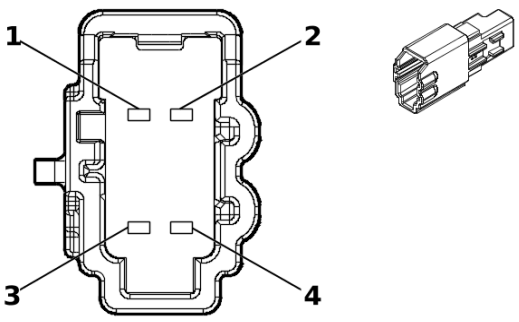

5360963

Connector Part Information

Harness Type: Roof Wiring Harness
OEM Connector: 6098-8435
Service Connector: Service by Harness - See Part Catalog
Description: 4-Way F 1.2 Series(BK)

Connector Part Information

Harness Type: Body Wiring Harness
OEM Connector: 13530132
Service Connector: 84847258
Description: 4-Way M 1.2 MCON Series(BK)

Terminal Part Information

Terminal Type ID	Terminated Lead	Diagnostic Test Probe	Terminal Removal Tool
I	Not required	J-35616-16 (L-GN)	No Tool Required
II	Not required	J-35616-13 (BU)	No Tool Required
III	Not required	J-35616-17 (LT GN)	No Tool Required

X618B Roof Wiring Harness to Body Wiring Harness

Pin	Size	Color	Circuit	Terminal Type ID	Option	Function	Pin	Size	Color	Circuit	Terminal Type ID	Option
1	0.35	WH / VT	1430	I	—	Exterior Courtesy Lamp Control	1	0.35	WH / VT	1430	II	—
2	—	—	—	—	—	Not Occu-pied	2	—	—	—	—	—
3	0.35	BK	2050	I	—	Ground	3	0.5	BK	2050	III	—
4	—	—	—	—	—	Not Occu-pied	4	—	—	—	—	—

X700 Rear Side Door Door Wiring Harness - Left to Body Wiring Harness

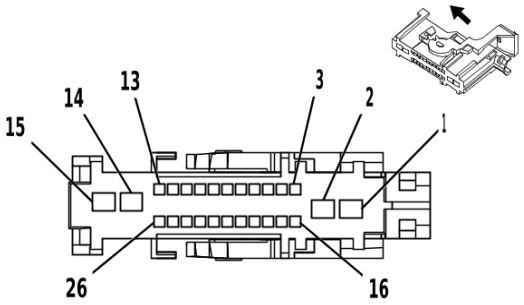

3530739

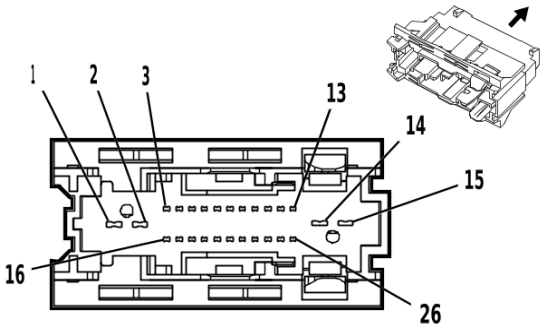

3530694

Connector Part Information

Harness Type: Rear Side Door Door Wiring Harness - Left
OEM Connector: 13981046
Service Connector: Service by Harness - See Part Catalog
Description: 26-Way F 1.2, 2.8 OCS Series(L-GY)

Connector Part Information

Harness Type: Body Wiring Harness
OEM Connector: 15531019
Service Connector: 13591678
Description: 26-Way M 1.2, 2.8 OCS Series(GY)

Terminal Part Information

Terminal Type ID	Terminated Lead	Diagnostic Test Probe	Terminal Removal Tool
I	Not required	J-35616-16 (L-GN)	No Tool Required
II	Not required	J-35616-4A (PU)	No Tool Required
III	19329836	J-35616-65B (L-BU)	J-38125-215A
IV	84888592	J-35616-5 (PU)	J-38125-11A

X700 Rear Side Door Door Wiring Harness - Left to Body Wiring Harness

Pin	Size	Color	Circuit	Terminal Type ID	Option	Function	Pin	Size	Color	Circuit	Terminal Type ID	Option
1	2.5	RD / GY	3540	II	—	Battery Positive Voltage	1	2.5	RD / GY	3540	IV	—
2	—	—	—	—	—	Not Occupied	2	—	—	—	—	—
3	0.75	VT / BN	2754	I	—	Door Double Lock Actuator Lock Control 2	3	0.75	VT / BN	2754	III	—
4	—	—	—	—	—	Not Occupied	4	—	—	—	—	—
5	0.75	WH	2679	I	—	Lock Actuators Unlock Control 1	5	0.75	WH	2679	III	—
6	0.75	BU / YE	1091	I	—	Left Rear Door Lock Actuator Lock Control	6	0.75	BU / YE	1091	III	—
7	0.35	VT / BU	4001	I	—	Left Rear Door Lock Switch Lock Control	7	0.35	VT / BU	4001	III	—
8	0.35	WH / YE	4002	I	—	Left Rear Door Lock Switch Unlock Control	8	0.35	WH / YE	4002	III	—

X700 Rear Side Door Door Wiring Harness - Left to Body Wiring Harness (cont'd)

Pin	Size	Color	Circuit	Terminal Type ID	Option	Function	Pin	Size	Color	Circuit	Terminal Type ID	Option
9 - 11	—	—	—	—	—	Not Occupied	9 - 11	—	—	—	—	—
12	0.35	WH / VT	4994	I	—	Left Rear Door Exterior Switch Unlock Signal	12	0.35	WH / VT	4994	III	—
13	0.35	VT / WH	6675	I	—	Left Rear Door Lock Indicator Control	13	0.35	VT / WH	6675	III	—
14	0.35	YE	6817	II	—	LED Backlight Dimming Control 1	14	0.5	YE	6817	IV	—
15	2.5	BK	1150	II	—	Ground	15	2.5	BK	1150	IV	—
16	—	—	—	—	—	Not Occupied	16	—	—	—	—	—
17	0.35	GN / GY	6135	I	—	Body Control Module LIN Bus 4	17	0.35	GN / GY	6135	III	—
18	0.35	WH / YE	7557	I	—	Interior Door Handle Accent Lighting Control	18	0.35	WH / YE	7557	III	—
19 - 22	—	—	—	—	—	Not Occupied	19 - 22	—	—	—	—	—
23	0.75	GN / BK	116	I	—	Left Rear Speaker [-] Control	23	0.75	GN / BK	116	III	—
24	0.75	GN	199	I	—	Left Rear Speaker [+] Control	24	0.75	GN	199	III	—
25	0.5	VT	4301	I	—	Passive Entry Left Front Antenna Signal High	25	0.35	VT	4301	III	—
26	0.5	VT / GY	4302	I	—	Passive Entry Left Front Antenna Signal Low	26	0.35	VT / WH	4302	III	—

X705 Rear Side Door Door Wiring Harness - Left to Rear Side Door Door Lock Door Wiring Harness - Left

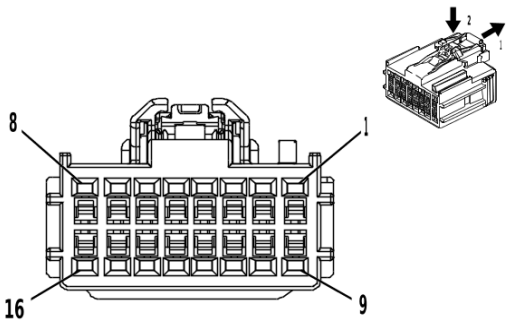

4115730

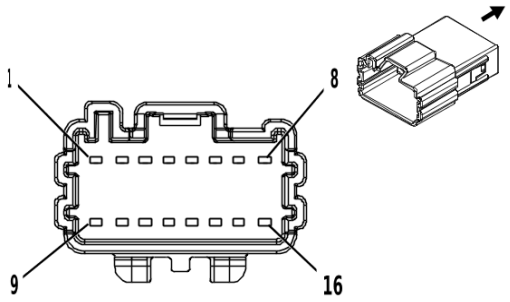

4223086

Connector Part Information

Harness Type: Rear Side Door Door Wiring Harness - Left
OEM Connector: 6098-8451
Service Connector: Service by Harness - See Part Catalog
Description: 16-Way F 1.2 OCS Series(BK)

Connector Part Information

Harness Type: Rear Side Door Door Lock Door Wiring Harness - Left
OEM Connector: 6098-8828
Service Connector: Service by Harness - See Part Catalog
Description: 16-Way M 1.2 Series(BK)

Terminal Part Information

Terminal Type ID	Terminated Lead	Diagnostic Test Probe	Terminal Removal Tool
I	Not required	J-35616-16 (L-GN)	No Tool Required
II	Not required	J-35616-17 (L-GN)	No Tool Required

X705 Rear Side Door Door Wiring Harness - Left to Rear Side Door Door Lock Door Wiring Harness - Left

Pin	Size	Color	Circuit	Terminal Type ID	Option	Function	Pin	Size	Color	Circuit	Terminal Type ID	Option
1	0.35	YE	6817	I	—	LED Backlight Dimming Control 1	1	0.35	YE	6817	II	—
2	—	—	—	—	—	Not Occupied	2	—	—	—	—	—
3	0.35	VT / WH	6675	I	—	Left Rear Door Lock Indicator Control	3	0.35	VT / WH	6675	II	—
4	0.35	VT / BU	4001	I	—	Left Rear Door Lock Switch Lock Control	4	0.35	VT / BU	4001	II	—
5	0.35	WH / YE	4002	I	—	Left Rear Door Lock Switch Unlock Control	5	0.35	WH / YE	4002	II	—
6	0.35	WH / YE	7557	I	—	Interior Door Handle Accent Lighting Control	6	0.35	WH / YE	7557	II	—
7	—	—	—	—	—	Not Occupied	7	—	—	—	—	—

X705 Rear Side Door Door Wiring Harness - Left to Rear Side Door Door Lock Door Wiring Harness - Left (cont'd)

Pin	Size	Color	Circuit	Terminal Type ID	Option	Function	Pin	Size	Color	Circuit	Terminal Type ID	Option
8	0.75	GN / BK	116	I	—	Left Rear Speaker [-] Control	8	0.75	GN / BK	116	II	—
9	0.75	GN	199	I	—	Left Rear Speaker [+] Control	9	0.75	GN	199	II	—
10 - 11	—	—	—	—	—	Not Occu-pied	10 - 11	—	—	—	—	—
12	0.5	BK	1150	I	—	Ground	12	0.35	BK	1150	II	—
13 - 16	—	—	—	—	—	Not Occu-pied	13 - 16	—	—	—	—	—

X706 Rear Side Door Door Wiring Harness - Left to Rear Side Door Door Lock Door Wiring Harness - Left

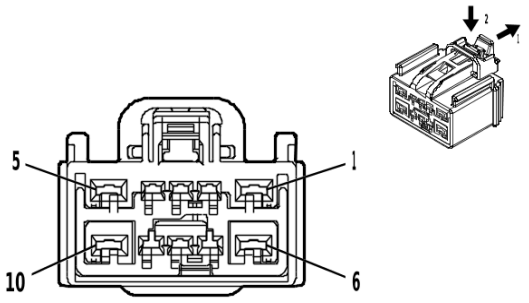

5020939

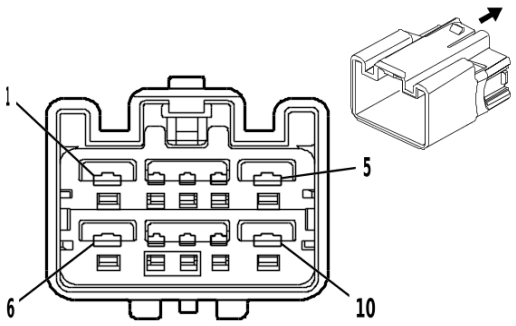

1851890

Connector Part Information

Harness Type: Rear Side Door Door Wiring Harness - Left
OEM Connector: 7289-9153-40
Service Connector: Service by Harness - See Part Catalog
Description: 10-Way F 1.5, 2.8 Kaizen Series(L-GY)

Connector Part Information

Harness Type: Rear Side Door Door Lock Door Wiring Harness - Left
OEM Connector: 7282-6459-40
Service Connector: Service by Harness - See Part Catalog
Description: 10-Way M YESC Kaizen Series(L-GY)

Terminal Part Information

Terminal Type ID	Terminated Lead	Diagnostic Test Probe	Terminal Removal Tool
I	Not required	J-35616-14 (GN)	No Tool Required
II	Not required	J-35616-4A (PU)	No Tool Required
III	Not required	J-35616-3 (GY)	No Tool Required
IV	Not required	J-35616-5 (PU)	No Tool Required

X706 Rear Side Door Door Wiring Harness - Left to Rear Side Door Door Lock Door Wiring Harness - Left

Pin	Size	Color	Circuit	Terminal Type ID	Option	Function	Pin	Size	Color	Circuit	Terminal Type ID	Option
1	2.5	RD / GY	3540	II	—	Battery Positive Voltage	1	2.5	RD / GY	3540	IV	—
2	—	—	—	—	—	Not Occupied	2	—	—	—	—	—
3	0.35	GN / GY	6135	I	—	Body Control Module LIN Bus 4	3	0.35	GN / GY	6135	III	—
4	0.35	GY	747	I	—	Left Rear Door Ajar Switch Signal	4	0.35	GY	747	III	—
5	2	BU / VT	668	II	—	Left Rear Window Motor Up Control	5	2	BU / VT	668	IV	—
6	2.5	BK	1150	II	—	Ground	6	2.5	BK	1150	IV	—
7	—	—	—	—	—	Not Occupied	7	—	—	—	—	—
8	0.35	GN / BU	4648	I	—	Left Rear Door Lock Status Signal	8	0.35	GN / BU	4648	III	—

X706 Rear Side Door Door Wiring Harness - Left to Rear Side Door Door Lock Door Wiring Harness - Left (cont'd)

Pin	Size	Color	Circuit	Terminal Type ID	Option	Function	Pin	Size	Color	Circuit	Terminal Type ID	Option
9	—	—	—	—	—	Not Occupied	9	—	—	—	—	—
10	2	YE / BU	669	II	—	Left Rear Window Motor Down Control	10	2	YE / BU	669	IV	—

X800 Rear Side Door Door Wiring Harness - Right to Body Wiring Harness

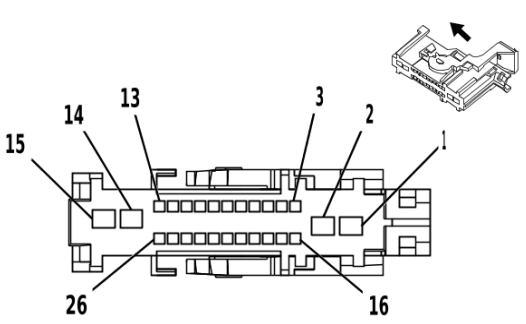

3530739

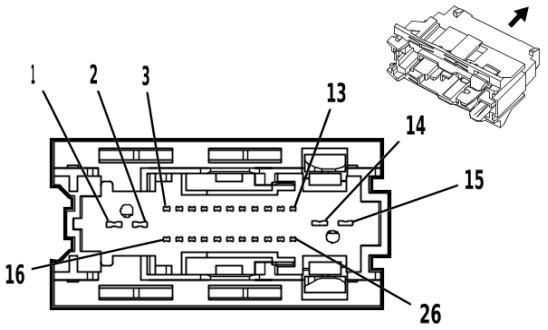

3530694

Connector Part Information

Harness Type: Rear Side Door Door Wiring Harness - Right
OEM Connector: 13981046
Service Connector: Service by Harness - See Part Catalog
Description: 26-Way F 1.2, 2.8 OCS Series(L-GY)

Connector Part Information

Harness Type: Body Wiring Harness
OEM Connector: 15531019
Service Connector: 13591678
Description: 26-Way M 1.2, 2.8 OCS Series(GY)

Terminal Part Information

Terminal Type ID	Terminated Lead	Diagnostic Test Probe	Terminal Removal Tool
I	Not required	J-35616-16 (L-GN)	No Tool Required
II	Not required	J-35616-4A (PU)	No Tool Required
III	19329836	J-35616-65B (L-BU)	J-38125-215A
IV	84888592	J-35616-5 (PU)	J-38125-11A

X800 Rear Side Door Door Wiring Harness - Right to Body Wiring Harness

Pin	Size	Color	Circuit	Terminal Type ID	Option	Function	Pin	Size	Color	Circuit	Terminal Type ID	Option
1	2.5	RD / BN	4240	II	—	Battery Positive Voltage	1	2.5	RD / BN	4240	IV	—
2	—	—	—	—	—	Not Occupied	2	—	—	—	—	—
3	0.75	VT / BN	2754	I	—	Door Double Lock Actuator Lock Control 2	3	0.75	VT / BN	2754	III	—
4	—	—	—	—	—	Not Occupied	4	—	—	—	—	—
5	0.75	GY / BK	2680	I	—	Lock Actuators Unlock Control 2	5	0.75	GY / BK	2680	III	—
6	0.75	VT / WH	1094	I	—	Right Rear Door Lock Actuator Lock Control	6	0.75	VT / WH	1094	III	—
7	0.35	GN / BN	4003	I	—	Right Rear Door Lock Switch Lock Control	7	0.35	GN / BN	4003	III	—
8	0.35	BU / GY	4004	I	—	Right Rear Door Lock Switch Unlock Control	8	0.35	BU / GY	4004	III	—

X800 Rear Side Door Door Wiring Harness - Right to Body Wiring Harness (cont'd)

Pin	Size	Color	Circuit	Terminal Type ID	Option	Function	Pin	Size	Color	Circuit	Terminal Type ID	Option
9 - 11	—	—	—	—	—	Not Occupied	9 - 11	—	—	—	—	—
12	0.35	GY / BU	4995	I	—	Right Rear Door Exterior Switch Unlock Signal	12	0.35	GY / BU	4995	III	—
13	0.35	YE / BK	6677	I	—	Right Rear Door Lock Indicator Control	13	0.35	YE / BK	6677	III	—
14	0.35	YE	6817	II	—	LED Backlight Dimming Control 1	14	0.5	YE	6817	IV	—
15	2.5	BK	1250	II	—	Ground	15	2.5	BK	1250	IV	—
16	—	—	—	—	—	Not Occupied	16	—	—	—	—	—
17	0.35	GN / GY	6135	I	—	Body Control Module LIN Bus 4	17	0.35	GN / GY	6135	III	—
18	0.35	WH / YE	7557	I	—	Interior Door Handle Accent Lighting Control	18	0.35	WH / YE	7557	III	—
19 - 22	—	—	—	—	—	Not Occupied	19 - 22	—	—	—	—	—
23	0.75	BU / BK	115	I	—	Right Rear Speaker [-] Control	23	0.75	BU / BK	115	III	—
24	0.75	WH	46	I	—	Right Rear Speaker [+] Control	24	0.75	WH	46	III	—
25	0.5	GN / YE	4303	I	—	Passive Entry Right Front Door Antenna Signal High	25	0.35	GN / YE	4303	III	—
26	0.5	GN / BK	4304	I	—	Passive Entry Right Front Door Antenna Signal Low	26	0.35	GN / BK	4304	III	—

X805 Rear Side Door Door Wiring Harness - Right to Rear Side Door Door Lock Door Wiring Harness - Right

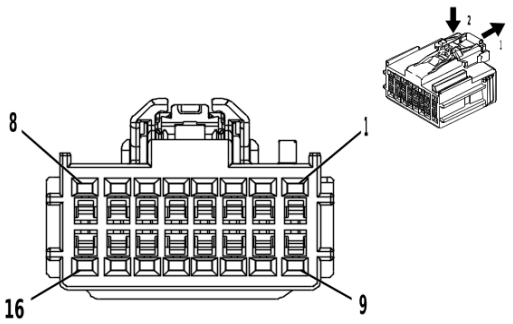

4115730

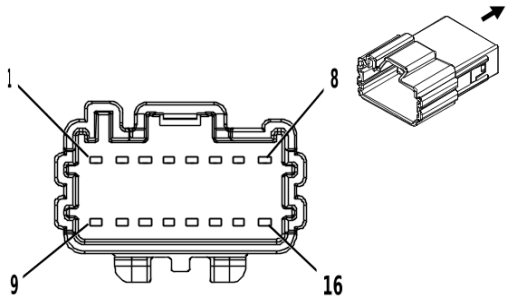

4223086

Connector Part Information

Harness Type: Rear Side Door Door Wiring Harness - Right
OEM Connector: 6098-8451
Service Connector: Service by Harness - See Part Catalog
Description: 16-Way F 1.2 OCS Series(BK)

Connector Part Information

Harness Type: Rear Side Door Door Lock Door Wiring Harness - Right
OEM Connector: 6098-8828
Service Connector: Service by Harness - See Part Catalog
Description: 16-Way M 1.2 Series(BK)

Terminal Part Information

Terminal Type ID	Terminated Lead	Diagnostic Test Probe	Terminal Removal Tool
I	Not required	J-35616-16 (L-GN)	No Tool Required
II	Not required	J-35616-17 (L-GN)	No Tool Required

X805 Rear Side Door Door Wiring Harness - Right to Rear Side Door Door Lock Door Wiring Harness - Right

Pin	Size	Color	Circuit	Terminal Type ID	Option	Function	Pin	Size	Color	Circuit	Terminal Type ID	Option
1	0.35	YE	6817	I	—	LED Backlight Dimming Control 1	1	0.5	YE	6817	II	—
2	—	—	—	—	—	Not Occupied	2	—	—	—	—	—
3	0.35	YE / BK	6677	I	—	Right Rear Door Lock Indicator Control	3	0.5	YE / BK	6677	II	—
4	0.35	GN / BN	4003	I	—	Right Rear Door Lock Switch Lock Control	4	0.35	GN / BN	4003	II	—
5	0.35	BU / GY	4004	I	—	Right Rear Door Lock Switch Unlock Control	5	0.35	BU / GY	4004	II	—
6	0.35	WH / YE	7557	I	—	Interior Door Handle Accent Lighting Control	6	0.35	WH / YE	7557	II	—
7	—	—	—	—	—	Not Occupied	7	—	—	—	—	—

X805 Rear Side Door Door Wiring Harness - Right to Rear Side Door Door Lock Door Wiring Harness - Right (cont'd)

Pin	Size	Color	Circuit	Terminal Type ID	Option	Function	Pin	Size	Color	Circuit	Terminal Type ID	Option
8	0.75	BU / BK	115	I	—	Right Rear Speaker [-] Control	8	0.75	BU / BK	115	II	—
9	0.75	WH	46	I	—	Right Rear Speaker [+] Control	9	0.75	WH	46	II	—
10 - 11	—	—	—	—	—	Not Occu-pied	10 - 11	—	—	—	—	—
12	0.5	BK	1250	I	—	Ground	12	0.35	BK	1250	II	—
13 - 16	—	—	—	—	—	Not Occu-pied	13 - 16	—	—	—	—	—

X806 Rear Side Door Door Wiring Harness - Right to Rear Side Door Door Lock Door Wiring Harness - Right

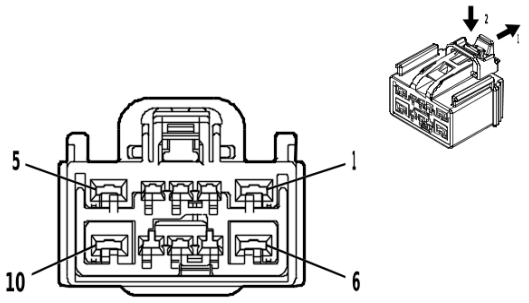

5020939

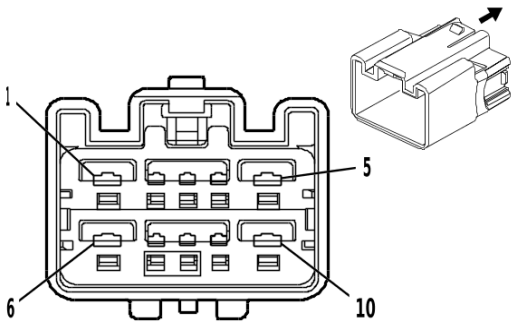

1851890

Connector Part Information

Harness Type: Rear Side Door Door Wiring Harness - Right
OEM Connector: 7289-9153-40
Service Connector: Service by Harness - See Part Catalog
Description: 10-Way F 1.5, 2.8 Kaizen Series(L-GY)

Connector Part Information

Harness Type: Rear Side Door Door Lock Door Wiring Harness - Right
OEM Connector: 7282-6459-40
Service Connector: Service by Harness - See Part Catalog
Description: 10-Way M YESC Kaizen Series(L-GY)

Terminal Part Information

Terminal Type ID	Terminated Lead	Diagnostic Test Probe	Terminal Removal Tool
I	Not required	J-35616-14 (GN)	No Tool Required
II	Not required	J-35616-4A (PU)	No Tool Required
III	Not required	J-35616-3 (GY)	No Tool Required
IV	Not required	J-35616-5 (PU)	No Tool Required

X806 Rear Side Door Door Wiring Harness - Right to Rear Side Door Door Lock Door Wiring Harness - Right

Pin	Size	Color	Circuit	Terminal Type ID	Option	Function	Pin	Size	Color	Circuit	Terminal Type ID	Option
1	2.5	RD / BN	4240	II	—	Battery Positive Voltage	1	2.5	RD / BN	4240	IV	—
2	—	—	—	—	—	Not Occupied	2	—	—	—	—	—
3	0.35	GN / GY	6135	I	—	Body Control Module LIN Bus 4	3	0.35	GN / GY	6135	III	—
4	0.35	GY	748	I	—	Right Rear Door Ajar Switch Signal	4	0.35	GY	748	III	—
5	2	GN / BK	671	II	—	Right Rear Window Motor Down Control	5	2	GN / BK	671	IV	—
6	2.5	BK	1250	II	—	Ground	6	2.5	BK	1250	IV	—
7	—	—	—	—	—	Not Occupied	7	—	—	—	—	—
8	0.35	WH / GY	4649	I	—	Right Rear Door Lock Status Signal	8	0.35	WH / GY	4649	III	—

X806 Rear Side Door Door Wiring Harness - Right to Rear Side Door Door Lock Door Wiring Harness - Right (cont'd)

Pin	Size	Color	Circuit	Terminal Type ID	Option	Function	Pin	Size	Color	Circuit	Terminal Type ID	Option
9	—	—	—	—	—	Not Occupied	9	—	—	—	—	—
10	2	BU / GY	670	II	—	Right Rear Window Motor Up Control	10	2	BU / GY	670	IV	—

X904JL Chassis Wiring Harness to Chassis Rear Wiring Harness Extension Harness

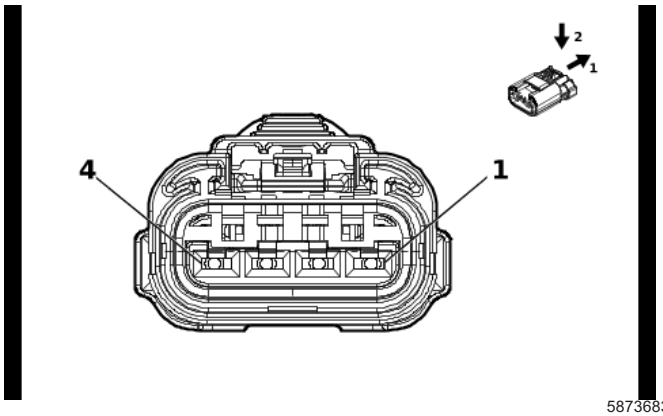

5873683

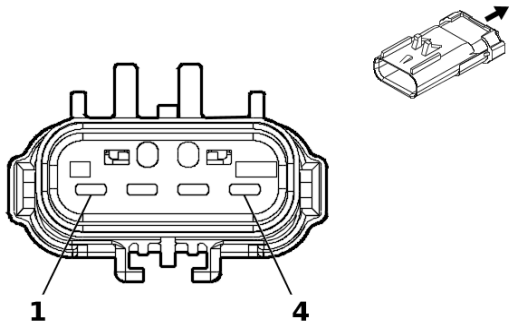

5246651

Connector Part Information

Harness Type: Chassis Wiring Harness
OEM Connector: 35333812
Service Connector: Service by Harness - See Part Catalog
Description: 4-Way F 2.8 APEX Series, Sealed(GY)

Connector Part Information

Harness Type: Chassis Rear Wiring Harness Extension Harness
OEM Connector: 13518460
Service Connector: Service by Harness - See Part Catalog
Description: 4-Way M 2.8 APEX Series, Sealed(GY)

Terminal Part Information

Terminal Type ID	Terminated Lead	Diagnostic Test Probe	Terminal Removal Tool
I	Not required	J-35616-2A (GY)	No Tool Required
II	Not required	J-35616-35 (VT)	No Tool Required
III	Not required	J-35616-5 (PU)	No Tool Required

X904JL Chassis Wiring Harness to Chassis Rear Wiring Harness Extension Harness

Pin	Size	Color	Circuit	Terminal Type ID	Option	Function	Pin	Size	Color	Circuit	Terminal Type ID	Option
1	0.75	GN / YE	1616	I	—	Rear Brake Pad Wear Sensor Signal	1	0.75	GN / YE	1616	III	—
2	0.75	BK	2050	I	—	Ground	2	0.75	BK	2050	III	—
3	4	GY / BK	4369	II	—	Left Park Brake Motor Low Reference	3	2.5	GY / BK	4369	III	—
4	4	WH	2001	II	—	Left Park Brake Motor Apply Control	4	2.5	WH	2001	III	—

X904JR Chassis Wiring Harness to Chassis Rear Wiring Harness Extension Harness

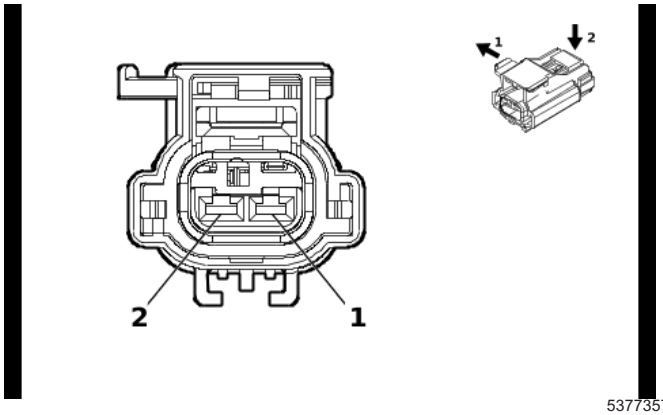

5377357

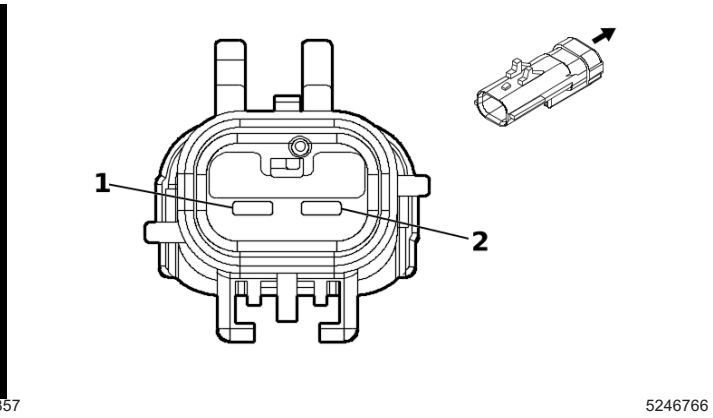

5246766

Connector Part Information

Harness Type: Chassis Wiring Harness
OEM Connector: 15380781
Service Connector: 84867144
Description: 2-Way F 2.8 APEX Series, Sealed(GY)

Connector Part Information

Harness Type: Chassis Rear Wiring Harness Extension Harness
OEM Connector: 13512891
Service Connector: Service by Harness - See Part Catalog
Description: 2-Way M 2.8 APEX Series, Sealed(GY)

Terminal Part Information

Terminal Type ID	Terminated Lead	Diagnostic Test Probe	Terminal Removal Tool
I	Not required	J-35616-35 (VT)	No Tool Required
II	Not required	J-35616-5 (PU)	No Tool Required

X904JR Chassis Wiring Harness to Chassis Rear Wiring Harness Extension Harness

Pin	Size	Color	Circuit	Terminal Type ID	Option	Function	Pin	Size	Color	Circuit	Terminal Type ID	Option
1	2	GY	4368	I	—	Right Park Brake Motor Low Reference	1	2.5	GY	4368	II	—
2	2	GN / VT	1988	I	—	Right Park Brake Motor Apply Control	2	2.5	GN / VT	1988	II	—

X905 Liftgate Wiring Harness to Body Wiring Harness

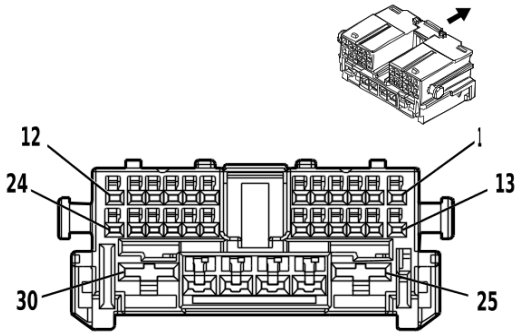

4253192

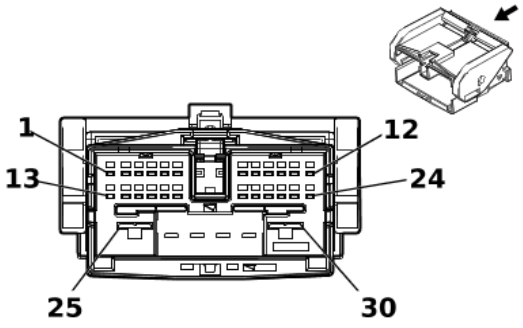

4249201

Connector Part Information

Harness Type: Liftgate Wiring Harness
OEM Connector: 7298-4329-30
Service Connector: Service by Harness - See Part Catalog
Description: 30-Way F 1.2 MCON, 2.8, 6.3 YESC Series(BK)

Connector Part Information

Harness Type: Body Wiring Harness
OEM Connector: 13539008
Service Connector: 13539008
Description: 30-Way M 1.2 MCON, 2.8, 6.3 YESC Series(BK)

Terminal Part Information

Terminal Type ID	Terminated Lead	Diagnostic Test Probe	Terminal Removal Tool
I	Not required	J-35616-16 (L-GN)	No Tool Required
II	Not required	J-35616-42 (RD)	No Tool Required
III	Not required	J-35616-4A (PU)	No Tool Required
IV	13580023	J-35616-43 (RD)	J-38125-11A
V	19352075	J-35616-13 (BU)	J-38125-215A
VI	84888592	J-35616-5 (PU)	J-38125-11A

X905 Liftgate Wiring Harness to Body Wiring Harness

Pin	Size	Color	Circuit	Terminal Type ID	Option	Function	Pin	Size	Color	Circuit	Terminal Type ID	Option
1	—	—	—	—	—	Not Occupied	1	—	—	—	—	—
2	0.35	GN / YE	6846	I	—	Rear License Plate Lamp Control	2	0.35	GN / YE	6846	V	—
3	0.35	BU / GN	4089	I	—	Rear Closure Motor Control	3	0.35	BU / GN	4089	V	—
4	0.5	BN / GY	6995	I	—	Right Rear Park Lamp Control	4	0.5	BN / GY	6995	V	—
5	0.35	GN / BU	2856	I	—	Body Control Module LIN Bus 10 Body Control Module LIN Bus 10	5	0.5 0.35	GN / BU GN / BU	2856 2856	V V	AS8+ C25/ ATH+ C25 + TC2 - AS8- ATH+ C25/ - AS8+ C25- TC2
6	0.35	VT / GY	1303	I	—	Liftgate Ajar Switch Signal 1	6	0.35	VT / GY	1303	V	—

X905 Liftgate Wiring Harness to Body Wiring Harness (cont'd)

Pin	Size	Color	Circuit	Terminal Type ID	Option	Function	Pin	Size	Color	Circuit	Terminal Type ID	Option
7 - 8	—	—	—	—	—	Not Occupied	7 - 8	—	—	—	—	—
9	0.5	GY / BK	2680	I	—	Lock Actuators Unlock Control 2	9	0.75	GY / BK	2680	V	—
10	0.35	BK / VT	4656	I	—	Rear Closure Object Sensor Low Reference	10	0.35	BK / VT	4656	V	—
11	—	—	—	—	—	Not Occupied	11	—	—	—	—	—
12	0.75	VT / GN	8869	I	—	Police Liftgate Strobe Rear On OFF Control	12	—	—	—	—	—
13	0.35	BU / YE	2279	I	—	Liftgate Window Ajar Switch Signal	13	0.35	BU / YE	2279	V	—
14	0.35	GY / WH	4658	I	—	Rear Closure Switch LED Control	14	0.35	GY / WH	4658	V	—
15	—	—	—	—	—	Not Occupied	15	—	—	—	—	—
16	0.35	YE / BU	5797	I	—	Rear Closure Handle Switch Open Signal	16	0.35	YE / BU	5797	V	—
17	0.35	GY / GN	6190	I	—	Liftgate Window/Rear Compartment Lid, Exterior Unlatch Signal	17	0.35	GY / GN	6190	V	—
18	0.35	BN / BU	6993	I	—	Left Rear Park Lamp Control	18	0.5	BN / BU	6993	V	—
19	0.35	YE / BK	8085	I	—	Rear Closure Latch Primary Status	19	0.35	YE / BK	8085	V	—
20	—	—	—	—	—	Not Occupied	20	—	—	—	—	—
21	0.35	GY / VT	4678	I	—	Rear Closure Latch Unlatch Status	21	0.35	GY / VT	4678	V	—
22	0.35	WH / GN	8084	I	—	Rear Closure Latch Neutral Status	22	0.35	WH / GN	8084	V	—
23	0.35	GN	4657	I	—	Rear Closure Switch Signal	23	0.35	GN	4657	V	—
24	0.5	BU / WH	6128	I	—	Rear Closure Unlatch Actuator Unlatch Control	24	0.5	BU / WH	6128	V	—
25	2.5	BN / VT	293	II	—	Rear Defogger Grid Control	25	2.5	BN / VT	293	IV	—
26	0.75	RD / YE	3040	III	—	Battery Positive Voltage	26	0.75	RD / YE	3040	VI	—

X905 Liftgate Wiring Harness to Body Wiring Harness (cont'd)

Pin	Size	Color	Circuit	Terminal Type ID	Option	Function	Pin	Size	Color	Circuit	Terminal Type ID	Option
27	0.5 1	VT BU / GY	8866 4682	III III	5W4/ 9C1 TC2	Police Liftgate Strobe Control Rear Closure Cinch Latch Motor Release Control	27	1	BU / GY	4682	VI	—
28	0.75 1	WH BN	8867 4681	III III	5W4/ 9C1 TC2	Police Liftgate Strobe Synchronization Signal Rear Closure Cinch Latch Motor Cinch Control	28	1	BN	4681	VI	—
29	0.75	BK	2050	III	—	Ground	29	0.75	BK	2050	VI	—
30	2.5	BK	2050	II	—	Ground	30	2.5	BK	2050	IV	—

X906 Antenna Coaxial Cable to Rearview Driver Information Camera Rear Closure Coaxial Cable (DRZ)

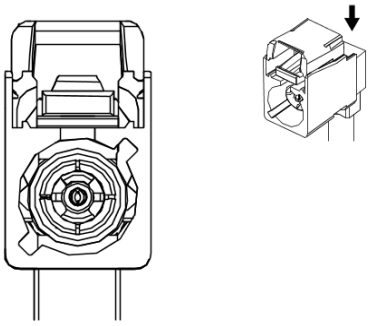

3028803

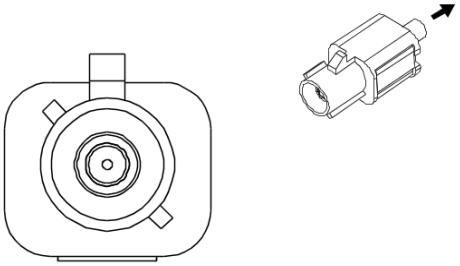

2871877

Connector Part Information

Harness Type: Antenna Coax

OEM Connector: 13532494

Service Connector: Service by Cable Assembly — See Part Catalog

Description: 1-Way F Coax Type

Connector Part Information

Harness Type: Rearview Driver Information Camera Rear Closure Coaxial Cable COAX

OEM Connector: 13532505

Service Connector: Service by Cable Assembly — See Part Catalog

Description: 1-Way M Coax Type

Terminal Part Information

Terminal Type ID	Terminated Lead	Diagnostic Test Probe	Terminal Removal Tool
I	Not required	No Tool Required	No Tool Required

X906 Antenna Coaxial Cable to Rearview Driver Information Camera Rear Closure Coaxial Cable (DRZ)

Pin	Size	Color	Circuit	Terminal Type ID	Option	Function	Pin	Size	Color	Circuit	Terminal Type ID	Option
—	—	Coax Cable	—	I	—	Full Display Mirror Rear Camera Coaxial Video Signal	—	—	Coax Cable	—	I	—

X907A Rear License Plate Lamp Wiring Harness to Liftgate Wiring Harness

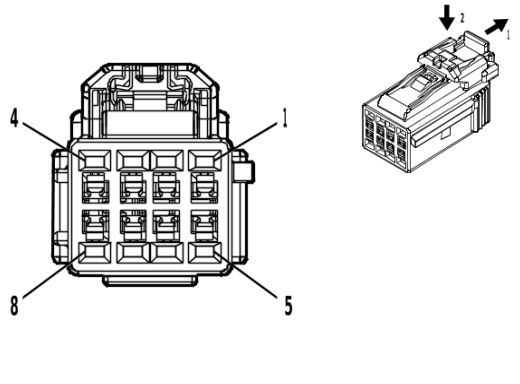

5086387

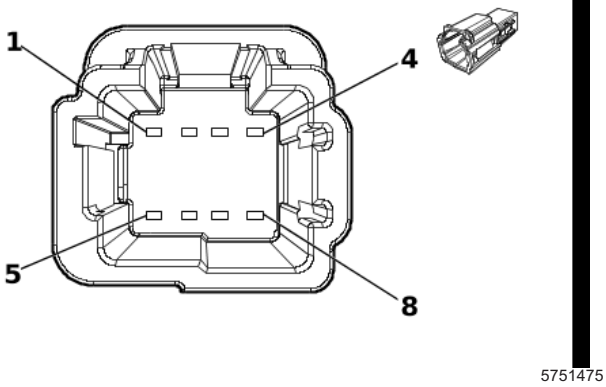

5751475

Connector Part Information

Harness Type: Rear License Plate Lamp Wiring Harness
OEM Connector: 6098-8443
Service Connector: Service by Harness - See Part Catalog
Description: 8-Way F 1.2 Series(BK)

Connector Part Information

Harness Type: Liftgate Wiring Harness
OEM Connector: 6098-9129
Service Connector: Service by Harness - See Part Catalog
Description: 8-Way M 1.2 MBS Series(BK)

Terminal Part Information

Terminal Type ID	Terminated Lead	Diagnostic Test Probe	Terminal Removal Tool
I	Not required	J-35616-12 (BU)	No Tool Required
II	Not required	J-35616-17 (L-GN)	No Tool Required

X907A Rear License Plate Lamp Wiring Harness to Liftgate Wiring Harness

Pin	Size	Color	Circuit	Terminal Type ID	Option	Function	Pin	Size	Color	Circuit	Terminal Type ID	Option
1	0.35	YE / BU	5797	I	—	Rear Closure Handle Switch Open Signal	1	0.35	YE / BU	5797	II	—
2	0.35	GN / YE	6846	I	—	Rear License Plate Lamp Control	2	0.35	GN / YE	6846	II	—
3 - 4	—	—	—	—	—	Not Occupied	3 - 4	—	—	—	—	—
5	0.35	GY / GN	6190	I	—	Liftgate Window/Rear Compartment Lid, Exterior Unlatch Signal	5	0.35	GY / GN	6190	II	—
6	—	—	—	—	—	Not Occupied	6	—	—	—	—	—
7	0.35	BK	2050	I	—	Ground	7	0.35	BK	2050	II	—
8	—	—	—	—	—	Not Occupied	8	—	—	—	—	—

X918 Chassis Wiring Harness to Front Disc Brake Pad Wear Sensor Jumper (JBK)

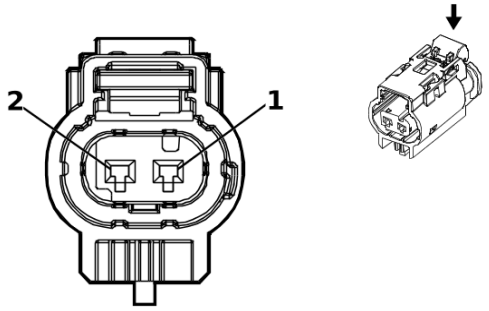

3747581

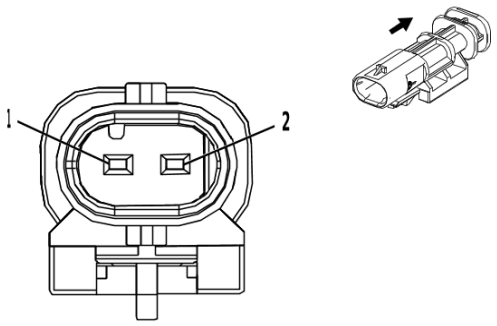

2474755

Connector Part Information

Harness Type: Chassis Wiring Harness
OEM Connector: 10094234
Service Connector: 84727362
Description: 2-Way F 1.2 Multilock Series, Sealed(BK)

Connector Part Information

Harness Type: Front Disc Brake Pad Wear Sensor Jumper
OEM Connector: 84480342
Service Connector: Service by Harness - See Part Catalog
Description: 2-Way M (BK)

Terminal Part Information

Terminal Type ID	Terminated Lead	Diagnostic Test Probe	Terminal Removal Tool
I	Not required	J-35616-12 (BU)	No Tool Required
II	Not required	J-35616-16 (LT GN)	No Tool Required
III	Not Available	No Tool Required	Not Available

X918 Chassis Wiring Harness to Front Disc Brake Pad Wear Sensor Jumper (JBK)

Pin	Size	Color	Circuit	Terminal Type ID	Option	Function	Pin	Size	Color	Circuit	Terminal Type ID	Option
1	0.75	BN / BU	1602	I	—	Front Brake Pad Wear Sensor Signal	1	0.75	BN / BU	1602	III	—
2	0.5	BK	2050	II	—	Ground	2	0.5	BK	2050	III	—

X944 Engine Wiring Harness to Engine Coolant Temperature Sensor Harness (LM2)

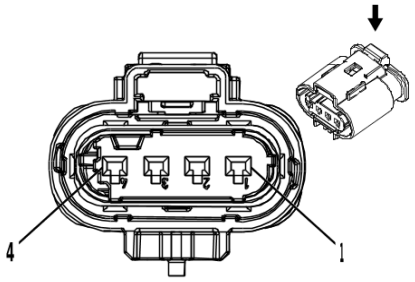

2717079

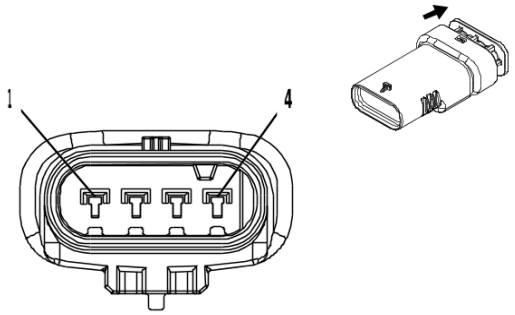

4560843

Connector Part Information

Harness Type: Engine Wiring Harness
OEM Connector: 10010346
Service Connector: 13587299
Description: 4-Way F 1.2 Multilock Series, Sealed(BK)

Connector Part Information

Harness Type: Engine Coolant Temperature Sensor Harness
OEM Connector: 10013906
Service Connector: Service by Harness - See Part Catalog
Description: 4-Way M 1.2 Multilock Series, Sealed(GY)

Terminal Part Information

Terminal Type ID	Terminated Lead	Diagnostic Test Probe	Terminal Removal Tool
I	Not required	J-35616-12 (BU)	No Tool Required
II	Not required	J-35616-17 (L-GN)	No Tool Required

X944 Engine Wiring Harness to Engine Coolant Temperature Sensor Harness (LM2)

Pin	Size	Color	Circuit	Terminal Type ID	Option	Function	Pin	Size	Color	Circuit	Terminal Type ID	Option
1	0.5	GY / VT	2404	I	—	Engine Block Coolant Temperature Signal	1	0.5	GY / VT	2404	II	—
2	0.5	BK / GY	626	I	—	Engine Control Vehicle Sensors Low Reference 1	2	0.5	BK / GN	580	II	—
3	0.5	VT	2988	I	—	Engine Outlet Coolant Temperature Signal	3	0.5	VT	2988	II	—
4	0.5	BK / YE	548	I	—	Engine Control Sensors Low Reference 1	4	0.5	BK / GY	626	II	—

X950 Front Object Alarm Sensor Wiring Harness to Body Wiring Harness

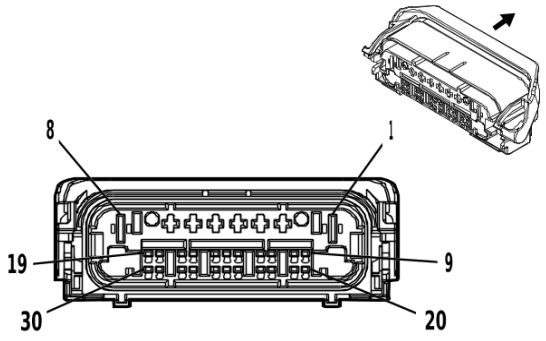

4650150

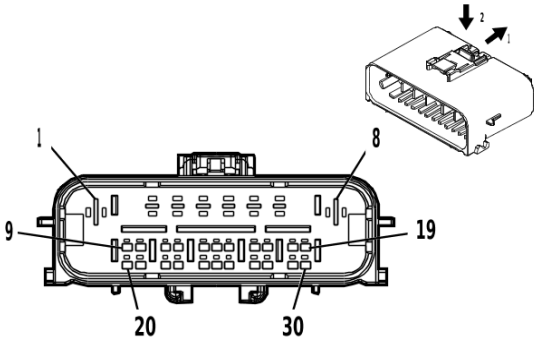

4817393

Connector Part Information

Harness Type: Front Object Alarm Sensor Wiring Harness
OEM Connector: 2301462-1
Service Connector: Service by Harness - See Part Catalog
Description: 30-Way F 1.2 MCON, 2.8, 6.3 MCP Series, Sealed(BK)

Connector Part Information

Harness Type: Body Wiring Harness
OEM Connector: 2301461-1
Service Connector: 19371177
Description: 30-Way M 1.2 MCON-CB, 2.8 MCP Series, Sealed(BK)

Terminal Part Information

Terminal Type ID	Terminated Lead	Diagnostic Test Probe	Terminal Removal Tool
I	Not required	J-35616-16 (L-GN)	No Tool Required
II	Not required	J-35616-40 (BU)	No Tool Required
III	Not required	J-35616-4A (PU)	No Tool Required
IV	13575376	J-35616-32 (OG)	J-38125-36
V	13578827	J-35616-5 (PU)	J-38125-36
VI	19330704	J-35616-13 (BU)	J-38125-215A

X950 Front Object Alarm Sensor Wiring Harness to Body Wiring Harness

Pin	Size	Color	Circuit	Terminal Type ID	Option	Function	Pin	Size	Color	Circuit	Terminal Type ID	Option
1	0.5	BU / GN	1253	II	—	Right Front Park Lamp Control	1	0.5	BU / GN	1253	IV	—
2	0.5	VT / GY	5218	III	—	Right Front Middle Parking Assist Sensor	2	0.5	VT / GY	5218	V	—
3	—	—	—	—	—	Virtual Key Module LIN Bus 1	3	0.5	GN / BK	2738	V	—
4	—	—	—	—	—	Signal Ground	4	0.75	BK / WH	251	V	—
5	—	—	—	—	—	Not Occupied	5	—	—	—	—	—
6	0.5	BN / GY	5061	III	—	Left Front Fog Lamp Control	6	0.5	BN / GY	5061	V	—
7	—	—	—	—	—	Not Occupied	7	—	—	—	—	—

X950 Front Object Alarm Sensor Wiring Harness to Body Wiring Harness (cont'd)

Pin	Size	Color	Circuit	Terminal Type ID	Option	Function	Pin	Size	Color	Circuit	Terminal Type ID	Option
8	0.5	BN / GN	5062	II	—	Right Front Fog Lamp Control	8	0.5	BN / GN	5062	IV	—
9 - 10	—	—	—	—	—	Not Occupied	9 - 10	—	—	—	—	—
11	0.5	WH / GY	5217	I	—	Right Front Outer Parking Assist Sensor	11	0.5	WH / GY	5217	VI	—
12	0.5	BK / BU	5214	I	—	Front Parking Assist Sensor Low Reference	12	0.5	BK / BU	5214	VI	—
13	—	—	—	—	—	Not Occupied	13	—	—	—	—	—
14	0.5	WH / YE	1254	I	—	Left Front Park Lamp Control	14	0.5	WH / YE	1254	VI	—
15	0.5	BN	6581	I	—	Front Parking Assist Display Control	15	0.5	BN	6581	VI	—
16	0.5	YE / GY	5216	I	—	Left Front Middle Parking Assist Sensor	16	0.5	YE / GY	5216	VI	—
17 - 18	—	—	—	—	—	Not Occupied	17 - 18	—	—	—	—	—
19	—	—	—	—	—	Battery Positive Voltage	19	0.5	RD / GY	4840	VI	—
20	0.5	VT / WH	5215	I	—	Left Front Outer Parking Assist Sensor	20	0.5	VT / WH	5215	VI	—
21 - 22	—	—	—	—	—	Not Occupied	21 - 22	—	—	—	—	—
23	0.75	BK	250	I	—	Ground	23	0.75	BK	250	VI	—
24 - 27	—	—	—	—	—	Not Occupied	24 - 27	—	—	—	—	—
28	0.75	BK	150	I	—	Ground	28	0.75	BK	150	VI	—
29 - 30	—	—	—	—	—	Not Occupied	29 - 30	—	—	—	—	—

X951 Front Object Alarm Sensor Wiring Harness to Body Wiring Harness (UV2/UVS)

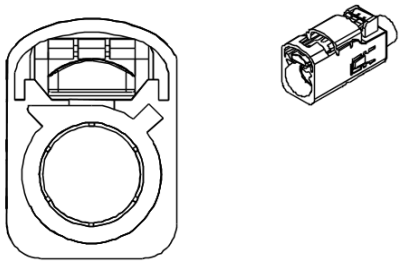

2807580

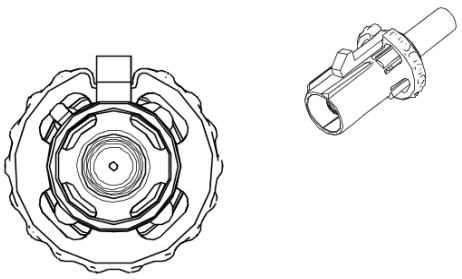

4109605

Connector Part Information

Harness Type: Front Object Alarm Sensor Wiring Harness COAX

OEM Connector: 35256728

Service Connector: Service by Cable Assembly — See Part Catalog

Description: 1-Way F Coax Type

Connector Part Information

Harness Type: Body Wiring Harness COAX

OEM Connector: 35294091

Service Connector: Service by Cable Assembly — See Part Catalog

Description: 1-Way M Coax Type

Terminal Part Information

Terminal Type ID	Terminated Lead	Diagnostic Test Probe	Terminal Removal Tool
I	Not required	No Tool Required	No Tool Required

X951 Front Object Alarm Sensor Wiring Harness to Body Wiring Harness (UV2/UVS)

Pin	Size	Color	Circuit	Terminal Type ID	Option	Function	Pin	Size	Color	Circuit	Terminal Type ID	Option
—	—	Coax Cable	—	I	—	Front Vision Camera 1 Coaxial Video Signal	—	—	Coax Cable	—	I	—

X953 Body Wiring Harness to Rear Object Alarm Sensor Wiring Harness

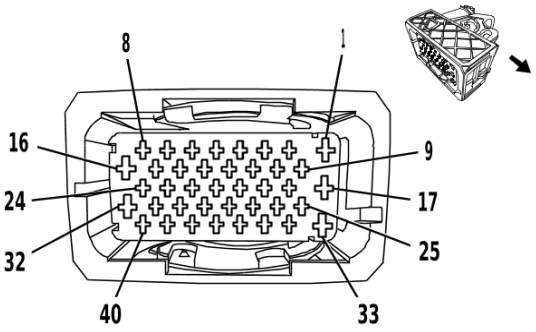

2220548

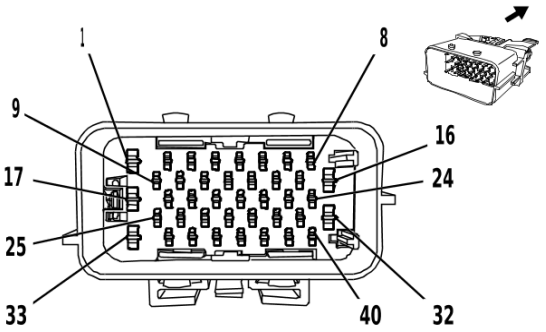

2339640

Connector Part Information

Harness Type: Body Wiring Harness

OEM Connector: 13603185

Service Connector: 13576549

Description: 40-Way F 1.5 DSQ, 2.8 ATS Series, Sealed(BK)

Connector Part Information

Harness Type: Rear Object Alarm Sensor Wiring Harness

OEM Connector: 13603208

Service Connector: Service by Harness - See Part Catalog

Description: 40-Way M 1.5 DSQ, 2.8 ATS Series, Sealed(BK)

Terminal Part Information

Terminal Type ID	Terminated Lead	Diagnostic Test Probe	Terminal Removal Tool
I	13580829	J-35616-4A (PU)	J-38125-36
II	19368143	J-35616-14 (GN)	J-38125-215A
III	Not required	J-35616-3 (GY)	No Tool Required
IV	Not required	J-35616-5 (PU)	No Tool Required

X953 Body Wiring Harness to Rear Object Alarm Sensor Wiring Harness

Pin	Size	Color	Circuit	Terminal Type ID	Option	Function	Pin	Size	Color	Circuit	Terminal Type ID	Option
1	—	—	—	—	—	Not Occupied	1	—	—	—	—	—
2	0.5	BN / WH	2374	II	—	Object Sensor Voltage Reference	2	0.5	BN / WH	2374	III	—
3	0.5	YE / GY	122	II	—	Rear Fog Lamp Control	3	0.5	YE / GY	122	III	—
4	—	—	—	—	—	Not Occupied	4	—	—	—	—	—
5	0.35	BU / GY	4105	II	—	AUTOSAR CAN Bus [+] 8 Serial Data	5	0.35	BU / GY	4105	III	—
6	—	—	—	—	—	Not Occupied	6	—	—	—	—	—
7	0.5	YE	2375	II	—	Left Rear Outer Parking Assist Sensor Signal	7	0.5	YE	2375	III	—
8 - 9	—	—	—	—	—	Not Occupied	8 - 9	—	—	—	—	—
10	0.35	GN / BU	2856	II	—	Body Control Module LIN Bus 10	10	0.5	GN / BU	2856	III	—

X953 Body Wiring Harness to Rear Object Alarm Sensor Wiring Harness (cont'd)

Pin	Size	Color	Circuit	Terminal Type ID	Option	Function	Pin	Size	Color	Circuit	Terminal Type ID	Option
11 - 12	—	—	—	—	—	Not Occupied	11 - 12	—	—	—	—	—
13	0.35	WH / GY	4104	II	—	AUTOSAR CAN Bus [-] 8 Serial Data	13	0.35	WH / GY	4104	III	—
14	—	—	—	—	—	Not Occupied	14	—	—	—	—	—
15	0.35	BN / GN	3568	II	—	Rear Closure Passive Entry Antenna High Signal	15	0.5	BN / GN	3568	III	—
16	—	—	—	—	—	Not Occupied	16	—	—	—	—	—
17	0.5	BK	1450	I	—	Ground	17	0.5	BK	1450	IV	—
18	0.5	YE / BU	2376	II	—	Left Rear Middle Parking Assist Sensor Signal	18	0.5	YE / BU	2376	III	—
19	0.35	WH	4100	II	—	AUTOSAR CAN Bus [-] 4 Serial Data	19	0.35	WH	4100	III	—
20	0.35	BU / VT	4101	II	—	AUTOSAR CAN Bus [+] 4 Serial Data	20	0.35	BU / VT	4101	III	—
21	0.5	BK / GY	2379	II	—	Object Sensor Low Reference	21	0.5	BK / GY	2379	III	—
22	0.35	WH / GY	4104	II	—	AUTOSAR CAN Bus [-] 8 Serial Data	22	0.5	WH / GY	4104	III	—
23	1	RD / GN	3140	II	—	Battery Positive Voltage	23	1	RD / GN	3140	III	—
24	—	—	—	—	—	Not Occupied	24	—	—	—	—	—
25	0.5	RD / GY	4840	II	—	Battery Positive Voltage	25	0.5	RD / GY	4840	III	—
26	—	—	—	—	—	Not Occupied	26	—	—	—	—	—
27	0.5	RD / BN	4940	II	—	Battery Positive Voltage	27	0.5	RD / BN	4940	III	—
28	0.5	GN / BK	2738	II	—	Virtual Key Module LIN Bus 1	28	—	—	—	—	—
29	0.35	GY	2066	II	—	Hands-Free Liftgate Sensor Lamp Control	29	0.5	GY	2066	III	—
30 - 31	—	—	—	—	—	Not Occupied	30 - 31	—	—	—	—	—
32	0.5	YE / WH	2377	I	—	Right Rear Middle Parking Assist Sensor Signal	32	0.5	YE / WH	2377	IV	—
33	—	—	—	—	—	Not Occupied	33	—	—	—	—	—

X953 Body Wiring Harness to Rear Object Alarm Sensor Wiring Harness (cont'd)

Pin	Size	Color	Circuit	Terminal Type ID	Option	Function	Pin	Size	Color	Circuit	Terminal Type ID	Option
34	0.35	GN / YE	2862	II	—	Body Control Module LIN Bus 16	34	0.5	GN / YE	2862	III	—
35	0.35	GN / GY	3569	II	—	Rear Closure Passive Entry Antenna Low Signal	35	0.5	GN / GY	3569	III	—
36	0.5	YE / VT	2378	II	—	Right Rear Outer Parking Assist Sensor Signal	36	0.5	YE / VT	2378	III	—
37 - 39	—	—	—	—	—	Not Occupied	37 - 39	—	—	—	—	—
40	0.35	BU / GY	4105	II	—	AUTOSAR CAN Bus [+] 8 Serial Data	40	0.5	BU / GY	4105	III	—

X961 Engine Wiring Harness to Valve Rocker Arm Oil Control Valve Extension Harness (L84/L87)

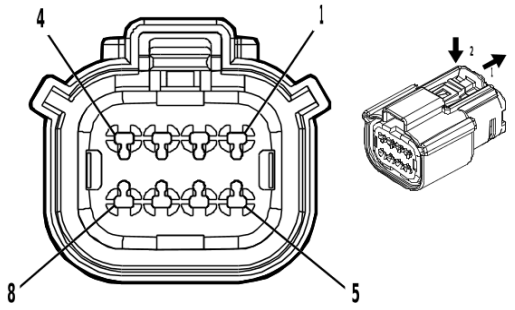

4846407

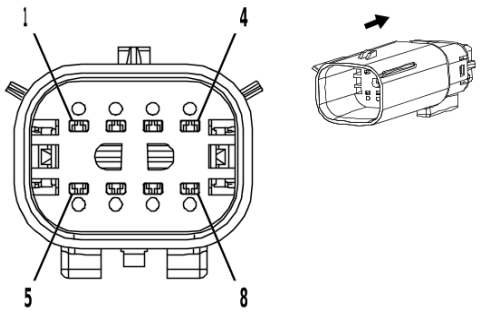

2667653

Connector Part Information

Harness Type: Engine Wiring Harness
OEM Connector: 33472-4806
Service Connector: 84928314
Description: 8-Way F 1.5 MX Series, Sealed(BK)

Connector Part Information

Harness Type: Valve Rocker Arm Oil Control Valve Extension Harness
OEM Connector: Not Available
Service Connector: Service by Harness - See Part Catalog
Description: 8-Way M (BK)

Terminal Part Information

Terminal Type ID	Terminated Lead	Diagnostic Test Probe	Terminal Removal Tool
I	Not required	J-35616-14 (GN)	No Tool Required
II	Not required	No Tool Required	No Tool Required

X961 Engine Wiring Harness to Valve Rocker Arm Oil Control Valve Extension Harness (L84/L87)

Pin	Size	Color	Circuit	Terminal Type ID	Option	Function	Pin	Size	Color	Circuit	Terminal Type ID	Option
1	0.5	WH / GN	2492	I	—	Cylinder Shutoff Solenoid Enable Signal 2	1	0.5	WH / GN	2492	II	—
2	0.5	GN	5492	I	—	Cylinder Deactivation Solenoid Valve Control 2	2	0.5	GN	5492	II	—
3	0.5	YE / GY	2493	I	—	Cylinder Shutoff Solenoid Enable Signal 3	3	0.5	YE / GY	2493	II	—
4	0.5	GY	5493	I	—	Cylinder Deactivation Solenoid Valve Control 3	4	0.5	GY	5493	II	—
5	0.5	WH / VT	2495	I	—	Cylinder Shutoff Solenoid Enable Signal 5	5	0.5	WH / VT	2495	II	—

X961 Engine Wiring Harness to Valve Rocker Arm Oil Control Valve Extension Harness (L84/L87) (cont'd)

Pin	Size	Color	Circuit	Terminal Type ID	Option	Function	Pin	Size	Color	Circuit	Terminal Type ID	Option
6	0.5	VT	5495	I	—	Cylinder De-activation Solenoid Valve Control 5	6	0.5	VT	5495	II	—
7	0.5	WH / YE	2498	I	—	Cylinder Shutoff Sole-noid Enable Signal 8	7	0.5	WH / YE	2498	II	—
8	0.5	YE	5498	I	—	Cylinder De-activation Solenoid Valve Control 8	8	0.5	YE	5498	II	—

X962 Engine Wiring Harness to Valve Rocker Arm Oil Control Valve Extension Harness (L84/L87)

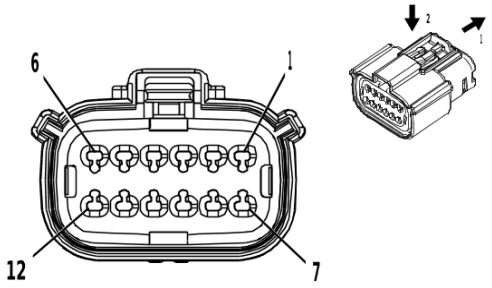

2871860

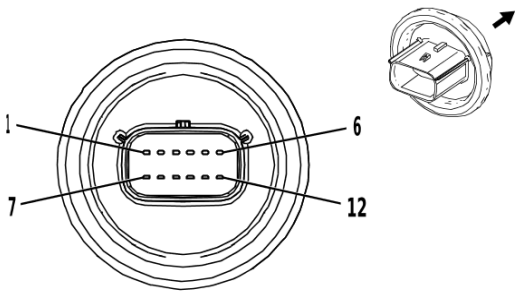

3238775

Connector Part Information

Harness Type: Engine Wiring Harness
OEM Connector: 33472-1266
Service Connector: 19352907
Description: 12-Way F 1.5 MX Series, Sealed(BK)

Connector Part Information

Harness Type: Valve Rocker Arm Oil Control Valve Extension Harness
OEM Connector: Not Available
Service Connector: Service by Harness - See Part Catalog
Description: 12-Way M (BK)

Terminal Part Information

Terminal Type ID	Terminated Lead	Diagnostic Test Probe	Terminal Removal Tool
I	19368973	J-35616-2A (GY)	J-38125-217
II	Not required	No Tool Required	No Tool Required

X962 Engine Wiring Harness to Valve Rocker Arm Oil Control Valve Extension Harness (L84/L87)

Pin	Size	Color	Circuit	Terminal Type ID	Option	Function	Pin	Size	Color	Circuit	Terminal Type ID	Option
1	0.5	WH / BU	2491	I	—	Cylinder Shutoff Solenoid Enable Signal 1	1	0.5	WH / BU	2491	II	—
2	0.5	BU	5491	I	—	Cylinder Deactivation Solenoid Valve Control 1	2	0.5	BU	5491	II	—
3	0.5	YE / GN	2494	I	—	Cylinder Shutoff Solenoid Enable Signal 4	3	0.5	YE / GN	2494	II	—
4	0.5	YE / BU	5494	I	—	Cylinder Deactivation Solenoid Valve Control 4	4	0.5	YE / BU	5494	II	—
5	0.5	YE / BN	2496	I	—	Cylinder Shutoff Solenoid Enable Signal 6	5	0.5	YE / BN	2496	II	—

X962 Engine Wiring Harness to Valve Rocker Arm Oil Control Valve Extension Harness (L84/L87) (cont'd)

Pin	Size	Color	Circuit	Terminal Type ID	Option	Function	Pin	Size	Color	Circuit	Terminal Type ID	Option
6	0.5	BN	5496	I	—	Cylinder Deactivation Solenoid Valve Control 6	6	0.5	BN	5496	II	—
7	0.5	GN / GY	2497	I	—	Cylinder Shutoff Solenoid Enable Signal 7	7	0.5	GN / GY	2497	II	—
8	0.5	WH	5497	I	—	Cylinder Deactivation Solenoid Valve Control 7	8	0.5	WH	5497	II	—
9	0.5	BU	410	I	—	Engine Coolant Temperature Sensor Signal	9	0.5	BU	410	II	—
10	0.5	BK / YE	548	I	—	Engine Control Sensors Low Reference 1	10	0.5	BK / YE	548	II	—
11 - 12	—	—	—	—	—	Not Occupied	11 - 12	—	—	—	—	—

X963 Valve Rocker Arm Oil Control Valve Extension Harness to Valve Rocker Arm Oil Control Valve Extension Harness (L84/L87)

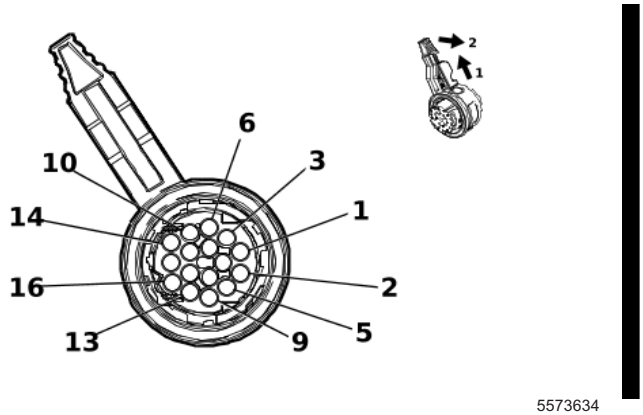

5573634

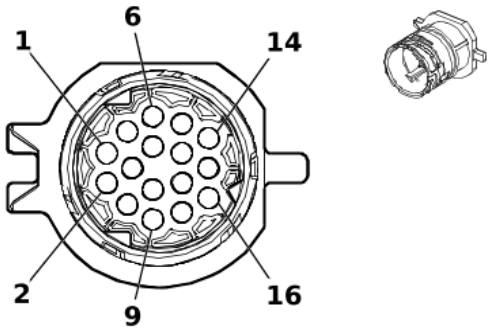

5575849

Connector Part Information

Harness Type: Valve Rocker Arm Oil Control Valve Extension Harness

OEM Connector: 10354998

Service Connector: Service by Harness - See Part Catalog

Description: 16-Way F 1.5 LKS Series, Sealed(BK)

Connector Part Information

Harness Type: Valve Rocker Arm Oil Control Valve Extension Harness

OEM Connector: 10140573

Service Connector: Service by Harness - See Part Catalog

Description: 16-Way M 1.5 LKS Series, Sealed(BK)

Terminal Part Information

Terminal Type ID	Terminated Lead	Diagnostic Test Probe	Terminal Removal Tool
I	Not Available	No Tool Required	Not Available
II	Not Available	No Tool Required	Not Available

X963 Valve Rocker Arm Oil Control Valve Extension Harness to Valve Rocker Arm Oil Control Valve Extension Harness (L84/L87)

Pin	Size	Color	Circuit	Terminal Type ID	Option	Function	Pin	Size	Color	Circuit	Terminal Type ID	Option
1	0.5	WH / GN	2492	I	—	Cylinder Shutoff Solenoid Enable Signal 2	1	0.5	WH / GN	2492	II	—
2	0.5	GN	5492	I	—	Cylinder Deactivation Solenoid Valve Control 2	2	0.5	GN	5492	II	—
3	0.5	YE / GY	2493	I	—	Cylinder Shutoff Solenoid Enable Signal 3	3	0.5	YE / GY	2493	II	—
4	0.5	GY	5493	I	—	Cylinder Deactivation Solenoid Valve Control 3	4	0.5	GY	5493	II	—
5	0.5	WH / VT	2495	I	—	Cylinder Shutoff Solenoid Enable Signal 5	5	0.5	WH / VT	2495	II	—

X963 Valve Rocker Arm Oil Control Valve Extension Harness to Valve Rocker Arm Oil Control Valve Extension Harness (L84/L87) (cont'd)

Pin	Size	Color	Circuit	Terminal Type ID	Option	Function	Pin	Size	Color	Circuit	Terminal Type ID	Option
6	0.5	VT	5495	I	—	Cylinder Deactivation Solenoid Valve Control 5	6	0.5	VT	5495	II	—
7	0.5	WH / YE	2498	I	—	Cylinder Shutoff Solenoid Enable Signal 8	7	0.5	WH / YE	2498	II	—
8	0.5	YE	5498	I	—	Cylinder Deactivation Solenoid Valve Control 8	8	0.5	YE	5498	II	—
9	0.5	WH / BU	2491	I	—	Cylinder Shutoff Solenoid Enable Signal 1	9	0.5	WH / BU	2491	II	—
10	0.5	BU	5491	I	—	Cylinder Deactivation Solenoid Valve Control 1	10	0.5	BU	5491	II	—
11	0.5	YE / GN	2494	I	—	Cylinder Shutoff Solenoid Enable Signal 4	11	0.5	YE / GN	2494	II	—
12	0.5	YE / BU	5494	I	—	Cylinder Deactivation Solenoid Valve Control 4	12	0.5	YE / BU	5494	II	—
13	0.5	YE / BN	2496	I	—	Cylinder Shutoff Solenoid Enable Signal 6	13	0.5	YE / BN	2496	II	—
14	0.5	BN	5496	I	—	Cylinder Deactivation Solenoid Valve Control 6	14	0.5	BN	5496	II	—
15	0.5	GN / GY	2497	I	—	Cylinder Shutoff Solenoid Enable Signal 7	15	0.5	GN / GY	2497	II	—
16	0.5	WH	5497	I	—	Cylinder Deactivation Solenoid Valve Control 7	16	0.5	WH	5497	II	—

X966 Engine Wiring Harness to Engine Wiring Harness (LM2)

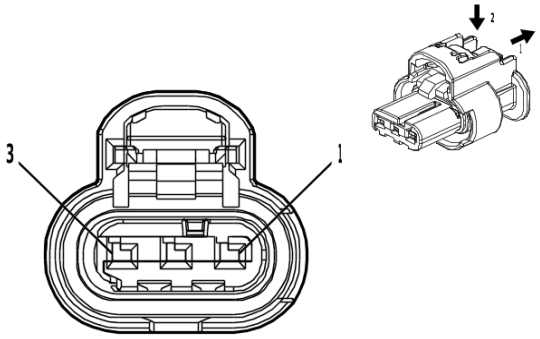

4778903

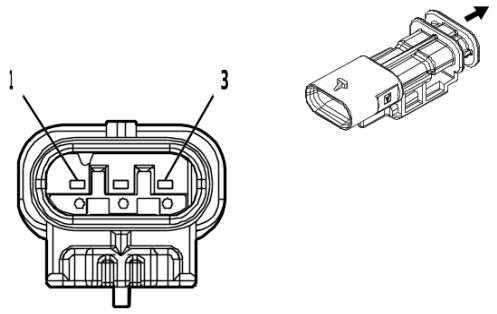

5068799

Connector Part Information

Harness Type: Engine Wiring Harness
OEM Connector: 1-2296695-2
Service Connector: 19371206
Description: 3-Way F 1.2 MCON-CB Series, Sealed(BK)

Connector Part Information

Harness Type: Engine Wiring Harness
OEM Connector: 13591344
Service Connector: Service by Harness - See Part Catalog
Description: 3-Way M (BK)

Terminal Part Information

Terminal Type ID	Terminated Lead	Diagnostic Test Probe	Terminal Removal Tool
I	Not required	J-35616-16 (LT GN)	No Tool Required
II	Not Available	No Tool Required	Not Available

X966 Engine Wiring Harness to Engine Wiring Harness (LM2)

Pin	Size	Color	Circuit	Terminal Type ID	Option	Function	Pin	Size	Color	Circuit	Terminal Type ID	Option
1	0.5	GN / BN	2732	I	—	Engine Control Module LIN Bus 4	1	0.5	GN / BN	2732	II	—
2	0.5	BK	6550	I	—	Ground	2	0.5	BK	6550	II	—
3	0.5	VT / BU	5294	I	—	Powertrain Main Relay Fused Supply Voltage 5	3	0.5	VT / BU	5294	II	—

X995A Body Wiring Harness to Rearview Driver Information Camera Rear Closure Coaxial Cable (UV2)

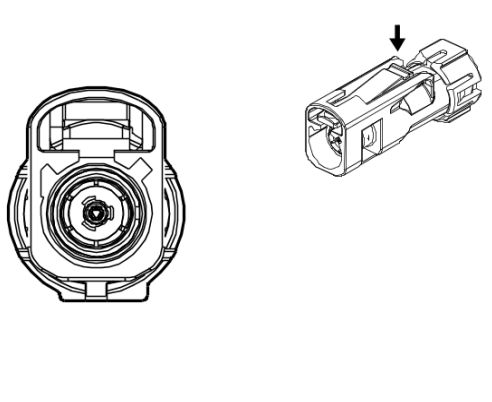

4817616

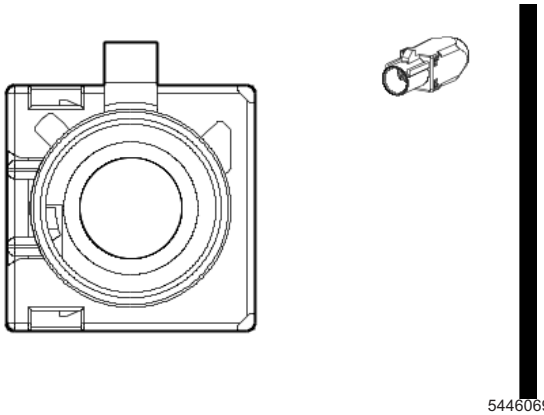

5446069

Connector Part Information

Harness Type: Body Wiring Harness COAX

OEM Connector: 35294086

Service Connector: Service by Cable Assembly — See Part Catalog

Description: 1-Way F Coax Type

Connector Part Information

Harness Type: Rearview Driver Information Camera Rear Closure Coaxial Cable COAX

OEM Connector: 13596714

Service Connector: Service by Cable Assembly — See Part Catalog

Description: 1-Way M Coax Type

Terminal Part Information

Terminal Type ID	Terminated Lead	Diagnostic Test Probe	Terminal Removal Tool
I	Not required	No Tool Required	No Tool Required

X995A Body Wiring Harness to Rearview Driver Information Camera Rear Closure Coaxial Cable (UV2)

Pin	Size	Color	Circuit	Terminal Type ID	Option	Function	Pin	Size	Color	Circuit	Terminal Type ID	Option
—	—	Coax Cable	—	I	—	Rear Vision Camera Coaxial Video Signal	—	—	Coax Cable	—	I	—

X995F Rearview Driver Information Camera Rear Closure Coaxial Cable to Rear License Plate Lamp Wiring Harness (UV2-DRZ)

—

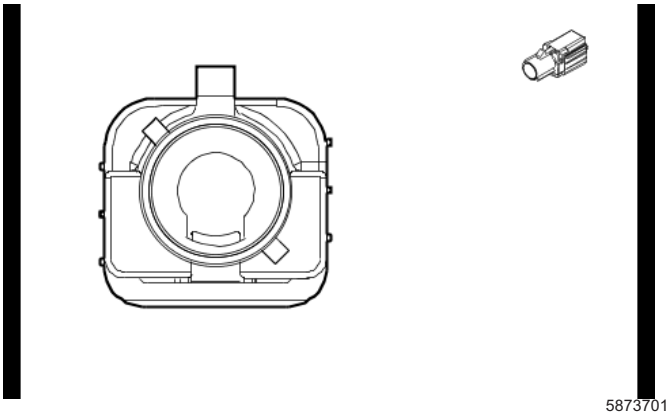

5873701

Connector Part Information

Harness Type: Rearview Driver Information Camera Rear Closure Coaxial Cable LVDS

OEM Connector: Not Available

Service Connector: Service by Cable Assembly — See Part Catalog

Description: 1-Way F

Connector Part Information

Harness Type: Rear License Plate Lamp Wiring Harness LVDS

OEM Connector: 33351038

Service Connector: Service by Cable Assembly — See Part Catalog

Description: 1-Way M Coax Type(BU)

Terminal Part Information

Terminal Type ID	Terminated Lead	Diagnostic Test Probe	Terminal Removal Tool
I	Not required	No Tool Required	No Tool Required

X995F Rearview Driver Information Camera Rear Closure Coaxial Cable to Rear License Plate Lamp Wiring Harness (UV2-DRZ)

Pin	Size	Color	Circuit	Terminal Type ID	Option	Function	Pin	Size	Color	Circuit	Terminal Type ID	Option
1	—	—	4721	I	—	Rearview Camera LVDS (Low Voltage Differential Signaling) Coaxial Signal	1	—	—	4721	II	—

X995R Rearview Driver Information Camera Rear Closure Coaxial Cable to Rear License Plate Lamp Wiring Harness (UV2+DRZ)

—

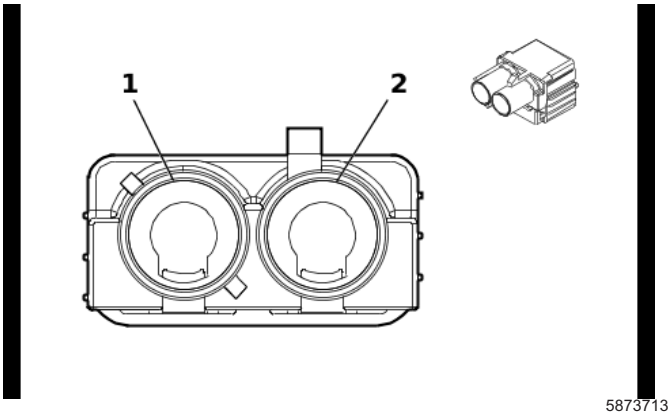

5873713

Connector Part Information

Harness Type: Rearview Driver Information Camera Rear Closure Coaxial Cable LVDS

OEM Connector: Not Available

Service Connector: Service by Cable Assembly — See Part Catalog

Description: 2-Way F

Connector Part Information

Harness Type: Rear License Plate Lamp Wiring Harness LVDS

OEM Connector: 33351073

Service Connector: Service by Cable Assembly — See Part Catalog

Description: 2-Way M Coax Type(BU)

Terminal Part Information

Terminal Type ID	Terminated Lead	Diagnostic Test Probe	Terminal Removal Tool
I	Not required	No Tool Required	No Tool Required

X995R Rearview Driver Information Camera Rear Closure Coaxial Cable to Rear License Plate Lamp Wiring Harness (UV2+DRZ)

Pin	Size	Color	Circuit	Terminal Type ID	Option	Function	Pin	Size	Color	Circuit	Terminal Type ID	Option
1	—	—	4721	I	—	Rearview Camera LVDS (Low Voltage Differential Signaling) Coaxial Signal	1	—	—	4721	II	—
2	—	—	2387	I	—	Full Display Mirror Rear Camera LVDS (Low Voltage Differential Signaling) Coaxial Signal	2	—	—	2387	II	—

X999 Reductant Control Module Jumper Wiring Harness to Chassis Wiring Harness (LM2)

—

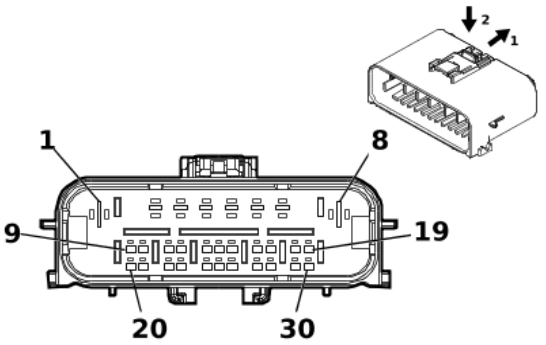

5377298

Connector Part Information

Harness Type: Reductant Control Module Jumper Wiring Harness

OEM Connector: Not Available

Service Connector: Service by Harness - See Part Catalog

Description: 30-Way F

Connector Part Information

Harness Type: Chassis Wiring Harness

OEM Connector: 1-2301461-4

Service Connector: Service by Harness - See Part Catalog

Description: 30-Way M 1.2 MCON-CB, 2.8 MCP Series, Sealed(GY)

Terminal Part Information

Terminal Type ID	Terminated Lead	Diagnostic Test Probe	Terminal Removal Tool
I	Not required	No Tool Required	No Tool Required
II	Not required	J-35616-13 (BU)	No Tool Required
III	Not required	J-35616-43 (RD)	No Tool Required
IV	Not required	J-35616-5 (PU)	No Tool Required

X999 Reductant Control Module Jumper Wiring Harness to Chassis Wiring Harness (LM2)

Pin	Size	Color	Circuit	Terminal Type ID	Option	Function	Pin	Size	Color	Circuit	Terminal Type ID	Option
1	2.5	BU	3921	I	—	Diesel Exhaust Fluid Heater Control 1	1	2.5	BU	3921	III	—
2	0.5	RD / WH	2040	I	—	Battery Positive Voltage	2	0.5	RD / WH	2040	IV	—
7	1	BK	1650	I	—	Ground	7	1	BK	1650	IV	—
8	2.5	BK	1650	I	—	Ground	8	2.5	BK	1650	III	—
11	0.5	BU / BK	4977	I	—	AUTOSAR CAN Bus [+] 3 Serial Data	11	0.5	BU / BK	4977	II	—
12	0.5	WH	4976	I	—	AUTOSAR CAN Bus [-] 3 Serial Data	12	0.5	WH	4976	II	—
22	0.5	BU / BK	4977	I	—	AUTOSAR CAN Bus [+] 3 Serial Data	22	0.5	BU / BK	4977	II	—
23	0.5	WH	4976	I	—	AUTOSAR CAN Bus [-] 3 Serial Data	23	0.5	WH	4976	II	—

X999 Reductant Control Module Jumper Wiring Harness to Chassis Wiring Harness (LM2) (cont'd)

Pin	Size	Color	Circuit	Terminal Type ID	Option	Function	Pin	Size	Color	Circuit	Terminal Type ID	Option
25	0.5	VT / BK	2139	I	—	Run/Crank Ignition 1 Voltage	25	0.5	VT / BK	2139	II	—

Electrical Component Locator and Harness Routing Views

Schematic and Routing Diagrams

Harness Routing Views (Front of Vehicle - Front Fascia Harness)

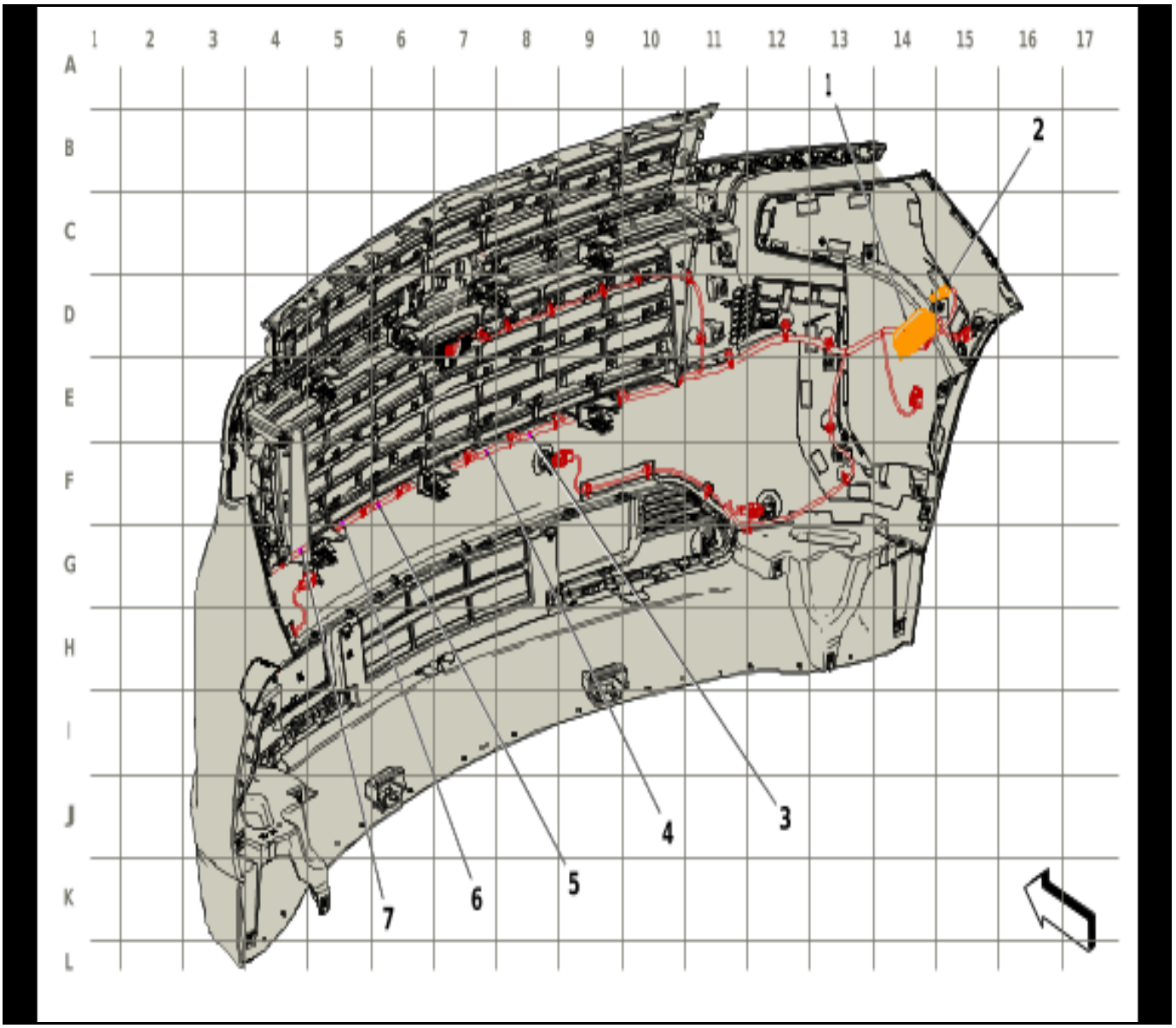

5869929

Items

(1) X950 Front Object Alarm Sensor Wiring Harness to Body Wiring Harness

(2) X951 Front Object Alarm Sensor Wiring Harness to Body Wiring Harness (UV2/UVS)

(3) J104

(4) J103 Front Object Alarm Sensor Wiring Harness (UD5)

(5) J102 Front Object Alarm Sensor Wiring Harness (UD5)

(6) J101

(7) J100

Harness Routing Views (Engine Compartment - Engine Harness - Left Front (L84/L87))

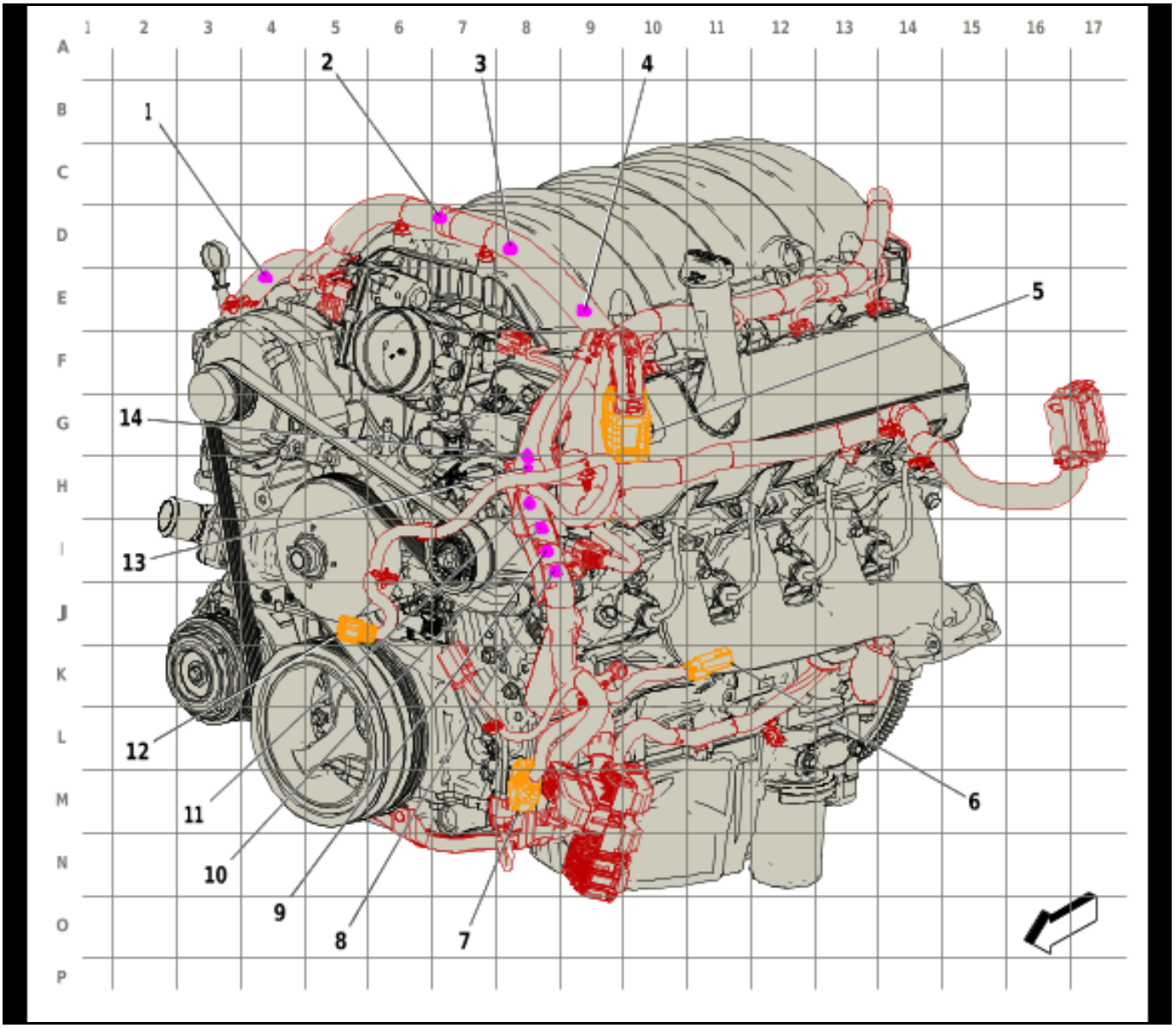

5869930

Items

(1) J163
(2) J162 Engine Wiring Harness
(3) J161 Engine Wiring Harness (L84/L87)
(4) J159 Engine Wiring Harness
(5) X125 Engine Wiring Harness to Body Wiring Harness
(6) X415A Transfer Case Selector Shift Control Switch Wiring Harness Extension Harness to Engine Wiring Harne (NP0/NQH)
(7) X403 Engine Wiring Harness to Chassis Wiring Harness
(8) J152 Engine Wiring Harness (L84/L87)
(9) J153 Engine Wiring Harness (LM2)
(10) J154 Engine Wiring Harness
(11) J155 Engine Wiring Harness (L84/L87)
(12) X604A Engine Wiring Harness to Active Grille Air Shutter Harness (VTI)
(13) J156 Engine Wiring Harness (L84/L87)
(14) J157 Engine Wiring Harness (L84/L87)

Harness Routing Views (Engine Compartment - Engine Harness - Left Rear (L84/L87))

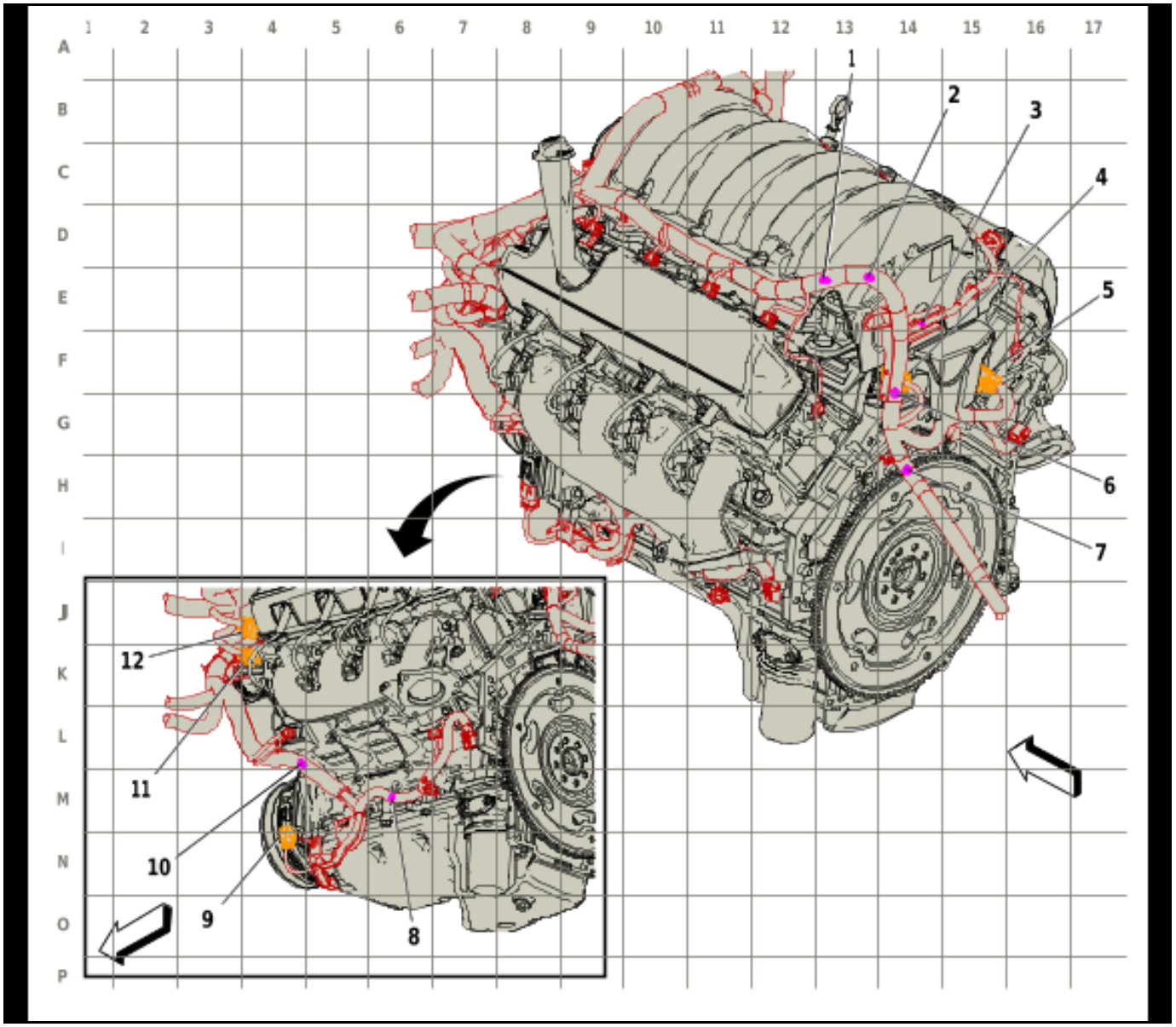

5869931

Items

(1) J164 Engine Wiring Harness (L84/L87)

(2) J165 Engine Wiring Harness (L84/L87)

(3) J167 Engine Wiring Harness (L84/L87)

(4) X160 Engine Wiring Harness to Fuel Injector Wiring Harness

(5) X161 Engine Wiring Harness to Fuel Injector Wiring Harness (L84/L87)

(6) J166 Engine Wiring Harness (L84/L87)

(7) J168 Engine Wiring Harness

(8) J151 Engine Wiring Harness (L84/L87)

(9) X128B

(10) J150 Engine Wiring Harness (L84/L87)

(11) X961 Engine Wiring Harness to Valve Rocker Arm Oil Control Valve Extension Harness (L84/L87) (L84/L87)

(12) X962 Engine Wiring Harness to Valve Rocker Arm Oil Control Valve Extension Harness (L84/L87)

Harness Routing Views (Engine Compartment - Engine Harness - Left Front (LM2))

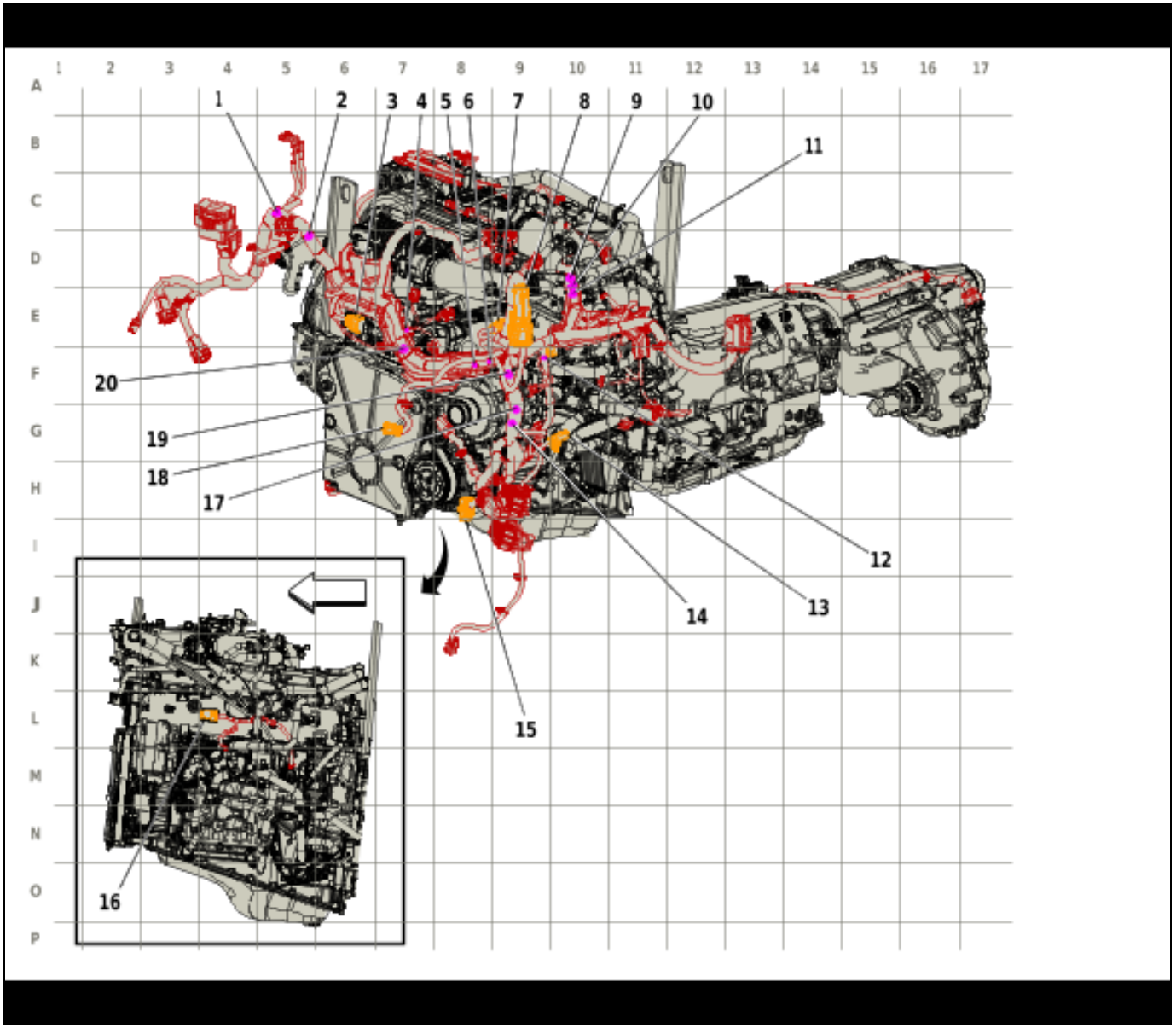

5869932

Items

(1) J187 Engine Wiring Harness (LM2)
(2) J159 Engine Wiring Harness
(3) X160 Engine Wiring Harness to Fuel Injector Wiring Harness
(4) J186 Engine Wiring Harness (LM2)
(5) J189 Engine Wiring Harness (LM2)
(6) J188 Engine Wiring Harness (LM2)
(7) X163 Engine Wiring Harness to Diesel Glow Plug Wiring Harness (LM2)
(8) X115
(9) J181 Engine Wiring Harness (LM2)
(10) J180 Engine Wiring Harness (LM2)
(11) J170 Engine Wiring Harness (LM2)
(12) J169 Engine Wiring Harness (LM2)
(13) X415A Transfer Case Selector Shift Control Switch Wiring Harness Extension Harness to Engine Wiring Harne (NP0/NQH)
(14) J168 Engine Wiring Harness
(15) X403 Engine Wiring Harness to Chassis Wiring Harness
(16) X944 Engine Wiring Harness to Engine Coolant Temperature Sensor Harness (LM2)
(17) J154 Engine Wiring Harness
(18) X604A Engine Wiring Harness to Active Grille Air Shutter Harness (VTI)
(19) J158 Engine Wiring Harness
(20) J162 Engine Wiring Harness

Harness Routing Views (Engine Compartment - Engine Harness - Right Rear (LM2))

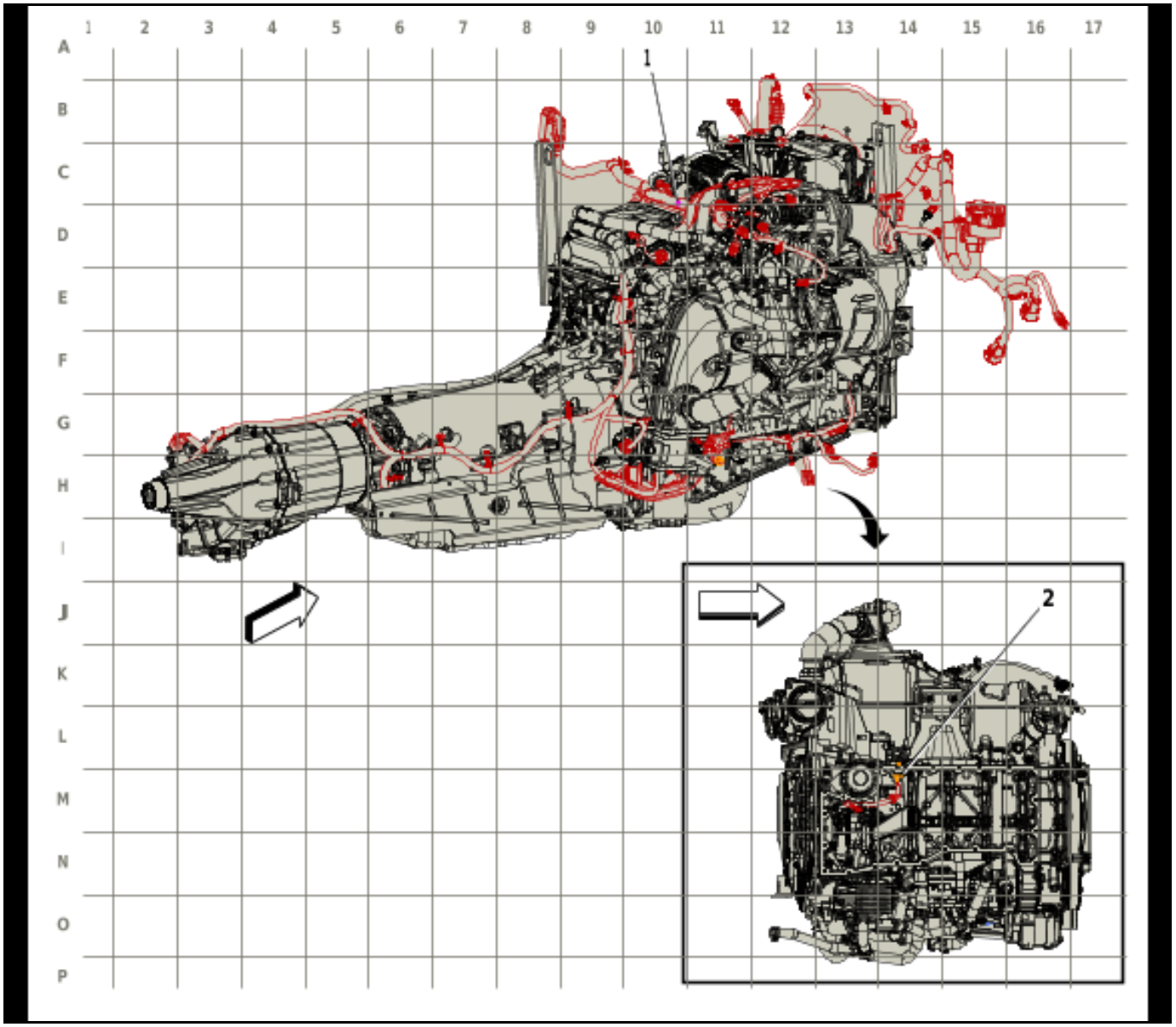

5869933

Items

(1) J184 Engine Wiring Harness (LM2)

(2) X129 Engine Wiring Harness to Engine Oil Pressure Control Solenoid Valve (L87/LM2)

Harness Routing Views (Engine Compartment - Body Harness - Left)

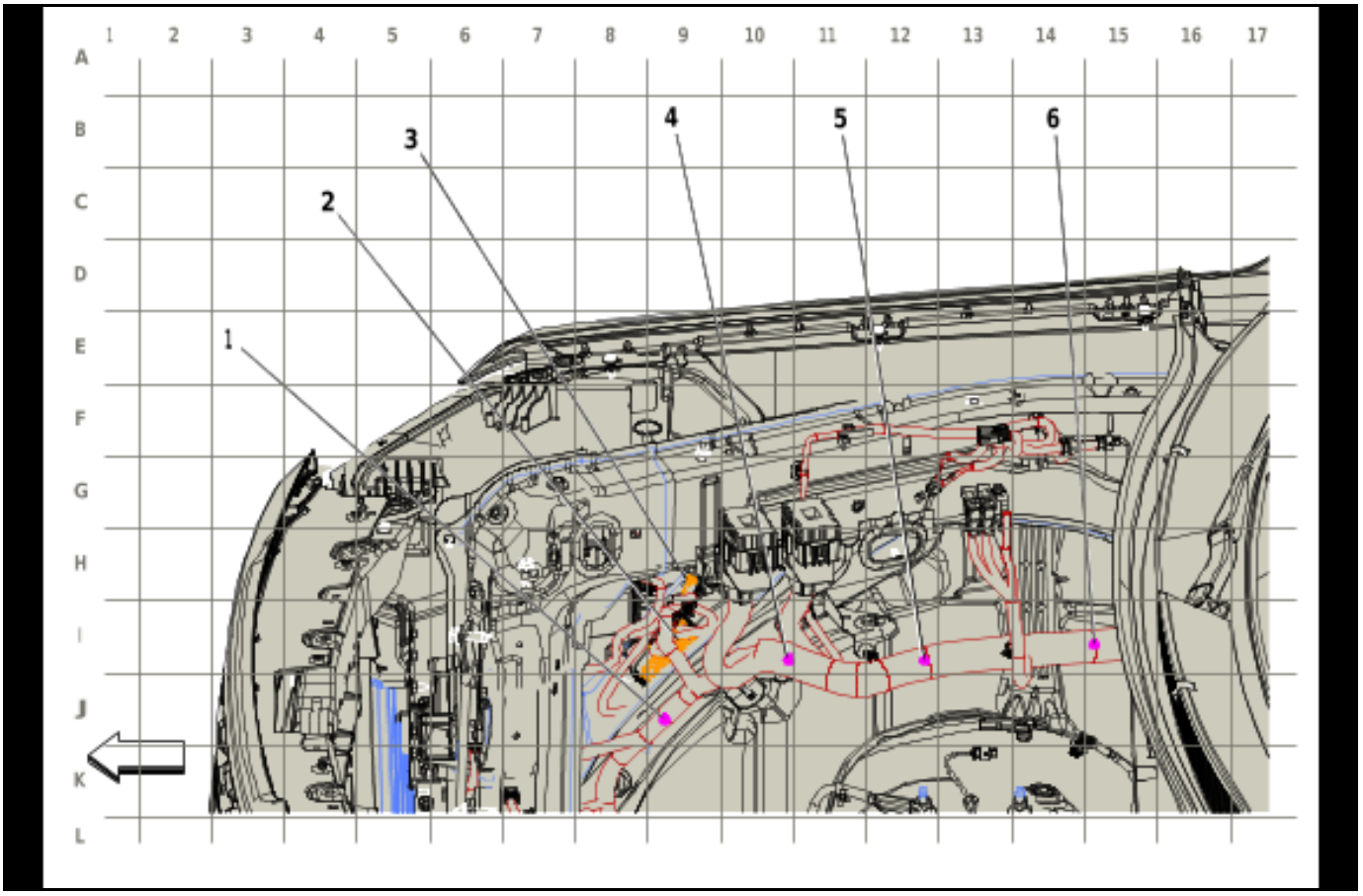

5869934

Items

(1) J178 Body Wiring Harness

(2) X950 Front Object Alarm Sensor Wiring Harness to Body Wiring Harness

(3) X951 Front Object Alarm Sensor Wiring Harness to Body Wiring Harness (UV2/UVS)

(4) J173 Body Wiring Harness

(5) J171 Body Wiring Harness

(6) J177 Body Wiring Harness

Harness Routing Views (Engine Compartment - Body Harness - Right)

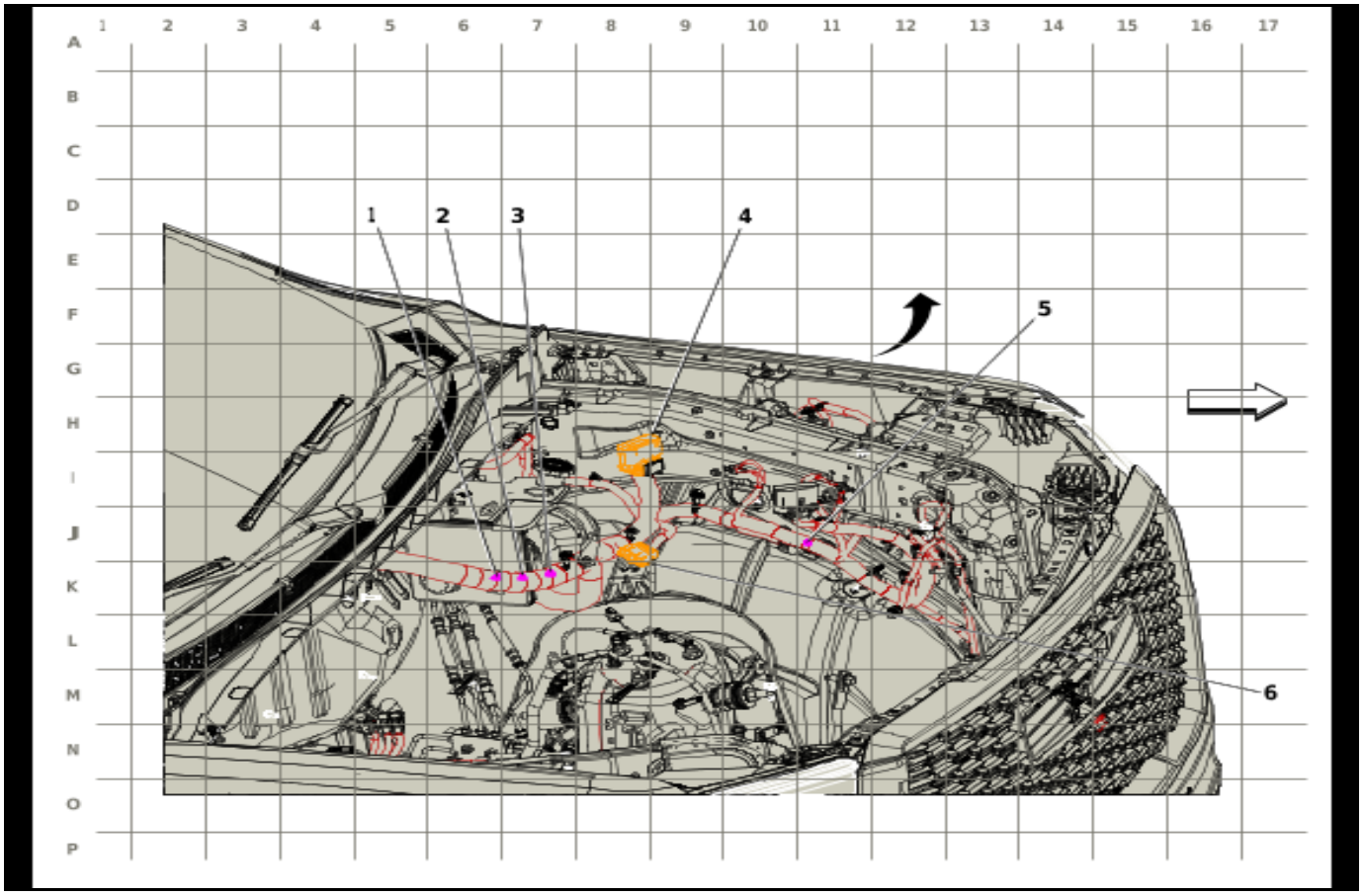

5869935

Items

(1) J134 Body Wiring Harness
(2) J133 Body Wiring Harness
(3) J132 Body Wiring Harness
(4) X400 Chassis Wiring Harness to Body Wiring Harness
(5) J131 Body Wiring Harness
(6) X401 Body Wiring Harness to Chassis Wiring Harness

Harness Routing Views (Instrument Panel - Instrument Panel Harness (-GFW))

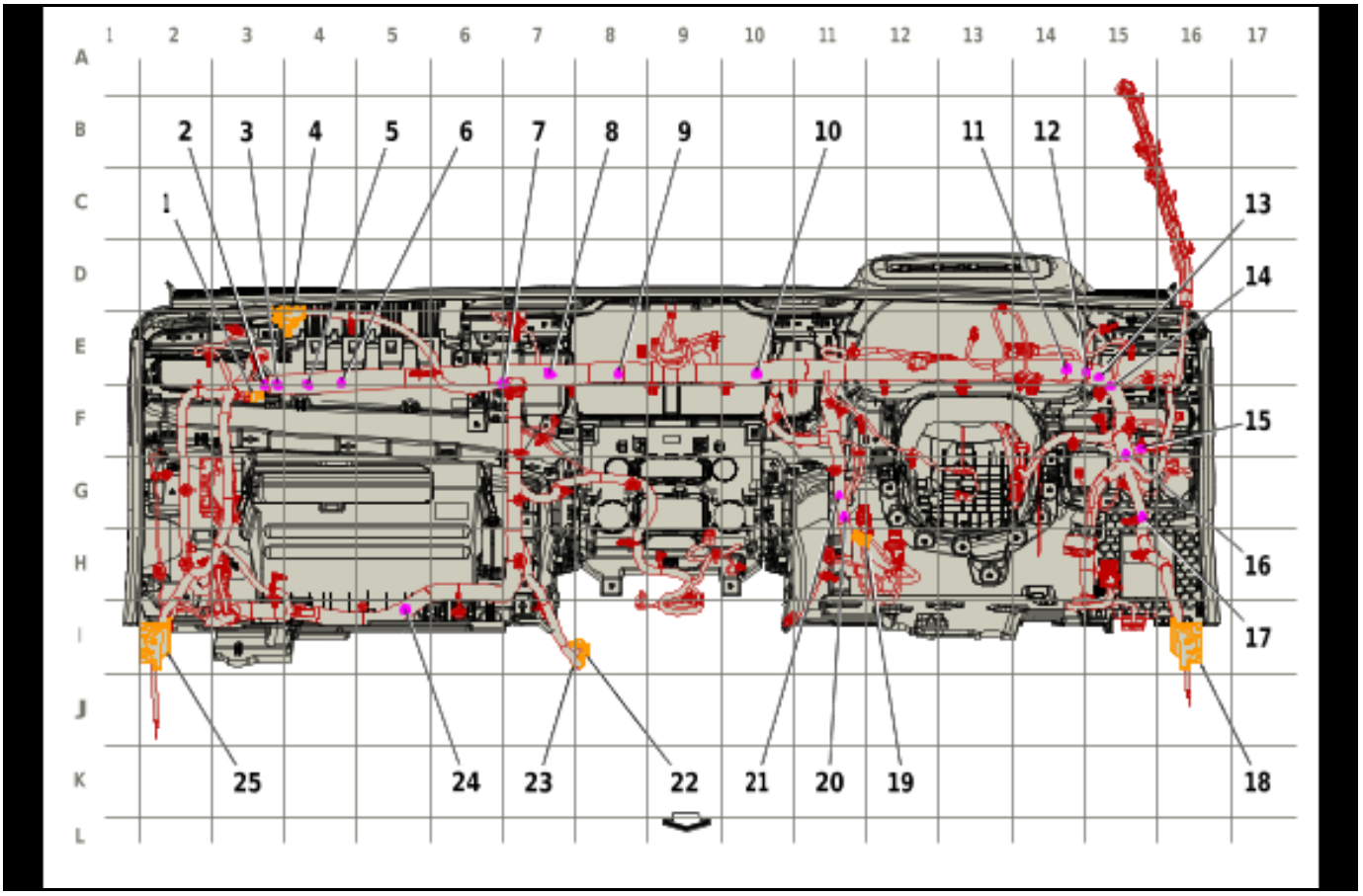

5869936

Items

(1) X221 Instrument Panel Wiring Harness to Passenger Instrument Panel Airbag Wiring Harness
(2) J253 Instrument Panel Wiring Harness
(3) J252 Instrument Panel Wiring Harness
(4) X370A Headliner Harness to Instrument Panel Harness
(5) J251 Instrument Panel Wiring Harness
(6) J250 Instrument Panel Wiring Harness
(7) J243 Instrument Panel Wiring Harness
(8) J248 Instrument Panel Wiring Harness
(9) J249 Instrument Panel Wiring Harness
(10) J242 Instrument Panel Wiring Harness
(11) J238 Instrument Panel Wiring Harness
(12) J237 Instrument Panel Wiring Harness
(13) J236 Instrument Panel Wiring Harness
(14) J235 Instrument Panel Wiring Harness
(15) J254 Instrument Panel Wiring Harness
(16) J234
(17) J231 Instrument Panel Wiring Harness
(18) X225
(19) X250 Instrument Panel Wiring Harness to Heater Wiring Harness
(20) J241 Instrument Panel Wiring Harness
(21) J246 Instrument Panel Wiring Harness
(22) X225B Instrument Panel Wiring Harness to Front Floor Console Wiring Harness
(23) X225A Front Floor Console Wiring Harness to Instrument Panel Wiring Harness (USR)
(24) J247 Instrument Panel Wiring Harness
(25) X210 Instrument Panel Wiring Harness to Body Wiring Harness

Harness Routing Views (Instrument Panel - Instrument Panel Harness (GFW))

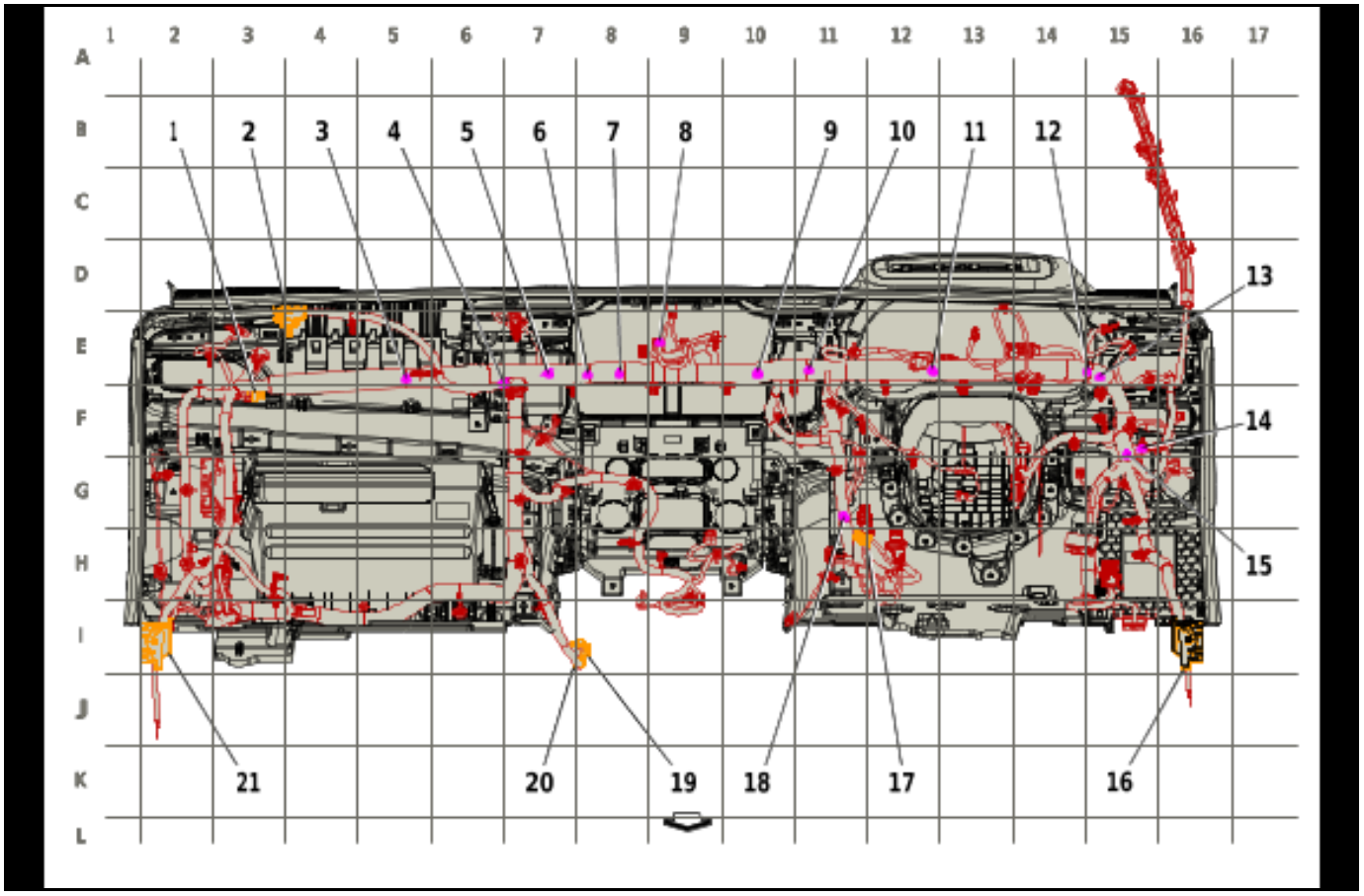

5869937

Items

(1) X221 Instrument Panel Wiring Harness to Passenger Instrument Panel Airbag Wiring Harness
(2) X370A Headliner Harness to Instrument Panel Harness
(3) J250 Instrument Panel Wiring Harness
(4) J243 Instrument Panel Wiring Harness
(5) J248 Instrument Panel Wiring Harness
(6) J253 Instrument Panel Wiring Harness
(7) J249 Instrument Panel Wiring Harness
(8) J242 Instrument Panel Wiring Harness
(9) J246 Instrument Panel Wiring Harness
(10) J247 Instrument Panel Wiring Harness
(11) J231 Instrument Panel Wiring Harness
(12) J237 Instrument Panel Wiring Harness
(13) J236 Instrument Panel Wiring Harness
(14) J254 Instrument Panel Wiring Harness
(15) J234
(16) X225
(17) X250 Instrument Panel Wiring Harness to Heater Wiring Harness
(18) J241 Instrument Panel Wiring Harness
(19) X225B Instrument Panel Wiring Harness to Front Floor Console Wiring Harness
(20) X225A Front Floor Console Wiring Harness to Instrument Panel Wiring Harness (USR)
(21) X210 Instrument Panel Wiring Harness to Body Wiring Harness

Harness Routing Views (Instrument Panel - HVAC Harness)

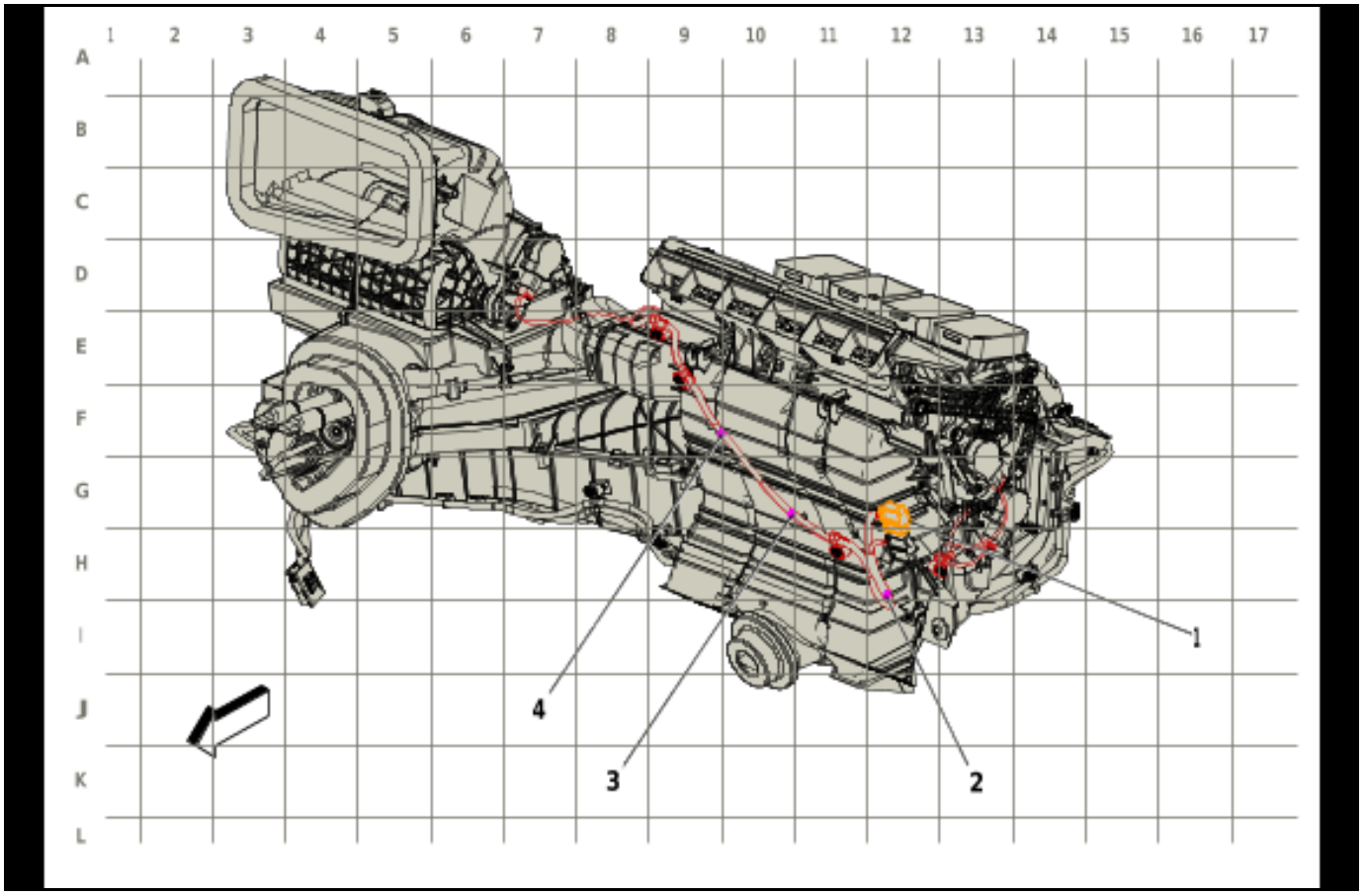

5869938

Items

(1) X250 Instrument Panel Wiring Harness to Heater Wiring Harness
(2) J220 Heater Wiring Harness
(3) J222 Heater Wiring Harness
(4) J221 Heater Wiring Harness

Harness Routing Views (Floor Console Harness (D07))

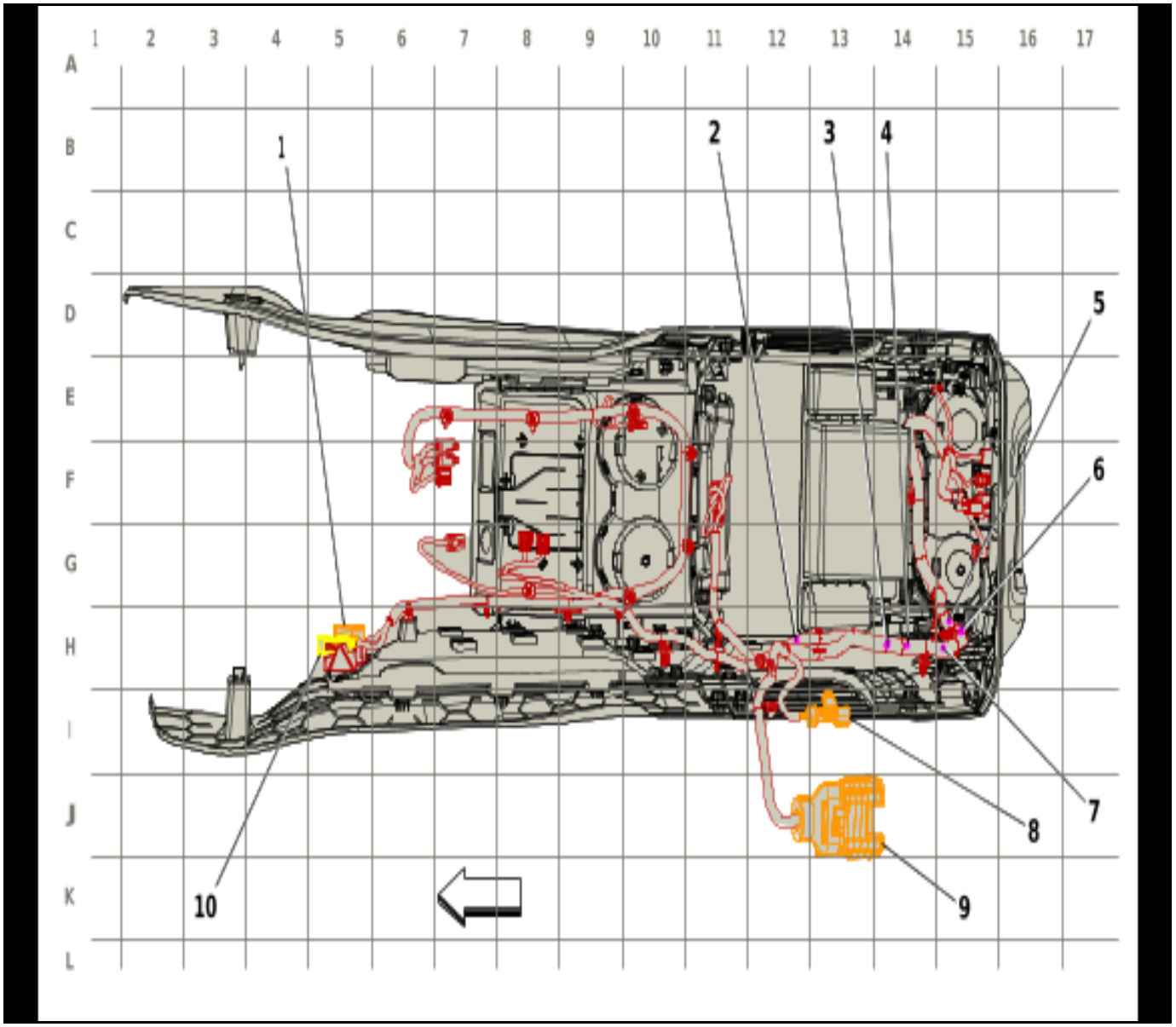

5869939

Items

(1) X225B Instrument Panel Wiring Harness to Front Floor Console Wiring Harness
(2) J302 Front Floor Console Wiring Harness
(3) J300 Front Floor Console Wiring Harness
(4) J301 Front Floor Console Wiring Harness
(5) J305 Front Floor Console Wiring Harness
(6) J304
(7) J303 Front Floor Console Wiring Harness (D07)
(8) X226 Front Floor Console Wiring Harness to Body Wiring Harness (UW9)
(9) X225C Front Floor Console Wiring Harness to Body Wiring Harness
(10) X225A Front Floor Console Wiring Harness to Instrument Panel Wiring Harness (USR)

Harness Routing Views (Floor Console Harness (DCH))

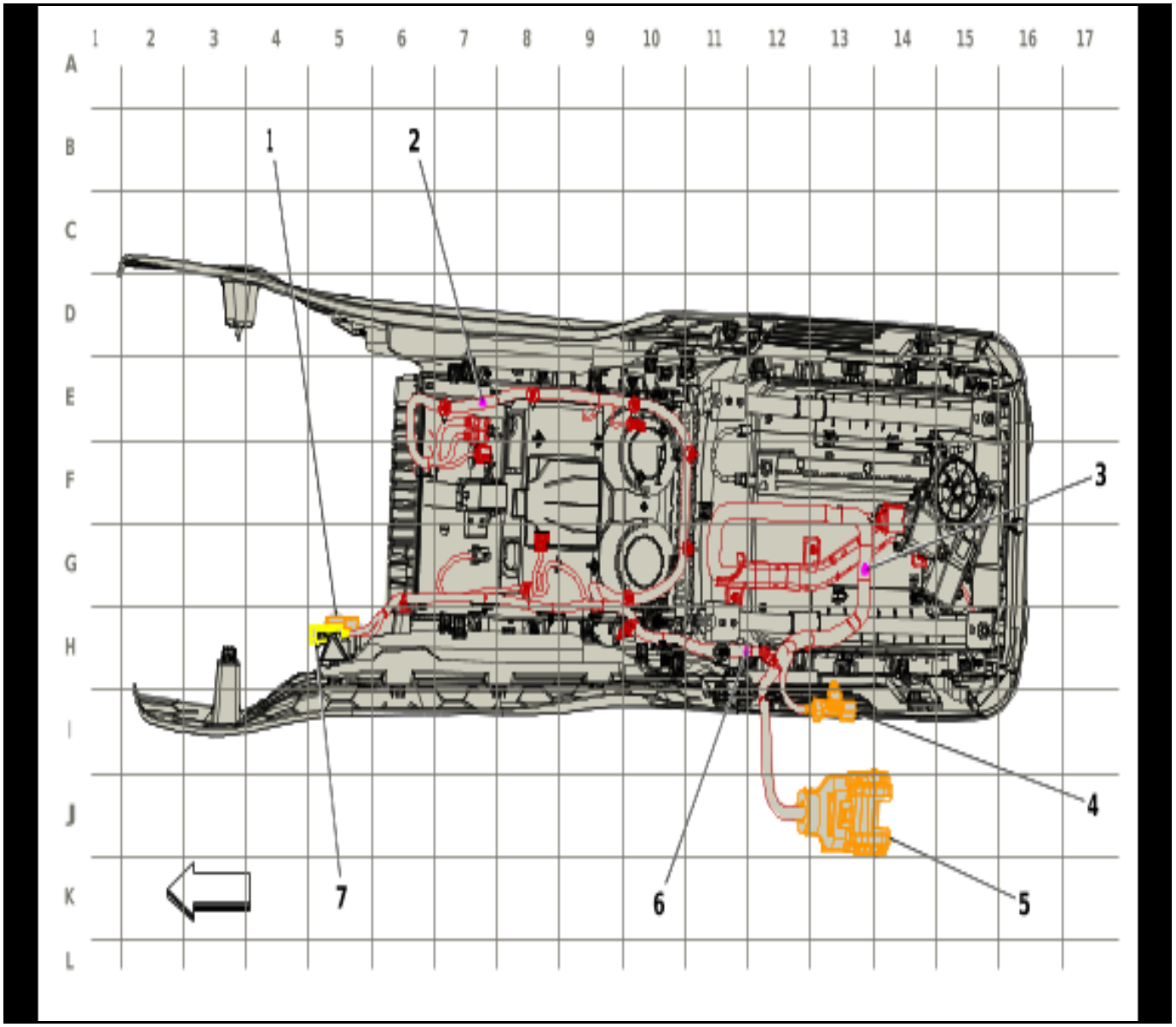

5869940

Items

(1) X225B Instrument Panel Wiring Harness to Front Floor Console Wiring Harness

(2) J302 Front Floor Console Wiring Harness

(3) J301 Front Floor Console Wiring Harness

(4) X301

(5) X225C Front Floor Console Wiring Harness to Body Wiring Harness

(6) J300 Front Floor Console Wiring Harness

(7) X225A Front Floor Console Wiring Harness to Instrument Panel Wiring Harness (USR)

Harness Routing Views (Floor Console Harness (DCK))

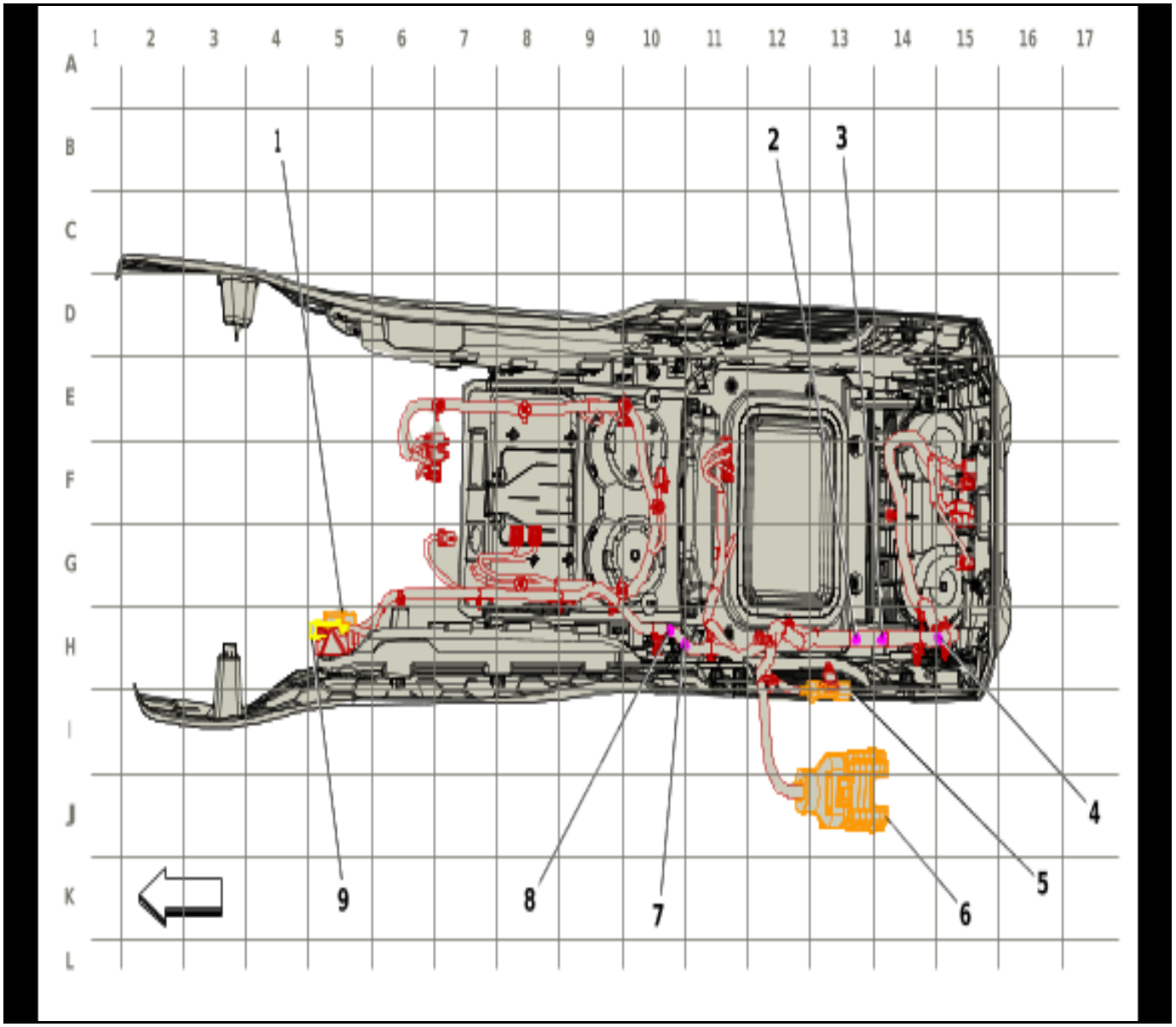

5869941

Items

(1) X225B Instrument Panel Wiring Harness to Front Floor Console Wiring Harness
(2) J302 Front Floor Console Wiring Harness
(3) J301 Front Floor Console Wiring Harness
(4) J303 Front Floor Console Wiring Harness (D07)
(5) X301
(6) X225C Front Floor Console Wiring Harness to Body Wiring Harness
(7) J305 Front Floor Console Wiring Harness
(8) J300 Front Floor Console Wiring Harness
(9) X225A Front Floor Console Wiring Harness to Instrument Panel Wiring Harness (USR)

Harness Routing Views (Passenger Compartment - Body Harness - Left)

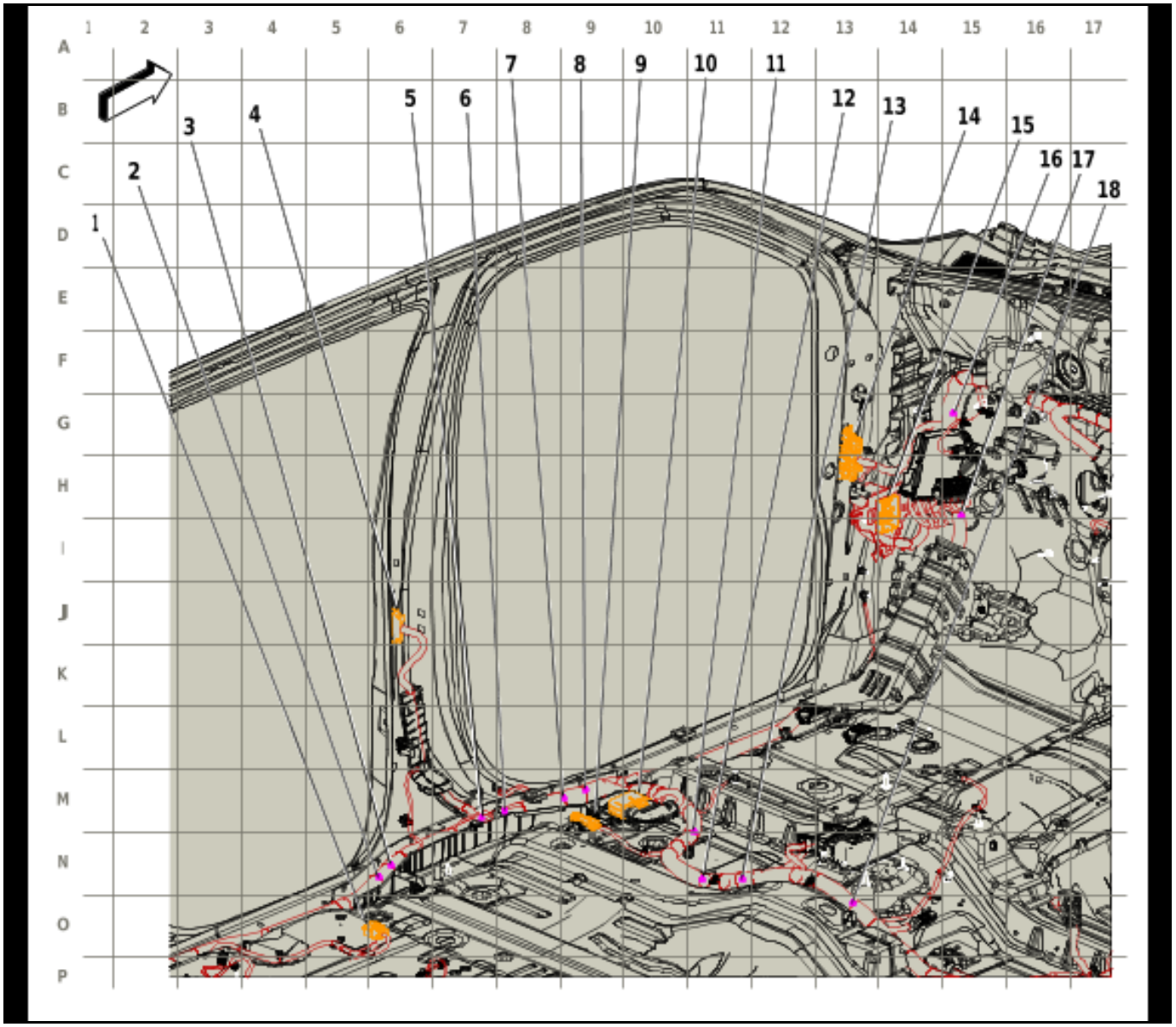

5869942

Items

(1) X340 Body Wiring Harness to Rear Seat Wiring Harness - 2nd Row Left
(2) J360 Body Wiring Harness
(3) J401 Body Wiring Harness
(4) X700 Rear Side Door Door Wiring Harness - Left to Body Wiring Harness
(5) J174 Body Wiring Harness
(6) J172 Body Wiring Harness
(7) J335 Body Wiring Harness
(8) J339
(9) X329 Body Wiring Harness to Front Seat Wiring Harness - Driver (UW9)
(10) X328 Front Seat Wiring Harness - Driver to Body Wiring Harness
(11) J331 Body Wiring Harness
(12) J333 Body Wiring Harness
(13) J334 Body Wiring Harness
(14) X500 Front Side Door Door Wiring Harness - Driver to Body Wiring Harness
(15) X211 Instrument Panel Wiring Harness to Body Wiring Harness
(16) J210 Body Wiring Harness
(17) J212 Body Wiring Harness
(18) J357 Body Wiring Harness

Harness Routing Views (Passenger Compartment - Body Harness - Right)

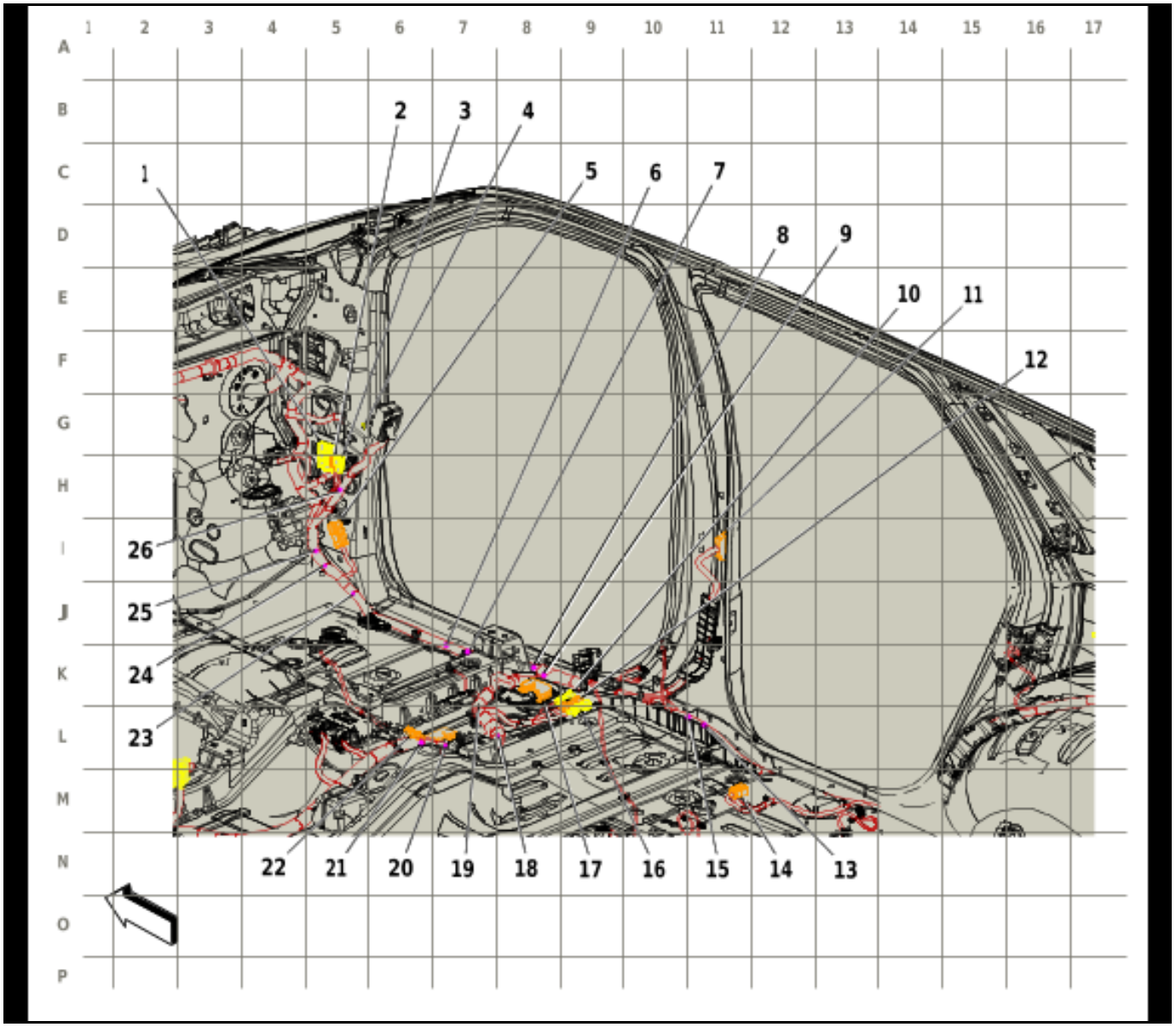

5869943

Items

(1) X210 Instrument Panel Wiring Harness to Body Wiring Harness

(2) X995A Body Harness to Rearview Camera Harness (UV2)

(3) X214 Instrument Panel Wiring Harness to Body Wiring Harness (UW9)

(4) X600 Front Side Door Door Wiring Harness - Passenger to Body Wiring Harness

(5) X251P

(6) J407 Body Wiring Harness

(7) J353 Body Wiring Harness

(8) J266 Body Wiring Harness

(9) J351

(10) X334E Passenger Seat Harness to Body Wiring Harness (UW9)

(11) X800 Rear Side Door Door Wiring Harness - Right to Body Wiring Harness

(12) X329 Body Wiring Harness to Front Seat Wiring Harness - Driver (UW9)

(13) J200 Body Wiring Harness

(14) X344 Body Wiring Harness to Rear Seat Wiring Harness - 2nd Row Right

(15) J428 Body Wiring Harness

(16) X334L Floor Console Harness to Body Harness (UW9)

(17) X320

(18) J361 Body Wiring Harness

(19) J362 Body Wiring Harness (UW9)

(20) J358 Body Wiring Harness

(21) J357 Body Wiring Harness

(22) X226 Front Floor Console Wiring Harness to Body Wiring Harness (UW9)
(23) J267
(24) J332 Body Wiring Harness
(25) J264 Body Wiring Harness
(26) J268 Body Wiring Harness

Harness Routing Views (Passenger Compartment - Driver Seat Harness)

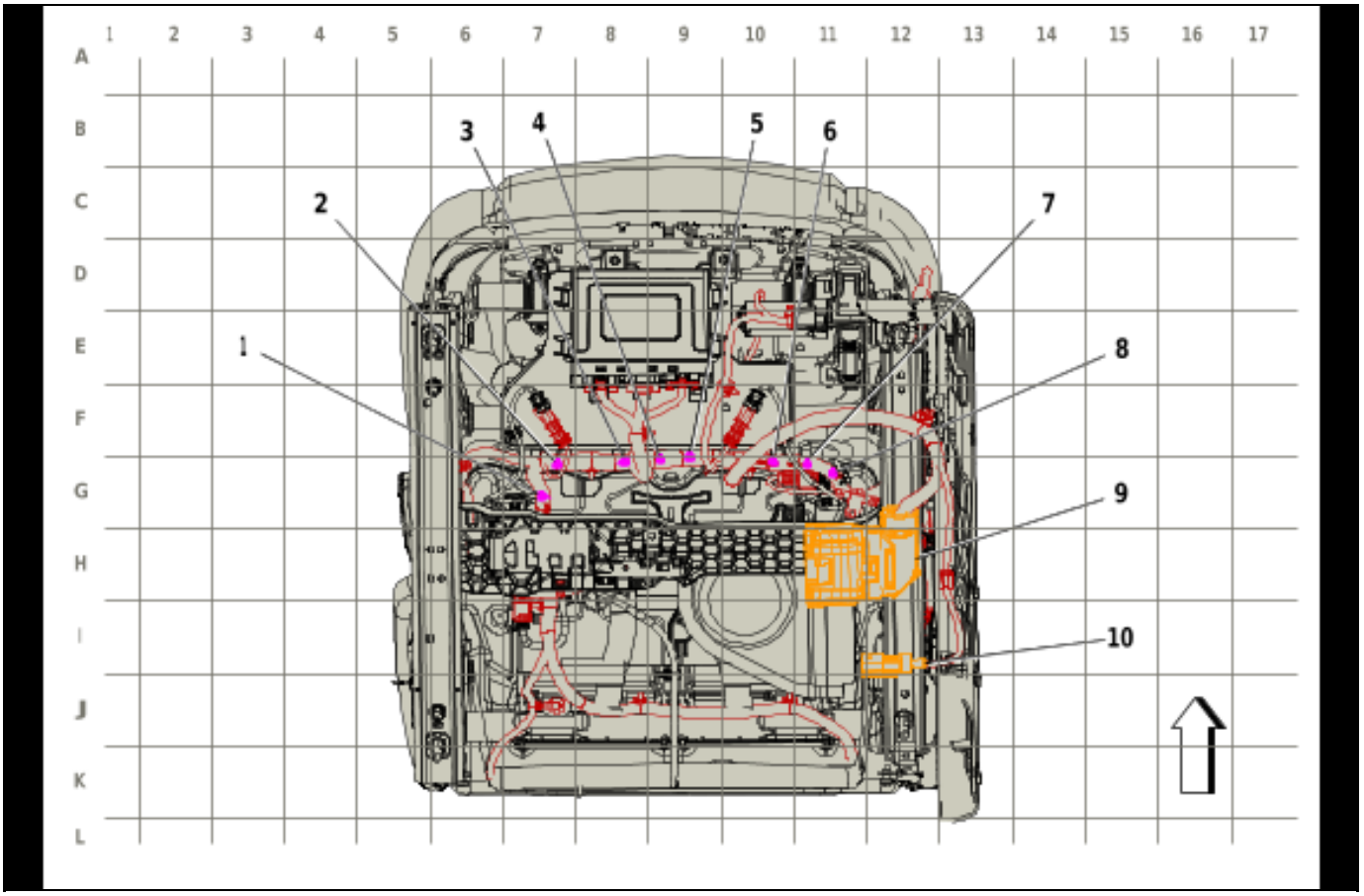

5869944

Items

(1) J312 Front Seat Wiring Harness - Driver (AVK)
(2) J316 Front Seat Wiring Harness - Driver (A45)
(3) J315 Front Seat Wiring Harness - Driver (KQV)
(4) J310 Front Seat Wiring Harness - Driver (A45/AUN)
(5) J313 Front Seat Wiring Harness - Driver
(6) J311 Front Seat Wiring Harness - Driver (A45/AVU)
(7) J314 Front Seat Wiring Harness - Driver
(8) J317 Accessory Wiring Harness (S0M)
(9) X328 Front Seat Wiring Harness - Driver to Body Wiring Harness
(10) X329 Body Wiring Harness to Front Seat Wiring Harness - Driver (UW9)

Harness Routing Views (Passenger Compartment - Front Center Seat Harness (AZ3))

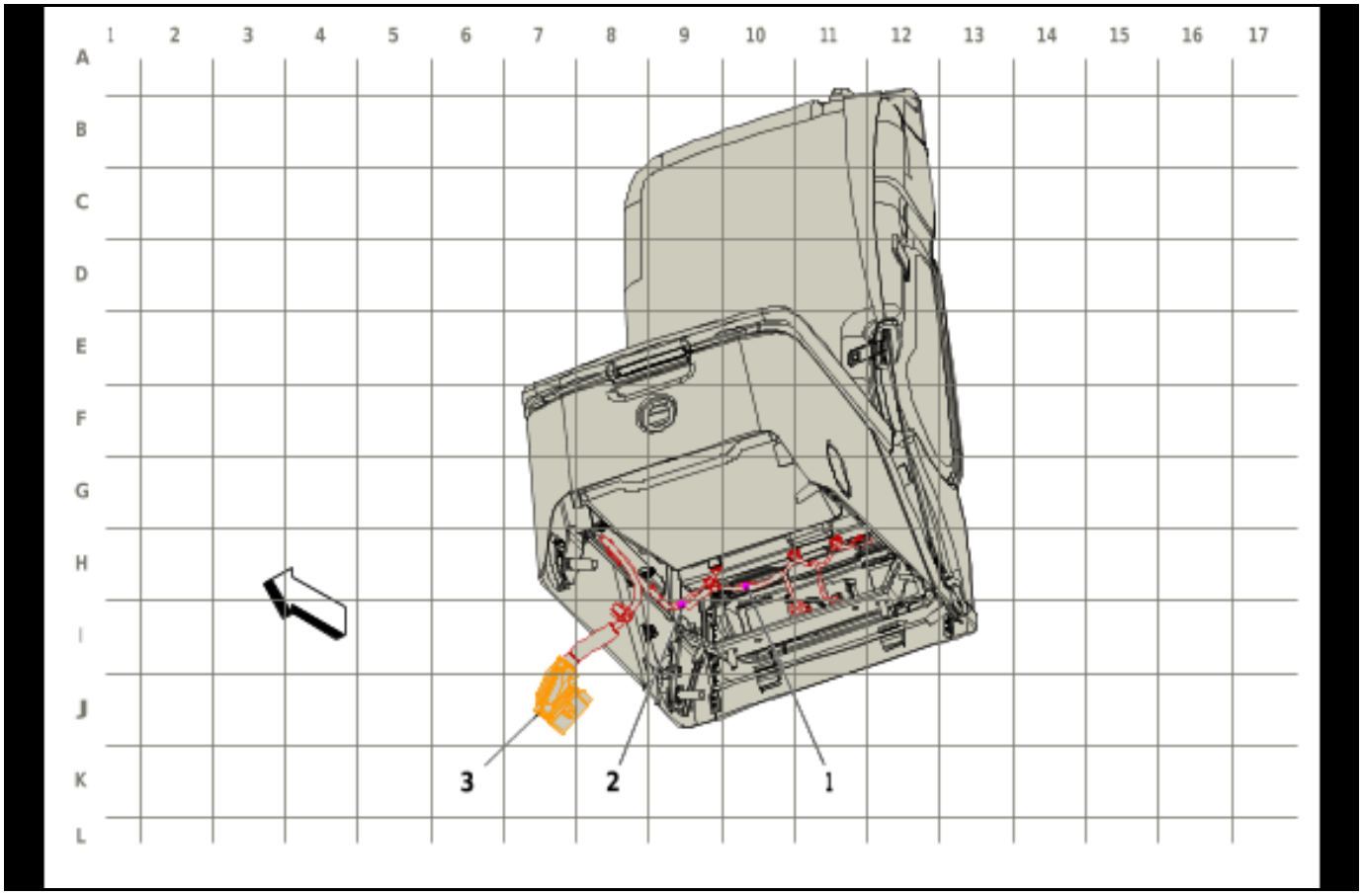

5869945

Items

(1) J301 Front Floor Console Wiring Harness

(2) J300 Front Floor Console Wiring Harness

(3) X225A Front Floor Console Wiring Harness to Instrument Panel Wiring Harness (USR)

Harness Routing Views (Passenger Compartment - Passenger Seat Harness)

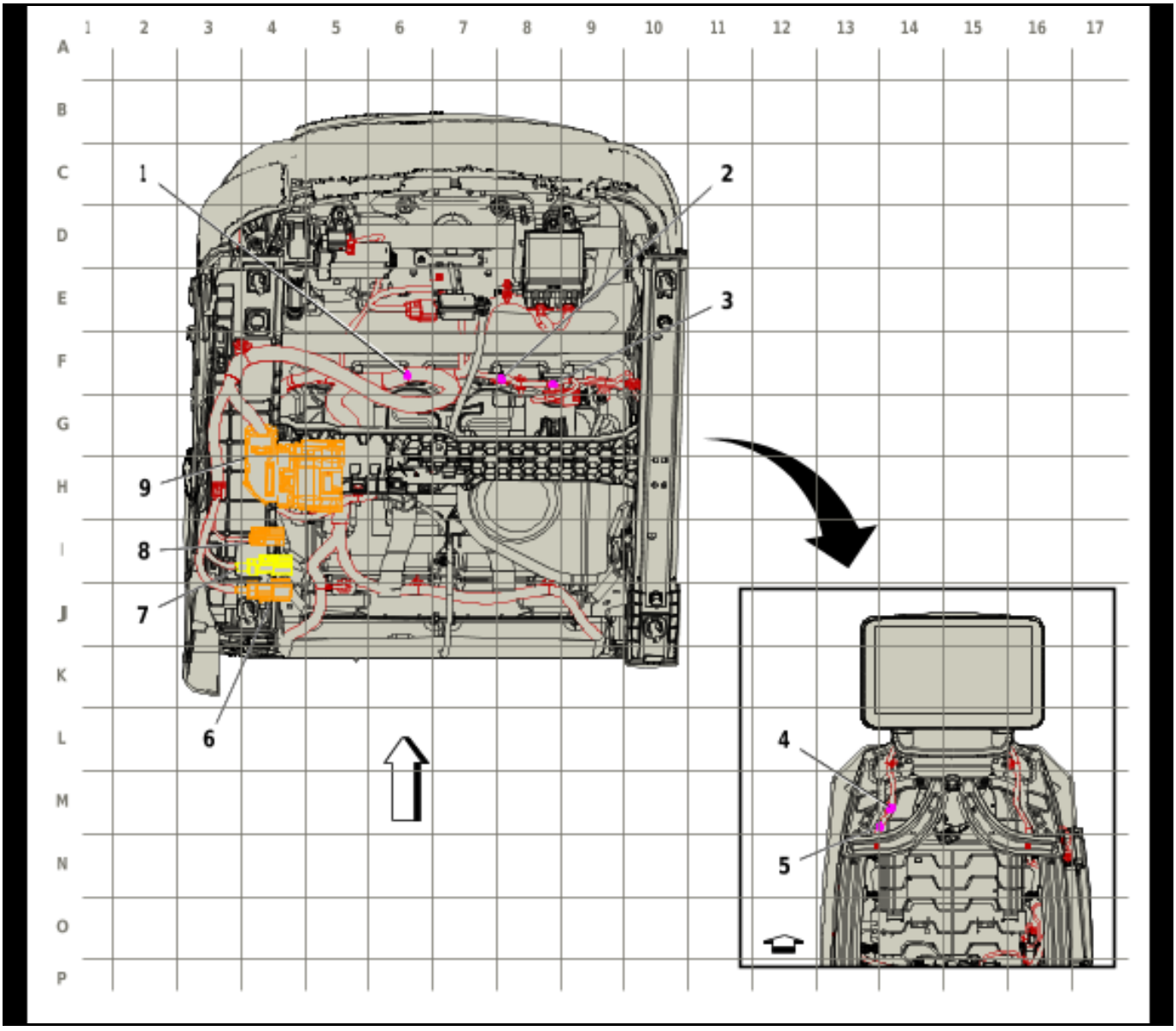

5869946

Items

(1) J323 Front Seat Wiring Harness - Passenger (A45)

(2) J326 Front Seat Wiring Harness - Passenger (KQV)

(3) J325 Front Seat Wiring Harness - Passenger (KQV)

(4) J321 Front Seat Wiring Harness - Passenger (UW9)

(5) J320 Front Seat Wiring Harness - Passenger (UW9)

(6) X334L Floor Console Harness to Body Harness (UW9)

(7) X329 Body Wiring Harness to Front Seat Wiring Harness - Driver (UW9)

(8) X334E Passenger Seat Harness to Body Wiring Harness (UW9)

(9) X333 Front Seat Wiring Harness - Passenger to Body Wiring Harness

Harness Routing Views (Passenger Compartment - 2nd Row Seat Harness)

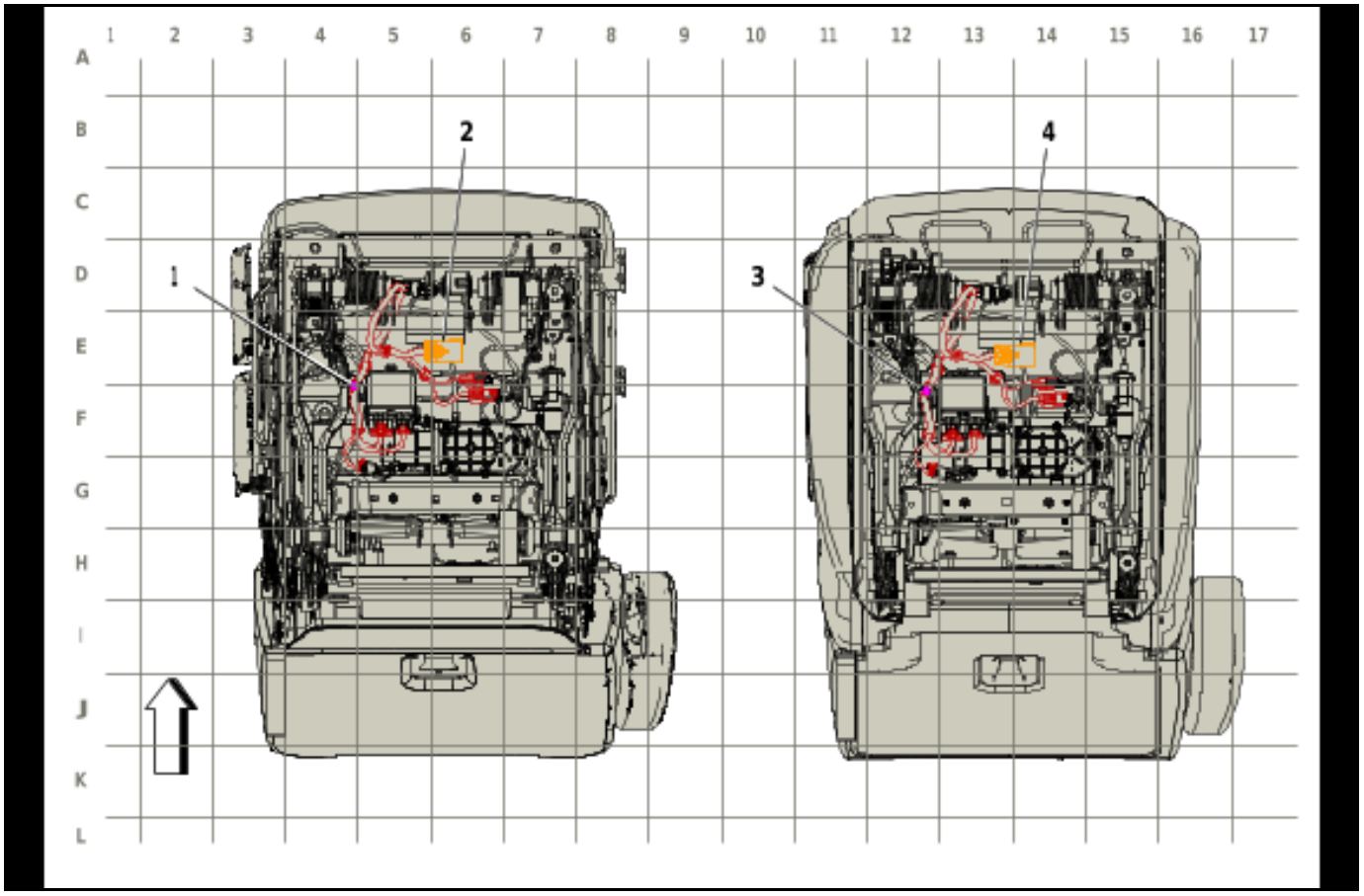

5869948

Items

(1) J365 Rear Seat Wiring Harness - 2nd Row Left (UH5/UH6)

(2) X344 Body Wiring Harness to Rear Seat Wiring Harness - 2nd Row Right

(3) J364

(4) X340 Body Wiring Harness to Rear Seat Wiring Harness - 2nd Row Left

Harness Routing Views (Passenger Compartment - 3rd Row Seat Harness)

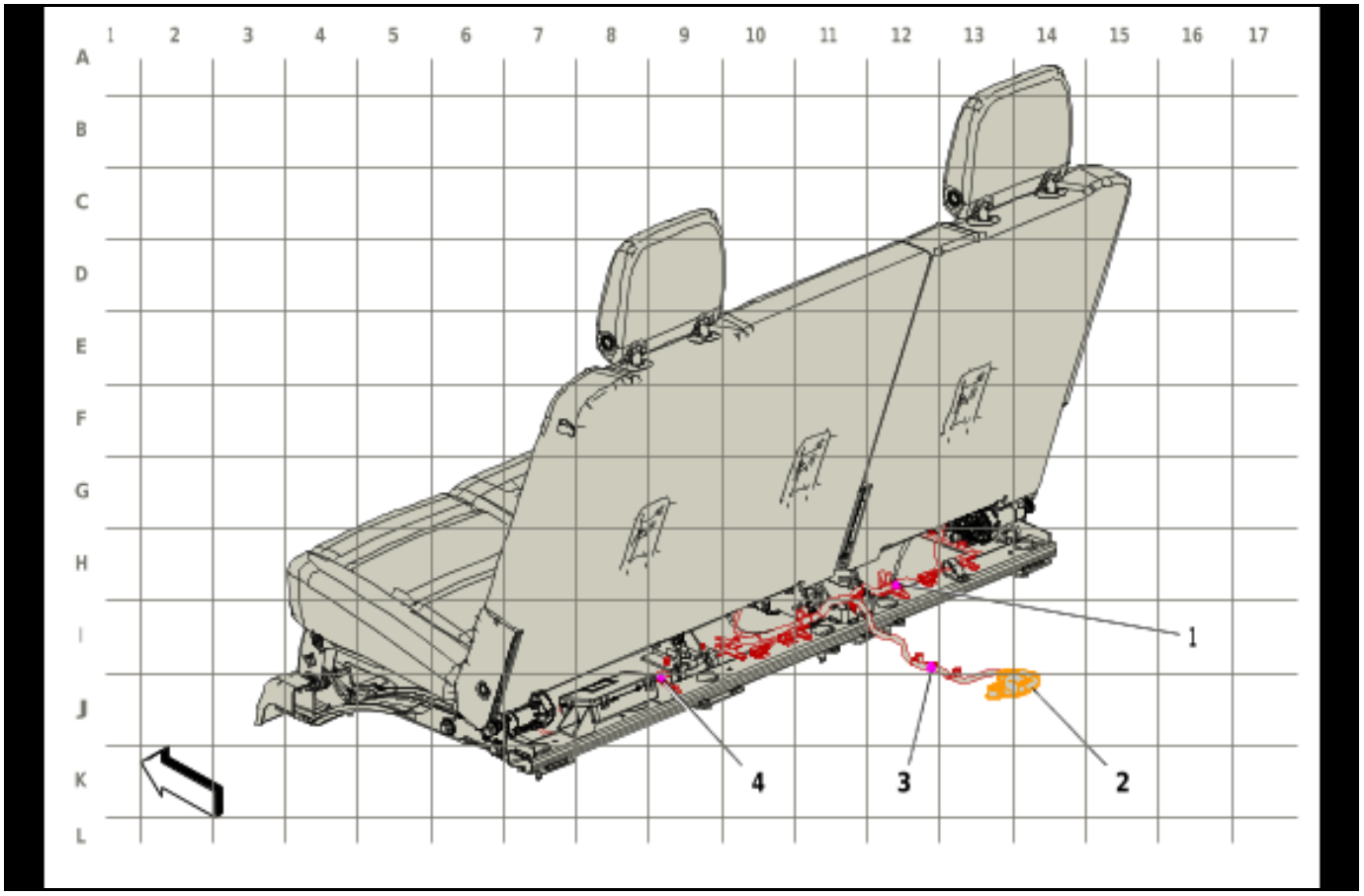

5869949

Items

(1) J440 3rd Row Seat Wiring Harness (AS8)

(2) X346A Body Wiring Harness to 3rd Row Seat Wiring Harness (AS8)

(3) J366 3rd Row Seat Wiring Harness (UH6)

(4) J441 3rd Row Seat Wiring Harness (AS8)

Harness Routing Views (Vehicle Underbody - Chassis Harness - Front)

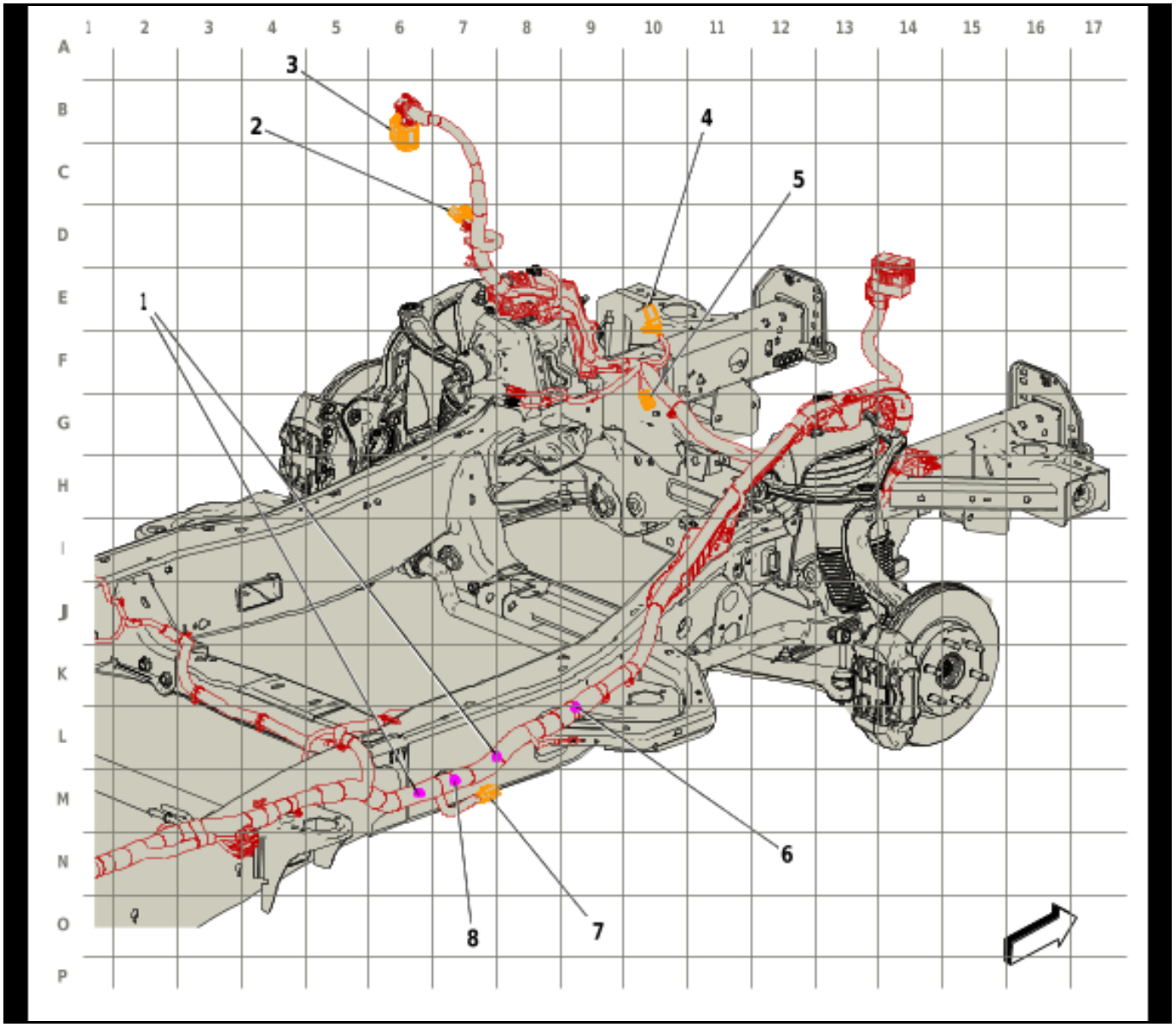

5869951

Items

(1) J372 Chassis Wiring Harness

(2) X401 Body Wiring Harness to Chassis Wiring Harness

(3) X400 Chassis Wiring Harness to Body Wiring Harness

(4) X403 Engine Wiring Harness to Chassis Wiring Harness

(5) X405D Chassis Harness to Power Steering Harness

(6) J370 Chassis Wiring Harness

(7) X404R Right Assist Step Harness to Chassis Harness (B3L)

(8) J371 Chassis Wiring Harness

Harness Routing Views (Vehicle Underbody - Chassis Harness - Rear)

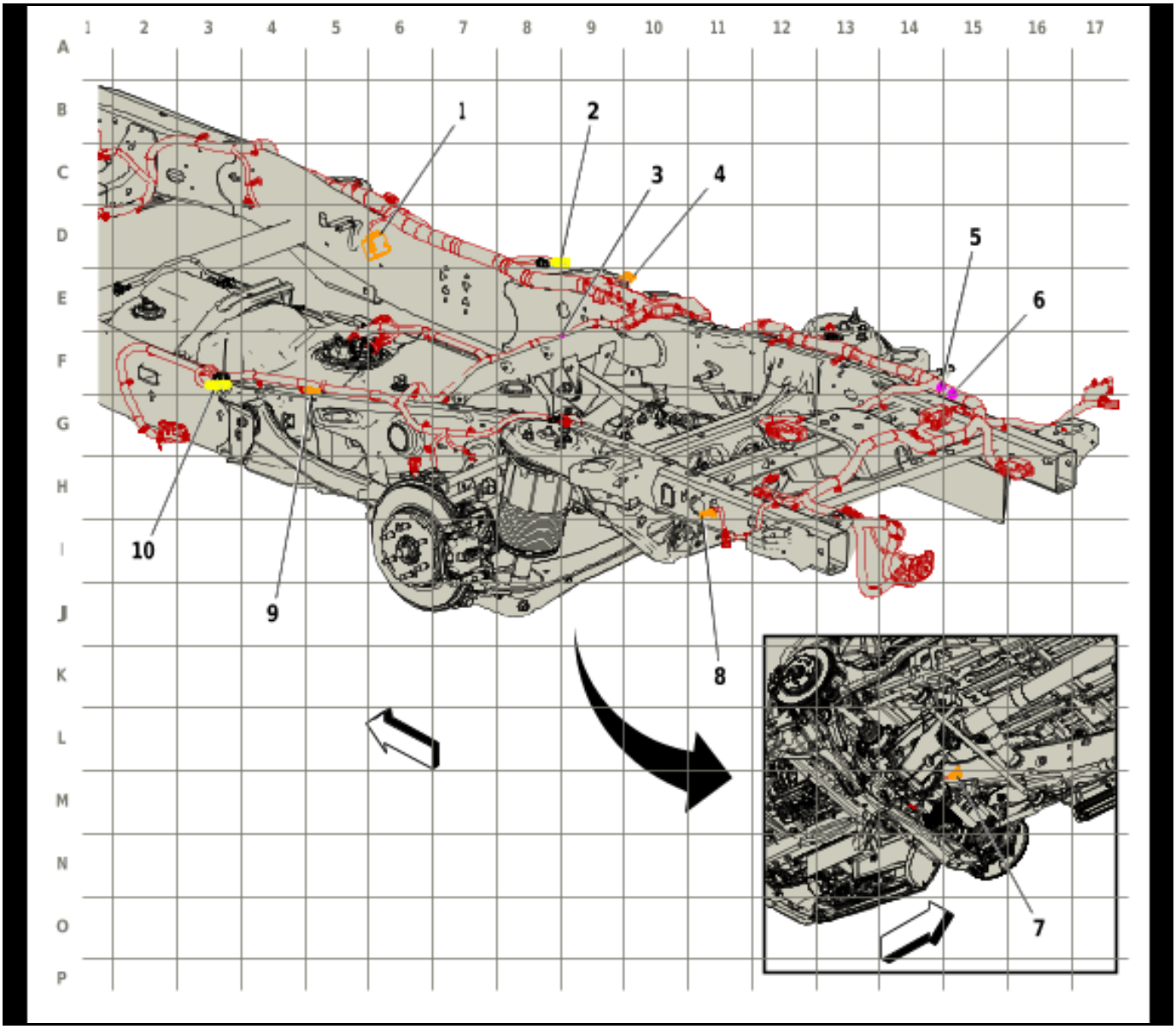

5869952

Items

(1) X999 Reductant Control Module Jumper Wiring Harness to Chassis Wiring Harness (LM2)

(2) X904JR Chassis Wiring Harness to Chassis Rear Wiring Harness Extension Harness

(3) J451 Chassis Wiring Harness

(4) X904BR Chassis Wiring Harness to Electronic Rear Vertical Accelerometer - Right Jumper Wiring Harness (Z95)

(5) J452

(6) J454 Chassis Wiring Harness

(7) X415A Transfer Case Selector Shift Control Switch Wiring Harness Extension Harness to Engine Wiring Harne (NP0/NQH)

(8) X353 Fuel Tank Filler Door Lock Release Wiring Harness to Chassis Wiring Harness

(9) X904BL Chassis Wiring Harness to Chassis Rear Extension Harness (Z95)

(10) X904JL Chassis Wiring Harness to Chassis Rear Wiring Harness Extension Harness

Harness Routing Views (Roof - Headliner Harness (C3U))

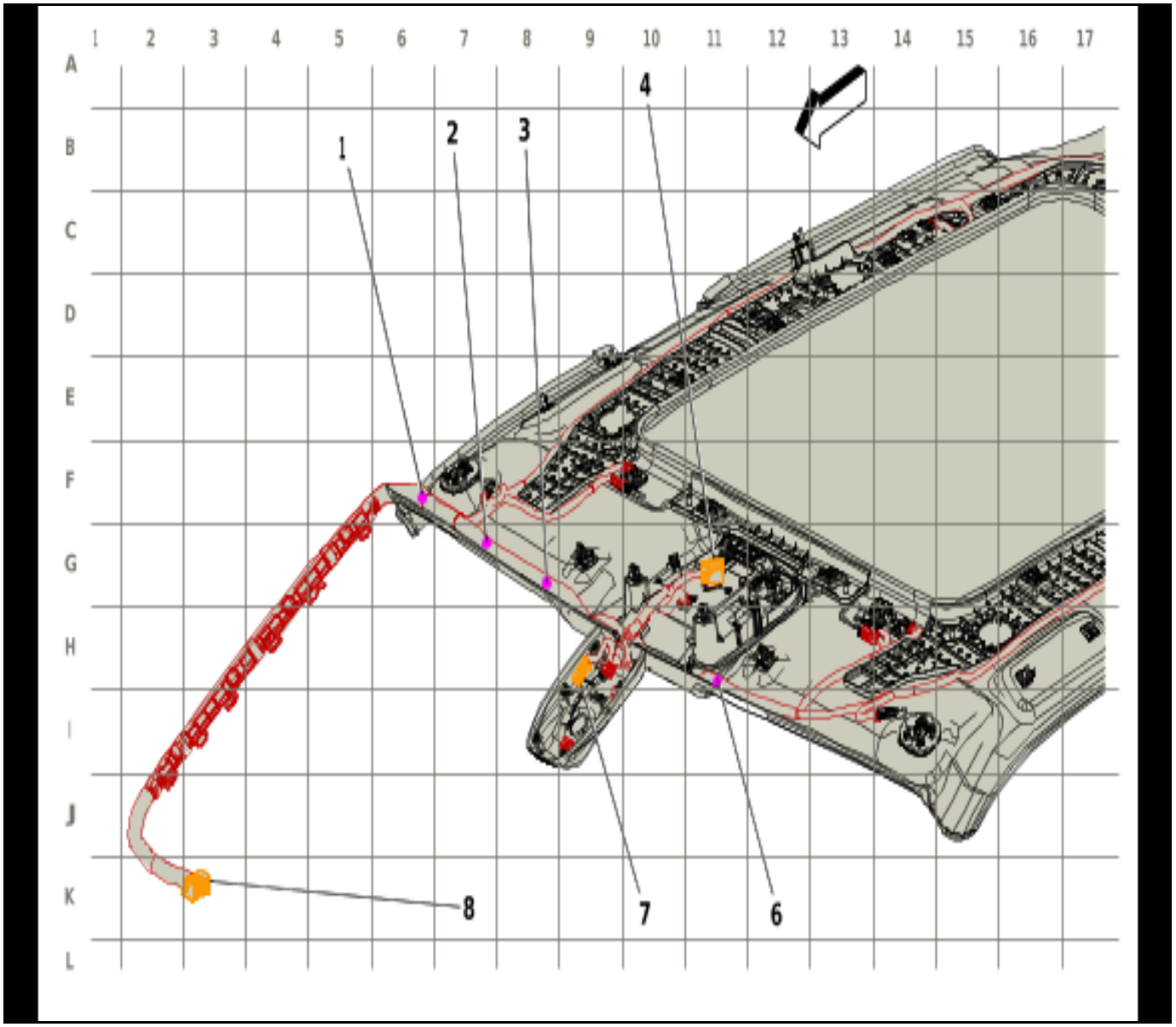

5869956

Items

(1) J380 Headlining Trim Panel Harness
(2) J381 Headlining Trim Panel Harness
(3) J382 Headlining Trim Panel Harness (C3U)
(4) X375 Sunroof Wiring Harness to Headlining Trim Panel Wiring Harness (C3U)
(6) J383 Headlining Trim Panel Harness
(7) X370
(8) X270

Harness Routing Views (Roof - Headliner Harness (without C3U))

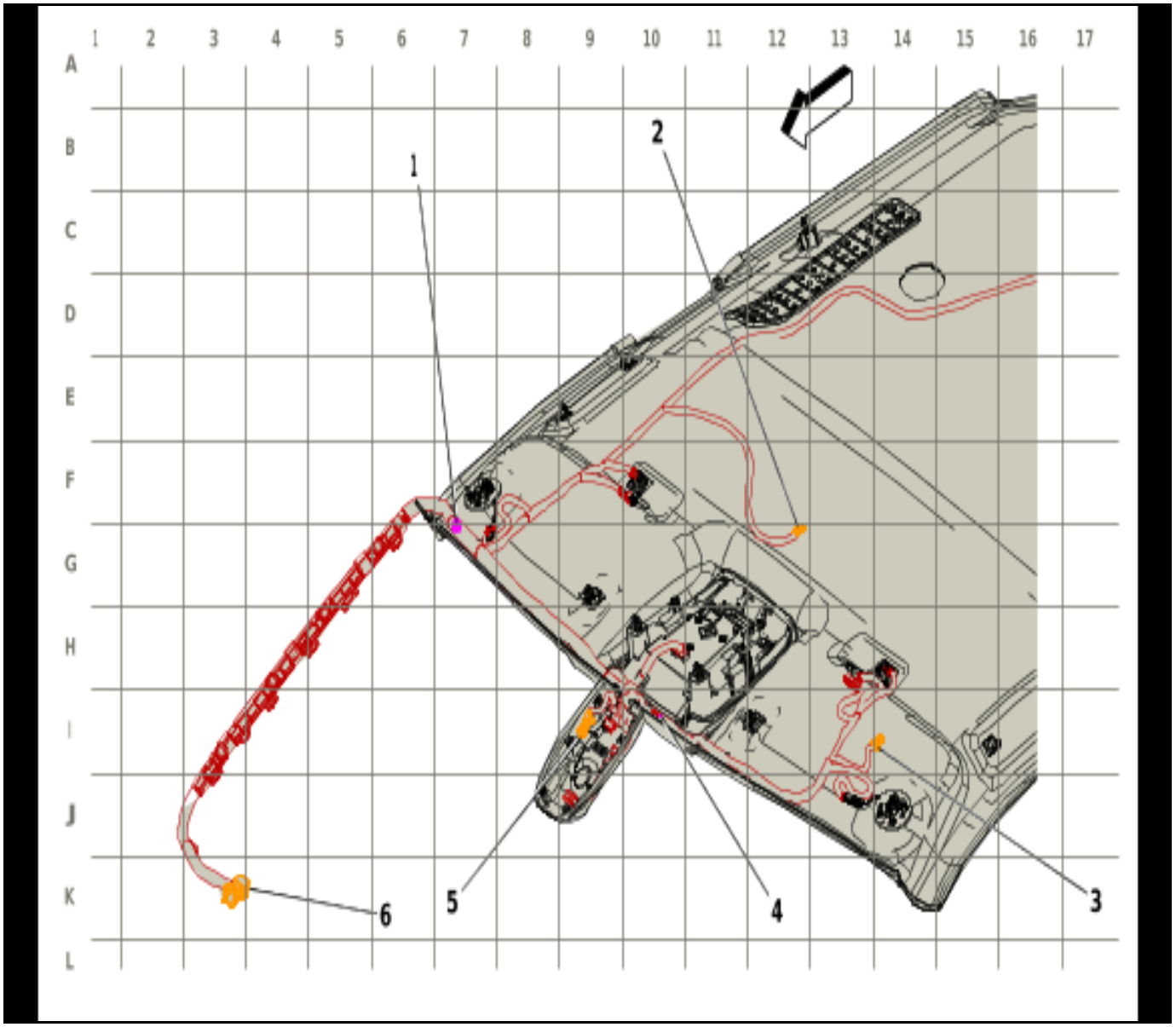

5869958

Items

(1) J383 Headlining Trim Panel Harness
(2) X385
(3) X372
(4) J380 Headlining Trim Panel Harness
(5) X370A Headliner Harness to Instrument Panel Harness
(6) X270

Harness Routing Views (Driver Door Harness)

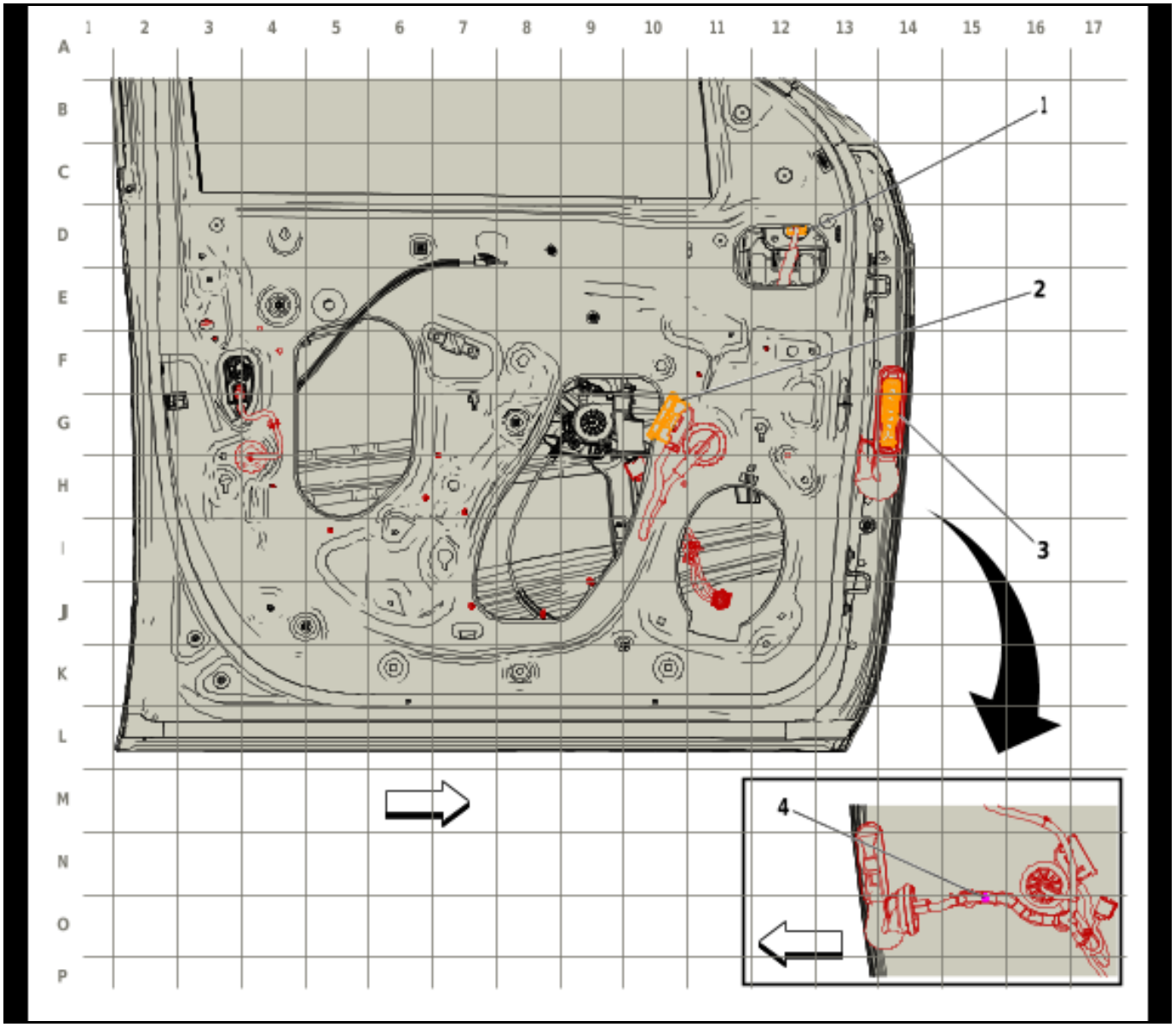

5869959

Items

(1) X510 Front Side Door Door Wiring Harness - Driver to Outside Rearview Mirror - Driver

(2) X505 Front Side Door Door Wiring Harness - Driver to Front Side Door Door Lock Door Wiring Harness - Dri

(3) X500 Front Side Door Door Wiring Harness - Driver to Body Wiring Harness

(4) J500 Front Side Door Door Wiring Harness - Driver

Harness Routing Views (Driver Door Trim Harness)

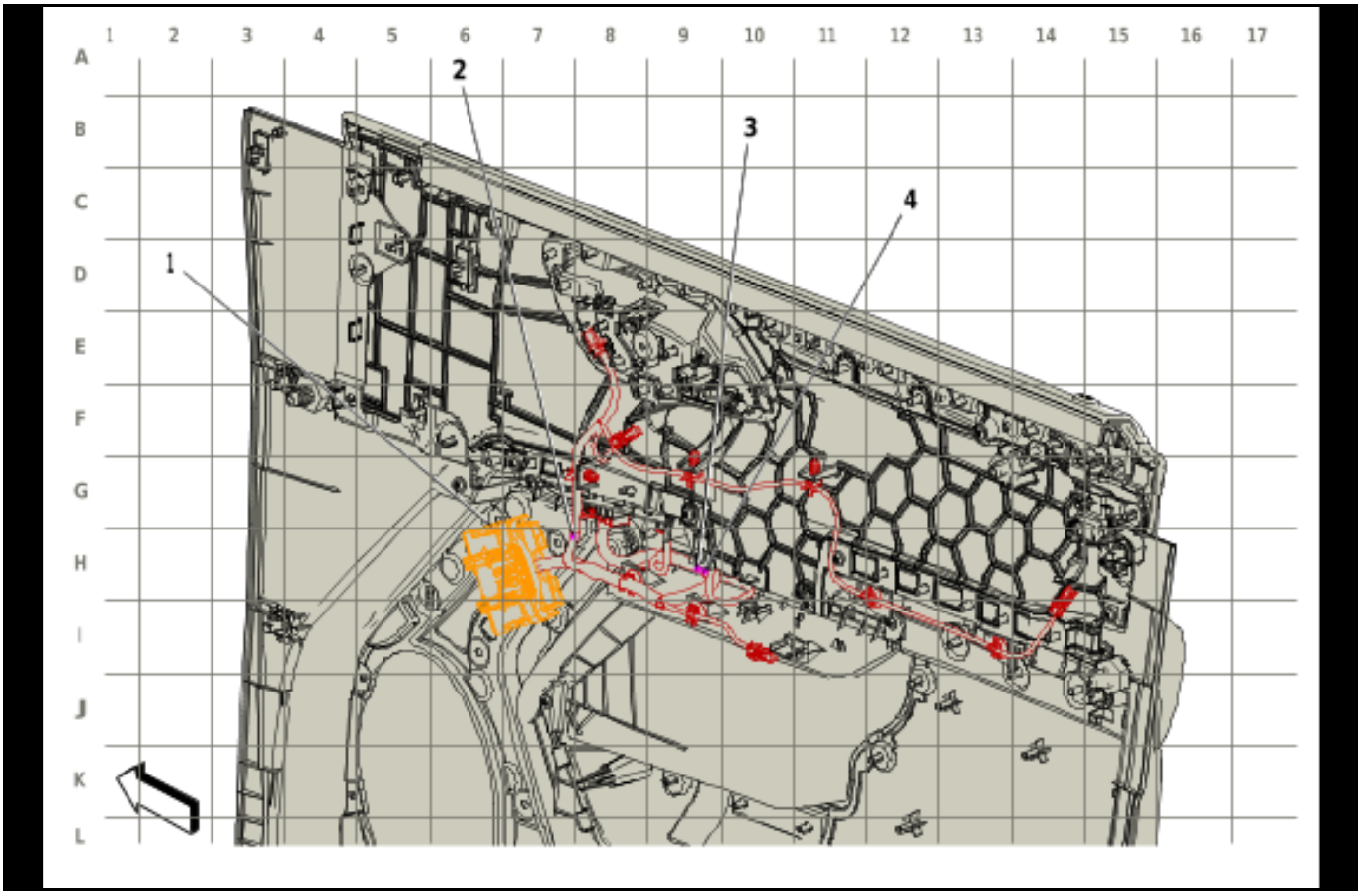

5869960

Items

(1) X505 Front Side Door Door Wiring Harness - Driver to Front Side Door Door Lock Door Wiring Harness - Dri

(2) J505 Front Side Door Door Lock Door Wiring Harness - Driver

(3) J506 Front Side Door Door Lock Door Wiring Harness - Driver

(4) J507 Front Side Door Door Lock Door Wiring Harness - Driver

Harness Routing Views (Passenger Door Harness)

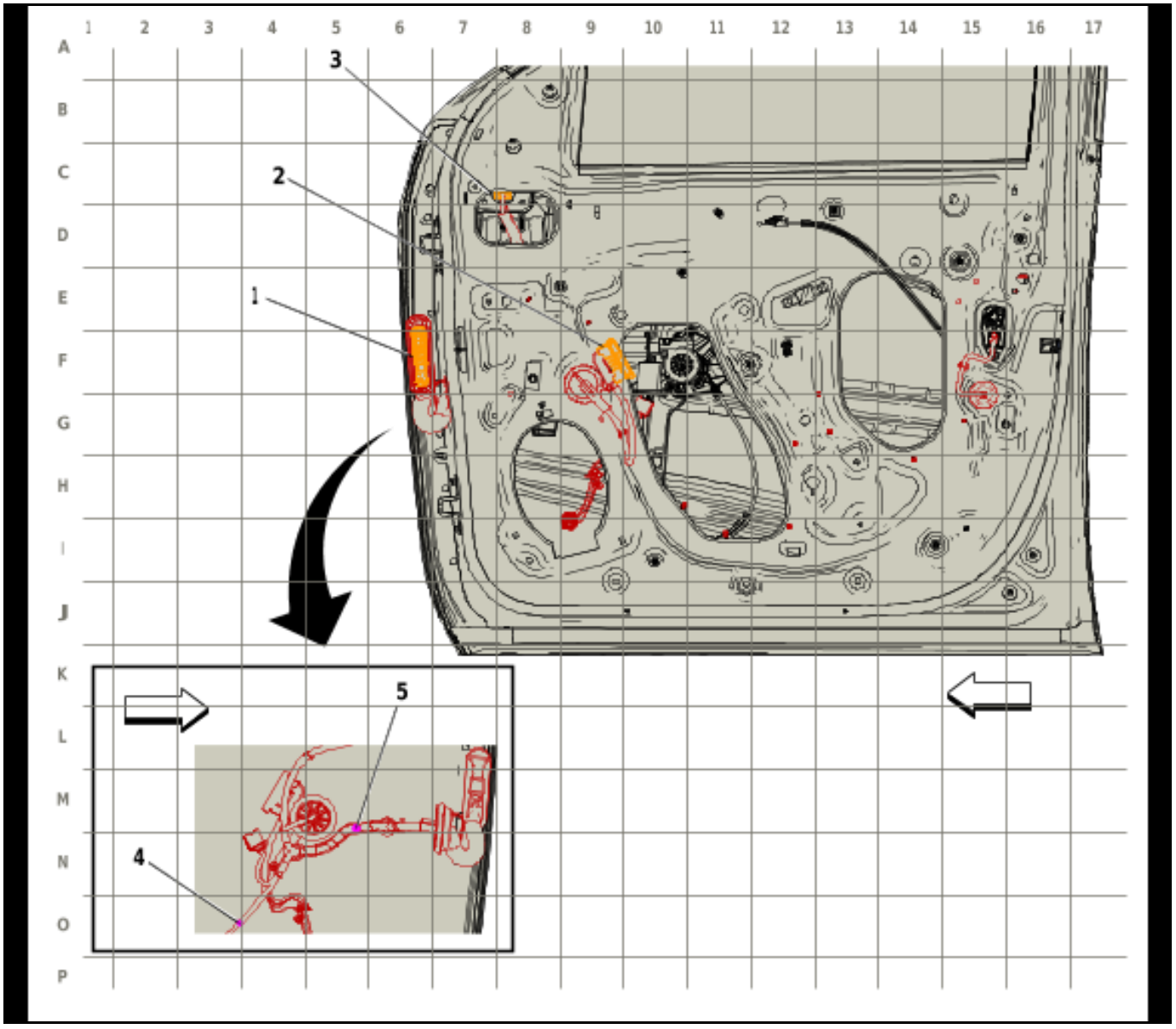

5869961

Items

(1) X600 Front Side Door Door Wiring Harness - Passenger to Body Wiring Harness

(2) X605 Front Side Door Door Wiring Harness - Passenger to Front Side Door Door Lock Door Wiring Harness -

(3) X610 Front Side Door Door Wiring Harness - Passenger to Front Side Door Door Wiring Harness - Passenger

(4) J601 Front Side Door Door Wiring Harness - Passenger

(5) J600 Front Side Door Door Wiring Harness - Passenger

Harness Routing Views (Passenger Door Trim Harness)

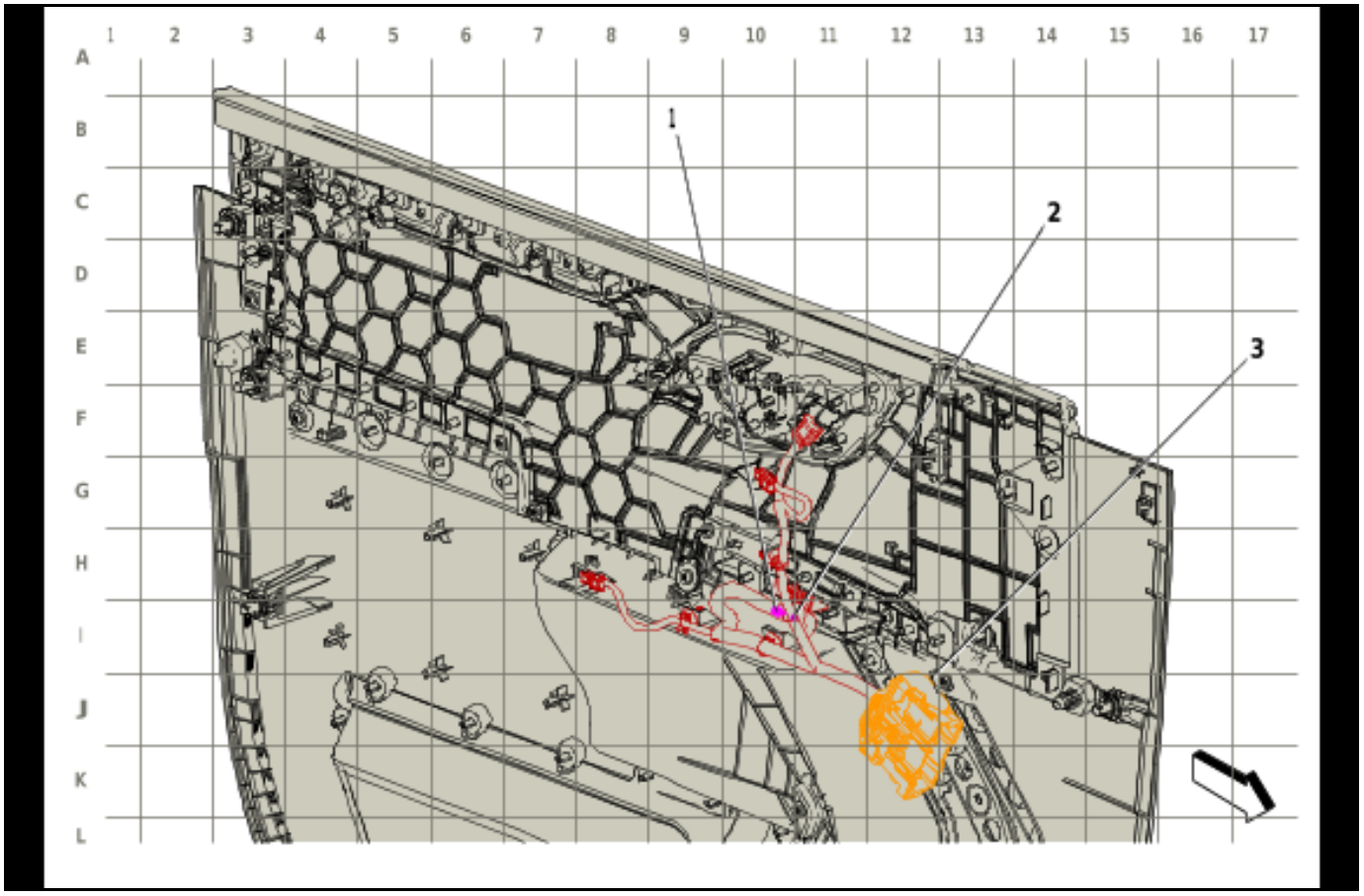

5869962

Items

(1) J606 Front Side Door Door Lock Door Wiring Harness - Passenger

(2) J605 Front Side Door Door Lock Door Wiring Harness - Passenger

(3) X605 Front Side Door Door Wiring Harness - Passenger to Front Side Door Door Lock Door Wiring Harness -

Harness Routing Views (Rear Door Harnesses (SWB))

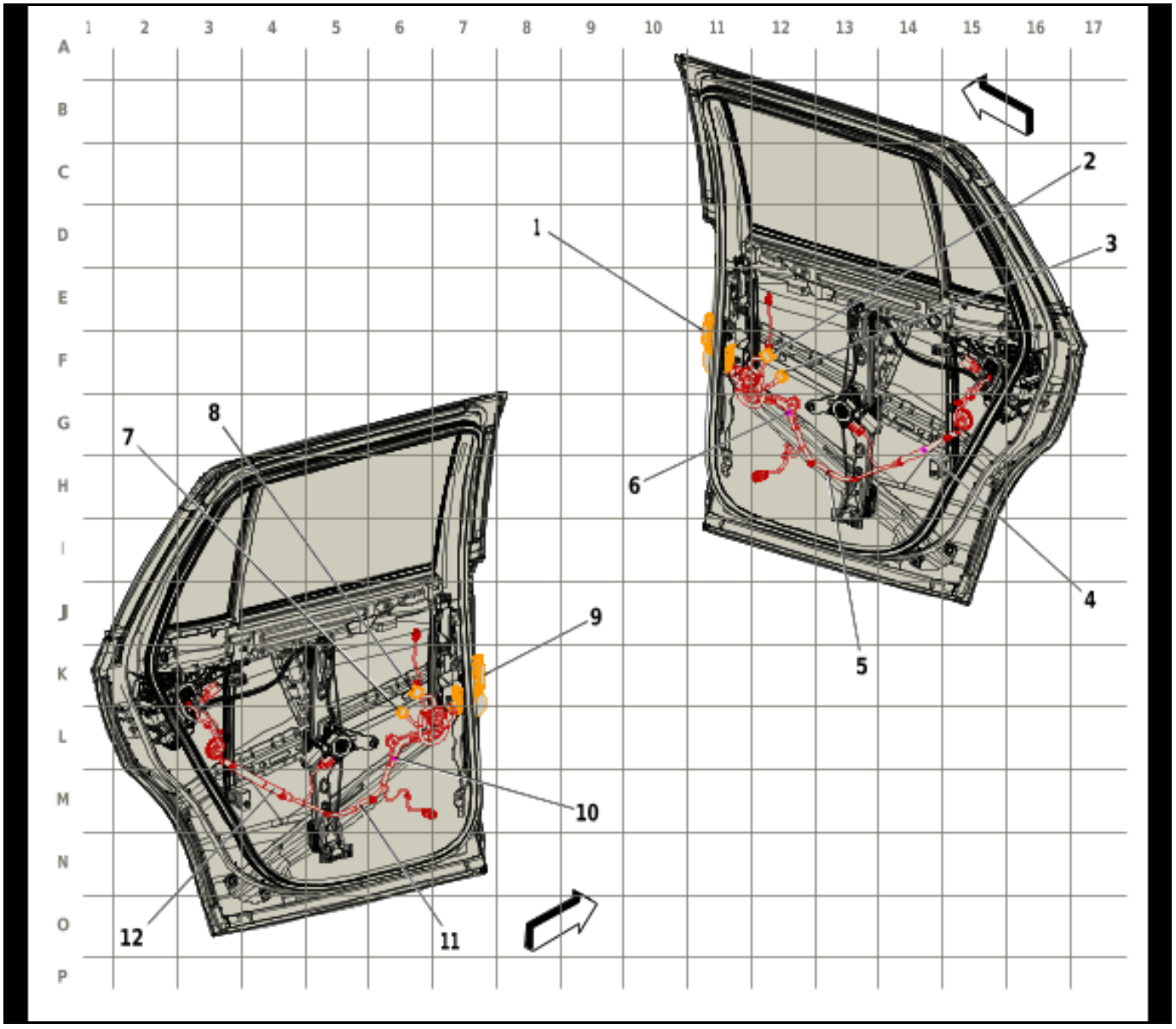

5869963

Items

(1) X800 Rear Side Door Door Wiring Harness - Right to Body Wiring Harness

(2) X806 Rear Side Door Door Wiring Harness - Right to Rear Side Door Door Lock Door Wiring Harness - Right

(3) X805 Rear Side Door Door Wiring Harness - Right to Rear Side Door Door Lock Door Wiring Harness - Right

(4) J802 Rear Side Door Door Wiring Harness - Right

(5) J800 Rear Side Door Door Wiring Harness - Right

(6) J801 Rear Side Door Door Wiring Harness - Right

(7) X705 Rear Side Door Door Wiring Harness - Left to Rear Side Door Door Lock Door Wiring Harness - Left

(8) X706 Rear Side Door Door Wiring Harness - Left to Rear Side Door Door Lock Door Wiring Harness - Left

(9) X700 Rear Side Door Door Wiring Harness - Left to Body Wiring Harness

(10) J700 Rear Side Door Door Wiring Harness - Left

(11) J701 Rear Side Door Door Wiring Harness - Left

(12) J702 Rear Side Door Door Wiring Harness - Left

Harness Routing Views (Rear Door Harnesses (LWB))

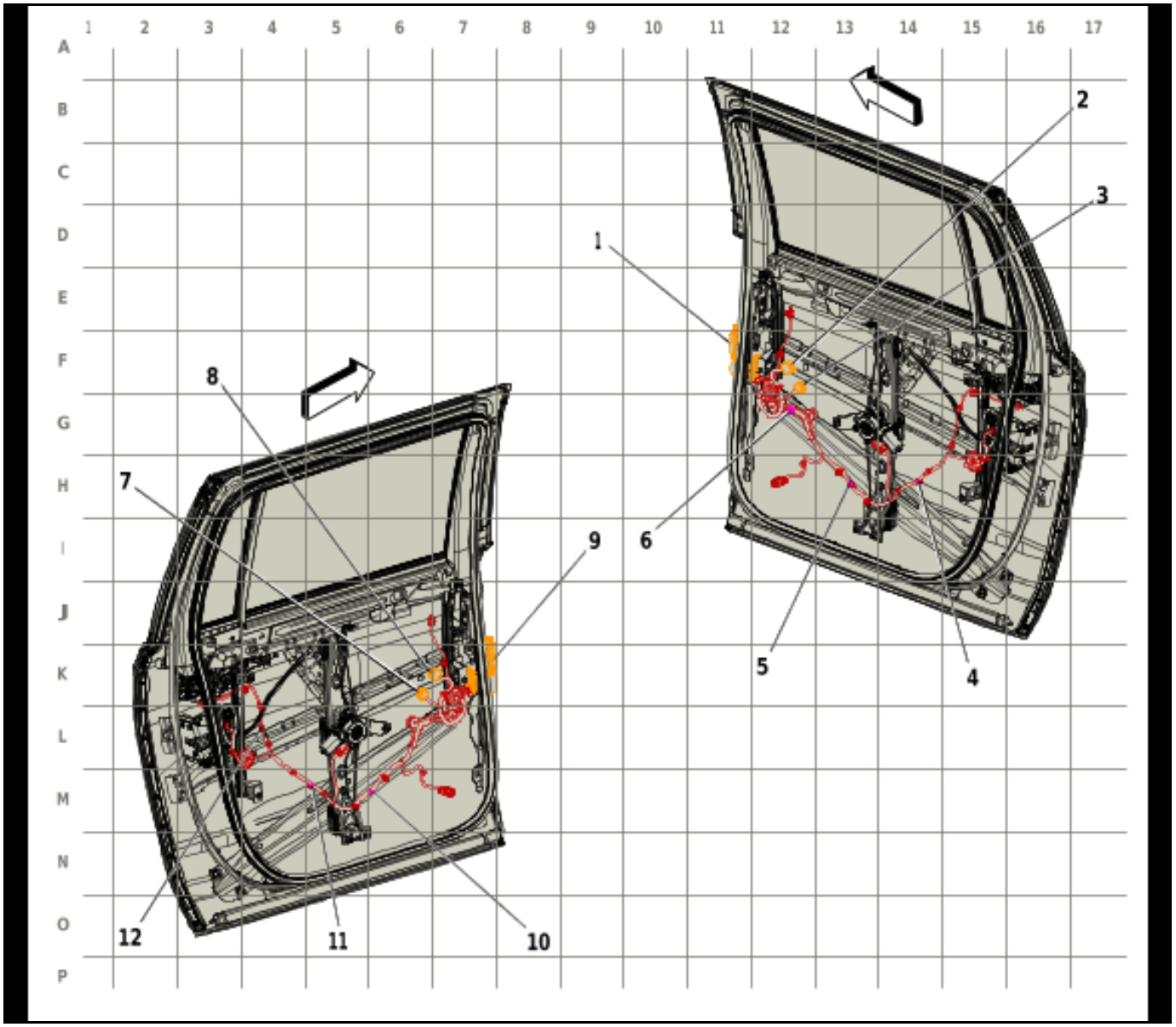

5869964

Items

(1) X800 Rear Side Door Door Wiring Harness - Right to Body Wiring Harness

(2) X806 Rear Side Door Door Wiring Harness - Right to Rear Side Door Door Lock Door Wiring Harness - Right

(3) X805 Rear Side Door Door Wiring Harness - Right to Rear Side Door Door Lock Door Wiring Harness - Right

(4) J802 Rear Side Door Door Wiring Harness - Right

(5) J801 Rear Side Door Door Wiring Harness - Right

(6) J800 Rear Side Door Door Wiring Harness - Right

(7) X705 Rear Side Door Door Wiring Harness - Left to Rear Side Door Door Lock Door Wiring Harness - Left

(8) X706 Rear Side Door Door Wiring Harness - Left to Rear Side Door Door Lock Door Wiring Harness - Left

(9) X700 Rear Side Door Door Wiring Harness - Left to Body Wiring Harness

(10) J702 Rear Side Door Door Wiring Harness - Left

(11) J700 Rear Side Door Door Wiring Harness - Left

(12) J701 Rear Side Door Door Wiring Harness - Left

Harness Routing Views (Rear Door Trim Harnesses)

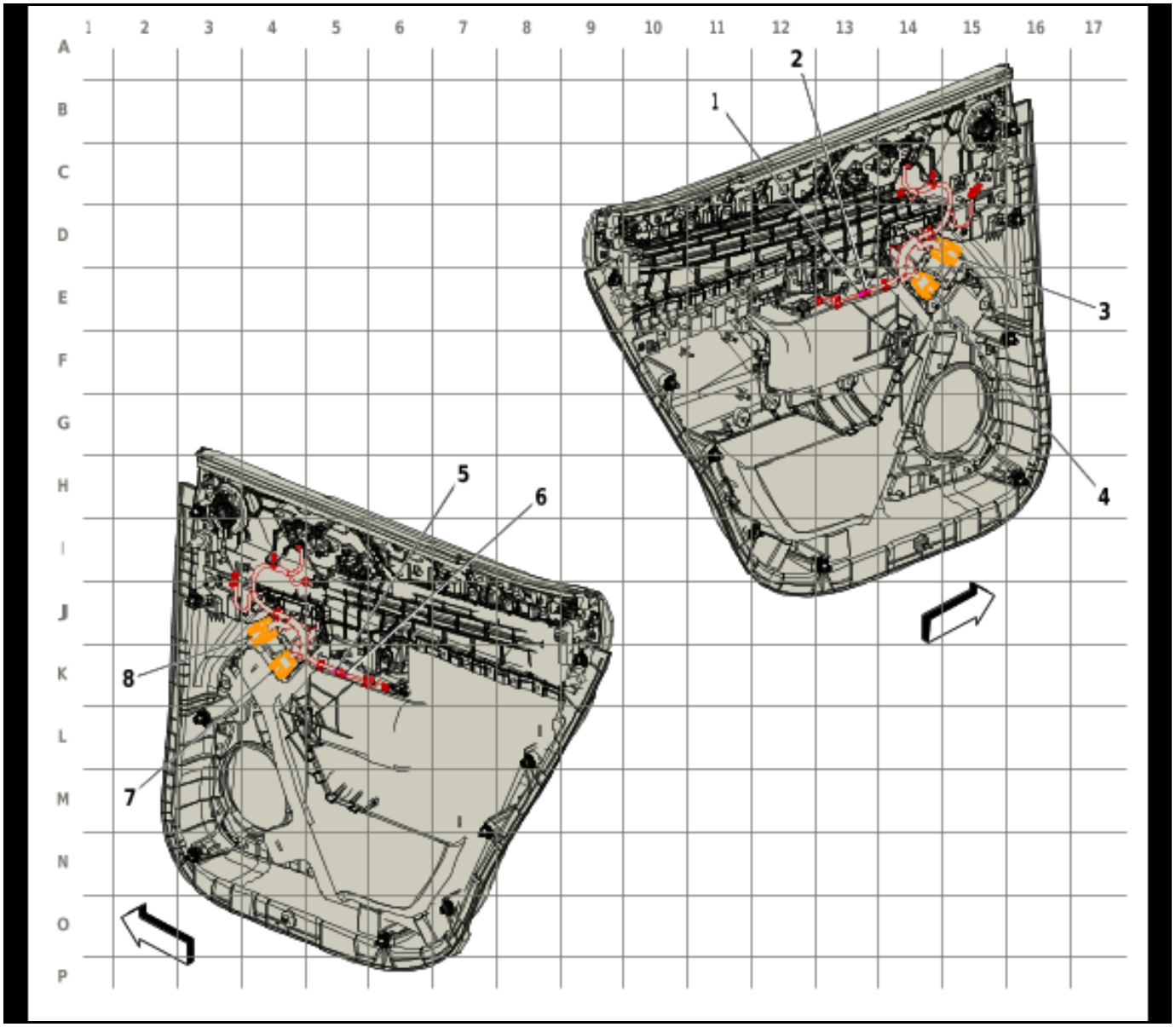

5869965

Items

(1) J806 Rear Side Door Door Lock Door Wiring Harness - Right

(2) J805 Rear Side Door Door Lock Door Wiring Harness - Right

(3) X806 Rear Side Door Door Wiring Harness - Right to Rear Side Door Door Lock Door Wiring Harness - Right

(4) X805 Rear Side Door Door Wiring Harness - Right to Rear Side Door Door Lock Door Wiring Harness - Right

(5) J705 Rear Side Door Door Lock Door Wiring Harness - Left

(6) J706 Rear Side Door Door Lock Door Wiring Harness - Left

(7) X705 Rear Side Door Door Wiring Harness - Left to Rear Side Door Door Lock Door Wiring Harness - Left

(8) X706 Rear Side Door Door Wiring Harness - Left to Rear Side Door Door Lock Door Wiring Harness - Left

Harness Routing Views (Luggage Compartment - Body Harness - Right (LWB))



5869966

Items

(1) J425 Body Wiring Harness
(2) J427 Body Wiring Harness
(3) J429 Body Wiring Harness
(4) J430 Body Wiring Harness
(5) J426 Body Wiring Harness
(6) X419
(7) X251A Body Wiring Harness to Auxiliary HVAC Wiring Harness (C69)
(8) X346

Harness Routing Views (Luggage Compartment - Body Harness - Right (SWB))

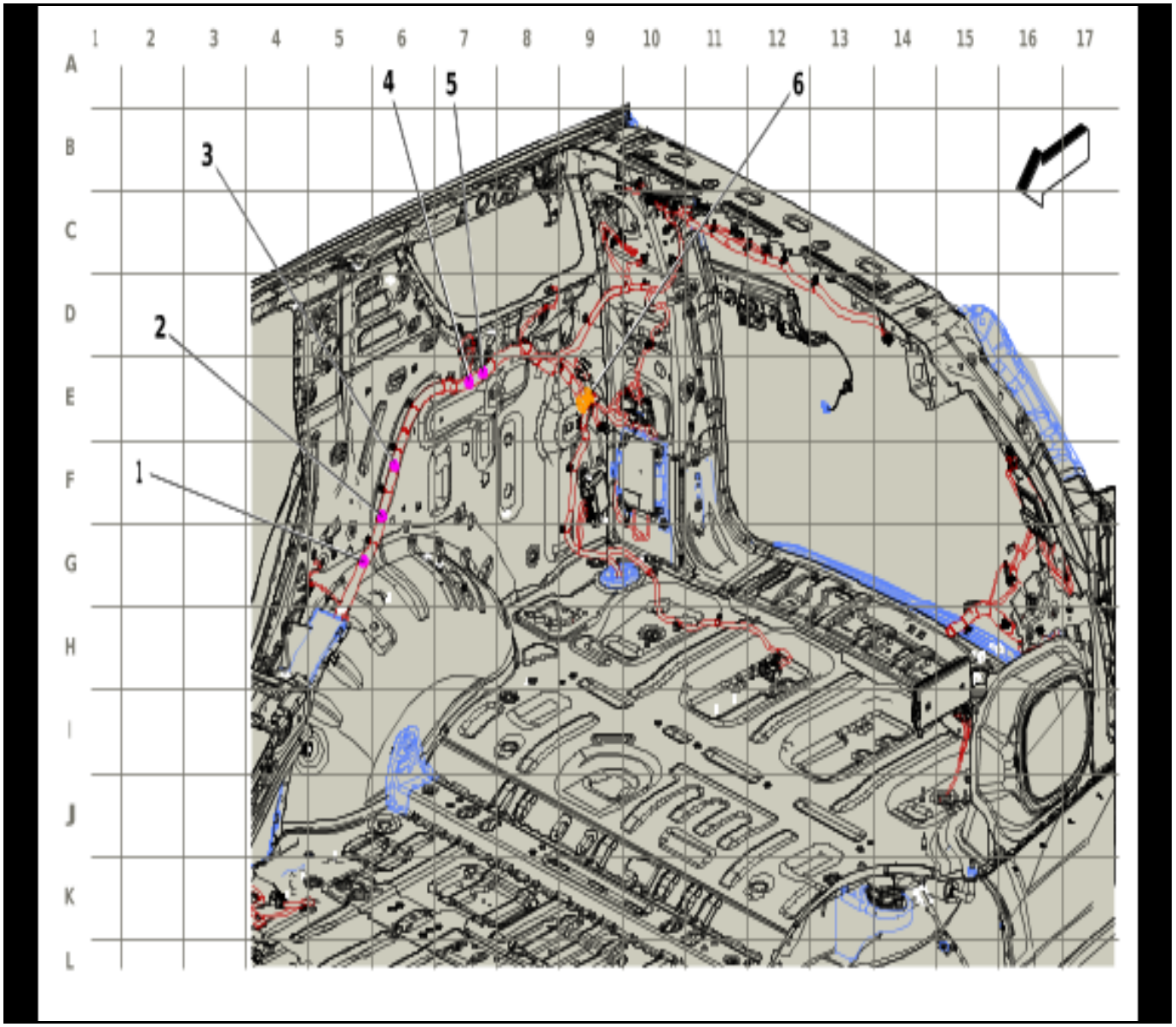

5869967

Items

(1) J425 Body Wiring Harness
(2) J426 Body Wiring Harness
(3) J427 Body Wiring Harness
(4) J429 Body Wiring Harness
(5) J430 Body Wiring Harness
(6) X251A Body Wiring Harness to Auxiliary HVAC Wiring Harness (C69)

Harness Routing Views (Rear of Vehicle - Liftgate Harness)

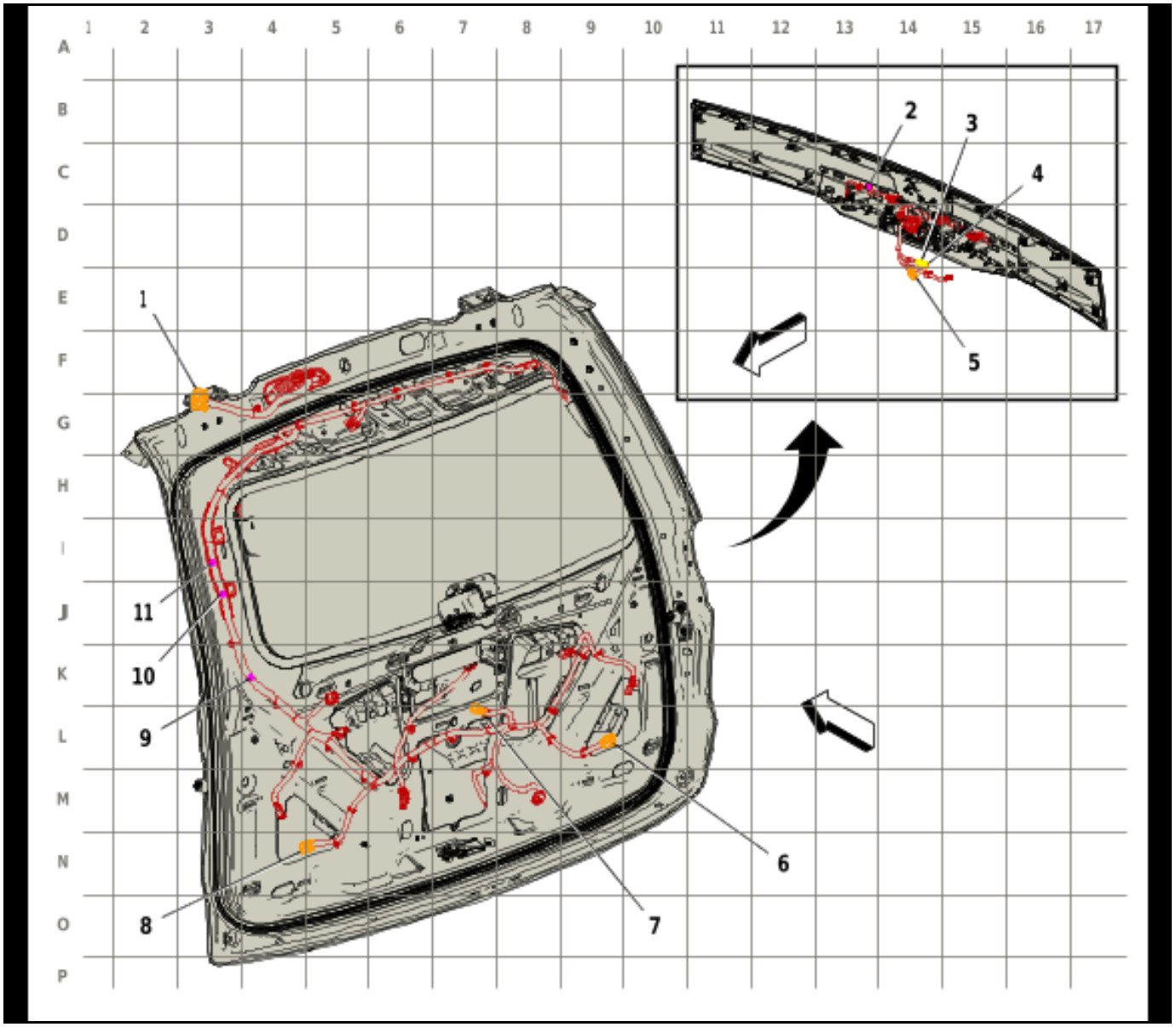

5869968

Items

(1) X905 Liftgate Wiring Harness to Body Wiring Harness
(2) J910 Rear License Plate Lamp Wiring Harness
(3) X995R Liftgate Extension Harness to Rearview Camera Harness (UV2)
(4) X995F Liftgate Extension Harness to Rearview Camera Harness
(5) X907
(6) X907L
(7) X907A Rear License Plate Lamp Wiring Harness to Liftgate Wiring Harness
(8) X908
(9) J903
(10) J902
(11) J901 Liftgate Wiring Harness

Component Locator

Front of Vehicle/Engine Compartment Component Views

Front of Vehicle Components

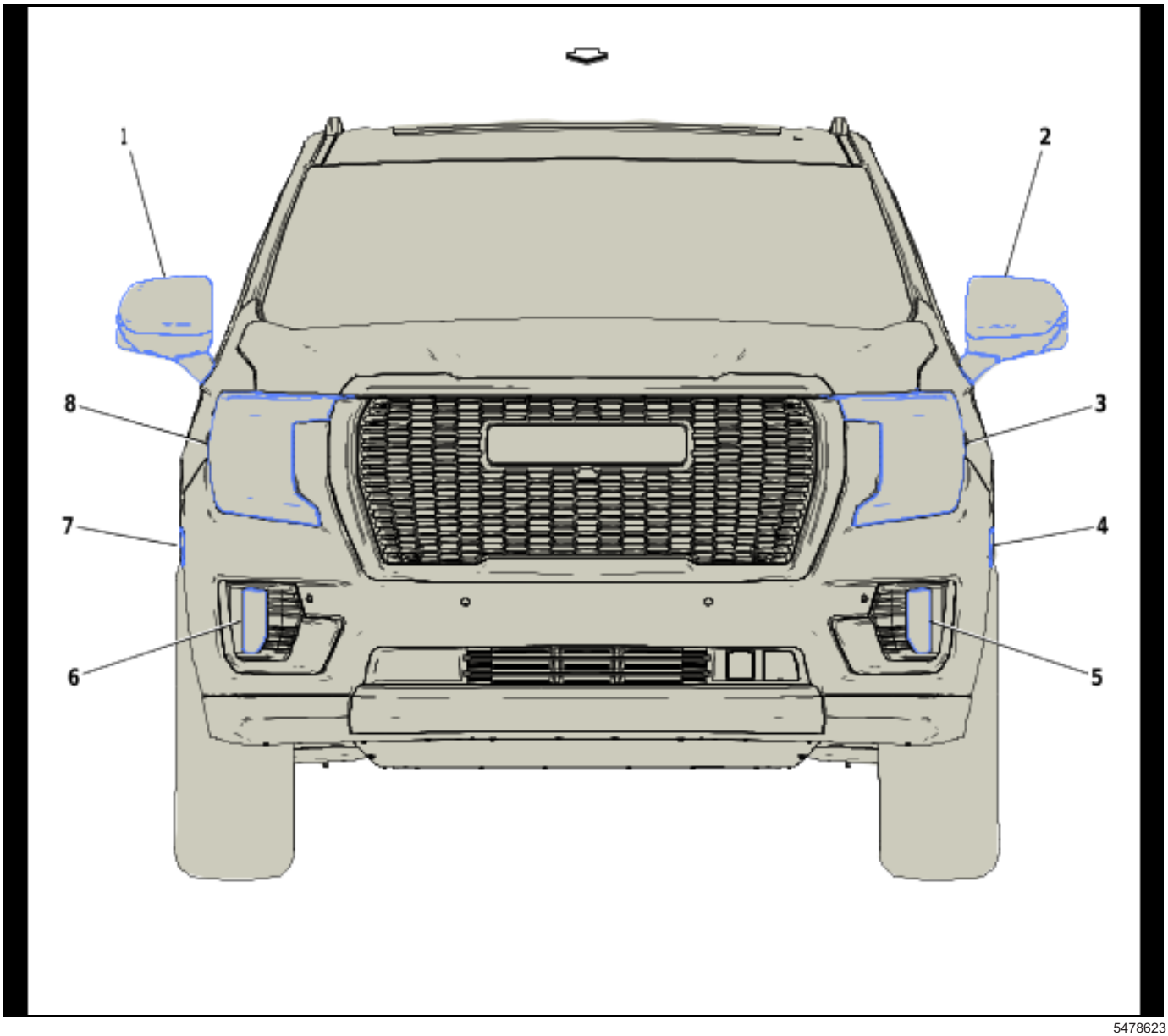

5478623

Items

(1) A9B Outside Rearview Mirror - Passenger
(2) A9A Outside Rearview Mirror - Driver
(3) E13LA Front Headlamp - Left
(4) E2LF Front Side Marker Lamp - Left
(5) E29LF Front Fog Lamp - Left (T3U)
(6) E29RF Front Fog Lamp - Right (T3U)
(7) E2RF Front Side Marker Lamp - Right
(8) E13RA Front Headlamp - Right

Front Fascia Components

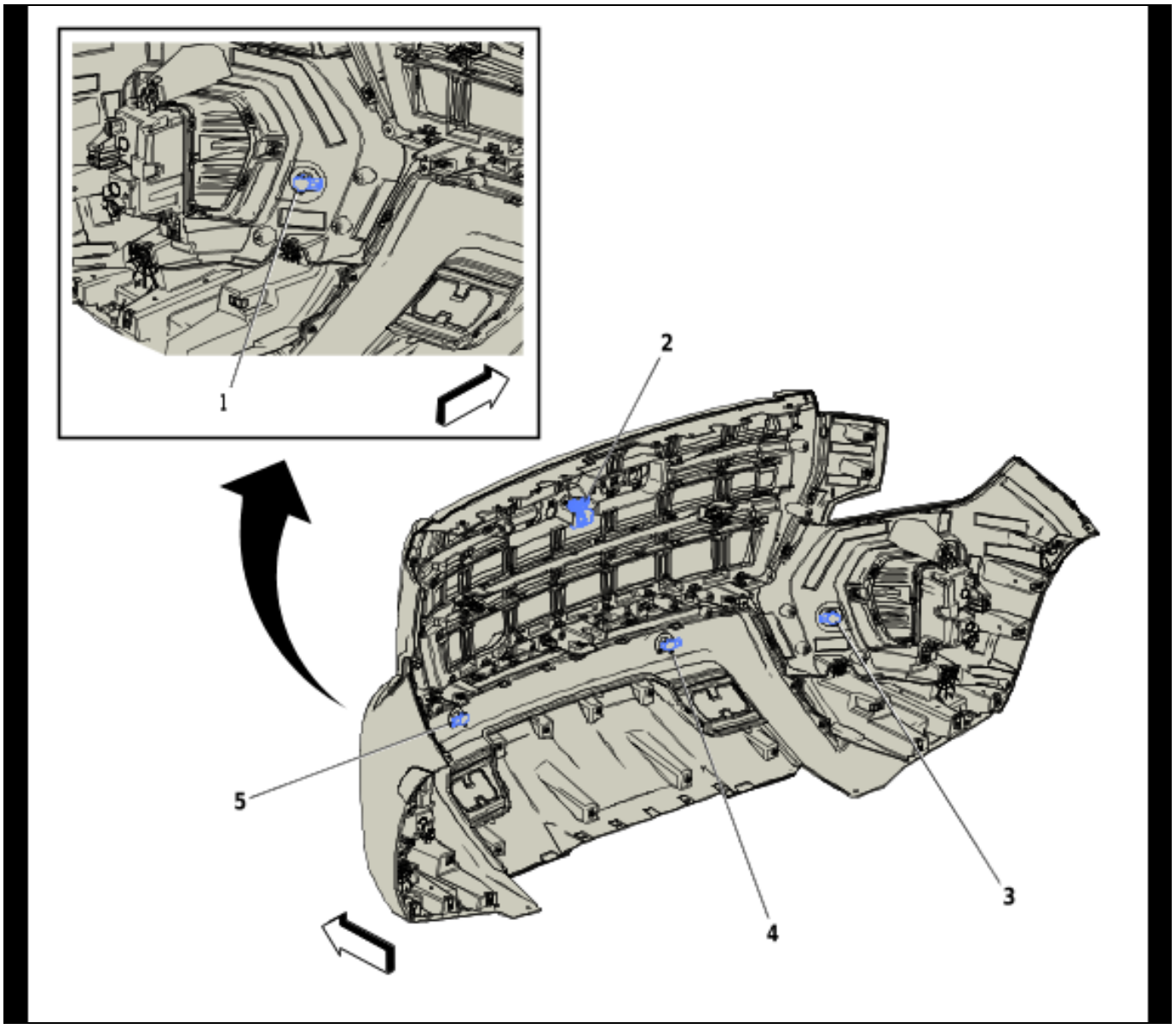

5478624

Items

(1) B306A Parking Assist Alarm Sensor - Front Left Outer (UD5)

(2) B174G Front View Driver Information Camera - Grille (UV2)

(3) B306D Parking Assist Alarm Sensor - Front Right Outer (UD5)

(4) B306C Parking Assist Alarm Sensor - Front Right Middle (UD5)

(5) B306B Parking Assist Alarm Sensor - Front Left Middle (UD5)

Radiator Components (L84/L87)

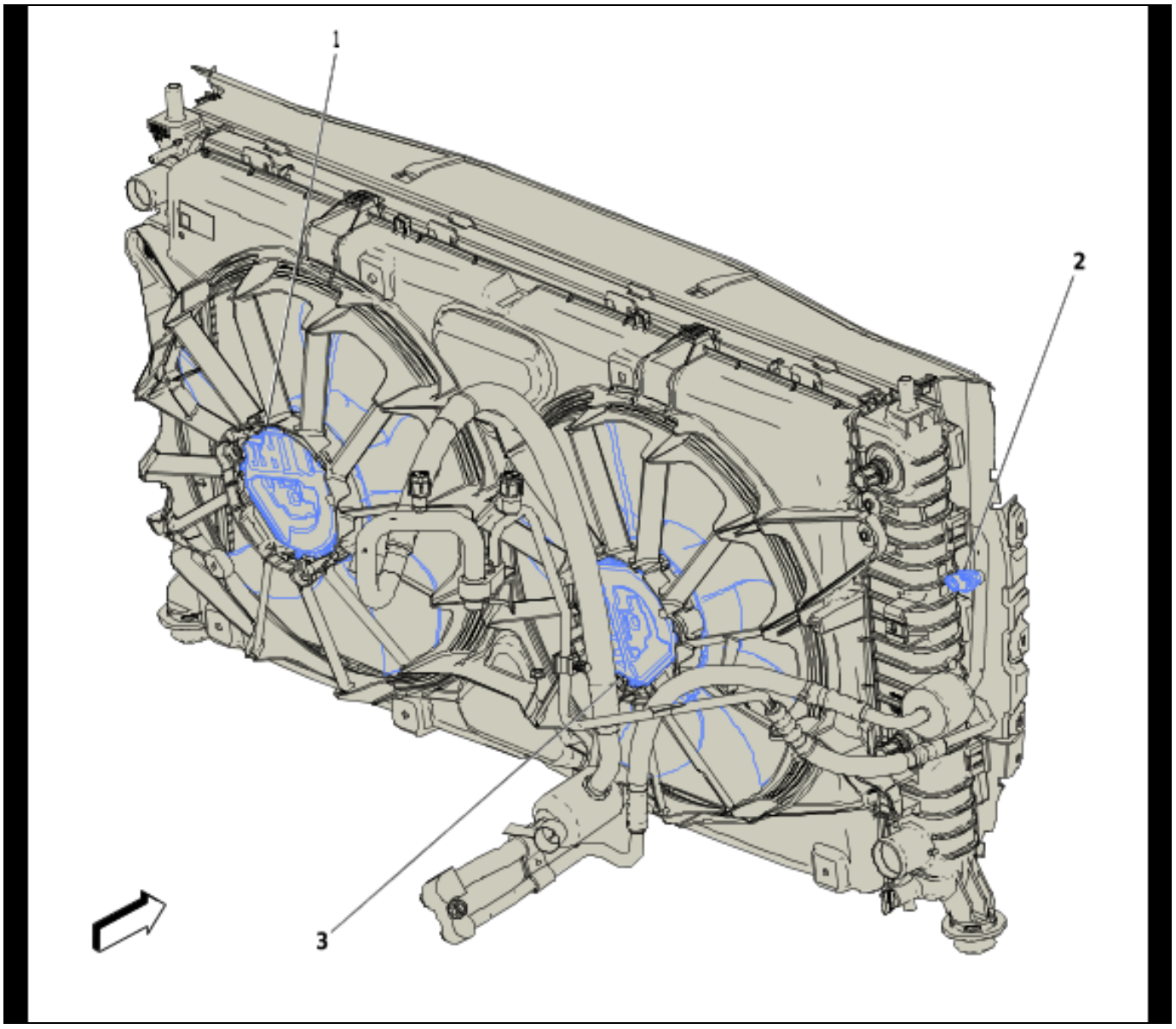

5501400

Items

(1) G10L Cooling Fan Motor - Left

(2) B1 Air Conditioning Refrigerant Pressure Sensor

(3) G10R Cooling Fan Motor - Right

Radiator Components (LM2)

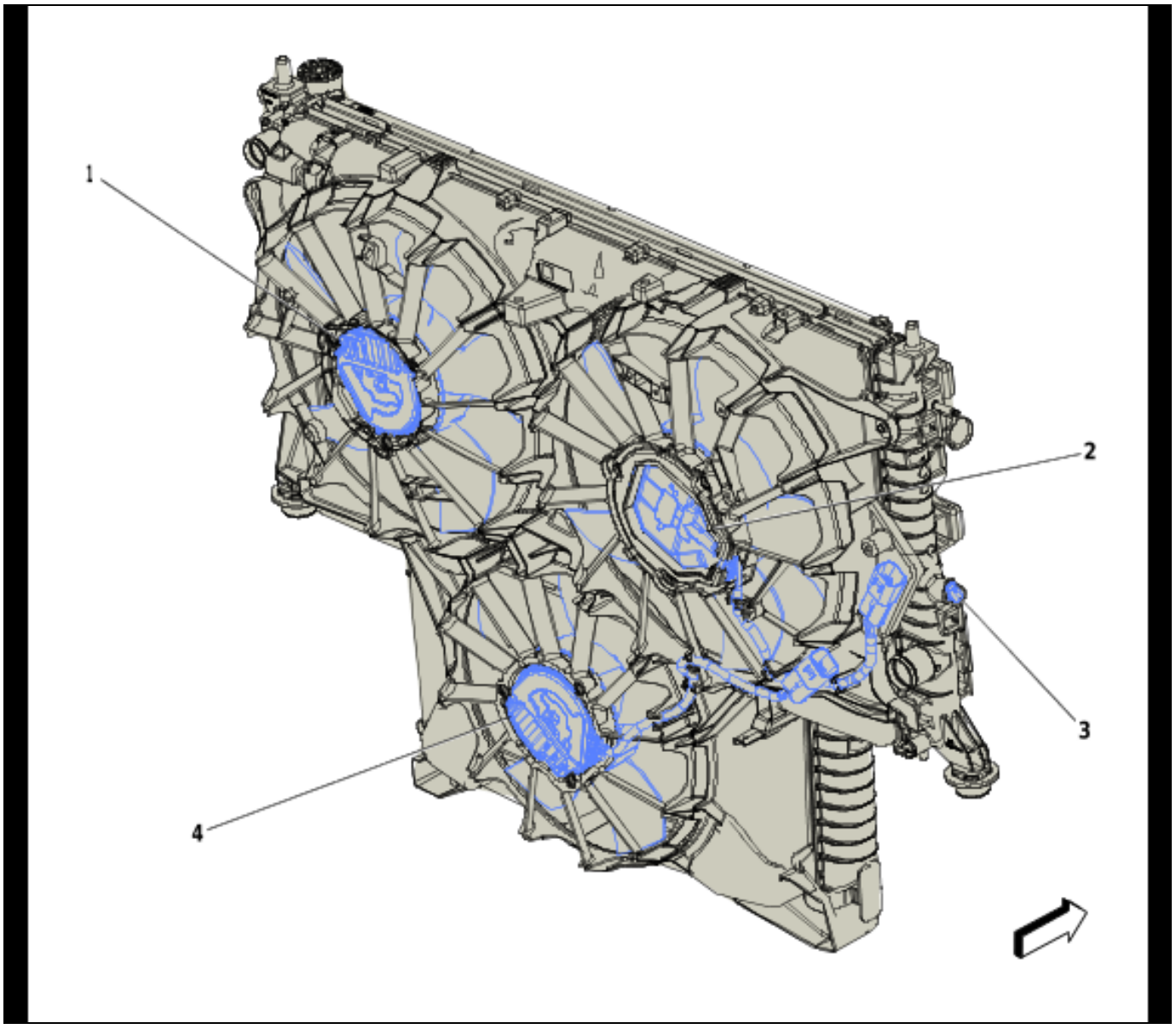

5731550

Items

(1) G10L Cooling Fan Motor - Left

(2) G10LW Cooling Fan Motor - Lower (LM2)

(3) B203 Radiator Coolant Temperature Sensor (LM2)

(4) G10R Cooling Fan Motor - Right

Radiator Support Components

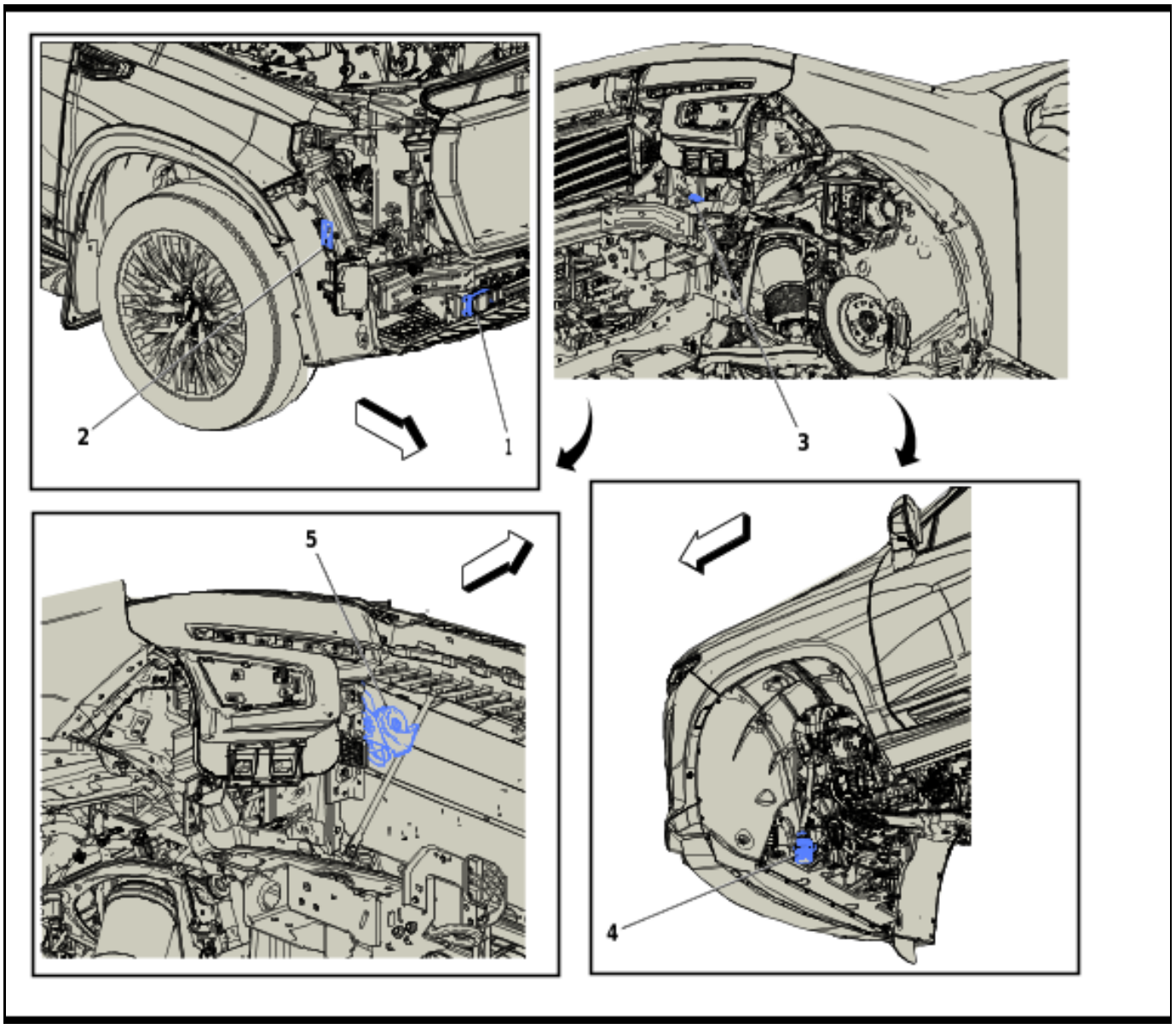

5548907

Items

(1) B233B Forward Range Radar Sensor - Long Range (UGN)

(2) B58R Airbag Front End Discriminating Sensor - Right

(3) B58L Airbag Front End Discriminating Sensor - Left

(4) M10 Charge Air Cooler Coolant Pump (LM2)

(5) P13 Horn

Engine Compartment Components - Top

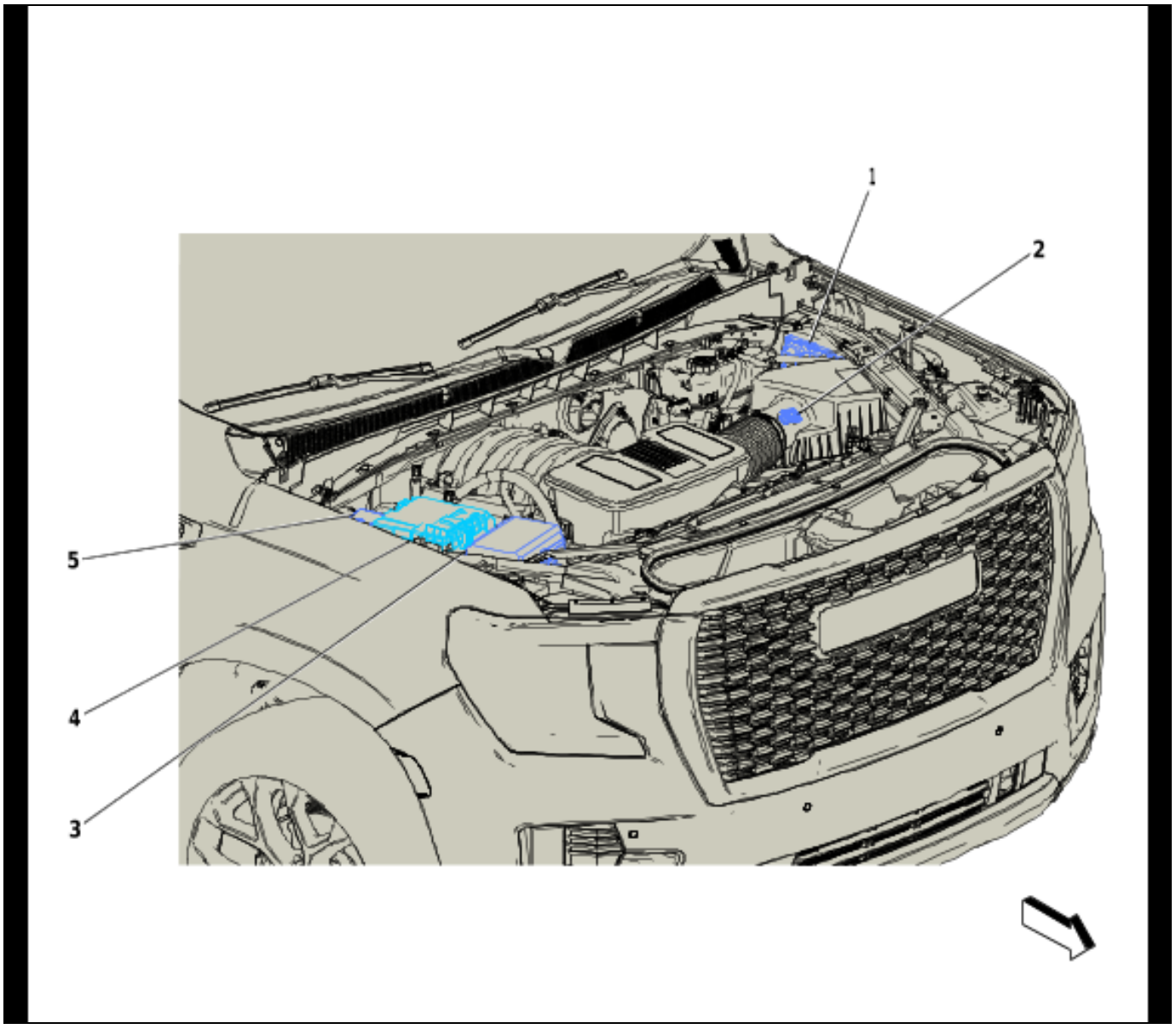

5501402

Items

(1) K69 Transfer Case Control Module (NP0/ NQH)

(2) B75 Mass Airflow Sensor

(3) X50A Engine Wiring Harness Junction Block

(4) X50B Battery Distribution Engine Compartment Fuse Block

(5) B110 Battery Monitor Module (KL9)

Engine Compartment Components - Bottom

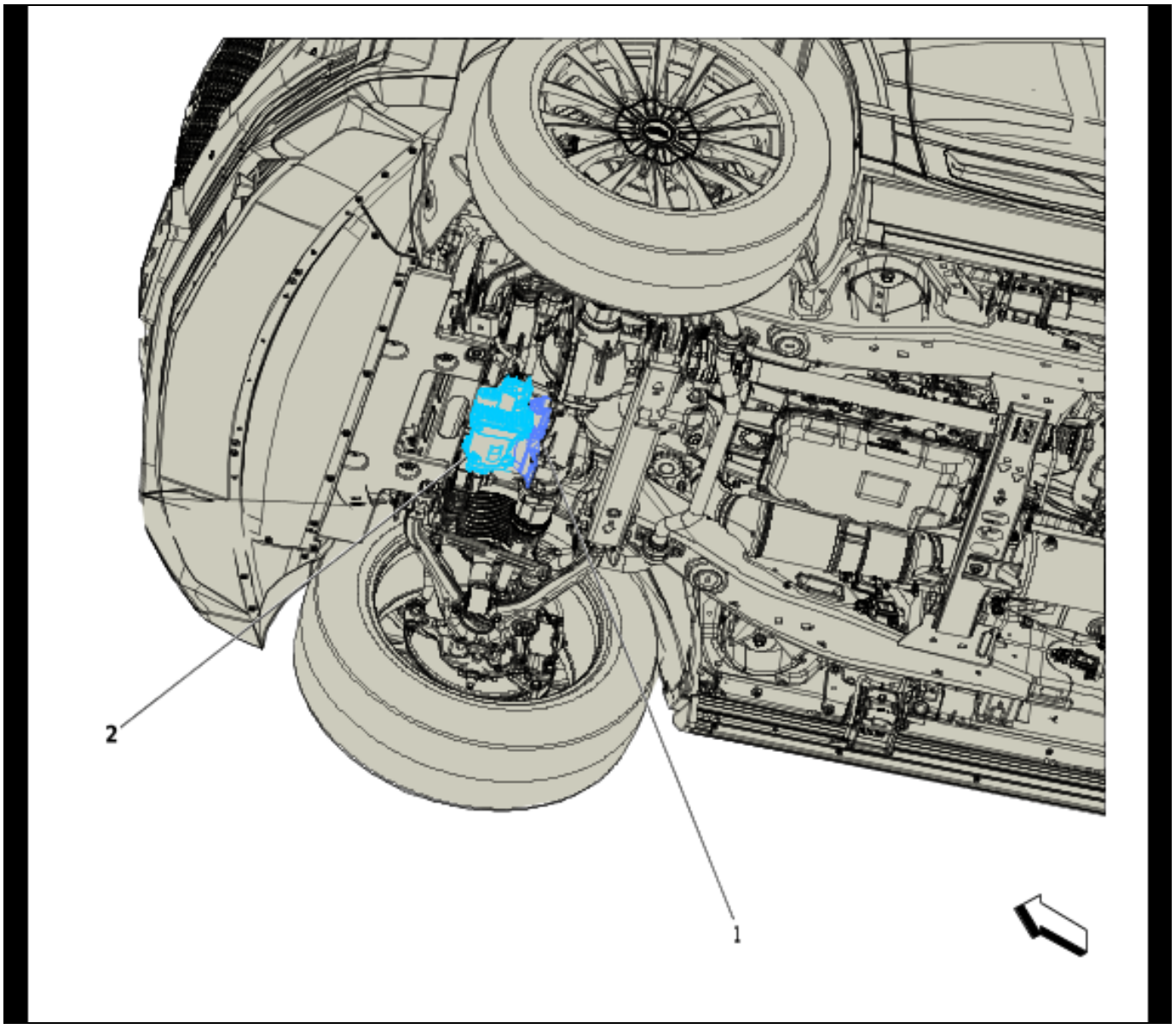

5731551

Items

(1) M26 Front Drive Axle Actuator (NP0/NQH)

(2) K43 Power Steering Control Module

Engine Compartment Components - Left

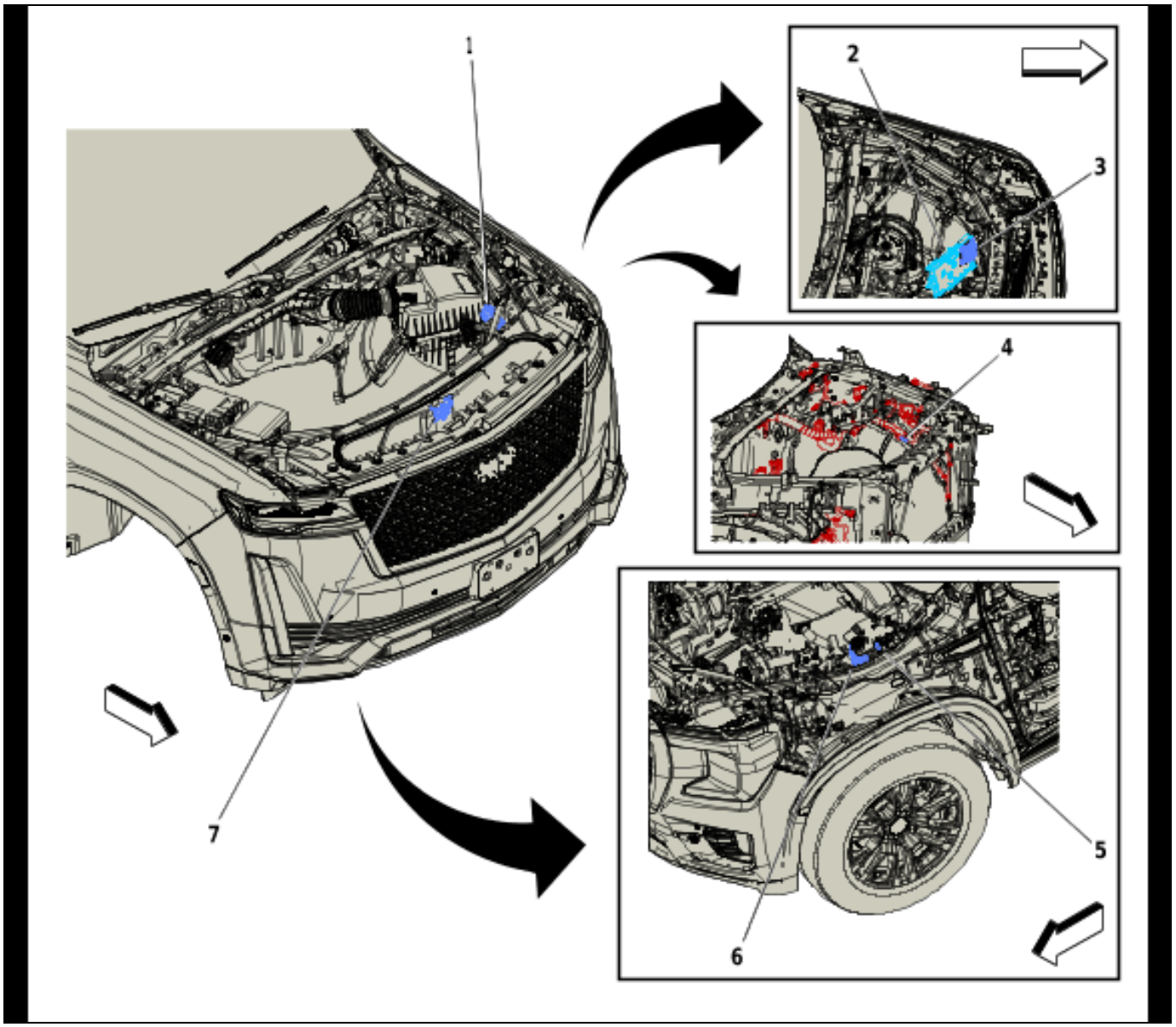

5548908

Items

(1) X50UA Accessory Wiring Junction Block - Underhood
(2) K20 Engine Control Module
(3) K71 Transmission Control Module
(4) R6A Terminating Resistor - High Speed Bus (UET+TB4-UKC-UKV)
(5) B20A Brake Fluid Level Indicator Switch
(6) K160 Brake System Control Module
(7) B55 Engine Compartment Cover Switch

Powertrain Component Views

Engine Components - Top (L84/L87)

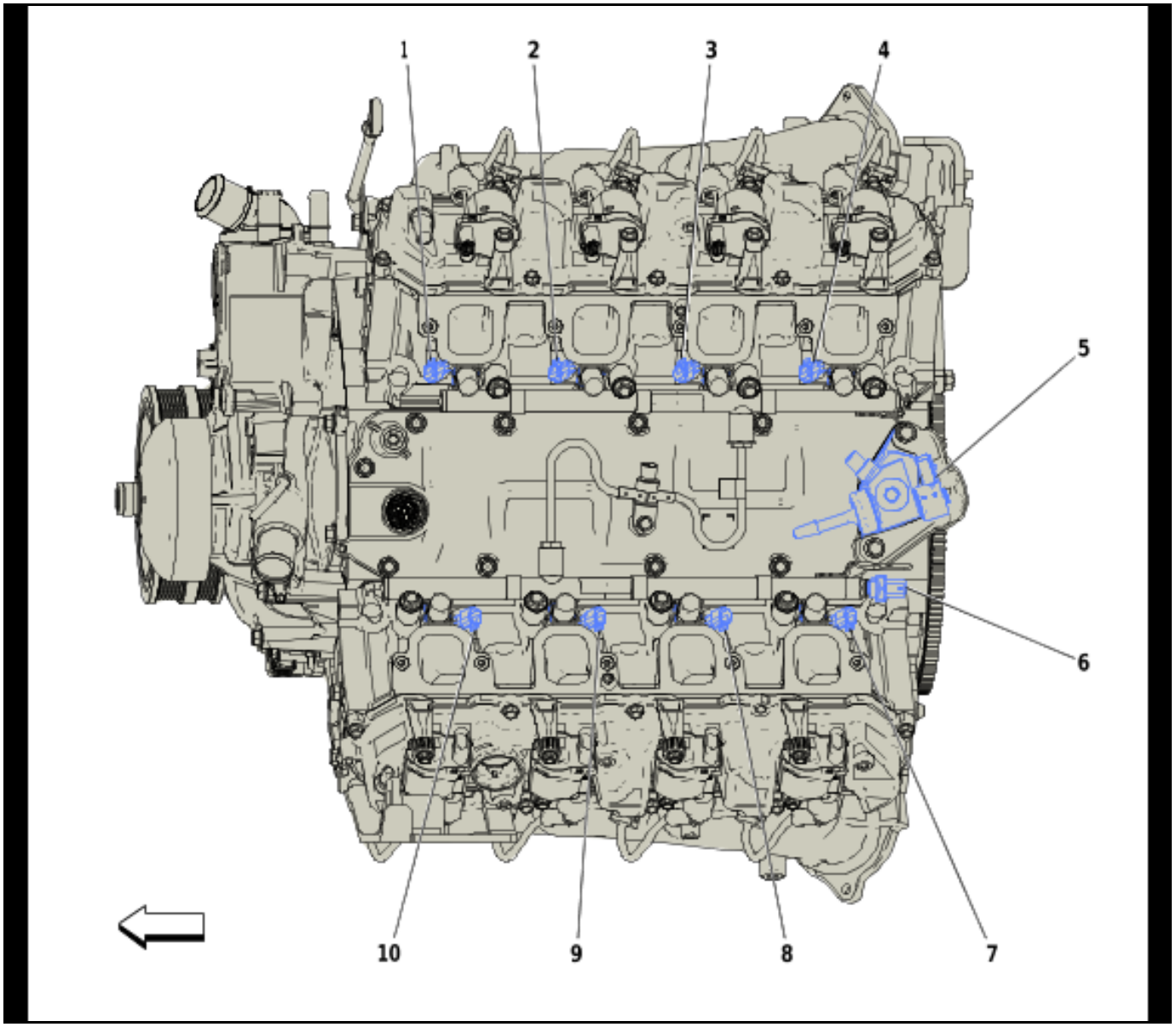

5501406

Items

(1) Q17B Fuel Injector 2
(2) Q17D Fuel Injector 4
(3) Q17F Fuel Injector 6
(4) Q17H Fuel Injector 8 (L84/L87)
(5) G18 Fuel Pump - High Pressure
(6) B47B Fuel Rail Pressure Sensor
(7) Q17G Fuel Injector 7 (L84/L87)
(8) Q17E Fuel Injector 5
(9) Q17C Fuel Injector 3
(10) Q17A Fuel Injector 1

Engine Components - Left Front (L84/L87)

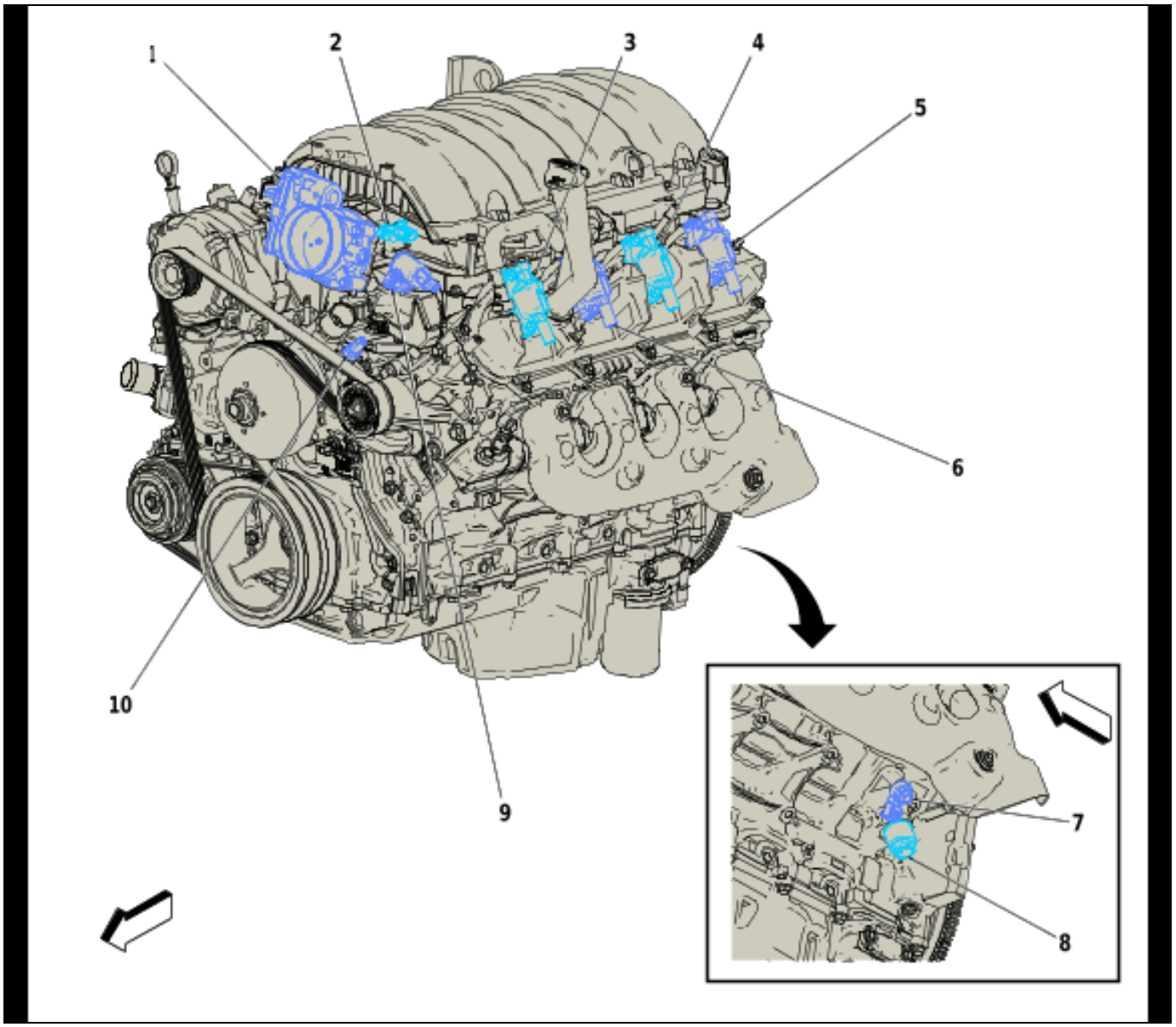

5479520

Items

(1) Q38 Throttle Body
(2) B74 Manifold Absolute Pressure Sensor (L84/L87)
(3) T8A Ignition Coil 1 (L84/L87)
(4) T8E Ignition Coil 5 (L84/L87)
(5) T8G Ignition Coil 7 (L84/L87)
(6) T8C Ignition Coil 3 (L84/L87)
(7) B68A Knock Sensor 1 (L84/L87)
(8) B37B Engine Oil Pressure Sensor (L84/L87)
(9) Q12 Evaporative Emission Canister Purge Solenoid Valve (L84/L87)
(10) B34 Engine Coolant Temperature Sensor

Engine Components - Right Front (L84/L87)

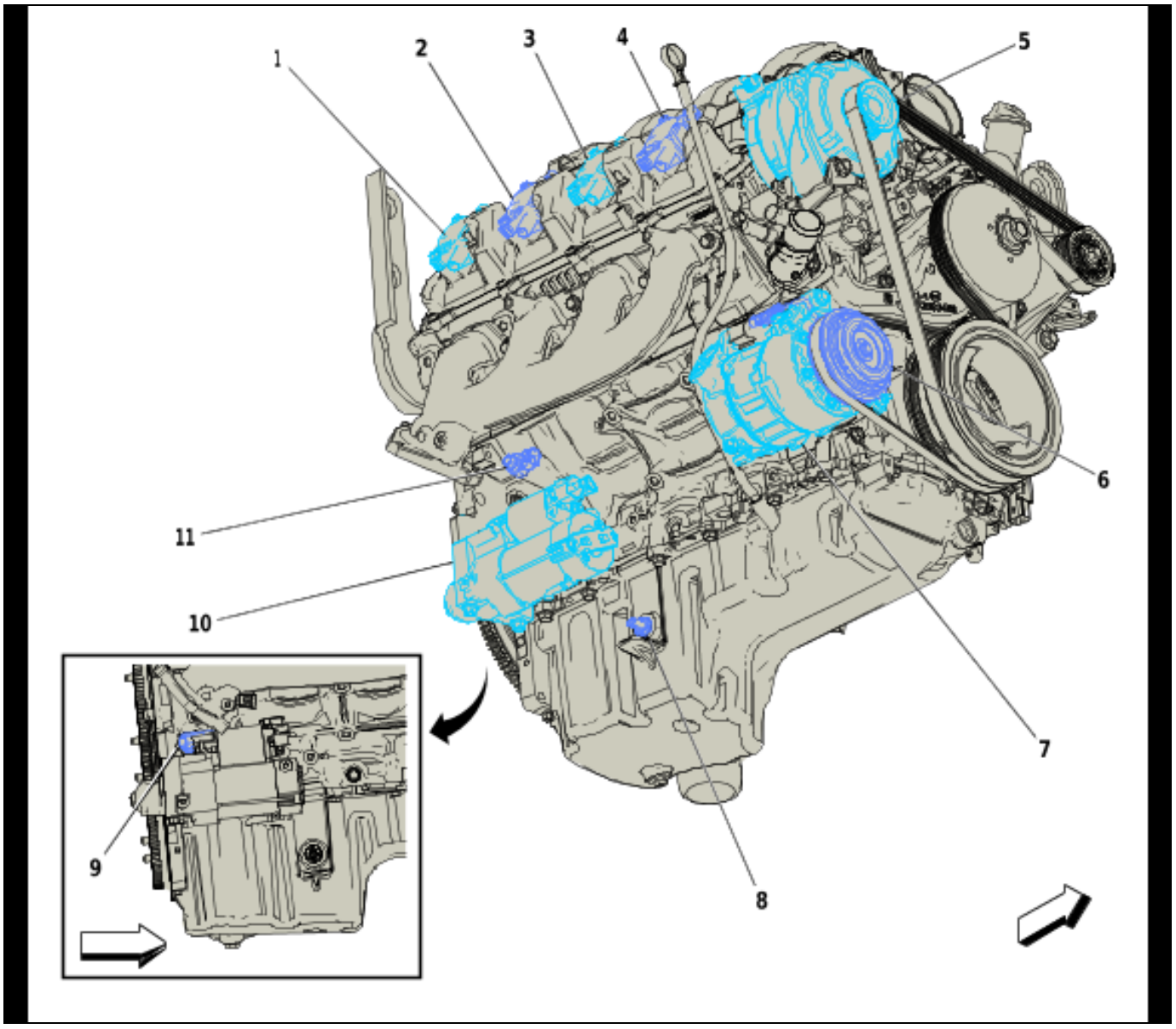

5479528

Items

(1) T8H Ignition Coil 8 (L84/L87)
(2) T8F Ignition Coil 6 (L84/L87)
(3) T8D Ignition Coil 4 (L84/L87)
(4) T8B Ignition Coil 2 (L84/L87)
(5) G13 Generator
(6) Q2 Air Conditioning Clutch
(7) Q46 Air Conditioning Compressor Solenoid Valve
(8) B35 Engine Oil Level Indicator Switch (L84/L87)
(9) B26 Crankshaft Position Sensor
(10) M64 Starter
(11) B68B Knock Sensor 2 (L84/L87)

Engine Components - Oxygen Sensors (L84/L87)

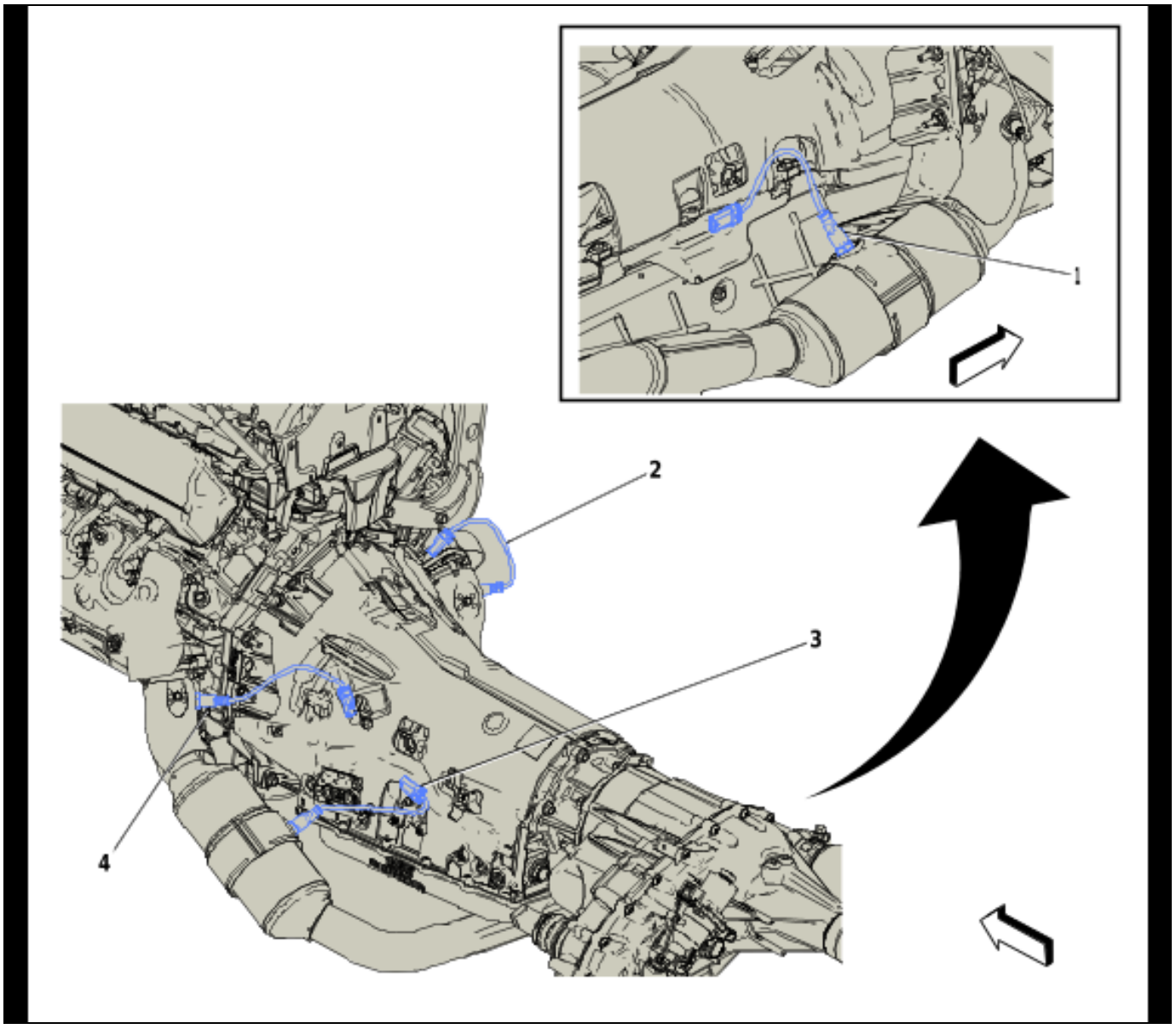

5501398

Items

(1) B52F Heated Oxygen Sensor - Bank 2 Sensor 2 (L84/L87)

(2) B52E Heated Oxygen Sensor - Bank 2 Sensor 1 (L84/L87)

(3) B52D Heated Oxygen Sensor - Bank 1 Sensor 2 (L84/L87)

(4) B52C Heated Oxygen Sensor - Bank 1 Sensor 1 (L84/L87)

Engine Components - Top (LM2)

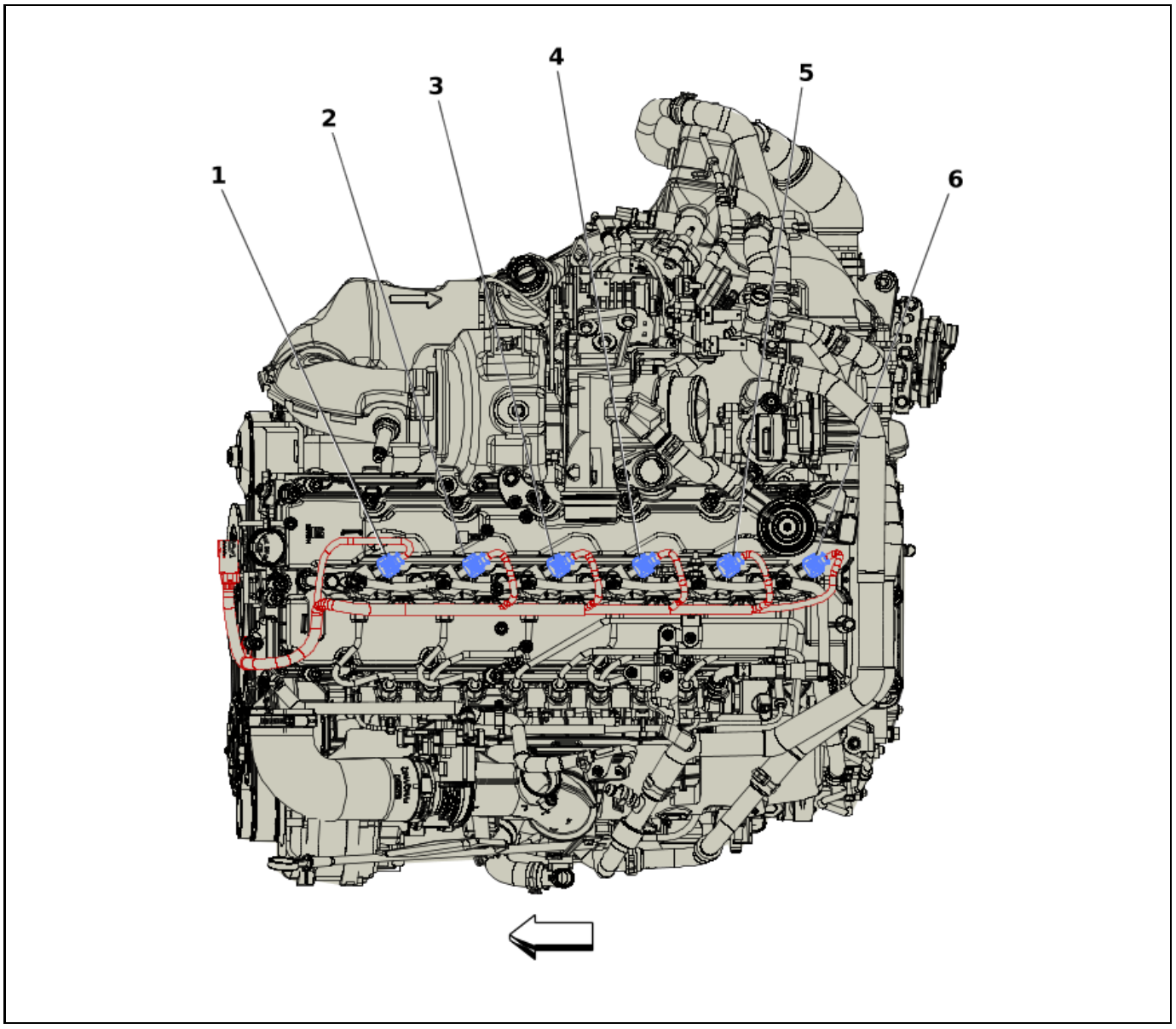

5034212

Items

(1) Q17A Fuel Injector 1
(2) Q17B Fuel Injector 2
(3) Q17C Fuel Injector 3
(4) Q17D Fuel Injector 4
(5) Q17E Fuel Injector 5
(6) Q17F Fuel Injector 6

Engine Components - Left Front (LM2)

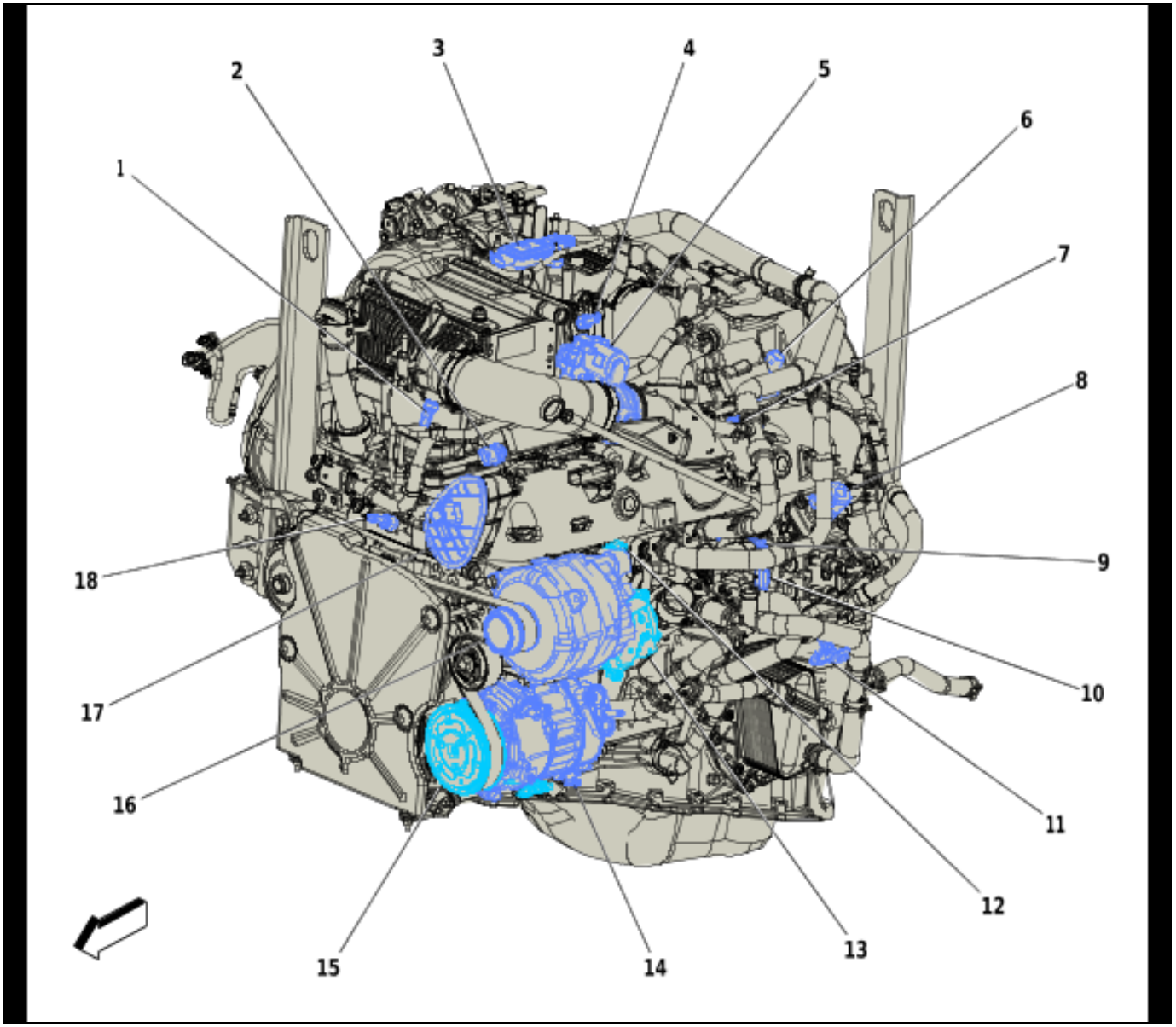

5731552

Items

(1) B193B Charge Air Cooler Air Temperature Sensor - Outlet (LM2)
(2) B47B Fuel Rail Pressure Sensor
(3) B195A Nitrogen Oxides Sensor 1 (LM2)
(4) B193A Charge Air Cooler Air Temperature Sensor - Inlet (LM2)
(5) Q38 Throttle Body
(6) Q18B Fuel Pressure Regulator 2 (LM2)
(7) B65 Manifold Absolute Pressure and Intake Air Temperature Sensor (LM2)
(8) Q18C Fuel Pressure Regulator 3 (LM2)
(9) B34E Engine Coolant Temperature Sensor 5 (LM2)
(10) Q97 Engine Coolant Flow Control Valve
(11) Q18A Fuel Pressure Regulator 1 (LM2)
(12) B34B Engine Coolant Temperature Sensor 2 (LM2)
(13) Q97 Engine Coolant Flow Control Valve
(14) Q46 Air Conditioning Compressor Solenoid Valve
(15) Q2 Air Conditioning Clutch
(16) G13 Generator
(17) Q22 Intake Manifold Tuning Solenoid Valve (LM2)
(18) B271 Engine Metal Temperature Sensor (LM2)

Engine Components - Right Front (LM2)

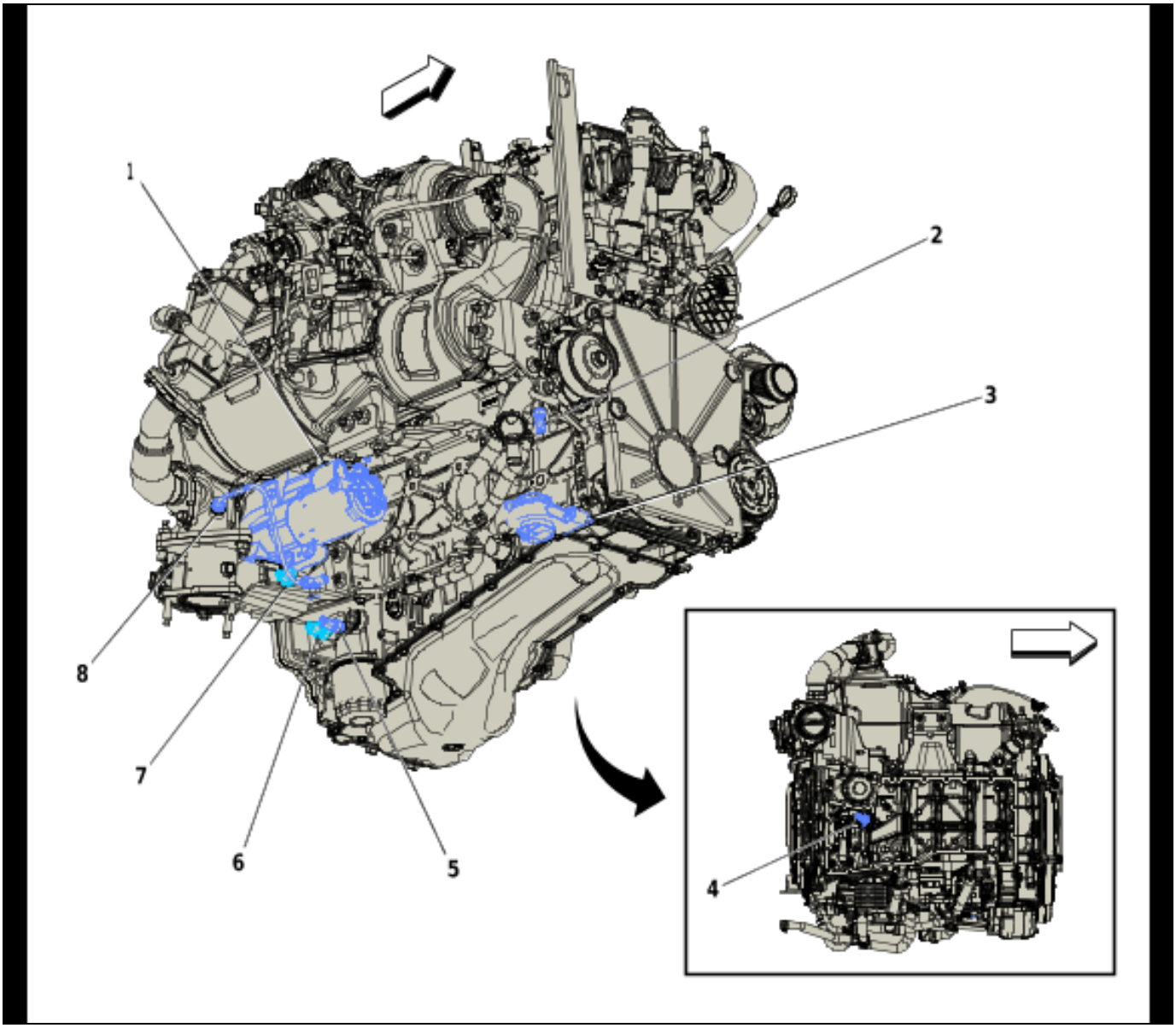

5731553

Items

(1) M64 Starter
(2) B34 Engine Coolant Temperature Sensor
(3) G17 Heater Coolant Pump
(4) Q44 Engine Oil Pressure Control Solenoid Valve
(5) B36 Engine Oil Temperature Sensor (LM2)
(6) B37B Engine Oil Pressure Sensor (L84/L87)
(7) B26 Crankshaft Position Sensor
(8) B131C Exhaust Gas Temperature Sensor 3 (LM2)

Engine Components - Right Rear (LM2)

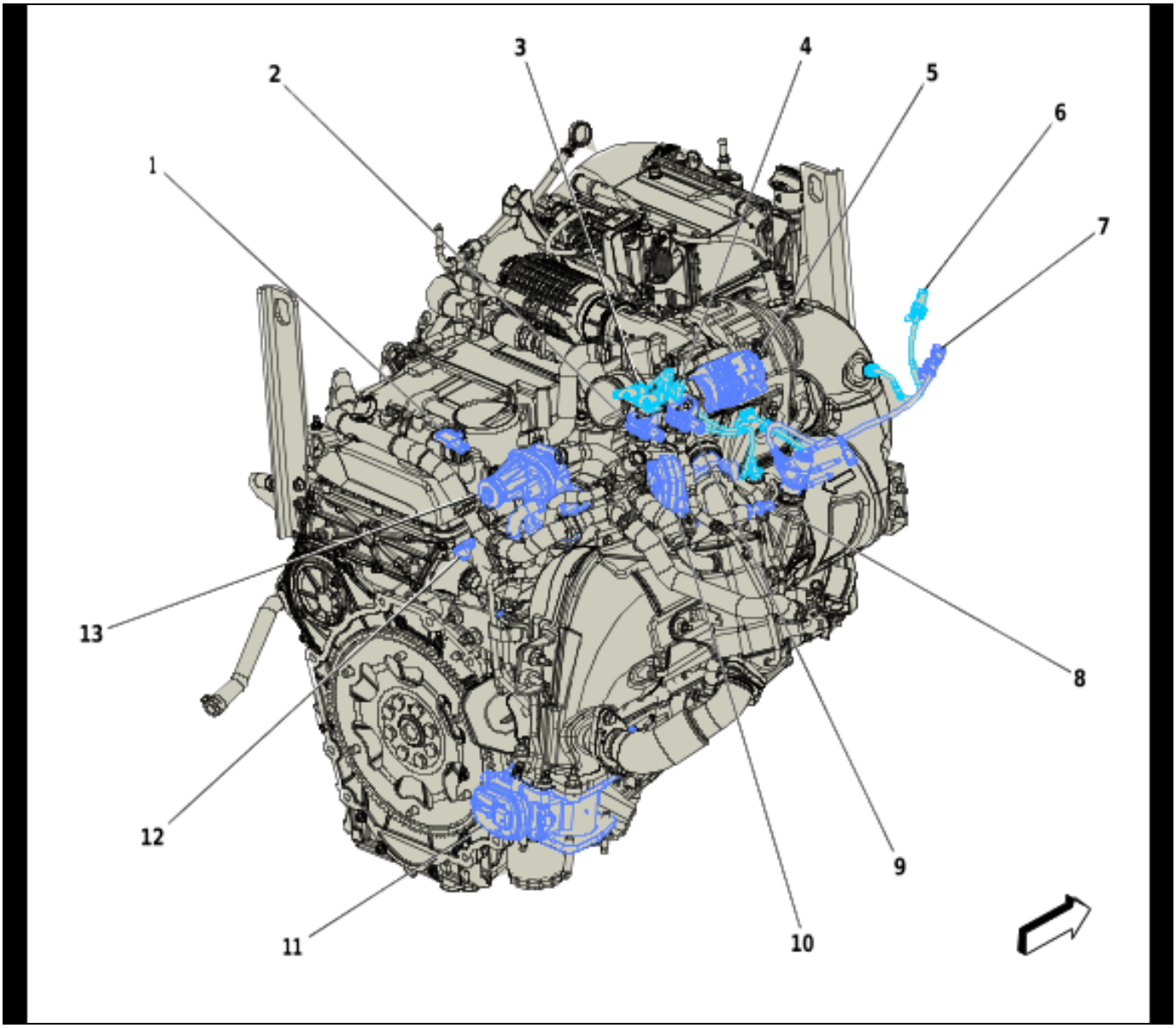

5731555

Items

(1) B321 Crankcase Pressure Sensor (LM2)

(2) B345P Exhaust Pressure Differential Sensor - Particulate Filter (LM2)

(3) B130A Exhaust Gas Recirculation Temperature Sensor 1 (LM2)

(4) B131B Exhaust Gas Temperature Sensor 2 (LM2)

(5) M103 Turbocharger Vane Position Actuator (LM2)

(6) B131A Exhaust Gas Temperature Sensor 1 (LM2)

(7) Q61 Reductant Fluid Injector (LM2)

(8) B130C Exhaust Gas Recirculation Temperature Sensor 3 (LM2)

(9) B345R Exhaust Pressure Differential Sensor - Exhaust Gas Recirculation (LM2)

(10) Q14B Exhaust Gas Recirculation Valve 2 (LM2)

(11) M122 Exhaust Pressure Regulator Valve (LM2)

(12) B23E Camshaft Position Sensor - Exhaust (LM2)

(13) Q14A Exhaust Gas Recirculation Valve 1 (LM2)

Transfer Case Components (NP0/NQH)

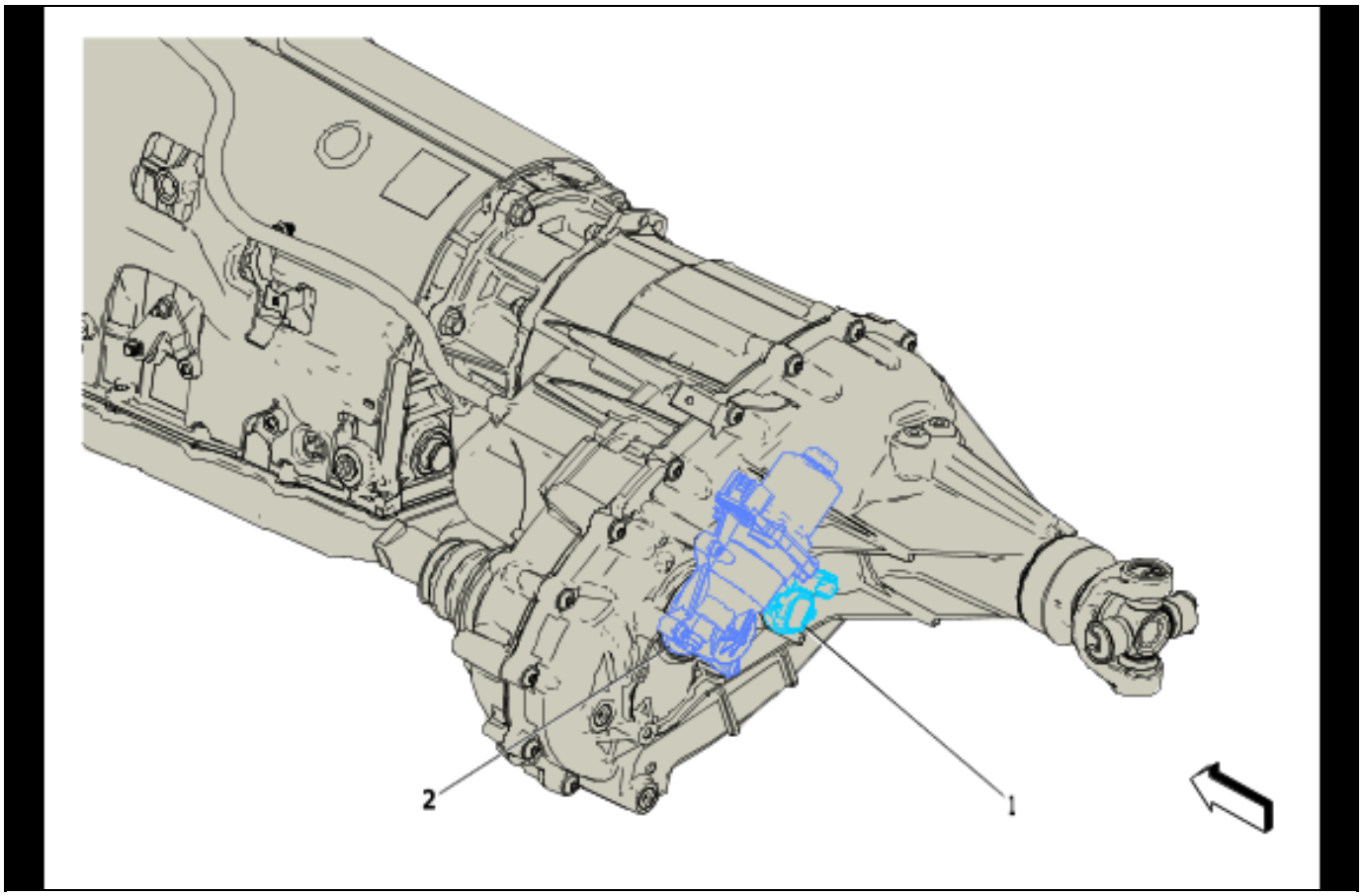

5479524

Items

(1) B139 Transfer Case Two/Four Wheel Drive Actuator Position Sensor (NP0/NQH)

(2) A16 Transfer Case Four Wheel Drive Actuator (NP0/NQH)

Instrument Panel/Center Console Component Views

Instrument Panel Components - Left

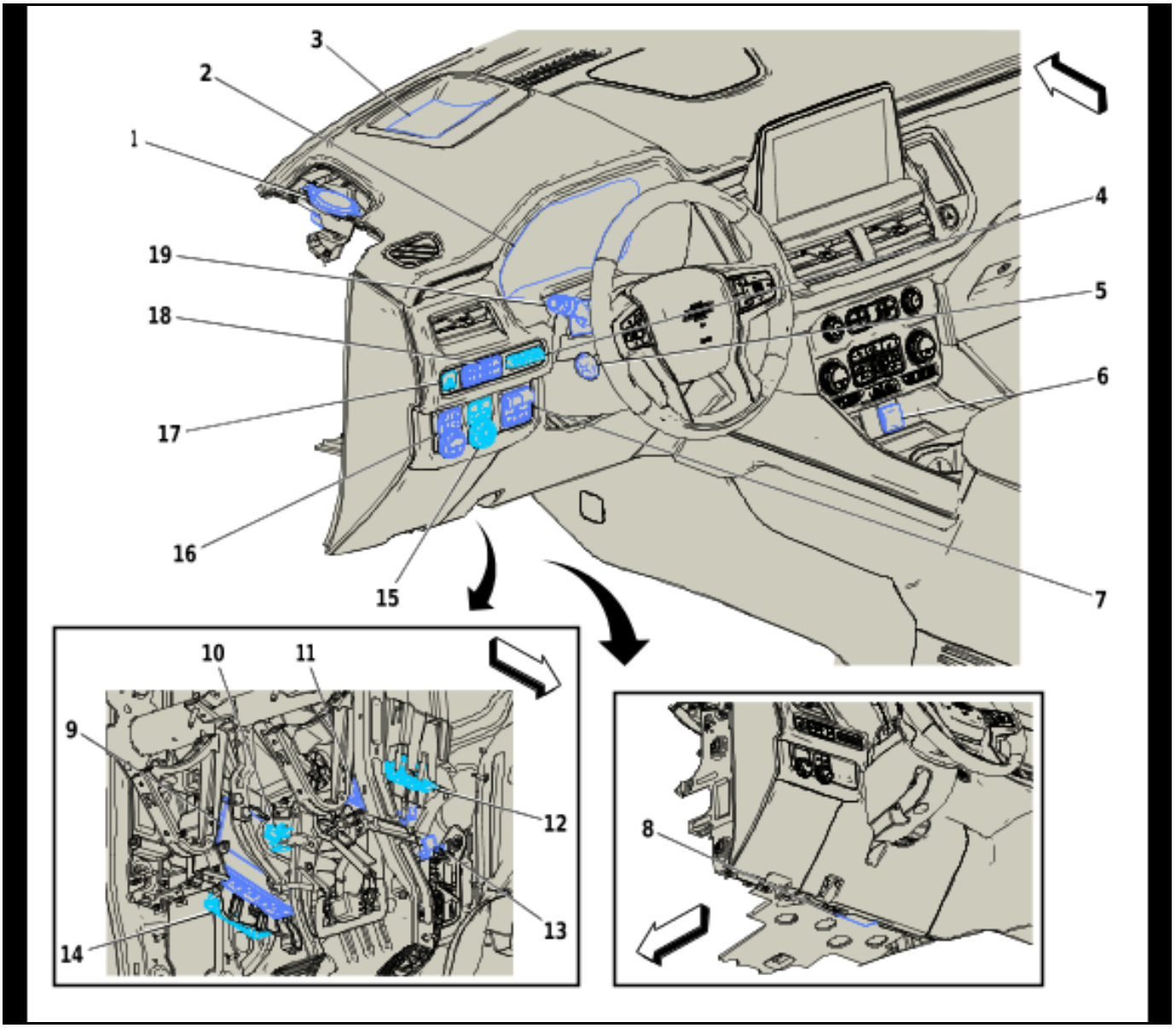

5508904

Items

(1) P19J Radio Front Speaker - Instrument Panel Left
(2) P16 Instrument Panel Cluster Control Module
(3) P43 Forward Collision Alert Display ((UHX/UEU)-UV6)
(4) X80G Accessory Power Receptacle - Instrument Panel (AZ3)
(5) S71 Steering Column Tilt Wheel and Telescope Switch (N38)
(6) S27 Head-Up Display Switch (UV6)
(7) S76 Trailer Brake Control Switch
(8) K9 Body Control Module
(9) B22 Brake Pedal Position Sensor
(10) K73 Telematic Control Module (UE1)
(11) K56 Serial Data Gateway Module
(12) B107 Accelerator Pedal Position Sensor
(13) K219 Lighting Control Module
(14) S30 Headlamp Switch
(15) S126 Ride Control Switch (URC)
(16) S91 Parking Brake Control Switch
(17) S86 Vehicle Stability Control System Switch
(18) S78 Turn Signal Switch

Instrument Panel Components - Center

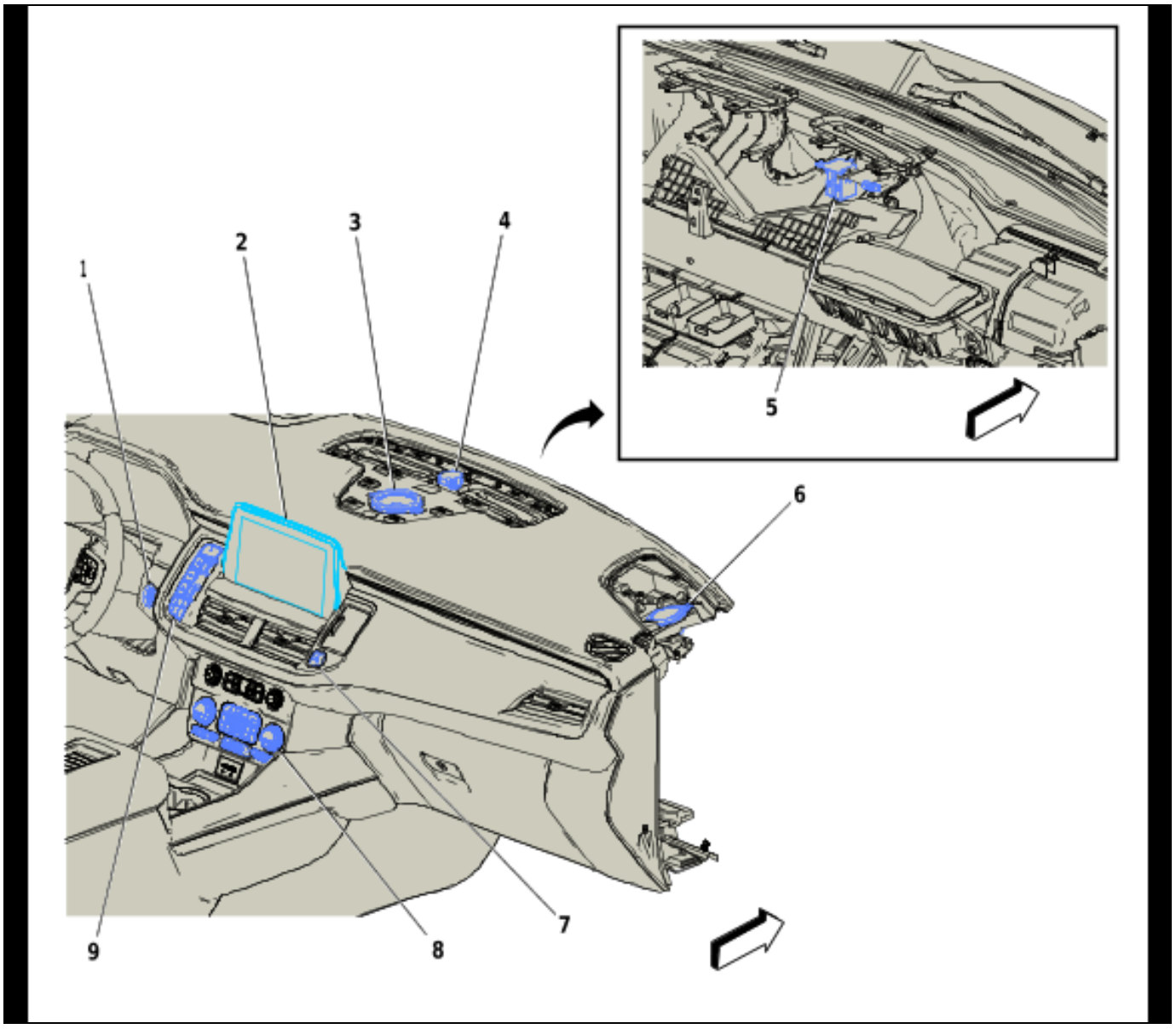

5661445

Items

(1) S38 On/Off Vehicle Switch (BTM)

(2) A22 Radio Control (UIR)

(3) P19B Radio Front Center Speaker (UQP/UQS)

(4) B10D Sun Load and Ambient Light and Security Indicator Sensor

(5) T4TA Auxiliary Wireless Communication Interface Antenna (VV4)

(6) P19W Radio Front Speaker - Instrument Panel Right

(7) S26 Hazard Warning Switch

(8) A26 Heater and Air Conditioning User Interface Control - Front (IOR)

(9) K212 Gear Shift Control Module

Instrument Panel Components - Right

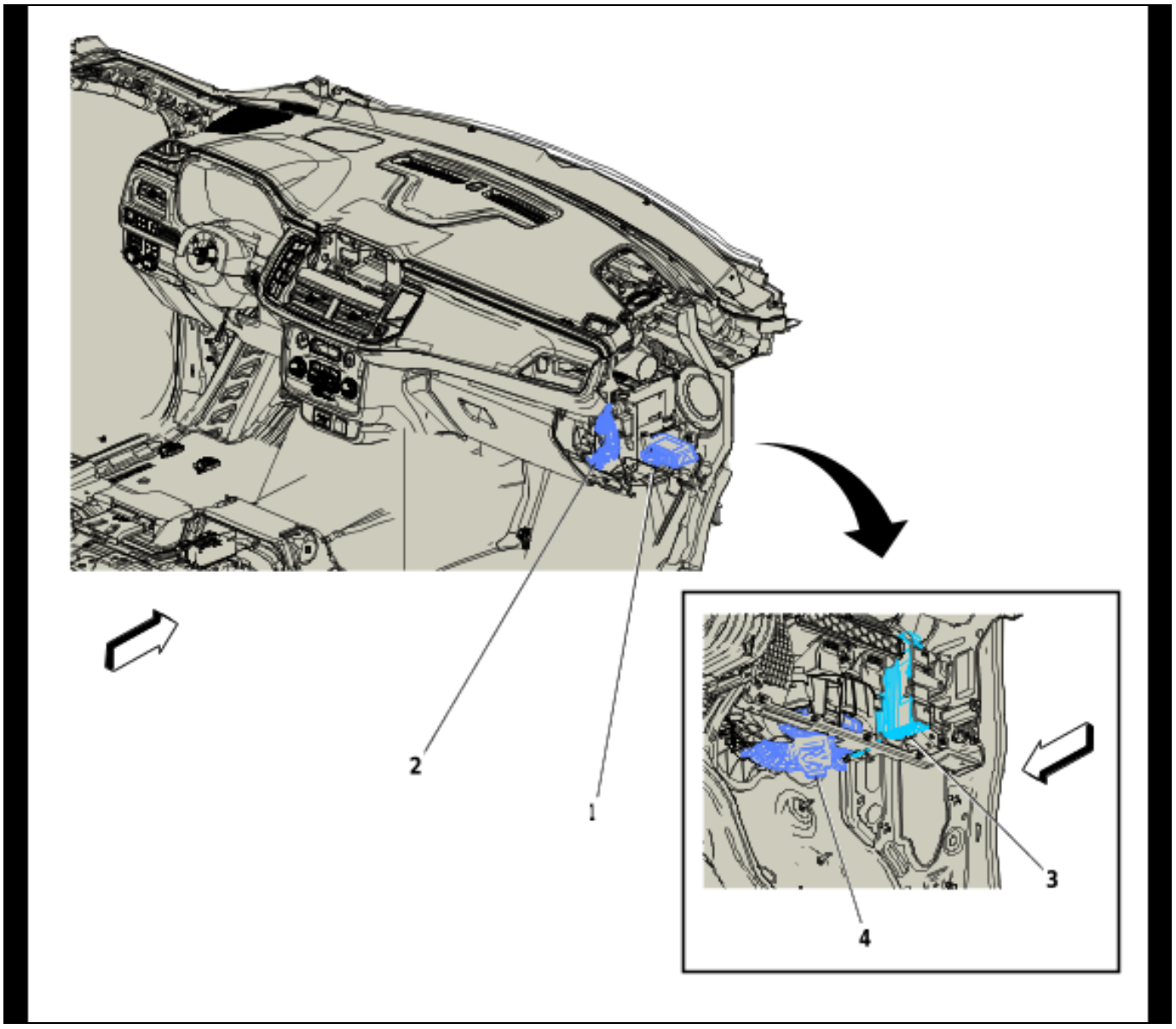

5508906

Items

(1) T19 Multifunction Power Supply Converter (KL9)

(2) X51R Instrument Panel Wiring Harness Junction Block - Right

(3) A11 Radio

(4) M8 Blower Motor

Instrument Panel Accent Lamps

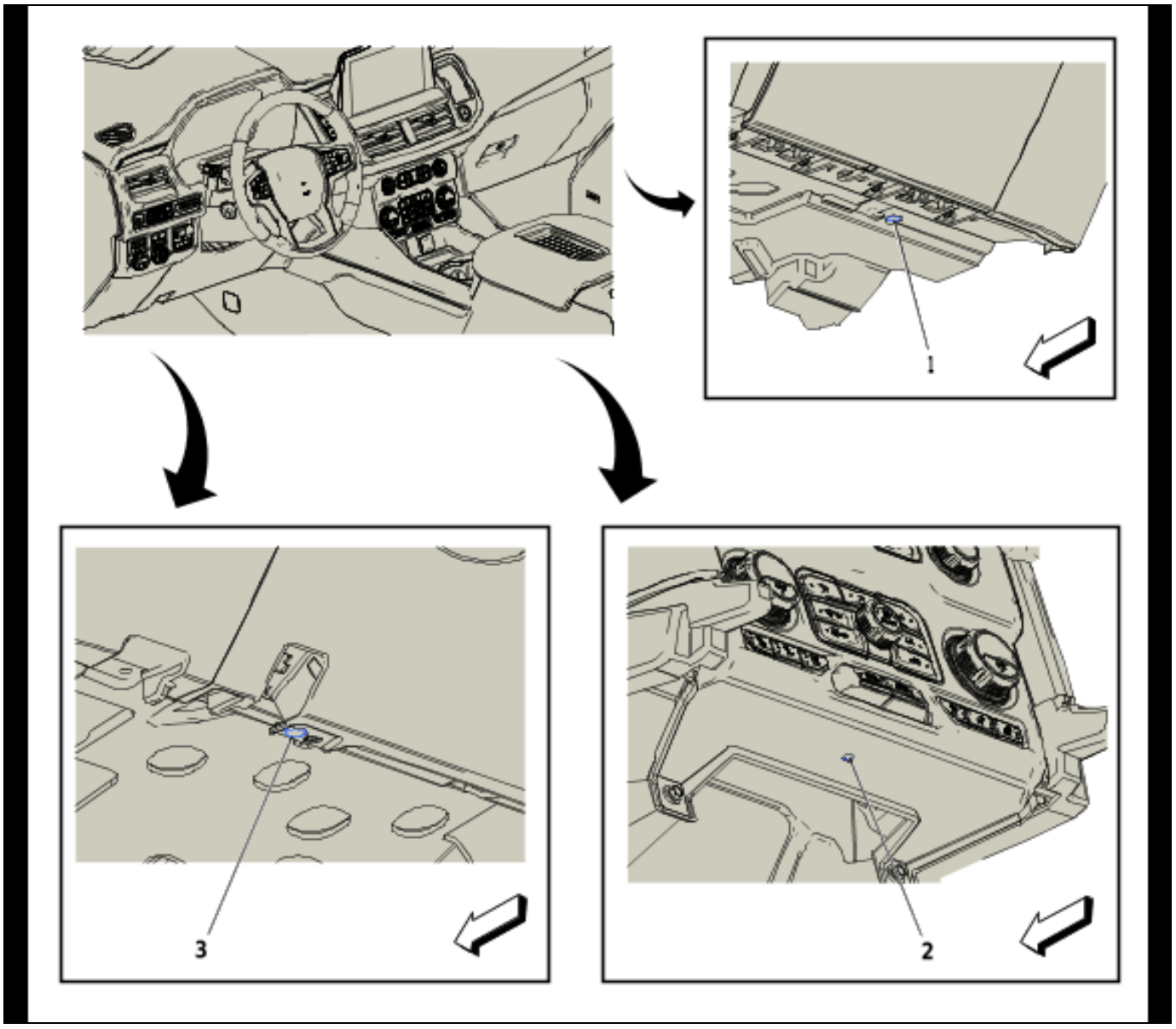

5508907

Items

(1) E8VA Front Floor Courtesy Lamp - Left

(2) E88 Front Floor Console Bin Lamp (D07/ DCK)

(3) E8VC Front Floor Courtesy Lamp - Right

Steering Wheel Components

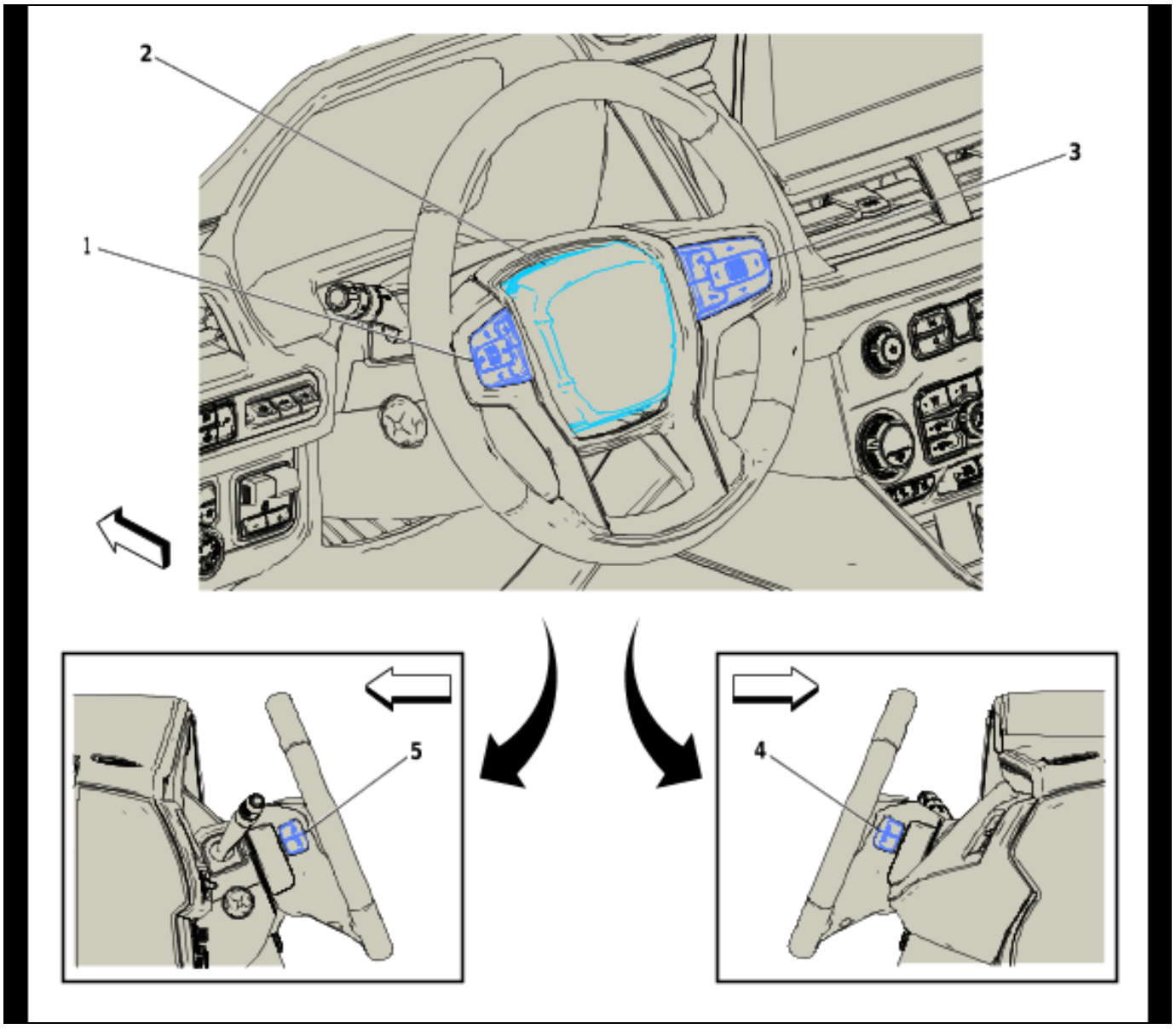

5508908

Items

(1) S70L Cruise Control Switch
(2) X85 Steering Wheel Airbag Coil
(3) S70R Radio Control Switch - Steering Wheel
(4) S70F Radio Volume Switch - Steering Wheel
(5) S70E Radio Favorites Switch - Steering Wheel

Steering Column Components

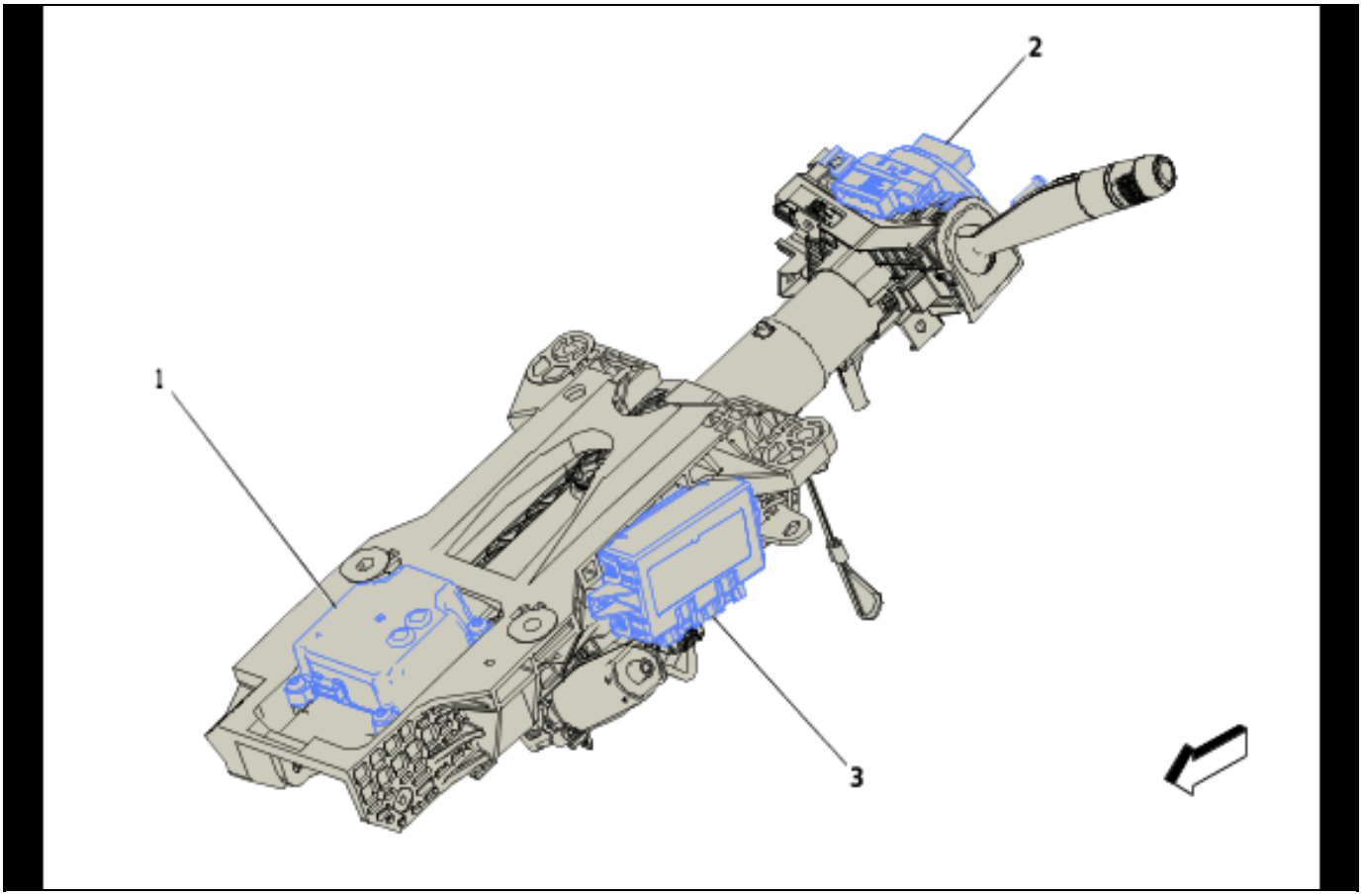

5508910

Items

(1) K60 Column Lock Module (BTM)
(2) X85 Steering Wheel Airbag Coil
(3) K99 Steering Column Control Module (N38)

Floor Console Components (D07)

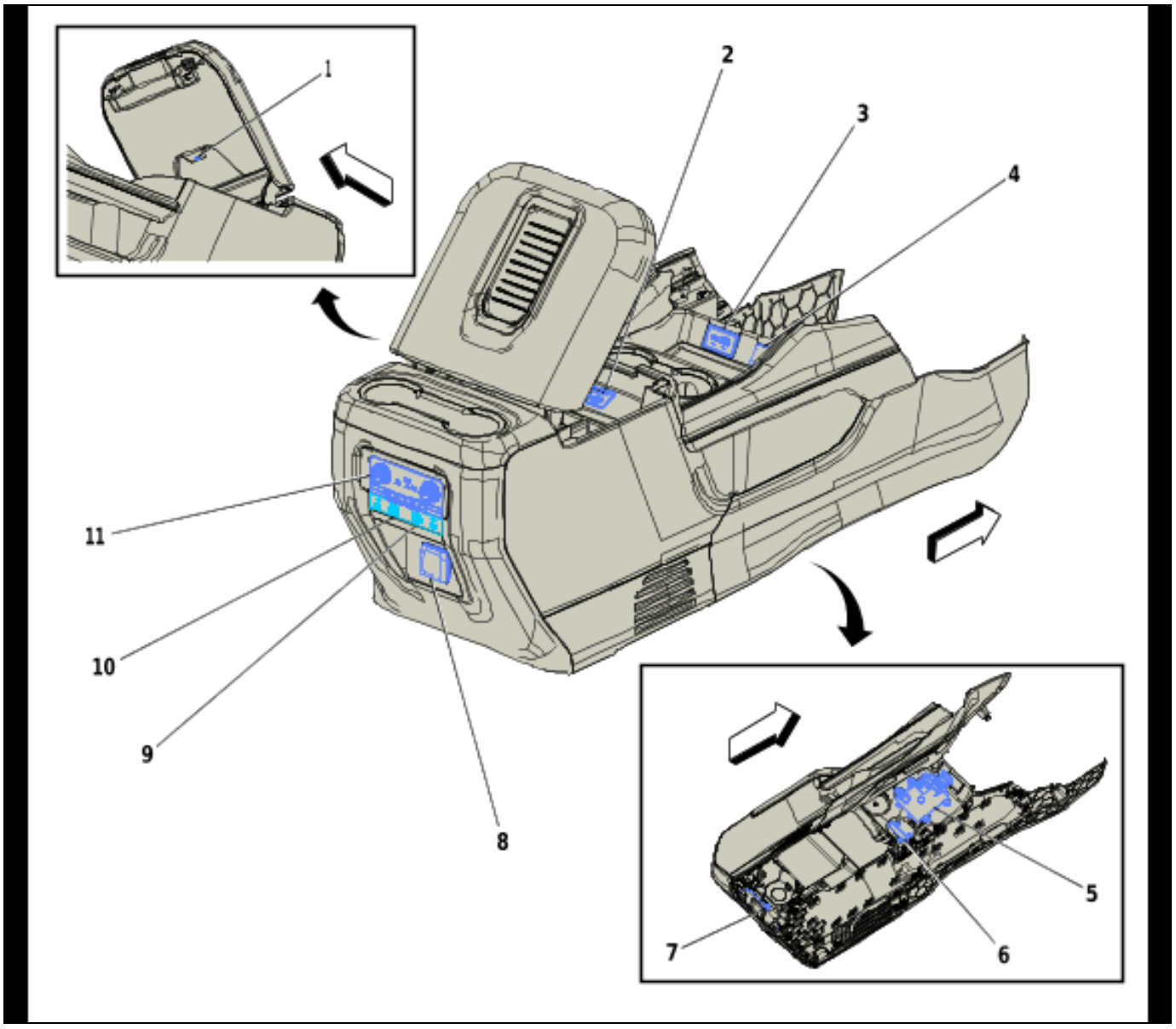

5731557

Items

(1) E28 Front Floor Console Compartment Lamp (D07)

(2) X92G USB 2 Port Receptacle

(3) X23 Multimedia Receptacle

(4) X80H Accessory Power Receptacle - Floor Console Front (D07/DCH/DCK)

(5) T22 Wireless Accessory Charging Module (K4C)

(6) T10U Low Frequency Console Antenna - Front

(7) T10KA Low Frequency Console Number 2 Antenna (D07/DCH/DCK)

(8) X81AC Accessory Power Receptacle - Floor Console 110V AC (KI4)

(9) X92CD Dual Charge Only Receptacle - Floor Console Rear (USS-UW9)

(10) X83B Audio/Video Receptacle

(11) A34 Heater and Air Conditioning Auxiliary Control (C69)

Floor Console Components (DCH)

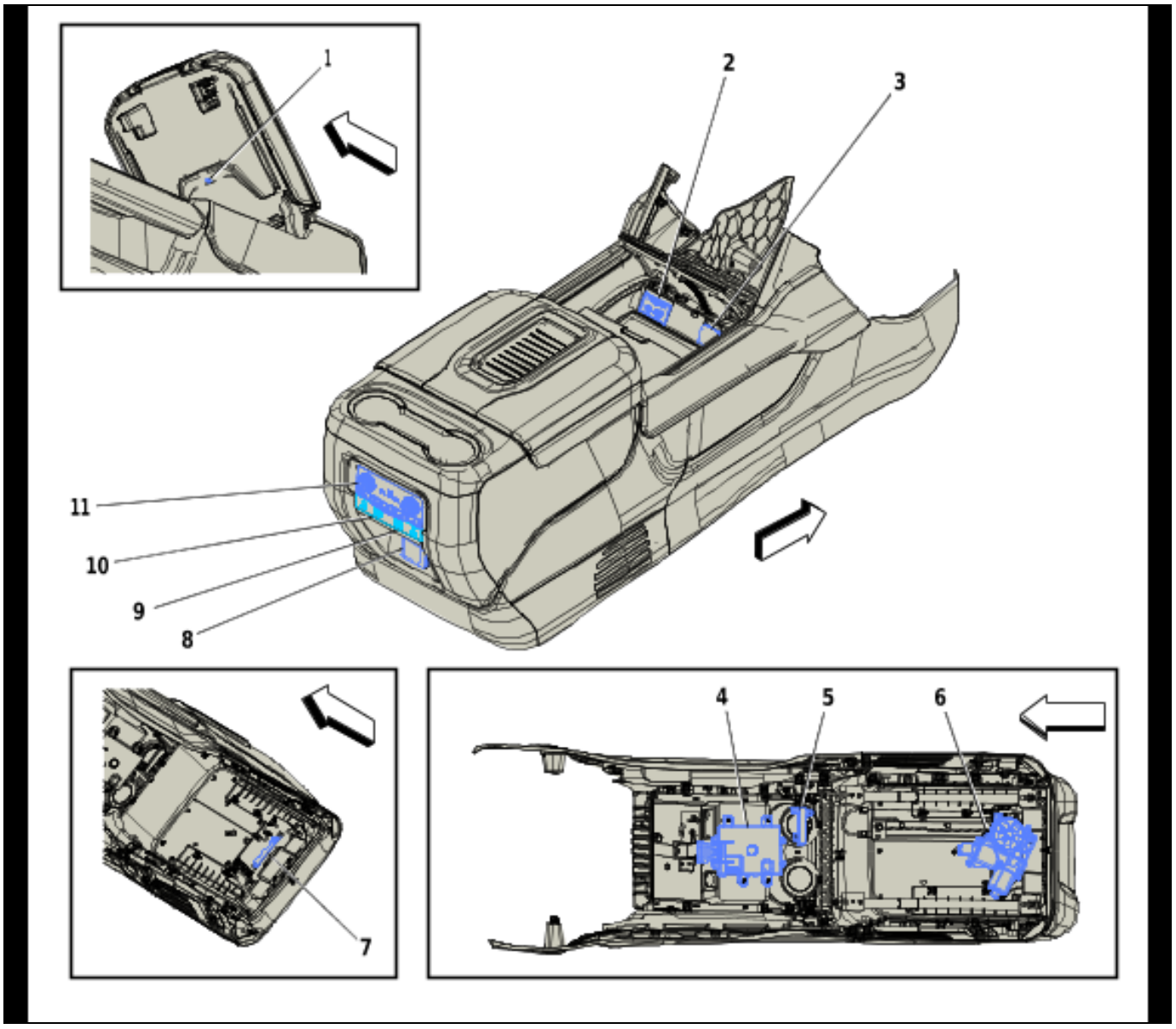

5731558

Items

(1) E28 Front Floor Console Compartment Lamp (D07)

(2) X92G USB 2 Port Receptacle

(3) X80H Accessory Power Receptacle - Floor Console Front (D07/DCH/DCK)

(4) T22 Wireless Accessory Charging Module (K4C)

(5) T10U Low Frequency Console Antenna - Front

(6) K230 Front Floor Console Control Module (DCH)

(7) T10KA Low Frequency Console Number 2 Antenna (D07/DCH/DCK)

(8) X81AC Accessory Power Receptacle - Floor Console 110V AC (KI4)

(9) X92CD Dual Charge Only Receptacle - Floor Console Rear (USS-UW9)

(10) X83B Audio/Video Receptacle

(11) A34 Heater and Air Conditioning Auxiliary Control (C69)

Floor Console Components (DCK)

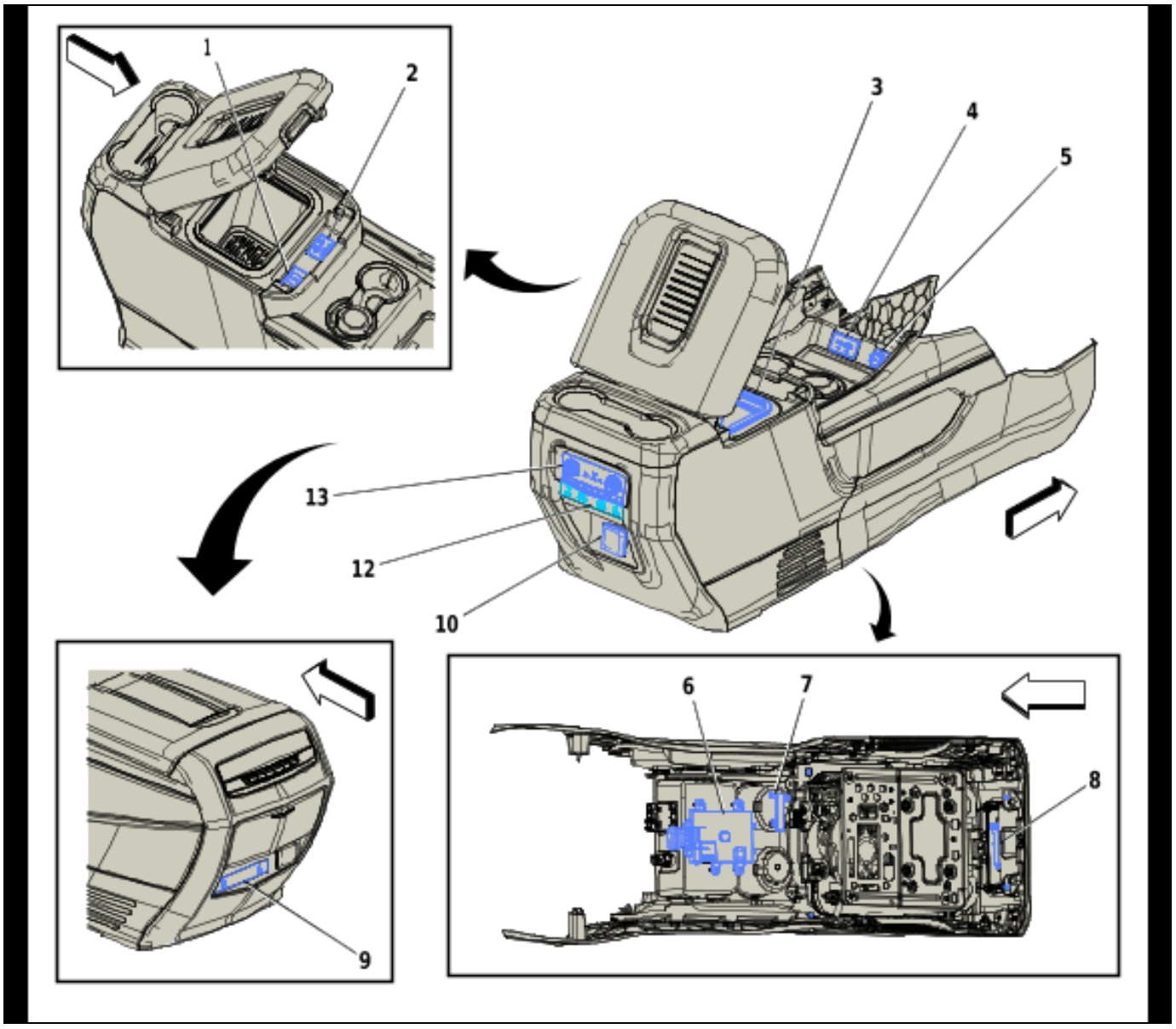

5731559

Items

(1) S145 Beverage Cooler Switch (DCK)

(2) X23 Multimedia Receptacle

(3) K175 Front Floor Console Compartment Cooler (DCK)

(4) X92G USB 2 Port Receptacle

(5) X80H Accessory Power Receptacle - Floor Console Front (D07/DCH/DCK)

(6) T22 Wireless Accessory Charging Module (K4C)

(7) T10U Low Frequency Console Antenna - Front

(8) T10J Low Frequency Instrument Panel Antenna

(9) X92CD Dual Charge Only Receptacle - Floor Console Rear (USS-UW9)

(10) X81AC Accessory Power Receptacle - Floor Console 110V AC (KI4)

(12) X83B Audio/Video Receptacle

(13) A34 Heater and Air Conditioning Auxiliary Control (C69)

Passenger Compartment/Roof Component Views

Passenger Compartment Components - Front Center

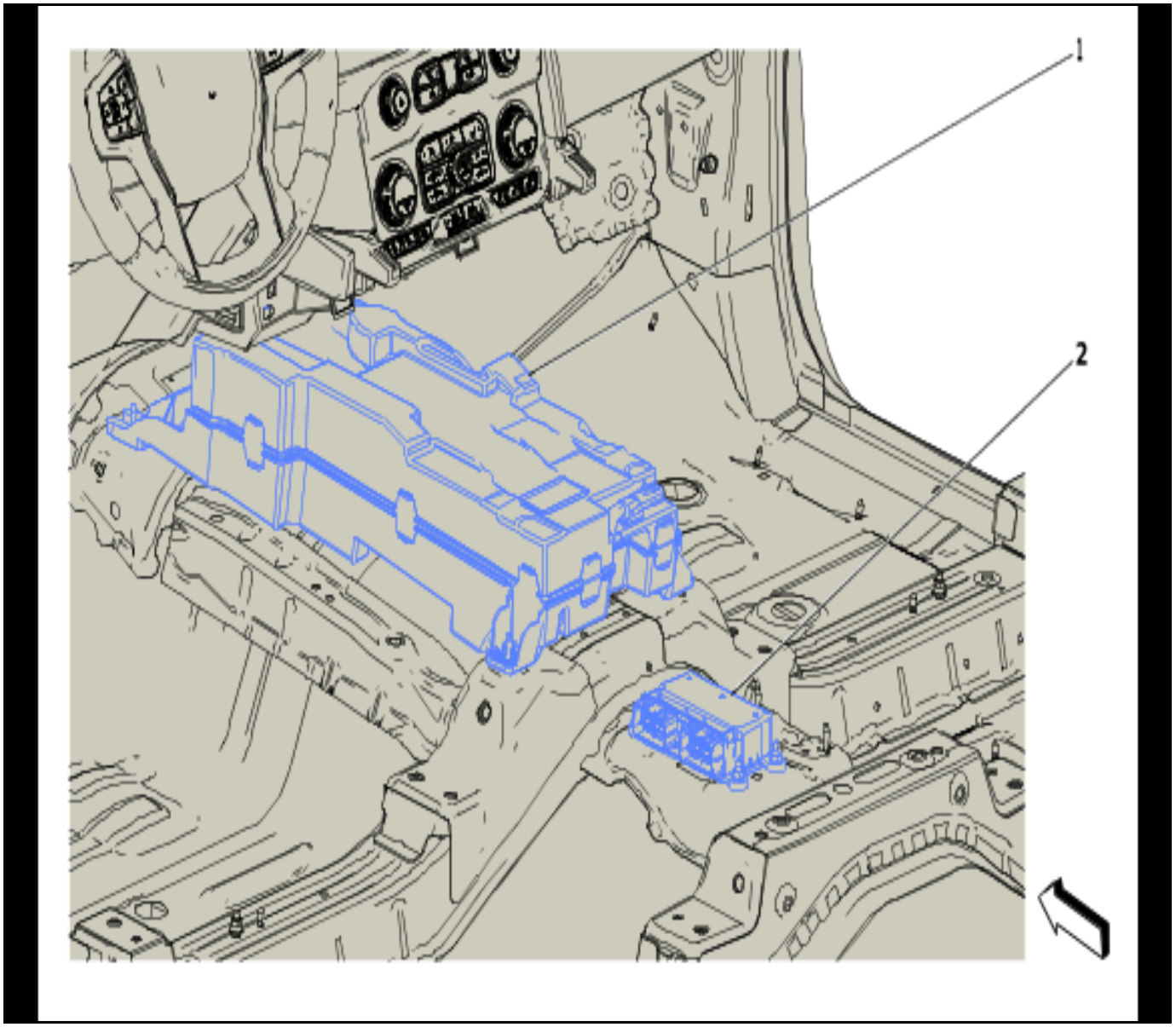

5548909

Items

(1) P19LA Radio Rear Compartment Speaker (UQP)

(2) K36 Restraints Control Module

Passenger Compartment Components - Left

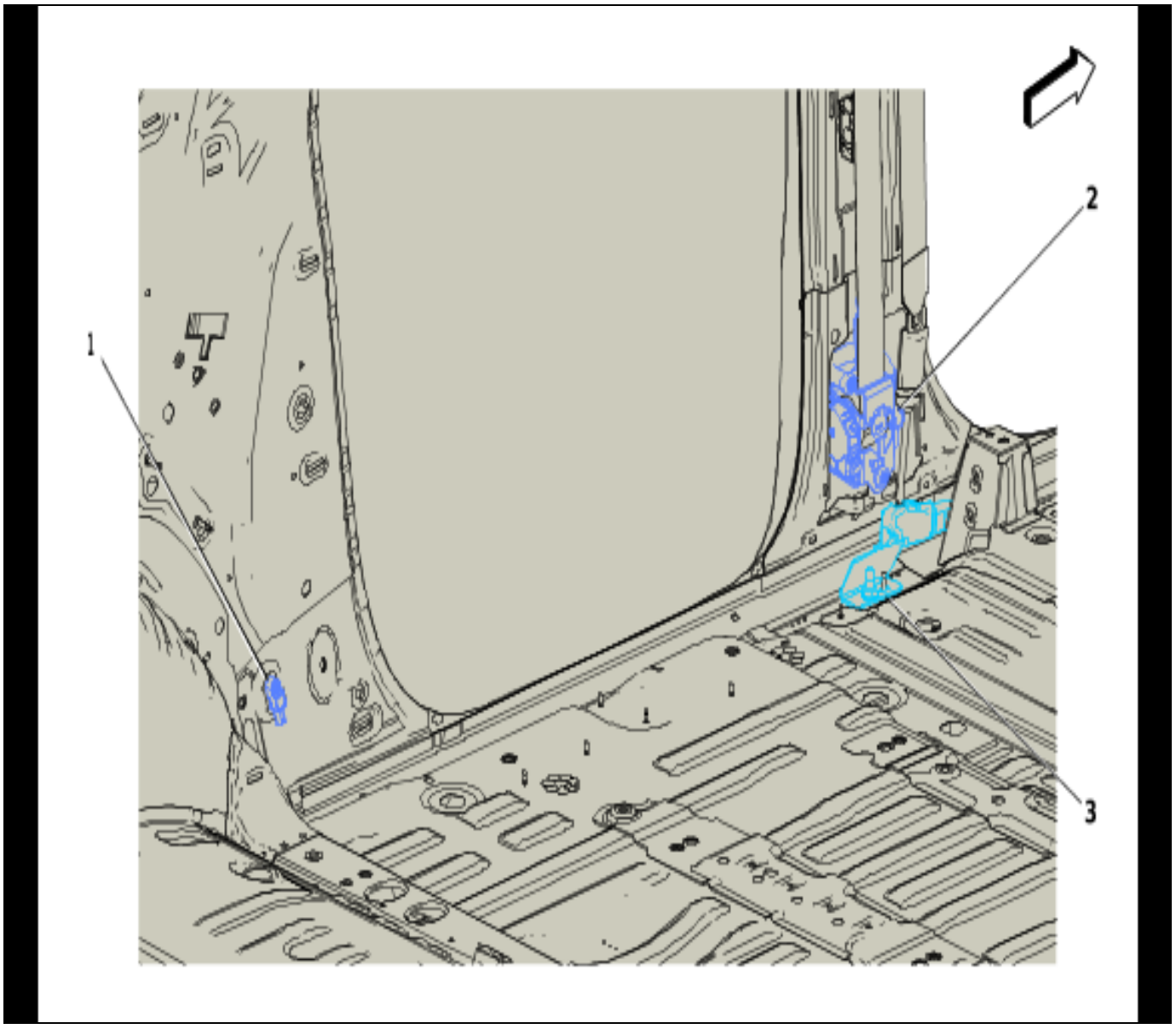

5548910

Items

(1) B63LR Airbag Side Impact Rear Sensor - Left Door

(2) F112D Front Seat Belt Retractor - Driver

(3) F113D Front Seat Belt Anchor Plate Tensioner - Driver

Passenger Compartment Components - Right

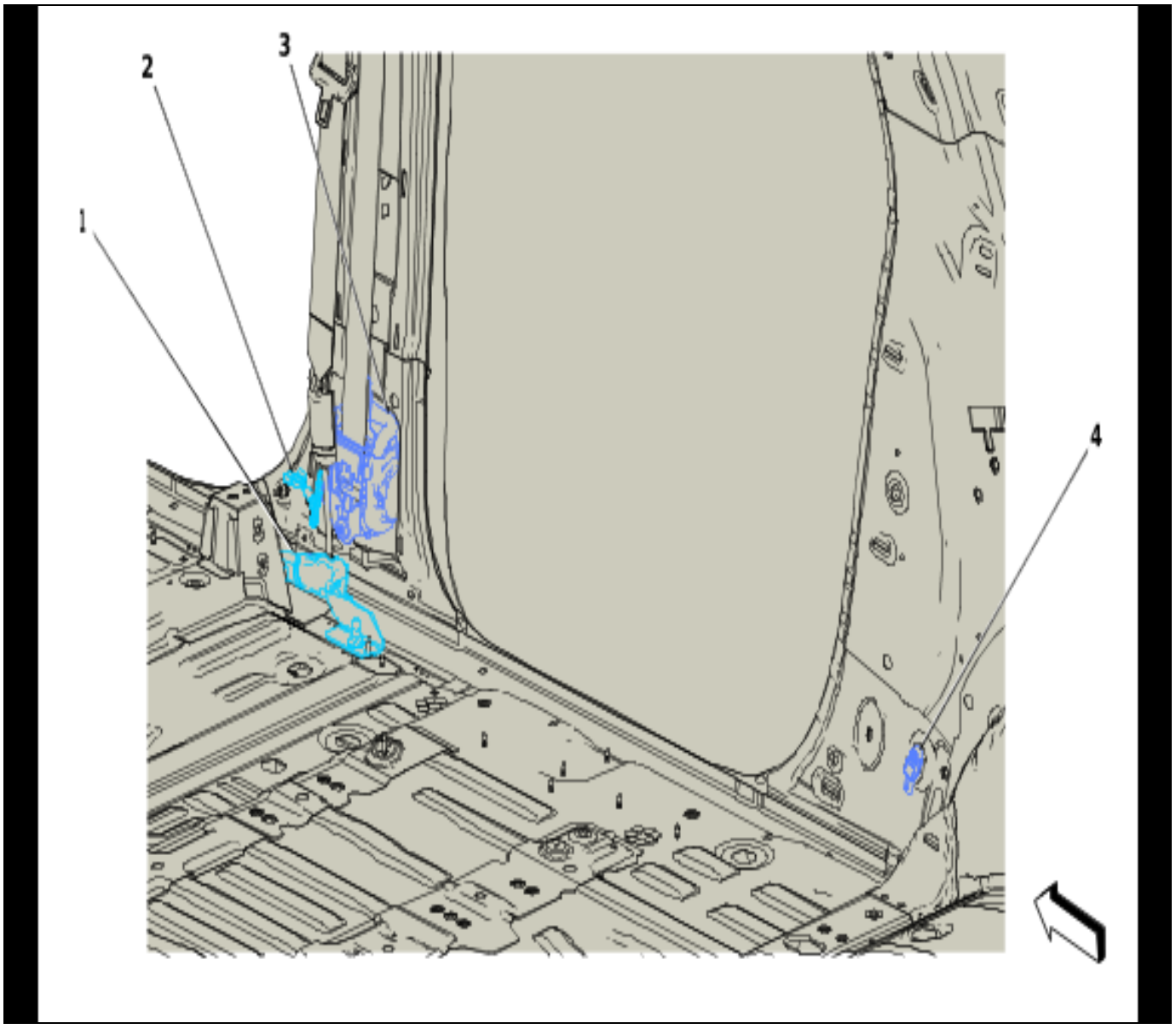

5548911

Items

(1) F113P Front Seat Belt Anchor Plate Tensioner - Passenger

(2) B61P Seat Belt Tension Sensor - Passenger

(3) F112P Front Seat Belt Retractor - Passenger

(4) B63RR Airbag Side Impact Rear Sensor - Right Door

Passenger Compartment Components - Left Rear

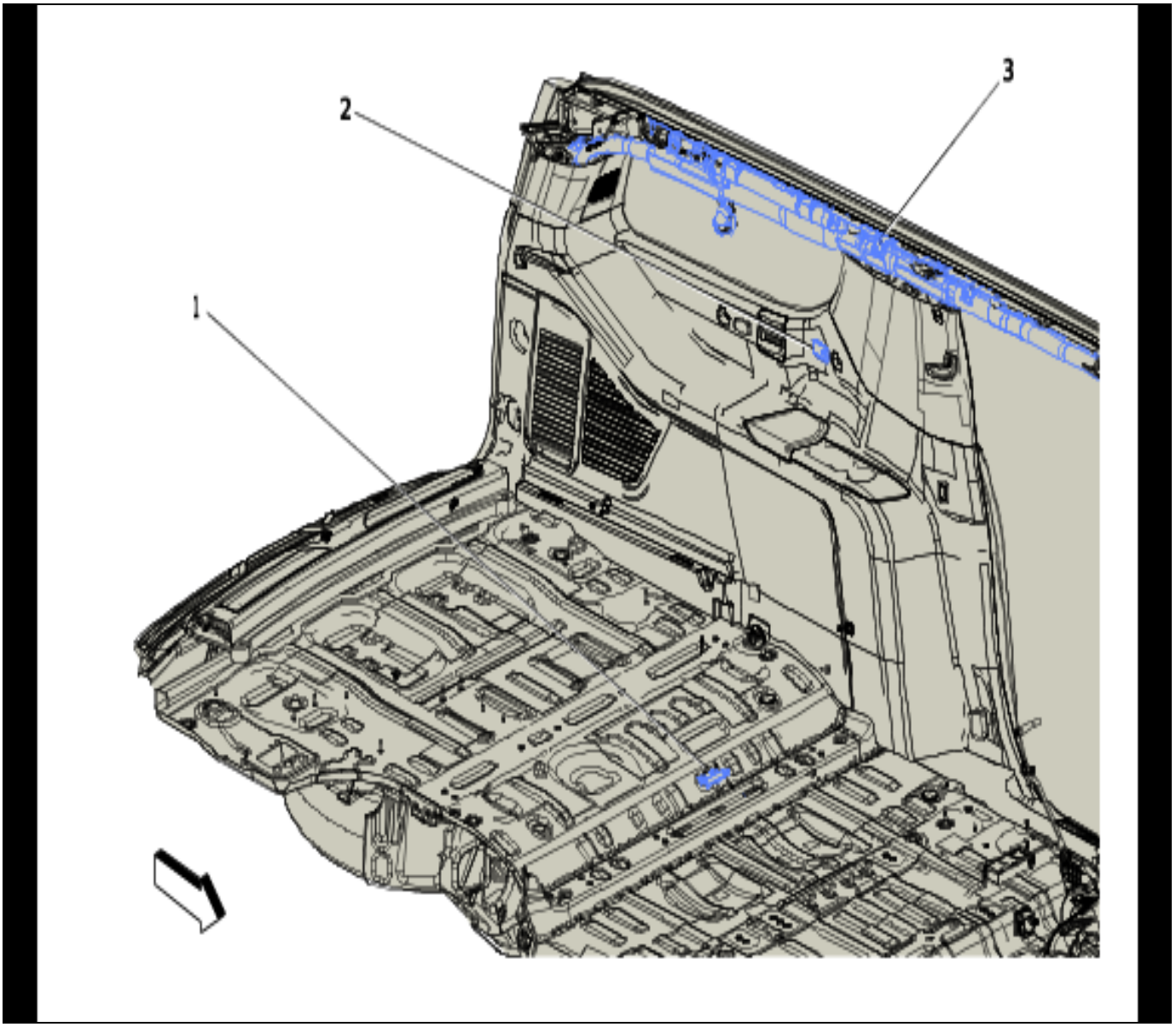

5548913

Items

(1) T10E Low Frequency Rear Compartment Antenna

(2) X92BCL USB Receptacle - 3rd Row Seat Left (USS)

(3) F105LA Front and Rear and 3rd Row Roof Rail Airbag - Left

Passenger Compartment Components - Right Rear

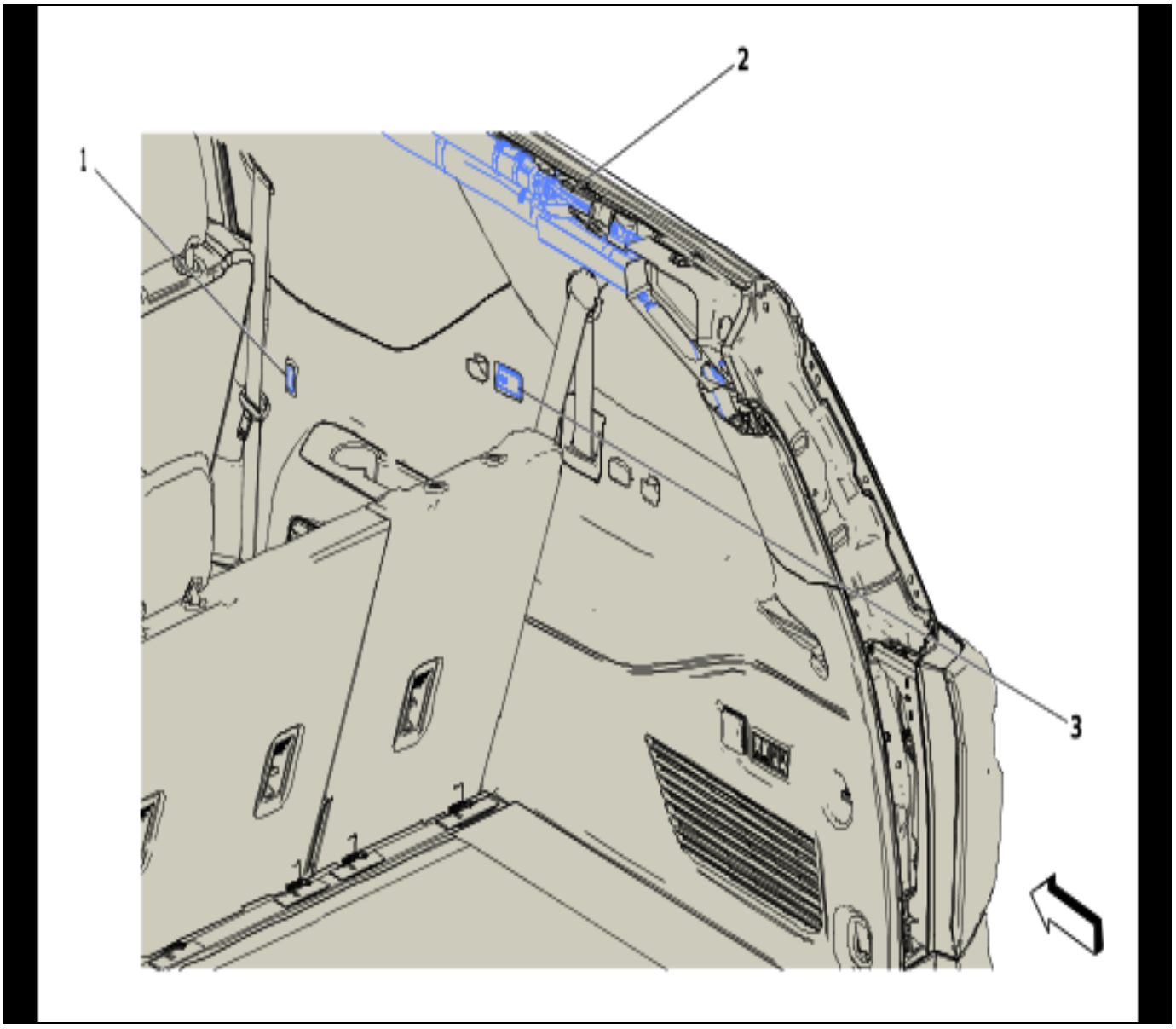

5548914

Items

(1) S143R Rear Seat Back Folding Switch - 2nd Row Right (ATN/ATT)

(2) F105RA Front and Rear and 3rd Row Roof Rail Airbag - Right

(3) X92BCR USB Receptacle - 3rd Row Seat Right (USS)

Roof Components - Headliner

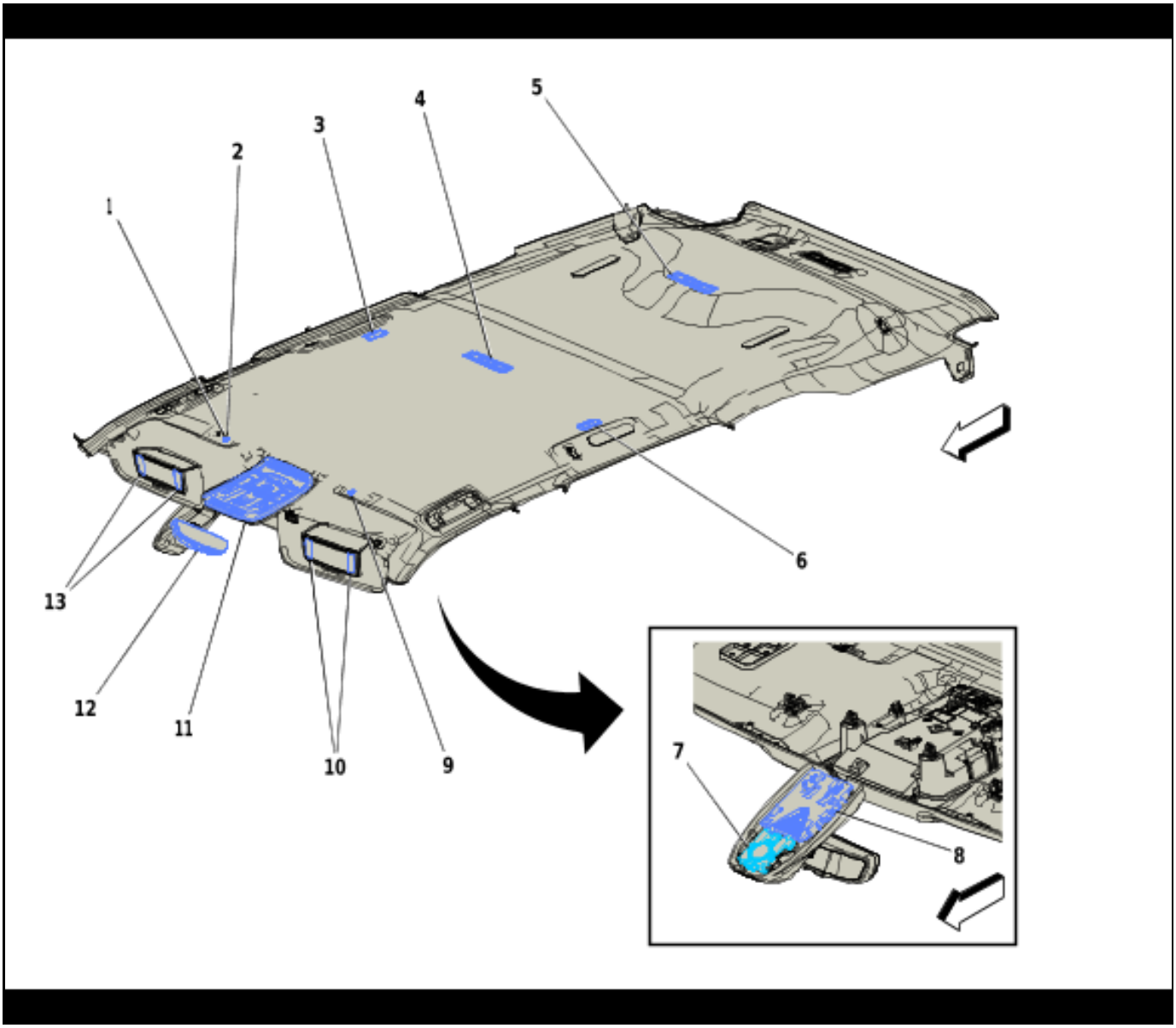

5731561

Items

(1) B24 Mobile Telephone Microphone (IOR)

(2) B24LF Mobile Telephone Microphone - Left Front (IOS/IOT)

(3) E37H Roof Rail Rear Seat Position Reading and Courtesy Lamp - Left (C3U)

(4) E37SMA Rear Seat Position Center Reading and Courtesy Lamp - 2nd Row (without C3U)

(5) E37SMB Rear Seat Position Center Reading and Courtesy Lamp - 3rd Row

(6) E37J Roof Rail Rear Seat Position Reading and Courtesy Lamp - Right (C3U)

(7) B117A Windshield Outside Moisture/Ambient Light and Humidity Sensor

(8) B174W Front View Camera - Windshield (ASV)

(9) B24RF Mobile Telephone Microphone - Right Front (IOS/IOT)

(10) E31R Sunshade Mirror Lamp - Right (DH6)

(11) A103 Roof Console

(12) A10 Inside Rearview Mirror

(13) E31L Sunshade Mirror Lamp - Left (DH6)

Door Component Views

Driver Door Components

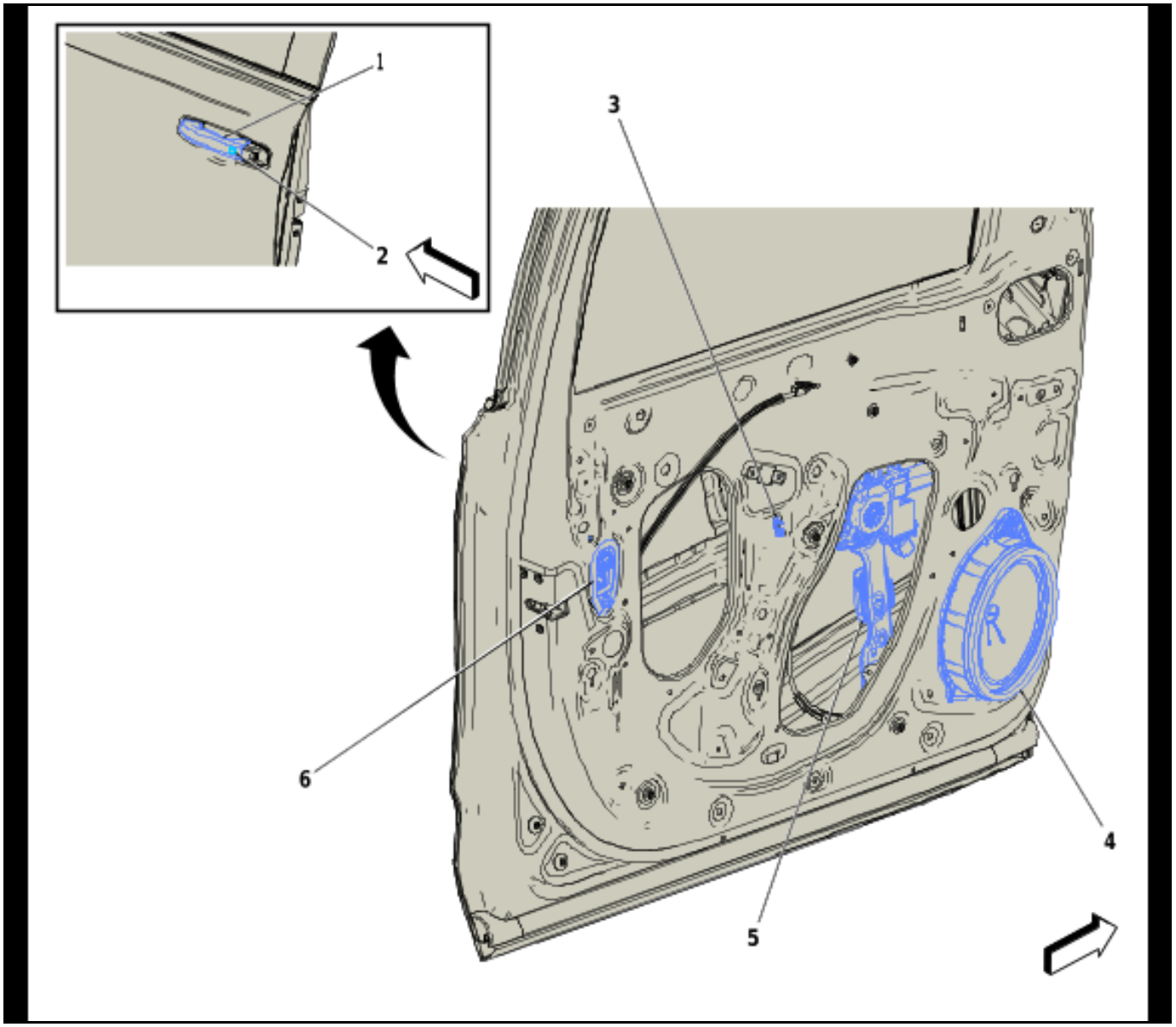

5515655

Items

(1) A24D Front Side Door Outside Handle - Left

(2) B27LF Front Side Door Outside Handle Switch - Left

(3) B63LF Airbag Side Impact Sensor - Left Front Door

(4) P19AG Radio Front Side Door Speaker - Left

(5) M74D Front Side Door Window Regulator Motor - Driver

(6) A23D Front Side Door Latch - Driver

Driver Door Trim Components

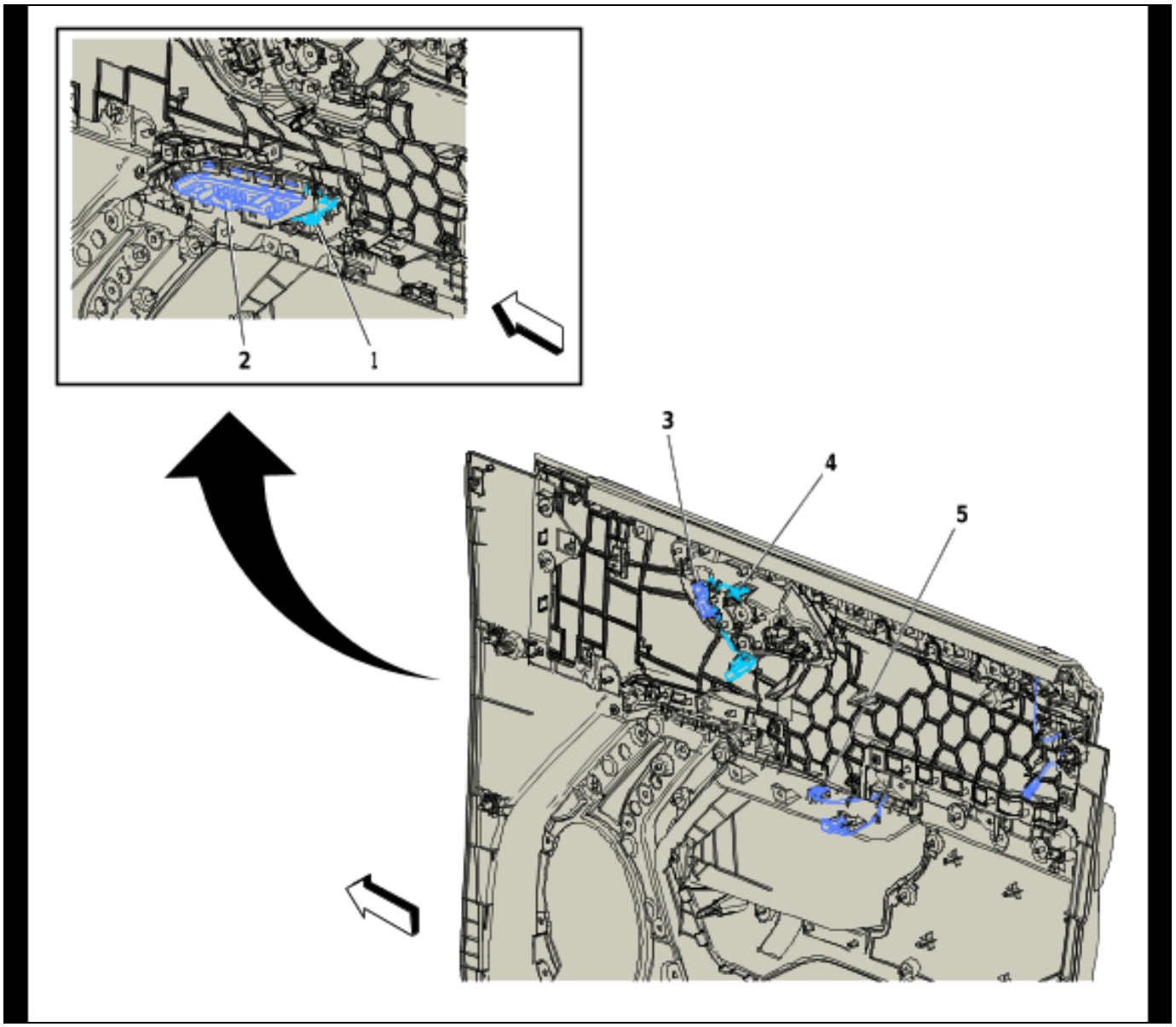

5515656

Items

(1) S47D Front Seat Adjuster Memory Switch - Driver

(2) S79D Front Side Door Window Control Switch - Driver

(3) S13D Door Lock Switch - Driver

(4) E63D Front Side Door Inside Handle Illumination Lamp - Left

(5) E55RF Front Side Door Map Pocket Illumination Lamp - Right

Passenger Door Components

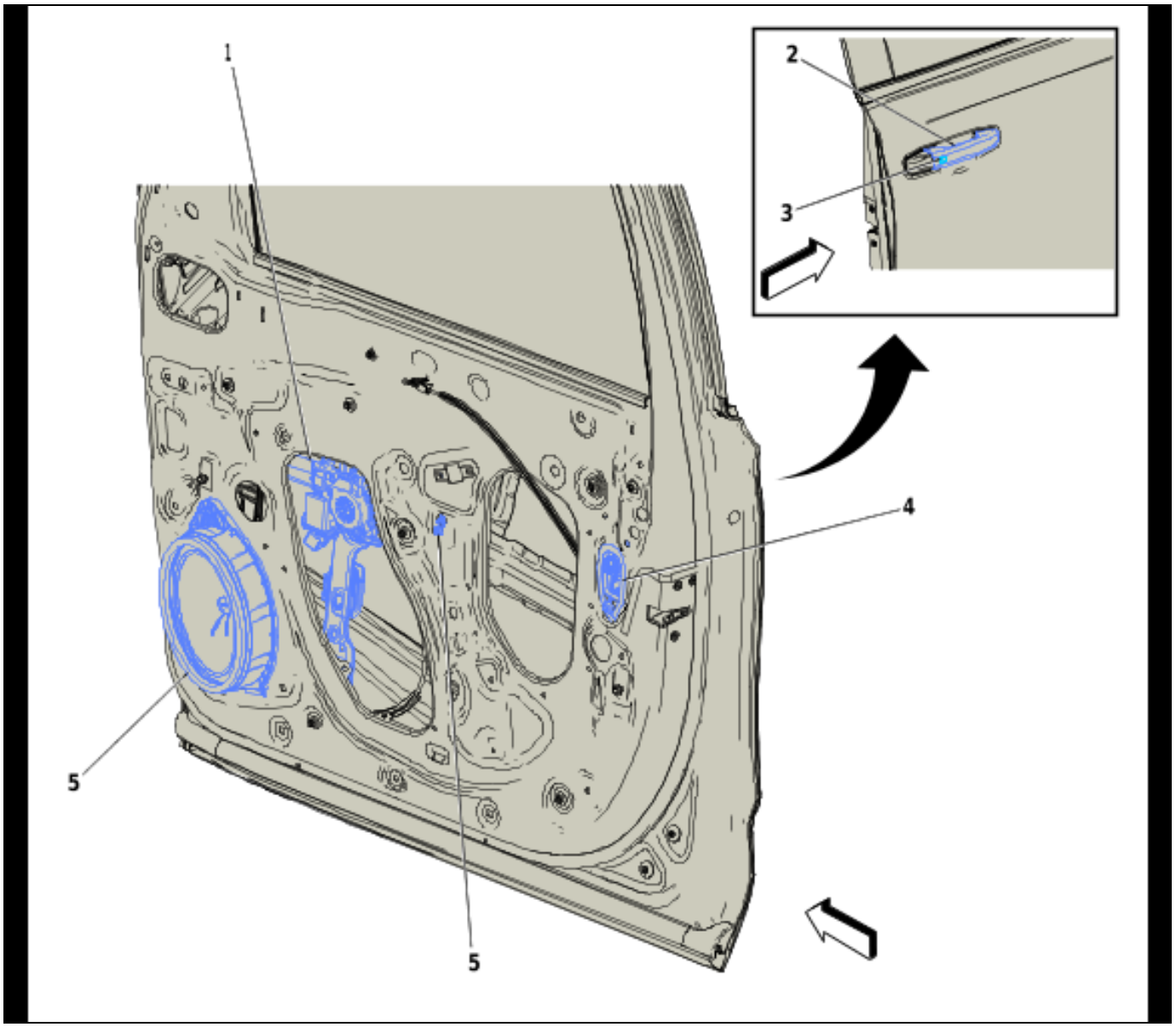

5515657

Items

(1) M74P Front Side Door Window Regulator Motor - Passenger

(2) A24P Front Side Door Outside Handle - Right

(3) B27RF Front Side Door Outside Handle Switch - Right

(4) A23P Front Side Door Latch - Passenger

(5) B63RF Airbag Side Impact Sensor - Right Front Door

(5) P19AH Radio Front Side Door Speaker - Right

Passenger Door Trim Components

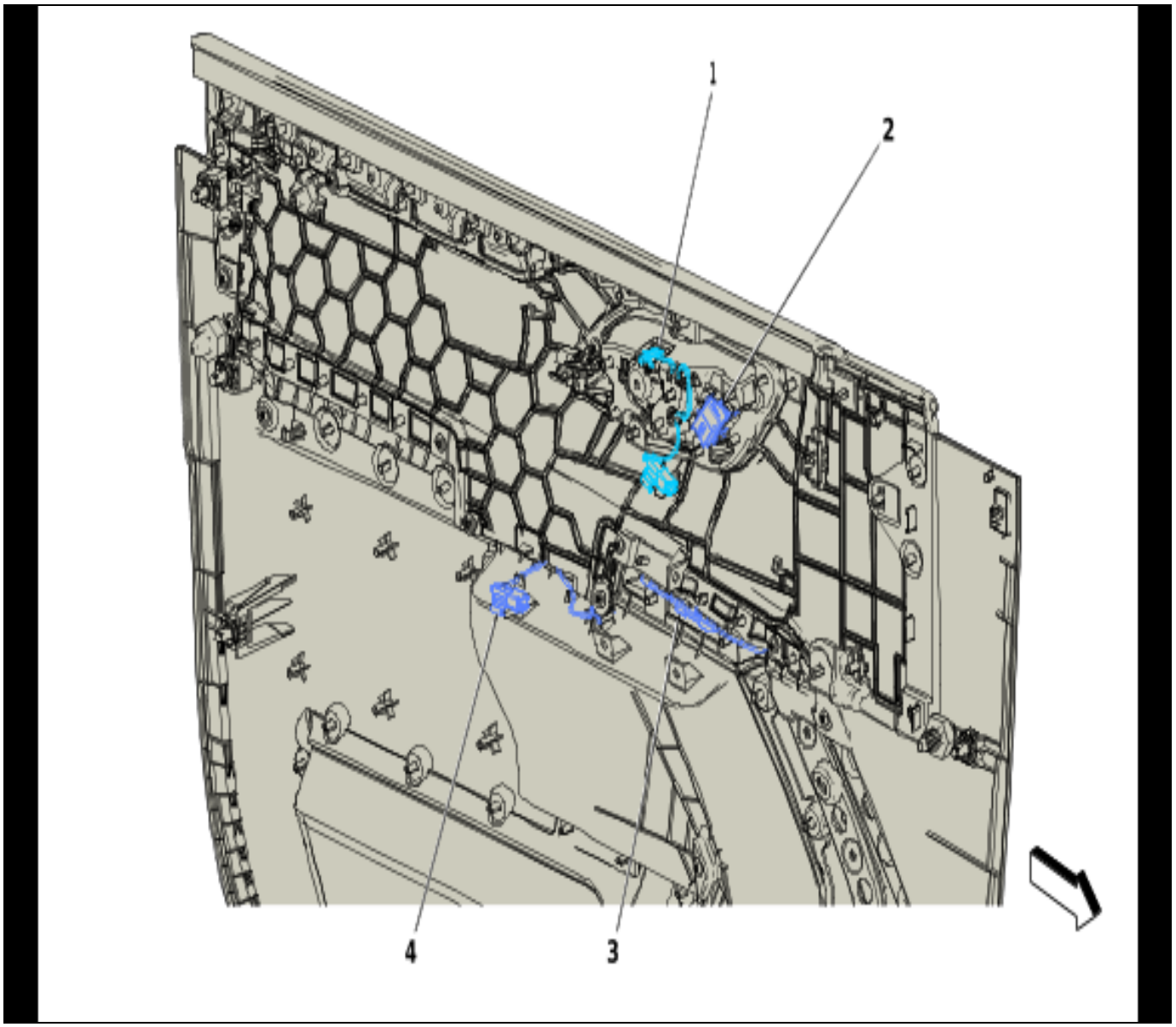

5515659

Items

(1) E63P Front Side Door Inside Handle Illumination Lamp - Right

(2) S13P Door Lock Switch - Passenger

(3) S79P Front Side Door Window Switch - Passenger

(4) E55LF Front Side Door Map Pocket Illumination Lamp - Left

Left Rear Door Components

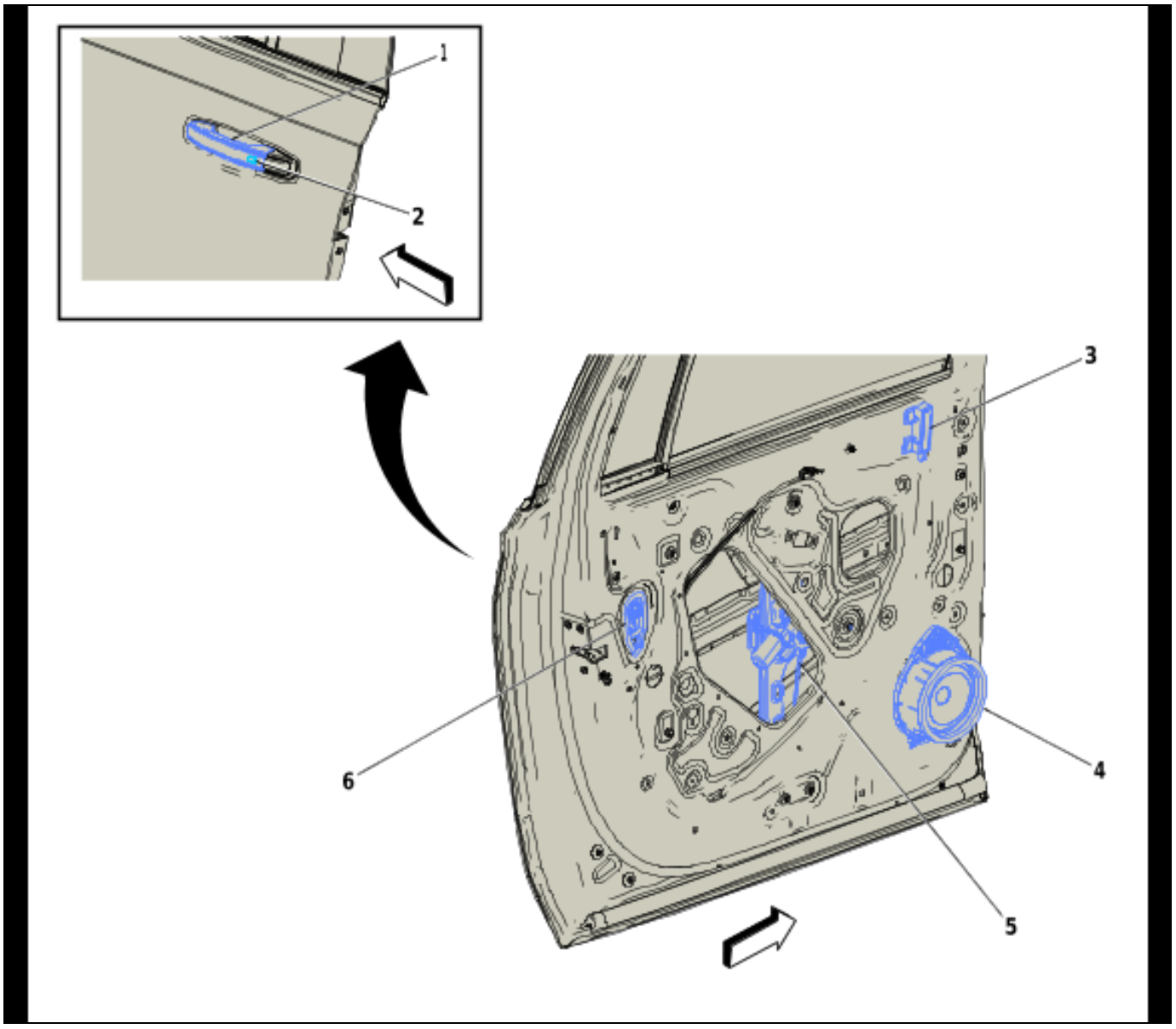

5527166

Items

(1) A23LR Rear Side Door Latch - Left

(2) B27LR Rear Side Door Outside Handle Switch - Left

(3) T10L Low Frequency Body Side Antenna - Left

(4) P19AL Radio Rear Side Door Speaker - Left

(5) M74LR Rear Side Door Window Regulator Motor - Left

(6) A24LR Rear Side Door Outside Handle - Left

Left Rear Door Trim Components

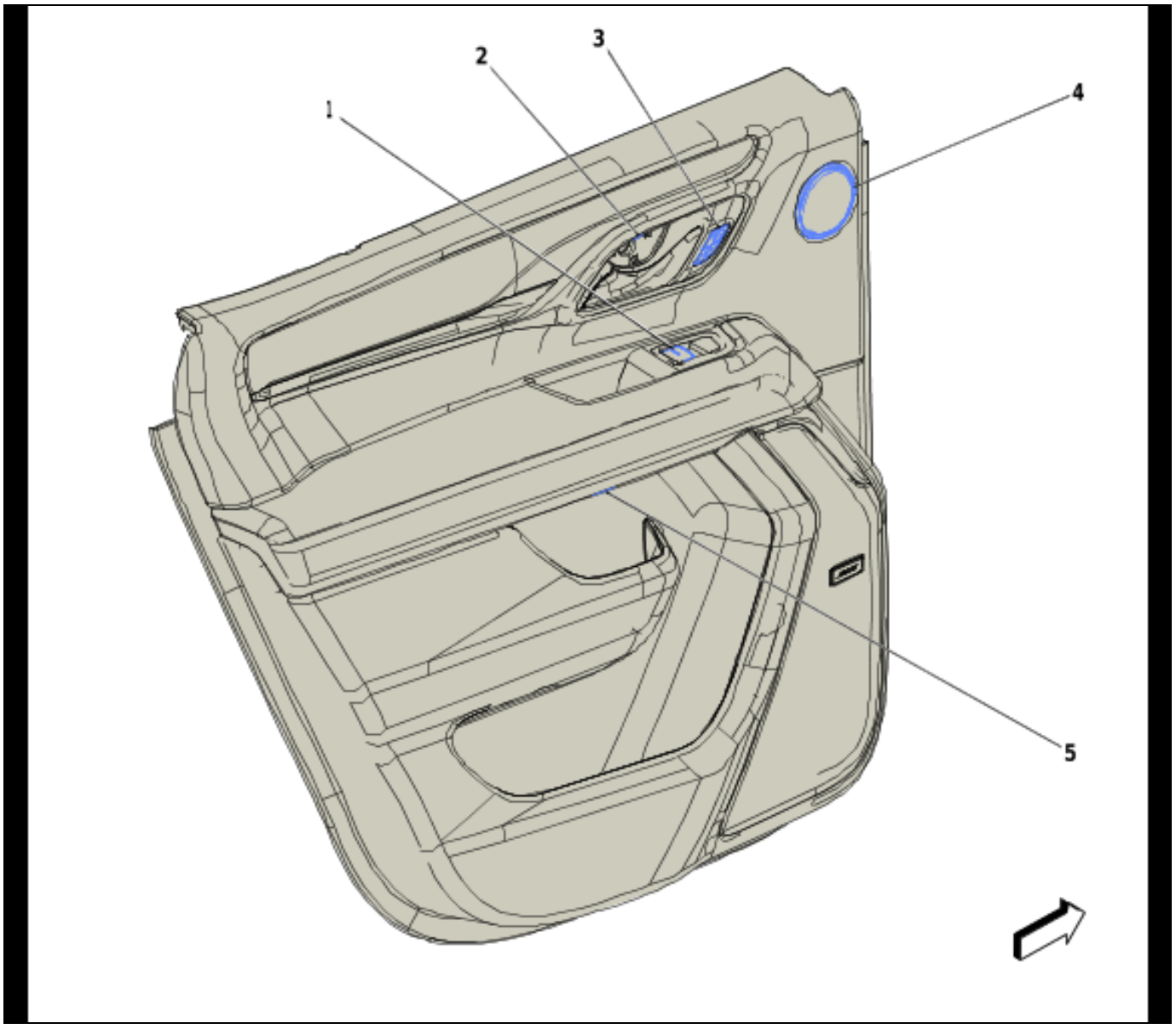

5527167

Items

(1) S79LR Rear Side Door Window Switch - Left

(2) E63LR Rear Side Door Inside Handle Illumination Lamp - Left

(3) S13LR Door Lock Switch - Left Rear

(4) P19V Radio Windshield Side Garnish Molding Speaker - Right Front (UQP)

(5) E55LR Rear Side Door Pocket Illumination Lamp - Left

Right Rear Door Components

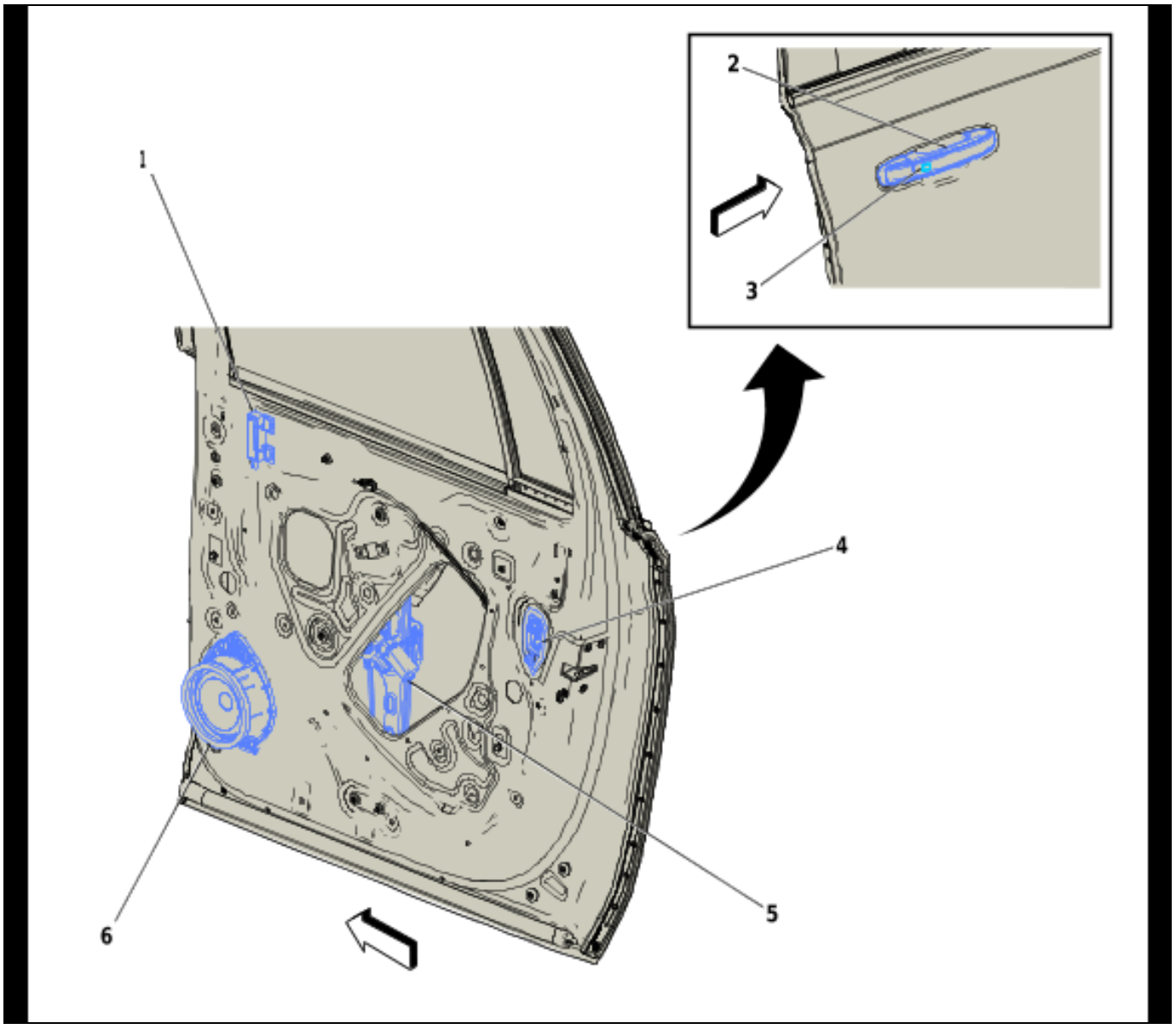

5527168

Items

(1) T10R Low Frequency Body Side Antenna - Right

(2) A23RR Rear Side Door Latch - Right

(3) B27RR Rear Side Door Outside Handle Switch - Right

(4) A24RR Rear Side Door Outside Handle - Right

(5) M74RR Rear Side Door Window Regulator Motor - Right

(6) P19AM Radio Rear Side Door Speaker - Right

Right Rear Door Trim Components

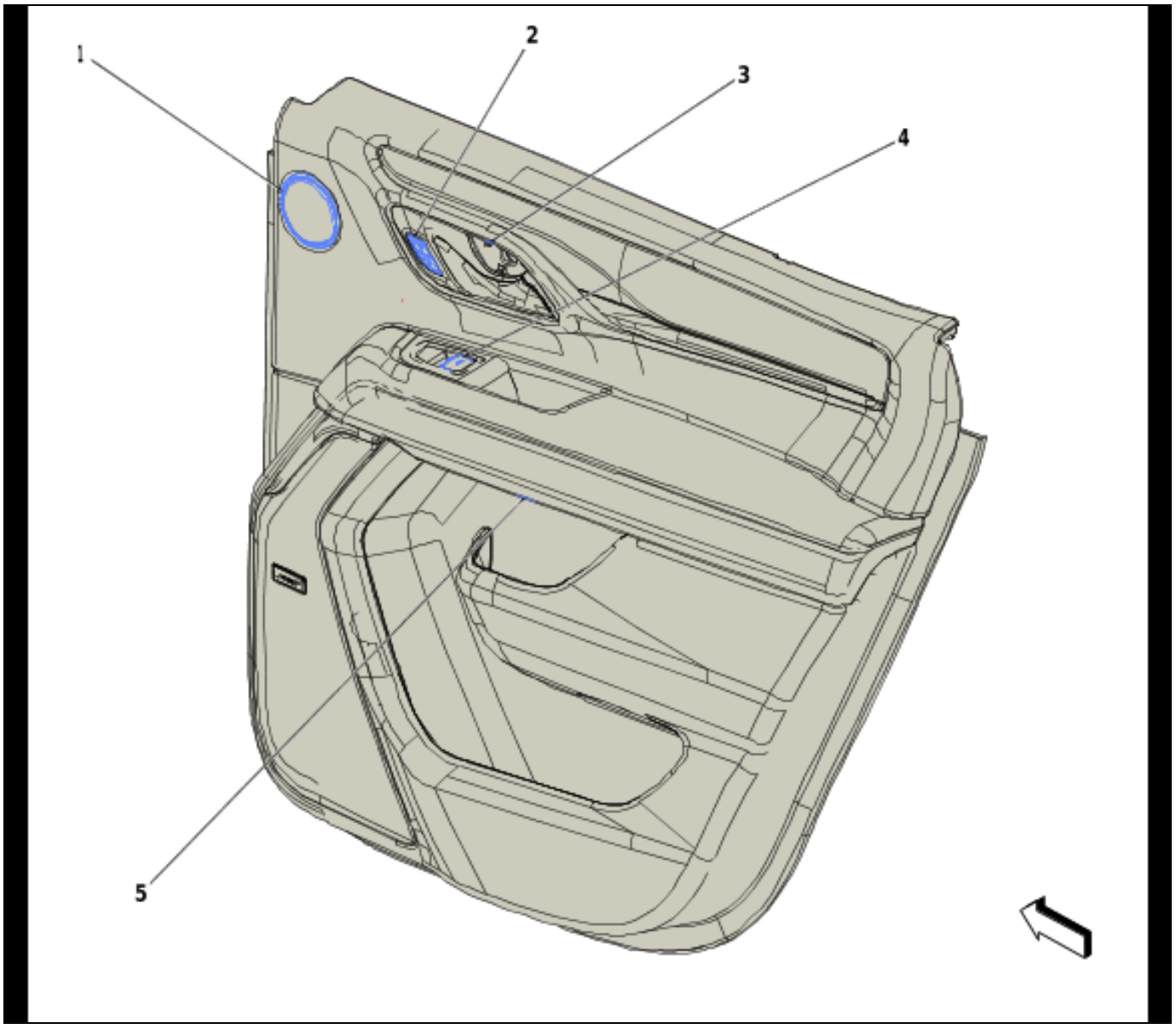

5527169

Items

(1) P19AM Radio Rear Side Door Speaker - Right

(2) S13RR Door Lock Switch - Right Rear

(3) E63RR Rear Side Door Inside Handle Illumination Lamp - Right

(4) S79RR Rear Side Door Window Switch - Right

(5) E55RR Rear Side Door Pocket Illumination Lamp - Right

Luggage Compartment/Rear of Vehicle Component Views

Luggage Compartment - Left

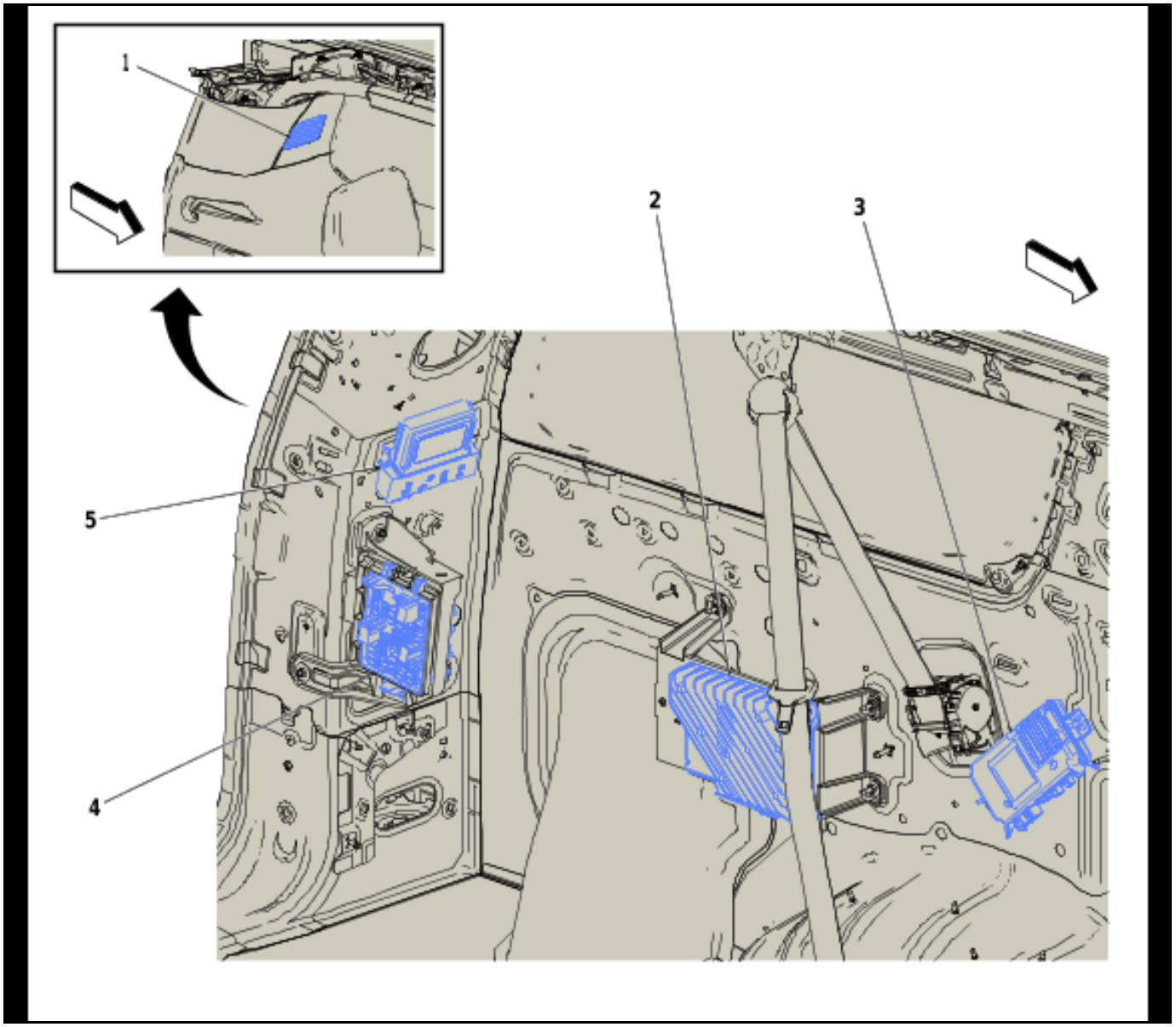

5548915

Items

(1) P19M Radio Body Rear Corner Upper Garnish Molding Speaker - Left (UQA/UQS)

(2) T3 Audio Amplifier (UQA)

(3) K157 Video Processing Module (UV2)

(4) X53A Body Wiring Harness Junction Block - Rear

(5) K194 Rear Gate Module (TC2)

Luggage Compartment - Right

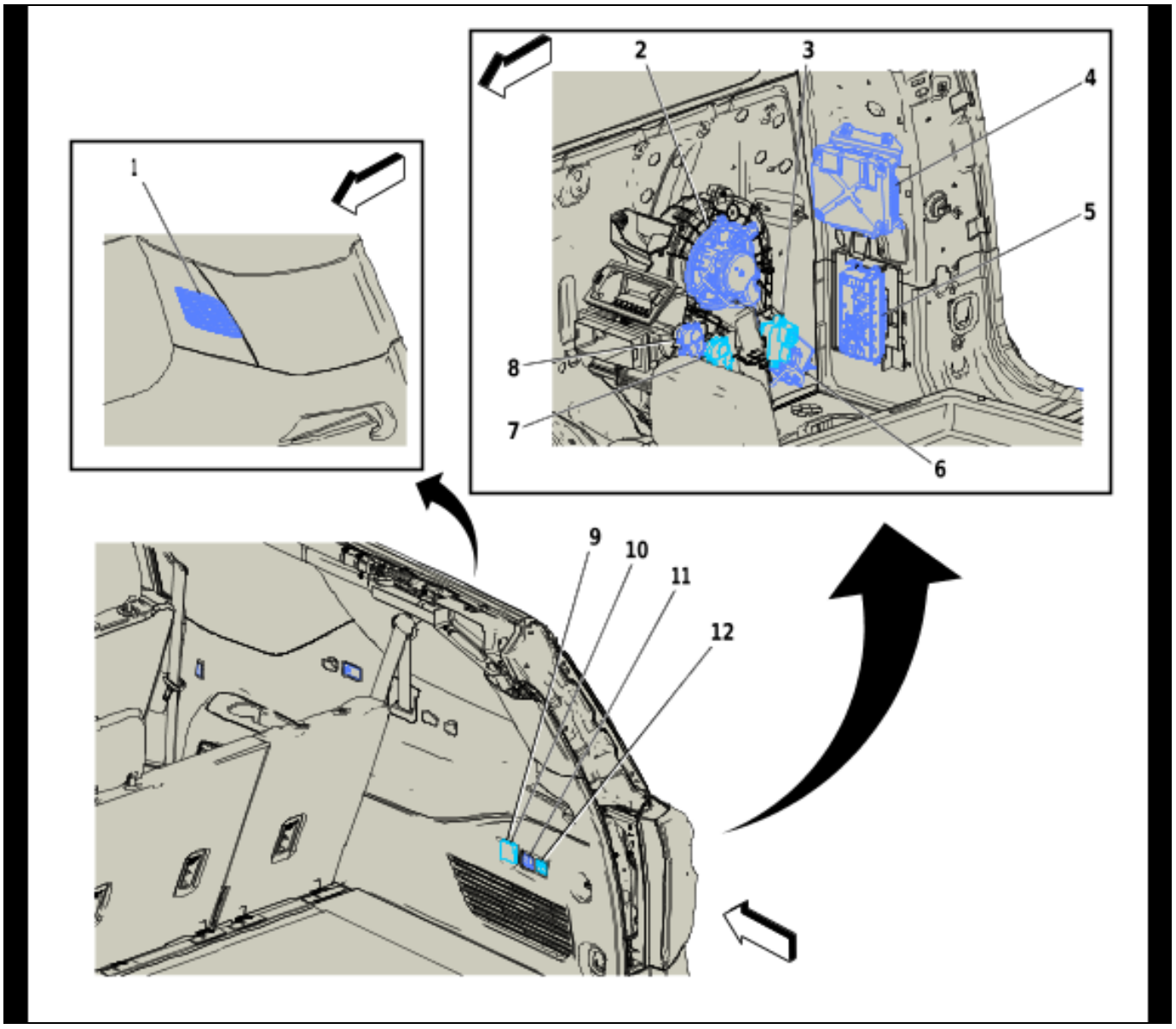

5548916

Items

(1) P19Z Radio Body Rear Corner Upper Garnish Molding Speaker - Right (UQA/UQS)

(2) M8B Blower Motor - Rear (C69)

(3) K8AB Blower Motor Control Module - Rear (C69)

(4) T1 DC/AC Converter Control Module (KI4/KI5)

(5) A34 Heater and Air Conditioning Auxiliary Control (C69)

(6) K182 Parking Assist Control Module (UD5/UD7)

(7) B7T Duct Air Temperature Sensor - Rear Lower (C69)

(8) B7S Duct Air Temperature Sensor - Rear Upper (C69)

(9) X81RA Quarter Lower Rear Trim Panel Accessory Power Receptacle - 110V AC (KI4)

(10) X81RB Quarter Lower Rear Trim Panel Accessory Power Receptacle - 220V AC (KI5)

(11) S144A Rear Seat Back Folding Switch - 2nd Row Rear Compartment (ATN/ATT)

(12) S144B 3rd Row Seat Folding Switch - Rear Compartment (AS8)

Rear of Vehicle

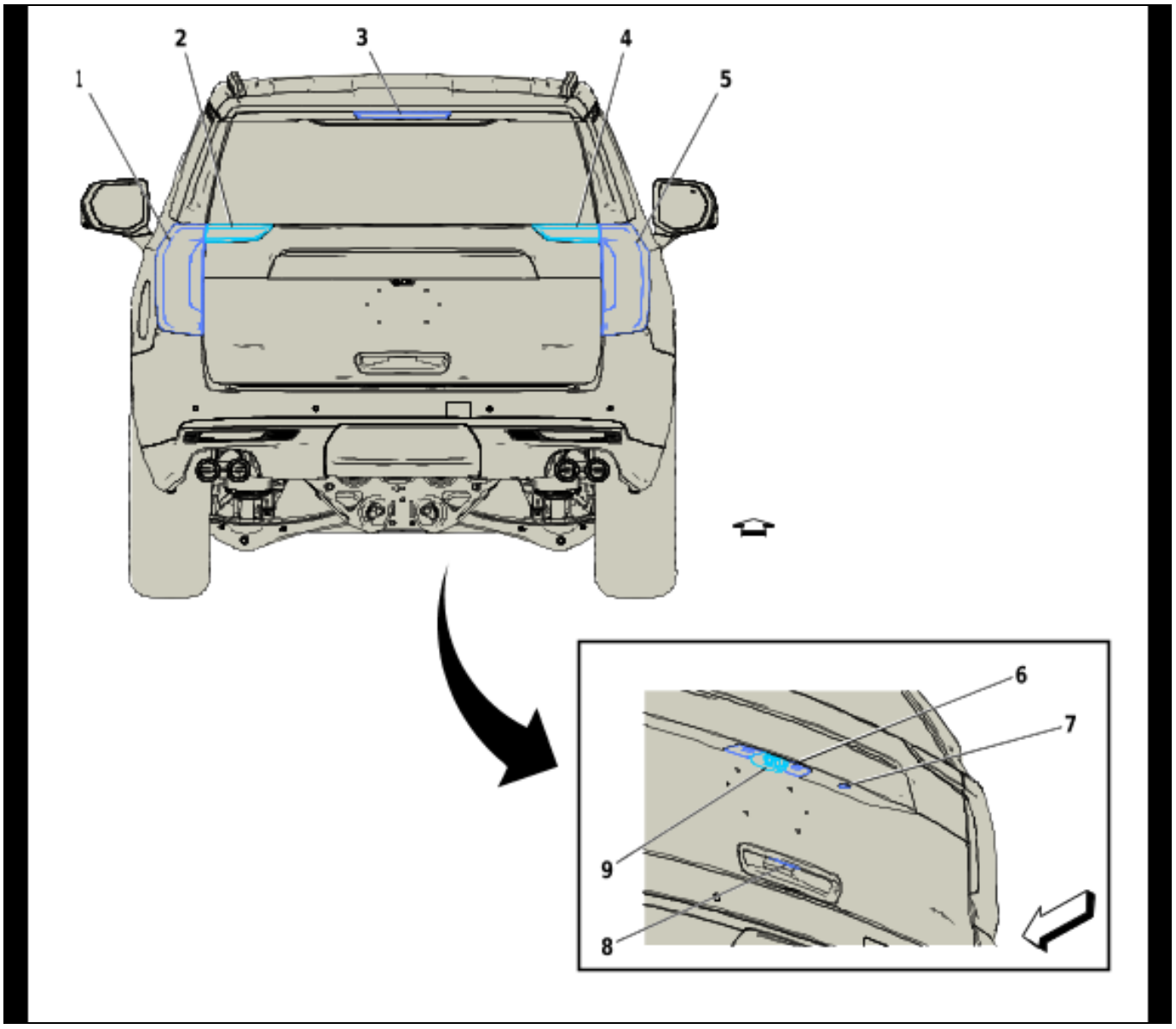

5548918

Items

(1) E42L Rear Body Structure Stop Lamp - Left
(2) E103L Rear Closure Signal Lamp - Left (Z88)
(3) E6 High Mount Stop Lamp
(4) E103R Rear Closure Signal Lamp - Right (Z88)
(5) E42R Rear Body Structure Stop Lamp - Right
(6) E7 Rear License Plate Lamp (ZW9)
(7) S141 Liftgate Window Release Switch - Exterior
(8) S45A Liftgate Release Switch - Exterior (TB4/TC2)
(9) B87 Rearview Driver Information Camera (UV2/UVB)

Wheels/Vehicle Underbody Component Views

Wheel Well Components - Left Front

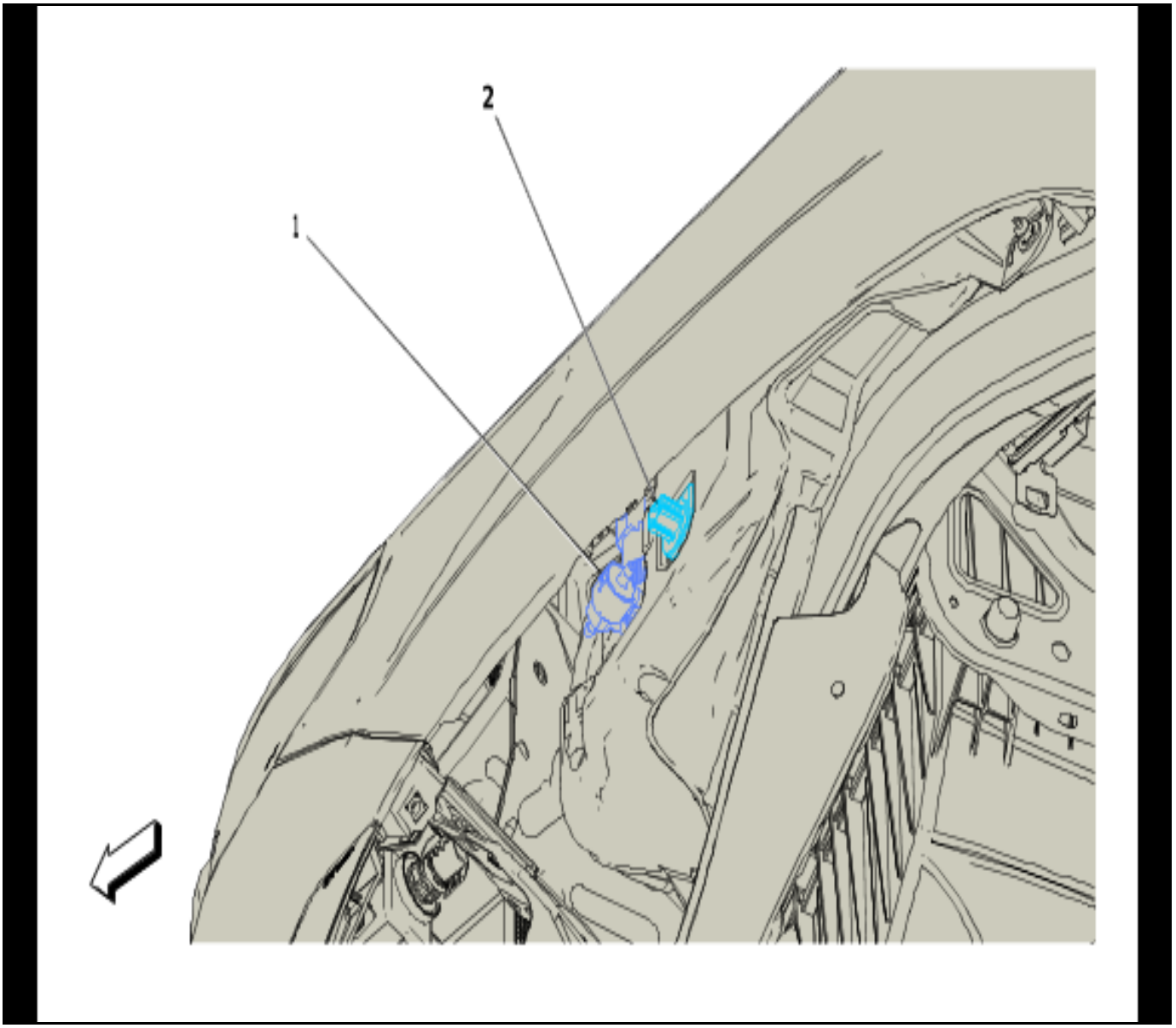

5548919

Items

(1) G24 Windshield Washer Pump

(2) B118 Windshield Washer Solvent Container Level Sensor

Suspension and Brake Components - Left Front

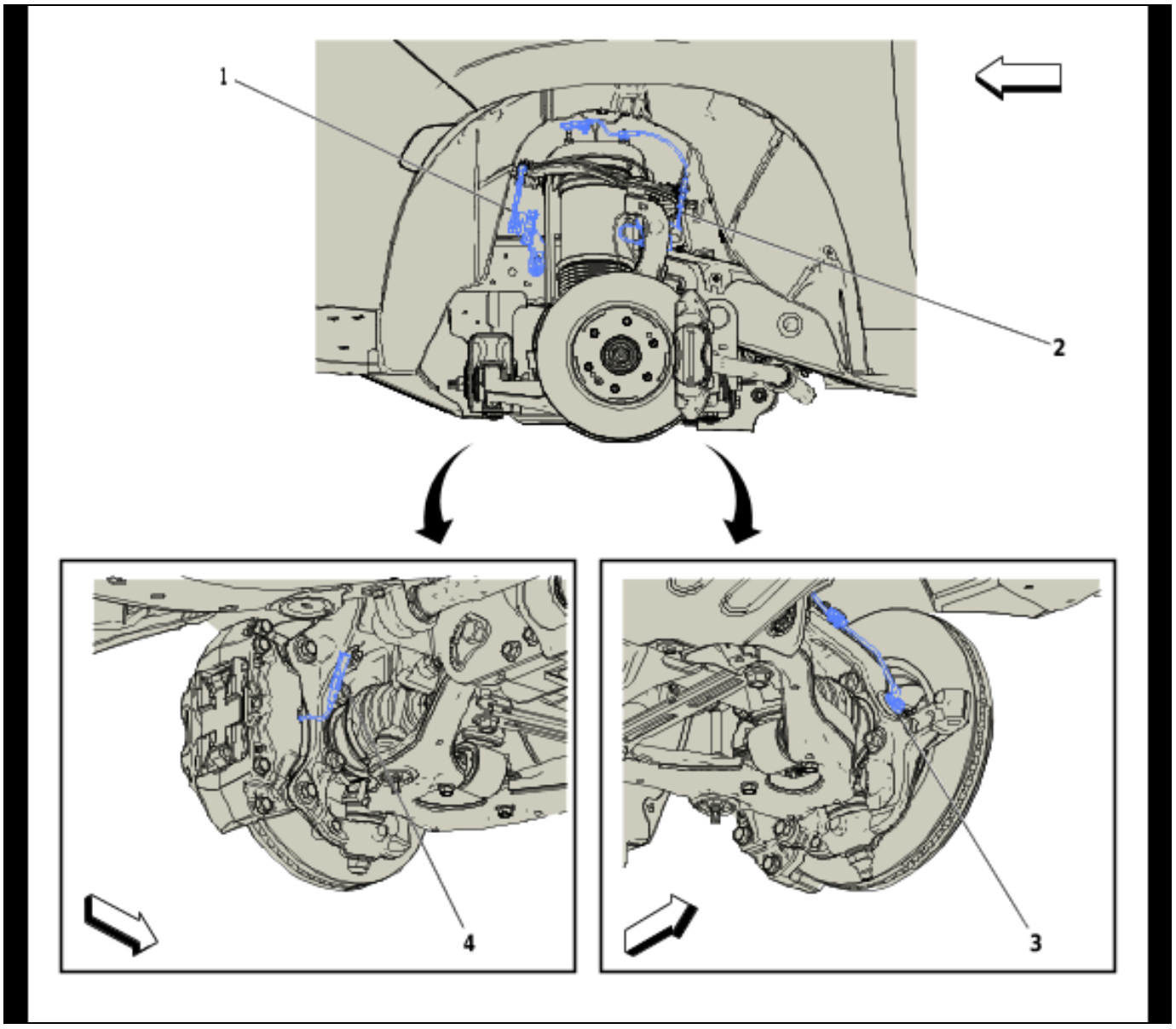

5479526

Items

(1) B11LF Front Suspension 4 Corner Leveling System Position Sensor - Left (F47)

(2) B161LF Electronic Suspension Wheel Front Vertical Accelerometer - Left (Z95)

(3) B5LF Front Wheel Speed Sensor - Left

(4) B172LF Front Disc Brake Pad Wear Sensor - Left (JBK)

Suspension and Brake Components - Right Front

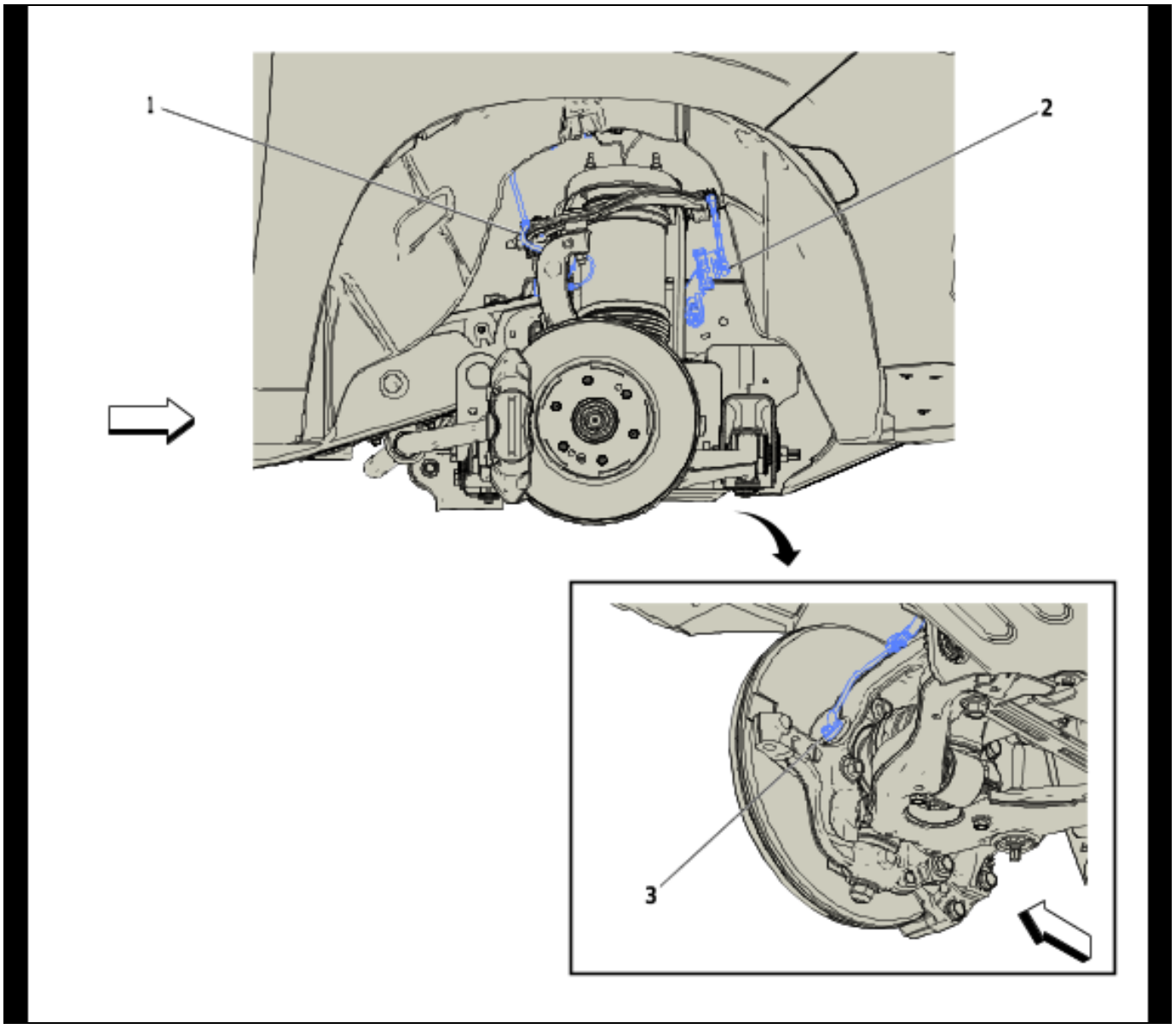

5479522

Items

(1) B161RF Electronic Suspension Wheel Front Vertical Accelerometer - Right (Z95)

(2) B11RF Front Suspension 4 Corner Leveling System Position Sensor - Right (F47)

(3) B5RF Front Wheel Speed Sensor - Right

Underbody Components - Rear

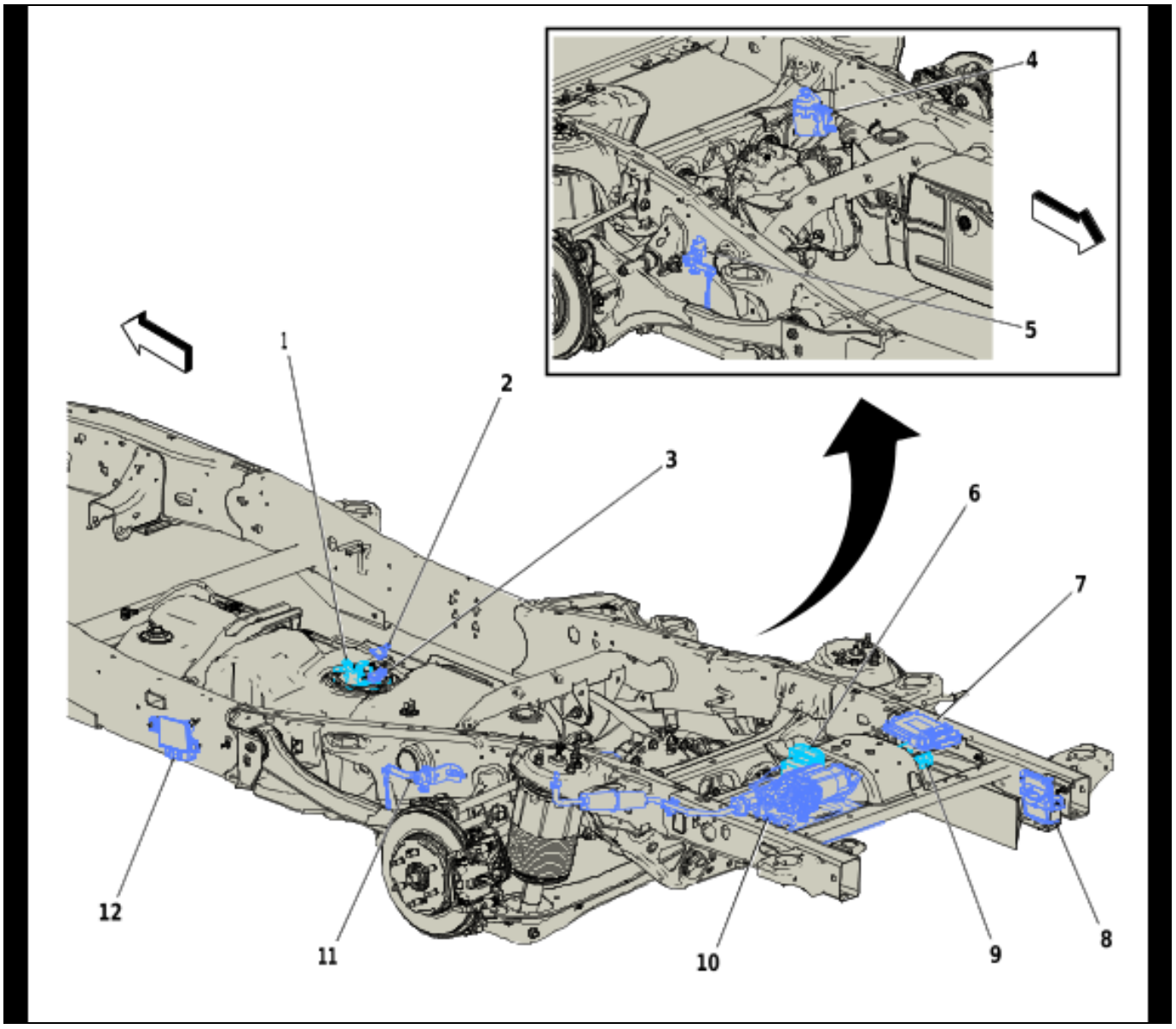

5479530

Items

(1) A7 Fuel Tank Fuel Pump Module
(2) B47 Fuel Pressure Sensor
(3) B150 Fuel Tank Pressure Sensor (L84/L87)
(4) Q13 Evaporative Emission Canister Vent Solenoid Valve
(5) B11RR Rear Suspension 2 or 4 Corner Air Leveling Position Sensor - Right (F47)
(6) K5 Automatic Level Control Module (F47)
(7) K19 Suspension Control Module (Z95)
(8) K68 Trailer Lamp Control Module (U1D)
(9) K67 Trailer Brake Control Module (JL1)
(10) G4 Automatic Level Control Air Compressor (F47)
(11) B11LR Rear Suspension 2 or 4 Corner Air Leveling Position Sensor - Left (F47)
(12) K111 Fuel Pump Power Control Module

Ground Views
G104 and G110

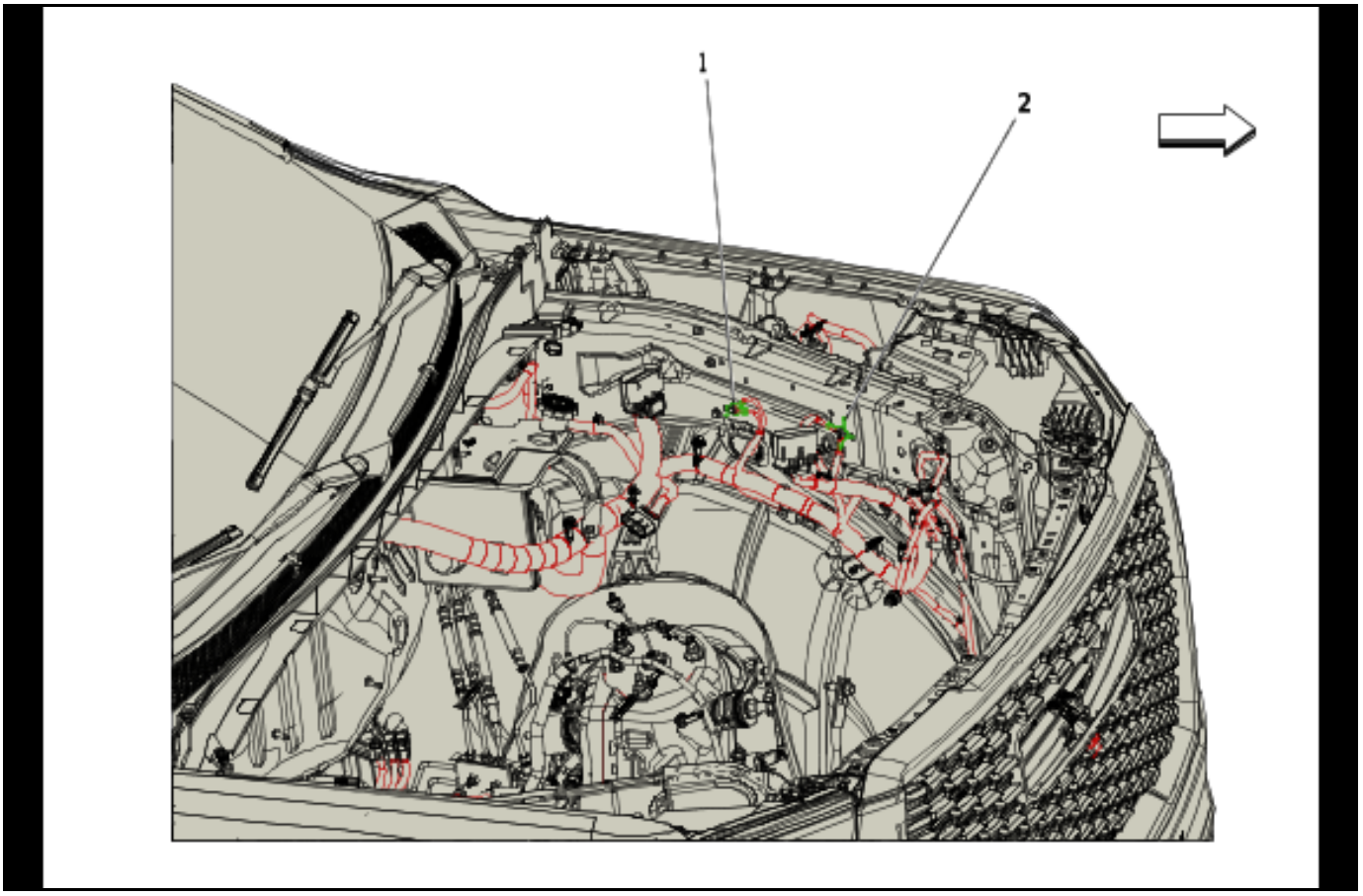

5869969

Items

(1) G101B Body Wiring Harness
(2) G103

G117 (L84/L87)

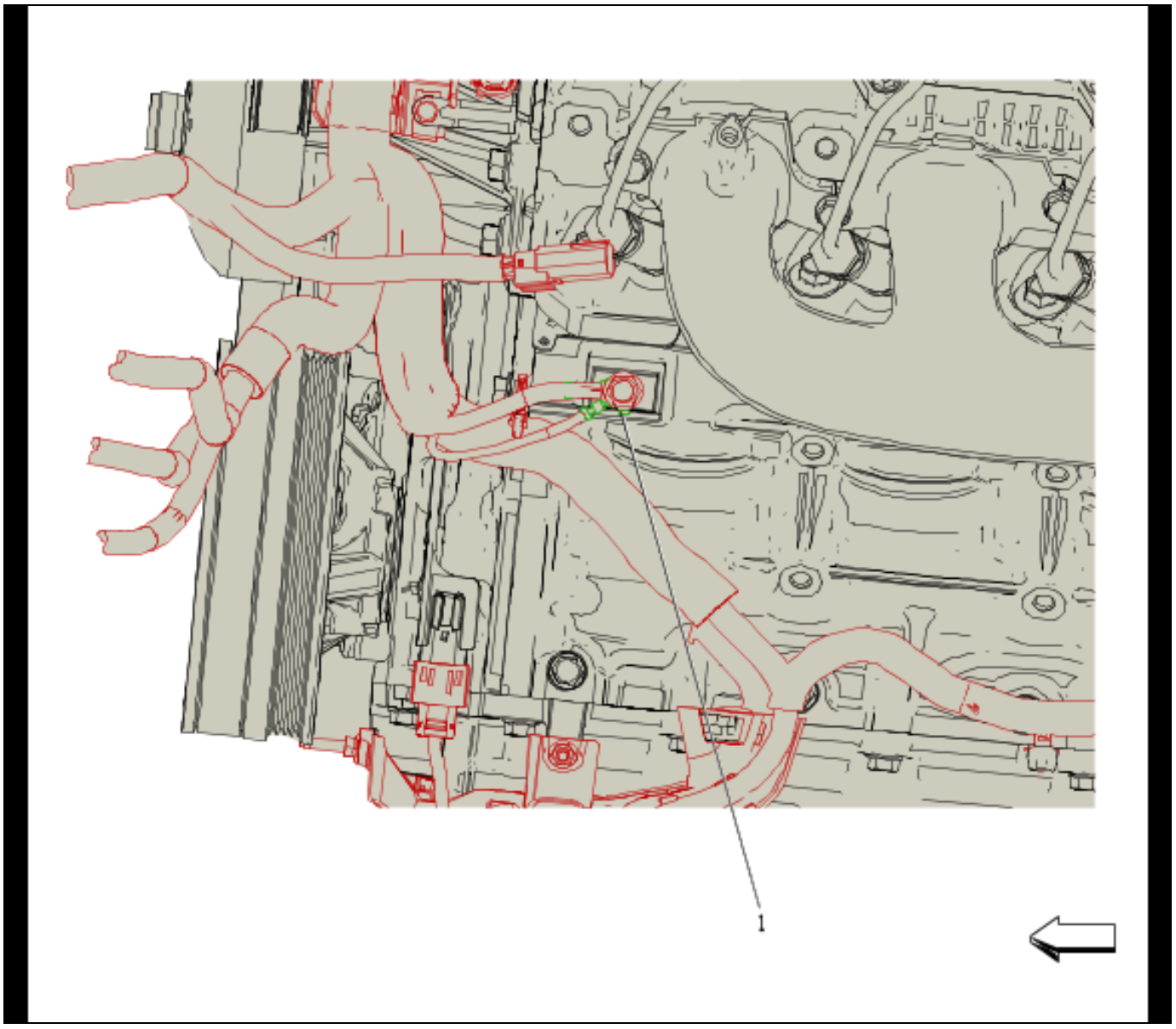

5869970

Items

(1) G177A Engine Wiring Harness (L84/L87)

G117 (LM2)

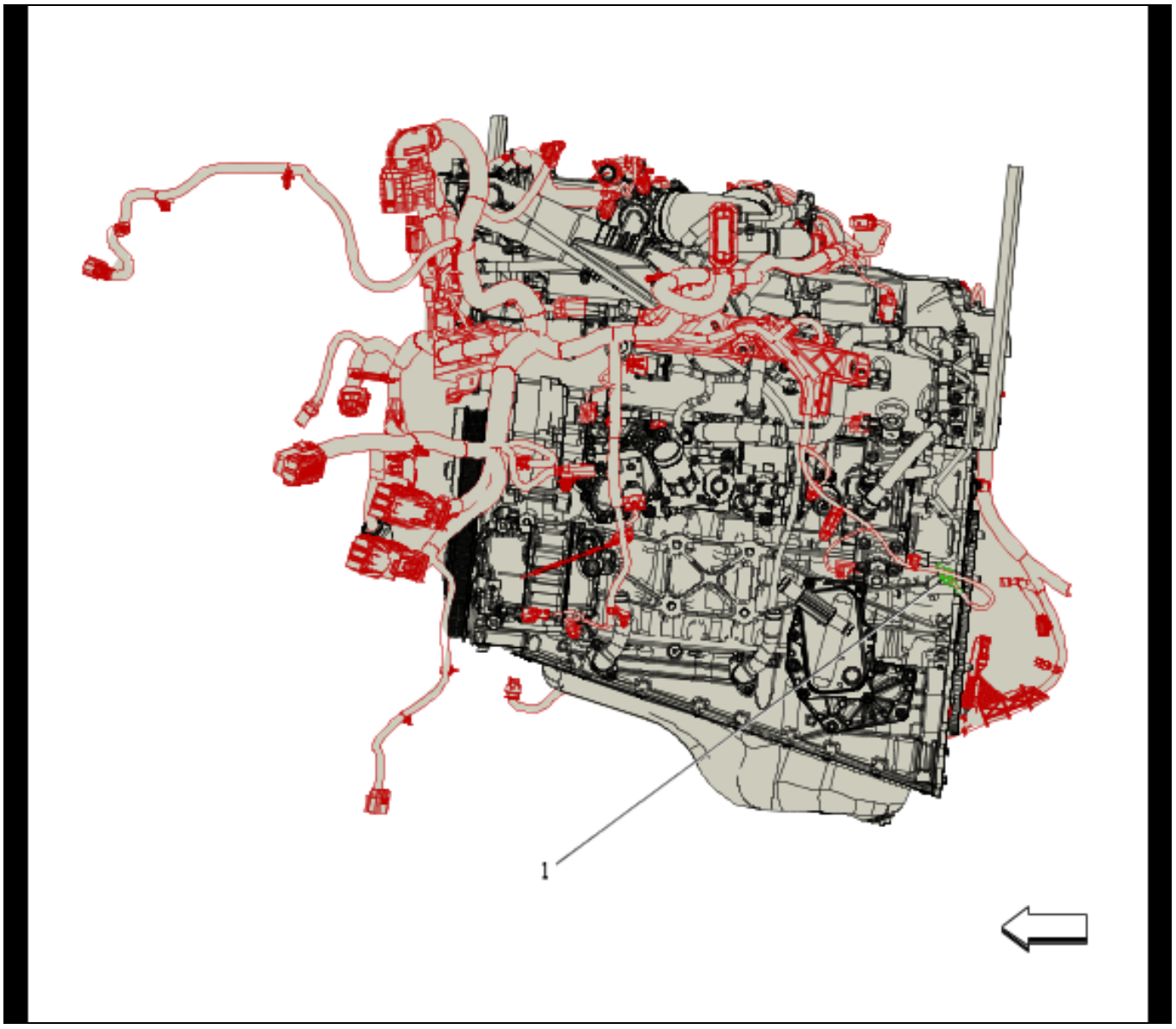

5869971

Items

(1) G177C

G120

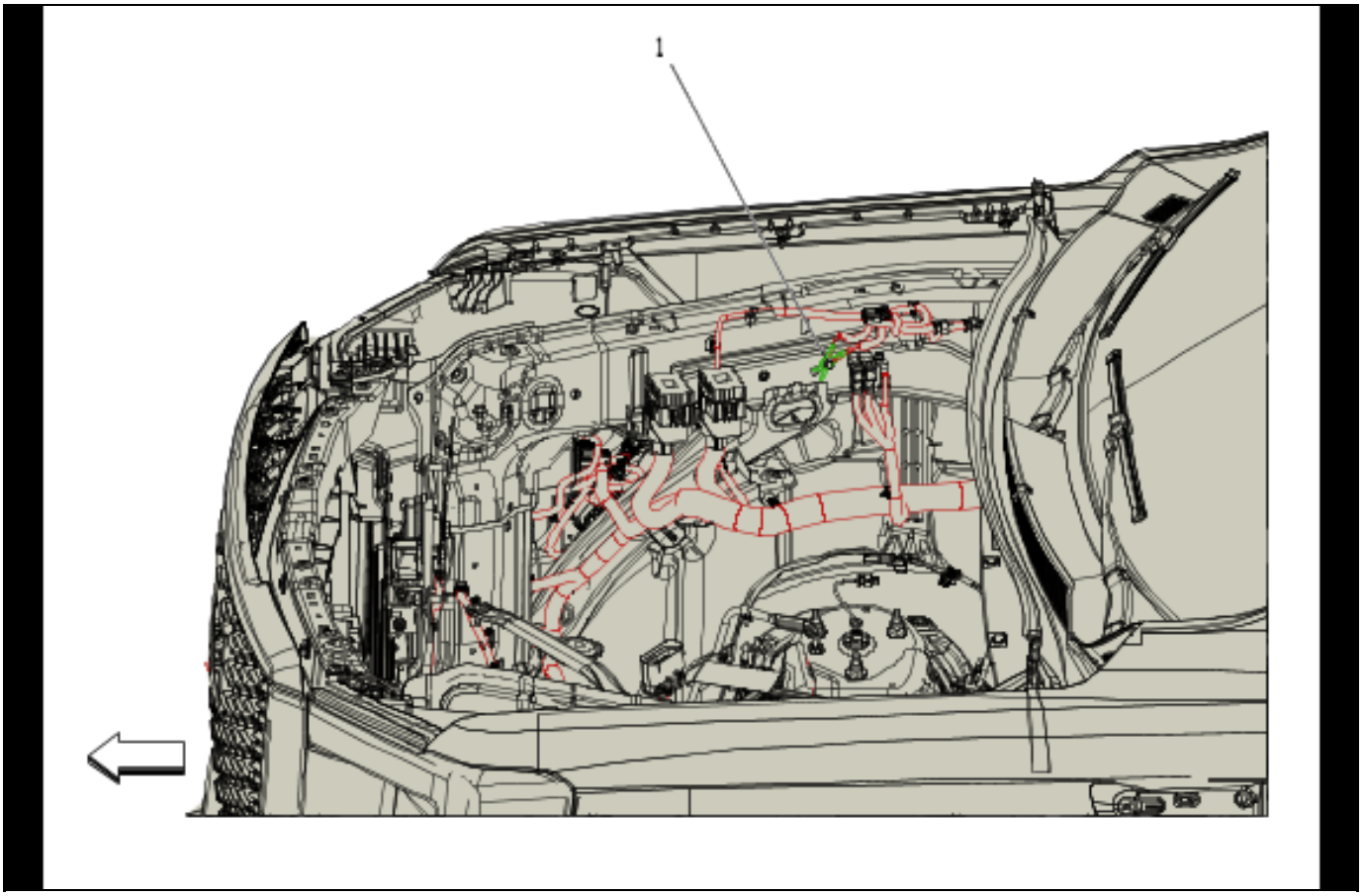

5869972

Items

(1) G102A Body Wiring Harness

G130 (L84/L87)

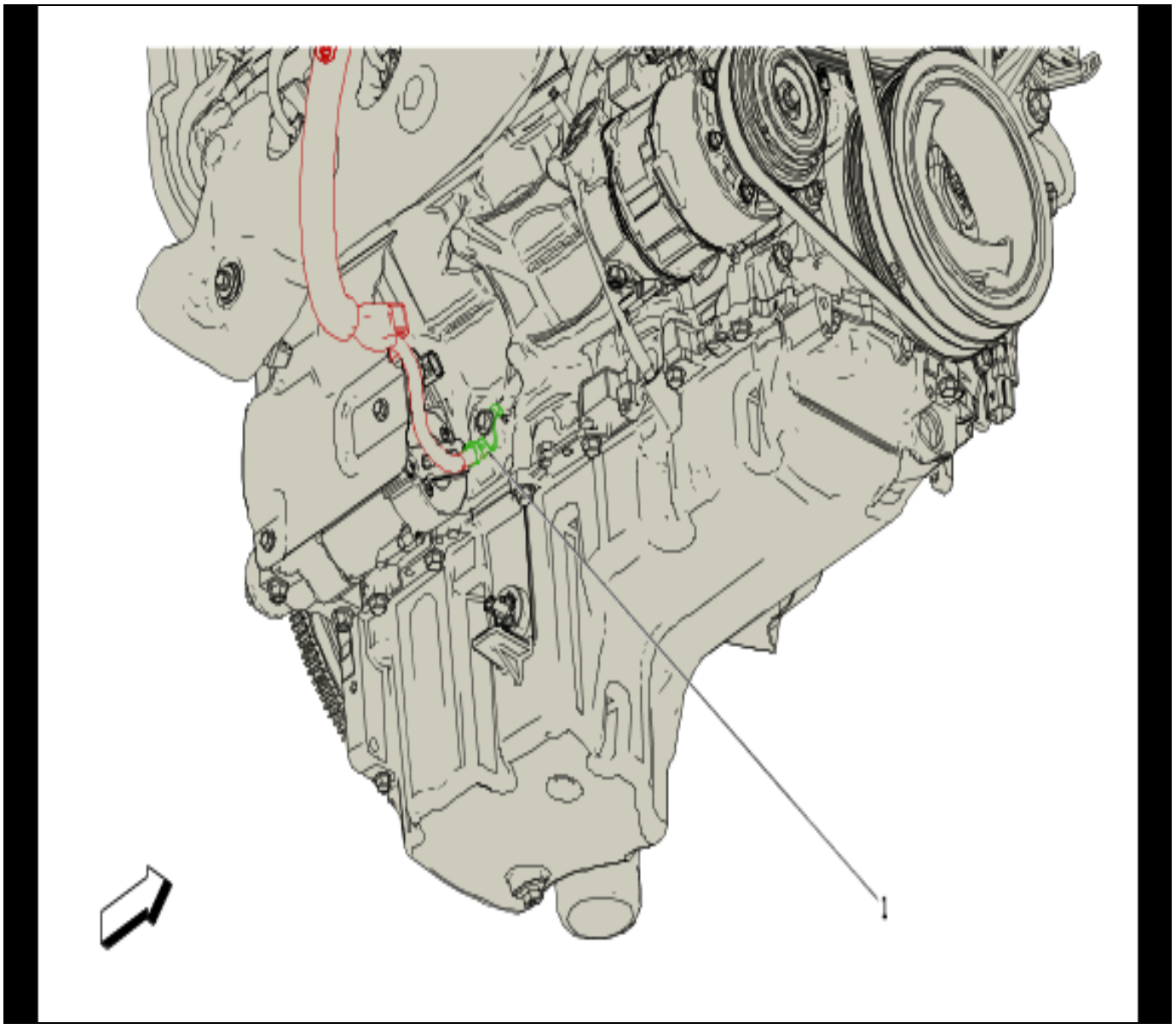

5869973

Items

(1) G130 Starter Solenoid Cable

G131, G132, G133, and G134

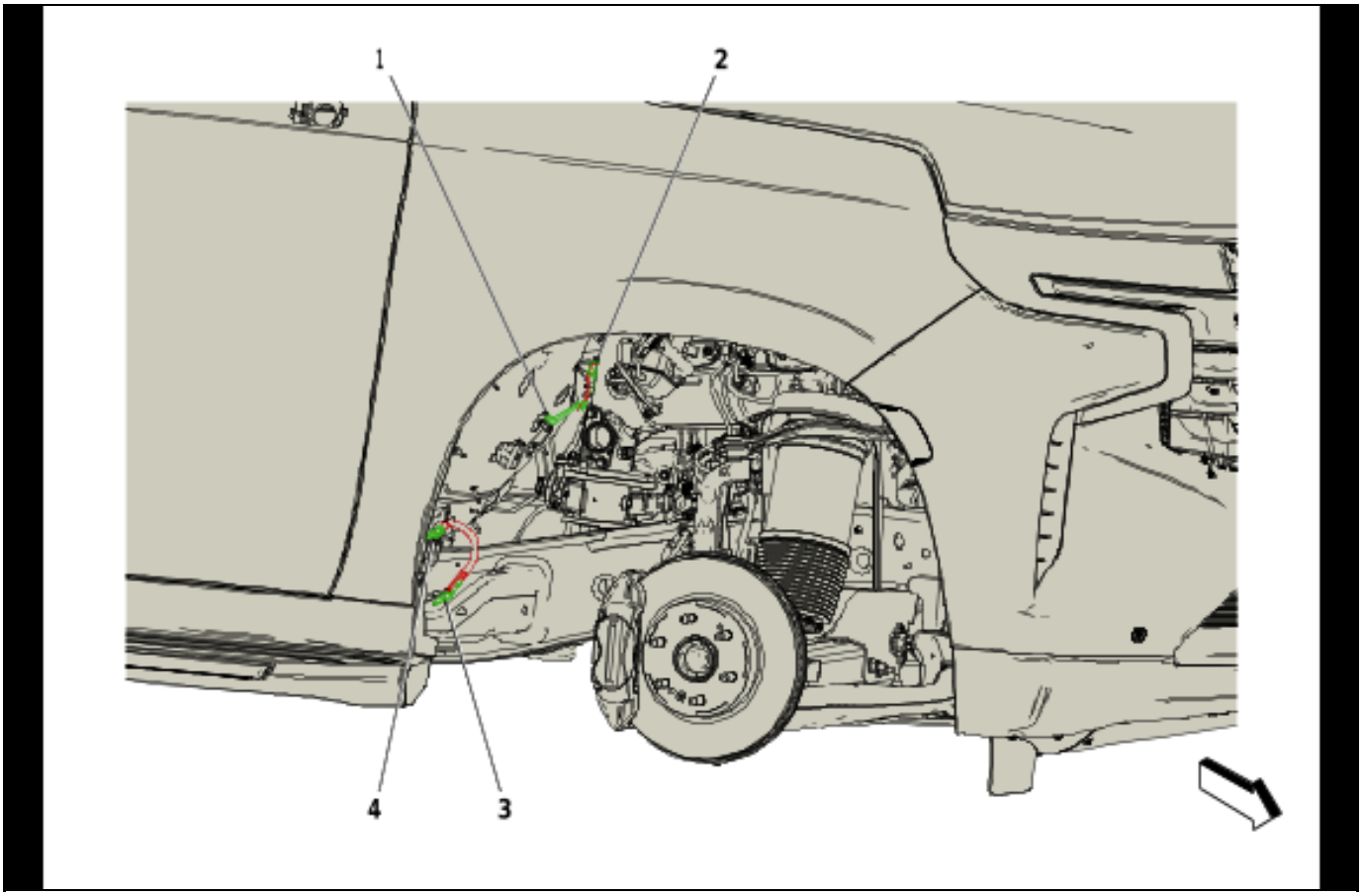

5869974

Items

(1) G131 Ground Strap
(2) G133 Ground Strap (LM2)
(3) G132 Ground Strap
(4) G134 Ground Strap (LM2)

G135

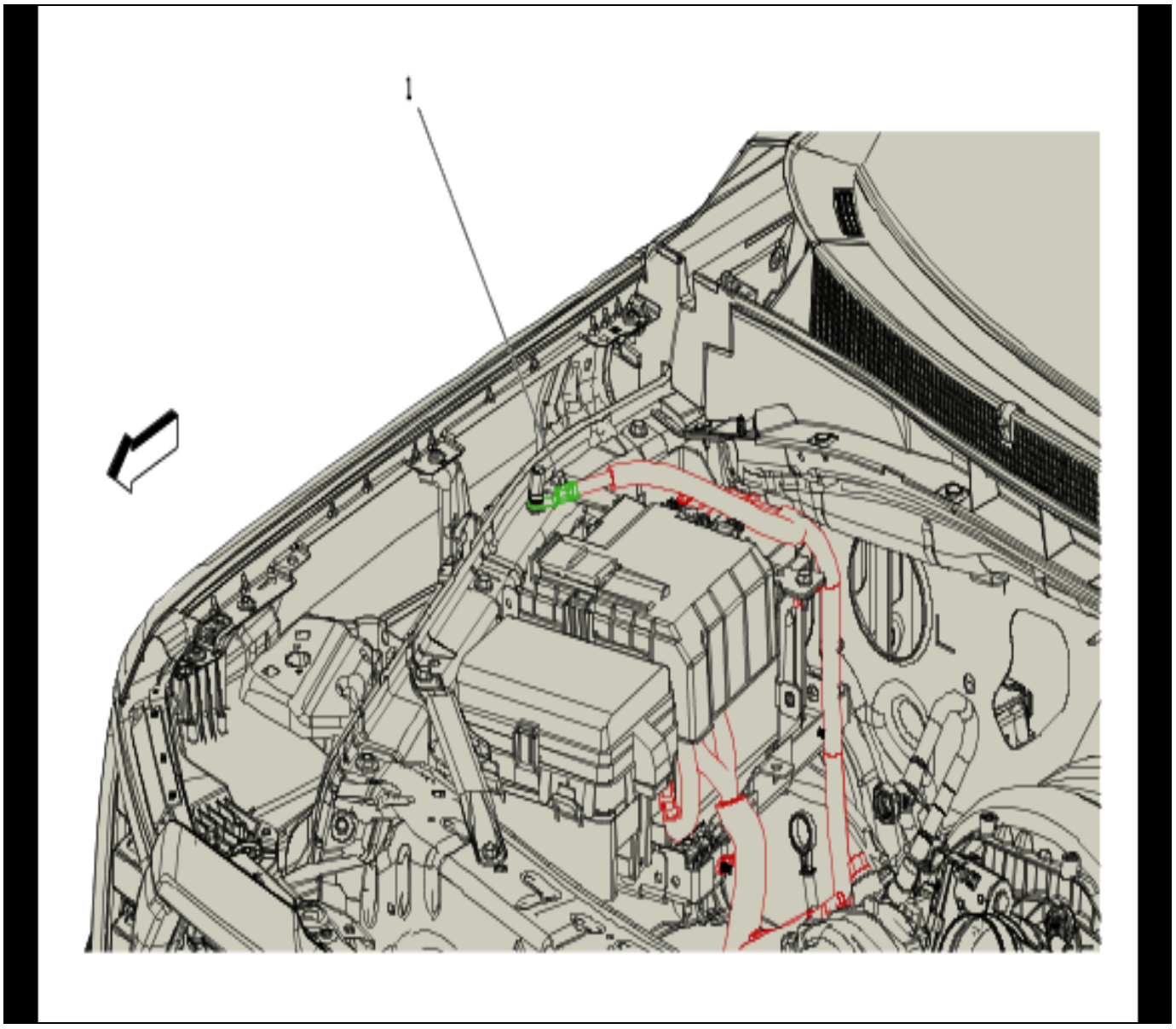

5869975

Items

(1) G104 Starter Solenoid Cable

G175 and G179 (L84/L87)

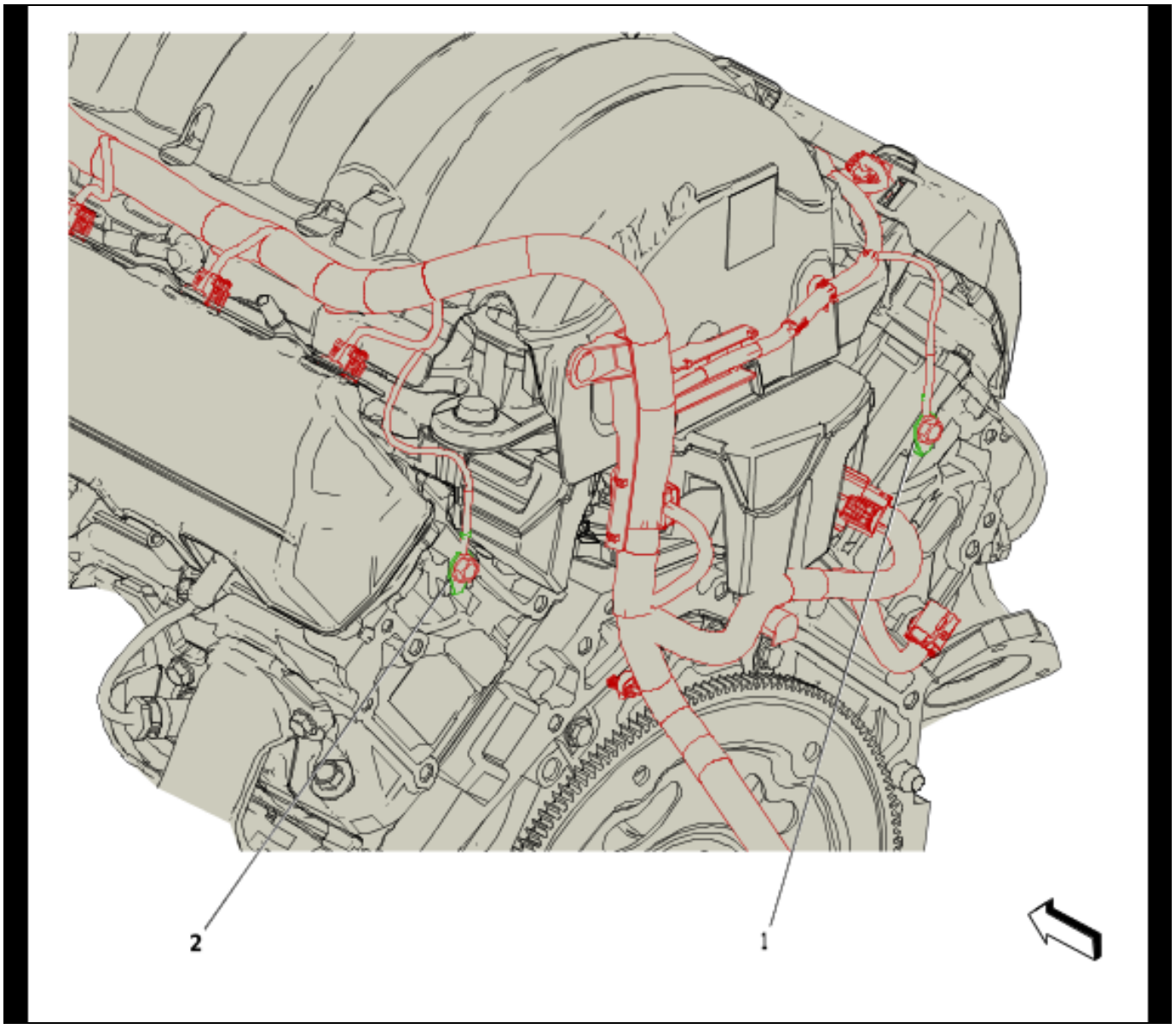

5869976

Items

(1) G176E Engine Wiring Harness (L84/L87)

(2) G175 Engine Wiring Harness (L84/L87)

G200

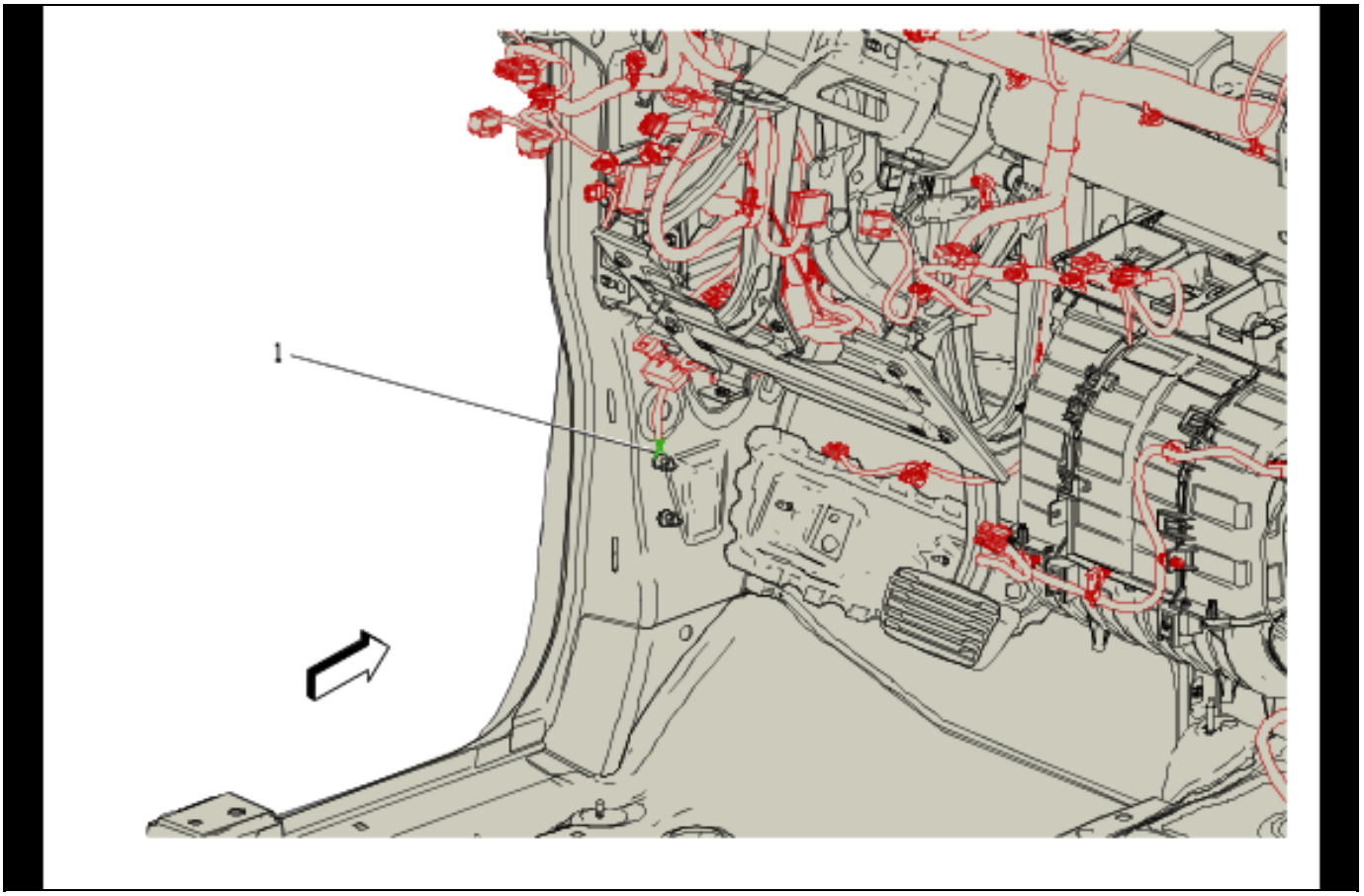

5869977

Items

(1) G201A Instrument Panel Wiring Harness

G220

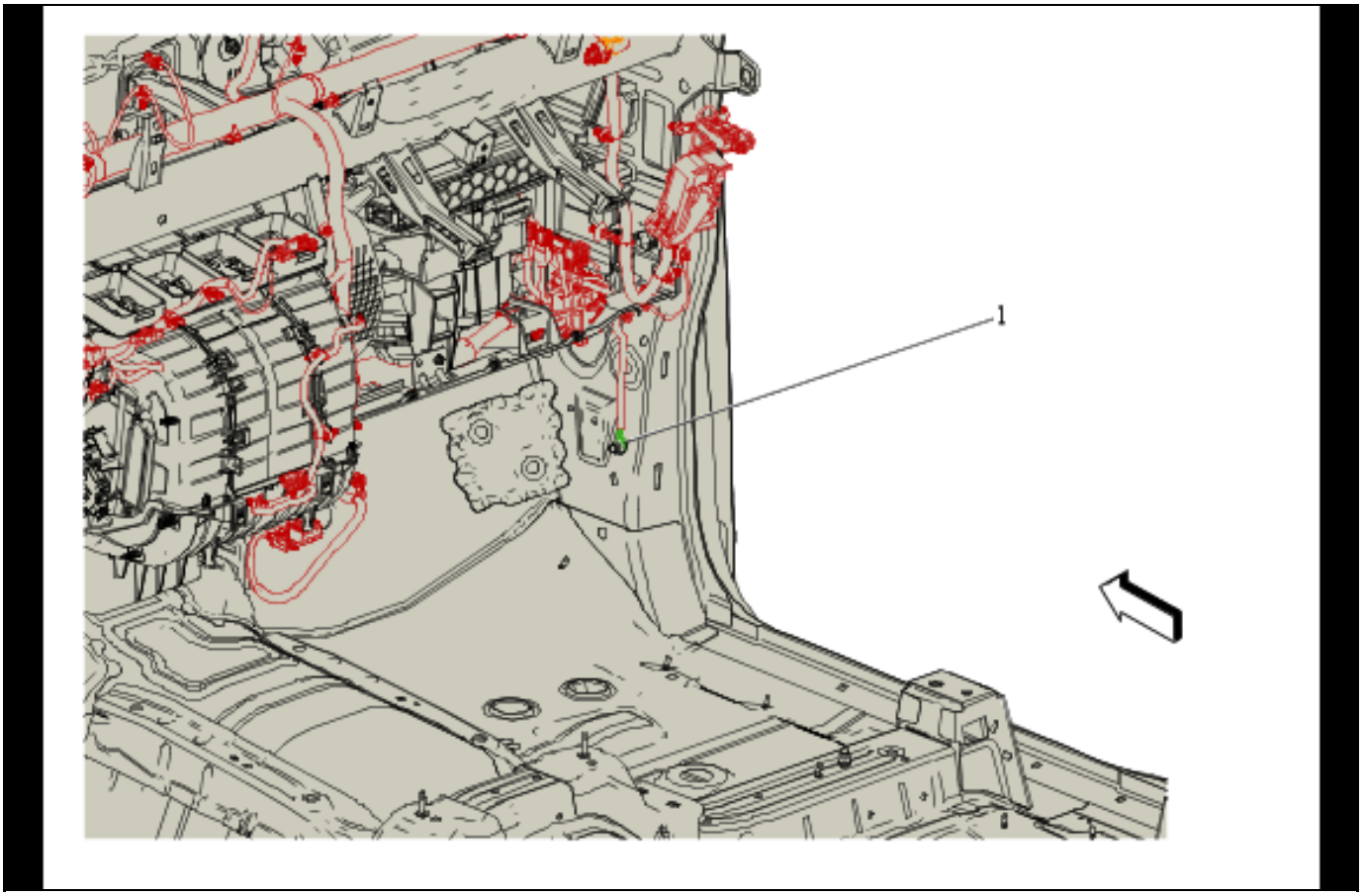

5869978

Items

(1) G200 Instrument Panel Wiring Harness

G327 and G328

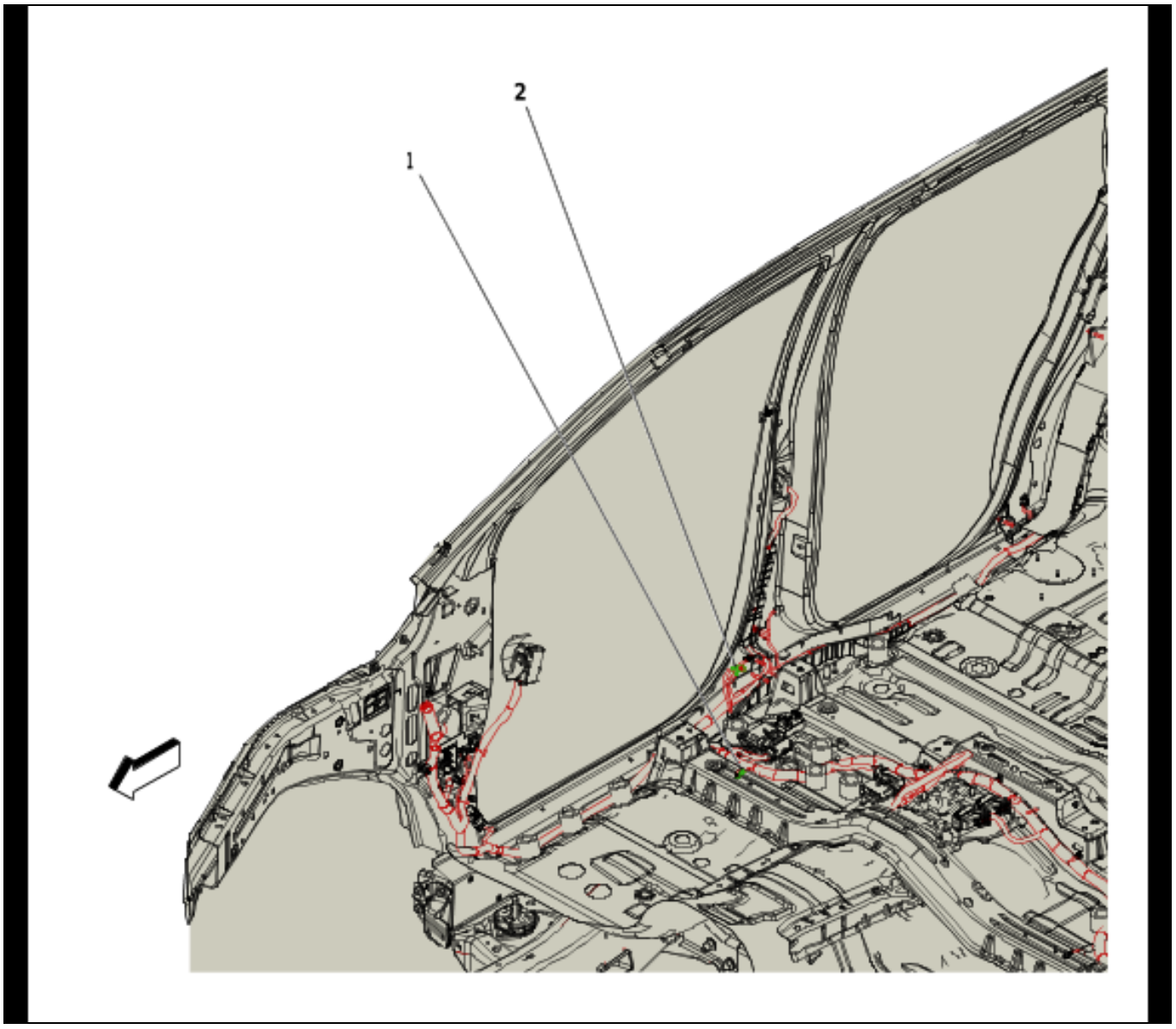

5869979

Items

(1) G302 Body Wiring Harness

(2) G300A Body Wiring Harness

G330

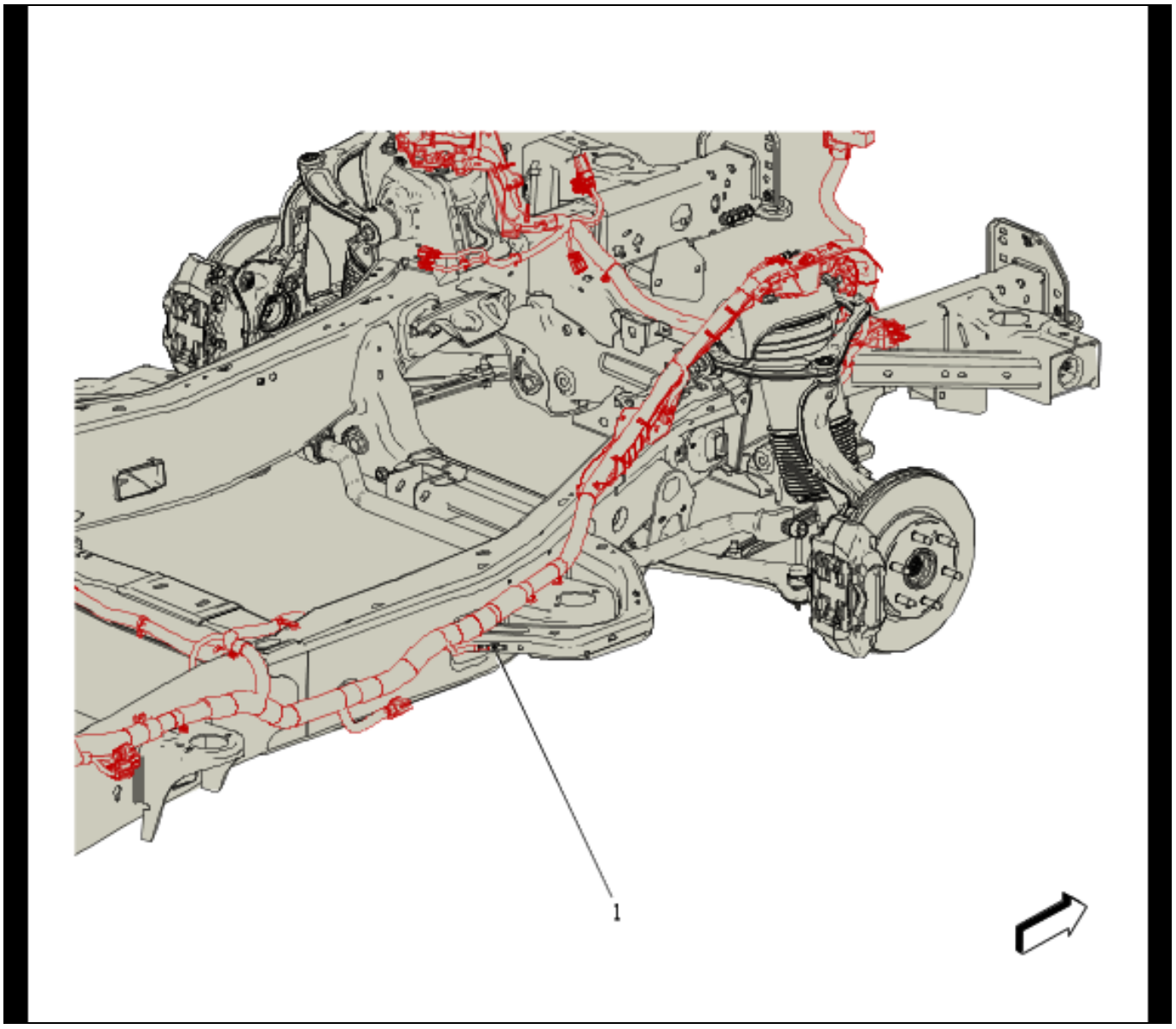

5869981

Items

(1) G402 Chassis Wiring Harness

G404 and G406

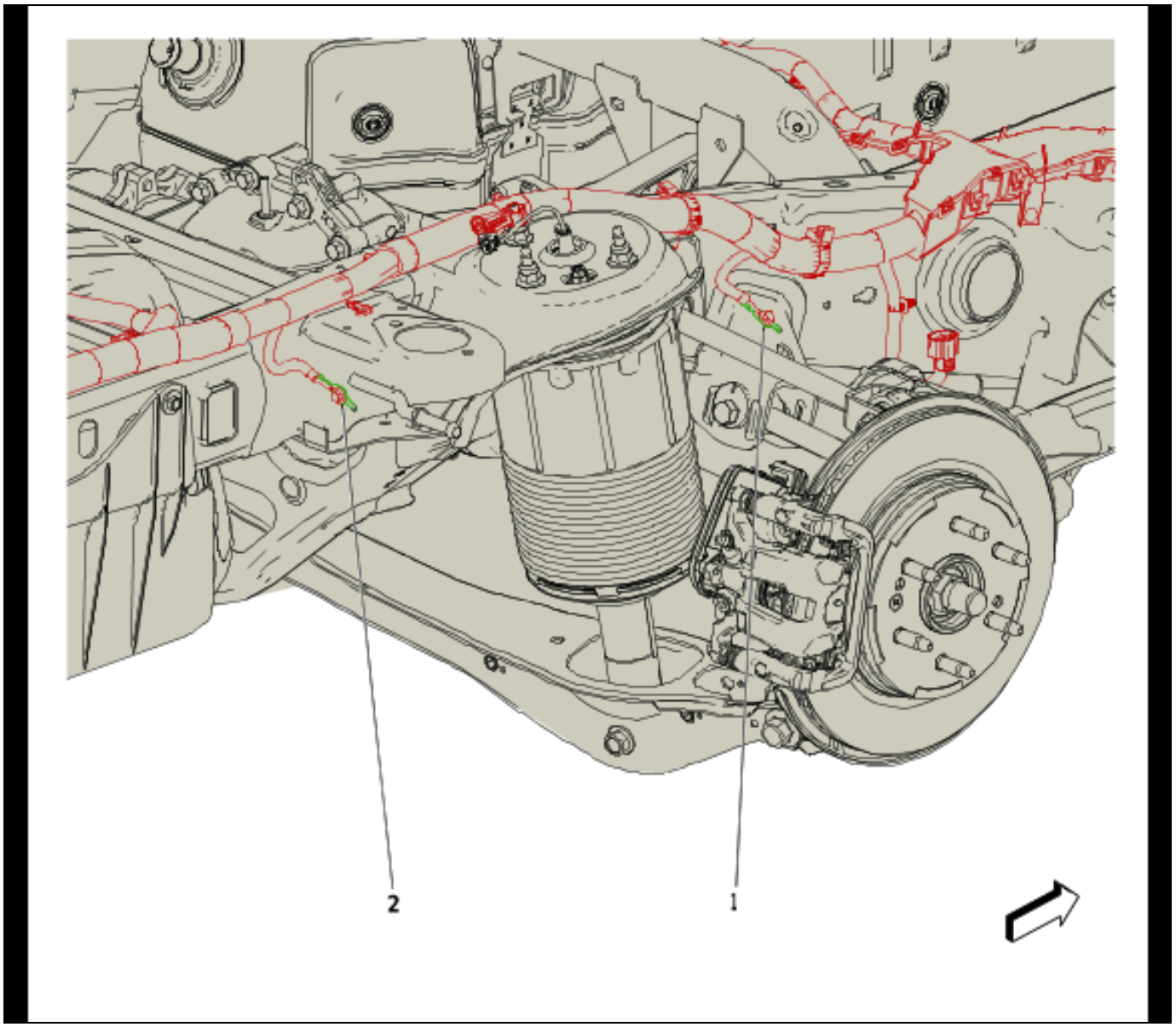

5869982

Items

(1) G404 Chassis Wiring Harness

(2) G407 Chassis Wiring Harness

G405

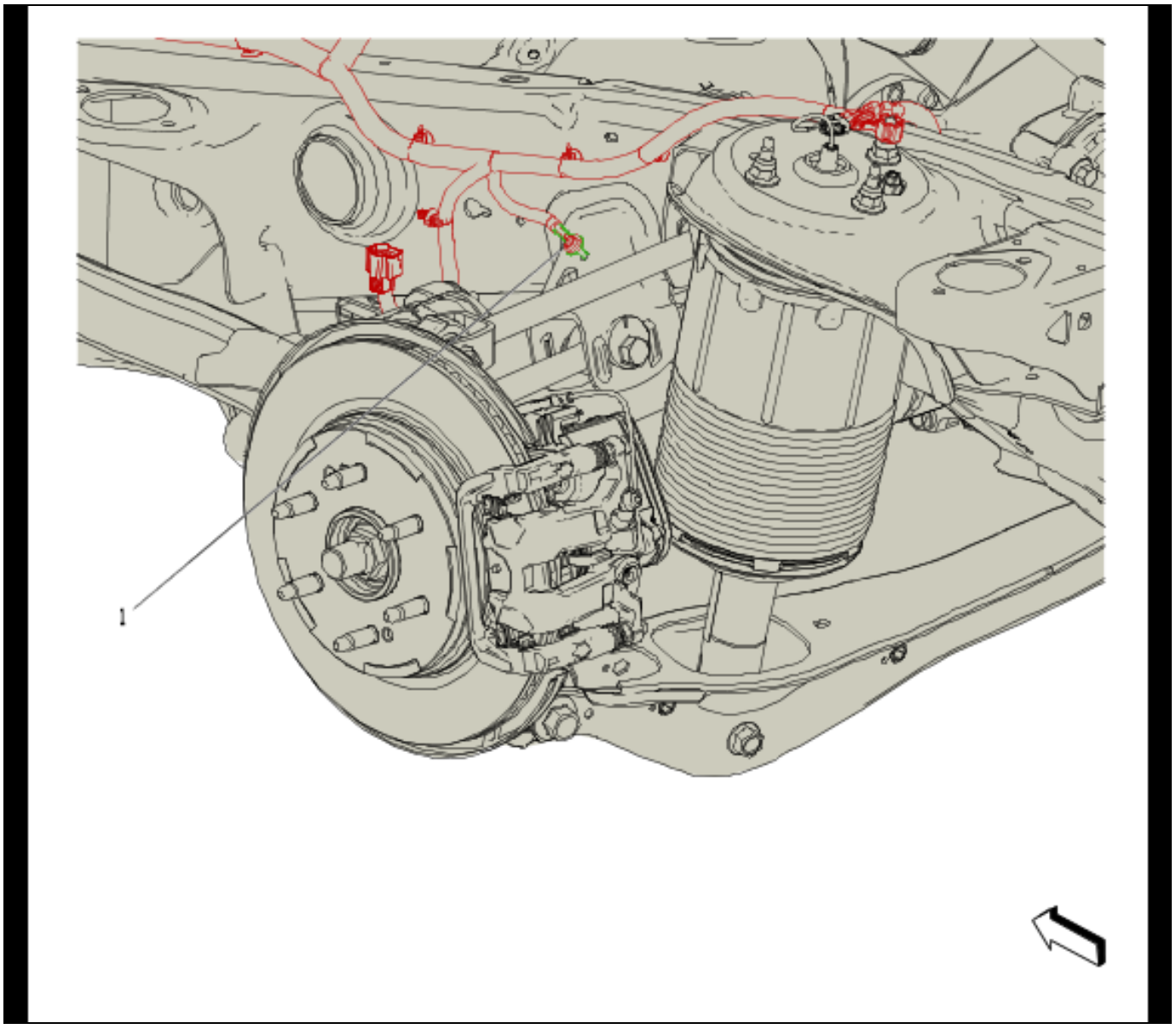

5869983

Items

(1) G405A Chassis Wiring Harness

G409

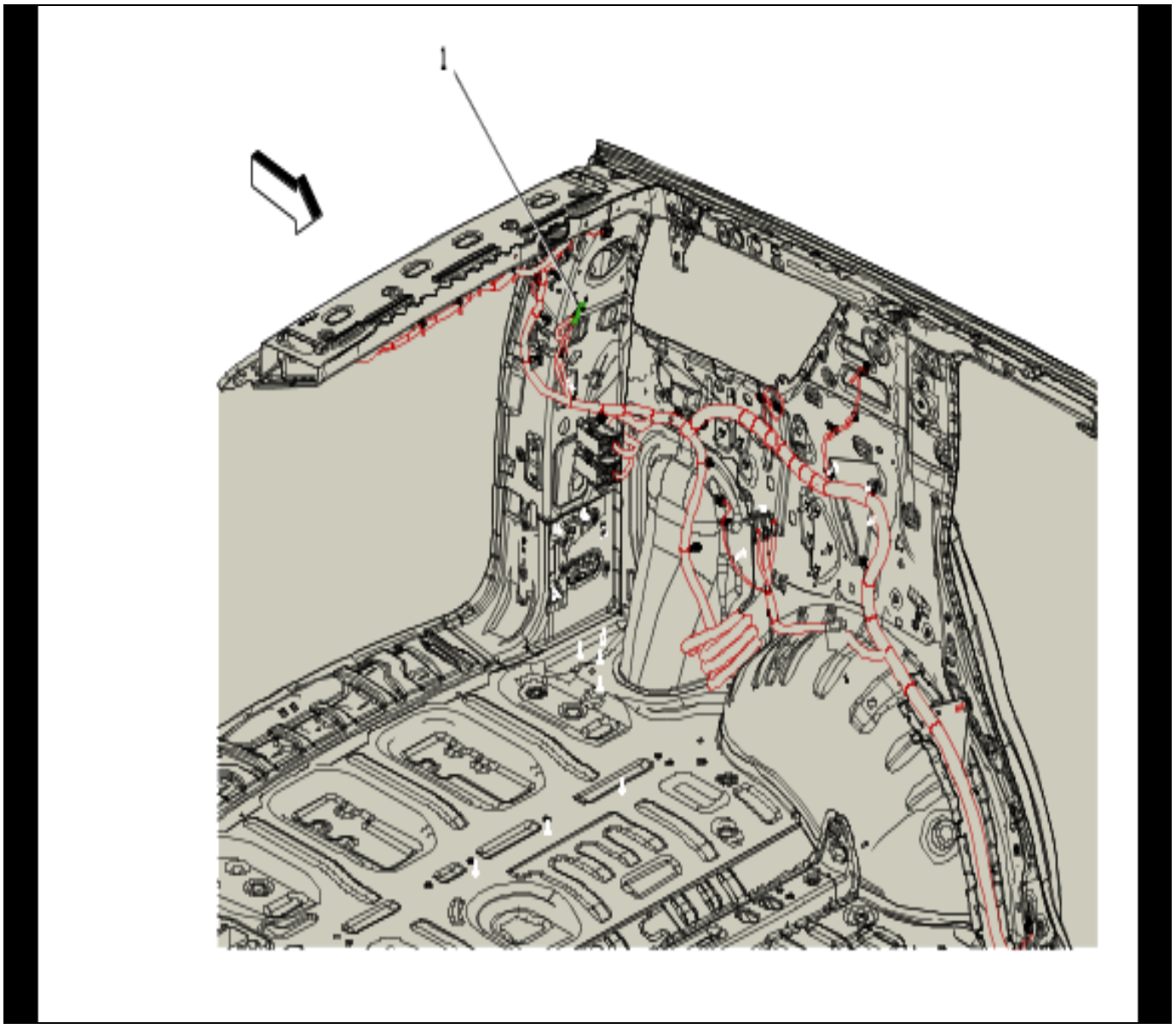

5869984

Items

(1) G409 Body Wiring Harness

Power Outlets

Schematic and Routing Diagrams

Cigar Lighter/Power Outlet Schematics (USB Receptacles (-UW9))

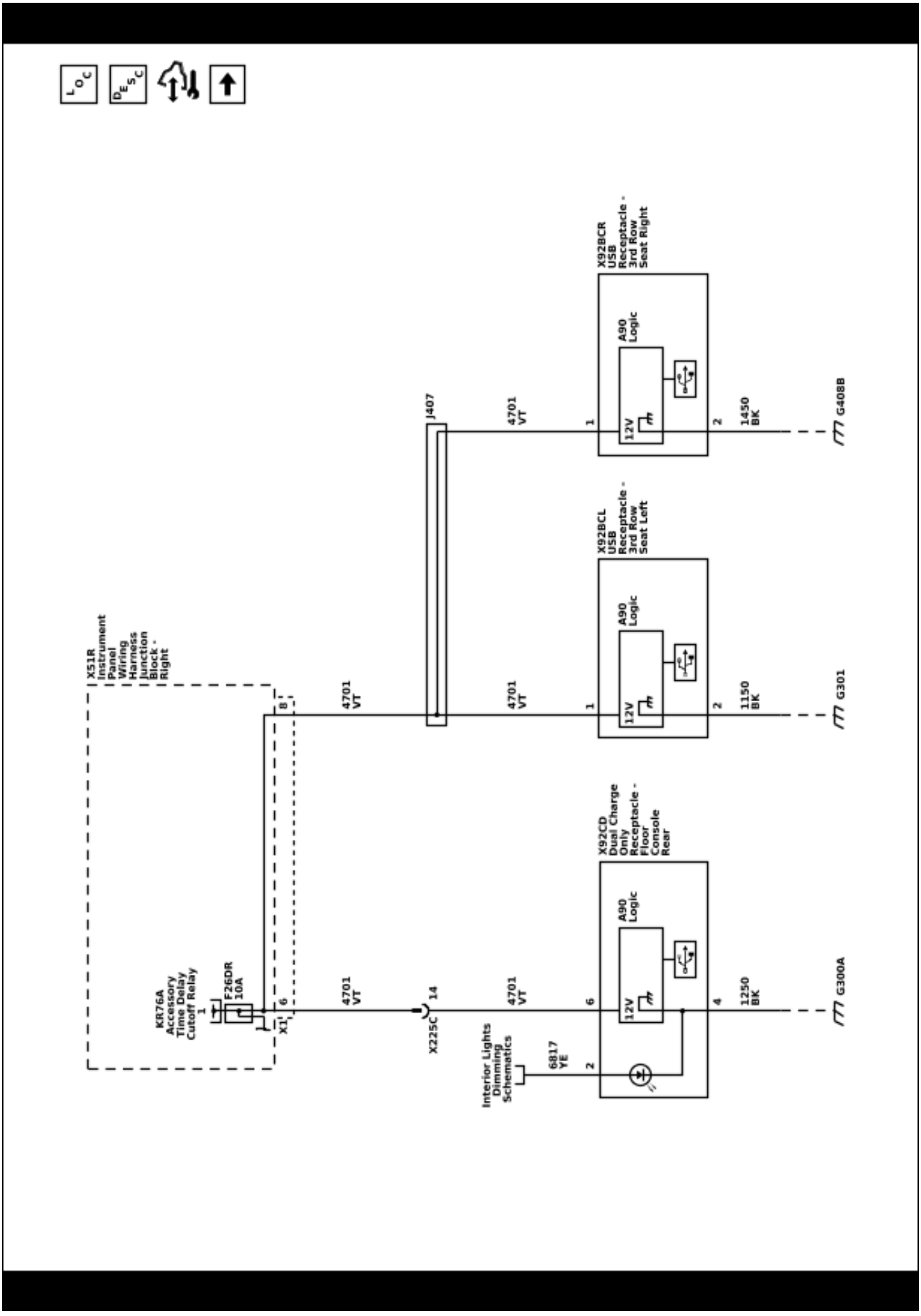

Cigar Lighter/Power Outlet Schematics (Power and Cigarette Lighter Receptacles)

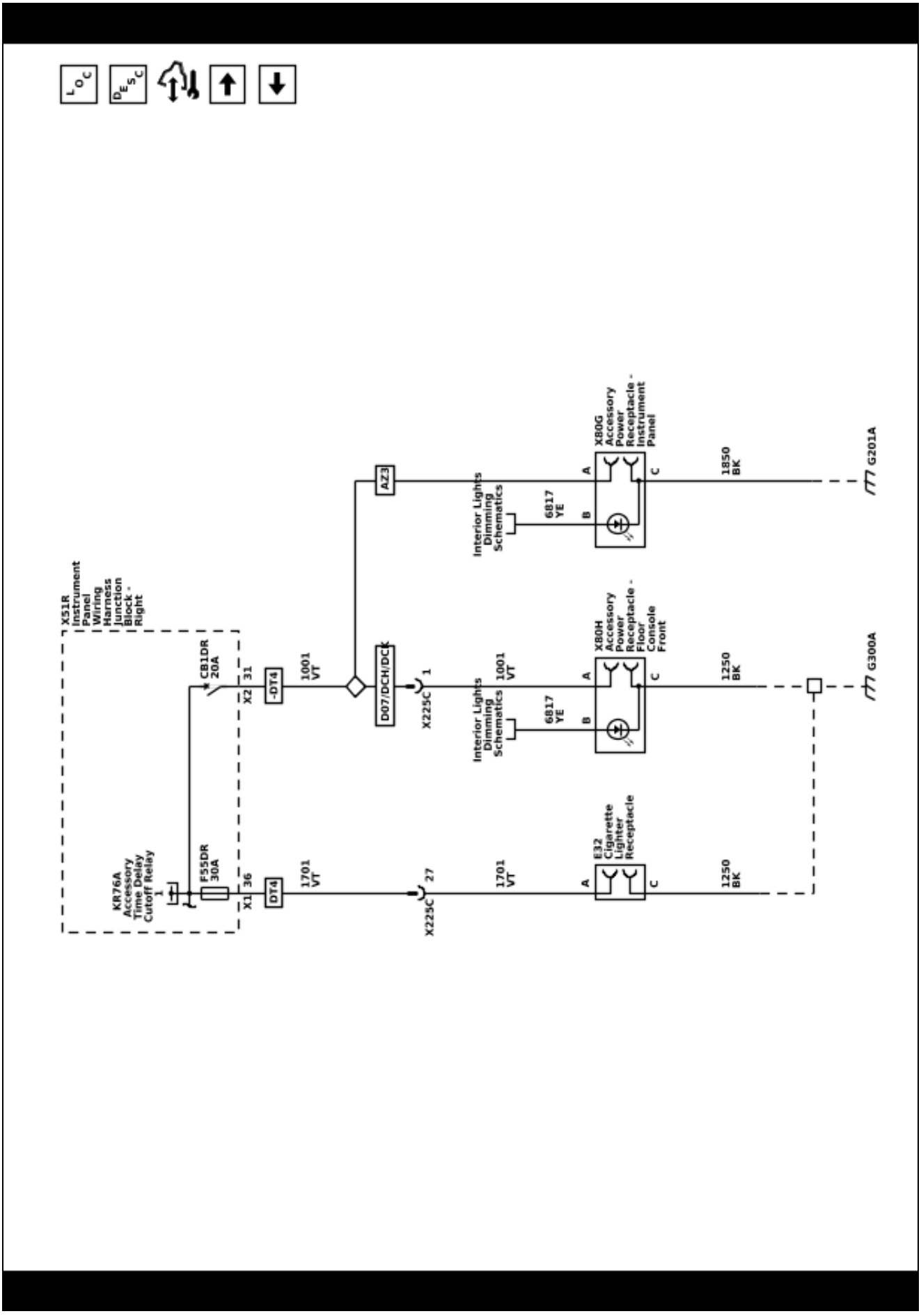

Cigar Lighter/Power Outlet Schematics (Inverter Module Power, Ground, Serial Data, and Controls (KI4/KI5))

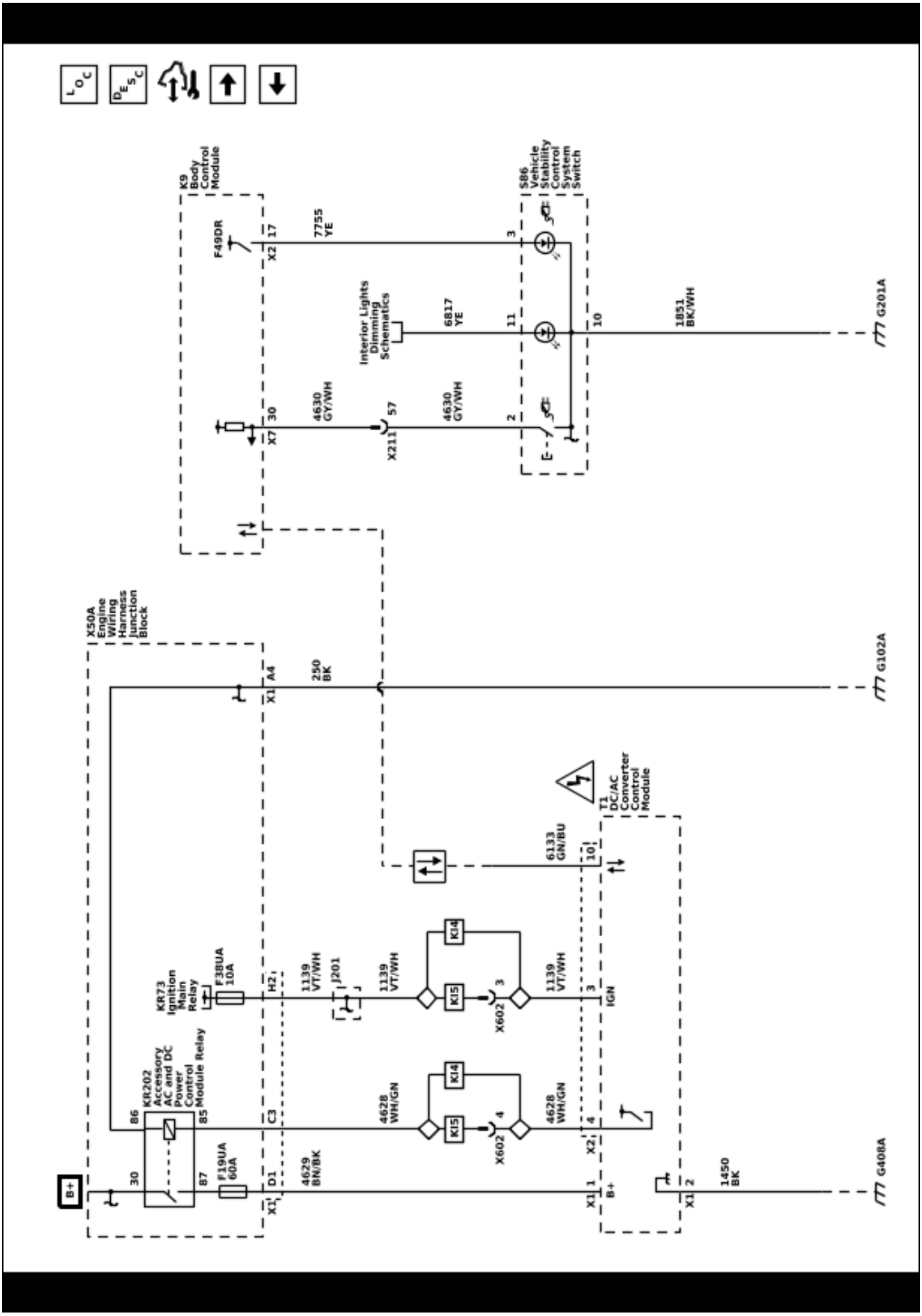

Cigar Lighter/Power Outlet Schematics (110V AC Accessory Power Receptacles (KI4))

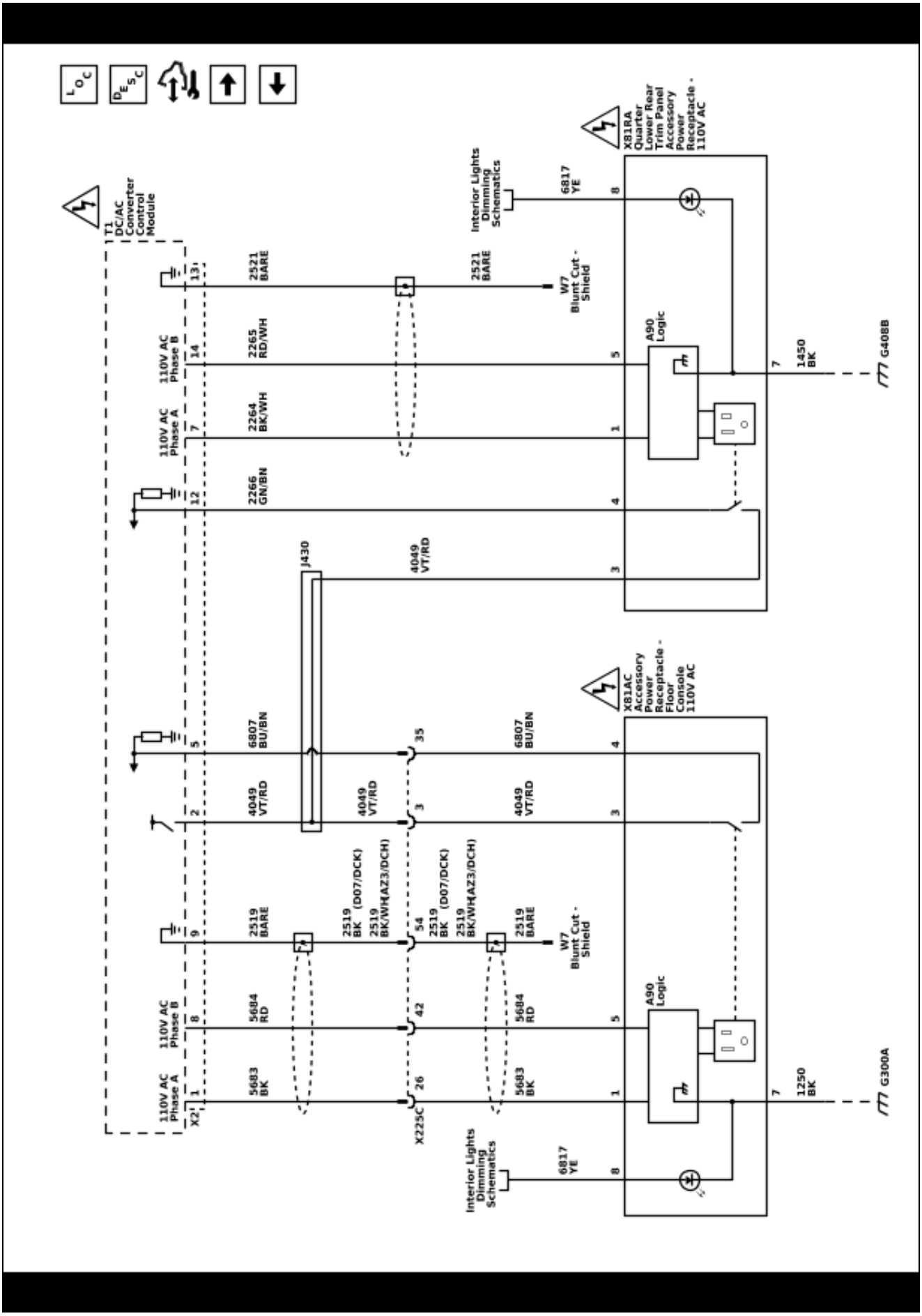

5862065

Cigar Lighter/Power Outlet Schematics (230V AC Accessory Power Receptacles (KI5))

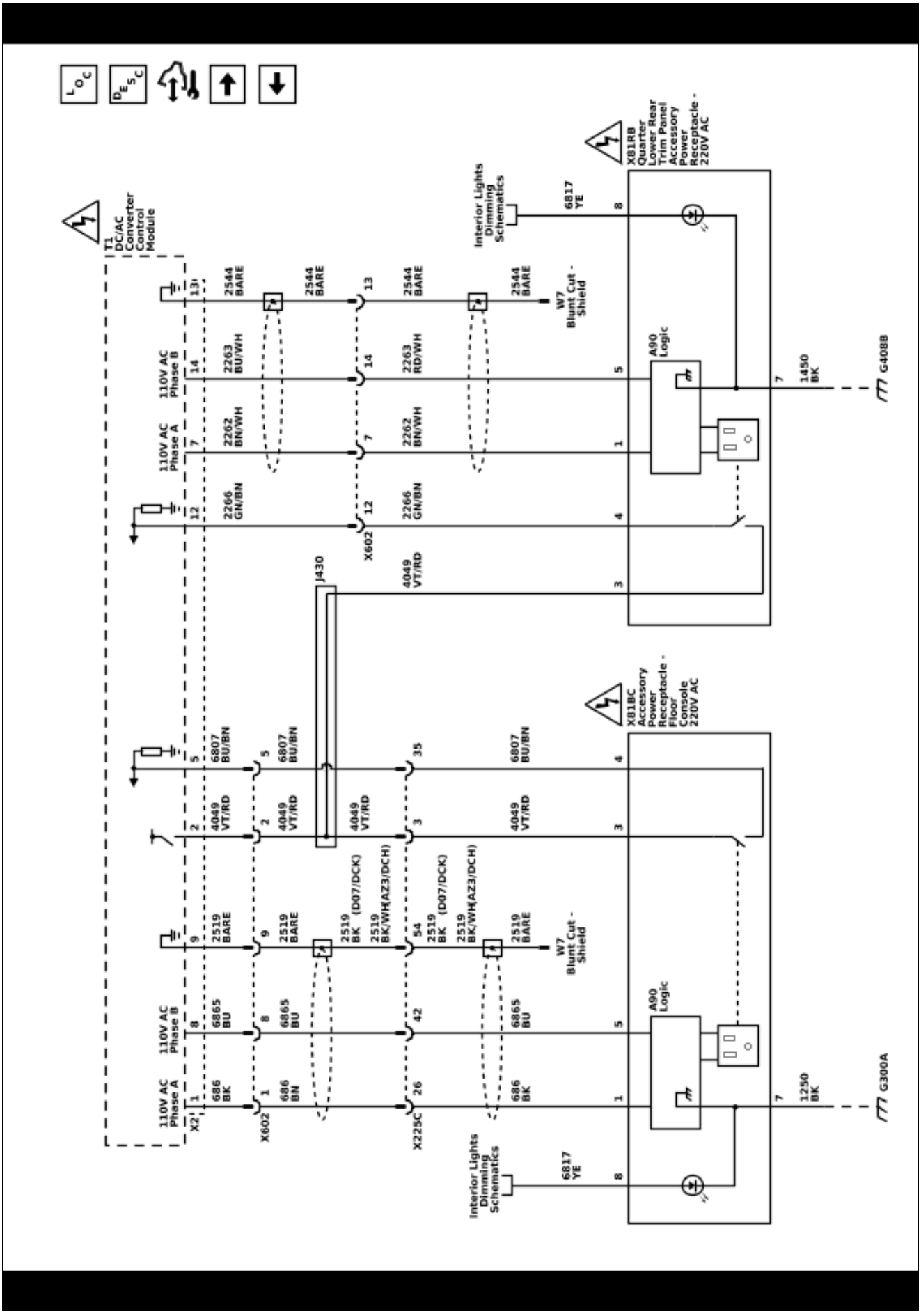

Cigar Lighter/Power Outlet Schematics (Wireless Charging (K4C))

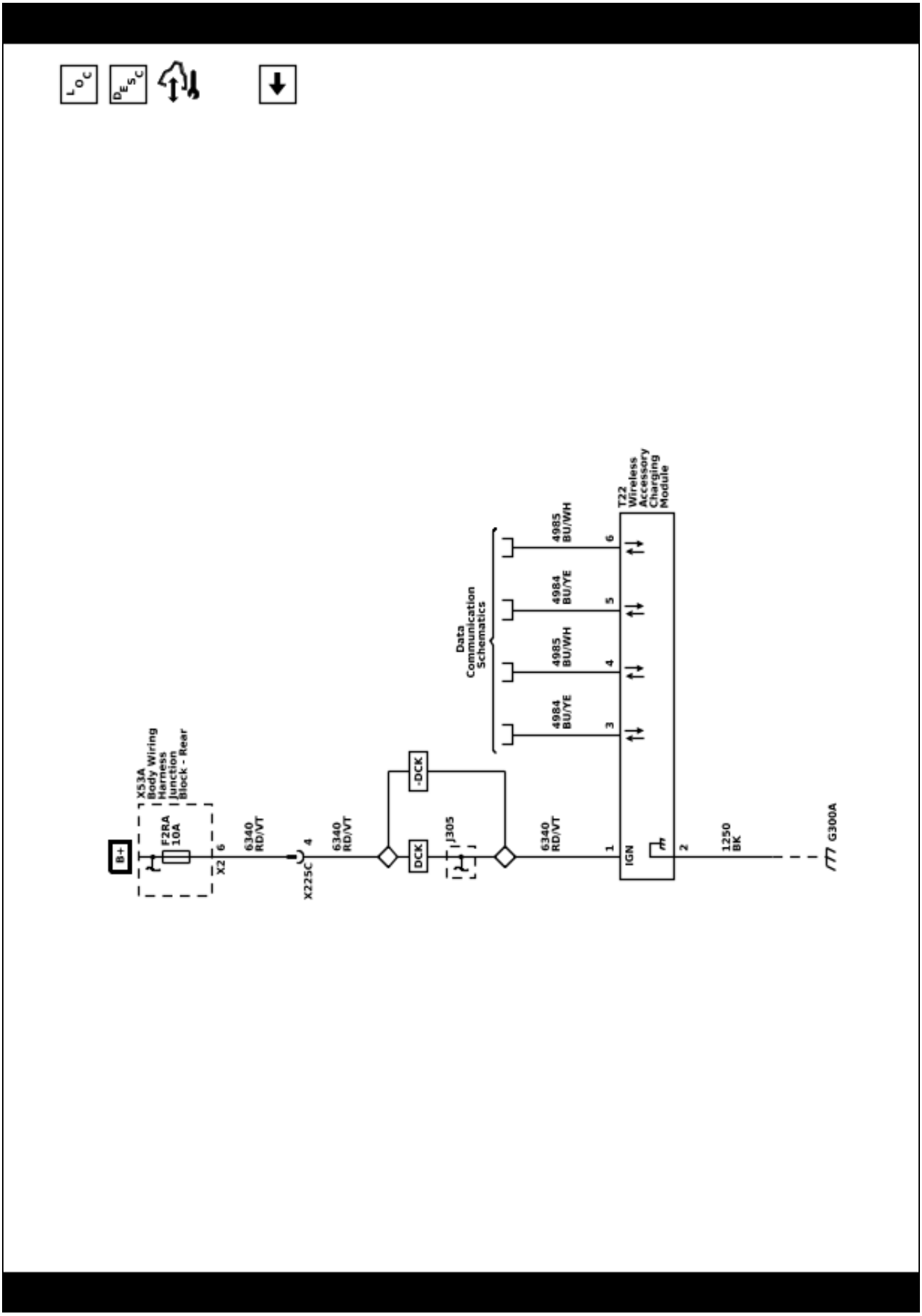

Description and Operation

Mobile Device Wireless Charger Description and Operation

Mobile Device Wireless Charging System

The Mobile Device Wireless Charging System (WCS) is an system for wirelessly charging mobile devices. It is capable of charging the batteries of compatible mobile devices. A compatible device is one that is compliant with Power Matters Alliance (PMA), Wireless Power Consortium (WPC) Standard, or Alliance for Wireless Power (A4WP), meaning that it is equipped with a PMA, WPC, or A4WP wireless charge “receiver” that will work with the charge “transmitter” installed in the vehicle. The devices may utilize built-in charging circuitry or an adapter (external plug-in device which contains the charging circuitry). To check for phone or other device compatibility, refer to GM Total Connect.

Warning: Remove all objects from the charging pad before charging your mobile device. Objects, such as coins, keys, rings, paper clips, or cards, between the phone and charging pad will become very hot. On the rare occasion that the charging system does not detect an object, and the object gets wedged between the phone and charger, remove the phone and allow the object to cool before removing it from the charging pad, to prevent burns.

Charging

To charge a device, place it on the charging surface in the vehicle. There is a charging coil located in the center of the charging surface. The device has a charging coil typically near the center of the device. These coils must be lined up in order for charging to proceed. When the interruptible retained accessory power (IRAP) relay is closed (this is true typically when vehicle ignition is in Run or Accessory position), the WCS will detect the device, establish communications with the device to confirm it is a compatible device, and then deliver charging power to the device via wireless interface. The WCS will be able to deliver 5W to 15W of power as requested by the compatible device. It shall only enter a charging state if communication is established and a compatible device is identified.

The WCS shall not enter a charging state if there is no communication established with a compatible device. Due to differences in objects, a foreign object detection protocol is employed to detect a non-compliant device and hold power transfer initiation until the non-compliant object has been removed and a compliant object has been detected. The charger monitors its internal temperature and will shut down if the charger temperature exceeds 185F (85C).

Indicator

The body control module will detect the device battery is charging and send a serial data message on the GMLAN bus to the radio display. The radio display will indicate a device is currently charging by displaying a lightning bolt over the phone icon. When the indicator is toggling on and off this indicates a thermal limit has been reached and the device will not charge. For more information refer to the owners manual.

Cooling

The wireless charger is kept cool using the HVAC system. There is a dedicated HVAC duct that connects to the Wireless Charging Module bracket (which holds the module and the mat).

Power Outlets Description and Operation

12 Volt Power Outlet Receptacle Description and Operation

The 12 V accessory power receptacles are supplied with power by the accessory relay.

The vehicle is fitted with a cigarette lighter and/or with a 12 V accessory power receptacle. The cigarette lighter and accessory power outlets are controlled by an ignition operated relay. The accessory power receptacle and cigarette lighter are operational when the ignition is turned to either the On or the Accessories positions. To operate the cigarette lighter, press in the lighter knob. When the element is hot, the lighter automatically pops out and is ready for use.

110 Volt Power Outlet Receptacle System Description

Power Outlets Block Diagram

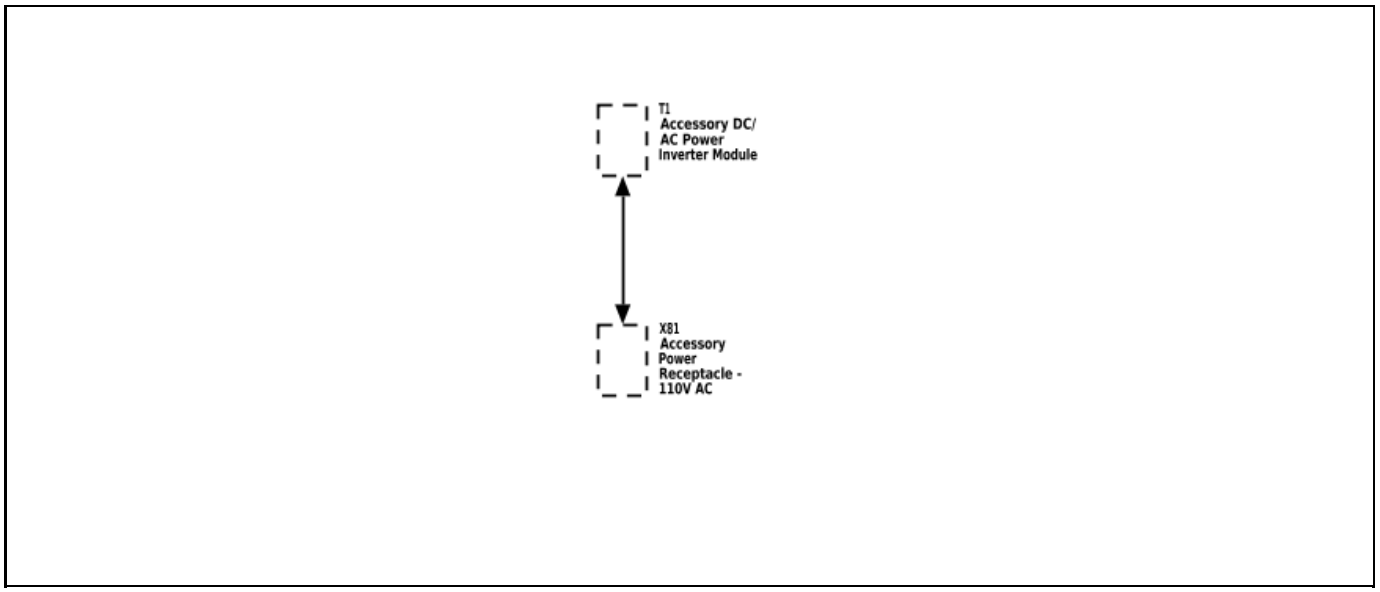

3403851

The alternating current (AC) accessory power outlet system consists of the accessory DC/AC power inverter module and the accessory power receptacle – 110 V AC. The accessory DC/AC power inverter module converts 12 V direct current (DC) battery power to 110 V at 60 Hertz (Hz) AC power to operate AC powered devices. The accessory DC/AC power inverter module provides up to 150 watts of power. The accessory power receptacle – 110 V AC provides the usual connection for AC powered devices.

110 Volt Power Outlet Receptacle System Operation

The accessory DC/AC power inverter module receives fuse protected battery voltage and is connected to the 12 V electrical system ground. The accessory power receptacle – 110 V AC has an internal switch, that detects when an AC powered device is plugged into the outlet. When the ignition is ON, and an AC powered device is plugged into the accessory power receptacle – 110 V AC, the normally open switch in the accessory power receptacle – 110 V AC, closes. When the accessory DC/AC power inverter module detects the voltage from the accessory power receptacle – 110 V AC switch, the inverter module begins to supply 110 V AC to the accessory power receptacle – 110 V AC after a 1.5 s delay. The accessory AC power system is protected against circuit overload and circuit shorts to ground.

110 Volt Power Outlet Receptacle Isolation Fault Protection

The accessory DC/AC power inverter module contains a ground fault circuit interrupter (GFCI). GFCI monitors the 110 V circuit for a short to vehicle chassis ground. If a 110 V AC short to ground is detected, the accessory DC/AC power inverter module will turn OFF. The module remains OFF, until the AC powered device is unplugged from the outlet, and then plugged into the outlet after a 3 s delay.

110 Volt Power Outlet Receptacle Overload Shutdown

The accessory DC/AC power inverter module will turn OFF if the current in the 110 V circuit is greater than 3.8 A for 1 s , or 2.5 A for 10 s . The module will turn ON again, when the AC powered device is unplugged from the outlet, and then plugged into the outlet after a 3 s delay.

110 Volt Power Outlet Receptacle Internal Shutdown

The accessory DC/AC power inverter module will turn OFF if the B+ supply voltage is greater than 16.5 V or less than 11 V. The module will also turn OFF if the device temperature is greater than 85°C (185°F). The module will turn ON again, after the shutdown condition is corrected, and the AC powered device is unplugged from the outlet, and then plugged into the outlet.

230 Volt Power Outlet Receptacle System Description

Power Outlets Block Diagram

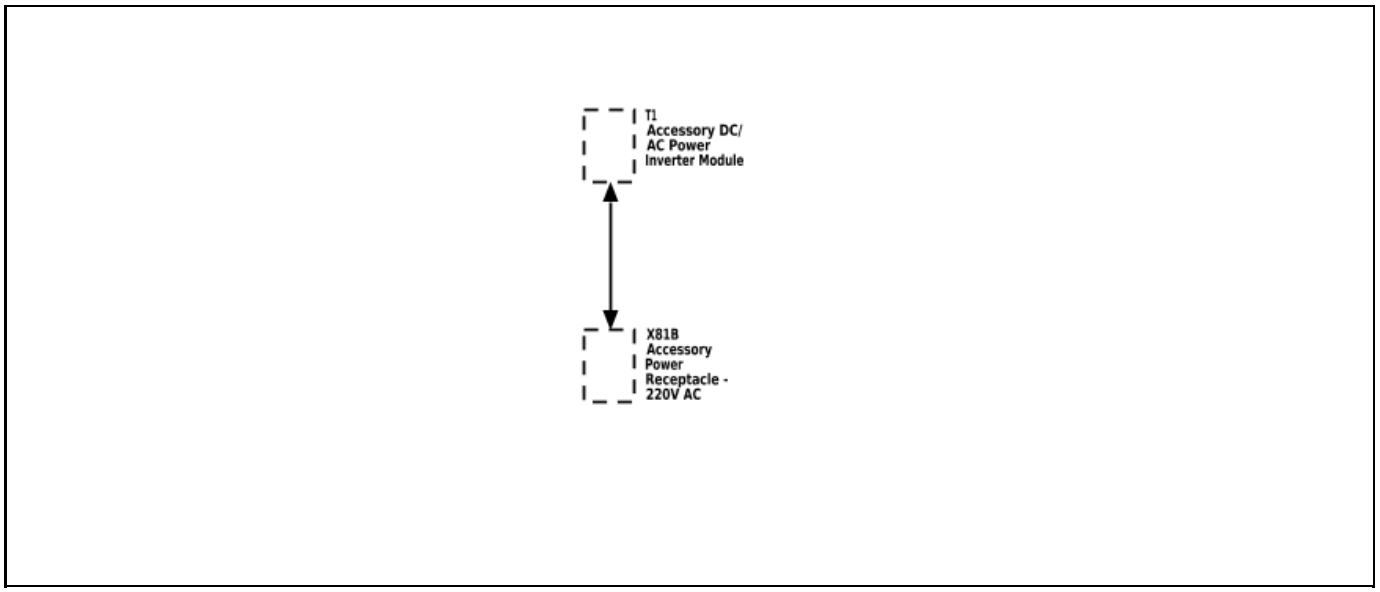

3403853

The alternating current (AC) accessory power outlet system consists of the accessory DC/AC power inverter module and the accessory power receptacle – 220V AC. The accessory DC/AC power inverter module converts 12 V direct current (DC) battery power to 220–230 V at 50 Hertz (Hz) AC power to operate AC powered devices. The accessory DC/AC power inverter module provides up to 150 watts of power. The accessory power receptacle – 220V AC provides the usual connection for AC powered devices.

230 Volt Power Outlet Receptacle System Operation

The accessory DC/AC power inverter module receives fuse protected battery voltage and is connected to the 12 V electrical system ground. The accessory power receptacle – 220V AC has an internal switch, that detects when an AC powered device is plugged into the outlet. When the ignition is ON, and an AC powered device is plugged into the accessory power receptacle – 220V AC, the normally open switch in the accessory power receptacle – 220V AC, closes. When the accessory DC/AC power inverter module detects the voltage from the accessory power receptacle – 220V AC switch, the inverter module begins to supply 220–230 V AC to the accessory power receptacle – 220V AC after a 1.5 second delay. The accessory AC power system is protected against circuit overload and circuit shorts to ground.

230 Volt Power Outlet Receptacle Isolation Fault Protection

The accessory DC/AC power inverter module contains a ground fault circuit interrupter (GFCI). GFCI monitors the 230 V circuit for a short to vehicle chassis ground. If a 230 V AC short to ground is detected, the accessory DC/AC power inverter module will turn OFF. The module remains OFF, until the AC powered device is unplugged from the outlet, and then plugged into the outlet after a 3 s delay.

230 Volt Power Outlet Receptacle Overload Shutdown

The accessory AC/DC power control module will turn OFF if the current in the 230 V circuit is greater than 3.8 A for 1 second, or 2.5 A for 10 seconds. The module will turn ON again, when the AC powered device is unplugged from the outlet, and then plugged into the outlet after a 3 second delay.

230 Volt Power Outlet Receptacle Internal Shutdown

The accessory DC/AC power inverter module will turn OFF if the B+ supply voltage is greater than 16.5 V or less than 11 V. The module will also turn OFF if the device temperature is greater than 85°C (185°F). The module will turn ON again, after the shutdown condition is corrected, and the AC powered device is unplugged from the accessory power receptacle – 220V AC, and then plugged into the accessory power receptacle – 220V AC.

USB Receptacle Description and Operation (USS)

The vehicle is fitted with USB charge port receptacles at the rear of the floor console. These USB receptacles are for charging devices only. The USB receptacles are controlled by an ignition operated relay and are operational when the ignition is turned to either the On or the Accessories positions.

Wiring Systems and Power Management

Schematic and Routing Diagrams

Power Distribution Schematics (X50B Battery Distribution Engine Compartment Fuse Block)

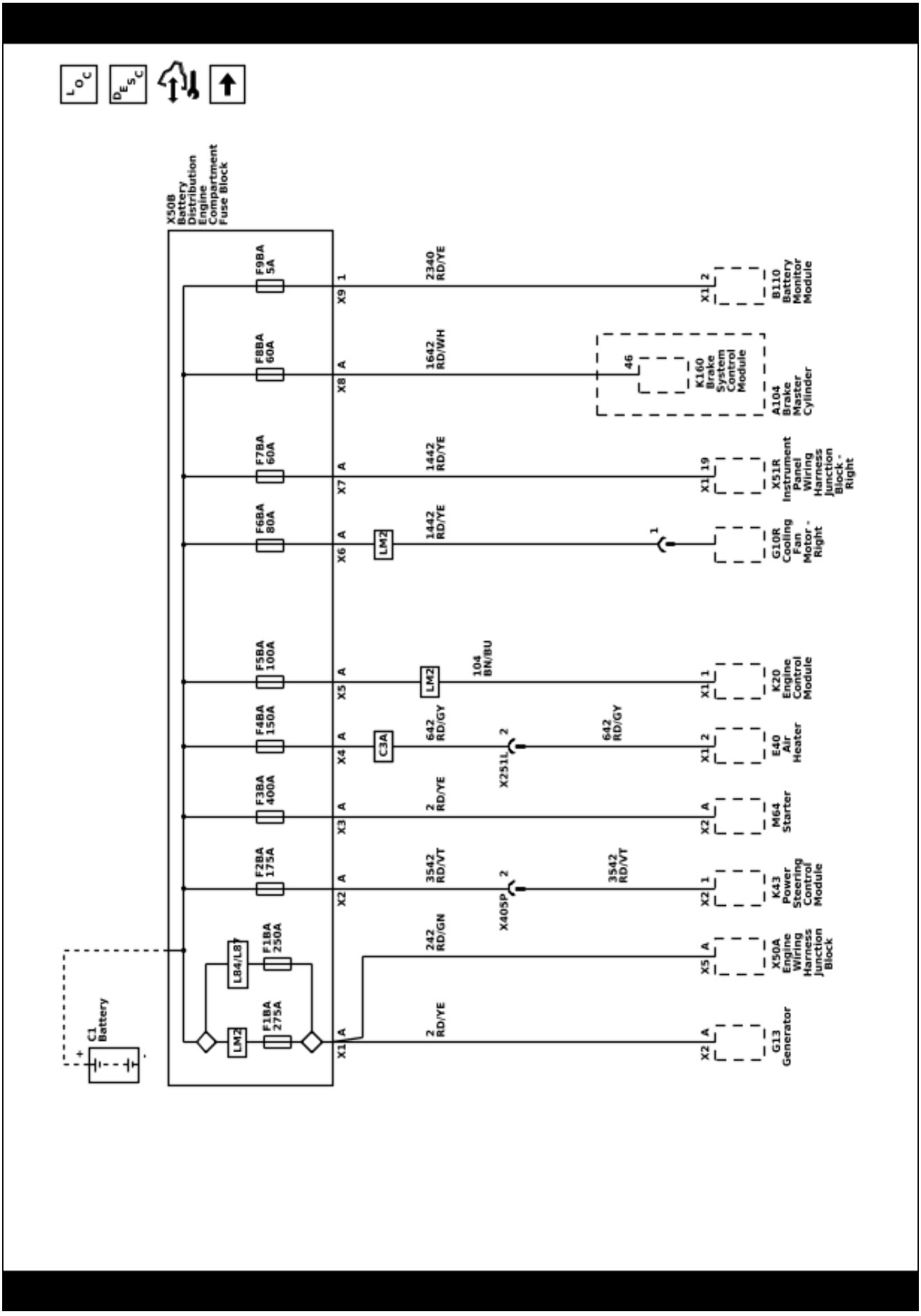

Power Distribution Schematics (X50A Engine Wiring Harness Junction Block - B+ Bus (1 of 2))

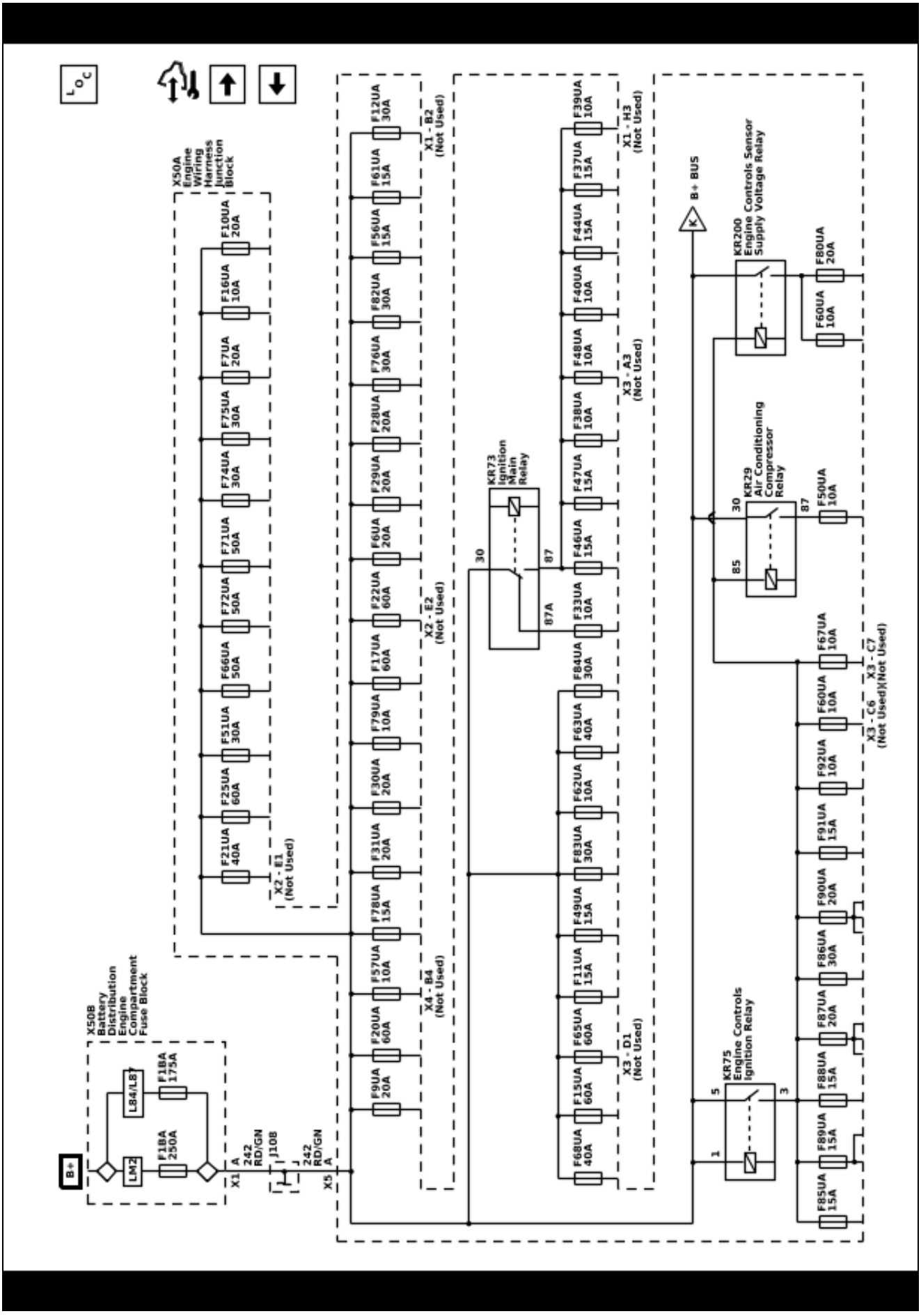

Power Distribution Schematics (X50A Engine Wiring Harness Junction Block - B+ Bus (2 of 2))

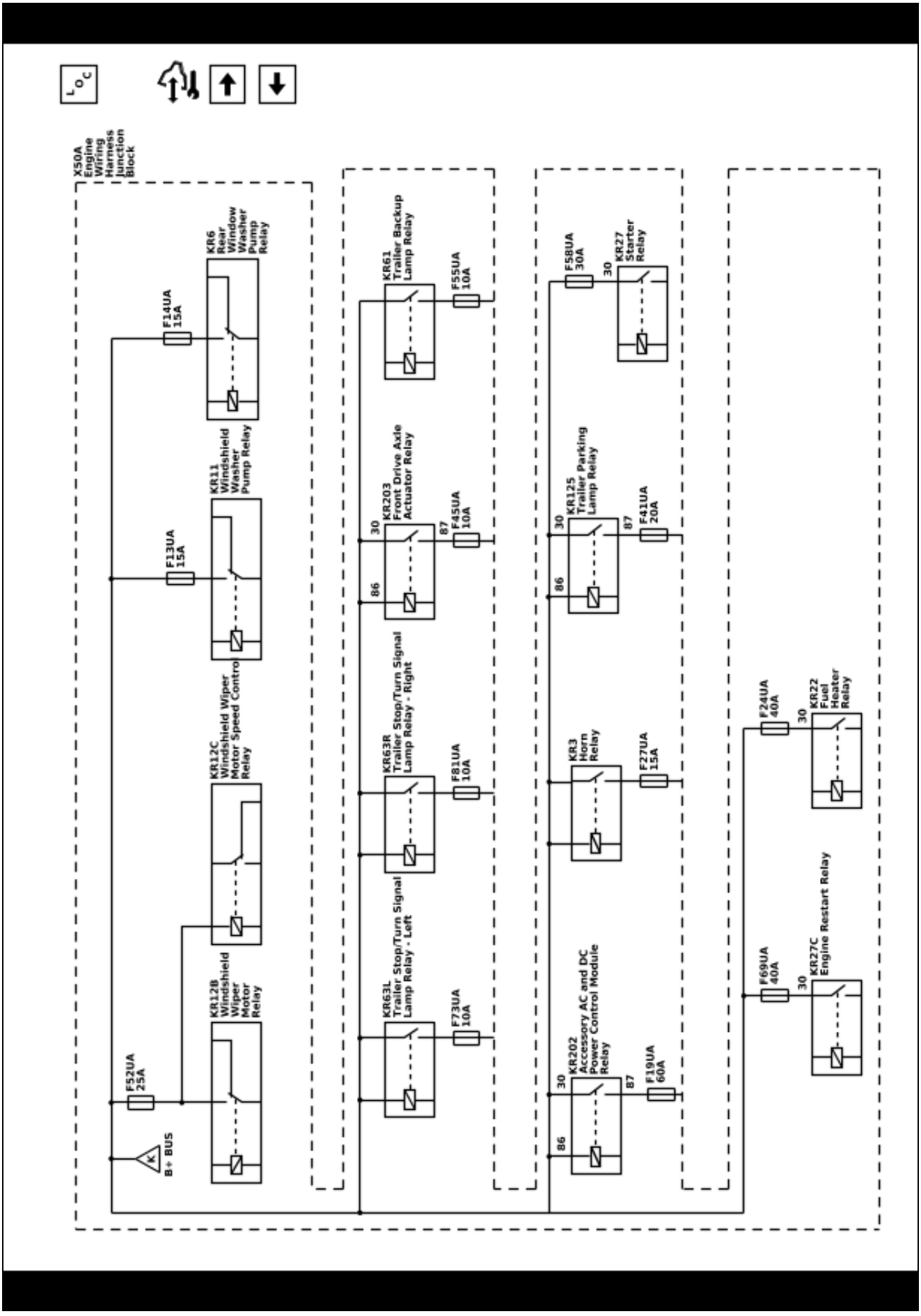

Power Distribution Schematics (F6UA, F7UA, F9UA, F10UA, F16UA, F25UA, F28UA, F29UA, F30UA, F31UA, F61UA, and F68UA Fuses)

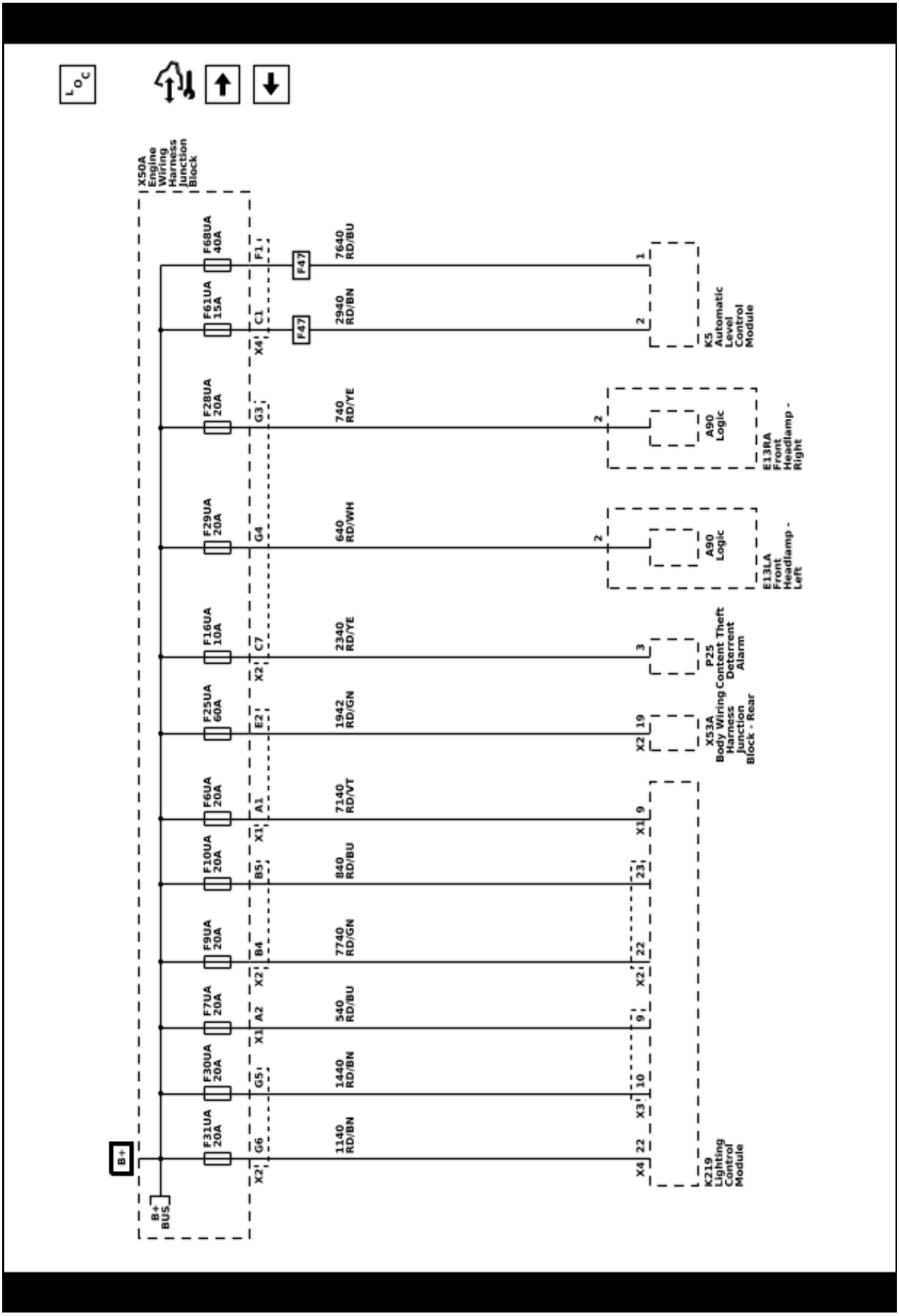

Power Distribution Schematics (F11UA, F13UA, F50UA, F55UA, F58UA, F69UA, and F79UA Fuses)

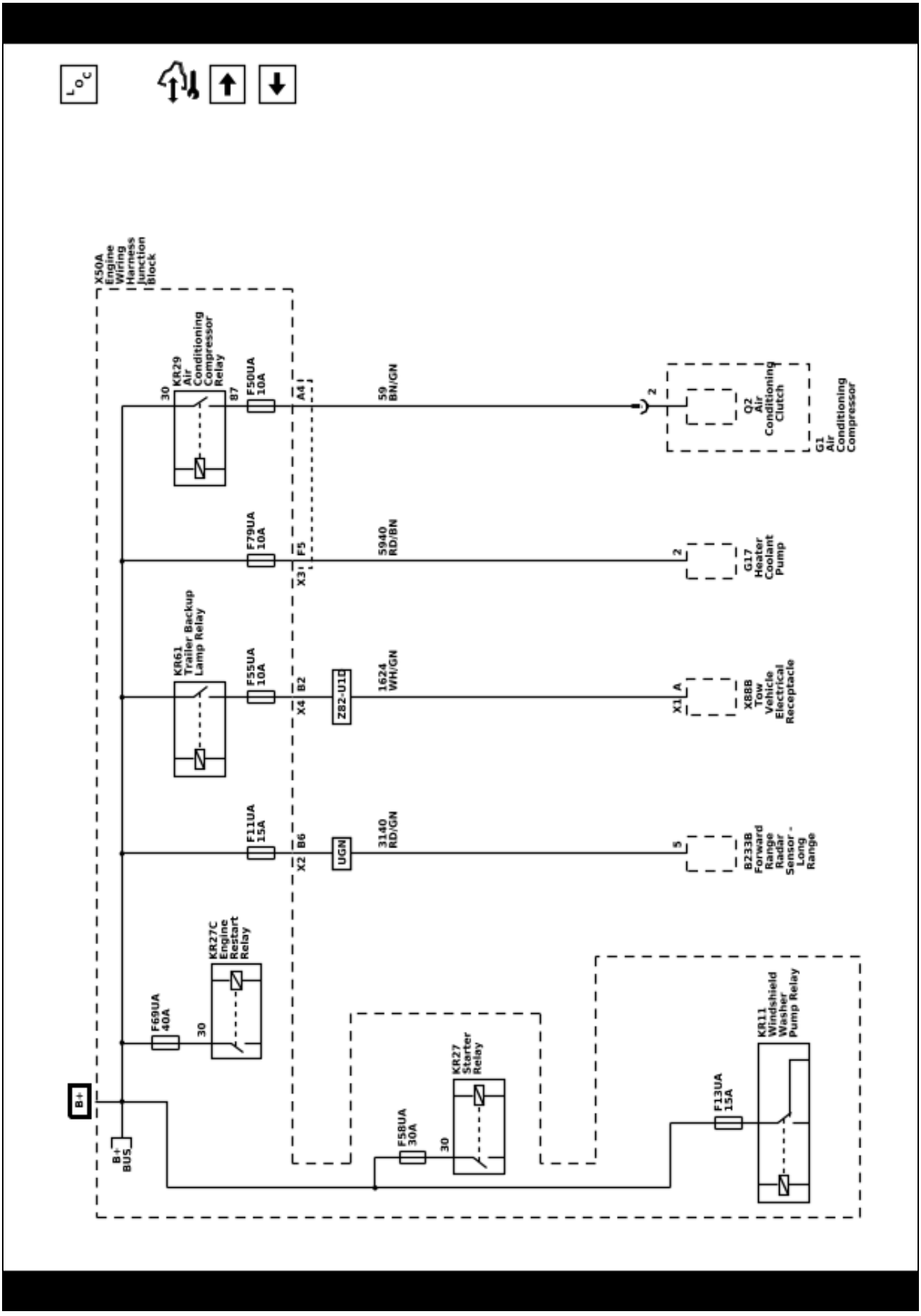

Power Distribution Schematics (F14UA, F15UA, F27UA, F73UA, and F81UA Fuses)

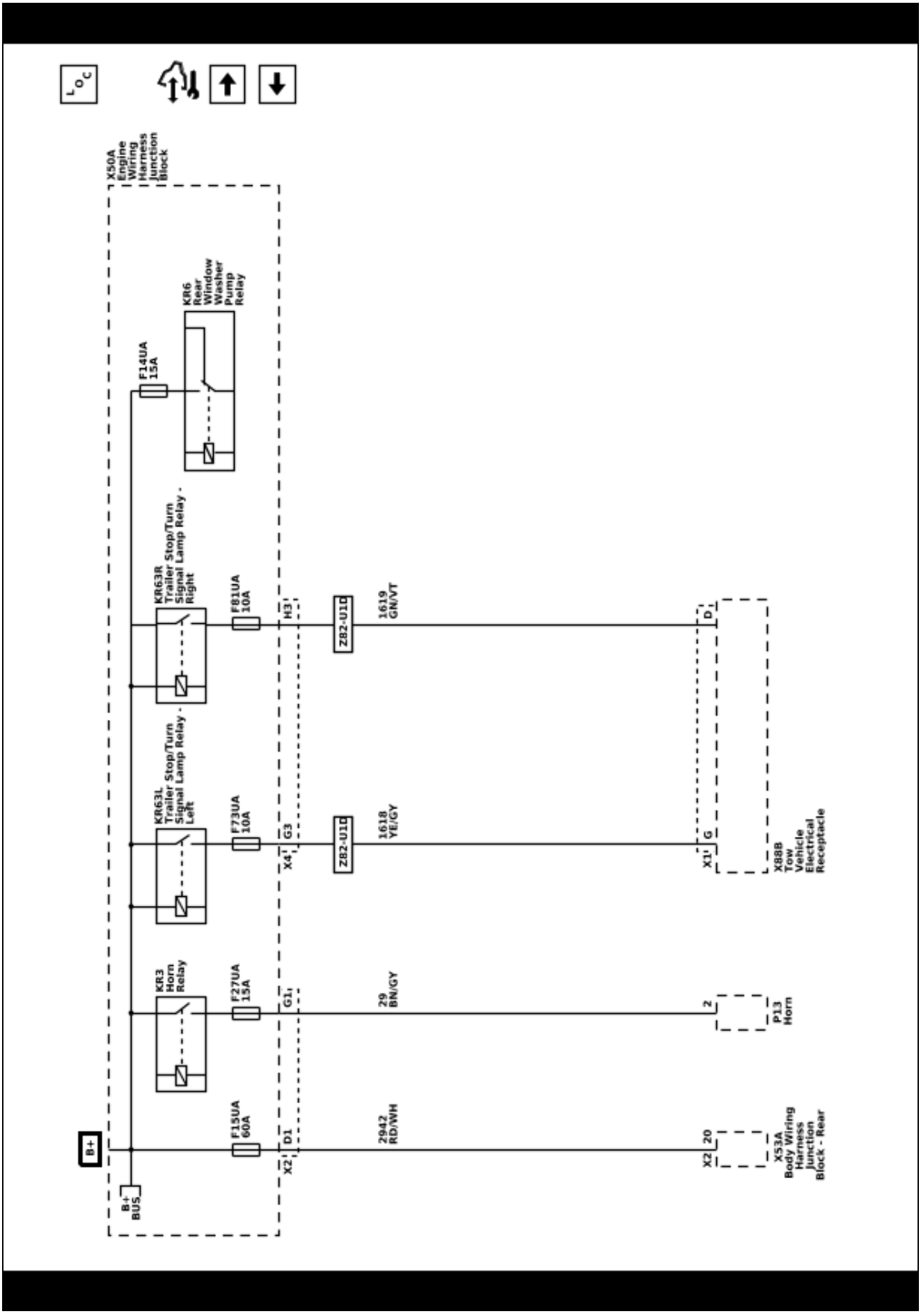

Power Distribution Schematics (F19UA, F22UA, F49UA, F56UA, F62UA, F63UA, F76UA, F82UA, F83UA, and F84UA Fuses)

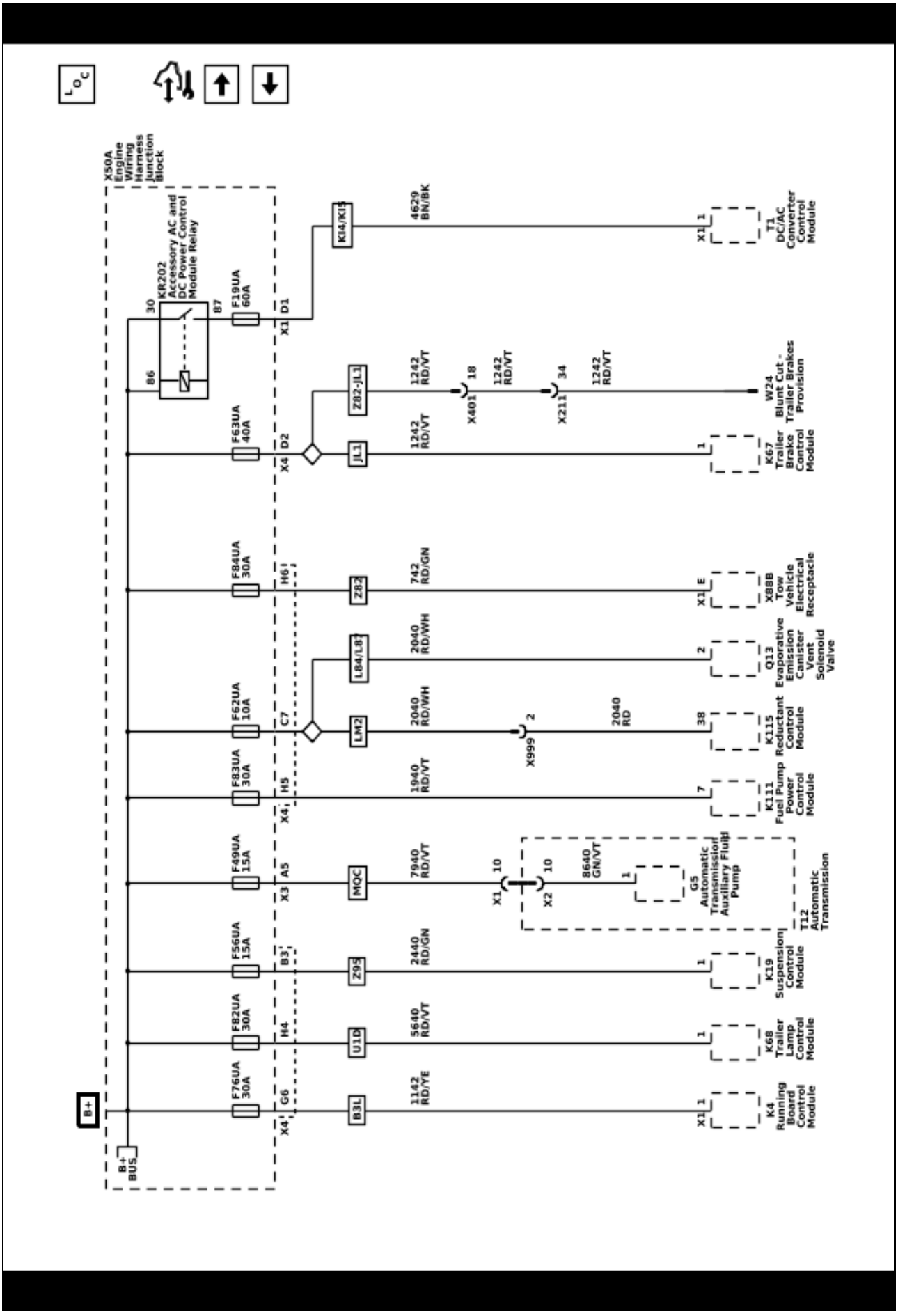

Power Distribution Schematics (F17UA, F20UA, F51UA, F66UA, F71UA, F72UA, F74UA, F75UA, and F78UA Fuses)

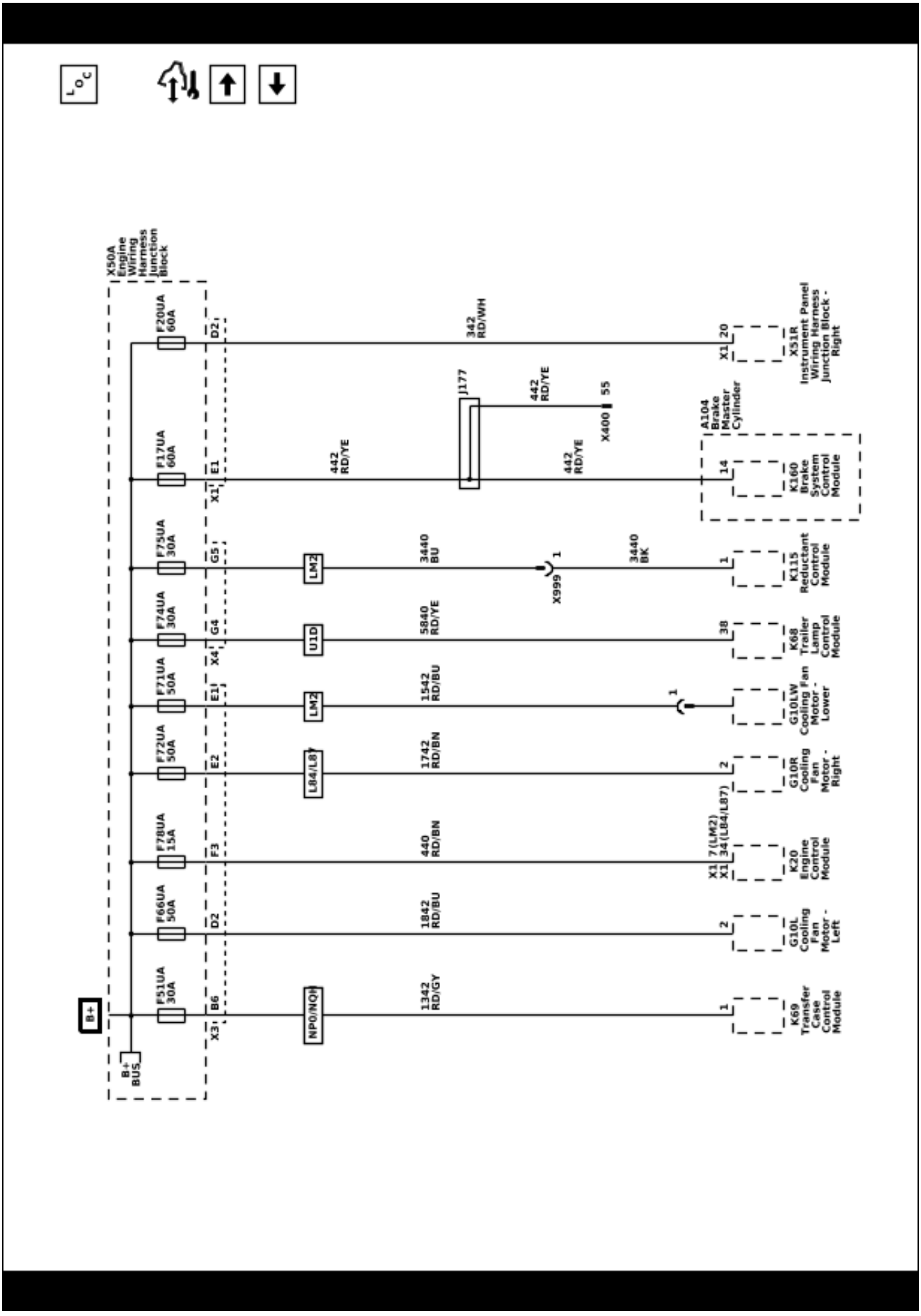

Power Distribution Schematics (F33UA, F38UA, F39UA, F46UA, and F47UA Fuses)

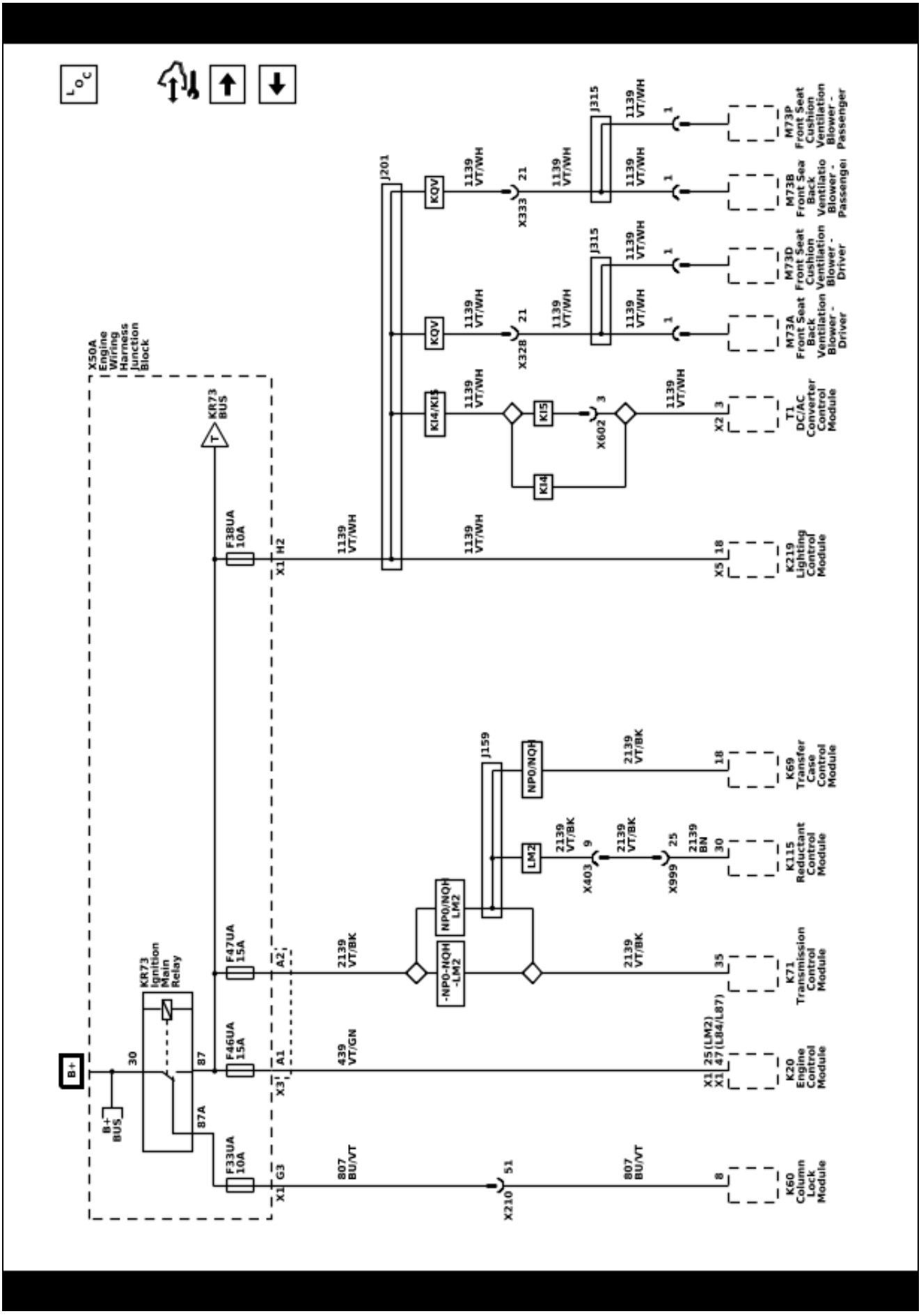

Power Distribution Schematics (F37UA, F40UA, and F44UA Fuses)

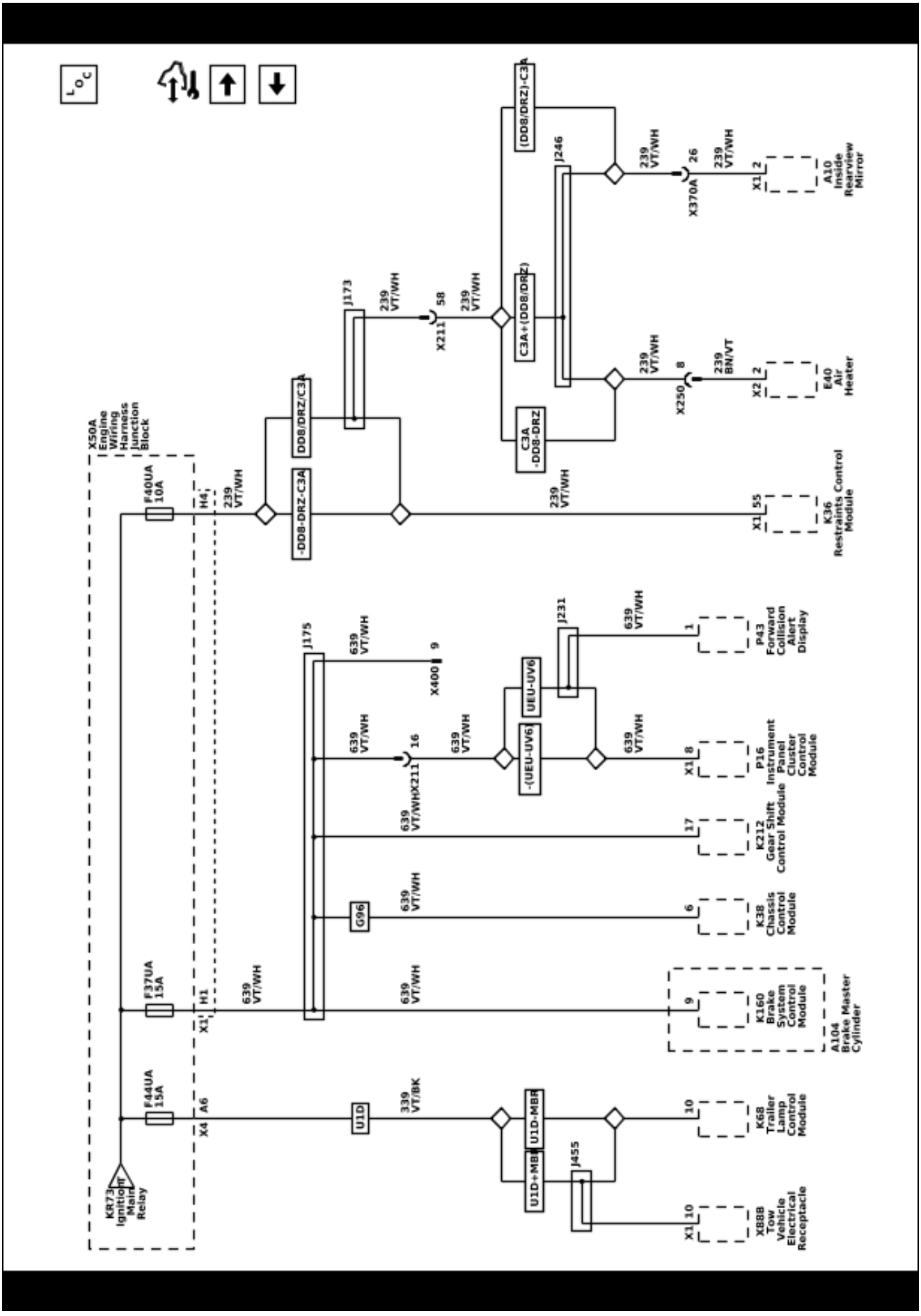

Power Distribution Schematics (F41UA, F45UA, and F89UA Fuses)

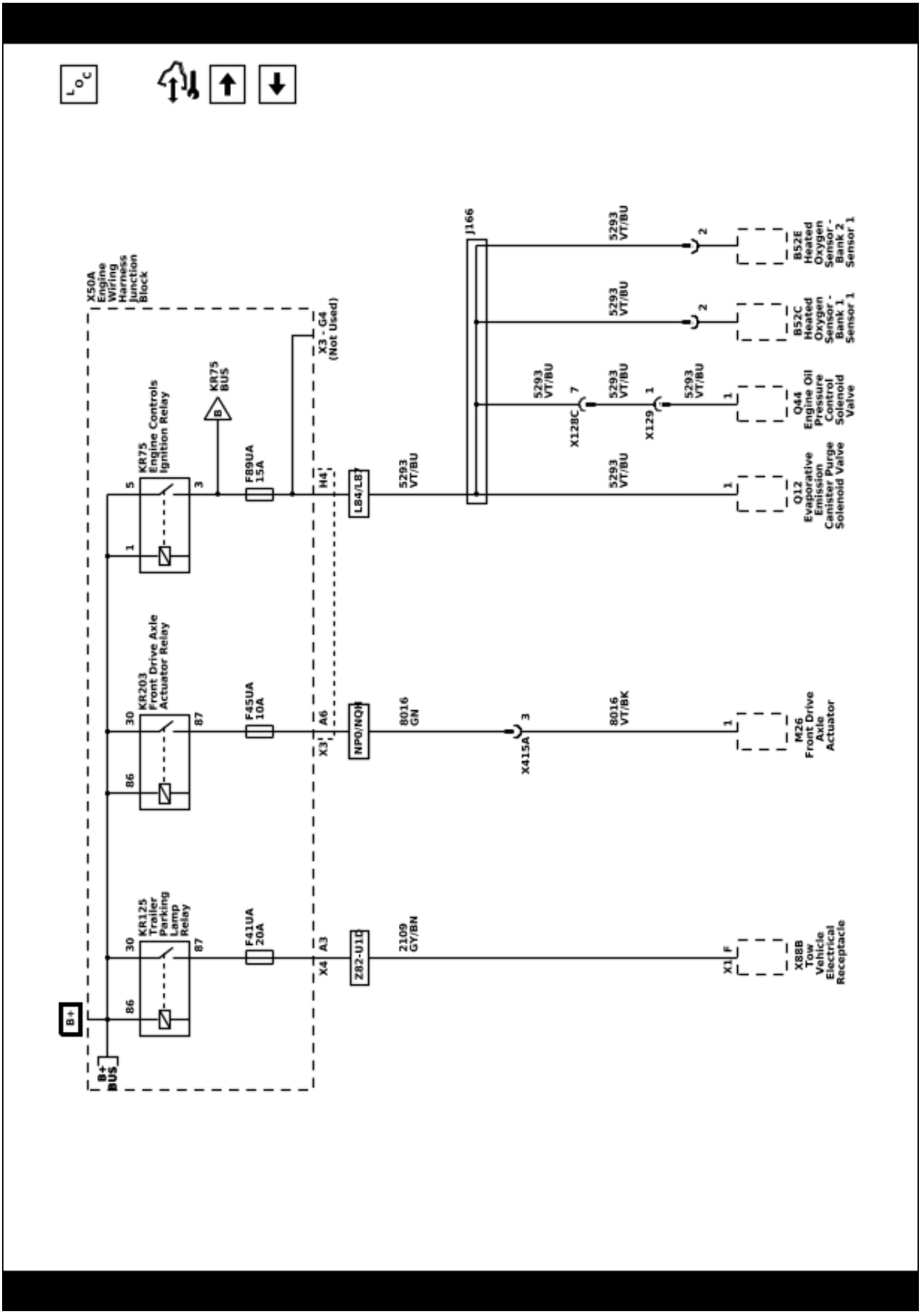

Power Distribution Schematics (F60UA and F80UA Fuses (LM2))

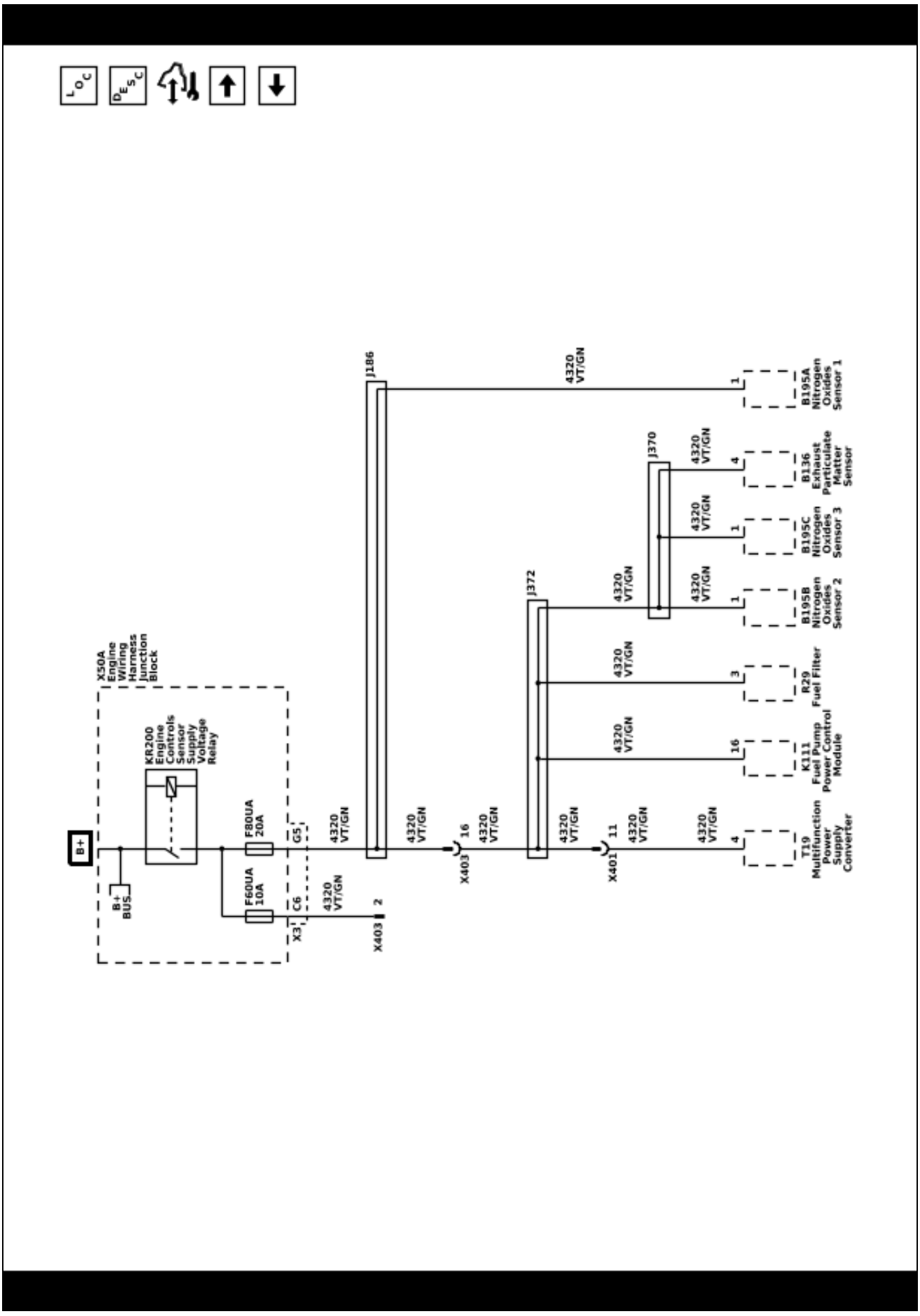

Power Distribution Schematics (F85UA, F86UA, and F88UA Fuses)

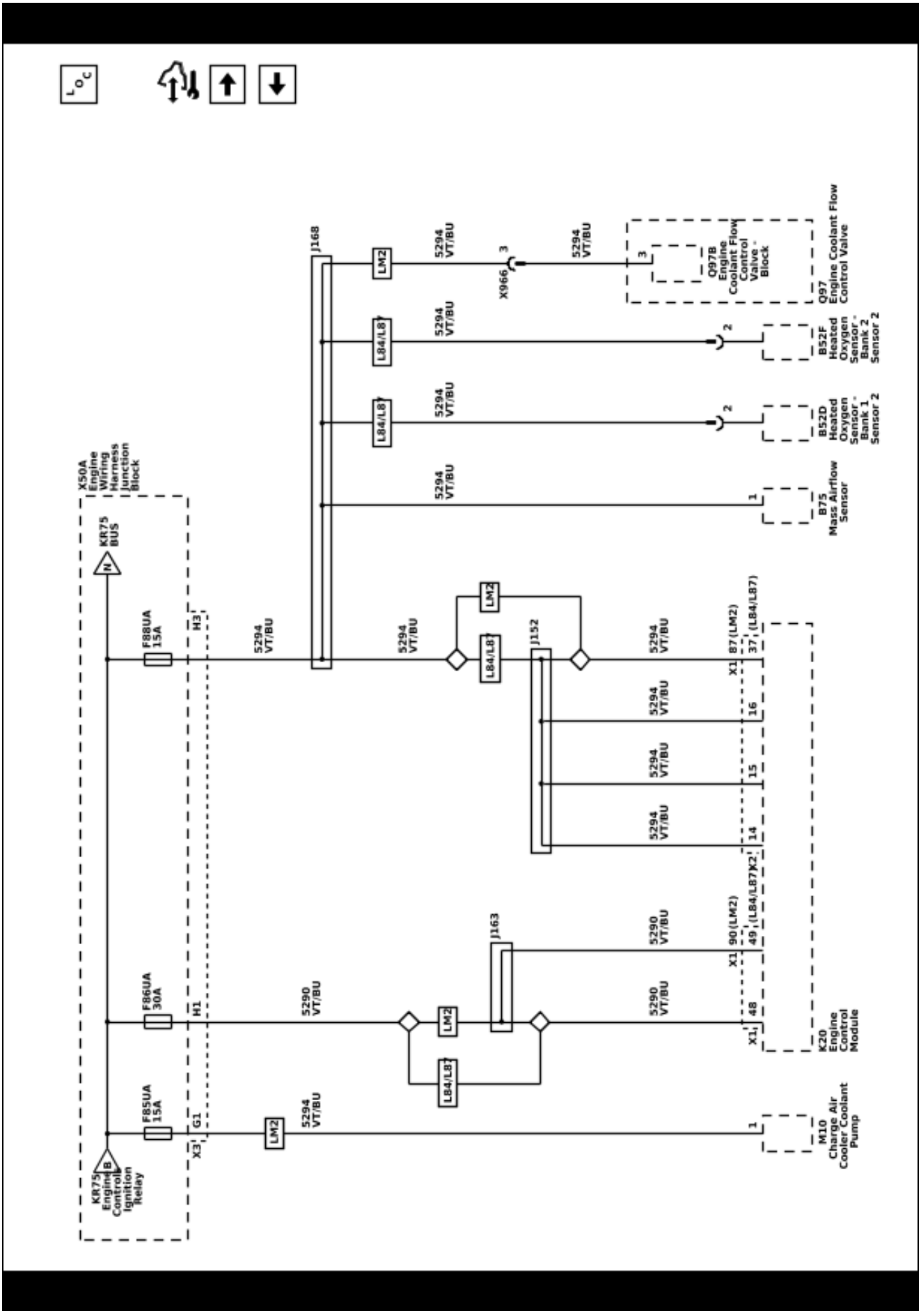

Power Distribution Schematics (F87UA, F90UA, F91UA, and F92UA Fuses)

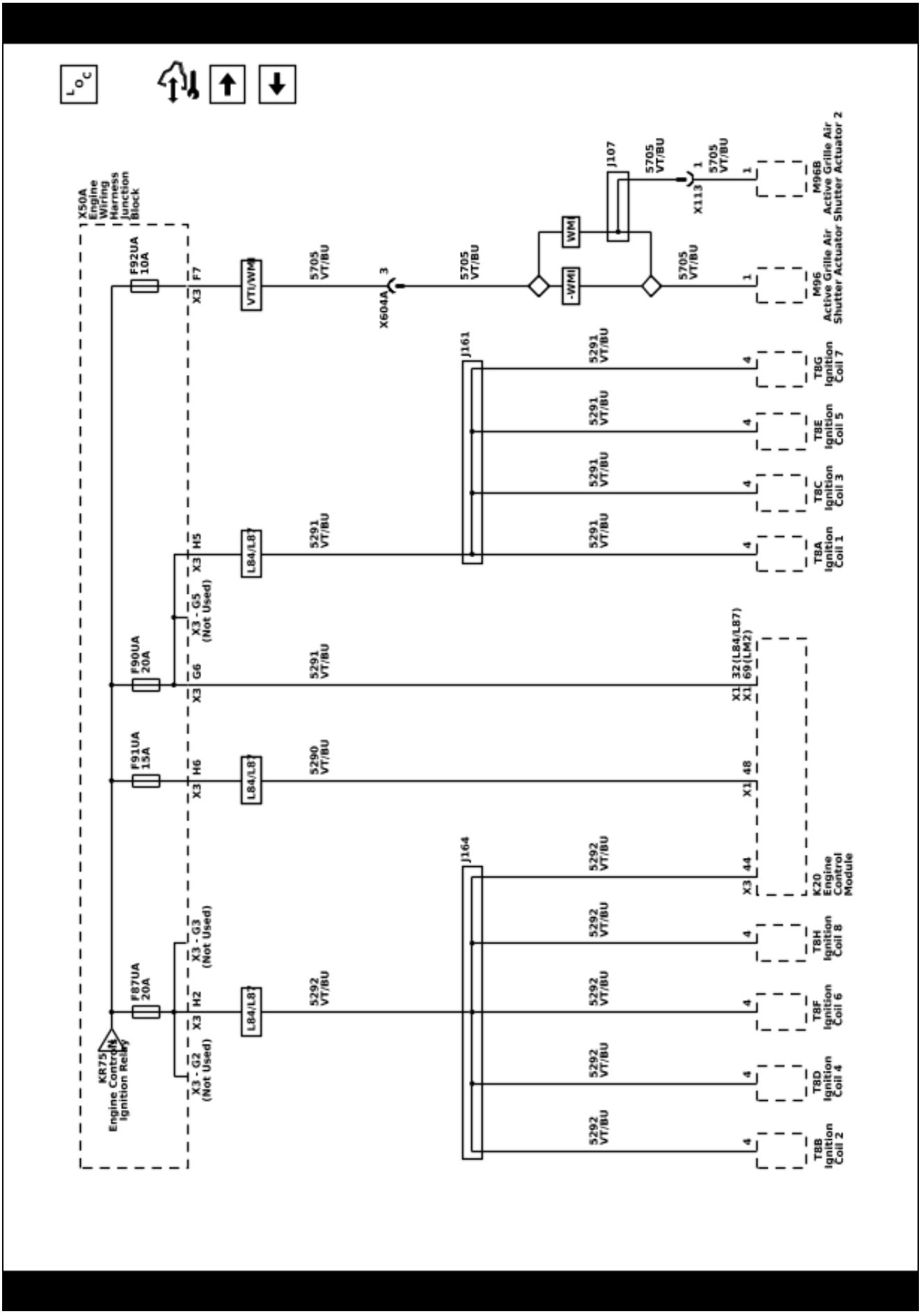

Power Distribution Schematics (X51R Instrument Panel Wiring Harness Junction Block - Right - B+ Bus (1 of 2))

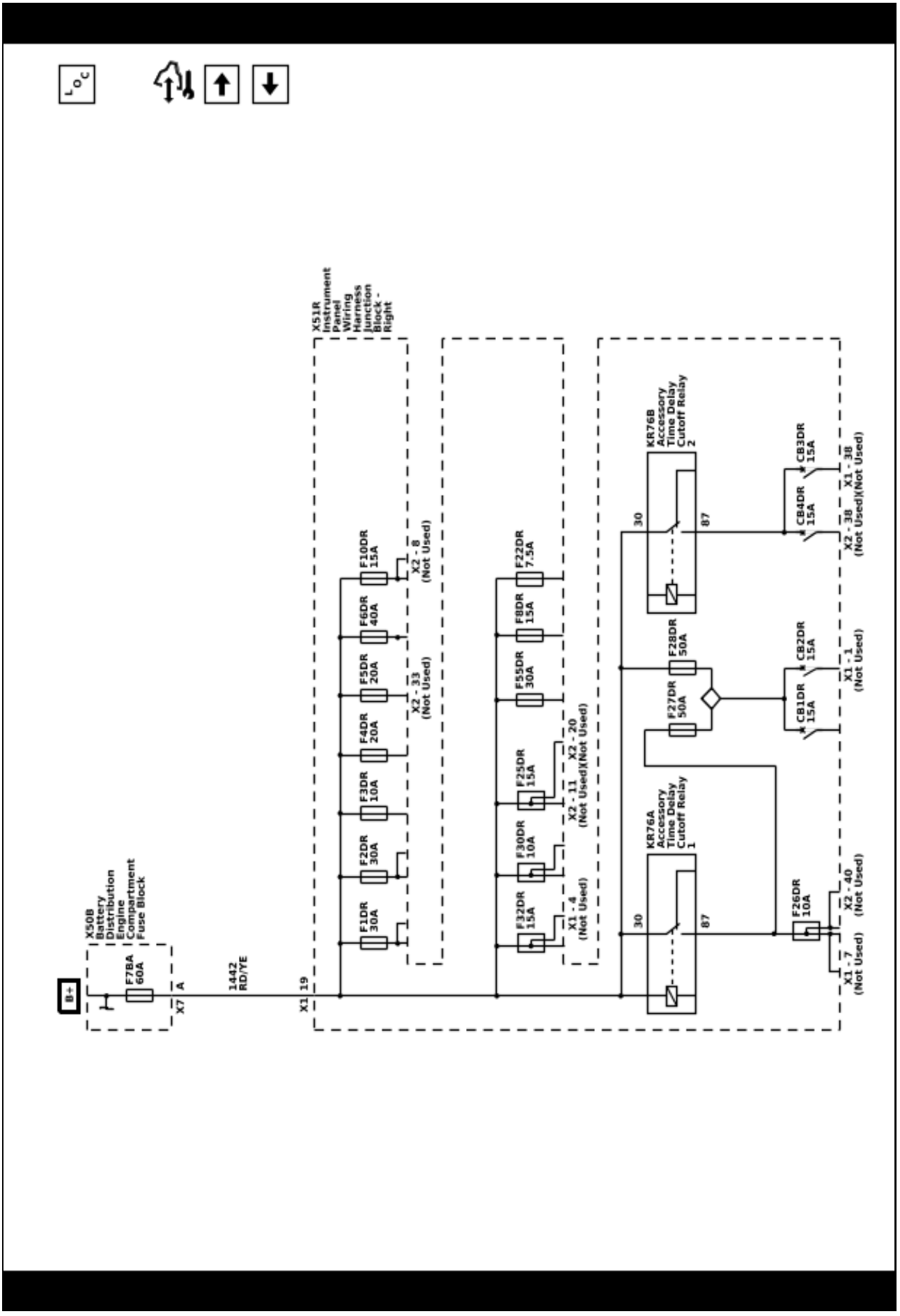

Power Distribution Schematics (X51R Instrument Panel Wiring Harness Junction Block - Right - B+ Bus (2 of 2))

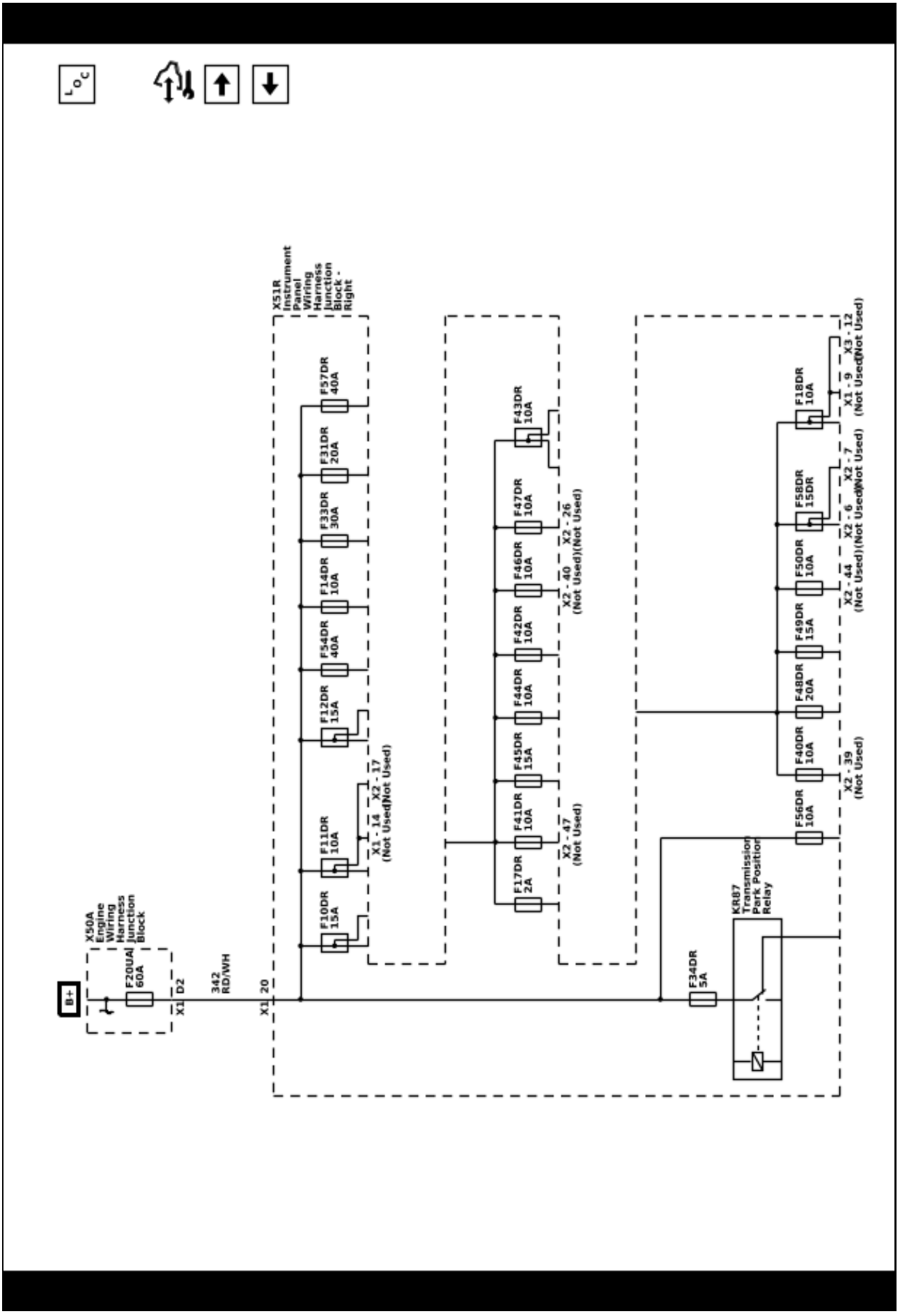

Power Distribution Schematics (CB1DR Circuit Breaker, F26DR, F27DR, F28DR, F30DR, and F32DR Fuses)

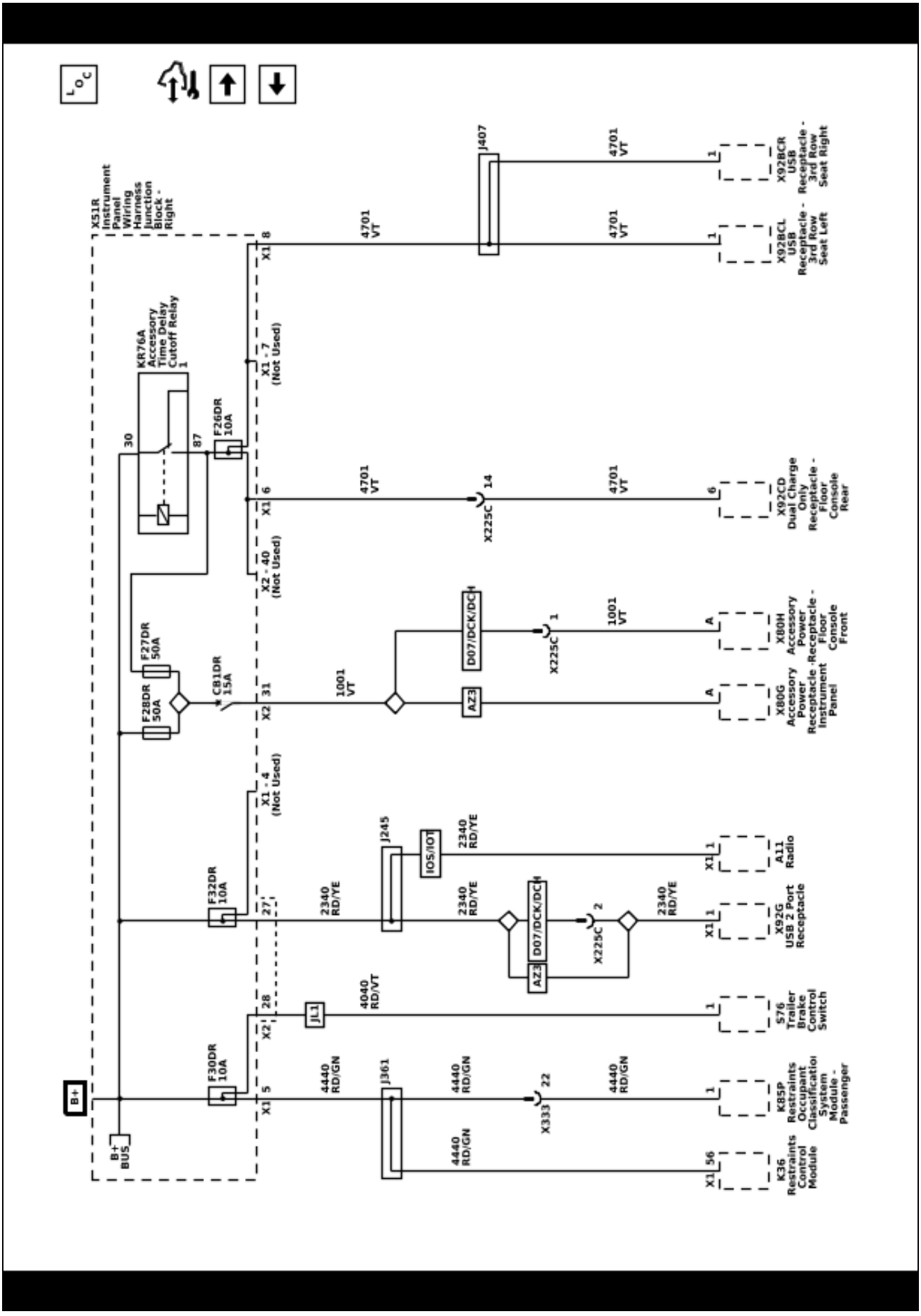

Power Distribution Schematics (F1DR, F2DR, F3DR, F6DR, F8DR, F24DR, F31DR, and F33DR Fuses)

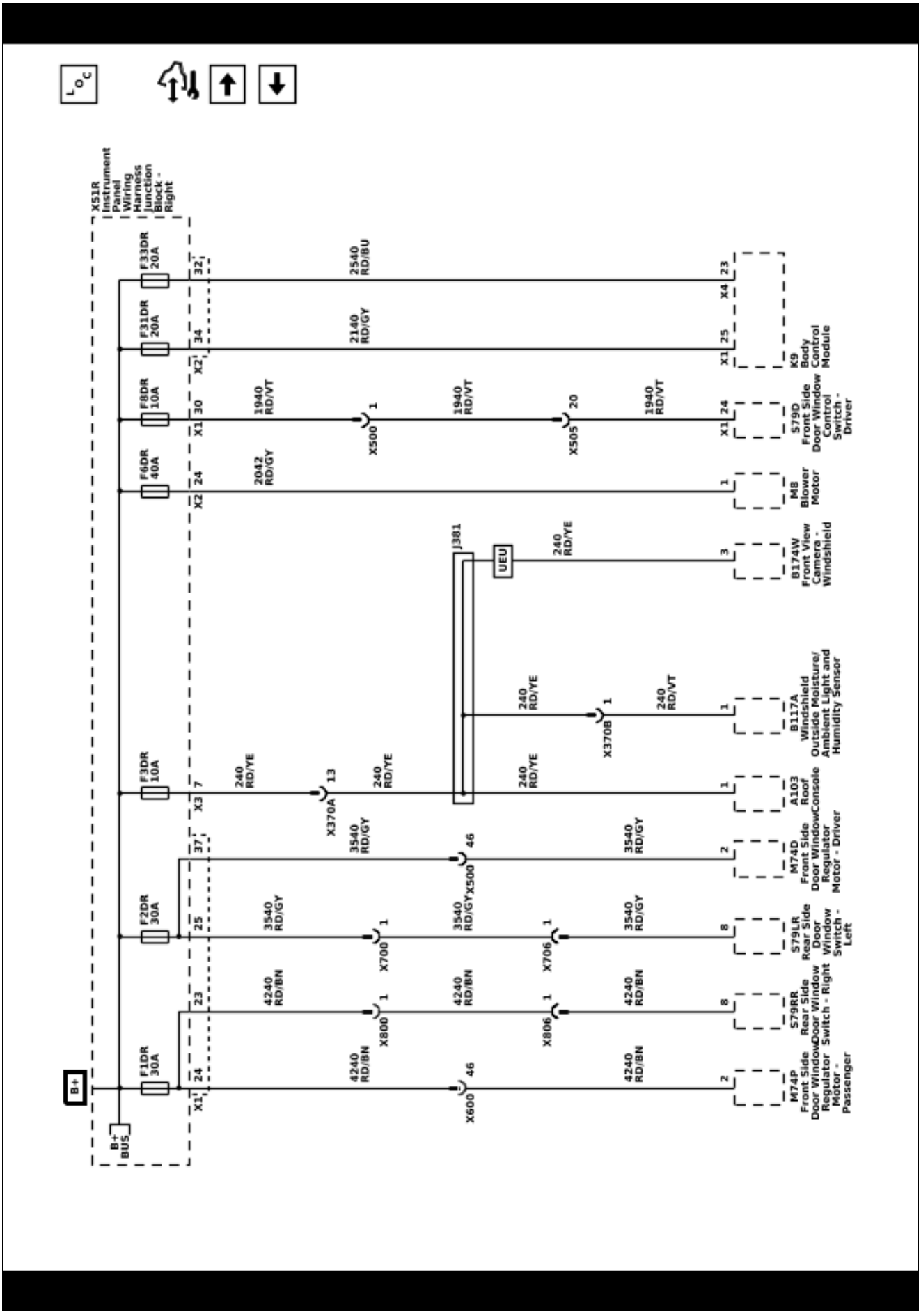

Power Distribution Schematics (F4DR, F5DR, F10DR, F11DR, F12DR, F14DR, and F54DR Fuses)

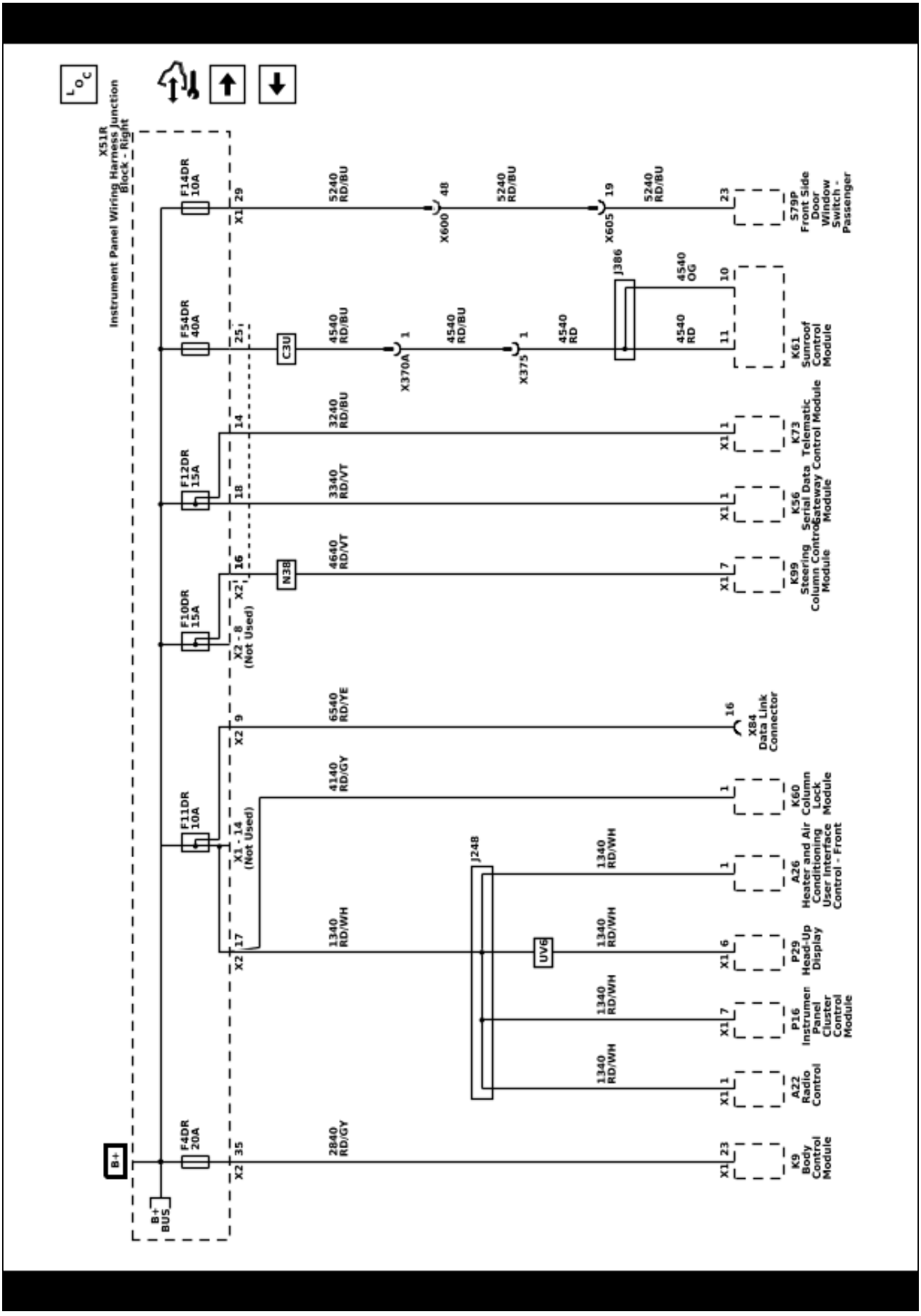

Power Distribution Schematics (F17DR, F22DR, F42DR, F43DR, F44DR, F45DR, and F57DR Fuses)

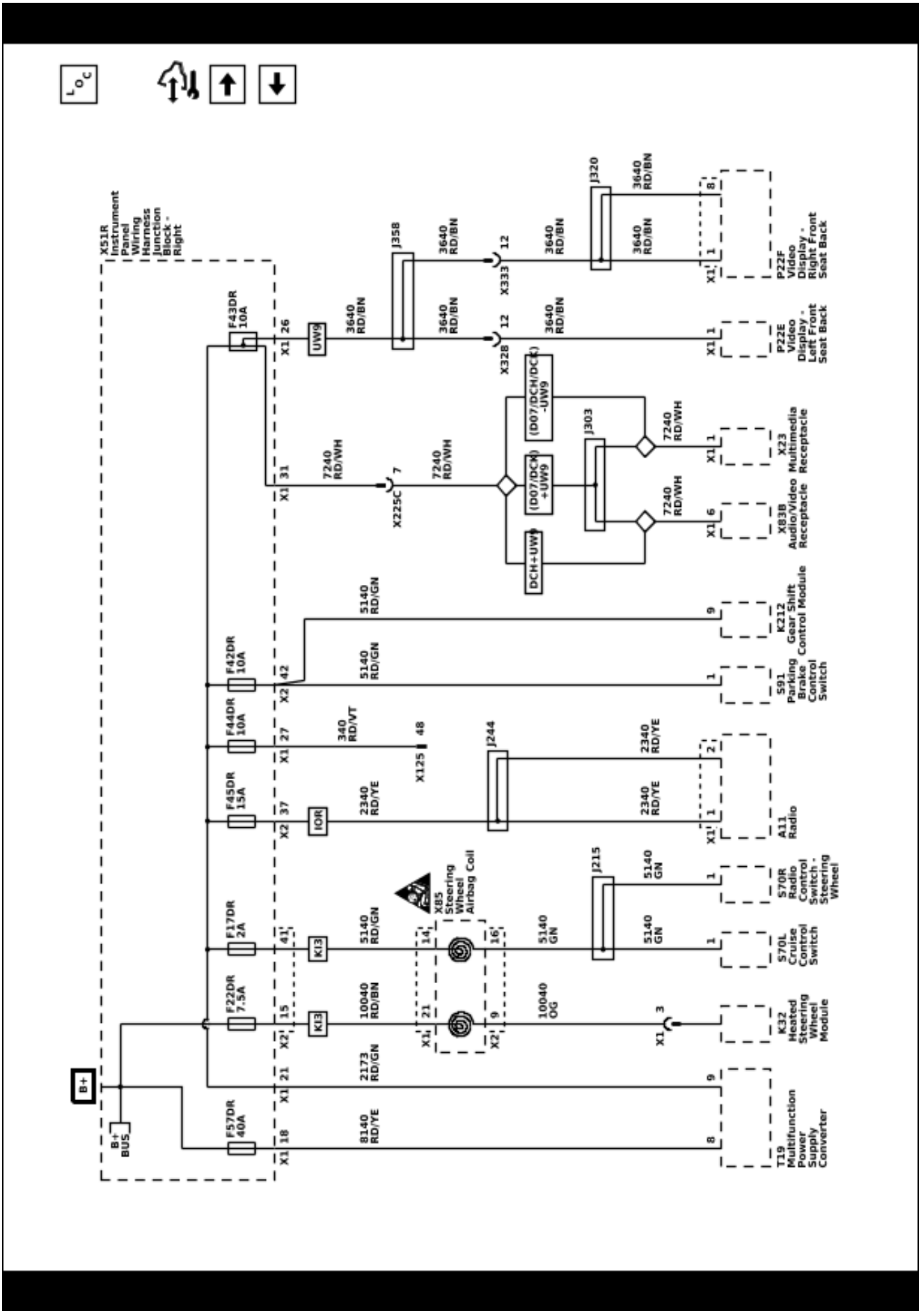

Power Distribution Schematics (F18DR, F34DR, F48DR, F49DR, and F56DR Fuses)

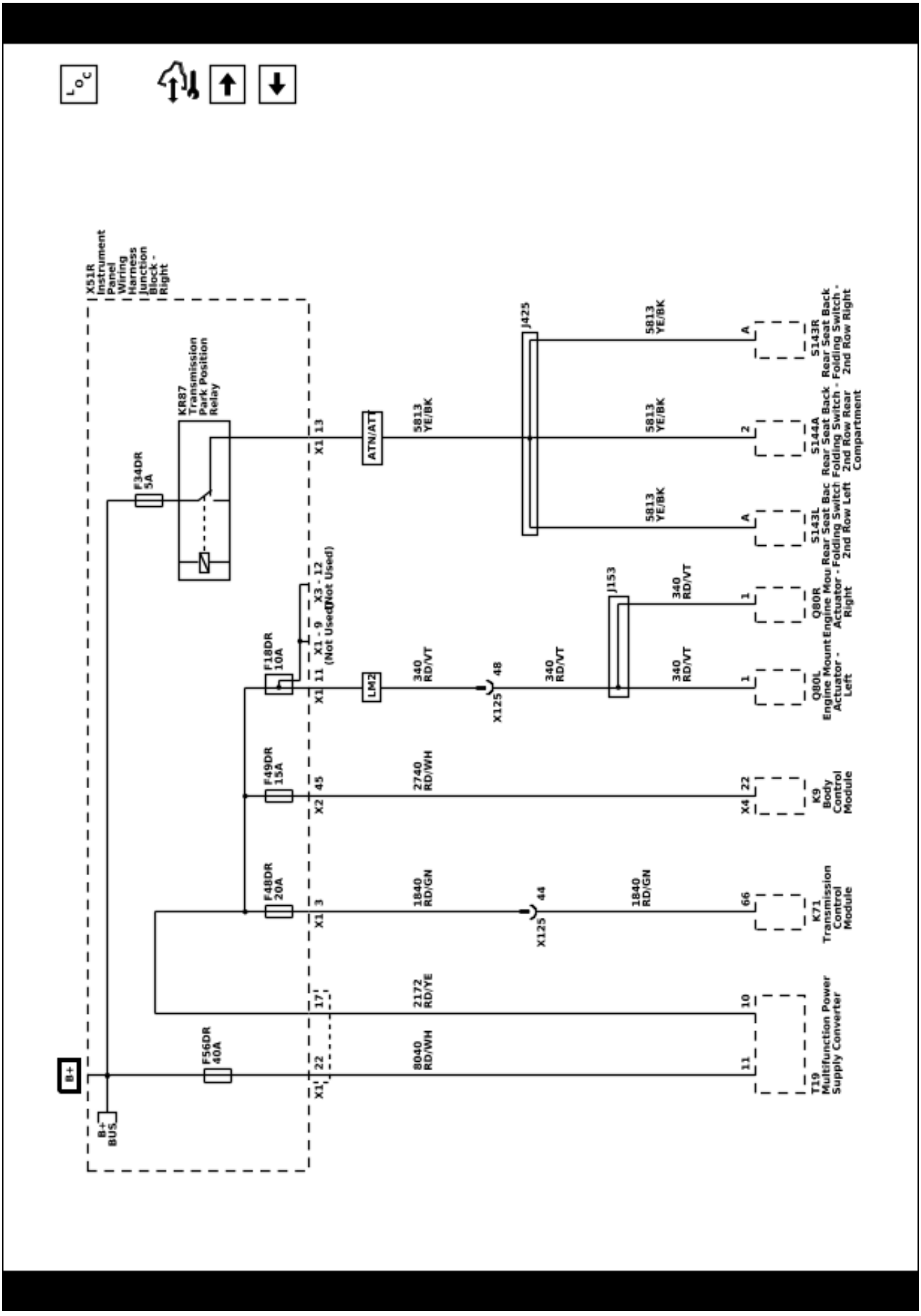

Power Distribution Schematics (X53A Body Wiring Harness Junction Block - Rear - B+ Bus)

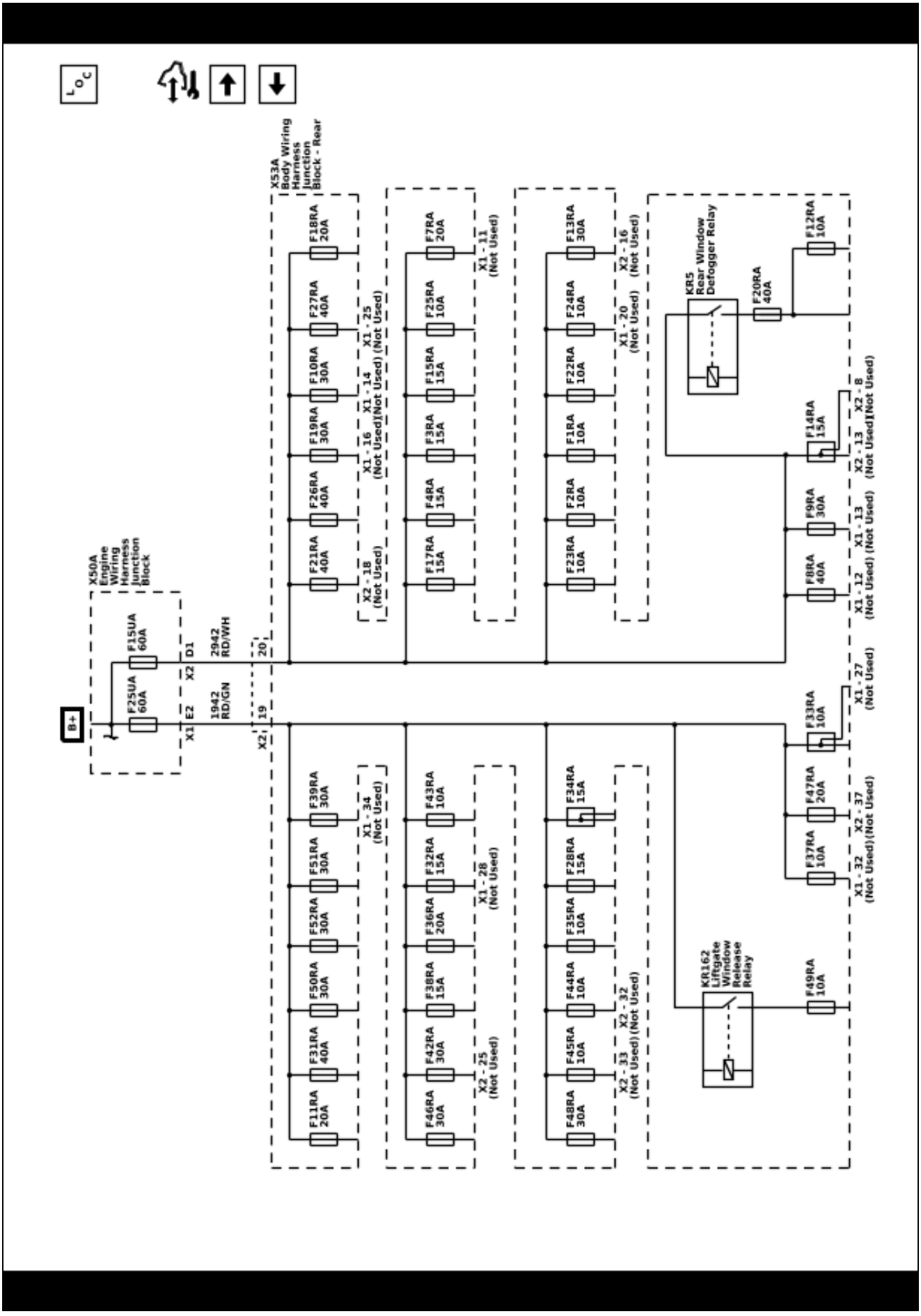

Power Distribution Schematics (F1RA, F2RA, F12RA, F20RA, F22RA, and F23RA Fuses)

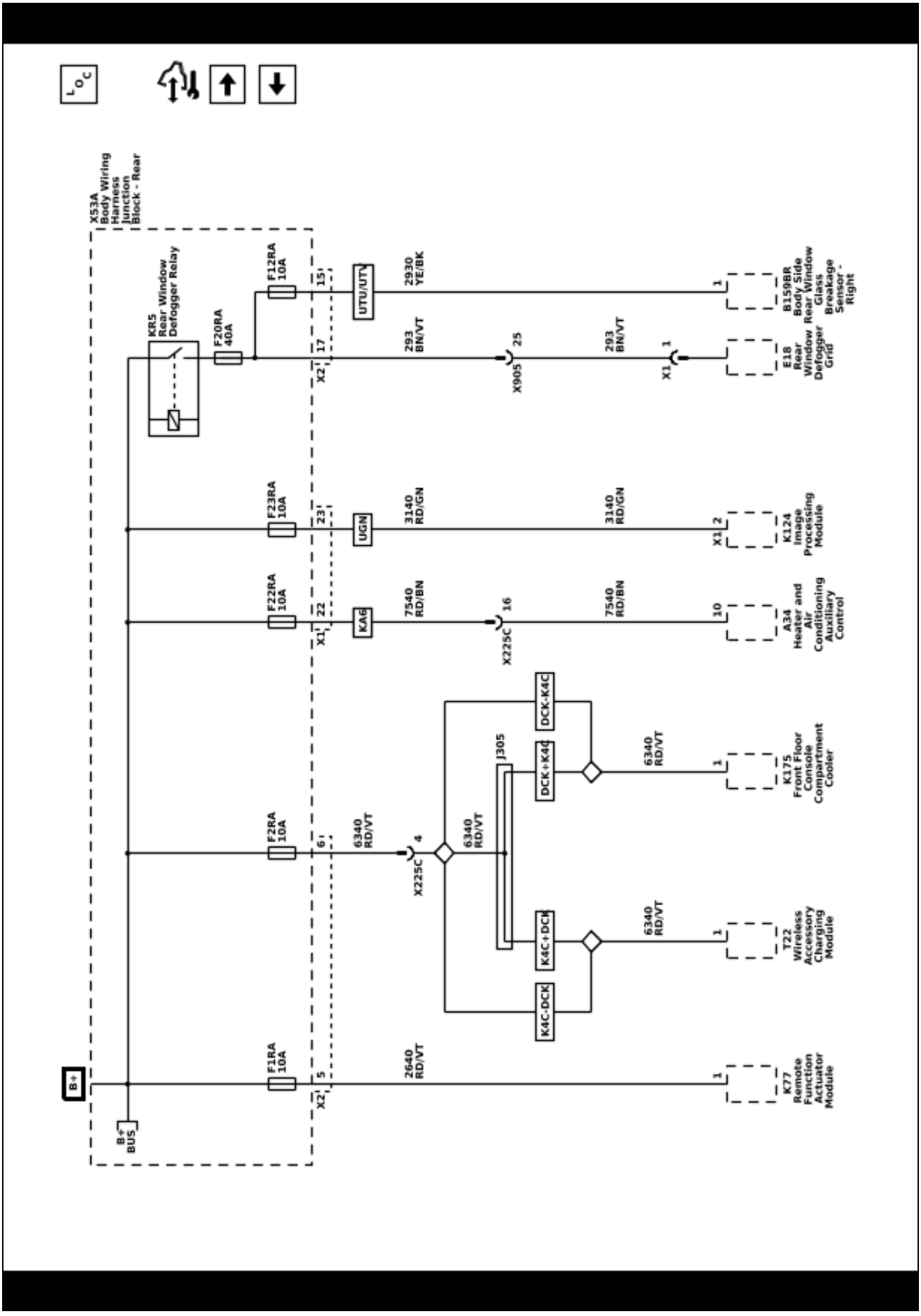

Power Distribution Schematics (F3RA, F4RA, F15RA, F17RA, F18RA, F25RA, F26RA, F46RA, and F48RA Fuses)

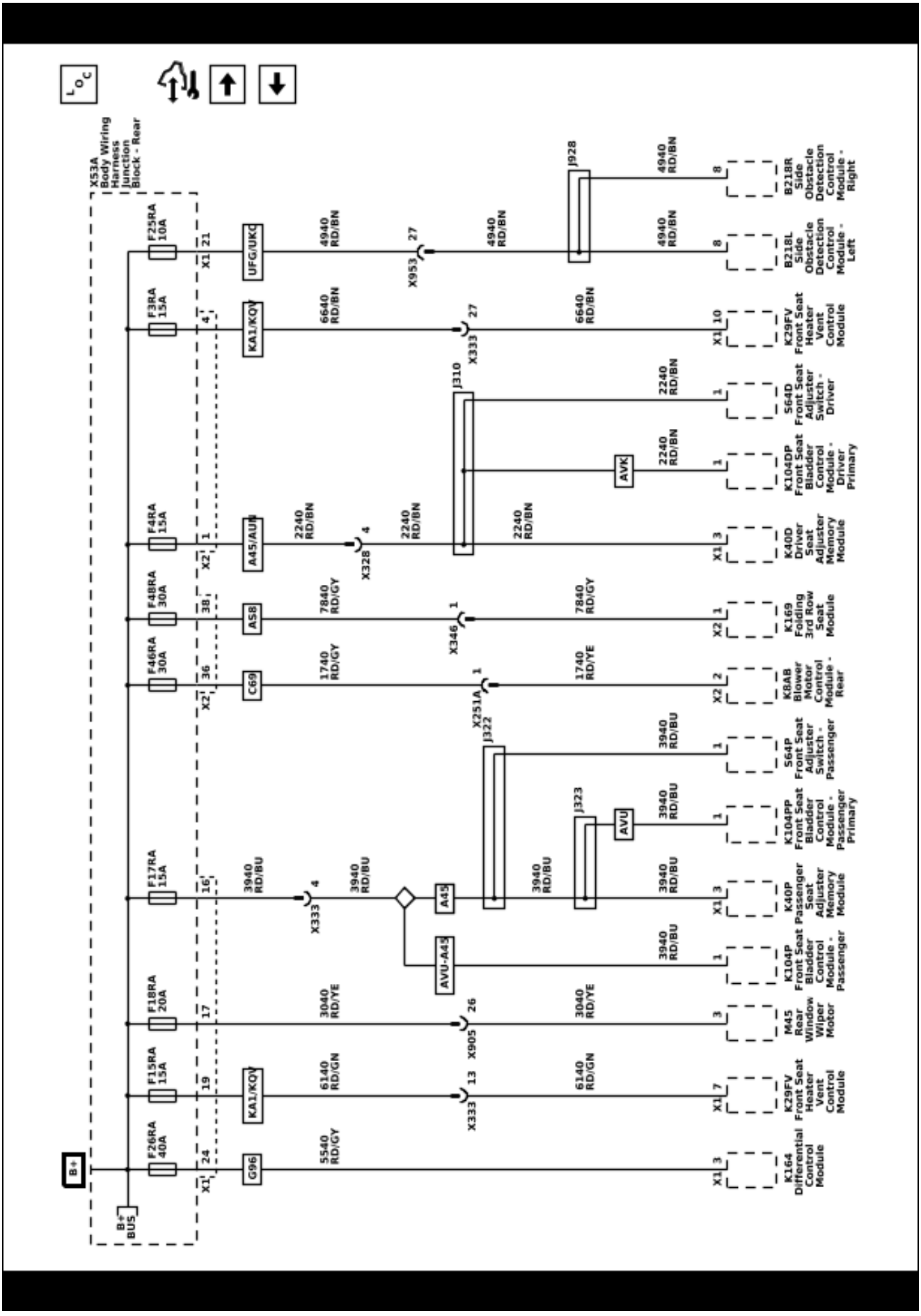

Power Distribution Schematics (F11RA, F28RA, F34RA, F35RA, F43RA, F46RA, and F48RA Fuses)

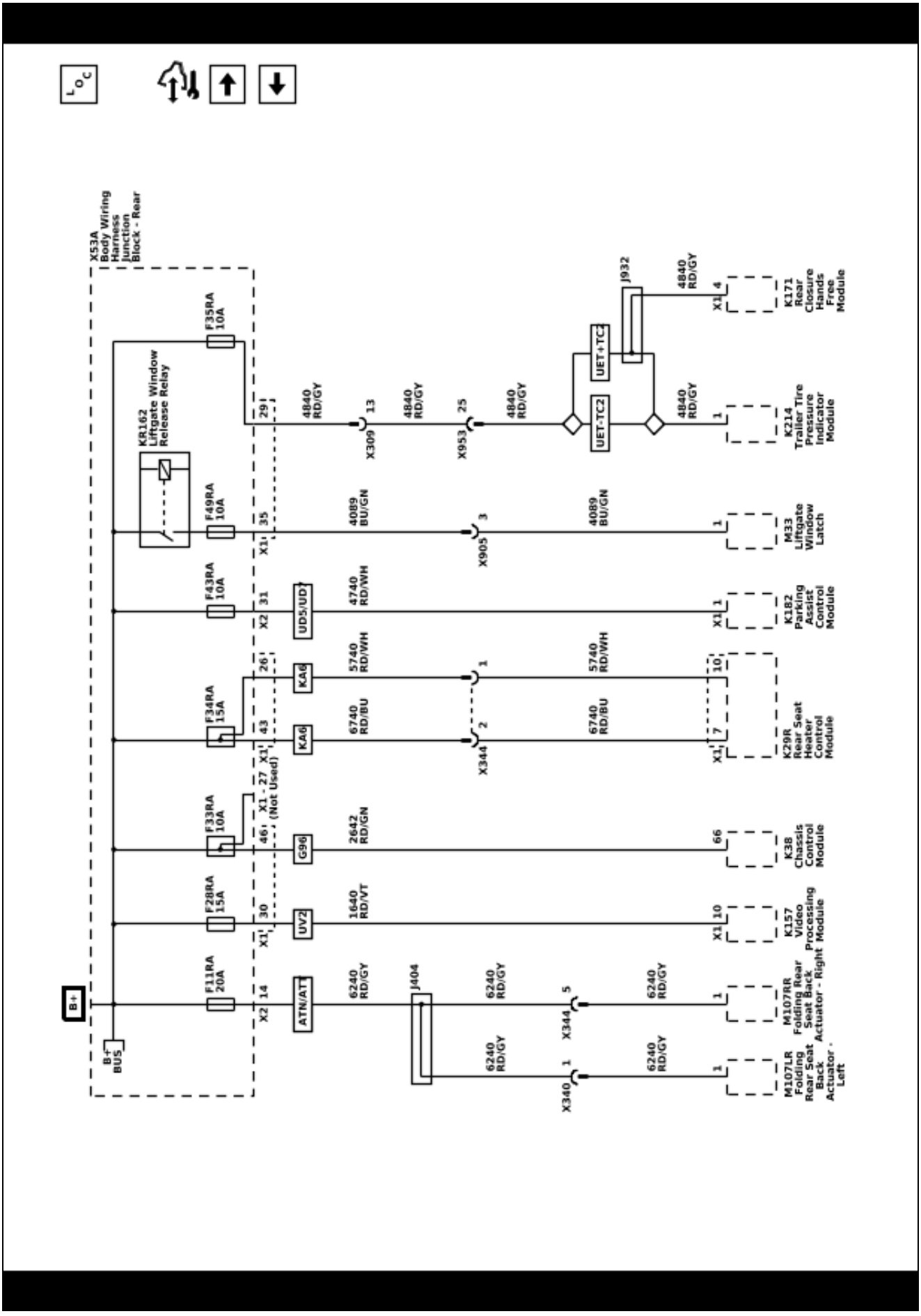

Power Distribution Schematics (F31RA, F36RA, F38RA, F50RA, F51RA, and F52RA Fuses)

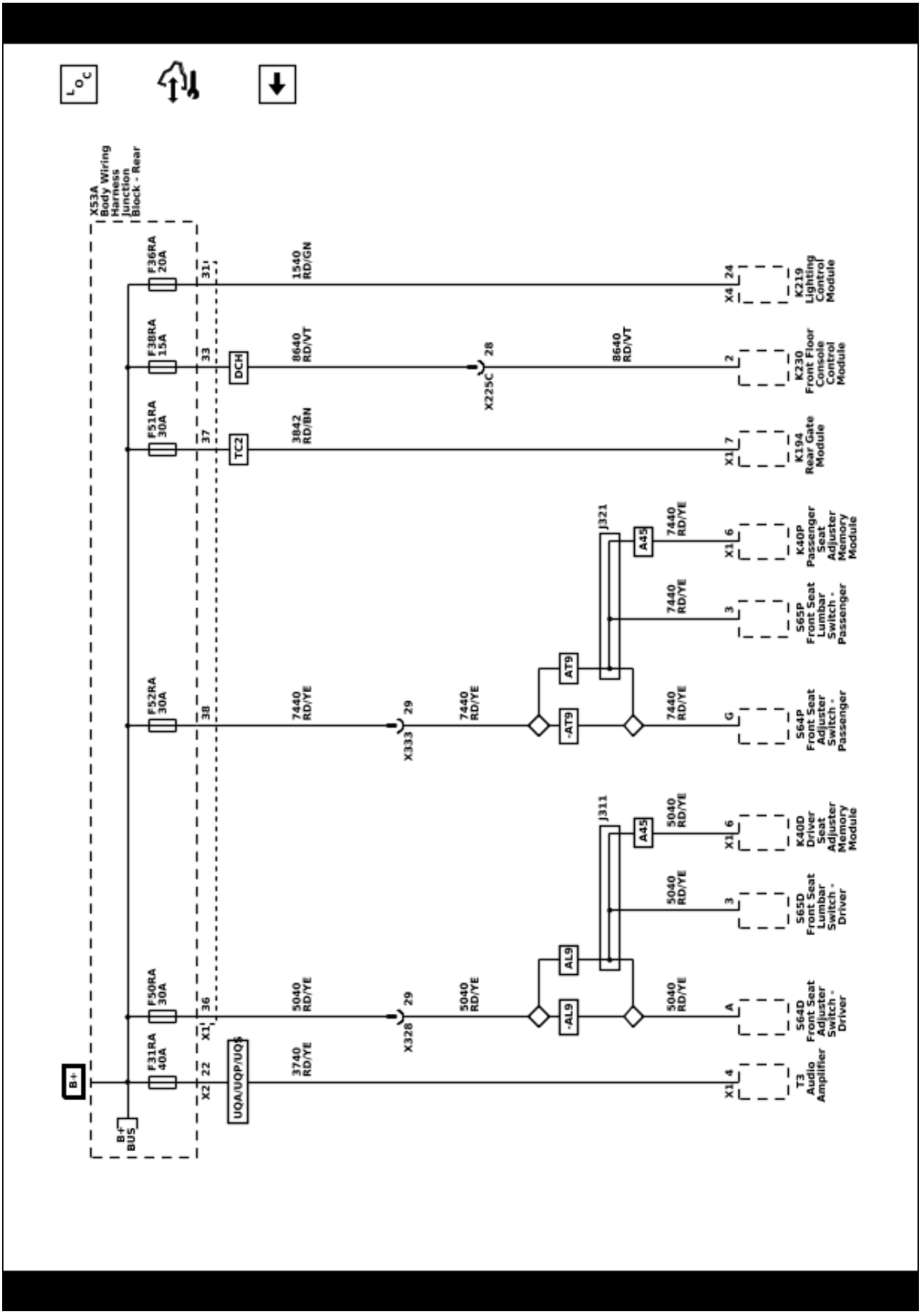

Power Moding Schematics (On/Off Vehicle Switch and Retained Accessory Power)

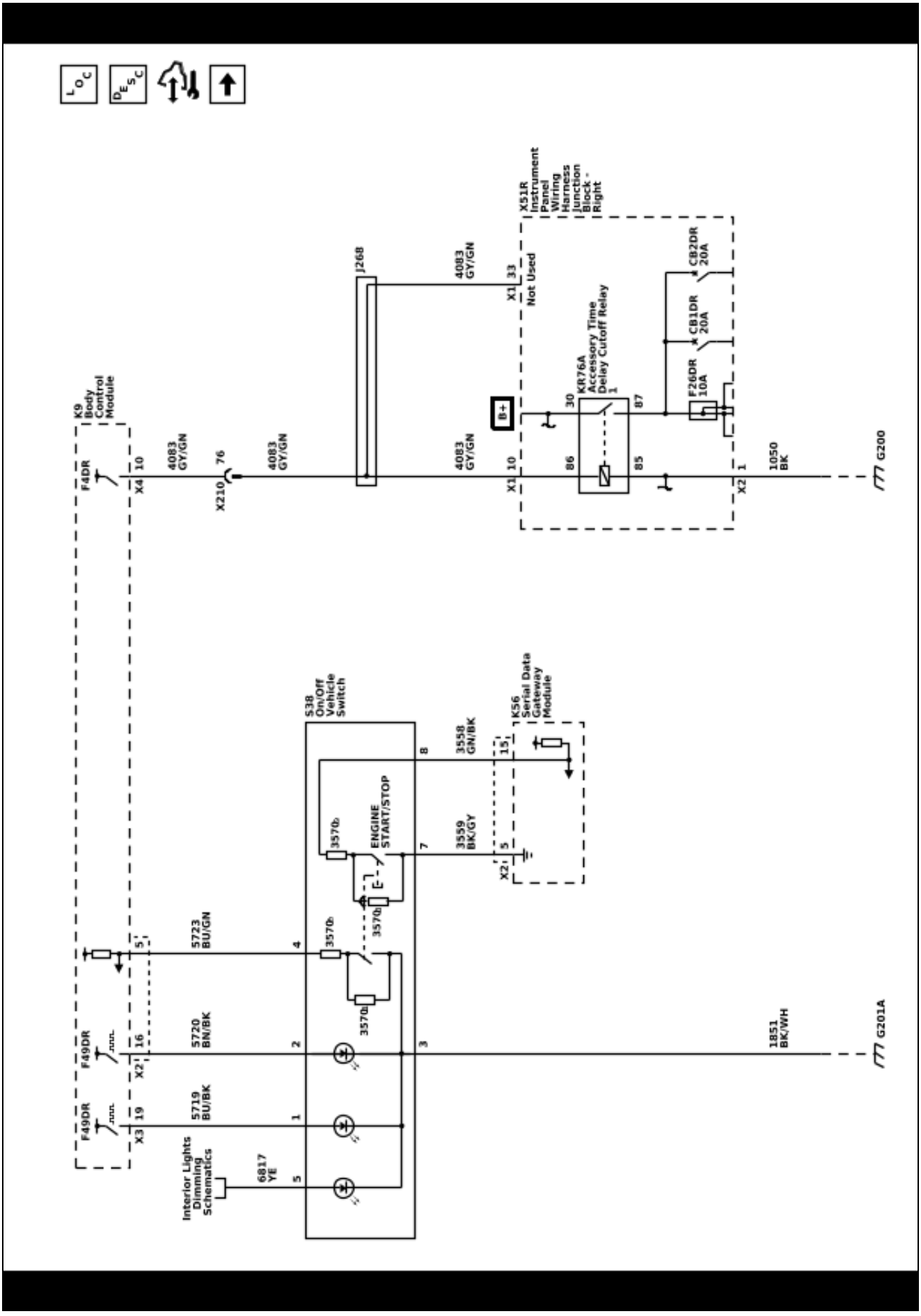

Power Moding Schematics (Ignition Main Relay)

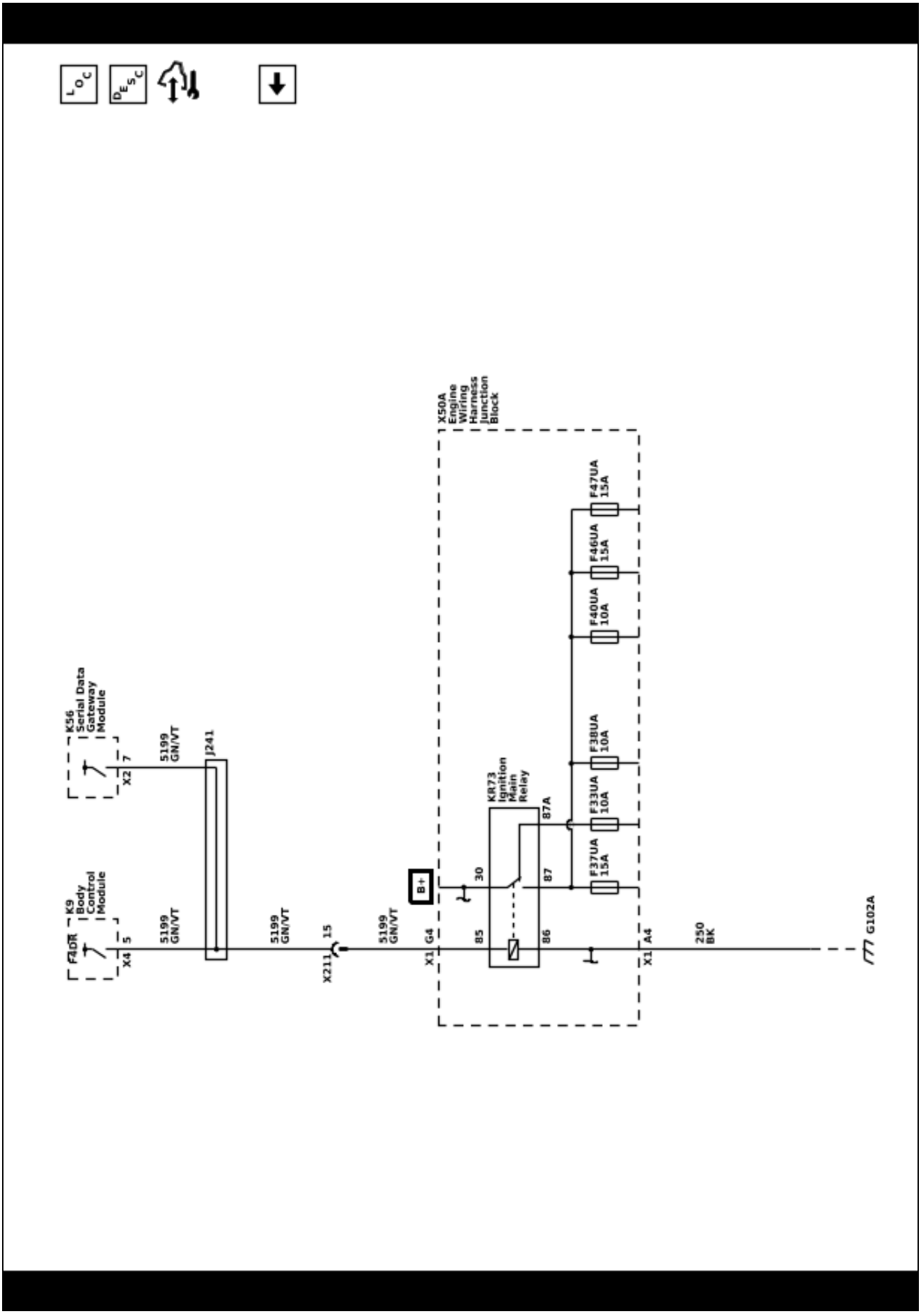

Ground Distribution Schematics (G100)

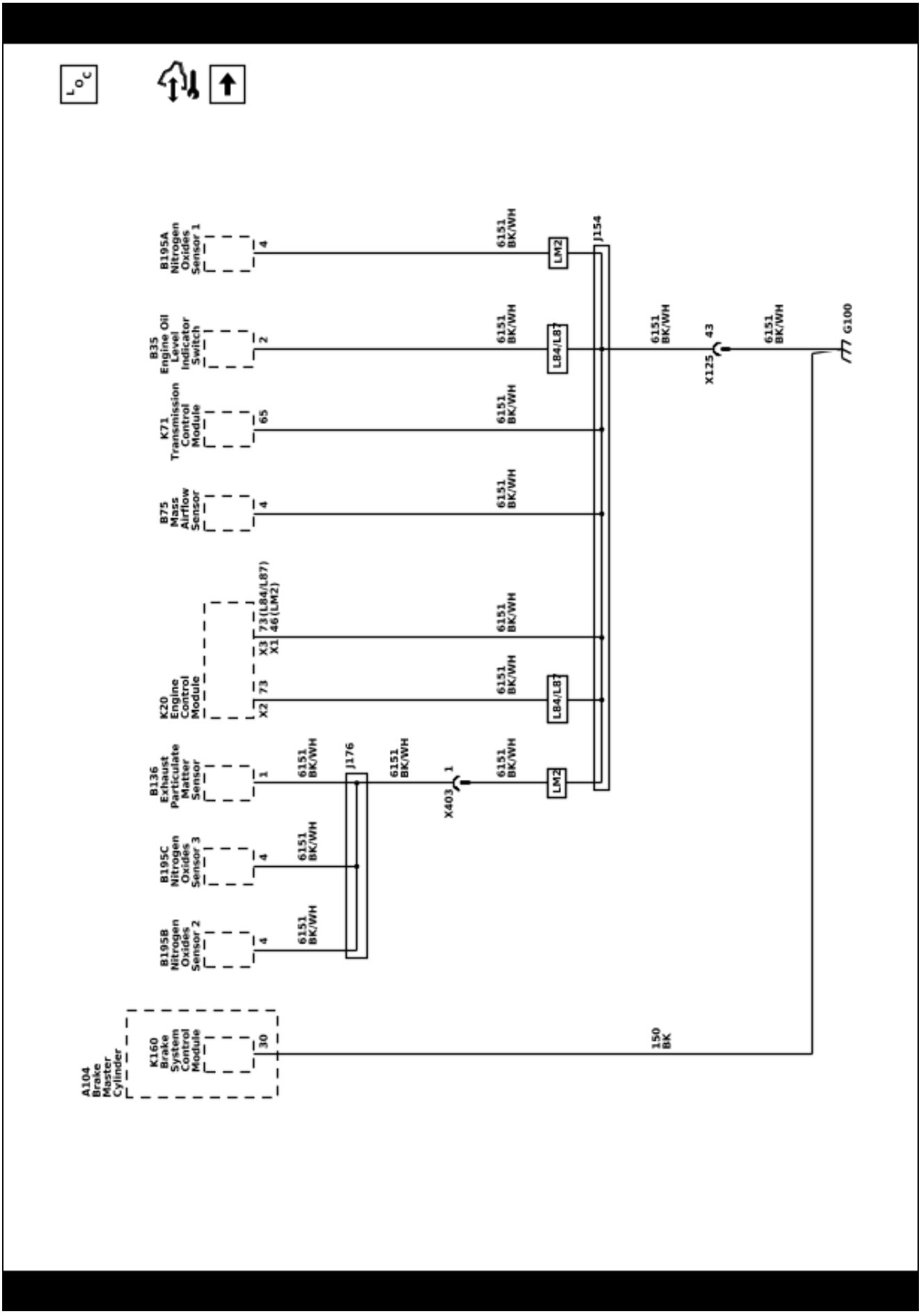

Ground Distribution Schematics (G101B, G101E, G104, and G176B)

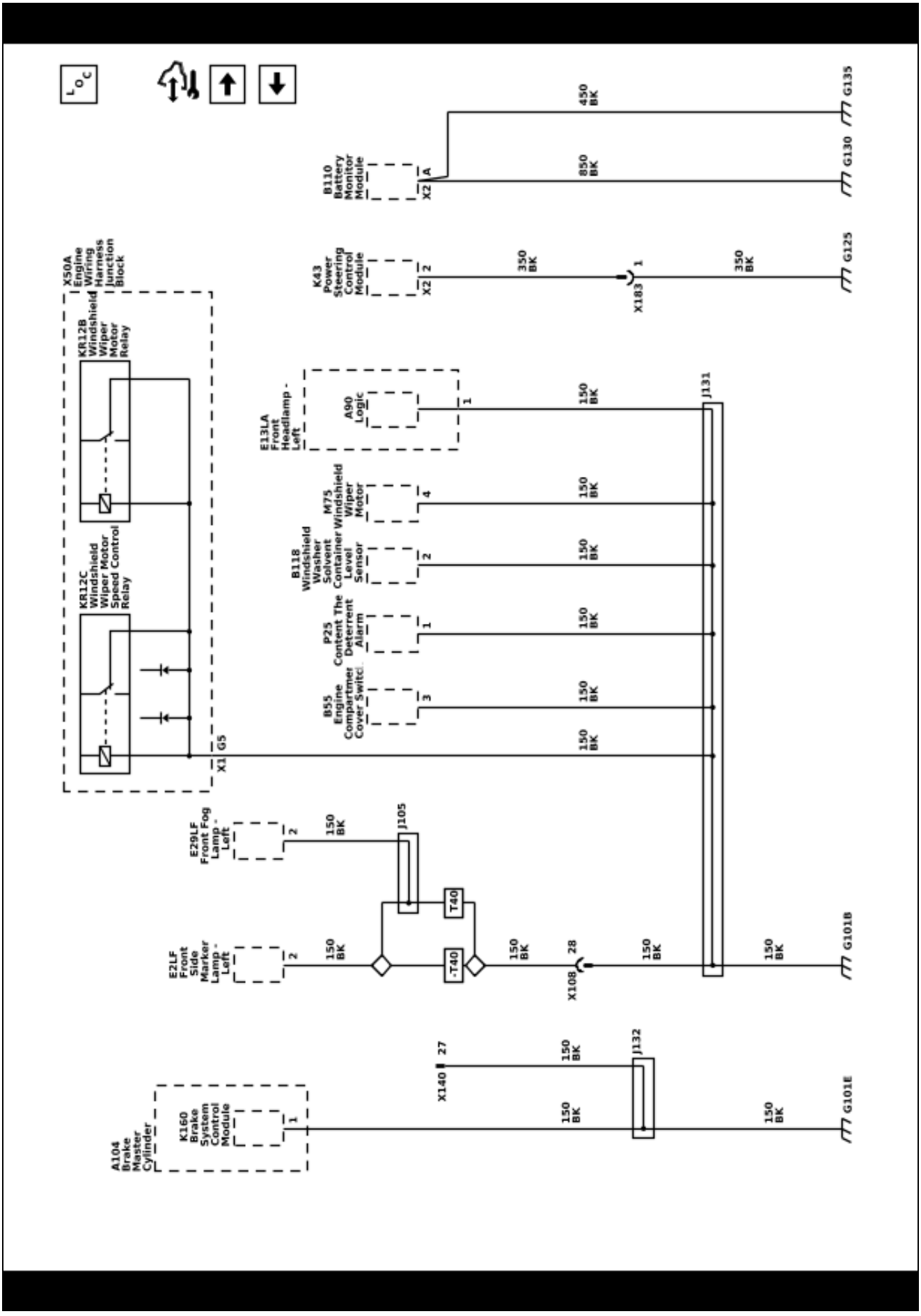

Ground Distribution Schematics (G102A and G102B)

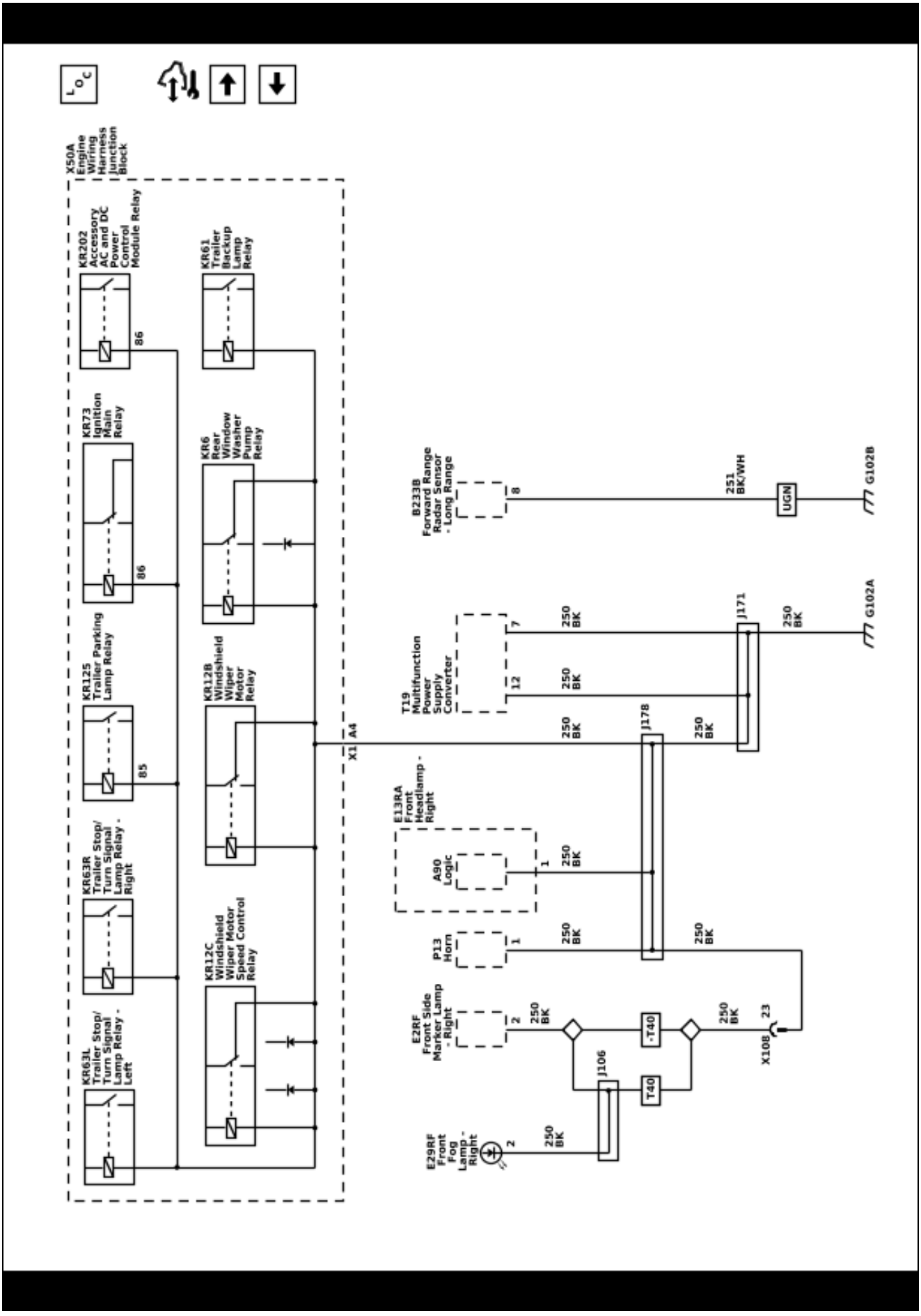

Ground Distribution Schematics (G131, G132, G133, G134, and G405B)

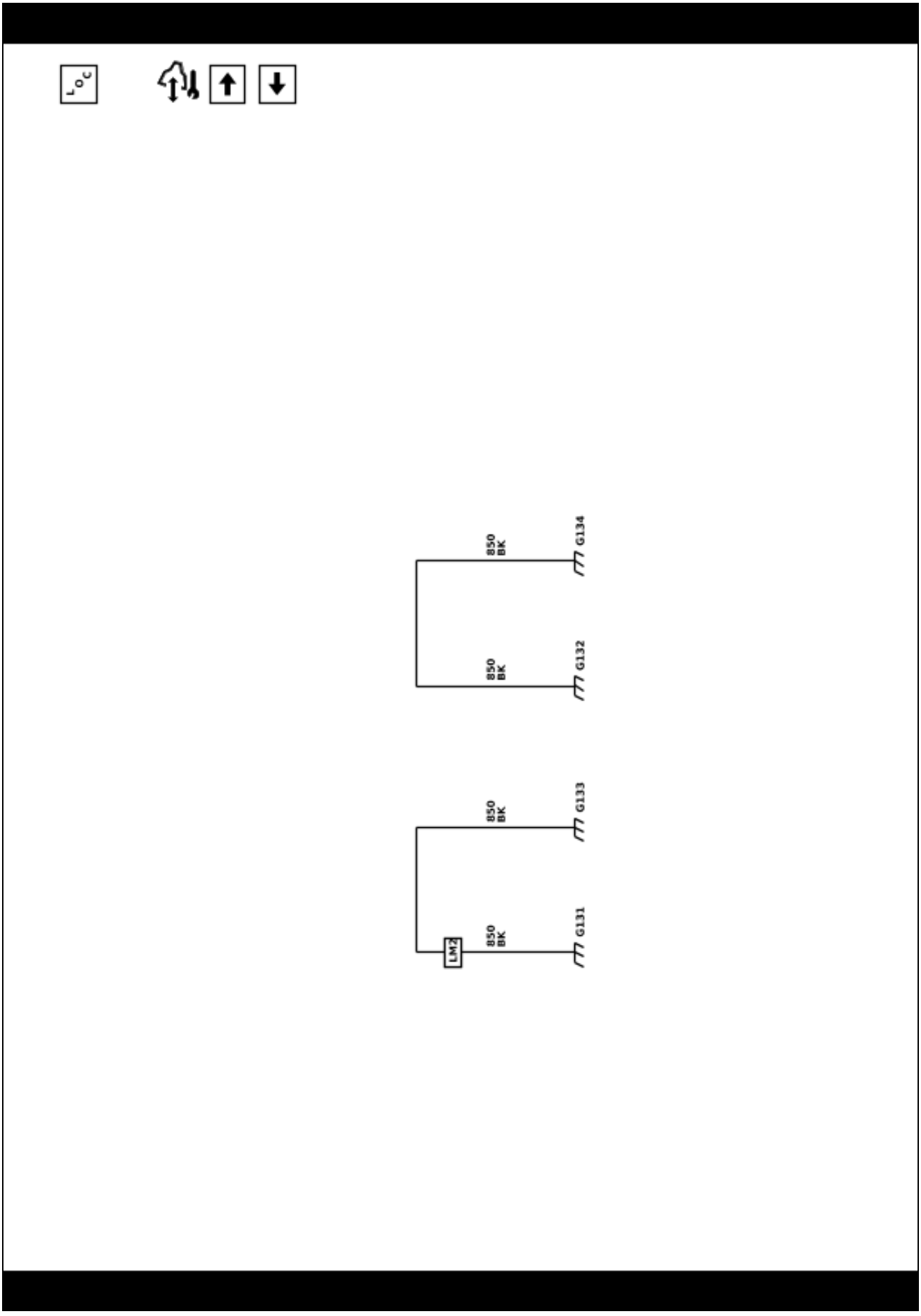

Ground Distribution Schematics (G175 and G176E (L84/L87))

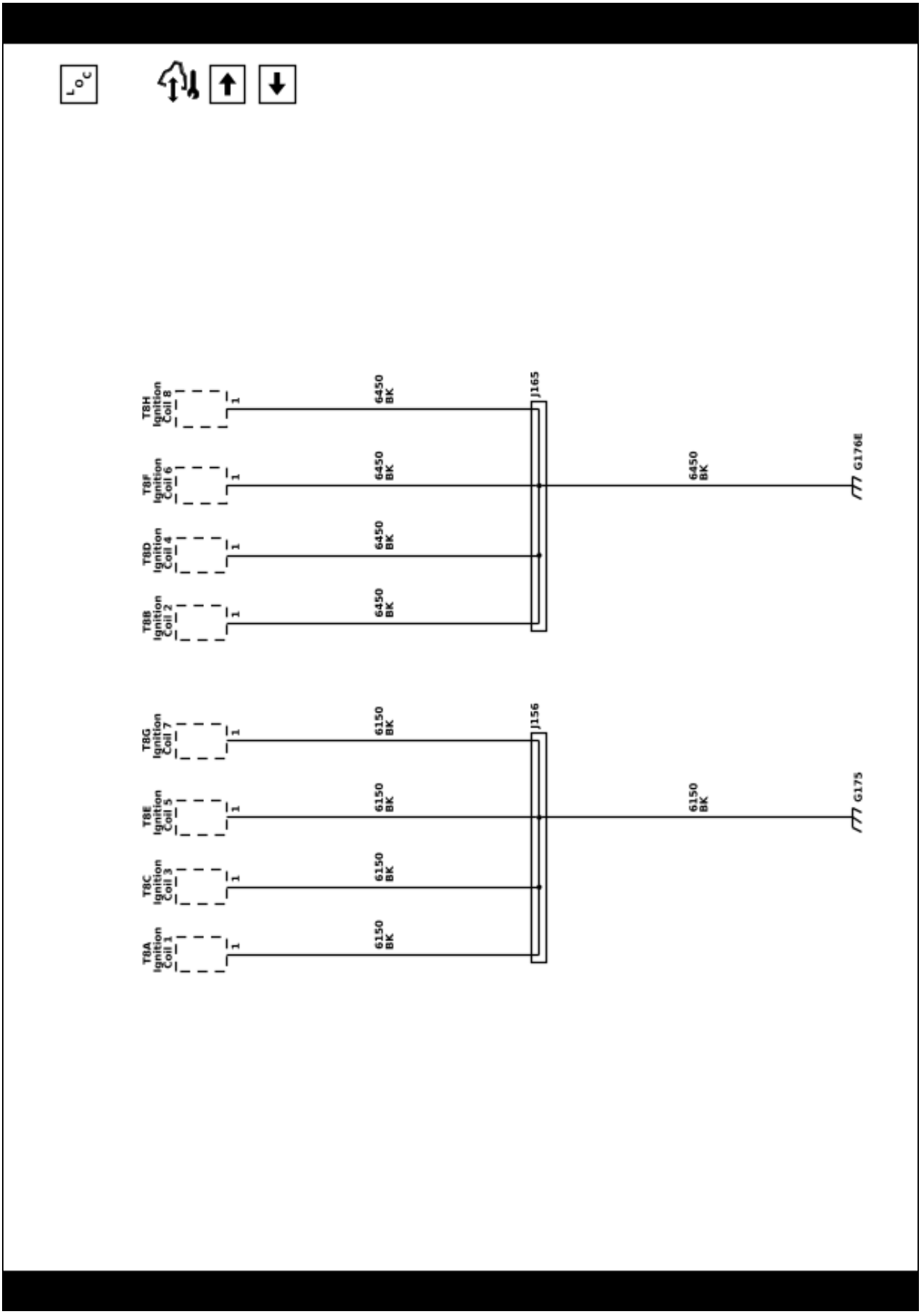

Ground Distribution Schematics (G176A and G178 (LM2))

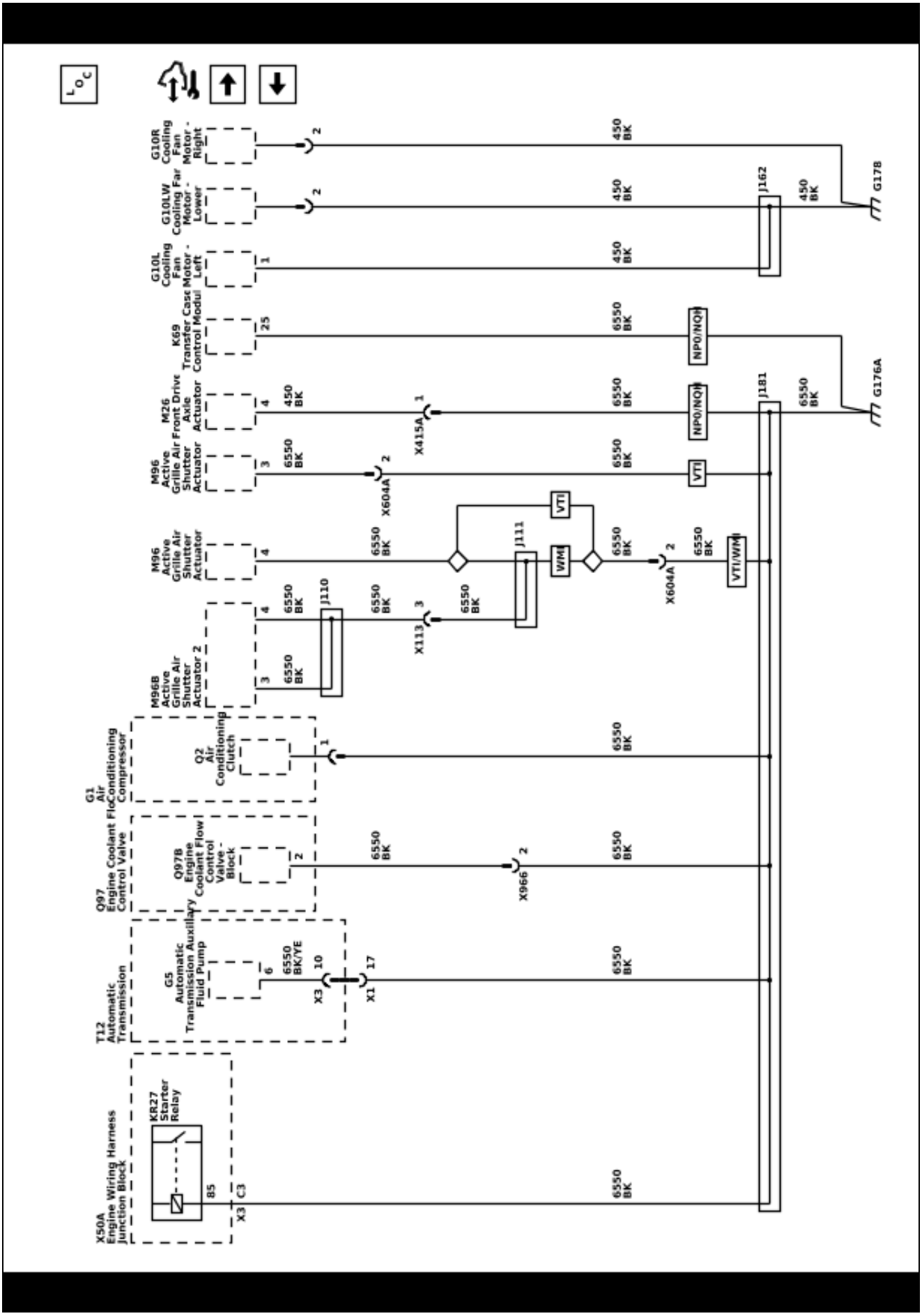

Ground Distribution Schematics (G177A (L84/L87))

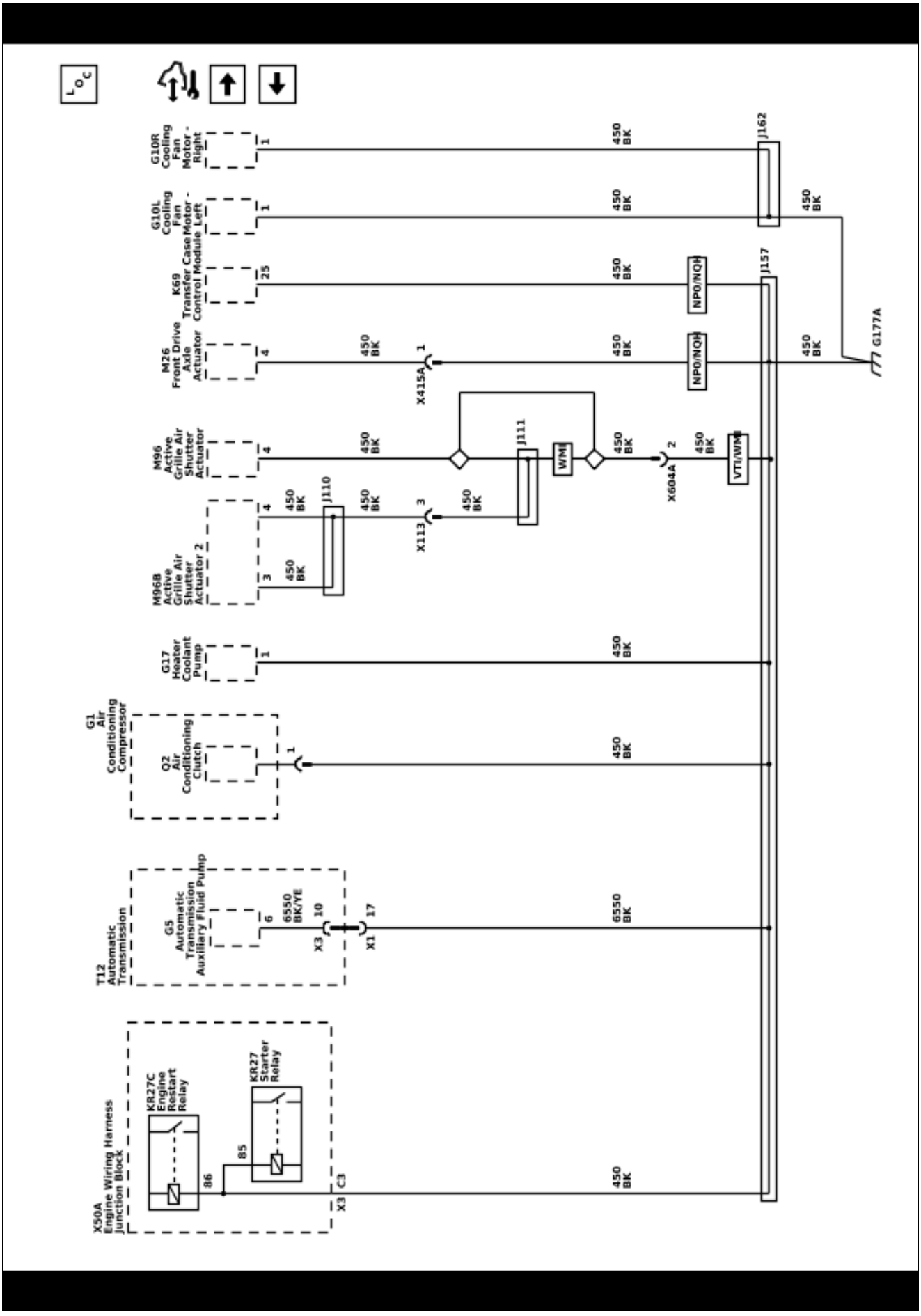

Ground Distribution Schematics (G200 (1 of 2))

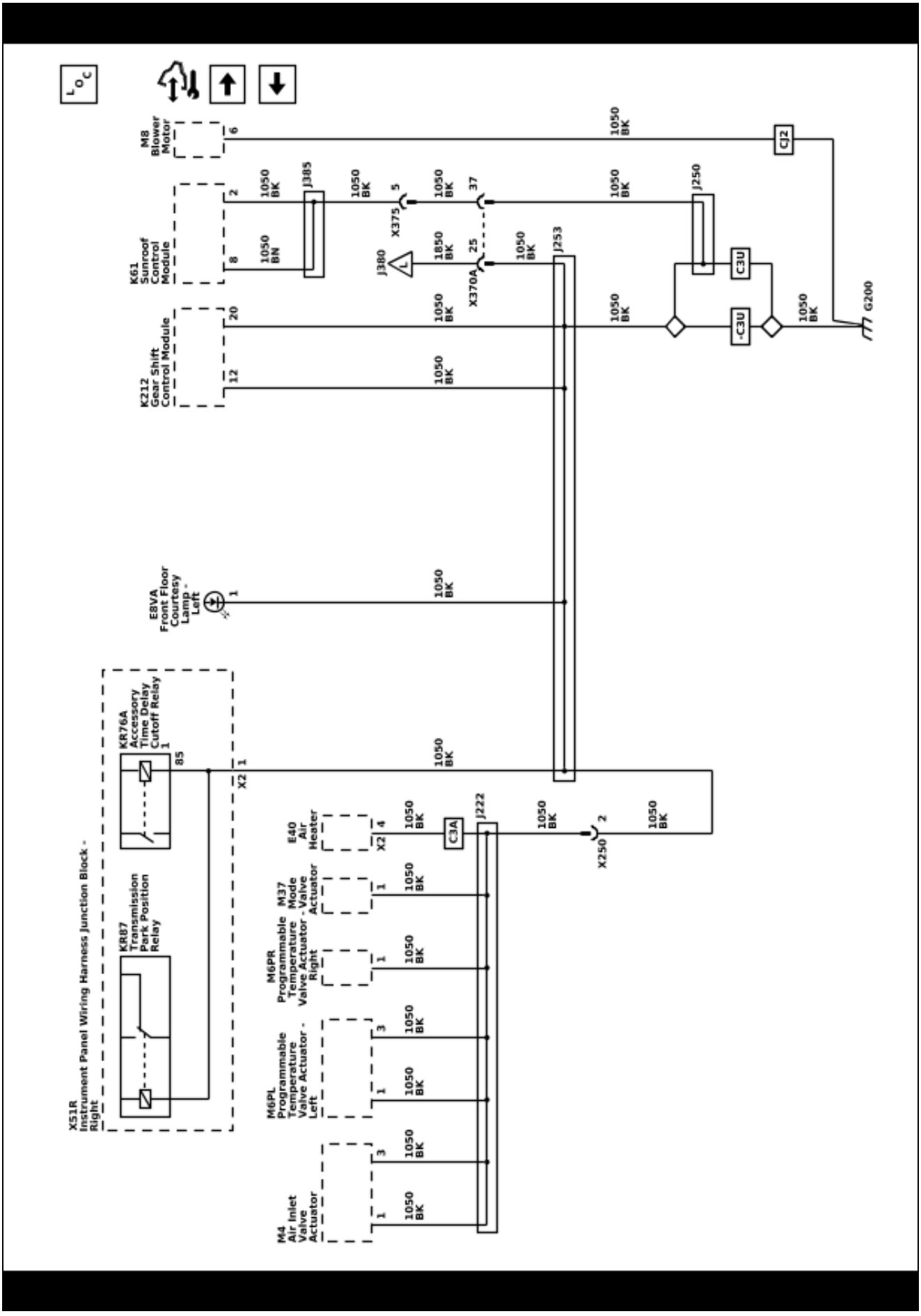

Ground Distribution Schematics (G200 (2 of 2))

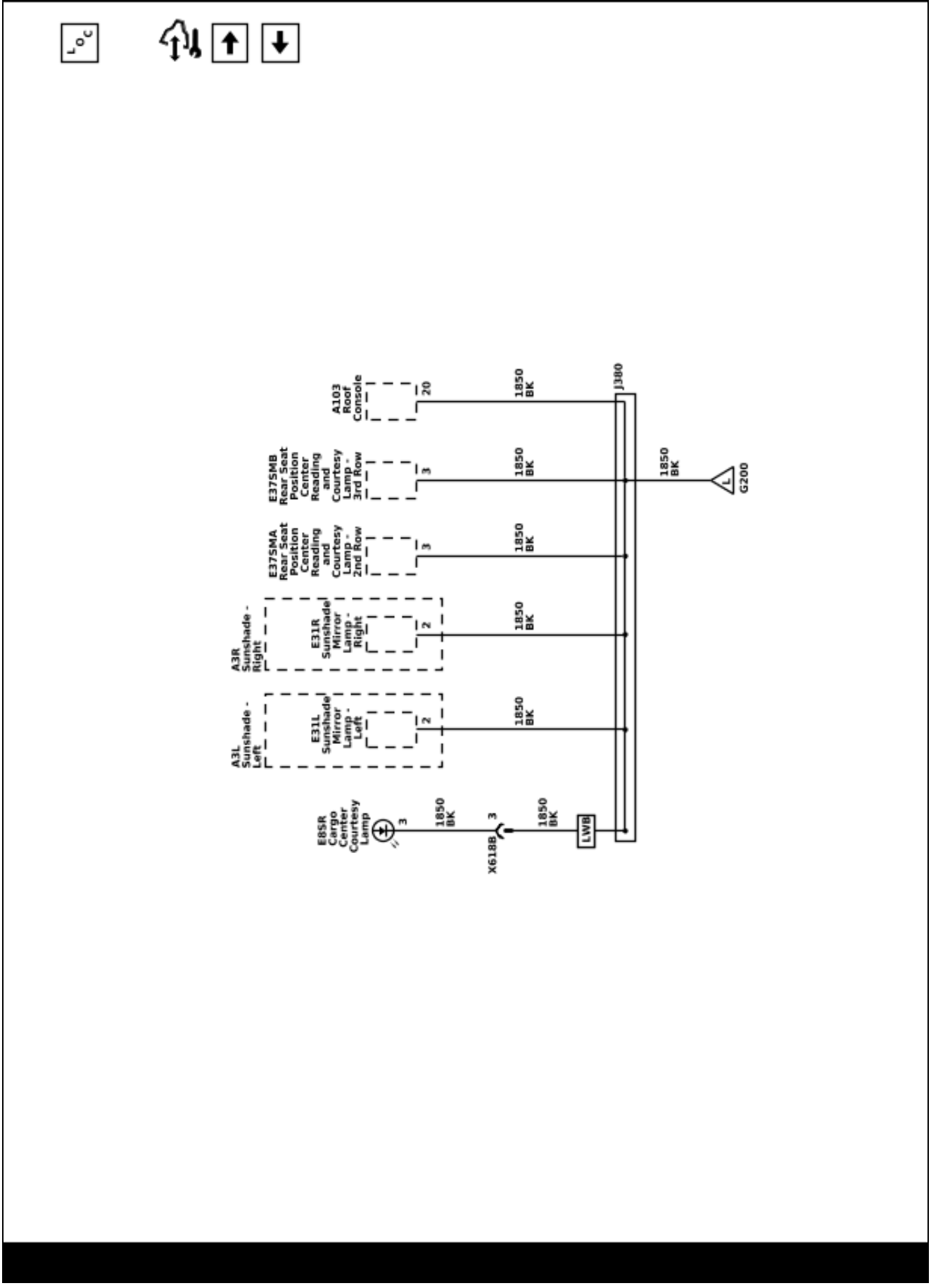

Ground Distribution Schematics (G201A (1 of 2))

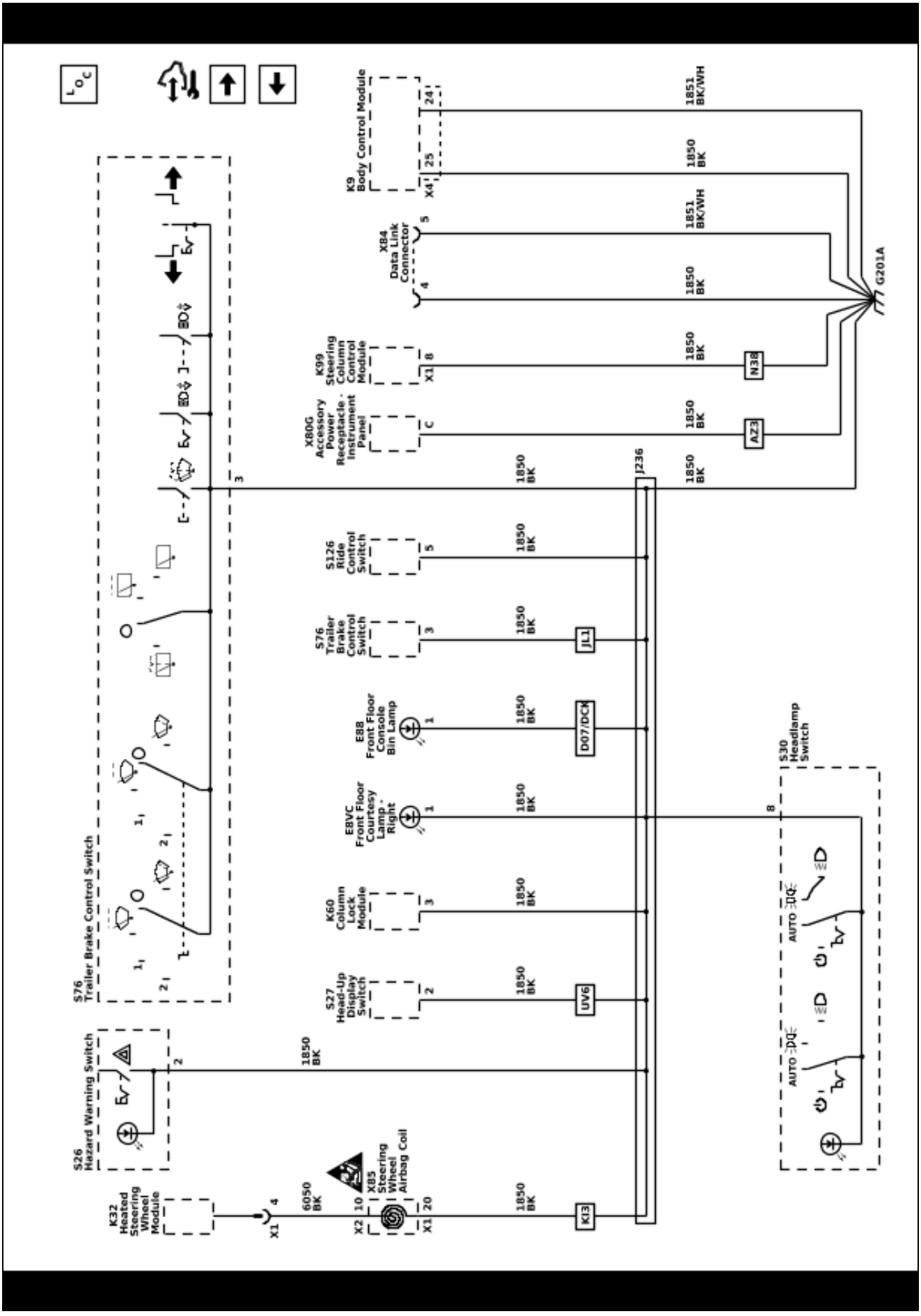

Ground Distribution Schematics (G201A (2 of 2))

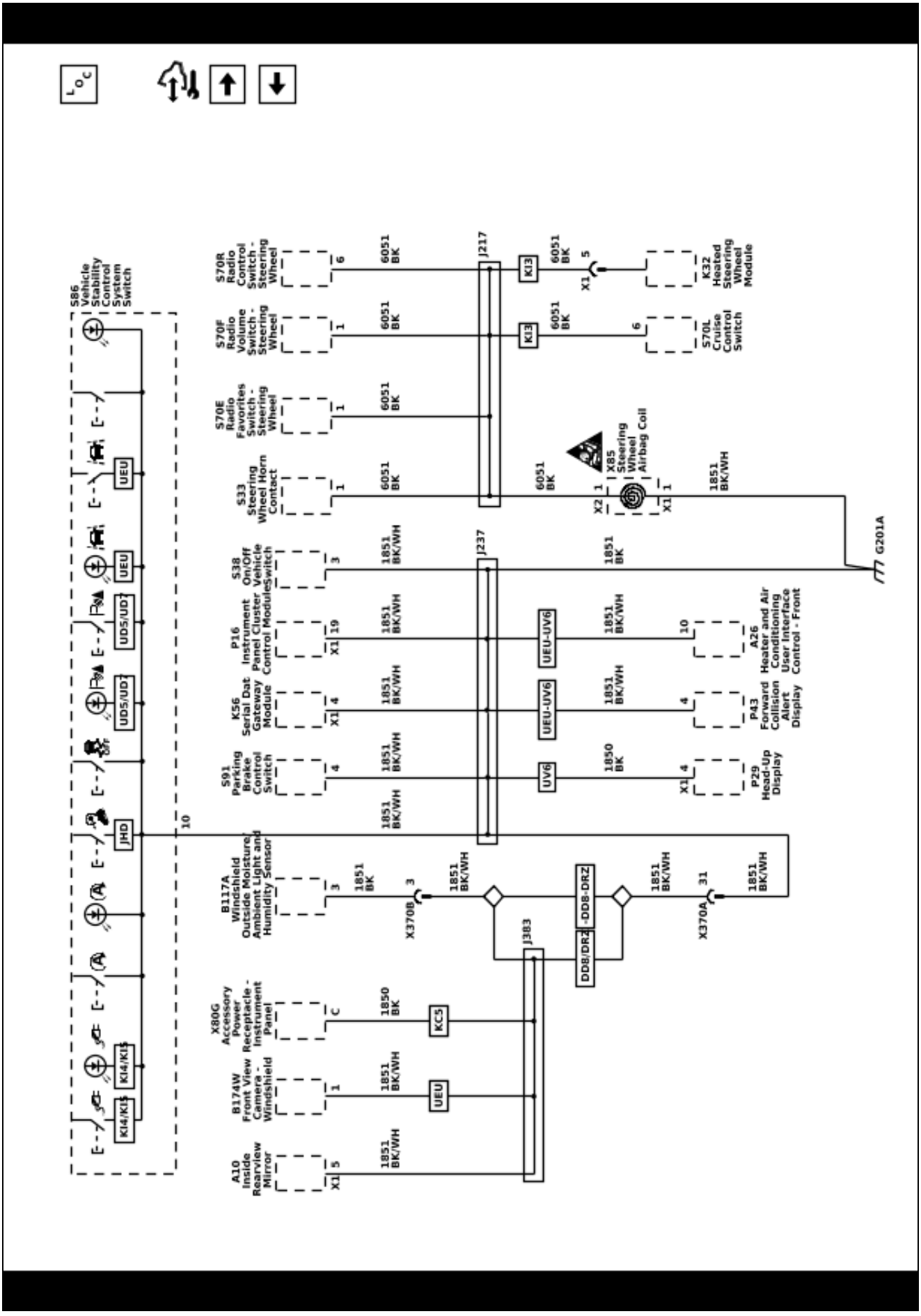

Ground Distribution Schematics (G300A (1 of 2))

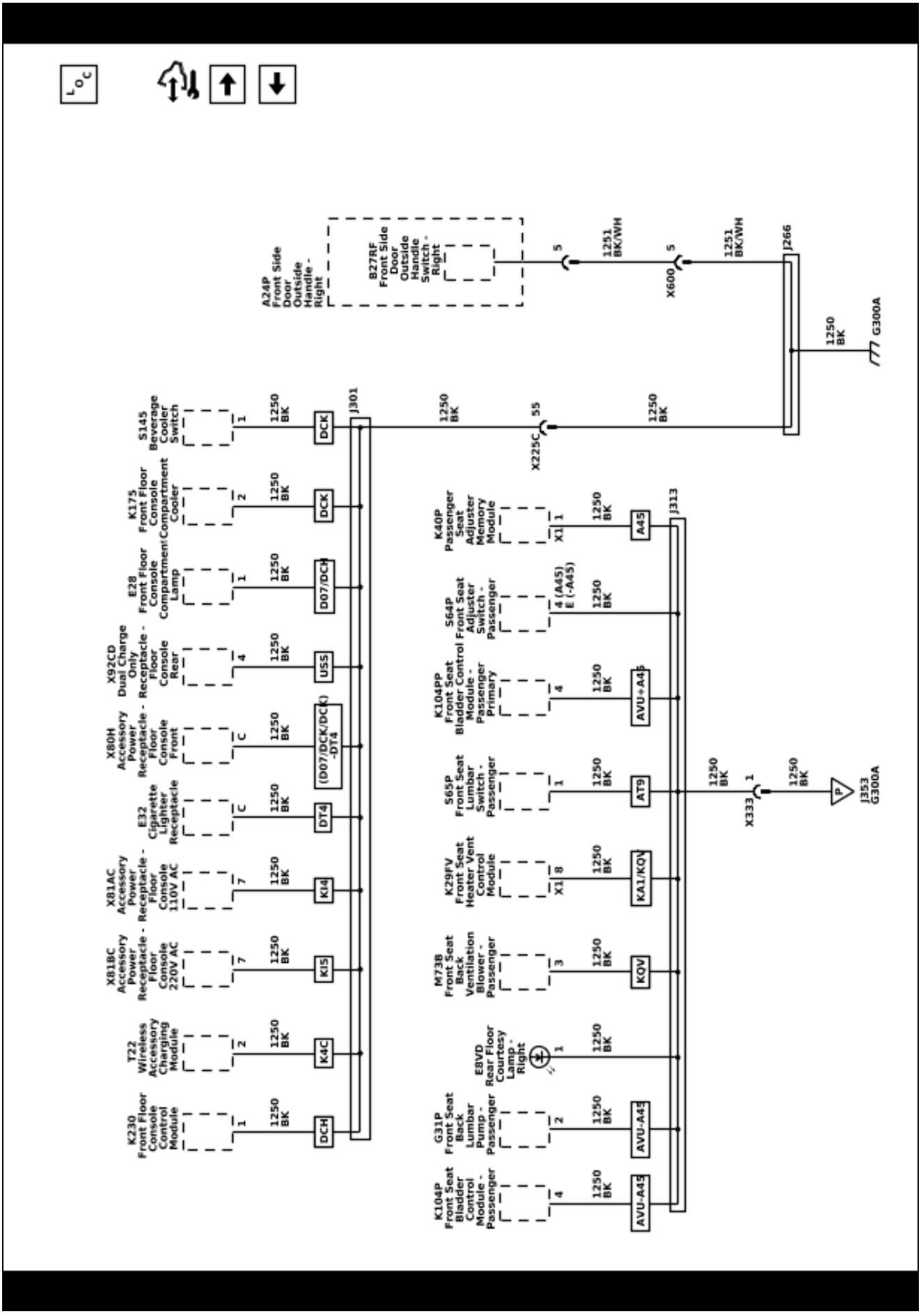

Ground Distribution Schematics (G300A (2 of 2))

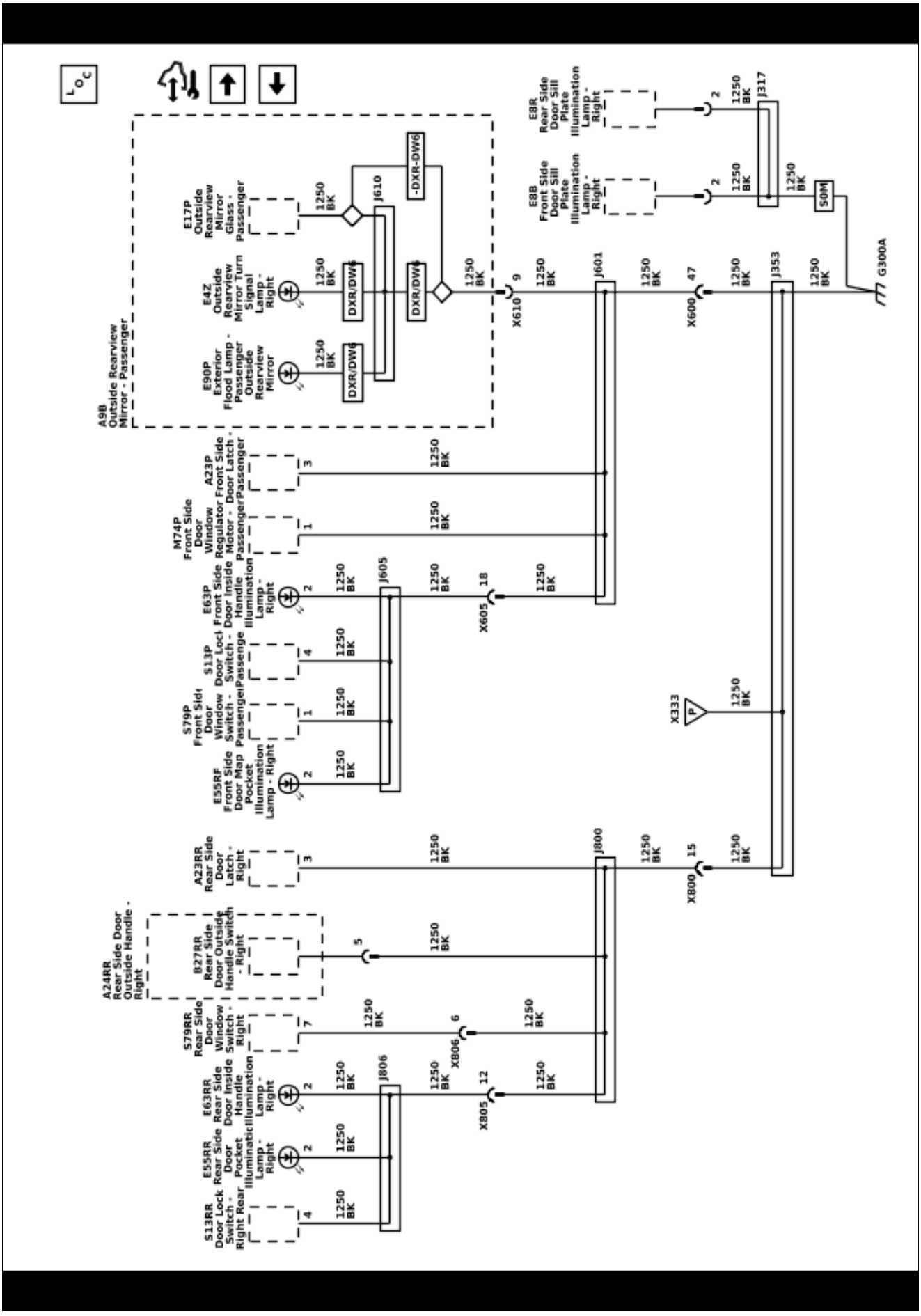

Ground Distribution Schematics (G301 (1 of 2))

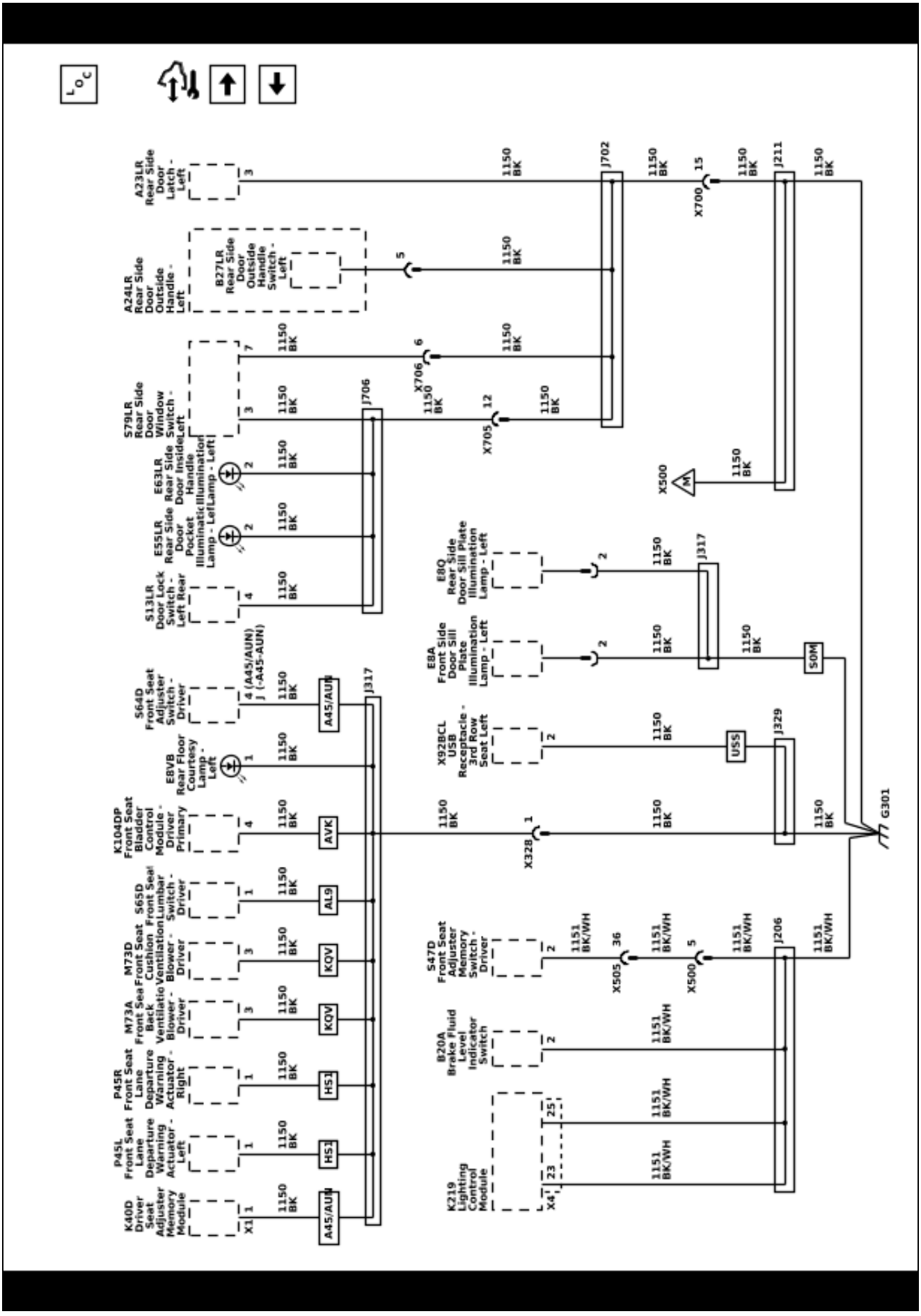

Ground Distribution Schematics (G301 (2 of 2))

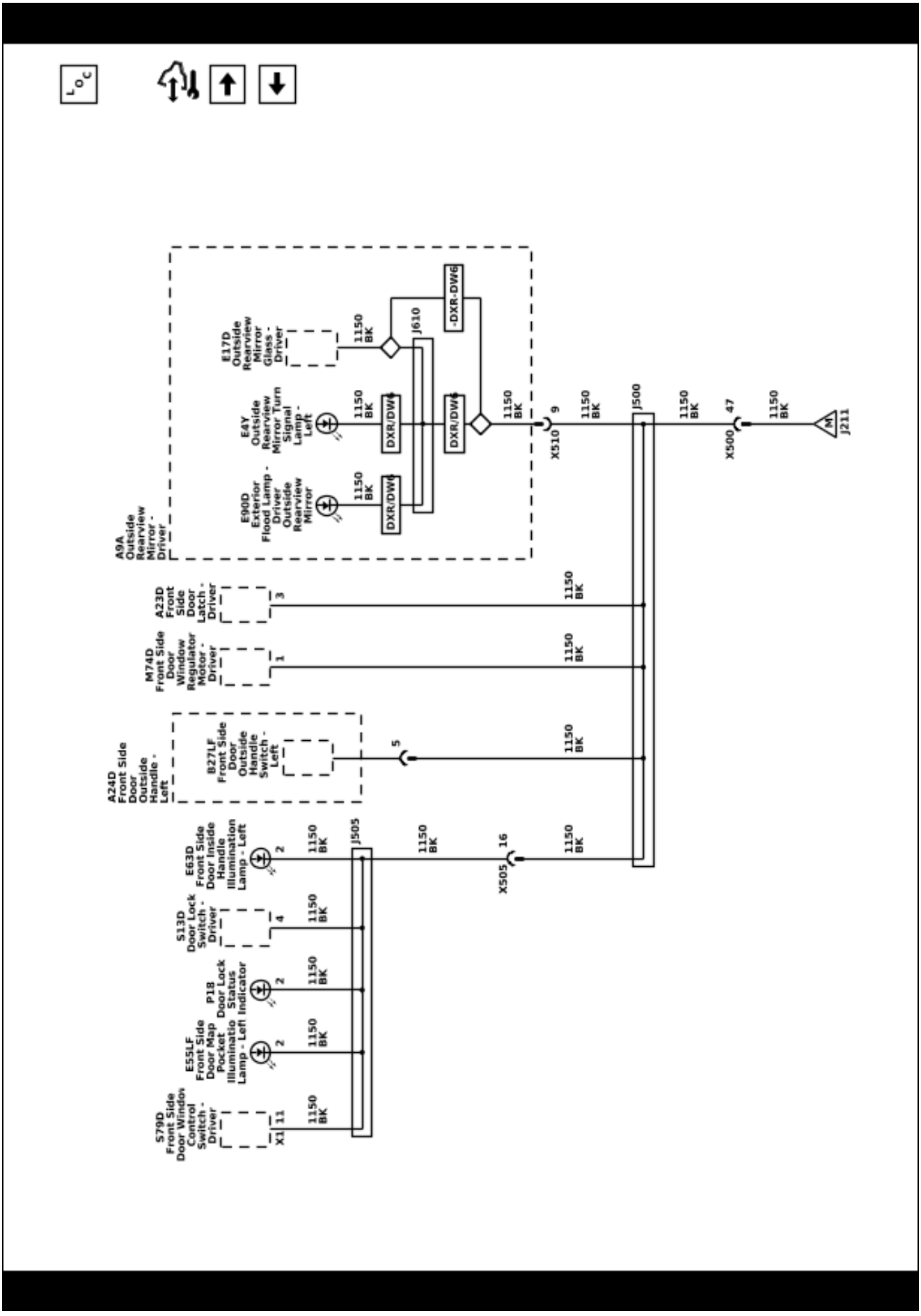

Ground Distribution Schematics (G302)

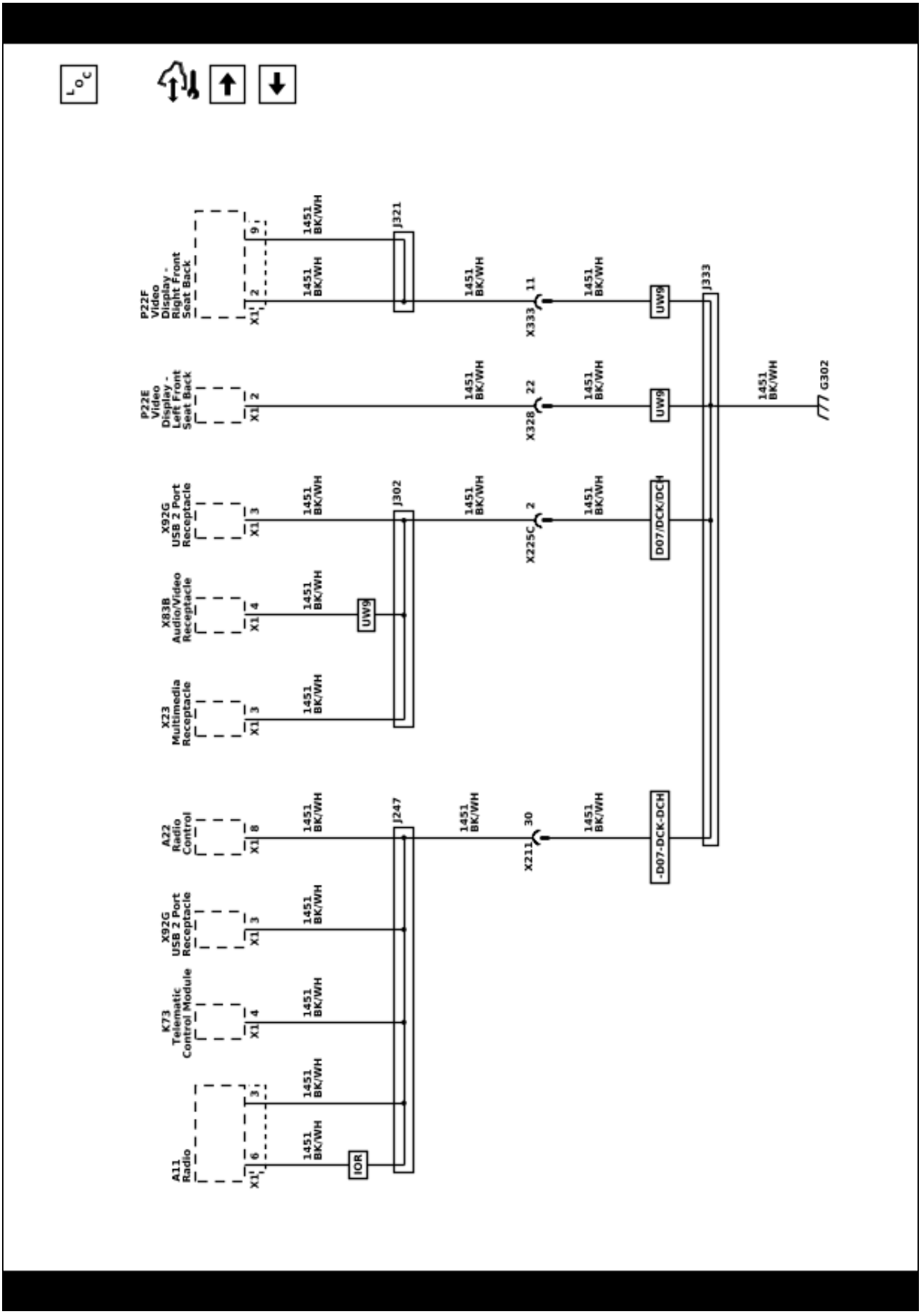

Ground Distribution Schematics (G303 and G407)

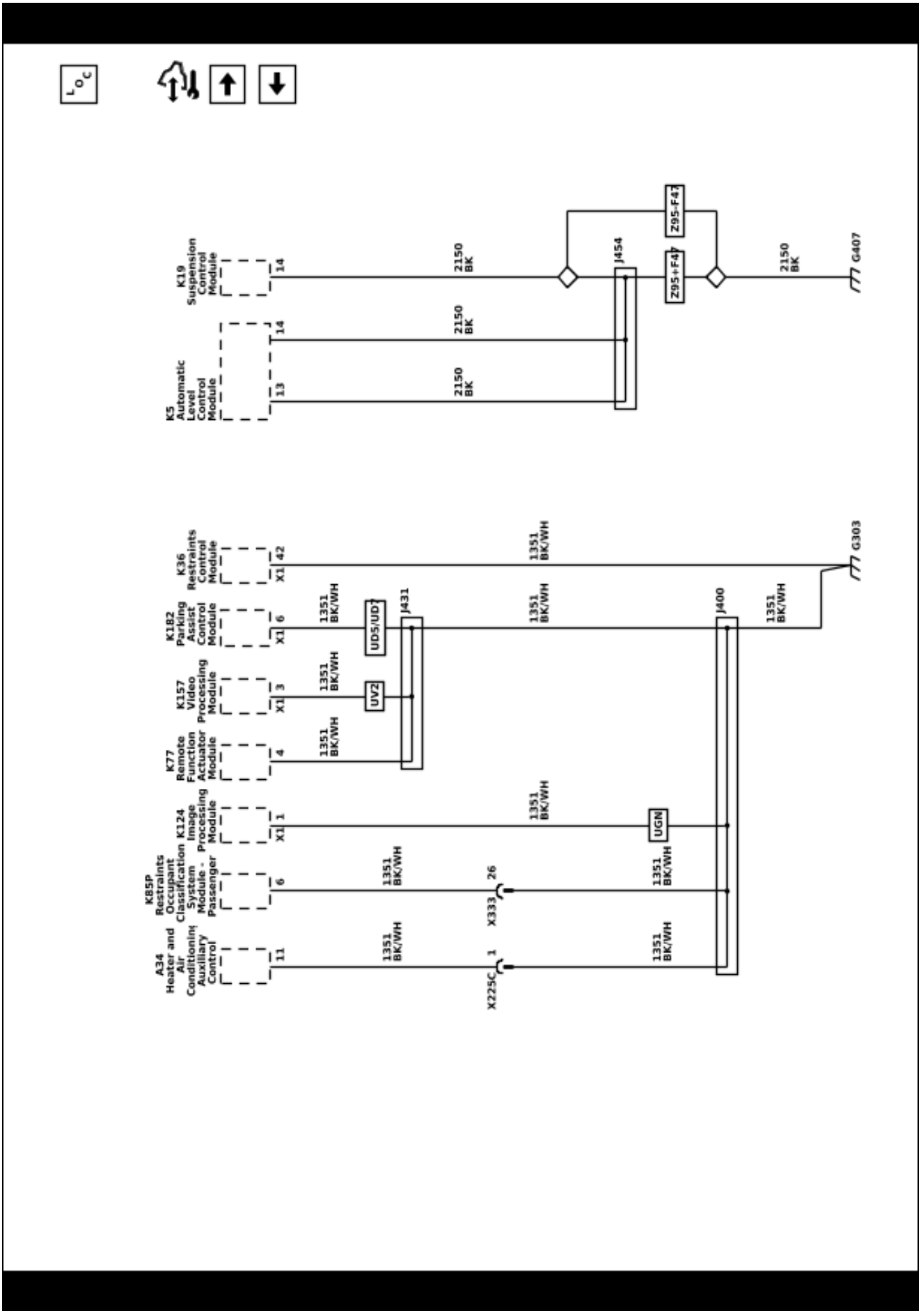

Ground Distribution Schematics (G402 (B3L/LM2))

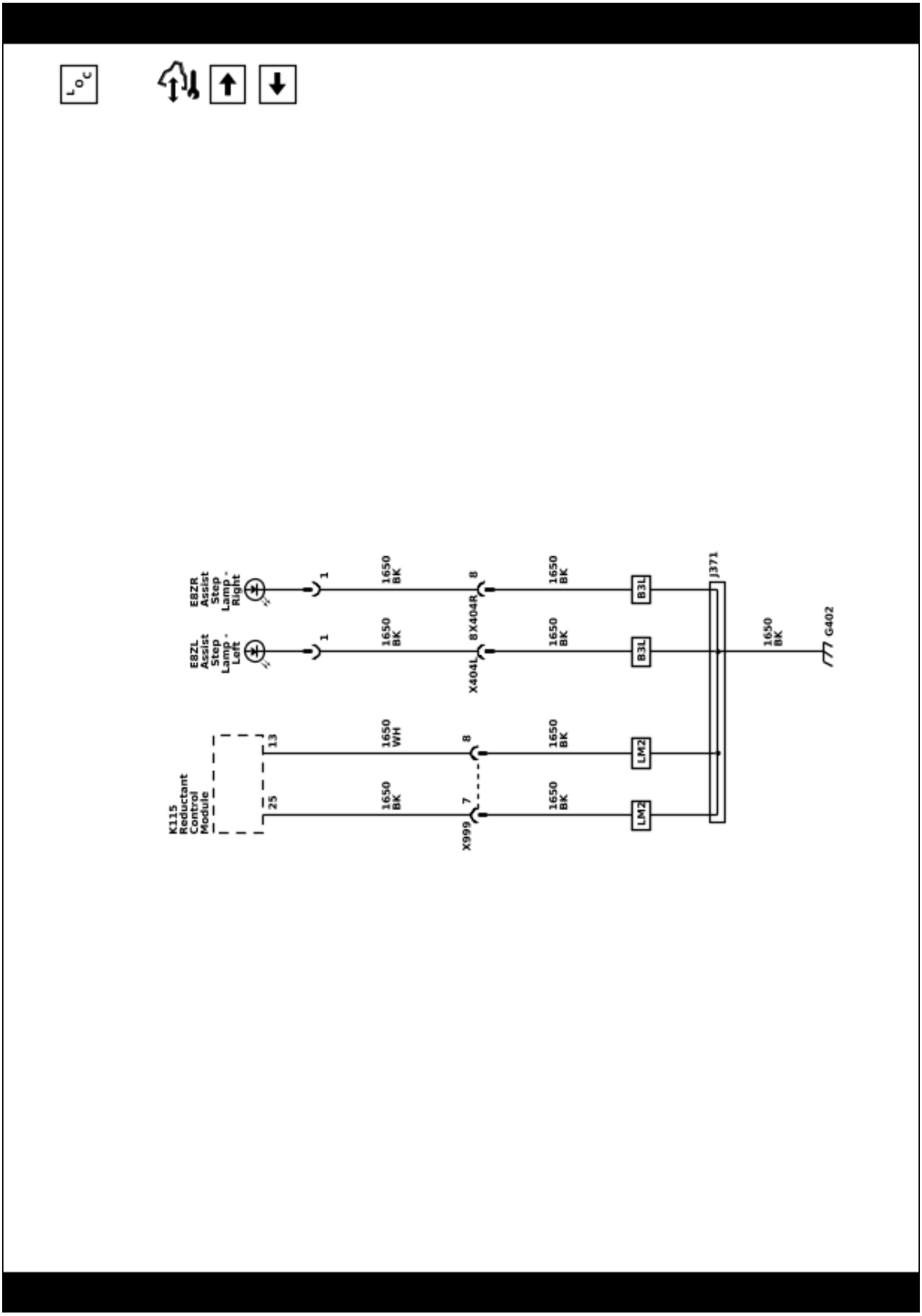

Ground Distribution Schematics (G404)

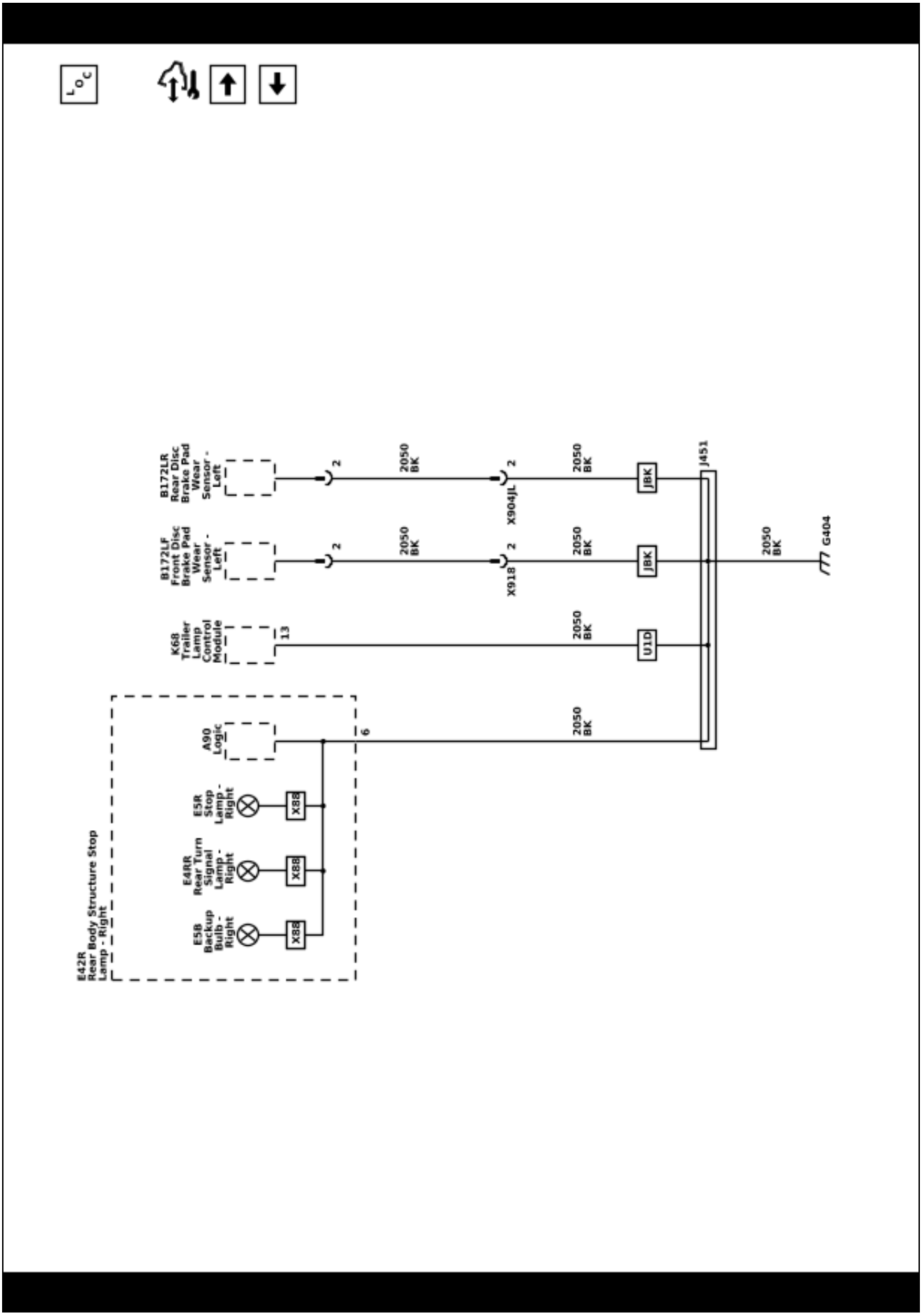

Ground Distribution Schematics (G405A)

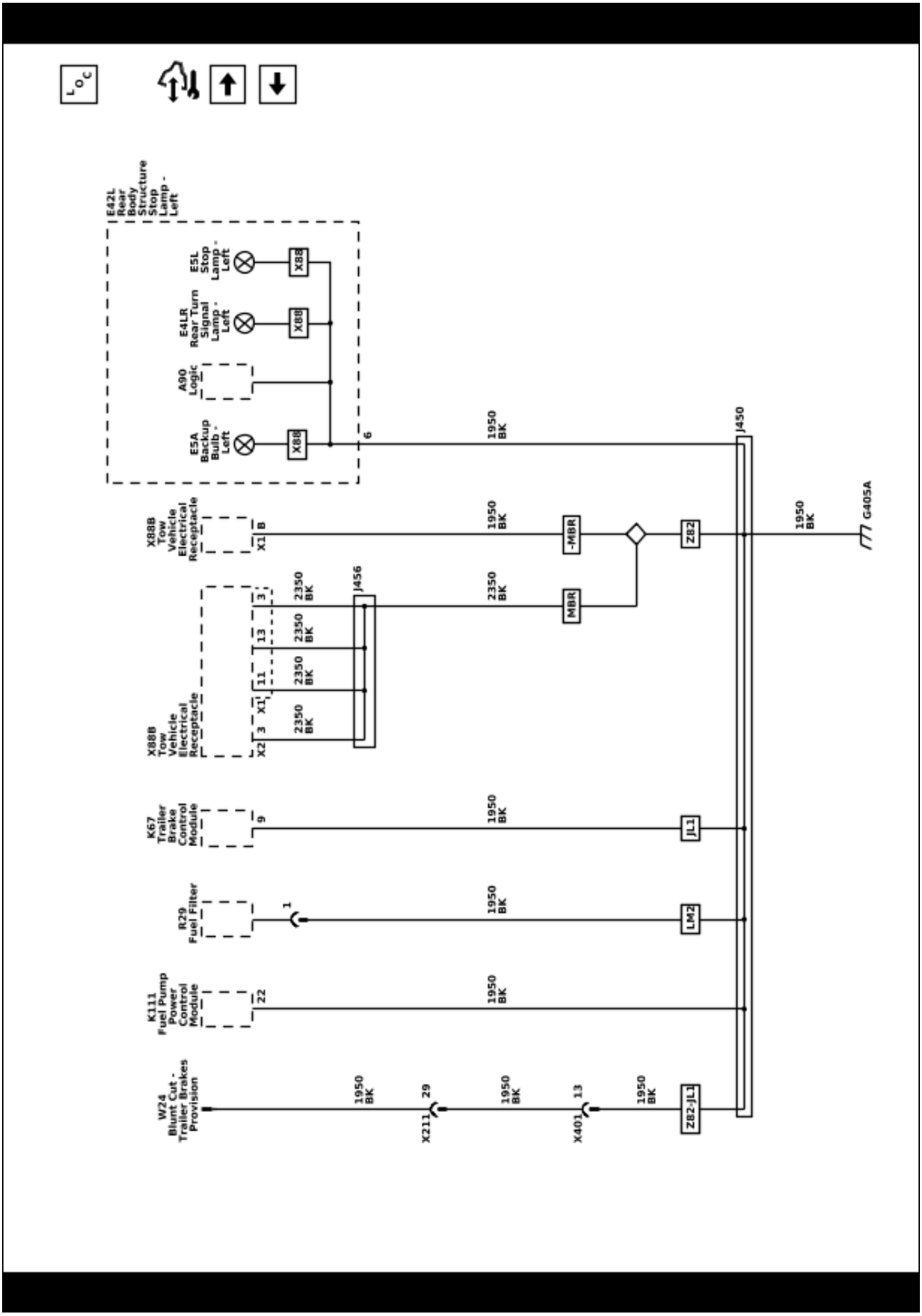

Ground Distribution Schematics (G408A and G408B)

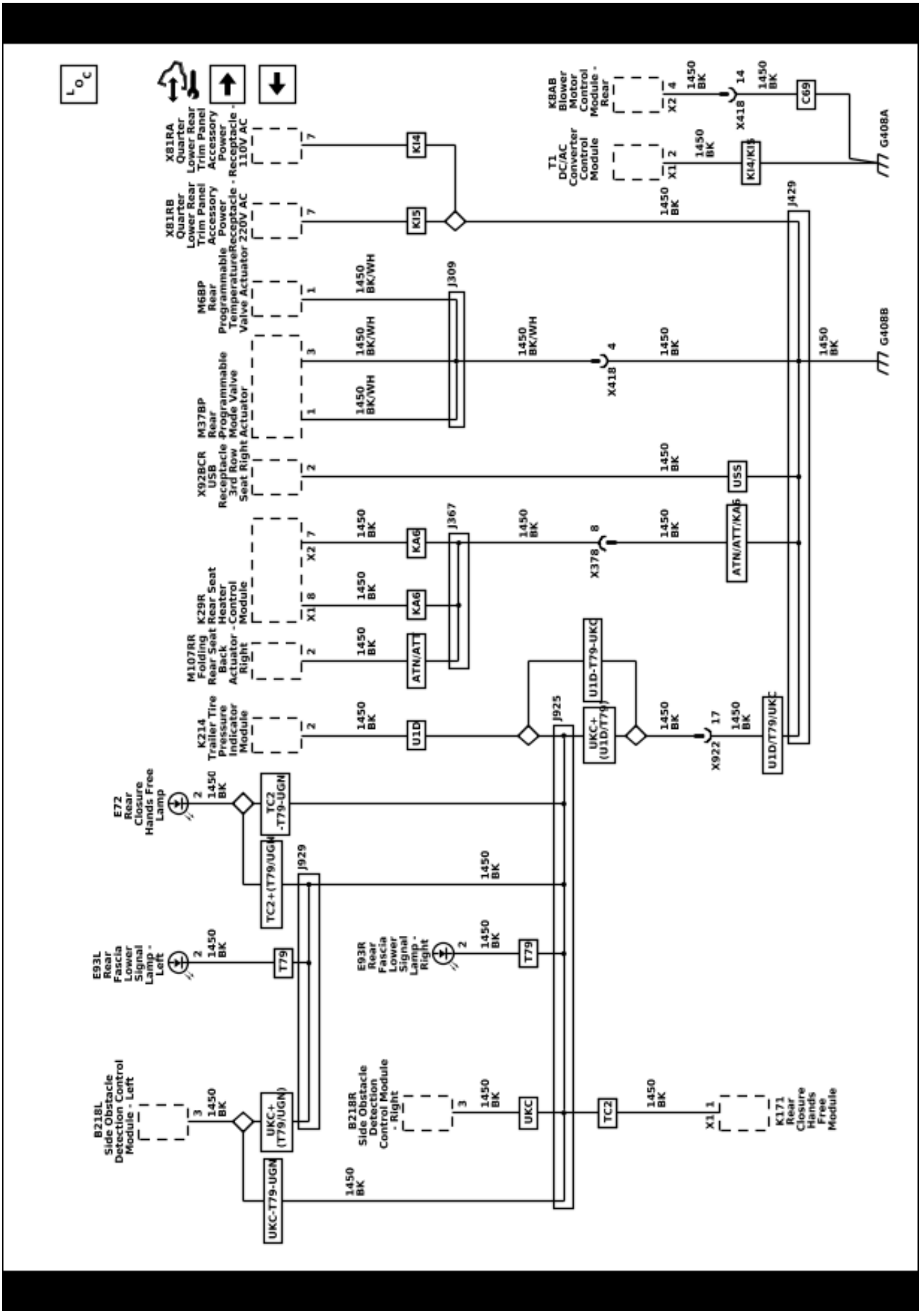

Ground Distribution Schematics (G409 (1 of 2))

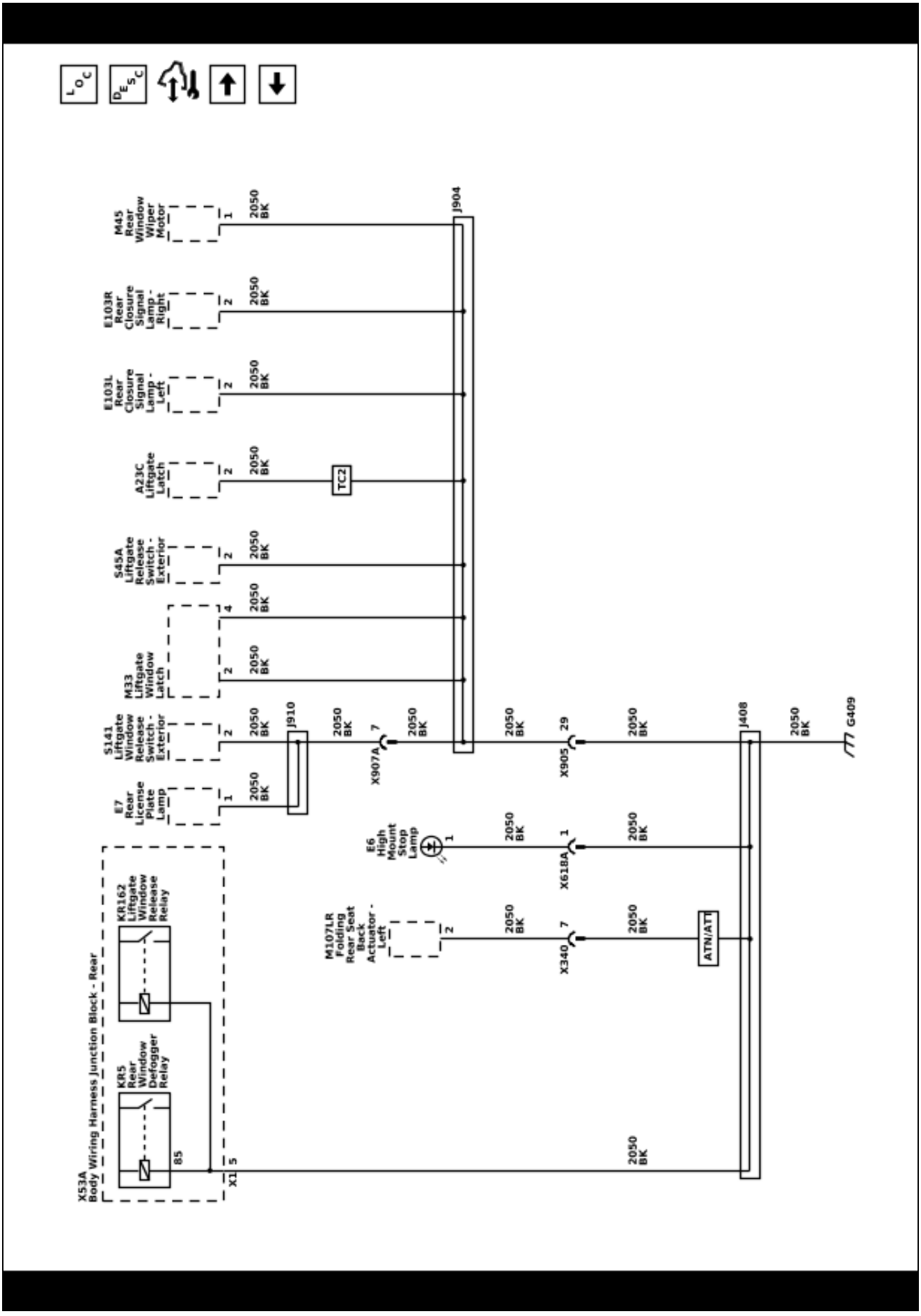

Ground Distribution Schematics (G409 (2 of 2))

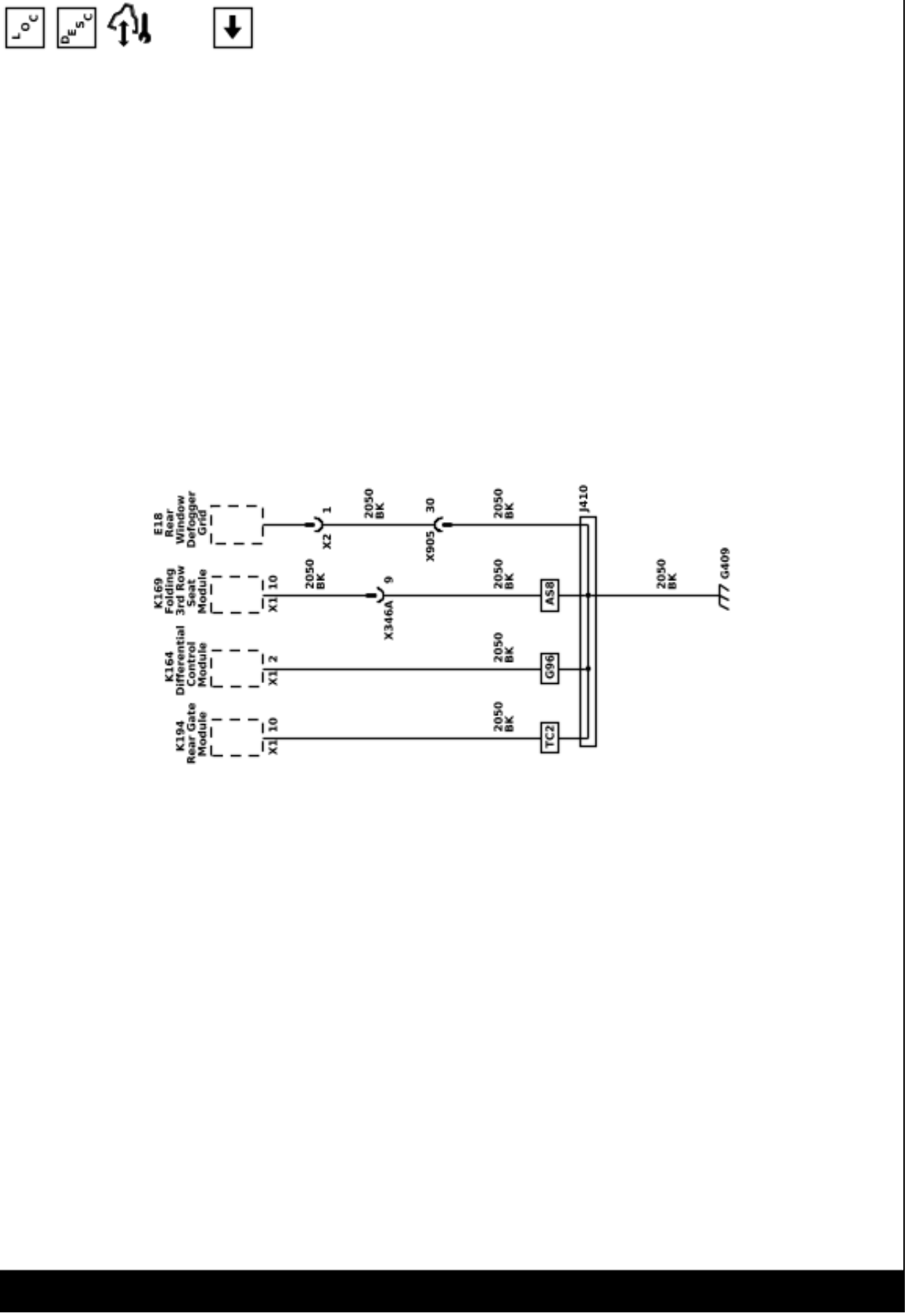

5862120

Component Locator

Master Electrical Component List

Code	Name	Option	Location	Locator View	Connector End View
A3L	Sunshade - Left	—	In the passenger compartment, at the front of the headliner, left side	—	—
A3R	Sunshade - Right	—	In the passenger compartment, at the front of the headliner, right side	—	—
A7	Fuel Tank Fuel Pump Module	—	Under the vehicle, left side, in front of rear axle, mounted in the fuel tank	—	A7 Fuel Tank Fuel Pump Module
A9A	Outside Rearview Mirror - Driver	—	Outside the vehicle, at the front of the driver door	—	—
A9B	Outside Rearview Mirror - Passenger	—	Outside the vehicle, at the front of the passenger door	—	—
A10	Inside Rearview Mirror	—	In the passenger compartment, at the top center of the windshield	—	• A10 Inside Rearview Mirror X1 • A10 Inside Rearview Mirror X2 (DRZ)
A11	Radio	—	In the passenger compartment, right front, below passenger a-pillar, between the instrument panel and bulkhead	—	• A11 Radio X1 (IOR) • A11 Radio X1 (IOS/IOT) • A11 Radio X10 (IOS/IOT) • A11 Radio X2 (IOR) • A11 Radio X2 (IOS/IOT) • A11 Radio X3 (IOR) • A11 Radio X3 (IOS/IOT) • A11 Radio X4 (IOR) • A11 Radio X4 (IOS/IOT) • A11 Radio X5 (IOR) • A11 Radio X6 (IOR) • A11 Radio X6 (IOS/IOT) • A11 Radio X7 (IOS/IOT) • A11 Radio X8 (IOR) • A11 Radio X9 (IOS/IOT)
A16	Transfer Case Four Wheel Drive Actuator	NP0/NQH	Under the vehicle, mounted to the rear of the transfer case	—	A16 Transfer Case Four Wheel Drive Actuator (NP0/NQH)
A22	Radio Control	UIR	In the passenger compartment, front center, mounted to the center of the Instrument Panel	—	• A22 Radio Control X1 • A22 Radio Control X2 (UV2/UVB)

Master Electrical Component List (cont'd)

Code	Name	Option	Location	Locator View	Connector End View
A23C	Liftgate Latch	—	At the rear of the vehicle, within liftgate, at the center of the bottom of the liftgate	—	• A23C Liftgate Latch (TB4) • A23C Liftgate Latch (TC2)
A23D	Front Side Door Latch - Driver	—	In the driver door, at the rear center	—	A23D Front Side Door Latch - Driver
A23LR	Rear Side Door Latch - Left	—	In the left rear door, at the rear center	—	A23LR Rear Side Door Latch - Left
A23P	Front Side Door Latch - Passenger	—	In the passenger door, at the rear center	—	A23P Front Side Door Latch - Passenger
A23RR	Rear Side Door Latch - Right	—	In the right rear door, at the rear center	—	A23RR Rear Side Door Latch - Right
A24D	Front Side Door Outside Handle - Left	—	Outside of the vehicle, at the rear of the driver door	—	A24D Front Side Door Outside Handle - Left
A24LR	Rear Side Door Outside Handle - Left	—	Outside of the vehicle, at the rear of the left rear door	—	A24LR Rear Side Door Outside Handle - Left
A24P	Front Side Door Outside Handle - Right	—	Outside of the vehicle, at the rear of the passenger door	—	A24P Front Side Door Outside Handle - Right
A24RR	Rear Side Door Outside Handle - Right	—	Outside of the vehicle, at the rear of the right rear door	—	A24RR Rear Side Door Outside Handle - Right
A26	Heater and Air Conditioning User Interface Control - Front	IOR	In the passenger compartment, at the center of the instrument panel, beneath A22 Radio Control	—	A26 Heater and Air Conditioning User Interface Control - Front
A34	Heater and Air Conditioning Auxiliary Control	C69	• (-5W4-9C1) In the passenger compartment, center, at the rear of the floor console • (5W4/9C1) In the luggage compartment, right rear, below D-pillar, behind right quarter lower rear trim panel	—	• A34 Heater and Air Conditioning Auxiliary Control (C69+A50) • A34 Heater and Air Conditioning Auxiliary Control (C69+AZ3)
A38	Reductant Tank Fluid Supply Pump Module	LM2	Under the vehicle, right side, rear of engine compartment bulkhead, mounted in the bottom of the reductant tank	—	A38 Reductant Tank Fluid Supply Pump Module (LM2)
A103	Roof Console	—	In the passenger compartment, front center, mounted to headliner	—	A103 Roof Console
A104	Brake Master Cylinder	—	In the engine compartment, left rear, bolted to the engine compartment bulkhead	—	—
B1	Air Conditioning Refrigerant Pressure Sensor	—	In the engine compartment, right side, mounted to high pressure A/C line, rearward of condenser	—	B1 Air Conditioning Refrigerant Pressure Sensor
B5LF	Front Wheel Speed Sensor - Left	—	Outside the vehicle, part of the left front wheel hub assembly	—	B5LF Front Wheel Speed Sensor - Left

Master Electrical Component List (cont'd)

Code	Name	Option	Location	Locator View	Connector End View
B5LR	Rear Wheel Speed Sensor - Left	—	Outside the vehicle, mounted to the outboard end of the left axle tube	—	B5LR Rear Wheel Speed Sensor - Left
B5RF	Front Wheel Speed Sensor - Right	—	Outside the vehicle, part of the right front wheel hub assembly	—	B5RF Front Wheel Speed Sensor - Right
B5RR	Rear Wheel Speed Sensor - Right	—	Outside the vehicle, mounted to the outboard end of the right axle tube	—	B5RR Rear Wheel Speed Sensor - Right
B7S	Duct Air Temperature Sensor - Rear Upper	C69	In the luggage compartment, right rear, behind right rear luggage compartment trim, part of Auxiliary HVAC Harness	—	—
B7T	Duct Air Temperature Sensor - Rear Lower	C69	In the luggage compartment, right rear, behind right rear luggage compartment trim, part of Auxiliary HVAC Harness	—	—
B9	Ambient Air Temperature Sensor	—	At the front of the vehicle, center, beneath intake air splash shield, attached to front bumper shutter	—	B9 Ambient Air Temperature Sensor
B10D	Sun Load and Ambient Light and Security Indicator Sensor	—	In the passenger compartment, front center, in instrument panel, mounted to the instrument panel extension	—	B10D Sun Load and Ambient Light and Security Indicator Sensor
B11LF	Front Suspension 4 Corner Leveling System Position Sensor - Left	F47	In left front wheel well, mounted to the frame and the front of the left upper control arm	—	B11LF Front Suspension 4 Corner Leveling System Position Sensor - Left (F47)
B11LR	Rear Suspension 2 or 4 Corner Air Leveling Position Sensor - Left	F47	In the left rear wheel well, mounted to the frame and the inside of the left rear trailing arm	—	B11LR Rear Suspension 2 or 4 Corner Air Leveling Position Sensor - Left (F47)
B11RF	Front Suspension 4 Corner Leveling System Position Sensor - Right	F47	In right front wheel well, mounted to the frame and the front of the right upper control arm	—	B11RF Front Suspension 4 Corner Leveling System Position Sensor - Right (F47)
B11RR	Rear Suspension 2 or 4 Corner Air Leveling Position Sensor - Right	F47	In the right rear wheel well, mounted to the frame and the inside of the right rear trailing arm	—	B11RR Rear Suspension 2 or 4 Corner Air Leveling Position Sensor - Right (F47)
B13	Automatic Transmission Fluid Temperature Sensor	—	Under the vehicle, inside the T12 Automatic Transmission	—	B13 Automatic Transmission Fluid Temperature Sensor (MQC)
B14A	Automatic Transmission Output Speed Sensor	—	Under the vehicle, inside the T12 Automatic Transmission	—	B14A Transmission Output Shaft Speed Sensor (MQC)
B14C	Automatic Transmission Input Speed Sensor	—	Under the vehicle, inside the T12 Automatic Transmission	—	B14C Transmission Input Shaft Speed Sensor (MQC)
B14DA	Automatic Transmission Intermediate Speed Sensor 1	—	Under the vehicle, inside the T12 Automatic Transmission	—	B14DA Transmission Intermediate Speed Sensor 1 (MQC)
B14DB	Automatic Transmission Intermediate Speed Sensor 2	—	Under the vehicle, inside the T12 Automatic Transmission	—	B14DB Transmission Intermediate Speed Sensor 2 (MQC)

Master Electrical Component List (cont'd)

Code	Name	Option	Location	Locator View	Connector End View
B20A	Brake Fluid Level Indicator Switch	—	In the engine compartment, left rear, mounted in the brake fluid reservoir	—	B20A Brake Fluid Level Indicator Switch
B22	Brake Pedal Position Sensor	—	In the passenger compartment, under the left side of the instrument panel, attached to the top of the brake pedal assembly	—	B22 Brake Pedal Position Sensor
B23	Camshaft Position Sensor	—	• (L84/L87) In the engine compartment, front center, mounted to timing chain cover, above the left side of the crankshaft harmonic balancer • (LM2) In the engine compartment, rear center, mounted to the right rear side of the cylinder head, rear of and beneath the exhaust gas recirculation valve	—	B23 Camshaft Position Sensor (L84/L87)
B23E	Camshaft Position Sensor - Exhaust	LM2	In the engine compartment, rear, mounted to the right rear corner of the cylinder head	—	B23E Camshaft Position Sensor - Exhaust (LM2)
B24	Mobile Telephone Microphone	IOR	In passenger compartment, front center, in A103 Roof Console	—	B24 Mobile Telephone Microphone (IOR)
B24LF	Mobile Telephone Microphone - Left Front	IOS/IOT	In the passenger compartment, front left, rear of A3L Sunshade - Left	—	—
B24RF	Mobile Telephone Microphone - Right Front	IOS/IOT	In the passenger compartment, front right, rear of A3R Sunshade - Right	—	—
B26	Crankshaft Position Sensor	—	• (L84/L87) In the engine compartment, right rear, mounted to right rear side of engine block, behind M64 Starter Motor • (LM2) In the engine compartment, right rear, beneath M64 Starter Motor mounted to the side of the engine block	—	• B26 Crankshaft Position Sensor (L84/L87) • B26 Crankshaft Position Sensor (LM2)
B27LF	Front Side Door Outside Handle Switch - Left	—	Outside of the vehicle, at the rear of the driver door, within A24D Front Side Door Outside Handle - Left	—	—
B27LR	Rear Side Door Outside Handle Switch - Left	—	Outside of the vehicle, at the rear of the left rear door, within A24LR Rear Side Door Outside Handle - Left Rear	—	—
B27RF	Front Side Door Outside Handle Switch - Right	—	Outside of the vehicle, at the rear of the driver door, within A24P Front Side Door Outside Handle - Right	—	—

Master Electrical Component List (cont'd)

Code	Name	Option	Location	Locator View	Connector End View
B27RR	Rear Side Door Outside Handle Switch - Right	—	Outside of the vehicle, at the rear of the right rear door, within A24RR Rear Side Door Outside Handle - Right Rear	—	—
B34	Engine Coolant Temperature Sensor	—	• (L84/L87) In the engine compartment, front center, mounted to water pump • (LM2) In the engine compartment, front center, mounted to inlet pipe at the rear of the water pump	—	• B34 Engine Coolant Temperature Sensor (L84/L87) • B34 Engine Coolant Temperature Sensor (LM2)
B34B	Engine Coolant Temperature Sensor 2	LM2	In the engine compartment, mounted to the left front side of the engine block	—	B34B Engine Coolant Temperature Sensor 2 (LM2)
B34E	Engine Coolant Temperature Sensor 5	LM2	In the engine compartment, mounted to the left rear side of the engine block	—	B34E Engine Coolant Temperature Sensor 5 (LM2)
B34K	Charge Air Cooler Coolant Temperature Sensor - Inlet	LM2	In the engine compartment, right front, mounted to charge air cooler coolant hose	—	B34K Charge Air Cooler Coolant Temperature Sensor - Inlet (LM2)
B35	Engine Oil Level Indicator Switch	L84/L87	In the engine compartment, mounted to the right side of the engine oil pan, above oil filter	—	B35 Engine Oil Level Indicator Switch (L84/L87)
B36	Engine Oil Temperature Sensor	LM2	In the engine compartment, right rear, mounted to the upper engine oil pan, above the oil filter	—	B36 Engine Oil Temperature Sensor (LM2)
B37B	Engine Oil Pressure Sensor	L84/L87	In the engine compartment, left rear side of engine, mounted to the engine oil cooler lines, above oil filter	—	• B37B Engine Oil Pressure Sensor (L84/L87) • B37B Engine Oil Pressure Sensor (LM2)
B39	Air Conditioning Evaporator Air Temperature Sensor	—	In the passenger compartment, front center, behind the left front floor console extension panel	—	B39 Air Conditioning Evaporator Air Temperature Sensor
B46	Fuel Level Sensor	—	Under the vehicle, left side, forward of rear axle, inside the fuel tank, part of A7 Fuel Tank Fuel Pump Module	—	—
B47	Fuel Pressure Sensor	—	Under the vehicle, left side, in front of rear axle, mounted to the top of A7 Fuel Tank Pump Module	—	• B47 Fuel Pressure Sensor (L87) • B47 Fuel Pressure Sensor (LM2)
B47B	Fuel Rail Pressure Sensor	—	• (L84/L87) In the engine compartment, rear, at the rear of Bank 1 Fuel Rail • (LM2) In the engine compartment, at the top of the engine, mounted to the front of the fuel rail	—	• B47B Fuel Rail Pressure Sensor (L84/L87) • B47B Fuel Rail Pressure Sensor (LM2)

Master Electrical Component List (cont'd)

Code	Name	Option	Location	Locator View	Connector End View
B52C	Heated Oxygen Sensor - Bank 1 Sensor 1	L84/L87	Under the vehicle, mounted in the bank 1 exhaust, upstream of the catalytic converter	—	B52C Heated Oxygen Sensor - Bank 1 Sensor 1 (L84/L87)
B52D	Heated Oxygen Sensor - Bank 1 Sensor 2	L84/L87	Under the vehicle, mounted to the bank 1 downstream catalytic converter	—	B52D Heated Oxygen Sensor - Bank 1 Sensor 2 (L84/L87)
B52E	Heated Oxygen Sensor - Bank 2 Sensor 1	L84/L87	Under the vehicle, mounted in the bank 2 exhaust, upstream of the catalytic converter	—	B52E Heated Oxygen Sensor - Bank 2 Sensor 1 (L84/L87)
B52F	Heated Oxygen Sensor - Bank 2 Sensor 2	L84/L87	Under the vehicle, mounted to the bank 2 downstream catalytic converter	—	B52F Heated Oxygen Sensor - Bank 2 Sensor 2 (L84/L87)
B55	Engine Compartment Cover Switch	—	Behind the front grille, center of hood latch	—	B55 Engine Compartment Cover Switch
B58L	Airbag Front End Discriminating Sensor - Left	—	In the engine compartment, left front, at the bottom of the radiator core support	—	B58L Airbag Front End Discriminating Sensor - Left
B58R	Airbag Front End Discriminating Sensor - Right	—	In the engine compartment, right front, at the bottom of the radiator core support	—	B58R Airbag Front End Discriminating Sensor - Right
B61P	Seat Belt Tension Sensor - Passenger	—	In the passenger compartment, at the base of the B-pillar, part of the passenger seat belt retractor pretensioner	—	B61P Seat Belt Tension Sensor - Passenger
B63LF	Airbag Side Impact Sensor - Left Front Door	—	At the left front of the passenger compartment, mounted inside the middle of the left front door	—	B63LF Airbag Side Impact Sensor - Left Front Door
B63LR	Airbag Side Impact Rear Sensor - Left Door	—	At the left rear of the passenger compartment, mounted inside the middle of the left rear door	—	B63LR Airbag Side Impact Rear Sensor - Left Door
B63RF	Airbag Side Impact Sensor - Right Front Door	—	At the right front of the passenger compartment, mounted inside the middle of the right front door	—	B63RF Airbag Side Impact Sensor - Right Front Door
B63RR	Airbag Side Impact Rear Sensor - Right Door	—	At the right rear of the passenger compartment, mounted inside the middle of the right rear door	—	B63RR Airbag Side Impact Rear Sensor - Right Door
B65	Manifold Absolute Pressure and Intake Air Temperature Sensor	LM2	In the engine compartment, left side of engine, mounted to the intake manifold, near Q18A Fuel Pressure Regulator 1	—	B65 Manifold Absolute Pressure and Intake Air Temperature Sensor (LM2)
B68A	Knock Sensor 1	L84/L87	In the engine compartment, left side of engine, mounted to the rear of the engine block, below exhaust manifold, behind knock sensor shield	—	B68A Knock Sensor 1 (L84/L87)
B68B	Knock Sensor 2	L84/L87	In the engine compartment, right rear, mounted to right rear side of engine block, above M64 Starter	—	B68B Knock Sensor 2 (L84/L87)

Master Electrical Component List (cont'd)

Code	Name	Option	Location	Locator View	Connector End View
B70	Liftgate Close Switch	TC2	At the rear of the vehicle, within liftgate, at the center of the bottom of the liftgate, left of A23C Liftgate Latch	—	B70 Liftgate Close Switch (TC2)
B74	Manifold Absolute Pressure Sensor	L84/L87	In the engine compartment, front center, mounted to intake manifold, to the left of Q38 Throttle Body	—	B74 Manifold Absolute Pressure Sensor (L84/L87)
B75	Mass Airflow Sensor	—	In the engine compartment, left front, mounted to the air cleaner lid	—	B75 Mass Airflow Sensor (LM2)
B80	Parking Brake Switch	—	In the passenger compartment, at the left lower side of the instrument panel trim pad	—	—
B87	Rearview Driver Information Camera	UV2/UVB	At the rear of the vehicle, center of the liftgate, mounted to the rear closure center applique	—	• B87 Rearview Driver Information Camera (UV2) • B87 Rearview Driver Information Camera (UVB)
B88CL	Seat Belt Switch - 3rd Row Left	—	In the passenger compartment, at the left side of left third row seat, part of B153CL 3rd Row Seat Belt Buckle - Left	—	B88CL Seat Belt Switch - 3rd Row Left (UH6)
B88CM	Seat Belt Switch - 3rd Row Middle	—	In the passenger compartment, at the middle of the third row seat, part of B153CM 3rd Row Seat Belt Buckle - Middle	—	B88CM Seat Belt Switch - 3rd Row Middle (UH6)
B88CR	Seat Belt Switch - 3rd Row Right	—	In the passenger compartment at the right of the third row seat, part of B153CR 3rd Row Seat Belt Buckle - Right	—	B88CR Seat Belt Switch - 3rd Row Right (UH6)
B88D	Seat Belt Switch - Driver	—	In the passenger compartment, at the inboard side of the driver seat, part of B153D Front Seat Belt Buckle - Driver	—	B88D Seat Belt Switch - Driver
B88LR	Seat Belt Switch - Left Rear	—	In the passenger compartment, 2nd row of seats, left side, part of B153LR Rear Seat Belt Buckle - Left	—	B88LR Seat Belt Switch - Left Rear (UH5)
B88MR	Seat Belt Switch - Rear Middle	—	In the passenger compartment, at the middle of the second row seat, part of B153RM Rear Center Seat Belt Buckle	—	B88MR Seat Belt Switch - Rear Middle (UH5)
B88P	Seat Belt Switch - Passenger	—	In the passenger compartment, at the inboard side of the passenger seat, part of B153P Front Seat Belt Buckle - Passenger	—	B88P Seat Belt Switch - Passenger
B88RR	Seat Belt Switch - Right Rear	—	In the passenger compartment, 2nd row of seats, right side, part of B153RR Rear Seat Belt Buckle - Right	—	B88RR Seat Belt Switch - Right Rear (UH5)

Master Electrical Component List (cont'd)

Code	Name	Option	Location	Locator View	Connector End View
B107	Accelerator Pedal Position Sensor	—	In the passenger compartment, in the driver side foot well, under the instrument panel, above the accelerator pedal	—	B107 Accelerator Pedal Position Sensor
B110	Battery Monitor Module	KL9	In the engine compartment, right rear, part of battery negative post clamp	—	• B110 Battery Monitor Module X1 • B110 Battery Monitor Module X2
B117A	Windshield Outside Moisture/Ambient Light and Humidity Sensor	—	In the passenger compartment, at the top center of the windshield, forward of windshield multifunction sensor mount bracket cover insert	—	B117A Windshield Outside Moisture/Ambient Light and Humidity Sensor
B118	Windshield Washer Solvent Container Level Sensor	—	At the left front corner of vehicle, forward of the front wheelhouse liner, at the bottom of the washer fluid reservoir	—	B118 Windshield Washer Solvent Container Level Sensor
B130A	Exhaust Gas Recirculation Temperature Sensor 1	LM2	In the engine compartment, right side, beneath M103 Turbocharger Vane Position Actuator	—	B130A Exhaust Gas Recirculation Temperature Sensor 1 (LM2)
B130C	Exhaust Gas Recirculation Temperature Sensor 3	LM2	In the engine compartment, left rear side of engine	—	B130C Exhaust Gas Recirculation Temperature Sensor 3 (LM2)
B131A	Exhaust Gas Temperature Sensor 1	LM2	In the engine compartment, right front, mounted in exhaust, in front of B345P Exhaust Pressure Differential Sensor - Particulate Filter	—	B131A Exhaust Gas Temperature Sensor 1 (LM2)
B131B	Exhaust Gas Temperature Sensor 2	LM2	In the engine compartment, right front, mounted in exhaust, near Q61 Reductant Fluid Injector	—	B131B Exhaust Gas Temperature Sensor 2 (LM2)
B131C	Exhaust Gas Temperature Sensor 3	LM2	In the engine compartment, mounted in exhaust, near M64 Starter	—	B131C Exhaust Gas Temperature Sensor 3 (LM2)
B136	Exhaust Particulate Matter Sensor	LM2	On the underbody, mounted to the inboard side of the right frame rail, near transmission crossmember	—	B136 Exhaust Particulate Matter Sensor (LM2)
B137B	Power Steering Shaft Torque/Position Sensor	—	Under the vehicle, in the engine compartment, left front, behind the left side of the power steering rack.	—	B137B Power Steering Shaft Torque/Position Sensor
B139	Transfer Case Two/Four Wheel Drive Actuator Position Sensor	NP0/NQH	Under the vehicle, mounted to the left rear of the transfer case	—	B139 Transfer Case Two/Four Wheel Drive Actuator Position Sensor (NP0/NQH)
B150	Fuel Tank Pressure Sensor	L84/L87	Under the vehicle, at the top of the fuel tank, mounted to A7 Fuel Tank Fuel Pump Module	—	B150 Fuel Tank Pressure Sensor (L84/L87)

Master Electrical Component List (cont'd)

Code	Name	Option	Location	Locator View	Connector End View
B153CL	3rd Row Seat Belt Buckle - Left	—	In the passenger compartment, at the left side of third row seat	—	—
B153CM	3rd Row Seat Belt Buckle - Middle	—	In the passenger compartment, at the middle of the third row seat	—	—
B153CR	3rd Row Seat Belt Buckle - Right	—	In the passenger compartment at the right side of the third row seat	—	—
B153D	Front Seat Belt Buckle - Driver	—	In the passenger compartment, at the inboard side of the driver seat	—	—
B153LR	Rear Seat Belt Buckle - Left	—	In the passenger compartment, 2nd row of seats, left side	—	—
B153P	Front Seat Belt Buckle - Passenger	—	In the passenger compartment, at the inboard side of the passenger seat	—	—
B153RM	Rear Center Seat Belt Buckle	—	In the passenger compartment, 2nd row of seats, middle	—	—
B153RR	Rear Seat Belt Buckle - Right	—	In the passenger compartment, 2nd row of seats, right side	—	—
B159BL	Body Side Rear Window Glass Breakage Sensor - Left	UTU/UTV	In the cargo area, left side, attached to the lower portion of the left rear side window	—	*B159BL Body Side Rear Window Glass Breakage Sensor - Left (UTJ)*
B159BR	Body Side Rear Window Glass Breakage Sensor - Right	UTU/UTV	In the cargo area, right side, attached to the lower portion of the right rear side window	—	*B159BR Body Side Rear Window Glass Breakage Sensor - Right (UTJ)*
B161LF	Electronic Suspension Wheel Front Vertical Accelerometer - Left	Z95	In left front wheel well, mounted to the frame and the front of the left upper control arm	—	*B161LF Electronic Suspension Wheel Front Vertical Accelerometer - Left (Z95)*
B161RF	Electronic Suspension Wheel Front Vertical Accelerometer - Right	Z95	In the left rear wheel well, mounted to the frame and the inside of the left rear trailing arm	—	*B161RF Electronic Suspension Wheel Front Vertical Accelerometer - Right (Z95)*
B162LR	Electronic Suspension Rear Vertical Accelerometer - Left	Z95	In right front wheel well, mounted to the frame and the front of the right upper control arm	—	*B162LR Electronic Suspension Rear Vertical Accelerometer - Left (Z95)*
B162RR	Electronic Suspension Rear Vertical Accelerometer - Right	Z95	In the right rear wheel well, mounted to the frame and the inside of the right rear trailing arm	—	*B162RR Electronic Suspension Rear Vertical Accelerometer - Right (Z95)*
B165	Content Theft Deterrent Sensor	—	In the passenger compartment, front center, mounted to rear of A103 Roof Console	—	—
B172LF	Front Disc Brake Pad Wear Sensor - Left	JBK	Under the vehicle, at left front caliper, attached to brake pad	—	*B172LF Front Disc Brake Pad Wear Sensor - Left (JBK)*
B172LR	Rear Disc Brake Pad Wear Sensor - Left	JBK	Under the vehicle, at left rear caliper, attached to brake pad	—	*B172LR Rear Disc Brake Pad Wear Sensor - Left (JBK)*

Master Electrical Component List (cont'd)

Code	Name	Option	Location	Locator View	Connector End View
B174G	Front View Driver Information Camera - Grille	UV2	At the front of the vehicle, front center, attached to the back of the grille	—	B174G Front View Driver Information Camera - Grille (UV2/UVS)
B174W	Front View Camera - Windshield	ASV	In the passenger compartment, at the top center of the windshield, forward of windshield multifunction sensor mount bracket cover insert	—	B174W Front View Camera - Windshield (UEU)
B193A	Charge Air Cooler Air Temperature Sensor - Inlet	LM2	In the engine compartment, front center, mounted to the left front bottom side of the air charge cooler	—	B193A Charge Air Cooler Air Temperature Sensor - Inlet (LM2)
B193B	Charge Air Cooler Air Temperature Sensor - Outlet	LM2	In the engine compartment, front center, mounted to the left rear of the air charge cooler	—	B193B Charge Air Cooler Air Temperature Sensor - Outlet (LM2)
B194	Reductant Pressure Sensor	LM2	Under the vehicle, right side, forward of rear axle, within reductant tank, part of A38 Reductant Tank Fluid Supply Pump Module	—	—
B195A	Nitrogen Oxides Sensor 1	LM2	In the engine compartment, right front, in the exhaust, forward of the turbocharger	—	B195A Nitrogen Oxides Sensor 1 (LM2)
B195B	Nitrogen Oxides Sensor 2	LM2	Under the vehicle, right side, in the exhaust, rearward of M106 Exhaust Control Valve Actuator	—	B195B Nitrogen Oxides Sensor 2 (LM2)
B195C	Nitrogen Oxides Sensor 3	LM2	Under the vehicle, right side, in the exhaust, rearward of M106 Exhaust Control Valve Actuator and B195B Nitrogen Oxides Sensor 2	—	B195C Nitrogen Oxides Sensor 3 (LM2)
B203	Radiator Coolant Temperature Sensor	LM2	In the engine compartment, right front, attached to the right side of the radiator	—	B203 Radiator Coolant Temperature Sensor (LM2)
B212	Reductant Tank Fluid Sensor	LM2	Under the vehicle, right side, attached to the bottom side of the reductant tank, rear of A38 Reductant Tank Fluid Supply Pump Module	—	B212 Reductant Tank Fluid Sensor (LM2)
B214	Reductant Tank Temperature Sensor	LM2	Under the vehicle, right side, within reductant tank, part of A38 Reductant Tank Fluid Supply Pump Module	—	—
B218L	Side Obstacle Detection Control Module - Left	UKC	Outside of the vehicle, left rear corner, mounted to the inside of the rear fascia	—	B218L Side Obstacle Detection Control Module - Left (UKC/UKV)
B218R	Side Obstacle Detection Control Module - Right	UKC	Outside of the vehicle, right rear corner, mounted to the inside of the rear fascia	—	B218R Side Obstacle Detection Control Module - Right (UKC/UKV)
B225L	Side View Driver Information Camera - Left	UV2	Outside of vehicle, left side, within A9A Outside Rearview Mirror - Driver	—	B225L Sideview Camera - Left (UV2)

Master Electrical Component List (cont'd)

Code	Name	Option	Location	Locator View	Connector End View
B225R	Side View Driver Information Camera - Right	UV2	Outside of vehicle, right side, within A9B Outside Rearview Mirror - Passenger	—	B225R Sideview Camera - Right (UV2)
B233B	Forward Range Radar Sensor - Long Range	UGN	At the front of the vehicle, behind front fascia, right of center	—	B233B Forward Range Radar Sensor - Long Range (UGN)
B233LR	Short Range Radar Rear Sensor - Left	UGN/UVZ	In the front of the vehicle, mounted inside front fascia, left side	—	B233LR Short Range Radar Rear Sensor - Left (UGN+UVZ)
B233RR	Short Range Radar Rear Sensor - Right	UGN/UVZ	In the front of the vehicle, mounted inside front fascia, right side	—	B233RR Short Range Radar Rear Sensor - Right (UGN+UVZ)
B271	Engine Metal Temperature Sensor	LM2	In the engine compartment, center, above the drive belt, near ground G178	—	B271 Engine Metal Temperature Sensor (LM2)
B275A	Rear Closure Hands Free Sensor - Upper	TC2	At the rear of the vehicle, forward of the rear fascia, right of center, attached to rear fascia	—	B275A Rear Closure Hands Free Sensor - Upper (TC2)
B275B	Rear Closure Hands Free Sensor - Lower	TC2	At the rear of the vehicle, forward of the rear fascia, right of center, attached to rear fascia	—	B275B Rear Closure Hands Free Sensor - Lower (TC2)
B306A	Parking Assist Alarm Sensor - Front Left Outer	UD5	At the front of the vehicle, left side, mounted in the front bumper	—	B306A Parking Assist Alarm Sensor - Front Left Outer (UD5/UD7)
B306B	Parking Assist Alarm Sensor - Front Left Middle	UD5	At the front of the vehicle, left of center, mounted in the front bumper	—	B306B Parking Assist Alarm Sensor - Front Left Middle (UD5/UD7)
B306C	Parking Assist Alarm Sensor - Front Right Middle	UD5	At the front of the vehicle, right of center, mounted in the front bumper	—	B306C Parking Assist Alarm Sensor - Front Right Middle (UD5/UD7)
B306D	Parking Assist Alarm Sensor - Front Right Outer	UD5	At the front of the vehicle, right side, mounted in the front bumper	—	B306D Parking Assist Alarm Sensor - Front Right Outer (UD5/UD7)
B306E	Parking Assist Alarm Sensor - Rear Left Outer	UD5/UD7	At the rear of the vehicle, left side, mounted in the rear bumper	—	B306E Parking Assist Alarm Sensor - Rear Left Outer (UD5/UD7)
B306F	Parking Assist Alarm Sensor - Rear Left Middle	UD5/UD7	At the rear of the vehicle, left of center, mounted in the rear bumper	—	B306F Parking Assist Alarm Sensor - Rear Left Middle (UD5/UD7)
B306G	Parking Assist Alarm Sensor - Rear Right Middle	UD5/UD7	At the rear of the vehicle, right of center, mounted in the rear bumper	—	B306G Parking Assist Alarm Sensor - Rear Right Middle (UD5/UD7)
B306H	Parking Assist Alarm Sensor - Rear Right Outer	UD5/UD7	At the rear of the vehicle, right side, in the rear bumper	—	B306H Parking Assist Alarm Sensor - Rear Right Outer (UD5/UD7)
B312LF	Active Noise Cancellation Microphone - Left Front	UQS/UQP	In the passenger compartment, left front, mounted to headliner, rear of A3L Sunshade - Left	—	B312LF Active Noise Cancellation Microphone - Left Front (UQP)

Master Electrical Component List (cont'd)

Code	Name	Option	Location	Locator View	Connector End View
B315A	Transmission Range Control Valve 1 Position Switch	—	Under the vehicle, within T12 Automatic Transmission	—	B315A Transmission Range Control Valve 1 Position Switch (MQC)
B316	Transmission Park Valve Position Switch	—	Under the vehicle, inside the T12 Automatic Transmission	—	B316 Transmission Park Valve Position Switch (MQC)
B321	Crankcase Pressure Sensor	LM2	In the engine compartment, rear center, mounted to the right rear side of the valve cover, beneath air cleaner outlet duct	—	B321 Crankcase Pressure Sensor (LM2)
B345P	Exhaust Pressure Differential Sensor - Particulate Filter	LM2	Under the vehicle, right side, near transmission crossmember, mounted to the exhaust particulate filter	—	B345P Exhaust Pressure Differential Sensor - Particulate Filter (LM2)
B345R	Exhaust Pressure Differential Sensor - Exhaust Gas Recirculation	LM2	In the engine compartment, right rear, mounted to the exhaust pressure differential sensor bracket at the right rear of the engine	—	B345R Exhaust Pressure Differential Sensor - Exhaust Gas Recirculation (LM2)
B352	Video Display Inside Rearview Mirror Camera	DRZ	Outside the vehicle, at the top center of the rear window bridge, within E6 High Mount Stop Lamp	—	B352 Video Display Inside Rearview Mirror Camera (DRZ)
B377LL	3rd Row Seat Back Latch Unlatched Switch - Left Seat Left Side	AS8	In the cargo area, left rear, at the top left of left seat back	—	B377LL 3rd Row Seat Back Latch Unlatched Switch - Left Seat Left Side (AS8)
B377LR	3rd Row Seat Back Latch Unlatched Switch - Left Seat Right Side	AS8	In the cargo area, left of center, at the top right of left seat back	—	B377LR 3rd Row Seat Back Latch Unlatched Switch - Left Seat Right Side (AS8)
B377RL	3rd Row Seat Back Latch Unlatched Switch - Right Seat Left Side	AS8	In the cargo area, right rear, at the top right of right seat back	—	B377RL 3rd Row Seat Back Latch Unlatched Switch - Right Seat Left Side (AS8)
B377RR	3rd Row Seat Back Latch Unlatched Switch - Right Seat Right Side	AS8	In the cargo area, right of center, at the top left of right seat back	—	B377RR 3rd Row Seat Back Latch Unlatched Switch - Right Seat Right Side (AS8)
C1	Battery	—	In the engine compartment, right rear	—	—
E2LF	Front Side Marker Lamp - Left	—	At the left front of vehicle, forward of left front wheel and tire, mounted to fender	—	E2LF Front Side Marker Lamp - Left
E2RF	Front Side Marker Lamp - Right	—	At the right front of vehicle, forward of right front wheel and tire, mounted to fender	—	E2RF Front Side Marker Lamp - Right
E4LF	Front Turn Signal Lamp - Left	G28	At the left front of vehicle, within E13LA Front Headlamp - Left	—	—
E4LR	Rear Turn Signal Lamp - Left	—	At the left rear corner of the vehicle, inside of E42L Rear Body Structure Stop Lamp - Left	—	—

Master Electrical Component List (cont'd)

Code	Name	Option	Location	Locator View	Connector End View
E4RR	Rear Turn Signal Lamp - Right	—	At the right rear corner of the vehicle, inside of E42R Rear Body Structure Stop Lamp - Right	—	—
E4Y	Outside Rearview Mirror Turn Signal Lamp - Left	—	At the front of the left front door, part of the A9A Outside Rearview Mirror - Driver	—	—
E4Z	Outside Rearview Mirror Turn Signal Lamp - Right	—	At the front of the right front door, part of the A9B Outside Rearview Mirror - Passenger	—	—
E5A	Backup Bulb - Left	—	At the rear of vehicle, left rear corner, within E42L Rear Body Structure Stop Lamp - Left	—	—
E5B	Backup Bulb - Right	—	At the rear of vehicle, right rear corner, within E42R Rear Body Structure Stop Lamp - Right	—	—
E5L	Stop Lamp - Left	—	At the left rear corner of the vehicle, within E42L Rear Body Structure Stop Lamp - Left	—	—
E5R	Stop Lamp - Right	—	At the right rear corner of the vehicle, within E42R Rear Body Structure Stop Lamp - Right	—	—
E6	High Mount Stop Lamp	—	Outside the vehicle, at the top of the liftgate, above rear glass	—	*E6 High Mount Stop Lamp*
E7	Rear License Plate Lamp	ZW9	At the rear of the vehicle, center of the liftgate, above liftgate handle	—	*E7 Rear License Plate Lamp*
E8A	Front Side Door Sill Plate Illumination Lamp - Left	S0M	In the passenger compartment, left front, in driver door sill trim plate	—	*E8A Front Side Door Sill Plate Illumination Lamp - Left (S0M)*
E8B	Front Side Door Sill Plate Illumination Lamp - Right	S0M	In the passenger compartment, right front, in passenger door sill trim plate	—	*E8B Front Side Door Sill Plate Illumination Lamp - Right (S0M)*
E8Q	Rear Side Door Sill Plate Illumination Lamp - Left	S0M	In the passenger compartment, left rear, in left rear door sill trim plate	—	*E8Q Rear Side Door Sill Plate Illumination Lamp - Left (S0M)*
E8R	Rear Side Door Sill Plate Illumination Lamp - Right	S0M	In the passenger compartment, right rear, in right rear door sill trim plate	—	*E8R Rear Side Door Sill Plate Illumination Lamp - Right (S0M)*
E8SR	Cargo Center Courtesy Lamp	—	In the cargo area, rear center, mounted to headliner	—	*E8SR Cargo Center Courtesy Lamp*
E8VA	Front Floor Courtesy Lamp - Left	—	In the passenger compartment, left front, attached to instrument panel left lower insulator	—	*E8VA Front Floor Courtesy Lamp - Left*
E8VB	Rear Floor Courtesy Lamp - Left	—	In the passenger compartment, left side, attached to bracket at bottom rear of driver seat	—	*E8VB Rear Floor Courtesy Lamp - Left*
E8VC	Front Floor Courtesy Lamp - Right	—	In the passenger compartment, right front, attached to instrument panel right lower insulator	—	*E8VC Front Floor Courtesy Lamp - Right*

Master Electrical Component List (cont'd)

Code	Name	Option	Location	Locator View	Connector End View
E8VD	Rear Floor Courtesy Lamp - Right	—	In the passenger compartment, right side, attached to bracket at bottom rear of passenger seat	—	E8VD Rear Floor Courtesy Lamp - Right
E8ZL	Assist Step Lamp - Left	BRS	Under the vehicle, along the left frame rail, under the driver door part of the power assist step	—	E8ZL Assist Step Lamp - Left (B3L)
E8ZR	Assist Step Lamp - Right	BRS	Under the vehicle, along the right frame rail, under the passenger door part of the power assist step	—	E8ZR Assist Step Lamp - Right (B3L)
E12A	Glow Plug 1	LM2	In the engine compartment, In the cylinder head at cylinder 1	—	E12A Glow Plug 1 (LM2)
E12B	Glow Plug 2	LM2	In the engine compartment, In the cylinder head at cylinder 2	—	E12B Glow Plug 2 (LM2)
E12C	Glow Plug 3	LM2	In the engine compartment, In the cylinder head at cylinder 3	—	E12C Glow Plug 3 (LM2)
E12D	Glow Plug 4	LM2	In the engine compartment, In the cylinder head at cylinder 4	—	E12D Glow Plug 4 (LM2)
E12E	Glow Plug 5	LM2	In the engine compartment, In the cylinder head at cylinder 5	—	E12E Glow Plug 5 (LM2)
E12F	Glow Plug 6	LM2	In the engine compartment, In the cylinder head at cylinder 6	—	E12F Glow Plug 6 (LM2)
E13LA	Front Headlamp - Left	—	Outside the vehicle, at the left front corner	—	E13LA Front Headlamp - Left
E13RA	Front Headlamp - Right	—	Outside the vehicle, at the right front corner	—	E13RA Front Headlamp - Right
E14A	Front Seat Back Heater - Driver	KA1/KQV	In the passenger compartment, in the driver seat back	—	E14A Front Seat Back Heater - Driver (KA1/KQV)
E14B	Front Seat Cushion Heater - Driver	KA1/KQV	In the passenger compartment, in the driver seat cushion	—	E14B Front Seat Cushion Heater - Driver (KA1/KQV)
E14C	Front Seat Back Heater - Passenger	KA1/KQV	In the passenger compartment, in the passenger seat back	—	E14C Front Seat Back Heater - Passenger (KA1)
E14D	Front Seat Cushion Heater - Passenger	KA1/KQV	In the passenger compartment, in the passenger seat cushion	—	E14D Front Seat Cushion Heater - Passenger (KA1/KQV)
E14F	Rear Seat Cushion Heater - Left Rear	KA6	In the passenger compartment, in the left rear seat cushion	—	E14F Rear Seat Cushion Heater - Left Rear (KA6)
E14H	Rear Seat Cushion Heater - Right Rear	KA6	In the passenger compartment, in the right rear seat cushion	—	E14H Rear Seat Cushion Heater - Right Rear (KA6)
E15	Steering Wheel Heater	KI3	In the passenger compartment, left front, part of the steering wheel	—	—
E17D	Outside Rearview Mirror Glass - Driver	DEZ/DLF/UKC	Outside the vehicle, at the front of the driver door, part of A9A Outside Rearview Mirror - Driver	—	—

Master Electrical Component List (cont'd)

Code	Name	Option	Location	Locator View	Connector End View
E17P	Outside Rearview Mirror Glass - Passenger	DEZ/DLF/UKC	Outside the vehicle, at the front of the passenger door, part of A9B Outside Rearview Mirror - Passenger	—	—
E18	Rear Window Defogger Grid	—	At the rear of the passenger compartment, part of the rear window glass	—	• E18 Rear Window Defogger Grid X1 • E18 Rear Window Defogger Grid X2
E28	Front Floor Console Compartment Lamp	D07	In the passenger compartment, between the front seats, inside the floor console storage bin	—	E28 Front Floor Console Compartment Lamp (D07/DCH)
E29LF	Front Fog Lamp - Left	T3U	Outside the vehicle, at the left front corner, in the front bumper, below E13LA Front Headlamp - Left	—	E29LF Front Fog Lamp - Left (T40)
E29RF	Front Fog Lamp - Right	T3U	Outside the vehicle, at the right front corner, in the front bumper, below E13RA Front Headlamp - Right	—	E29RF Front Fog Lamp - Right (T40)
E31L	Sunshade Mirror Lamp - Left	DH6	In the passenger compartment, at the left front of the headliner, part of A3L Sunshade - Left	—	E31L Sunshade Mirror Lamp - Left
E31R	Sunshade Mirror Lamp - Right	DH6	In the passenger compartment, at the right front of the headliner, part of A3R Sunshade - Right	—	E31R Sunshade Mirror Lamp - Right
E32	Cigarette Lighter Receptacle	DT4	In the passenger compartment, front center, in floor console, beneath A26 Heater and Air Conditioning User Interface Control - Front	—	E32 Cigarette Lighter Receptacle (DT4)
E37H	Roof Rail Rear Seat Position Reading and Courtesy Lamp - Left	C3U	In the passenger compartment, above left rear door, mounted to headliner	—	E37H Roof Rail Rear Seat Position Reading and Courtesy Lamp - Left (C3U)
E37J	Roof Rail Rear Seat Position Reading and Courtesy Lamp - Right	C3U	In the passenger compartment, above right rear door, mounted to headliner	—	E37J Roof Rail Rear Seat Position Reading and Courtesy Lamp - Right (C3U)
E37SMA	Rear Seat Position Center Reading and Courtesy Lamp - 2nd Row	without C3U	In the passenger compartment, rear center, above the 2nd row seats, mounted to headliner	—	E37SMA Rear Seat Position Center Reading and Courtesy Lamp - 2nd Row (-C3U)
E37SMB	Rear Seat Position Center Reading and Courtesy Lamp - 3rd Row	—	In the passenger compartment, rear center, above the 3rd row seats, mounted to headliner	—	E37SMB Rear Seat Position Center Reading and Courtesy Lamp - 3rd Row (-C3U)
E40	Air Heater	C32	In the passenger compartment, at the top of the HVAC box	—	• E40 Air Heater X1 (C3A) • E40 Air Heater X2 (C3A)
E42L	Rear Body Structure Stop Lamp - Left	—	Outside the vehicle, at the left rear corner of the vehicle	—	E42L Rear Body Structure Stop Lamp - Left

Master Electrical Component List (cont'd)

Code	Name	Option	Location	Locator View	Connector End View
E42R	Rear Body Structure Stop Lamp - Right	—	Outside the vehicle, at the right rear corner of the vehicle	—	E42R Rear Body Structure Stop Lamp - Right
E52	Reductant Heater 2 - Injector Supply Pipe	LM2	Under the vehicle, right side, forward of rear axle, attached to reductant line, near reductant tank	—	E52 Reductant Heater 2 - Injector Supply Pipe (LM2)
E53A	Reductant Heater 1 - Tank	LM2	Under the vehicle, right side, forward of rear axle, within reductant tank, part of A38 Reductant Tank Fluid Supply Pump Module	—	—
E53C	Reductant Heater 3 - Tank	LM2	Under the vehicle, right side, forward of rear axle, within reductant tank, part of A38 Reductant Tank Fluid Supply Pump Module	—	—
E55LF	Front Side Door Map Pocket Illumination Lamp - Left	—	Mounted to the driver door trim panel, above the driver door map pocket	—	E55LF Front Side Door Map Pocket Illumination Lamp - Left
E55LR	Rear Side Door Pocket Illumination Lamp - Left	—	In the passenger compartment, rear of center, left side, in the left rear door trim, inside the arm rest	—	E55LR Rear Side Door Pocket Illumination Lamp - Left
E55RF	Front Side Door Map Pocket Illumination Lamp - Right	—	Mounted to the passenger door trim panel, above the passenger door map pocket	—	E55RF Front Side Door Map Pocket Illumination Lamp - Right
E55RR	Rear Side Door Pocket Illumination Lamp - Right	—	In the passenger compartment, rear of center, right side, in the right rear door trim, inside the arm rest	—	E55RR Rear Side Door Pocket Illumination Lamp - Right
E63D	Front Side Door Inside Handle Illumination Lamp - Left	—	Mounted to the driver door trim panel, above the driver door handle	—	E63D Front Side Door Inside Handle Illumination Lamp - Left
E63LR	Rear Side Door Inside Handle Illumination Lamp - Left	—	Mounted to the left rear door trim panel, above the left rear door handle	—	E63LR Rear Side Door Inside Handle Illumination Lamp - Left
E63P	Front Side Door Inside Handle Illumination Lamp - Right	—	Mounted to the passenger door trim panel, above the passenger door handle	—	E63P Front Side Door Inside Handle Illumination Lamp - Right
E63RR	Rear Side Door Inside Handle Illumination Lamp - Right	—	Mounted to the right rear door trim panel, above the right rear door handle	—	E63RR Rear Side Door Inside Handle Illumination Lamp - Right
E72	Rear Closure Hands Free Lamp	—	Rear of the vehicle, under the right side of the rear fascia	—	E72 Rear Closure Hands Free Lamp
E88	Front Floor Console Bin Lamp	D07/DCK	In the passenger compartment, front center, mounted to the bottom of the instrument panel accessory bezel	—	E88 Front Floor Console Bin Lamp
E90D	Exterior Flood Lamp - Driver Outside Rearview Mirror	DXR/DW6	Outside of vehicle, left side, mounted to the bottom of A9A Outside Rearview Mirror - Driver	—	—

Master Electrical Component List (cont'd)

Code	Name	Option	Location	Locator View	Connector End View
E90P	Exterior Flood Lamp - Passenger Outside Rearview Mirror	DXR/DW6	Outside of vehicle, right side, mounted to the bottom of A9B Outside Rearview Mirror - Passenger	—	—
E93L	Rear Fascia Lower Signal Lamp - Left	T79	At the rear of the vehicle, mounted to the left corner of the rear fascia	—	*E93L Rear Fascia Lower Signal Lamp - Left (T79)*
E93R	Rear Fascia Lower Signal Lamp - Right	T79	At the rear of the vehicle, mounted to the right corner of the rear fascia	—	*E93R Rear Fascia Lower Signal Lamp - Right (T79)*
E103L	Rear Closure Signal Lamp - Left	Z88	At the rear of the vehicle, mounted to the liftgate, left side	—	*E103L Rear Closure Signal Lamp - Left*
E103R	Rear Closure Signal Lamp - Right	Z88	At the rear of the vehicle, mounted to the liftgate, right side	—	*E103R Rear Closure Signal Lamp - Right*
F101	Instrument Panel Airbag	—	In the passenger compartment, behind the instrument panel upper glove box	—	• *F101 Instrument Panel Airbag X1* • *F101 Instrument Panel Airbag X2*
F105LA	Front and Rear and 3rd Row Roof Rail Airbag - Left	—	In the passenger compartment, on the left side, above the door openings, under the headliner	—	*F105LA Front and Rear and 3rd Row Roof Rail Airbag - Left*
F105RA	Front and Rear and 3rd Row Roof Rail Airbag - Right	—	In the passenger compartment, on the right side, above the door openings, under the headliner	—	*F105RA Front and Rear and 3rd Row Roof Rail Airbag - Right*
F106D	Front Seat Outboard Seat Back Airbag - Driver	—	In the passenger compartment, in the outboard side of the driver seat back	—	*F106D Front Seat Outboard Seat Back Airbag - Driver*
F106DA	Front Seat Inboard Seat Back Airbag - Driver	—	In the passenger compartment, on the right side of the left front seat back	—	*F106DA Front Seat Inboard Seat Back Airbag - Driver*
F106P	Front Seat Outboard Seat Back Airbag - Passenger	—	In the passenger compartment, in the outboard side of the passenger seat back	—	*F106P Front Seat Outboard Seat Back Airbag - Passenger*
F107	Steering Wheel Airbag	—	In the passenger compartment, mounted to the middle of the steeing wheel	—	• *F107 Steering Wheel Airbag X1* • *F107 Steering Wheel Airbag X2*
F112D	Front Seat Belt Retractor - Driver	—	In the passenger compartment, at the base of the driver side B-pillar	—	*F112D Front Seat Belt Retractor - Driver*
F112P	Front Seat Belt Retractor - Passenger	—	In the passenger compartment, at the base of the passenger side B-pillar	—	*F112P Front Seat Belt Retractor - Passenger*
F113D	Front Seat Belt Anchor Plate Tensioner - Driver	—	In the passenger compartment, mounted to the outboard driver seat track	—	*F113D Front Seat Belt Anchor Plate Tensioner - Driver*
F113P	Front Seat Belt Anchor Plate Tensioner - Passenger	—	In the passenger compartment, mounted to the outboard passenger seat track	—	*F113P Front Seat Belt Anchor Plate Tensioner - Passenger*
G1	Air Conditioning Compressor	—	In the engine compartment, right front, mounted to the right lower side of the engine	—	—

Master Electrical Component List (cont'd)

Code	Name	Option	Location	Locator View	Connector End View
G4	Automatic Level Control Air Compressor	F47	Under the vehicle, left rear, mounted to the inboard side of the driver side frame rail, rear of frame cross-member	—	G4 Automatic Level Control Air Compressor (F47)
G5	Automatic Transmission Auxiliary Fluid Pump	—	Under the vehicle, within T12 Automatic Transmission	—	G5 Transmission Fluid Pump - Electric/ Auxiliary (MQC)
G10L	Cooling Fan Motor - Left	—	In the engine compartment, in the radiator shroud, left side	—	G10L Cooling Fan Motor - Left
G10LW	Cooling Fan Motor - Lower	LM2	In the engine compartment, in the radiator shroud, beneath the left and right cooling fan motors	—	G10LW Cooling Fan Motor - Lower (LM2)
G10R	Cooling Fan Motor - Right	—	In the engine compartment, in the radiator shroud, right side	—	• G10R Cooling Fan Motor - Right (L84/L87) • G10R Cooling Fan Motor - Right (LM2)
G12	Fuel Pump	—	Under the vehicle, within the fuel tank, part of A7 Fuel Tank Fuel Pump Module	—	—
G13	Generator	—	In the engine compartment, right front, mounted to the right upper side of the engine	—	• G13 Generator X1 • G13 Generator X2 (L84/L87)
G17	Heater Coolant Pump	—	In the engine compartment, front center, mounted to the right front of the engine, just above the oil pan	—	G17 Heater Coolant Pump
G18	Fuel Pump - High Pressure	—	• (L84/L87) In the engine compartment, rear center, beneath the rear of the intake manifold • (LM2) In the engine compartment, left rear, mounted near the left side of the transmission bellhousing	—	G18 Fuel Pump - High Pressure (L84/ L87)
G24	Windshield Washer Pump	—	In the engine compartment, attached to the washer fluid reservoir, behind E13LA Front Headlamp - Left	—	G24 Windshield Washer Pump
G31D	Front Seat Back Lumbar Pump - Driver	—	In the passenger compartment, inside driver seat cushion	—	G31D Front Seat Back Lumbar Pump - Driver (AVK+A45)
G31P	Front Seat Back Lumbar Pump - Passenger	—	In the passenger compartment, inside passenger seat cushion	—	G31P Front Seat Back Lumbar Pump - Passenger (AVK-A45)
G33	Reductant Pump	LM2	Under the vehicle, right side, forward of rear axle, within reductant tank, part of A38 Reductant Tank Fluid Supply Pump Module	—	—

Master Electrical Component List (cont'd)

Code	Name	Option	Location	Locator View	Connector End View
K4	Running Board Control Module	B3L	Underneath the vehicle, below the passenger side b-pillar, mounted to the outside of the right frame rail	—	• K4 Running Board Control Module X1 (B3L) • K4 Running Board Control Module X2 (B3L) • K4 Running Board Control Module X3 (B3L)
K5	Automatic Level Control Module	F47	Under the vehicle, left rear, mounted to the inboard side of the driver side frame rail, rear of frame cross-member	—	K5 Automatic Level Control Module (F47)
K8AB	Blower Motor Control Module - Rear	C69	In the luggage compartment, right side, behind right quarter lower rear trim panel	—	• K8AB Blower Motor Control Module - Rear X1 (C69) • K8AB Blower Motor Control Module - Rear X2 (C69)
K9	Body Control Module	—	In the passenger compartment, behind the driver side of the instrument panel, outboard of the steering column	—	• K9 Body Control Module X1 • K9 Body Control Module X2 • K9 Body Control Module X3 • K9 Body Control Module X4 • K9 Body Control Module X5 • K9 Body Control Module X6 • K9 Body Control Module X7 • K9 Body Control Module X8
K19	Suspension Control Module	Z95	Under the vehicle, mounted to the bracket above the spare tire	—	K19 Suspension Control Module (Z95)
K20	Engine Control Module	—	In the engine compartment, left front, behind E13LA Front Headlamp - Left	—	• K20 Engine Control Module X1 (L84/L87) • K20 Engine Control Module X1 (LM2) • K20 Engine Control Module X2 (L84/L87) • K20 Engine Control Module X2 (LM2) • K20 Engine Control Module X3 (L84/L87)
K29FV	Front Seat Heater Vent Control Module	KA1/KQV	In the passenger compartment, right front, under the passenger seat cushion	—	• K29FV Front Seat Heater Vent Control Module X1 (KA1/KQV) • K29FV Front Seat Heater Vent Control Module X2 (KA1/KQV)

Master Electrical Component List (cont'd)

Code	Name	Option	Location	Locator View	Connector End View
K29R	Rear Seat Heater Control Module	KA6	In the passenger compartment, rear center, underneath the front of the rear seat cushion	—	• K29R Rear Seat Heater Control Module X1 (KA6) • K29R Rear Seat Heater Control Module X2 (KA6)
K32	Heated Steering Wheel Module	KI3	In the passenger compartment, in the steering wheel, behind the driver air bag	—	• K32 Heated Steering Wheel Module X1 (KI3) • K32 Heated Steering Wheel Module X2 (KI3)
K36	Restraints Control Module	—	In the passenger compartment, bolted to the floor between the front seats or under console if equipped	—	• K36 Restraints Control Module X1 • K36 Restraints Control Module X2
K38	Chassis Control Module	G96	In the luggage compartment, left rear, mounted behind the rear seat, below the rear window, behind Quarter Lower Rear Trim Panel	—	K38 Chassis Control Module
K40D	Driver Seat Adjuster Memory Module	A45/AUN	In the passenger compartment, left side, under the driver seat cushion	—	• K40D Driver Seat Adjuster Memory Module X1 (A45/AUN) • K40D Driver Seat Adjuster Memory Module X2 (A45/AUN) • K40D Driver Seat Adjuster Memory Module X3 (A45/AUN)
K40P	Passenger Seat Adjuster Memory Module	A45	In the passenger compartment, right side, under the passenger seat cushion	—	—
K43	Power Steering Control Module	—	Under the vehicle, part of the steering gear assembly	—	• K43 Power Steering Control Module X1 • K43 Power Steering Control Module X2 • K43 Power Steering Control Module X3
K56	Serial Data Gateway Module	—	In the passenger compartment, left front, between the instrument panel and bulkhead, behind B107 Accelerator Pedal Position Sensor	—	• K56 Serial Data Gateway Module X1 • K56 Serial Data Gateway Module X2 • K56 Serial Data Gateway Module X3
K60	Column Lock Module	BTM	In the passenger compartment, left front, mounted on top of the steering column, underneath instrument panel	—	K60 Column Lock Module

Master Electrical Component List (cont'd)

Code	Name	Option	Location	Locator View	Connector End View
K61	Sunroof Control Module	C3U	In the passenger compartment, above headliner, at the rear of the sunroof	—	K61 Sunroof Control Module (C3U)
K67	Trailer Brake Control Module	JL1	Under the rear of the vehicle, right side, near spare tire, inboard of frame rail	—	K67 Trailer Brake Control Module (JL1)
K68	Trailer Lamp Control Module	U1D	Under the rear of the vehicle, right side, near spare tire, mounted to inboard side of frame rail	—	K68 Trailer Lamp Control Module (U1D)
K69	Transfer Case Control Module	NP0/NQH	In the engine compartment, left rear, left of K160 Brake System Control Module	—	K69 Transfer Case Control Module (NP0/NQH)
K71	Transmission Control Module	—	In the engine compartment, left side, forward of front wheelhouse liner, forward of K20 Engine Control Module	—	K71 Transmission Control Module
K73	Telematic Control Module	UE1	In the passenger compartment, left front, between the instrument panel and bulkhead	—	• K73 Telematic Control Module X1 • K73 Telematic Control Module X2 • K73 Telematic Control Module X3
K77	Remote Function Actuator Module	—	In the passenger compartment, attached to the left rear c-pillar, behind the body lock pillar upper trim panel	—	K77 Remote Function Actuator Module (ATH)
K84	Keyless Entry Control Module	BTM	In the passenger compartment, left front, between the instrument panel and bulkhead	—	—
K85P	Restraints Occupant Classification System Module - Passenger	—	In the passenger compartment, right front, under the passenger seat cushion	—	K85P Restraints Occupant Classification System Module - Passenger
K99	Steering Column Control Module	N38	In the passenger compartment, forward, left side, mounted to the bottom of the steering column	—	• K99 Steering Column Control Module X1 (N38) • K99 Steering Column Tilt Wheel and Telescope Control Module X2 (N38)
K104DP	Front Seat Bladder Control Module - Driver Primary	AVK	In the passenger compartment, left front, under the driver seat cushion	—	K104DP Front Seat Bladder Control Module - Driver Primary (AVK)
K104P	Front Seat Bladder Control Module - Passenger	AVU-A45	In the passenger compartment, right front, under the passenger seat cushion	—	K104P Front Seat Bladder Control Module - Passenger (AVK-A45)
K104PP	Front Seat Bladder Control Module - Passenger Primary	AVU	In the passenger compartment, right front, under the passenger seat cushion	—	K104PP Front Seat Bladder Control Module - Passenger Primary (AVU)

Master Electrical Component List (cont'd)

Code	Name	Option	Location	Locator View	Connector End View
K111	Fuel Pump Power Control Module	—	Under the vehicle, left rear, mounted to the outboard side of the left frame rail, forward of left rear trailing arm	—	K111 Fuel Pump Power Control Module
K115	Reductant Control Module	LM2	Under the vehicle, right side, rear of engine compartment bulkhead, mounted to the right side of the reductant tank	—	K115 Reductant Control Module (LM2)
K124	Image Processing Module	UGN	In the rear compartment, right side, underneath rear quarter glass window, behind right rear quarter trim	—	• K124 Image Processing Module X1 (UGN) • K124 Image Processing Module X2 (UGN)
K157	Video Processing Module	UV2	In the passenger compartment, right rear, mounted behind the rear seat, below the rear window	—	• K157 Video Processing Module X1 (UV2) • K157 Video Processing Module X2 (UV2) • K157 Video Processing Module X3 (UV2) • K157 Video Processing Module X4 (UV2)
K160	Brake System Control Module	—	In the engine compartment, left rear corner, near brake master cylinder	—	K160 Brake System Control Module
K164	Differential Control Module	G96	In the luggage compartment, left rear, mounted behind the rear seat, below the rear window, behind Quarter Lower Rear Trim Panel	—	• K164 Differential Control Module X1 (G96) • K164 Differential Control Module X2 (G96)
K169	Folding 3rd Row Seat Module	AS8	In the passenger compartment, in the 3rd row seat, left side, inside seat back in the lower left corner	—	• K169 Folding 3rd Row Seat Module X1 (AS8) • K169 Folding 3rd Row Seat Module X2 (AS8)
K171	Rear Closure Hands Free Module	TC2	At the rear of the vehicle, center, mounted to the underside of the rear bumper	—	• K171 Rear Closure Hands Free Module X1 (TC2) • K171 Rear Closure Hands Free Module X2 (TC2)
K175	Front Floor Console Compartment Cooler	DCK	In the passenger compartment, center, inside center console at the floor	—	K175 Front Floor Console Compartment Cooler (DCK)
K182	Parking Assist Control Module	UD5/UD7	In the luggage compartment, right rear, below D-pillar, behind right quarter lower rear trim panel	—	• K182 Parking Assist Control Module X1 (UD5/UD7) • K182 Parking Assist Control Module X2 (UD5/UD7) • K182 Parking Assist Control Module X3 (UD5/UD7)

Master Electrical Component List (cont'd)

Code	Name	Option	Location	Locator View	Connector End View
K194	Rear Gate Module	TC2	In the rear compartment, left side of the tailgate, behind the trim	—	• K194 Rear Gate Module X1 (TC2) • K194 Rear Gate Module X2 (TC2) • K194 Rear Gate Module X3 (TC2) • K194 Rear Gate Module X4 (TC2)
K212	Gear Shift Control Module	—	In the passenger compartment, front center, mounted to the instrument panel, left of A22 Radio Control	—	K212 Gear Shift Control Module
K214	Trailer Tire Pressure Indicator Module	U1D	At the rear of the vehicle, mounted to the center of the rear bumper, near X88 Trailer Connector	—	K214 Trailer Tire Pressure Indicator Module (PTT)
K219	Lighting Control Module	—	In the passenger compartment, left front, in the instrument panel, above the driver lower trim panel, left of the brake pedal	—	• K219 Lighting Control Module X1 • K219 Lighting Control Module X2 • K219 Lighting Control Module X3 • K219 Lighting Control Module X4 • K219 Lighting Control Module X5
K221L	Headlamp LED Driver Module - Left	X88-G28	At the left front of vehicle, mounted to the bottom of E13LA Front Headlamp - Left	—	—
K221R	Headlamp LED Driver Module - Right	X88-G28	At the right front of vehicle, mounted to the bottom of E13RA Front Headlamp - Right	—	—
K230	Front Floor Console Control Module	DCH	In the passenger compartment, center, beneath the floor console	—	K230 Front Floor Console Control Module (DCH)
M4	Air Inlet Valve Actuator	—	In the passenger compartment, within the instrument panel, right front, behind the instrument panel glove box, near the cabin air filter	—	M4 Air Inlet Valve Actuator
M6BP	Rear Programmable Temperature Valve Actuator	C69	In the cargo area, right side, behind right quarter lower rear trim panel, mounted to the auxiliary HVAC assembly, rear of the M37BP Rear Programmable Mode Valve Actuator	—	M6BP Rear Programmable Temperature Valve Actuator (C69)
M6PL	Programmable Temperature Valve Actuator - Left	—	In the passenger compartment, within the instrument panel, left of center, behind front floor console extension panel, mounted to the left side of the HVAC assembly	—	M6PL Programmable Temperature Valve Actuator - Left

Master Electrical Component List (cont'd)

Code	Name	Option	Location	Locator View	Connector End View
M6PR	Programmable Temperature Valve Actuator - Right	—	In the passenger compartment, within the instrument panel, right of center, behind glove box, attached to the HVAC assembly	—	M6PR Programmable Temperature Valve Actuator - Right
M8	Blower Motor	—	In the passenger compartment, under the right side of the instrument panel, above the hush panel	—	M8 Blower Motor
M8B	Blower Motor - Rear	C69	In the cargo area, right side, behind right quarter lower rear trim panel, mounted to the auxiliary HVAC unit	—	M8B Blower Motor - Rear (C69)
M10	Charge Air Cooler Coolant Pump	LM2	In the engine compartment, left front, attached to bracket near the front of the left lower control arm	—	M10 Charge Air Cooler Coolant Pump (LM2)
M26	Front Drive Axle Actuator	NP0/NQH	Under the front of the vehicle, mounted to the front axle	—	M26 Front Drive Axle Actuator (NP0/NQH)
M31L	Liftgate Power Assist Actuator - Left	TC2	In the cargo area, left rear, between left side of liftgate and body, behind the left quarter lower rear trim panel	—	M31L Liftgate Power Assist Actuator - Left (TC2)
M33	Liftgate Window Latch	—	At the rear of the vehicle, within the liftgate, centered at the bottom of the rear window,	—	M33 Liftgate Window Latch
M37	Mode Valve Actuator	—	In the passenger compartment, right front, within instrument panel, attached to HVAC assembly	—	M37 Mode Valve Actuator
M37BP	Rear Programmable Mode Valve Actuator	C69	In the cargo area, right side, behind right quarter lower rear trim panel, mounted to the auxiliary HVAC unit, forward of the M6BP Rear Programmable Temeperature Valve Actuator	—	M37BP Rear Programmable Mode Valve Actuator (C69)
M38	Power Steering Assist Motor	—	Under the vehicle, part of the steering gear assembly	—	—
M45	Rear Window Wiper Motor	—	At rear of vehicle, in the liftgate	—	M45 Rear Window Wiper Motor
M50D	Front Seat Tilt Adjuster Actuator - Driver	—	In the passenger compartment, under the driver seat	—	• M50D Front Seat Tilt Adjuster Actuator - Driver (A45/AUN) • M50D Front Seat Tilt Adjuster Actuator - Driver (-A45-AUN)
M50P	Front Seat Tilt Adjuster Actuator - Passenger	—	In the passenger compartment, under the passenger seat	—	M50P Front Seat Tilt Adjuster Actuator - Passenger
M51D	Front Seat Adjuster Actuator - Driver	—	In the passenger compartment, under the driver seat	—	M51D Front Seat Adjuster Actuator - Driver

Master Electrical Component List (cont'd)

Code	Name	Option	Location	Locator View	Connector End View
M51P	Front Seat Adjuster Actuator - Passenger	—	In the passenger compartment, under the passenger seat	—	M51P Front Seat Adjuster Actuator - Passenger
M53D	Front Seat Back Lumbar Motor - Driver	AL9	In the passenger compartment, in the center of the driver seat back	—	M53D Front Seat Back Lumbar Motor - Driver
M53P	Front Seat Back Lumbar Motor - Passenger	AT9	In the passenger compartment, in the center of the passenger seat back	—	M53P Front Seat Back Lumbar Motor - Passenger
M55D	Front Seat Vertical Adjuster Actuator - Driver	—	In the passenger compartment, under the driver seat	—	M55D Front Seat Vertical Adjuster Actuator - Driver
M55P	Front Seat Vertical Adjuster Actuator - Passenger	—	In the passenger compartment, under the passenger seat	—	M55P Front Seat Vertical Adjuster Actuator - Passenger
M56D	Front Seat Recliner Actuator - Driver	—	In the passenger compartment, in the driver seat back	—	M56D Front Seat Recliner Actuator - Driver
M56P	Front Seat Recliner Actuator - Passenger	—	In the passenger compartment, in the passenger seat back	—	M56P Front Seat Recliner Actuator - Passenger
M64	Starter	—	In the engine compartment, left rear, mounted to rear of engine block	—	• M64 Starter X1 (L84/L87) • M64 Starter X1 (LM2) • M64 Starter X2 (L84/L87)
M65	Steering Column Telescope Actuator	N38	In the passenger compartment, forward, left of center, on the steering column	—	M65 Steering Column Telescope Actuator (N38)
M68	Steering Column Tilt Wheel Actuator	N38	In the passenger compartment, forward, left of center, on the steering column	—	M68 Steering Column Tilt Wheel Actuator (N38)
M73A	Front Seat Back Ventilation Blower - Driver	KQV	In the passenger compartment, in the driver seat back	—	M73A Front Seat Back Ventilation Blower - Driver (KQV)
M73B	Front Seat Back Ventilation Blower - Passenger	KQV	In the passenger compartment, in the passenger seat back	—	M73B Front Seat Back Ventilation Blower - Passenger (KQV)
M73D	Front Seat Cushion Ventilation Blower - Driver	KQV	In the passenger compartment, in the driver seat cushion	—	M73D Front Seat Cushion Ventilation Blower - Driver (KQV)
M73P	Front Seat Cushion Ventilation Blower - Passenger	KQV	In the passenger compartment, in the passenger seat back	—	M73P Front Seat Cushion Ventilation Blower - Passenger (KQV)
M74D	Front Side Door Window Regulator Motor - Driver	—	In the passenger compartment, in the driver door	—	M74D Front Side Door Window Regulator Motor - Driver
M74LR	Rear Side Door Window Regulator Motor - Left	—	In the passenger compartment, in the left rear door	—	M74LR Rear Side Door Window Regulator Motor - Left
M74P	Front Side Door Window Regulator Motor - Passenger	—	In the passenger compartment, in the passenger door	—	M74P Front Side Door Window Regulator Motor - Passenger
M74RR	Rear Side Door Window Regulator Motor - Right	—	In the passenger compartment, in the right rear door	—	M74RR Rear Side Door Window Regulator Motor - Right

Master Electrical Component List (cont'd)

Code	Name	Option	Location	Locator View	Connector End View
M75	Windshield Wiper Motor	—	Outside the vehicle, at the left rear of the engine compartment, below the left lower corner of the windshield	—	M75 Windshield Wiper Motor
M77D	Outside Rearview Mirror Actuator - Driver	—	Outside the vehicle, at the front of the driver door, within the A9A Outside Rearview Mirror - Driver	—	—
M77P	Outside Rearview Mirror Actuator - Passenger	—	Outside the vehicle, at the front of the passenger door, within the A9B Outside Rearview Mirror - Passenger	—	—
M78D	Outside Rearview Mirror Folding Actuator - Driver	A45	Outside the vehicle, at the front of the driver door, within the A9A Outside Rearview Mirror - Driver	—	—
M78P	Outside Rearview Mirror Folding Actuator - Passenger	A45	Outside the vehicle, at the front of the passenger door, within the A9B Outside Rearview Mirror - Passenger	—	—
M81	Sunroof Sunshade Motor	C3U	In the passenger compartment, above headliner, at the rear of the sunroof	—	M81 Sunroof Sunshade Motor (C3U)
M95L	Assist Step Motor - Left	BRS	Under the vehicle, along the left frame rail, under the driver door	—	M95L Assist Step Motor - Left (B3L)
M95R	Assist Step Motor - Right	BRS	Under the vehicle, along the right frame rail, under the passenger door	—	M95R Assist Step Motor - Right (B3L)
M96	Active Grille Air Shutter Actuator	VTI/WMI	At the front of the vehicle, center, attached radiator core support, above M96B Active Grille Air Shutter Actuator 2 (if equipped)	—	M96 Active Grille Air Shutter Actuator (VTI/WMI)
M96B	Active Grille Air Shutter Actuator 2	WMI	At the front of the vehicle, center, attached radiator core support, below M96 Active Grille Air Shutter Actuator	—	M96B Active Grille Air Shutter Actuator 2 (VTI)
M97	Fuel Tank Filler Door Lock Actuator	N08	Under the left rear of the vehicle, rear of the left rear wheelhouse liner	—	M97 Fuel Tank Filler Door Lock Actuator
M103	Turbocharger Vane Position Actuator	LM2	In the engine compartment, right side, mounted to turbocharger	—	M103 Turbocharger Vane Position Actuator (LM2)
M104L	Parking Brake Actuator - Left	—	Under the vehicle, left rear, attached to the left rear brake caliper	—	M104L Parking Brake Actuator - Left
M104R	Parking Brake Actuator - Right	—	Under the vehicle, right rear, attached to the right rear brake caliper	—	M104R Parking Brake Actuator - Right
M107LR	Folding Rear Seat Back Actuator - Left	ATN/ATT	In the passenger compartment, left side, under 2nd row seat cushion	—	M107LR Folding Rear Seat Back Actuator - Left (ATN/ATT)
M107RR	Folding Rear Seat Back Actuator - Right	ATN/ATT	In the passenger compartment, right side, under 2nd row seat cushion	—	M107RR Folding Rear Seat Back Actuator - Right (ATN/ATT)

Master Electrical Component List (cont'd)

Code	Name	Option	Location	Locator View	Connector End View
M108LR	3rd Row Seat Back Pivot Actuator Motor - Left	AS8	In the passenger compartment, left side, at the bottom of the 3rd row seat back	—	M108LR 3rd Row Seat Back Pivot Actuator Motor - Left (AS8)
M108RR	3rd Row Seat Back Pivot Actuator Motor - Right	AS8	In the passenger compartment, right side, at the bottom of the 3rd row seat back	—	M108RR 3rd Row Seat Back Pivot Actuator Motor - Right (AS8)
M109LR	Folding 3rd Row Seat Back Actuator - Left	AS8	In the passenger compartment, left side, at the middle of the 3rd row seat back	—	M109LR Folding 3rd Row Seat Back Actuator - Left (AS8)
M109RR	Folding 3rd Row Seat Back Actuator - Right	AS8	In the passenger compartment, right side, at the middle of the 3rd row seat back	—	M109RR Folding 3rd Row Seat Back Actuator - Right (AS8)
M122	Exhaust Pressure Regulator Valve	LM2	In the engine compartment, right rear, mounted to the exhaust, near the lower right side of the transmission bellhousing	—	M122 Exhaust Pressure Regulator Valve (LM2)
M123	Transmission Park Valve Lock Solenoid Actuator	—	Under the vehicle, inside the T12 Automatic Transmission	—	M123 Transmission Park Valve Lock Solenoid Actuator (MQC)
M135	Differential Lock Motor	G96	Under the vehicle, center rear, within differential housing	—	M135 Differential Lock Motor (G96)
P13	Horn	—	At the front of the vehicle, right side, behind grille, attached to radiator core support	—	P13 Horn
P16	Instrument Panel Cluster Control Module	—	In the passenger compartment, in the driver side of the instrument panel	—	• P16 Instrument Panel Cluster Control Module X1 • P16 Instrument Panel Cluster Control Module X2 (UV6)
P18	Door Lock Status Indicator	UTJ	In the passenger compartment, left front, attached to the upper forward area of the driver door trim panel	—	P18 Door Lock Status Indicator
P19AFC	Front Floor Speaker - Console	UQA	In the passenger compartment, front center, beneath the front of the floor console	—	P19AFC Front Floor Speaker - Console (UQA/UQS)
P19AG	Radio Front Side Door Speaker - Left	—	In the passenger compartment, in the driver door	—	P19AG Radio Front Side Door Speaker - Left
P19AH	Radio Front Side Door Speaker - Right	—	In the passenger compartment, in the passenger door	—	P19AH Radio Front Side Door Speaker - Right
P19AL	Radio Rear Side Door Speaker - Left	—	In the passenger compartment, in the left rear door	—	P19AL Radio Rear Side Door Speaker - Left (UQF/UQA/UQS/UQP/UQH)
P19ALU	Radio Rear Side Door Upper Speaker - Left	UQP	In the passenger compartment, at the top of the left rear door	—	P19ALU Radio Rear Side Door Upper Speaker - Left (UQP)

Master Electrical Component List (cont'd)

Code	Name	Option	Location	Locator View	Connector End View
P19AM	Radio Rear Side Door Speaker - Right	—	In the passenger compartment, in the right rear door	—	P19AM Radio Rear Side Door Speaker - Right
P19AMU	Radio Rear Side Door Upper Speaker - Right	UQP	In the passenger compartment, at the top of the right rear door	—	P19AMU Radio Rear Side Door Upper Speaker - Right (UQP)
P19B	Radio Front Center Speaker	UQP/UQS	In the passenger compartment, front center, mounted to instrument panel beneath the instrument panel extension	—	P19B Radio Front Center Speaker (UQP)
P19H	Radio Windshield Side Garnish Molding Speaker - Left Front	UQP	In the passenger compartment, left front, at a-pillar, behind left front window garnish moulding	—	P19H Radio Windshield Side Garnish Molding Speaker - Left Front (UQP)
P19J	Radio Front Speaker - Instrument Panel Left	—	In the passenger compartment, in the top of the left side of the instrument panel	—	• P19J Radio Front Speaker - Instrument Panel Left (GFW) • P19J Radio Front Speaker - Instrument Panel Left (-GFW)
P19LA	Radio Rear Compartment Speaker	UQP	In the cargo area, left rear, behind trim panel, rear of the left rear wheel house	—	P19LA Radio Rear Compartment Speaker (UQH)
P19M	Radio Body Rear Corner Upper Garnish Molding Speaker - Left	UQA/UQS	In the cargo area, left rear corner, at d-pillar, behind left rear window garnish molding,	—	P19M Radio Body Rear Corner Upper Garnish Molding Speaker - Left (UQA)
P19V	Radio Windshield Side Garnish Molding Speaker - Right Front	UQP	In the passenger compartment, right front, at a-pillar, behind right front window garnish moulding	—	P19V Radio Windshield Side Garnish Molding Speaker - Right Front (UQP)
P19W	Radio Front Speaker - Instrument Panel Right	—	In the passenger compartment, in the top of the right side of the instrument panel	—	• P19W Radio Front Speaker - Instrument Panel Right (GFW) • P19W Radio Front Speaker - Instrument Panel Right (-GFW)
P19Z	Radio Body Rear Corner Upper Garnish Molding Speaker - Right	UQA/UQS	In the cargo area, right rear corner, at d-pillar, behind right rear window garnish molding,	—	• P19Z Radio Body Rear Corner Upper Garnish Molding Speaker - Right (UQA) • P19Z Radio Body Rear Corner Upper Garnish Molding Speaker - Right (UQA/UQP) • P19Z Radio Body Rear Corner Upper Garnish Molding Speaker - Right (UQS)
P22E	Video Display - Left Front Seat Back	UW9	In the passenger compartment, left side, mounted to the driver seat back	—	P22E Video Display - Left Front Seat Back (UW9)

Master Electrical Component List (cont'd)

Code	Name	Option	Location	Locator View	Connector End View
P22F	Video Display - Right Front Seat Back	UW9	In the passenger compartment, right side, mounted to the passenger seat back	—	• P22F Video Display - Right Front Seat Back X1 (UW9) • P22F Video Display - Right Front Seat Back X2 (UW9)
P25	Content Theft Deterrent Alarm	UTJ/UTR	In the passenger compartment, left front, at the upper instrument panel, near the K9 Body Control Module	—	P25 Content Theft Deterrent Alarm (UTJ)
P29	Head-Up Display	UV6	In the passenger compartment, at the left side of the instrument panel, near the windshield	—	• P29 Head-Up Display X1 (UV6) • P29 Head-Up Display X2 (UV6)
P34D	Side Object Detection Indicator - Driver	UKC	Outside of the vehicle, left side, part of E17D Outside Rearview Mirror Glass - Driver, within A9A Outside Rearview Mirror - Driver	—	—
P34P	Side Object Detection Indicator - Passenger	UKC	Outside of the vehicle, left side, part of E17P Outside Rearview Mirror Glass - Passenger, within A9B Outside Rearview Mirror - Passenger	—	—
P43	Forward Collision Alert Display	(UHX/UEU)-UV6	In the passenger compartment, in the top of the instrument panel, near the windshield, in front of the driver	—	P43 Forward Collision Alert Display (UEU-UV6)
P45L	Front Seat Lane Departure Warning Actuator - Left	HS1	In the passenger compartment, under the driver seat cushion, on the left rear side	—	P45L Front Seat Lane Departure Warning Actuator - Left (HS1)
P45R	Front Seat Lane Departure Warning Actuator - Right	HS1	In the passenger compartment, under the driver seat cushion, on the right rear side	—	P45R Front Seat Lane Departure Warning Actuator - Right (HS1)
P50	Regulatory Emergency Call Backup Speaker	—	In the passenger compartment, front center, near the top of the instrument panel	—	P50 Regulatory Emergency Call Backup Speaker
Q2	Air Conditioning Clutch	—	In the engine compartment, right front, mounted to the right lower side of the engine, part of G1 A/C Compressor	—	Q2 Air Conditioning Clutch
Q4	Automatic Level Control Solenoid Valve	F47	Under the vehicle, left rear, mounted to the inboard side of the driver side frame rail, rear of frame crossmember	—	Q4 Automatic Level Control Solenoid Valve (F47)
Q6	Camshaft Position Actuator Solenoid Valve	L84/L87	In the engine compartment, front center, mounted to timing chain cover, above crankshaft harmonic balancer	—	Q6 Camshaft Position Actuator Solenoid Valve (L84/L87)
Q12	Evaporative Emission Canister Purge Solenoid Valve	L84/L87	In the engine compartment, front center, mounted to intake manifold, to the left of Q38 Throttle Body	—	Q12 Evaporative Emission Canister Purge Solenoid Valve (L84/L87)

Master Electrical Component List (cont'd)

Code	Name	Option	Location	Locator View	Connector End View
Q13	Evaporative Emission Canister Vent Solenoid Valve	—	On the underbody, at the top left side of the fuel tank	—	Q13 Evaporative Emission Canister Vent Solenoid Valve (L84/L87)
Q14A	Exhaust Gas Recirculation Valve 1	LM2	In the engine compartment, right rear, mounted to the exhaust, near the top right side of the engine	—	Q14A Exhaust Gas Recirculation Valve 1 (LM2)
Q14B	Exhaust Gas Recirculation Valve 2	LM2	In the engine compartment, right rear lower, in the exhaust between the turbocharger and nitrogen oxides catalytic converter	—	Q14B Exhaust Gas Recirculation Valve 2 (LM2)
Q17A	Fuel Injector 1	—	• (L84/L87) In the engine compartment, underneath intake manifold, next to cylinder 1 intake port on the cylinder head • (LM2) In the engine compartment, center, mounted to valve cover above cylinder 1	—	• Q17A Fuel Injector 1 (L84/L87) • Q17A Fuel Injector 1 (LM2)
Q17B	Fuel Injector 2	—	• (L84/L87) In the engine compartment, underneath intake manifold, next to cylinder 2 intake port on the cylinder head • (LM2) In the engine compartment, center, mounted to valve cover above cylinder 2	—	• Q17B Fuel Injector 2 (L84/L87) • Q17B Fuel Injector 2 (LM2)
Q17C	Fuel Injector 3	—	• (L84/L87) In the engine compartment, underneath intake manifold, next to cylinder 3 intake port on the cylinder head • (LM2) In the engine compartment, center, mounted to valve cover above cylinder 3	—	• Q17C Fuel Injector 3 (L84/L87) • Q17C Fuel Injector 3 (LM2)
Q17D	Fuel Injector 4	—	• (L84/L87) In the engine compartment, underneath intake manifold, next to cylinder 4 intake port on the cylinder head • (LM2) In the engine compartment, center, mounted to valve cover above cylinder 4	—	• Q17D Fuel Injector 4 (L84/L87) • Q17D Fuel Injector 4 (LM2)
Q17E	Fuel Injector 5	—	• (L84/L87) In the engine compartment, underneath intake manifold, next to cylinder 5 intake port on the cylinder head • (LM2) In the engine compartment, center, mounted to valve cover above cylinder 5	—	• Q17E Fuel Injector 5 (L84/L87) • Q17E Fuel Injector 5 (LM2)

Master Electrical Component List (cont'd)

Code	Name	Option	Location	Locator View	Connector End View
Q17F	Fuel Injector 6	—	• (L84/L87) In the engine compartment, underneath intake manifold, next to cylinder 6 intake port on the cylinder head • (LM2) In the engine compartment, center, mounted to valve cover above cylinder 6	—	• Q17F Fuel Injector 6 (L84/L87) • Q17F Fuel Injector 6 (LM2)
Q17G	Fuel Injector 7	L84/L87	In the engine compartment, underneath intake manifold, next to cylinder 7 intake port on the cylinder head	—	Q17G Fuel Injector 7 (L84/L87)
Q17H	Fuel Injector 8	L84/L87	In the engine compartment, underneath intake manifold, next to cylinder 8 intake port on the cylinder head	—	Q17H Fuel Injector 8 (L84/L87)
Q18A	Fuel Pressure Regulator 1	LM2	In the engine compartment, left rear side of engine, below Q18C Fuel Pressure Regulator 3, attached to G18 High Pressure Fuel Pump	—	Q18A Fuel Pressure Regulator 1 (LM2)
Q18B	Fuel Pressure Regulator 2	LM2	In the engine compartment, left side of engine, mounted to the left rear side of the valve cover	—	Q18B Fuel Pressure Regulator 2 (LM2)
Q18C	Fuel Pressure Regulator 3	LM2	In the engine compartment, left rear side of engine, above Q18A Fuel Pressure Regulator 1, attached to G18 High Pressure Fuel Pump	—	Q18C Fuel Pressure Regulator 3 (LM2)
Q22	Intake Manifold Tuning Solenoid Valve	LM2	In the engine compartment, front center, attached to the front of the intake manifold	—	Q22 Intake Manifold Tuning Solenoid Valve (LM2)
Q37LFB	Front Shock Absorber Actuator - Left	Z95	In the left front wheel well, attached to the left front lower control arm and left front strut tower, part of strut assembly	—	Q37LFB Front Shock Absorber Actuator - Left (Z95)
Q37LRB	Rear Shock Absorber Actuator - Left	Z95	In the left rear wheel well, attached to the left rear lower control arm and left rear strut tower, part of strut assembly	—	Q37LRB Rear Shock Absorber Actuator - Left (Z95)
Q37RFB	Front Shock Absorber Actuator - Right	Z95	In the right front wheel well, attached to the right front lower control arm and right front strut tower, part of strut assembly	—	Q37RFB Front Shock Absorber Actuator - Right (Z95)
Q37RRB	Rear Shock Absorber Actuator - Right	Z95	In the right rear wheel well, attached to the right rear lower control arm and right rear strut tower, part of strut assembly	—	Q37RRB Rear Shock Absorber Actuator - Right (Z95)

Master Electrical Component List (cont'd)

Code	Name	Option	Location	Locator View	Connector End View
Q38	Throttle Body	—	• (L84/L87) In the engine compartment, at the front of the engine, mounted to the intake manifold inlet • (LM2) In the engine compartment, left front, to the left of the valve cover	—	Q38 Throttle Body
Q44	Engine Oil Pressure Control Solenoid Valve	—	In the engine compartment, at the front of the engine, behind the front cover	—	• Q44 Engine Oil Pressure Control Solenoid Valve (L87) • Q44 Engine Oil Pressure Control Solenoid Valve (LM2)
Q46	Air Conditioning Compressor Solenoid Valve	—	In the engine compartment, right front, mounted to the right lower side of the engine, part of G1 A/C Compressor	—	Q46 Air Conditioning Compressor Solenoid Valve
Q61	Reductant Fluid Injector	LM2	In the engine compartment, right front, mounted to the exhaust, in front of diesel particulate filter	—	Q61 Reductant Fluid Injector (LM2)
Q74	Engine Coolant Bypass Valve	LM2	In the engine compartment, left rear, attached to the bottom rear of Q97 Engine Coolant Flow Control Valve	—	Q74 Engine Coolant Bypass Valve (LM2)
Q77A	Transmission Control Solenoid Valve 1	—	Under the vehicle, inside the T12 Automatic Transmission	—	Q77A Transmission Control Solenoid Valve 1 (MQC)
Q77B	Transmission Control Solenoid Valve 2	—	Under the vehicle, inside the T12 Automatic Transmission	—	Q77B Transmission Control Solenoid Valve 2 (MQC)
Q77C	Transmission Control Solenoid Valve 3	—	Under the vehicle, inside the T12 Automatic Transmission	—	Q77C Transmission Control Solenoid Valve 3 (MQC)
Q77D	Transmission Control Solenoid Valve 4	—	Under the vehicle, inside the T12 Automatic Transmission	—	Q77D Transmission Control Solenoid Valve 4 (MQC)
Q77E	Transmission Control Solenoid Valve 5	—	Under the vehicle, inside the T12 Automatic Transmission	—	Q77E Transmission Control Solenoid Valve 5 (MQC)
Q77F	Transmission Control Solenoid Valve 6	—	Under the vehicle, inside the T12 Automatic Transmission	—	Q77F Transmission Control Solenoid Valve 6 (MQC)
Q77G	Transmission Control Solenoid Valve 7	—	Under the vehicle, inside the T12 Automatic Transmission	—	Q77G Transmission Control Solenoid Valve 7 (MQC)
Q77H	Transmission Control Solenoid Valve 8	—	Under the vehicle, inside the T12 Automatic Transmission	—	Q77H Transmission Control Solenoid Valve 8 (MQC)
Q77J	Transmission Control Solenoid Valve 9	—	Under the vehicle, inside the T12 Automatic Transmission	—	Q77J Transmission Control Solenoid Valve 9 (MQC)
Q80L	Engine Mount Actuator - Left	LM2	In the engine compartment, front center, mounted to left side of the upper oil pan	—	—

Master Electrical Component List (cont'd)

Code	Name	Option	Location	Locator View	Connector End View
Q80R	Engine Mount Actuator - Right	LM2	In the engine compartment, front center, mounted to right side of the upper oil pan	—	—
Q83AA	Valve Lifter Oil Solenoid Valve - Cylinder 1	L84/L87	In the engine compartment, mounted to the engine, beneath the engine block valley cover, next to cylinder 1	—	Q83AA Valve Lifter Oil Solenoid Valve - Cylinder 1 (L82/L84/L87)
Q83AB	Valve Lifter Oil Solenoid Valve - Cylinder 2	L84/L87	In the engine compartment, mounted to the engine, beneath the engine block valley cover, next to cylinder 2	—	Q83AB Valve Lifter Oil Solenoid Valve - Cylinder 2 (L84/L87)
Q83AC	Valve Lifter Oil Solenoid Valve - Cylinder 3	L84/L87	In the engine compartment, mounted to the engine, beneath the engine block valley cover, next to cylinder 3	—	Q83AC Valve Lifter Oil Solenoid Valve - Cylinder 3 (L84/L87)
Q83AD	Valve Lifter Oil Solenoid Valve - Cylinder 4	L84/L87	In the engine compartment, mounted to the engine, beneath the engine block valley cover, next to cylinder 4	—	Q83AD Valve Lifter Oil Solenoid Valve - Cylinder 4 (L82/L84/L87)
Q83AE	Valve Lifter Oil Solenoid Valve - Cylinder 5	L84/L87	In the engine compartment, mounted to the engine, beneath the engine block valley cover, next to cylinder 5	—	Q83AE Valve Lifter Oil Solenoid Valve - Cylinder 5 (L84/L87)
Q83AF	Valve Lifter Oil Solenoid Valve - Cylinder 6	L84/L87	In the engine compartment, mounted to the engine, beneath the engine block valley cover, next to cylinder 6	—	Q83AF Valve Lifter Oil Solenoid Valve - Cylinder 6 (L82/L84/L87)
Q83AG	Valve Lifter Oil Solenoid Valve - Cylinder 7	L84/L87	In the engine compartment, mounted to the engine, beneath the engine block valley cover, next to cylinder 7	—	Q83AG Valve Lifter Oil Solenoid Valve - Cylinder 7 (L82/L84/L87)
Q83AH	Valve Lifter Oil Solenoid Valve - Cylinder 8	L84/L87	In the engine compartment, mounted to the engine, beneath the engine block valley cover, next to cylinder 8	—	Q83AH Valve Lifter Oil Solenoid Valve - Cylinder 8 (L84/L87)
Q97	Engine Coolant Flow Control Valve	—	In the engine compartment, left, attached to the front of Q97 Engine Coolant Flow Control Valve	—	—
Q97B	Engine Coolant Flow Control Valve - Block	LM2	In the engine compartment, left front, attached to the front of Q97 Engine Coolant Flow Control Valve, at the top	—	Q97B Engine Coolant Flow Control Valve - Block (LM2)
Q97M	Engine Coolant Flow Control Valve - Main	LM2	In the engine compartment, left front, attached to the front of Q97 Engine Coolant Flow Control Valve, behind the G13 Generator	—	Q97M Engine Coolant Flow Control Valve - Main (LM2)
R6A	Terminating Resistor - High Speed Bus	UET+TB4-UKC-UKV	In the engine compartment, left side, attached to harness between breakouts to ground G100/G103 and G101B/G101E	—	R6A Terminating Resistor - High Speed Bus (U1D+TB4-UKC-UVC)
R29	Fuel Filter	LM2	Under the vehicle, left side, mounted to inboard side of left frame rail, rear of transmission crossmember	—	R29 Fuel Filter (LM2)

Master Electrical Component List (cont'd)

Code	Name	Option	Location	Locator View	Connector End View
S2	Automatic Transmission Manual Shift Shaft Position Switch	—	In the passenger compartment, part of the transmission shift lever	—	—
S13D	Door Lock Switch - Driver	—	In the passenger compartment, in the driver door trim panel	—	S13D Door Lock Switch - Driver
S13LR	Door Lock Switch - Left Rear	—	In the passenger compartment, left rear, in the left rear door trim panel, below handle	—	S13LR Door Lock Switch - Left Rear
S13P	Door Lock Switch - Passenger	—	In the passenger compartment, in the passenger door trim panel	—	S13P Door Lock Switch - Passenger
S13RR	Door Lock Switch - Right Rear	—	In the passenger compartment, right rear, in the right rear door trim panel, below handle	—	S13RR Door Lock Switch - Right Rear
S25	Garage Door Opener Transmitter	UG1	In the passenger compartment, front center, mounted to rear of A103 Roof Console	—	—
S26	Hazard Warning Switch	—	In the passenger compartment, front center, in the instrument panel trim pad, below A22 Radio Control	—	S26 Hazard Warning Switch
S27	Head-Up Display Switch	UV6	In the passenger compartment, left front, left of the steering column, in the instrument panel	—	S27 Head-Up Display Switch (UV6)
S30	Headlamp Switch	—	In the passenger compartment, left of the steering column, in the instrument panel switch trim plate	—	S30 Headlamp Switch
S33	Steering Wheel Horn Contact	—	In the passenger compartment, in the center of the steering wheel, behind the driver side air bag	—	S33 Steering Wheel Horn Contact
S38	On/Off Vehicle Switch	BTM	In the passenger compartment, right of the steering column, in the instrument panel	—	S38 On/Off Vehicle Switch
S45A	Liftgate Release Switch - Exterior	TB4/TC2	At the rear of the vehicle, center, at the bottom of the liftgate	—	S45A Liftgate Release Switch - Exterior
S47D	Front Seat Adjuster Memory Switch - Driver	—	In the passenger compartment, on the driver door panel above the driver door switch assembly	—	S47D Front Seat Adjuster Memory Switch - Driver (A45/AUN)
S64D	Front Seat Adjuster Switch - Driver	—	In the passenger compartment, mounted to the outboard side of the driver seat cushion	—	• S64D Front Seat Adjuster Switch - Driver (A45/AUN) • S64D Front Seat Adjuster Switch - Driver (-A45-AUN)
S64P	Front Seat Adjuster Switch - Passenger	—	In the passenger compartment, mounted to the outboard side of the passenger seat cushion	—	S64P Front Seat Adjuster Switch - Passenger

Master Electrical Component List (cont'd)

Code	Name	Option	Location	Locator View	Connector End View
S65D	Front Seat Lumbar Switch - Driver	A2X	In the passenger compartment, mounted to the outboard side of the driver seat cushion	—	• S65D Front Seat Lumbar Switch - Driver (A2X+AL9) • S65D Front Seat Lumbar Switch - Driver (AVK +(A45/AUN))
S65P	Front Seat Lumbar Switch - Passenger	A7K	In the passenger compartment, mounted to the outboard side of the passenger seat cushion	—	• S65P Front Seat Lumbar Switch - Passenger X1 • S65P Front Seat Lumbar Switch - Passenger X2
S70E	Radio Favorites Switch - Steering Wheel	—	In the passenger compartment, on the left rear side of the steering wheel	—	S70E Radio Favorites Switch - Steering Wheel
S70F	Radio Volume Switch - Steering Wheel	—	In the passenger compartment, on the right rear side of the steering wheel	—	S70F Radio Volume Switch - Steering Wheel
S70L	Cruise Control Switch	—	In the passenger compartment, on the left side of the steering wheel	—	S70L Cruise Control Switch
S70R	Radio Control Switch - Steering Wheel	—	In the passenger compartment, on the right side of the steering wheel	—	S70R Radio Control Switch - Steering Wheel
S71	Steering Column Tilt Wheel and Telescope Switch	N38	In the passenger compartment, left front, left side of steering column, mounted to the instrument panel steering column lower trim cover	—	S71 Steering Column Tilt Wheel and Telescope Switch (N38)
S76	Trailer Brake Control Switch	—	In the passenger compartment, center of the instrument panel, below S86 Vehicle Stability Control System Switch	—	S76 Trailer Brake Control Switch (JL1)
S78	Turn Signal Switch	—	In the passenger compartment, on the left side of the steering column	—	S78 Turn Signal Switch
S79D	Front Side Door Window Control Switch - Driver	—	In the passenger compartment, left front, mounted to the driver door trim panel, below the door handle	—	• S79D Front Side Door Window Control Switch - Driver X1 • S79D Front Side Door Window Control Switch - Driver X2
S79LR	Rear Side Door Window Switch - Left	—	In the passenger compartment, left rear, on the left rear door trim panel, center of the door	—	S79LR Rear Side Door Window Switch - Left
S79P	Front Side Door Window Switch - Passenger	—	In the passenger compartment, right front, mounted to the passenger door trim panel, below the door handle	—	S79P Front Side Door Window Switch - Passenger
S79RR	Rear Side Door Window Switch - Right	—	In the passenger compartment, right rear, on the right rear door trim panel, center of the door	—	S79RR Rear Side Door Window Switch - Right

Master Electrical Component List (cont'd)

Code	Name	Option	Location	Locator View	Connector End View
S86	Vehicle Stability Control System Switch	—	In the passenger compartment, left front, mounted to left instrument panel trim bad, below the HVAC vent, right of S91 Parking Brake Control Switch	—	S86 Vehicle Stability Control System Switch
S91	Parking Brake Control Switch	—	In the passenger compartment, left front, mounted to left instrument panel trim bad, below the HVAC vent, left of S86 Vehicle Stability Control System Switch	—	S91 Parking Brake Control Switch
S126	Ride Control Switch	URC	In the passenger compartment, left front, left side of the instrument panel, above S30 Headlamp Switch	—	S126 Ride Control Switch
S141	Liftgate Window Release Switch - Exterior	—	At the rear of the vehicle, mounted to the liftgate, near E7 Rear License Plate Lamp	—	S141 Liftgate Window Release Switch - Exterior
S143L	Rear Seat Back Folding Switch - 2nd Row Left	ATN/ATT	In the passenger compartment, left side, on C-Pillar trim	—	S143L Rear Seat Back Folding Switch - 2nd Row Left (ATN/ATT)
S143R	Rear Seat Back Folding Switch - 2nd Row Right	ATN/ATT	In the passenger compartment, right side, on C-Pillar trim	—	S143R Rear Seat Back Folding Switch - 2nd Row Right (ATN/ATT)
S144A	Rear Seat Back Folding Switch - 2nd Row Rear Compartment	ATN/ATT	In the cargo area, right rear, below right rear window and d-pillar, mounted to right rear trim panel	—	S144A Rear Seat Back Folding Switch - 2nd Row Rear Compartment (ATN/ATT)
S144B	3rd Row Seat Folding Switch - Rear Compartment	AS8	In the cargo area, right rear, below right rear window and d-pillar, mounted to right rear trim panel	—	S144B 3rd Row Seat Folding Switch - Rear Compartment (AS8)
S145	Beverage Cooler Switch	DCK	In the passenger compartment, center, in the floor console compartment, at the right front	—	S145 Beverage Cooler Switch (DCK)
T1	DC/AC Converter Control Module	KI4/KI5	In the luggage compartment, right rear, below D-pillar, behind right quarter lower rear trim panel	—	• T1 DC/AC Converter Control Module X1 (KI4/KI5) • T1 DC/AC Converter Control Module X2 (KI5)
T3	Audio Amplifier	UQA	In the rear passenger compartment, mounted behind the rear seat, below the rear window	—	• T3 Audio Amplifier X1 (UQA/UQS/UQP) • T3 Audio Amplifier X2 (UQA/UQS/UQP) • T3 Audio Amplifier X3 (UQA/UQS/UQP) • T3 Audio Amplifier X4 (UQP)
T4M	Radio Antenna	—	At the rear of the vehicle, part of the rear spoiler	—	—

Master Electrical Component List (cont'd)

Code	Name	Option	Location	Locator View	Connector End View
T4P	High Frequency Antenna	—	Mounted to the vehicle roof, left front	—	T4P High Frequency Antenna X1
T4S	Wireless Communication Antenna - Bluetooth	—	Outside the vehicle, at the rear of the right front fender	—	—
T4TA	Auxiliary Wireless Communication Interface Antenna	VV4	In the passenger compartment, front center, below instrument panel upper trim panel, behind HVAC vent	—	T4TA Auxiliary Wireless Communication Interface Antenna (VV4)
T8A	Ignition Coil 1	L84/L87	In the engine compartment, at the top of the engine, above cylinder 1	—	T8A Ignition Coil 1 (L84/L87)
T8B	Ignition Coil 2	L84/L87	In the engine compartment, at the top of the engine, above cylinder 2	—	T8B Ignition Coil 2 (L84/L87)
T8C	Ignition Coil 3	L84/L87	In the engine compartment, at the top of the engine, above cylinder 3	—	T8C Ignition Coil 3 (L84/L87)
T8D	Ignition Coil 4	L84/L87	In the engine compartment, at the top of the engine, above cylinder 4	—	T8D Ignition Coil 4 (L84/L87)
T8E	Ignition Coil 5	L84/L87	In the engine compartment, at the top of the engine, above cylinder 5	—	T8E Ignition Coil 5 (L84/L87)
T8F	Ignition Coil 6	L84/L87	In the engine compartment, at the top of the engine, above cylinder 6	—	T8F Ignition Coil 6 (L84/L87)
T8G	Ignition Coil 7	L84/L87	In the engine compartment, at the top of the engine, above cylinder 7	—	T8G Ignition Coil 7 (L84/L87)
T8H	Ignition Coil 8	L84/L87	In the engine compartment, at the top of the engine, above cylinder 8	—	T8H Ignition Coil 8 (L84/L87)
T10E	Low Frequency Rear Compartment Antenna	—	In the passenger compartment, left rear, beneath the front of the driver side passenger second row seat cushion, beneath the carpet	—	T10E Low Frequency Rear Compartment Antenna
T10G	Low Frequency Rear Bumper Antenna	—	At the rear of the vehicle, center, mounted to rear fascia	—	T10G Low Frequency Rear Bumper Antenna
T10J	Low Frequency Instrument Panel Antenna	—	In the passenger compartment, front center, mounted to the bottom of the front floor console cup holder trim plate	—	T10J Low Frequency Instrument Panel Antenna (AZ3)
T10KA	Low Frequency Console Number 2 Antenna	D07/DCH/DCK	In the passenger compartment, center, mounted to the back of the front floor console rear trim panel	—	T10KA Low Frequency Console Number 2 Antenna (D07/DCH/DCK)
T10L	Low Frequency Body Side Antenna - Left	—	In the left rear door, at the front	—	T10L Low Frequency Body Side Antenna - Left
T10R	Low Frequency Body Side Antenna - Right	—	In the right rear door, at the front	—	T10R Low Frequency Body Side Antenna - Right
T10U	Low Frequency Console Antenna - Front	—	In the passenger compartment, center, beneath floor console	—	T10U Low Frequency Console Antenna - Front

Master Electrical Component List (cont'd)

Code	Name	Option	Location	Locator View	Connector End View
T12	Automatic Transmission	—	Under the vehicle, mounted to the rear of the engine	—	• T12 Automatic Transmission Assembly X2 (MQC) • T12 Automatic Transmission Assembly X3 (MQC) • T12 Automatic Transmission X1
T19	Multifunction Power Supply Converter	KL9	In the passenger compartment, right front, between the instrument panel and bulkhead	—	T19 Multifunction Power Supply Converter
T22	Wireless Accessory Charging Module	K4C	In the passenger compartment, forward of center, in the floor console bin lid.	—	T22 Wireless Accessory Charging Module (K4C)
T35AF	Radio Antenna Amplifier - AM/FM	—	At the rear of the vehicle, above rear of headliner, center, below spoiler	—	• T35AF Radio Antenna Amplifier - AM/FM X1 • T35AF Radio Antenna Amplifier - AM/FM X2
T35X	Radio Antenna - XM	U2K	At the rear of the vehicle, part of the rear spoiler	—	T35X Radio Antenna - XM (U2K)
W24	Blunt Cut - Trailer Brakes Provision	(Z82-JL1)+Late	In the passenger compartment, within the instrument panel, driver side, attached to the instrument panel harness near K9 Body Control Module	—	—
X23	Multimedia Receptacle	—	In the passenger compartment, front center, mounted to the left side of the floor console, in front of the cup holders	—	• X23 Multimedia Receptacle X1 • X23 Multimedia Receptacle X2 (MCR) • X23 Multimedia Receptacle X3 (UW9)
X50A	Engine Wiring Harness Junction Block	—	In the engine compartment, right front, in front of C1 Battery	—	Electrical Center Identification Views on page 6-30
X50B	Battery Distribution Engine Compartment Fuse Block	—	In the engine compartment, right front, above C1 Battery	—	Electrical Center Identification Views on page 6-30
X51R	Instrument Panel Wiring Harness Junction Block - Right	—	In the passenger compartment, right side of the instrument panel, behind side trim panel	—	Electrical Center Identification Views on page 6-30
X53A	Body Wiring Harness Junction Block - Rear	—	In the cargo area, left rear, behind access panel	—	Electrical Center Identification Views on page 6-30
X80G	Accessory Power Receptacle - Instrument Panel	AZ3	In the passenger compartment, front center, in the instrument panel, beneath A26 HVAC Controls	—	X80G Accessory Power Receptacle - Instrument Panel (AZ3)
X80H	Accessory Power Receptacle - Floor Console Front	D07/DCH/DCK	In the passenger compartment, front center, in the instrument panel, beneath A26 HVAC Controls	—	X80H Accessory Power Receptacle - Floor Console Front (D07/DCH/DCK)

Master Electrical Component List (cont'd)

Code	Name	Option	Location	Locator View	Connector End View
X81AC	Accessory Power Receptacle - Floor Console 110V AC	KI4	In the passenger compartment, center, mounted to the bottom of the front floor console rear cover	—	• X81AC Accessory Power Receptacle - Floor Console 110V AC X2 (KI4 +(D07/DCH/DCK)) • X81AC Accessory Power Receptacle - Floor Console 110V AC X2 (KI4 +AZ3)
X81BC	Accessory Power Receptacle - Floor Console 220V AC	KI5	In the passenger compartment, center, mounted to the bottom of the front floor console rear cover	—	—
X81RA	Quarter Lower Rear Trim Panel Accessory Power Receptacle - 110V AC	KI4	In the cargo area, right rear, below right rear window, mounted to right rear trim panel	—	X81RA Quarter Lower Rear Trim Panel Accessory Power Receptacle - 110V AC (KI4)
X81RB	Quarter Lower Rear Trim Panel Accessory Power Receptacle - 220V AC	KI5	In the cargo area, right rear, below right rear window, mounted to right rear trim panel	—	X81RB Quarter Lower Rear Trim Panel Accessory Power Receptacle - 220V AC (KI5)
X83B	Audio/Video Receptacle	—	In the passenger compartment, center, mounted to the front floor console rear cover	—	• X83B Audio/Video Receptacle X1 (UW9) • X83B Audio/Video Receptacle X2 (UW9) • X83B Audio/Video Receptacle X3 (UW9)
X84	Data Link Connector	—	In the passenger compartment, at the bottom of the driver side of the instrument panel	—	X84 Data Link Connector
X85	Steering Wheel Airbag Coil	—	In the passenger compartment, behind the steering wheel	—	• X85 Steering Wheel Airbag Coil X1 • X85 Steering Wheel Airbag Coil X2
X88B	Tow Vehicle Electrical Receptacle	—	At the rear of the vehicle, forward of the rear bumper fascia trailer hitch cover, to the left of the hitch	—	• X88B Tow Vehicle Electrical Receptacle X1 (U1D +(MAS/MBM/MBR)) • X88B Tow Vehicle Electrical Receptacle X1 (UET-(-MAS/MBM/MBR))
X92BCL	USB Receptacle - 3rd Row Seat Left	USS	In the passenger compartment, left rear, mounted to the left rear lower quarter trim panel, above the cup holder	—	X92BCL USB Receptacle - 3rd Row Seat Left (USS)
X92BCR	USB Receptacle - 3rd Row Seat Right	USS	In the passenger compartment, right rear, mounted to the right rear lower quarter trim panel, above the cup holder	—	X92BCR USB Receptacle - 3rd Row Seat Right (USS)

Master Electrical Component List (cont'd)

Code	Name	Option	Location	Locator View	Connector End View
X92CD	Dual Charge Only Receptacle - Floor Console Rear	USS-UW9	In the passenger compartment, center, mounted to the front floor console rear cover or front seat armrest cover	—	• X92CD Dual Charge Only Receptacle - Floor Console Rear (USS-UW9+(D07/DCH/DCK)) • X92CD Dual Charge Only Receptacle - Floor Console Rear (USS-UW9+AZ3)
X92G	USB 2 Port Receptacle	—	In the passenger compartment, front center, in the instrument panel, beneath A26 HVAC Controls	—	• X92G USB 2 Port Receptacle X1 ((D07/DCH/DCK)) • X92G USB 2 Port Receptacle X1 (AZ3) • X92G USB 2 Port Receptacle X2 • X92G USB 2 Port Receptacle X3
X125	Engine Wiring Harness to Body Wiring Harness	—	In the front of the engine compartment, near the upper left of the radiator support	—	• X125 Engine Wiring Harness to Body Wiring Harness (L84/L87) • X125 Engine Wiring Harness to Body Wiring Harness (LM2)
X128C	Engine Wiring Harness to Camshaft Position Sensor Jumper Harness	L84/L87	In the engine compartment, left front, near left side of oil pump housing	—	X128C Engine Wiring Harness to Camshaft Position Sensor Jumper Wiring Harness (L84/L87)
X129	Engine Wiring Harness to Engine Oil Pressure Control Solenoid Valve	L87/LM2	In the engine compartment, rear center, beneath rear of intake manifold	—	• X129 Camshaft Position Sensor Jumper Wiring Harness to Valve Rocker Arm Oil Control Valve Extension Harness (L87) • X129 Engine Wiring Harness to Oil Pump Flow Control Solenoid Valve Harness (LM2)
X160	Engine Wiring Harness to Fuel Injector Wiring Harness	—	• (L84/L87) In the engine compartment, rear of the engine near the top center • (LM2) In the engine compartment, rear of the engine near the top center	—	• X160 Engine Wiring Harness to Fuel Injector Wiring Harness (L84/L87) • X160 Engine Wiring Harness to Fuel Injector Wiring Harness (LM2)
X161	Engine Wiring Harness to Fuel Injector Wiring Harness	L84/L87	In the engine compartment, rear of the engine near the top right	—	X161 Engine Wiring Harness to Fuel Injector Wiring Harness (L84/L87)

Master Electrical Component List (cont'd)

Code	Name	Option	Location	Locator View	Connector End View
X163	Engine Wiring Harness to Diesel Glow Plug Wiring Harness	LM2	In the engine compartment, left front, above the G13 Generator	—	X163 Engine Wiring Harness to Diesel Glow Plug Wiring Harness (LM2)
X176	Automatic Transmission Wiring Harness to Automatic Transmission Wiring Harness	MQC	Under the vehicle, inside the T12 Automatic Transmission	—	X176 Automatic Transmission Wiring Harness to Automatic Transmission Wiring Harness (MQC)
X177	Automatic Transmission Wiring Harness to Automatic Transmission Wiring Harness	MQC	Under the vehicle, inside the T12 Automatic Transmission	—	X177 Automatic Transmission Wiring Harness to Automatic Transmission Wiring Harness (MQC)
X210	Instrument Panel Wiring Harness to Body Wiring Harness	—	In the passenger compartment, behind the lower right side of the instrument panel	—	X210 Instrument Panel Wiring Harness to Body Wiring Harness
X211	Instrument Panel Wiring Harness to Body Wiring Harness	—	In the passenger compartment, behind the lower left side of the instrument panel	—	X211 Instrument Panel Wiring Harness to Body Wiring Harness
X214	Instrument Panel Wiring Harness to Body Wiring Harness	UW9	In the passenger compartment, right front, below passenger a-pillar, between the instrument panel and bulkhead, near A11 Radio	—	X214 Instrument Panel Wiring Harness to Body Wiring Harness
X216	Instrument Panel Wiring Harness to Body Wiring Harness	—	• (UV2) In the passenger compartment, right front, within instrument panel • (UVB) In the passenger compartment, right front, within instrument panel	—	• X216 Instrument Panel Wiring Harness to Body Wiring Harness (UV2) • X216 Instrument Panel Wiring Harness to Body Wiring Harness (UVB)
X221	Instrument Panel Wiring Harness to Passenger Instrument Panel Airbag Wiring Harness	—	In the passenger compartment, right front, within instrument panel, beneath the instrument panel upper trim panel, right of F101 Instrument Panel Airbag	—	X221 Instrument Panel Wiring Harness to Passenger Instrument Panel Airbag Wiring Harness
X225A	Front Floor Console Wiring Harness to Instrument Panel Wiring Harness	USR	In the passenger compartment, center, underneath the front of the floor console	—	—
X225B	Instrument Panel Wiring Harness to Front Floor Console Wiring Harness	—	In the passenger compartment, right front, at the bottom of the A-pillar, behind passenger kick panel	—	X225B Instrument Panel Wiring Harness to Front Floor Console Wiring Harness
X225C	Front Floor Console Wiring Harness to Body Wiring Harness	—	In the passenger compartment, front center, at the front of the floor console	—	X225C Front Floor Console Wiring Harness to Body Wiring Harness (D07/DCH/DCK)
X226	Front Floor Console Wiring Harness to Body Wiring Harness	UW9	In the passenger compartment, right front, beneath the passenger seat cushion	—	X226 Front Floor Console Wiring Harness to Body Wiring Harness (UW9)

Master Electrical Component List (cont'd)

Code	Name	Option	Location	Locator View	Connector End View
X250	Instrument Panel Wiring Harness to Heater Wiring Harness	—	In the passenger compartment, center, within instrument panel, near HVAC assembly	—	X250 Instrument Panel Wiring Harness to Heater Wiring Harness
X251A	Body Wiring Harness to Auxiliary HVAC Wiring Harness	C69	In the cargo area, right rear, behind right quarter lower rear trim panel, approximately 25 cm (9.8 in) from M8B Blower Motor - Rear	—	X251A Body Wiring Harness to Auxiliary Heater and Air Conditioning Wiring Harness (C69)
X251L	Body Wiring Harness to Body Wiring Harness	C3A	In the passenger compartment, right front, within instrument panel, near X51R Instrument Panel Wiring Harness Junction Block - Right	—	X251L Air Heater Jumper Wiring Harness to Body Wiring Harness (C3A)
X309	Body Wiring Harness to Body Wiring Harness	—	In the cargo area, right rear, behind trim panel, at right d-pillar	—	X309 Body Wiring Harness to Body Wiring Harness
X328	Front Seat Wiring Harness - Driver to Body Wiring Harness	—	In the passenger compartment, under the passenger seat	—	X328 Front Seat Wiring Harness - Driver to Body Wiring Harness
X329	Body Wiring Harness to Front Seat Wiring Harness - Driver	UW9	In the passenger compartment, left front, beneath the driver seat cushion	—	X329 Body Wiring Harness to Front Seat Wiring Harness - Driver (UW9)
X333	Front Seat Wiring Harness - Passenger to Body Wiring Harness	—	In the passenger compartment, under the passenger seat	—	X333 Front Seat Wiring Harness - Passenger to Body Wiring Harness
X334E	Passenger Seat Harness to Body Wiring Harness	UW9	In the passenger compartment, right front, beneath the passenger seat cushion	—	X334E Front Seat Wiring Harness - Passenger to Body Wiring Harness
X334L	Floor Console Harness to Body Harness	UW9	In the passenger compartment, front center, at the front of the floor console	—	X334L Front Seat Wiring Harness - Passenger to Body Wiring Harness (UW9)
X334U	Body Harness to Passenger Seat Harness	UW9	In the passenger compartment, right front, beneath the passenger seat cushion	—	X334U Body Wiring Harness to Front Seat Wiring Harness - Passenger (UW9)
X340	Body Wiring Harness to Rear Seat Wiring Harness - 2nd Row Left	—	In the passenger compartment, left center, beneath the left 2nd row seat	—	X340 Body Wiring Harness to Rear Seat Wiring Harness - 2nd Row Left
X344	Body Wiring Harness to Rear Seat Wiring Harness - 2nd Row Right	—	In the passenger compartment, right rear, beneath right 2nd row seat cushion	—	X344 Body Wiring Harness to Rear Seat Wiring Harness - 2nd Row Right
X346A	Body Wiring Harness to 3rd Row Seat Wiring Harness	AS8	In the cargo area, left rear, behind quarter lower rear trim panel	—	—
X353	Fuel Tank Filler Door Lock Release Wiring Harness to Chassis Wiring Harness	—	Under the vehicle, left rear, behind left rear tire	—	X353 Fuel Tank Filler Door Lock Release Wiring Harness to Chassis Wiring Harness

Master Electrical Component List (cont'd)

Code	Name	Option	Location	Locator View	Connector End View
X370A	Headliner Harness to Instrument Panel Harness	—	In the passenger compartment, front center, within instrument panel, beneath the instrument panel upper trim panel	—	X370A Headlining Trim Panel Wiring Harness to Instrument Panel Wiring Harness
X370B	Rain Sensor Jumper Harness to Headliner Harness	C3U	In the passenger compartment, in the headliner, between near the A-pillar	—	X370B Headlamp Automatic Control Ambient Light Sensor Wiring Harness to Headlining Trim Panel Wiring Harness
X375	Sunroof Wiring Harness to Headlining Trim Panel Wiring Harness	C3U	In the passenger compartment, front center, near the rear of A103 Roof Console	—	X375 Sunroof Wiring Harness to Headlining Trim Panel Wiring Harness (C3U)
X396	Instrument Panel Wiring Harness to Antenna Coax	—	In the passenger compartment, left front, behind driver a-pillar trim	—	X396 Instrument Panel Wiring Harness to Antenna Coax
X400	Chassis Wiring Harness to Body Wiring Harness	—	In the engine compartment, left side	—	X400 Chassis Wiring Harness to Body Wiring Harness
X401	Body Wiring Harness to Chassis Wiring Harness	—	In the rear of the engine compartment, near the rear of the under hood fuse block	—	X401 Body Wiring Harness to Chassis Wiring Harness
X403	Engine Wiring Harness to Chassis Wiring Harness	—	• (L84/L87) In the engine compartment, left front, above the engine crossmember • (LM2) In the engine compartment, left front, above the engine crossmember	—	• X403 Engine Wiring Harness to Chassis Wiring Harness (L84/L87) • X403 Engine Wiring Harness to Chassis Wiring Harness (LM2)
X404L	Left Assist Step Harness to Chassis Wiring Harness	B3L	Under the vehicle, left side, outside of left frame rail, near transmission crossmember	—	X404L Left Assist Step Harness to Chassis Wiring Harness (B3L)
X404R	Right Assist Step Harness to Chassis Harness	B3L	Under the vehicle, righ side, outside of right frame rail, near transmission crossmember	—	X404R Right Assist Step Harness to Chassis Wiring Harness (B3L)
X405D	Chassis Harness to Power Steering Harness	—	In the engine compartment, left front, above steering gear	—	X405D Chassis Wiring Harness to Power Steering Wiring Harness Extension Harness
X405P	Power Steering Harness to Power Steering Jumper Harness	—	In the engine compartment, left front, above steering gear	—	X405P Power Steering Wiring Harness to Power Steering Wiring Harness
X415A	Transfer Case Selector Shift Control Switch Wiring Harness Extension Harness to Engine Wiring Harness	NP0/NQH	In the engine compartment, left front, beneath K71 Transmission Control Module	—	X415A Transfer Case Selector Shift Control Switch Wiring Harness Extension Harness to Engine Wiring Harness (NP0/NQH)
X415R	Chassis Harness to Differential Lock Jumper Harness	G96	Under the vehicle, left rear, behind fuel tank	—	X415R Chassis Wiring Harness to Differential Carrier Lock Wiring Harness (G96)

Master Electrical Component List (cont'd)

Code	Name	Option	Location	Locator View	Connector End View
X500	Front Side Door Door Wiring Harness - Driver to Body Wiring Harness	—	In the passenger compartment, behind the left side of the instrument panel	—	X500 Front Side Door Door Wiring Harness - Driver to Body Wiring Harness
X505	Front Side Door Door Wiring Harness - Driver to Front Side Door Door Lock Door Wiring Harness - Driver	—	In the driver door, behind the driver door panel	—	X505 Front Side Door Door Wiring Harness - Driver to Front Side Door Door Lock Door Wiring Harness - Driver
X510	Front Side Door Door Wiring Harness - Driver to Outside Rearview Mirror - Driver	—	In the driver door, behind the driver door panel, near the A-pillar	—	X510 Front Side Door Door Wiring Harness - Driver to Outside Rearview Mirror - Driver
X600	Front Side Door Door Wiring Harness - Passenger to Body Wiring Harness	—	In the passenger compartment, behind the right side of the instrument panel	—	X600 Front Side Door Door Wiring Harness - Passenger to Body Wiring Harness
X602	Body Wiring Harness to Body Rear Wiring Harness Extension Harness	KI5	In the rear compartment, left side, underneath rear quarter glass window, behind trim	—	X602 Body Wiring Harness to Body Rear Wiring Harness Extension Harness (KI5)
X604A	Engine Wiring Harness to Active Grille Air Shutter Harness	VTI	In the engine compartment, left front, near the radiator core support	—	• X604A Engine Wiring Harness to Active Grille Air Shutter Harness (VTI+(L84/L87)) • X604A Engine Wiring Harness to Active Grille Air Shutter Harness (VTI+LM2)
X605	Front Side Door Door Wiring Harness - Passenger to Front Side Door Door Lock Door Wiring Harness - Passenger	—	In the passenger door, behind the passenger door panel	—	X605 Front Side Door Door Wiring Harness - Passenger to Front Side Door Door Lock Door Wiring Harness - Passenger
X610	Front Side Door Door Wiring Harness - Passenger to Front Side Door Door Wiring Harness - Passenger	—	In the passenger door, behind the passenger door panel, near the A-pillar	—	X610 Front Side Door Door Wiring Harness - Passenger to Front Side Door Door Wiring Harness - Passenger
X618A	Center High Mounted Stop Lamp Jumper Harness to Body Wiring Harness	—	In the passenger compartment, rear of the vehicle, above headliner, forward of E6 High Mount Stop Lamp	—	X618A Center High Mounted Stop Lamp Jumper Harness to Body Wiring Harness
X618B	Rear Cargo Lamp Jumper Harness to Body Wiring Harness	Long Wheelbase	In the cargo area, left rear, behind left rear trim panel	—	X618B Roof Wiring Harness to Body Wiring Harness
X700	Rear Side Door Door Wiring Harness - Left to Body Wiring Harness	—	In the passenger compartment, behind the left B-pillar, near the middle	—	X700 Rear Side Door Door Wiring Harness - Left to Body Wiring Harness

Master Electrical Component List (cont'd)

Code	Name	Option	Location	Locator View	Connector End View
X705	Rear Side Door Door Wiring Harness - Left to Rear Side Door Door Lock Door Wiring Harness - Left	—	In the left rear door, attached to the door trim, at the front of the door	—	X705 Rear Side Door Door Wiring Harness - Left to Rear Side Door Door Lock Door Wiring Harness - Left
X706	Rear Side Door Door Wiring Harness - Left to Rear Side Door Door Lock Door Wiring Harness - Left	—	In the left rear door, attached to the door trim, at the front of the door	—	X706 Rear Side Door Door Wiring Harness - Left to Rear Side Door Door Lock Door Wiring Harness - Left
X800	Rear Side Door Door Wiring Harness - Right to Body Wiring Harness	—	In the passenger compartment, behind the right B-pillar, near the middle	—	X800 Rear Side Door Door Wiring Harness - Right to Body Wiring Harness
X805	Rear Side Door Door Wiring Harness - Right to Rear Side Door Door Lock Door Wiring Harness - Right	—	In the right rear door, attached to the door trim, at the front of the door	—	X805 Rear Side Door Door Wiring Harness - Right to Rear Side Door Door Lock Door Wiring Harness - Right
X806	Rear Side Door Door Wiring Harness - Right to Rear Side Door Door Lock Door Wiring Harness - Right	—	In the right rear door, attached to the door trim, at the front of the door	—	X806 Rear Side Door Door Wiring Harness - Right to Rear Side Door Door Lock Door Wiring Harness - Right
X904BL	Chassis Wiring Harness to Chassis Rear Extension Harness	Z95	Under the vehicle, left side, inside of left frame rail, near transmission crossmember	—	—
X904BR	Chassis Wiring Harness to Electronic Rear Vertical Accelerometer - Right Jumper Wiring Harness	Z95	Under the vehicle, right side, beneath the front of the right rear door, near right frame rail	—	—
X904JL	Chassis Wiring Harness to Chassis Rear Wiring Harness Extension Harness	—	Under the vehicle, left rear	—	X904JL Chassis Wiring Harness to Chassis Rear Wiring Harness Extension Harness
X904JR	Chassis Wiring Harness to Chassis Rear Wiring Harness Extension Harness	—	Under the vehicle, right side, beneath the front of the right rear door, near right frame rail	—	X904JR Chassis Wiring Harness to Chassis Rear Wiring Harness Extension Harness
X905	Liftgate Wiring Harness to Body Wiring Harness	—	At the rear of the vehicle, at the top front of the liftgate	—	X905 Liftgate Wiring Harness to Body Wiring Harness
X907A	Rear License Plate Lamp Wiring Harness to Liftgate Wiring Harness	—	At the rear of the vehicle, center, within liftgate	—	X907A Rear License Plate Lamp Wiring Harness to Liftgate Wiring Harness
X918	Chassis Wiring Harness to Front Disc Brake Pad Wear Sensor Jumper	JBK	In the engine compartment, left side, at left front strut tower	—	X918 Chassis Wiring Harness to Front Disc Brake Pad Wear Sensor Jumper (JBK)

Master Electrical Component List (cont'd)

Code	Name	Option	Location	Locator View	Connector End View
X944	Engine Wiring Harness to Engine Coolant Temperature Sensor Harness	LM2	In the engine compartment, left of center, above Q97 Engine Coolant Flow Control Valve	—	X944 Engine Wiring Harness to Engine Coolant Temperature Sensor Harness (LM2)
X950	Front Object Alarm Sensor Wiring Harness to Body Wiring Harness	—	At the front of the vehicle, right front, near E2RF Side Marker Lamp - Right Front	—	X950 Front Object Alarm Sensor Wiring Harness to Body Wiring Harness
X951	Front Object Alarm Sensor Wiring Harness to Body Wiring Harness	UV2/UVS	At the front of the vehicle, right front, near E2RF Side Marker Lamp - Right Front	—	X951 Front Object Alarm Sensor Wiring Harness to Body Wiring Harness (UV2/UVS)
X953	Body Wiring Harness to Rear Object Alarm Sensor Wiring Harness	—	At the rear of the vehicle, right rear, attached to right rear corner of rear fascia	—	X953 Body Wiring Harness to Rear Object Alarm Sensor Wiring Harness
X961	Engine Wiring Harness to Valve Rocker Arm Oil Control Valve Extension Harness (L84/L87)	L84/L87	In the engine compartment, left front, near the top of the left rocker arm cover	—	X961 Engine Wiring Harness to Valve Rocker Arm Oil Control Valve Extension Harness (L84/L87)
X962	Engine Wiring Harness to Valve Rocker Arm Oil Control Valve Extension Harness	L84/L87	In the engine compartment, left front, near the top of the left rocker arm cover	—	X962 Engine Wiring Harness to Valve Rocker Arm Oil Control Valve Extension Harness (L84/L87)
X963	Valve Rocker Arm Oil Control Valve Extension Harness to Valve Rocker Arm Oil Control Valve Extension Harness	L84/L87	In the engine compartment, beneath the intake manifold, at the front of the engine block valley cover	—	X963 Valve Rocker Arm Oil Control Valve Extension Harness to Valve Rocker Arm Oil Control Valve Extension Harness (L84/L87)
X966	Engine Wiring Harness to Engine Wiring Harness	LM2	In the engine compartment, left front, near Q97B Engine Coolant Flow Control Valve - Block	—	X966 Engine Wiring Harness to Engine Wiring Harness (LM2)
X995A	Body Harness to Rearview Camera Harness	UV2	At the rear of the vehicle, at the top front of the liftgate, right of center	—	X995A Body Wiring Harness to Rearview Driver Information Camera Rear Closure Coaxial Cable (UV2)
X995F	Liftgate Extension Harness to Rearview Camera Harness	—	In the luggage compartment, rear center, forward of liftgate	—	X995F Rearview Driver Information Camera Rear Closure Coaxial Cable to Rear License Plate Lamp Wiring Harness (UV2-DRZ)
X995R	Liftgate Extension Harness to Rearview Camera Harness	UV2	In the luggage compartment, rear center, forward of liftgate	—	X995R Rearview Driver Information Camera Rear Closure Coaxial Cable to Rear License Plate Lamp Wiring Harness (UV2+DRZ)

Master Electrical Component List (cont'd)

Code	Name	Option	Location	Locator View	Connector End View
X999	Reductant Control Module Jumper Wiring Harness to Chassis Wiring Harness	LM2	Under the vehicle, right side, in front of rear axle, at the front of the reductant tank	—	*X999 Reductant Control Module Jumper Wiring Harness to Chassis Wiring Harness (LM2)*
G100	Body Wiring Harness	—	In the engine compartment, left front, behind E13LA Front Headlamp - Left	—	—
G101B	Body Wiring Harness	—	In the engine compartment, left side, attached to body	—	—
G101E	Body Wiring Harness	—	In the engine compartment, left side, attached to body	—	—
G102A	Body Wiring Harness	—	In the engine compartment, right side, right of C1 Battery	—	—
G102B	Body Wiring Harness	—	In the engine compartment, right side, right of C1 Battery	—	—
G104	Starter Solenoid Cable	—	In the engine compartment, right side, attached at discharged battery remote negative terminal	—	—
G130	Starter Solenoid Cable	—	In the engine compartment, right rear corner	—	—
G131	Ground Strap	—	Under the vehicle, right front wheel well, behind inner fender, rearward of upper control arm	—	—
G132	Ground Strap	—	Under the vehicle, right front wheel well, behind inner fender, rearward of lower control arm	—	—
G133	Ground Strap	LM2	In the engine compartment, right rear, attached to the rear of the exhaust manifold	—	—
G134	Ground Strap	LM2	Under the vehicle, right front wheel well, behind inner fender, rearward of lower control arm	—	—
G175	Engine Wiring Harness	L84/L87	In the engine compartment, left rear, at the rear of the bank 1 cylidner head	—	—
G176A	Engine Wiring Harness	LM2	In the engine compartment, right rear, attached to the right rear side of the engine block, above engine oil filter housing	—	—
G176B	Power Steering Wiring Harness	—	In the engine compartment, left front	—	—
G176E	Engine Wiring Harness	L84/L87	In the engine compartment, right rear, at the rear of the bank 2 cylidner head	—	—
G177A	Engine Wiring Harness	L84/L87	In the engine compartment, attached to the left side of the engine block, below the exhaust manifold	—	—
G178	Engine Wiring Harness	LM2	In the engine compartment, attached to the front of the engine	—	—

Master Electrical Component List (cont'd)

Code	Name	Option	Location	Locator View	Connector End View
G200	Instrument Panel Wiring Harness	—	In the passenger compartment, right front, below A-pillar, behind passenger side kick panel	—	—
G201A	Instrument Panel Wiring Harness	—	In the passenger compartment, left front, below A-pillar, behind driver side kick panel	—	—
G300A	Body Wiring Harness	—	In the passenger compartment, right side, at bottom of B-pillar	—	—
G301	Body Wiring Harness	—	In the passenger compartment, left side, at bottom of B-pillar	—	—
G302	Body Wiring Harness	—	In the passenger compartment, center, left of breakout to passenger seat harness	—	—
G303	Body Wiring Harness	—	In the passenger compartment, center, between breakout to driver seat harness and breakout to K36 Restraints Control Module	—	—
G402	Chassis Wiring Harness	—	Under the vehicle, right side, under the passenger door, attached to the right side frame rail	—	—
G404	Chassis Wiring Harness	—	Under the vehicle, right rear corner	—	—
G405A	Chassis Wiring Harness	—	Under the rear of the vehicle, in front of the tow hitch, mounted to the center of the frame	—	—
G407	Chassis Wiring Harness	—	In the cargo area, front center	—	—
G408A	Body Wiring Harness	—	In the cargo area, right front, behind right rear trim panel	—	—
G408B	Body Wiring Harness	—	In the cargo area, right front, behind right rear trim panel	—	—
G409	Body Wiring Harness	—	In the cargo area, left rear, behind left rear trim panel	—	—
J102	Front Object Alarm Sensor Wiring Harness	UD5	At the front of the vehicle, front center, in front of the radiator core support, attached to front fascia, between breakout to B306A Parking Assist Alarm Sensor - Front Left Outer and B306B Parking Assist Alarm Sensor - Front Left Middle and breakout to B174G Front View Driver Information Camera - Grille	—	—

Master Electrical Component List (cont'd)

Code	Name	Option	Location	Locator View	Connector End View
J103	Front Object Alarm Sensor Wiring Harness	UD5	At the front of the vehicle, front center, in front of the radiator core support, attached to front fascia, between breakout to B306A Parking Assist Alarm Sensor - Front Left Outer and B306B Parking Assist Alarm Sensor - Front Left Middle and breakout to B174G Front View Driver Information Camera - Grille	—	—
J105	Front Object Alarm Sensor Wiring Harness	T40	At the front of the vehicle, front center, in front of the radiator core support, attached to front fascia, between breakout to B306A Parking Assist Alarm Sensor - Front Left Outer and B306B Parking Assist Alarm Sensor - Front Left Middle and breakout to B174G Front View Driver Information Camera - Grille	—	—
J106	Front Object Alarm Sensor Wiring Harness	T40	At the front of the vehicle, front center, in front of the radiator core support, attached to front fascia, between breakout to B306A Parking Assist Alarm Sensor - Front Left Outer and B306B Parking Assist Alarm Sensor - Front Left Middle and breakout to B174G Front View Driver Information Camera - Grille	—	—
J107	Active Grille Air Shutter Harness	WMI	At the front of the vehicle, front center, within Active Grille Air Shutter Harness	—	—
J109	Active Grille Air Shutter Harness	VTI	At the front of the vehicle, front center, within Active Grille Air Shutter Harness	—	—
J131	Body Wiring Harness	—	In the engine compartment, left front, between breakout to ground G104 and ground G110	—	—
J132	Body Wiring Harness	—	In the engine compartment, left rear, approximately 5 cm (2 in)from breakout to M75 Windshield Wiper Motor and B20A Brake Fluid Level Indicator Switch	—	—
J133	Body Wiring Harness	—	In the engine compartment, left rear, approximately 12 cm (4.7 in) from breakout to K160 Brake System Control Module, towards the rear of the vehicle	—	—
J134	Body Wiring Harness	—	In the engine compartment, left rear, approximately 19 cm (7.5 in)from breakout to K160 Brake System Control Module, towards the rear of the vehicle	—	—

Master Electrical Component List (cont'd)

Code	Name	Option	Location	Locator View	Connector End View
J150	Engine Wiring Harness	L84/L87	In the center of the engine compartment, approximately 10 cm (3.9 in) from breakout to ground G117, towards the rear of the vehicle	—	—
J151	Engine Wiring Harness	L84/L87	In the engine compartment, near breakout to B74 Manifold Absolute Pressure Sensor, in harness channel	—	—
J152	Engine Wiring Harness	L84/L87	In the engine compartment, near breakout to B74 Manifold Absolute Pressure Sensor, in harness channel	—	—
J153	Engine Wiring Harness	LM2	In the engine compartment, right front, approximately 25 cm (9.8 in) from breakout to B34K Charge Air Cooler Coolant Temperature Sensor - Inlet	—	—
J154	Engine Wiring Harness	—	• (L84/L87) In the engine compartment, near breakout to B74 Manifold Absolute Pressure Sensor, in harness channel • (LM2) In the engine compartment, left front, approximately 4 cm (1.6 in) from breakout towards B75 Mass Airflow Sensor and inline connector X115	—	—
J155	Engine Wiring Harness	L84/L87	In the engine compartment, near breakout to B74 Manifold Absolute Pressure Sensor, in harness channel	—	—
J156	Engine Wiring Harness	L84/L87	In the engine compartment, near breakout to B74 Manifold Absolute Pressure Sensor, in harness channel	—	—
J157	Engine Wiring Harness	L84/L87	In the engine compartment, near breakout to B74 Manifold Absolute Pressure Sensor, in harness channel	—	—
J158	Engine Wiring Harness	—	• (L84/L87) In the engine compartment, front center, between breakout to Q38 Throttle Body and breakout to T8A Ignition Coil 1 • (LM2) In the engine compartment, left front, approximately 4 cm (1.6 in) from breakout to B1 Air Conditioning Refrigerant Pressure Sensor	—	—

Master Electrical Component List (cont'd)

Code	Name	Option	Location	Locator View	Connector End View
J159	Engine Wiring Harness	—	• (L84/L87) In the engine compartment, front center, between breakout to Q38 Throttle Body and breakout to T8A Ignition Coil 1 • (LM2) In the engine compartment, right front, approximately 15 cm (5.9 in) from breakout to B34K Charge Air Cooler Coolant Temperature Sensor - Inlet	—	—
J161	Engine Wiring Harness	L84/L87	In the engine compartment, front center, between breakout to Q38 Throttle Body and breakout to T8A Ignition Coil 1	—	—
J162	Engine Wiring Harness	—	• (L84/L87) In the engine compartment, front center, between breakout to Q38 Throttle Body and breakout to T8A Ignition Coil 1 • (LM2) In the engine compartment, front center, approximately 5 cm (2 in) from breakout towards B195A Nitrogen Oxides Sensor 1, Q38 Throttle Body, and B193A Charge Air Coooler Air Temperature Sensor - Inlet	—	—
J164	Engine Wiring Harness	L84/L87	In the engine compartment, rear of the engine, near the top, approximately 6 cm (2.4 in) from breakout to ground G175	—	—
J165	Engine Wiring Harness	L84/L87	In the engine compartment, rear of the engine, near the top, between breakout to ground G179 and harness channel at the left rear of the intake manifold	—	—
J166	Engine Wiring Harness	L84/L87	In the engine compartment rear center, in harness channel attached to the left rear of the intake manifold	—	—
J167	Engine Wiring Harness	L84/L87	In the engine compartment rear center, in harness channel attached to the left rear of the intake manifold	—	—

Master Electrical Component List (cont'd)

Code	Name	Option	Location	Locator View	Connector End View
J168	Engine Wiring Harness	—	• (L84/L87) In the engine compartment, rear center, approximately 10 cm from breakout to inline connectors X160 and X161 • (LM2) In the engine compartment, front center, approximately 4 cm (1.6 in) from breakout towards B195A Nitrogen Oxides Sensor 1, Q38 Throttle Body, and B193A Charge Air Coooler Air Temperature Sensor - Inlet	—	—
J169	Engine Wiring Harness	LM2	In the engine compartment, front, approximately 5 cm (2 in) from breakout to in-line connector X172	—	—
J170	Engine Wiring Harness	LM2	In the engine compartment, left rear, in harness channel, attached to the left rear side of the engine	—	—
J171	Body Wiring Harness	—	In the engine compartment, right rear, between breakout to X50D Battery Distribution Fuse Block and breakout to X50A Engine Wiring Harness Junction Block	—	—
J172	Body Wiring Harness	—	• (SWB-5W4-9C1) In the passenger compartment, left middle, approximately 5 cm (2 in) from breakout to ground G325, towards the rear of the vehicle • (5W4/9C1/LWB) In the passenger compartment, left rear, between breakout to ground G325 and breakout to F113D Front Seat Belt Anchor Plate Tensioner - Driver	—	—
J173	Body Wiring Harness	—	In the engine compartment, right front, between breakout to X50A Engine Wiring Harness Junction Block X1 and breakout to X50A Engine Wiring Harness Junction Block X2	—	—

Master Electrical Component List (cont'd)

Code	Name	Option	Location	Locator View	Connector End View
J174	Body Wiring Harness	—	• (SWB-5W4-9C1) In the passenger compartment, left middle, approximately 10 cm (3.9 in) from breakout to ground G325, towards the rear of the vehicle • (5W4/9C1/LWB) In the passenger compartment, left rear, between breakout to ground G325 and breakout to F113D Front Seat Belt Anchor Plate Tensioner - Driver	—	—
J175	Body Wiring Harness	—	In the engine compartment, right rear, between breakout to X50UA Accessory Wiring Junction Block - Underhood and body harness grommet at the bulkhead	—	—
J176	Chassis Wiring Harness	—	• (SWB) In the engine compartment, right front, in harness channel, approximately 7 cm (2.8 in) from breakout to X50A Engine Wiring Harness Junction Block X4, towards the rear of the vehicle • (LWB) Under the vehicle, right side, approximately 5 cm (2 in) from breakout towards B195C Nitrogen Oxides Sensor 3/B195B Nitrogen Oxides Sensor 2/ B136 Exhaust Particulate Matter Sensor, towards the front of the vehicle	—	—
J177	Body Wiring Harness	—	In the engine compartment, right rear, between breakout to X50UA Accessory Wiring Junction Block - Underhood and body harness grommet at the bulkhead	—	—
J178	Body Wiring Harness	—	In the engine compartment, right front, approximately 6 cm (2.4 in) from breakout to X50A Engine Wiring Harness Junction Block	—	—
J180	Engine Wiring Harness	LM2	In the engine compartment, left rear, in harness channel, attached to the left rear side of the engine	—	—
J181	Engine Wiring Harness	LM2	In the engine compartment, left rear, in harness channel, attached to the left rear side of the engine	—	—

Master Electrical Component List (cont'd)

Code	Name	Option	Location	Locator View	Connector End View
J182	Engine Wiring Harness	LM2	In the engine compartment, left rear, approximately 9 cm (3.5 in) from breakout to Q18B Fuel Pressure Regulator 2, in harness channel	—	—
J184	Engine Wiring Harness	LM2	In the engine compartment, left rear, approximately 14 cm (5.5 in) from breakout to Q18B Fuel Pressure Regulator 2, in harness channel	—	—
J186	Engine Wiring Harness	LM2	In the engine compartment, front center, in breakout towards B195A Nitrogen Oxides Sensor 1, Q38 Throttle Body, and B193A Charge Air Temperature Sensor - Inlet	—	—
J187	Engine Wiring Harness	LM2	In the engine compartment, right front, approximately 5 cm (2 in) from breakout to B34K Charge Air Cooler Coolant Temperature Sensor - Inlet	—	—
J188	Engine Wiring Harness	LM2	In the engine compartment, front, approximately 7 cm (2.8 in) from breakout to inline connector X172, in harness channel	—	—
J189	Engine Wiring Harness	LM2	In the engine compartment, front, approximately 11 cm (4.3 in) from breakout to inline connector X172, in harness channel	—	—
J190	Automatic Transmission Wiring Harness	—	Under the vehicle, center, within T12 Automatic Transmission	—	—
J191	Automatic Transmission Wiring Harness	—	Under the vehicle, center, within T12 Automatic Transmission	—	—
J192	Automatic Transmission Wiring Harness	—	Under the vehicle, center, within T12 Automatic Transmission	—	—
J193	Automatic Transmission Wiring Harness	—	Under the vehicle, center, within T12 Automatic Transmission	—	—
J194	Automatic Transmission Wiring Harness	—	Under the vehicle, center, within T12 Automatic Transmission	—	—
J195	Automatic Transmission Wiring Harness	—	Under the vehicle, center, within T12 Automatic Transmission	—	—
J196	Automatic Transmission Wiring Harness	—	Under the vehicle, center, within T12 Automatic Transmission	—	—
J200	Body Wiring Harness	—	In the passenger compartment, right middle, approximately 10 cm (3.9 in) from breakout to F113P Seat Belt Anchor Plate Tesioner - Passenger, towards the rear of othe vehicle	—	—

Master Electrical Component List (cont'd)

Code	Name	Option	Location	Locator View	Connector End View
J201	Body Wiring Harness	—	In the passenger compartment, left front, within instrument panel, approximately 4 cm (1.6 in) from breakout to B107 Accelerator Pedal Position Sensor, towards the right side of the vehicle	—	—
J202	Body Wiring Harness	—	• (LWB-5W4-9C1) In the passenger compartment, left front, within instrument panel, approximately 10 cm (3.9 in) from breakout to K9 Body Control Module • (SWB-5W4-9C1) In the passenger compartment, left front, within instrument panel, approximately 14 cm (5.5 in) from breakout to B107 Accelerator Pedal Position Sensor, towards the right side of the vehicle • (5W4/9C1) In the passenger compartment, left front, within instrument panel, approximately 10 cm (3.9 in) from breakout to K9 Body Control Module	—	—
J203	Body Wiring Harness	—	In the passenger compartment, left front, within instrument panel, approximately 19 cm (7.5 in) from breakout to B107 Accelerator Pedal Position Sensor, towards the right side of the vehicle	—	—
J204	Body Wiring Harness	—	In the passenger compartment, left front, within instrument panel, approximately 24 cm (9.4 in) from breakout to B107 Accelerator Pedal Position Sensor, towards the right side of the vehicle	—	—
J205	Body Wiring Harness	—	In the passenger compartment, left front, within instrument panel, approximately 30 cm (11.2) from breakout to B107 Accelerator Pedal Position Sensor, towards the right side of the vehicle	—	—
J206	Body Wiring Harness	—	In the passenger compartment, left front, within instrument panel, between breakout to K219 Lighting Control Module and breakout to K9 Body Control Module	—	—

Master Electrical Component List (cont'd)

Code	Name	Option	Location	Locator View	Connector End View
J207	Body Wiring Harness	—	In the passenger compartment, left front, within instrument panel, approximately 8 cm (3.1 in) from breakout to the bulkhead grommet, towards the left side of the vehicle	—	—
J208	Body Wiring Harness	—	In the passenger compartment, left front, within instrument panel, approximately 16 cm (6.3 in) from breakout to the bulkhead grommet, towards the left side of the vehicle	—	—
J209	Body Wiring Harness	—	In the passenger compartment, left front, within instrument panel, approximately 20 cm (7.9 in) from breakout to the bulkhead grommet, towards the left side of the vehicle	—	—
J210	Body Wiring Harness	—	In the passenger compartment, left front, within instrument panel, approximately 12 cm (4.7 in) from breakout to B22 Brake Pedal Position Sensor, towards the left side of the vehicle	—	—
J211	Body Wiring Harness	—	In the passenger compartment, left front, within instrument panel, approximately 4 cm (1.6 in) from breakout to K9 Body Control Module, towards the front of the vehicle	—	—
J212	Body Wiring Harness	—	In the passenger compartment, left front, within instrument panel, approximately 5 cm (2 in) from breakout to K9 Body Control Module, towards the rear of the vehicle	—	—
J215	Steering Wheel Horn Switch Wiring Harness	—	In the passenger compartment, left front, within steering wheel	—	—
J217	Steering Wheel Horn Switch Wiring Harness	—	In the passenger compartment, left front, within steering wheel	—	—
J220	Heater Wiring Harness	—	In the passenger compartment, right front, within instrument panel, in HVAC harness, approximately 18 cm (7.1 in) from inline connector X257	—	—
J221	Heater Wiring Harness	—	In the passenger compartment, right front, within instrument panel, in HVAC harness, approximately 24 cm (9.4 in) from breakout to M4 Air Inlet Valve Actuator	—	—

Master Electrical Component List (cont'd)

Code	Name	Option	Location	Locator View	Connector End View
J222	Heater Wiring Harness	—	In the passenger compartment, right front, within instrument panel, in HVAC harness, approximately 36 cm (14.2 in) from breakout to M4 Air Inlet Valve Actuator	—	—
J231	Instrument Panel Wiring Harness	—	• (-GFW) In the passenger compartment, left front, within instrument panel, approximately 14 cm (5.5 in) from breakout to X84 Data Link Connector and K9 Body Control Module • (GFW) In the passenger compartment, left front, within instrument panel, approximately 10 cm (3.9 in) from breakout to P16 Instrument Panel Cluster Control Module	—	—
J233	Instrument Panel Wiring Harness	—	In the passenger compartment, left front, within instrument panel, in breakout to X84 Data Link Connector and K9 Body Control Module	—	—
J235	Instrument Panel Wiring Harness	—	In the passenger compartment, left front, within instrument panel, approximately 15 cm (5.9 in) from breakout to P16 Instrument Panel Cluster Control Module	—	—
J236	Instrument Panel Wiring Harness	—	In the passenger compartment, left front, within instrument panel, approximately 14 cm (5.5 in) from breakout to P16 Instrument Panel Cluster Control Module	—	—
J237	Instrument Panel Wiring Harness	—	In the passenger compartment, left front, within instrument panel, approximately 11 cm (4.3 in) from breakout to P16 Instrument Panel Cluster Control Module	—	—
J238	Instrument Panel Wiring Harness	—	In the passenger compartment, left front, within instrument panel, approximately 9 cm (3.5 in) from breakout to P16 Instrument Panel Cluster Control Module	—	—
J239	Instrument Panel Wiring Harness	—	In the passenger compartment, left front, within instrument panel, approximately 10 cm (3.9 in) from breakout to P16 Instrument Panel Cluster Control Module, towards the right side of the vehicle	—	—

Master Electrical Component List (cont'd)

Code	Name	Option	Location	Locator View	Connector End View
J240	Instrument Panel Wiring Harness	—	In the passenger compartment, left front, within instrument panel, approximately 13 cm from breakout to P16 Instrument Panel Cluster Control Module, towards the right side of the vehicle	—	—
J241	Instrument Panel Wiring Harness	—	In the passenger compartment, front center, within instrument panel, between breakout to S38 On/Off Vehicle Switch and breakout to E8VA Front Floor Courtesy Lamp - Left	—	—
J242	Instrument Panel Wiring Harness	—	• (5W4/9C1) In the passenger compartment, left front, between breakout to K60 Column Lock Module and breakout to B10D Sun Load and Ambient Light Security Indicator Sensor • (-5W4-9C1-GFW) In the passenger compartment, left front, within instrument panel, approximately 13 cm (5.1 in) from breakout to K60 Column Lock Module • (GFW) In the passenger compartment, center, within instrument panel, in breakout to B10D Sun Load and Ambient Light Security Indicator Sensor	—	—
J243	Instrument Panel Wiring Harness	—	In the passenger compartment, front center, within instrument panel, in breakout to inline connector X270	—	—
J244	Instrument Panel Wiring Harness	—	In the passenger compartment, front center, within instrument panel, approximately 12 cm (4.7 in) from breakout to T4T Auxiliary Wireless Communication Interface Antenna	—	—
J245	Instrument Panel Wiring Harness	—	In the passenger compartment, front center, within instrument panel, approximately 5 cm (2 in) from breakout to S26 Hazard Warning Switch	—	—

Master Electrical Component List (cont'd)

Code	Name	Option	Location	Locator View	Connector End View
J246	Instrument Panel Wiring Harness	—	• (5W4/9C1/GFW) In the passenger compartment, left front, between breakout to K60 Column Lock Module and breakout to B10D Sun Load and Ambient Light Security Indicator Sensor • (5W4-9C1-GFW) In the passenger compartment, front center, within instrument panel, between breakout to S38 On/Off Vehicle Switch and breakout to E8VA Front Floor Courtesy Lamp - Left	—	—
J247	Instrument Panel Wiring Harness	—	In the passenger compartment, front center, within instrument panel, between breakout to X51R Fuse Block - Instrument Panel - Right X3 and breakout to inline connectors X256 and X255	—	—
J248	Instrument Panel Wiring Harness	—	In the passenger compartment, front right, within instrument panel, between breakout to B10D Sun Load and Ambient Light Security Indicator Sensor and breakout to inline connector X270	—	—
J249	Instrument Panel Wiring Harness	—	In the passenger compartment, front right, within instrument panel, between breakout to B10D Sun Load and Ambient Light Security Indicator Sensor and breakout to inline connector X270	—	—
J250	Instrument Panel Wiring Harness	—	• (-GFW) In the passenger compartment, front right, within instrument panel, between breakout to X51R Instrument Panel Wiring Harness Junction Block - Right X2 and breakout to inline connector X270 • (GFW) In the passenger compartment, right of center, within instrument panel, between breakout to P19V Radio Windshield Side Garnish Molding Speaker - Right Front and breakout to inline connector X270	—	—

Master Electrical Component List (cont'd)

Code	Name	Option	Location	Locator View	Connector End View
J251	Instrument Panel Wiring Harness	—	In the passenger compartment, front right, within instrument panel, between breakout to X51R Instrument Panel Wiring Harness Junction Block - Right X2 and breakout to inline connector X270	—	—
J252	Instrument Panel Wiring Harness	—	In the passenger compartment, front right, within instrument panel, between breakout to X51R Instrument Panel Wiring Harness Junction Block - Right X2 and breakout to inline connector X270	—	—
J253	Instrument Panel Wiring Harness	—	• (-GFW) In the passenger compartment, front right, within instrument panel, between breakout to X51R Instrument Panel Wiring Harness Junction Block - Right X2 and breakout to inline connector X270 • (GFW) In the passenger compartment, front right, within instrument panel, between breakout to B10D Sun Load and Ambient Light Security Indicator Sensor and breakout to inline connector X270	—	—
J254	Instrument Panel Wiring Harness	—	In the passenger compartment, front right, within instrument panel, in breakout towards S126 Ride Control Switch, S76 Trailer Brake Control Switch, S30 Headlamp Switch, B80 Parking Brake Control Switch, S27 Head-Up Display Switch, and S86 Vehicle Stability Control System Switch	—	—
J261	Body Wiring Harness	—	In the passenger compartment, right front, within instrument panel, approximately 18 cm (7.1 in) from breakout to grommet in bulkhead	—	—

Master Electrical Component List (cont'd)

Code	Name	Option	Location	Locator View	Connector End View
J263	Body Wiring Harness	—	• (SWB-5W4-9C1) In the passenger compartment, right front, within instrument panel, approximately 36 cm (14.2 in) from breakout to grommet in bulkhead • (5W4/9C1/LWB) In the passenger compartment, right front, within instrument panel, approximately 29 cm (11.4 in) from breakout to grommet in bulkhead	—	—
J264	Body Wiring Harness	—	In the passenger compartment, right side, approximately 3 cm (1.2 in) from breakout to X51R Instrument Panel Wiring Harness Junction Block - Right	—	—
J265	Body Wiring Harness	—	In the passenger compartment, right front, within instrument panel, approximately 57 cm (22.4 in) from breakout to grommet in bulkhead	—	—
J266	Body Wiring Harness	—	• (LWB) In the passenger compartment, right middle, forward of harness channel at the bottom of the right side B-pillar • (SWB/5W4/9C1) In the luggage compartment, right middle, in harness channel at the bottom of the passenger door forward of B-pillar	—	—
J268	Body Wiring Harness	—	• (SWB-5W4-9C1) In the passenger compartment, right front, within instrument panel, approximately 3 cm (1.2 in) from breakout to inline connector X218, towards the rear of the vehicle • (LWB/5W4/9C1) In the passenger compartment, right front, in breakout to X51R Instrument Panel Wiring Harness Junction Block - Right	—	—

Master Electrical Component List (cont'd)

Code	Name	Option	Location	Locator View	Connector End View
J300	Front Floor Console Wiring Harness	—	• (DCH) In the passenger compartment, front center, beneath floor console, approximately 5 cm (2 in) from breakout to inline connector X300 • (D07) In the passenger compartment, front center, beneath floor console, approximately 18 cm (17.1 in) from breakout to inline connector X300 • (DCK) In the passenger compartment, front center, beneath floor console, between breakout towards S145 Beverage Cooler Switch and X92G USB 2 Port Receptacle and breakout to inline connectors X255 and X256	—	—
J301	Front Floor Console Wiring Harness	—	• (DCH) In the passenger compartment, front center, beneath floor console, approximately 18 cm from breakout to K230 Front Floor Console Control Module • (D07) In the passenger compartment, front center, beneath floor console, approximately 20 cm from breakout to inline connector X300 • (DCK) In the passenger compartment, front center, beneath floor console, approximately 20 cm from breakout to inline connector X300	—	—
J302	Front Floor Console Wiring Harness	—	• (DCH) In the passenger compartment, front center, beneath floor console, approximately 14 cm from breakout to T10U Low Frequency Console Antenna - Front • (D07) In the passenger compartment, front center, beneath floor console, approximately 5 cm (2 in) from breakout to X92G USB 2 Port Receptacle • (DCK) In the passenger compartment, front center, beneath floor console, approximately 14 cm from breakout to inline connector X301	—	—

Master Electrical Component List (cont'd)

Code	Name	Option	Location	Locator View	Connector End View
J303	Front Floor Console Wiring Harness	D07	• (D07) In the passenger compartment, front center, beneath floor console, approximately 29 cm from breakout to inline connector X300 • (DCK) In the passenger compartment, front center, beneath floor console, approximately 30 cm from breakout to inline connector X301	—	—
J305	Front Floor Console Wiring Harness	—	• (D07) In the passenger compartment, front center, beneath floor console, approximately 50 cm from breakout to inline connector X300 • (DCK) In the passenger compartment, front center, beneath floor console, between breakout towards S145 Beverage Cooler Switch and X92G USB 2 Port Receptacle and breakout to inline connectors X255 and X256	—	—
J306	Auxiliary Heater and Air Conditioning Wiring Harness	—	In the passenger compartment, front center, beneath floor console, within Auxiliary HVAC harness	—	—
J307	Auxiliary Heater and Air Conditioning Wiring Harness	—	In the passenger compartment, front center, beneath floor console, within Auxiliary HVAC harness	—	—
J308	Auxiliary Heater and Air Conditioning Wiring Harness	—	In the passenger compartment, front center, beneath floor console, within Auxiliary HVAC harness	—	—
J309	Auxiliary Heater and Air Conditioning Wiring Harness	—	In the passenger compartment, front center, beneath floor console, within Auxiliary HVAC harness	—	—
J310	Front Seat Wiring Harness - Driver	A45/AUN	In the passenger compartment, left front, within driver seat	—	—
J311	Front Seat Wiring Harness - Driver	A45/AVU	In the passenger compartment, left front, within driver seat	—	—
J312	Front Seat Wiring Harness - Driver	AVK	In the passenger compartment, left front, within driver seat	—	—
J313	Front Seat Wiring Harness - Driver	—	In the passenger compartment, left front, within driver seat	—	—
J314	Front Seat Wiring Harness - Driver	—	In the passenger compartment, left front, within driver seat	—	—
J315	Front Seat Wiring Harness - Driver	KQV	In the passenger compartment, left front, within driver seat	—	—

Master Electrical Component List (cont'd)

Code	Name	Option	Location	Locator View	Connector End View
J316	Front Seat Wiring Harness - Driver	A45	In the passenger compartment, left front, within driver seat	—	—
J317	Accessory Wiring Harness	S0M	In the passenger compartment, left front, within Accessory Wiring Harness	—	—
J318	Accessory Wiring Harness	S0M	In the passenger compartment, left front, within Accessory Wiring Harness	—	—
J320	Front Seat Wiring Harness - Passenger	UW9	In the passenger compartment, right front, within passenger seat	—	—
J321	Front Seat Wiring Harness - Passenger	UW9	In the passenger compartment, right front, within passenger seat	—	—
J322	Front Seat Wiring Harness - Passenger	A45	In the passenger compartment, right front, within passenger seat	—	—
J323	Front Seat Wiring Harness - Passenger	A45	In the passenger compartment, right front, within passenger seat	—	—
J324	Front Seat Wiring Harness - Passenger	KA1/KQV	In the passenger compartment, right front, within passenger seat	—	—
J325	Front Seat Wiring Harness - Passenger	KQV	In the passenger compartment, right front, within passenger seat	—	—
J326	Front Seat Wiring Harness - Passenger	KQV	In the passenger compartment, right front, within passenger seat	—	—
J327	Accessory Wiring Harness	S0M	In the passenger compartment, left front, within Accessory Wiring Harness	—	—
J328	Accessory Wiring Harness	S0M	In the passenger compartment, right front, within Accessory Wiring Harness	—	—
J329	Body Wiring Harness	—	In the passenger compartment, left middle, in harness channel near left B-pillar, forward of breakout towards the center of the vehicle	—	—
J331	Body Wiring Harness	—	In the passenger compartment, front center, beneath floor console, approximately 10 cm (3.9 in) from breakout to ground G326, towards the right side of the vehicle	—	—
J332	Body Wiring Harness	—	In the passenger compartment, right side, approximately 5 cm (2 in) from breakout to X51R Instruent Panel Wiring Harness Junction Block - Right	—	—
J333	Body Wiring Harness	—	In the passenger compartment, front center, beneath floor console, left of breakout to K36 Restraints Control Module X1	—	—

Master Electrical Component List (cont'd)

Code	Name	Option	Location	Locator View	Connector End View
J334	Body Wiring Harness	—	In the passenger compartment, front center, beneath floor console, left of breakout to K36 Restraints Control Module X1	—	—
J335	Body Wiring Harness	—	In the passenger compartment, left middle, in harness channel at the bottom of the left B-pillar, forward of ground G325	—	—
J353	Body Wiring Harness	—	In the luggage compartment, right middle, forward of harness channel at the bottom of the right side B-pillar	—	—
J357	Body Wiring Harness	—	• (SWB) In the passenger compartment, front center, beneath floor console, approximately 10 cm from breakout to Speaker - Subwoofer Front • (LWB) In the passenger compartment, right front, approximately 5 cm (2 in) from breakout to K36 Restraints Control Module	—	—
J358	Body Wiring Harness	—	In the passenger compartment, front center, beneath floor console, approximately 5 cm (2 in) from breakout to P19AC Radio Rear Speaker	—	—
J359	Body Wiring Harness	—	In the passenger compartment, left middle, in harness channel at the bottom of the left B-pillar, forward of ground G325	—	—
J360	Body Wiring Harness	—	In the passenger compartment, left middle, approximately 10 cm (3.9 in) from breakout to F112D Front Seat Belt Retractor - Driver, towards the rear of the vehicle	—	—
J361	Body Wiring Harness	—	• (SWB/LWB) In the passenger compartment, front center, approximately 10 cm (3.9 in) from breakout to inline connector X300 • (5W4/9C1) In the passenger compartment, front center, approximately 5 cm (2 in) from breakout to inline connector X300	—	—
J362	Body Wiring Harness	UW9	In the passenger compartment, right front, approximately 4 cm (1.6 in) from breakout to G327, towards the front of the vehicle	—	—

Master Electrical Component List (cont'd)

Code	Name	Option	Location	Locator View	Connector End View
J365	Rear Seat Wiring Harness - 2nd Row Left	UH5/UH6	In the passenger compartment, right center, within Left 2nd Row Seat Harness	—	—
J366	3rd Row Seat Wiring Harness	UH6	In the passenger compartment, rear, within 3rd Row Seat Harness	—	—
J367	Rear Seat Wiring Harness - 2nd Row Right	ATN/ATT/KA6	In the passenger compartment, right center, within Right 2nd Row Seat Harness	—	—
J370	Chassis Wiring Harness	—	• (LWB) Underneath the vehicle, right side, between breakout to ground G330 and breakout to inline connector X337 • (SWB) Underneath the vehicle, right middle, less than 12 cm (4.7 in) from breakout to inline connector X337, towards rear of the vehicle	—	—
J371	Chassis Wiring Harness	—	Underneath the vehicle, right side, between breakout to ground G330 and breakout to inline connector X337	—	—
J372	Chassis Wiring Harness	—	Under the vehicle, right side, between breakout to B5RF Front Wheel Speed Sensor - Right and breakout to ground G330	—	—
J373	Chassis Wiring Harness	LM2	Underneath the vehicle, right middle, approximately 17 cm (6.7 in) from breakout to K4 Running Board Control Module, towards the front of the vehicle	—	—
J374	Chassis Wiring Harness	LM2	Underneath the vehicle, right middle, approximately 17 cm (6.7 in) from breakout to K4 Running Board Control Module, towards the front of the vehicle	—	—
J380	Headlining Trim Panel Harness	—	• (C3U) In the passenger compartment, right front, behind passenger A-pillar trim, approximately 15 cm (5.9 in) above harness channel • (-C3U) In the passenger compartment, left front, above headliner, between breakout to A10 Inside Rearview Mirror and breakout to E31L Sunshade Mirror Lamp - Left	—	—

Master Electrical Component List (cont'd)

Code	Name	Option	Location	Locator View	Connector End View
J381	Headlining Trim Panel Harness	—	In the passenger compartment, front center, above headliner, between breakout to A103 Roof Console and breakout to E31R Sunshade Mirror Lamp - Right	—	—
J382	Headlining Trim Panel Harness	C3U	In the passenger compartment, front center, above headliner, between breakout to A103 Roof Console and breakout to E31R Sunshade Mirror Lamp - Right	—	—
J383	Headlining Trim Panel Harness	—	• (C3U) In the passenger compartment, front center, above headliner, approximately 6 cm (2.4 in) from breakout to A10 Inside Rearview Mirror • In the passenger compartment, right front, behind passenger A-pillar trim, near the right front corner of the headliner (-C3U)	—	—
J385	Sunroof Wiring Harness	C3U	In the passenger compartment, above headliner, approximately 24 cm (9.4 in) from breakout to M81 Sunroof Sunshade Motor	—	—
J386	Sunroof Wiring Harness	C3U	In the passenger compartment, above headliner, approximately 33 cm (13 in) from breakout to M81 Sunroof Sunshade Motor	—	—
J400	Body Wiring Harness	—	• (SWB-5W4-9C1) In the luggage compartment, left front, approximately 21 cm from the breakout to S143L Rear Seat Back Folding Switch - 2nd Row Left, towards the rear of the vehicle • (LWB) In the luggage compartment, left side, approximately 4 cm (1.6 in) from breakout to K38 Chassis Control Module • (5W4/9C1) In the luggage compartment, left rear, approximately 8 cm from breakout to X50EA Battery Distribution Fuse Block - Auxiliary	—	—
J401	Body Wiring Harness	—	In the passenger compartment, left middle, approximately 5 cm (2 in) from breakout to F112D Front Seat Belt Retractor - Driver, towards the rear of the vehicle	—	—

Master Electrical Component List (cont'd)

Code	Name	Option	Location	Locator View	Connector End View
J403	Body Wiring Harness	—	• (SWB-5W4-9C1) In the luggage compartment, left side, approximately 8 cm (3.1 in) from breakout to K77 Remote Function Actuator Module, towards the rear of the vehicle • (LWB) In the luggage compartment, left front, approximately 5 cm (2 in) forward of breakout to S143L Rear Seat Back Folding Switch - 2nd Row Left	—	—
J404	Body Wiring Harness	—	• (SWB-5W4-9C1) In the luggage compartment, left side, approximately 12 cm from breakout to K77 Remote Function Actuator Module, towards the rear of the vehicle • (LWB) In the luggage compartment, left side, approximately 82 cm from breakout to T3 Audio Amplifier, towards the rear of the vehicle	—	—
J407	Body Wiring Harness	—	• (-5W4-9C1) In the luggage compartment, right middle, forward of harness channel at the bottom of the right side B-pillar • (5W4/9C1) In the passenger compartment, right front, approximately 20 cm (7.9 in) from breakout to inline connector X220	—	—
J408	Body Wiring Harness	—	In the luggage compartment, rear center, above headliner, near endgate	—	—
J410	Body Wiring Harness	—	In the luggage compartment, left rear, approximately 6 cm (2.4 in) from breakout to F105L Front and Rear Row Roof Rail Airbag - Left	—	—
J415	Body Wiring Harness	5W4/9C1	In the luggage compartment, left rear, approximately 9 cm (3.5 in) from breakout to K77 Remote Function Actuator Module, towards the rear of the vehicle	—	—

Master Electrical Component List (cont'd)

Code	Name	Option	Location	Locator View	Connector End View
J425	Body Wiring Harness	—	• (SWB-5W4-9C1) In the luggage compartment, right front, approximately 44 cm from breakout to X92BCR USB Receptacle - 3rd Row Seat Right, towards the front of the vehicle • (LWB) In the luggage compartment, right front, approximately 12 cm from breakout to S143R Rear Seat Back Folding Switch - 2nd Row Right, towards the rear of the vehicle	—	—
J426	Body Wiring Harness	—	In the luggage compartment, right front, approximately 35 cm from breakout to X92BCR USB Receptacle - 3rd Row Seat Right, towards the front of the vehicle	—	—
J427	Body Wiring Harness	—	• (SWB-5W4-9C1) In the luggage compartment, right front, approximately 23 cm from breakout to X92BCR USB Receptacle - 3rd Row Seat Right, towards the front of the vehicle • (LWB) In the luggage compartment, right front, approximately 22 cm from breakout to S143R Rear Seat Back Folding Switch - 2nd Row Right, towards the rear of the vehicle	—	—
J428	Body Wiring Harness	—	In the passenger compartment, right middle, approximately 5 cm (2 in) from breakout to F113P Front Seat Belt Anchor Plate Tensioner - Passenger, towards the rear of othe vehicle	—	—
J429	Body Wiring Harness	—	In the luggage compartment, right front, approximately 11 cm from breakout to X92BCR USB Receptacle - 3rd Row Seat Right, towards the rear of the vehicle	—	—

Master Electrical Component List (cont'd)

Code	Name	Option	Location	Locator View	Connector End View
J430	Body Wiring Harness	—	• (SWB) In the luggage compartment, right front, approximately 14 cm from breakout to X92BCR USB Receptacle - 3rd Row Seat Right, towards the rear of the vehicle • (LWB) In the luggage compartment, right front, approximately 26 cm from breakout to X92BCR USB Receptacle - 3rd Row Seat Right, towards the rear of the vehicle	—	—
J431	Body Wiring Harness	—	• (SWB-5W4-9C1) In the luggage compartment, right rear, approximately 19 cm from breakout to inline connector X419, towards the rear of the vehicle • (LWB) In the luggage compartment, right rear, approximately 21 cm from breakout to B159BR Body Side Rear Window Glass Breakage Sensor - Right	—	—
J440	3rd Row Seat Wiring Harness	AS8	In passenger compartment, rear, beneath 3rd row seat cushion	—	—
J441	3rd Row Seat Wiring Harness	AS8	In passenger compartment, rear, beneath 3rd row seat cushion	—	—
J450	Chassis Wiring Harness	—	Under the vehicle, right rear, approximately 5 cm (2 in) from breakout to ground G404	—	—
J451	Chassis Wiring Harness	—	Under the vehicle, right rear, between breakout to ground G406 and breakout to Q37RRB Rear Shock Absorber Actuator Right	—	—
J454	Chassis Wiring Harness	—	Under the vehicle, right rear, approximately 19 cm (7.5 in) from breakout to E42R Rear Body Structure Stop Lamp - Right	—	—
J455	Chassis Wiring Harness	U1D+MBR	Under the vehicle, right rear, approximately 5 cm (2 in) from breakout to E42R Rear Body Structure Stop Lamp - Right	—	—
J456	Chassis Wiring Harness	U1D+MBR	Under the vehicle, left rear, approximately 8 cm (3.1 in) from breakout to E42L Rear Body Structure Stop Lamp - Left	—	—

Master Electrical Component List (cont'd)

Code	Name	Option	Location	Locator View	Connector End View
J500	Front Side Door Door Wiring Harness - Driver	—	Left side of the vehicle, within driver door, in harness channel at the front of the door	—	—
J501	Front Side Door Door Wiring Harness - Driver	—	Left side of the vehicle, within driver door, approximately 11 cm (4.3 in) from breakout to M74D Front Side Door Window Regulator Motor - Driver	—	—
J505	Front Side Door Door Lock Door Wiring Harness - Driver	—	left side of the vehicle, within driver door, approximately 5 cm (2 in) from breakout to inline connector X500, towards the rear of the vehicle	—	—
J506	Front Side Door Door Lock Door Wiring Harness - Driver	—	Left side of the vehicle, within driver door, approximately 7 cm (2.8 in) from breakout to S47D Front Seat Adjuster Memory Switch - Driver, towards the rear of the vehicle	—	—
J507	Front Side Door Door Lock Door Wiring Harness - Driver	—	Left side of the vehicle, within driver door, approximately 8 cm (3.1 in) from breakout to S47D Front Seat Adjuster Memory Switch - Driver, towards the rear of the vehicle	—	—
J510	Driver Outside Rearview Mirror Harness	—	Left side of the vehicle, within driver outside rearview mirror, within driver outside rearview mirror harness	—	—
J600	Front Side Door Door Wiring Harness - Passenger	—	Right side of the vehicle, within passenger door, front of door, in breakout to inline connector X600	—	—
J601	Front Side Door Door Wiring Harness - Passenger	—	Right side of the vehicle, within passenger door, approximately 11 cm from breakout to P19AH Radio Front Side Door Speaker - Right	—	—
J605	Front Side Door Door Lock Door Wiring Harness - Passenger	—	Right side of the vehicle, within the passenger door, approximately 5 cm (2 in) from breakout to inline connector X605	—	—
J606	Front Side Door Door Lock Door Wiring Harness - Passenger	—	Right side of the vehicle, within the passenger door, in breakout to S79P Front Side Door Window Switch - Passenger	—	—
J610	Passenger Outside Rearview Mirror Harness	—	Right side of the vehicle, within passenger outside rearview mirror, within passenger outside rearview mirror harness	—	—

Master Electrical Component List (cont'd)

Code	Name	Option	Location	Locator View	Connector End View
J700	Rear Side Door Door Wiring Harness - Left	—	• Left side of the vehicle, within left rear door, approximately 10 cm (3.9 in) from breakout to inline connector X700 (SWB) • Left side of the vehicle, within left rear door, between breakout to M74LR Rear Side Door Window Regulator Motor - Left and breakout A23LR Rear Side Door Latch - Left (LWB)	—	—
J701	Rear Side Door Door Wiring Harness - Left	—	• Left side of the vehicle, within left rear door, approximately 10 cm (3.9 in) from breakout to P19AL Radio Rear Side Door Speaker - Left (SWB) • Left side of the vehicle, within left rear door, in breakout to A23LR Rear Side Door Latch - Left (LWB)	—	—
J702	Rear Side Door Door Wiring Harness - Left	—	• Left side of the vehicle, within left rear door, approximately 14 cm from breakout to M74LR Rear Side Door Window Regulator Motor - Left (SWB) • Left side of the vehicle, within left rear door, approximately 10 cm (3.9 in) from breakout to inline connector X700 (LWB)	—	—
J705	Rear Side Door Door Lock Door Wiring Harness - Left	—	Left side of the vehicle, within left rear door, in breakout to E55LR Rear Side Door Pocket Illumination Lamp - Left	—	—
J706	Rear Side Door Door Lock Door Wiring Harness - Left	—	Left side of the vehicle, within left rear door, in breakout to E55LR Rear Side Door Pocket Illumination Lamp - Left	—	—
J800	Rear Side Door Door Wiring Harness - Right	—	• Right side of the vehicle, within right rear door, approximately 10 cm (3.9 in) from breakout to inline connector X800, in harness channel (LWB) • Right side of the vehicle, within right rear door, approximately 10 cm (3.9 in) from breakout to P19AM Radio Rear Side Door Speaker - Right (SWB)	—	—

Master Electrical Component List (cont'd)

Code	Name	Option	Location	Locator View	Connector End View
J801	Rear Side Door Door Wiring Harness - Right	—	• Right side of the vehicle, within right rear door, approximately 15 cm from breakout to M74RR Rear Side Door Window Regulator Motor - Left (LWB) • Right side of the vehicle, within right rear door, approximately 10 cm (3.9 in) from breakout to inline connector X800, in harness channel (SWB)	—	—
J802	Rear Side Door Door Wiring Harness - Right	—	• Right side of the vehicle, within right rear door, approximately 14 cm from breakout to A24RR Rear Side Door Outside Handle - RIght (LWB) • Right side of the vehicle, within right rear door, approximately 14 cm from breakout to M74RR Rear Side Door Window Regulator Motor - Left (SWB)	—	—
J805	Rear Side Door Door Lock Door Wiring Harness - Right	—	Right side of the vehicle, within right rear door, approximately 8 cm (3.1 in) from breakout to S79RR Rear Side Door Window Switch - Right	—	—
J806	Rear Side Door Door Lock Door Wiring Harness - Right	—	Right side of the vehicle, within right rear door, approximately 9 cm (3.5 in) from breakout to S79RR Rear Side Door Window Switch - Right	—	—
J901	Liftgate Wiring Harness	—	At the rear of the vehicle, within the liftgate, left upper, approximately 16 cm from breakout to E18 Rear Window Defogger Grid X2	—	—
J904	Liftgate Wiring Harness	—	At the rear of the vehicle, within the liftgate, left upper, approximately 11 cm from breakout to E18 Rear Window Defogger Grid X2	—	—
J910	Rear License Plate Lamp Wiring Harness	—	At the rear of the vehicle, within the liftgate, in breakout to S141 Liftgate Window Release Switch - Exterior	—	—
J925	Rear Object Alarm Sensor Wiring Harness	—	At the rear of the vehicle, attached to the inside of the rear fascia, right side, between breakout to B306H Parking Assist Alarm Sensor - Rear Right Outer and breakout to B306G Parking Assist Alarm Sensor - Rear Right Middle	—	—

Master Electrical Component List (cont'd)

Code	Name	Option	Location	Locator View	Connector End View
J926	Rear Object Alarm Sensor Wiring Harness	—	At the rear of the vehicle, attached to the inside of the rear fascia, right side, between breakout to B306H Parking Assist Alarm Sensor - Rear Right Outer and breakout to B306G Parking Assist Alarm Sensor - Rear Right Middle	—	—
J927	Rear Object Alarm Sensor Wiring Harness	—	At the rear of the vehicle, attached to the inside of the rear fascia, right side, between breakout to B306H Parking Assist Alarm Sensor - Rear Right Outer and breakout to B306G Parking Assist Alarm Sensor - Rear Right Middle	—	—
J928	Rear Object Alarm Sensor Wiring Harness	—	At the rear of the vehicle, attached to the inside of the rear fascia, center, between breakout to B306G Parking Assist Alarm Sensor - Rear Right Middle and breakout to B306F Parking Assist Alarm Sensor - Rear Left Middle	—	—
J929	Rear Object Alarm Sensor Wiring Harness	—	At the rear of the vehicle, within rear fascia harness, approximately 12 cm (4.7 in) from breakout to T10G Low Frequency Rear Bumper Antenna, twoards the left side of the vehicle	—	—
J931	Rear Object Alarm Sensor Wiring Harness	—	At the rear of the vehicle, attached to the inside of the rear fascia, right side, between breakout to B306F Parking Assist Alarm Sensor - Rear Left Middle and breakout to B306E Parking Assist Alarm Sensor - Rear Left Outer	—	—
J932	Rear Object Alarm Sensor Wiring Harness	—	At the rear of the vehicle, attached to the inside of the rear fascia, right side, between breakout to B306F Parking Assist Alarm Sensor - Rear Left Middle and breakout to B306E Parking Assist Alarm Sensor - Rear Left Outer	—	—
J933	Rear Object Alarm Sensor Wiring Harness	UGN/UVZ	At the rear of the vehicle, attached to the inside of the rear fascia, right side, between breakout to B306F Parking Assist Alarm Sensor - Rear Left Middle and breakout to B306E Parking Assist Alarm Sensor - Rear Left Outer	—	—

BLANK

Section 7

Safety and Security

Immobilizer 7-3
Schematic and Routing Diagrams 7-3
Immobilizer Schematics 7-4
Description and Operation 7-5
Immobilizer Description and Operation 7-5
Parking Assistance Systems 7-7
Schematic and Routing Diagrams 7-7
Parking Assistance Systems Schematics 7-8
Description and Operation 7-11
Parking Assist Description and Operation (UD5) 7-11
Remote Functions 7-13
Schematic and Routing Diagrams 7-13
Remote Function Schematics 7-14
Description and Operation 7-17
Garage Door Opener Description and Operation 7-17
Keyless Entry System Description and Operation 7-17
Seat Belts 7-21
Schematic and Routing Diagrams 7-21
Seat Belt Schematics 7-22
Description and Operation 7-24
Seat Belt System Description and Operation ... 7-24
Supplemental Restraints 7-26
Schematic and Routing Diagrams 7-26
SIR Schematics 7-27
Description and Operation 7-31
Supplemental Inflatable Restraint System Description and Operation 7-31

BLANK

Immobilizer

Schematic and Routing Diagrams

Immobilizer Schematics (Immobilizer)

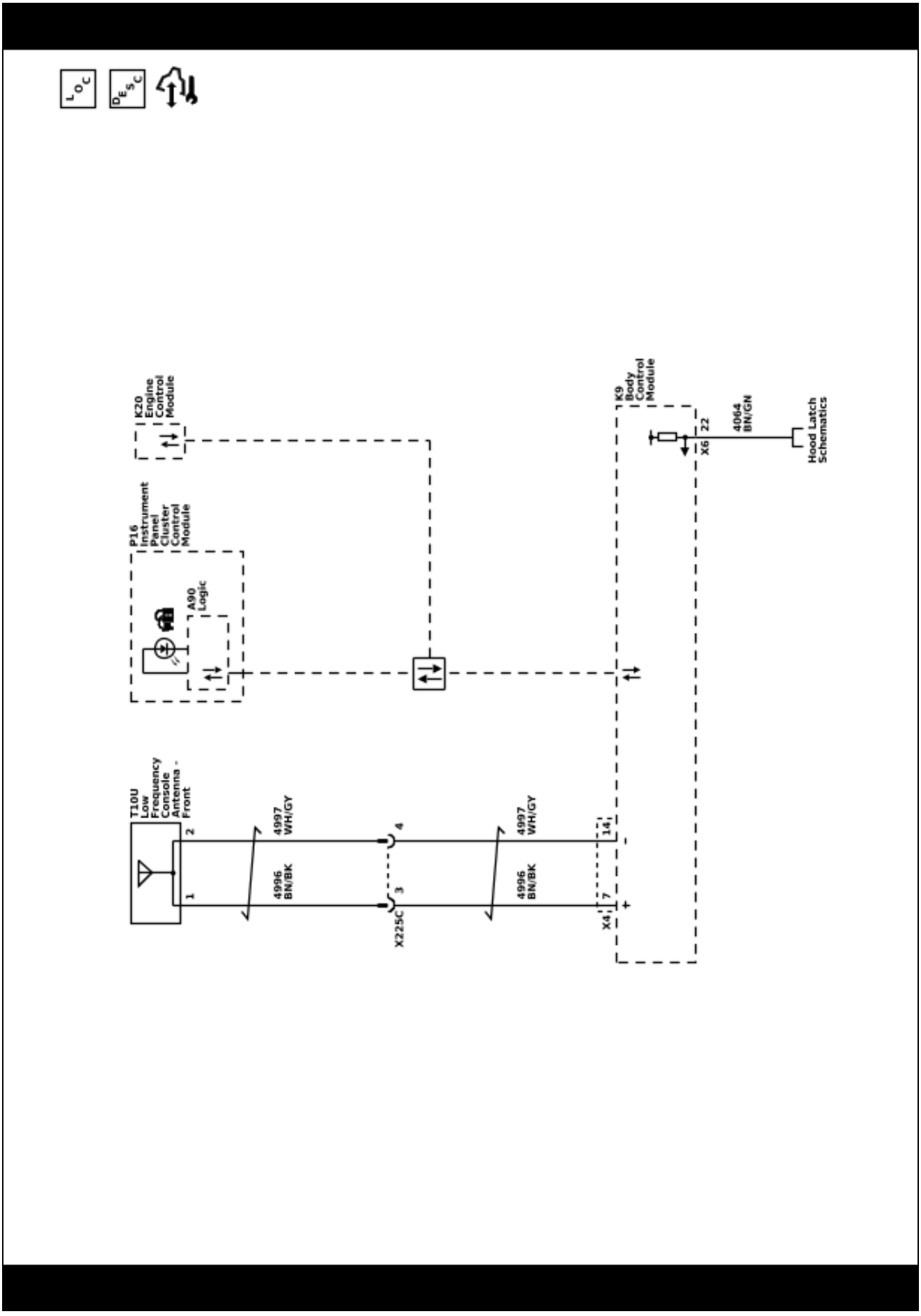

Description and Operation

Immobilizer Description and Operation

The immobilizer system functions are provided by the Steering Column Lock Module, the Body Control Module (BCM), and the Engine Control Module (ECM), as well as any control modules which store and report the environment identifier. The Body Control Module uses low frequency antennas in different locations on the vehicle to determine the location of the transmitter. Multiple transmitting antennas are used to ensure complete coverage of the vehicle interior and rear compartment. These antennas transmit to the keyless entry transmitter.

When the vehicle Stop/Start switch is pressed, the low frequency antennas emit a challenge to the keyless entry transmitter. The transmitter receives this challenge and emits it's response as an RF message. The BCM then compares this value to a value stored in memory. The BCM also monitors various control modules to determine if the stored environment identifiers match.

If the correct transponder is detected, the electric steering column is unlocked, and there is no start disable from OnStar the BCM will send the prerelease allowed message via serial data to the ECM. The vehicle will be allowed up to 3 seconds run time. If the theft check is incorrect, the environment identifier check fails, the incorrect transponder is detected, the electric steering column is locked, or there is a start disable from OnStar, the BCM will send a negative response and the ECM will not start the vehicle or will immediately shut off the vehicle if prerelease allowed the vehicle to start.

If RF communication is interrupted, a "No Remote Detected" message will be displayed on the DIC. In these cases, the transmitter can be placed in the transmitter pocket. The immobilizer coil antenna is located in the immediate vicinity of the transmitter pocket. Placing the transmitter in the pocket/slot will create a low powered coupling between the transmitter and immobilizer coil antenna, allowing communications to occur and enabling vehicle starting.

The components of the immobilizer system are as follows:

- BCM
- ECM
- Steering column lock control module
- Immobilizer coil antenna
- Low frequency antenna
- Ignition key/Keyless entry transmitter
- Security indicator
- Various control modules which store and report the environment identifier

Body Control Module (BCM)

The immobilizer system is an integral part of the BCM and is controlled internally within the BCM. The BCM can learn up to 8 keys (transponder values). The BCM uses low frequency antennas in three different locations on the vehicle to determine the location of the transmitter. Multiple antennas are used to ensure complete coverage of the vehicle interior and rear compartment. The BCM monitors the ignition mode switch. When the ignition mode is changed, the BCM will command, or “ping”, the low frequency antenna.

The BCM uses the following inputs:

- Environment identifier exchange with various modules
- Encrypted code from the vehicle key, received by the immobilizer coil antenna if the keyless entry transmitter signal isn’t detected as indicated by the “No Remote Detected” message
- Encrypted code from the vehicle key

The BCM uses the following outputs:

- Prerelease Allowed signal communication with ECM
- Challenge/Response with ECM

When a transponder value is received by the BCM, the BCM will compare this value to the learned key code stored in memory. The BCM then performs one of the following functions:

- If the encrypted code value matches the values stored in the BCM memory, the BCM will send the Prerelease Allowed signal to the ECM via serial data.
- If the encrypted code unique value does not match the value stored in the BCM, the BCM will send the start disable message to the ECM via serial data.
- If the BCM is unable to receive the vehicle key encrypted code value, the BCM will not send any messages to the ECM.

Engine Control Module (ECM)

The ECM receives the BCM Prerelease Allowed signal and simultaneously the ECM sends a challenge to the BCM via the serial data circuit upon seeing the vehicle transition from OFF to any other power mode. Both the ECM and BCM perform a calculation on this challenge. If the calculated response from the BCM equals the calculation performed by the ECM, the ECM will allow vehicle starting.

Low Frequency Antenna

When commanded, or “pinged”, the low frequency antenna broadcast a challenge to the keyless entry transmitter. Because of the low power of the antenna, this challenge is only broadcast in an approximate three meter range of the antenna. Multiple antenna are used to ensure complete coverage of the vehicle interior and rear compartment.

Steering Column Lock Control Module

On vehicles with electronic steering column lock that use a steering column lock control module the immobilizer system will prevent vehicle starting if there is a fault or no communication with the steering column lock control module.

Keyless Entry Transmitter

Each keyless entry transmitter contains a transponder with a unique encrypted value. The transponder's encrypted value is fixed and unable to be changed. The immobilizer system uses the keyless entry transmitter transponder value to determine if a valid keyless entry transmitter is being used to start the vehicle.

Security Indicator

The BCM will command the Instrument Cluster to illuminate the security indicator when the vehicle is ON to indicate a fault has occurred within the immobilizer system.

Parking Assistance Systems

Schematic and Routing Diagrams

Parking Assistance Systems Schematics (Park Assist - Power, Ground, and Serial Data (UD5))

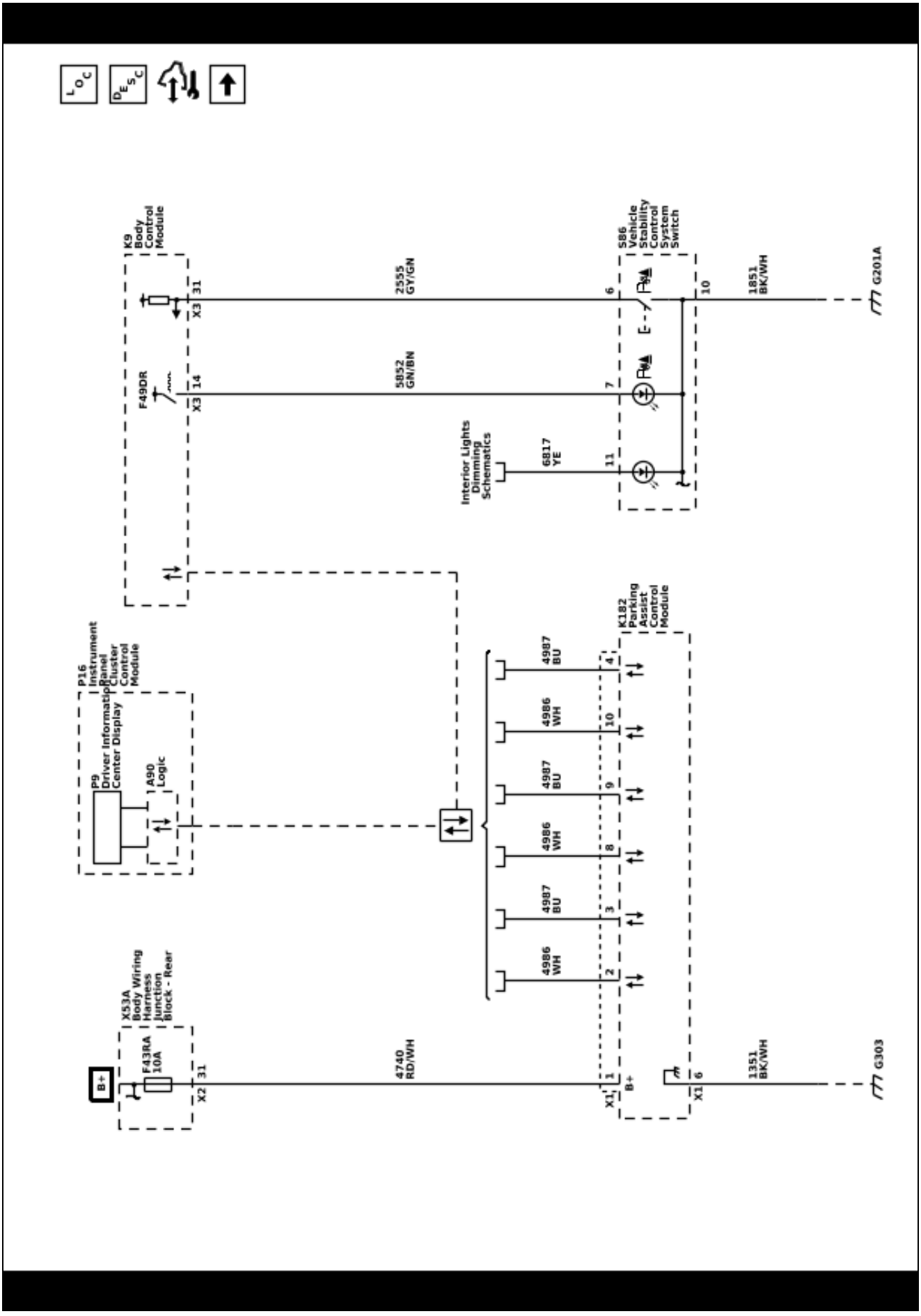

Parking Assistance Systems Schematics (Park Assist - Rear Sensors (UD5))

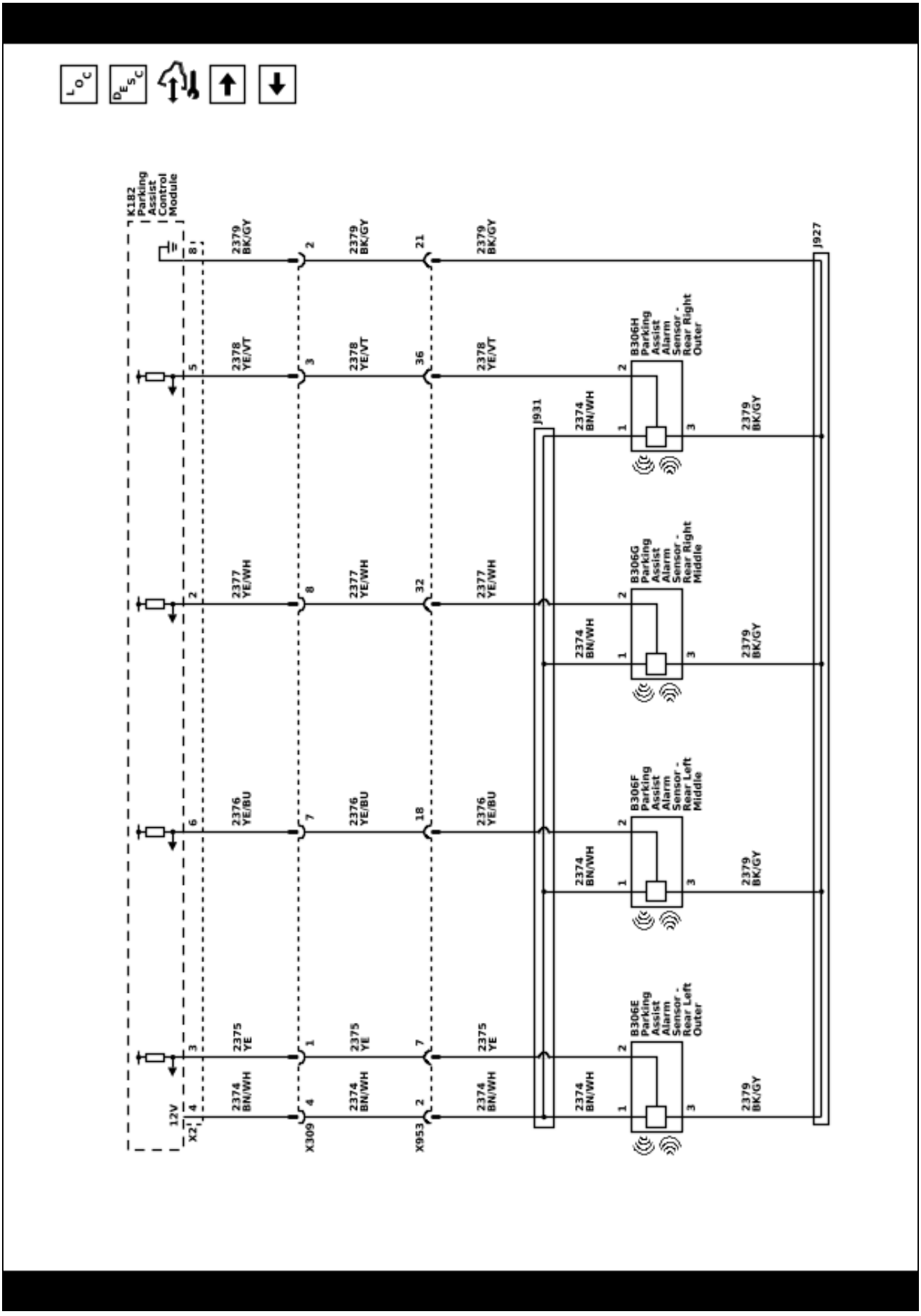

5862129

Parking Assistance Systems Schematics (Park Assist - Front Sensors (UD5))

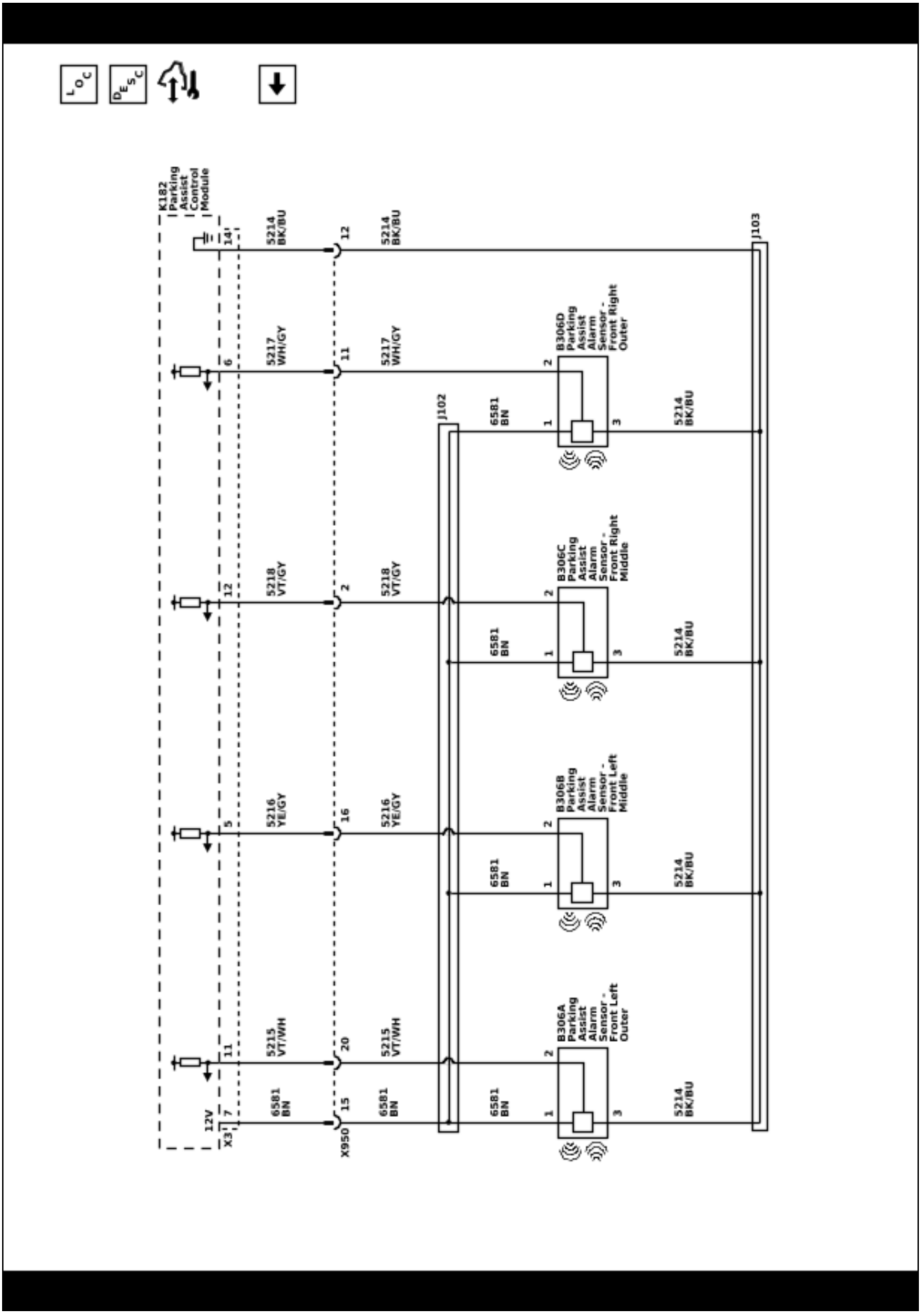

Description and Operation

Parking Assist Description and Operation (UD5)

The parking assist system can help drivers avoid certain objects in their path during low-speed parking. The distance and location of the object is determined by four object sensors located in the rear fascia. The parking assist system may not detect all children, pedestrians, bicyclists, animals or objects below the bumper. Drivers should remember to always check the area around the vehicle before shifting into REVERSE. The parking assist system will not stop or slow down a vehicle. It does not engage a vehicle's throttle or braking. No safety system can take the place of an alert and engaged driver.

The parking assist system is made up of the following components:

- K182 Parking Assist Control Module
- B306 Parking Assist Alarm Sensors
- Infotainment system

K182 Parking Assist Control Module

The K182 Parking Assist Control Module provides a reference voltage and a low reference to the B306 Parking Assist Alarm Sensors. The K182 Parking Assist Control Module receives individual signals from each of the four B306 Parking Assist Alarm Sensors and determines the location and distance of an object based on these inputs. When an object is detected, the K182 Parking Assist Control Module will send a serial data message to the infotainment system requesting an audible alert.

B306 Parking Assist Alarm Sensors

The B306 Parking Assist Alarm Sensors are located in the rear fascia of the vehicle. The sensors are used to determine the distance between an object and the bumper. Each sensor emits an ultrasonic frequency which is reflected off any object located behind the vehicle. These reflections are received by the sensors. The time difference between the emission of the frequency and when the reflection is received is known as sensor echo time; it is used to determine the distance to the object. The sensors report this information to the K182 Parking Assist Control Module.

Infotainment System

The infotainment system controls the audible alert for the parking assist system. If the an object is detected the infotainment system will command beeps as an audible alert to the driver.

Rear Parking Assist Operation

The rear parking assist system uses four B306 Parking Assist Alarm Sensors located on the rear fascia and functions when the transmission is in REVERSE. When a driver is backing up at a low speed, up to about 11 km/h (7 mph), the B306 Parking Assist Alarm Sensors may detect objects up to 1.8 m (6 ft) behind the vehicle. When an object is within the measuring range of the B306 Parking Assist Alarm Sensors, the ultrasonic pulse is reflected and is received by the sending or a neighboring sensor. The sensor converts this signal into a voltage signal and sends this signal to the K182 Parking Assist Control Module. The K182 Parking Assist Control Module evaluates the received sensor signals.

When an object is within 0.6 m (2 ft) of the rear bumper, 5 repeating low-pitched beeps are played from the rear speakers, followed by a continuous tone. If the vehicle is equipped with the Safety Alert Seat (HS1), it will pulse 5 times on both sides.

Some vehicles may have a park assist display on the P16 Instrument Panel Cluster Module with bars that show "distance to object," driving direction, and object location information for the parking assist system. As the vehicle gets closer to the detected object, distance-to-object information and caution triangles may be displayed that changes from yellow to amber to red.

The parking assist system can be turned on and off using the parking assist switch.

The K182 Parking Assist Control Module carries out a self test and monitors the sensors for electrical and mechanical faults. Monitored is the power supply of each sensor and the sensor signals. Mud, ice and snow may cause obstruction of the function of the sensors. The K182 Parking Assist Control Module also determines if the correct type of sensor is installed. If any of these tests fails, a DTC with corresponding symptom is set and the parking assist system is deactivated.

Parking Assist System Messages

SERVICE PARKING ASSIST or SERVICE DRIVER ASSIST

The driver information center displays SERVICE PARKING ASSIST or SERVICE DRIVER ASSIST when the K182 Parking Assist Control Module detects a malfunction in the parking assist system and the system is disabled.

PARK ASSIST OFF

The PARK ASSIST OFF message is displayed in the driver information center when the parking assist system is disabled due to conditions that disable or inhibit the system. The K182 Parking Assist Control Module requests the driver information center display PARK ASSIST OFF when it detects such a condition.

Parking Assist System Operational Checks

The scan tool Parking Assist Disable History 1–8 data can be used to diagnose a malfunction within the parking assist system or an intermittent concern. The following is a brief description of potential causes which may aid in diagnosis. For each potential issue, perform an appropriate inspect of the component or system and refer to the specific service information subsection related to that system for further diagnosis:

- Disable by Switch – The parking assist system has been disabled through the parking assist switch.
- Disabled by Customization Menu – The parking assist system has been disabled through the vehicle personalization menu.

- Vehicle Speed Too High – The vehicle is travelling too fast in reverse at speeds of greater than 8 km/h (5 mph).
- Vehicle Speed Invalid – The vehicle is unable to determine the vehicle speed.
- Steering Angle Signal Invalid – The vehicle is unable to determine the steering angle.
- Front Attached Object Detected – An object has been determined to be attached to the front of the vehicle. Common items such as a brush guards, light bars, and license plates may cause this concern. Additionally, damage to the front of the vehicle or a misaligned sensor may cause this concern. If the vehicle is damaged in a manner that causes the sensor to detect the bumper itself, the parking assist control module will interpret this as an attached object and disable the system. Carefully inspect the bumper, bumper mounting surface, and sensor retainers before continuing with normal diagnosis. After the detected cause has been addressed the vehicle must be driven at speed greater than 40 km/h (25 MPH).
- Rear Attached Object Detected – An object has been determined to be attached to the rear of the vehicle. Common items such as a hitch receiver, trailer, or a bicycle rack may cause this concern. Additionally, damage to the rear of the vehicle or a misaligned sensor may cause this concern. If the vehicle is damaged in a manner that causes the sensor to detect the bumper itself, the parking assist control module will interpret this as an attached object and disable the system. Carefully inspect the bumper, bumper mounting surface, and sensor retainers before continuing with normal diagnosis. After the detected cause has been addressed the vehicle must be driven at speed greater than 40 km/h (25 MPH).
- Front And Rear Attached Object Detected – An object has been determined to be attached to the front and rear of vehicle.
- Parking Assist Alarm Sensor Blocked – One of the following conditions may be present:
  - One or more of the sensors may be blocked by snow, mud, ice, or other debris. This might happen after going through a car wash in cold weather.
  - Silicone insulator surrounding sensor maybe missing, cut, or twisted.
  - Improperly installed sensor, sensor maybe be crooked due to a tight wire harness.
  - One or more of the sensors may be scratched or the paint maybe chipped.
  - Excessive paint thickness on a sensor may cause an excessive sensor ring time. When replacing or refinishing a sensor, do not apply an excessive amount of paint or clear coat.
- Haptic Seat Malfunction – A fault exists with the safety alert seat. Check for DTCs.
- Chime Malfunction – A fault exists with the vehicle chime. Check for DTCs.
- Parking Assist Switch Malfunction – A fault exists with the parking assist switch. Check for DTCs.
- Invalid Gear – The vehicle has determine a plausibility fault exists with the transmission range.
- Incorrect Power Mode – The vehicle is in an incorrect power mode for parking assist operation.

Remote Functions

Schematic and Routing Diagrams

Remote Function Schematics (Keyless Entry - Active)

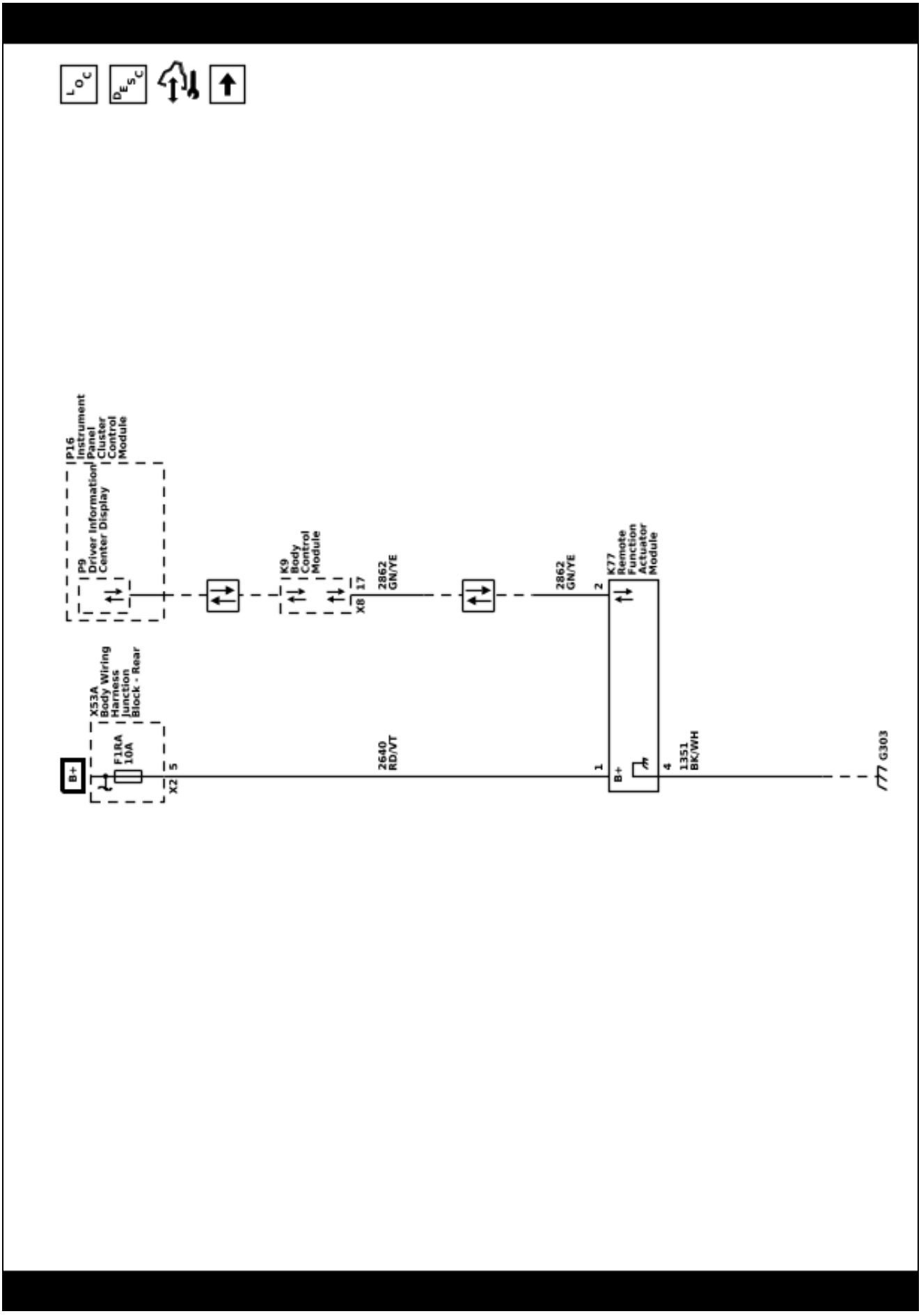

Remote Function Schematics (Keyless Entry - Passive and Keyless Start)

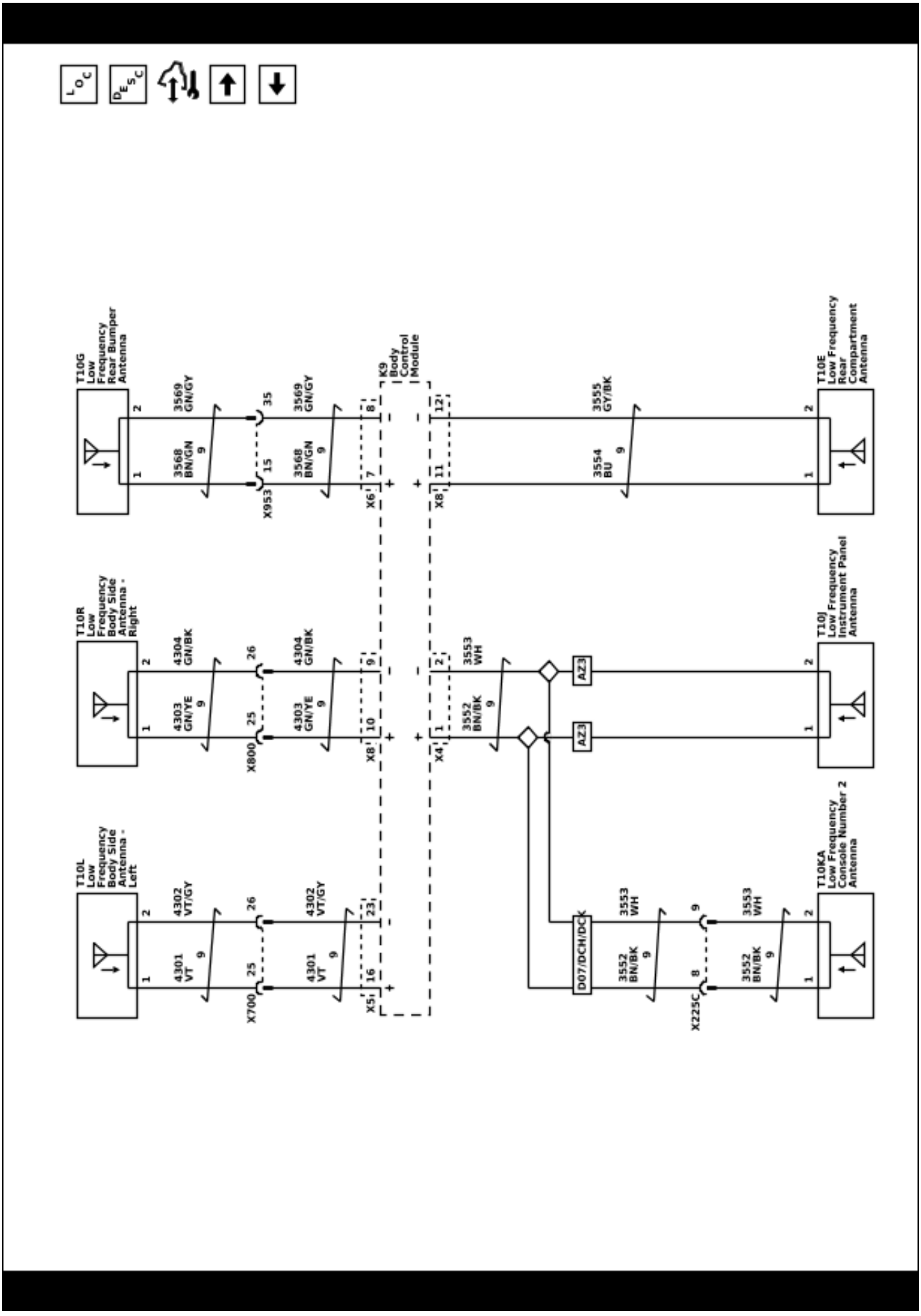

5862132

Remote Function Schematics (Garage Door Opener (UG1))

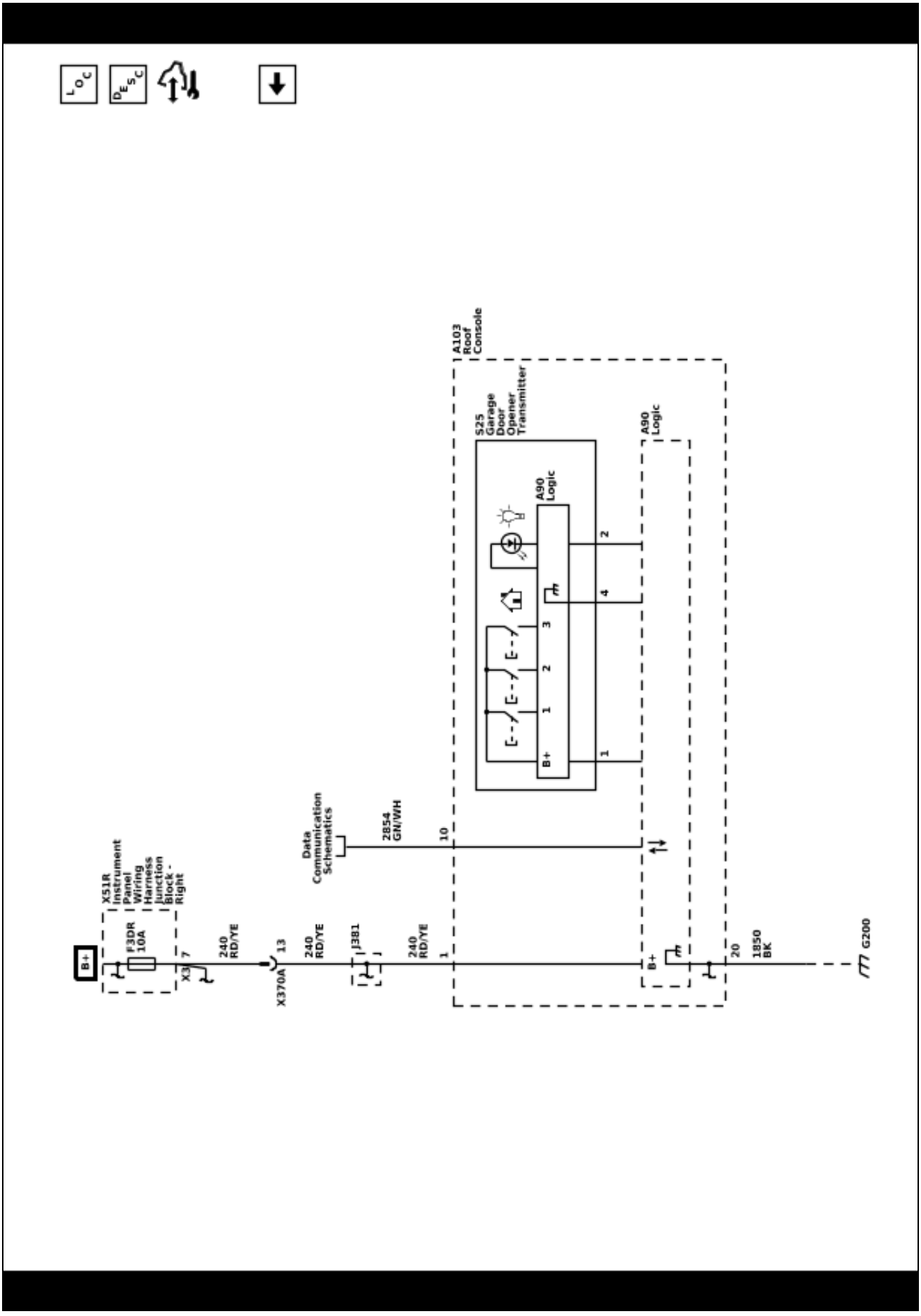

Description and Operation

Garage Door Opener Description and Operation

The garage door opener is fixed and rolling code capable. Rolling code is a system that allows the code that the customers receiver receives from the garage door opener to change every time the garage door opener is used within operating range of the receiver. Rolling code programming requires the customer to push a learn/program button on the garage door opener receiver at their home. This button is usually located on the receiver unit under a cover (light cover) on one end of the unit. The customer must follow the garage door opener manufacturers instructions to program/learn the receiver to accept the Universal Home Remote System as an authorized opener for their unit . When the receiver and the garage door opener are initially programmed together, a code is established and a new code is created for every new transmission. The software in the receiver recognizes the garage door opener and accepts the new code.

The garage door opener is compatible with most, but not all types and brands of transmitters.

The garage door opener is a transmitter operating between 288–434 MHz. The power and range of the transmitter is limited to comply with laws governing the generation of radio frequency interference. The transmitter is programmed by the user to accept the signal generated by the user's transmitters.

The garage door opener has 3 buttons that may be programmed for individual transmitter/receiver combinations to control up to 3 garage door openers, security gates, lighting systems, etc. Each button represents a transmitter code section of the transmitter, which operates separately from any other button, and may be considered a separate transmitter. Operation consists of simply pressing a button to activate the corresponding transmitter.

The garage door opener does not need any programming after it is replaced. However, for the opener function it must be programmed to the customer’s garage door or other devices such as a gate. The programming can only be performed at the device being programmed, it cannot be programmed at a service facility. Instructions for programming are listed in the Garage Door Opener Malfunction document in a Diagnostic Aid.

Note: Do not use the garage door opener (GDO) with any garage door opener that does not have the stop and reverse safety feature. This includes any garage door opener model manufactured before April 1, 1982.

Keyless Entry System Description and Operation

Keyless Entry System Description and Operation – Active

The keyless entry system is a vehicle entry device. The keyless entry system is used in conjunction with the door locks to unlock the vehicle. Keyless entry will lock/unlock a door or open the rear compartment lid when a corresponding button on the keyless entry transmitter is pressed. This is accomplished by the transmitter sending a radio frequency to the remote control door lock receiver that has a direct link to the body control module (BCM). The BCM interprets the signal and activates the requested function or requests the appropriate ECU to activate the function via a serial data message. A low transmitter battery or radio frequency interference from aftermarket devices, such as 2-way radios, power inverters, computers, etc., may cause a system malfunction. High radio frequency traffic areas, such as gas stations that use pay-at-the-pump radio frequency transponders, may also cause interference that could lead to a malfunction. Keyless entry allows you to operate the following features:

- Door lock/unlock
- Rear compartment lid release
- Illuminated entry lamps
- Panic alarm/vehicle locator
- Remote vehicle start
- Passive keyless entry able/disable
- Automatic window express down, if equipped
- Automatic window express up, if equipped
- Automatic power mirror folding/unfolding, if equipped

Keyless Entry System Description and Operation – Passive

Passive keyless entry allows entry to a locked vehicle without pressing any buttons on the keyless entry transmitter. The passive entry system uses low frequency antennas in several different areas on the vehicle to determine the location of the transmitter. When passively opening a locked door or the rear compartment, you must have a programmed transmitter with you in your pocket, purse, or briefcase within a one meter range.

When an exterior door handle button is pressed or the rear compartment touch pad is pressed, the body control module activates the low frequency antenna which sends out a challenge to the keyless entry transmitter. Because of the low frequency, communication range is limited. The antenna will emit the challenge in a one meter range. The transmitter must be within this range to receive the challenge. The transmitter receives this challenge and emits it's response as an RF message, which is received by the remote control door lock receiver. If the response is correct, entry into the vehicle will be allowed.

As a customer convenience feature, the keyless entry system will notify the driver if the transmitter has been left in the vehicle after exiting by chirping the vehicle horn three times and displaying a message on the DIC. This may be turned off using vehicle personalization. Also, if the transmitter is left in the vehicle after the central door lock switch has been used to lock the vehicle, the driver door will remain unlocked after exiting the vehicle. This is intended to prevent locking the transmitter in the vehicle and being unable to access it.

Keyless Entry System Description and Operation – Keyless Start

The keyless start portion of the keyless entry system allows vehicle starting, having only the transmitter as your key. The keyless start system uses low frequency antennas in three different locations on the vehicle to determine the location of the transmitter. Multiple antenna are used to ensure complete coverage of the vehicle interior and rear compartment. When using the keyless start system, a programmed transmitter must be in the vehicle's interior, in the driver's pocket, purse, or briefcase.

When the ignition mode switch is pressed, the low frequency antennas emit a challenge to the keyless entry transmitter. The transmitter receives this challenge and emits it's response as an RF message, which is received by the remote control door lock receiver. If the response is correct, vehicle starting will be allowed. If RF communication is interrupted, a “No Remote Detected” message will be displayed on the DIC. In these cases, the transmitter can be placed in the transmitter pocket located in the center console. The immobilizer antenna coil is located directly beneath the transmitter pocket. Placing the transmitter in the pocket will create a low powered coupling between the transmitter and immobilizer antenna, allowing communications to occur and enabling vehicle starting. If the key has been idle the DIC may display “Key In Sleep Mode, Move Key, Then Start”. In this case move the vehicle key to start the vehicle.

The keyless entry system has the following components:

- Keyless entry integrated key/transmitter
- Driver and passenger side antennas
- Driver and passenger door handle switches (part of the door handle assembly)
- Rear fascia antenna
- Immobilizer antenna coil (front console antenna function)
- Rear console antenna
- Trunk antenna (rear compartment)
- Body control module (BCM)
- Remote control door lock receiver

Keyless Entry Transmitters

By operating any of the exterior door handle buttons or the start/stop switch, a nearby transmitter is challenged by a keyless entry antenna. The transmitter will send an RF response to the remote control door lock receiver, which communicates with the BCM. The BCM will interpret this communication and either allow or deny vehicle entry or starting.

Side Antennas

The keyless entry side antennas are used to transmit low frequency communications to the keyless entry transmitters.

The keyless entry side antennas are located in the driver and passenger body sides. The antennas are controlled by the body control module. When the exterior door handle button is pressed, the respective antenna will send out a challenge to the keyless entry transmitter, which begins the passive entry communications.

Rear Fascia Antenna

The rear fascia antenna is used to transmit low frequency communication to the keyless entry transmitters for entry to rear compartment.

The rear fascia antenna is located behind the rear fascia. The antenna is controlled by the body control module. When the rear compartment touch pad is pressed, the antenna sends out a challenge to the keyless entry transmitter, which begins the passive entry communications.

Immobilizer Coil Antenna

This antenna is located in the front of the center console.

The Immobilizer antenna coil is used for vehicle starting functions and for learning vehicle keys. When the ignition mode switch is pressed, the antenna is energized or "pinged". This emits a low frequency challenge signal that is received by the keyless entry transmitter. The transmitter will then reply to this challenge with a response and, if correct, vehicle starting will occur. If the transmitter battery is dead, weak, or the RF signal is being interrupted, the transmitter may be placed in the pocket to create a low powered coupling between the transmitter and immobilizer coil antenna, allowing communications to occur and enabling vehicle starting.

Rear Console Antenna

This antenna is located in the rear of the center console.

The rear console antenna is used for vehicle starting functions. When the ignition mode switch is pressed, the antenna is energized or "pinged". This emits a low frequency challenge signal that is received by the keyless entry transmitter. The transmitter will then reply to this challenge with a response and, if correct, vehicle starting will occur.

Rear Compartment Antenna

This antenna is located near the center of the rear compartment area.

The rear compartment antenna is used for vehicle starting functions. When the ignition mode switch is pressed, the antenna is energized or "pinged". This emits a low frequency challenge signal that is received by the keyless entry transmitter. The transmitter will then reply to this challenge with a response and, if correct, vehicle starting will occur.

OnStar® Remote Link

A vehicle operator may have the ability to perform some of the keyless entry functions using applications on personal devices such as smart phones. Refer to OnStar Description and Operation.

Body Control Module (BCM)

The BCM is a multi-function module that performs the following functions:

- Receive and authenticate active transmitter and keyless start/entry signals from the remote control door lock receiver
- Determines the function requested by the transmitter signal
- Performs the function requested by the transmitter signal
- Activating vehicle antennas for passive keyless entry functions
- Activating vehicle antennas for keyless start functions
- Backup control for the ECM accessory wakeup and the run/crank relay
- If equipped, controls the electronic steering column lock
- Receiver of the exterior door handle switch inputs and door open switch (not the door ajar switch)
- Ignition mode switch monitoring

Unlock Driver Door Only – Active

Momentarily press the transmitter UNLOCK button in order to perform the following functions:

- Unlock only the driver door or all doors, if enabled through personalization
- Illuminate the interior lamps for a determined length of time, or until the ignition is turned ON
- Flash the exterior lights, if enabled through personalization
- Disarm the Content Theft Deterrent (CTD) system
- Deactivate the CTD system when in the alarm mode

Unlock All Doors – Second Operation – Active

Momentarily press the transmitter UNLOCK button a second time, within 5 seconds of the first press, to perform the following function:

Unlock the remaining doors

Unlock Driver Door Only – Passive

If enabled through personalization, approach the driver door with a valid keyless entry transmitter and press the door handle button to perform the following functions:

- Unlock and open only the driver door
- Disarm the CTD system, if equipped
- Deactivate the CTD system when in the alarm mode

Unlock All Doors – Passive

Approach any non driver door (front or rear) or, if enabled through personalization, the driver door with a valid keyless entry transmitter and press the door handle button to perform the following functions:

- Unlock all vehicle doors
- Disarm the CTD system, if equipped
- Deactivate the CTD system when in the alarm mode

Lock All Doors – Active

Press the transmitter LOCK button to perform the following functions:

- Lock all vehicle doors
- Immediately turn off the interior lamps
- Flash the exterior lights, if enabled through personalization
- Chirp the horn, if enabled through personalization
- Arm the CTD system

Lock All Doors – Passive

Exit the vehicle (with ignition off) with the keyless entry transmitter to automatically perform the following functions, if equipped.

- Lock all vehicle doors after a delay
- Flash the exterior lights, if enabled through personalization
- Chirp horn, if enabled through personalization
- Arm the CTD system

When all doors are closed, they can also be locked from the exterior by operating a front door handle button or touch pad while having a valid transmitter within range. Vehicles equipped with a rear door button can also lock all doors from the rear doors.

Rear Compartment Lid Release – Active

If the vehicle transaxle is in PARK or NEUTRAL, a double press of the transmitter rear compartment release button will open the rear compartment lid.

Rear Compartment Lid Release – Passive

Approach the rear of a locked vehicle with a valid keyless entry transmitter. Press the rear compartment lid release touch pad. The rear compartment lid will open.

Vehicle Locator/Panic Alarm/Active

A single press of the panic button performs the following functions. Some functions may be dependent on personalization settings:

- Pulses the horn three times
- Flashes the exterior lamps three times

A press and hold of the panic button performs the following functions:

- Pulses the horn and flashes the parking lamps for 30 second or until the following conditions occur:
  - The panic button is pressed
  - The ignition switch is turned to the RUN position with a valid key

Remote Vehicle Start/Active

The remote vehicle start function allows engine starting while not in the vehicle. It also allows the vehicle HVAC system and other vehicle systems to enable, providing a comfortable vehicle upon entry. The remote vehicle start sequence begins by pressing and releasing the remote vehicle start button on the keyless entry transmitter twice. The turn signal lamps will illuminate to indicate the vehicle has received the remote start request. Each time a remote vehicle start is performed,

the vehicle doors are locked, however they may then be unlocked/locked with the transmitter at any time. Once activated, the engine is allowed to run for 15 minutes. The remote start operation can be repeated as many times as desired up to a total run time of 30 minutes. The remote vehicle start event may be cancelled at any time by pressing only the remote vehicle start button on the transmitter or by entering the vehicle and turning ON the hazard lamps.

Hood Ajar Switch/Active

The hood switch provides status of the hood to the BCM for remote vehicle start purposes. The switch is integrated into the hood latch assembly. The hood ajar switch provides 2 separate inputs to the BCM. These separate inputs allow the BCM to actively monitor for a hood ajar switch fault.

Remote Vehicle Start Circuit Description/Active

The BCM receives a signal from the keyless entry transmitter indicating a remote vehicle start request. The BCM and ECM use the following inputs to verify the system is ready to enable a remote vehicle start event:

- Vehicle is not in valet mode
- Vehicle is in park
- Keyless entry transmitter is not in the vehicle
- The hood is closed
- The hazard switch is OFF
- Vehicle power mode is OFF
- The malfunction indicator lamp (MIL) is not commanded ON by the ECM
- Remote start timer does not equal 0 (the 30 minute maximum time has not been used)

When the BCM determines all conditions meet those required for a remote vehicle start event, a message is sent via serial data to the ECM. While the ECM is in remote vehicle start mode it will cut fuel to the engine if any of the following monitored conditions occur:

- Vehicle speed is greater than 0
- Transmission is not in P
- Excessive engine coolant temperature
- Low oil pressure
- Engine crank time is greater than 30 seconds
- Excessive engine speed
- Accelerator pedal position too high
- Immobilizer system indicates a theft attempt

If any conditions prevent a remote start or cause a remote start operation to be cancelled there is a record of the cause in the scan tool.

Keyless Entry Personalization

Vehicle lock/unlock functions and remote vehicle start settings may be personalized for the vehicle. This includes the capability of turning the passive entry system completely off. For functional descriptions and programming instructions, refer to the vehicle owners manual.

Seat Belts

Schematic and Routing Diagrams

Seat Belt Schematics (Front Seat Belt Switches and Indicator)

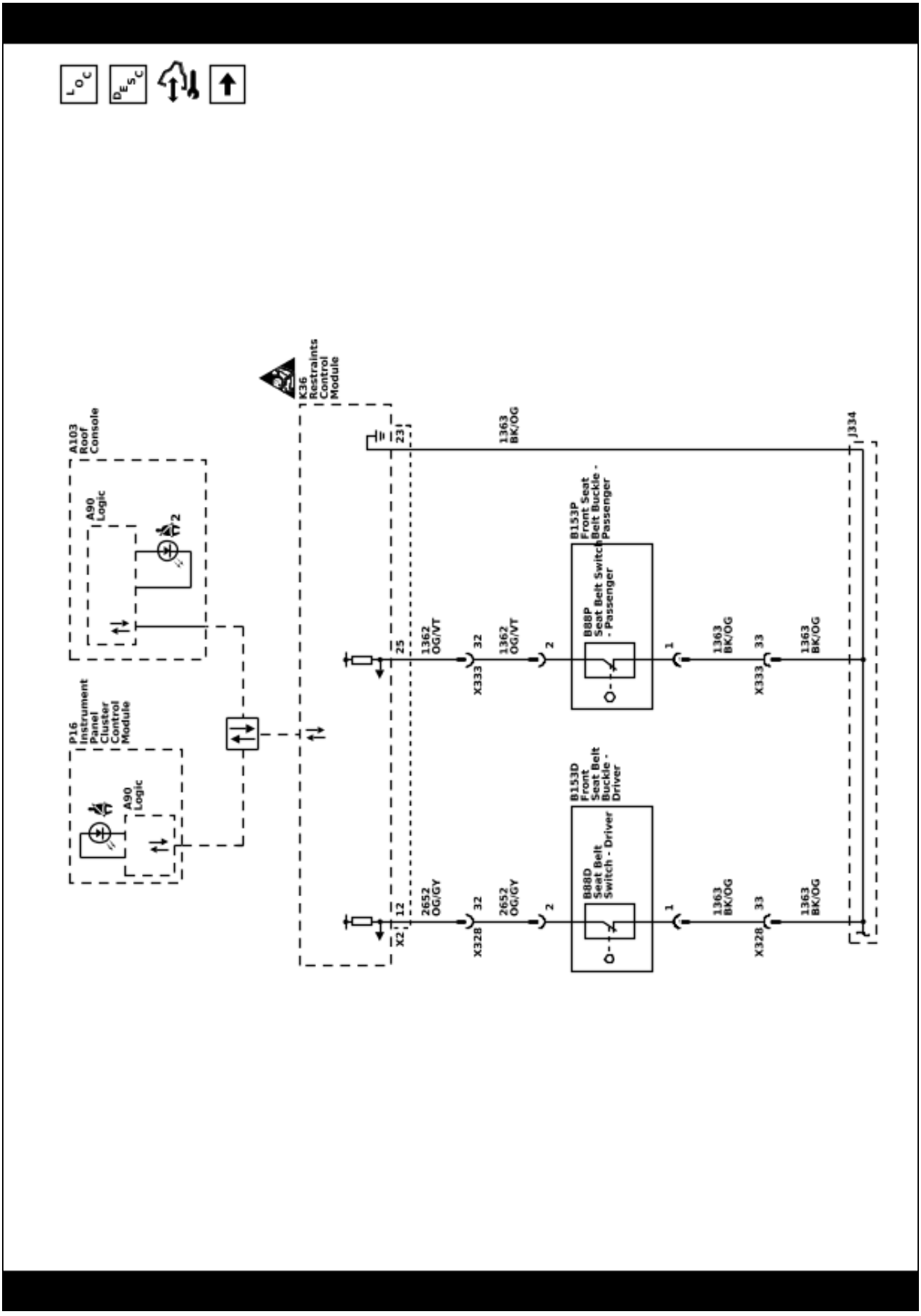

Seat Belt Schematics (2nd and 3rd Row Seat Belt Switches (UH5/UH6))

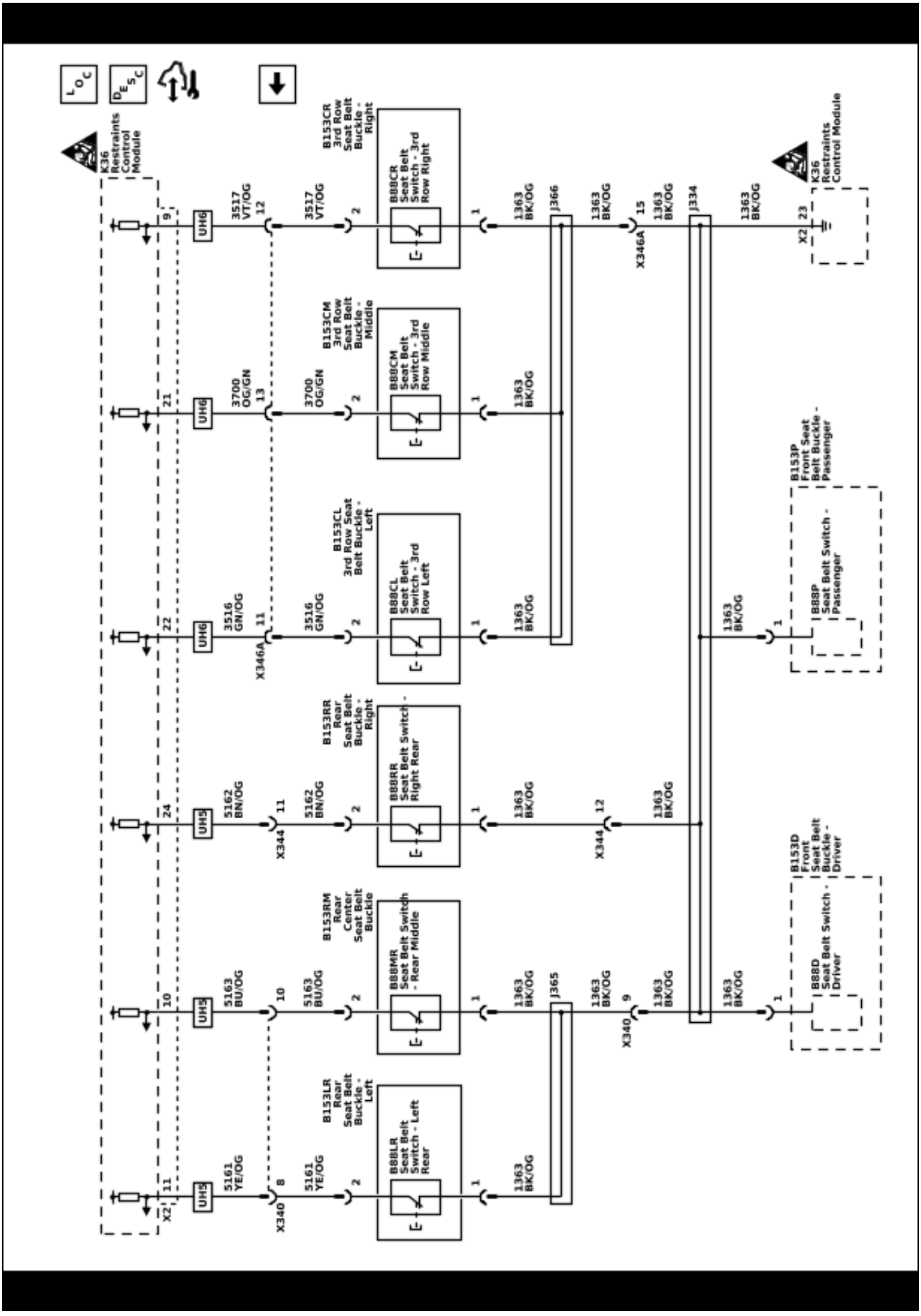

Description and Operation

Seat Belt System Description and Operation

Restraint System

The primary means of occupant restraint are the front and rear seat belts. Seat belts help to keep the occupants inside the passenger compartment and gradually reduce the impact forces during the following events:

- Frontal impact
- Rear impact
- Side impact
- Rollover event

All seat belt retractors have emergency locks. The retractors remain unlocked during normal operation and under normal driving conditions to allow free movement of the upper body of each occupant. The seat belt webbing is locked into position by a pendulum, which causes a locking bar to engage a cog on the spool of the retractor mechanism, when the following conditions occur:

- Rapid extraction of the seat belt webbing from the retractor
- Abrupt change in vehicle velocity
- Operation of the vehicle on a steep slope

The seat belts have an automatic locking (cinch) feature. The cinch feature is activated when the seat belt webbing is completely extended from the retractor. It prevents the webbing from extending beyond the position at which it can retract. Use of the cinch feature is recommended for securing a child seat. The cinch feature may be cancelled by allowing the webbing to wind back completely into the retractor. After the cinch feature is cancelled, the webbing is unlocked. This vehicle is also equipped with a Supplemental Inflatable Restraint (SIR) system. Refer to *Supplemental Inflatable Restraint System Description and Operation on page 7-31*.

Motorized Seat Belts

A motorized seat belt is a seat belt with a motor coupled to the shoulder belt retractor. The motor performs a reversible, pretightening action (retraction) to reduce the slack in the seat belt. The motorized seat belt provides the driver and passenger a sense of safety and, in the case of severe braking or a crash, more quickly couples the occupant to the vehicle, enhancing the safety to the occupant.

Motorized seat belts monitor vehicle information to determine when to perform each of the following retractions

- Full retraction for such situations but not limited to: panic braking and or skidding
- Dynamic support for lateral and longitudinal dynamics
- Slack removal when the vehicle speed above enable speed

Preconditions for motorized seat belt retractions

- Seat belt buckle is latched
- Vehicle speed greater than or equal to 25 kph (16 mph)
- All messages on serial data are received as valid

Triggers that may cause motorized seat belt retractions

- Emergency Braking
- Sudden Emergency / Panic Braking
- High Vehicle Deceleration Detection
- Ice Braking Detection
- Oversteer and Understeer

Motorized seat belt inputs

- Vehicle Power Mode
- Transmission Gear
- Wheel Speeds
- Vehicle Acceleration
- Accelerator Pedal Position
- Steering Wheel Angle and Gradient
- Yaw Rate and Lat/Long Acceleration
- Brake Pedal Position, Gradient, Pressure, Initial Travel
- Vehicle Stability

Motorized seat belt output signals

- Driver information center message – motorized seat belt Failed “Service Automatic Seatbelt Tightening”
- Driver information center message – motorized seat belt Unavailable “Automatic Seatbelt Tightening Unavailable”

Motorized seat belt retractions are inhibited when seat belt unbuckled

Driver and passenger motorized seat belts operate independently

Front Seat Belt System

The front seat belt system includes the driver and passenger seat belts, seat belt reminder indicators, and the retractor and anchor pretensioners, which are part of the SIR system, refer to *Supplemental Inflatable Restraint System Description and Operation on page 7-31*. The driver seat belt reminder indicator is controlled by a switch in the driver seat belt buckle. The passenger seat belt reminder indicator is controlled by a switch in the passenger seat belt buckle and the Restraint Occupant Classification System Module. For more on the Restraint Occupant Classification System Module, refer to *Supplemental Inflatable Restraint System Description and Operation on page 7-31*. When the vehicle is on, the seat belt reminder indicator and tone alarm will operate in the following cases:

- The driver seat belt is unbuckled
- The passenger seat belt is unbuckled while the seat is occupied

Rear Seat Belt System

The rear seat belt system includes the following components:

- The rear seat belt retractor located at the wheelhouse panel and attached to the floor panel
- The rear seat belt buckles and the center seat belt buckle attached to the seat

Child Seat Restraint System

Warning: A child in a rear-facing child restraint can be seriously injured if the front passenger air bag inflates, because the back of a rear-facing child restraint would be very close to the inflating air bag. NEVER use a rear-facing child restraint in this vehicle. If a forward-facing child restraint is suitable for your child, ALWAYS move the front passenger seat as far back as it will go and then install the child restraint. Be sure the child restraint position does not conflict with any additional requirements provided by the manufacturer. For more information, refer to the vehicle owner's manual and the instructions that came with the child restraint.

All vehicles are equipped with a dual-mode type retractor with emergency and automatic locking features. The automatic locking feature is for the restraint of a child seat. The child seat can be secured by pulling the seat belt all the way out to lock it, then tightening the seat belt around the child seat. If the child seat has a top strap, the child seat should be anchored. This applies to the seats designed with the top strap provision and for the vehicles sold in Canada. To ensure the correct top strap angle, the child seat is only to be used at the seating position for which the top strap anchor is installed. The child seat should be installed and secured according to the manufacturer's directions.

Seat Belt Reminder Indicators

There is a driver seat belt reminder indicator located on the instrument cluster and a passenger seat belt reminder located on the overhead console. The state of the seat belt reminder indicators is determined by the RCM, which communicates over serial data with the Restraint Occupant Classification System Module (ROCSM) and the instrument cluster. The seat belt reminder indicator illuminates under the following conditions:

- The RCM sends the status of the driver seat belt to the instrument cluster via serial data. The passenger seat belt status is sent to the driver information center via serial data. The rear seat belt status is sent to the driver information center via serial data. If any of the seat belts are unfastened, the instrument cluster will send a message requesting a chime sound to be turned ON after a bulb check.

  Note: Review DIC for overhead console

Supplemental Restraints

Schematic and Routing Diagrams

SIR Schematics (Module Power, Ground, Serial Data, Controls, Indicators, and Subsystem References)

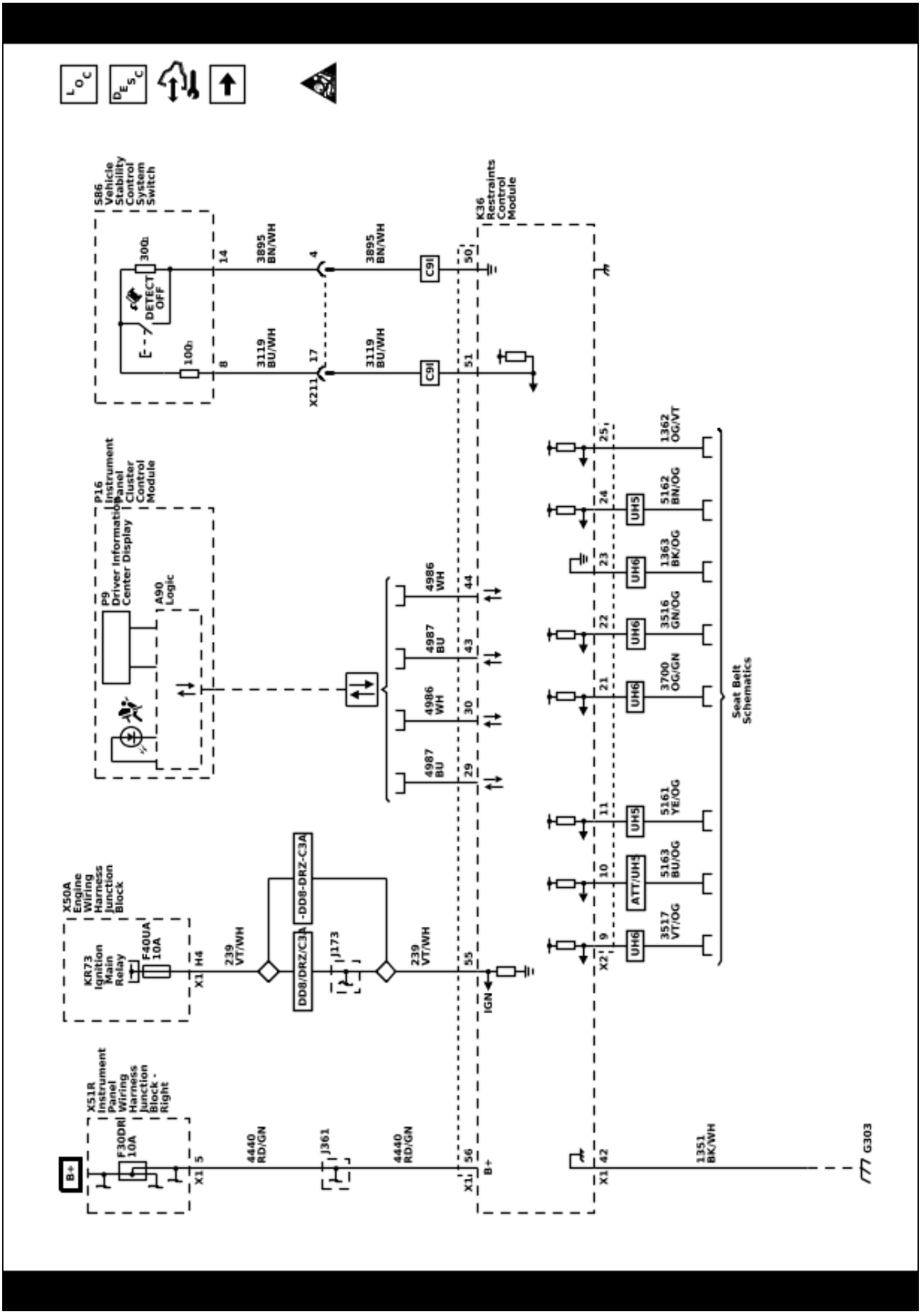

SIR Schematics (Passenger Presence Module)

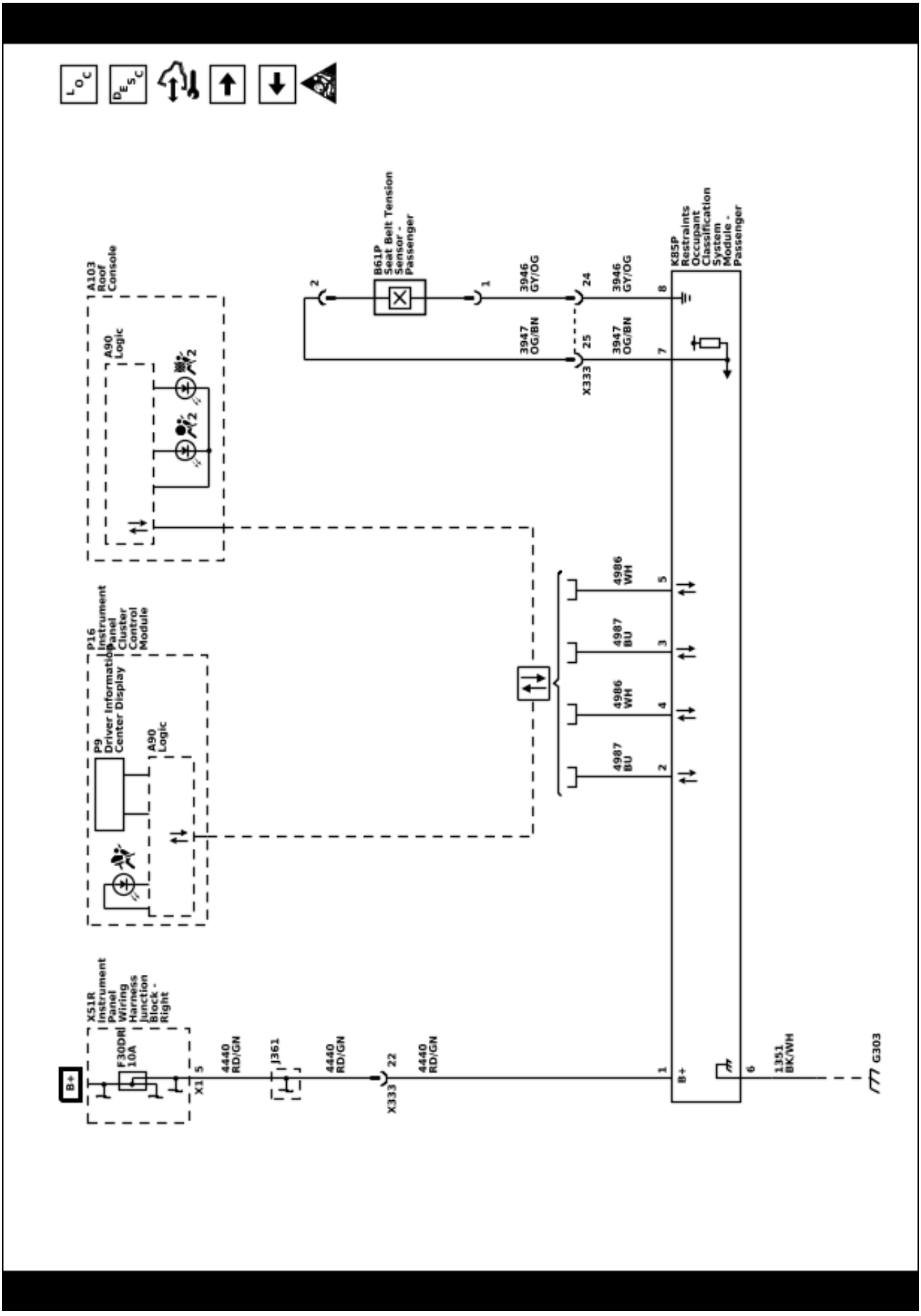

SIR Schematics (Frontal Impact Sensing and Deployment)

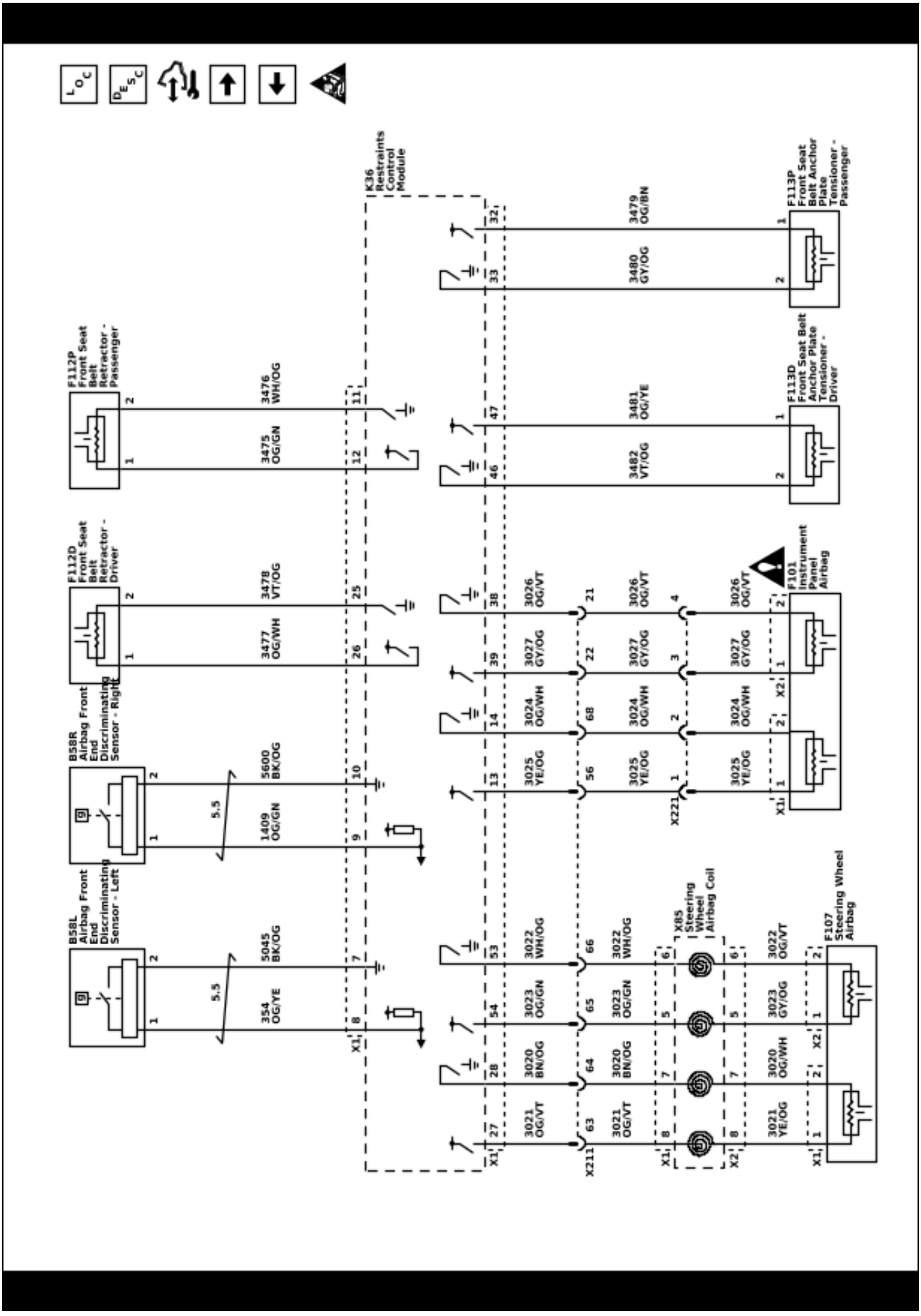

SIR Schematics (Side Impact Sensing and Deployment)

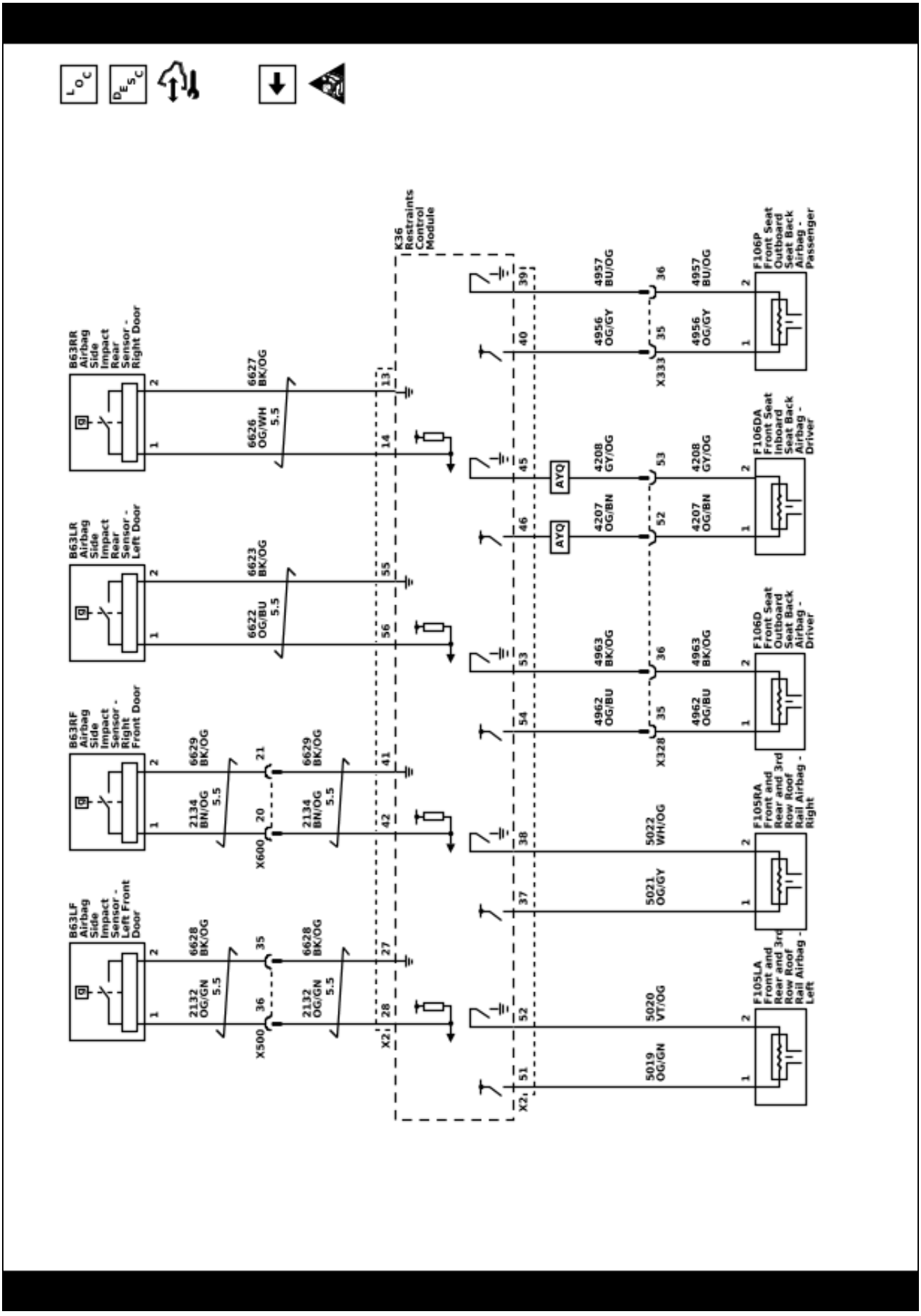

Description and Operation

Supplemental Inflatable Restraint System Description and Operation

The supplemental inflatable restraint (SIR) system, comprised of the Restraints Control module (RCM), impact sensors, Airbags, Restraint Occupant Classification System Module, and seat belt Pretensioners, supplements the protection offered by the seat belts. The RCM determines the severity of a collision using data collected from impact sensors located at strategic points on the vehicle. The RCM processes the information provided by the sensors to provide the safest combination of Airbag and pretensioner deployment. The RCM will deploy the Airbags and Pretensioners if it detects a collision of sufficient force. If the force of the impact is not sufficient to warrant Airbag deployment, the RCM may still deploy the seat belt Pretensioners. The RCM contains a sensing device that translates vehicle acceleration to an electrical signal. The RCM compares these signals to the threshold values stored in memory. If the signals exceed the stored threshold value, the RCM will determine the severity of the event and may deploy restraints. The RCM continuously monitors the deployment loops and electrical components for malfunctions. Upon detection of a circuit malfunction, the RCM will set a DTC and illuminate the SIR system Airbag indicator.

Note: The SIR System may be active up to 30 seconds after the ignition transitions to OFF.

The supplemental inflatable restraint system utilizes the following components:

- Restraints Control Module
- Airbag Indicator
- Airbags
- Seat Belt Pretensioners
- Impact Sensors
- Restraints Occupant Classification System Module (AL0)
- Passenger Airbag Indicator (C99 / AL0)
- Passenger Airbag Disable Switch (C99)
- Seat Belt Tension Sensor
- Seat Belt Indicators

Restraints Control Module

The RCM is the control unit for the SIR system. The RCM contains internal sensors in addition to the external impact sensors. The RCM contains sensors which translate vehicle acceleration into an electrical signal, which may be used by other modules. In the event of a collision, the RCM compares the signals from the internal and external impact sensors to a threshold value stored in memory. When the generated signals exceed the stored value, the RCM will cause current to flow through the appropriate deployment loops to deploy the restraints. The RCM records the SIR system status when a deployment occurs and illuminates the SIR system Airbag indicator. The RCM performs continuous diagnostic monitoring of the SIR system electrical components and circuitry when the ignition is ON. If the RCM detects a malfunction, a DTC will set and the RCM will command the instrument cluster to illuminate the SIR system Airbag indicator, notifying the driver that a malfunction exists. If power is lost during a collision, the RCM maintains a limited energy reserve for deployment of the Airbags. It is important when disabling the SIR system for servicing or rescue operations to allow the limited energy reserve to dissipate, which could take up to 2 minutes.

Airbag Indicator

The SIR system Airbag indicator, located in the instrument cluster, is used to notify the driver of SIR system malfunctions and verify that the RCM is communicating with the instrument cluster. When the ignition is turned ON, the RCM is active. The instrument cluster will momentarily turn on the SIR system Airbag indicator. While the indicator is on, the RCM conducts tests on all SIR system components and circuits. If no malfunctions are detected the RCM will communicate with the instrument cluster through the serial data circuit and command the SIR system Airbag indicator to turn OFF. The RCM provides continuous monitoring of the SIR system components and circuits by conducting a sequence of checks. If a malfunction is detected the RCM will set a DTC and command the instrument cluster to illuminate the SIR system Airbag indicator via serial data. The presence of an SIR system malfunction could result in non-deployment of the inflatable restraints or deployment in conditions that normally would not warrant deployment. The SIR system Airbag indicator will remain on for the duration of the malfunction or until the system has been repaired.

Airbags

The vehicle will contain a number of Airbags, depending on vehicle available and optional equipment:

- Steering wheel
- Instrument panel
- Driver seat
- Passenger seat
- Instrument Panel Lower Airbag
- Passenger knee
- Left roof rail
- Right roof rail

To view the locations of the Airbags refer to: *Master Electrical Component List on page 6-1006*.

Airbags contain a housing, inflatable Airbag, an initiating device, a canister of gas generating material and, in some cases, stored compressed gas. Each Airbag has a discrete deployment loop to supply current and deploy the Airbag. The current passing through the Airbags ignite the material in the canister producing a rapid generation of gas and is some cases, the release of compressed gas. The gas produced from this reaction rapidly inflates the Airbag. Once the Airbag is inflated, it deflates through the Airbag vent holes and/or the bag fabric.

The steering wheel and instrument panel Airbag will either be a dual-stage or a single stage design.
A dual-stage Airbag uses two stages of deployment, which varies the amount of restraint to the occupant according to the collision severity. For moderate frontal collisions, the Airbag deploys at less than full deployment which consists of stage 1 of the Airbag.

During a more severe frontal collision, a full deployment is initiated which consists of stage 1 and stage 2 of the Airbag.

Seat Belt Pretensioners

The vehicle will contain a number of seat belt Pretensioners, depending on vehicle available and optional equipment:

- Driver – Seat belt anchor
- Driver – Seat belt retractor
- Passenger – Seat belt anchor
- Passenger – Seat belt retractor
- Rear Outboard Left/Right Passenger – Seat belt retractor

To view the locations of the Airbags refer to: *Master Electrical Component List on page 6-1006*.

The seat belt Pretensioners consist of a housing, seat belt retractor, seat belt anchor, seat belt webbing, initiator, and a canister of gas generating materials. The initiator is part of the seat belt pretensioner deployment loop. When the vehicle is involved in a collision of sufficient force, the RCM causes current to flow through the seat belt deployment loops to the initiator. Current passing through the initiator ignites the material in the canister producing a rapid generation of gas. The gas produced from this reaction deploys the seat belt Pretensioners which removes the slack in the seat belts. Depending on the severity of the collision, the seat belt Pretensioners may deploy without the frontal inflator modules deploying, or they will deploy immediately before the frontal inflator modules deploy.

Impact Sensors

The vehicle will contain a number of impact sensors, depending on vehicle available and optional equipment:

- Front Impact Sensor — Left
- Front Impact Sensor — Right
- Side Impact Sensor — Left Front
- Side Impact Sensor — Right Front
- Side Impact Sensor — Left Middle
- Side Impact Sensor — Right Middle
- Side Impact Sensor — Left Rear
- Side Impact Sensor — Right Rear

To view the locations of the Airbags refer to: *Master Electrical Component List on page 6-1006*.

The impact sensors contain a sensing device which monitors vehicle acceleration or pressure to detect collisions that are severe enough to warrant Airbag deployment. The impact sensors are not part of the deployment loop, but instead provide input to the RCM.

Restraints Occupant Classification System Module

The Restraints Occupant Classification System Module is used to monitor the type of occupant that is sitting in the front passenger seat and communicate the status to the RCM. The RCM then uses this information to determine whether to enable or suppress the deployment of the passenger instrument panel Airbag. The Restraints Occupant Classification System Module consists of an electronic control module, a sensor mat in the seat, Seat Belt Tension Sensor (if equipped), and a harness.

Passenger Airbag Indicator

The passenger Airbag indicator identifies the status of the instrument panel Airbag. The RCM will momentarily turn on the passenger Airbag indicators after ignition is turned ON. If an occupant is not detected in the passenger seat or the occupant type is not suitable for Airbag deployment, the Restraints Control module will illuminate the passenger Airbag OFF indicator. If an occupant is detected in the passenger seat, the Restraints Control module will illuminate the passenger Airbag ON indicator.

Seat Belt Tension Sensor

The seat belt tension sensor (if equipped) is mounted on the passenger seat belt retractor to measure the seat belt tension. If the shoulder portion of a passenger seat belt is fully extended, the infant car seat restraint locking feature may be engaged, disabling the passenger Airbag.

Passenger Airbag Disable Switch

The passenger Airbag disable switch provides the means to manually disable the ability for the passenger instrument panel Airbag to deploy. The vehicle has a passenger Airbag status indicator to inform the driver when the passenger Airbag is on or off based on the disable switch position.

Seat Belt Indicators

The seat belt indicators are controlled by the RCM. For further information on seat belt indicators refer to: *Seat Belt System Description and Operation on page 7-24*.

A

Automatic HVAC Description and Operation 5-14

B

Battery
Description and Operation 4-8

C

Charging System
Description and Operation 4-8

D

Door Ajar Indicator
Description and Operation 2-61
Door Component Views 6-914

E

Electrical Power Management Description and Operation 4-11
Exterior Lighting Systems
Description and Operation 2-42

F

Front of Vehicle/Engine Compartment Component Views 6-882
Fuel Fill Door
Description and Operation 2-61
Full-Cut Method Description 2-8

G

Garage Door Opener
Description and Operation 7-17
Ground Views 6-929

H

Harness Routing Views 6-848
Heater and Air Conditioning System Description and Operation 5-3
Hood Ajar Indicator
Description and Operation 2-61
Horn
System Description and Operation 2-12

I

Immobilizer
Description and Operation 6-5, 7-5
Instrument Panel/Center Console Component Views 6-899
Interior Lighting System
Description and Operation 2-45

K

Keyless Entry
System Description and Operation 7-17

L

Liftgate
Ajar Indicator Description and Operation 2-61
Description and Operation 2-62
Luggage Compartment/Rear of Vehicle Component Views 6-922

M

Master Electrical Component List 6-1006
Mobile Device Wireless Charger
Description and Operation 6-951

P

Parking Assist
Description and Operation 6-11, 7-11
Passenger Compartment/Roof Component Views 6-908
Power Door Locks
Description and Operation 2-63
Power Outlets
Description and Operation 6-951
Power Windows
Description and Operation 2-8
Powertrain Component Views 6-890

R

Rear Hatch/Gate Description and Operation 2-64
Rear Vision Camera
Description and Operation 3-8
Rear Window Defogger
Description and Operation 2-9
Rearview Camera
Camera Full Display Mirror Description and Operation 3-8
RPO Code List 1-7

S

Schematics
Cigar Lighter/Power Outlet 6-945
Defogger 2-7
Door Lock/Indicator 2-48
Exterior Lamps 2-18
Fog Lamps 2-17
Ground Distribution 6-983
Headlamps/Daytime Running Lamps 2-14
Hood Latch 2-57
Horns 2-11
HVAC Systems - Automatic 5-5
Image Display Cameras 3-4
Immobilizer 6-4, 7-4
Interior Lamps 2-31
Interior Lamps Dimming 2-37
Liftgate 2-58
Moveable Window 2-4
Parking Assistance Systems 6-8, 7-8
Power Distribution 6-955
Power Moding 6-981

Schematics (cont'd)
Release Systems 2-54
Remote Function 7-14
Seat Belts 7-22
SIR 7-27
Starting and Charging 4-4
Seat Belt
System Description and Operation 7-24
Starting System
Description and Operation 4-13
Stationary Window
Description 2-9
Stop/Start System
Description and Operation 4-14
Supplemental Inflatable Restraint
System Description and Operation 7-31
Surround Vision Camera
Description and Operation 3-8

U

Urethane Adhesive
Description 2-9

V

Vehicle Certification, Tire Placard, and Anti-Theft
Label 1-5
Vehicle, Engine and Transmission ID and VIN
Location, Derivative and Usage 1-3

W

Wheels/Vehicle Underbody Component
Views 6-925