Table of Contents

General Information 1-1
General Information 1-3

Body Systems 2-1
Fixed and Moveable Windows 2-3
Horns and Pedestrian Alerts 2-12
Lighting 2-15
Mirrors 2-45
Trailering Systems 2-53
Vehicle Access 2-66

Driver Information and Entertainment 3-1
Image Display Cameras 3-3

Engine/Propulsion 4-1
12 V Starting and Charging 4-3

Power and Signal Distribution 5-1
Data Communications 5-3
Electrical Component and Inline Harness Connector End Views 5-6
Power Outlets 5-859
Wiring Systems and Power Management 5-874

Safety and Security 6-1
Driver Assistance Systems 6-3
Immobilizer 6-26
Parking Assistance Systems 6-30
Remote Functions 6-36

Transmission 7-1
Shift Lock Control 7-3

INDEX INDEX-1

BLANK

Section 1

General Information

General Information 1-3
Introduction 1-3
Vehicle, Engine and Transmission ID and VIN Location, Derivative and Usage 1-3
Vehicle Certification, Tire Placard, and Anti-Theft Label 1-5
RPO Code List 1-7

BLANK

General Information

Introduction

Vehicle, Engine and Transmission ID and VIN Location, Derivative and Usage



5028742

The vehicle identification number (VIN) plate (1) is the legal identifier of the vehicle. The VIN plate is located on the upper left corner of the instrument panel. The VIN number can be seen through the windshield from the outside of the vehicle:

Vehicle Identification Number (VIN) System

Position	Definition	Character	Description
1	Country of Origin	1	United States
		2	Canada
		3	Mexico
2	Manufacturer	G	General Motors
3	Vehicle Brand/Type	B	Chevrolet Incomplete
		C	Chevrolet Truck
4	GVWR/Brake System/Body Style	N	6,001–7,000 lbs/Hydraulic/Standard Cab
		P	6,001–7,000 lbs/Hydraulic/Crew Cab
		R	6,001–7,000 lbs/Hydraulic/Extended Cab
		U	7,001–8,000 lbs/Hydraulic/Crew Cab

Vehicle Identification Number (VIN) System (cont'd)

Position	Definition	Character	Description
		V	7,001–8,000 lbs/Hydraulic/Extended Cab
5/6	Line Chassis/Series	A/A	4x2, 1500 Chevrolet Silverado, Work Truck
		A/B	4x2, 1500 Chevrolet Silverado, Custom
		A/C	4x2, 1500 Chevrolet Silverado, LT
		A/D	4x2, 1500 Chevrolet Silverado, RST
		A/E	4x2, 1500 Chevrolet Silverado, LTZ
		A/F	4x2, 1500 Chevrolet Silverado, High Country
		D/9	4x2, 1500 Chevrolet Silverado, (Non-US, Non-Canada)
		D/A	4x4, 1500 Chevrolet Silverado, Work Truck
		D/B	4x4, 1500 Chevrolet Silverado, Custom
		D/C	4x4, 1500 Chevrolet Silverado, Trail Boss Custom
		D/D	4x4, 1500 Chevrolet Silverado, LT
		D/E	4x4, 1500 Chevrolet Silverado, RST
		D/F	4x4, 1500 Chevrolet Silverado, Trail Boss - LT
		D/G	4x4, 1500 Chevrolet Silverado, LTZ
		D/H	4x4, 1500 Chevrolet Silverado ZR2
		D/J	4x4, 1500 Chevrolet Silverado High Country
		D/K	4x4, 1500 Chevrolet Silverado LTD LT-L
		D/9	4x4, 1500 Chevrolet Silverado, (Non-US, Non-Canada)
7	Restraint System	E	RPO AY0 – Active Manual Belts, Airbags – Driver and Passenger – Front (1st row), Front Seat Side (1st row), Roof Side (all seating rows)
8	Engine Type	D	RPO L84, Engine Gas, 8 Cylinder, 5.3L, DI, DFM*, Aluminum, GEN 5, VAR 2
		K	RPO L3B, Engine Gas, 4 Cylinder, L4, 2.7L, SIDI VVT, Turbo, DOHC, Aluminum
		L	RPO L87, Engine Gas, 8 Cylinder, V8, 6.2L, DI AFM, Aluminum, GEN 5
		T	RPO LM2, Engine Diesel, 6 Cylinder, 3.0L, CRI, V6, DOHC, Turbo, VGT, Aluminum
9	Check Digit	—	Check Digit
10	Model Year	N	2022
11	Plant Location	Z	Fort Wayne, Indiana, USA
		1	Oshawa, Canada
G	Silao, Mexico		
12–17	Plant Sequence Number	—	Plant Sequence Number

2.7L (L3B) Engine ID and VIN Derivative Location

Engine Identification

3.0L (LM2) Diesel Engine ID and VIN Derivative Location

Engine Identification

5.3L (L84) or 6.2L (L87) Engine ID and VIN Derivative Location

Engine Identification

10L80 (MQB) Transmission ID and VIN Derivative Location

Transmission Identification Information

8L90 (MQE) Transmission ID and VIN Derivative Location

Transmission Identification Information

Vehicle Certification, Tire Placard, and Anti-Theft Label

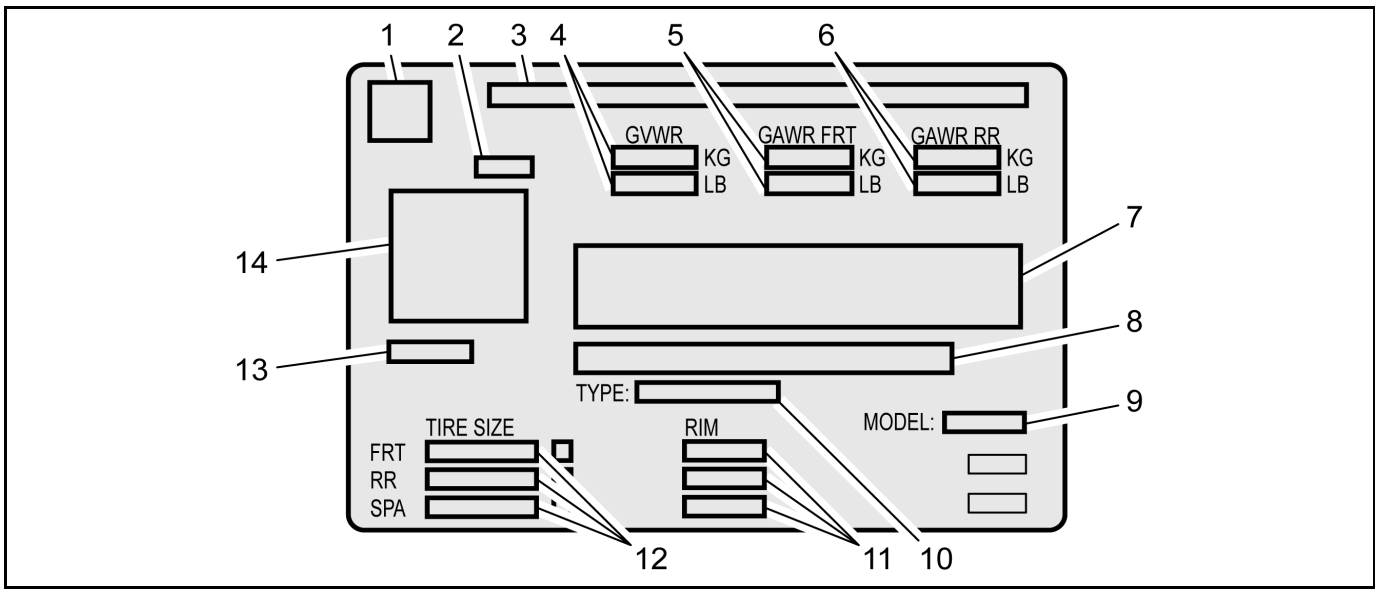

4992823

Vehicle Certification Label

Callout	Description
A vehicle-specific Certification label is attached to the vehicle's center pillar (B-pillar) and displays the following assessments:	
1	Logo
2	Final Date of Manufacture (Month and Year MM/YY) Date of manufacture is to reflect the date that the vehicle is counted as built. In those cases where a replacement label is needed, the replacement label should reflect the actual build date not the date of replacement.
3	Name of Manufacturer
4	Maximum Gross Vehicle Weight Rating (GVWR)
5	Maximum Gross Axle Weight Rating (GAWR) - Front
6	Maximum Gross Axle Weight Rating (GAWR) - Rear
7	Certification Statement
8	Vehicle Identification Number (VIN)
9	Engineering Model Number
10	Vehicle Class Type (Pass Car, etc.)
11	Original Equipment Rim Size
12	Original Equipment Tire Size
13	Paint Code
14	QR Code Once the QR code is scanned, the information will appear in this order on your smartphone or laptop: VIN, Model Year, Model, Build Month, Year, Engineering Book, Vehicle Order Number, 3 Digit RPO Codes sorted alphanumerically and the Paint Code (same code appears the lower left of the QR code)

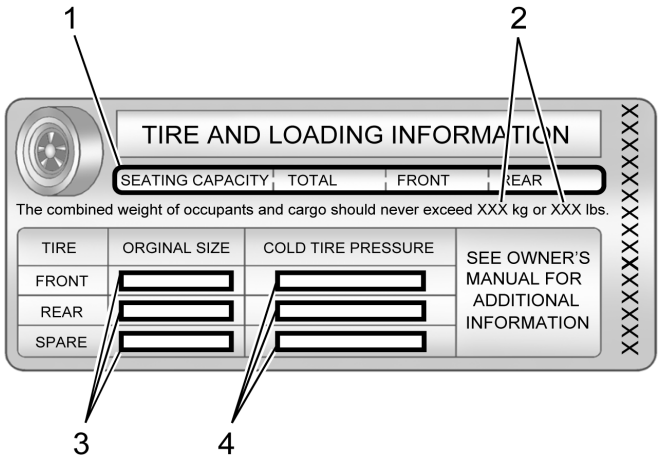
1
2
TIRE AND LOADING INFORMATION
SEATING CAPACITY
TOTAL
FRONT
REAR
The combined weight of occupants and cargo should never exceed XXX kg or XXX lbs.
TIRE
ORGINAL SIZE
COLD TIRE PRESSURE
FRONT
REAR
SPARE
SEE OWNER'S MANUAL FOR ADDITIONAL INFORMATION
XXXX

Anti-Theft Label

Callout	Description
This legal identifier is in the front corner of the instrument panel, on the driver side of the vehicle. It can be seen through the windshield from outside. The Vehicle Identification Number (VIN) also appears on the Vehicle Certification and certificates of title and registration.	
1	Vehicle Identification Number (VIN)

RPO Code List

The following table provides the description of the Regular Production Option (RPO) codes that are available on the vehicle. The vehicle's RPO list is printed on the Service Parts Identification Label.

RPO	Description
00D	IDENTIFICATION-NOT EQUIPPED WITH VISUAL AUTO TEMP ON HVAC DIALS
00V	IDENTIFICATION-NOT EQUIPPED WITH FRONT HEAT/VENT SEATS
1CX	PACKAGE-CX OPTION 1
1LT	PACKAGE-LT OPTION 1
1LZ	PACKAGE-LZ OPTION 1
1SP	PACKAGE-OPTION 14
1WT	PACKAGE-WT OPTION 1
2CX	PACKAGE-CX OPTION 2
2FL	PACKAGE-FL OPTION 2
2LT	PACKAGE-LT OPTION 2
3LZ	PACKAGE-LZ OPTION 3
4AA	INTERIOR TRIM-JET BLACK
4JJ	INTERIOR TRIM-GIDEON/VY DK ATMOSPHERE
4JS	INTERIOR TRIM-JET BLACK/UMBER
5A7	WHEEL SPARE-NONE
5JL	ACCESSORY-BRAKE UPGRADE PKG 1 - COMPLETE
5JY	ACCESSORY-TONNEAU - RR COMPT - SOFT FOLDING
5LE	ACCESSORY-GARAGE DOOR OPENER
5LL	ACCESSORY-DECAL PACKAGE - BODYSIDE - DESIGN 10
5LM	ACCESSORY-DECAL PACKAGE - BODYSIDE - DESIGN 11
5VE	ACCESSORY-EXHAUST TIP - DESIGN 5
5VF	ACCESSORY-EXHAUST TIP - DESIGN 3
5VG	ACCESSORY-EXHAUST TIP - DESIGN 4
5VI	ACCESSORY-TIE DOWN RINGS - CARGO AREA
5W4	SALES PACKAGE-SPECIAL SERVICE, MUNICIPAL
5W7	ACCESSORY-AIR FILTER - PERFORMANCE
63G	ACCESSORY-TAILGATE ASSIST LIGHTING
65C	LABEL, WARNING-CALIFORNIA, PROP 65 COMPLIANT
6K5	SALES PACKAGE-CONVENIENCE II
9J4	BUMPER RR-(NONE)
9L3	TIRE SPARE-NONE
9L7	EQUIPMENT-ACSRY WRG JUNC BLK
A2S	ADJUSTER DRIVER SEAT-4WAY, DISCONT MAN RECLINE, MAN FORE/AFT
A2X	ADJUSTER DRIVER SEAT-8WAY, PWR RECLINE, PWR FORE/AFT, PWR HEIGHT, PWR TILT
A45	MEMORY-SEAT ADJUSTER, MIRROR, POWER, DRIVER, PERSONALIZATION
A48	WINDOW RR-FULL WIDTH, SLIDING, POWER
A50	SEAT-FRT BKT
A60	LOCK CONTROL RR CMPT-LID, TAILGATE, KEY ACTIVATED
A68	SEAT RR-SPLIT, FOLDING
A6Q	WINDOW REG DRVR DR-MANUAL OPERATED (DO NOT USE NEXT NEW MAJOR)
A6R	WINDOW REG PASS DR-MANUAL OPERATED (DO NOT USE NEXT NEW MAJOR)
A7E	ADJUSTER PASS ST-4WAY, DISCONT MAN RECLINE, MAN FORE/AFT
A7K	ADJUSTER PASS ST-8WAY, PWR RECLINE, PWR FORE/AFT, PWR HEIGHT, PWR TILT
AAK	ACCESSORY-FLOOR LINER - CONTOURED - ALT DESIGN 1
AE7	SEAT-FRT SPLIT, DRIVER, PASS
AED	WINDOW REG PASS DR-POWER OPERATED,EXPRESS DOWN (DO NOT USE NEXT NEW MAJOR)
AEF	WINDOW REG PASS DR-POWER OPERATED, EXPRESS UP/DOWN (DO NOT USE NEXT NEW MAJOR)
AEQ	WINDOW REG REAR DR-POWER OPERATED, EXPRESS DOWN (DO NOT USE NEXT NEW MAJOR)
AKO	WINDOW TYPE-PRIVACY
AKP	WINDOW TYPE-SOLAR ABSORBING
AL0	SENSOR INDICATOR-INFLATABLE RESTRAINT, FRT PASS/CHILD PRESENCE DETECTOR
AMK	VEHICLE-EFFECTIVE POINT CONTROL, 2022 M.Y.

RPO	Description
AQQ	LOCK CONTROL, ENTRY-REMOTE ENTRY, EXTENDED RANGE (MY 09 AND FUTURE)
ASV	EQUIPMENT-SENSOR AIR MOISTURE & W/S TEMP
AU3	LOCK CONTROL-SIDE DR, ELEC
AVJ	LOCK CONTROL, ENTRY-REMOTE ENTRY, EXTENDED RANGE, PASSIVE ENTRY, FRONT DOORS
AXG	WINDOW REG DRVR DR-POWER OPERATED, EXPRESS UP/DOWN (DO NOT USE NEXT NEW MAJOR)
AXK	VEHICLE TYPE-TRUCK
AY0	RESTRAINT SYSTEM-SEAT, INFLATABLE, DRIVER & PASS FRT, SEAT SIDE, ROOF SIDE
AZ3	SEAT-FRT SPLIT, DRIVER, PASS, FULL FEATURE CENTER
B1J	LINER-RR WHEELHOUSE
B26	SALES PACKAGE-SAFETY PACKAGE VAR. 1
B30	COVERING FLOOR-CARPET
B32	COVERING FRT-FLOOR MATS, AUX
B33	COVERING REAR-FLOOR MATS, AUX
B34	COVERING FRT-FLOOR MATS, CARPETED INSERT
B35	COVERING REAR-FLOOR MATS, CARPETED INSERT
B4U	PERFORMANCE PACKAGE-SPORT
B59	SALES PACKAGE-FUNCTIONAL PACKAGE
BAQ	SALES PACKAGE-STYLE VAR 1
BG9	COVERING FLOOR-RUBBER
BGP	SALES PACKAGE-SAFETY PACKAGE VAR. 2
BKE	COVERING REAR-FLOOR MATS, FLOOR LINER CARPET INSERT
BKF	COVERING FRT-FLOOR MATS, FLOOR LINER CARPET INSERT
BPH	APPEARANCE PACKAGE-CHEVROLET "OFF ROAD"
BRS	STEPS, RUNNINGBOARD-SIDE, RETRACTABLE, POWER, BRIGHT
BTM	SWITCH-START, KEYLESS
BTV	REMOTE START-VEHICLE
BVT	STEPS, RUNNINGBOARD-SIDE, CHROME
BWN	STEPS-CORNER ASSIST, BUMPER
C32	HEATER AIR SYSTEM-HEATING/ DEFROSTER SYSTEM, REINFORCED, ELECTRIC
C49	DEFOGGER-RR WINDOW, ELECTRIC
C4P	HVAC SYSTEM-AIR CONDITIONER FRT, SEMIAUTOMATIC, ELECTRONIC CONTROLS
C59	VENT-AIR, CONSOLE, RR

RPO	Description
C67	HVAC SYSTEM-AIR CONDITIONER FRT, ELECTRONIC CONTROLS
CF5	ROOF-SUN, GLASS, SLIDING, ELEC (DO NOT USE NEXT NEW MAJOR)
CGN	LINER-PUBX, SPRAY ON
CJ2	HVAC SYSTEM-AIR CONDITIONER FRT, AUTO TEMP CONT, AUX TEMP CONT
CTT	HITCH ASSIST-GUIDELINES
CWM	SALES PACKAGE-TECHNOLOGY
CXH	SALES PACKAGE-INTERIOR LEATHER PACKAGE
D07	CONSOLE-FRT COMPT, FLOOR, CUSTOM
D31	MIRROR I/S R/V-TILT
D4J	COUNTRY-US VIRGIN ISLAND
D72	HANDLE O/S DOOR-BLACK
D75	HANDLE O/S DOOR-BODY COLOR
DD8	MIRROR I/S R/V-LT SENSITIVE
DEN	MIRROR O/S-LH & RH, MANUAL, MANUAL FOLD, FLAT/DRVR, CNVX/PASS
DEZ	MIRROR O/S-LH & RH, ELEC REMOTE, POWER FOLD, HEAT, PERM LIGHT, LT SENSITIVE DRVR, FLAT/DRVR, CNVX/PASS
DH6	MIRROR I/S FRT VAN-LH & RH, SUNSHADE, ILLUM (DO NOT USE NEXT NEW MAJOR)
DLF	MIRROR O/S-LH & RH, RC, ELEC, HEAT, MAN FOLD, FLAT/DRVR, CNVXPASS
DNS	EQUIPMENT-SUPPLIER INSTALLED
DP6	MIRROR PROVISIONS-HOUSING, PAINTED
DP9	MIRROR PROVISIONS-HOUSING, CHROME
DPO	MIRROR O/S-LH & RH, WIDE FIELD OF VIEW, MAN EXTEND, MAN FOLD, HEATED, REMOTE CONT, AUX CARGO LMP, AUX CLEAR LMP
DQS	MIRROR O/S-LH & RH, WIDE LOAD, VERT GLS,MAN EXT,PWR FLD,HTD,TURN SIG IND,R/CON,MEMORY,AUX CLEAR LP,AUX CARGO LP
DRZ	MIRROR I/S R/V-LT SENSITIVE, FULL VIDEO DISPLAY
E20	HANDLE O/S DOOR-CHROME
E35	PICKUP BOX INNER-STEEL
E63	BODY EQUIPMENT-FLEETSIDE PICK-UP BOX
E6J	COUNTRY-PUERTO RICO
EF7	COUNTRY-UNITED STATES OF AMERICA (USA)
ENL	ENG CONTROL DISABLE-STOP/START, NON-LATCHING
F48	CHASSIS DRIVE LINE-ALL WHEEL DRIVE (AWD)/FOUR WHEEL DRIVE(4WD), DRIVER SELECT
FE9	CERTIFICATION-EMISSION, FEDERAL

RPO	Description
FHS	VEHICLE FUEL-GASOLINE E85
FHX	VEHICLE FUEL-DIESEL B20
FJW	VEHICLE FUEL-GASOLINE E15
FWI	PLANT CODE-FT WAYNE, IN, USA
G0S	SALES PACKAGE-CAMO EDITION
G1W	PRIMARY COLOR-EXTERIOR, ABALONE WHITE TRICOAT(140X)
G7C	PRIMARY COLOR-EXTERIOR, PULL ME OVER RED SOLID (130X)
G80	AXLE POSITRACTION-LIMITED SLIP
G93	AXLE-FRT ELECTRONIC LOCKING DIFFERENTIAL, DRIVER SELECT
G94	AXLE-RR ELECTRONIC LOCKING DIFFERENTIAL, DRIVER SELECT
G9K	PRIMARY COLOR-EXTERIOR, SATIN STEEL GRAY MET-3 (464C)
GA0	PRIMARY COLOR-EXTERIOR, SOME KINDA BLUE MET -1 (619D)
GAN	PRIMARY COLOR-EXTERIOR, SWITCHBLADE SILVER MET (G) 636R
GAZ	PRIMARY COLOR-EXTERIOR, SUMMIT WHITE (G) 8624
GB8	PRIMARY COLOR-EXTERIOR, BLACK MEET KETTLE MET (384A)
GBA	PRIMARY COLOR-EXTERIOR, BLACK (G) 8555
GEY	HANDLING CHARGE-FROM FT WAYNE ASM, TO GROUND EFFECTS LTD., FT WAYNE, IN, BACK TO FT WAYNE ASM.
GF2	TRIM PACKAGE-CUSTOM
GF3	TRIM PACKAGE-LT
GF4	TRIM PACKAGE-TRAIL BOSS LT
GF5	TRIM PACKAGE-WORK TRUCK
GF9	TRIM PACKAGE-LTZ
GFC	TRIM PACKAGE-RST
GFD	TRIM PACKAGE-HIGH COUNTRY
GG0	TRIM PACKAGE-LT-L
GJI	PRIMARY COLOR-EXTERIOR, DARK SHADOW MET -1 (626D)
GNK	PRIMARY COLOR-EXTERIOR, OXFORD MET-1 (334E)
GPZ	TRIM PACKAGE-TRAIL BOSS CUSTOM
GSK	PRIMARY COLOR-EXTERIOR, CHERRY POP TINT-1 (252F)
GT4	AXLE REAR-3.73 RATIO
GU5	AXLE REAR-3.23 RATIO
GU6	AXLE REAR-3.42 RATIO
H0U	INTERIOR TRIM CONFIG-CLOTH, LEVEL 2, JET BLACK
H0Y	INTERIOR TRIM CONFIG-LEATHER, LEVEL 1, JET BLACK
H1T	INTERIOR TRIM CONFIG-CLOTH, LEVEL 1, JET BLACK
H1Y	INTERIOR TRIM CONFIG-LEATHER, LEVEL 2, JET BLACK
H2G	INTERIOR TRIM CONFIG-VINYL, LEVEL 1, JET BLACK
H2U	INTERIOR TRIM CONFIG-LEATHER, LEVEL 3, JET BLACK
HS1	ALERT-SAFETY HAPTIC SEAT
HV5	INTERIOR TRIM CONFIG-CLOTH, LEVEL 2, GIDEON/VY DK ATMOSPHERE
HVC	INTERIOR TRIM CONFIG-LEATHER, LEVEL 1, GIDEON/VY DK ATMOSPHERE
HVE	INTERIOR TRIM CONFIG-LEATHER, LEVEL 2, GIDEON/VY DK ATMOSPHERE
HVG	INTERIOR TRIM CONFIG-LEATHER, LEVEL 3, JET BLACK / UMBER
IOK	INFOTAINMENT SYSTEM - 3.X MID/HIGH HMI,ENHANCED CONNECTIVITY 2.0, VOICE RECOGNITION
IOR	RADIO-INFOTAINMENT SYSTEM - 3.X LOW HMI, MIDLEVEL CONNECTIVITY 3.X
IOS	RADIO-INFOTAINMENT SYSTEM - 3.X MID/ HIGH HMI, ENHANCED CONNECTIVITY, VOICE RECOGNITION, MID SD NAV CAPABLE
IOT	RADIO-INFOTAINMENT SYSTEM - 3.X MID/ HIGH HMI, ENHANCED CONNECTIVITY, VOICE RECOGNITION, PREMIUM SD NAV
J21	ENGINEERING YEAR-2021
J61	BRAKE SYSTEM-POWER, FRT & RR DISC, ABS, 17"
JBP	BRAKE LINING WEAR SY-LIFE SPAN PROGNOSTIC INDICATOR
JHD	BRK APL CTRL FEATURE-HILL DESCENT, GEAR HOLD
JL1	BRK APL CTRL FEATURE-INTEGRATED TRAILER BRAKE
K05	HEATER ENG-BLOCK
K34	CRUISE CONTROL-AUTOMATIC, ELECTRONIC
K47	AIR CLEANER-HIGH CAPACITY
K4C	CHARGER-INDUCTIVE PORTABLE WIRELESS DEVICE
KA1	HEATER SEAT FRT-DRVR & PASS
KA6	HEATER SEAT-REAR
KC4	COOLING SYSTEM-ENG OIL
KC5	RECEPTACLE-ELECTRICAL, ACCESSORY
KC9	RECEPTACLE PUBX-ELECTRICAL, 110 VOLT
KI3	STEERING WHEEL HEAT-AUTOMATIC
KI4	RECEPTACLE I/P-ELECTRICAL, 110 VOLT
KL9	ENG CONTROL-STOP/START SYS, CONVENTIONAL AT, CONVENTIONAL MT OR BRAKE RELEASE LATE RESTART
KNP	COOLING SYSTEM-TRANS, HD
KPA	RECEPTACLE-ELECTRICAL, FRT CONSOLE RR, 12 VOLT

RPO	Description
KQV	HEATER-SEAT, VENTED, FRT (DO NOT USE NEXT NEW MAJOR, USE KU9)
KSG	CRUISE CONTROL-AUTOMATIC, ADAPTIVE, WITH STOP/GO
KW5	GENERATOR-220 AMP
KW7	GENERATOR-170 AMP
L3B	ENGINE-GAS, 4 CYL, L4, 2.7L, SIDI, VVT, TURBO, DOHC, ALUM
L84	ENGINE-GAS, 8 CYL, 5.3L, V8, DI, DFM, ALUM, GEN 5
L87	ENGINE-GAS, 8 CYL, V8, 6.2L, DI, DFM, ALUM, GEN 5
LM2	ENGINE-DIESEL, 6 CYL, 3.0L, CRI, L6, DOHC, TURBO, VGT, ALUM, CSS50V, VAR. 1
MAH	MARKETING AREA-US, PUERTO RICO/USVI
MCR	RECEPTACLE-MEMORY CARD (DO NOT USE NEXT NEW MAJOR)
MCZ	PORT, MULTI ELEK DEV-USB (DO NOT USE NEXT NEW MAJOR, SEE BFO)
MQB	TRANSMISSION-AUTO 10 SPD, 10L80, ATSS, CPA, GEN 2
MQE	TRANSMISSION-AUTO 8 SPD, 8L90, ATSS, CPA, GEN 1
MSL	PLANT CODE-SILAO, MEXICO
N06	STEERING COLUMN LOCK-ELECTRICAL
N10	EXHAUST SYSTEM-DUAL
N33	STEERING COLUMN-TILT TYPE
N37	STEERING COLUMN-TILT, TELESCOPING
NB5	EXHAUST SYSTEM-SINGLE (DO NOT USE NEXT NEW MAJOR, USE NC2)
NE1	CERTIFICATION-EMISSION, GEOGRAPHICALLY RESTRICTED REGISTRATION
NHT	PERFORMANCE PACKAGE-ENHANCED TOWING
NK5	STEERING WHEEL-STANDARD
NP0	TRANSFER CASE-ACTIVE, SINGLE SPEED,SWITCH ACTIVATED,ALUM
NP5	STEERING WHEEL-LEATHER WRAPPED
NQH	TRANSFER CASE-ACTIVE, TWO SPEED, SWITCH ACTIVATED, ALUM
NSS	IDENTIFICATION-NOT EQUIPPED WITH STOP/START SYS
NTB	EMISSION SYSTEM-FEDERAL, TIER 3
NUC	EMISSION SYSTEM-CALIFORNIA, ULEV50
NUF	EMISSION SYSTEM-CALIFORNIA, ULEV125
NZJ	WHEEL-20 X 9.0, J, ALUMINUM, DESIGN 9
NZP	WHEEL-20 X 9.0, J, ALUMINUM, DESIGN 12
NZZ	SALES PACKAGE-SKID PLATE, "OFF ROAD" SPORT
PTT	TRAILER TIRE PRESSUR-MANUAL LEARN
PZ8	IMAGE ADJUSTMENT-HITCH VIEW
PZX	WHEEL-18 X 8.5, J, ALUMINUM, DESIGN 2
Q5U	WHEEL-17 X 8.0, J, ALUMINUM, DESIGN 2
QAB	TIRE ALL-275/60R20 SL 115S BW AL2
QAE	TIRE ALL-275/60R20 SL 115S BW AT
QAQ	TIRE SPARE-255/80R17 SL 115S BW SPR
QBN	TIRE ALL-255/70R17 SL 112S BW ALS VAR 1
QBR	TIRE SPARE-255/70R17 SL 112S BW ALS VAR1
QDF	TIRE ALL-265/65R18 SL 114T BW ALS VAR 1
QDS	TIRE ALL-265/65R18 SL 114T WOL AT VAR 1
QDV	TIRE ALL-265/70R17 SL 115S BW AT VAR 1
QFV	TIRE ALL-LT265/60R20 C 110/107S BW OOR, VAR 1
QK1	GATE TYPE-PUBX END STANDARD
QK2	GATE TYPE-PUBX END ENHANCED
QT2	GATE FUNCTION-MANUAL
QT5	GATE FUNCTION-MANUAL ASSIST POWER RELEASE
QT6	GATE FUNCTION-POWER
R3O	TIRE ALL-LT275/65R18 C 113/110Q BW OOR, VAR1
R7O	SEAT RR-SPLIT, FOLDING, BASE STORAGE
R88	ACCESSORY-ILLUMINATED EMBLEM - EXTERIOR - DESIGN 2
RBR	WHEEL-22 X 9.0, J, STEEL, DESIGN 1
RC5	TIRE ALL-LT265/70R17 C 112Q BW AT
RCP	ACCESSORY TIRE-TIRE ALL - LT275/65R18 C 113/110Q BW OOR VAR1
RD1	WHEEL-18 X 8.5, J, ALUMINUM, DESIGN 6
RD2	WHEEL-20 X 9.0, J, ALUMINUM, DESIGN 2
RD4	WHEEL-20 X 9.0, J, ALUMINUM, DESIGN 4
RD5	WHEEL-20 X 9.0, J, ALUMINUM, DESIGN 5
RD6	WHEEL-17 X 8.0, J, STEEL, DESIGN 2
RDI	ACCESSORY-KEYLESS ENTRY
RHM	TIRE SPARE-LT265/70R17 C 112Q BW AT
RIA	ACCESSORY-FLOOR LINER - CONTOURED
RIK	ACCESSORY-BADGE - EXTERIOR, PACKAGE, DESIGN 1
RIN	ACCESSORY-BADGE - EXTERIOR, PACKAGE, DESIGN 2
RM7	WHEEL SPARE-17 X 8.0, J, STEEL, DESIGN 1
RN2	ACCESSORY-ILLUMINATED EMBLEM - EXTERIOR - DESIGN 1
RPP	WHEEL-17 X 8.0, J, STEEL, DESIGN 4

RPO	Description
RPS	WHEEL-20 X 9.0, J, ALUMINUM, DESIGN 13
RVA	WHEEL-22 X 9.0, J, ALUMINUM, DESIGN 1
RVG	ACCESSORY-ADAPTER - TRAILER HARNESS
RVQ	ACCESSORY-ASSIST STEPS - TUBULAR - OVAL - BLACK
RVS	ACCESSORY-ASSIST STEPS - TUBULAR - ROUND - BLACK
RW9	ACCESSORY-BED STORAGE BOX - SIDE FULL LENGTH - COMPOSITE
RWL	CHASSIS DRIVE LINE-REAR WHEEL DRIVE (RWD)
RWR	ACCESSORY-CAMERA - REAR VISION
RWS	ACCESSORY-FLOOR MATS - CARPET
RXC	ACCESSORY-AIR, POLLUTANT, ODOR, FINE DUST, ALLERGEN
RXH	ACCESSORY-CENTER CAP - WHEEL - DESIGN 1
RXJ	ACCESSORY-CENTER CAP - WHEEL - DESIGN 2
RXQ	ACCESSORY-CONVENIENCE NET - BED MOUNTED
RYT	ACCESSORY-FIRST AID KIT
S08	ACCESSORY-HIGHWAY SAFETY KIT
S0M	ACCESSORY-ILLUMINATED DOOR SILLS
S0P	ACCESSORY-INSERT - FLOOR CONSOLE
S0T	ACCESSORY-INTERIOR TRIM KIT - ALTERNATE FINISH 1
S0Y	ACCESSORY-LAMPS - CARGO AREA
S1O	ACCESSORY-CONTAINER - LOCKABLE STORAGE - INTERIOR
S1V	ACCESSORY-HEADPHONES - RSE
S2B	WHEEL SPARE-17 X 7.0, J, ALUMINUM, DESIGN 1
S3I	ACCESSORY-LAMPS - PERIMETER ILLUMINATION
S3U	ACCESSORY-LAMP KIT - FRONT FOG
S41	ACCESSORY-LINER - WHEEL HOUSE
S47	ACCESSORY-LUG NUTS
S4X	ACCESSORY-MIRROR COVERS/SKULL CAPS - ALTERNATE FINISH - PAINTED
S4Z	ACCESSORY-MIRRORS - TRAILER EXTENSION
S6L	ACCESSORY-PROTECTOR - ROCKER PANEL
S6N	ACCESSORY-RECEIVER COVER - TRAILER HITCH
S6P	ACCESSORY-REMOTE START KIT
S6Z	ACCESSORY-SEAT COVER - TAILORED - ALTERNATE MATERIAL
SAF	LOCK-SPARE TIRE, HOIST SHAFT
SB1	ACCESSORY-SPLASH GUARDS - FLAT

RPO	Description
SB7	ACCESSORY-DECAL PACKAGE - DESIGN 1
SB9	ACCESSORY-DECAL PACKAGE - DESIGN 2
SBY	ACCESSORY-SPORT BAR - BED MOUNTED - DESIGN 1
SD5	ACCESSORY-TIRE PRESSURE MONITOR
SDA	ACCESSORY-TOW HOOKS
SDE	ACCESSORY-TRAILER HITCH - REMOVABLE
SE5	ACCESSORY-WHEEL - 18" - ALUMINUM - DESIGN 2
SEH	ACCESSORY-WHEEL - 20" - ALUMINUM - DESIGN 1
SES	ACCESSORY-WHEEL - 22 X 9.0 - J - ALUMINUM - DESIGN 1
SEU	ACCESSORY-WHEEL - 22 X 9.0 - J - ALUMINUM - DESIGN 2
SEV	ACCESSORY-WHEEL - 22 X 9.0 - J - ALUMINUM - DESIGN 3
SEW	ACCESSORY-WHEEL - 22 X 9.0 - J - ALUMINUM - DESIGN 4
SEZ	ACCESSORY-WHEEL - 22 X 9.0 - J - ALUMINUM - DESIGN 6
SF0	ACCESSORY-WHEEL - 22 X 9.0 - J - ALUMINUM - DESIGN 7
SF1	ACCESSORY-WHEEL - 22 X 9.0 - J - ALUMINUM - DESIGN 8
SF5	ACCESSORY-WHEEL FLARES - ALTERNATE DESIGN - MOLDED COLOR
SF8	ACCESSORY-DECAL PACKAGE - DESIGN 3
SFE	ACCESSORY-WHEEL LOCKS
SFJ	ACCESSORY-WINDOW SHADES - REFLECTIVE
SFZ	ACCESSORY-EMBLEM - EXTERIOR - DESIGN 1
SG3	ACCESSORY-SPRINGS - SPORT SUSPENSION
SGM	ACCESSORY-WHEEL - 22 X 9.0 - J - ALUMINUM - DESIGN 9
SHD	ACCESSORY-WHEEL - 22 X 9.0 - J - ALUMINUM - DESIGN 10
SIE	ACCESSORY-PUBX TIERED STORAGE
SIL	ACCESSORY-RSE - PORTABLE MEDIA CONNECTIVITY PKG - W/INTEGRATED POWER
SJB	ACCESSORY-GRILLE / GRILLE INSERTS - ALTERNATE FINISH 3
SKY	ACCESSORY-WHEEL - 18 X 8.5 - J - ALUMINUM - DESIGN 1
SL7	ACCESSORY-PUBX LADDER / UTILITY RACK STANCHIONS
SNR	SEAT RR-SPLIT, FOLDING, DELUXE STORAGE

RPO	Description
SNS	ACCESSORY-DECAL PACKAGE - DESIGN 28
SPY	ACCESSORY-LUG NUTS - ALT FINISH
SPZ	ACCESSORY-WHEEL LOCKS - ALT FINISH
SR3	ACCESSORY-RSE - DUAL HEADREST DISPLAY W/WIRELESS CONNECTIVITY & DVD
STH	SALES PACKAGE-RALLY 2
SUR	ACCESSORY-TRAILER TIRE PRESSURE MONITOR
T3U	LAMP FRT FOG-FRT FOG
TDM	MODE TEEN DRIVER-SETTINGS, INFOTAINMENT
THS	TRAILERING ASSIST-REVERSE
TQ5	HEADLAMP HIGH BEAM-AUTO CONTROL
TRO	ACCESSORY-CAMERA PKG - TRAILERING AUX MOUNTED
TT0	ACCESSORY-TRAILERING HOOKUP ASSIST
TUF	ORNAMENTATION-EMBLEM, "TEXAS EDITION"
U12	LAMP-EXTR, OSRV MIRROR, TASK
U1D	INDICATOR-TRAILER INFORMATION
U2J	DIGITAL AUDIO SYSTEM-S-BAND - NONE (DNU NEXT NEW MAJOR)
U2K	DIGITAL AUDIO SYSTEM-S-BAND
U73	ANTENNA-FIXED, RADIO
U95	SPEAKER SYSTEM-2, BASE
UD5	PARK ASSIST-FRONT AND REAR
UD7	PARK ASSIST-REAR
UDC	DISPLAY INSTRUMENT-DRIVER INFO ENHANCED (ONE COLOR GRAPHIC)
UDD	DISPLAY INSTRUMENT-DRIVER INFO ENHANCED (MULTI COLOR STANDARD GRAPHIC)
UDU	PROVISIONS-REAR CAMERA PREP
UE0	COMMUNICATION SYSTEM-VEHICLE - NONE (DO NOT USE NEXT NEW MAJOR)
UE1	COMMUNICATION SYSTEM-VEHICLE, ONSTAR
UE4	SENSOR INDICATOR-FOLLOWING DISTANCE
UEU	SENSOR INDICATOR-FORWARD COLLISION ALERT
UF2	LAMP-CARGO
UFG	REAR CROSS TRAFFIC-ALERT
UG1	OPENER-GARAGE DOOR, UNIVERSAL
UGA	HOOK-TOW, RED
UHL	VEHICLE-U-HAUL
UHS	DISPLAY INSTRUMENT-DRIVER INFO ENHANCED (MULTI COLOR ENHANCED GRAPHIC)
UHX	LANE ACTIVE SAFETY-KEEP ASSIST

RPO	Description
UHY	COLL IMMINENT BRK-LOW SPEED, VEH FWD MOVEMENT, BRAKE PREFILL, INTEGRATED BRAKE ASSIST
UIJ	INFOTAINMENT DISPLAY-NORMALLY BLACK COLOR (TFT), 8", WVGA 800X480P
UIK	INFOTAINMENT DISPLAY-NORMALLY BLACK COLOR (TFT), 8", WXGA 1280X768P
UIR	INFOTAINMENT DISPLAY-NORMALLY BLACK COLOR (TFT), 7", WVGA 800X480P
UJM	TIRE PRESS INDICATOR-MANUAL LEARN
UK3	CONTROL-STEERING WHEEL, ACCESSORY
UKC	SIDE ACTIVE SAFETY-OBSTACLE DETECTION ENHANCED
UKJ	PED DETECTION FRT-BASIC, PEDESTRIANS
ULK	ACCESSORY-TOW HOOKS - RED
UMN	SPEEDOMETER-INST, MILES & KILO, MILES ODOMETER
UQA	SPEAKER SYSTEM-PREMIUM AUDIO, BRANDED AMPLIFIER
UQF	SPEAKER SYSTEM-STANDARD AUDIO
URC	SWITCH-FLEXRIDE MODE SYSTEM
USS	RECEPTACLE-USB CHARGE PORT (DO NOT USE NEXT NEW MAJOR, SEE BFO)
UTJ	THEFT DETERENT-ELECTRICAL, UNAUTHORIZED ENTRY
UV6	HEAD UP DISPLAY-WINDSHIELD
UVB	VISION-REAR VIEW, MONO, HD DIGITAL
UVC	VISION-REAR VIEW, MONO, ANALOG
UVI	VISION-270 & REAR TRAILER VIEW, MONO, HD DIGITAL(DO NOT USE AFTER MY2022)
UVN	VISION AUXILIARY-CARGO BED
UVS	VISION-360 & TRAILER VIEW, MONO, HD DIGITAL (DO NOT USE AFTER MY2022)
V46	BUMPER FRT-CHROME
V76	HOOK-TOW
V8D	VEHICLE STATEMENT-VEHICLE LABEL CONTENT - U.S. FMVSS
VAV	ACCESSORY-FLOOR MATS - ALL WEATHER
VB5	BUMPER FRT-COLOR
VBJ	ACCESSORY-UNDERSEAT STORAGE
VBN	ACCESSORY-PUBX CARPET
VBR	ACCESSORY-PUBX RUBBER MAT
VGC	PROTECTOR-FILM, PAINT ETCH PREVENTIVE
VH6	BUMPER FRT-BLACK
VJG	BUMPER RR-BLACK
VJH	BUMPER RR-CHROME
VK3	LICENSE PLATE FRONT-FRT MOUNTING PKG

RPO	Description
VKU	ACCESSORY-MIRROR CAPS - CHROME
VKW	ACCESSORY-ORGANIZER - FRONT CONSOLE
VKY	ACCESSORY-DOOR HANDLES - ALTERNATE FINISH - CHROME
VLQ	HOOK-TOW, CHROME
VMK	ACCESSORY-CARGO MANAGEMENT SYSTEM RAILS
VNI	ACCESSORY-REAR FASCIA APPLIQUE - ALTERNATIVE FINISH 1
VOZ	ACCESSORY-TONNEAU - RR COMPT - HARD FOLDING - ALT DESIGN
VPB	ACCESSORY-TONNEAU - RR COMPT - VINYL W/ INTEGRAL CROSSBOW SUPPORTS
VPI	ACCESSORY-REAR FASCIA APPLIQUE - ALTERNATIVE FINISH 2
VQK	ACCESSORY-SPLASH GUARDS - CUSTOM MOLDED
VQM	ACCESSORY-ASSIST STEPS - CHROME
VQO	ACCESSORY-ASSIST STEPS - BLACK
VQY	ACCESSORY-TOW HOOKS - CHROME
VQZ	ACCESSORY-EXHAUST TIP - DESIGN 1
VST	ACCESSORY-SILL PLATES - ALTERNATE DESIGN 1
VSX	LABEL-TOWING
VT2	ACCESSORY-ASSIST STEPS - ALTERNATE FINISH
VT5	BUMPER RR-COLOR KEYED
VT7	OWNERS MANUAL-ENGLISH LANGUAGE
VTA	ACCESSORY-EXHAUST TIP - DESIGN 2
VTI	SHUTTERS-FRONT GRILLE, ACTIVE, UPR
VUK	ACCESSORY-TAILGATE LINER - PUBX
VV4	COMMUNICATION EQUIP-MOBILE INTERNET CONNECTIVITY
VW9	ACCESSORY-CENTER CAP - WHEEL - DESIGN 3
VWD	ACCESSORY-CENTER CAP - WHEEL - DESIGN 4
VXH	ACCESSORY-ASSIST STEPS - TUBULAR - CHROME - OVAL
VXJ	ACCESSORY-ASSIST STEPS - TUBULAR - CHROME - ROUND
VXT	VEHICLE TYPE-INCOMPLETE
VXW	ACCESSORY-ASSIST STEPS - MOLDED
VYU	PROVISIONS-SNOW PLOW PREP
VZX	ACCESSORY-PUBX BEDLINER
W09	ACCESSORY-TAILGATE GAP COVER
W1V	ACCESSORY-FLOOR MATS - PREMIUM CARPET - ALT DESIGN
W2D	ACCESSORY-CARGO NET
WBC	ACCESSORY-EXHAUST UPGRADE
WGQ	SALES PACKAGE-REDLINE

RPO	Description
WJP	SALES PACKAGE-MIDNIGHT EDITION
WLD	WINDOW CONTROL-REMOTE EXPRESS DOWN, ALL WINDOWS
WMI	SHUTTERS-FRONT GRILLE, ACTIVE, UPR AND LWR
WMW	VIN MODEL YEAR-2022
WPC	SALES PACKAGE-COMFORT AND CONVENIENCE
WPF	SALES PACKAGE-PREFERRED
WPQ	SALES PACKAGE-PROTECTION
X88	MARKET BRAND-CHEVROLET
XCE	TIRE ALL-275/50R22 SL 111T BW AL2 VAR 1
XCK	TIRE ALL-265/65R18 SL 114T BW AT VAR1
XCQ	TIRE SPARE-265/70R17 SL 115S BW SPR VAR1
XD5	ACCESSORY TIRE-TIRE ALL-275/50R22 SL 111T BW AL2
XDF	ACCESSORY TIRE-TIRE ALL - 275/60R20 SL 115S BW AT
YF5	CERTIFICATION-EMISSION, CALIFORNIA
Z45	CHASSIS PACKAGE-CONTINUOUS DAMPING CONTROL
Z60	CHASSIS PACKAGE-HIGH PERFORMANCE
Z71	CHASSIS PACKAGE-"OFF ROAD"
Z7X	CHASSIS PACKAGE-"OFF ROAD" 2 INCH LIFT
Z82	TRAILER PROVISIONS-SPECIAL EQUIPMENT, H.D.
Z85	CHASSIS PACKAGE-INCREASED CAPACITY
ZL3	SALES PACKAGE-CONVENIENCE
ZL6	SALES PACKAGE-TRAILER INTEGRATION
ZLA	SALES PACKAGE-INFOTAINMENT
ZLQ	SALES PACKAGE-LS FLEET
ZW9	BODY EQUIPMENT-BASE BODY OR CHASSIS

BLANK

Section 2

Body Systems

Fixed and Moveable Windows 2-3
Schematic and Routing Diagrams 2-3
Moveable Window Schematics 2-4
Defogger Schematics 2-10
Description and Operation 2-11
Power Windows Description and Operation 2-11
Rear Window Defogger Description and Operation 2-11

Horns and Pedestrian Alerts 2-12
Schematic and Routing Diagrams 2-12
Horn Schematics 2-13
Description and Operation 2-14
Horns System Description and Operation 2-14

Lighting 2-15
Schematic and Routing Diagrams 2-15
Headlights/Daytime Running Lights (DRL) Schematics 2-16
Fog Lights Schematics 2-20
Exterior Lights Schematics 2-21
Interior Lights Schematics 2-34
Interior Lights Dimming Schematics 2-36
Description and Operation 2-40
Exterior Lighting Systems Description and Operation 2-40
Interior Lighting Systems Description and Operation 2-43

Mirrors 2-45
Schematic and Routing Diagrams 2-45
Inside Rearview Mirror Schematics 2-46
Outside Rearview Mirror Schematics 2-47
Description and Operation 2-50
Automatic Day-Night Mirror Description and Operation 2-50
Outside Mirror Description and Operation 2-51

Trailering Systems 2-53
Schematic and Routing Diagrams 2-53
Trailering Systems Schematics 2-54
Description and Operation 2-59
Trailering Description and Operation 2-59

Vehicle Access 2-66
Schematic and Routing Diagrams 2-66
Door Lock/Indicator Schematics 2-67
Release Systems Schematics 2-73
Endgate Schematics 2-74
Description and Operation 2-78
Door Ajar Indicator Description and Operation 2-78
Endgate Description and Operation (QT6) 2-78
Endgate Description and Operation (QT5 Without MultiPro Tailgate) 2-79
Endgate Description and Operation (QT5 With MultiPro Tailgate) 2-79
Hood Ajar Indicator Description and Operation 2-80
Power Door Locks Description and Operation 2-80

BLANK

Fixed and Moveable Windows

Schematic and Routing Diagrams

Moveable Window Schematics (Driver Window (AXG))

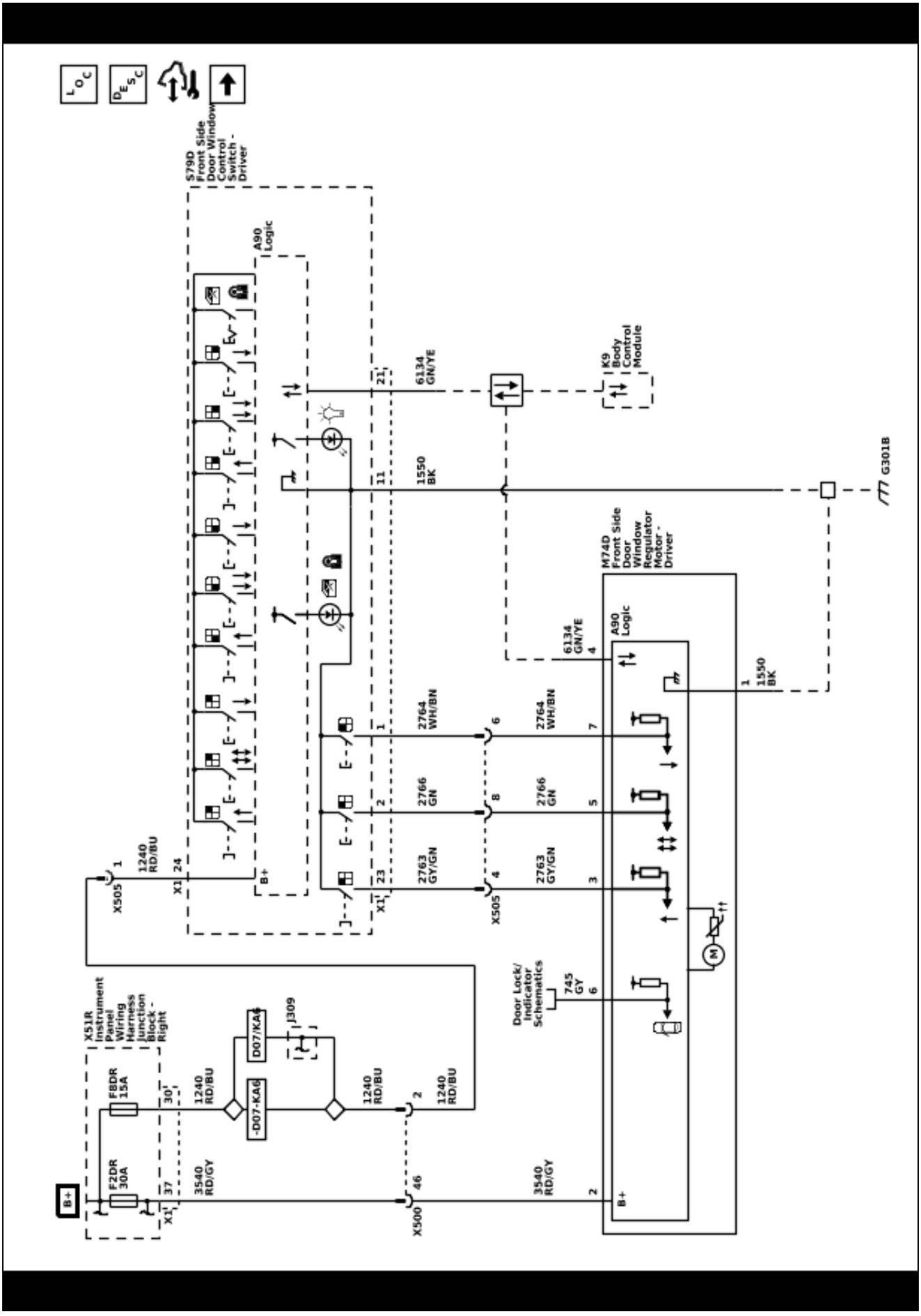

Moveable Window Schematics (Passenger Window (AEF))

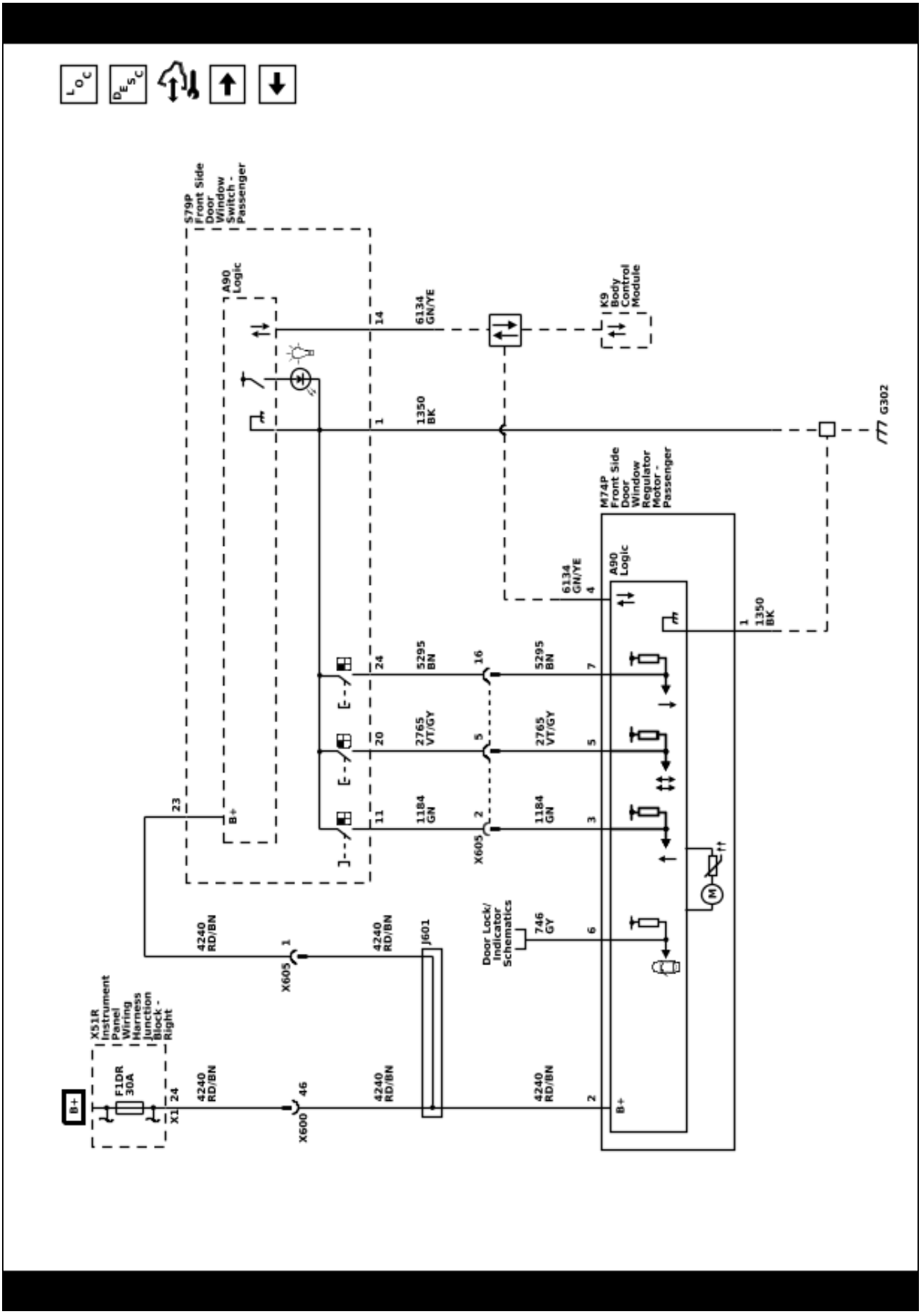

Moveable Window Schematics (Passenger Window (AED))

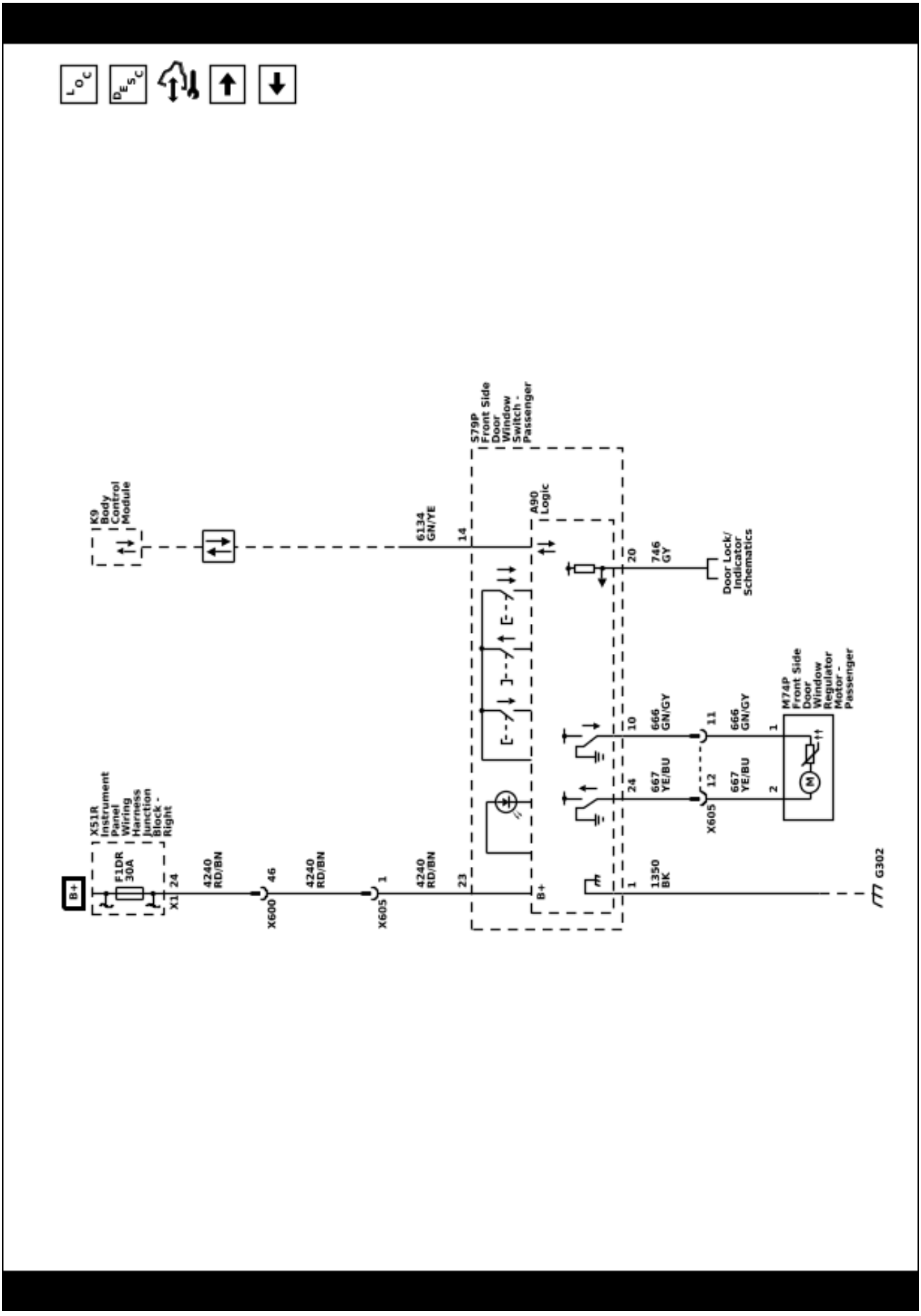

5967330

Moveable Window Schematics (Rear Windows (AEQ))

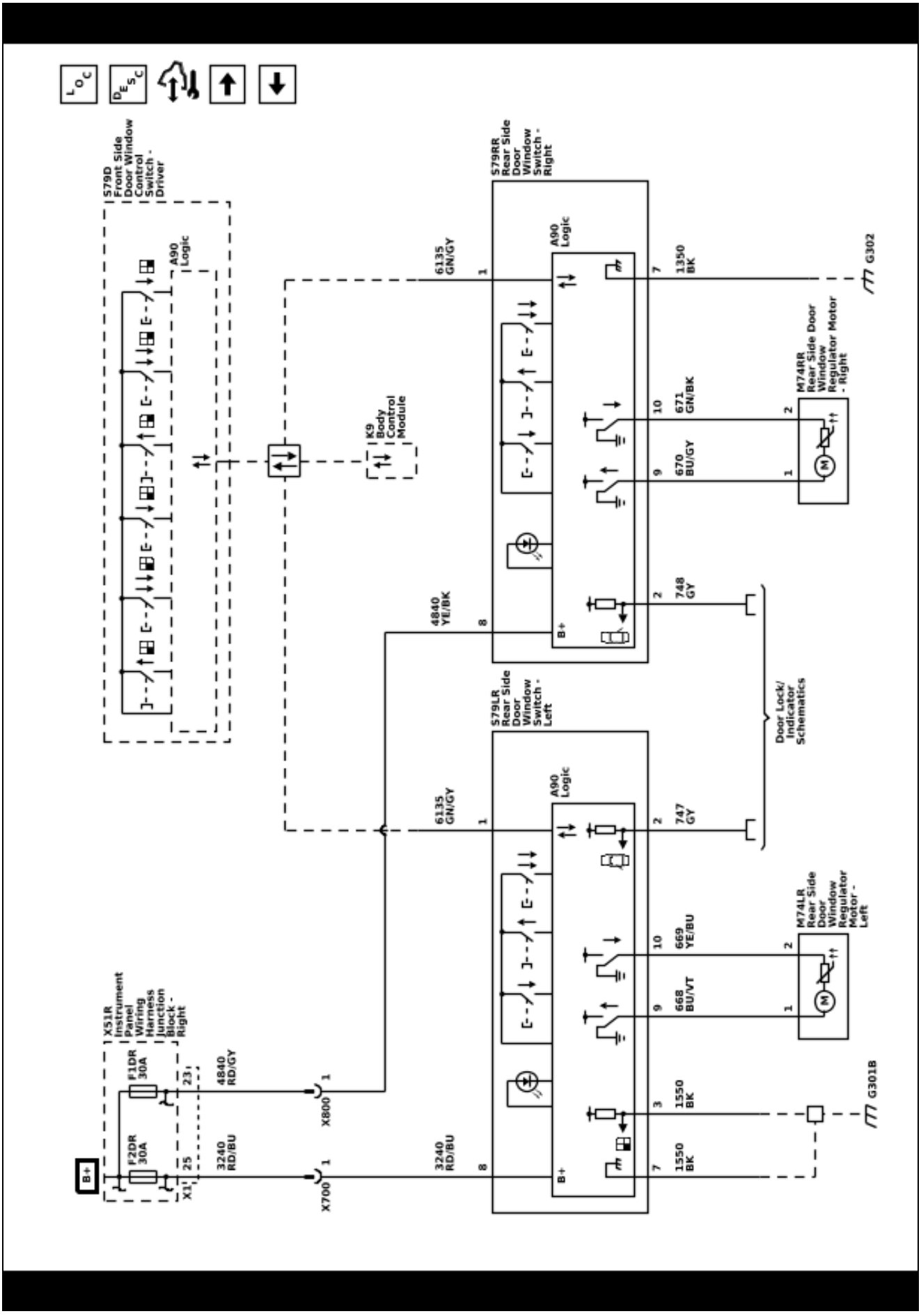

Moveable Window Schematics (Global Window Express Down Switch (WLD))

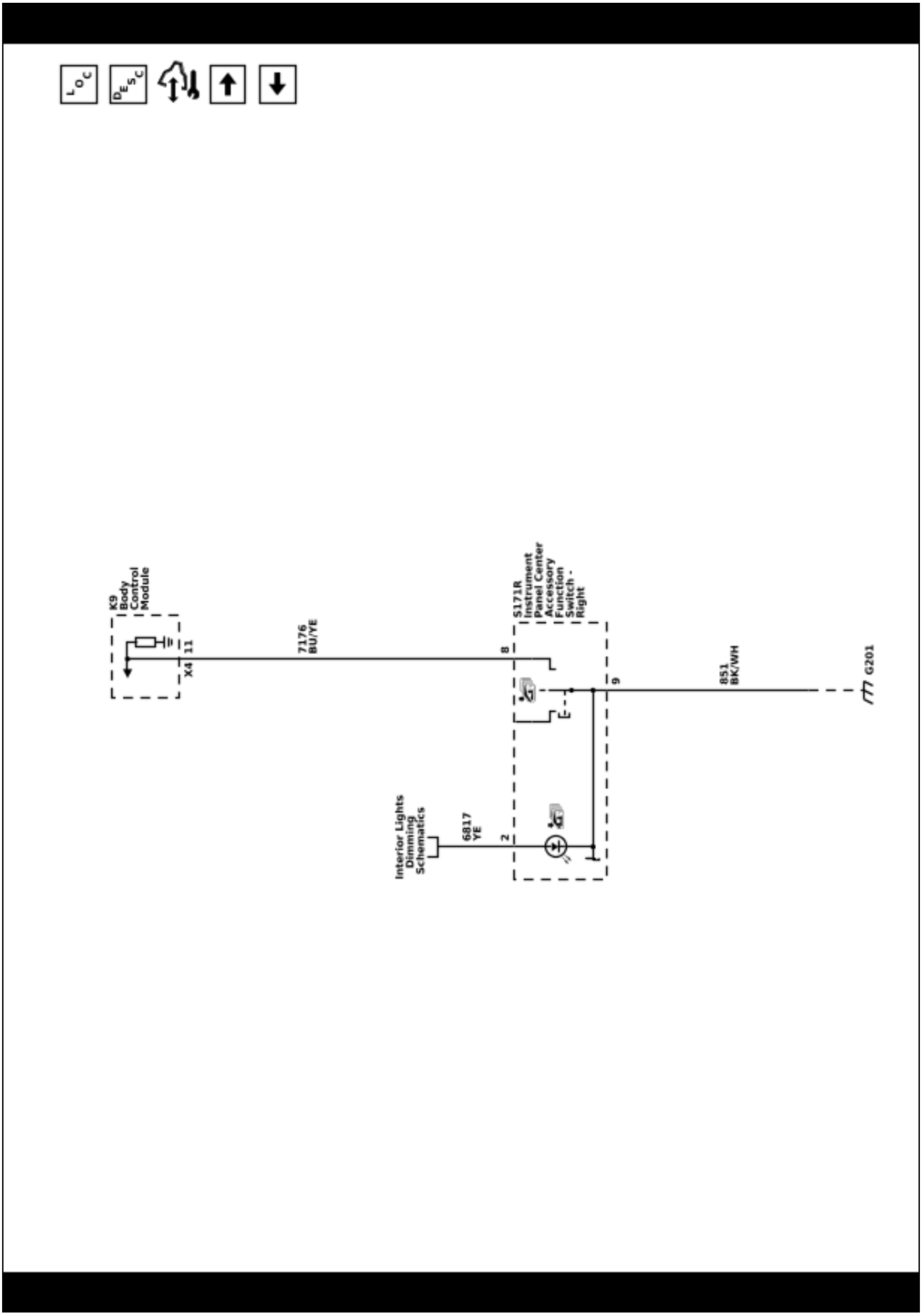

Moveable Window Schematics (Rear Sliding Window (A48))

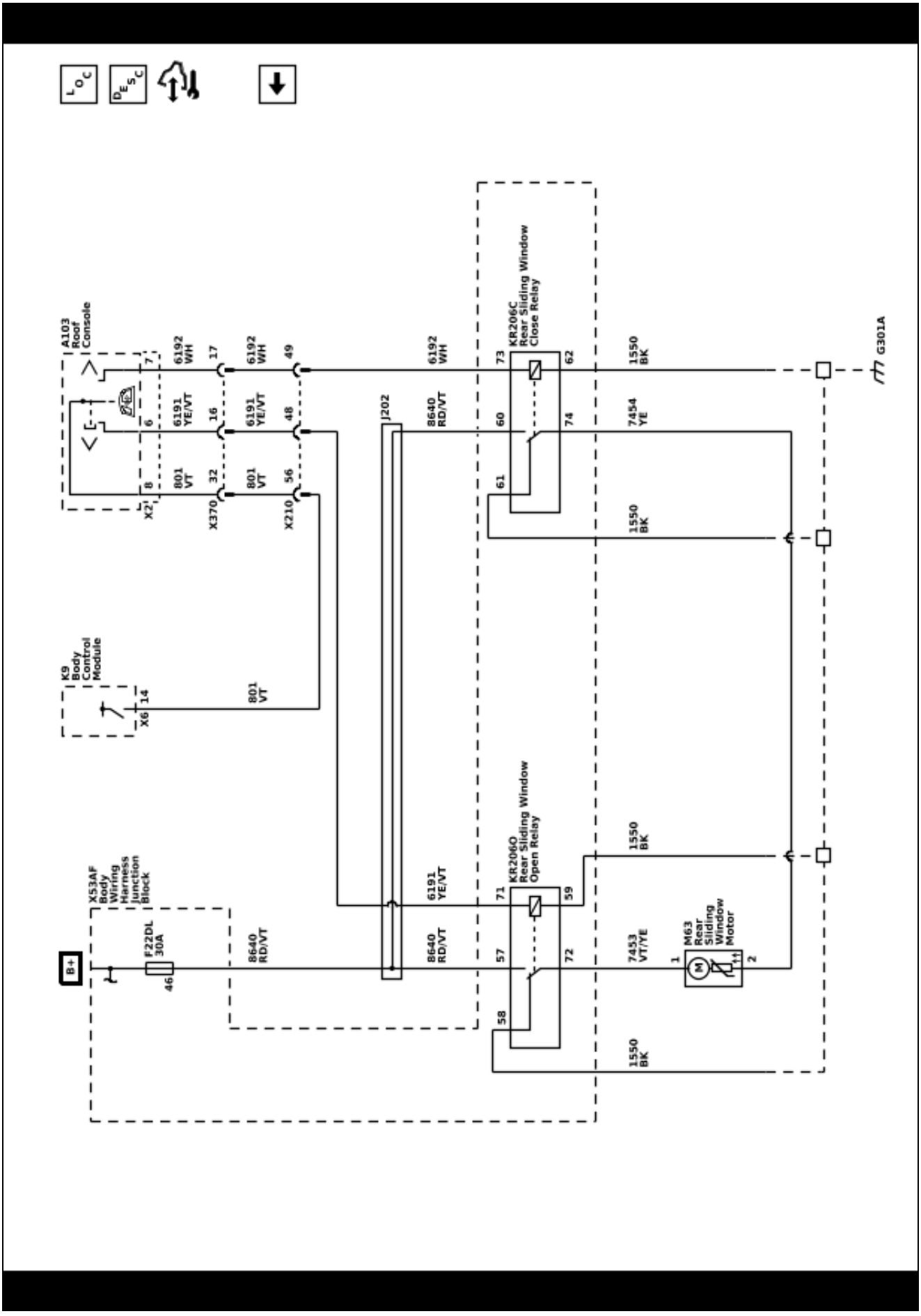

Defogger Schematics (Defogger)

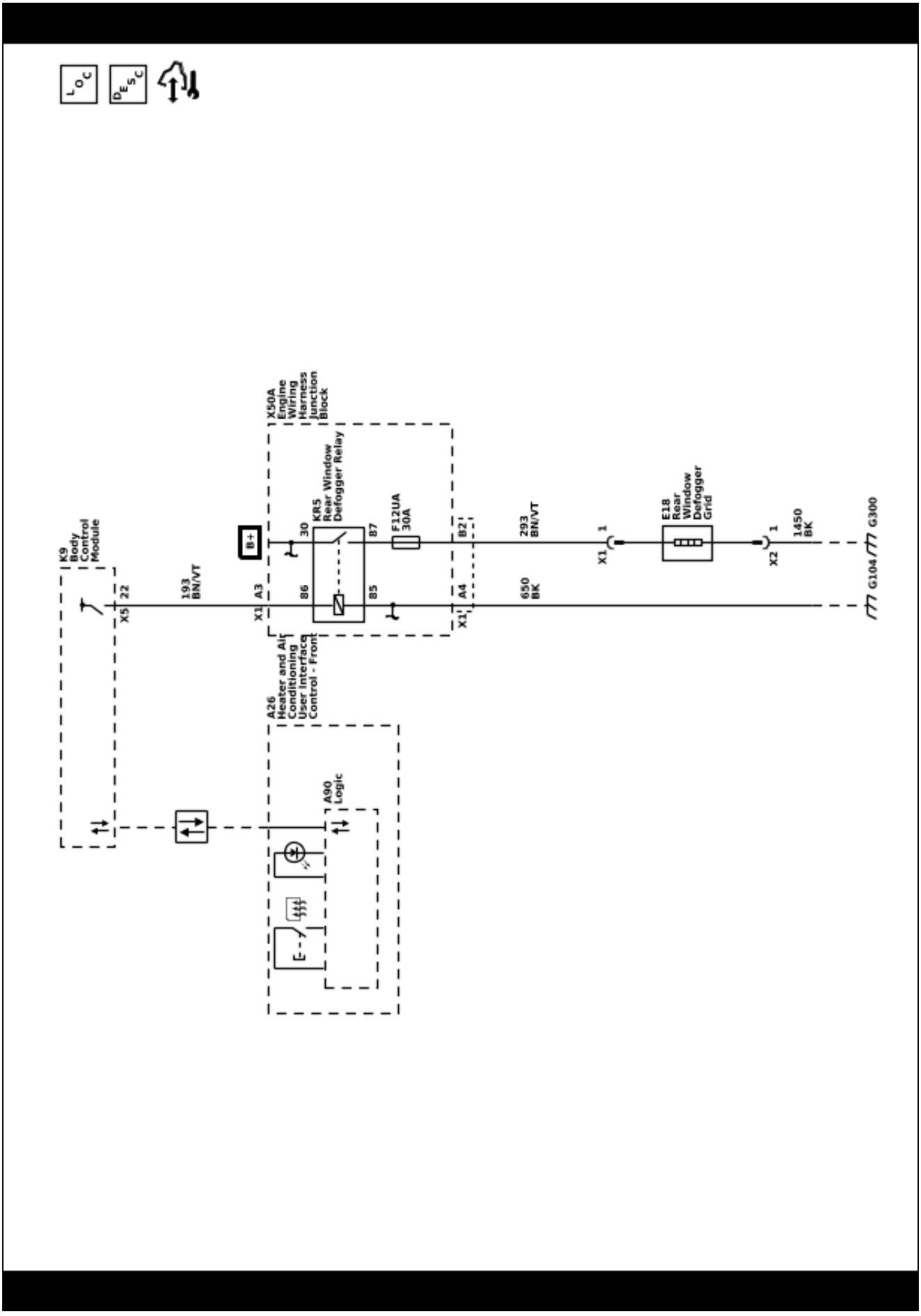

Description and Operation

Power Windows Description and Operation

Power Windows System Components

The power window system consists of the following components:

- Driver front side door window control switch
- Passenger front side door window control switch
- Left rear side door window switch
- Right rear side door window switch
- Window motors in each of the doors
- Body control module (BCM)

Driver and Passenger Express Up and Express Down Power Window Motors

The driver and passenger doors contains a window motor is smart motor that will detect excessive resistance while performing the express up function and automatically reverse direction to prevent injury to any occupants that may become trapped between the closing window and the door frame. The automatic reverse safety feature can be overridden by pulling and holding the window switch.

The logic circuit within the window motor monitors the up, down and express signal circuits which are normally equal to B+ voltage. When a switch is used on the front side door window control switch, the contacts close causing a voltage drop within the appropriate signal circuit. The window motor will detect the voltage drop and will command the window to move in the direction requested.

The driver front side door window control switch communicates to the BCM by a serial data circuit. When the driver wishes to control the passenger window, the driver will use the appropriate switch on the driver front side door window control switch. When this switch is used, a serial data message is sent to the BCM requesting the passenger window motor command, the BCM will then send a serial data message to the passenger window motor which will then move in the direction requested.

Left Rear, Right Rear Express Down Window Motors

For the right rear and left rear doors, when their window switch is pressed in the down position, battery positive voltage is applied to their respective window motor control circuit and ground to the other window motor control circuit causing that window to open. When the individual window switch is pulled in the up position, voltage and ground is applied to the window motor in the opposite direction causing that window to close. The return path to ground is supplied through the inactive control circuit being normally grounded through the window switch.

Each rear side door window switch communicates to the BCM by a serial data circuit. When the driver wishes to control the left rear or right rear window, the driver will use the appropriate switch on the driver front side door window control switch. When this switch is used, a serial data message is sent to the BCM requesting a window motor command, the BCM will then send a serial data message to the appropriate rear side door window switch which will then command that window to move in the direction requested.

Lockout Switch Feature

The driver front side door window control switch contains a window lockout switch, when the driver presses the window lockout switch, a serial data message is sent to the BCM which will send a disable command to the rear side door window switches, deactivating them. The rear windows will still function normally from the switches on the driver front side door window control switch.

Rear Window Defogger Description and Operation

Rear Window Defogger System Components

The rear window defogger system consists of the following components:

- Body Control Module
- Front Heater and Air Conditioning User Interface Control
- Rear Body Wiring Harness Junction Block (Contains PCB Rear Defogger Relay
- Rear Defogger Grid
- 40A Fuse

Rear Window Defogger Operation

The rear defog control system utilizes a single zone backlight design, driven with a single relay configuration. A switch for the customer to control the system is provided within the front heater and air conditioning user interface control. Also included in the front heater and air conditioning user interface control is an indicator to inform the customer with the current state of the system. The system is only operational when engine is running or during remote start.

Pressing the heated rear window switch causes the front heater and air conditioning user interface control to send a serial data message to the body control module requesting rear window defog operation. The body control module upon receipt of the serial data message will provide voltage to the coil side of the rear defogger relay, this will energize the relay causing the relay switch contacts to close allowing B+ voltage to flow through the rear defogger grid control circuit to the rear defogger grid.

When the rear heated rear window switch is pressed and the engine is running, the rear window defogger grid will activate and will turn off automatically depending upon the vehicle speed (refer to owner’s manual for rear window defogger operation cycles)

Horns and Pedestrian Alerts

Schematic and Routing Diagrams

Horn Schematics (Horn)

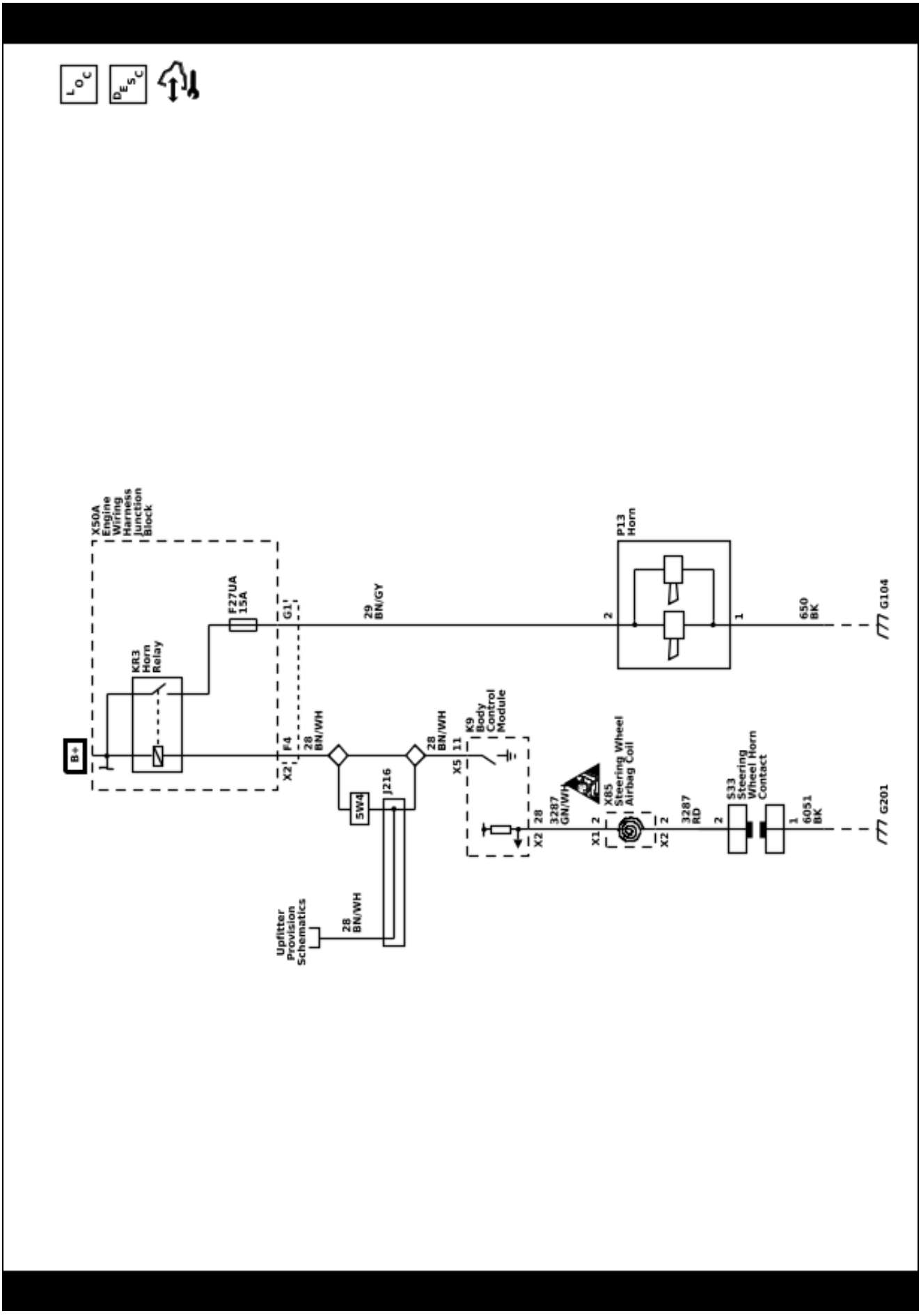

Description and Operation

Horns System Description and Operation

System Description

The horn system consists of the following components:

- HORN fuse
- Engine wiring harness junction block (contains horn PCB relay
- Steering wheel horn contact
- Horn
- Body control module (BCM)

System Operation

The vehicle horn system is activated under the following conditions:

- When the horn switch is depressed
- The BCM commands the horns ON under any of the following conditions:
  - When the content theft deterrent system detects a vehicle intrusion—For further information refer to Theft Systems Description and Operation.
  - When the panic button is depressed on the remote control door lock transmitter—For further information refer to *Keyless Entry System Description and Operation*.
  - When the keyless entry system is used to lock the vehicle, a horn chirp may sound to notify the driver that the vehicle has been locked. The notification feature may be enabled or disabled through personalization. For further information refer to *Keyless Entry System Description and Operation*.
  - When the OnStar® system is used to sound the horns if equipped—For further information, refer to *OnStar Description and Operation*.

Circuit Operation

Battery positive voltage is applied at all times to the horn relay coil and the horn relay switch. Pressing either of the horn switches applies ground to the horn relay control circuit. The BCM may also apply ground to the horn relay control circuit as described above. When the horn relay control circuit is grounded, the horn relay is energized and battery positive voltage is applied to the horns through the horn control circuit. The horns sound as long as ground is applied to the horn relay control circuit.

Lighting

Schematic and Routing Diagrams

Headlights/Daytime Running Lights (DRL) Schematics (Controls and Indicators)

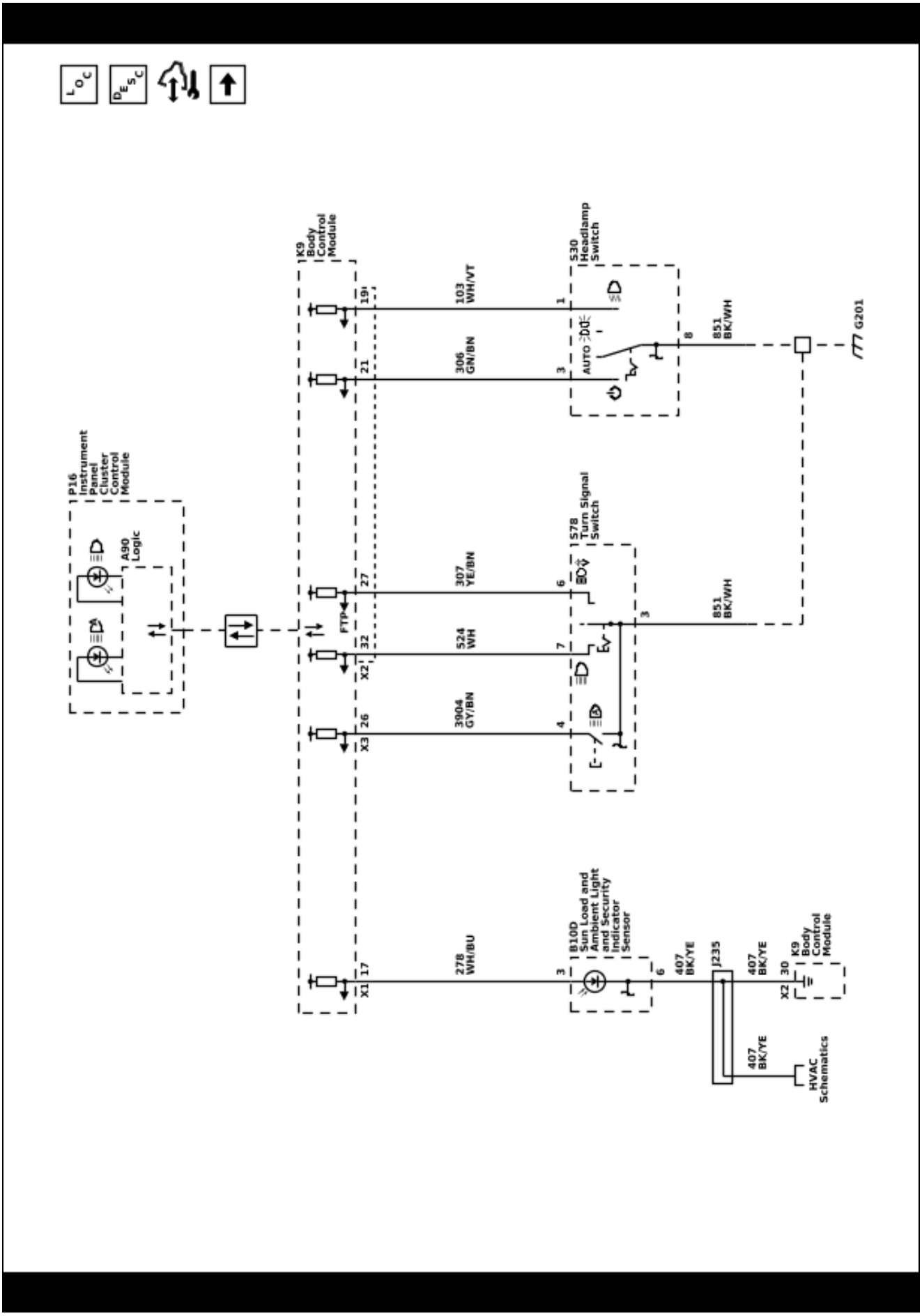

Headlights/Daytime Running Lights (DRL) Schematics (Headlamps (GF2/GF5/GPZ))

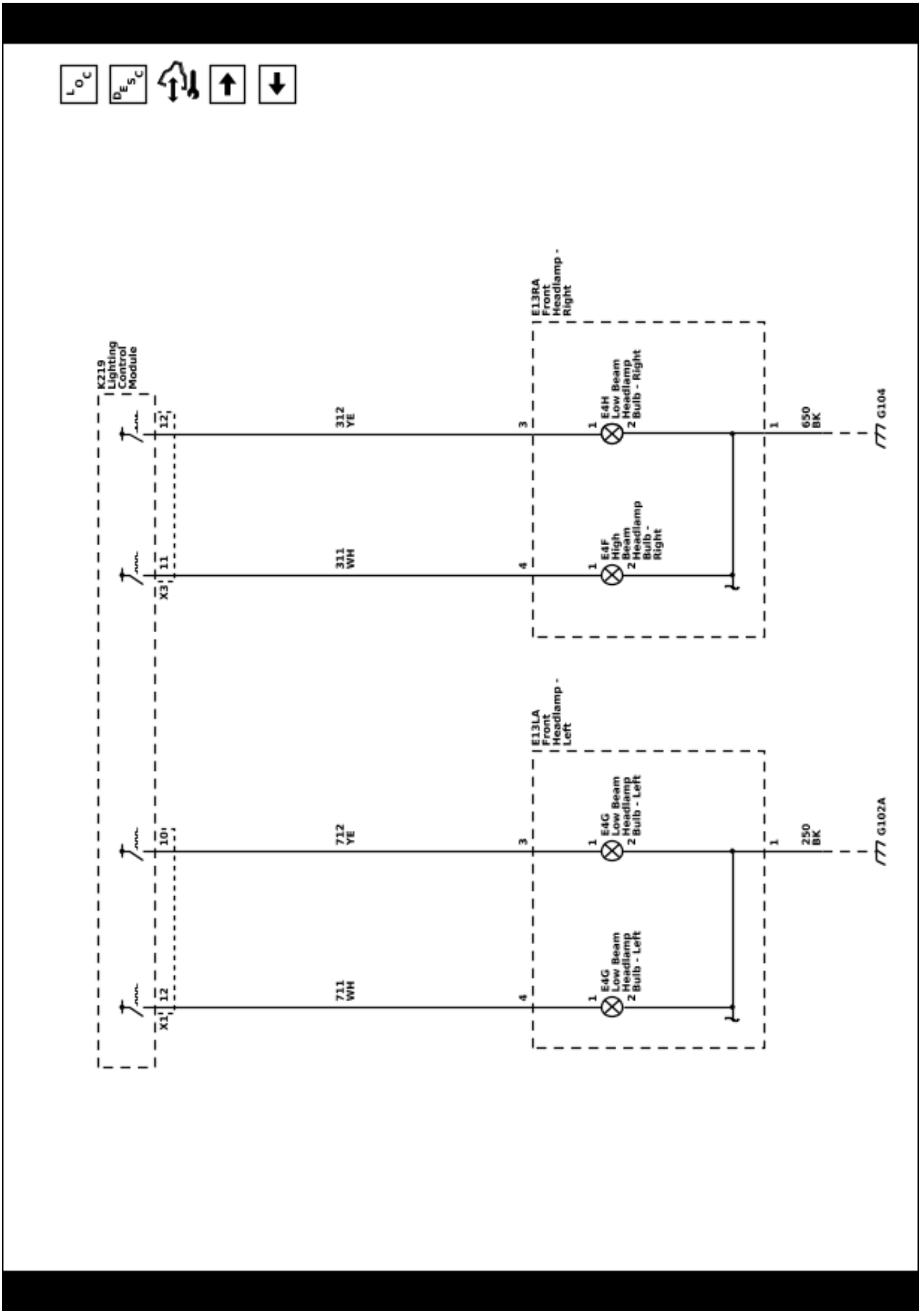

Headlights/Daytime Running Lights (DRL) Schematics (Headlamps and Daytime Running Lamps - Left (GF3/GF4/GF9/GFC/GFD/GG0/GRZ))

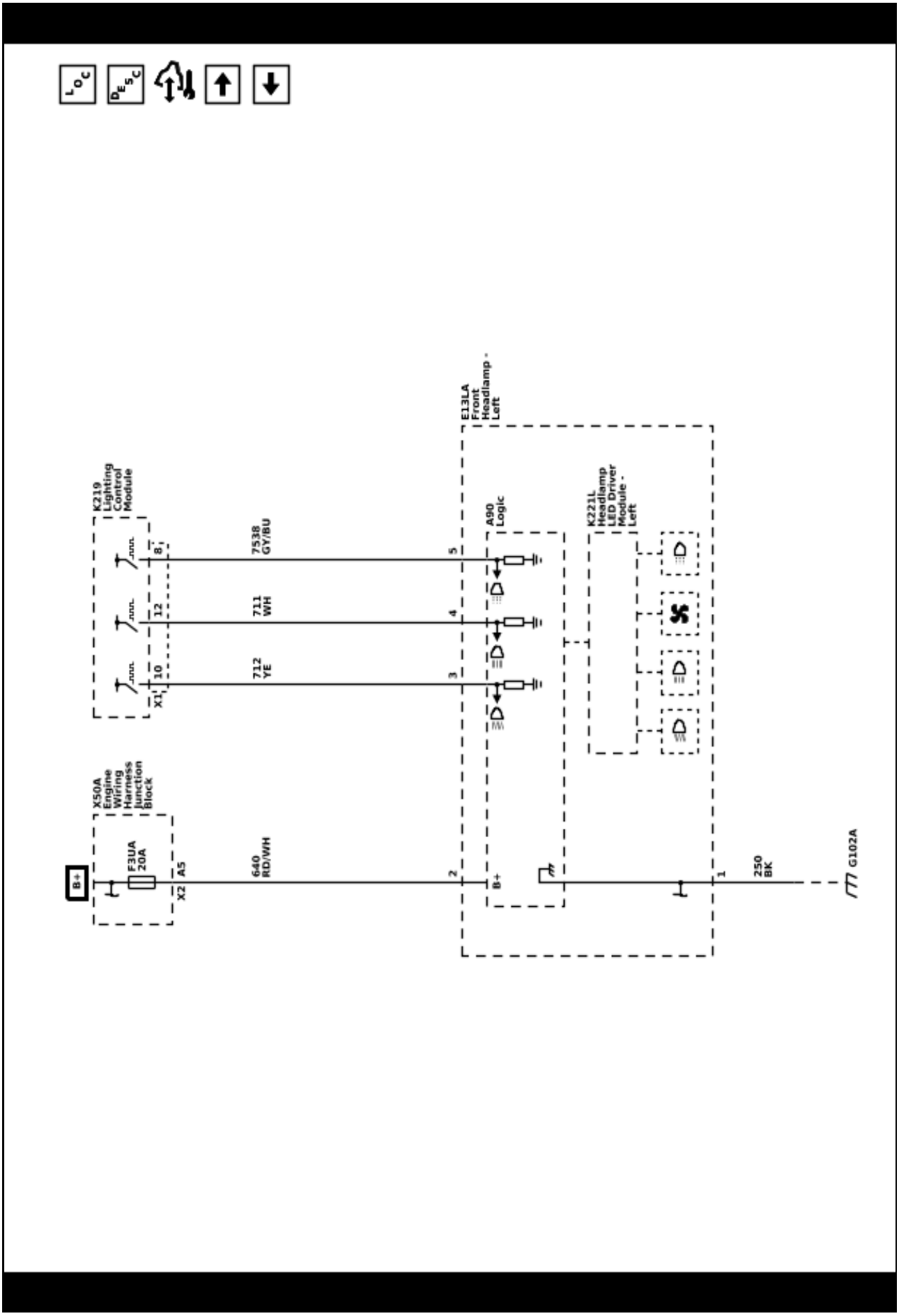

Headlights/Daytime Running Lights (DRL) Schematics (Headlamps and Daytime Running Lamps - Right (GF3/GF4/GF9/GFC/GFD/GG0/GRZ))

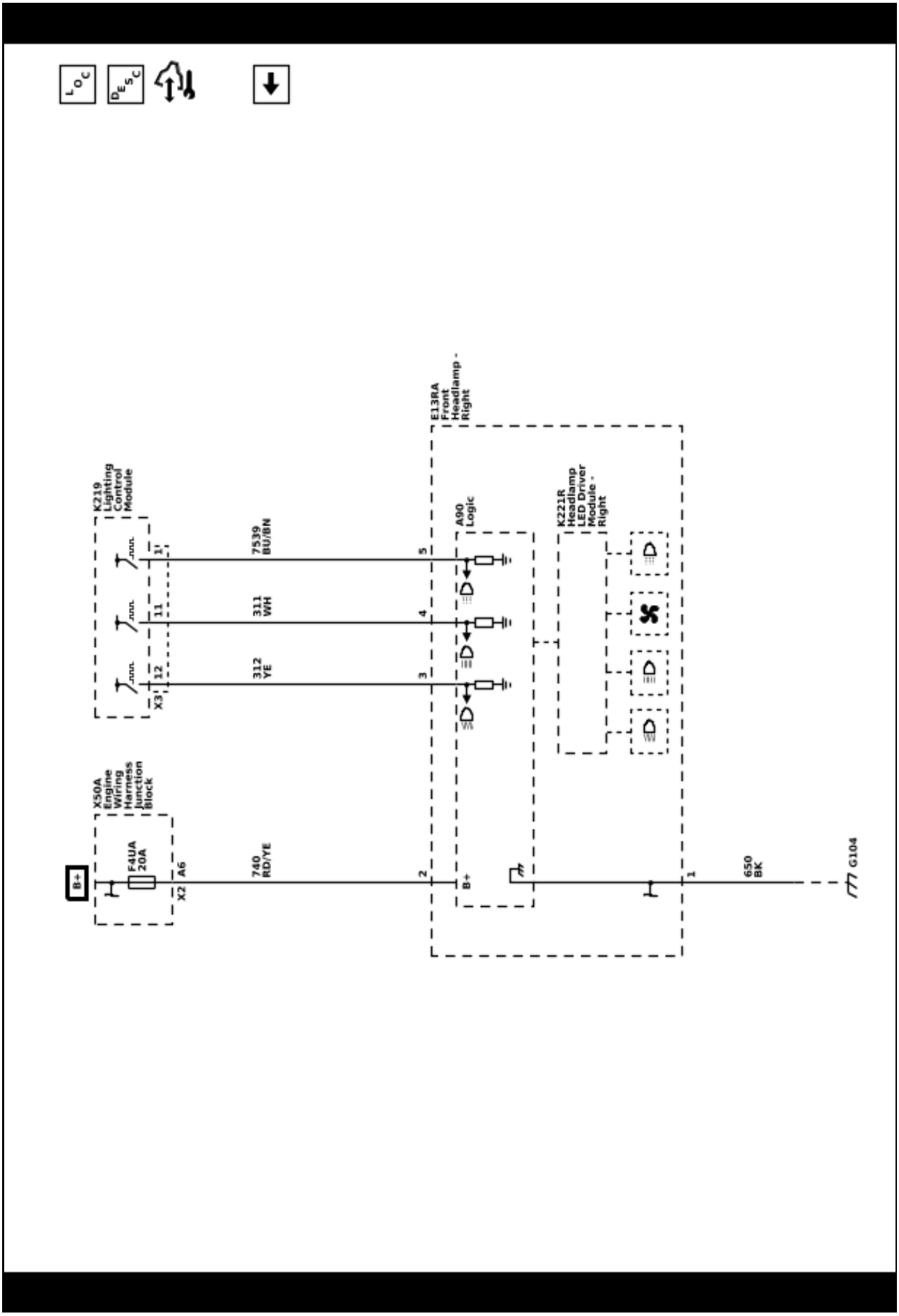

Fog Lights Schematics (Fog Lamps (T3U))

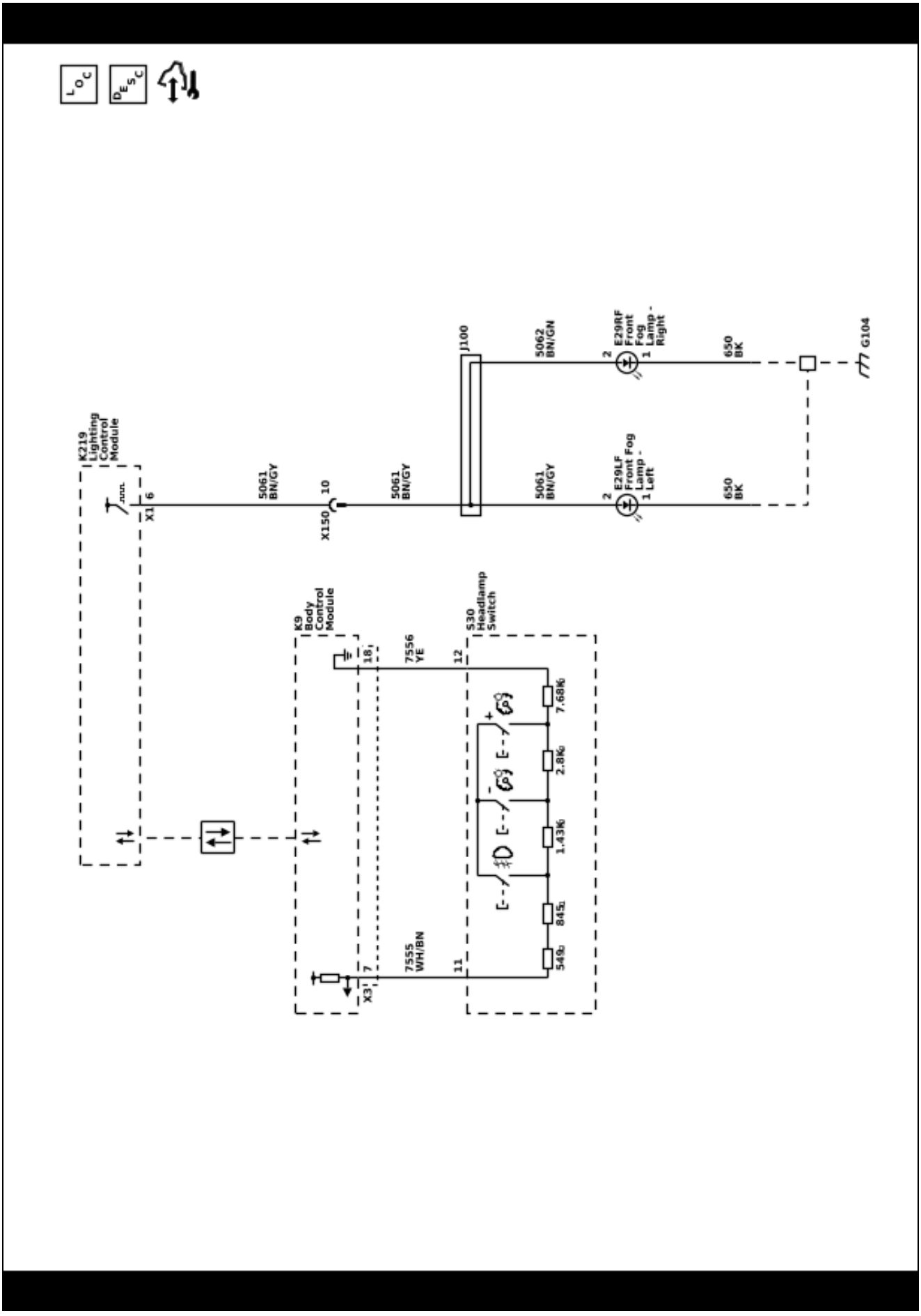

Exterior Lights Schematics (Lighting Control Module Power, Ground, and Serial Data)

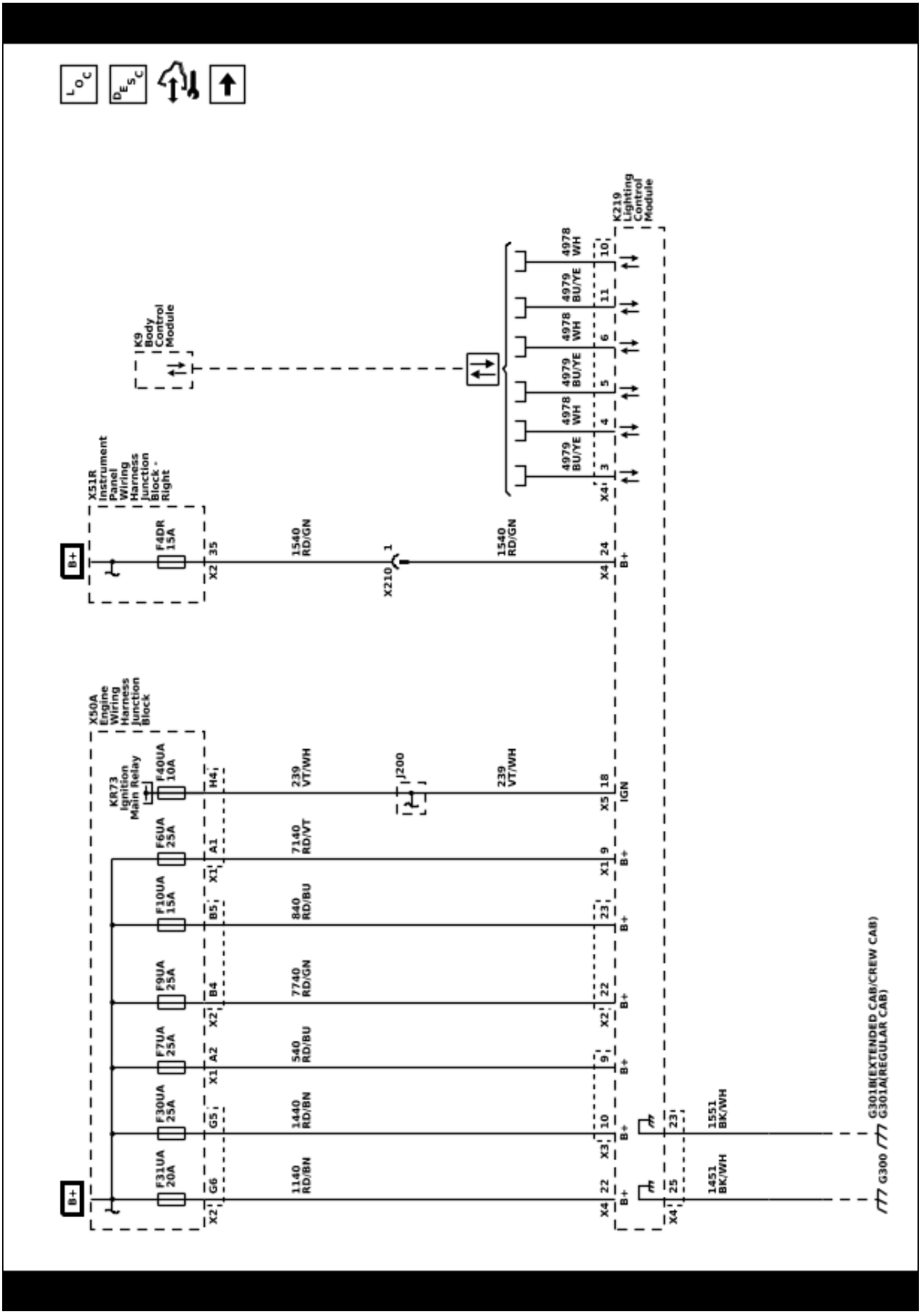

Exterior Lights Schematics (Lighting Control Module Subsystem References)

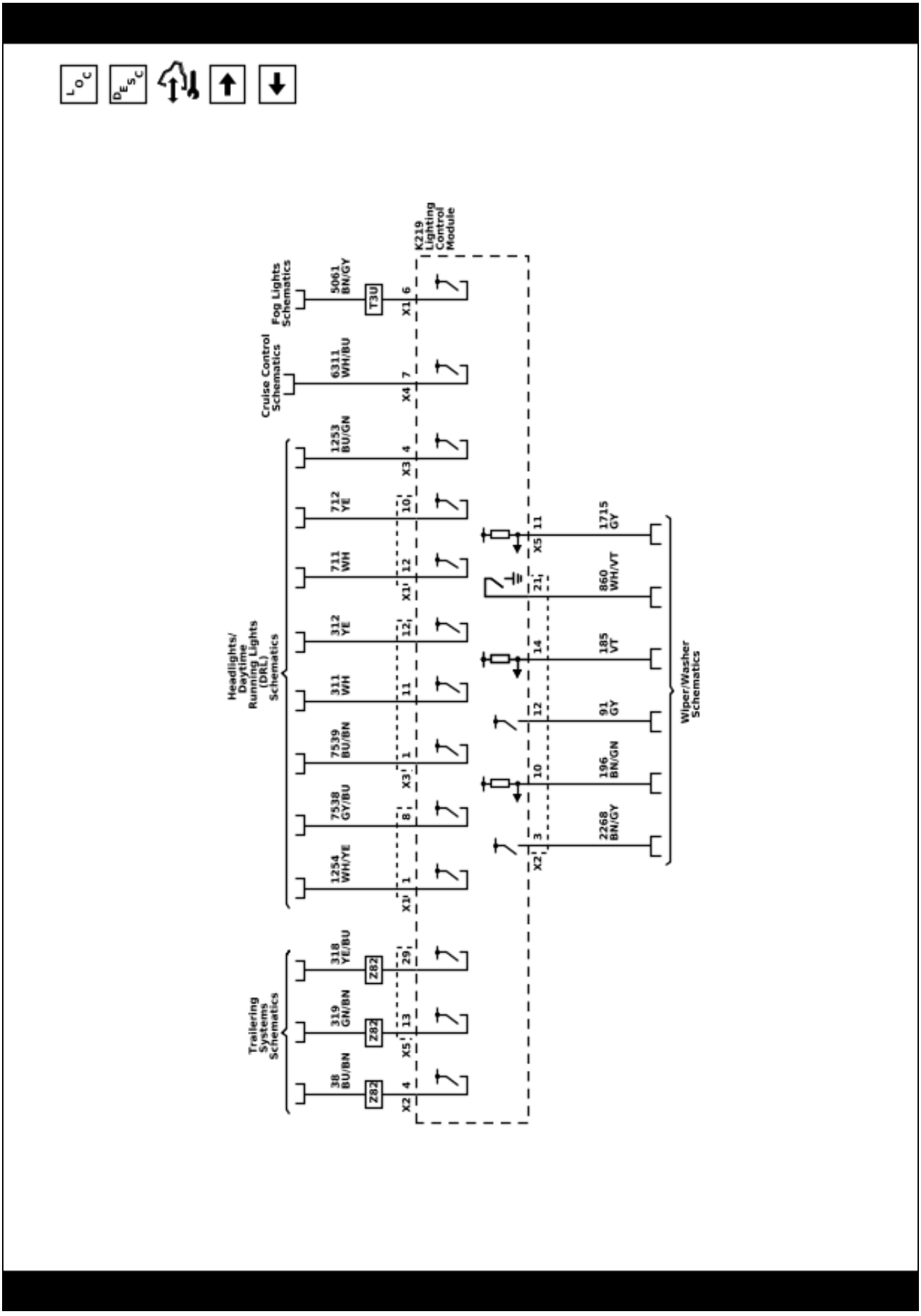

5967341

Exterior Lights Schematics (Controls and Indicators)

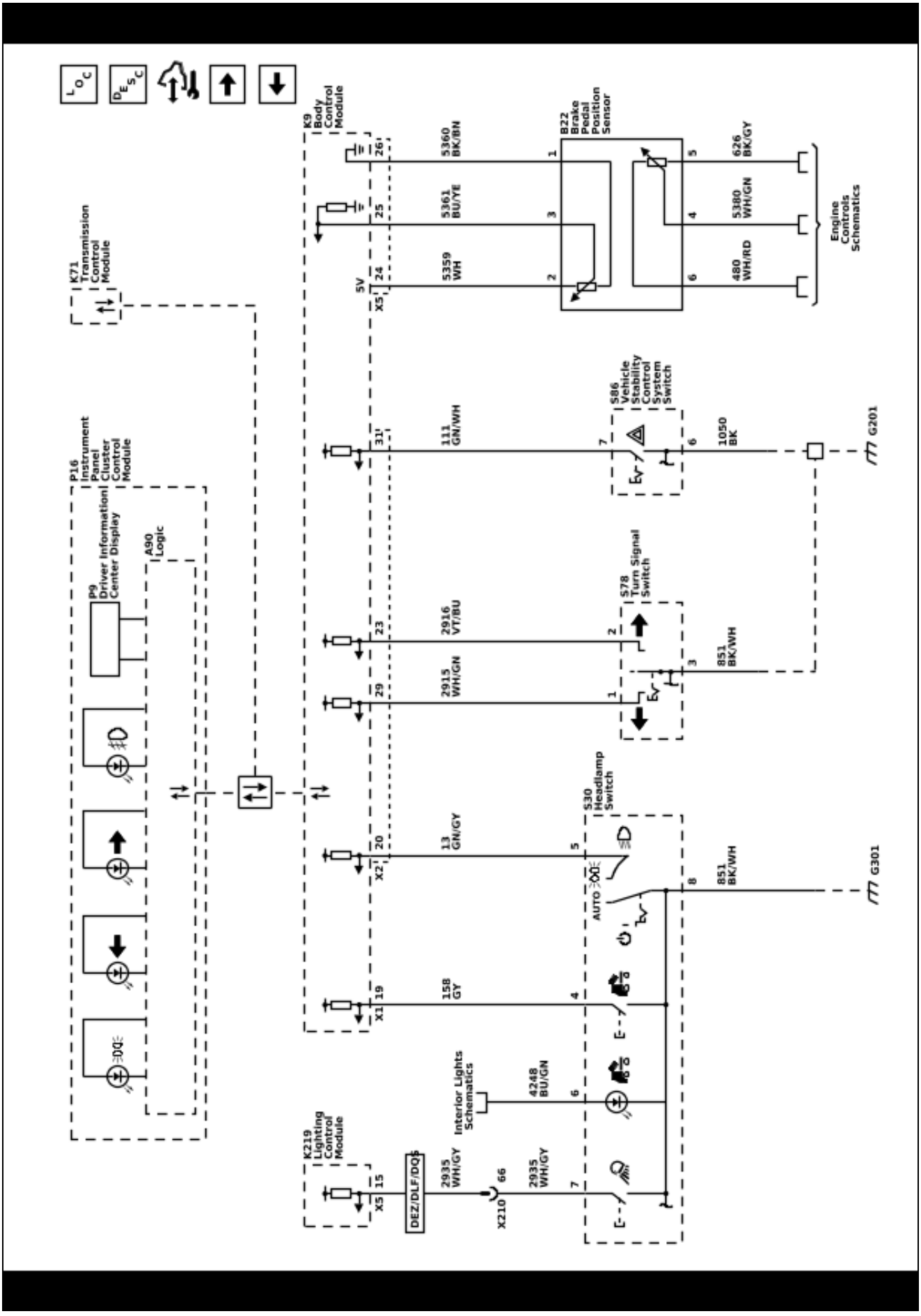

Exterior Lights Schematics (Front Lights)

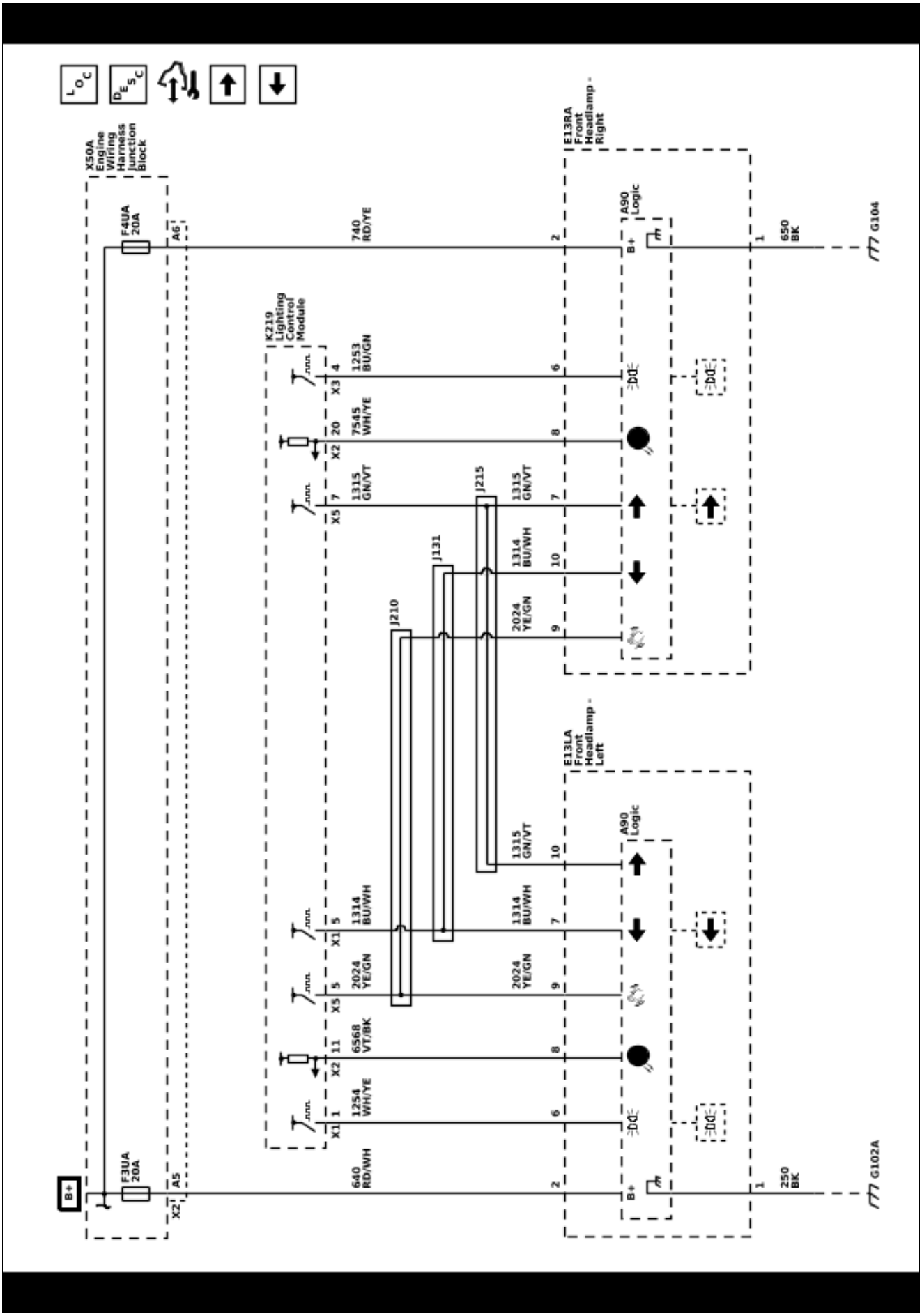

5967343

Exterior Lights Schematics (Left Rear Body Structure Stop Lamp, Left Cargo Box Lamp, and Backup Signal (GF2/GF3/GF5/GG0/GPZ))

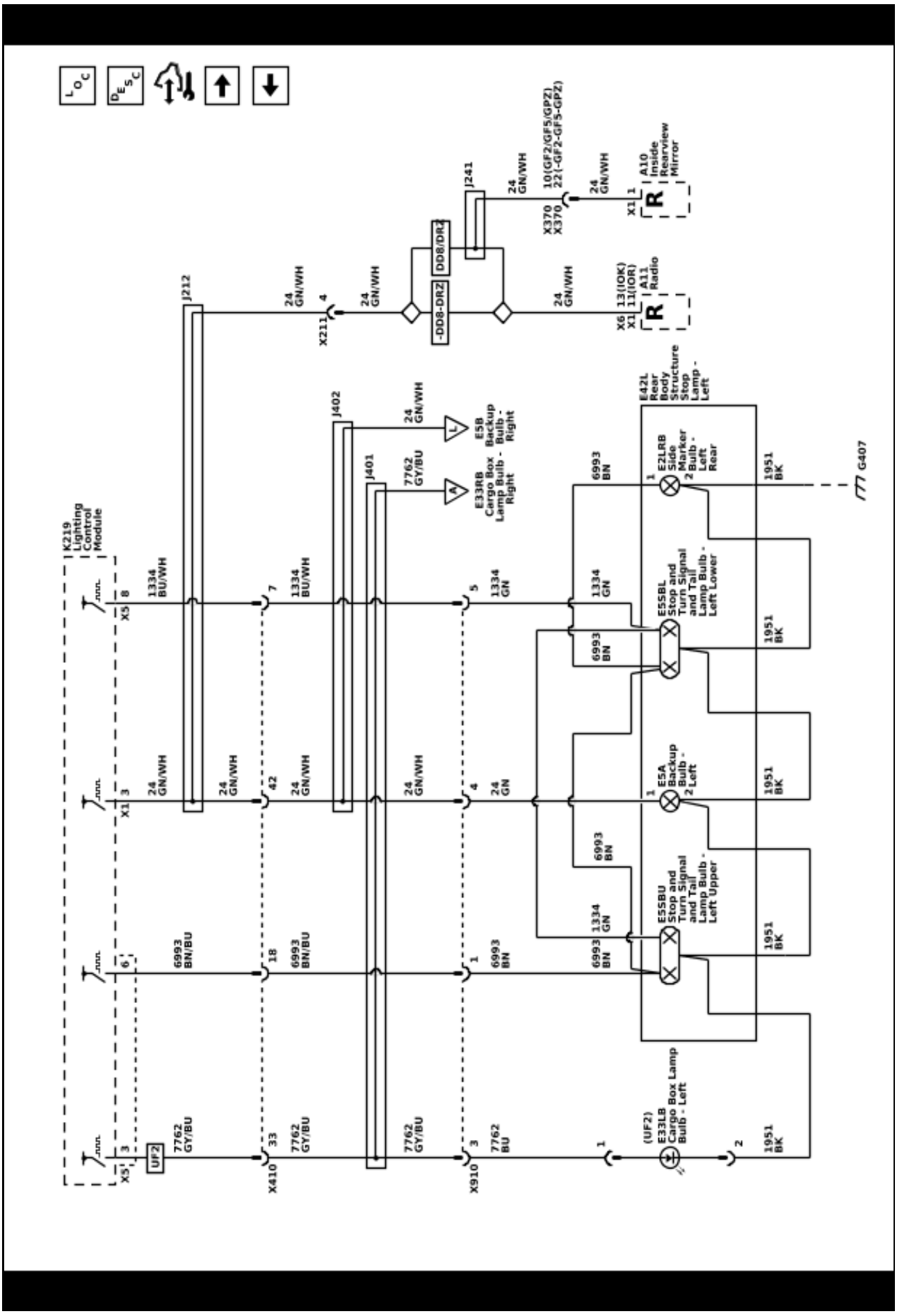

Exterior Lights Schematics (Right Rear Body Structure Stop Lamp and Right Cargo Box Lamp (GF2/GF3/GF5/GG0/GPZ))

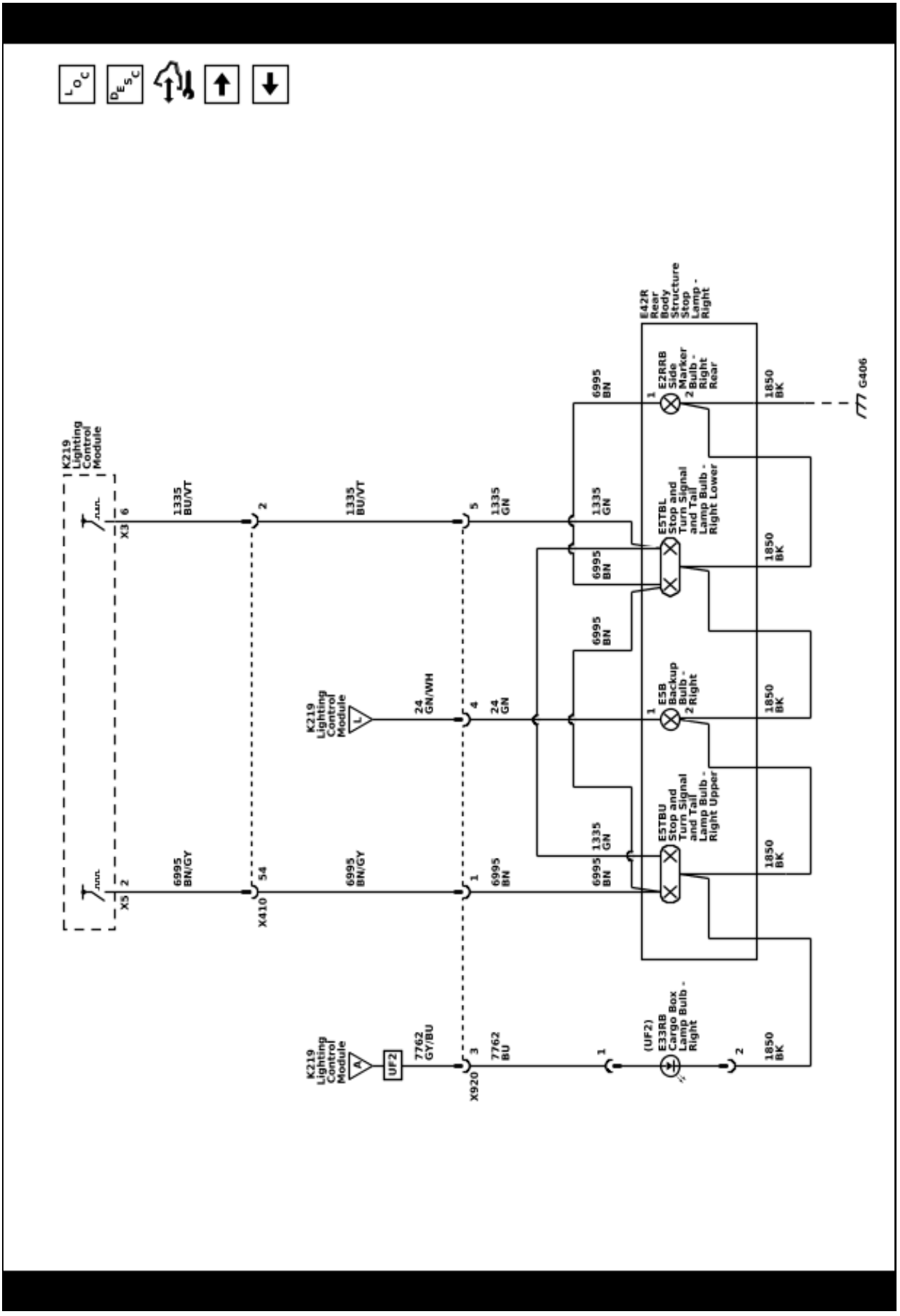

Exterior Lights Schematics (Left Rear Body Structure Stop Lamp, Left Cargo Box Lamp, and Backup Signal (GF4/GF9/GFC/GFD/GRZ))

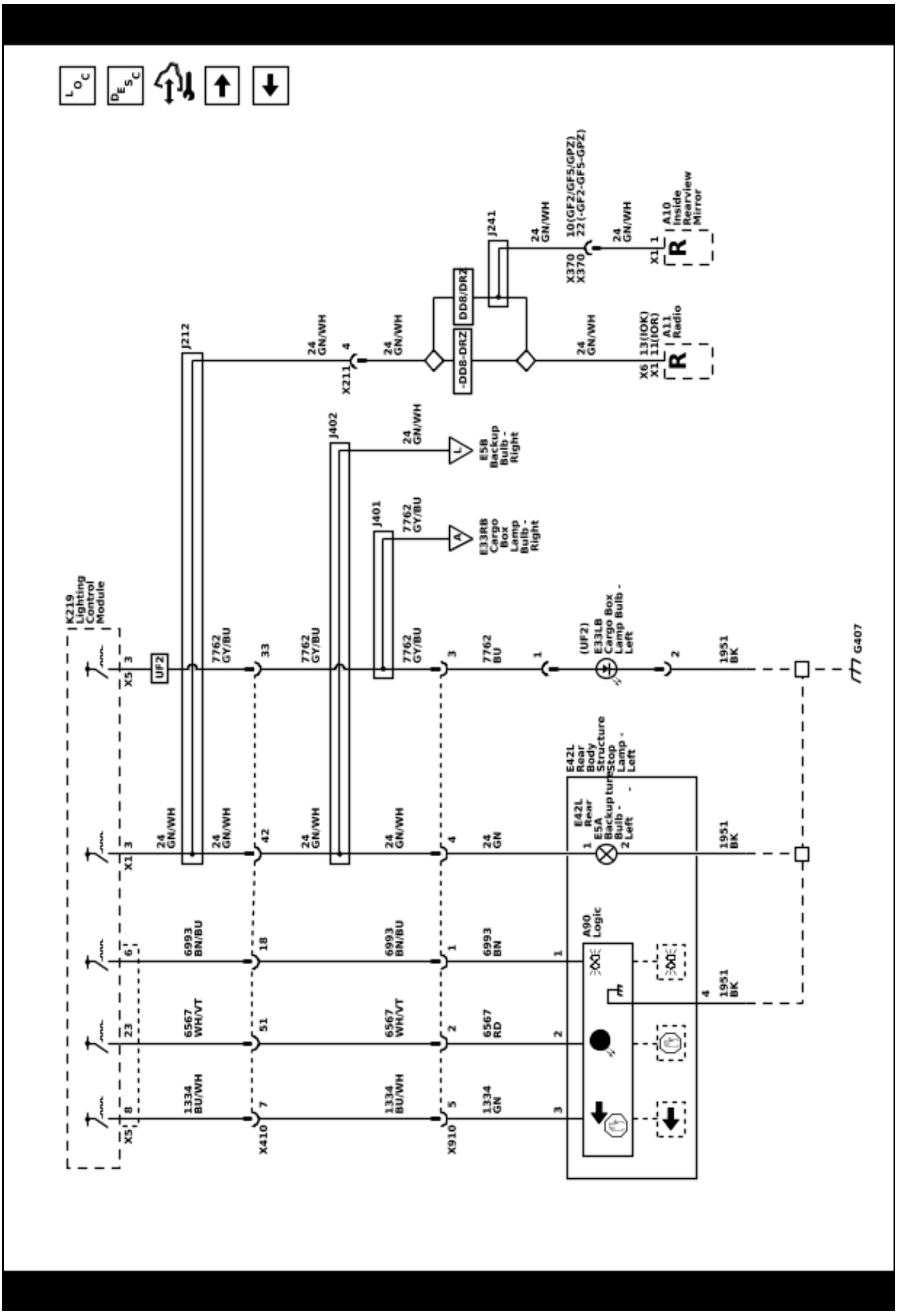

Exterior Lights Schematics (Right Rear Body Structure Stop Lamp and Right Cargo Box Lamp (GF4/GF9/GFC/GFD/GRZ))

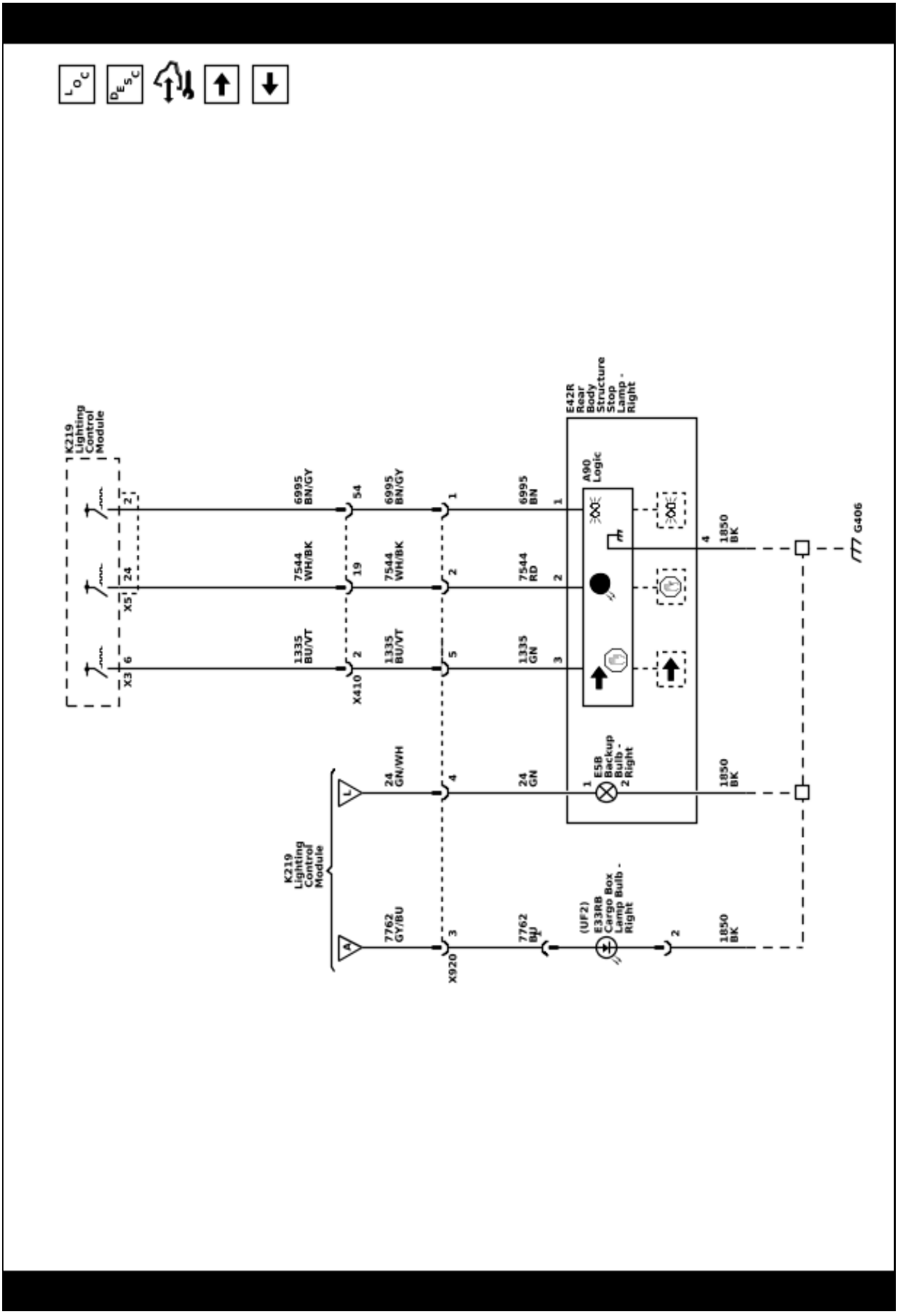

Exterior Lights Schematics (Center High Mount Stop and Exterior Courtesy Lights (Regular Cab))

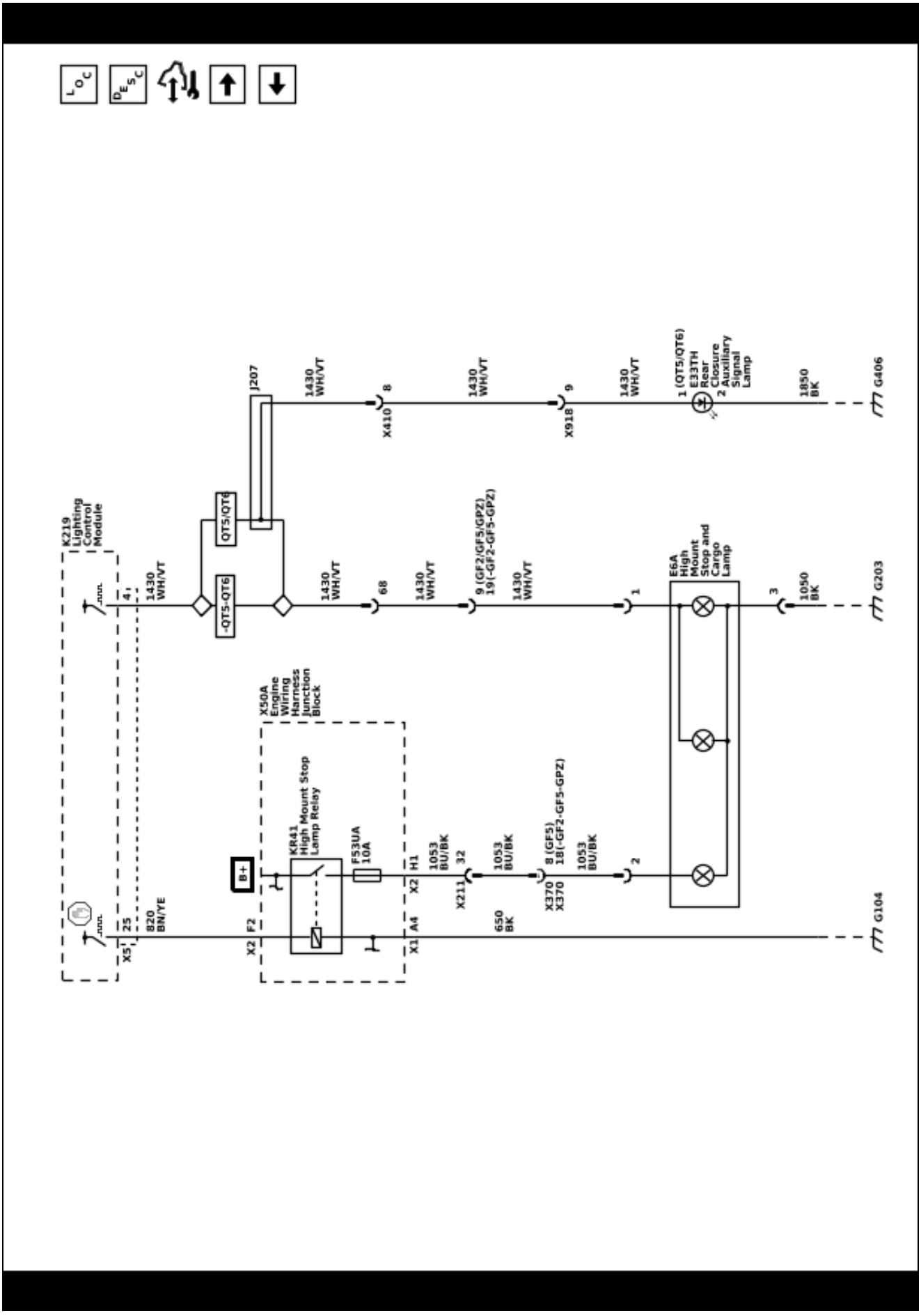

Exterior Lights Schematics (Center High Mount Stop and Exterior Courtesy Lights (Extended Cab/Crew Cab))

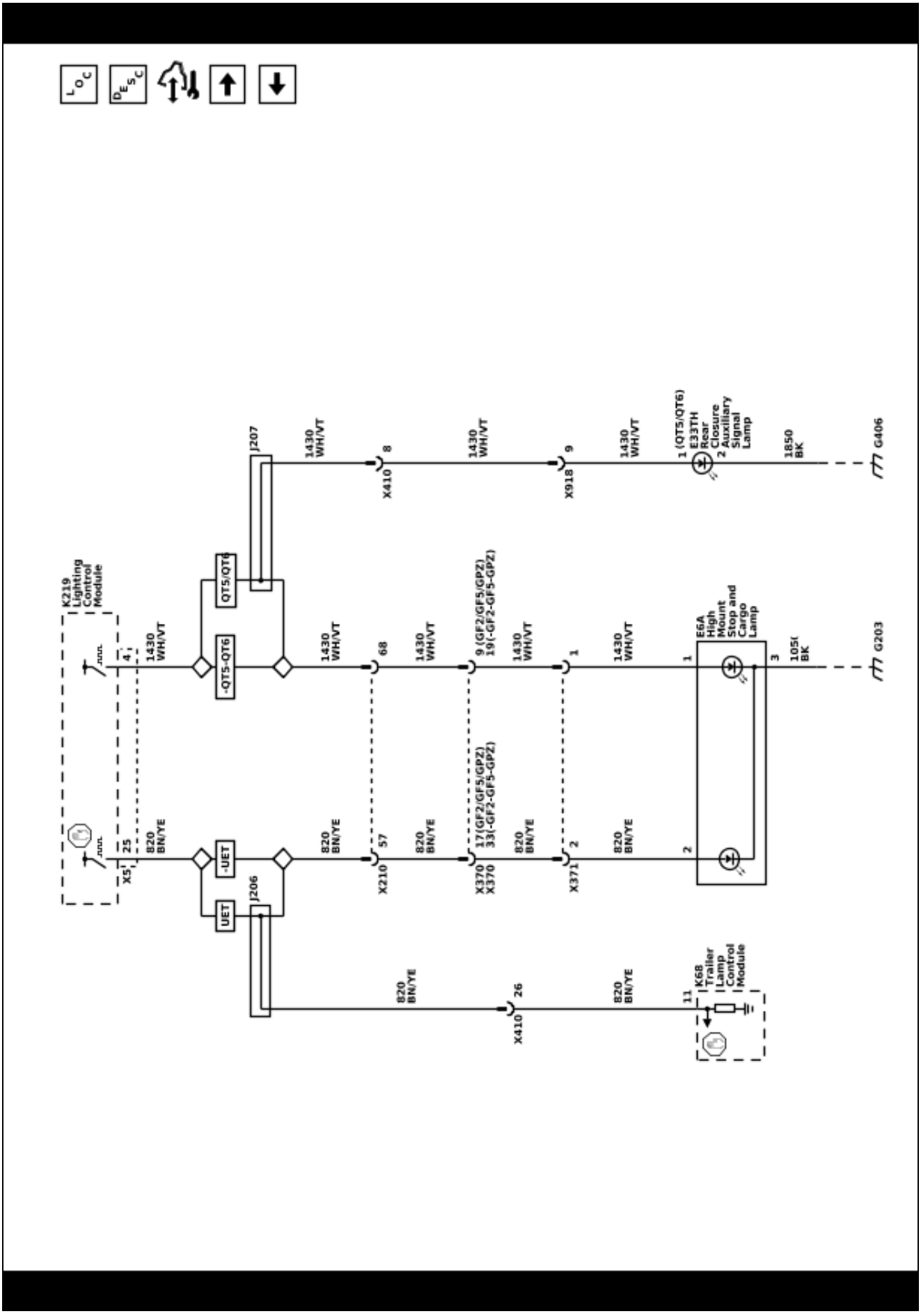

Exterior Lights Schematics (Outside Rearview Mirror Task (DLF/DEZ/DQS), Turn (DPO/DQS), Approach (DEZ), and Flood Lights (DPO/DQS))

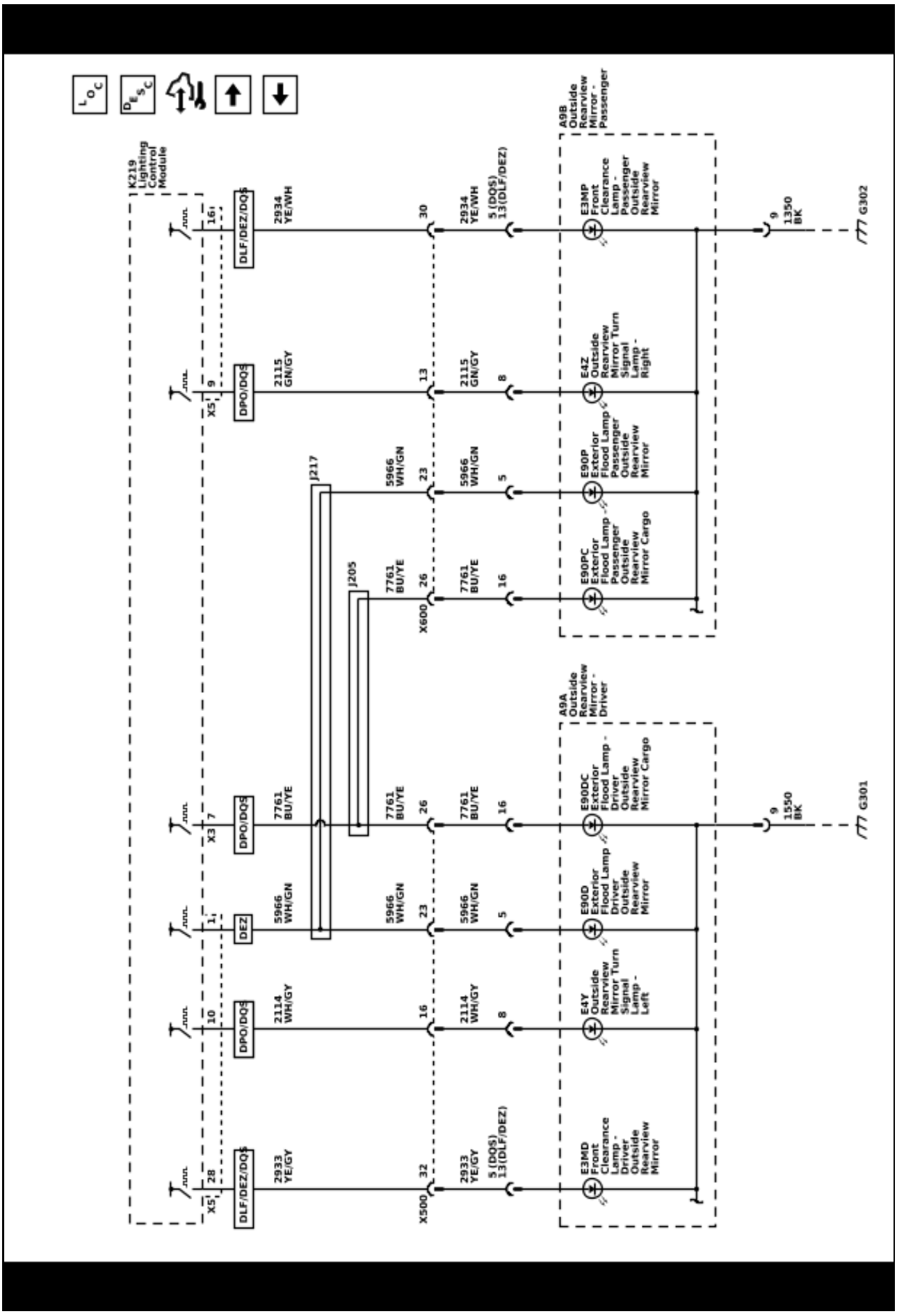

Exterior Lights Schematics (Identification Lights (DPO/DQS/GRZ))

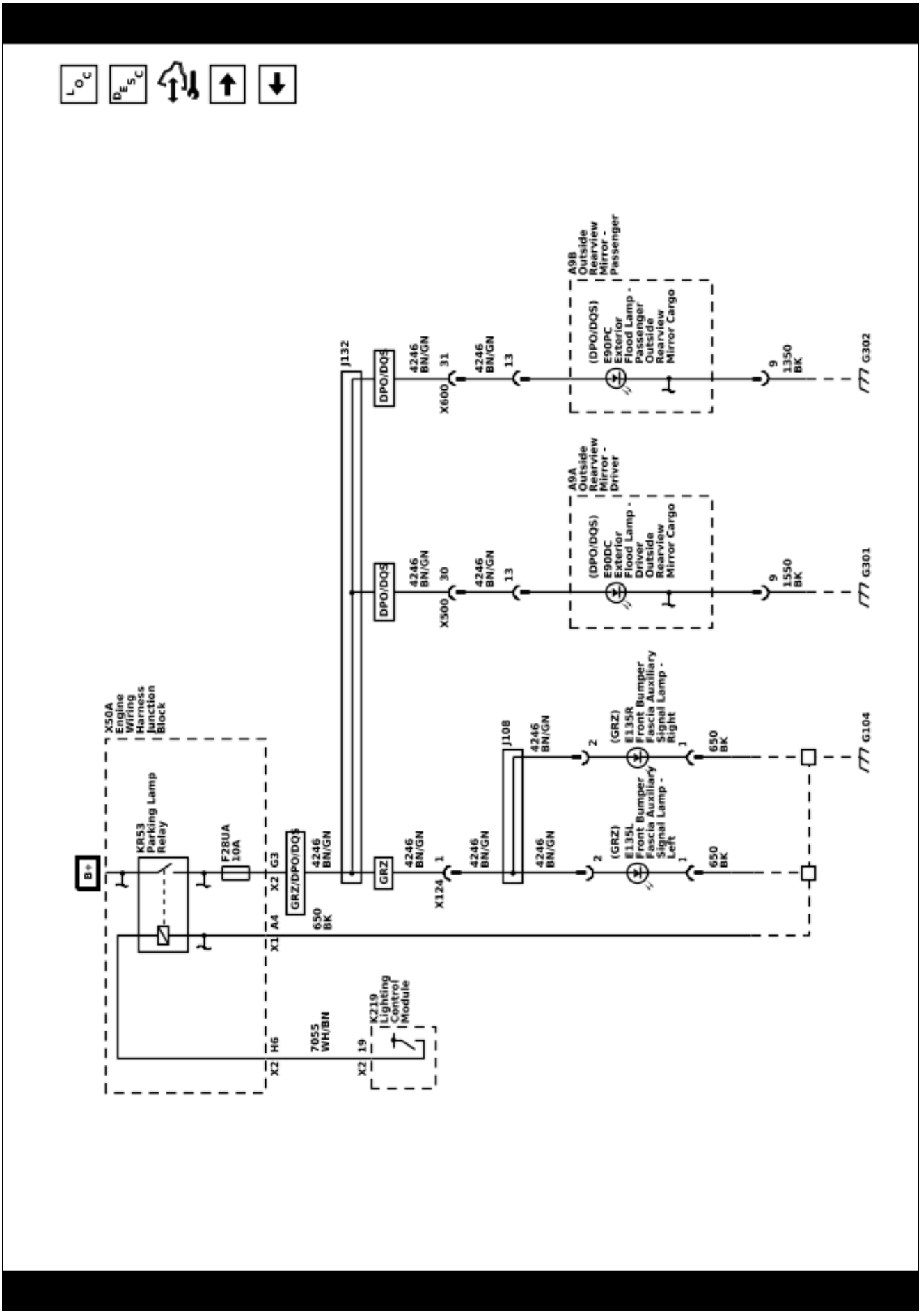

Exterior Lights Schematics (License Plate Lamps)

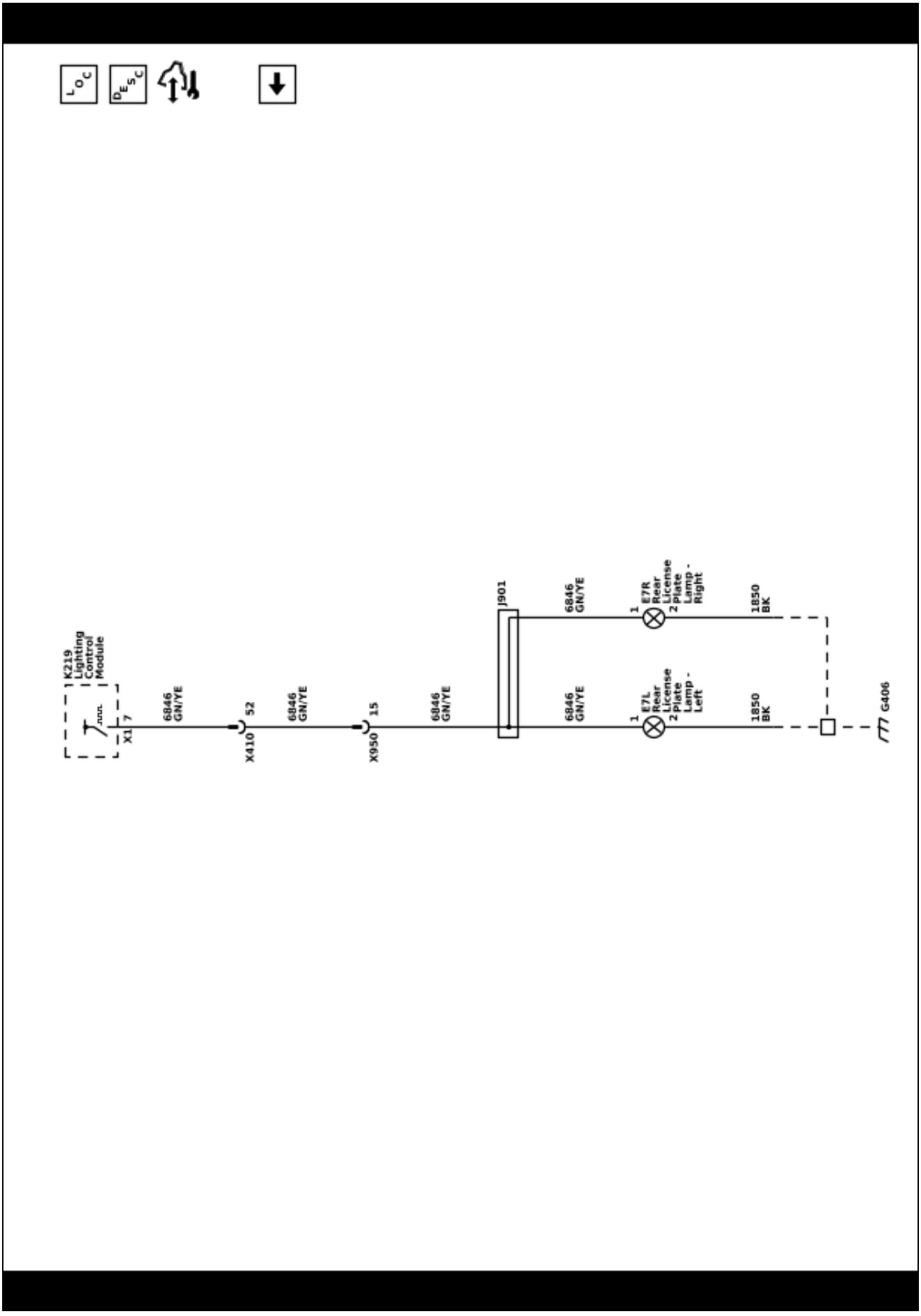

Interior Lights Schematics (Roof Console and Rear Seat Reading and Courtesy Lamps (Extended Cab/Crew Cab))

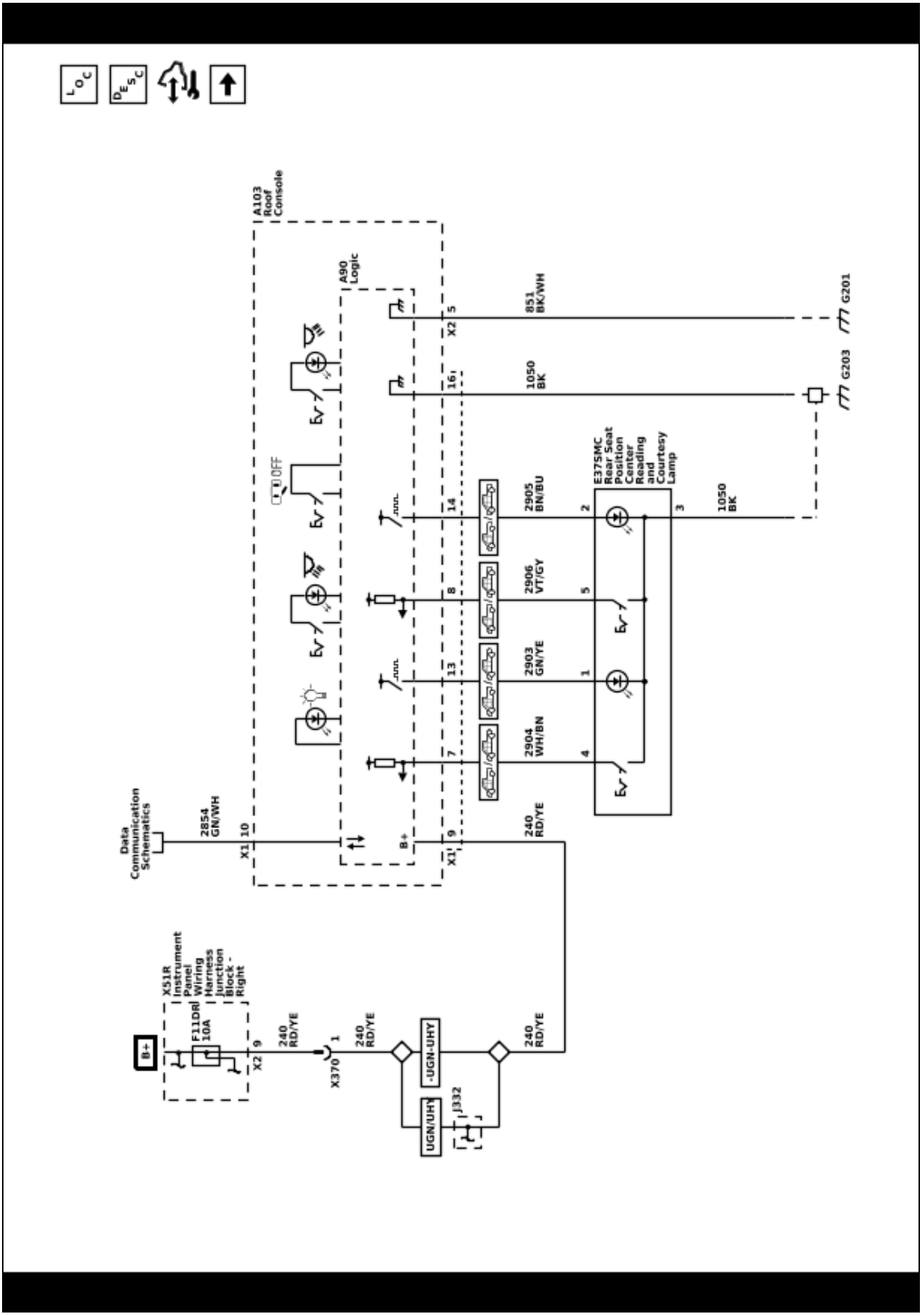

Interior Lights Schematics (Cargo Lamp Indicator, Sunshade, Center Console, and Door Lamps)

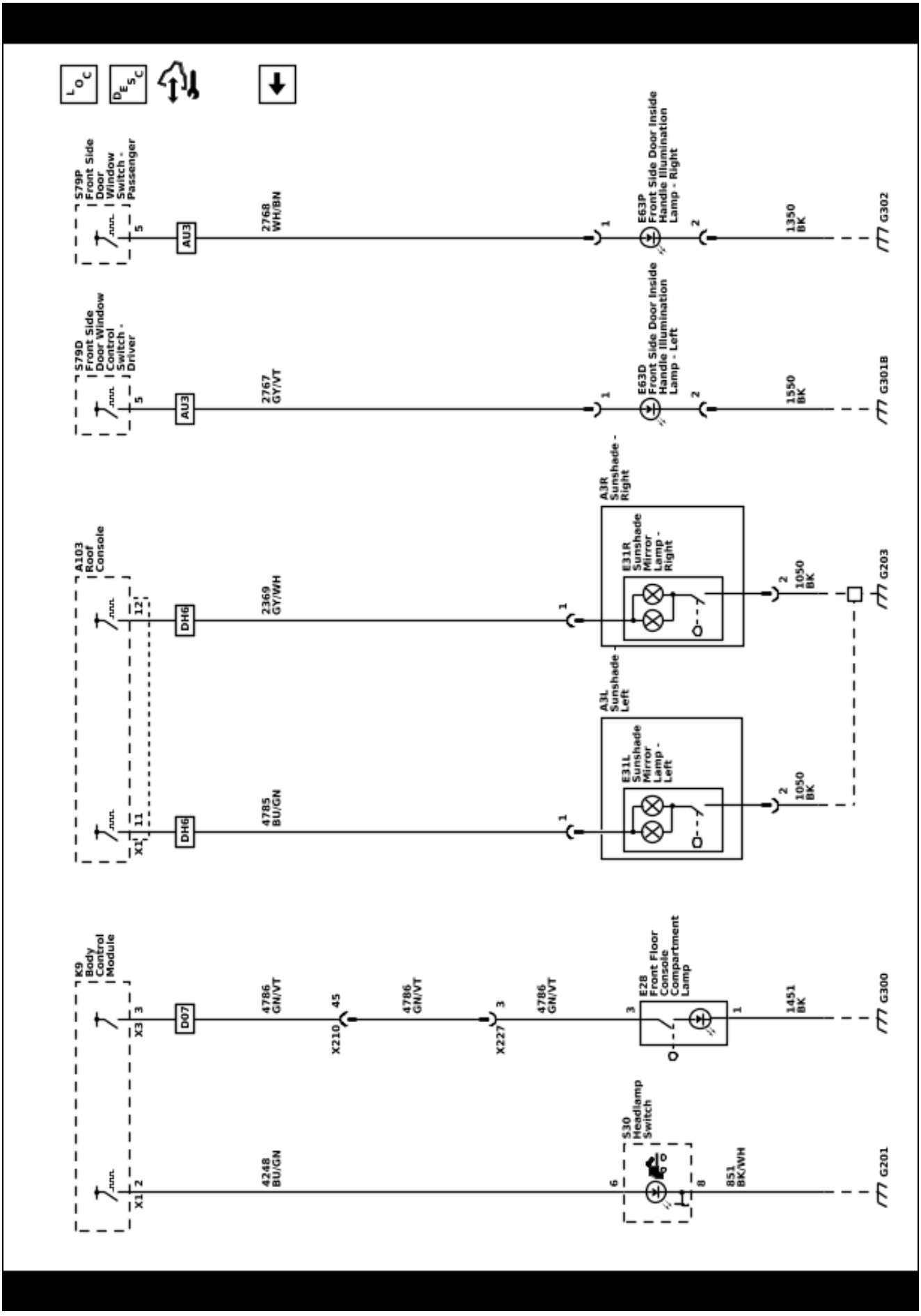

Interior Lights Dimming Schematics (Controls and Front Door Backlights)

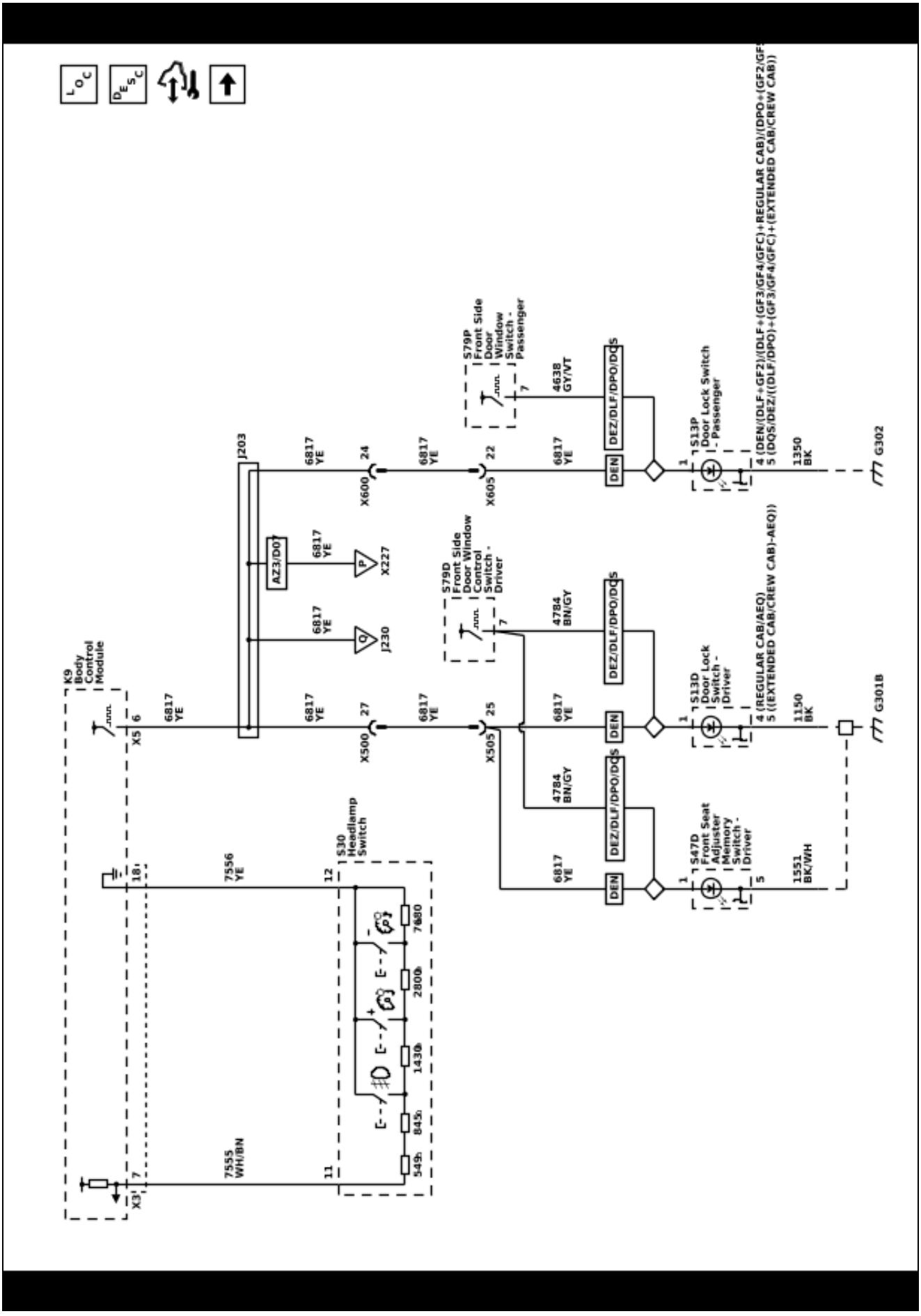

Interior Lights Dimming Schematics (Steering Wheel, Floor Console (D07), and Center Seat (AZ3) Backlights)

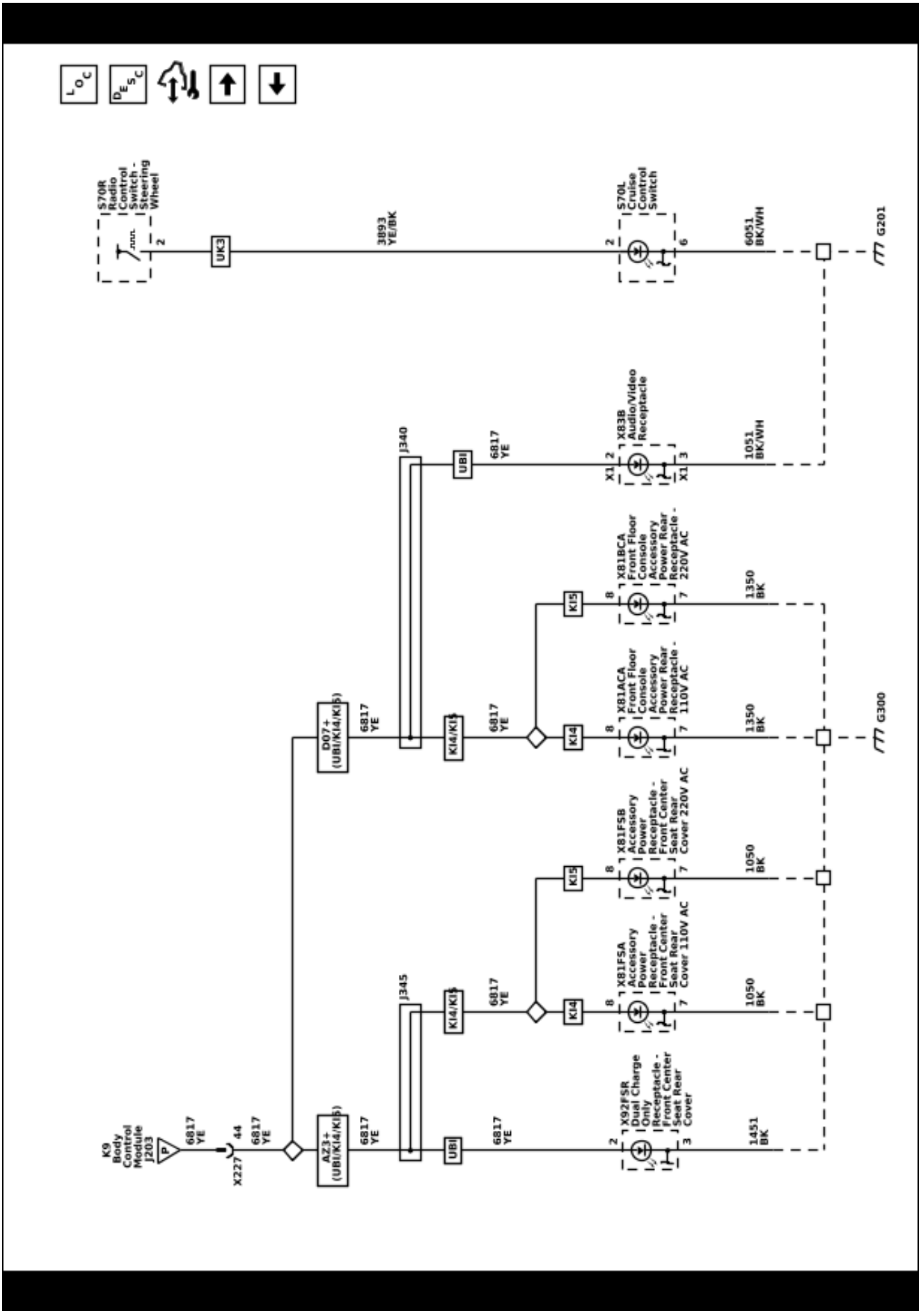

Interior Lights Dimming Schematics (Instrument Panel Backlights)

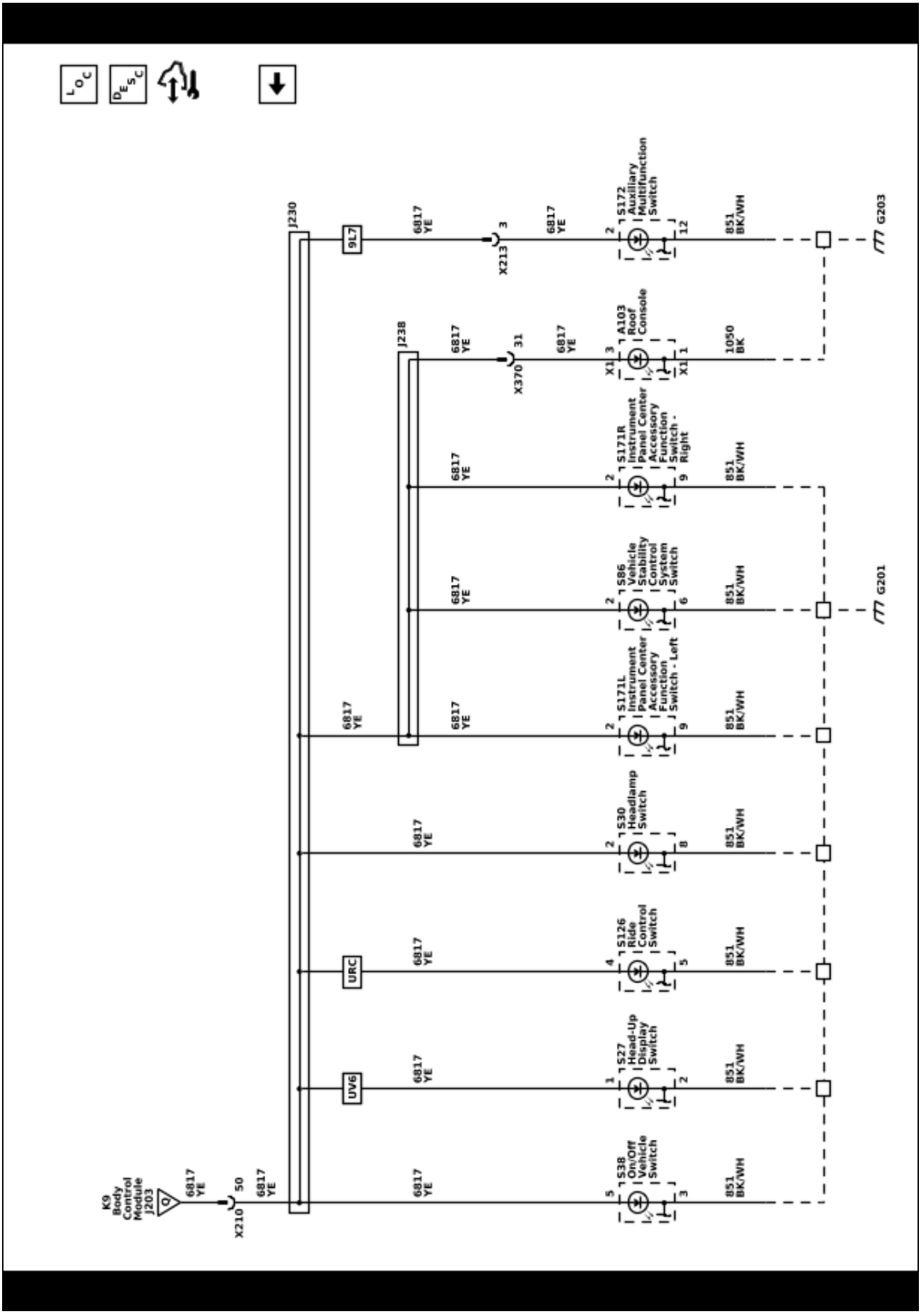

5967355

Interior Lights Dimming Schematics (Indicators)

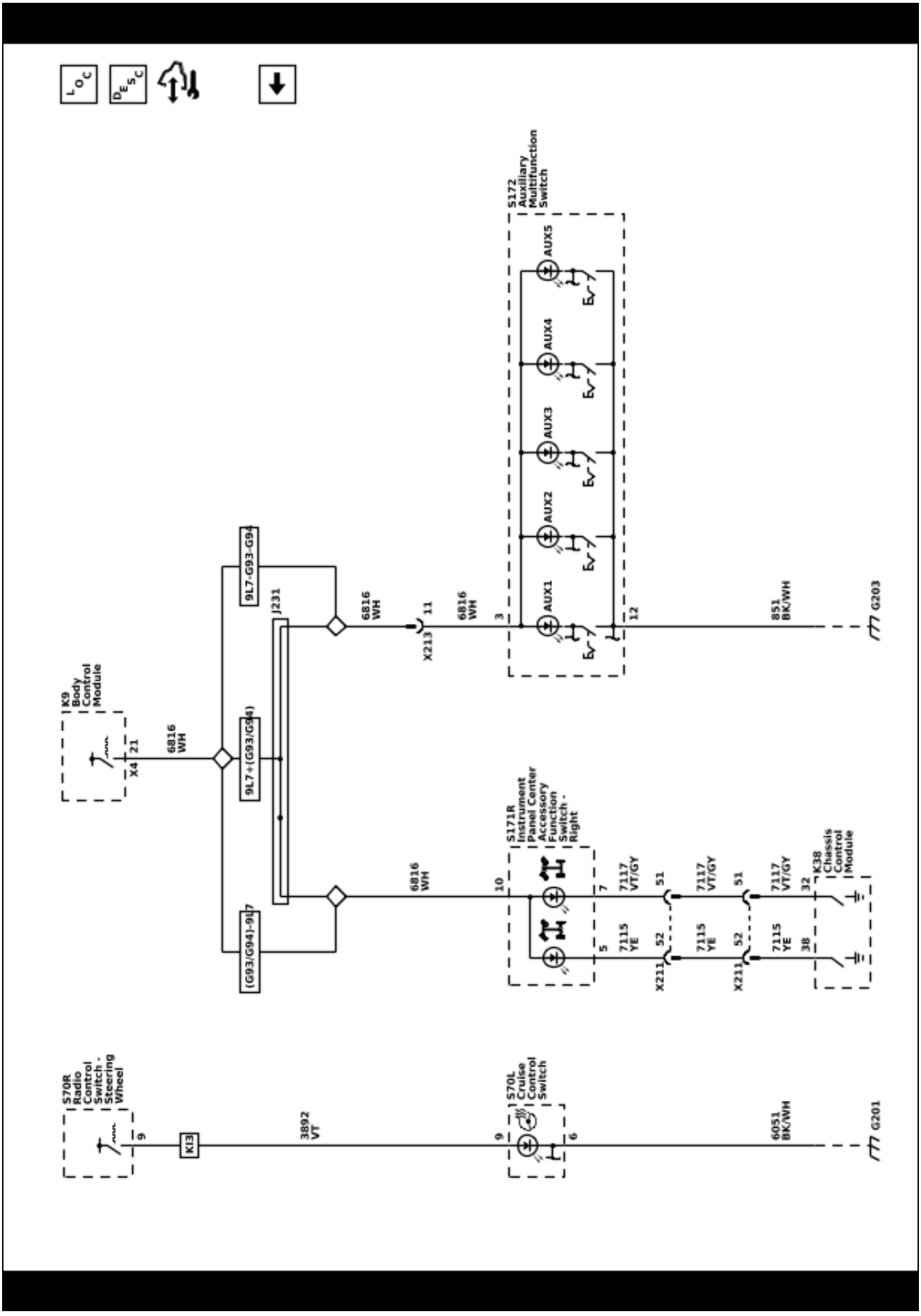

Description and Operation

Exterior Lighting Systems Description and Operation

The exterior lighting system consist of the following lamps:

- Backup lamps
- Cargo lamps
- Daytime running lamps (DRL)
- Exterior courtesy lamps
- Hazard warning lamps
- Headlamps
- Park, tail, license, and marker lamps
- Front fog lamps (T3U)
- Stop lamps
- Task lamps
- Turn signal lamps
- Trailer lighting, refer to *Trailering Description and Operation on page 2-59* for more information.

Low Beam Headlamps

The headlamps may be turned ON in 3 different ways:

- When the headlamp switch is placed in the ON position, for normal operation
- When the headlamp switch is placed in the AUTO position, for automatic lamp control during low ambient light conditions
- When the headlamp switch is placed in the AUTO position, with the windshield wipers ON in daylight conditions, after a 6 second delay

The K9 Body Control Module (BCM) monitors three signal circuits from the S30 Headlamp Switch. When the headlamp switch is in the AUTO position, the three signal circuits are unaffected (open) and the BCM relies on the B10D Sun Load and Ambient Light and Security Indicator Sensor input to determine if headlamps are required or if daytime running lamps will be activated based on outside lighting conditions. When the headlamp switch is placed in the headlamp OFF position, the headlamp switch headlamps OFF signal circuit is grounded, indicating to the BCM that the exterior lamps should be turned OFF. With the headlamp switch in the PARK LAMPS position, the headlamp switch park lamps ON signal circuit is grounded, indicating that the park lamps have been requested. When the headlamp switch is in the HEADLAMP position, both the headlamp switch park lamps ON signal circuit and the headlamps ON signal circuit are grounded. The BCM responds to these inputs by sending a serial data message to the K219 Lighting Control Module. The Lighting Control Module responds by applying pulse width modulated (PWM) voltage to both headlamp low beam control circuits, illuminating the low beam headlamps. When the Lighting Control Module commands the low beam headlamps ON, the operator will notice the interior backlighting for the instrument cluster and the various other switches dim to the level of brightness selected by the instrument panel dimmer switch.

High Beam Headlamps

The high beam and flash to pass (FTP) functions are contained within the S78 Turn Signal Switch. The K9 Body Control Module (BCM) provides the turn signal/multifunction switch with two signal circuits, the high beam signal circuit and the FTP signal circuit. When the low beam headlamps are ON, and the turn signal/multifunction switch is placed in either the high beam position or FTP position, ground is applied to the BCM through the high beam/FTP signal circuit. The BCM responds to the high beam request by sending a serial data message to the K219 Lighting Control Module. The Lighting Control Module responds by applying pulse width modulated (PWM) voltage to both headlamp high beam control circuits, illuminating the high beam headlamps. The status of the high beam lamps is shown by a blue indicator located on the instrument cluster. When high beams are commanded on, the indicator will be illuminated continuously. If the driver turns the high beams off, the indicator will also turn off.

Flash to Pass

When the S78 Turn Signal Switch is momentarily placed in the flash to pass position, ground is applied to the turn signal/multifunction switch. The turn signal/multifunction switch applies ground to the K9 Body Control Module (BCM) through the flash to pass switch signal circuit. The BCM responds to the flash to pass request by sending a serial data message to the K219 Lighting Control Module. The Lighting Control Module responds by applying pulse width modulated (PWM) voltage to both headlamp high beam control circuits, illuminating the high beam headlamps. This causes the high beam headlamps to illuminate at full brightness until the turn signal/multifunction switch is returned to the at rest position.

Automatic Headlamp Control

The K9 Body Control Module (BCM) monitors three signal circuits from the S30 Headlamp Switch. When the headlamp switch is in the AUTO position, the three signal circuits are unaffected (open) and the BCM relies on the B10D Sun Load and Ambient Light and Security Indicator Sensor input to determine if headlamps are required or if daytime running lamps will be activated based on outside lighting conditions. During automatic lamp control, the headlamps will be off during daylight conditions but will turn on when the ambient light sensor detects low ambient light conditions. The ambient light sensor is a light sensitive transistor that varies the voltage signal to the BCM. The BCM provides a 5 volt reference signal and a low reference ground to the ambient light sensor. During low light conditions the BCM will request the low beam headlamps ON by sending a serial data message to the K219 Lighting Control Module. The Lighting Control Module responds by applying pulse width modulated (PWM) voltage to both headlamp low beam control circuits, illuminating the low beam headlamps.

Intellibeam – Automatic High Beam Assist (TQ5)

The IntelliBeam system is activated by pressing the auto high beam assist button on the turn signal switch while the exterior lamp control is in AUTO mode and

the engine running. The AHBA system consists of a front camera module that detects light, and is able to identify approaching vehicles on an even, straight road at a distance of greater than 0.4 km (0.25 mi). The front camera module analyzes light color, intensity, and movement. The AHBA system will turn OFF the high beam headlamps when approaching vehicle headlamps or preceding vehicle taillights are detected by the front camera module. The AHBA system is turned off anytime the headlamp switch is moved out of the AUTO position.

AHBA System Activation

- Vehicle ON
- Headlamp switch placed in the AUTO position
- Outside lighting conditions must be dark
- Vehicle speed greater than 25 mph (40 km/h)

AHBA System Operation

The following are conditions that the AHBA system will turn the high beam headlamps off during operation:

- The system detects approaching traffic headlamps
- The system detects preceding traffic tail lamps
- Ambient light level too high due to towns or twilight situations
- The vehicle's speed drops below 13 mph (22 km/h)
- Delay

Note: AHBA may not operate properly if any of the following conditions exist:

- Approaching and preceding vehicles lamps are undetectable due to dirt, snow, road spray, smoke, fog, or any other airborne conditions.
- The front camera module is covered with ice, dirt, snow, haze, or is obstructed.
- The vehicle is being driven on winding or hilly road conditions which would make any on coming vehicle headlamps undetectable by the AHBA.

AHBA System Deactivation

- Manually operating the headlamp switch from neutral to high beam position
- AHBA is deactivated automatically when the front or rear fog lamps are turned ON

AHBA System Indicator

The status of the AHBA system is shown by a green indicator located on the instrument panel cluster. When AHBA is active, the indicator will be illuminated continuously. If the operator deactivates the AHBA system, the indicator will turn off.

Daytime Running Lamps

The daytime running lamps (DRL) will illuminate continuously when the following conditions are met:

- Engine running
- The headlamp switch is in the AUTO position
- Ambient light conditions are daytime conditions

The B10D Sun Load and Ambient Light and Security Indicator Sensor is used to monitor outside lighting conditions. The ambient light sensor provides a voltage signal that will vary between 0.2 and 4.9 volts depending on outside lighting conditions. The K9 Body Control Module (BCM) provides a 5 volt reference signal and a low reference ground to the ambient light sensor. The BCM monitors the ambient light sensor signal circuit to determine if outside lighting conditions are correct for either daytime running lamps (DRL) or automatic lamp control when the headlamp switch is in the AUTO position. In daylight conditions the BCM will send a serial data message to the K219 Lighting Control Module to command the DRLs ON, the Lighting Control Module responds by applying pulse width modulated (PWM) voltage to both DRL control circuits, illuminating the DRLs. During low light conditions the Lighting Control Module will command the low beam headlamps ON.

Hazard Lamps

The hazard flashers may be activated in any power mode. The Hazard Warning Switch signal circuit is momentarily grounded when the hazard switch is pressed. The K9 Body Control Module (BCM) responds to the hazard switch signal input by sending a serial data message to the K219 Lighting Control Module. The Lighting Control Module responds by supplying battery voltage to all turn signal lamps in an ON and OFF duty cycle. When the hazard switch is activated, the BCM also sends a serial data message to the instrument cluster requesting both turn signal indicators to be cycled ON and OFF.

Park, Tail, and License Lamps

When the S30 Headlamp Switch is placed in the HEAD or PARK position, ground is applied to the park lamp switch ON signal circuit to the K9 Body Control Module (BCM). The BCM responds to the park lamp switch signal input by sending a serial data message to the K219 Lighting Control Module. The Lighting Control Module responds by applying battery voltage to the park lamps, tail lamps, and license lamps control circuits illuminating the park, tail, and license lamps.

Stop Lamps

The B22 Brake Pedal Position Sensor is used to sense the action of the driver application of the brake pedal. The K9 Body Control Module (BCM) provides the brake pedal position sensor with low reference, signal, and 5 volt reference circuits. When the variable signal reaches a voltage threshold indicating the brakes have been applied, the BCM will respond by sending a serial data message to the K219 Lighting Control Module requesting the stop lamps to be turned ON. The Lighting Control Module responds by applying battery voltage to the left and right stop lamp control circuits as well as the center high mounted stop lamp control circuit illuminating the left and right stop lamps and the center high mounted stop lamp. If serial data communication is lost between the BCM and the Lighting Control Module, the Lighting Control Module will receive a serial data message from the Electronic Brake Control Module indicating that the brakes have been applied. If serial data communication is lost between all three modules, the Lighting Control Module also receives a hard wired voltage signal from the BCM to signal the brake lamps ON.

Turn Signal Lamps

Turn Signals

The K9 Body Control Module (BCM) provides the S78 Turn Signal Switch with left and right turn signal switch signal circuits. Ground is applied at all times to the turn signal/multifunction switch. The turn signal lamps may only be activated with the ignition switch in the ON or START positions. When the turn signal/ multifunction switch is placed in either the turn right or turn left position, ground is applied to the BCM through either the right turn or left turn signal switch signal circuit. The BCM responds to the turn signal switch input by sending a serial data message to the K219 Lighting Control Module. The Lighting Control Module responds by applying a pulsating voltage to the turn signal lamps through there respective control circuits. When a turn signal request is received by the BCM, a serial data message is also sent to the instrument cluster requesting the respective turn signal indicator be pulsed ON and OFF.

Turn Signal Outage Detection

Vehicles with LED turn signals require additional turn signal outage detection circuits that provide turn signal feedback to the K219 Lighting Control Module. The Lighting Control Module uses the feedback information to send a serial data message to the instrument cluster to alert the driver anytime a turn signal fault is detected. If a fault is detected on a turn signal circuit or a turn signal feedback circuit, the turn signals will flash in a rapid manner to alert the driver of the fault.

Backup Lamps

With the engine running and the transmission in the reverse position, the transmission control module (TCM) sends a serial data message to the multiple control modules. The message indicates that the gear selector is in the reverse position. The K9 Body Control Module (BCM) responds to the reverse position message by sending a serial data message to the K219 Lighting Control Module to request the backup lamps on. The Lighting Control Module responds by applying battery voltage to the backup lamps control circuit(s) illuminating the backup lamps. The applied voltage is also sent to the A11 Radio and A10 Inside Rearview Mirror for rearview camera purposes. Once the driver moves the gear selector out of the reverse position, a serial data message is sent by the TCM that the transmission is no longer in the reverse position. The BCM responds to the reverse position message by sending a serial data message to the Lighting Control Module to request the backup lamps off. The Lighting Control Module responds by removing battery voltage from the backup lamp circuits. The engine must be running for the backup lamps to operate.

Cargo Lamps

Cargo Lamps

When the K9 Body Control Module (BCM) receives a task lamp switch input from the S30 Headlaamp Switch, the BCM responds by sending a serial data message to the K219 Lighting Control Module. The lighting control module responds by applying pulse width modulated (PWM) voltage to the cargo lamp control circuits illuminating the cargo lamps. In the event that the cargo lamps were to remain illuminated for more than 10 minutes with the ignition switch in the OFF position, the lighting control module will deactivate the cargo lamp control circuits to prevent total battery discharge.

Task Lamps

When the K9 Body Control Module (BCM) receives a task lamp switch input from the S30 Headlaamp Switch, the BCM responds by sending a serial data message to the K219 Lighting Control Module. The lighting control module responds by applying pulse width modulated (PWM) voltage to the task lamp control circuits illuminating the task lamps in each outside rearview mirror assembly. When the task lamp switch is pressed a second time, the left task lamp control circuit will stay illuminated while the right side will be turned off. When the task lamp switch is pressed a third time, the left task lamp control circuit will be turned off while the right side will be turned back on. When the task lamp switch is pressed a fourth time, both task lamps will be turned off. In the event that the task lamps were to remain illuminated for more than 10 minutes with the ignition switch in the OFF position, the lighting control module will deactivate the cargo lamp control circuit to prevent total battery discharge.

Approach Lighting

Approach lighting is commanded ON when the unlock button is pressed on the keyless entry transmitter during dark ambient light conditions. When the keyless entry transmitter unlock button is pressed, a serial data message is sent by the K9 Body Control Module (BCM) that the vehicle is being unlocked. The K219 Lighting Control Module responds to the serial data message by applying voltage to the approach lamp control circuit illuminating the LED lighting located under each outside rearview mirror as part of approach lighting.

Battery Run Down Protection/ Inadvertent Power

To provide battery run down protection, the exterior lamps will be deactivated automatically under certain conditions. The K9 Body Control Module (BCM) monitors the state of the S30 Headlamp Switch. If the headlamp switch is in the park or headlamp position when the ignition switch is ON and then the ignition switch is placed in the OFF position, the BCM initiates a 10 minutes timer. At the end of the 10 minutes, the BCM will send a serial data message to the K219 Lighting Control Module to deactivate the exterior lamps to prevent total battery discharge. This feature will be cancelled if any power mode other than OFF becomes active.

The BCM will disable battery run down protection if any of the following conditions exist:

- The park or headlamp switch is changed from the ON to OFF position, and back to the ON position during battery run down protection.
- The BCM determined that the park or headlamp switch was not active when the ignition was turned OFF.

Interior Lighting Systems Description and Operation

Interior Lamps

The interior lighting system consist of two groups. This first group includes lamps that are not be dimmed.

- Dome/reading lamps
- Instrument panel compartment lamp
- Instrument panel courtesy lamps
- Overhead console accent lamp
- Sunshade mirror lamps

Dome Lamps

The dome lamps are controlled by door ajar inputs to the K9 Body Control Module (BCM). When any door is opened, the door ajar switch contacts close and the BCM receives a door-open input. The BCM responds by sending a serial data message to the A103 Roof Console. The Roof Console responds by applying battery voltage to the dome lamps illuminating the dome lamps. The BCM will also send a serial data message to request the dome lamps on when a door lock/unlock request is activated with the key fob. After all doors have been closed, the dome lamp will remain illuminated approximately 3 seconds after the last door closes. In the event that the dome lamp were to remain illuminated for more than 10 minutes with the ignition switch in the OFF position, the BCM will deactivate the dome lamp control circuit to prevent total battery discharge. The dome lamps will turn OFF using the theater dimming feature when controlled by the BCM.

Center Console Compartment Lamp

The K9 Body Control Module (BCM) supplies battery voltage to the center console lamp. When the center console lid is opened, the switch contacts close allowing battery voltage to flow illuminating the center console lamp. In the event that the center console lamp were to remain illuminated for more than 10 minutes with the ignition/vehicle off, the BCM will deactivate the courtesy lamp control circuit to prevent total battery discharge.

Keyless Entry Interior Illumination

When the operator uses the keyless entry transmitter in order to unlock the doors, the K9 Body Control Module (BCM) receives a door-unlock signal. The BCM must receive inputs from various systems that indicate that the ignition switch is OFF, the courtesy lamp switch is OFF, and all doors are closed before the BCM will activate the interior lamps. After all doors have been closed, the courtesy lamps will turn OFF immediately if the ignition switch is turned to the ON position, the door locks are LOCKED, or approximately 20 seconds after the last door closes. The BCM will turn off the courtesy lamps through the theater dimming feature. The BCM keeps the courtesy lamps on for 40 seconds after an alarm event is completed.

Reading Lamps

When a reading lamp button is pressed, the switch contacts close providing a path to ground for the signal circuit from the A103 Roof Console. The roof console responds by applying battery voltage to the appropriate reading lamp control circuit illuminating the reading lamp. If the operator inadvertently leaves a reading lamp ON, the BCM will send a serial data message to turn all interior lighting off after 10 minutes has passed to prevent total battery discharge.

Sunshade Mirror Lamp

The inadvertent power supply voltage circuit from the K9 Body Control Module (BCM) provides battery voltage to the passenger side sunshade mirror lamp. When the sunshade mirror cover is opened, a switch closes providing ground and the sunshade lamp illuminates. If the operator inadvertently leaves the sunshade mirror cover open with the lamp ON, the BCM will turn all interior lamps OFF after 10 minutes has passed to prevent total battery discharge.

Interior Lamps Dimming

The second group includes lamps which may be dimmed. This group may use a combination of light emitting diodes (LED), incandescent lamps, and pulse width modulation (PWM) voltage illumination.

- Audio/Video Input Adapter
- Door lock switch – driver
- Door lock switch – passenger
- Hazard switch
- HVAC control head assembly
- Ignition mode switch
- Instrument panel dimmer switch
- Multifunction switch – center console
- Multifunction switch – instrument panel
- Outside rearview mirror switch
- Park brake switch
- Radio
- Seat memory switch – driver
- Seat memory switch – passenger
- Steering wheel controls switch – left
- Steering wheel controls switch – radio presets
- Steering wheel controls switch – radio volume
- Window switch – driver
- Window switch – passenger

With the S30 Headlamp Switch in the PARK or HEAD position, the park lamp switch signal circuit provides an input to the K9 Body Control Module (BCM). The BCM responds by applying voltage to the backlight dimming control circuits illuminating all components with interior backlighting. All interior backlighting turns on at the dimming level set by the dimmer buttons within the headlamp switch. The headlamp switch is used to increase and decrease the brightness of the interior backlighting components. The BCM provides a signal circuit and a low reference circuit to the headlamp switch for backlight dimming. When a dimming button is pressed, the signal circuit becomes grounded through the appropriate resistor internal to the headlight switch and voltage from the BCM will decrease accordingly. The BCM interprets the signal and responds in two ways. The BCM applies a pulse width modulated (PWM) voltage through the LED dimming control circuits illuminating the interior backlighting to the requested level of brightness. The BCM also sends a

serial data message to the appropriate control modules requesting all dimming components to be illuminated to the same level of brightness.

Battery Rundown Protection/ Inadvertent Power

The K9 Body Control Module (BCM) inadvertent power supply voltage circuit provides battery voltage to all of the interior courtesy lamps. In the event that any of these lamps were to remain illuminated for a period of more than 10 minutes with the ignition switch in the OFF position, the BCM will deactivate the inadvertent power supply voltage circuit to prevent total battery discharge. If the ignition switch is turned to any position other than OFF, or if a lamp switch is activated during this 10 minute period, the timer resets for another 10 minutes.

Mirrors

Schematic and Routing Diagrams

Inside Rearview Mirror Schematics (Inside Rearview Mirror (DD8/DRZ))

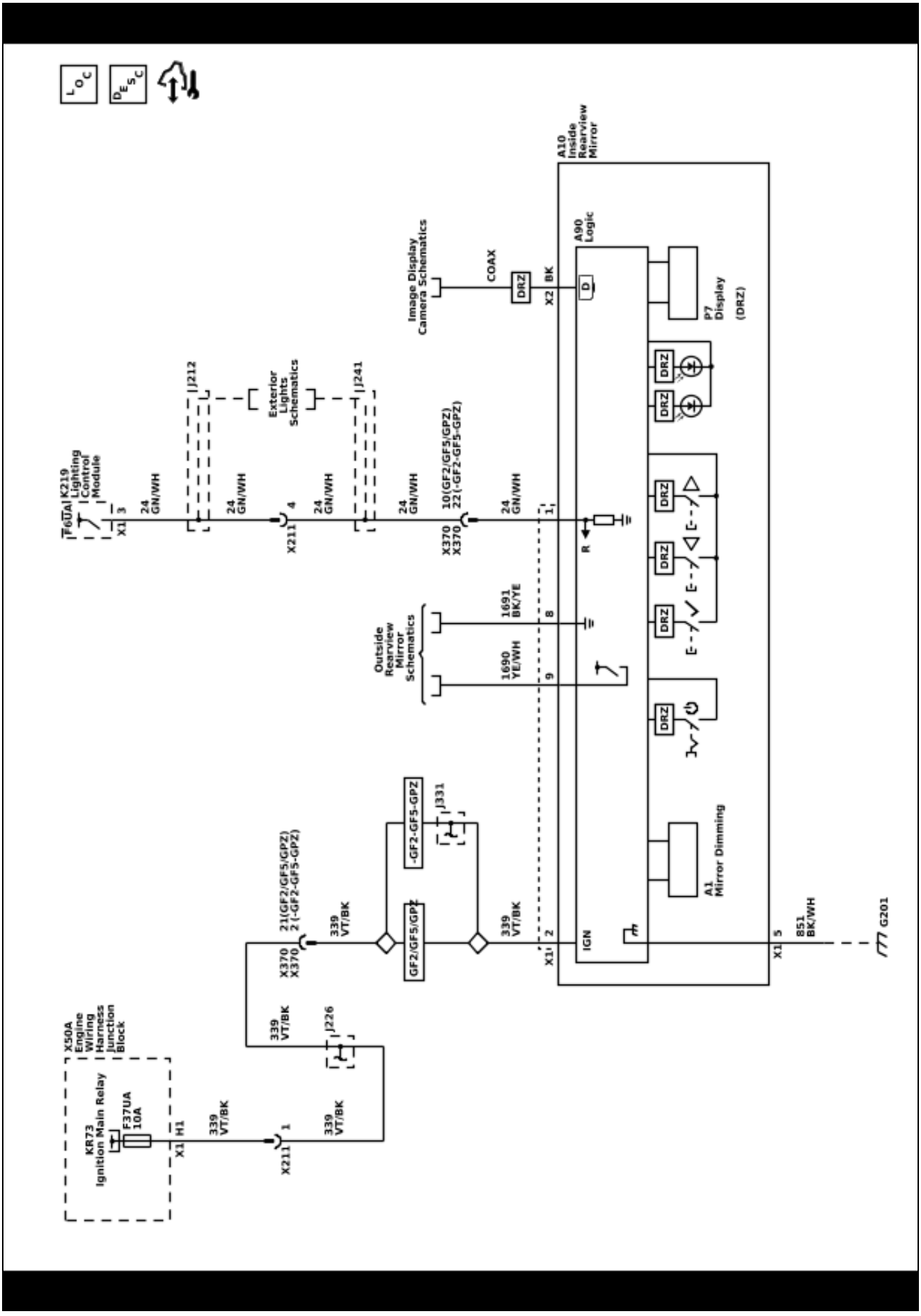

5967356

Outside Rearview Mirror Schematics (Driver Controls, Position, and Folding)

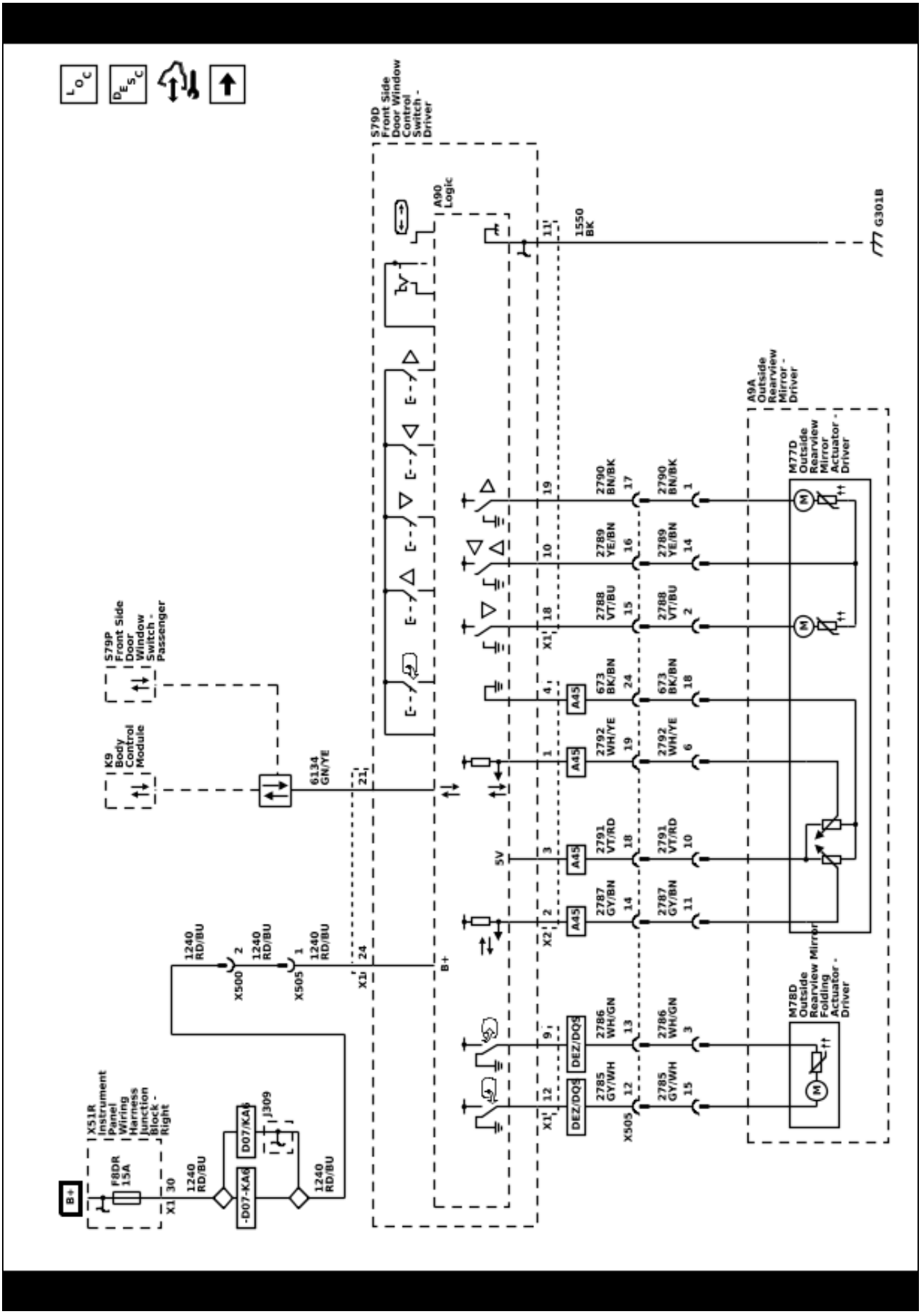

Outside Rearview Mirror Schematics (Passenger Controls, Position, and Folding)

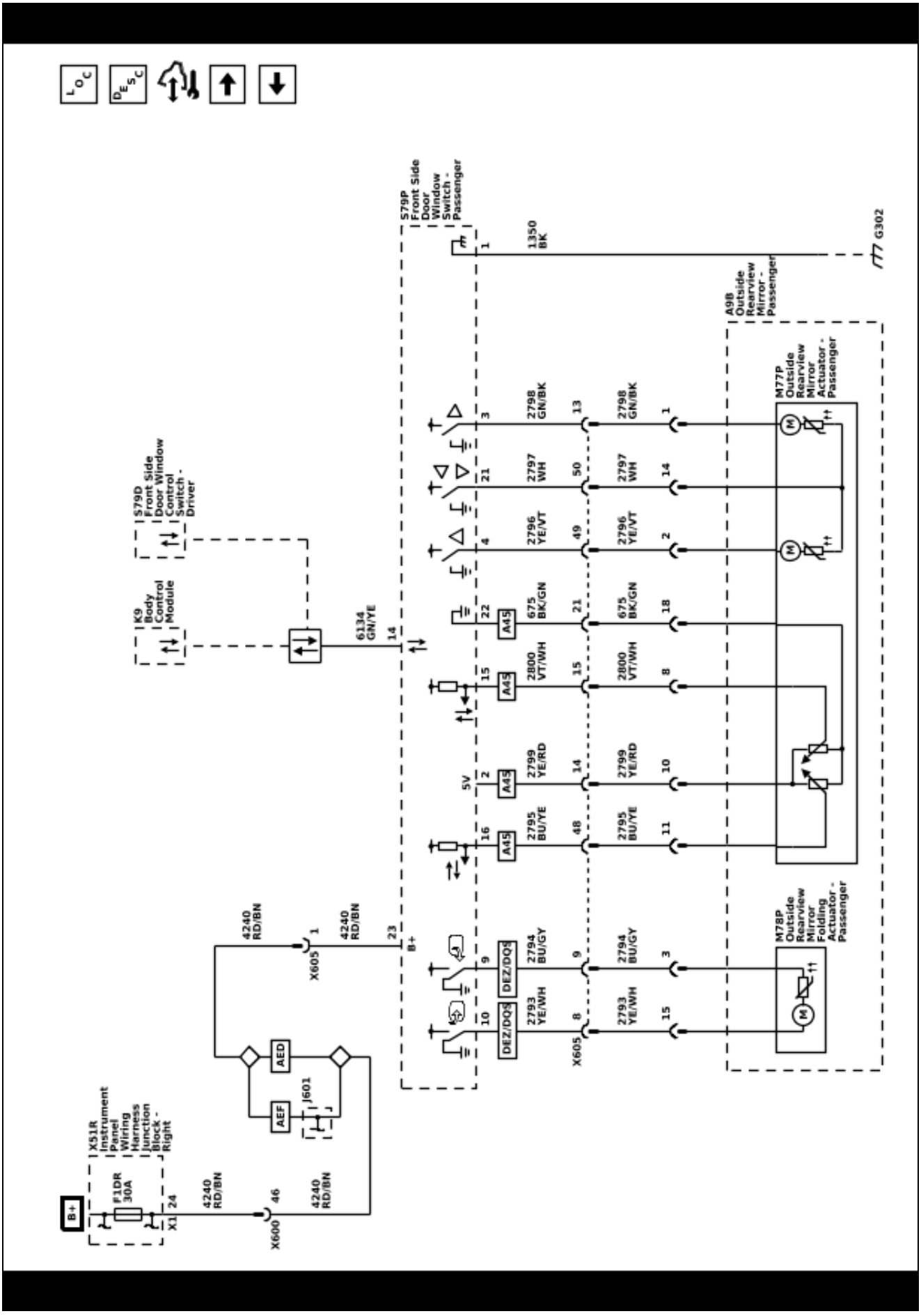

Outside Rearview Mirror Schematics (Dimming (DEZ) and Heating)

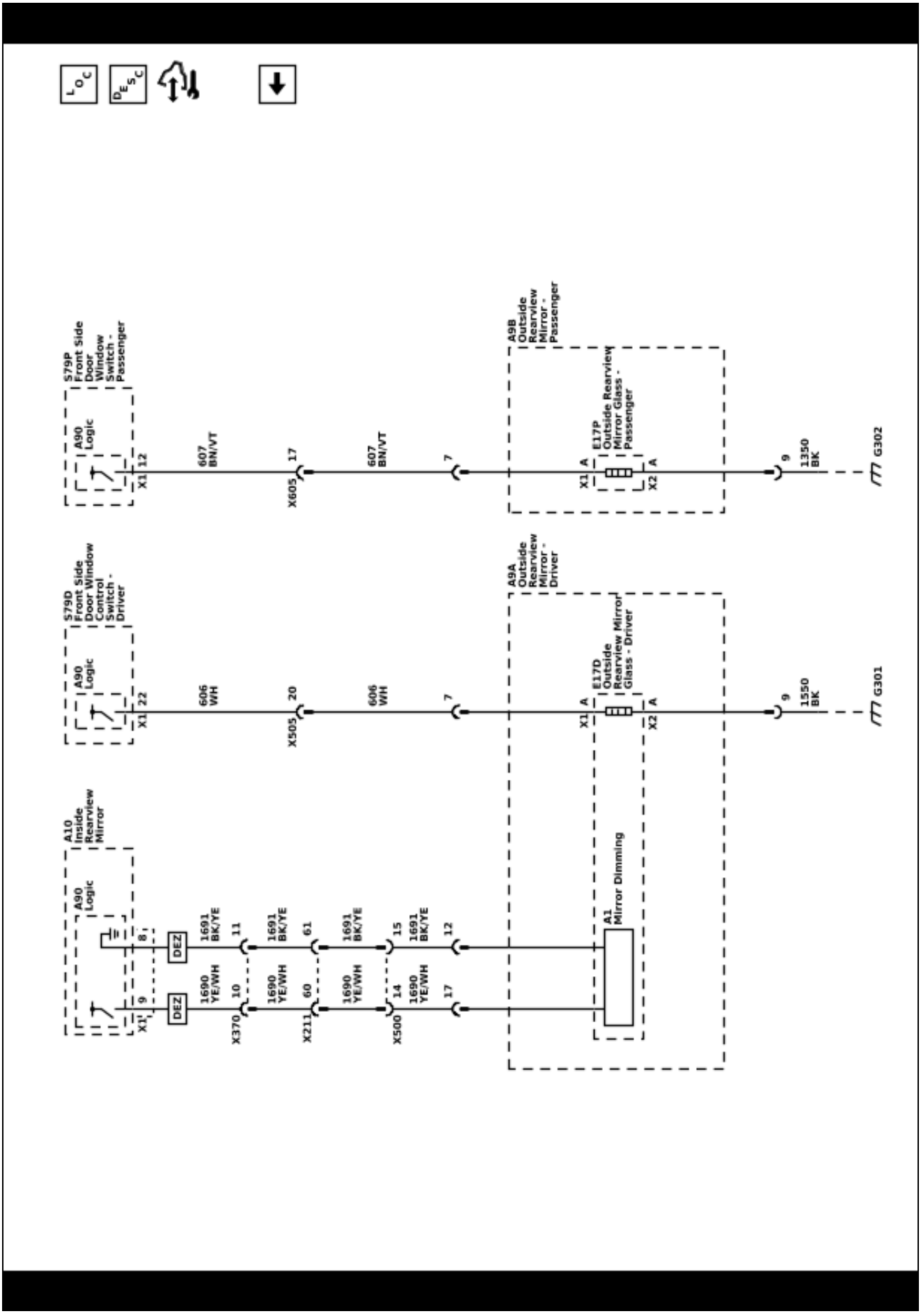

Description and Operation

Automatic Day-Night Mirror Description and Operation

Inside Rearview Mirror with the Automatic Day-Night Feature System Operation

The inside rearview mirror uses 2 photocell sensors. One sensor is the headlight sensor, located on the face side of the mirror. The headlight sensor is used to determine light conditions present at the mirror face. The other sensor is the ambient light sensor, located on the rear of the mirror or windshield side. The ambient light sensor is used to determine the exterior light conditions. With a low exterior light condition detected, and a high light condition from behind the car, at the headlight sensor, the inside rearview mirror will automatically darken the face of the mirror.

In the daytime, the mirror is in a normal state because of the high exterior light condition that is indicated by the ambient light sensor. With the gear selector lever in the REVERSE position and the Ignition ON/Vehicle in Service Mode, backup lamp supply voltage is supplied as an input to the inside rearview mirror. The mirror monitors this input to disable the automatic day-night feature. This allows the driver to see objects in the mirror clearly when backing up, even during the night.

Driver Outside Rearview Mirror with Automatic Day-Night System Operation (If Equipped)

The automatic day-night feature of the driver outside rearview mirror is controlled by the inside rearview mirror. The inside rearview mirror supplies control and low reference to the driver outside rearview mirror. At night, with the automatic day-night feature enabled, the driver outside rearview mirror will automatically darken with the inside rearview mirror to reduce glare from headlamps behind the vehicle.

Inside Rearview Camera Full Display Mirror System Operation

The inside rearview camera full display mirror is connected to the outside rearview camera via a shielded coaxial cable. When the tab under the inside rearview mirror is pulled rearward, a view of the area behind the vehicle displays on the mirror. Adjust the rearview mirror for a clear view of the area behind the vehicle before turning on full display mirror. Use the button on the back of the mirror to adjust the brightness of the display. Make sure the light sensor is not covered when adjusting the brightness.

The inside rearview camera full display mirror may not work properly or display a clear image if:.

- It is dark.
- The sun or the beam of headlamps are shining directly into the camera lens.
- Ice, snow, mud, or anything else builds up on the camera lens. Clean the lens, rinse it with water, and wipe it with a soft cloth.

When the mirror detects that the camera is not sending a valid video signal, it “blue screens” with a “no video” decal for 3 seconds, then reverts back to the mirror. Meanwhile, if a blue screen keeps on displaying instead of the camera view, take the vehicle to your dealer for service.

Rearview Camera Full Display Mirror Block Diagram

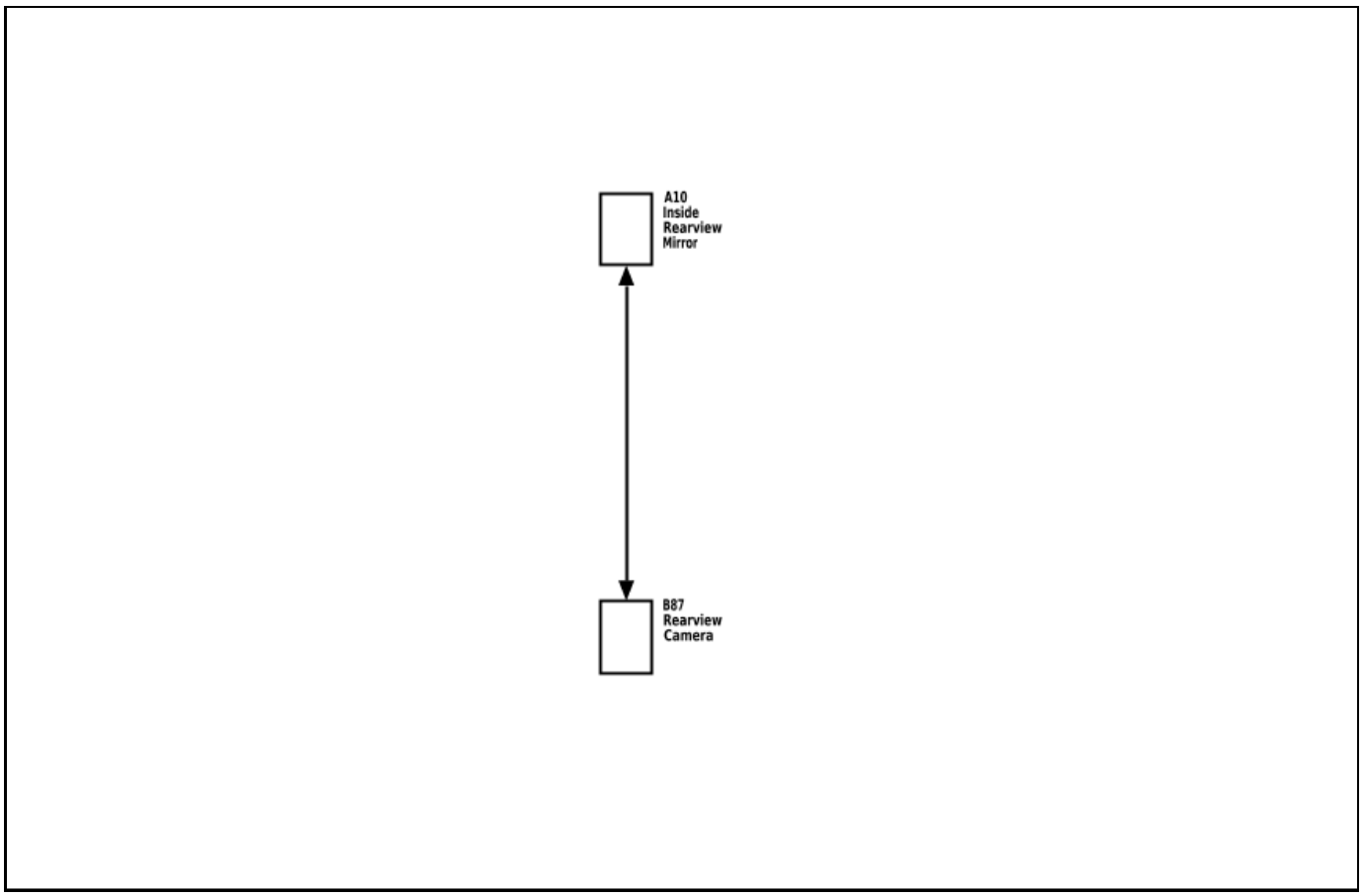

4433072

Outside Mirror Description and Operation

Power Mirror System Components

The power mirror system consists of the following components:

- Body Control Module
- Driver Seat Adjuster Memory Module
- Outside Mirror Switch
- Passenger Window Switch
- Left Outside Rearview Mirror
- Right Outside Rearview Mirror

Power Mirror System Controls

The outside rearview mirror switch is part of the S79D Driver Front Side Door Window Control Switch and uses serial data to control the passenger mirror through the S79P Passenger Front Side Door Window Control Switch. Each S79 Side Door Window Control Switch has it own 12V, ground and data communications circuit along with mirror directional control and mirror fold circuits.

Driver Mirror Controls

The S79D Driver Front Side Door Window Control Switch has internal connections for the driver mirror. When the mirror position switch is active the driver mirror is commanded to move through bi-directional motor control circuits. The motor control circuits are floating while in an inactive state and the switches will apply power and ground to the control circuits as necessary to move the mirror in the commanded direction.

Passenger Mirror Controls

The S79D Driver Front Side Door Window Control Switch uses serial data circuits to communicate the active states for the passenger mirror switch to the S79P Passenger Front Side Door Window Control Switch. The S79P Passenger Front Side Door Window Control Switch has internal connections for the passenger mirror. When the mirror position switch is active the passenger mirror is commanded to move through bi-directional motor control circuits. The motor control circuits are floating while in an inactive state and the switches will apply power and ground to the control circuits as necessary to move the mirror in the commanded direction.

Mirror Position

Mirror position is determined by both horizontal and vertical position sensors in each of the power mirrors. Each S79 Front Side Door Window Control Switch supplies a 5 V reference, low reference, and horizontal and vertical position signal circuits to these sensors. The signal circuits are referenced from 5 V by the S79 Front Side Door Window Control Switch and the signal circuit voltage levels represent the mirror positions. The mirror positions are stored in each

S79 Front Side Door Window Control Switch for memory mirror operation. When the memory seat module receives a memory recall command, the memory seat control module will send the go to position to the S79 Front Side Door Window Control Switch. The S79 Front Side Door Window Control Switches will then drive the appropriate mirror motors to the commanded position sensor settings.

Mirror Select

The S79D Driver Front Side Door Window Control Switch has internal connections for the mirror select switch. When the mirror select switch is active the S79 Front Side Door Window Control Switch will either control the driver mirror or send a serial data message to control the passenger mirror.

Folding Mirrors

The S79D Driver Front Side Door Window Control Switch sends the mirror fold/unfold inputs to the K9 Body Control Module (BCM) through serial data. When the BCM receives a fold/unfold signal it will send a fold/unfold command to the S79 Driver Front Side Door Window Control Switch which will send a serial data message to the S79P Passenger Front Side Door Window Control Switch. The outside mirrors will fold or unfold depending on their current state. The BCM will also send a serial data message to unfold the mirrors when the vehicle is placed into gear. The S79 Front Side Door Window Control Switches control the fold/unfold motors through bi-directional control circuits

Heated Mirrors

The heated mirrors are controlled through each S79 Front Side Door Window Control Switch. When the vehicle is running and the HVAC control module receives a rear window defog request from the radio/HVAC controls, the HVAC control module will send a serial data message to the S79D Driver Front Side Door Window Control Switch and S79P Passenger Front Side Door Window Control Switch. Each S79 Front Side Door Window Control Switch provide B + voltage to the driver and passenger outside rearview mirror heating elements.

Trailering Systems

Schematic and Routing Diagrams

Trailering Systems Schematics (Trailer Lighting Control Module (UET))

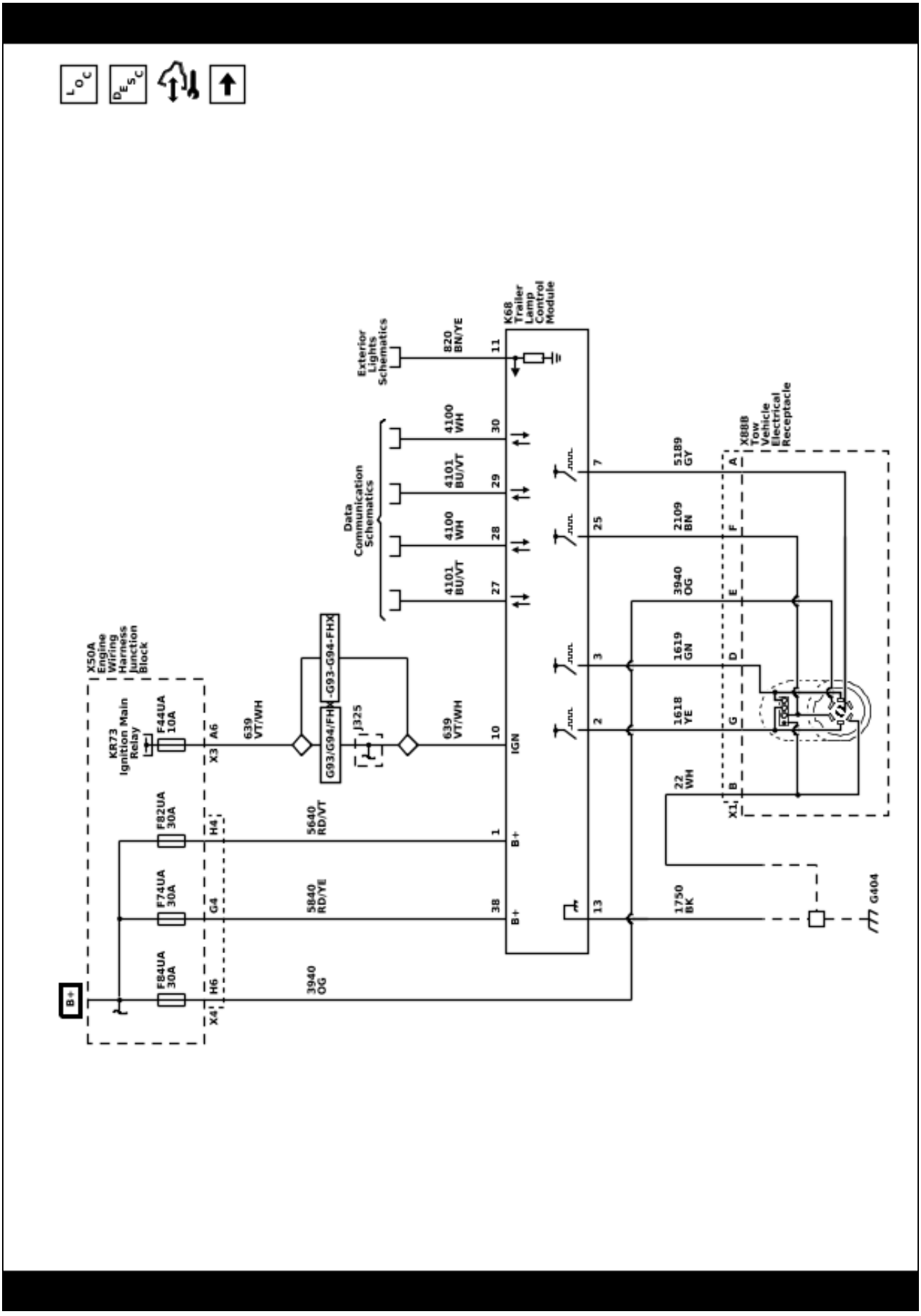

Trailering Systems Schematics (Trailer Connector Pins: A, B, D, E, F, G (Z82-UET))

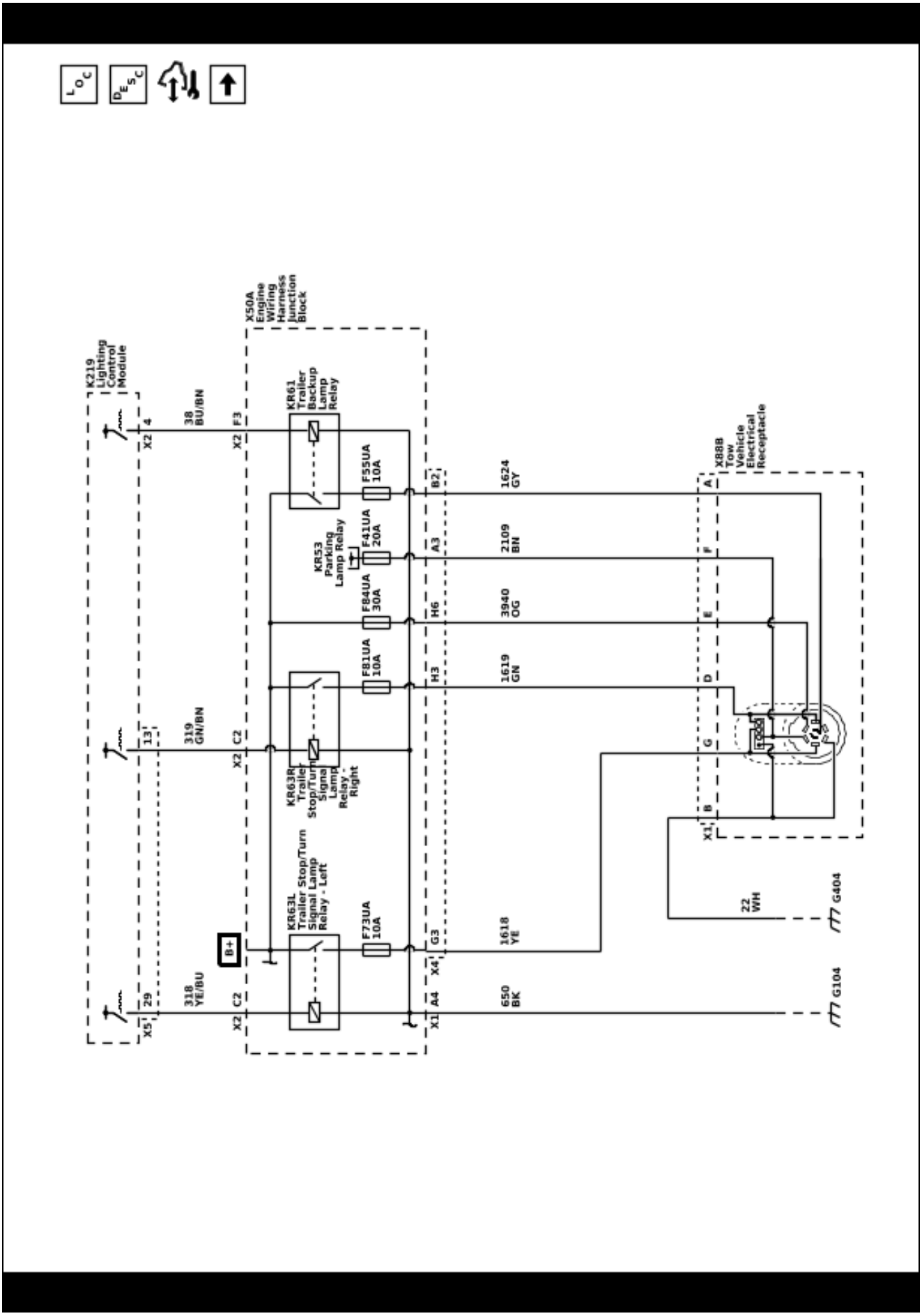

Trailering Systems Schematics (Trailer Brake Provisions (Z82-JL1))

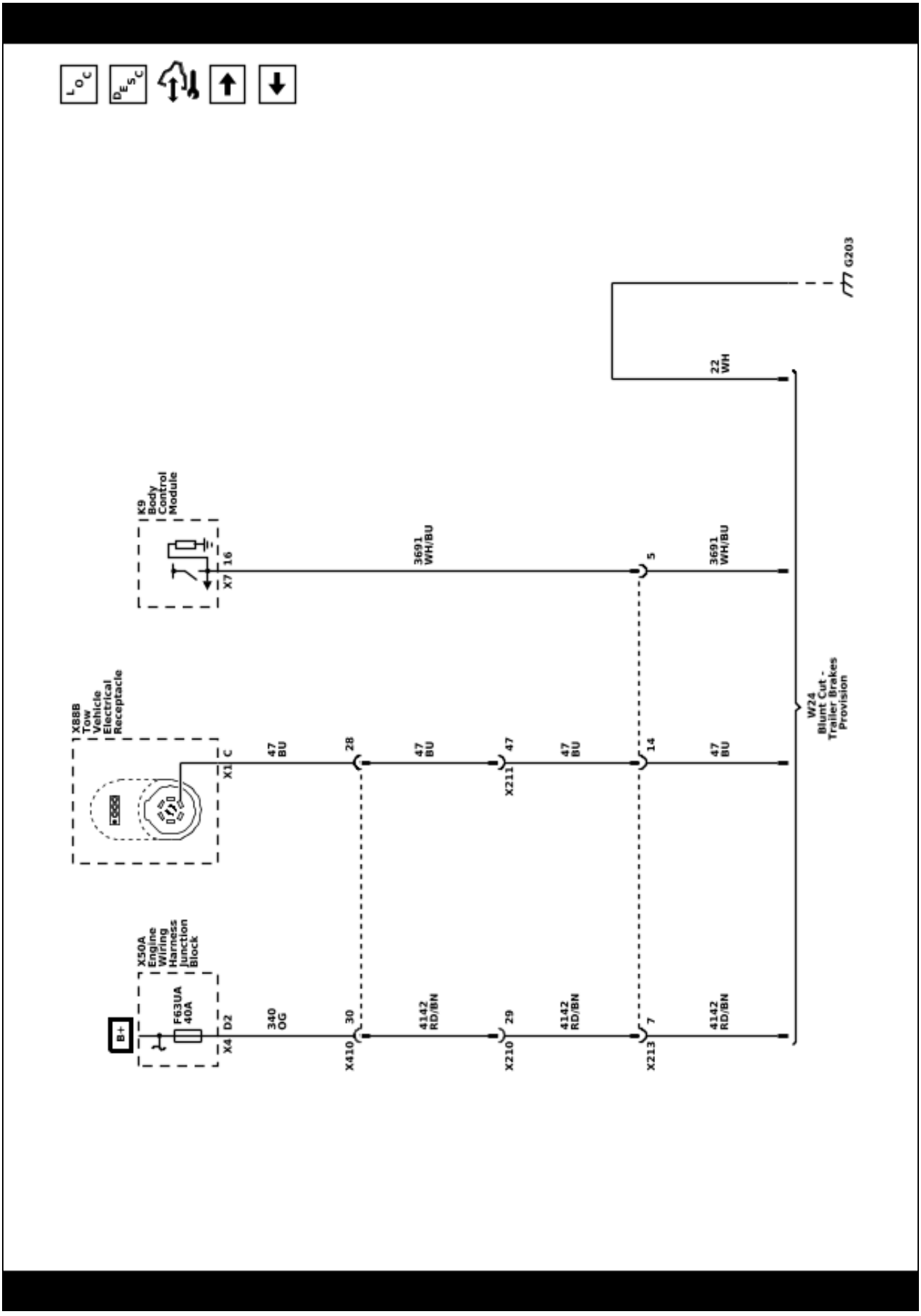

Trailering Systems Schematics (Trailer Brake (JL1))

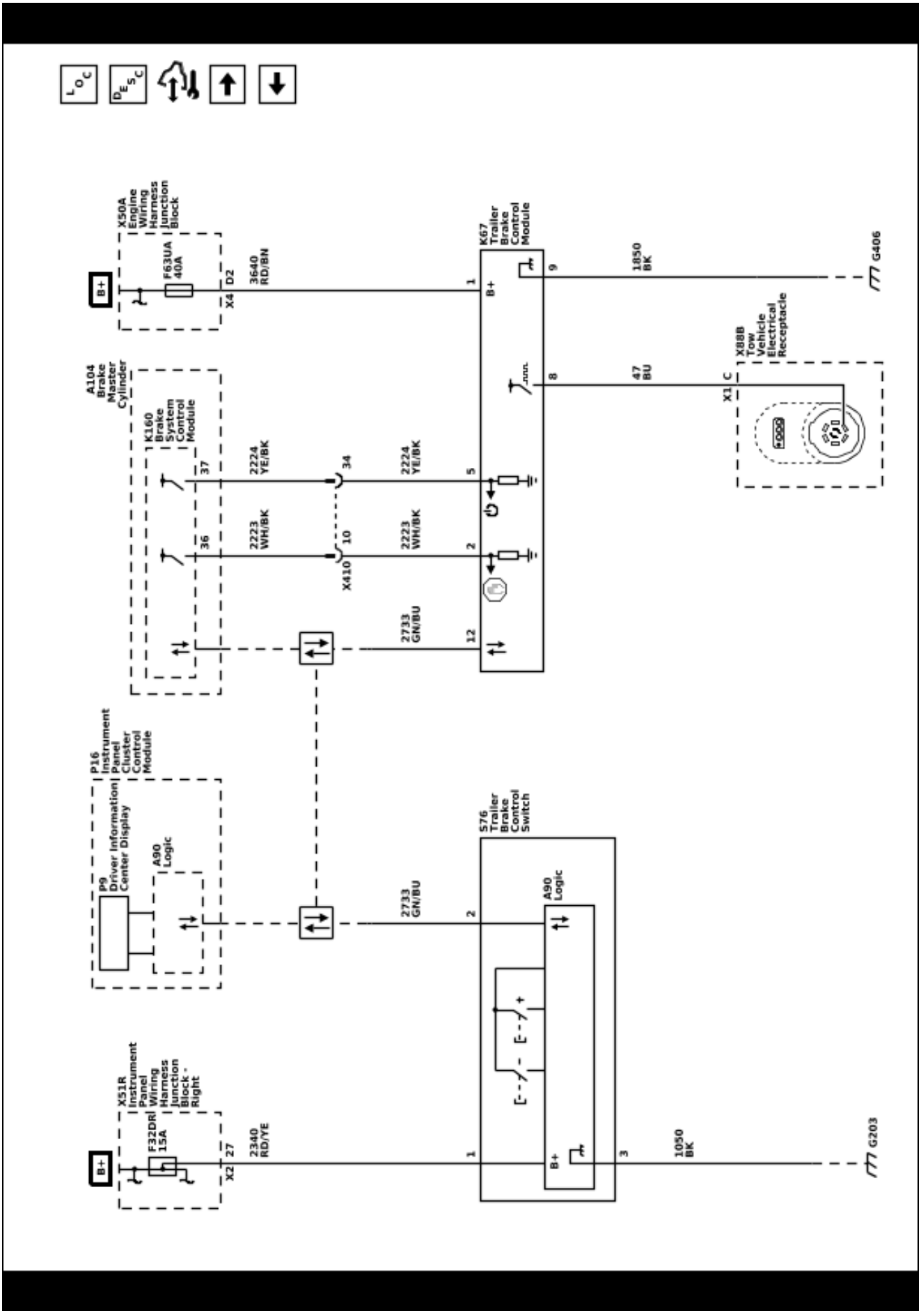

Trailering Systems Schematics (Trailer Tire Pressure (UET))

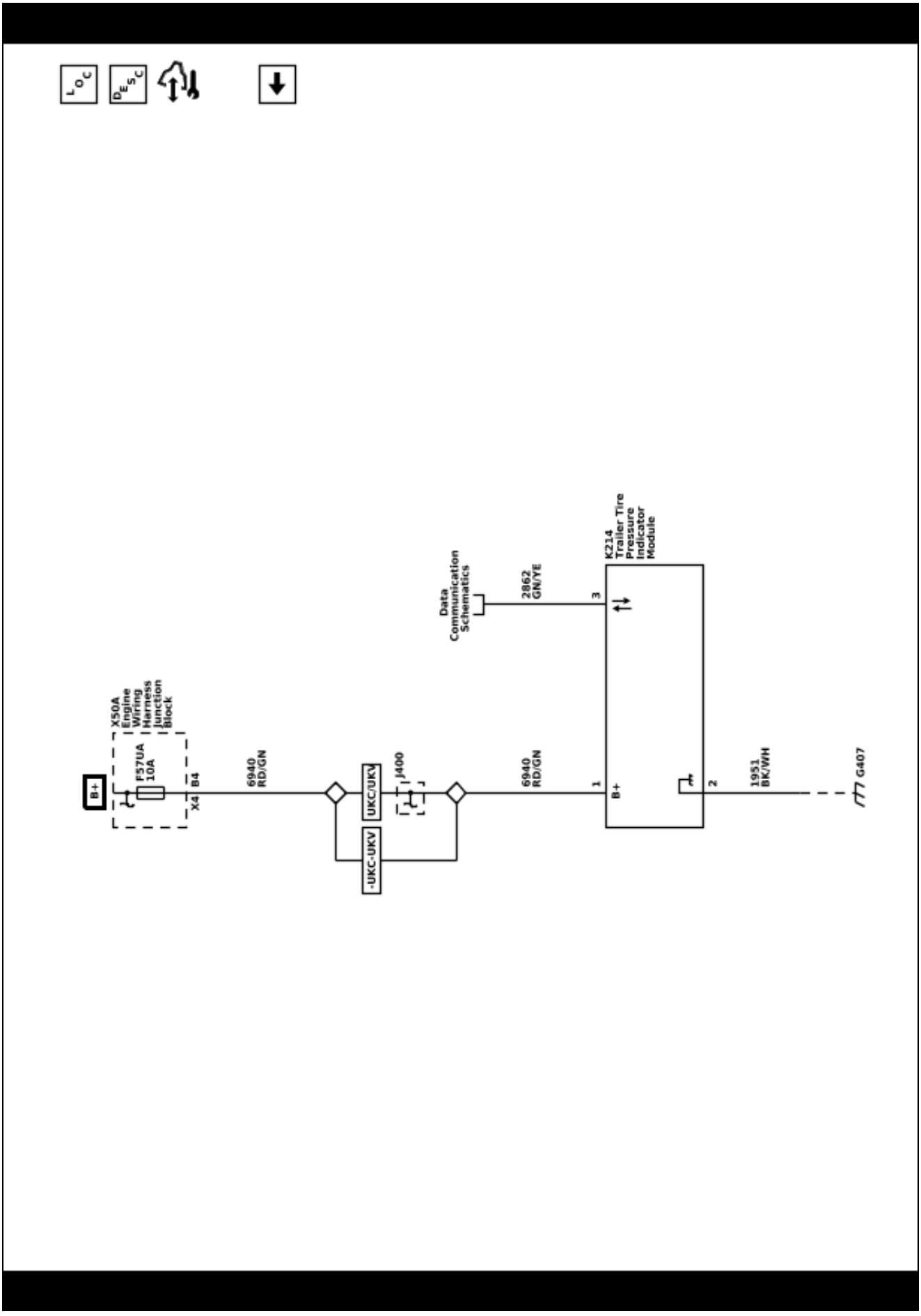

Description and Operation
Trailering Description and Operation

Trailering System Overview

Begin the trailering system diagnosis with Diagnostic System Check - Trailering. The Diagnostic System Check - Trailering will provide a complete strategy to locate and repair a vehicle trailering electrical fault. Not following this strategy may cause additional diagnostic time and/or misdiagnosis.

The trailering system consists of the following:

- Trailer Lighting, refer to Trailer Lamps Malfunction for additional diagnostic information.
- Trailer Brakes, refer to Trailer Brake Malfunction for additional diagnostic information.
- Trailer Battery Charging System, refer to Trailer Battery Charging Malfunction for additional diagnostic information.
- Trailer Detection, refer to Trailer Detection Malfunction for additional diagnostic information.
- Trailer Tire Pressure Monitoring System, refer to Trailer Tire Pressure Monitoring Malfunction for additional diagnostic information.
- Trailer Theft Detection.

When a trailer is detected on a vehicle equipped with side blind zone detection, rear park assist, and/or rear cross traffic alert, the vehicle will automatically turn these features off. These features are turned off to prevent false detections due to the trailer obstructing the view of the sensors.

7–Terminal Tow Vehicle Electrical Receptacle Pinout (North America)

- Terminal A – Trailer Backup Lamp Control
- Terminal B – Ground
- Terminal C – Trailer Brake Control
- Terminal D – Right Trailer Stop/Turn Signal Lamp Control
- Terminal E – B+
- Terminal F – Trailer Park Lamp Control
- Terminal G – Left Trailer Stop/Turn Signal Lamp Control

13–Terminal Tow Vehicle Electrical Receptacle Pinout (Export)

- Terminal 1 – Left Trailer Turn Signal Lamp Control
- Terminal 2 – Trailer Fog Lamp Control
- Terminal 3 – Ground
- Terminal 4 – Right Trailer Turn Signal Lamp Control
- Terminal 5 – Right Trailer Park Lamps Control
- Terminal 6 – Trailer Stop Lamps Control
- Terminal 7 – Left Trailer Park Lamps Control
- Terminal 8 – Trailer Backup Lamp Control
- Terminal 9 – B+
- Terminal 10 – Ignition Voltage
- Terminal 11 – Ground
- Terminal 12 – Trailer Connected Signal
- Terminal 13 – Ground

Connecting Aftermarket Accessories

- Some aftermarket accessories that connect to the X88 Tow Vehicle Electrical Receptacle will be recognized by the vehicle as a trailer connected, even if the accessory is not a trailer. As a result, side blind zone detection, rear park assist, and/or rear cross traffic alert will be turned off anytime the vehicle detects a trailer/accessory is connected.
- Vehicles equipped with U1D/UET have trailer theft detection that constantly monitors trailer connected status when enabled. This is done by randomly pulsing the lighting circuits of the trailer when the vehicle is parked. As a result, some aftermarket accessories may be turned ON/OFF when connected to the vehicle with theft detection enabled.
- Vehicles equipped with U1D/UET use pulse width modulation voltage (PWM) for trailer lighting functions. Some aftermarket accessories are incompatible with PWM and may not function correctly when connected to the trailer lighting circuits of the vehicle.

Trailer Battery Charging System

Trailer battery charging is accomplished through constant battery voltage from the X50A Engine Wiring Harness Junction Block to the X88 Tow Vehicle Electrical Receptacle. Battery voltage is supplied to terminal E at the X88 Tow Vehicle Electrical Receptacle at all times. If equipped, the trailer battery will constantly be charged by the vehicle's electrical system anytime the trailer is connected. Some trailers require the B+ circuit to the X88 Tow Vehicle Electrical Receptacle for the trailer brakes to function.

Trailer Lighting and Detection With U1D/UET

Note:

- Some trailers utilize a trailer mounted control module to operate some or all of the trailer lights. These trailers may use the B+ circuit from the trailer connector to power the trailer lighting circuits. These trailers may not always be detected by the Trailer Lighting Control Module and may set faults.
- Vehicles equipped with IOR/1FL do not come equipped with the trailering APP however may still be equipped with a K68 trailer Lamp Control Module.

North America (7-Terminal connector)

North American vehicles use a 7-way trailer connector for trailering features. The K68 Trailer Lamp Control Module is responsible for controlling the trailer lighting on vehicles with U1D/UET. The combined trailer stop/turn signal lamps of the trailer must draw at least 55mA of total current to be detected as a trailer or the Trailer Lamp Control Module will not control the lighting circuits. The Trailer Lamp Control Module receives serial data messages from the K9 Body Control Module (BCM) indicating what lamps have been activated on the vehicle. The Trailer Lamp Control Module responds by applying pulse width modulated voltage (PWM) to the appropriate control circuits for the requested lamps

illuminating the lamps on the attached trailer. The Trailer Lamp Control Module constantly monitors for trailer connection status, trailer lighting faults, and trailer theft deterrent purposes. This is accomplished through the lighting circuits of the trailer to determine if a trailer is connected. When a trailer is connected, the Trailer Lamp Control Module senses the trailer connection and alerts the driver by requesting a trailer profile setup through the Trailering App, which is displayed on the infotainment screen. If a trailer is disconnected with the ignition ON, the vehicle will display multiple trailer lighting messages until a trailer is reconnected or the message is dismissed by the user. With the key OFF, the Trailer Lamp Control Module will periodically pulse the lighting circuits of the trailer to verify it is still connected. The lights on the trailer may flash at different intervals with the key OFF depending on which type of lights the trailer is built with. If a trailer is disconnected with the key ON, the vehicle will display a trailer disconnected message until a trailer is reconnected or the ignition is cycled.

Export (13-Terminal connector)

Export vehicles use a 13-way trailer connector for trailering features. The K68 Trailer Lamp Control Module is responsible for controlling the trailer lighting on vehicles with U1D/UET. The combined trailer turn signal and park lamps of the trailer must draw at least 55mA of total current to be detected as a trailer or the Trailer Lamp Control Module will not control the lighting circuits. The Trailer Lamp Control Module receives serial data messages from the K9 Body Control Module (BCM) indicating what lamps have been activated on the vehicle. The Trailer Lamp Control Module responds by applying pulse width modulated voltage (PWM) to the appropriate control circuits for the requested lamps illuminating the lamps on the attached trailer. The Trailer Lamp Control Module constantly monitors for trailer connection status, trailer lighting faults, and trailer theft deterrent purposes. This is accomplished through the lighting circuits of the trailer to determine if a trailer is connected. With the key OFF, the Trailer Lamp Control Module will periodically pulse the lighting circuits of the trailer to verify it is still connected. The lights on the trailer may flash at different intervals with the key OFF depending on which type of lights the trailer is built with.

Trailer Lighting Without U1D/UET

The K219 Lighting Control Module is responsible for controlling the trailer lighting on vehicles without U1D/UET. The lighting control module receives serial data messages from the K9 Body Control Module (BCM) indicating what lamps have been activated on the vehicle. The lighting control module responds by applying voltage to the appropriate relay control circuits for the requested lamps anytime the vehicle lamps are commanded ON. With the relay coil energized, the relay contacts close and allow voltage to flow through the relay illuminating the appropriate lamps on the attached trailer.

North America 7–Way Trailer Connector Trailer Messages

The driver information center (P16 Instrument Cluster) or infotainment screen (P17 Info Display Module) may display one or more of the following messages to the user related to trailering.

North America 7–Way Trailer Connector

Trailering Message	Description
Check Trailer Left Turn Signal Lamp	The K68 Trailer Lighting Control Module detects a fault on the left trailer stop/turn lamp control circuit
Check Trailer Right Turn Signal Lamp	The K68 Trailer Lighting Control Module detects a fault on the right trailer stop/turn lamp control circuit
Check Trailer Rear Lamp	The K68 Trailer Lighting Control Module detects a fault on the trailer park lamp control circuit.
Check Trailer Reversing Lamp	The K68 Trailer Lighting Control Module detects a fault on the trailer backup lamp control circuit.
Check Trailer Brake Lamps	The K68 Trailer Lighting Control Module detects a fault on the left and/or right trailer stop/turn lamp control circuits
{JL1} Check Trailer Wiring	The K133 Trailer Brake Power Control Module detects a fault on the trailer brake control circuit or the trailer was disconnected.
Lane Change Alert Off	Reminder to the user that lane change alerts are turned off anytime a trailer is detected.
Rear Cross Traffic Alert Off	Reminder to the user that rear cross traffic alerts are turned off anytime a trailer is detected.
Rear Park Assist Off	Reminder to the user that rear park assist is turned off anytime a trailer is detected.
Remember to turn On Tow/Haul Mode	Reminder to the user to turn ON Tow/Haul Mode when towing.
{JL1} Service Trailer Brake System	The K133 Trailer Brake Power Control Module detects a fault on the trailer brake control circuit.
Service Trailer Tire Monitor System	The K214 Trailer Tire Pressure Indicator Module detects one or more issues with the trailer tire pressure monitoring system.

North America 7–Way Trailer Connector (cont'd)

Trailering Message	Description
Trailer Detected	The K68 Trailer Lighting Control Module detects a trailer has been connected to the X88 Trailer Connector.
{JL1} Trailer Brakes Detected	The K133 Trailer Brake Power Control Module detects a trailer with trailer brakes has been connected to the X88 Trailer Connector.
Trailer Disconnected Check Connection	The K68 Trailer Lighting Control Module detects a trailer has been disconnected from the X88 Trailer Connector.
Trailer Tire Pressure High	The K214 Trailer Tire Pressure Indicator Module detects one or more of the trailer tire pressures is high.
Trailer Tire Pressure Low	The K214 Trailer Tire Pressure Indicator Module detects one or more of the trailer tire pressures is low.
Trailer Tire Sensor Fault	The K214 Trailer Tire Pressure Indicator Module detects one or more of the trailer tire pressure sensors has a fault.
Trailer Tire Temperature High	The K214 Trailer Tire Pressure Indicator Module detects one or more of the trailer tire temperatures is too high.

Export 13–Way Trailer Connector Trailer Messages

The driver information center (P16 Instrument Cluster) or infotainment screen (P17 Info Display Module) may display one or more of the following messages to the user related to trailering.

Export 13–Way Trailer Connector

Trailering Message	Description
Check Trailer Left Turn Signal Lamp	The K68 Trailer Lighting Control Module detects a fault on the left trailer turn lamp control circuit
Check Trailer Right Turn Signal Lamp	The K68 Trailer Lighting Control Module detects a fault on the right trailer turn lamp control circuit
Check Trailer Rear Lamp	The K68 Trailer Lighting Control Module detects a fault on one or both of the trailer park lamp control circuit(s).
Check Trailer Reversing Lamp	The K68 Trailer Lighting Control Module detects a fault on the trailer backup lamp control circuit.
Check Trailer Brake Lamps	The K68 Trailer Lighting Control Module detects a fault on the trailer stop lamp control circuit.
Check Trailer Rear Fog Lamp	The K68 Trailer Lighting Control Module detects a fault on the trailer fog lamp control circuit.
Lane Change Alert Off	Reminder to the user that lane change alerts are turned off anytime a trailer is detected.
Rear Cross Traffic Alert Off	Reminder to the user that rear cross traffic alerts are turned off anytime a trailer is detected.
Rear Park Assist Off	Reminder to the user that rear park assist is turned off anytime a trailer is detected.

Trailer Theft Detection (With U1D/ UET Only)

Trailer theft monitoring can be turned ON and OFF through the vehicle Trailer App. When enabled, any time the trailer theft deterrent system is armed, the trailer lighting circuits are constantly monitored to determine if a trailer is connected for trailer theft deterrent purposes. With the key OFF, the K68 Trailer Lamp Control Module will randomly pulse the lighting circuits of the trailer to verify it is still connected by monitoring the voltage drop of the circuit. Depending on the configuration of the trailer lights, the trailer lights may randomly flash as part of the trailer theft deterrent function. These flashes correspond to when the K68 Trailer Lamp Control Module pulses the lighting circuits to ensure the trailer is still connected and is considered normal. If the trailer is disconnected while the trailer theft deterrent system is armed, the vehicle will flash the exterior lights and cycle the horn to alert of a trailer theft event. Refer to Theft Systems Description and Operation for more information on the content theft deterrent system.

Trailer Brakes (JL1)

The vehicle is equipped with the following trailer braking components:

- K160 Brake System Control Module
- K133 Trailer Brake Control Module
- S76 Trailer Brake Control Switch
- Manual Trailer Brake Apply
- Trailer Gain Adjustment
- Trailer Brake Driver Information Center Display

A trailer brake control system is used to control the amount of trailer braking power that is made available to trailers with brakes that require a controlled electrical output signal for actuation.

The power output to the trailer brakes is based on both the amount of braking being applied by the vehicle's brake system and on the type of trailer brakes detected.

The Trailer Brake Control System is compatible with two types of Trailer Brake Systems as listed below:

1. **Electric Brakes** A controlled electrical output signal energizes an electric-magnet/lever arm assembly that directly actuates the brake mechanism. The GDS name for this system is "Electromagnetic Brakes".
2. **Electric Over Hydraulic Brakes** A controlled electrical output signal energizes a remote, trailer mounted hydraulic pump to build brake pressure in a closed hydraulic system on the trailer. The hydraulic fluid pressure actuates the brake mechanism. The GDS name for this system is "Electrohydraulic Brakes".

Trailer Brake Output Versus Trailer Brake Type

- The trailer brake system characterizes the trailer brakes as either Electric Brake or Electric Over Hydraulic Brake automatically. This characterization may be affected by the number, type, and age of the trailer brake magnets, as well as any other devices installed on the trailer brakes (i.e. adapters for Electric Over Hydraulic brake functionality).
- The trailer brake system is fully operational with either characterization.
- Sliding the manual trailer brake apply lever will produce output at zero speed for either characterization.

The user gain allows the driver to adjust the amount of trailer brake output to match the trailer load and road surface. The controller determines the desired trailer brake output and provides a control signal to the K133 Trailer Brake Control Module (TBPM). The K133 Trailer Brake Control Module amplifies the signal and provides the output required to activate the Electric or Electric Over Hydraulic trailer brakes.

The trailer brake control can support up to a maximum of four axles with electric trailer brakes (8 brake magnets).

Connecting a trailer that is not compatible with the trailer brake system may result in reduced or complete loss of trailer braking. There may be an increase in stopping distance or trailer instability which could result in personal injury or damage to the vehicle, trailer or other property. An aftermarket controller may be available for use with incompatible trailer brake systems.

To determine the type of brakes on your trailer and the availability of controllers, check with your trailer manufacturer or dealer. Do not power up an aftermarket controller with the factory brake controller at the same time.

Trailer Brake Control Panel

The S76 Trailer Brake Control Switch contains the trailer gain and manual apply switches. It is located in the vehicle center stack. Refer to the owner's manual for more information on the location. The control panel and switches allows you to adjust the amount of output, referred to as trailer gain, available to the Electric or Electric Over Hydraulic brakes. It also allows you to manually apply the trailer brakes. The trailer brake control switch is used along with the trailer brake display page on the driver information center to adjust and display power output to the trailer brakes.

Manual Trailer Brake Apply

The manual trailer brake apply lever is located on the S76 Trailer Brake Control Switch and is used to apply the trailer's Electric or Electric Over Hydraulic brakes independent of the vehicle's brakes. This lever is used in the trailer gain adjustment procedure to properly adjust the power output to the trailer brakes.

Sliding the lever will apply only the trailer brakes. The power output to the trailer is indicated in the trailer brake display page in the Driver Information Center (DIC). If the vehicle's service brakes are applied while using the manual trailer brake apply lever, the trailer brake control output power will be the greater of the two.

The trailer and the vehicle's brake lamps will come on when either the vehicle's braking or manual trailer brakes are applied.

Trailer Brake Gain Adjustment

Trailer gain should be set for a specific trailering condition and must be adjusted any time vehicle loading, trailer loading or road surface conditions change. It is important to re-adjust trailer gain any time the tow vehicle, trailer loading or road surface conditions change or if you notice trailer wheel lock-up at any time while you are towing.

Setting the trailer gain properly is needed for the best trailer stopping performance. A trailer that is over-gained may result in locked trailer brakes. A trailer that is under-gained may result in not enough trailer braking. Both of these conditions may result in poor stopping and stability of the vehicle and trailer.

Trailer Gain Adjustment Procedure

- Adjust trailer gain in 0.5 step increments up to 10 gain setting by using the gain adjustment +/− buttons on the trailer brake control panel switch. Pressing and holding a gain button will cause the trailer gain to continuously increment or decrement. To turn the output to the trailer off, set the gain to zero.
- Drive the tow vehicle and trailer combination on a level surface representative of the towing condition and free of traffic at approximately 32–40 km/h (20–25 mph) and fully apply the manual trailer brake apply lever mechanism located on the trailer brake control panel switch. Adjusting the trailer gain at slower speeds may result in an incorrect gain setting.
- Adjust the trailer gain to just below the threshold of trailer wheel lock-up . Trailer wheel lock-up may not occur if towing a heavily loaded trailer. In this case, adjust the trailer gain to the highest allowable setting for the towing condition.

Trailer Brake Gain and Output Display

This display menu can be accessed by scrolling through the DIC menu, or any time the trailer gain +/− button is depressed, or the manual trailer brake apply lever is actuated. The trailer output is displayed from 0 to full output and indicates the output power provided to the trailer brakes, relative to the gain setting.

After the electrical connection is made to a trailer equipped with electric brakes or electric over hydraulic brakes, the TRAILER CONNECTED message will be displayed momentarily on the DIC. The Trailer Brake Display Page can be selected on the DIC showing TRAILER GAIN and OUTPUT, after all vehicle related service messages are acknowledged by the driver. Depending on which instrument panel cluster is in the vehicle, the DIC may display dashed lines, a greyed out display, or it may be blank signifying a disconnected trailer or a trailer brake fault condition.

Trailer Brake Driver Information Center Indicators and Messages

Trailer Brake Detection

The K133 Trailer Brake Control Module constantly monitors the trailer auxiliary control circuit from Terminal C at the X88 Trailer connector. When a trailer is connected with trailer brakes, the K133 Trailer Brake Control Module senses the connection and alerts the driver with a Trailer Connected message. If the K133 Trailer Brake Control Module senses a fault, or the trailer becomes disconnected, the vehicle will alert the driver with a Check Trailer Wiring message.

The following indicators are used to inform the driver of several different conditions:

Trailer Connected

This message will be briefly displayed when a trailer with Electric or Electric Over Hydraulic brakes is first connected to the vehicle. This message will automatically turn off in about ten seconds. The driver can also acknowledge this message before it automatically turns off.

Check Trailer Wiring

This message will be displayed if:

- The system detects that a trailer with Electric or Electric Over Hydraulic brakes is connected to the vehicle and then the trailer harness becomes disconnected from the vehicle.
- The trailer connection is recognized initially and then a disconnect occurs while the vehicle is stationary. This message will automatically turn off in about thirty seconds. This message will also turn off if the driver selects to turn this message off or if the trailer harness is reconnected.
- A disconnect of the trailer wiring harness occurs while the vehicle is moving. The Check Trailer Wiring message will continue until the ignition is turned off. The message will also turn off if the driver selects to turn this message off or it the trailer harness is re-connected.
- There is an electrical fault in the wiring to the electric trailer brakes. The Check Trailer Wiring message will continue as long as there is an electrical fault in the trailer wiring. This message will also turn off if the driver acknowledges this message off.
- A poor connection at the 7–way connector may cause the Check Trailer Wiring message. Some aftermarket 7–way trailer side connector adapters or plugs may cause deformation or excessive wear to the vehicle's trailer terminals. It is recommended that you use an OEM or Pollak heavy duty 7–way trailer side connector adapter.

Service Trailer Brake System

This message will be displayed when there is a problem with the trailer brake control system. The trailer brake system may not be fully functional, or may not be functioning at all. The trailer brake system is designed to provide trailer braking, if possible, even when faults prevent it from being fully functional. This reduced functionality includes:

1. Providing trailer braking when the master cylinder pressure or brake pedal switch are faulted.
2. Providing trailer braking when hill start assist and trailer sway control communication is faulted.
3. Providing trailer braking when certain manual trailer brake apply lever faults are present.

Trailer Tire Pressure Monitoring

Special Tools

- *EL-46079/J-46079* Tire Pressure Monitor Diagnostic Tool
- *EL-50448* Tire Pressure Monitor Sensor Activation Tool
- *EL-52641* Trailer Presence Simulator Tool

For equivalent regional tools, refer to Special Tools.

The Trailer Tire Pressure Monitor System is designed to monitor the pressure of the trailer tires, and warn the driver when a low pressure condition exists. Four Trailer Tire Pressure Monitor System sensors may be provided in the vehicle's glove box as an accessory when equipped. The system can accommodate a trailer with up to (6) tires if additional sensors are purchased from the dealership. Also, the system can be paired

with up to (5) individual trailers. The sensors must be mounted onto each tire and wheel assembly, and the sensors must be learned by the vehicle by following the learning procedure as shown in the Trailering App section of this manual. For sensor installation assistance, please contact your trailer service center or tire service center. The Trailer Tire Pressure Monitor System sensors monitor the air pressure in the trailer tires and transmit the trailer tire pressure readings to a receiver located in the vehicle. The trailer tire pressure sensors can transmit up to 23 feet (7 meters) from the hitch receiver of the vehicle. The tire pressure values can be viewed in the trailering app in the vehicle's center stack.

Trailering Diagnostic Tools

In some situations when diagnosing trailer tire pressure monitoring, trailer lighting, or integrated trailer brakes, it may be necessary to connect the vehicle to a trailer to confirm proper operation. Performing this activity may prove difficult in the service environment since trailers are not often available for diagnostic use, may have existing electrical issues outside of the issues a technician is attempting to diagnose, or simply may be too unwieldily to connect for diagnosis.

With all this in mind, it may be helpful to build or create a tool that can be plugged into the vehicle's trailer connector and simulate a connected trailer. This tool would include park lamps, stop lamps, and a reverse lamp for lighting and trailer tire pressure monitoring diagnosis. It can be expanded to include trailer brake magnets to diagnose integrated trailer brake concerns. Also, an additional lamp can be included to diagnose the B+ circuit to the trailer.

Trailer issues are NOT covered under warranty, but these tools may be used to verify the vehicle is functioning properly and to help the customer understand and correct any trailer related issues if they so choose.

Available Trailer Presence Simulator Tool

Illustration	Tool Number/Description
 5166189	*EL-52641* Trailer Presence Simulator Tool

Simulated Trailer Lighting

Creating a tool to simulate a connected trailer can be used to diagnose issues with trailer lighting, trailer brake (if equipped), the Trailering App (if equipped), and trailer tire pressure monitoring system (if equipped).

If the vehicle is equipped with a K68 Trailer Lamp Control Module (U1D/UET), the module monitors the current on the lighting circuits to determine a trailer has been connected. The Trailer Lamp Control Module pulses current on the trailer lighting circuits every 42 minutes to monitor for a connected trailer. If a current draw greater than 55mA is detected, the Trailer Lamp Control Module recognizes this as a connected trailer. This will enable any trailer lighting controlled by the Trailer Lamp Control Module. The Center Stack Module will also use this trailer detection as a cue to enable the Trailering App and trailer tire pressure monitoring functions.

Creating a Simulated Trailer Lighting Tool

Parts needed:

- 7-way RV trailer connector Qty: 1

  Note: The combination trailer stop/turn, and backup lamps must draw at least 55mA of total current to be detected as a trailer. Some LED combination lamps will not draw enough current. If an LED combination lamp is used, make sure it draws at least 55mA. A load resistor can be added to the circuit if necessary to obtain the correct load.

- Combination trailer park/stop/turn lamp (greater than 55mA drawn when on) Qty: 2
- Reverse lamp Qty: 1
- 12 gauge wire and terminals/connectors Qty: As needed
- 18 gauge wire and terminals/connectors Qty: As needed
- Mounting board Qty: 1

1. Connect a 12 gauge wire to the ground terminal of the 7-way trailer connector and the ground circuit of each combination trailer park/stop/turn lamp and the reverse lamp in parallel.
2. Connect an 18 gauge wire between the park lamp terminal of the 7-way trailer connector and the park lamp circuit of each combination trailer park/stop/turn lamp in parallel.
3. Connect an 18 gauge wire between the left turn/stop lamp terminal of the 7-way trailer connector and the turn/stop lamp circuit of left trailer park/stop/turn lamp.
4. Connect an 18 gauge wire between the right turn/stop lamp terminal of the 7-way trailer connector and the turn/stop lamp circuit of right trailer park/stop/turn lamp.
5. Connect an 18 gauge wire between the reverse lamp terminal of the 7-way trailer connector and the reverse lamp.

   Note: A combination trailer lighting and trailer brake tool can be created on the same mounting board.

6. Mount the left combination trailer park/stop/turn lamp, right combination trailer park/stop/turn lamp, and reverse lamp to the mounting board.
7. Plug the 7-way RV trailer connector to the vehicle and verify functionality.

Simulated Trailer Brakes

Creating a tool to simulate trailer brakes can be used to diagnose trailer brake issues.

The trailer brake control system is compatible with two types of trailer brake systems: electromagnetic or electro-over hydraulic trailer brakes. The Brake System Control Module must determine which type of brakes the trailer is equipped with so the system can output correctly for the trailer's brake system. Because the Brake System Control Module has to determine the type of trailer brake system that is being used, it can be sensitive to a variety of trailer wiring issues.

The Trailer Brake Control Module continuously sends a test pulse out on the trailer brake control circuit (circuit 47) to determine if a trailer with trailer brakes has been connected. How the pulse reacts when a trailer is connected is how the Trailer Brake Control Module determines which type of braking system the trailer is equipped with.

Even after the system detects the trailer, Trailer Brake Control Module will continue to send this test pulse on the trailer brake control circuit, which now is monitoring both the truck and trailer circuitry. The trailer brake control circuit continues to be monitored for any faults so the driver can be notified of any issues that may occur within the truck or trailer, as well as, to determine when the trailer is disconnected from the truck.

Creating a Simulated Trailer Brake Tool

Parts needed:

- 7-way RV trailer connector Qty: 1
- Electric trailer brake magnets Qty: 2, 4, 6, or 8
- Reverse lamp Qty: 1
- Mounting board Qty: 1
- 12 gauge wire and terminals/connectors Qty: As needed

1. Connect a 12 gauge wire to the ground terminal of the 7-way trailer connector.
2. Connect a 12 gauge wire to the brake controller output terminal of the 7-way trailer connector.

   Note: The trailer brake magnets must be connected in parallel. Connecting in series will create an excessive current draw and disable the trailer brake system.
3. Connect the trailer brake magnets to the 12 gauge wires from the 7-way trailer connector in parallel.

   Note: A combination trailer lighting and trailer brake tool can be created on the same mounting board.
4. Mount the trailer brake magnets to the mounting board.
5. Plug the 7-way RV trailer connector to the vehicle and verify functionality.

Vehicle Access

Schematic and Routing Diagrams

Door Lock/Indicator Schematics (Driver Door Switch Panel Control Module Power, Ground, Serial Data, and Subsystem References)

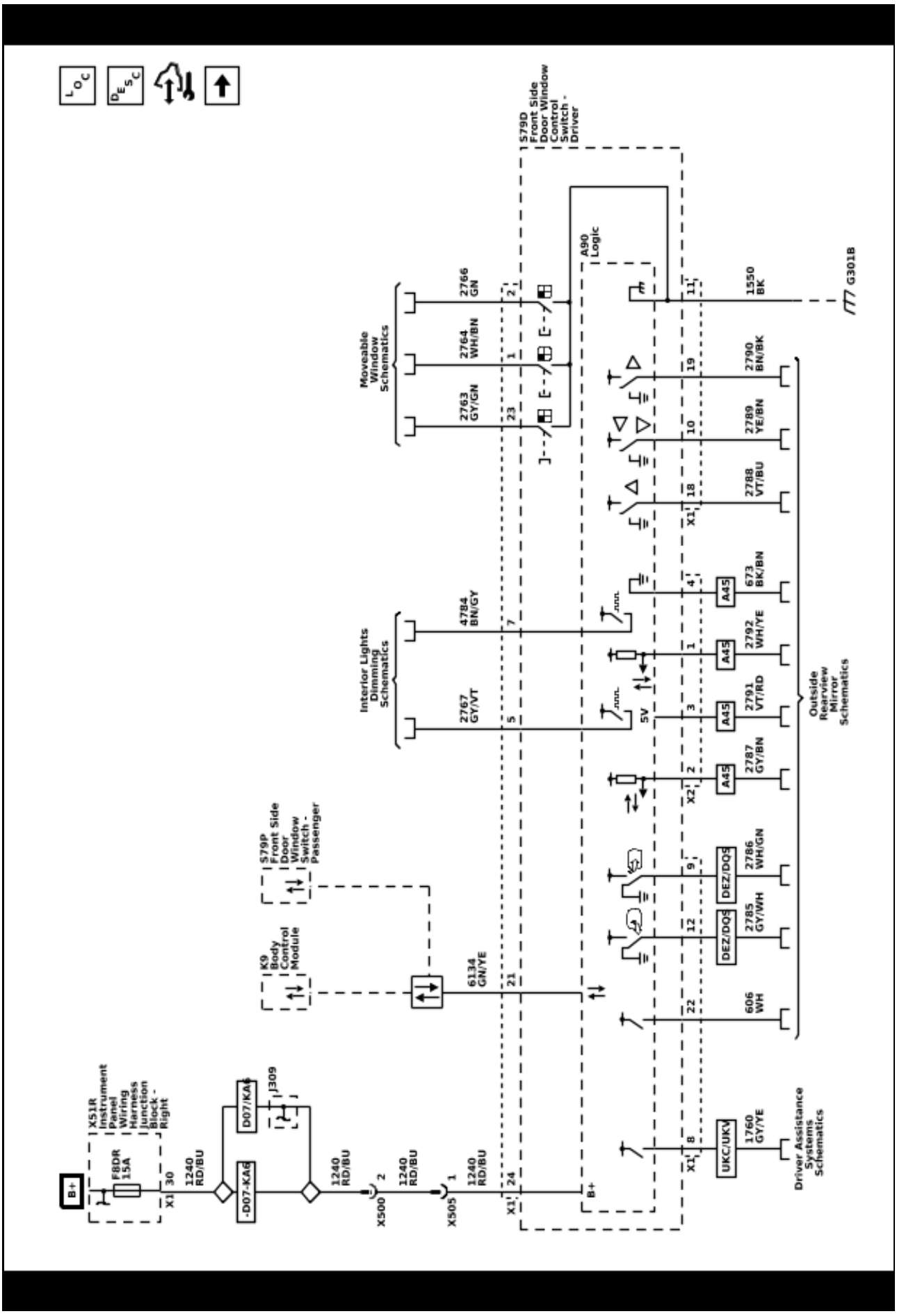

Door Lock/Indicator Schematics (Passenger Door Switch Panel Control Module Power, Ground, Serial Data, and Subsystem References)

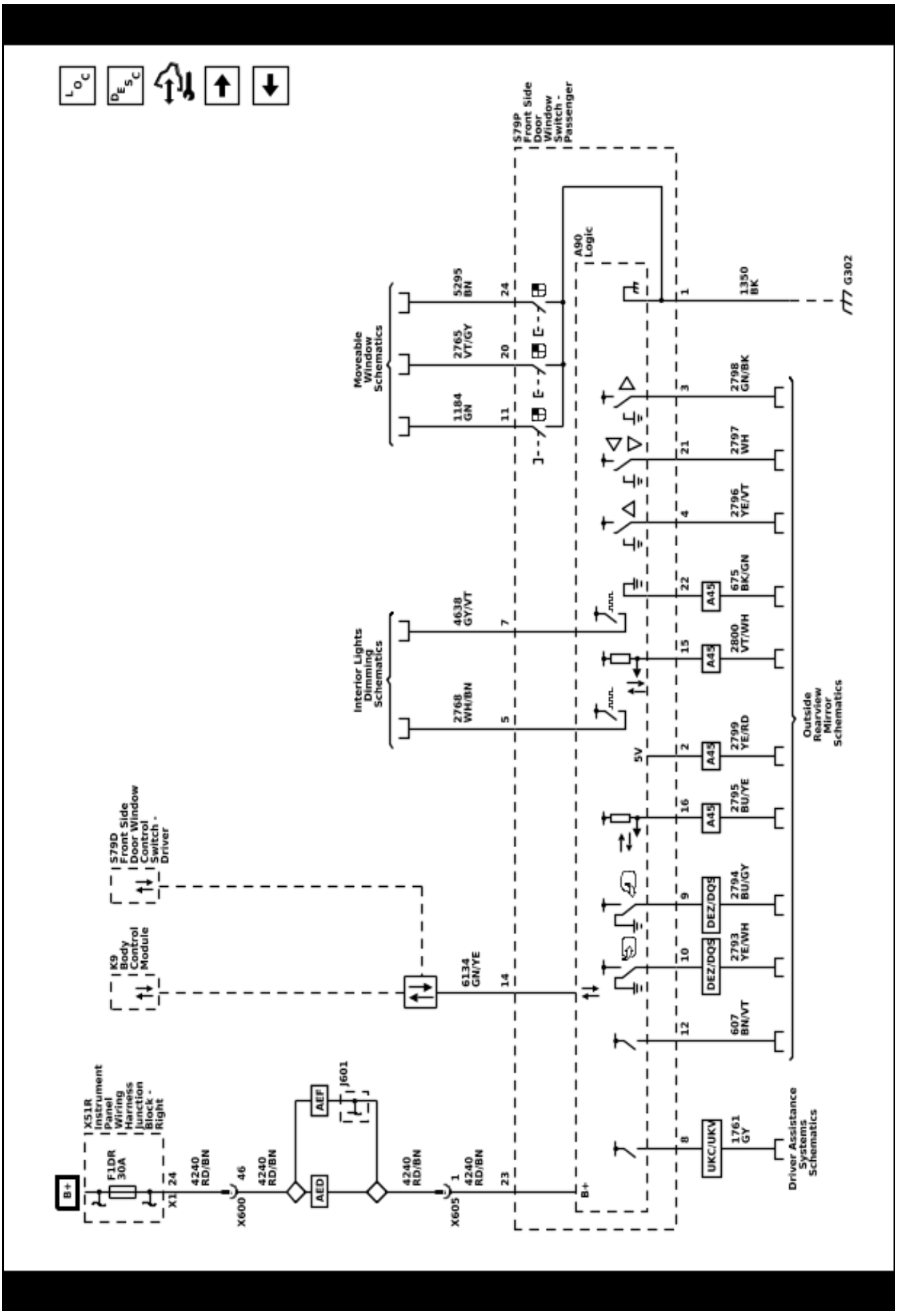

Door Lock/Indicator Schematics (Door Lock Switches and Indicators)

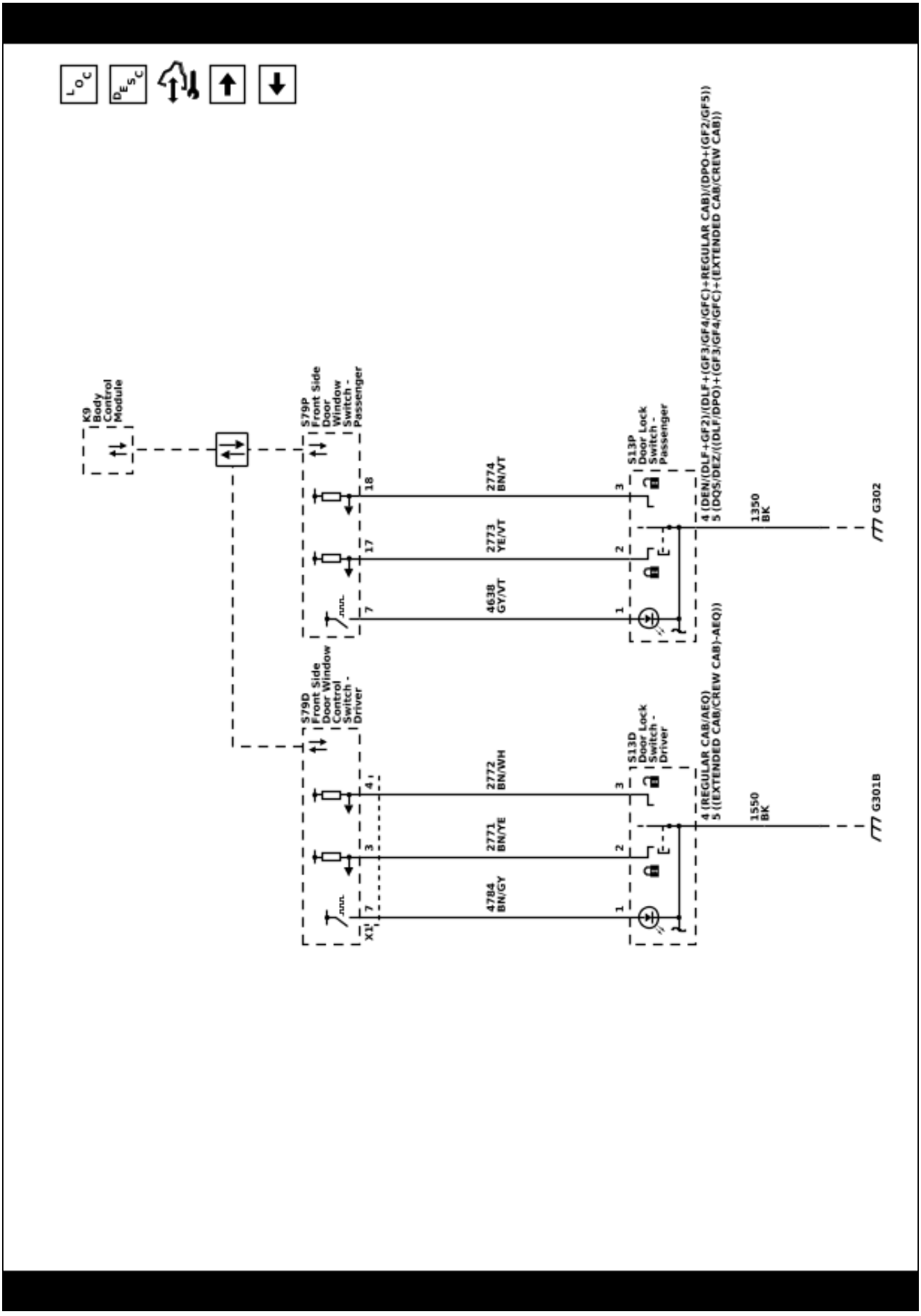

Door Lock/Indicator Schematics (Ajar Switches, Lock Status and Child Lock Status)

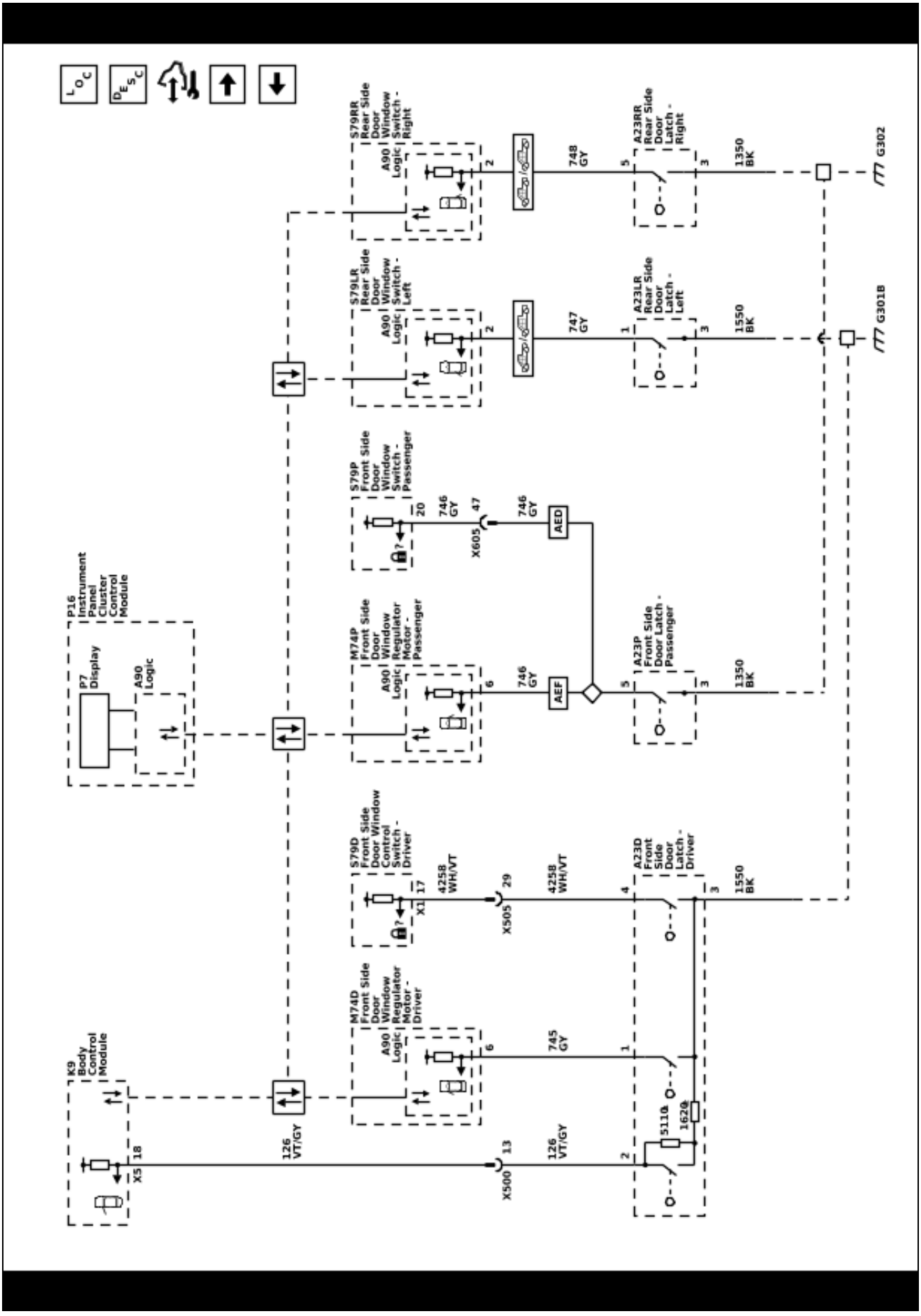

Door Lock/Indicator Schematics (Actuators)

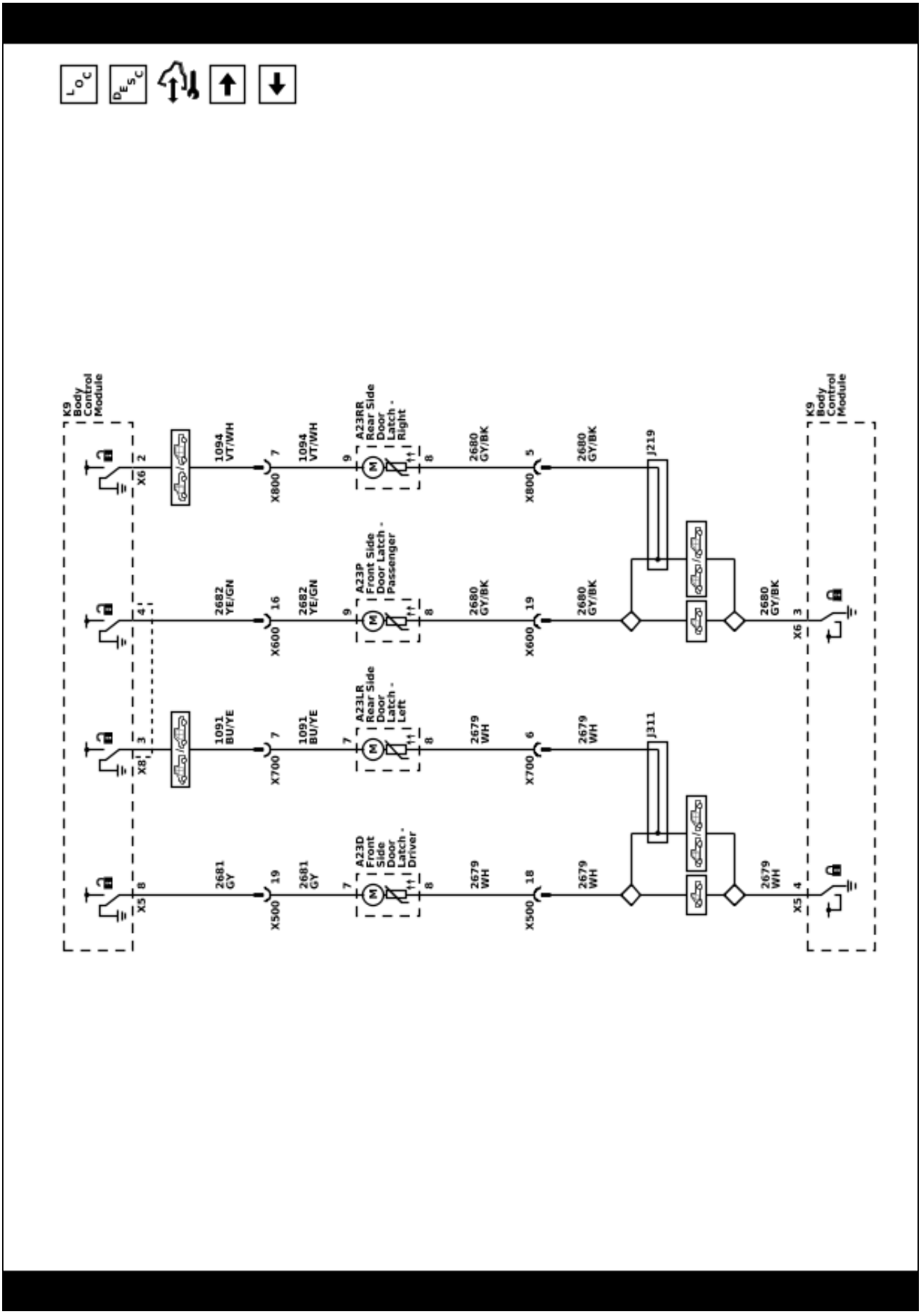

5967370

Door Lock/Indicator Schematics (Door Handle Switches)

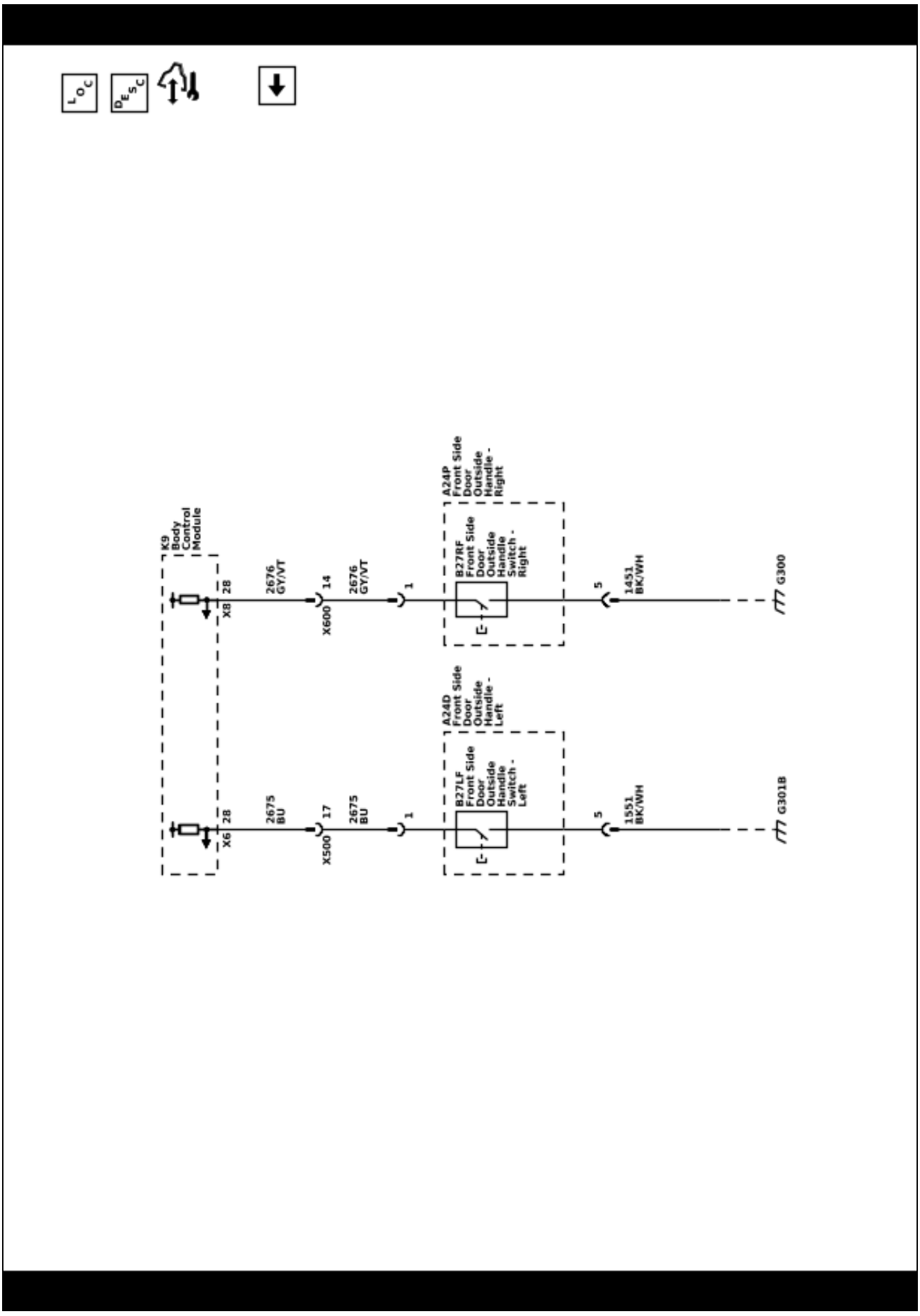

Release Systems Schematics (Endgate Release (QT5))

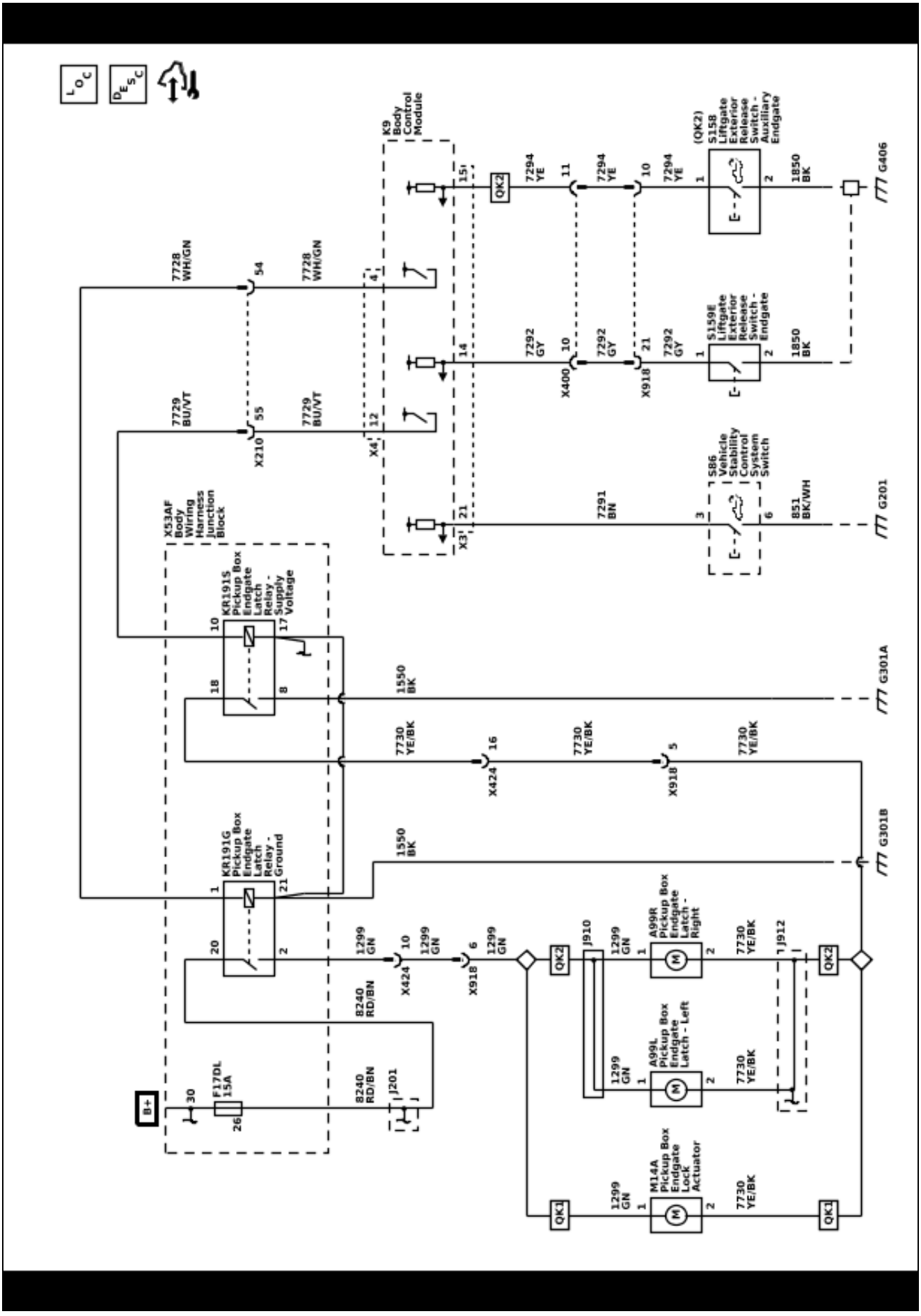

Endgate Schematics (Power Endgate Controls (QT6))

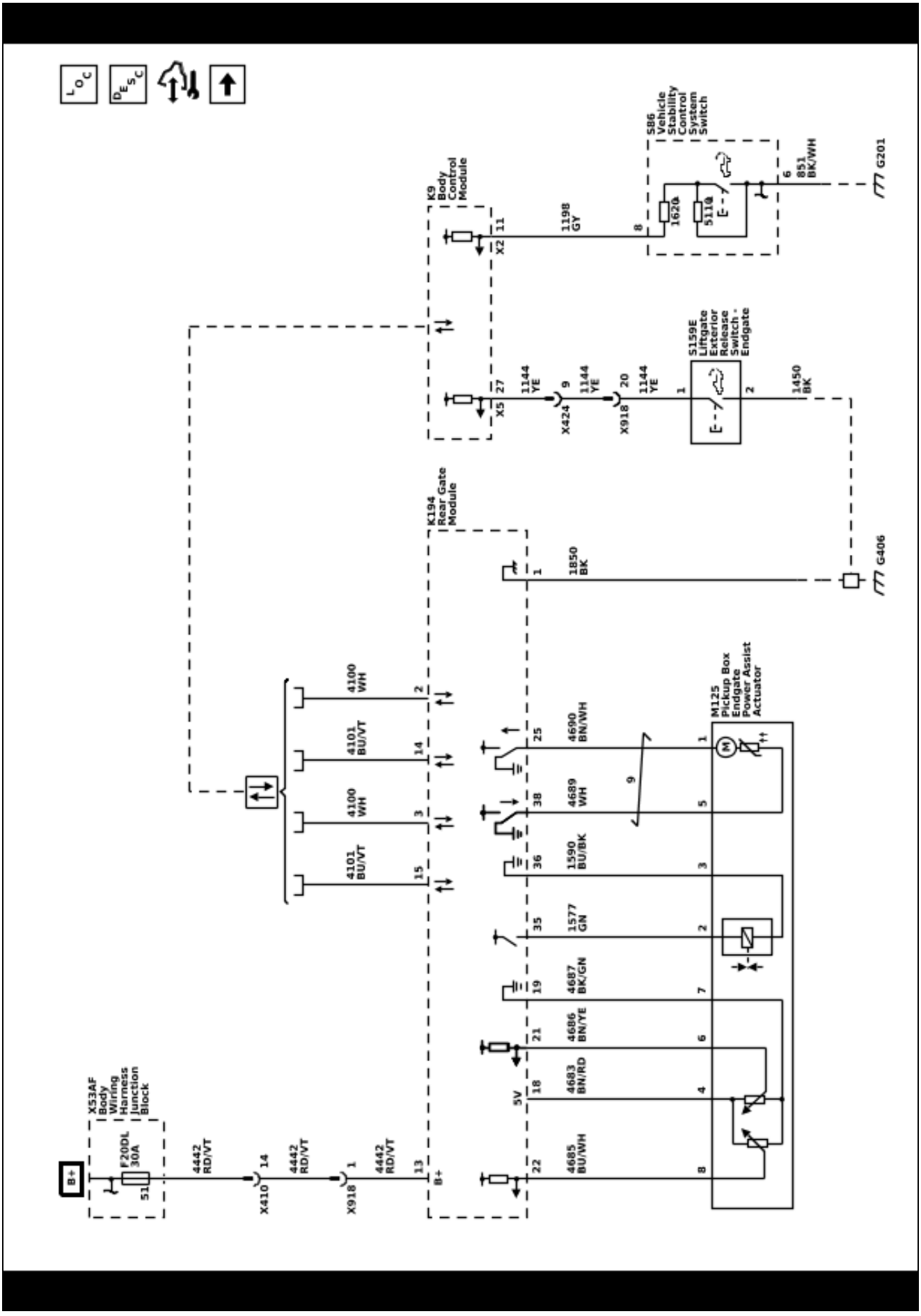

Endgate Schematics (Power Endgate Latches (QT6))

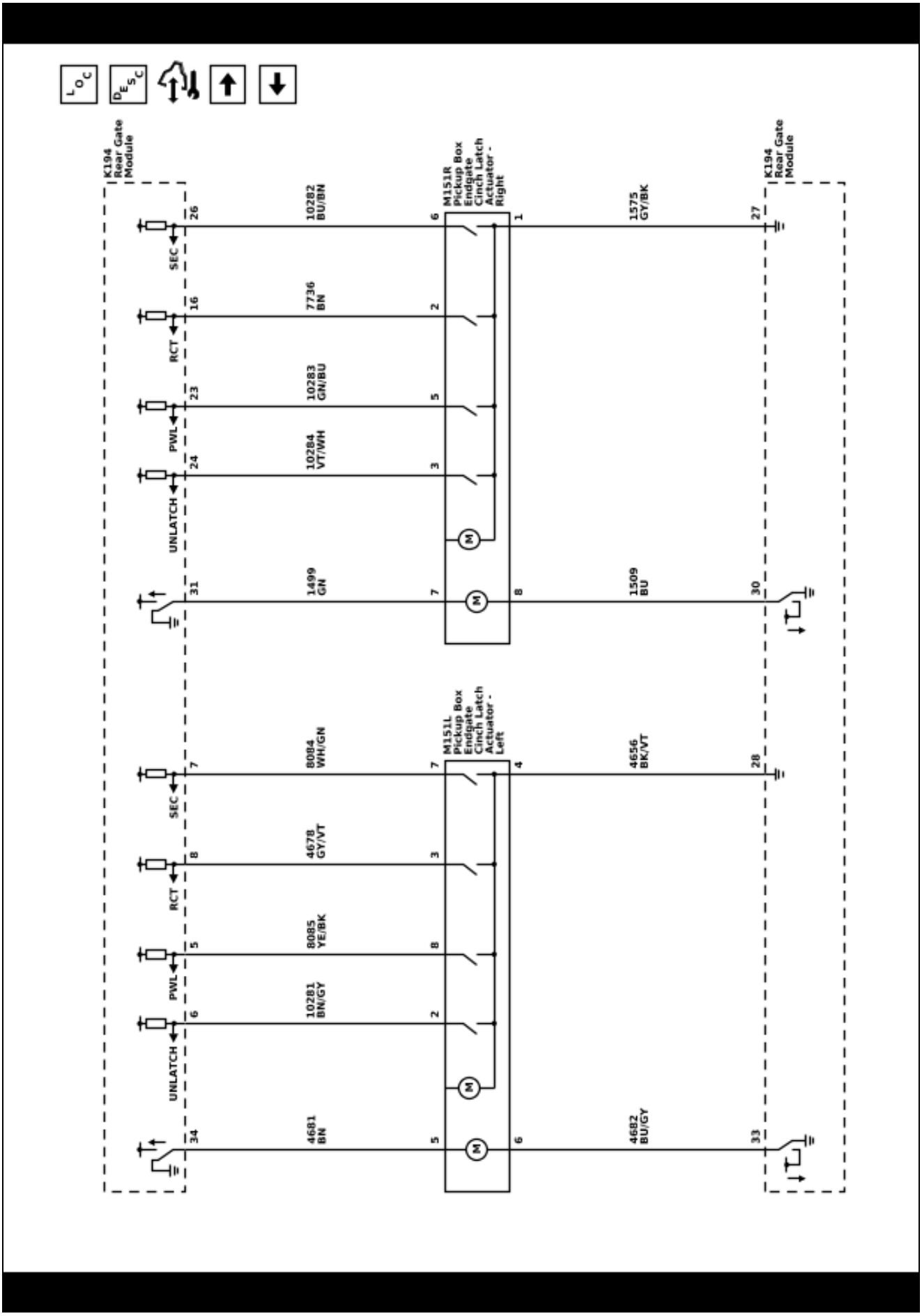

Endgate Schematics (Auxiliary Endgate Latch Controls and Switches (QK2+QT5))

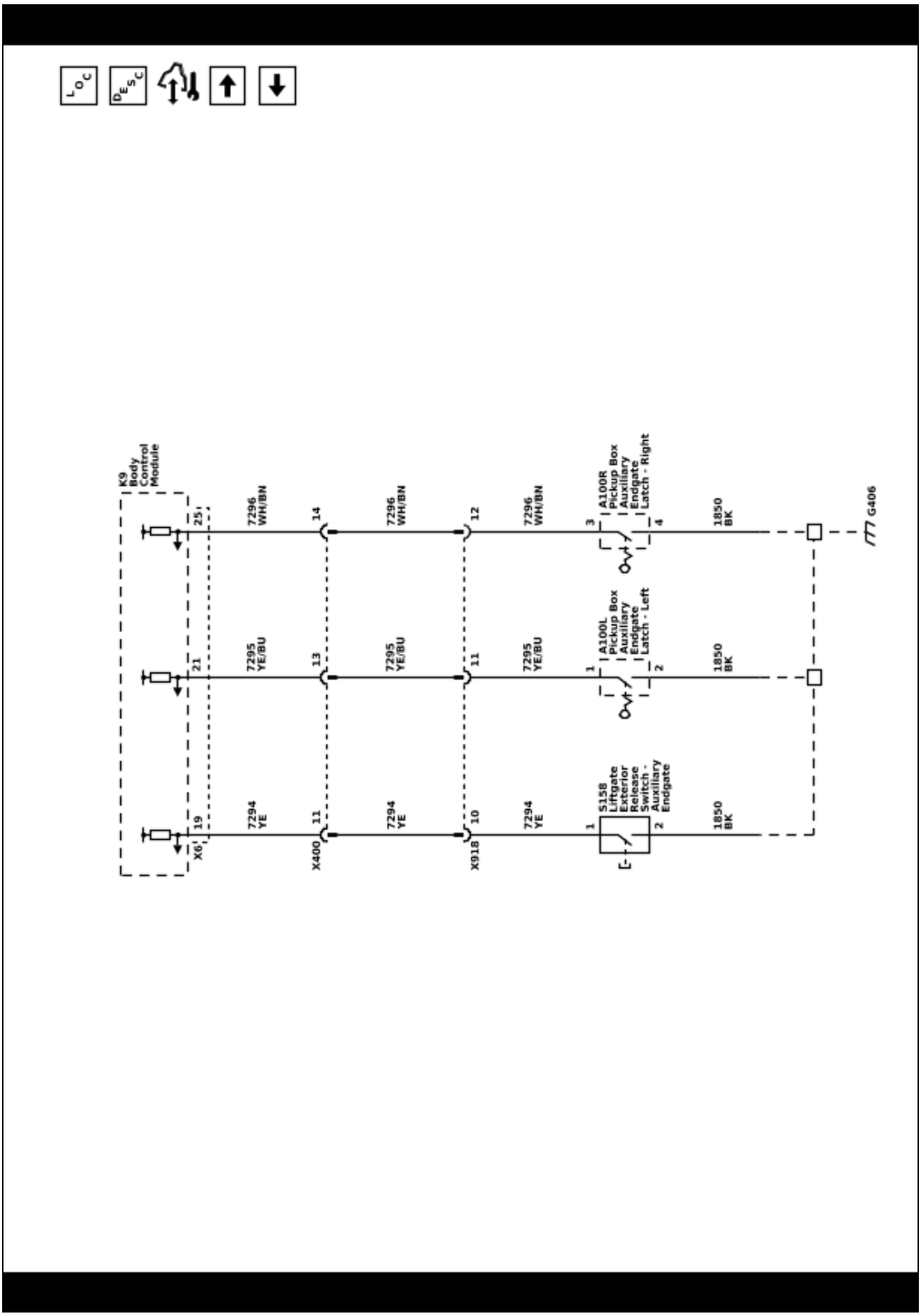

Endgate Schematics (Auxiliary Endgate Latch Motors (QK2))

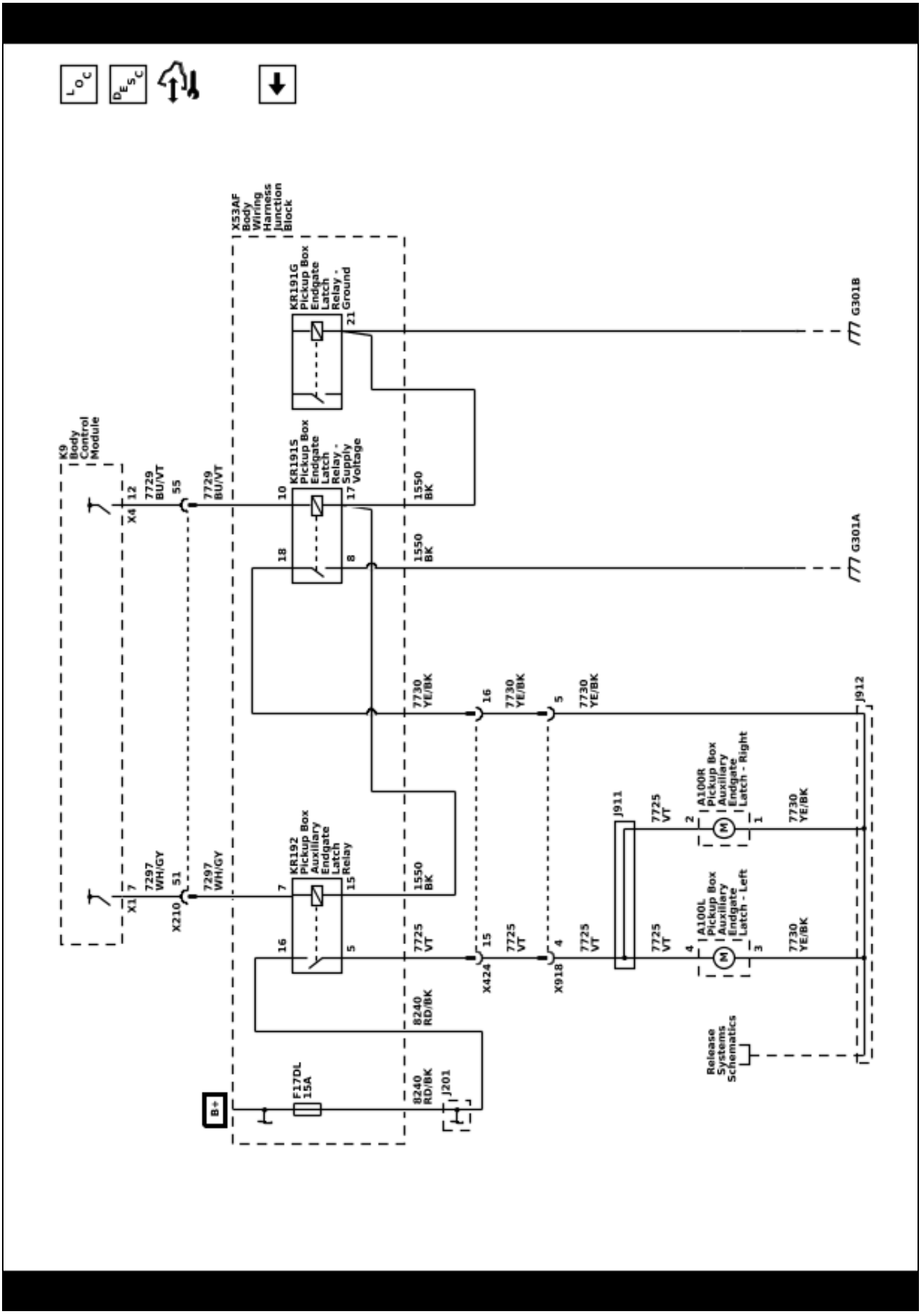

Description and Operation

Door Ajar Indicator Description and Operation

Door Ajar Indicator System Components

The door ajar indicator system consists of the following components:

- Body control module (BCM)
- Instrument cluster
- Driver door latch
- Passenger door latch
- Left rear door latch
- Right rear door latch
- Driver window motor
- Passenger window motor
- Left rear side door window switch
- Right rear side door window switch

Driver and Passenger Door Ajar

The window motor supplies a 12 V signal to the door ajar switch within the door latch, when a door is open the door ajar switch closes pulling the 12 V signal low. When the window motor detects the drop in the 12 V signal circuit, it will then communicate this status to the BCM via local interconnect network (LIN) bus. The BCM communicates with the instrument cluster via serial data message. The instrument cluster, upon receipt of this serial data message, will illuminate the door ajar indicator and also send a serial data message to the radio to activate the door ajar audible warning when the vehicle speed is greater then 8 km/h (5 mph).

Rear Doors Ajar

The rear side door window switches each provide a 12 V signal to their respective door ajar switch signal circuits. The rear door ajar switches are integral to each rear door latch assembly. When a rear door is opened, the normally open door ajar switch closes. With the door ajar switch closed, ground is provided to the door ajar switch signal circuit and the voltage within the signal circuit drops. The rear side door window switches will detect the voltage drop and will send a serial data message to the body control module which will then send a message to the instrument cluster to command the door ajar message

Endgate Description and Operation (QT6)

System Description

The power endgate system consists of the following components:

- Rear gate module
- Pickup box endgate power assist actuator
- Pickup box endgate position sensor (part of the power assist actuator)
- Interior pickup box endgate control switch (Part of the Instrument panel multifunction switch)
- Exterior pickup box endgate control switch
- Right pickup box endgate latch assembly
- Left pickup box endgate latch assembly
- Keyless entry transmitter
- Remote control door lock receiver

Operation

The power endgate can be commanded to power open and power close by the following methods:

- An open or close command from the interior pickup box endgate control switch
- An open or close command from the exterior pickup box endgate control switch
- An open or close request by a signal from the keyless entry transmitter to the remote control door lock receiver

The rear gate module will respond to a request by commanding the left and right pickup box endgate latches to release the endgate and activate the pickup box endgate power assist actuator and lower the endgate or to raise and cinch the endgate closed.

Power Latch

The rear gate module continuously monitors power endgate operation and calculates its location and direction of travel from an endgate position sensor (part of the power assist actuator). One input returns the position of the endgate relative to the x-axis and y-axis. The rear gate module then uses these 2 inputs together to calculate its angle relative to the endgate.

The left and right pickup box endgate latches are bi-directional motors and latch or unlatch operation is the result of the direction of the motor rotation. The rear gate module controls the left and right pickup box endgate latches through the control circuits by supplying power and ground in the appropriate polarity. The motor control circuits are monitored by the rear gate module prior to activation for a high or low condition and during motor operation for an insufficient current flow condition. The ratchet, pawl and sector switches are part of the left and right pickup box endgate latches and are used by the rear gate module to determine the state of the latch during the process of latching or unlatching. Each of the latch switch signal circuits are supplied battery voltage and monitored within the rear gate module. The latch switches share a common low reference circuit from the rear gate module and when the switch contacts close the signal circuit goes low and the rear gate module determines the switch to be active. The ratchet, pawl and unlatch switches are inactive when the endgate is closed and will transition to active as the endgate is opened. The sector switch will be inactive when the endgate is closed, during opening of the endgate the sector switch will change to active and back to inactive when the endgate is in the fully open position.

The exterior pickup box endgate control switch signal circuit is supplied battery voltage by the rear gate module. When the switch is pressed the contacts close and the signal circuit goes low, the rear gate module will detect the voltage drop and will command the endgate to release and lower or to power raise the endgate to the closed position.

For vehicles without the optional passive keyless entry, when the exterior pickup box endgate control switch is pressed, the rear gate module will check the status of the vehicle door locks by sending a serial data message to the body control module requesting the door lock status. If the vehicle doors are locked, the rear gate module will ignore the signal from the exterior pickup box endgate control switch. If the vehicle doors are unlocked, the rear gate module will permit the endgate to unlatch and power open when the exterior pickup box endgate control switch is pressed.

For vehicles with the optional passive keyless entry system, the keyless entry control module monitors the proximity of the keyless entry transmitter. If the exterior pickup box endgate control switch is pressed and the keyless entry transmitter is within range, the keyless entry control module will send a serial data message to the rear gate module indicating the presence of the keyless entry transmitter and the rear gate module will permit the endgate to unlatch and power open. If the doors are locked and the keyless entry transmitter is not within range, the rear gate module will ignore the signal from the exterior pickup box endgate control switch.

Manual Endgate Operation

The endgate can be manually closed from the full-open position when the endgate is lifted in a continuous motion. If the endgate motion is stopped between the full-open and half-closed positions, the lift to close feature can engage and power close the endgate. If the touch pad is pressed during power operation, the endgate will stop and allow manual operation. The endgate must be held after stopping, or it will continue to open

Tailgate Release Unavailable Driver Information Center Message

Power Endgate Functions Disabled Without Setting DTCs

The driver information center displays Tailgate Release Unavailable when a thermal inhibit occurs in the latch or drive unit or the position count is out of range.

The power endgate functions will be restored by performing the following actions:

- Closing the endgate which will reset the position counts
- Closing the endgate and removing the F20DL 30A fuse for greater than 5 minutes

Power Endgate Functions Disabled With DTCs Current

The driver information center displays Tailgate Release Unavailable when the rear gate module control module detects a malfunction in the power endgate system and the system is disabled.

Endgate Description and Operation (QT5 Without MultiPro Tailgate)

Endgate Release System Components

- Body control module (BCM)
- Pickup box endgate control switch-interior (Part of the instrument panel multifunction switch)
- Pickup box endgate control switch-exterior
- Pickup box endgate unlatch actuator
- Pickup box endgate unlatch relay

Endgate Release Operation (Without MutiPro Tailgate Option)

Interior Endgate Release Switch

The body control module monitors the voltage level of the endgate unlatch signal circuit so that when the switch is pressed contacts within the switch closes providing a ground path for the endgate unlatch signal circuit, the voltage within the signal circuit is pulled low, the body control module will detect the voltage drop and if the passenger doors are unlocked, will energize the pickup box endgate unlatch relay.

Exterior Endgate Release Switch

The body control module monitors the status of the vehicle doors, if the doors are locked the body control module will ignore the request from the exterior pickup box endgate control switch. If the passenger doors have been commanded to unlock, pressing the exterior pickup box endgate control switch will close contacts within the switch and provide a ground path for the endgate unlatch signal circuit, the body control module will detect the voltage drop and will energize the pickup box endgate unlatch relay.

If the vehicle has been equipped with the passive keyless entry system and the keyless entry transmitter is within 3 feet (1 meter) of the endgate, pressing the exterior pickup box endgate control switch will also function in the same manner but without unlocking the passenger doors. Refer to *Keyless Entry System Description and Operation* for more information on the passive keyless entry system.

Pickup Box Endgate Unlatch actuator

When body control module receives a endgate release command from the exterior pickup box endgate control switch, the body control module applies brief pulse of voltage to the pickup box endgate unlatch relay control circuit, which energizes the coil side of the relay. The switch side of the pickup box endgate unlatch relay then momentarily closes, supplying a brief pulse of battery positive voltage to the pickup box endgate unlatch actuator. The pickup box endgate unlatch actuator is continuously grounded and when it receives the voltage pulse, it will become energized and the latch will activate releasing the endgate so that it may be manually lowered to an open position.

Endgate Description and Operation (QT5 With MultiPro Tailgate)

Endgate Release System Components

- Body control module (BCM)
- Pickup box endgate control switch-interior (Part of the instrument panel multifunction switch)
- Pickup box endgate control switch-exterior
- Left pickup box endgate latch
- Right pickup box endgate latch
- Left pickup box auxiliary endgate latch

- Right pickup box auxiliary endgate latch
- Left pickup box endgate latch relay
- Right pickup box endgate latch relay
- Left pickup box auxiliary endgate latch relay
- Right pickup box auxiliary endgate latch relay

Endgate Release Operation (With MutiPro Tailgate Option)

Interior Endgate Release Switch

The body control module monitors the voltage level of the endgate unlatch signal circuit so that when the switch is pressed contacts within the switch closes providing a ground path for the endgate unlatch signal circuit, the voltage within the signal circuit is pulled low, the body control module will detect the voltage drop and if the passenger doors are unlocked, will energize the left pickup box endgate latch relay and right pickup box endgate latch relay.

Exterior Endgate Release Switch

The body control module monitors the status of the vehicle doors, if the doors are locked the body control module will ignore the request from the exterior pickup box endgate control switch. If the passenger doors have been commanded to unlock, pressing the appropriate exterior pickup box endgate control switch will close contacts within the switch and provide a ground path for the major or minor endgate unlatch signal circuit, the body control module will detect the voltage drop and will energize the appropriate pickup box endgate latch relays.

If the vehicle has been equipped with the passive keyless entry system and the keyless entry transmitter is within 3 feet (1 meter) of the endgate, pressing the exterior pickup box endgate control switch will also function in the same manner but without unlocking the passenger doors. Refer to *Keyless Entry System Description and Operation* for more information on the passive keyless entry system.

Major Pickup Box Endgate

Note: The auxiliary pickup box endgate must be in the latched position before commanding the major pickup box endgate to release. The body control module will disable the major pickup box endgate release function if the auxiliary pickup box endgate is open or ajar.

When body control module receives a major endgate release command from the exterior pickup box endgate control switch, the body control module applies brief pulse of voltage to the left and right pickup box endgate latch relay control circuits, which energizes the coil side of the relays. The switch side of the left and right pickup box endgate latch relay then momentarily closes, supplying a brief pulse of battery positive voltage to the left and right pickup box endgate latches. The left and right pickup box endgate latches will become energized and the latches will activate releasing the major endgate so that it may be manually lowered to an open position.

Minor Pickup Box Endgate

When body control module receives a major endgate release command from the exterior pickup box endgate control switch, the body control module applies brief pulse of voltage to the left and right pickup box auxiliary endgate latch relay control circuits, which energizes the coil side of the relays. The switch side of the left and right pickup box auxiliary endgate latch relay then momentarily closes, supplying a brief pulse of battery positive voltage to the left and right pickup box auxiliary endgate latches. The left and right pickup box auxiliary endgate latches will become energized and the latches will activate releasing the minor endgate so that it may be manually lowered to an open position.

Hood Ajar Indicator Description and Operation

Hood Ajar Switch

The body control module (BCM) applies B+ to the hood ajar signal circuit and monitors the voltage to determine the position of the hood. When the hood is open, the switch is open and voltage remains high. When the hood is closed, the switch is closed and the voltage is pulled low.

The BCM uses the hood ajar switch as a content theft deterrent alarm trigger.

Hood Ajar Indicator/Message

When the hood is ajar, a message is displayed on the DIC or the hood ajar indicator will be illuminated.

Power Door Locks Description and Operation

Door Lock System Components

The power door lock system consists of the following components:

- Driver door lock switch
- Passenger door lock switch
- Left rear door lock switch
- Right rear door lock switch
- Driver front side door window control switch
- Passenger front side door window switch
- Driver front side door latch
- Passenger front side door latch
- Left rear side door latch
- Right rear side door latch
- Exterior door handle switches
- Body control module
- Lighting control module

Door Lock System Controls

The power door lock system can be controlled by any of the following:

- Power door lock switch activation
- Keyless entry lock or unlock command
- Delayed locking command

- Automatic door lock command
- When the OnStar® system is used to unlock the driver door

Door Lock and Unlock Operation

The driver or passenger front side door window control switch will monitor the voltage of their respective door lock switches, when the driver or passenger door lock switch is activated in the lock or unlock position the signal voltage will be pulled low, the corresponding front side door window control switch will detect the voltage drop in the signal circuit and will send a serial data message to the body control module requesting the door lock or unlock command.

The lighting control module will monitor the voltage of the left rear and right rear door lock switches, when the left rear or right rear door lock switch is activated in the lock or unlock position the signal voltage will be pulled low, the lighting control module will detect the voltage drop in the signal circuit and will send a serial data message to the body control module requesting the door lock or unlock command.

The body control module upon receipt of a lock or unlock request, will supply battery voltage to the door lock actuator lock or unlock control circuits. Since the opposite side of the lock actuator is connected to ground through the other lock actuator control circuit, the doors, and fuel filler door will then lock or unlock as commanded.

The following control circuits are used to operate the door lock actuators:

- Driver door unlock only
- Passenger and rear door unlock
- All door lock

This sequence and be modified through the personalization settings

Passive Door Lock/Unlock Operation

The exterior door handle switch signal circuits provide inputs to the body control module when the exterior door handle switches are activated. These inputs allow the body control module to detect a door lock or a door unlock request. The body control module provides a 7 V signal to each exterior door handle switch via the door handle switch signal circuits. When a door handle switch is pressed, the switch closes and the voltage signal within the signal circuit is pulled to ground. The body control module will detect the voltage drop and a low frequency antenna will transmit a challenge to the keyless entry transmitter. If the challenge is met, the keyless entry transmitter will respond, and the body control module will command the door(s) to be locked or unlocked

BLANK

Section 3

Driver Information and Entertainment

Image Display Cameras 3-3
Schematic and Routing Diagrams 3-3
Image Display Camera Schematics 3-4
Description and Operation 3-7
Rearview Camera Full Display Mirror Description and Operation 3-7
Rear Vision Camera Description and Operation 3-7
Surround Vision Camera Description and Operation 3-7

BLANK

Image Display Cameras

Schematic and Routing Diagrams

Image Display Camera Schematics (Rearview Driver Information Camera (UVB))

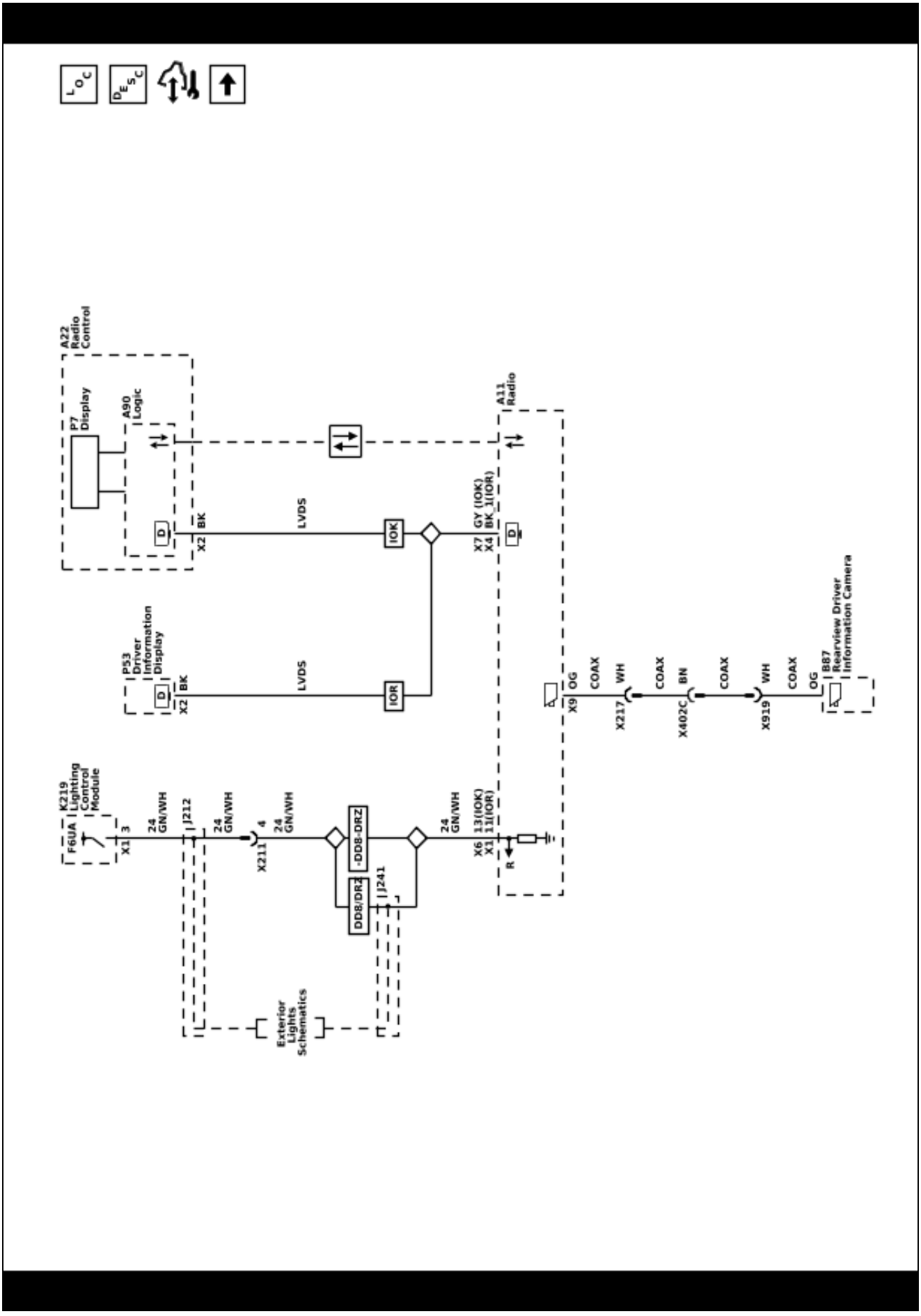

Image Display Camera Schematics (Inside Rearview Mirror Camera (DRZ))

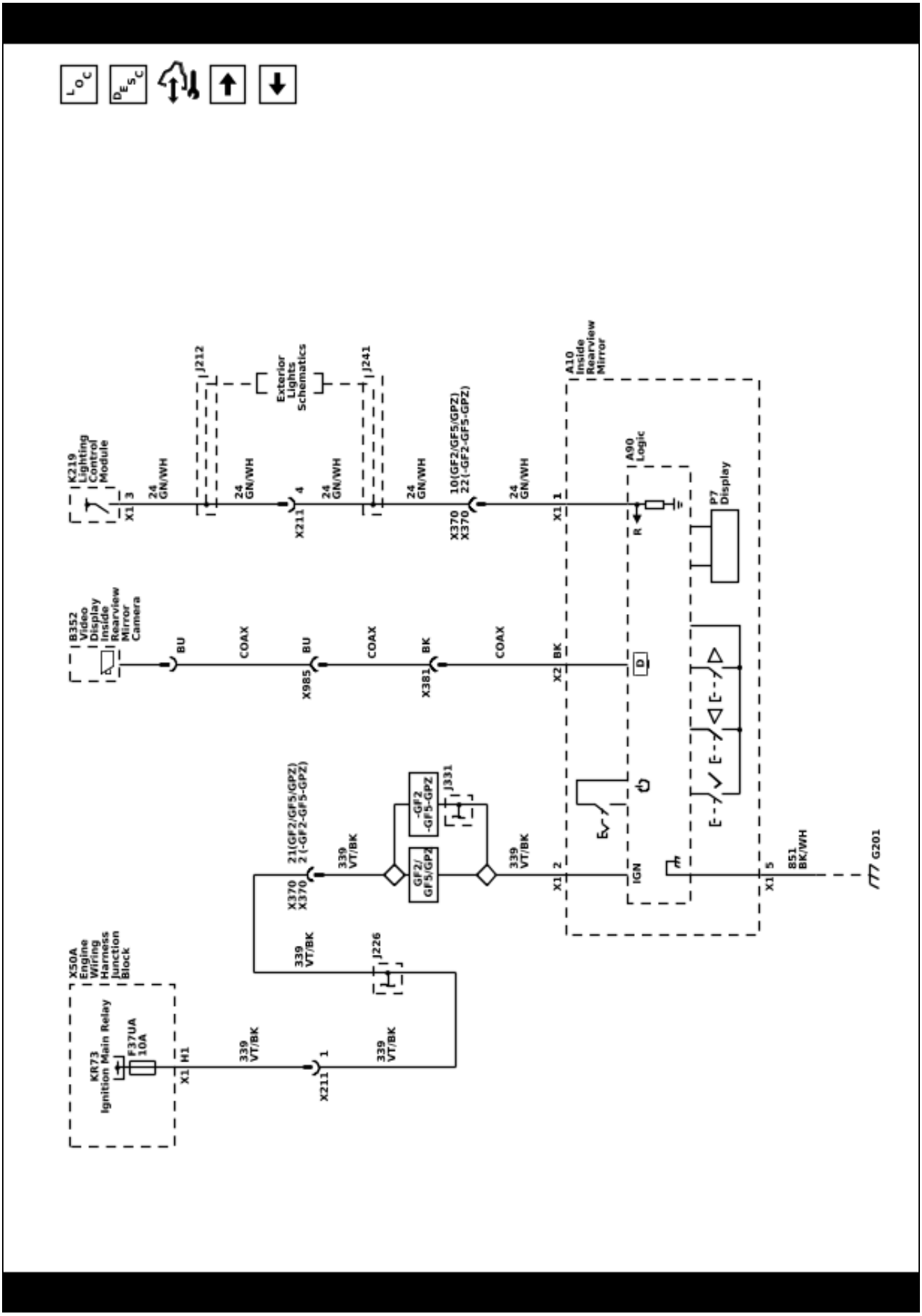

Image Display Camera Schematics (360 Degree Vision (UV2))

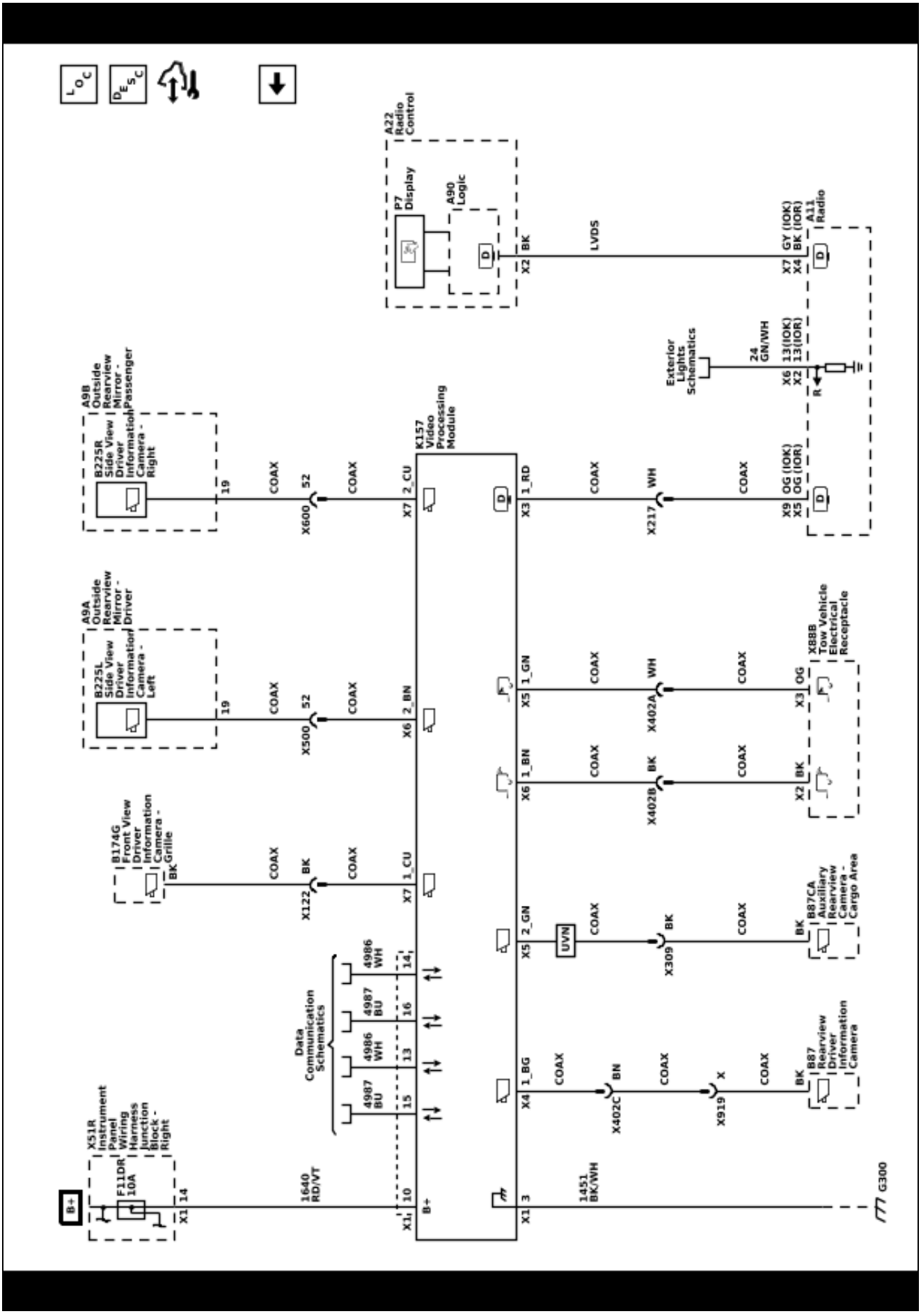

Description and Operation

Rearview Camera Full Display Mirror Description and Operation

If equipped, full display mirror provides a wider field of view than normally seen from the inside rearview mirror to assist when driving and changing lanes. When the tab under the inside rearview mirror is pulled rearward, a view of the area behind the vehicle displays on the mirror. The inside rearview camera full display mirror is connected to the outside rearview camera via a shielded coaxial cable.

When the tab under the inside rearview mirror is pulled rearward, a view of the area behind the vehicle displays on the mirror.

Adjust the rearview mirror for a clear view of the area behind the vehicle before turning on full display mirror. Use the three buttons on the bottom of the mirror to adjust the brightness, zoom, and tilt of the display. Make sure the light sensor is not covered when adjusting the brightness.

The inside rearview camera full display mirror may not work properly or display a clear image if:.

- It is dark.
- The sun or the beam of headlamps are shining directly into the camera lens.
- Ice, snow, mud, or anything else builds up on the camera lens. Clean the lens, rinse it with water, and wipe it with a soft cloth.

When the mirror detects that the camera is not sending a valid video signal, it “blue screens” with a “no video” decal for 3 seconds, then reverts back to the mirror.

Rear Vision Camera Description and Operation

Rear Vision Camera System Operation

The rear vision camera system consists of a video camera located at the rear of the vehicle and the Rado.

When the transmission is placed into REVERSE, a signal is sent to the Radio indicating that camera operation is requested. The rearview camera sends video information to the radio through a coax cable. The coax cable also provides power from the Radio to the rearview camera.

The following conditions may cause a degraded rear vision camera image:

- Ice, snow, or mud has built up on the rear vision camera
- Dark conditions
- Extreme light conditions, such as glare from the sun or the headlights of another vehicle
- Damage to the rear of the vehicle
- Extreme high temperatures or extreme temperature changes

If a malfunction is detected in the system, Service Rear Vision Camera may be displayed on the Info Display Module as an indicator to the customer that a problem exists that requires service.

Surround Vision Camera Description and Operation

Warning: The Surround Vision cameras have blind spots and will not display all objects near the corners of the vehicle. Folding outside mirrors that are out of position may not display surround view correctly. Always check around the vehicle when parking or backing.

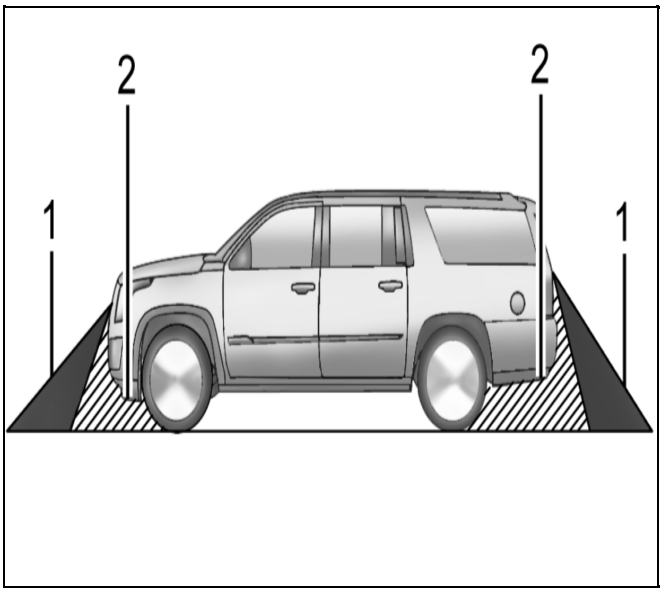

4291164

1. View Displayed by the Surround Vision Camera
2. Area Not Shown

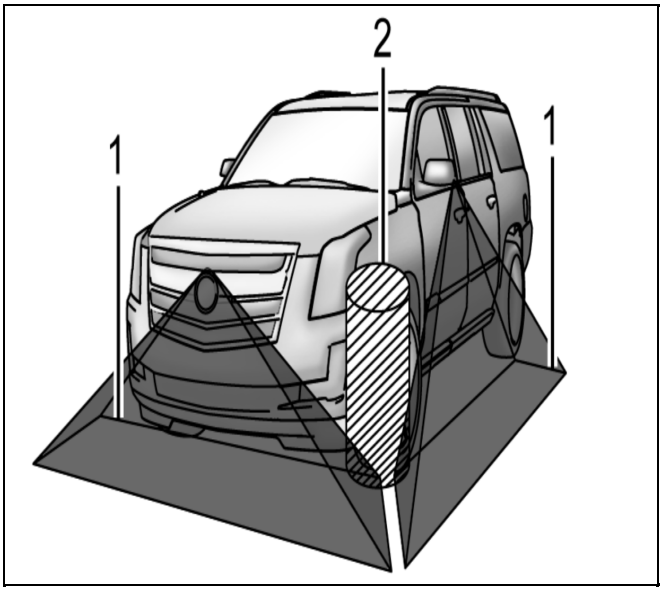

4291749

1. View Displayed by the Surround Vision Camera
2. Area Not Shown

The surround vision camera system consists of the following components:

- B87 Rearview Camera
- B174G Frontview Camera – Grille
- K157 Video Processing Control Module

- A11 Radio **OR** K74 Human Machine Interface Module
- B225L Sideview Camera – Left
- B225R Sideview Camera – Right
- X20 Memory Card Receptacle (with XVR)

When the vehicle is traveling at speeds slower than 6 mph (10kph) the video processing control module will power up the cameras and send a video signal to the radio or human machine interface module.

The following conditions may cause a degraded surround vision camera image:

- Ice, snow, or mud has built up on the rear vision camera
- Dark conditions
- Extreme light conditions, such as glare from the sun or the headlights of another vehicle
- Damage to the rear of the vehicle
- Extreme high temperatures or extreme temperature changes

Surround Vision displays an overhead view of the area surrounding the vehicle, along with the front or rear camera views in the center stack. The front camera is in the grille or near the front emblem, the side cameras are on the bottom of the outside rearview mirrors, and the rear vision camera is above the license plate.

Note: Images from the Sideview Cameras are only displayed when both front doors are properly closed.

Features of the Surround Vision System

- Rear camera (B87 Rearview Camera) view alongside overhead view is displayed in reverse
- Front camera (B174G Frontview Camera – Grille) view alongside overhead view is displayed after shifting out of reverse to Neutral or Drive
- Will display front view when front park assist object is within trigger range calibration value (30 cm (12 in) in a forward gear
- Image is removed from display when vehicle speed exceeds speed calibration (10kph/6 mph) or button press / screen touch

System Operation

The video processing control module is connected to each camera via a shielded coaxial cable. The coaxial cable provides power for the camera and also carries the video image from the cameras to the video processing control module for processing. The video processing control module will then send the processed image output to infotainment system via another coaxial cable.

The video processing module receives various vehicle information (such as steering wheel angle, object detection, etc) from other sources such as parking assist modules and the Body Control Module via serial data. This information is used to produce the enhanced surround vision system images that include a warning triangle that may display if an object is detected nearby. This triangle changes from amber to red and increases in size as the object gets closer to the vehicle. Also, dynamic guidelines are displayed in Reverse to show the projected path of the vehicle based on steering wheel angle. Due to this use of vehicle information, any faults or DTCs in these related systems can prohibit proper surround vision operation.

If equipped, the video processing control module system may have a memory card receptacle (with XVR) located in the trunk. The memory card receptacle interfaces with the video processing control module via a USB cable. The memory card receptacle also receives fused battery voltage and ground from the video processing control module. The video processing control module uses the memory card as a mass storage device, similar to a USB storage device.

Section 4

Engine/Propulsion

12 V Starting and Charging 4-3
Schematic and Routing Diagrams 4-3
Starting and Charging Schematics 4-4
Description and Operation 4-9
Electrical Power Management Description and Operation 4-9
Starting System Description and Operation 4-11
Stop/Start System Description and Operation 4-12

BLANK

12 V Starting and Charging

Schematic and Routing Diagrams

Starting and Charging Schematics (Starting (L3B/L84/L87))

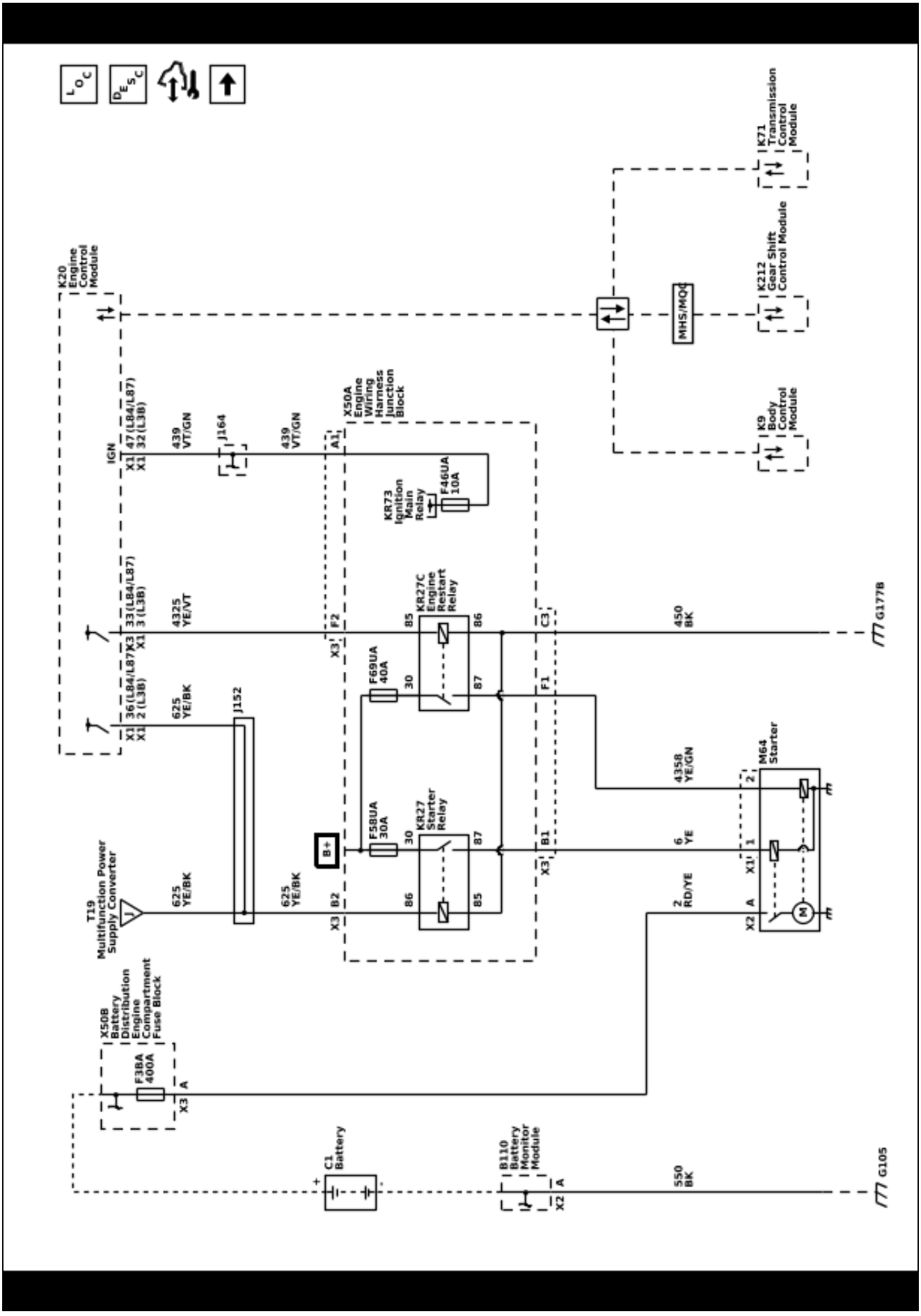

Starting and Charging Schematics (Starting (LM2))

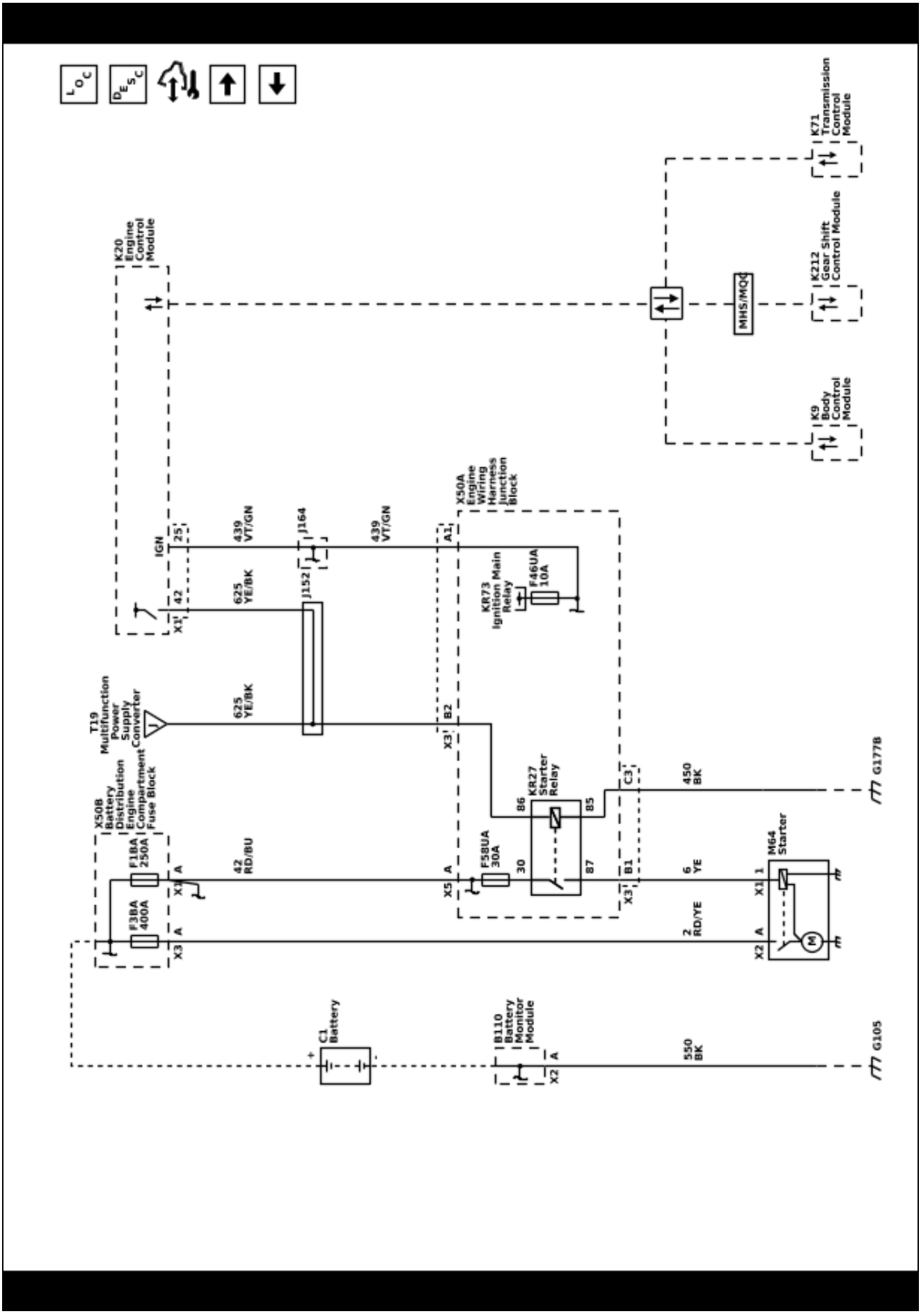

Starting and Charging Schematics (Charging)

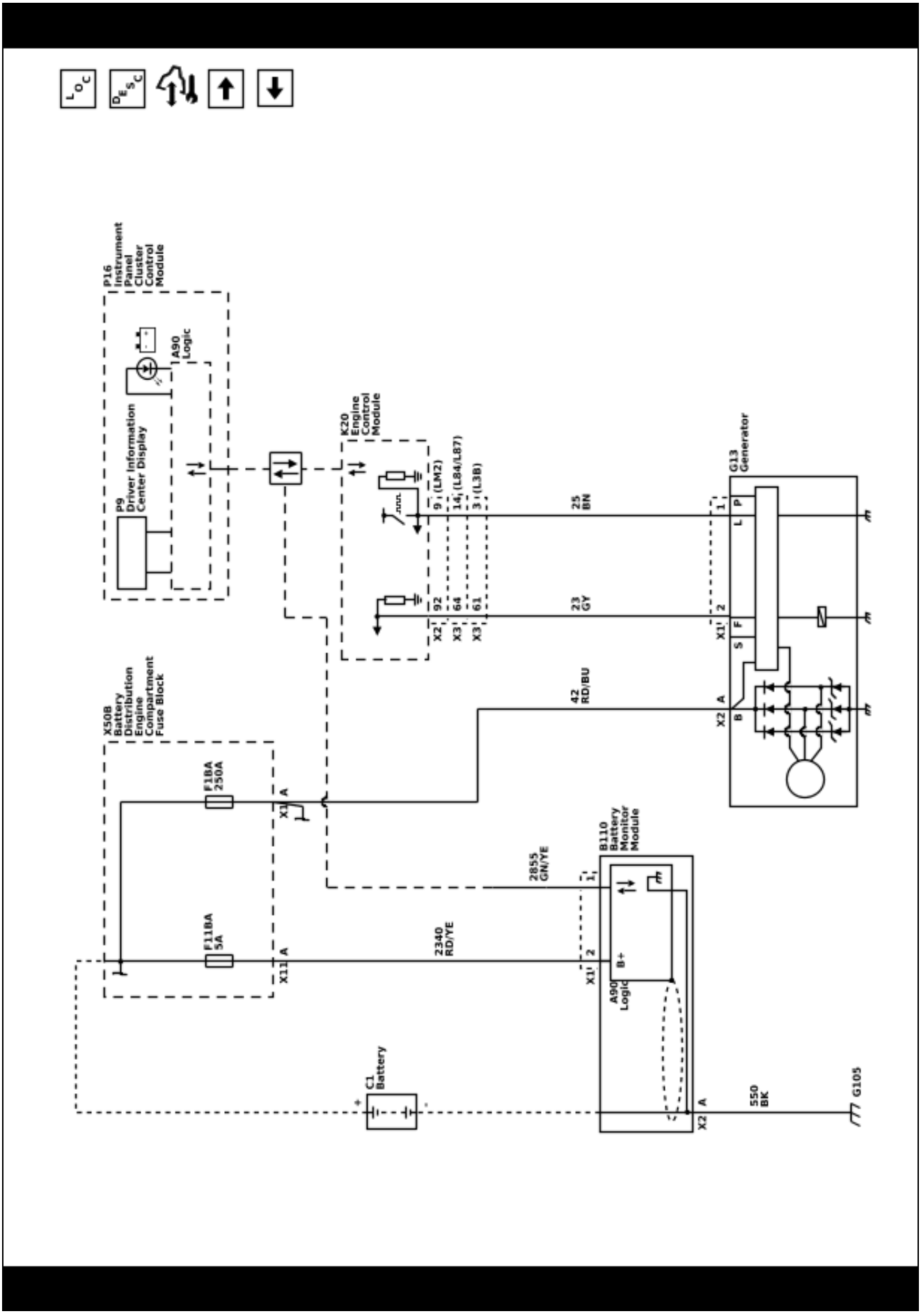

Starting and Charging Schematics (Power Supply Transformer Power, Ground, Serial Data, and Subsystem References (KL9))

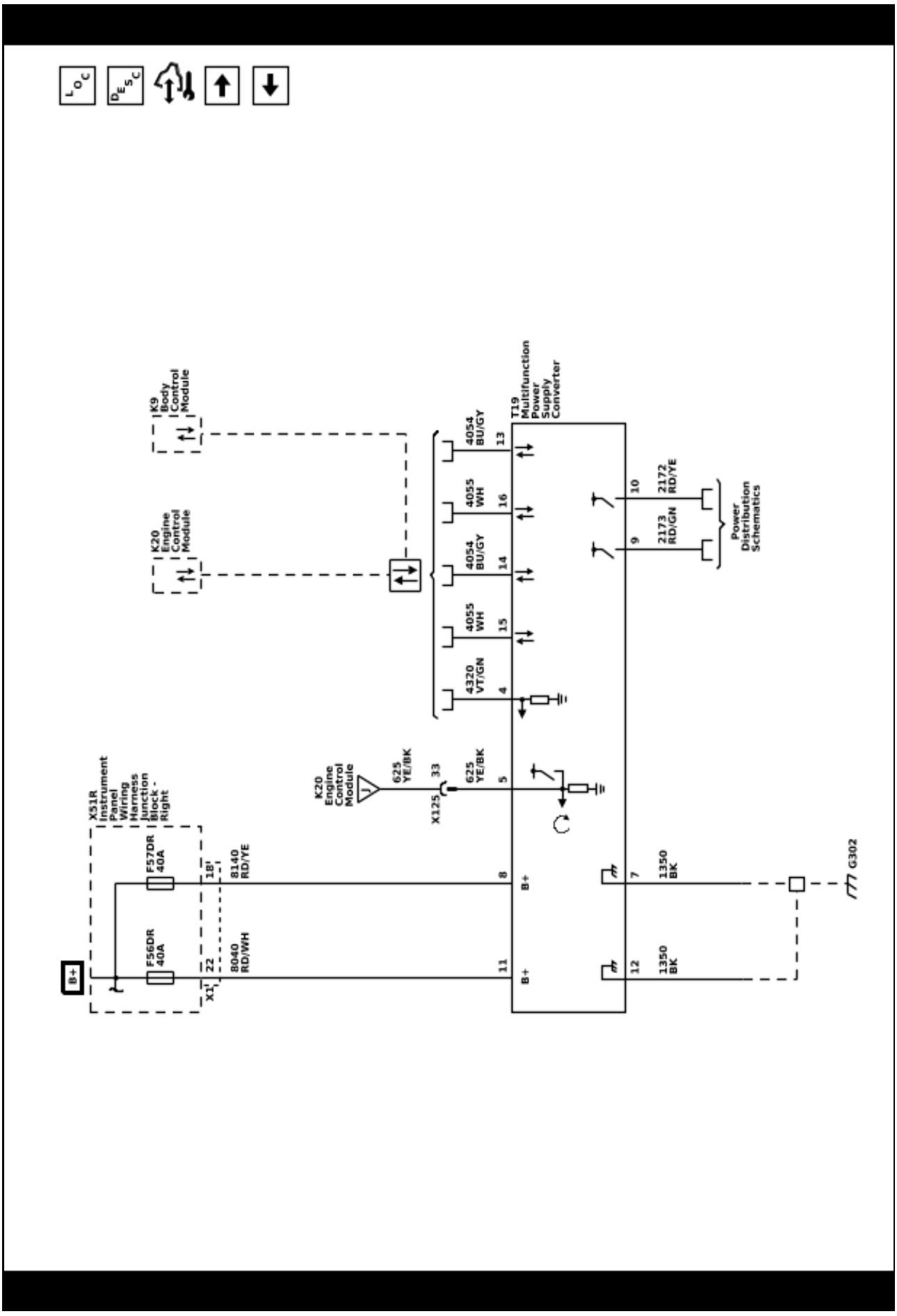

Starting and Charging Schematics (Stop/Start Controls (KL9))

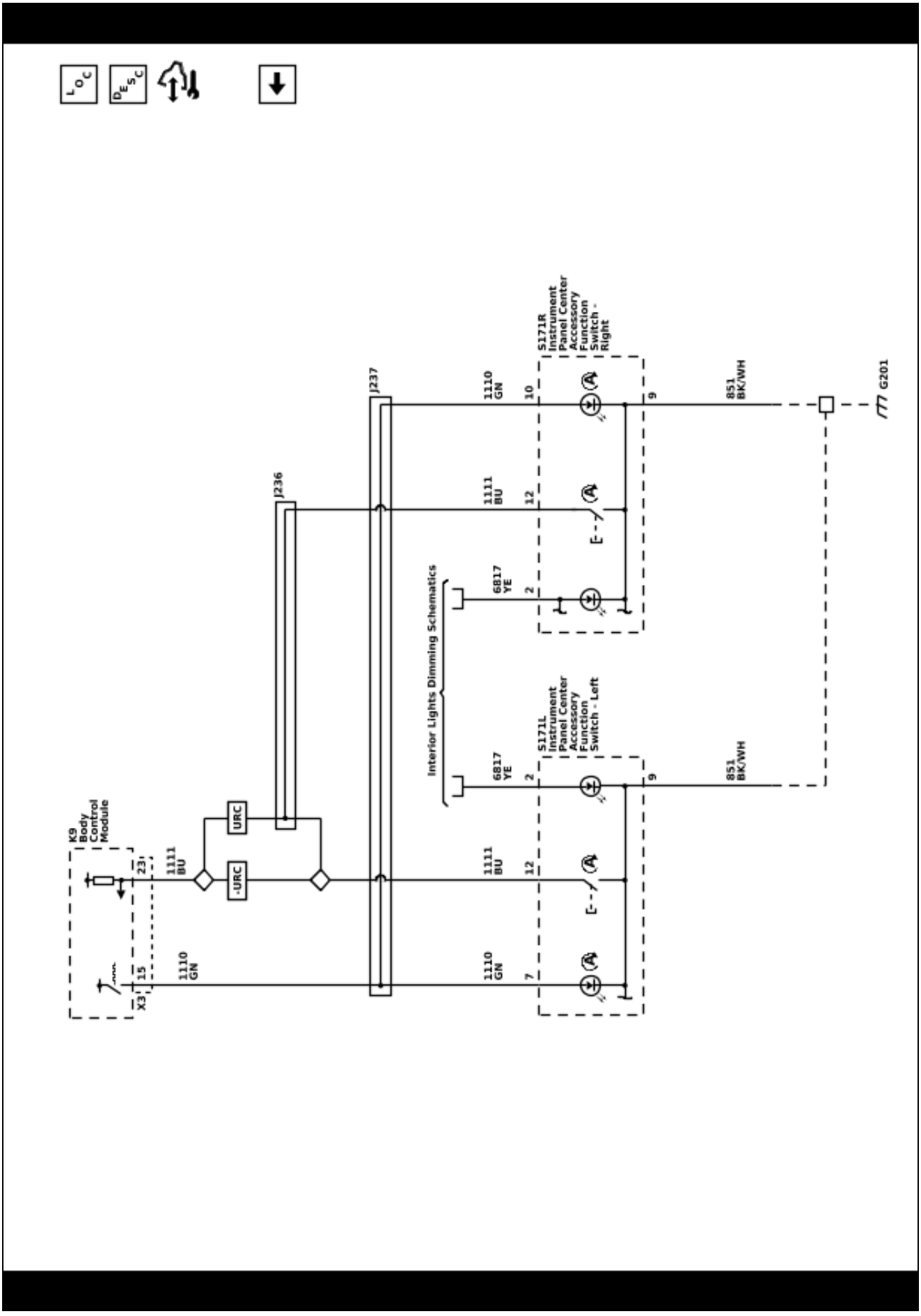

Description and Operation
Electrical Power Management
Description and Operation

Electrical Power Management

The electrical power management is used to monitor and control the charging system and alert the driver of possible problems within the charging system. The electrical power management system makes the most efficient use of the generator output, improves the battery state-of-charge, extends battery life, and manages system electrical loads.

The load shed operation is a means of reducing electrical loads during a low voltage or low battery state-of-charge condition.

The idle boost operation is a means of improving generator performance during a low voltage or low battery state-of-charge condition.

Each electrical power management function, either idle boost or load shed, is activated in incremental steps. For example, idle boost 1 must be active before idle boost 2 can be active. The criteria used by the body control module (BCM) to regulate electrical power management are outlined below:

Idle Boost and Load Shed With Current Sensor

Function	Battery Temperature Calculation	Battery Voltage Calculation	Amp-Hour Calculation	Action Taken
Idle Boost 1 Start	Less Than −15°C (5°F)	Less Than 13 V	—	First level Idle boost requested
Idle Boost 1 Start	—	—	Battery has a net loss greater than 0.6 Ah	First level Idle boost requested
Idle Boost 1 Start	—	Less Than 11 V	—	First level Idle boost requested
Idle Boost 1 End	Greater Than −10°C (14°F)	Greater Than 12 V	Battery has a net loss less than 0.2 Ah	First level Idle boost request cancelled
Idle Boost 2 Start	—	—	Battery has a net loss greater than 1.6 Ah	Second level Idle boost requested
Idle Boost 2 Start	—	Less Than 11 V	—	Second level Idle boost requested
Idle Boost 2 End	—	Greater Than 12 V	Battery has a net loss less than 0.8 Ah	Second level Idle boost request cancelled
Load Shed 1 Start	—	—	Battery has a net loss of 4 Ah	Rear Defrost, Heated Mirrors, Heated Seats, HVAC cycled OFF for 20% of their cycle
Load Shed 1 Start	—	Less Than 11 V	—	Rear Defrost, Heated Mirrors, Heated Seats, HVAC cycled OFF for 20% of their cycle
Load Shed 1 End	—	Greater Than 12 V	Battery has a net loss of less than 2 Ah	Clear Load Shed 1
Idle Boost 3 Start	—	—	Battery has a net loss of 10 Ah	Third level Idle boost requested
Idle Boost 3 Start	—	Less Than 11 V	—	Third level Idle boost requested
Idle Boost 3 End	—	Greater Than 12 V	Battery has a net loss of less than 6.0 Ah	Third level Idle boost request cancelled

Idle Boost and Load Shed With Current Sensor (cont'd)

Function	Battery Temperature Calculation	Battery Voltage Calculation	Amp-Hour Calculation	Action Taken
Load Shed 2 Start	—	—	Battery has a net loss greater than 12 Ah	Rear Defrost, Heated Mirrors, Heated Seats, HVAC cycled OFF for 50% of their cycle. The BATTERY SAVER ACTIVE message will be displayed on the DIC
Load Shed 2 Start	—	Less Than 11 V	—	Rear Defrost, Heated Mirrors, Heated Seats, HVAC cycled OFF for 50% of their cycle. The BATTERY SAVER ACTIVE message will be displayed on the DIC
Load Shed 2 End	—	Greater Than 12 V	Battery has a net loss of less than 8 Ah	Clear Load Shed 2
Load Shed 3 Start	—	Less Than 11.9 V	Battery has a net loss greater than 20 Ah	Rear Defrost, Heated Mirrors, Heated Seats, HVAC cycled OFF for 100% of their cycle. The BATTERY SAVER ACTIVE message will be displayed on the DIC
Load Shed 3 Start	—	Less Than 11 V	—	Rear Defrost, Heated Mirrors, Heated Seats, HVAC cycled OFF for 100% of their cycle. The BATTERY SAVER ACTIVE message will be displayed on the DIC
Load Shed 3 End	—	Greater Than 12.6 V	Battery has a net loss of less than 13 Ah	Clear Load Shed 3

Idle Boost and Load Shed Without Current Sensor (based on battery voltage)

Function	Battery Temperature Calculation	Battery Voltage Calculation	Action Taken
Idle Boost 1 Start	Less Than −15°C (5°F)	Less Than 13 V	First level Idle boost requested
Idle Boost 1 Start	—	Less Than 12.6 V	First level Idle boost requested
Idle Boost 1 End	Greater Than −15°C (5°F)	—	First level Idle boost request cancelled
Idle Boost 1 End	—	Greater Than 13 V	First level Idle boost request cancelled
Idle Boost 2 Start	—	Less Than 12.4 V	Second level Idle boost requested
Idle Boost 2 End	—	Greater Than 12.5 V	Second level Idle boost request cancelled
Load Shed 1 Start	—	Less Than 12.3 V	Rear Defrost, Heated Mirrors, Heated Seats, HVAC cycled OFF for 20% of their cycle
Load Shed 1 End	—	Greater Than 12.4 V	Clear Load Shed 1
Idle Boost 3 Start	—	Less Than 10 V	Third level Idle boost requested

Idle Boost and Load Shed Without Current Sensor (based on battery voltage) (cont'd)

Function	Battery Temperature Calculation	Battery Voltage Calculation	Action Taken
Idle Boost 3 End	—	Greater Than 12.3 V	Third level Idle boost request cancelled
Load Shed 2 Start	—	Less Than 12.1 V	Rear Defrost, Heated Mirrors, Heated Seats, HVAC cycled OFF for 50% of their cycle. The BATTERY SAVER ACTIVE message will be displayed on the DIC
Load Shed 2 End	—	Greater Than 12.2 V	Clear Load Shed 2
Load Shed 3 Start	—	Less Than 11.9 V	Rear Defrost, Heated Mirrors, Heated Seats, HVAC cycled OFF for 100% of their cycle. The BATTERY SAVER ACTIVE message will be displayed on the DIC
Load Shed 3 End	—	Greater Than 12.0 V	Clear Load Shed 3

Starting System Description and Operation

Starter Motor Operation (Without KL9)

The starter motors are non-repairable. They have pole pieces that are arranged around the armature. Both solenoid windings are energized. The pull-in winding circuit is completed to the ground through the starter motor. The windings work together magnetically to pull and hold in the plunger. The plunger moves the shift lever. This action causes the starter drive assembly to rotate on the armature shaft spline as it engages with the flywheel ring gear on the engine. Moving at the same time, the plunger also closes the solenoid switch contacts in the starter solenoid. Full battery voltage is applied directly to the starter motor and it cranks the engine.

As soon as the solenoid switch contacts close, current stops flowing thorough the pull-in winding because battery voltage is applied to both ends of the windings. The hold-in winding remains energized. Its magnetic field is strong enough to hold the plunger, shift lever, starter drive assembly, and solenoid switch contacts in place to continue cranking the engine. When the engine starts, pinion overrun protects the armature from excessive speed until the switch is opened.

When the crank signal is removed, the starter relay opens and battery voltage is removed from the starter solenoid S terminal. Current flows from the motor contacts through both windings to the ground at the end of the hold-in winding. However, the direction of the current flow through the pull-in winding is now opposite the direction of the current flow when the winding was first energized.

The magnetic fields of the pull-in and hold-in windings now oppose one another. This action of the windings, along with the help of the return spring, causes the starter drive assembly to disengage and the solenoid switch contacts to open simultaneously. As soon as the contacts open, the starter circuit is turned off.

Enhanced Starter Motor Operation (KL9)

The Engine Stop/Start system in GM vehicles automatically turns off the engine when the vehicle comes to a stop under certain driving conditions, and can quickly restart the engine in about 0.3 seconds when commanded to do so.

In order to smoothly restart the engine as quickly as possible while managing the greater number of engine starts, the Stop/Start system uses an enhanced starter motor that operates differently from a conventional starter motor. It has a high performance electric motor and a stronger pinion engagement mechanism than a conventional starter. It also has independent control of the pinion and motor.

The enhanced starter motor continues using the typical pinion engagement mechanism with a starter solenoid that drives the pinion gear to engage or disengage the flywheel of the engine. When engaged, the starter motor can rotate the engine flywheel and, in turn, the crankshaft.

On the enhanced starter of a Stop/Start system the operation is done in two separate functions inside the solenoid, Starter Motor and Pinion Actuator. Each function controlled individually by the ECM. There are two separate relays to control the two separate parts of the enhanced solenoid:

- KR27 Starter Motor Relay
- KR27C Starter Pinion Actuator Relay

The two individually-controlled relays allow for smooth engagement of the pinion gear into the flywheel with minimum noise and wear.

When the vehicle is coming to a stop, just before the engine stops rotating (at approximately 50 RPM) during stop/start operation, the ECM energizes the Starter Pinion Solenoid Actuator Relay to easily push the pinion gear into the flywheel gear without gear clash. (Fig. 8) When the engine stops rotating during Stop/Start operation (Auto Stop mode), the starter pinion gear is fully engaged, ready for the starter motor to become energized to quickly start the engine again.

A secondary need for the starter pinion to be driven into the flywheel gear before the engine stops rotating is to address quickly changing demands on the engine. For example, when a driver is slowing nearly to a stop — and the Stop/Start system is preparing for Auto Stop mode — but suddenly decides to release the brake and accelerate

In this situation, the engine has already stopped rotating, or nearly so. A conventional starter cannot restart the engine until the engine has completely stopped. However, with the enhanced starter, the starter pinion gear is fully engaged and ready to begin rotating the engine even before it fully stops turning. Otherwise, the engine would actually have to stop rotating before the pinion can engage smoothly to begin a restart.

To prevent a lag in engine operation, the ECM uses predictive speed matching of the flywheel gear speed and the pinion gear speed to engage the pinion gear into the flywheel gear without gear clash before the engine fully stops. By predicting how long it takes the starter motor to spin up using an algorithm, the pinion gear speed can be matched to the flywheel gear speed. The result is an almost instant restart that is possible at extremely low engine speeds.

Circuit Description

Keyless Start

When the Ignition mode switch is placed in the crank position, a discrete signal is supplied to the body control module (BCM) notifying it that the ignition is in the crank position. The BCM then sends a serial data message to the engine control module (ECM) that crank has been requested. The ECM then verifies that the brake pedal is applied and for manual transmission the clutch is fully depressed or for automatic transmission is in Park/Neutral. If it is, the ECM then supplies 12 V to the control circuit of the starter relay. When this occurs, battery positive voltage is supplied through the switch side of the crank relay to the S terminal of the starter solenoid.

Key Start

When the ignition switch is placed in the Start position, a discrete signal is supplied to the body control module (BCM) notifying it that the ignition is in the Start position. The BCM then sends a message to the engine control module (ECM) notifying it that CRANK has been requested. The ECM verifies that the transmission is in Park or Neutral. If it is, the ECM then supplies 12 V to the control circuit of the crank relay. When this occurs, battery positive voltage is supplied through the switch side of the crank relay to the S terminal of the starter solenoid.

Stop/Start System Description and Operation

The Stop/Start System is used to improve fuel efficiency in stop/start driving. The vehicle automatically shuts down the engine in appropriate conditions at a traffic light, for example, resulting in zero tail pipe emissions and saving fuel which otherwise is used idling the engine when stationary. The engine instantly restarts when the driver is ready to move away.

As soon as the driver prepares to move away (by releasing the brake pedal and/or depressing the accelerator pedal), the engine will start; it only takes the system around 0.3 s to start the engine.

To support the increased number of engine starts, the starter motor is upgraded with a high performance electric motor and a stronger pinion engagement mechanism with reduced noise levels.

Along with the upgraded starter motor, advanced battery technology is required to ensure the vehicles battery can handle the frequent charge and discharge cycles common with stop/start operation. There is battery sensor module connected to the battery which continually monitors the battery charge and healthy state. The Engine Control Module (ECM) uses this information from the battery sensor module to determine if the battery charge and health is sufficient for an Stop/Start condition.

The Stop/Start system can reduce fuel consumption and carbon dioxide (CO2) emissions by up to 5% in mixed driving conditions. In an urban environment and in heavy traffic with frequent stops the savings may increase to as much as 10%.

There are also sophisticated controls in place to help ensure the Stop/Start System does not compromise the needs of either the driver or vehicle. For the engine to shutdown, the vehicle must be below 5 km/h (3 MPH), the selector lever in position D, and brake pedal depressed. To restart, the driver simply releases the brake pedal and the enhanced starter motor engages the engine. When the engine has been shut down by the Stop/Start System, a control indicator will be illuminated in the Driver Information Center (DIC). When the engine is restarted, the control indicator in the DIC extinguishes.

To ensure neither the needs of the driver or vehicle are compromised the engine will not shut down in the following circumstances:

- Ambient and coolant temperature correlation does not match specified values.
- Ambient temperature is less than −10°C (14°F)
- Battery temperature is less than 0°C (32°F) or greater than 55°C (131°F)
- Driver seat belt is not fastened and the drivers door is not fully closed (not applicable to vehicles in North America)
- HVAC system demand is high
- HVAC defrost has been selected
- Battery charge is low

Likewise the engine will automatically restart if:

- Driver door opened and driver seat belt unbuckled (not applicable to vehicles in North America)
- Engine hood opened
- Battery charge is low
- HVAC demand increases
- Vehicle speed increases
- Brake booster vacuum has been reduced
- Engine coolant temperature is greater than 125° C (257°F)
- Economy mode turned OFF by driver
- Autostop time exceeded 2 min

When the Stop/Start System has shut down the engine, and the ambient temperature is below 15°C (59°F), the ECM will activate the Stop/Start auxiliary relay which controls the electric engine coolant pump motor to continually circulate the engine coolant through the engine while the engine is off. This is to ensure the engine and passenger compartment temperature is maintained while off. Once the Stop/Start System has restarted the engine, the ECM will turn off the electric coolant pump motor, thus allowing the engines internal coolant pump to circulate the engine coolant. The Stop/Start System is automatically activated each time the ignition switch is turned on.

Through the climate control system, the vehicle can be cycled between off, comfort, and eco air conditioning modes (if equipped). In comfort mode, the priority for Stop/Start operation is on customer comfort. Depending on ambient temp, humidity, cabin temperature and cabin temperature setpoint, the least amount of autostops occur in this mode. In eco mode, the priority is on fuel economy. There are more frequent autostops with some sacrificing of cabin temperature control. With the HVAC turned off, the maximum autostops occur since there will be no A/C compressor requests.

Autostop Criteria

The ECM will send an Autostop state message to the body control module (BCM) and shut down the engine when all of the following criteria is met. The BCM will transmit the Autostop state message to the instrument cluster which will display the Autostop indicator in the tachometer display.

- Initial minimum vehicle speed during drive cycle must be 19 km/h (12 MPH) or greater. Subsequent autostop minimum speed may vary from 2-10 km/h (1-6 MPH), depending on vehicle
- Ambient and engine coolant temperature correlation meets specified values.
- Ambient and transmission fluid temperature correlation meets specified values.
- Hood switch status is closed
- Driver door status is closed
- Driver seat belt status is buckled
- Brake booster vacuum is greater than 45 kPa (7 PSI)
- Transmission gear selector is in the Drive position
- Vehicle speed is less than 5 km/h (3 MPH)
- Engine speed is below 1,500 RPM
- Engine coolant temperature is less than 120° C (248°F)
- Ambient temperature is greater than −10°C (14°F)
- No A/C compressor request from HVAC (A/C or Defrost modes)
- Battery voltage greater than 12 V
- Battery state of charge greater than 75% (changes with state of health)

Autostop Enable Ambient and Engine Coolant Temperature Table

Ambient Temperature	inimum Coolant Temperature	Autostop Enable
−10°C (14°F)	60°C (140°F)	Yes

Autostop Enable Ambient and Engine Coolant Temperature Table (cont'd)

Ambient Temperature	inimum Coolant Temperature	Autostop Enable
0°C (32°F)	50°C (122°F)	Yes
6°C (43°F)	40°C (104°F)	Yes
12°C (54°F)	30°C (86°F)	Yes
20°C (68°F)	18°C (64°F)	Yes
30°C (86°F)	18°C (64°F)	Yes

Autostart Criteria

The ECM will send an Autostart state message to the BCM. If all of the following conditions are true the ECM and BCM will restart the vehicle.

Driver Enabled Conditions that will engage Autostart:

- Driver removes pressure from the brake or depresses the accelerator pedal while the vehicle is in the forward Drive gear

System Enabled Conditions that will engage Autostart

Note: If one or more of the following conditions occur, the system will force the engine to restart.

- Brake booster vacuum is less than 40 kPa (6 PSI)
- A/C compressor request from HVAC (A/C or Defrost modes)
- Battery voltage less than 11 V,
- Battery state of charge is less than 73% (changes with state of health)
- Driver door status changes to open and driver seat belt status changes to unbuckled (not applicable to vehicles in North America)
- Hood switch status changes to open
- Autostop time exceeded 2 min

If the crank time exceeds 2 s, a manual ignition switch restart will be necessary.

System Components

Engine Control Module (ECM)

The ECM monitors the inputs from the Engine Coolant Temperature (ECT) sensor, Vehicle Speed Sensor (VSS), Battery Sensor Module, hood ajar switch, brake booster vacuum sensor, and engine speed to determine Autostart and Autostop conditions. The ECM also controls the auxiliary coolant pump motor (if equipped).

Transmission Control Module (TCM)

The TCM monitors the inputs from the transmission neutral safety switch to determine the driver selected gear. This information is transmitted to the ECM via serial data to support the Auto Stop Start algorithm.

Engine Coolant Temperature sensor (ECT)

The ECT sensor is used to determine engine operating temperature.

Intake Air Temperature Sensor (IAT)

The ECM uses this sensor to monitor ambient air temperature. If too cold, the Autostop will not occur.

Inside air temperature sensor

The HVAC control module monitors the passenger compartment temperature sensor to determine the temperature inside the passenger compartment. The HVAC control module sends this temperature reading to the ECM on the data communication circuit. The ECM uses this temperature values to determine if a restart is requires based on the temperature inside the passenger compartment.

Vehicle speed sensor

The vehicle speed sensor is used to determine vehicle speed. If vehicle speed is detected above a calculated value during an Autostop condition, the ECM will start the engine.

Hood Ajar Switch

If the hood switch is in the open position, the vehicle will not Autostop. If the hood is opened during Autostop, the vehicle will automatically restart.

Brake Booster Vacuum Sensor

The ECM monitors vacuum in order to ensure proper power assist for the brake pedal. If the ECM determines vacuum is too low, it will restart the engine.

Brake Pedal Position Sensor (BPPS) & Accelerator Pedal Position Sensor (APP)

The ECM monitors both the brake pedal position sensor and the accelerator pedal position sensor to determine the level of activation for each. While the accelerator pedal is in it's at rest position with no pressure applied by the operator, a partially depressed Brake pedal will cause the ECM to prepare the engine for an Autostop event. When the vehicle is in an auto stop event and the status of the brake pedal position sensor changes from meeting the autostop criteria to not meeting this criteria the engine will be restarted provided all of the other conditions to allow an autostart are met. If the Accelerator pedal is moved from its at rest position the vehicle will also enter an auto start event if all other conditions to support an autostart event, except for the brake pedal position, are met.

Transmission Gear Shift Position Switch

The transmission gear shift position switch is used to determine if the transmission is in the proper state to allow an auto stop/start event. The ECM will not allow Autostop until the brake is engaged, the transmission is in the forward gear position and then the vehicle slows to below the minimum speed required to allow and autostop while meeting all of the other minimum criteria to support an autostop event.

Coolant Pump Motor

The ECM will turn on the auxiliary coolant pump motor during Autostop to maintain engine operating temperature and HVAC temperature. Once the engine is running, the ECM will turn off the coolant pump motor.

Body Control Module (BCM)

The Body Control Module (BCM) monitors the Autostop Disable switch in order to enable or disable the system. It sends the appropriate messages to the ECM Via serial data to enable or disable the system.

Battery Sensor Module

The Battery Sensor Module monitors the battery current load, state of health, and state of charge, the information is sent to the BCM Via LIN then to the ECM Via Serial Data. If the module detects high current load, the battery is in a poor state of health or a low charge condition, the ECM will not allow Autostop to occur.

Autostop Disable Switch

The disable switch is an input to the BCM, it allows the customer to disable or re-enable the Autostop system. After the vehicle is turned off the Autostop system will turn back on the next time the vehicle is started.

Power Supply Transformer

The DC to DC converter monitors battery voltage and will maintain operating voltage to the radio, instrument cluster and instrument panel displays. The DC to DC converter will provide a boosted voltage to sensitive loads during Autostart to ensure proper operation of the driver informational displays.

Instrument Cluster

In order to differentiate between a normal engine shut down (engine speed 0 RPM) and when the engine has been shut down by the Stop/Start System, the tachometer needle will rest at the Autostop indicator icon (500 RPM point) indicating the engine has been shut down by the Stop/Start System. Once the engine is restarted, or the ECO button has disengaged Autostop, the tachometer will function normally.

BLANK

Section 5

Power and Signal Distribution

Data Communications 5-3
Description and Operation 5-3
Data Link Communications Description and Operation 5-3
Electrical Component and Inline Harness Connector End Views 5-6
Component Locator 5-6
Electrical Center Identification Views 5-6
Component Connector End Views 5-60
Inline Harness Connector End Views 5-701
Power Outlets 5-859
Schematic and Routing Diagrams 5-859
Cigar Lighter/Power Outlet Schematics 5-860
Description and Operation 5-871
Mobile Device Wireless Charger Description and Operation 5-871
Power Outlets Description and Operation 5-871
Wiring Systems and Power Management 5-874
Schematic and Routing Diagrams 5-874
Power Distribution Schematics 5-875
Power Moding Schematics 5-898
Ground Distribution Schematics 5-900
Upfitter Provision Schematics 5-926
Description and Operation 5-931
Power Mode Description and Operation 5-931
Retained Accessory Power Description and Operation 5-934

BLANK

Data Communications

Description and Operation

Data Link Communications Description and Operation

Note: This is an overview of different serial data buses used by control modules to communicate with each others. Use Data Communication Schematics to find out which serial data buses are configured for a specific vehicle.

Data Link Communications Overview

There are many components in a vehicle that rely on information from other sources, transmit information to other sources, or both. Serial data communication networks provide a reliable, cost effective, way for various components of the vehicle to “talk” to one another and share information.

General Motors uses a number of different communication buses to insure the timely and efficient exchange of information between control modules. When compared to each other, some of these buses are different in nature as far as speed, signal characteristics, and behavior.

On the other hand, when other buses are compared to each other they have similar characteristics and simply operate in parallel. In this case they are used to group together components which have high interaction. Examples are the Controller Area Network (CAN), private CAN, and LIN buses. This allows them to communicate with each other on a bus with reduced message congestion insuring faster and the more timely exchange of information than if all vehicle control modules were on a single bus.

The majority of information that exists within a given network generally stays local; however some information will have to be shared on other networks. Control modules designated as Gateway’s perform the function of transferring information between the various buses. A Gateway module is connected to at least 2 buses and will interact with each network according to its message strategy and transmission models.

CAN provides the capability for a receiving control module to monitor message transmissions from other control modules in order to determine if messages of interest are not being received. The primary purpose is to allow reasonable default values to be substituted for the information no longer being received. Additionally, a control module may set a Diagnostic Trouble Code (DTC) to indicate that the control module it is expecting information from is no longer communicating.

K9 Body Control Module (BCM)

The body control system consists of the K9 Body Control Module, communications, and various input and outputs. Some inputs, outputs and messages require other control modules to interact with the K9 Body Control Module. The K9 Body Control Module also has discrete input and output terminals to control the vehicle's body functions. The K9 Body Control Module is wired to CAN bus and multiple Local Interconnect Network (LIN) buses and acts as a gateway between them.

The various K9 Body Control Module input and output circuits are illustrated in the corresponding functional areas on the K9 Body Control Module electrical schematics. Refer to the Body Control System Schematics for more detailed information.

K56 Serial Data Gateway Module

The K56 Serial Data Gateway Module gates messages between the CAN networks described in the Controller Area Network (CAN) Bus Description section below. The K56 Serial Data Gateway Module needs to know what CAN control modules are present on a given vehicle in order to enable/disable loss of communication DTCs and to know what CAN control modules to track for their communication status. The K56 Serial Data Gateway Module has the ability to learn the diagnostic addresses list of CAN control modules to identify what CAN control modules are equipped on the vehicle and what CAN buses they are on. If the K56 Serial Data Gateway Module is replaced, this learn/verification process will have to be done again through K56 Serial Data Gateway Module programming and setup procedure in SPS. This learn process will not cause any previously learned contents to be forgotten/overwritten. If the learn process is not done on a new K56 Serial Data Gateway Module, DTC U1977 will be set until the learn procedure is executed. If the learn is invalid due to control module internal malfunction or a K56 Serial Data Gateway Module swap, DTC U3000 42 or DTC U3002 56 will be set. If any of these DTCs sets, the K56 Serial Data Gateway Module will enable loss of communication for all CAN control modules. This will result in loss of communication DTCs being set against CAN control modules that are not equipped on the vehicle.

A fault can be localized by monitoring the normal mode messages on a CAN bus. The K56 Serial Data Gateway Module will monitor one signal per CAN control module per CAN bus to determine control module status. When a signal times out, a loss of communication event will be started.

Controller Area Network (CAN) Bus Description

The CAN buses are used where data needs to be exchanged at a high enough rate to minimize the delay between the occurrence of a change in sensor value and the reception of this information by a control device using the information to adjust vehicle system performance.

Each CAN serial data network consists of two twisted wires. One signal circuit is identified as CAN-High and the other signal circuit is identified as CAN-Low. At each end of the data bus there is a 120 Ω termination resistor between the CAN-High and CAN-Low circuits. Most CAN control modules have an internal resistance of 4.950K Ω. There may be one or two CAN control modules that have a higher internal resistance like the K60 Column Lock Module which has an internal resistance of 77.4K Ω. The internal resistance of CAN

control modules causes lower terminating resistor reading when splitting the CAN network to check for faults. The more CAN control modules on the network the lower the terminating resistor will read.

The data to be transmitted over a CAN bus is represented by the voltage difference between the CAN-High signal voltage and the CAN-Low signal voltage. Data symbols (1's and 0's) are transmitted sequentially at the following rate:

- CAN 1 (circuits 4986 & 4987) = 500 Kbit/s
- CAN 2 (circuits 4978 & 4979) = 2 Mbit/s
- CAN 3 (circuits 4976 & 4977) = 500 Kbit/s
- CAN 4 (circuits 4100 & 4101) = 500 Kbit/s
- CAN 5 (circuits 4984 & 4985) = 500 Kbit/s
- CAN 6 (circuits 4980 & 4981) = 5 Mbit/s
- CAN 7 (circuits 4982 & 4983) = 5 Mbit/s
- CAN 8 (circuits 4104 & 4105) = 2 Mbit/s
- CAN 9 (circuits 4102 & 4103) = 2 Mbit/s

When the two wire bus is at rest the CAN-High and CAN-Low signal circuits are not being driven and this represents a logic "1". In this state both signal circuits are at the same voltage of 2.5 V. The differential voltage is approximately 0 V.

When a logic "0" is to be transmitted, the CAN-High signal circuit is driven higher to about 3.5 V and the CAN-Low circuit is driven lower to about 1.5 V. The differential voltage becomes approximately 2.0 (+/- 0.5) V.

The CAN 1, CAN 2, CAN 3, CAN 4, CAN 5, CAN 8, and CAN 9 buses are used to communicate between the K56 Serial Data Gateway Module and other CAN control modules.

The CAN 8, and CAN 9 buses are reserved for the following systems:

- The CAN 8 bus is reserved for most control modules and sensors related to active safety system, if applicable.
- The CAN 9 bus is reserved for most control modules and sensors related to Hybrid/EV system, if applicable.

The following CAN buses are between the X84 Data Link Connector and the K56 Serial Data Gateway Module:

- The CAN 6 bus is used for CAN diagnostics and programming.
- The CAN 7 bus is used for programming by assembly plant only.
- The Private Presentation CAN 1 bus (circuits 2577 & 2578) is used by Engineering to observe data communications on CAN buses not directly accessible at the X84 Data Link Connector. It requires special security access and will not be used in a service environment.
- The Private Presentation CAN 2 bus (circuits 2579 & 2580) is used by Engineering to observe data communications on CAN buses not directly accessible at the X84 Data Link Connector. It requires special security access and will not be used in a service environment.

Private Powertrain CAN Bus Description

The Private Powertrain CAN bus (circuits 4054 & 4055) is reserved for Powertrain components. It has a transmission rate of 500 Kbit/s. Sometimes communication is required between the Private Powertrain CAN bus and another CAN bus. This is accomplished by using the K20 Engine Control Module (for gas vehicles) or K16 Battery Energy Control Module (for electric vehicles) as the Gateway module. Since the Private Powertrain CAN bus and other CAN buses operate in the same manner, the diagnostics for each are similar.

Local Interconnect Network (LIN) Bus Description

The LIN Bus consists of a single wire with a transmission rate of 10.417 Kbit/s. This bus is used to exchange information between a master control module and other smart devices which provide supporting functionality. This type of configuration does not require the capacity or speed of a CAN bus and is thus relatively simpler.

The data symbols (1's and 0's) to be transmitted are represented by different voltage levels on the communication bus. When the LIN Bus is at rest and is not being driven, the signal is in a high voltage state of approximately Vbatt. This represents a logic "1". When a logic "0" is to be transmitted, the signal voltage is driven low to about ground (0.0 V).

Ethernet Bus Description

Ethernet is a data communication technology that uses a single twisted copper pair of wires at speeds of 100 Mbit/s and 1000 Mbit/s. The Ethernet system uses point-to-point communication that is connected via an Ethernet switch [Module <–> Switch <–> Module]. The Ethernet bus does not use terminating resistors.

The K56 Serial Data Gateway Module and the A11 Radio have an Ethernet switch that connects to other Ethernet modules. The K56 Serial Data Gateway Module and the A11 Radio communicate with other devices and systems in the vehicle via CAN and LIN buses. Diagnostic Trouble Codes will be read on CAN to diagnose Ethernet, LIN and system faults.

Note: Ethernet harness failures should only be repaired using an appropriate kit to perform de-pin/re-pin overlays or in cases where the wiring harness repair kits are not available, the entire harness should be replaced. No crimps or splicing should be performed on the Ethernet wiring harness.

Ethernet 1

Ethernet bus 1 consists of 2 twisted pair of wires [1 pair for Ethernet bus 1R (circuits 4972 & 4973) and 1 pair for Ethernet bus 1T (circuits 4974 & 4975)]. It is connected between X84 Data Link Connector (DLC) and K56 Serial Data Gateway Module. This bus is used for diagnostics and service programming of control modules using Ethernet instead of CAN. The K56 Serial Data Gateway Module will convert Ethernet serial data to CAN as necessary, and vice versa. There is an

Ethernet enable circuit (circuit 7207) which can be used to wake up the K56 Serial Data Gateway Module for Ethernet diagnostic and programming.

Ethernet 2

Ethernet bus 2 (circuits 4757 & 4758) is for connection between the A11 Radio and the K56 Serial Data Gateway Module.

Ethernet 3

Ethernet bus 3 (circuits 7208 & 7209) is for connection between the K56 Serial Data Gateway Module and K179 Automated Driving Mapping Module.

Ethernet 4

Ethernet bus 4 (circuits 7210 & 7211) is for connection between the following control modules:

- K56 Serial Data Gateway Module and K73 Communication Interface Module for vehicles equipped with IOR radio.
- A11 Radio and K73 Communication Interface Module for vehicles equipped with other radios.

Ethernet 5

Ethernet bus 5 (circuits 7212 & 7213) is for connection between the A11 Radio and P22F Video Display - Right Front Seat Back.

Ethernet 6

Ethernet bus 6 (circuits 7214 & 7215) is for connection between the A11 Radio and T3 Audio Amplifier.

Ethernet 7

Ethernet bus 7 (circuits 7216 & 7217) is for connection between the K56 Serial Data Gateway Module and P16 Instrument Panel Cluster Control Module.

Ethernet 11

Ethernet bus 11 (circuits 7224 & 7225) is for connection between the K124 Image Processing Module and K179 Automated Driving Mapping Module.

Ethernet 14

Ethernet bus 14 (circuits 7230 & 7231) is for connection between the A11 Radio and P29 Head-Up Display.

Ethernet 15

Ethernet bus 15 (circuits 7232 & 7233) is for connection between the K56 Serial Data Gateway Module, K161 Vehicle Performance Data Recorder, and P22F Video Display - Passenger Seat Back.

X84 Data Link Connector (DLC)

The X84 Data Link Connector is a standardized 16-cavity connector. Connector design and location is dictated by an industry wide standard, and is required to provide the following:

- Terminal 1: CAN Bus 7 Serial Data [+]
- Terminal 2: Private Presentation CAN Bus 1 Serial Data [+]
- Terminal 3: Ethernet Bus 1R [+]
- Terminal 4: Scan tool power ground
- Terminal 5: Common signal ground
- Terminal 6: CAN Bus 6 Serial Data [+]
- Terminal 7: Private Presentation CAN Bus 2 Serial Data [+]
- Terminal 8: Ethernet Bus 1 Enable Signal
- Terminal 9: CAN Bus 7 Serial Data [-]
- Terminal 10: Private Presentation CAN Bus 1 Serial Data [-]
- Terminal 11: Ethernet Bus 1R [-]
- Terminal 12: Ethernet Bus 1T [+]
- Terminal 13: Ethernet Bus 1T [-]
- Terminal 14: CAN Bus 6 Serial Data [-]
- Terminal 15: Private Presentation CAN Bus 2 Serial Data [-]
- Terminal 16: Scan tool power, B+

Serial Data Reference

The scan tool communicates over the various buses on the vehicle. When a scan tool is installed on a vehicle, the scan tool will try to communicate with every control module that could be optioned into the vehicle. If an option is not installed on the vehicle, the scan tool will display No Communication for that optional control module. In order to avert misdiagnoses of No Communication with a specific control module, refer to Data Link References for a list of control modules and the buses they communicate with. Use schematics and specific vehicle build RPO codes to determine optional control modules.

Electrical Component and Inline Harness Connector End Views

Component Locator

Electrical Center Identification Views

X50B Battery Distribution Engine Compartment Fuse Block Top View

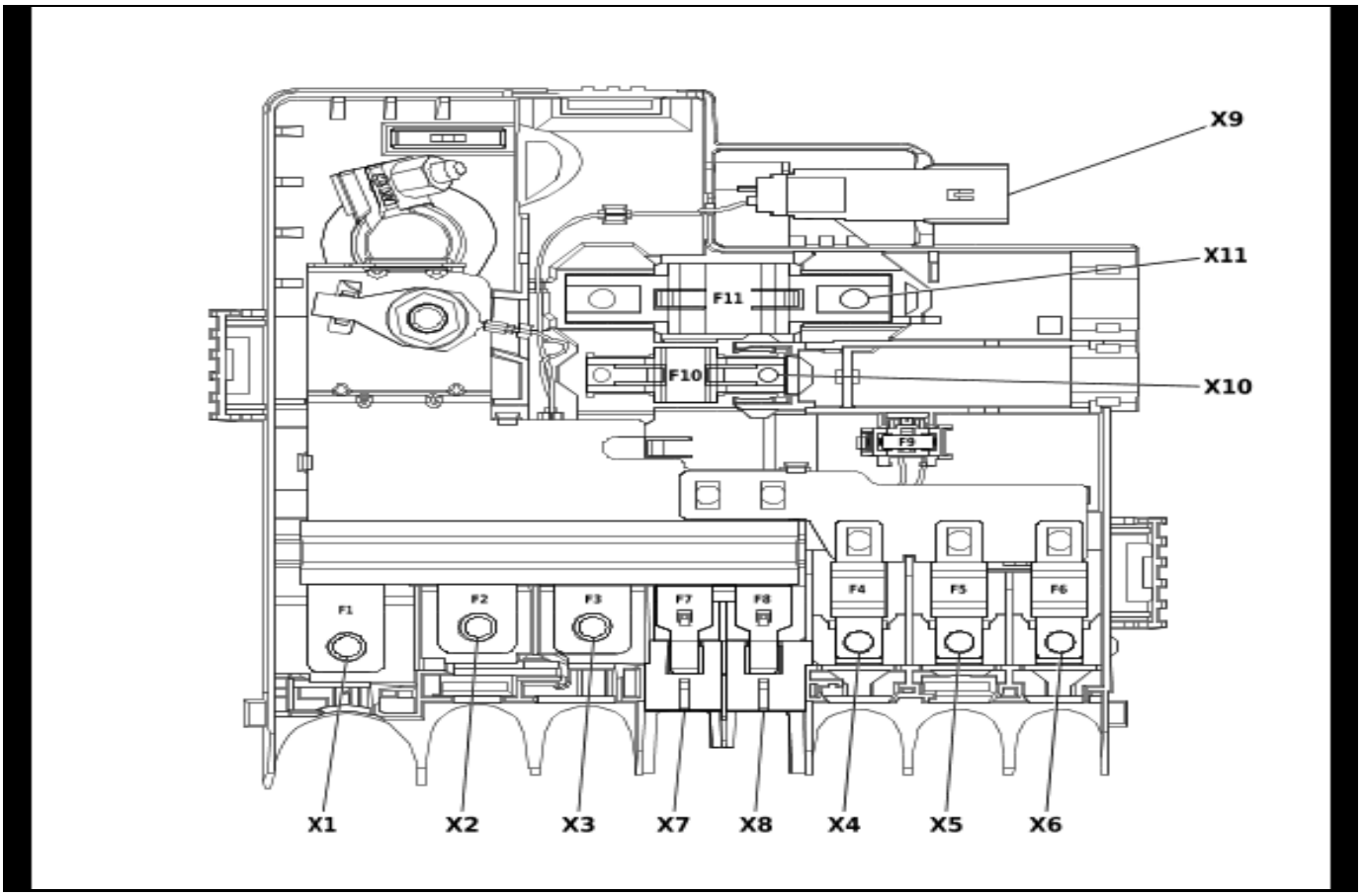

5070128

Usage Table

No.	Device Label Name	Device Assigned Name	Rating	Description
Fuses				
F1	—	F1BA	250A	• G13 Generator • X50A Engine Wiring Harness Junction Block
F2	—	F2BA	250A	• K43 Power Steering Control Module
F3	—	F3BA	400A	• M64 Starter Motor
F4	—	F4BA	60A	• E40 Air Heater (C3A)
F5	—	F5BA	60A	• K20 Engine Control Module (LM2)
F6	—	F6BA	80A	• G10R Cooling Fan Motor - Right (LM2) • G59 Engine Coolant Pump (L3B)
F7	—	F7BA	60A	• X51AX Instrument Panel Wiring Harness Junction Block - Right (9L7)
F8	—	F8BA	60A	• X51R Instrument Panel Wiring Harness Junction Block - Right

Usage Table (cont'd)

No.	Device Label Name	Device Assigned Name	Rating	Description
F9	—	F9BA	60A	• K160 Brake System Control Module
F10	—	F10BA	5A	• B110 Battery Sensor Module

X50B Battery Distribution Engine Compartment Fuse Block X1 (L3B)

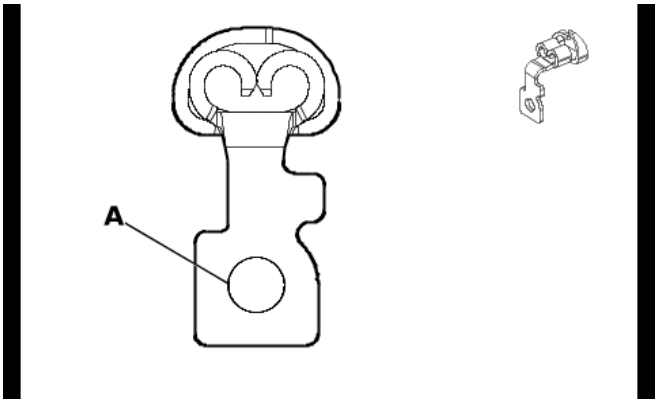

5911326

Connector Part Information

Harness Type: Starter Solenoid Cable - L3B
OEM Connector: 84386516
Service Connector: Service by Cable Assembly — See Part Catalog
Description: 1-Way Ring Terminal

Terminal Part Information

Terminal Type ID	Terminated Lead	Diagnostic Test Probe	Terminal Removal Tool
I	Not required	No Tool Required	No Tool Required

X50B Battery Distribution Engine Compartment Fuse Block X1 (L3B)

Pin	Size	Color	Circuit	Function	Terminal Type ID	Option
1	35	RD / BU	42	Battery Positive Voltage	I	—
A	—	—	—	Not Occupied	—	—

X50B Battery Distribution Engine Compartment Fuse Block X1 (L84/L87)

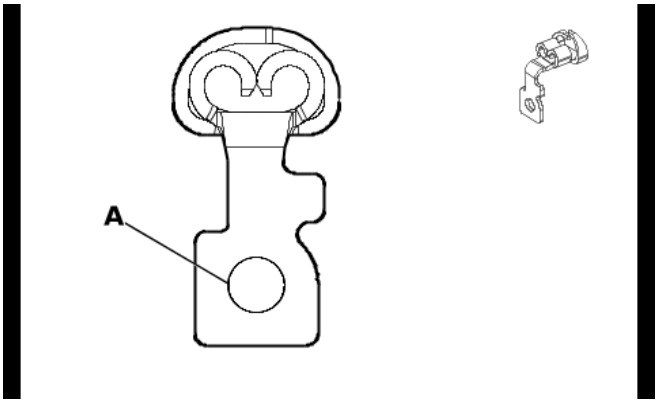

5911326

Connector Part Information

Harness Type: Starter Solenoid Cable
OEM Connector: 84386516
Service Connector: Service by Cable Assembly — See Part Catalog
Description: 1-Way Ring Terminal

Terminal Part Information

Terminal Type ID	Terminated Lead	Diagnostic Test Probe	Terminal Removal Tool
I	Not required	No Tool Required	No Tool Required

X50B Battery Distribution Engine Compartment Fuse Block X1 (L84/L87)

Pin	Size	Color	Circuit	Function	Terminal Type ID	Option
1	35	RD / BU	42	Battery Positive Voltage	I	—
A	—	—	—	Not Occupied	—	—

X50B Battery Distribution Engine Compartment Fuse Block X1 (LM2)

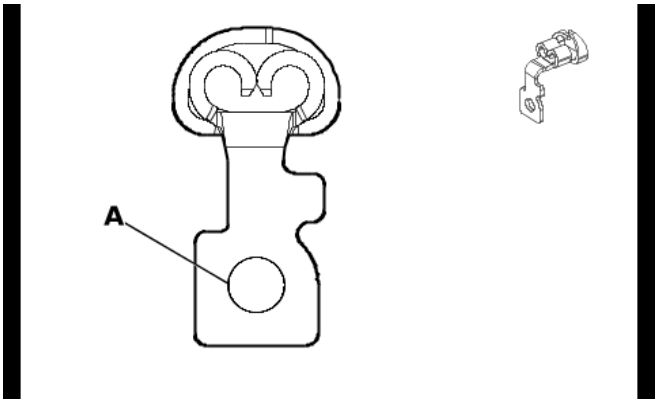

5911326

Connector Part Information

Harness Type: Generator Battery Jumper Cable
OEM Connector: 84386516
Service Connector: Service by Cable Assembly — See Part Catalog
Description: 1-Way Ring Terminal

Terminal Part Information

Terminal Type ID	Terminated Lead	Diagnostic Test Probe	Terminal Removal Tool
I	Not required	No Tool Required	No Tool Required

X50B Battery Distribution Engine Compartment Fuse Block X1 (LM2)

Pin	Size	Color	Circuit	Function	Terminal Type ID	Option
1	35	RD / BU	42	Battery Positive Voltage	I	—
A	—	—	—	Not Occupied	—	—

X50B Battery Distribution Engine Compartment Fuse Block X3 (L3B)

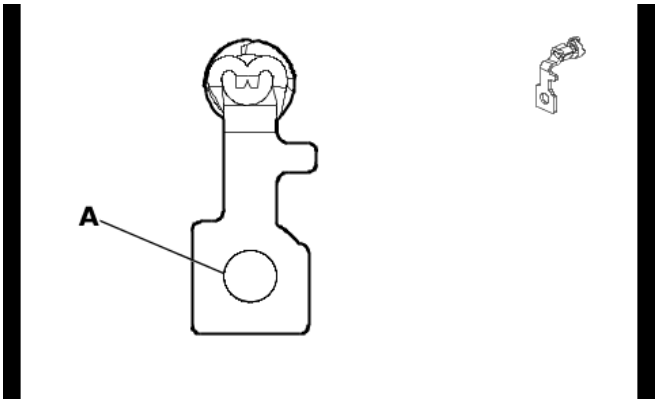

5881244

Connector Part Information

Harness Type: Starter Solenoid Cable - L3B
OEM Connector: 84386515
Service Connector: Service by Cable Assembly — See Part Catalog
Description: 1-Way F Ring Terminal

Terminal Part Information

Terminal Type ID	Terminated Lead	Diagnostic Test Probe	Terminal Removal Tool
I	Not required	No Tool Required	No Tool Required

X50B Battery Distribution Engine Compartment Fuse Block X3 (L3B)

Pin	Size	Color	Circuit	Function	Terminal Type ID	Option
1	35	RD / YE	2	Battery Positive Voltage	I	—
A	—	—	—	Not Occupied	—	—

X50B Battery Distribution Engine Compartment Fuse Block X3 (L84/L87)

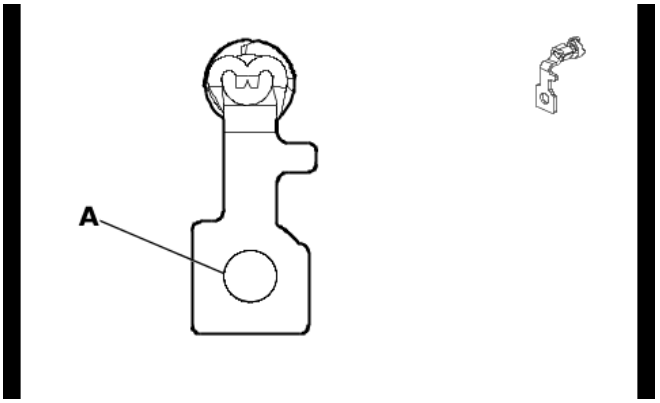

5881244

Connector Part Information

Harness Type: Starter Solenoid Cable
OEM Connector: 84386515
Service Connector: Service by Cable Assembly — See Part Catalog
Description: 1-Way Ring Terminal

Terminal Part Information

Terminal Type ID	Terminated Lead	Diagnostic Test Probe	Terminal Removal Tool
I	Not required	No Tool Required	No Tool Required

X50B Battery Distribution Engine Compartment Fuse Block X3 (L84/L87)

Pin	Size	Color	Circuit	Function	Terminal Type ID	Option
1	35	RD / YE	2	Battery Positive Voltage	I	—
A	—	—	—	Not Occupied	—	—

X50B Battery Distribution Engine Compartment Fuse Block X3 (LM2)

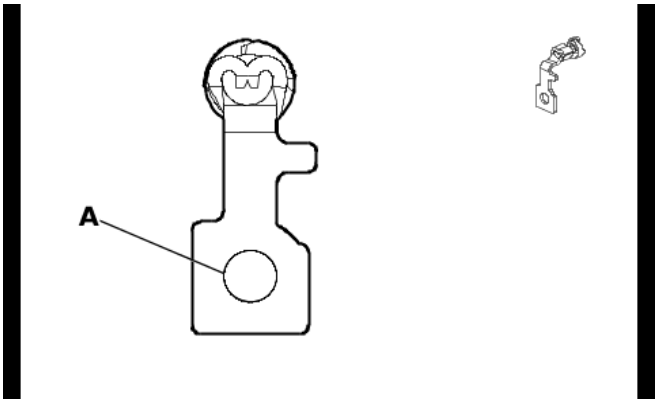

5881244

Connector Part Information

Harness Type: Starter Solenoid Cable - LM2
OEM Connector: 84386515
Service Connector: Service by Cable Assembly — See Part Catalog
Description: 1-Way F Ring Terminal

Terminal Part Information

Terminal Type ID	Terminated Lead	Diagnostic Test Probe	Terminal Removal Tool
I	Not required	No Tool Required	No Tool Required

X50B Battery Distribution Engine Compartment Fuse Block X3 (LM2)

Pin	Size	Color	Circuit	Function	Terminal Type ID	Option
1	35	RD / YE	2	Battery Positive Voltage	I	—
A	—	—	—	Not Occupied	—	—

X50B Battery Distribution Engine Compartment Fuse Block X6 (L3B)

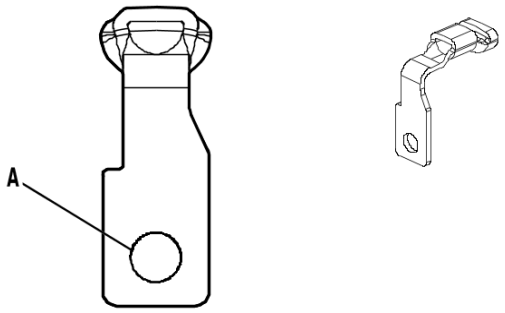

4994507

Connector Part Information

Harness Type: Engine Wiring Harness
OEM Connector: 35085183
Service Connector: Service by Cable Assembly — See Part Catalog
Description: 1-Way Ring Terminal

Terminal Part Information

Terminal Type ID	Terminated Lead	Diagnostic Test Probe	Terminal Removal Tool
I	Not required	No Tool Required	No Tool Required

X50B Battery Distribution Engine Compartment Fuse Block X6 (L3B)

Pin	Size	Color	Circuit	Function	Terminal Type ID	Option
A	10	RD / BN	1742	Battery Positive Voltage	I	—

X50B Battery Distribution Engine Compartment Fuse Block X6 (LM2)

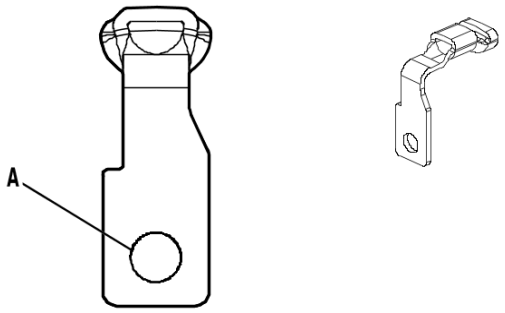

4994507

Connector Part Information

Harness Type: Engine Wiring Harness
OEM Connector: 35085183
Service Connector: Service by Cable Assembly — See Part Catalog
Description: 1-Way Ring Terminal

Terminal Part Information

Terminal Type ID	Terminated Lead	Diagnostic Test Probe	Terminal Removal Tool
I	Not required	No Tool Required	No Tool Required

X50B Battery Distribution Engine Compartment Fuse Block X6 (LM2)

Pin	Size	Color	Circuit	Function	Terminal Type ID	Option
A	8	RD / BN	1742	Battery Positive Voltage	I	—

X50B Battery Distribution Engine Compartment Fuse Block X7

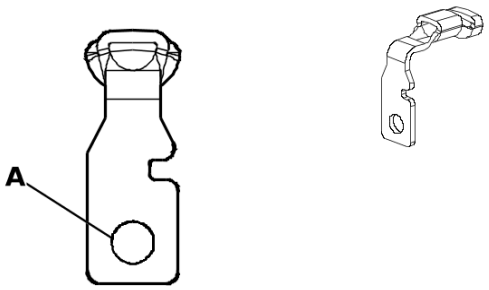

5194789

Connector Part Information

Harness Type: Body Wiring Harness
OEM Connector: 35085117
Service Connector: Service by Cable Assembly — See Part Catalog
Description: 1-Way Ring Terminal

Terminal Part Information

Terminal Type ID	Terminated Lead	Diagnostic Test Probe	Terminal Removal Tool
I	Not required	No Tool Required	No Tool Required

X50B Battery Distribution Engine Compartment Fuse Block X7

Pin	Size	Color	Circuit	Function	Terminal Type ID	Option
A	10	RD / GY	642	Battery Positive Voltage	I	—

X50B Battery Distribution Engine Compartment Fuse Block X8

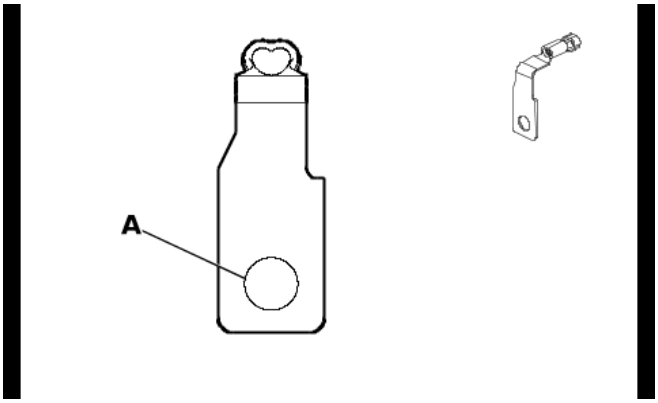

5373306

Connector Part Information

Harness Type: Engine Wiring Harness
OEM Connector: 35169508
Service Connector: Service by Cable Assembly — See Part Catalog
Description: 1-Way Ring Terminal

Terminal Part Information

Terminal Type ID	Terminated Lead	Diagnostic Test Probe	Terminal Removal Tool
I	Not required	No Tool Required	No Tool Required

X50B Battery Distribution Engine Compartment Fuse Block X8

Pin	Size	Color	Circuit	Function	Terminal Type ID	Option
A	6	BN / BU	104	Glow Plug Control	I	—

X50B Battery Distribution Engine Compartment Fuse Block X9

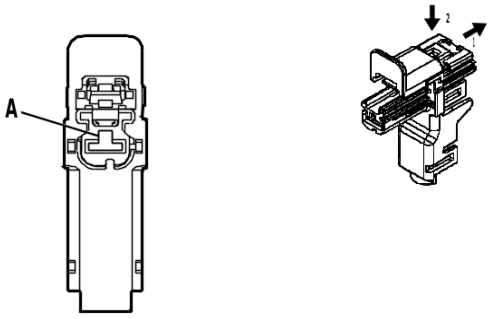

4994171

Connector Part Information

Harness Type: Body Wiring Harness
OEM Connector: 33297579
Service Connector: Service by Harness - See Part Catalog
Description: 1-Way F 6.3 Series(BU)

Terminal Part Information

Terminal Type ID	Terminated Lead	Diagnostic Test Probe	Terminal Removal Tool
I	Not required	J-35616-42 (RD)	No Tool Required

X50B Battery Distribution Engine Compartment Fuse Block X9

Pin	Size	Color	Circuit	Function	Terminal Type ID	Option
A	5	RD / YE	1442	Battery Positive Voltage	I	—

X50B Battery Distribution Engine Compartment Fuse Block X10

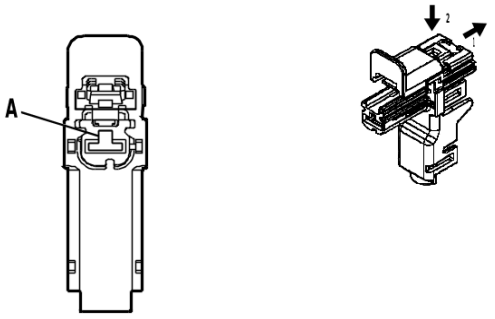

4994183

Connector Part Information

Harness Type: Body Wiring Harness
OEM Connector: 33297578
Service Connector: Service by Harness - See Part Catalog
Description: 1-Way F 6.3 Series(BK)

Terminal Part Information

Terminal Type ID	Terminated Lead	Diagnostic Test Probe	Terminal Removal Tool
I	Not required	J-35616-42 (RD)	No Tool Required

X50B Battery Distribution Engine Compartment Fuse Block X10

Pin	Size	Color	Circuit	Function	Terminal Type ID	Option
A	6	RD / WH	1642	Battery Positive Voltage	I	—

X50B Battery Distribution Engine Compartment Fuse Block X11

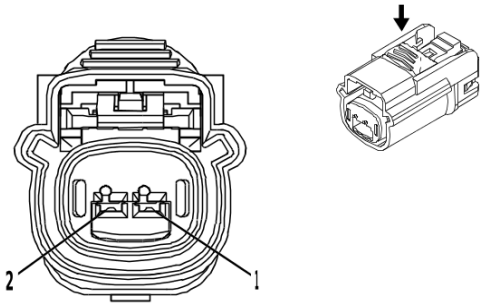

4332222

Connector Part Information

Harness Type: Body Wiring Harness
OEM Connector: 15514573
Service Connector: 19368124
Description: 2-Way F 1.5 OCS Series, Sealed(BK)

Terminal Part Information

Terminal Type ID	Terminated Lead	Diagnostic Test Probe	Terminal Removal Tool
I	Not required	J-35616-2A (GY)	No Tool Required

X50B Battery Distribution Engine Compartment Fuse Block X11

Pin	Size	Color	Circuit	Function	Terminal Type ID	Option
1	0.75	RD / YE	2340	Battery Positive Voltage	I	—
2	—	—	—	Not Occupied	—	—

X50B Battery Distribution Engine Compartment Fuse Block X12 (9L7)

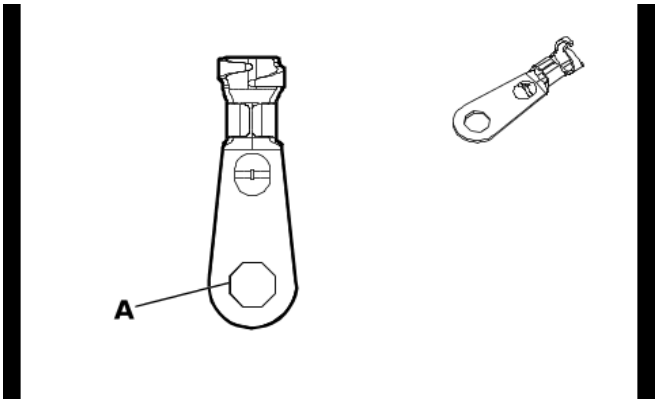

5920578

Connector Part Information

Harness Type: Auxiliary Fuse Block Wiring Harness
OEM Connector: 13624367
Service Connector: Service by Cable Assembly — See Part Catalog
Description: 1-Way Ring Terminal

Terminal Part Information

Terminal Type ID	Terminated Lead	Diagnostic Test Probe	Terminal Removal Tool
I	Not required	No Tool Required	No Tool Required

X50B Battery Distribution Engine Compartment Fuse Block X12 (9L7)

Pin	Size	Color	Circuit	Function	Terminal Type ID	Option
A	10	RD / VT	542	Battery Positive Voltage	I	—

X50A Engine Wiring Harness Junction Block Label

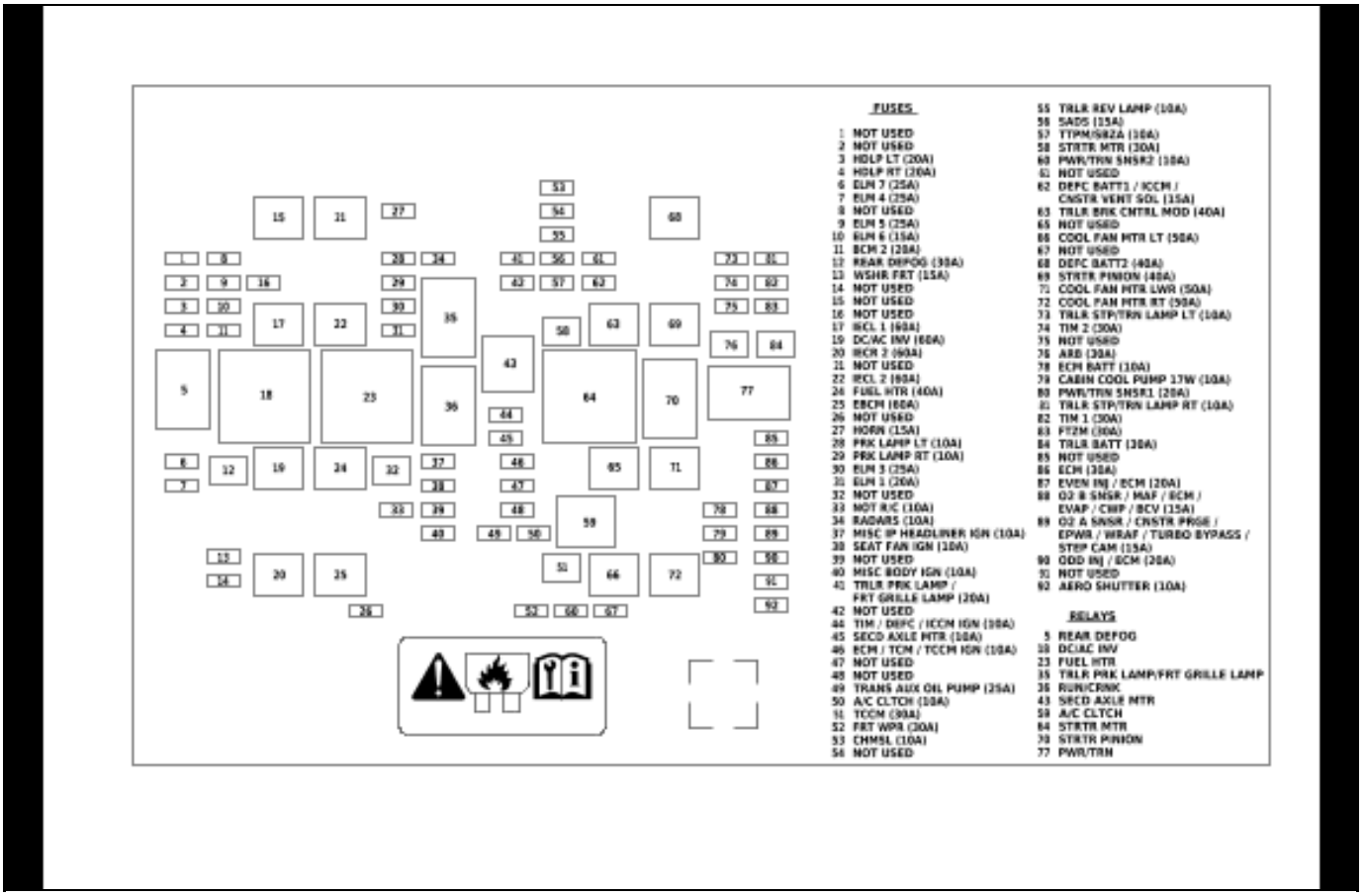

5969415

X50A Engine Wiring Harness Junction Block Top View

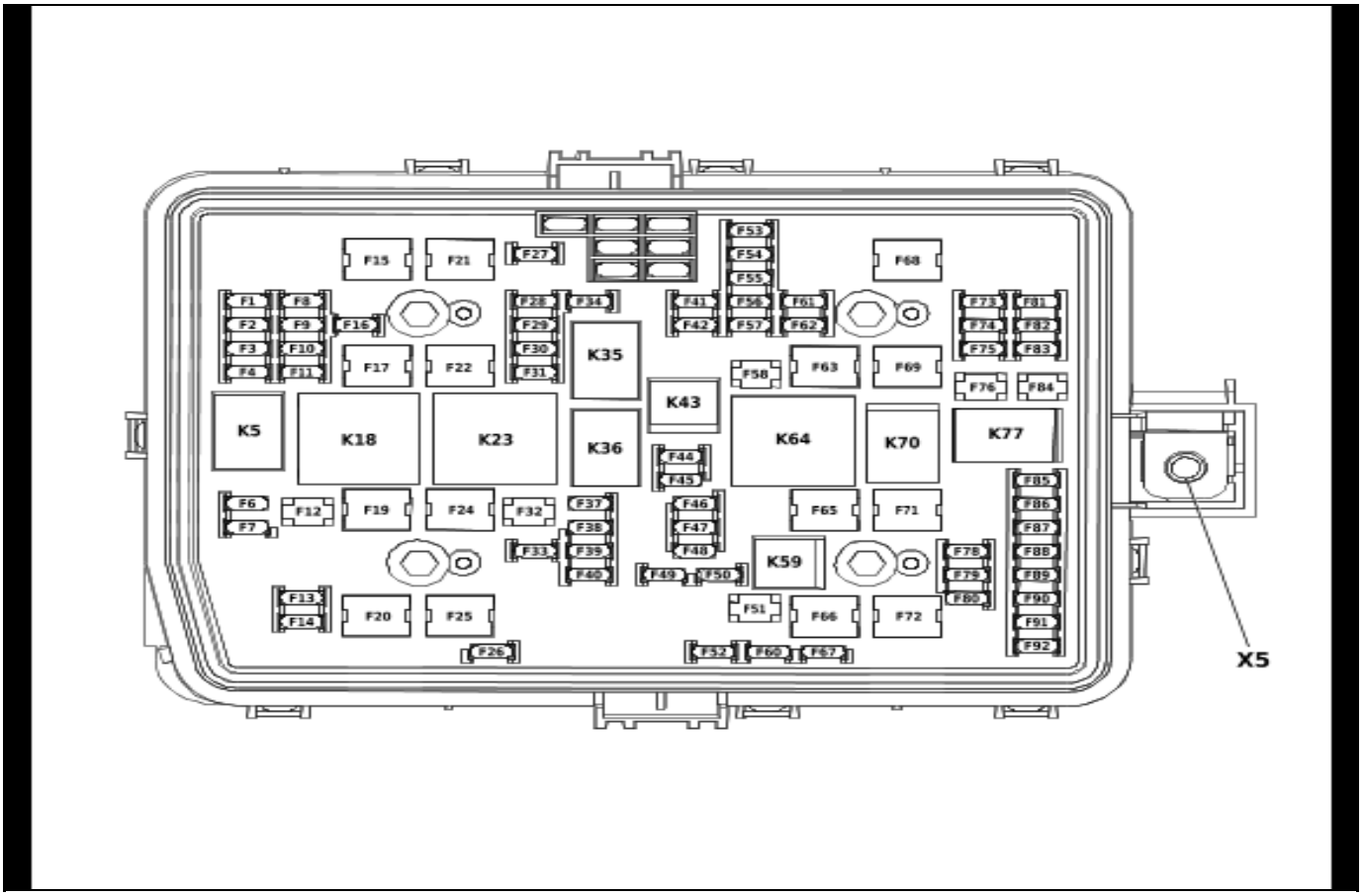

6013389

Usage Table

No.	Device Label Name	Device Assigned Name	Rating	Description
Fuses				
F1	NOT USED	F1UA	—	• Not Used
F2	NOT USED	F2UA	—	• Not Used
F3	HDLP LT	F3UA	20A	• E13LA Front Headlamp - Left
F4	HDLP RT	F4UA	20A	• E13RA Front Headlamp - Right
F6	ELM 7	F6UA	25A	• K219 Lighting Control Module
F7	ELM 4	F7UA	25A	• K219 Lighting Control Module
F8	NOT USED	F8UA	—	• Not Used
F9	ELM 5	F9UA	25A	• K219 Lighting Control Module
F10	ELM 6	F10UA	15A	• K219 Lighting Control Module
F11	BCM 2	F11UA	20A	• K9 Body Control Module
F12	REAR DEFOG	F12UA	30A	• E18 Rear Window Defogger Grid
F13	WSHR FRT	F13UA	15A	• G24 Windshield Washer Pump
F14	NOT USED	F14UA	—	• Not Used
F15	NOT USED	F15UA	—	• Not Used
F16	NOT USED	F16UA	—	• Not Used
F17	IECL 1	F17UA	60A	• X51L Instrument Panel Wiring Harness Junction Block - Left
F19	DC/AC INV	F19UA	60A	• T1 DC/AC Converter Control Module (KI4/KI5)

Usage Table (cont'd)

No.	Device Label Name	Device Assigned Name	Rating	Description
F20	IECR2	F20UA	60A	• X51R Instrument Panel Wiring Harness Junction Block - Right
F21	NOT USED	F21UA	—	• Not Used
F22	IECL 2	F22UA	60A	• X51L Instrument Panel Wiring Harness Junction Block - Left
F24	FUEL HTR	F24UA	40A	• R29 Fuel Filter (LM2)
F25	EBCM	F25UA	60A	• K160 Brake System Control Module
F26	NOT USED	F26UA	—	• Not Used
F27	HORN	F27UA	15A	• P13 Horn
F28	PARK LAMP LT	F28UA	10A	• A9A Outside Rearview Mirror - Driver (DPO/DQS) • A9B Outside Rearview Mirror - Passenger (DPO/DQS) • E135L Front Bumper Fascia Auxiliary Signal Lamp - Left (GRZ) • E135R Front Bumper Fascia Auxiliary Signal Lamp - Right (GRZ)
F29	PARK LAMP RT	F29UA	10A	• Not Used
F30	ELM 3	F30UA	25A	• K219 Lighting Control Module
F31	ELM 1	F31UA	20A	• K219 Lighting Control Module
F32	NOT USED	F32UA	—	• Not Used
F33	NOT R/C	F33UA	10A	• K60 Column Lock Module
F34	RADARS	F34UA	10A	• B233B Forward Range Radar Sensor - Long Range (UGN) • B233LF Short Range Radar Sensor - Left Front (UKL) • B233RF Short Range Radar Sensor - Right Front (UKL) • B233LR Short Range Radar Rear Sensor - Left (UKL) • B233RR Short Range Radar Rear Sensor - Right (UKL) • B233SL Short Range Radar Rear Side Sensor - Left (UKL) • B233SR Short Range Radar Rear Side Sensor - Right (UKL)
F37	MISC IP HEAD-LINER IGN	F37UA	10A	• A10 Inside Rearview Mirror • B117A Windshield Outside Moisture/Ambient Light and Humidity Sensor (ASV+CE1) • B160 Inside Air Moisture and Windshield Temperature Sensor (ASV-CE1) • E40 Air Heater (C32) • P16 Instrument Panel Cluster Control Module • P43 Forward Collision Alert Display ((UEU/UHX)-UV6)
F38	SEAT FAN IGN	F38UA	10A	• K219 Lighting Control Module • M73A Front Seat Back Ventilation Blower - Driver (KQV) • M73B Front Seat Back Ventilation Blower - Passenger (KQV) • M73D Front Seat Cushion Ventilation Blower - Driver (KQV) • M73P Front Seat Cushion Ventilation Blower - Passenger (KQV) • T1 DC/AC Converter Control Module (KI4/KI5)
F39	NOT USED	F39UA	—	• Not Used

Usage Table (cont'd)

No.	Device Label Name	Device Assigned Name	Rating	Description
F40	MISC BODY IGN	F40UA	10A	• K36 Restraints Control Module • K160 Brake System Control Module • K212 Gear Shift Control Module (MHS/MQC) • K219 Lighting Control Module • T1 DC/AC Converter Control Module (KI4/KI5)
F41	TRLR PRK LAMP / GRT GRILLE LAMP	F41UA	20A	• X88B Tow Vehicle Electrical Receptacle (Z82-UET)
F42	NOT USED	F42UA	—	• Not Used
F44	TIM / DEFC / ICCM IGN	F44UA	10A	• K38 Chassis Control Module (G93/G94) • K68 Trailer Lamp Control Module (UET) • K115 Reductant Control Module (FHX)
F45	SECD AXLE MTR	F45UA	10A	• M26 Front Drive Axle Actuator (NP0/NQH)
F46	ECM / TCM / TCCM IGN	F46UA	15A	• K20 Engine Control Module • K69 Transfer Case Control Module (NP0/NQH) • K71 Transmission Control Module
F47	NOT USED	F47UA	—	• Not Used
F48	NOT USED	F48UA	—	• Not Used
F49	TRANS AUX OIL PUMP	F49UA	25A	• G5 Automatic Transmission Auxiliary Fluid Pump (MQB/MQC/MHT/MHS)
F50	A/C CLTCH	F50UA	10A	• Q2 Air Conditioning Clutch
F51	TCCM	F51UA	30A	• K69 Transfer Case Control Module (NP0/NQH)
F52	FRT WPR	F52UA	30A	• M75 Windshield Wiper Motor
F53	CHMSL	F53UA	10A	• E6A High Mount Stop and Cargo Lamp (Regular Cab)
F54	NOT USED	F54UA	—	• Not Used
F55	TRLR REV LAMP	F55UA	10A	• X88B Tow Vehicle Electrical Receptacle (Z82-UET)
F56	SADS	F56UA	15A	• K19 Suspension Control Module (Z45)
F57	TTPM/SBZA	F57UA	10A	• B218L Side Obstacle Detection Control Module - Left (UKC/UKV) • B218R Side Obstacle Detection Control Module - Right (UKC/UKV) • K214 Trailer Tire Pressure Indicator Module (UET)
F58	STRTR MTR	F58UA	30A	• M64 Starter Motor
F60	PWR/TRN SNSR2	F60UA	10A	• B195A Nitrogen Oxides Sensor 1 (LM2) • K212 Gear Shift Control Module (LM2+MQC) • T19 Multifunction Power Supply Converter (LM2)
F61	NOT USED	F61UA	—	• Not Used
F62	DEFC BATT1 / ICCM / CNSTR VENT SOL	F62UA	15A	• K115 Reductant Control Module (LM2) • Q13 Evaporative Emission Canister Vent Solenoid Valve (L3B/L84/L87)
F63	TRLR BRK CNTRL MOD	F63UA	40A	• K67 Trailer Brake Control Module (JL1) • W24 Blunt Cut - Trailer Brakes Provision (Z82-JL1)
F65	NOT USED	F65UA	—	• Not Used
F66	COOL FAN MTR LT	F66UA	50A	• G10L Cooling Fan Motor - Left
F67	NOT USED	F67UA	—	• Not Used
F68	DEFC BATT2	F68UA	40A	• K115 Reductant Control Module (LM2)
F69	STRTR PINION	F69UA	40A	• M64 Starter Motor (L3B/L84/L87)

Usage Table (cont'd)

No.	Device Label Name	Device Assigned Name	Rating	Description
F71	COOL FAN MTR LWR	F71UA	50A	• G10LW Cooling Fan Motor - Lower (L3B/LM2)
F72	COOL FAN MTR RT	F72UA	50A	• G10R Cooling Fan Motor - Right (L3B/L84/L87)
F73	TRLR STP/TRN LAMP LT	F73UA	10A	• X88B Tow Vehicle Electrical Receptacle (Z82-UET)
F74	TIM 2	F74UA	30A	• K68 Trailer Lamp Control Module (UET)
F75	NOT USED	F75UA	—	• K38 Chassis Control Module (G93/G94)
F76	ARB	F76UA	30A	• K4 Running Board Control Module (BRS)
F78	ECM BATT	F78UA	10A	• K20 Engine Control Module
F79	CABIN COOL PUMP 17W	F79UA	10A	• G8 Engine Coolant Pump - Auxiliary (L84/L87/LM2)
F80	PWR/TRN SNSR1	F80UA	20A	• B195B Nitrogen Oxides Sensor 2 (LM2) • B195C Nitrogen Oxides Sensor 3 (LM2) • B136 Exhaust Particulate Matter Sensor (LM2) • K111 Fuel Pump Power Control Module (LM2) • R29 Fuel Filter (LM2)
F81	TRLR STP/TRN LAMP RT	F81UA	10A	• X88B Tow Vehicle Electrical Receptacle (Z82-UET)
F82	TIM 1	F82UA	30A	• K68 Trailer Lamp Control Module (UET)
F83	FTZM	F83UA	30A	• K111 Fuel Pump Power Control Module
F84	TRLR BATT	F84UA	30A	• X88B Tow Vehicle Electrical Receptacle (Z82)
F85	NOT USED	F85UA	—	• Not Used
F86	ECM	F86UA	30A	• K20 Engine Control Module
F87	EVEN INJ / ECM	F87UA	20A	• K20 Engine Control Module (L84/L87) • T8B Ignition Coil 2 (L84/L87) • T8D Ignition Coil 4 (L84/L87) • T8F Ignition Coil 6 (L84/L87) • T8H Ignition Coil 8 (L84/L87)
F88	O2 B SNSR / MAF / ECM / EVAP / CWP / BCV	F88UA	15A	• B75 Mass Airflow Sensor • B52B Heated Oxygen Sensor 2 (L3B) • B52D Heated Oxygen Sensor - Bank 1 Sensor 2 (L84/L87) • B52F Heated Oxygen Sensor - Bank 2 Sensor 2 (L84/L87) • G58 Evaporative Emission Canister Purge Pump (L3B) • K20 Engine Control Module • M10 Charge Air Cooler Coolant Pump (LM2) • Q97B Engine Coolant Flow Control Valve - Block (L3B/LM2)
F89	O2 A SNSR / CNSTR PRGE / EPWR / WRAF / TURBO BYPASS / STEP CAM	F89UA	15A	• B52C Heated Oxygen Sensor - Bank 1 Sensor 1 (L3B/L84/L87) • B52E Heated Oxygen Sensor - Bank 2 Sensor 1 (L84/L87) • M129A Intake Camshaft Profile Actuator 1 (L3B) • M129B Intake Camshaft Profile Actuator 2 (L3B) • M129C Intake Camshaft Profile Actuator 3 (L3B) • M129D Intake Camshaft Profile Actuator 4 (L3B) • M130A Exhaust Camshaft Profile Actuator 1 (L3B) • M130B Exhaust Camshaft Profile Actuator 2 (L3B)

Usage Table (cont'd)

No.	Device Label Name	Device Assigned Name	Rating	Description
				• Q12 Evaporative Emission Canister Purge Solenoid Valve (L3B/L84/L87) • Q40 Turbocharger Bypass Valve Solenoid (L3B) • Q44 Engine Oil Pressure Control Solenoid Vlave (L3B/L84/L87)
F90	ODD INJ / ECM	F90UA	20A	• K20 Engine Control Module • T8A Ignition Coil 1 (L3B/L84/L87) • T8B Ignition Coil 2 (L3B) • T8C Ignition Coil 3 (L3B/L84/L87) • T8D Ignition Coil 4 (L3B) • T8E Ignition Coil 5 (L84/L87) • T8G Ignition Coil 7 (L84/L87)
F91	NOT USED	F91UA	—	• Not Used
F92	AERO SHUTTER	F92UA	10A	• M96 Active Grille Air Shutter Actuator (VTI/WMI) • M96B Active Grille Air Shutter Actuator 2 (WMI)
Relays				
K5	REAR DEFOG	KR5 Rear Window Defogger Relay	—	• F12UA
K18	DC/AC INV	KR202 Accessory AC and DC Power Control Module Relay	—	• F19UA
K23	FUEL HTR	KR22 Fuel Heater Relay	—	• F24UA (LM2)
K35	TRLR PRK LAMP/ FRT GRILLE LAMP	KR53 Parking Lamp Relay	—	• F28UA • F41UA
K36	RUN/CRNK	KR73 Ignition Main Relay	—	• F33UA • F37UA • F38UA • F40UA • F44UA • F46UA
K43	SECD AXLE MTR	KR203 Front Drive Axle Actuator Relay	—	• F45UA (NP0/NQH)
K59	A/C CLTCH	KR29 A/C Compressor Clutch Relay	—	• F50UA
K64	STRTR MTR	KR27 Starter Motor	—	• M64 Starter Motor
K70	STRTR PINION	KR27C Engine Restart Relay	—	• M64 Starter Motor (L3B/L84/L87)
K77	PWR/TRN	KR75 Engine Controls Ignition Relay	—	• F86UA • F87UA • F88UA • F89UA • F90UA • F92UA • KR29 Air Conditioning Compressor Relay
Note: Relays listed below are non-serviceable Printed Circuit Board (PCB) relays and are internal to the block.				
—	—	KR3 Horn Relay	—	• F27UA
—	—	KR11 Windshield Washer Pump Relay	—	• G24 Windshield Washer Pump

Usage Table (cont'd)

No.	Device Label Name	Device Assigned Name	Rating	Description
—	—	KR12B Windshield Wiper Motor Relay	—	• M75 Windshield Wiper Motor
—	—	KR12C Windshield Wiper Motor Speed Control Relay	—	• M75 Windshield Wiper Motor
—	—	KR61 Trailer Back-up Lamp Relay	—	• F55UA
—	—	KR63L Trailer Stop/Turn Signal Lamp Relay - Left	—	• F73UA
—	—	KR63R Trailer Stop/Turn Signal Lamp Relay - Right	—	• F81UA
—	—	KR200 Engine Controls Sensor Supply Voltage Relay	—	• F60UA • F80UA

X50A Engine Wiring Harness Junction Block Bottom View

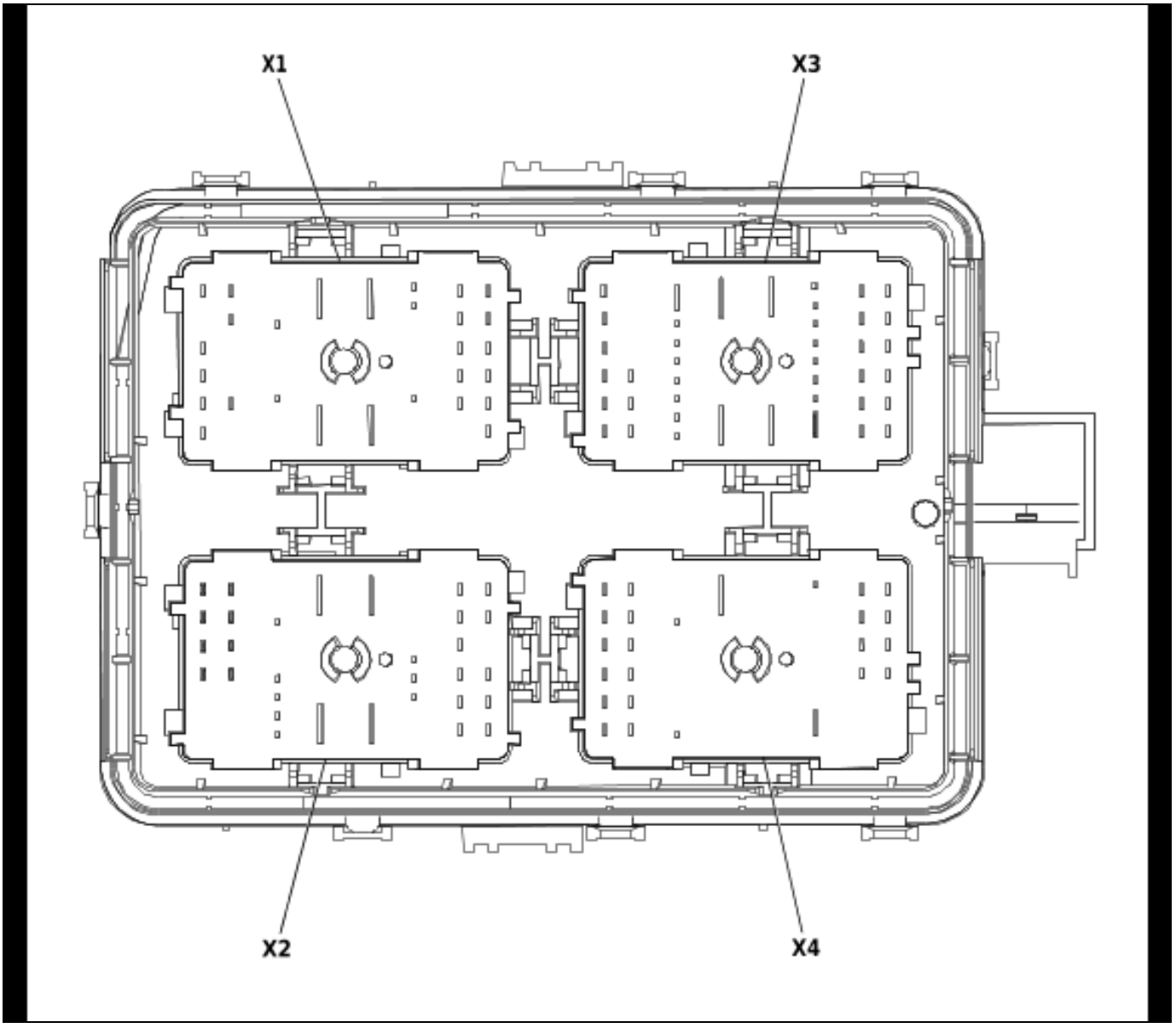

5041382

X50A Engine Wiring Harness Junction Block X1

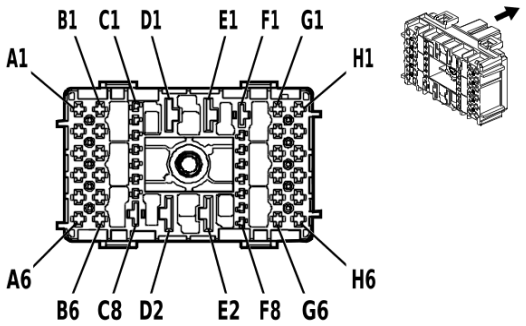

4994109

Connector Part Information

Harness Type: Body Wiring Harness
OEM Connector: 33384590
Service Connector: 19370824
Description: 44-Way F 1.5, 2.8, 6.3 CTS, 9.5 MCON-LL Series(BU)

Terminal Part Information

Terminal Type ID	Terminated Lead	Diagnostic Test Probe	Terminal Removal Tool
I	19369711	J-35616-14 (GN)	EL-38125-560A
II	84764079	J-35616-22 (RD)	J-38125-11A
III	84779405	J-35616-35 (VT)	J-38125-215A
IV	Not required	J-35616-22 (RD)	No Tool Required

X50A Engine Wiring Harness Junction Block X1

Pin	Size	Color	Circuit	Function	Terminal Type ID	Option
A1	1.5	RD / VT	7140	Battery Positive Voltage	III	—
A2	1.5	RD / BU	540	Battery Positive Voltage	III	—
A3	0.35	BN / VT	193	Rear Defogger Relay Control	III	—
A4	0.5	BK	650	Ground	III	—
A5	0.75	GY / VT	228	Windshield Washer Pump Control	III	—
A6 - B1	—	—	—	Not Occupied	—	—
B2	2.5	BN / VT	293	Rear Defogger Grid Control	III	—
B3 - C2	—	—	—	Not Occupied	—	—
C3	0.5	WH / GN	4628	DC/AC Inverter Relay Control	I	—
C4	0.35	BN / GY	2268	Windshield Washer Relay Control	I	—
C5 - C8	—	—	—	Not Occupied	—	—
D1	5	BN / BK	4629	DC/AC Inverter Control	II	—
D2	10	RD / WH	342	Battery Positive Voltage	IV	—
E1	—	—	—	Not Occupied	—	—
E2	6	RD / WH	1040	Battery Positive Voltage	II	—
F1 - F5	—	—	—	Not Occupied	—	—
F6	0.35	WH / VT	860	Windshield Wiper Switch High Signal	I	—
F7 - G2	—	—	—	Not Occupied	—	—
G3	0.35	BU / VT	807	Ignition Off/Accessory Ignition Voltage	III	—

X50A Engine Wiring Harness Junction Block X1 (cont'd)

Pin	Size	Color	Circuit	Function	Terminal Type ID	Option
G4	0.5	GN / VT	5199	Run/Crank Relay Coil Control	III	—
G5	2	BK	150	Ground	III	—
G6	0.35	GY	91	Windshield Wiper Motor Relay Coil Control	III	—
H1	0.5	VT / BK	339	Run/Crank Ignition 1 Voltage	III	—
H2	0.75	VT / WH	1139	Run/Crank Ignition 1 Voltage	III	—
H3	—	—	—	Not Occupied	—	—
H4	0.5	VT / WH	239	Run/Crank Ignition 1 Voltage	III	—
H5	2	WH	92	Windshield Wiper Motor High Speed Control	III	—
H6	2	YE / BN	95	Windshield Wiper Motor Low Speed Control	III	—

X50A Engine Wiring Harness Junction Block X2

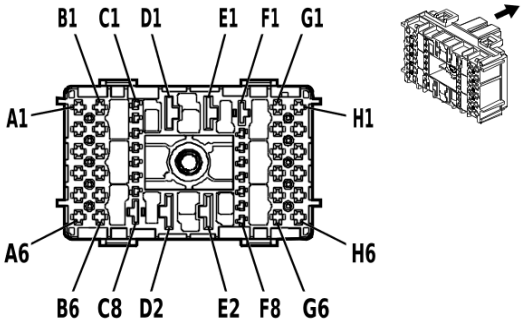

4994132

Connector Part Information

Harness Type: Body Wiring Harness
OEM Connector: 33384594
Service Connector: 19371174
Description: 44-Way F 1.5, 2.8, 6.3 CTS, 9.5 MCON-LL Series(GN)

Terminal Part Information

Terminal Type ID	Terminated Lead	Diagnostic Test Probe	Terminal Removal Tool
I	19369711	J-35616-14 (GN)	EL-38125-560A
II	84779405	J-35616-35 (VT)	J-38125-215A
III	Not required	J-35616-22 (RD)	No Tool Required

X50A Engine Wiring Harness Junction Block X2

Pin	Size	Color	Circuit	Function	Terminal Type ID	Option
A1 - A4	—	—	—	Not Occupied	—	—
A5	1.5	RD / WH	640	Battery Positive Voltage	II	—
A6	1.5	RD / YE	740	Battery Positive Voltage	II	—
B1 - B3	—	—	—	Not Occupied	—	—
B4	1.5	RD / GN	7740	Battery Positive Voltage	II	—
B5	0.5	RD / BU	840	Battery Positive Voltage	II	—
B6	1	GN / YE	6840	Auxiliary Device 2 Switched Voltage	II	—
C1	0.35	YE / BU	318	Left Rear Trailer Stop/Turn Lamp Control	I	—
C2	0.35	GN / BN	319	Right Rear Trailer Stop/Turn Lamp Control	I	—
C3 - D1	—	—	—	Not Occupied	—	—
D2	10	RD / GY	142	Battery Positive Voltage	III	—
E1	—	—	—	Not Occupied	—	—
E2	10	RD / GN	242	Battery Positive Voltage	III	—
F1	—	—	—	Not Occupied	—	—
F2	0.35	BN / YE	820	Center High Mounted Stop Lamp Supply Voltage	I	—
F3	0.35	BU / BN	38	Backup Lamp Relay Control	I	—
F4	0.35	BN / WH	28	Horn Relay Control	I	—
F5 - F8	—	—	—	Not Occupied	—	—
G1	0.75	BN / GY	29	Horn Control	II	—
G2	—	—	—	Not Occupied	—	—

X50A Engine Wiring Harness Junction Block X2 (cont'd)

Pin	Size	Color	Circuit	Function	Terminal Type ID	Option
G3	1.5	BN / GN	4246	Identification Lamp Control	II	—
G4	—	—	—	Not Occupied	—	—
G5	1.5	RD / BN	1440	Battery Positive Voltage	II	—
G6	1	RD / BN	1140	Battery Positive Voltage	II	—
H1	0.5	BU / BK	1053	Center High Mounted Stop Lamp Control 3	II	—
H2	—	—	—	Not Occupied	—	—
H3	0.5	RD / GN	3140	Battery Positive Voltage	II	—
H4 - H5	—	—	—	Not Occupied	—	—
H6	0.35	WH / BN	7055	Auxiliary Park Lamp Relay Control	II	—

X50A Engine Wiring Harness Junction Block X3 (L3B)

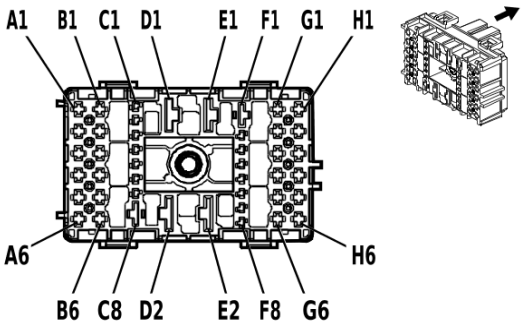

4992608

Connector Part Information

Harness Type: Engine Wiring Harness
OEM Connector: 33384584
Service Connector: 19371176
Description: 44-Way F 1.5, 2.8, 6.3 CTS, 9.5 MCON-LL Series(GY)

Terminal Part Information

Terminal Type ID	Terminated Lead	Diagnostic Test Probe	Terminal Removal Tool
I	19369711	J-35616-14 (GN)	EL-38125-560A
II	84764078	J-35616-42 (RD)	J-38125-215A
III	84764079	J-35616-22 (RD)	J-38125-11A
IV	84779405	J-35616-35 (VT)	J-38125-215A

X50A Engine Wiring Harness Junction Block X3 (L3B)

Pin	Size	Color	Circuit	Function	Terminal Type ID	Option
A1	0.75	VT / GN	439	Run/Crank Ignition 1 Voltage	IV	—
A2 - A3	—	—	—	Not Occupied	—	—
A4	0.75	BN / GN	59	A/C Compressor Clutch Control	IV	—
A5	—	—	—	Not Occupied	—	—
A6	0.5	GN	8016	Secondary Axle Motor Control	IV	—
B1	2.5	YE	6	Starter Solenoid Crank Ignition Voltage	IV	—
B2	0.5	YE / BK	625	Starter Enable Relay Control	IV	—
B3	0.5	VT / GY	8017	Secondary Axle Motor Relay Control	IV	—
B4 - B5	—	—	—	Not Occupied	—	—
B6	3	GN / RD	6042	Cruise Control Switch 5V Reference	IV	—
C1 - C2	—	—	—	Not Occupied	—	—
C3	0.5	BK	450	Ground	I	—
C4	0.5	WH / GY	459	A/C Compressor Clutch Relay Control	I	—
C5 - D1	—	—	—	Not Occupied	—	—
D2	5	RD / GN	3840	Battery Positive Voltage	III	—
E1	5	RD / GY	4140	Battery Positive Voltage	III	—
E2	5	RD / VT	4040	Battery Positive Voltage	III	—
F1	2.5	YE / GN	4358	Starter Pinion Solenoid Voltage	II	—
F2	0.5	YE / VT	4325	Starter Pinion Solenoid Actuator Relay Control	I	—

X50A Engine Wiring Harness Junction Block X3 (L3B) (cont'd)

Pin	Size	Color	Circuit	Function	Terminal Type ID	Option
F3	0.5	RD / BN	440	Battery Positive Voltage	I	—
F4	0.5	YE	5991	Powertrain Relay Coil Control	I	—
F5 - F6	—	—	—	Not Occupied	—	—
F7	0.5	VT / BU	5705	Powertrain Main Relay Control	I	—
F8 - G3	—	—	—	Not Occupied	—	—
G4	0.75	VT / BU	5293	Powertrain Main Relay Fused Supply Voltage 4	IV	—
G5	—	—	—	Not Occupied	—	—
G6	1	VT / BU	5291	Powertrain Main Relay Fused Supply Voltage 2	IV	—
H1	2.5	VT / BU	5290	Powertrain Main Relay Fused Supply Voltage 1	IV	—
H2	—	—	—	Not Occupied	—	—
H3	1	VT / BU	5294	Powertrain Main Relay Fused Supply Voltage 5	IV	—
H4	0.75	VT / BU	5293	Powertrain Main Relay Fused Supply Voltage 4	IV	—
H5 - H6	—	—	—	Not Occupied	—	—

X50A Engine Wiring Harness Junction Block X3 (L84/L87)

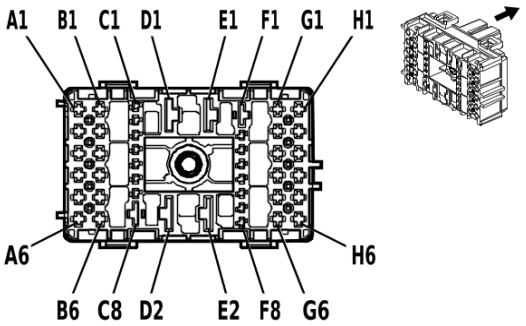

4992608

Connector Part Information

Harness Type: Engine Wiring Harness
OEM Connector: 33384584
Service Connector: 19371176
Description: 44-Way F 1.5, 2.8, 6.3 CTS, 9.5 MCON-LL Series(GY)

Terminal Part Information

Terminal Type ID	Terminated Lead	Diagnostic Test Probe	Terminal Removal Tool
I	19369711	J-35616-14 (GN)	EL-38125-560A
II	84764078	J-35616-42 (RD)	J-38125-215A
III	84764079	J-35616-22 (RD)	J-38125-11A
IV	84779405	J-35616-35 (VT)	J-38125-215A

X50A Engine Wiring Harness Junction Block X3 (L84/L87)

Pin	Size	Color	Circuit	Function	Terminal Type ID	Option
A1	0.75	VT / GN	439	Run/Crank Ignition 1 Voltage	IV	—
A2 - A3	—	—	—	Not Occupied	—	—
A4	0.75	BN / GN	59	A/C Compressor Clutch Control	IV	—
A5	1.5	RD / GY	8540	Battery Positive Voltage	IV	—
A6	0.5	GN	8016	Secondary Axle Motor Control	IV	—
B1	2.5	YE	6	Starter Solenoid Crank Ignition Voltage	IV	—
B2	0.5	YE / BK	625	Starter Enable Relay Control	IV	—
B3	0.5	VT / GY	8017	Secondary Axle Motor Relay Control	IV	—
B4 - B5	—	—	—	Not Occupied	—	—
B6	3	GN / RD	6042	Cruise Control Switch 5V Reference	IV	—
C1 - C2	—	—	—	Not Occupied	—	—
C3	1	BK	450	Ground	I	—
C4	0.5	WH / GY	459	A/C Compressor Clutch Relay Control	I	—
C5 - D1	—	—	—	Not Occupied	—	—
D2	5	RD / GN	3840	Battery Positive Voltage	III	—
E1	—	—	—	Not Occupied	—	—
E2	5	RD / VT	4040	Battery Positive Voltage	III	—
F1	2.5	YE / GN	4358	Starter Pinion Solenoid Voltage	II	—
F2	0.5	YE / VT	4325	Starter Pinion Solenoid Actuator Relay Control	I	—

X50A Engine Wiring Harness Junction Block X3 (L84/L87) (cont'd)

Pin	Size	Color	Circuit	Function	Terminal Type ID	Option
F3	0.5	RD / BN	440	Battery Positive Voltage	I	—
F4	0.5	YE	5991	Powertrain Relay Coil Control	I	—
F5	0.5	RD / BU	6040	Battery Positive Voltage	I	—
F6	—	—	—	Not Occupied	—	—
F7	0.5	VT / BU	5705	Powertrain Main Relay Control	I	—
F8 - G1	—	—	—	Not Occupied	—	—
G2	1	VT / BU	5292	Powertrain Main Relay Fused Supply Voltage 3	IV	—
G3 - G5	—	—	—	Not Occupied	—	—
G6	1	VT / BU	5291	Powertrain Main Relay Fused Supply Voltage 2	IV	—
H1	2.5	VT / BU	5290	Powertrain Main Relay Fused Supply Voltage 1	IV	—
H2	0.75	VT / BU	5292	Powertrain Main Relay Fused Supply Voltage 3	IV	—
H3	1	VT / BU	5294	Powertrain Main Relay Fused Supply Voltage 5	IV	—
H4	0.75	VT / BU	5293	Powertrain Main Relay Fused Supply Voltage 4	IV	—
H5 - H6	—	—	—	Not Occupied	—	—

X50A Engine Wiring Harness Junction Block X3 (LM2)

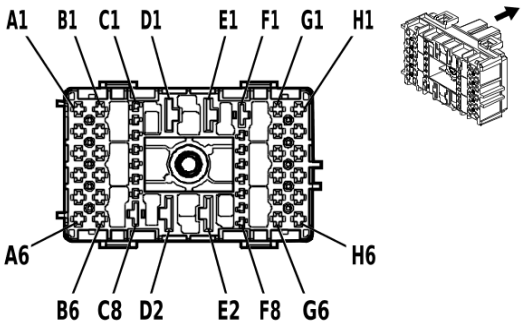

4992608

Connector Part Information

Harness Type: Engine Wiring Harness
OEM Connector: 33384584
Service Connector: 19371176
Description: 44-Way F 1.5, 2.8, 6.3 CTS, 9.5 MCON-LL Series(GY)

Terminal Part Information

Terminal Type ID	Terminated Lead	Diagnostic Test Probe	Terminal Removal Tool
I	19369711	J-35616-14 (GN)	EL-38125-560A
II	84764079	J-35616-22 (RD)	J-38125-11A
III	84779405	J-35616-35 (VT)	J-38125-215A

X50A Engine Wiring Harness Junction Block X3 (LM2)

Pin	Size	Color	Circuit	Function	Terminal Type ID	Option
A1	0.75	VT / GN	439	Run/Crank Ignition 1 Voltage	III	—
A2 - A3	—	—	—	Not Occupied	—	—
A4	0.75	BN / GN	59	A/C Compressor Clutch Control	III	—
A5	1.5	RD / GY	8540	Battery Positive Voltage	III	—
A6	0.5	GN	8016	Secondary Axle Motor Control	III	—
B1	2.5	YE	6	Starter Solenoid Crank Ignition Voltage	III	—
B2	0.5	YE / BK	625	Starter Enable Relay Control	III	—
B3	0.5	VT / GY	8017	Secondary Axle Motor Relay Control	III	—
B4 - B5	—	—	—	Not Occupied	—	—
B6	3	GN / RD	6042	Cruise Control Switch 5V Reference	III	—
C1	0.5	BU	3017	Fuel Heater Relay 1 Control	I	—
C2	—	—	—	Not Occupied	—	—
C3	0.75	BK	450	Ground	I	—
C4	0.5	WH / GY	459	A/C Compressor Clutch Relay Control	I	—
C5	0.5	GN / BU	3889	Powertrain Sensor Bus Relay Control	I	—
C6	1	VT / GN	4320	Powertrain Sensor Bus Enable	I	—
C7 - D1	—	—	—	Not Occupied	—	—
D2	5	RD / GN	3840	Battery Positive Voltage	II	—
E1	5	RD / GY	4140	Battery Positive Voltage	II	—
E2 - F2	—	—	—	Not Occupied	—	—

X50A Engine Wiring Harness Junction Block X3 (LM2) (cont'd)

Pin	Size	Color	Circuit	Function	Terminal Type ID	Option
F3	0.75	RD / BN	440	Battery Positive Voltage	I	—
F4	0.5	YE	5991	Powertrain Relay Coil Control	I	—
F5	0.5	RD / BU	6040	Battery Positive Voltage	I	—
F6	—	—	—	Not Occupied	—	—
F7	0.5	VT / BU	5705	Powertrain Main Relay Control	I	—
F8 - G4	—	—	—	Not Occupied	—	—
G5	1.5	VT / GN	4320	Powertrain Sensor Bus Enable	III	—
G6	—	—	—	Not Occupied	—	—
H1	2.5	VT / BU	5290	Powertrain Main Relay Fused Supply Voltage 1	III	—
H2	—	—	—	Not Occupied	—	—
H3	1	VT / BU	5294	Powertrain Main Relay Fused Supply Voltage 5	III	—
H4	—	—	—	Not Occupied	—	—
H5	2.5	VT / BU	5291	Powertrain Main Relay Fused Supply Voltage 2	III	—
H6	—	—	—	Not Occupied	—	—

X50A Engine Wiring Harness Junction Block X4

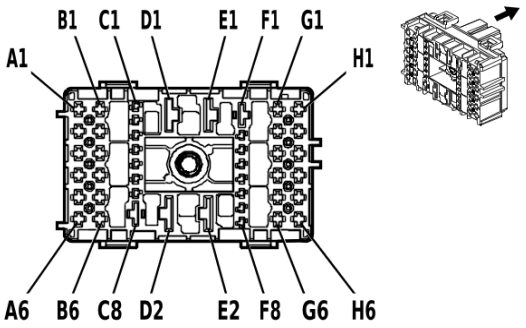

4993031

Connector Part Information

Harness Type: Chassis Wiring Harness
OEM Connector: 33384574
Service Connector: 19371188
Description: 44-Way F 1.5, 2.8, 6.3 CTS, 9.5 MCON-LL Series(BK)

Terminal Part Information

Terminal Type ID	Terminated Lead	Diagnostic Test Probe	Terminal Removal Tool
I	19369711	J-35616-14 (GN)	EL-38125-560A
II	84764078	J-35616-42 (RD)	J-38125-215A
III	84764079	J-35616-22 (RD)	J-38125-11A
IV	84779405	J-35616-35 (VT)	J-38125-215A

X50A Engine Wiring Harness Junction Block X4

Pin	Size	Color	Circuit	Function	Terminal Type ID	Option
A1	—	—	—	Not Occupied	—	—
A2	0.5	RD / BU	5240	Battery Positive Voltage	IV	—
A3	1.5	BN	2109	Trailer Park Lamp Control	IV	—
A4 - A5	—	—	—	Not Occupied	—	—
A6	0.35 0.5	VT / WH VT / WH	639 639	Run/Crank Ignition 1 Voltage Run/Crank Ignition 1 Voltage	IV IV	- FHX- G93- G94+ UET FHX- UET
B1	—	—	—	Not Occupied	—	—
B2	1	GY	1624	Trailer Backup Lamp Control	IV	—
B3	0.75	RD / GN	2440	Battery Positive Voltage	IV	—
B4	0.5	RD / GN	6940	Battery Positive Voltage	IV	—
B5 - C6	—	—	—	Not Occupied	—	—
C7	1.5 0.5	RD / WH RD / WH	3440 3440	Battery Positive Voltage Battery Positive Voltage	I I	FHX FJW
C8	2.5	BN / YE	2996	Fuel Heater Control 1	II	—
D1	—	—	—	Not Occupied	—	—
D2	4	OG	3640	Battery Positive Voltage	III	—
E1 - E2	—	—	—	Not Occupied	—	—
F1	2.5	RD / WH	2040	Battery Positive Voltage	II	—
F2 - G2	—	—	—	Not Occupied	—	—

X50A Engine Wiring Harness Junction Block X4 (cont'd)

Pin	Size	Color	Circuit	Function	Terminal Type ID	Option
G3	1	YE	1618	Left Rear Trailer Stop/Turn Lamp Control	IV	—
G4	2.5	RD / YE	5840	Battery Positive Voltage	IV	—
G5	1.5	RD / BN	5940	Battery Positive Voltage	IV	—
G6	2.5	RD / WH	1040	Battery Positive Voltage	IV	—
H1 - H2	—	—	—	Not Occupied	—	—
H3	1	GN	1619	Right Rear Trailer Stop/Turn Lamp Control	IV	—
H4	2.5	RD / VT	5640	Battery Positive Voltage	IV	—
H5	2.5	RD / VT	1940	Battery Positive Voltage	IV	—
H6	4	OG	3940	Battery Positive Voltage	IV	—

X51AX Instrument Panel Wiring Harness Junction Block - Auxiliary Label (9L7)

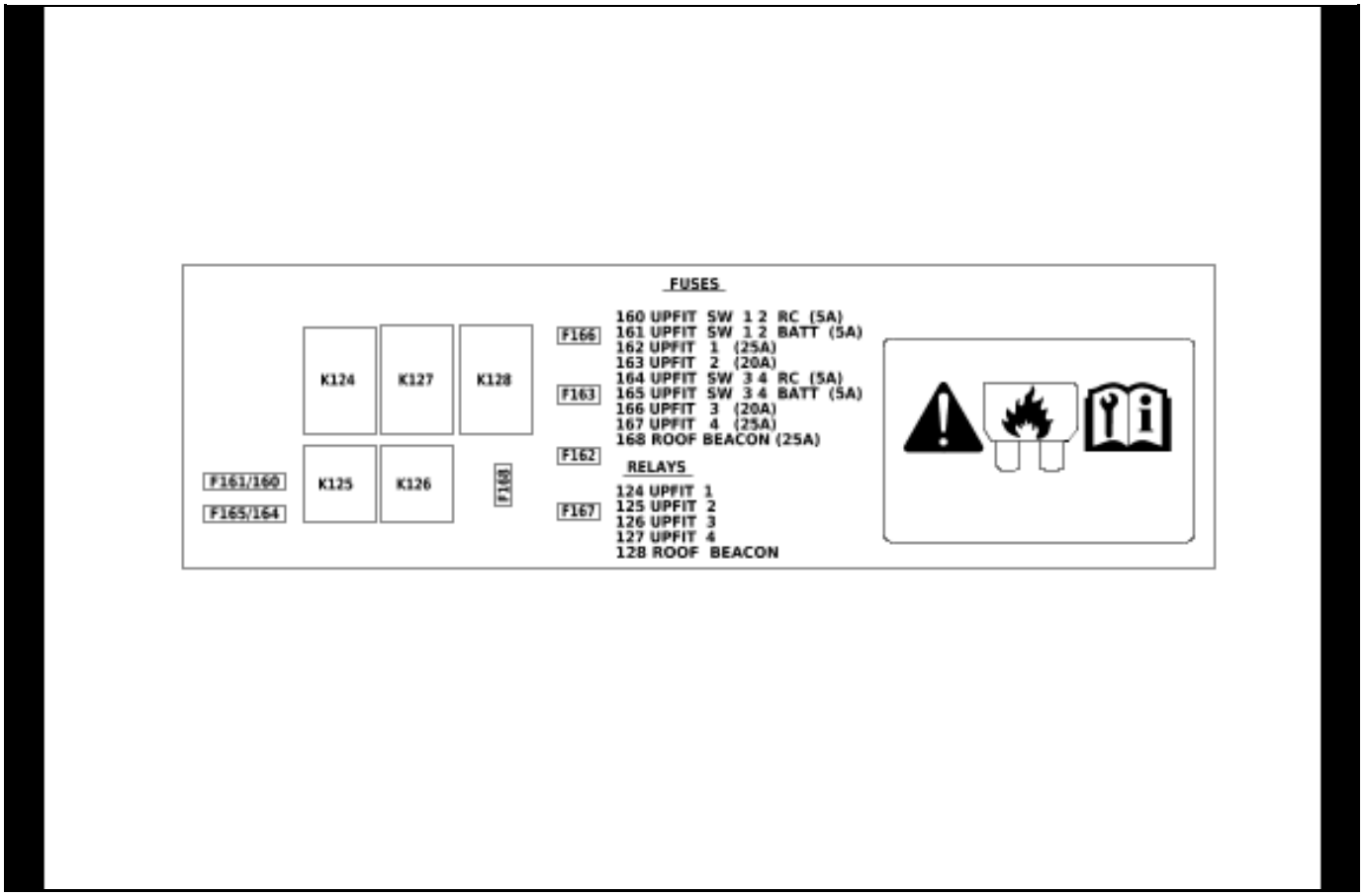

5969422

X51AX Instrument Panel Wiring Harness Junction Block - Auxiliary Top View (9L7)

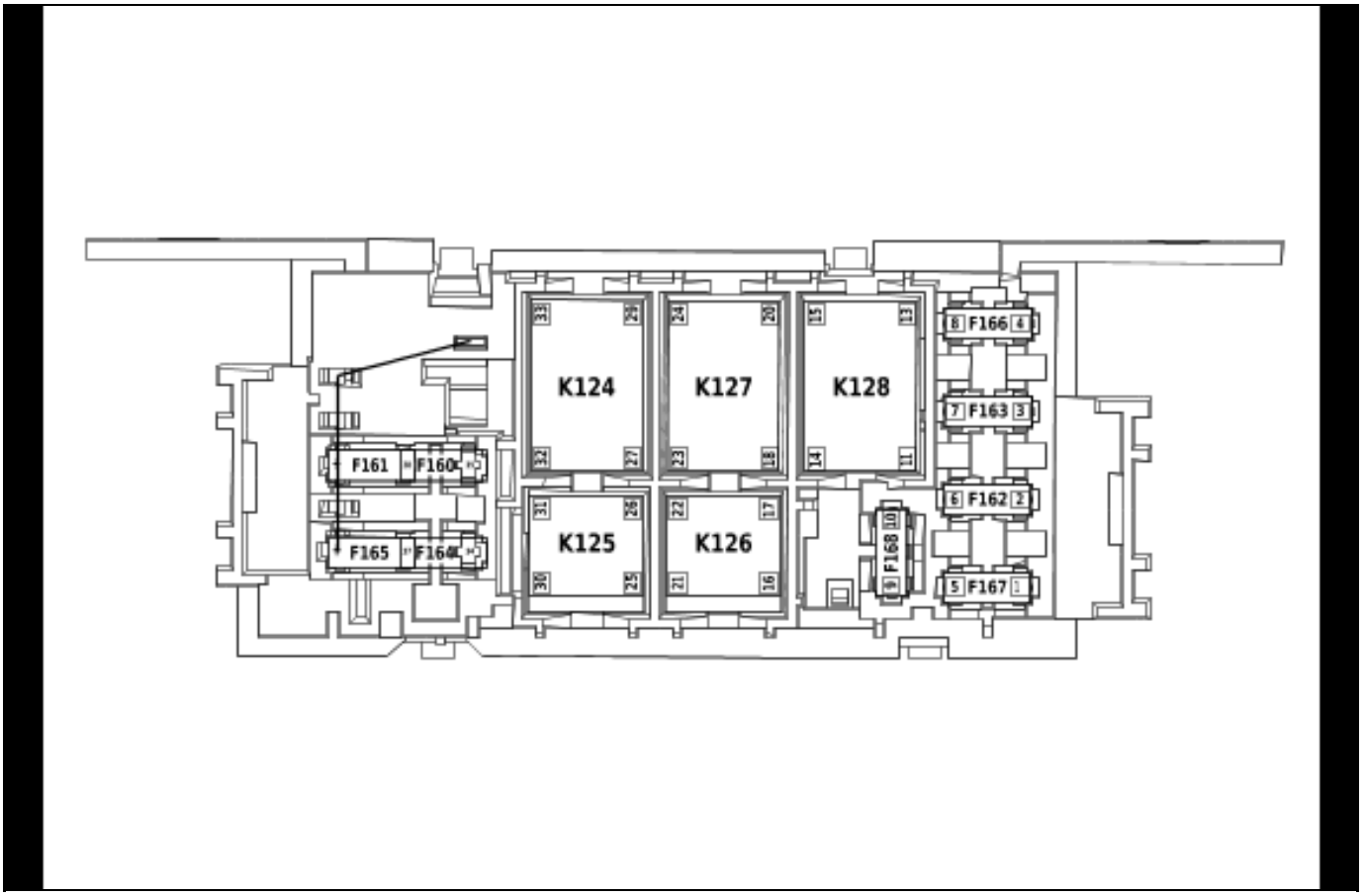

5988611

Usage Table

No.	Device Label Name	Device Assigned Name	Rating	Description
Fuses				
F160	UPFIT SW 1 2 RC	F160DA	5A	• KR161AA Configurable/Accessory Provision Relay 1 • KR161BA Configurable/Accessory Provision Relay 2
F161	UPFIT SW 1 2 BATT	F161DA	5A	• KR161AA Configurable/Accessory Provision Relay 1 • KR161BA Configurable/Accessory Provision Relay 2
F162	UPFIT 1	F162DA	25A	• X79A Configurable/Accessory Provision Supply Connector
F163	UPFIT 2	F163DA	20A	• X79A Configurable/Accessory Provision Supply Connector
F164	UPFIT SW 3 4 RC	F164DA	5A	• KR161CA Configurable/Accessory Provision Relay 3 • KR161DA Configurable/Accessory Provision Relay 4 • KR161EA Configurable/Accessory Provision Relay 5
F165	UPFIT SW 3 4 BATT	F165DA	5A	• KR161CA Configurable/Accessory Provision Relay 3 • KR161DA Configurable/Accessory Provision Relay 4 • KR161EA Configurable/Accessory Provision Relay 5
F166	UPFIT 3	F166DA	20A	• X79A Configurable/Accessory Provision Supply Connector
F167	UPFIT 4	F167DA	25A	• X79A Configurable/Accessory Provision Supply Connector
F168	ROOF BEACON	F168DA	25A	• X79A Configurable/Accessory Provision Supply Connector

Usage Table (cont'd)

No.	Device Label Name	Device Assigned Name	Rating	Description
Relays				
K124	UPFIT 1	KR161AA Configurable/Accessory Provision Relay 1	—	• F162DA
K125	UPFIT 2	KR161BA Configurable/Accessory Provision Relay 2	—	• F163DA
K126	UPFIT 3	KR161CA Configurable/Accessory Provision Relay 3	—	• F166DA
K127	UPFIT 4	KR161DA Configurable/Accessory Provision Relay 4	—	• F167DA
K128	ROOF BEACON	KR161EA Configurable/Accessory Provision Relay 5	—	• F168DA

X51AX Instrument Panel Wiring Harness Junction Block - Auxiliary Wire Entry (9L7)

—

Connector Part Information

Harness Type: Auxiliary Fuse Block Wiring Harness
OEM Connector: 33323307
Service Connector: Service by Component Assembly - See Part Catalog
Description: Wire Entry Fuse Block

Terminal Part Information

Terminal Type ID	Terminated Lead	Diagnostic Test Probe	Terminal Removal Tool
I	Not required	J-35616-22 (RD)	No Tool Required
II	Not required	J-35616-4A (PU)	No Tool Required

X51AX Instrument Panel Wiring Harness Junction Block - Auxiliary Wire Entry (9L7)

Pin	Size	Color	Circuit	Function	Terminal Type ID	Option
1	2.5	YE / BN	10734	Upfitter Accessory 4 Supply Voltage	II	—
2	2.5	BU	10731	Upfitter Accessory 1 Supply Voltage	II	—
3	2.5	GY / BK	10732	Upfitter Accessory 2 Supply Voltage	II	—
4	2.5	BN / WH	10733	Upfitter Accessory 3 Supply Voltage	II	—
5	2.5	YE	10729	Upfitter Accessory Fuse 4 Supply Voltage	II	—
6	2.5	BU / GN	10726	Upfitter Accessory Fuse 1 Supply Voltage	II	—
7	2.5	GY	10727	Upfitter Accessory Fuse 2 Supply Voltage	II	—
8	2.5	BN	10728	Upfitter Accessory Fuse 3 Supply Voltage	II	—
9	2.5	VT / BU	10735	Upfitter Accessory 5 Supply Voltage	II	—
10	2.5	VT	10730	Upfitter Accessory Fuse 5 Supply Voltage	II	—
11	2.5	VT	10730	Upfitter Accessory Fuse 5 Supply Voltage	II	—
13	0.35	VT / BN	10723	Upfitter Accessory Relay 3 Coil Supply Voltage	II	—
14	0.35	GY / VT	10720	Upfitter Accessory Relay 5 Coil Control	II	—
15	2.5	RD / VT	542	Battery Positive Voltage	II	—
16	2.5	RD / VT	542	Battery Positive Voltage	II	—
17	0.35	GN / BN	10718	Upfitter Accessory Relay 3 Coil Control	II	—
18	2.5	YE	10729	Upfitter Accessory Fuse 4 Supply Voltage	II	—
20	0.35	VT / BN	10723	Upfitter Accessory Relay 3 Coil Supply Voltage	II	—
21	0.35	VT / BN	10723	Upfitter Accessory Relay 3 Coil Supply Voltage	II	—
22	2.5	BN	10728	Upfitter Accessory Fuse 3 Supply Voltage	II	—
23	0.35	WH / YE	10719	Upfitter Accessory Relay 4 Coil Control	II	—
24	2.5	RD / VT	542	Battery Positive Voltage	II	—
25	2.5	RD / VT	542	Battery Positive Voltage	II	—
26	0.35	VT / GY	10717	Upfitter Accessory Relay 2 Coil Control	II	—
27	2.5	BU / GN	10726	Upfitter Accessory Fuse 1 Supply Voltage	II	—
29	0.35	BU / VT	10721	Upfitter Accessory Relay 1 Coil Supply Voltage	II	—
30	0.35	BU / VT	10721	Upfitter Accessory Relay 1 Coil Supply Voltage	II	—
31	2.5	GY	10727	Upfitter Accessory Fuse 2 Supply Voltage	II	—
32	0.35	BU / WH	10716	Upfitter Accessory Relay 1 Coil Control	II	—
33	2.5	RD / VT	542	Battery Positive Voltage	II	—
34	0.5	VT / BK	339	Run/Crank Ignition 1 Voltage	II	—

X51AX Instrument Panel Wiring Harness Junction Block - Auxiliary Wire Entry (9L7) (cont'd)

Pin	Size	Color	Circuit	Function	Terminal Type ID	Option
35	0.5	VT / BK	339	Run/Crank Ignition 1 Voltage	II	—
36	10	RD / VT	542	Battery Positive Voltage	I	—
37	0.35	VT / BN	10723	Upfitter Accessory Relay 3 Coil Supply Voltage	II	—
38	0.35	BU / VT	10721	Upfitter Accessory Relay 1 Coil Supply Voltage	II	—
39	2.5	RD / VT	542	Battery Positive Voltage	II	—
40	2.5	RD / VT	542	Battery Positive Voltage	II	—
41	2.5	RD / VT	542	Battery Positive Voltage	II	—
42	2.5	RD / VT	542	Battery Positive Voltage	II	—
43	2.5	RD / VT	542	Battery Positive Voltage	II	—

X53AF Body Wiring Harness Junction Block Label

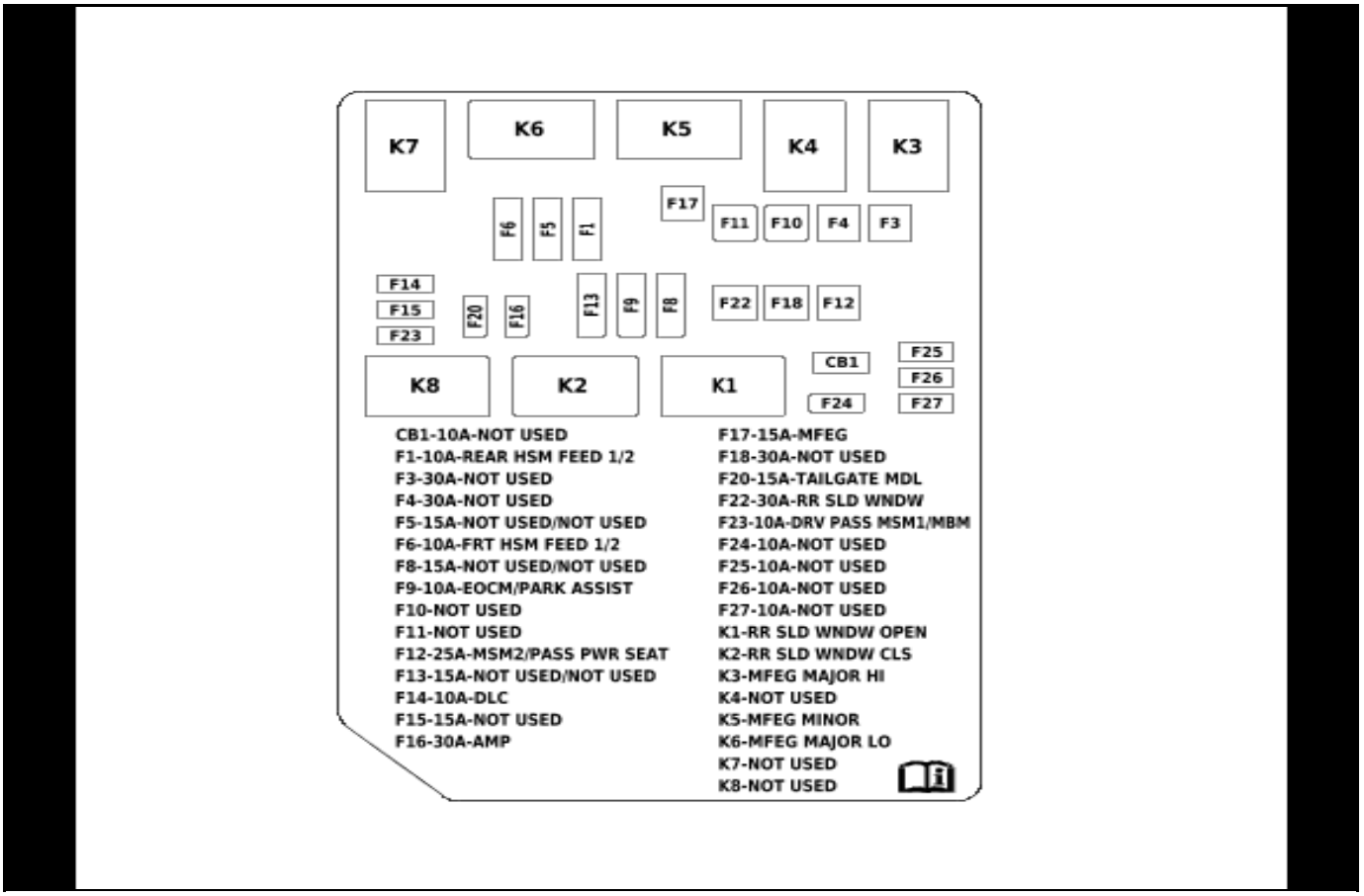

5969417

X53AF Body Wiring Harness Junction Block Top View

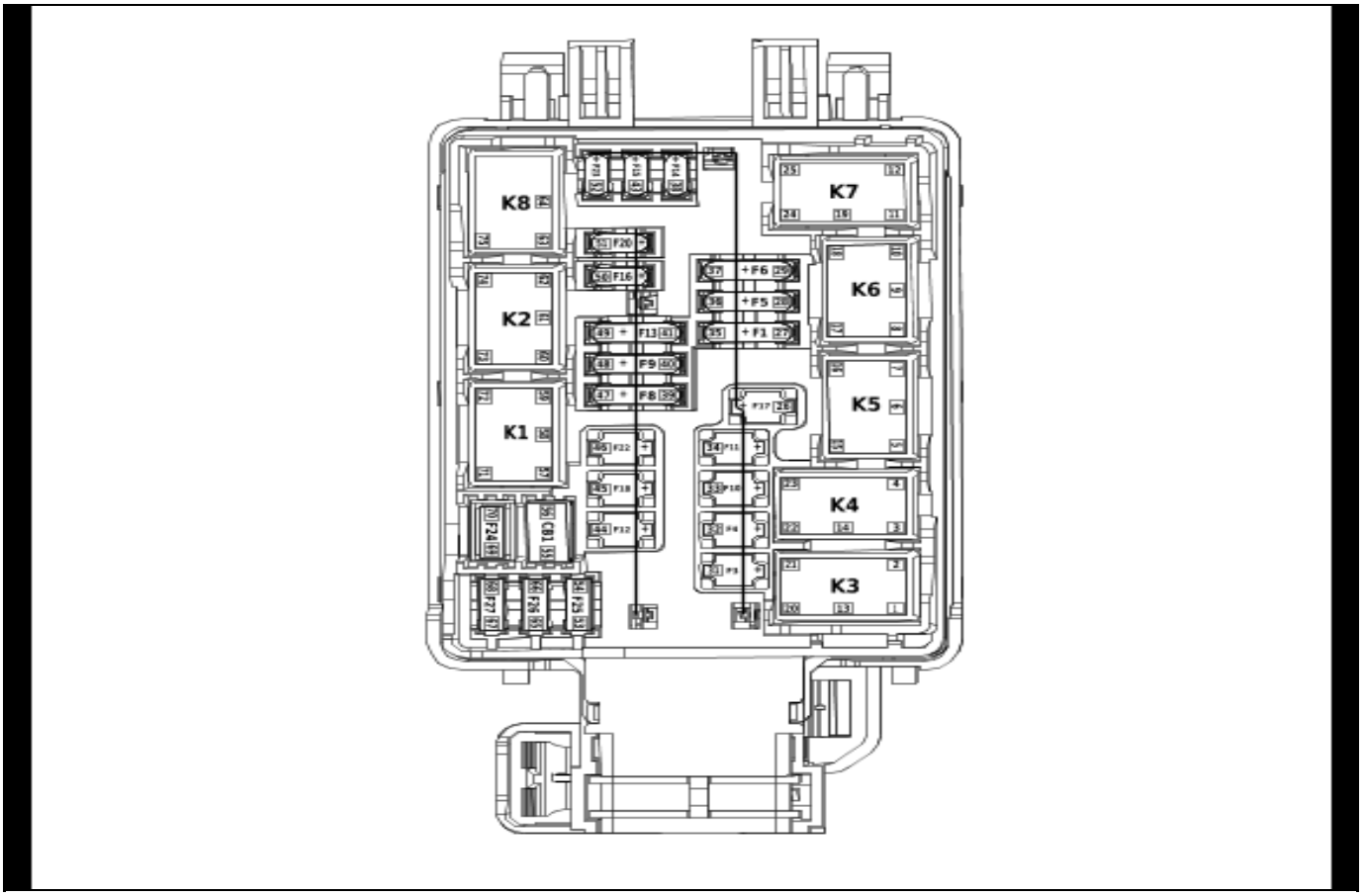

5041380

Usage Table

No.	Device Label Name	Device Assigned Name	Rating	Description
Fuses				
F1	REAR HSM FEED 1/2	F1DL	10A	• K29R Rear Seat Heater Control Module (KA6)
F3	NOT USED	F3DL	30A	• Not Used
F4	NOT USED	F4DL	30A	• Not Used
F5	NOT USED/NOT USED	F5DL	15A	• Not Used
F6	FRT HSM FEED 1/2	F6DL	10A	• K29FV Front Seat Heater Vent Control Module (KA1/KQV)
F8	NOT USED/NOT USED	F8DL	15A	• Not Used
F9	EOCM/PARK ASSIST	F9DL	10A	• K124 Image Processing Module (UGN) • K182 Parking Assist Control Module (UD5/UD7)
F10	NOT USED	F10DL	30A	• Not Used
F11	NOT USED	F11DL	30A	• Not Used
F12	MSM2/PASS PWR SEAT	F12DL	25A	• K40P Passenger Seat Adjuster Memory Module (A45) • S64P Front Seat Adjuster Switch - Passenger (-A45) • S65P Front Seat Lumbar Switch - Passenger (-A45)
F13	NOT USED/NOT USED	F13DL	15A	• Not Used
F14	DLC	F14DL	10A	• X84 Data Link Connector

Usage Table (cont'd)

No.	Device Label Name	Device Assigned Name	Rating	Description
F15	NOT USED	F15DL	15A	• Not Used
F16	AMP	F16DL	30A	• T3 Audio Amplifier (UQA)
F17	MFEG	F17DL	15A	• KR191G Pickup Box Endgate Latch Relay - Ground (QT5) • KR192 Pickup Box Auxiliary Endgate Latch Relay (QK2+QT5)
F18	NOT USED	F18DL	30A	• Not Used
F20	TAILGATE MDL	F20DL	15A	• K194 Rear Gate Module (QT6)
F22	RR SLD WNDW	F22DL	30A	• KR206C Rear Sliding Window Close Relay (A48) • KR206O Rear Sliding Window Open Relay (A48)
F23	DRV PASS MSM1/ MBM	F23DL	10A	• K40D Driver Seat Adjuster Memory Module (A45/AUN) • K40P Passenger Seat Adjuster Memory Module (A45) • K104D Front Seat Bladder Control Module - Driver (A45) • K104P Front Seat Bladder Control Module - Passenger • S64D Front Seat Adjuster Switch - Driver (A45) • S64P Front Seat Adjuster Switch - Passenger (A45)
F24	NOT USED	F24DL	10A	• Not Used
F25	NOT USED	F25DL	10A	• Not Used
F26	NOT USED	F26DL	10A	• Not Used
F27	NOT USED	F27DL	10A	• Not Used
Circuit Breakers				
CB1	NOT USED	CB1DL	10A	• Not Used
Relays				
K1	RR SLD WNDW OPEN	KR206O Rear Sliding Window Open Relay	—	• M63 Rear Sliding Window Motor (A48)
K2	RR WNDW CLS	KR206C Rear Sliding Window Close Relay	—	• M63 Rear Sliding Window Motor (A48)
K3	MFEG MAJOR HI	KR191G Pickup Box Endgate Latch Relay - Ground	—	• A99L Pickup Box Endgate Latch - Left (QK2+QT5) • A99R Pickup Box Endgate Latch - Right (QK2+QT5) • M14A Pickup Box Endgate Lock Actuator (QK1+QT5)
K4	NOT USED	—	—	• Not Used
K5	MFEG MINOR	KR192 Pickup Box Auxiliary Endgate Latch Relay	—	• A100L Pickup Box Auxiliary Endgate Latch - Left (QK2+QT5) • A100R Pickup Box Auxiliary Endgate Latch - Right (QK2+QT5)
K6	MFEG MAJOR LO	KR191S Pickup Box Endgate Latch Relay - Supply Voltage	—	• A99L Pickup Box Endgate Latch - Left (QK2+QT5) • A99R Pickup Box Endgate Latch - Right (QK2+QT5) • M14A Pickup Box Endgate Lock Actuator (QK1+QT5)
K7	NOT USED	—	—	• Not Used
K8	NOT USED	—	—	• Not Used

X53AF Body Wiring Harness Junction Block Wire Entry

—

Connector Part Information

Harness Type: Body Wiring Harness
OEM Connector: 35232561
Service Connector: Service by Component Assembly - See Part Catalog
Description: Wire Entry Fuse Block

Terminal Part Information

Terminal Type ID	Terminated Lead	Diagnostic Test Probe	Terminal Removal Tool
I	13575574	J-35616-5 (PU)	J-38125-215A
II	Not required	J-35616-22 (RD)	No Tool Required

X53AF Body Wiring Harness Junction Block Wire Entry

Pin	Size	Color	Circuit	Function	Terminal Type ID	Option
1	0.75	WH / GN	7728	Major Endgate High Relay Control	I	—
2	1	GN	1299	Major Endgate Motor Control	I	—
5	1	VT	7725	Minor Endgate Motor Control	I	—
7	0.75	WH / GY	7297	Minor Endgate High Relay Control	I	—
8	1	BK	1550	Ground	I	—
10	0.75	BU / VT	7729	Major Endgate Low Relay Control	I	—
15	0.5	BK	1550	Ground	I	—
16	1	RD / BN	8240	Battery Positive Voltage	I	—
17	0.5	BK	1550	Ground	I	—
18	1	YE / BK	7730	Major Endgate Motor Low Reference	I	—
20	1	RD / BN	8240	Battery Positive Voltage	I	—
21	0.5	BK	1550	Ground	I	—
26	1	RD / BN	8240	Battery Positive Voltage	I	—
27	0.75	RD / WH	5740	Battery Positive Voltage	I	—
29	0.75	RD / BN	6640	Battery Positive Voltage	I	—
30	10	RD / GY	142	Battery Positive Voltage	II	—
35	0.75	RD / BU	6740	Battery Positive Voltage	I	—
37	0.75	RD / GN	6140	Battery Positive Voltage	I	—
38	0.5	RD / YE	6540	Battery Positive Voltage	I	—
42	10	RD / GN	242	Battery Positive Voltage	II	—
44	2.5	RD / YE	7440	Battery Positive Voltage	I	—
46	2.5	RD / VT	8640	Battery Positive Voltage	I	—
48	0.5	RD / WH	4740	Battery Positive Voltage	I	—
50	2.5	RD / YE	3740	Battery Positive Voltage	I	—
51	2.5	RD / VT	4442	Primary Fused Battery Positive Voltage	I	—
52	0.5	RD / BN	2240	Battery Positive Voltage	I	—
57	2.5	RD / VT	8640	Battery Positive Voltage	I	—
58	2.5	BK	1550	Ground	I	—
59	0.5	BK	1550	Ground	I	—
60	2.5	RD / VT	8640	Battery Positive Voltage	I	—
61	2.5	BK	1550	Ground	I	—

X53AF Body Wiring Harness Junction Block Wire Entry (cont'd)

Pin	Size	Color	Circuit	Function	Terminal Type ID	Option
62	0.5	BK	1550	Ground	I	—
71	0.5	YE / VT	6191	Power Rear Window Switch Open Signal	I	—
72	2	VT / YE	7453	Window Motor Rear Auxiliary Open Control	I	—
73	0.5	WH	6192	Sliding Rear Window Switch Close Signal	I	—
74	2	YE	7454	Window Motor Rear Auxiliary Close Control	I	—

X51R Instrument Panel Wiring Harness Junction Block - Right Label

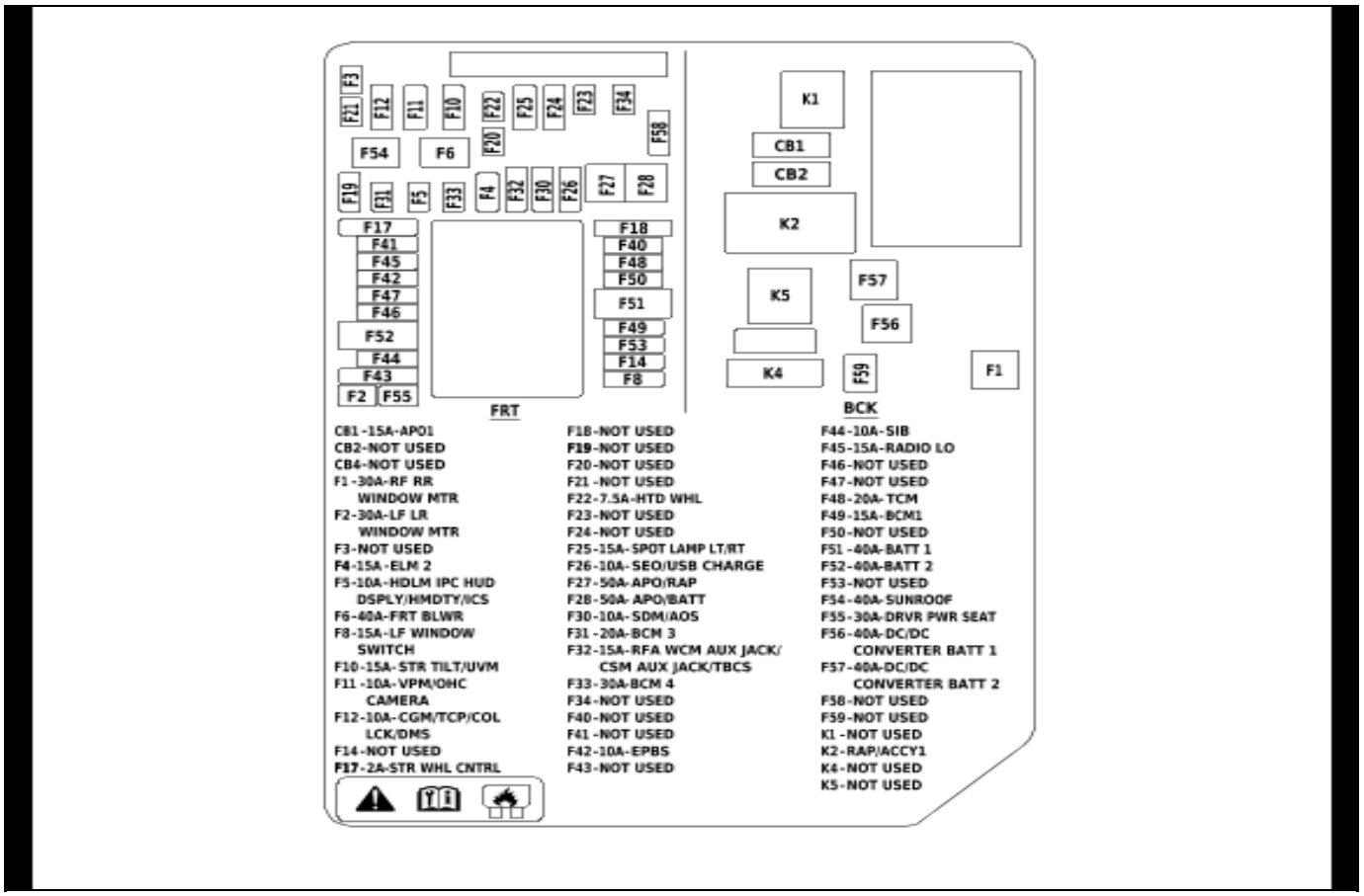

5969420

X51R Instrument Panel Wiring Harness Junction Block - Right Top View

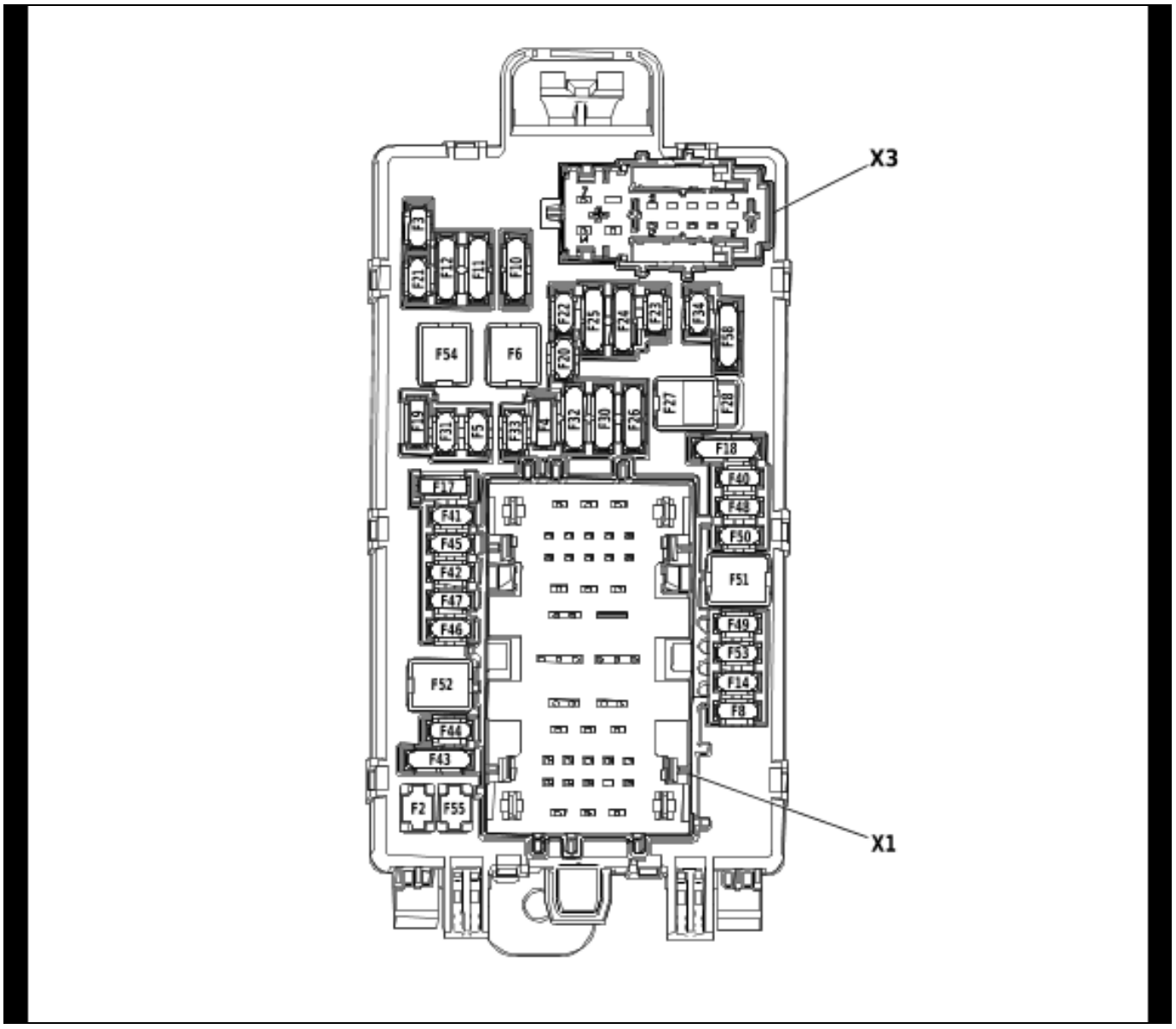

5041376

Usage Table

No.	Device Label Name	Device Assigned Name	Rating	Description
Circuit Breakers				
CB4	NOT USED	—	—	• Not Used
Fuses				
F1	RF RR WINDOW MTR	F1DR	30A	• M74P Front Side Door Window Regulator Motor - Passenger (AEF) • S79P Front Side Door Window Switch - Passenger (AED/AEF) • S79RR Rear Side Door Window Switch - Right
F2	LF LR WINDOW MTR	F2DR	30A	• M74D Front Side Door Window Regulator Motor - Driver • S79LR Rear Side Door Window Switch - Left
F3	NOT USED	F3DR	—	• Not Used
F4	ELM 2	F4DR	15A	• K219 Lighting Control Module

Usage Table (cont'd)

No.	Device Label Name	Device Assigned Name	Rating	Description
F5	HDLM IPC HUD DSPLY/HMDTY/ ICS	F5DR	10A	• A26 Heater and Air Conditioning User Interface Control - Front • K179 Automated Driving Mapping Module (UKL) • P16 Instrument Panel Cluster Control Module • P29 Head-Up Display (UV6)
F6	FRT BLWR	F6DR	40A	• M8 Blower Motor
F8	LF WINDOW SWITCH	F8DR	15A	• S79D Front Side Door Window Control Switch - Driver • S32R Rear Seat Heater Switch (KA6)
F10	STR TILT/UVM	F10DR	15A	• K99 Steering Column Tilt Wheel and Telescope Control Module (N38)
F11	VPM/OHC CAM-ERA	F11DR	10A	• A103 Roof Console • B174W Front View Camera - Windshield (UGN/UHY) • K157 Video Processing Module (UV2)
F12	CGM/TCP/COL LCK/DMS	F12DR	10A	• K56 Serial Data Gateway Module • K60 Column Lock Module • K73 Telematic Control Module (UDA/UE1) • K180 Driver Monitoring System Module (UKL)
F14	NOT USED	F14DR	—	• Not Used
F17	STR WHL CNTRL	F17DR	2A	• S70L Cruise Control Switch (KI3) • S70R Radio Control Switch - Steering Wheel (KI3)
F18	NOT USED	F18DR	—	• Not Used
F19	NOT USED	F19DR	—	• Not Used
F20	NOT USED	F20DR	—	• Not Used
F21	NOT USED	F21DR	—	• Not Used
F22	HTD WHL	F22DR	7.5A	• K32 Steering Wheel Heating Control Module (KI3-UKL) • K180S Driver Monitoring System Module - Steering Wheel (KI3+UKL)
F23	NOT USED	F23DR	—	• Not Used
F24	NOT USED	F24DR	—	• Not Used
F25	SPOT LAMP LT/ RT	F25DR	15A	• X219 (9C1) • X220 (9C1)
F26	SEO/USB CHARGE	F26DR	10A	• X92CD Dual Charge Only Receptacle - Floor Console Rear (D07+UBI) • X92FSR Dual Charge Only Receptacle - Front Center Seat Rear Cover (AZ3+UBI)
F27	APO/RAP	F27DR	50A	• Not Used
F28	APO/BATT	F28DR	50A	• Not Used
F30	SDM/AOS	F30DR	10A	• K36 Restraints Control Module • K85P Restraints Occupant Classification System Module - Passenger
F31	BCM 3	F31DR	20A	• K9 Body Control Module
F32	RFA WCM AUX JACK/CSM AUX JACK/TBCS	F32DR	15A	• A11 Radio (IOK) • K77 Remote Function Actuator Module • S76 Trailer Brake Control Switch • T22 Wireless Accessory Charging Module (K4C) • X83B Audio/Video Receptacle (D07) • X92IP USB 2 Port Receptacle - Instrument Panel (IOR)
F33	BCM 4	F33DR	30A	• K9 Body Control Module

Usage Table (cont'd)

No.	Device Label Name	Device Assigned Name	Rating	Description
F34	NOT USED	F34DR	—	• Not Used
F40	NOT USED	F40DR	—	• Not Used
F41	NOT USED	F41DR	—	• Not Used
F42	EPBS	F42DR	10A	• S91 Parking Brake Control Switch
F43	NOT USED	F43DR	—	• Not Used
F44	SIB	F44DR	10A	• K212 Gaer Shift Control Module (MHS/MQC)
F45	RADIO LO	F45DR	15A	• A11 Radio (IOR)
F46	NOT USED	F46DR	—	• Not Used

X51R Instrument Panel Wiring Harness Junction Block - Right Bottom View

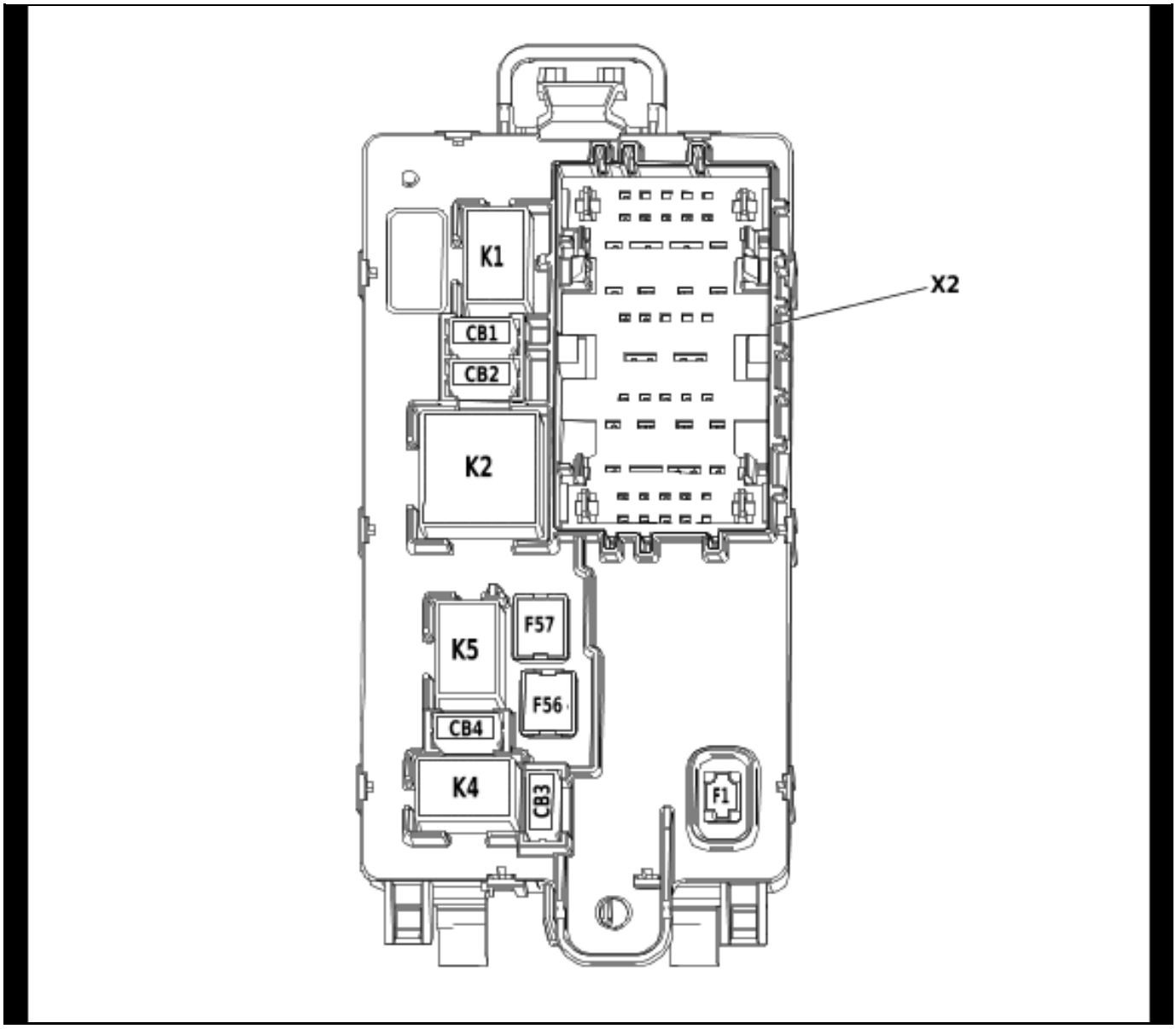

5041378

Usage Table

No.	Device Label Name	Device Assigned Name	Rating	Description
Circuit Breakers				
CB1	APO 1	CB1DR	15A	• X80G Accessory Power Receptacle - Instrument Panel (KC5)
CB2	NOT USED	—	—	• Not Used
Fuses				
F47	NOT USED	F47DR	—	• Not Used
F48	TCM	F48DR	20A	• K71 Transmission Control Module
F49	BCM 1	F49DR	15A	• K9 Body Control Module
F50	NOT USED	F50DR	—	• Not Used
F51	BATT 1	F51DR	40A	• Not Used
F52	BATT 2	F52DR	40A	• Not Used
F53	NOT USED	F53DR	—	• Not Used
F54	SUNROOF	F54DR	40A	• K61 Sunroof Control Module (CF5)
F55	DRVR PWR SEAT	F55DR	30A	• K40D Driver Seat Adjuster Memory Module (A45) • S64D Front Seat Adjuster Switch - Driver (-A45) • S65D Front Seat Lumbar Switch Driver (-A45)
F56	DC/DC CONVERTER BATT 1	F56DR	40A	• T19 Multifunction Power Supply Transformer
F57	DC/DC CONVERTER BATT 2	F57DR	40A	• T19 Multifunction Power Supply Transformer
F58	NOT USED	F58DR	—	• Not Used
F59	NOT USED	F59DR	—	• Not Used
Relays				
K1	NOT USED	—	—	• Not Used
K2	RAP/ACCY 1	KR76 Accessory Time Delay Cutoff Relay	—	• CB1DR • F26DR
K4	NOT USED	—	—	• Not Used
K5	NOT USED	—	—	• Not Used

X51R Instrument Panel Wiring Harness Junction Block - Right X1

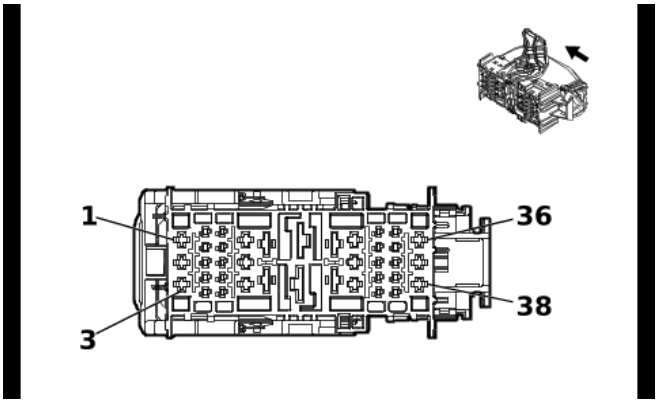

5402140

Connector Part Information

Harness Type: Body Wiring Harness
OEM Connector: 35264615
Service Connector: 84941450
Description: 38-Way F 1.5, 2.8, 6.3 CTS, 9.5 MCON-LL Series(BU)

Terminal Part Information

Terminal Type ID	Terminated Lead	Diagnostic Test Probe	Terminal Removal Tool
I	19332366	J-35616-35 (VT)	J-38125-212
II	19371175	J-35616-2A (GY)	J-38125-11A
III	84764078	J-35616-42 (RD)	J-38125-215A
IV	84764079	J-35616-22 (RD)	J-38125-11A
V	Not required	J-35616-22 (RD)	No Tool Required

X51R Instrument Panel Wiring Harness Junction Block - Right X1

Pin	Size	Color	Circuit	Function	Terminal Type ID	Option
1 - 2	—	—	—	Not Occupied	—	—
3	1.5	RD / GN	1840	Battery Positive Voltage	I	—
4	0.75	RD / VT	2640	Battery Positive Voltage	II	—
5	0.5	RD / GN	4440	Battery Positive Voltage	II	—
6	0.35	VT	4701	Retained Accessory Power Control	II	—
7 - 13	—	—	—	Not Occupied	—	—
14	0.5	RD / VT	1640	Battery Positive Voltage	I	—
15 - 16	—	—	—	Not Occupied	—	—
17	2.5	RD / GN	2173	12V Regulated Supply Voltage 2	III	—
18	2.5	RD / YE	8140	Battery Positive Voltage	III	—
19	5	RD / YE	1442	Battery Positive Voltage	IV	—
20	10	RD / WH	342	Battery Positive Voltage	V	—
21	2.5	RD / YE	2172	12V Regulated Supply Voltage 1	III	—
22	2.5	RD / WH	8040	Battery Positive Voltage	III	—
23	2.5	RD / GY	4840	Battery Positive Voltage	I	—
24	2.5	RD / BN	4240	Battery Positive Voltage	I	—
25	2.5	RD / BU	3240	Battery Positive Voltage	I	—
26	—	—	—	Not Occupied	—	—

X51R Instrument Panel Wiring Harness Junction Block - Right X1 (cont'd)

Pin	Size	Color	Circuit	Function	Terminal Type ID	Option
27	0.5	RD / WH	5440	Battery Positive Voltage	II	—
28 - 29	—	—	—	Not Occupied	—	—
30	0.5	RD / BU	1240	Battery Positive Voltage	II	—
31 - 35	—	—	—	Not Occupied	—	—
36	2.5	RD / YE	5040	Battery Positive Voltage	I	—
37	2.5	RD / GY	3540	Battery Positive Voltage	I	—
38	—	—	—	Not Occupied	—	—

X51R Instrument Panel Wiring Harness Junction Block - Right X2

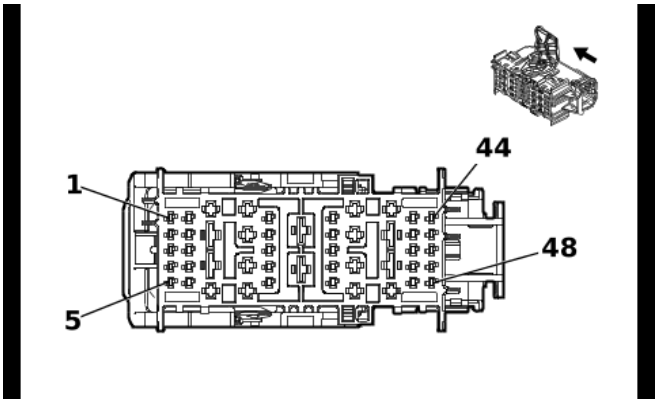

5403539

Connector Part Information

Harness Type: Instrument Panel Wiring Harness
OEM Connector: 35264616
Service Connector: 19371180
Description: 48-Way F 1.5, 2.8, 6.3 CTS Series(GN)

Terminal Part Information

Terminal Type ID	Terminated Lead	Diagnostic Test Probe	Terminal Removal Tool
I	19369711	J-35616-14 (GN)	EL-38125-560A
II	84764078	J-35616-42 (RD)	J-38125-215A
III	84779405	J-35616-35 (VT)	J-38125-215A

X51R Instrument Panel Wiring Harness Junction Block - Right X2

Pin	Size	Color	Circuit	Function	Terminal Type ID	Option
1	0.75	BK	1050	Ground	I	—
2	—	—	—	Not Occupied	—	—
3	0.35	GY / GN	4083	Retained Accessory Power Relay 2 Coil Control	I	—
4 - 8	—	—	—	Not Occupied	—	—
9	0.5	RD / YE	240	Battery Positive Voltage	I	—
10	—	—	—	Not Occupied	—	—
11	0.75	RD / GN	10240	Secondary Fused Battery Positive Voltage 102 Police	III	—
12 - 13	—	—	—	Not Occupied	—	—
14	0.35 0.5	RD / YE RD / YE	3040 3040	Battery Positive Voltage Battery Positive Voltage	III	— —
15	0.5	RD / BN	10040	Secondary Fused Battery Positive Voltage	III	—
16	0.75	RD / VT	4640	Battery Positive Voltage	III	—
17	—	—	—	Not Occupied	—	—
18	0.35	RD / BN	4940	Battery Positive Voltage	III	—
19	—	—	—	Not Occupied	—	—
20	0.75	RD / GY	10340	Secondary Fused Battery Positive Voltage 103 Police	I	—
21 - 23	—	—	—	Not Occupied	—	—
24	4	RD / GY	1740	Battery Positive Voltage	II	—
25	2.5	RD / BU	4540	Battery Positive Voltage	II	—

X51R Instrument Panel Wiring Harness Junction Block - Right X2 (cont'd)

Pin	Size	Color	Circuit	Function	Terminal Type ID	Option
26	—	—	—	Not Occupied	—	—
27	0.5	RD / YE	2340	Battery Positive Voltage	I	—
28 - 30	—	—	—	Not Occupied	—	—
31	1.5	VT	1001	Retained Accessory Power Ignition Voltage	III	—
32	2	RD / BU	2540	Battery Positive Voltage	III	—
33	0.5	RD / WH	1340	Battery Positive Voltage	III	—
34	1	RD / GY	2140	Battery Positive Voltage	III	—
35	0.5	RD / GN	1540	Battery Positive Voltage	III	—
36	—	—	—	Not Occupied	—	—
37	1	RD / GY	2840	Battery Positive Voltage	II	—
38 - 40	—	—	—	Not Occupied	—	—
41	0.5	RD / GN	5140	Battery Positive Voltage	I	—
42	0.35	RD / YE	4340	Battery Positive Voltage	I	—
43 - 44	—	—	—	Not Occupied	—	—
45	0.5	RD / WH	2740	Battery Positive Voltage	I	—
46 - 48	—	—	—	Not Occupied	—	—

X54 Fuse Block - Snow Plow (VYU)

—

Connector Part Information

Harness Type: Accessory Wiring Harness
OEM Connector: 35028846
Service Connector: Service by Component Assembly - See Part Catalog
Description: Wire Entry Fuse Block

Terminal Part Information

Terminal Type ID	Terminated Lead	Diagnostic Test Probe	Terminal Removal Tool
I	Not required	J-35616-4A (PU)	No Tool Required

X54 Fuse Block - Snow Plow (VYU)

Pin	Size	Color	Circuit	Function	Terminal Type ID	Option
A4	0.5	BN	25	Charge Indicator Control	I	—
A6	0.75	RD	9026	Snow Plow Voltage	I	—
B4	0.75	WH / BU	9030	Snow Plow Switch Signal	I	—
B5	0.5	BN	9025	Charge Indicator Control Switch Signal	I	—

X55SP Fuse Holder - Snow Plow (VYU)

—

Connector Part Information

Harness Type: Accessory Wiring Harness
OEM Connector: 33391084
Service Connector: Service by Component Assembly - See Part Catalog
Description: Wire Entry Fuse Block

Terminal Part Information

Terminal Type ID	Terminated Lead	Diagnostic Test Probe	Terminal Removal Tool
I	Not required	J-35616-64B (L-BU)	No Tool Required

X55SP Fuse Holder - Snow Plow (VYU)

Pin	Size	Color	Circuit	Function	Terminal Type ID	Option
A	1	OG	9026	Snow Plow Voltage	I	—
B	1	OG	9028	Snow Plow Voltage	I	—

Component Connector End Views
A7 Fuel Tank Fuel Pump Module

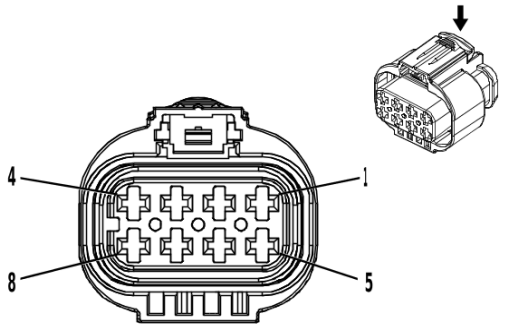

3749582

Connector Part Information

Harness Type: Chassis Wiring Harness
OEM Connector: 33180742
Service Connector: 19354078
Description: 8-Way F 2.8 Series, Sealed(L-GY)

Terminal Part Information

Terminal Type ID	Terminated Lead	Diagnostic Test Probe	Terminal Removal Tool
I	Not required	J-35616-4A (PU)	No Tool Required

A7 Fuel Tank Fuel Pump Module

Pin	Size	Color	Circuit	Function	Terminal Type ID	Option
1	2.5	GY	120	Fuel Pump Control	I	—
2	2.5	YE / GY	4137	Fuel Pump Supply Voltage Phase 2	I	—
3	2.5	WH / BN	4138	Fuel Pump Supply Voltage Phase 3	I	—
4	0.5	WH	7444	Fuel Pump Assembly Shield Ground	I	—
5	0.5	BU / GN	1936	Primary Fuel Level Sensor Signal	I	—
6	0.5	BK / GN	6281	Fuel Level Sensor Low Reference	I	—
7 - 8	—	—	—	Not Occupied	—	—

A9A Outside Rearview Mirror - Driver

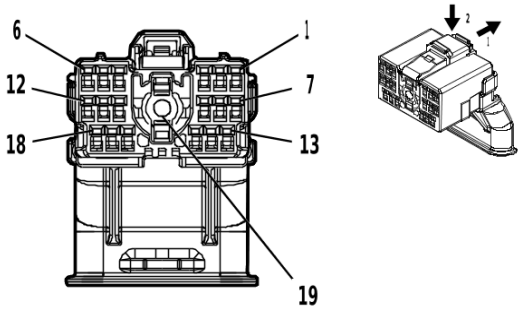

4991775

Connector Part Information

Harness Type: Front Side Door Door Wiring Harness - Driver
OEM Connector: 35077331
Service Connector: Service by Harness - See Part Catalog
Description: 19-Way F 1.2 MCON, Coaxial Series(BK)

Terminal Part Information

Terminal Type ID	Terminated Lead	Diagnostic Test Probe	Terminal Removal Tool
I	Not required	J-35616-16 (L-GN)	No Tool Required
II	Not required	No Tool Required	No Tool Required

A9A Outside Rearview Mirror - Driver

Pin	Size	Color	Circuit	Function	Terminal Type ID	Option
1	0.5	BN / BK	2790	Left Front Mirror Motor Right [+] Left [-] Control	I	—
2	0.5	VT / BU	2788	Left Front Mirror Motor Up [+] Down [-] Control	I	—
3	0.5	WH / GN	2786	Left Front Mirror Motor Fold In Control	I	—
4	0.5	GY / YE	1760	Left Side Object Detection LED Control	I	—
5	0.5 0.5	WH / GN YE / GY	5966 2933	Approach Lamp Control Task Lamp Control Left	I I	DEZ DQS
6	0.5	WH / YE	2792	Left Front Mirror Position Sensor Left [-] Right [+] Signal	I	—
7	0.5	WH	606	Left Outside Rearview Mirror Heater Control	I	—
8	0.5	WH / GY	2114	Left Turn Signal Lamp Control 2	I	—
9	0.5	BK	1550	Ground	I	—
10	0.5	VT / RD	2791	Left Front Mirror Position Sensor High Reference	I	—
11	0.5	GY / BN	2787	Left Front Mirror Position Sensor Up [+] Down [-] Signal	I	—
12	0.5	BK / YE	1691	Automatic Day/Night Mirror Low Reference	I	—
13	0.5 0.5	YE / GY BN / GN	2933 4246	Task Lamp Control Left Identification Lamp Control	I I	DLF/ DEZ DPO/ DQS
14	0.5	YE / BN	2789	Left Front Mirror Motor Common Control	I	—
15	0.5	GY / WH	2785	Left Front Mirror Motor Fold Out Control	I	—
16	0.5	BU / YE	7761	Backup Illumination Lamp Control	I	—
17	0.5	YE / WH	1690	Mirror Dimming Signal	I	—

A9A Outside Rearview Mirror - Driver (cont'd)

Pin	Size	Color	Circuit	Function	Terminal Type ID	Option
18	0.5	BK / BN	673	Left Outside Rearview Mirror Position Sensor Low Reference	I	—
19	0	—	4725	Left Sideview Camera LVDS (Low Voltage Differential Signaling) Coaxial Signal	II	—

A9B Outside Rearview Mirror - Passenger

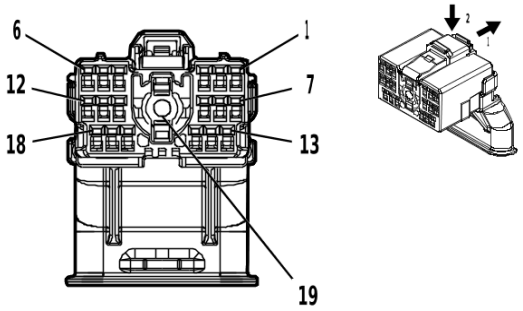

4991775

Connector Part Information

Harness Type: Front Side Door Door Wiring Harness - Passenger
OEM Connector: 35077331
Service Connector: Service by Harness - See Part Catalog
Description: 19-Way F 1.2 MCON, Coaxial Series(BK)

Terminal Part Information

Terminal Type ID	Terminated Lead	Diagnostic Test Probe	Terminal Removal Tool
I	Not required	J-35616-16 (L-GN)	No Tool Required
II	Not required	No Tool Required	No Tool Required

A9B Outside Rearview Mirror - Passenger

Pin	Size	Color	Circuit	Function	Terminal Type ID	Option
1	0.5	GN / BK	2798	Right Front Mirror Motor Right [+] Left [-] Control	I	—
2	0.5	YE / VT	2796	Right Front Mirror Motor Up [+] Down [-] Control	I	—
3	0.5	BU / GY	2794	Right Front Mirror Motor Fold In Control	I	—
4	0.5	GY	1761	Right Side Object Detection LED Control	I	—
5	0.5 0.5	WH / GN YE / WH	5966 2934	Approach Lamp Control Task Lamp Control Right	I I	DEZ DQS
6	0.5	VT / WH	2800	Right Front Mirror Position Sensor Left [-] Right [+] Signal	I	—
7	0.5	BN / VT	607	Right Outside Rearview Mirror Heater Control	I	—
8	0.5	GN / GY	2115	Right Turn Signal Lamp Control 2	I	—
9	0.5	BK	1350	Ground	I	—
10	0.5	YE / RD	2799	Right Front Mirror Position Sensor High Reference	I	—
11	0.5	BU / YE	2795	Right Front Mirror Position Sensor Up [+] Down [-] Signal	I	—
12	0.5	BK / GY	626	Engine Control Vehicle Sensors Low Reference 1	I	—
13	0.5 0.5	YE / WH BN / GN	2934 4246	Task Lamp Control Right Identification Lamp Control	I I	DEZ DQS
14	0.5	WH	2797	Right Front Mirror Motor Common Control	I	—
15	0.5	YE / WH	2793	Right Front Mirror Motor Fold Out Control	I	—
16	0.5	BU / YE	7761	Backup Illumination Lamp Control	I	—
17	0.5	BU / GY	636	Ambient Air Temperature Sensor Signal	I	—

A9B Outside Rearview Mirror - Passenger (cont'd)

Pin	Size	Color	Circuit	Function	Terminal Type ID	Option
18	0.5	BK / GN	675	Right Outside Rearview Mirror Position Sensor Low Reference	I	—
19	0	—	4724	Right Sideview Camera LVDS (Low Voltage Differential Signaling) Coaxial Signal	II	—

A10 Inside Rearview Mirror X1 (DD8/DRZ)

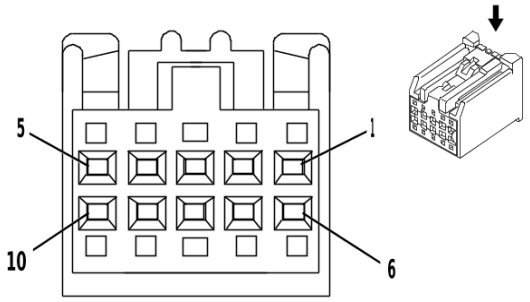

2180211

Connector Part Information

Harness Type: Dome Lamp Wiring Harness
OEM Connector: 13815336
Service Connector: 13577390
Description: 10-Way F 0.64 Kaizen Series(BK)

Terminal Part Information

Terminal Type ID	Terminated Lead	Diagnostic Test Probe	Terminal Removal Tool
I	13575742	J-35616-64B (L-BU)	J-38125-215A

A10 Inside Rearview Mirror X1 (DD8/DRZ)

Pin	Size	Color	Circuit	Function	Terminal Type ID	Option
1	0.5	GN / WH	24	Backup Lamp Control	I	—
2	0.5	VT / BK	339	Run/Crank Ignition 1 Voltage	I	—
3 - 4	—	—	—	Not Occupied	—	—
5	0.5	BK / WH	851	Signal Ground	I	—
6 - 7	—	—	—	Not Occupied	—	—
8	0.35	BK / YE	1691	Automatic Day/Night Mirror Low Reference	I	—
9	0.35	YE / WH	1690	Mirror Dimming Signal	I	—
10	—	—	—	Not Occupied	—	—

A10 Inside Rearview Mirror X2 (DRZ)

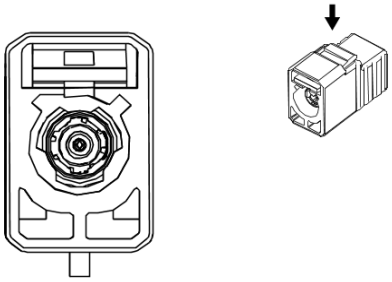

2893647

Connector Part Information

Harness Type: Radio Antenna Cable Extension Cable COAX
OEM Connector: 13581683
Service Connector: Service by Cable Assembly — See Part Catalog
Description: 1-Way F Coax Type(BK)

Terminal Part Information

Terminal Type ID	Terminated Lead	Diagnostic Test Probe	Terminal Removal Tool
I	Not required	No Tool Required	No Tool Required

A10 Inside Rearview Mirror X2 (DRZ)

Pin	Size	Color	Circuit	Function	Terminal Type ID	Option
1	—	WH / WH	2387	Full Display Mirror Rear Camera LVDS (Low Voltage Differential Signaling) Coaxial Signal	I	—
Coax Cable	—	—	—	Not Occupied	—	—

A11 Radio X1 (IOK)

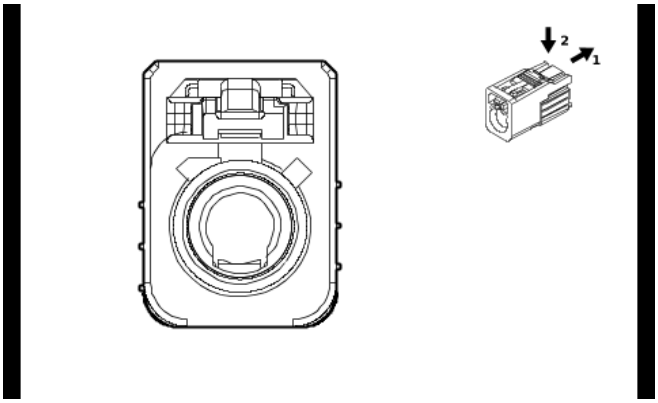

5660978

Connector Part Information

Harness Type: AM FM Cable COAX
OEM Connector: 13516044
Service Connector: Service by Cable Assembly — See Part Catalog
Description: 1-Way F Coax Type(BK)

Terminal Part Information

Terminal Type ID	Terminated Lead	Diagnostic Test Probe	Terminal Removal Tool
I	Not required	No Tool Required	No Tool Required

A11 Radio X1 (IOK)

Pin	Size	Color	Circuit	Function	Terminal Type ID	Option
—	—	Coax Cable	—	(AM/FM) Antenna RF Signal	I	—

A11 Radio X2 (IOK-UE1-UDA)

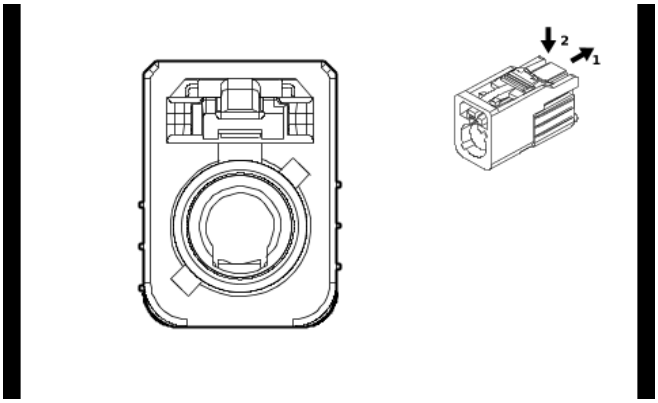

5793980

Connector Part Information

Harness Type: Instrument Panel Wiring Harness COAX
OEM Connector: 33340311
Service Connector: Service by Cable Assembly — See Part Catalog
Description: 1-Way F Coax Type(BU)

Terminal Part Information

Terminal Type ID	Terminated Lead	Diagnostic Test Probe	Terminal Removal Tool
I	Not required	No Tool Required	No Tool Required

A11 Radio X2 (IOK-UE1-UDA)

Pin	Size	Color	Circuit	Function	Terminal Type ID	Option
—	—	Coax Cable	—	(GPS only) Coaxial Antenna GPS Signal	I	—

A11 Radio X3 (IOK)

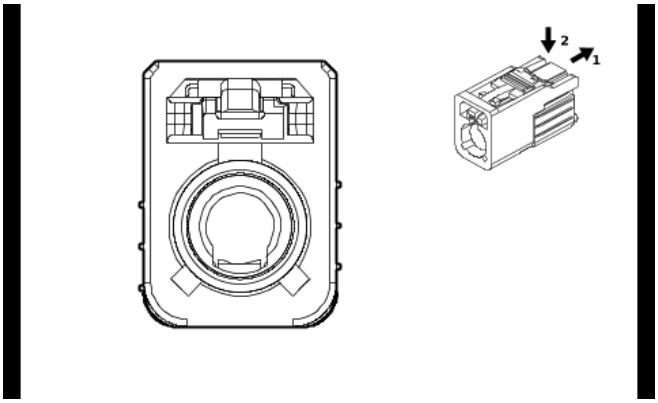

5794617

Connector Part Information

Harness Type: Instrument Panel Wiring Harness COAX
OEM Connector: 33340318
Service Connector: Service by Cable Assembly — See Part Catalog
Description: 1-Way F Coax Type(CU)

Terminal Part Information

Terminal Type ID	Terminated Lead	Diagnostic Test Probe	Terminal Removal Tool
I	Not required	No Tool Required	No Tool Required

A11 Radio X3 (IOK)

Pin	Size	Color	Circuit	Function	Terminal Type ID	Option
—	—	Coax Cable	—	(XM +/-HD) Coaxial Antenna XM Signal	I	—

A11 Radio X5 (IOK)

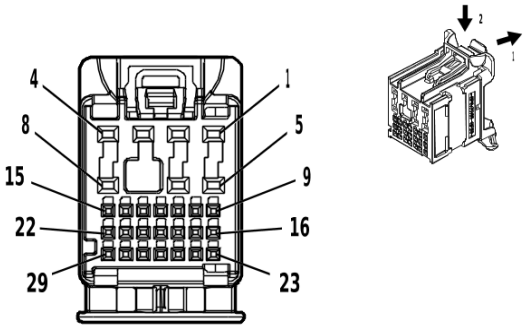

4496253

Connector Part Information

Harness Type: Instrument Panel Wiring Harness
OEM Connector: 35364134
Service Connector: 13534974
Description: 29-Way F 0.5 NANO, 1.2 MCON, stAK50h Series(BK)

Terminal Part Information

Terminal Type ID	Terminated Lead	Diagnostic Test Probe	Terminal Removal Tool
I	19370262	EL-35616-58 (BK)	EL-38125-58
II	84729890	J-35616-12 (BU)	J-38125-553

A11 Radio X5 (IOK)

Pin	Size	Color	Circuit	Function	Terminal Type ID	Option
1	0.5	RD / YE	2340	Battery Positive Voltage	II	—
2	—	—	—	Not Occupied	—	—
3	0.75	BK / WH	1051	Signal Ground	II	—
4 - 7	—	—	—	Not Occupied	—	—
8	0.75	GN / BK	116	Left Rear Speaker [-] Control	II	—
9	0.35 0.35	BU GY / YE	655 5149	Cellular Telephone Microphone Signal Voice Recognition Audio Signal	I I	(- GF2- GF5- GFF- GPZ) + (IOR- UDA- UE1) (IOR+ UDA) / (IOR+ UE1)
10	0.35 0.35	BK / BN BK / GY	654 5152	Cellular Telephone Microphone Low Reference Voice Recognition Audio [-] Control	I I	(- GF2- GF5- GFF- GPZ) + (IOR- UDA- UE1) (IOR+ UDA) / (IOR+ UE1)
11	0.35	VT / YE	7043	Microphone [+] Signal	I	—
12	0.35	BU / BK	7044	Microphone [-] Signal	I	—
13 - 29	—	—	—	Not Occupied	—	—

A11 Radio X6 (IOK)

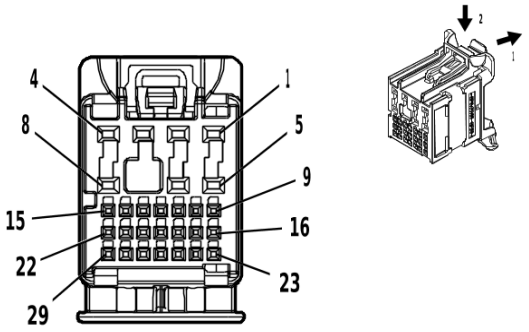

4578560

Connector Part Information

Harness Type: Instrument Panel Wiring Harness
OEM Connector: 35364137
Service Connector: 13534971
Description: 29-Way F 0.5 NANO, 1.2 MCON, stAK50h Series(GY)

Terminal Part Information

Terminal Type ID	Terminated Lead	Diagnostic Test Probe	Terminal Removal Tool
I	19370262	EL-35616-58 (BK)	EL-38125-58
II	84729890	J-35616-12 (BU)	J-38125-553

A11 Radio X6 (IOK)

Pin	Size	Color	Circuit	Function	Terminal Type ID	Option
1	0.75	GN	199	Left Rear Speaker [+] Control	II	—
2	0.75	BU	201	Left Front Speaker 1 [+] Control	II	—
3	0.75	YE / BK	117	Right Front Speaker [-] Control 1	II	—
4	0.75	BU / BK	115	Right Rear Speaker [-] Control	II	—
5	0.75	BN / BU	118	Left Front Speaker [-] Control 1	II	—
6	0.75	YE	200	Right Front Speaker 1 [+] Control	II	—
7	—	—	—	Not Occupied	—	—
8	0.75	WH	46	Right Rear Speaker [+] Control	II	—
9	0.35	BU / WH	4985	AUTOSAR CAN Bus [+] 5 Serial Data	I	—
10	0.35	BU / YE	4984	AUTOSAR CAN Bus [-] 5 Serial Data	I	—
11 - 12	—	—	—	Not Occupied	—	—
13	0.35	GN / WH	24	Backup Lamp Control	I	—
14 - 29	—	—	—	Not Occupied	—	—

A11 Radio X7 (IOK)

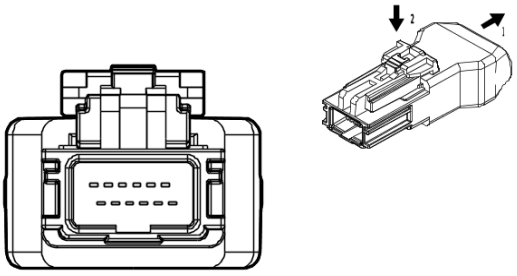

4584321

Connector Part Information

Harness Type: Instrument Panel Wiring Harness
OEM Connector: VP000124
Service Connector: Service by Cable Assembly — See Part Catalog
Description: 12-Way M 2.0 HSAL-2 Series(GY)

Terminal Part Information

Terminal Type ID	Terminated Lead	Diagnostic Test Probe	Terminal Removal Tool
I	Not required	No Tool Required	No Tool Required

A11 Radio X7 (IOK)

Pin	Size	Color	Circuit	Function	Terminal Type ID	Option
1	—	—	7853	Center Stack LVDS (Low Voltage Differential Signaling) Low Reference	I	—
2	—	—	7854	Center Stack LVDS (Low Voltage Differential Signaling) Signal [+]	I	—
3	—	—	7855	Center Stack LVDS (Low Voltage Differential Signaling) Signal [-]	I	—
4	—	—	7847	Center Stack LVDS (Low Voltage Differential Signaling) 2 Low Reference	I	—
5	—	—	7848	Center Stack LVDS (Low Voltage Differential Signaling) 2 Signal [+]	I	—
6	—	—	7849	Center Stack LVDS (Low Voltage Differential Signaling) 2 Signal [-]	I	—
7 - 12	—	—	—	Not Occupied	—	—

A11 Radio X8 (IOK)

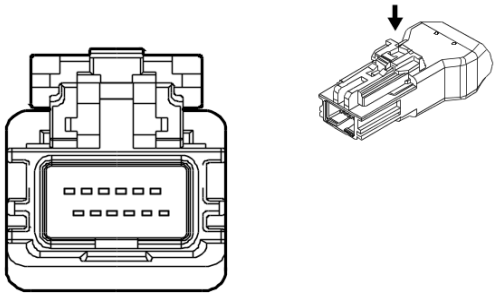

4527210

Connector Part Information

Harness Type: Instrument Panel Wiring Harness
OEM Connector: VP000119
Service Connector: Service by Cable Assembly — See Part Catalog
Description: 12-Way M 2.0 HSAL-2 Series(BK)

Terminal Part Information

Terminal Type ID	Terminated Lead	Diagnostic Test Probe	Terminal Removal Tool
I	Not required	No Tool Required	No Tool Required

A11 Radio X8 (IOK)

Pin	Size	Color	Circuit	Function	Terminal Type ID	Option
1 - 6	—	—	—	Not Occupied	—	—
7	—	—	7899	Auxiliary Audio/Video Jack USB Serial Data Supply Voltage	I	—
8	—	—	7897	Auxiliary Audio/Video Jack USB [-] Serial Data	I	—
9	—	—	7896	Auxiliary Audio/Video Jack USB [+] Serial Data	I	—
10	—	—	7898	Auxiliary Audio/Video Jack USB Low Reference	I	—
11 - 12	—	—	—	Not Occupied	—	—

A11 Radio X9 (IOK)

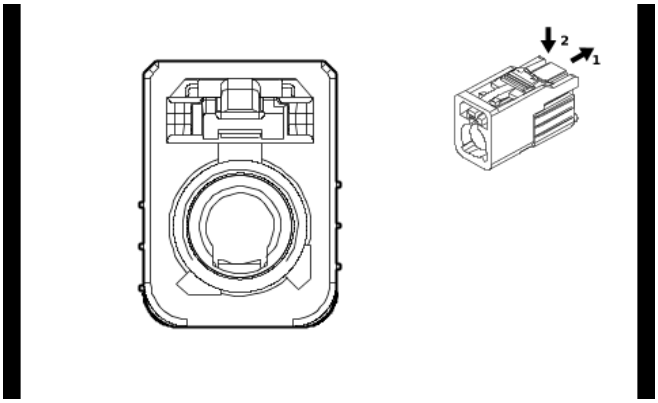

5191842

Connector Part Information

Harness Type: Instrument Panel Wiring Harness COAX
OEM Connector: 33340320
Service Connector: Service by Cable Assembly — See Part Catalog
Description: 1-Way F Coax Type(OG)

Terminal Part Information

Terminal Type ID	Terminated Lead	Diagnostic Test Probe	Terminal Removal Tool
I	Not required	No Tool Required	No Tool Required

A11 Radio X9 (IOK)

Pin	Size	Color	Circuit	Function	Terminal Type ID	Option
—	—	Coax Cable	—	Video Processing Module Coaxial Video Signal	I	—

A11 Radio X10 (IOK)

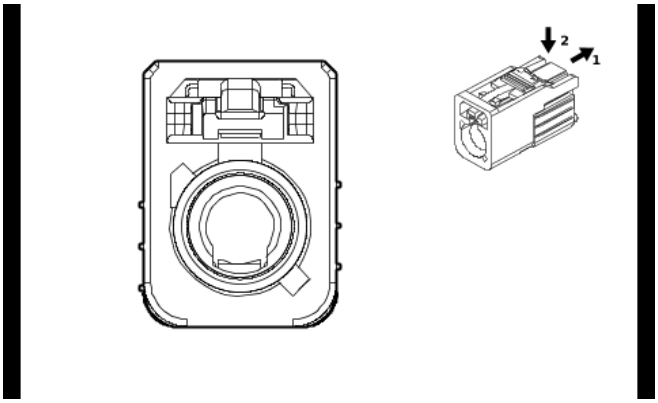

5518456

Connector Part Information

Harness Type: Instrument Panel Wiring Harness COAX
OEM Connector: 33340317
Service Connector: Service by Cable Assembly — See Part Catalog
Description: 1-Way F Coax Type(BG)

Terminal Part Information

Terminal Type ID	Terminated Lead	Diagnostic Test Probe	Terminal Removal Tool
I	Not required	No Tool Required	No Tool Required

A11 Radio X10 (IOK)

Pin	Size	Color	Circuit	Function	Terminal Type ID	Option
—	—	Coax Cable	—	WiFi Antenna Coaxial Signal	I	—

A11 Radio X11 (IOK)

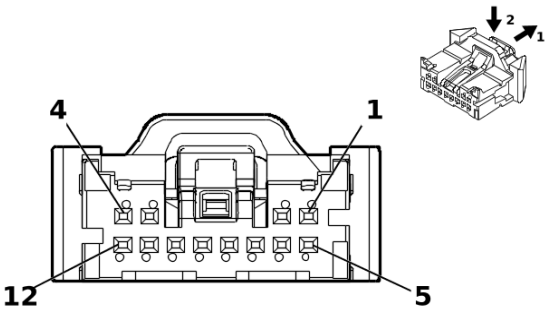

5360826

Connector Part Information

Harness Type: Instrument Panel Wiring Harness
OEM Connector: 35068239
Service Connector: 13529935
Description: 12-Way F 050 CTS Series(BK)

Terminal Part Information

Terminal Type ID	Terminated Lead	Diagnostic Test Probe	Terminal Removal Tool
I	84944580	EL-35616-58 (BK)	EL-38125-58

A11 Radio X11 (IOK)

Pin	Size	Color	Circuit	Function	Terminal Type ID	Option
1 - 2	—	—	—	Not Occupied	—	—
3	0.35	YE	4758	Ethernet Bus 2 [+]	I	—
4	0.35	BU	4757	Ethernet Bus 2 [-]	I	—
5 - 7	—	—	—	Not Occupied	—	—
8	0.35	YE	7215	Ethernet Bus 6 [+]	I	—
9	0.35	GN	7214	Ethernet Bus 6 [-]	I	—
10	—	—	—	Not Occupied	—	—
11	0.35	BN	7211	Ethernet Bus 4 [+]	I	—
12	0.35	GY	7210	Ethernet Bus 4 [-]	I	—

A11 Radio X1 (IOR)

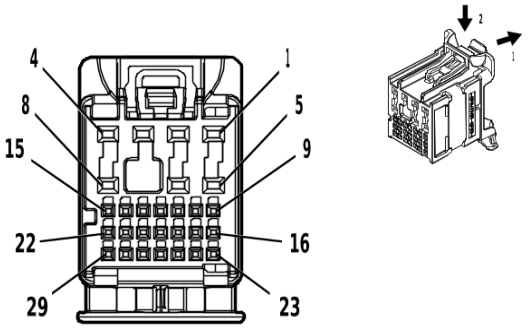

4584346

Connector Part Information

Harness Type: Instrument Panel Wiring Harness
OEM Connector: 35364128
Service Connector: 13534972
Description: 29-Way F 0.5 NANO, 1.2 MCON Series(GN)

Terminal Part Information

Terminal Type ID	Terminated Lead	Diagnostic Test Probe	Terminal Removal Tool
I	19370262	EL-35616-58 (BK)	EL-38125-58
II	84729890	J-35616-12 (BU)	J-38125-553

A11 Radio X1 (IOR)

Pin	Size	Color	Circuit	Function	Terminal Type ID	Option
1	0.75	RD / GY	2840	Battery Positive Voltage	II	—
2	0.75	RD / GY	2840	Battery Positive Voltage	II	—
3	0.75	BK / WH	1051	Signal Ground	II	—
4	0.35	BU / RD	11246	Infotainment Display 5 Volt Reference	II	—
5	0.35	BK / WH	11252	Infotainment Display Low Reference	II	—
6	0.75	BK / WH	1051	Signal Ground	II	—
7	—	—	—	Not Occupied	—	—
8	0.75	GN / BK	116	Left Rear Speaker [-] Control	II	—
9	0.35	GY / BU	11247	Infotainment Display LCD Enable Signal	I	—
10	—	—	—	Not Occupied	—	—
11	0.35	GN / WH	24	Backup Lamp Control	I	—
12 - 14	—	—	—	Not Occupied	—	—
15	0.35	BU / GY	11244	Radio Switch Dimming Control	I	—
16	—	—	—	Not Occupied	—	—
17	0.35	BU / WH	4985	AUTOSAR CAN Bus [+] 5 Serial Data	I	—
18	0.35	BU / YE	4984	AUTOSAR CAN Bus [-] 5 Serial Data	I	—
19 - 20	—	—	—	Not Occupied	—	—
21	0.35	GY / VT	11249	Infotainment Display Backlight Enable Control	I	—
22	0.35	BU / GN	11248	Infotainment Display Backlight Dimming Control	I	—
23	—	—	—	Not Occupied	—	—
24	0.35	BN / WH	11233	Radio Switch Power ON/OFF Switch Signal	I	—

A11 Radio X1 (IOR) (cont'd)

Pin	Size	Color	Circuit	Function	Terminal Type ID	Option
25	0.35	VT / WH	11245	Radio Switch Buttons Signal	I	—
26	0.35	BU	11235	Radio Switch Volume Up Signal	I	—
27	0.35	GY / BN	11234	Radio Switch Volume Down Signal	I	—
28 - 29	—	—	—	Not Occupied	—	—

A11 Radio X2 (IOR)

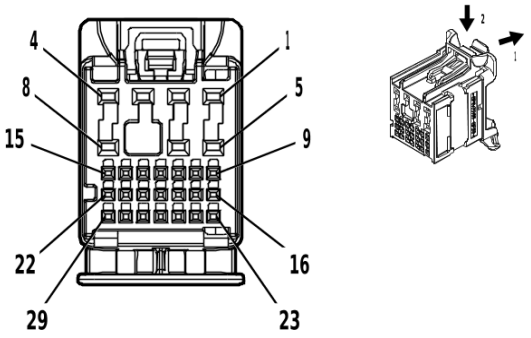

4584398

Connector Part Information

Harness Type: Instrument Panel Wiring Harness
OEM Connector: 35364129
Service Connector: 13534973
Description: 29-Way F 0.5 NANO, 1.2 MCON, stAK50h Series(GY)

Terminal Part Information

Terminal Type ID	Terminated Lead	Diagnostic Test Probe	Terminal Removal Tool
I	19370262	EL-35616-58 (BK)	EL-38125-58
II	84729890	J-35616-12 (BU)	J-38125-553

A11 Radio X2 (IOR)

Pin	Size	Color	Circuit	Function	Terminal Type ID	Option
1	0.75	GN	199	Left Rear Speaker [+] Control	II	—
2	0.75	BU	201	Left Front Speaker 1 [+] Control	II	—
3	0.75	YE	200	Right Front Speaker 1 [+] Control	II	—
4	0.75	BU / BK	115	Right Rear Speaker [-] Control	II	—
5	0.75	BN / BU	118	Left Front Speaker [-] Control 1	II	—
6	0.75	YE / BK	117	Right Front Speaker [-] Control 1	II	—
7	—	—	—	Not Occupied	—	—
8	0.75	WH	46	Right Rear Speaker [+] Control	II	—
9	0.35 0.35	BK / BN BK / GY	654 5152	Cellular Telephone Microphone Low Reference Voice Recognition Audio [-] Control	I I	(- GF2- GF5- GFF- GPZ) + (IOR- UDA- UE1) IOR+ UDA/ IOR + UE1
10	0.35 0.35	BU GY / YE	655 5149	Cellular Telephone Microphone Signal Voice Recognition Audio Signal	I I	(- GF2- GF5- GFF- GPZ) + (IOR- UDA- UE1) IOR+ UDA/ IOR + UE1
11 - 29	—	—	—	Not Occupied	—	—

A11 Radio X3 (IOR)

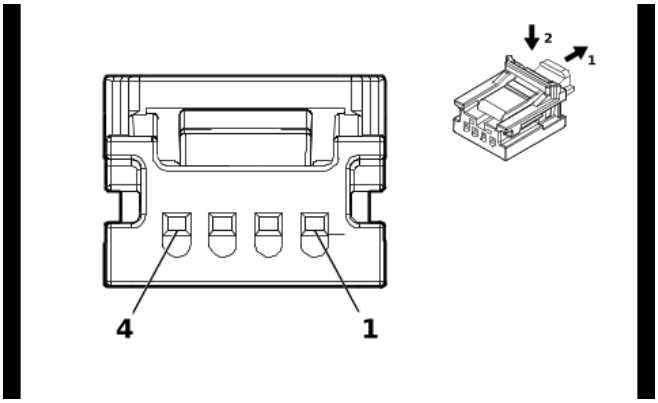

5493278

Connector Part Information

Harness Type: Instrument Panel Wiring Harness
OEM Connector: 33228283
Service Connector: 19354840
Description: 4-Way F Mini 50 Series(BK)

Terminal Part Information

Terminal Type ID	Terminated Lead	Diagnostic Test Probe	Terminal Removal Tool
I	Not required	EL-35616-58 (BK)	No Tool Required

A11 Radio X3 (IOR)

Pin	Size	Color	Circuit	Function	Terminal Type ID	Option
1	—	—	—	Not Occupied	—	—
2	0.35	YE	4758	Ethernet Bus 2 [+]	I	—
3	0.35	BU	4757	Ethernet Bus 2 [-]	I	—
4	—	—	—	Not Occupied	—	—

A11 Radio X4 (IOR)

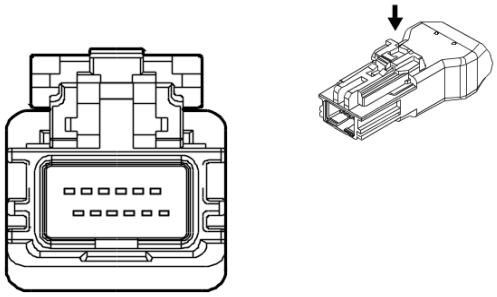

4527210

Connector Part Information

Harness Type: Instrument Panel Wiring Harness
OEM Connector: 33358813
Service Connector: Service by Cable Assembly — See Part Catalog
Description: 12-Way M 2.0 HSAL-2 Series(BK)

Terminal Part Information

Terminal Type ID	Terminated Lead	Diagnostic Test Probe	Terminal Removal Tool
I	Not required	No Tool Required	No Tool Required

A11 Radio X4 (IOR)

Pin	Size	Color	Circuit	Function	Terminal Type ID	Option
1	—	—	4844	Radio LVDS (Low Voltage Differential Signaling) Low Reference	I	—
2	—	—	4845	Radio LVDS (Low Voltage Differential Signaling) Signal [+]	I	—
3	—	—	4846	Radio LVDS (Low Voltage Differential Signaling) Signal [-]	I	—
4 - 6	—	—	—	Not Occupied	—	—
7	—	—	7899	Auxiliary Audio/Video Jack USB Serial Data Supply Voltage	I	—
8	—	—	—	Not Occupied	—	—
9	—	—	7896	Auxiliary Audio/Video Jack USB [+] Serial Data	I	—
10	—	—	7897	Auxiliary Audio/Video Jack USB [-] Serial Data	I	—
11	—	—	—	Not Occupied	—	—
12	—	—	7898	Auxiliary Audio/Video Jack USB Low Reference	I	—

A11 Radio X5 (IOR)

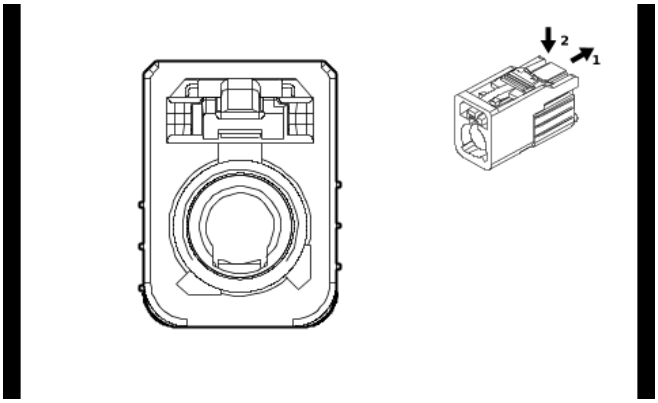

5191842

Connector Part Information

Harness Type: Instrument Panel Wiring Harness COAX
OEM Connector: 33340320
Service Connector: Service by Cable Assembly — See Part Catalog
Description: 1-Way F Coax Type(OG)

Terminal Part Information

Terminal Type ID	Terminated Lead	Diagnostic Test Probe	Terminal Removal Tool
I	Not required	No Tool Required	No Tool Required

A11 Radio X5 (IOR)

Pin	Size	Color	Circuit	Function	Terminal Type ID	Option
—	—	Coax Cable	—	Rear Vision Camera Coaxial Video Signal	I	—

A11 Radio X6 (IOR)

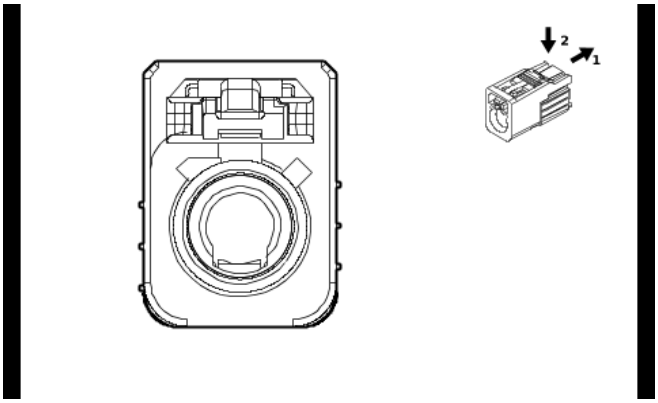

5660978

Connector Part Information

Harness Type: AM FM Cable COAX
OEM Connector: 13516044
Service Connector: Service by Cable Assembly — See Part Catalog
Description: 1-Way F Coax Type(BK)

Terminal Part Information

Terminal Type ID	Terminated Lead	Diagnostic Test Probe	Terminal Removal Tool
I	Not required	No Tool Required	No Tool Required

A11 Radio X6 (IOR)

Pin	Size	Color	Circuit	Function	Terminal Type ID	Option
—	—	Coax Cable	—	(AM/FM) Antenna RF Signal	I	—

A11 Radio X7 (IOR)

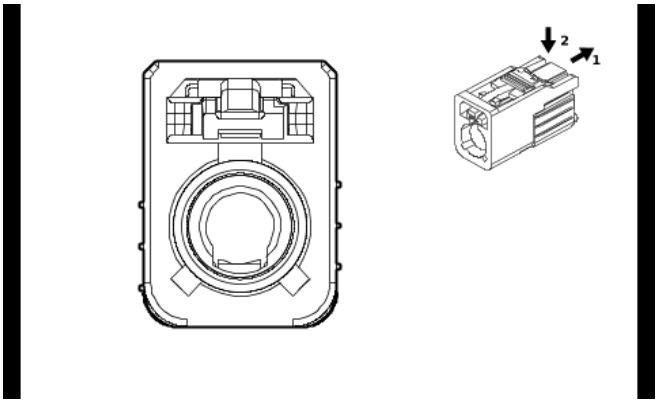

5794617

Connector Part Information

Harness Type: Instrument Panel Wiring Harness COAX
OEM Connector: 33340318
Service Connector: Service by Cable Assembly — See Part Catalog
Description: 1-Way F Coax Type(CU)

Terminal Part Information

Terminal Type ID	Terminated Lead	Diagnostic Test Probe	Terminal Removal Tool
I	Not required	No Tool Required	No Tool Required

A11 Radio X7 (IOR)

Pin	Size	Color	Circuit	Function	Terminal Type ID	Option
—	—	Coax Cable	—	(XM +/-HD) Coaxial Antenna XM Signal	I	—

A11 Radio X8 (IOR)

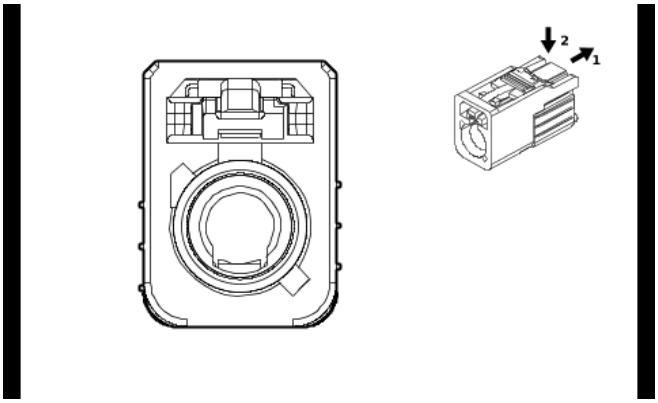

5518456

Connector Part Information

Harness Type: Instrument Panel Wiring Harness COAX
OEM Connector: 33340317
Service Connector: Service by Cable Assembly — See Part Catalog
Description: 1-Way F Coax Type(BG)

Terminal Part Information

Terminal Type ID	Terminated Lead	Diagnostic Test Probe	Terminal Removal Tool
I	Not required	No Tool Required	No Tool Required

A11 Radio X8 (IOR)

Pin	Size	Color	Circuit	Function	Terminal Type ID	Option
—	—	Coax Cable	—	WiFi Antenna Coaxial Signal	I	—

A16 Transfer Case Four Wheel Drive Actuator (NP0/NQH)

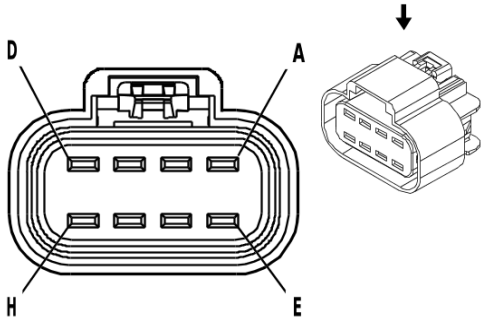

646372

Connector Part Information

Harness Type: Engine Wiring Harness
OEM Connector: 13538370
Service Connector: 19369184
Description: 8-Way F 280 GT Series, Sealed(BK)

Terminal Part Information

Terminal Type ID	Terminated Lead	Diagnostic Test Probe	Terminal Removal Tool
I	Not required	J-35616-4A (PU)	No Tool Required

A16 Transfer Case Four Wheel Drive Actuator (NP0/NQH)

Pin	Size	Color	Circuit	Function	Terminal Type ID	Option
A	2.5	YE / GY	1552	Transfer Case Motor Clockwise Control	I	—
B	0.75	BU	8013	Transfer Case Lock Solenoid Control 2	I	—
C	0.75	YE / BN	1569	Transfer Case Lock Solenoid Valve Control	I	—
D	2.5	YE / VT	1553	Transfer Case Motor Counter Clockwise Control	I	—
E	0.5	YE	7474	Incremental Encoder Direction Signal	I	—
F	0.5	BU / GY	7473	Incremental Encoder Impulse Signal	I	—
G	0.5	WH / GN	7475	Incremental Encoder Sensor 8V Reference	I	—
H	0.5	VT	7476	Incremental Encoder Sensor Low Reference	I	—

A22 Radio Control X1 (IOK)

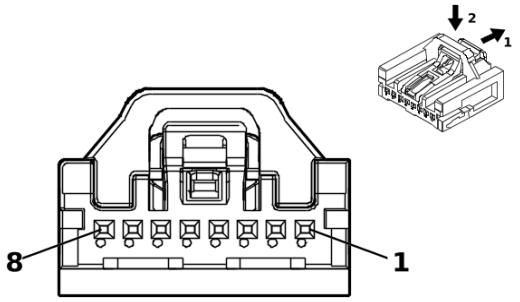

5200269

Connector Part Information

Harness Type: Instrument Panel Wiring Harness
OEM Connector: 35068228
Service Connector: 84769201
Description: 8-Way F Mini 50 Series(BK)

Terminal Part Information

Terminal Type ID	Terminated Lead	Diagnostic Test Probe	Terminal Removal Tool
I	Not required	EL-35616-58 (BK)	No Tool Required

A22 Radio Control X1 (IOK)

Pin	Size	Color	Circuit	Function	Terminal Type ID	Option
1	0.35	RD / WH	1340	Battery Positive Voltage	I	—
2 - 7	—	—	—	Not Occupied	—	—
8	0.35	BK / WH	1051	Signal Ground	I	—

A22 Radio Control X2 (IOK)

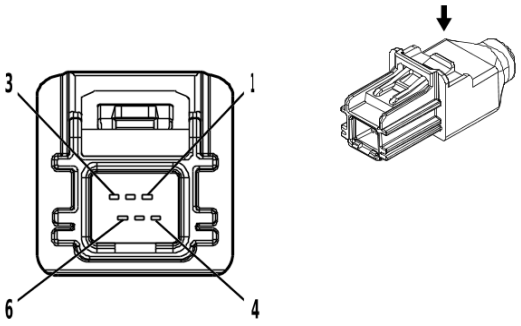

4806625

Connector Part Information

Harness Type: Instrument Panel Wiring Harness
OEM Connector: VP000160
Service Connector: Service by Cable Assembly — See Part Catalog
Description: 6-Way M HSAL-2 Series(BK)

Terminal Part Information

Terminal Type ID	Terminated Lead	Diagnostic Test Probe	Terminal Removal Tool
I	Not required	No Tool Required	No Tool Required

A22 Radio Control X2 (IOK)

Pin	Size	Color	Circuit	Function	Terminal Type ID	Option
1	—	—	7853	Center Stack LVDS (Low Voltage Differential Signaling) Low Reference	I	—
2	—	—	7854	Center Stack LVDS (Low Voltage Differential Signaling) Signal [+]	I	—
3	—	—	7855	Center Stack LVDS (Low Voltage Differential Signaling) Signal [-]	I	—
4	—	—	7848	Center Stack LVDS (Low Voltage Differential Signaling) 2 Signal [+]	I	—
5	—	—	7849	Center Stack LVDS (Low Voltage Differential Signaling) 2 Signal [-]	I	—
6	—	—	7847	Center Stack LVDS (Low Voltage Differential Signaling) 2 Low Reference	I	—

A23D Front Side Door Latch - Driver

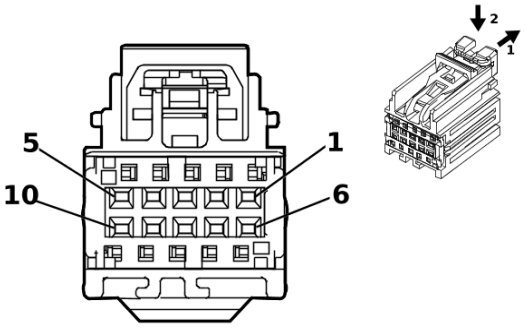

4622549

Connector Part Information

Harness Type: Front Side Door Door Wiring Harness - Driver
OEM Connector: 33320811
Service Connector: Service by Harness - See Part Catalog
Description: 10-Way F 0.64 YESC Kaizen Series(GN)

Terminal Part Information

Terminal Type ID	Terminated Lead	Diagnostic Test Probe	Terminal Removal Tool
I	Not required	J-35616-64B (L-BU)	No Tool Required

A23D Front Side Door Latch - Driver

Pin	Size	Color	Circuit	Function	Terminal Type ID	Option
1	0.5	GY	745	Left Front Door Ajar Switch Signal	I	—
2	0.5	VT / GY	126	Left Front Door Open Switch Signal	I	—
3	0.5	BK	1550	Ground	I	—
4	0.5	WH / VT	4258	Left Front Door Lock Status Signal	I	—
5 - 6	—	—	—	Not Occupied	—	—
7	0.75	GY	2681	Left Front Door Lock Actuator Lock Control	I	—
8	0.75	WH	2679	Lock Actuators Unlock Control 1	I	—
9 - 10	—	—	—	Not Occupied	—	—

A23LR Rear Side Door Latch - Left (Extended Cab/Crew Cab)

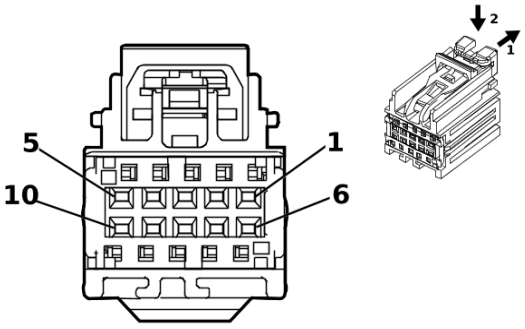

4622549

Connector Part Information

Harness Type: Rear Side Door Door Wiring Harness - Left
OEM Connector: 33320811
Service Connector: Service by Harness - See Part Catalog
Description: 10-Way F 0.64 YESC Kaizen Series(GN)

Terminal Part Information

Terminal Type ID	Terminated Lead	Diagnostic Test Probe	Terminal Removal Tool
I	Not required	J-35616-64B (L-BU)	No Tool Required

A23LR Rear Side Door Latch - Left (Extended Cab/Crew Cab)

Pin	Size	Color	Circuit	Function	Terminal Type ID	Option
1	0.5	GY	747	Left Rear Door Ajar Switch Signal	I	—
2	—	—	—	Not Occupied	—	—
3	0.5	BK	1550	Ground	I	—
4 - 6	—	—	—	Not Occupied	—	—
7	0.75	BU / YE	1091	Left Rear Door Lock Actuator Lock Control	I	—
8	0.75	WH	2679	Lock Actuators Unlock Control 1	I	—
9 - 10	—	—	—	Not Occupied	—	—

A23P Front Side Door Latch - Passenger

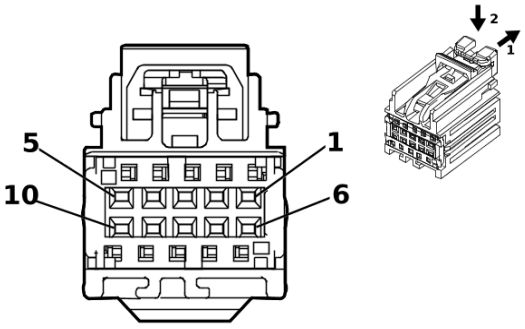

4622549

Connector Part Information

Harness Type: Front Side Door Door Wiring Harness - Passenger
OEM Connector: 33320811
Service Connector: Service by Harness - See Part Catalog
Description: 10-Way F 0.64 YESC Kaizen Series(GN)

Terminal Part Information

Terminal Type ID	Terminated Lead	Diagnostic Test Probe	Terminal Removal Tool
I	Not required	J-35616-64B (L-BU)	No Tool Required

A23P Front Side Door Latch - Passenger

Pin	Size	Color	Circuit	Function	Terminal Type ID	Option
1 - 2	—	—	—	Not Occupied	—	—
3	0.5	BK	1350	Ground	I	—
4	—	—	—	Not Occupied	—	—
5	0.5	GY	746	Right Front Door Ajar Switch Signal	I	—
6 - 7	—	—	—	Not Occupied	—	—
8	0.75	GY / BK	2680	Lock Actuators Unlock Control 2	I	—
9	0.75	YE / GN	2682	Right Front Door Lock Actuator Lock Control	I	—
10	—	—	—	Not Occupied	—	—

A23RR Rear Side Door Latch - Right (Extended Cab/Crew Cab)

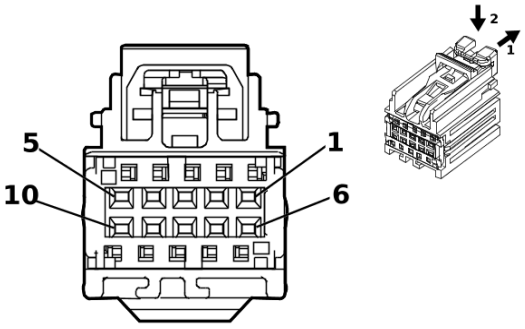

4622549

Connector Part Information

Harness Type: Rear Side Door Door Wiring Harness - Right
OEM Connector: 33320811
Service Connector: Service by Harness - See Part Catalog
Description: 10-Way F 0.64 YESC Kaizen Series(GN)

Terminal Part Information

Terminal Type ID	Terminated Lead	Diagnostic Test Probe	Terminal Removal Tool
I	Not required	J-35616-64B (L-BU)	No Tool Required

A23RR Rear Side Door Latch - Right (Extended Cab/Crew Cab)

Pin	Size	Color	Circuit	Function	Terminal Type ID	Option
1 - 2	—	—	—	Not Occupied	—	—
3	0.5	BK	1350	Ground	I	—
4	—	—	—	Not Occupied	—	—
5	0.5	GY	748	Right Rear Door Ajar Switch Signal	I	—
6 - 7	—	—	—	Not Occupied	—	—
8	0.75	GY / BK	2680	Lock Actuators Unlock Control 2	I	—
9	0.75	VT / WH	1094	Right Rear Door Lock Actuator Lock Control	I	—
10	—	—	—	Not Occupied	—	—

A24D Front Side Door Outside Handle - Left

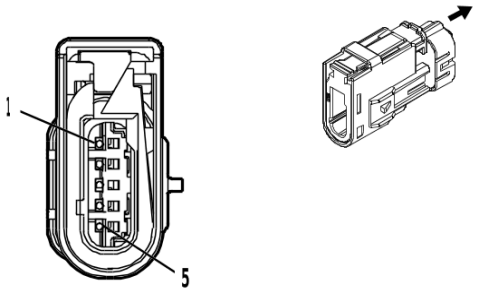

4808321

Connector Part Information

Harness Type: Front Side Door Door Wiring Harness - Driver
OEM Connector: 35028909
Service Connector: Service by Harness - See Part Catalog
Description: 5-Way M 1.2 Series, Sealed(NA)

Terminal Part Information

Terminal Type ID	Terminated Lead	Diagnostic Test Probe	Terminal Removal Tool
I	Not required	J-35616-17 (L-GN)	No Tool Required

A24D Front Side Door Outside Handle - Left

Pin	Size	Color	Circuit	Function	Terminal Type ID	Option
1	0.5	BU	2675	Left Front Exterior Door Handle Switch Unlock Signal	I	—
2	0.5	VT	4301	Passive Entry Left Front Antenna Signal High	I	—
3	—	—	—	Not Occupied	—	—
4	0.5	VT / GY	4302	Passive Entry Left Front Antenna Signal Low	I	—
5	0.5	BK / WH	1551	Signal Ground	I	—

A24P Front Side Door Outside Handle - Right

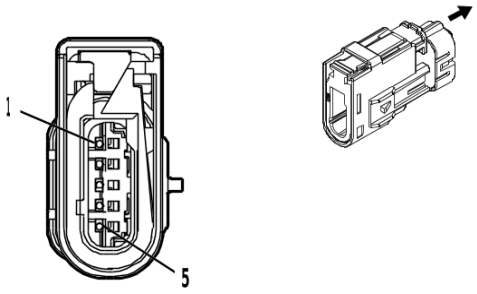

4808321

Connector Part Information

Harness Type: Front Side Door Door Wiring Harness - Passenger
OEM Connector: 35028909
Service Connector: Service by Harness - See Part Catalog
Description: 5-Way M 1.2 Series, Sealed(NA)

Terminal Part Information

Terminal Type ID	Terminated Lead	Diagnostic Test Probe	Terminal Removal Tool
I	Not required	J-35616-17 (L-GN)	No Tool Required

A24P Front Side Door Outside Handle - Right

Pin	Size	Color	Circuit	Function	Terminal Type ID	Option
1	0.5	GY / VT	2676	Right Front Door Exterior Switch Unlock Signal	I	—
2	0.5	GN / YE	4303	Passive Entry Right Front Door Antenna Signal High	I	—
3	—	—	—	Not Occupied	—	—
4	0.5	GN / BK	4304	Passive Entry Right Front Door Antenna Signal Low	I	—
5	0.5	BK / WH	1451	Signal Ground	I	—

A26 Heater and Air Conditioning User Interface Control - Front

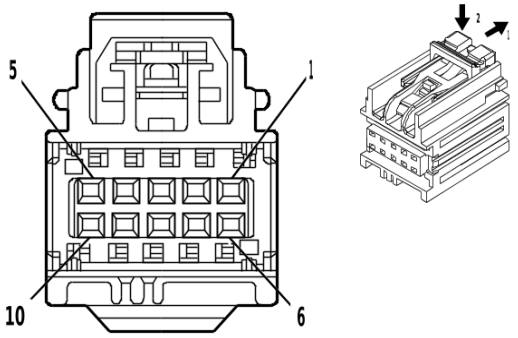

4891168

Connector Part Information

Harness Type: Instrument Panel Wiring Harness
OEM Connector: 33315379
Service Connector: 13509649
Description: 10-Way F 0.64 YESC Kaizen Series(NA)

Terminal Part Information

Terminal Type ID	Terminated Lead	Diagnostic Test Probe	Terminal Removal Tool
I	19300629	J-35616-64B (L-BU)	J-38125-215A

A26 Heater and Air Conditioning User Interface Control - Front

Pin	Size	Color	Circuit	Function	Terminal Type ID	Option
1	0.5	RD / WH	1340	Battery Positive Voltage	I	—
2	—	—	—	Not Occupied	—	—
3	0.35	BU / WH	4985	AUTOSAR CAN Bus [+] 5 Serial Data	I	—
4	0.35	BU / WH	4985	AUTOSAR CAN Bus [+] 5 Serial Data	I	—
5	—	—	—	Not Occupied	—	—
6	0.35	GY / GN	4636	HVAC System Enable Signal	I	—
7	—	—	—	Not Occupied	—	—
8	0.35	BU / YE	4984	AUTOSAR CAN Bus [-] 5 Serial Data	I	—
9	0.35	BU / YE	4984	AUTOSAR CAN Bus [-] 5 Serial Data	I	—
10	0.5	BK / WH	851	Signal Ground	I	—

A38 Reductant Tank Fluid Supply Pump Module (LM2)

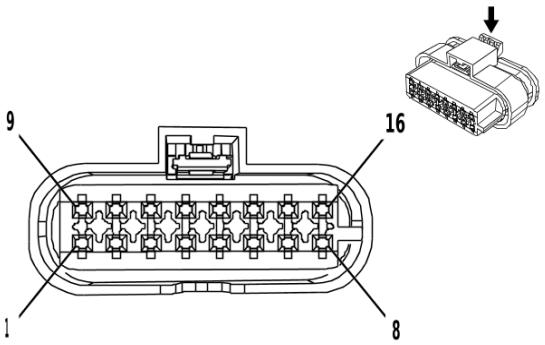

4259227

Connector Part Information

Harness Type: Emission Reduction Fluid Tank Reservoir Wire Harness
OEM Connector: 33210848
Service Connector: Service by Harness - See Part Catalog
Description: 16-Way F 1.2 MLK Series, Sealed(BK)

Terminal Part Information

Terminal Type ID	Terminated Lead	Diagnostic Test Probe	Terminal Removal Tool
I	Not required	J-35616-16 (L-GN)	No Tool Required
II	Not required	Not Available	No Tool Required

A38 Reductant Tank Fluid Supply Pump Module (LM2)

Pin	Size	Color	Circuit	Function	Terminal Type ID	Option
1	0.5	BK	3244	Diesel Exhaust Fluid Tank Temperature Sensor Signal	II	—
2	0.5	BN	3245	Diesel Exhaust Fluid Tank Temperature Sensor Low Reference	II	—
3	0.5	BU	3107	Diesel Exhaust Fluid Pressure Sensor Low Reference	II	—
4	0.5	BU	3108	Diesel Exhaust Fluid Pressure Sensor Signal	II	—
5	0.5	BN	3106	Diesel Exhaust Fluid Pressure Sensor 5 Volt Reference	II	—
6	—	—	—	Not Occupied	—	—
7	1.0	WH	3103	Diesel Exhaust Fluid Smart Pump Control	I	—
8	1.0	BN	3875	Diesel Exhaust Fluid Smart Pump Supply Voltage Phase 2	I	—
9	1.0	YE	3677	Diesel Exhaust Fluid Reservoir Heater Control	I	—
10	1.0	BN	3676	Diesel Exhaust Fluid Heating Tank 2 Heater Control	I	—
11	1.0	BU	4318	Diesel Exhaust Fluid Tank Heater Low Control	I	—
12 - 13	—	—	—	Not Occupied	—	—
14	1.0	BU	2937	Diesel Exhaust Fluid Pump Motor Stator Low Reference	I	—
15	1.0	BN	2936	Diesel Exhaust Fluid Heating Tank 2 Heater Control Low	I	—
16	1.0	YE	3876	Diesel Exhaust Fluid Smart Pump Supply Voltage Phase 3	I	—

A99L Pickup Box Endgate Latch - Left (QK2+QT5)

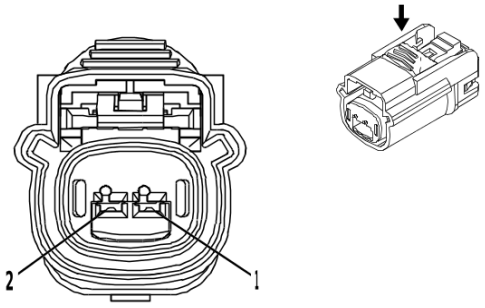

4332222

Connector Part Information

Harness Type: Endgate Wiring Harness
OEM Connector: 15514573
Service Connector: Service by Harness - See Part Catalog
Description: 2-Way F 1.5 OCS Series, Sealed(BK)

Terminal Part Information

Terminal Type ID	Terminated Lead	Diagnostic Test Probe	Terminal Removal Tool
I	Not required	J-35616-2A (GY)	No Tool Required

A99L Pickup Box Endgate Latch - Left (QK2+QT5)

Pin	Size	Color	Circuit	Function	Terminal Type ID	Option
1	1	GN	1299	Major Endgate Motor Control	I	—
2	1	YE / BK	7730	Major Endgate Motor Low Reference	I	—

A99R Pickup Box Endgate Latch - Right (QK2+QT5)

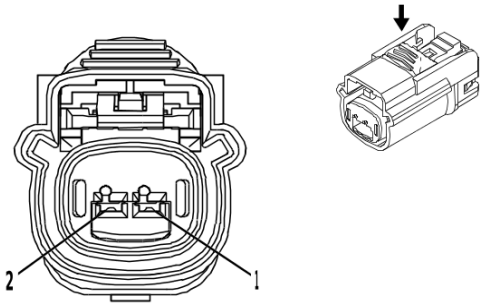

4332222

Connector Part Information

Harness Type: Endgate Wiring Harness
OEM Connector: 15514573
Service Connector: Service by Harness - See Part Catalog
Description: 2-Way F 1.5 OCS Series, Sealed(BK)

Terminal Part Information

Terminal Type ID	Terminated Lead	Diagnostic Test Probe	Terminal Removal Tool
I	Not required	J-35616-2A (GY)	No Tool Required

A99R Pickup Box Endgate Latch - Right (QK2+QT5)

Pin	Size	Color	Circuit	Function	Terminal Type ID	Option
1	1	GN	1299	Major Endgate Motor Control	I	—
2	1	YE / BK	7730	Major Endgate Motor Low Reference	I	—

A100L Pickup Box Auxiliary Endgate Latch - Left (QK2)

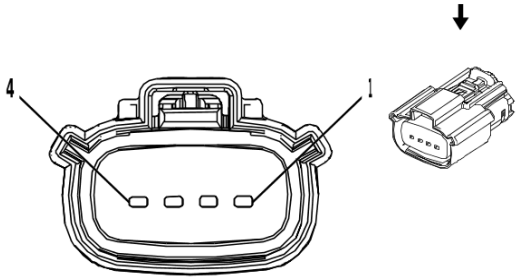

2474747

Connector Part Information

Harness Type: Endgate Wiring Harness
OEM Connector: 13815807
Service Connector: Service by Harness - See Part Catalog
Description: 4-Way F 1.5 MX Series, Sealed(BK)

Terminal Part Information

Terminal Type ID	Terminated Lead	Diagnostic Test Probe	Terminal Removal Tool
I	Not required	J-35616-2A (GY)	No Tool Required

A100L Pickup Box Auxiliary Endgate Latch - Left (QK2)

Pin	Size	Color	Circuit	Function	Terminal Type ID	Option
1	0.75	YE / BU	7295	Left Minor Endgate Ajar Signal	I	—
2	0.75	BK	1850	Ground	I	—
3	1	YE / BK	7730	Major Endgate Motor Low Reference	I	—
4	1	VT	7725	Minor Endgate Motor Control	I	—

A100R Pickup Box Auxiliary Endgate Latch - Right (QK2)

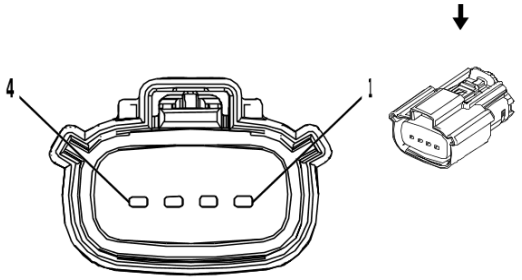

2474747

Connector Part Information

Harness Type: Endgate Wiring Harness
OEM Connector: 13815807
Service Connector: Service by Harness - See Part Catalog
Description: 4-Way F 1.5 MX Series, Sealed(BK)

Terminal Part Information

Terminal Type ID	Terminated Lead	Diagnostic Test Probe	Terminal Removal Tool
I	Not required	J-35616-2A (GY)	No Tool Required

A100R Pickup Box Auxiliary Endgate Latch - Right (QK2)

Pin	Size	Color	Circuit	Function	Terminal Type ID	Option
1	1	YE / BK	7730	Major Endgate Motor Low Reference	I	—
2	1	VT	7725	Minor Endgate Motor Control	I	—
3 - 4	—	—	—	Not Occupied	—	—

A103 Roof Console X1

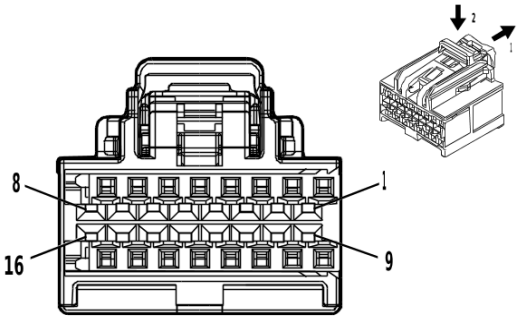

4873254

Connector Part Information

Harness Type: Dome Lamp Wiring Harness
OEM Connector: 35016344
Service Connector: 13519739
Description: 16-Way F 0.64 OCS Series(GY)

Terminal Part Information

Terminal Type ID	Terminated Lead	Diagnostic Test Probe	Terminal Removal Tool
I	19300660	J-35616-64B (L-BU)	J-38125-215A

A103 Roof Console X1

Pin	Size	Color	Circuit	Function	Terminal Type ID	Option
1	0.5	BK	1050	Ground	I	—
2	—	—	—	Not Occupied	—	—
3	0.35	YE	6817	LED Backlight Dimming Control 1	I	—
4 - 6	—	—	—	Not Occupied	—	—
7	0.35	WH / BN	2904	Row 2 Dome Reading Lamp Switch Signal	I	—
8	0.35	VT / GY	2906	Row 2 Dome Reading Lamp 2 Switch Signal	I	—
9	0.5	RD / YE	240	Battery Positive Voltage	I	—
10	0.5	GN / WH	2854	Body Control Module LIN Bus 8	I	—
11	0.35	BU / GN	4785	Interior Lamp Overhead Enable Signal	I	—
12	0.35	GY / WH	2369	Interior Lamp Overhead 2 Enable Signal	I	—
13	0.35	GN / YE	2903	Row 2 Dome Reading Lamp Interior Lamp Control	I	—
14	0.35	BN / BU	2905	Row 2 Dome Reading Lamp 2 Interior Lamp Control	I	—
15	—	—	—	Not Occupied	—	—
16	0.5	BK	1050	Ground	I	—

A103 Roof Console X2

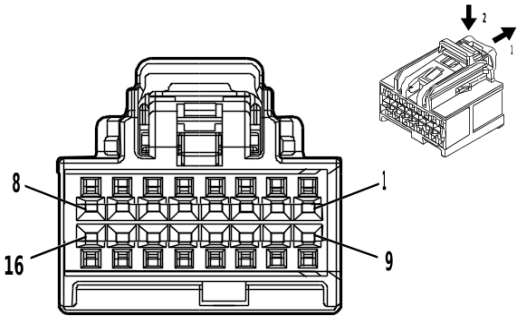

4873243

Connector Part Information

Harness Type: Dome Lamp Wiring Harness
OEM Connector: 35016343
Service Connector: 13519738
Description: 16-Way F 0.64 OCS Series(BK)

Terminal Part Information

Terminal Type ID	Terminated Lead	Diagnostic Test Probe	Terminal Removal Tool
I	19354230	J-35616-64B (L-BU)	J-38125-215A

A103 Roof Console X2

Pin	Size	Color	Circuit	Function	Terminal Type ID	Option
1	0.35	YE / VT	2516	Telematics Switch Green LED Indicator Control	I	—
2	0.35	BN / WH	2517	Telematics Switch Red LED Indicator Control	I	—
3	0.35	GN / WH	2514	Telematics Switch Signal	I	—
4	0.35	GN / BK	2515	Telematics Switch Supply Voltage	I	—
5	0.35	BK / WH	851	Signal Ground	I	—
6	0.35	YE / VT	6191	Power Rear Window Switch Open Signal	I	—
7	0.35	WH	6192	Sliding Rear Window Switch Close Signal	I	—
8	0.5	VT	801	Retained Accessory Power Control	I	—
9 - 16	—	—	—	Not Occupied	—	—

B1 Air Conditioning Refrigerant Pressure Sensor

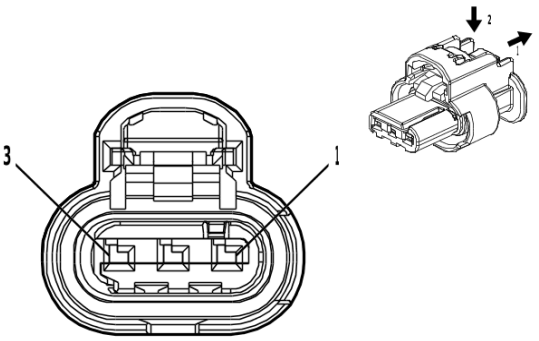

4581126

Connector Part Information

Harness Type: Engine Wiring Harness
OEM Connector: 33358800
Service Connector: 86792094
Description: 3-Way F 1.2 MCON-CB Series, Sealed(BK)

Terminal Part Information

Terminal Type ID	Terminated Lead	Diagnostic Test Probe	Terminal Removal Tool
I	Not required	J-35616-16 (L-GN)	No Tool Required

B1 Air Conditioning Refrigerant Pressure Sensor

Pin	Size	Color	Circuit	Function	Terminal Type ID	Option
1	0.5	WH / RD	480	Engine Control Vehicle Sensors 5 Volt Reference 1	I	—
2	0.5	GN	380	A/C Refrigerant Pressure Sensor Signal	I	—
3	0.5	BK / GY	626	Engine Control Vehicle Sensors Low Reference 1	I	—

B5LF Front Wheel Speed Sensor - Left

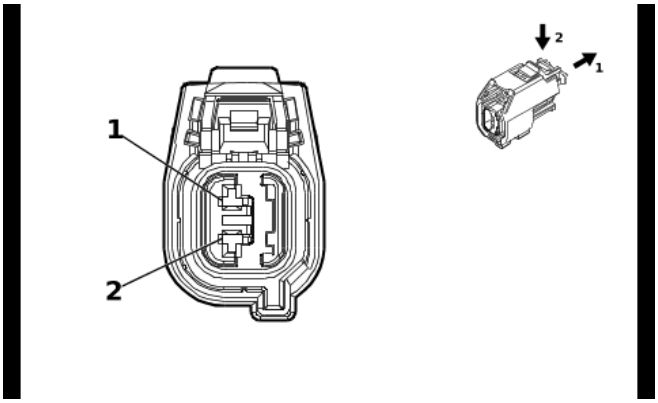

5666214

Connector Part Information

Harness Type: Chassis Wiring Harness
OEM Connector: 33189092
Service Connector: 85526683
Description: 2-Way F 1.5 OCS Series, Sealed(BK)

Terminal Part Information

Terminal Type ID	Terminated Lead	Diagnostic Test Probe	Terminal Removal Tool
I	Not required	J-35616-14 (GN)	No Tool Required

B5LF Front Wheel Speed Sensor - Left

Pin	Size	Color	Circuit	Function	Terminal Type ID	Option
1	0.5	GY / WH	7064	Left Front Wheel Speed Sensor Control	I	—
2	0.5	GY	830	Left Front Wheel Speed Sensor Signal	I	—

B5LR Rear Wheel Speed Sensor - Left

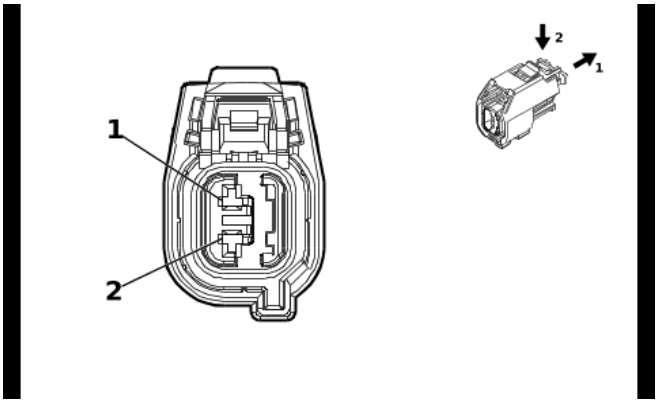

5666214

Connector Part Information

Harness Type: Chassis Wiring Harness
OEM Connector: 33189092
Service Connector: 85526683
Description: 2-Way F 1.5 OCS Series, Sealed(BK)

Terminal Part Information

Terminal Type ID	Terminated Lead	Diagnostic Test Probe	Terminal Removal Tool
I	Not required	J-35616-14 (GN)	No Tool Required

B5LR Rear Wheel Speed Sensor - Left

Pin	Size	Color	Circuit	Function	Terminal Type ID	Option
1	0.5	GY / BK	7127	Left Rear Wheel Speed Sensor Control	I	—
2	0.5	BU	884	Left Rear Wheel Speed Sensor Signal	I	—

B5RF Front Wheel Speed Sensor - Right

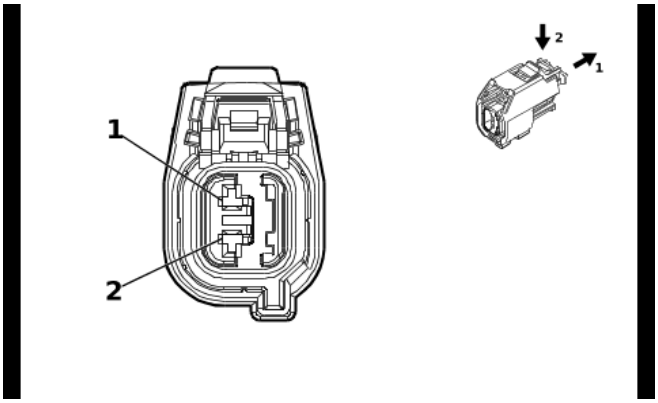

5666214

Connector Part Information

Harness Type: Chassis Wiring Harness
OEM Connector: 33189092
Service Connector: 85526683
Description: 2-Way F 1.5 OCS Series, Sealed(BK)

Terminal Part Information

Terminal Type ID	Terminated Lead	Diagnostic Test Probe	Terminal Removal Tool
I	Not required	J-35616-14 (GN)	No Tool Required

B5RF Front Wheel Speed Sensor - Right

Pin	Size	Color	Circuit	Function	Terminal Type ID	Option
1	0.5	GY / BN	7065	Right Front Wheel Speed Sensor Control	I	—
2	0.5	YE	872	Right Front Wheel Speed Sensor Signal	I	—

B5RR Rear Wheel Speed Sensor - Right

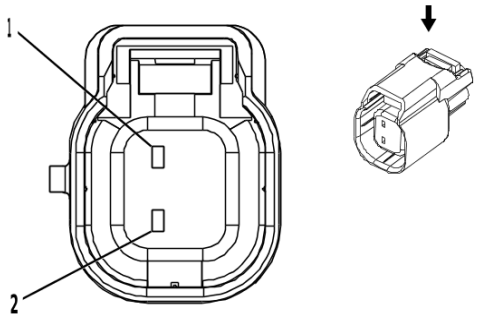

4115616

Connector Part Information

Harness Type: Chassis Wiring Harness
OEM Connector: 33122852
Service Connector: 19366860
Description: 2-Way F 1.5 Series, Sealed(BK)

Terminal Part Information

Terminal Type ID	Terminated Lead	Diagnostic Test Probe	Terminal Removal Tool
I	Not required	J-35616-14 (GN)	No Tool Required

B5RR Rear Wheel Speed Sensor - Right

Pin	Size	Color	Circuit	Function	Terminal Type ID	Option
1	0.5	GY / YE	7128	Right Rear Wheel Speed Sensor Control	I	—
2	0.5	VT	882	Right Rear Wheel Speed Sensor Signal	I	—

B10D Sun Load and Ambient Light and Security Indicator Sensor

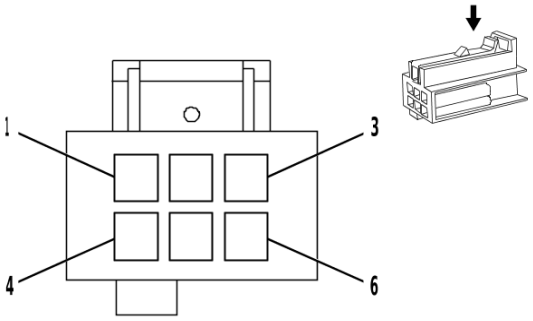

2282896

Connector Part Information

Harness Type: Instrument Panel Wiring Harness
OEM Connector: 35289942
Service Connector: 85587649
Description: 6-Way F 0.64 Micro-Quadlock Series(BK)

Terminal Part Information

Terminal Type ID	Terminated Lead	Diagnostic Test Probe	Terminal Removal Tool
I	Not required	J-35616-64B (L-BU)	No Tool Required

B10D Sun Load and Ambient Light and Security Indicator Sensor

Pin	Size	Color	Circuit	Function	Terminal Type ID	Option
1	0.35	GY	590	Driver Solar Sensor Signal	I	—
2	—	—	—	Not Occupied	—	—
3	0.35	WH / BU	278	Ambient Light Sensor Signal	I	—
4	0.35	BU / WH	734	Inside Air Temperature Sensor Signal	I	—
5	0.35	GY	728	Security Indicator Control	I	—
6	0.35	BK / YE	407	Sensor Low Reference	I	—

B11LF Front Suspension 4 Corner Leveling System Position Sensor - Left (Z45)

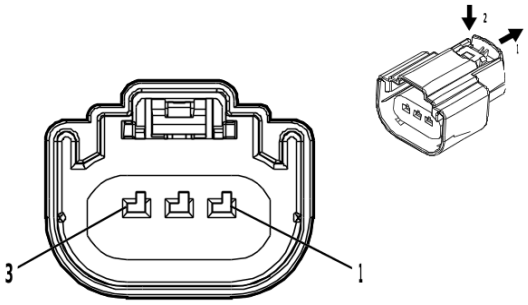

4569745

Connector Part Information

Harness Type: Chassis Wiring Harness
OEM Connector: 33343869
Service Connector: 19179750
Description: 3-Way F 1.5 MX Series, Sealed(BK)

Terminal Part Information

Terminal Type ID	Terminated Lead	Diagnostic Test Probe	Terminal Removal Tool
I	Not required	J-35616-14 (GN)	No Tool Required

B11LF Front Suspension 4 Corner Leveling System Position Sensor - Left (Z45)

Pin	Size	Color	Circuit	Function	Terminal Type ID	Option
1	0.5	BU / RD	1205	Left Front Suspension Position Sensor Voltage Reference	I	—
2	0.5	BK / BU	1206	Left Front Suspension Position Sensor Low Reference	I	—
3	0.5	BN / WH	1207	Left Front Suspension Position Sensor Signal	I	—

B11LR Rear Suspension 2 or 4 Corner Air Leveling Position Sensor - Left (Z45)

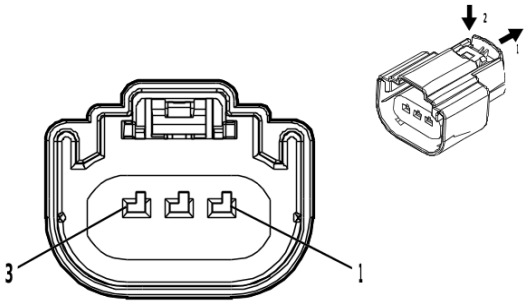

4569745

Connector Part Information

Harness Type: Chassis Wiring Harness
OEM Connector: 33343869
Service Connector: 19179750
Description: 3-Way F 1.5 MX Series, Sealed(BK)

Terminal Part Information

Terminal Type ID	Terminated Lead	Diagnostic Test Probe	Terminal Removal Tool
I	Not required	J-35616-14 (GN)	No Tool Required

B11LR Rear Suspension 2 or 4 Corner Air Leveling Position Sensor - Left (Z45)

Pin	Size	Color	Circuit	Function	Terminal Type ID	Option
1	0.5	YE / RD	1208	Left Rear Suspension Position Sensor Voltage Reference	I	—
2	0.5	BK / GN	1209	Left Rear Suspension Position Sensor Low Reference	I	—
3	0.5	GN / WH	1210	Left Rear Suspension Position Sensor Signal	I	—

B11RF Front Suspension 4 Corner Leveling System Position Sensor - Right (Z45)

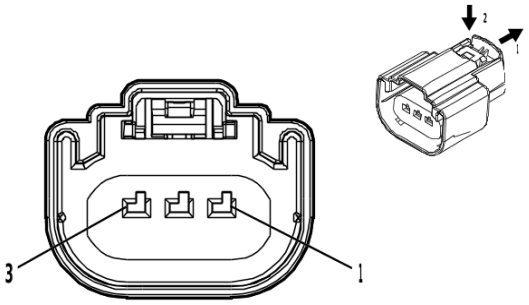

4569745

Connector Part Information

Harness Type: Chassis Wiring Harness
OEM Connector: 33343869
Service Connector: 19179750
Description: 3-Way F 1.5 MX Series, Sealed(BK)

Terminal Part Information

Terminal Type ID	Terminated Lead	Diagnostic Test Probe	Terminal Removal Tool
I	Not required	J-35616-14 (GN)	No Tool Required

B11RF Front Suspension 4 Corner Leveling System Position Sensor - Right (Z45)

Pin	Size	Color	Circuit	Function	Terminal Type ID	Option
1	0.5	BN / RD	1211	Right Front Suspension Position Sensor Voltage Reference	I	—
2	0.5	BK / GY	1212	Right Front Suspension Position Sensor Low Reference	I	—
3	0.5	YE / WH	1213	Right Front Suspension Position Sensor Signal	I	—

B13 Automatic Transmission Fluid Temperature Sensor (M5X/MQE)

—

Connector Part Information

Harness Type: Automatic Transmission Wiring Harness - Control
OEM Connector: 312004
Service Connector: Service by Harness - See Part Catalog
Description: —

Terminal Part Information

Terminal Type ID	Terminated Lead	Diagnostic Test Probe	Terminal Removal Tool
I	Not required	J-35616-64B (L-BU)	No Tool Required

B13 Automatic Transmission Fluid Temperature Sensor (M5X/MQE)

Pin	Size	Color	Circuit	Function	Terminal Type ID	Option
1	0.5	WH / GY	586	Transmission Fluid Temperature Sensor Low Reference	I	—
2	0.5	BK / GY	585	Transmission Fluid Temperature Sensor Signal	I	—

B13 Transmission Fluid Temperature Sensor (MHS/MQC)

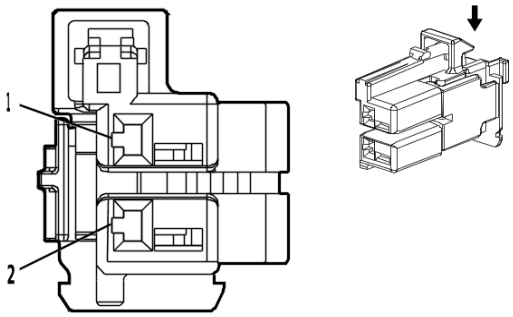

4672650

Connector Part Information

Harness Type: Automatic Transmission Wiring Harness - Control
OEM Connector: 2289523-1
Service Connector: Service by Harness - See Part Catalog
Description: 2-Way F 1.2 MCON Series(BN)

Terminal Part Information

Terminal Type ID	Terminated Lead	Diagnostic Test Probe	Terminal Removal Tool
I	Not required	J-35616-16 (LT GN)	No Tool Required

B13 Transmission Fluid Temperature Sensor (MHS/MQC)

Pin	Size	Color	Circuit	Function	Terminal Type ID	Option
1	0.5	BU / BN	586	Transmission Fluid Temperature Sensor Low Reference	I	—
2	0.5	BN / YE	585	Transmission Fluid Temperature Sensor Signal	I	—

B13 Automatic Transmission Fluid Temperature Sensor (MHT/MQB)

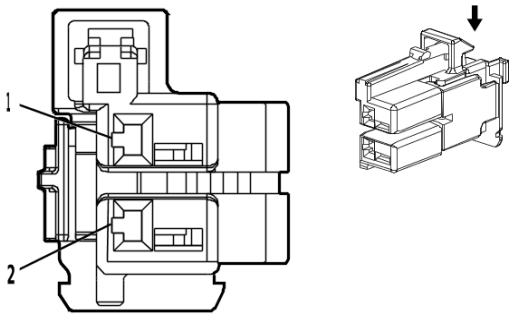

4672650

Connector Part Information

Harness Type: Automatic Transmission Wiring Harness - Control
OEM Connector: 2289523-1
Service Connector: Service by Harness - See Part Catalog
Description: 2-Way F 1.2 MCON Series(BN)

Terminal Part Information

Terminal Type ID	Terminated Lead	Diagnostic Test Probe	Terminal Removal Tool
I	Not required	Not Available	No Tool Required

B13 Automatic Transmission Fluid Temperature Sensor (MHT/MQB)

Pin	Size	Color	Circuit	Function	Terminal Type ID	Option
1	0.5	BU / BN	586	Transmission Fluid Temperature Sensor Low Reference	I	—
2	0.5	BN / YE	585	Transmission Fluid Temperature Sensor Signal	I	—

B14A Transmission Output Shaft Speed Sensor (MHS/MQC)

—

Connector Part Information

Harness Type: Automatic Transmission Wiring Harness - Case
OEM Connector: 2340311-2
Service Connector: Service by Harness - See Part Catalog
Description: 2-Way M SLV WIR CONN MALE

Terminal Part Information

Terminal Type ID	Terminated Lead	Diagnostic Test Probe	Terminal Removal Tool
I	Not required	J-35616-13 (BU)	No Tool Required

B14A Transmission Output Shaft Speed Sensor (MHS/MQC)

Pin	Size	Color	Circuit	Function	Terminal Type ID	Option
1	0.5	YE / OG	6358	Output Speed Signal	I	—
2	0.5	GN	4170	Transmission Output Shaft Speed Sensor Circuit 9V Reference	I	—

B14A Transmission Output Shaft Speed Sensor (MHT/MQB)

—

Connector Part Information

Harness Type: Automatic Transmission Wiring Harness - Case
OEM Connector: 2340311-2
Service Connector: Service by Harness - See Part Catalog
Description: 2-Way M SLV WIR CONN MALE

Terminal Part Information

Terminal Type ID	Terminated Lead	Diagnostic Test Probe	Terminal Removal Tool
I	Not required	J-35616-13 (BU)	No Tool Required

B14A Transmission Output Shaft Speed Sensor (MHT/MQB)

Pin	Size	Color	Circuit	Function	Terminal Type ID	Option
1	0.5	YE / OG	6358	Output Speed Signal	I	—
2	0.5	GN	4170	Transmission Output Shaft Speed Sensor Circuit 9V Reference	I	—

B14C Transmission Input Shaft Speed Sensor (MHS/MQC)

—

Connector Part Information

Harness Type: Automatic Transmission Wiring Harness - Case
OEM Connector: 2340311-3
Service Connector: Service by Harness - See Part Catalog
Description: 2-Way M SLV WIR CONN MALE

Terminal Part Information

Terminal Type ID	Terminated Lead	Diagnostic Test Probe	Terminal Removal Tool
I	Not required	J-35616-13 (BU)	No Tool Required

B14C Transmission Input Shaft Speed Sensor (MHS/MQC)

Pin	Size	Color	Circuit	Function	Terminal Type ID	Option
1	0.5	WH / VT	6353	Input Speed Signal	I	—
2	0.5	BU	4171	Transmission Input Shaft Speed Sensor Circuit 9V Reference	I	—

B14C Transmission Input Shaft Speed Sensor (MHT/MQB)

—

Connector Part Information

Harness Type: Automatic Transmission Wiring Harness - Case
OEM Connector: 2340311-3
Service Connector: Service by Harness - See Part Catalog
Description: 2-Way M SLV WIR CONN MALE

Terminal Part Information

Terminal Type ID	Terminated Lead	Diagnostic Test Probe	Terminal Removal Tool
I	Not required	J-35616-13 (BU)	No Tool Required

B14C Transmission Input Shaft Speed Sensor (MHT/MQB)

Pin	Size	Color	Circuit	Function	Terminal Type ID	Option
1	0.5	WH / VT	6353	Input Speed Signal	I	—
2	0.5	BU	4171	Transmission Input Shaft Speed Sensor Circuit 9V Reference	I	—

B14DA Transmission Intermediate Speed Sensor 1 (MHS/MQC)

—

Connector Part Information

Harness Type: Automatic Transmission Wiring Harness - Case
OEM Connector: 2340311-1
Service Connector: Service by Harness - See Part Catalog
Description: 2-Way M SLV WIR CONN MALE

Terminal Part Information

Terminal Type ID	Terminated Lead	Diagnostic Test Probe	Terminal Removal Tool
I	Not required	J-35616-13 (BU)	No Tool Required

B14DA Transmission Intermediate Speed Sensor 1 (MHS/MQC)

Pin	Size	Color	Circuit	Function	Terminal Type ID	Option
1	0.5	VT / GN	4510	Transmission Intermediate Speed Signal	I	—
2	0.5	GN	4170	Transmission Output Shaft Speed Sensor Circuit 9V Reference	I	—

B14DA Transmission Intermediate Speed Sensor 1 (MHT/MQB)

—

Connector Part Information

Harness Type: Automatic Transmission Wiring Harness - Case
OEM Connector: 2340311-1
Service Connector: Service by Harness - See Part Catalog
Description: 2-Way M SLV WIR CONN MALE

Terminal Part Information

Terminal Type ID	Terminated Lead	Diagnostic Test Probe	Terminal Removal Tool
I	Not required	J-35616-13 (BU)	No Tool Required

B14DA Transmission Intermediate Speed Sensor 1 (MHT/MQB)

Pin	Size	Color	Circuit	Function	Terminal Type ID	Option
1	0.5	VT / GN	4174	Transmission Intermediate Speed Signal	I	4174
2	0.5	GN	4170	Transmission Output Shaft Speed Sensor Circuit 9V Reference	I	—

B14DB Transmission Intermediate Speed Sensor 2 (MHS/MQC)

—

Connector Part Information

Harness Type: Automatic Transmission Wiring Harness - Case
OEM Connector: 2340311-2
Service Connector: Service by Harness - See Part Catalog
Description: 2-Way M SLV WIR CONN MALE

Terminal Part Information

Terminal Type ID	Terminated Lead	Diagnostic Test Probe	Terminal Removal Tool
I	Not required	J-35616-13 (BU)	No Tool Required

B14DB Transmission Intermediate Speed Sensor 2 (MHS/MQC)

Pin	Size	Color	Circuit	Function	Terminal Type ID	Option
1	0.5	WH / BU	4510	Transmission Intermediate Speed Signal	I	—
2	0.5	BU	4171	Transmission Input Shaft Speed Sensor Circuit 9V Reference	I	—

B14DB Transmission Intermediate Speed Sensor 2 (MHT/MQB)

—

Connector Part Information

Harness Type: Automatic Transmission Wiring Harness - Case
OEM Connector: 2340311-2
Service Connector: Service by Harness - See Part Catalog
Description: 2-Way M SLV WIR CONN MALE

Terminal Part Information

Terminal Type ID	Terminated Lead	Diagnostic Test Probe	Terminal Removal Tool
I	Not required	J-35616-13 (BU)	No Tool Required

B14DB Transmission Intermediate Speed Sensor 2 (MHT/MQB)

Pin	Size	Color	Circuit	Function	Terminal Type ID	Option
1	0.5	WH / BU	4510	Transmission Intermediate Speed Signal	I	—
2	0.5	BU	4171	Transmission Input Shaft Speed Sensor Circuit 9V Reference	I	—

B20A Brake Fluid Level Indicator Switch

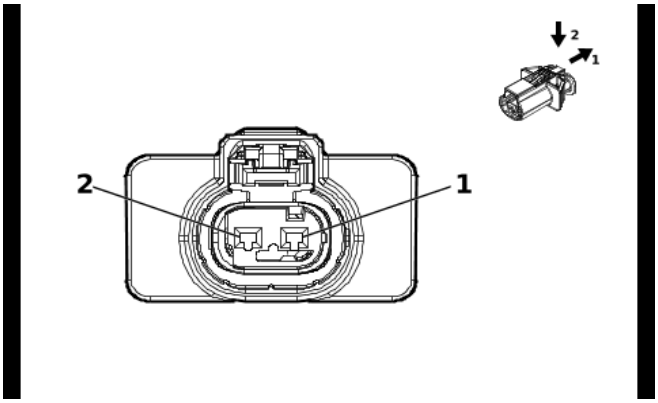

5877143

Connector Part Information

Harness Type: Body Wiring Harness
OEM Connector: 35242147
Service Connector: 85596543
Description: 2-Way F 1.2 MLK Series, Sealed(BK)

Terminal Part Information

Terminal Type ID	Terminated Lead	Diagnostic Test Probe	Terminal Removal Tool
I	Not required	J-35616-16 (L-GN)	No Tool Required

B20A Brake Fluid Level Indicator Switch

Pin	Size	Color	Circuit	Function	Terminal Type ID	Option
1	0.5	GN / GY	333	Brake Fluid Level Signal	I	—
2	0.5	BK / WH	151	Signal Ground	I	—

B22 Brake Pedal Position Sensor

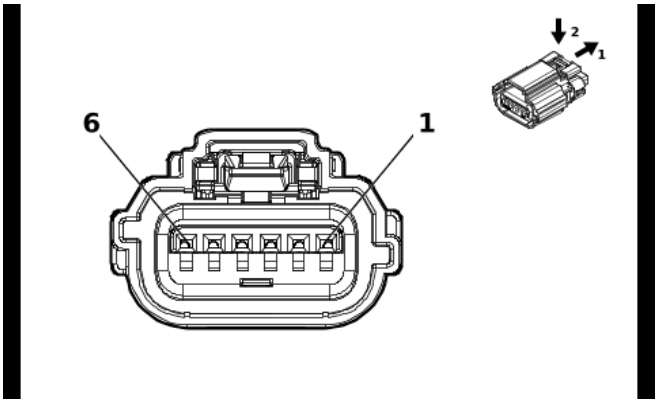

5921818

Connector Part Information

Harness Type: Body Wiring Harness
OEM Connector: 35547326
Service Connector: 86825468
Description: 4-Way F 0.64 OCS Series, Sealed(NA)

Terminal Part Information

Terminal Type ID	Terminated Lead	Diagnostic Test Probe	Terminal Removal Tool
I	Not required	J-35616-64B (L-BU)	No Tool Required

B22 Brake Pedal Position Sensor

Pin	Size	Color	Circuit	Function	Terminal Type ID	Option
1	0.35	BK / BN	5360	Brake Apply Sensor Low Reference	I	—
2	0.35	WH	5359	Brake Apply Sensor Control	I	—
3	0.35	BU / YE	5361	Brake Apply Sensor Signal	I	—
4	0.35	WH / GN	5380	Brake Position Sensor Signal	I	—
5	0.35	BK / GY	626	Engine Control Vehicle Sensors Low Reference 1	I	—
6	0.35	WH / RD	480	Engine Control Vehicle Sensors 5 Volt Reference 1	I	—

B23 Camshaft Position Sensor (L3B)

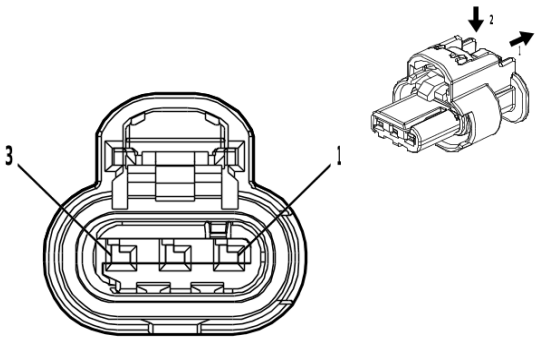

4581126

Connector Part Information

Harness Type: Engine Wiring Harness
OEM Connector: 33358800
Service Connector: 86792094
Description: 3-Way F 1.2 MCON-CB Series, Sealed(BK)

Terminal Part Information

Terminal Type ID	Terminated Lead	Diagnostic Test Probe	Terminal Removal Tool
I	Not required	J-35616-16 (L-GN)	No Tool Required

B23 Camshaft Position Sensor (L3B)

Pin	Size	Color	Circuit	Function	Terminal Type ID	Option
1	0.5	GY / BU	5300	Intake Camshaft Position Sensor 1 Voltage Reference	I	—
2	0.5	BK / GN	5301	Intake Camshaft Position Sensor Low Reference 1	I	—
3	0.5	YE / VT	5275	Intake Camshaft Position Sensor 1	I	—

B23 Camshaft Position Sensor (L84/L87)

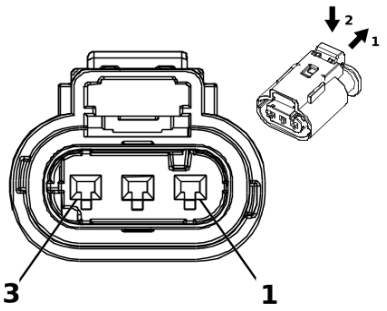

2717069

Connector Part Information

Harness Type: Camshaft Position Sensor Wire
OEM Connector: 13503570
Service Connector: Service by Harness - See Part Catalog
Description: 3-Way F 1.2 Multilock Series, Sealed(BK)

Terminal Part Information

Terminal Type ID	Terminated Lead	Diagnostic Test Probe	Terminal Removal Tool
I	Not required	No Tool Required	No Tool Required

B23 Camshaft Position Sensor (L84/L87)

Pin	Size	Color	Circuit	Function	Terminal Type ID	Option
1	0.5	GY / BU	5300	Intake Camshaft Position Sensor 1 Voltage Reference	I	—
2	0.5	BK / GN	5301	Intake Camshaft Position Sensor Low Reference 1	I	—
3	0.5	YE / VT	5275	Intake Camshaft Position Sensor 1	I	—

B23E Camshaft Position Sensor - Exhaust (L3B)

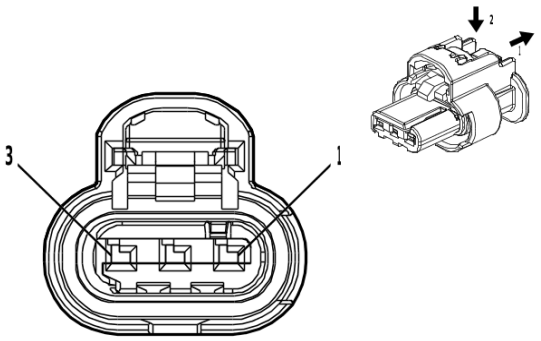

4581126

Connector Part Information

Harness Type: Engine Wiring Harness
OEM Connector: 33358800
Service Connector: 86792094
Description: 3-Way F 1.2 MCON-CB Series, Sealed(BK)

Terminal Part Information

Terminal Type ID	Terminated Lead	Diagnostic Test Probe	Terminal Removal Tool
I	Not required	J-35616-16 (L-GN)	No Tool Required

B23E Camshaft Position Sensor - Exhaust (L3B)

Pin	Size	Color	Circuit	Function	Terminal Type ID	Option
1	0.5	GY / YE	5297	Exhaust Camshaft Position Sensor 1 Voltage Reference	I	—
2	0.5	BK / GY	5296	Exhaust Camshaft Position Sensor Low Reference 1	I	—
3	0.5	VT / BK	5273	Exhaust Camshaft Position Sensor 1	I	—

B23E Camshaft Position Sensor - Exhaust (LM2)

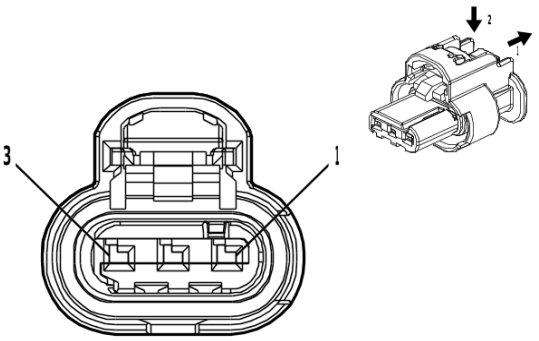

4581126

Connector Part Information

Harness Type: Engine Wiring Harness
OEM Connector: 33358800
Service Connector: 86792094
Description: 3-Way F 1.2 MCON-CB Series, Sealed(BK)

Terminal Part Information

Terminal Type ID	Terminated Lead	Diagnostic Test Probe	Terminal Removal Tool
I	Not required	J-35616-16 (L-GN)	No Tool Required

B23E Camshaft Position Sensor - Exhaust (LM2)

Pin	Size	Color	Circuit	Function	Terminal Type ID	Option
1	0.5	GY / YE	5297	Exhaust Camshaft Position Sensor 1 Voltage Reference	I	—
2	0.5	BK / GY	5296	Exhaust Camshaft Position Sensor Low Reference 1	I	—
3	0.5	VT / BK	5273	Exhaust Camshaft Position Sensor 1	I	—

B24LF Mobile Telephone Microphone - Left Front

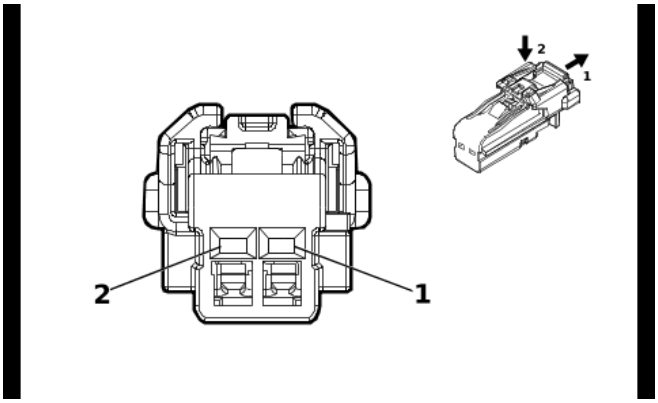

4115691

Connector Part Information

Harness Type: Dome Lamp Wiring Harness
OEM Connector: 35311666
Service Connector: 19352066
Description: 2-Way F 1.2 MCON Series(BK)

Terminal Part Information

Terminal Type ID	Terminated Lead	Diagnostic Test Probe	Terminal Removal Tool
I	Not required	J-35616-16 (L-GN)	No Tool Required

B24LF Mobile Telephone Microphone - Left Front

Pin	Size	Color	Circuit	Function	Terminal Type ID	Option
1	0.35	BK / BN	654	Cellular Telephone Microphone Low Reference	I	—
2	0.35	BU	655	Cellular Telephone Microphone Signal	I	—

B24RF Mobile Telephone Microphone - Right Front

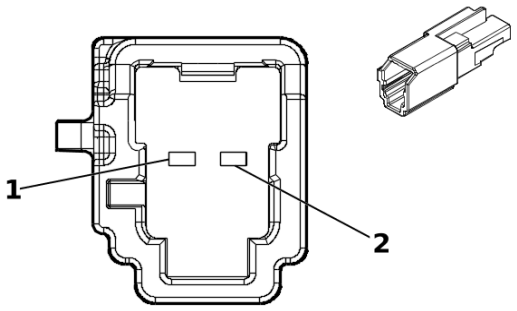

5360948

Connector Part Information

Harness Type: Dome Lamp Wiring Harness
OEM Connector: 35264701
Service Connector: 84847259
Description: 2-Way M 1.2 MCON Series(GY)

Terminal Part Information

Terminal Type ID	Terminated Lead	Diagnostic Test Probe	Terminal Removal Tool
I	Not required	J-35616-13 (BU)	No Tool Required

B24RF Mobile Telephone Microphone - Right Front

Pin	Size	Color	Circuit	Function	Terminal Type ID	Option
1	0.35	BU / BK	7044	Microphone [-] Signal	I	—
2	0.35	VT / YE	7043	Microphone [+] Signal	I	—

B26 Crankshaft Position Sensor (L3B)

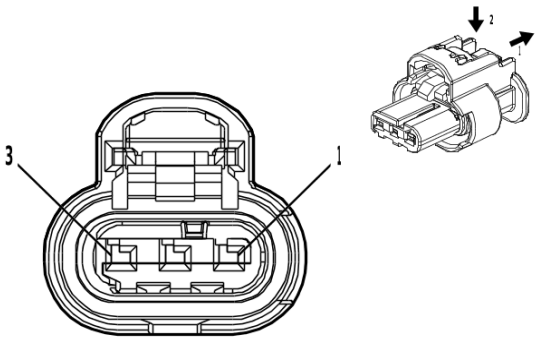

4778903

Connector Part Information

Harness Type: Engine Wiring Harness
OEM Connector: 33358808
Service Connector: 86792095
Description: 3-Way F 1.2 MCON-CB Series, Sealed(BK)

Terminal Part Information

Terminal Type ID	Terminated Lead	Diagnostic Test Probe	Terminal Removal Tool
I	Not required	J-35616-16 (L-GN)	No Tool Required

B26 Crankshaft Position Sensor (L3B)

Pin	Size	Color	Circuit	Function	Terminal Type ID	Option
1	0.5	VT / BU	6270	Crankshaft Position Sensor Voltage	I	—
2	0.5	BK / VT	6272	Crankshaft Position Sensor Low Reference	I	—
3	0.5	GN	6271	Crankshaft Position Sensor Signal	I	—

B26 Crankshaft Position Sensor (L84/L87)

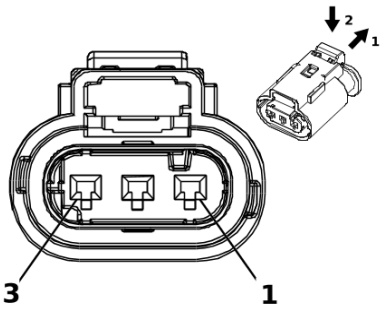

2717069

Connector Part Information

Harness Type: Engine Wiring Harness
OEM Connector: 13763990
Service Connector: 84601390
Description: 3-Way F 1.2 Multilock Series, Sealed(BK)

Terminal Part Information

Terminal Type ID	Terminated Lead	Diagnostic Test Probe	Terminal Removal Tool
I	Not required	J-35616-16 (L-GN)	No Tool Required

B26 Crankshaft Position Sensor (L84/L87)

Pin	Size	Color	Circuit	Function	Terminal Type ID	Option
1	0.5	GN	6271	Crankshaft Position Sensor Signal	I	—
2	0.5	BK / VT	6272	Crankshaft Position Sensor Low Reference	I	—
3	0.5	VT / BU	6270	Crankshaft Position Sensor Voltage	I	—

B26 Crankshaft Position Sensor (LM2)

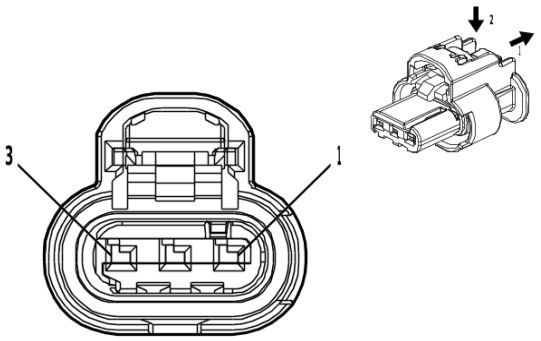

4581126

Connector Part Information

Harness Type: Engine Wiring Harness
OEM Connector: 33358800
Service Connector: 86792094
Description: 3-Way F 1.2 MCON-CB Series, Sealed(BK)

Terminal Part Information

Terminal Type ID	Terminated Lead	Diagnostic Test Probe	Terminal Removal Tool
I	Not required	J-35616-16 (L-GN)	No Tool Required

B26 Crankshaft Position Sensor (LM2)

Pin	Size	Color	Circuit	Function	Terminal Type ID	Option
1	0.5	VT / BU	6270	Crankshaft Position Sensor Voltage	I	—
2	0.5	BK / VT	6272	Crankshaft Position Sensor Low Reference	I	—
3	0.5	GN	6271	Crankshaft Position Sensor Signal	I	—

B34 Engine Coolant Temperature Sensor (L84/L87)

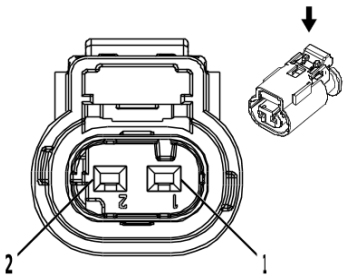

2717066

Connector Part Information

Harness Type: Valve Rocker Arm Oil Control Valve Extension Harness
OEM Connector: 10010337
Service Connector: Service by Harness - See Part Catalog
Description: 2-Way F 1.2 Multilock Series, Sealed(BK)

Terminal Part Information

Terminal Type ID	Terminated Lead	Diagnostic Test Probe	Terminal Removal Tool
I	Not required	No Tool Required	No Tool Required

B34 Engine Coolant Temperature Sensor (L84/L87)

Pin	Size	Color	Circuit	Function	Terminal Type ID	Option
1	0.5	BU	410	Engine Coolant Temperature Sensor Signal	I	—
2	0.5	BK / YE	626	Engine Control Vehicle Sensors Low Reference 1	I	—

B34 Engine Coolant Temperature Sensor (LM2)

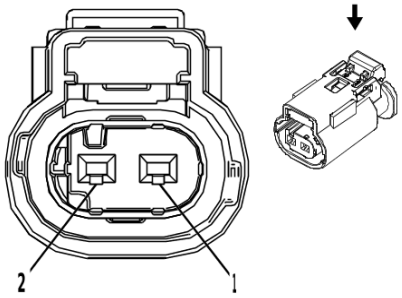

2830969

Connector Part Information

Harness Type: Engine Wiring Harness
OEM Connector: 13840071
Service Connector: 13587321
Description: 2-Way F 1.2 Multilock Series, Sealed(D-GY)

Terminal Part Information

Terminal Type ID	Terminated Lead	Diagnostic Test Probe	Terminal Removal Tool
I	Not required	J-35616-16 (L-GN)	No Tool Required

B34 Engine Coolant Temperature Sensor (LM2)

Pin	Size	Color	Circuit	Function	Terminal Type ID	Option
1	0.5	YE / BU	2408	Engine Inlet Coolant Temperature Signal	I	—
2	0.5	BK / YE	548	Engine Control Sensors Low Reference 1	I	—

B34A Engine Coolant Temperature Sensor 1 (L3B)

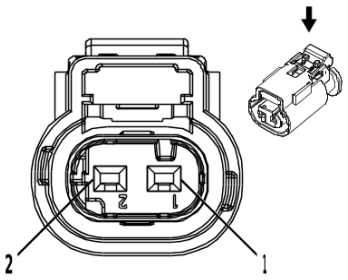

2717066

Connector Part Information

Harness Type: Engine Wiring Harness
OEM Connector: 13735326
Service Connector: 13587326
Description: 2-Way F 1.2 Multilock Series, Sealed(BK)

Terminal Part Information

Terminal Type ID	Terminated Lead	Diagnostic Test Probe	Terminal Removal Tool
I	Not required	J-35616-16 (L-GN)	No Tool Required

B34A Engine Coolant Temperature Sensor 1 (L3B)

Pin	Size	Color	Circuit	Function	Terminal Type ID	Option
1	0.5	YE / BU	2408	Engine Inlet Coolant Temperature Signal	I	—
2	0.5	BK / YE	548	Engine Control Sensors Low Reference 1	I	—

B34B Engine Coolant Temperature Sensor 2 (L3B)

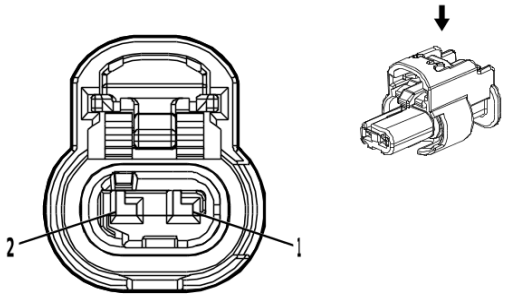

4690744

Connector Part Information

Harness Type: Engine Wiring Harness
OEM Connector: 33375932
Service Connector: 19366871
Description: 2-Way F 1.2 MCON Series, Sealed(BK)

Terminal Part Information

Terminal Type ID	Terminated Lead	Diagnostic Test Probe	Terminal Removal Tool
I	Not required	J-35616-16 (L-GN)	No Tool Required

B34B Engine Coolant Temperature Sensor 2 (L3B)

Pin	Size	Color	Circuit	Function	Terminal Type ID	Option
1	0.5	VT	2988	Engine Outlet Coolant Temperature Signal	I	—
2	0.5	BK / GY	626	Engine Control Vehicle Sensors Low Reference 1	I	—

B34B Engine Coolant Temperature Sensor 2 (LM2)

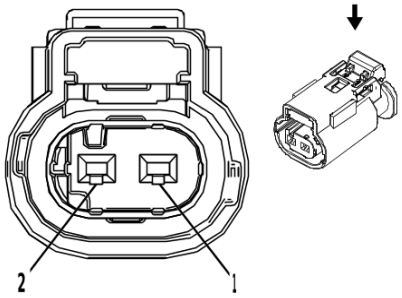

2830969

Connector Part Information

Harness Type: Engine Coolant Temperature Sensor Harness
OEM Connector: 10010339
Service Connector: Service by Harness - See Part Catalog
Description: 2-Way F 1.2 Multilock Series, Sealed(D-GY)

Terminal Part Information

Terminal Type ID	Terminated Lead	Diagnostic Test Probe	Terminal Removal Tool
I	Not required	J-35616-16 (L-GN)	No Tool Required

B34B Engine Coolant Temperature Sensor 2 (LM2)

Pin	Size	Color	Circuit	Function	Terminal Type ID	Option
1	0.5	VT	2988	Engine Outlet Coolant Temperature Signal	I	—
2	0.5	BK / GY	626	Engine Control Vehicle Sensors Low Reference 1	I	—

B34E Engine Coolant Temperature Sensor 5 (L3B)

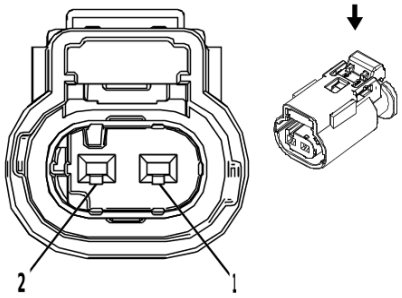

2830969

Connector Part Information

Harness Type: Engine Wiring Harness
OEM Connector: 13840071
Service Connector: 13587321
Description: 2-Way F 1.2 Multilock Series, Sealed(D-GY)

Terminal Part Information

Terminal Type ID	Terminated Lead	Diagnostic Test Probe	Terminal Removal Tool
I	Not required	J-35616-16 (L-GN)	No Tool Required

B34E Engine Coolant Temperature Sensor 5 (L3B)

Pin	Size	Color	Circuit	Function	Terminal Type ID	Option
1	0.5	BU / YE	8938	Engine Integrated Exhaust Manifold Temperature Signal	I	—
2	0.5	BK / YE	548	Engine Control Sensors Low Reference 1	I	—

B34E Engine Coolant Temperature Sensor 5 (LM2)

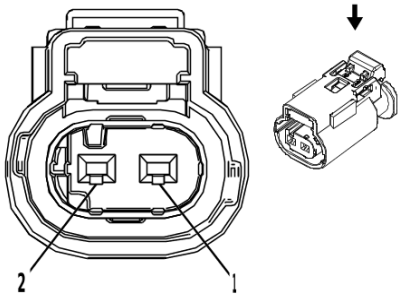

2830969

Connector Part Information

Harness Type: Engine Coolant Temperature Sensor Harness
OEM Connector: 10010339
Service Connector: Service by Harness - See Part Catalog
Description: 2-Way F 1.2 Multilock Series, Sealed(D-GY)

Terminal Part Information

Terminal Type ID	Terminated Lead	Diagnostic Test Probe	Terminal Removal Tool
I	Not required	J-35616-16 (L-GN)	No Tool Required

B34E Engine Coolant Temperature Sensor 5 (LM2)

Pin	Size	Color	Circuit	Function	Terminal Type ID	Option
1	0.5	GY / VT	2404	Engine Block Coolant Temperature Signal	I	—
2	0.5	BK / GN	580	Engine Control Sensors Low Reference 2	I	—

B34F Engine Coolant Temperature Sensor 6 (L3B)

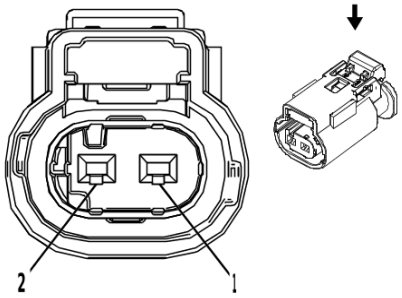

2830969

Connector Part Information

Harness Type: Engine Wiring Harness
OEM Connector: 13840071
Service Connector: 13587321
Description: 2-Way F 1.2 Multilock Series, Sealed(D-GY)

Terminal Part Information

Terminal Type ID	Terminated Lead	Diagnostic Test Probe	Terminal Removal Tool
I	Not required	J-35616-16 (L-GN)	No Tool Required

B34F Engine Coolant Temperature Sensor 6 (L3B)

Pin	Size	Color	Circuit	Function	Terminal Type ID	Option
1	0.5	GY / VT	2404	Engine Block Coolant Temperature Signal	I	—
2	0.5	BK / YE	548	Engine Control Sensors Low Reference 1	I	—

B34K Charge Air Cooler Coolant Temperature Sensor - Inlet (LM2)

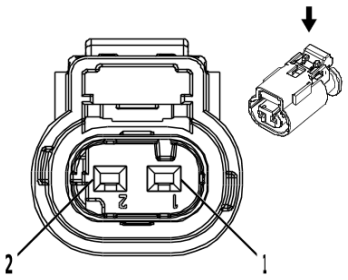

2717066

Connector Part Information

Harness Type: Engine Wiring Harness
OEM Connector: 13735326
Service Connector: 13587326
Description: 2-Way F 1.2 Multilock Series, Sealed(BK)

Terminal Part Information

Terminal Type ID	Terminated Lead	Diagnostic Test Probe	Terminal Removal Tool
I	Not required	J-35616-16 (L-GN)	No Tool Required

B34K Charge Air Cooler Coolant Temperature Sensor - Inlet (LM2)

Pin	Size	Color	Circuit	Function	Terminal Type ID	Option
1	0.5	BU / BK	1422	Engine Water Charge Air Coolant Temperature Signal	I	—
2	0.5	BK / GY	626	Engine Control Vehicle Sensors Low Reference 1	I	—

B35 Engine Oil Level Indicator Switch (L84/L87)

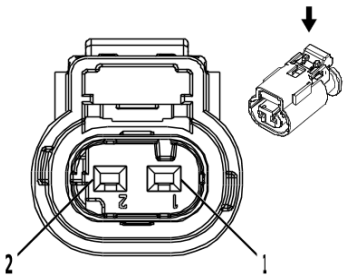

2717066

Connector Part Information

Harness Type: Engine Wiring Harness
OEM Connector: 13735326
Service Connector: 13587326
Description: 2-Way F 1.2 Multilock Series, Sealed(BK)

Terminal Part Information

Terminal Type ID	Terminated Lead	Diagnostic Test Probe	Terminal Removal Tool
I	Not required	J-35616-16 (L-GN)	No Tool Required

B35 Engine Oil Level Indicator Switch (L84/L87)

Pin	Size	Color	Circuit	Function	Terminal Type ID	Option
1	0.5	BN / GN	1174	Oil Level Switch Signal	I	—
2	0.75	BK / WH	251	Signal Ground	I	—

B36 Engine Oil Temperature Sensor (L4B)

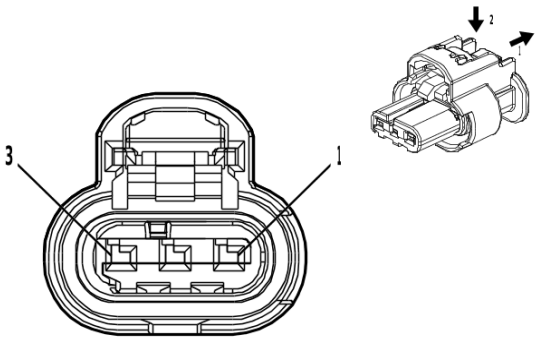

4994602

Connector Part Information

Harness Type: Engine Wiring Harness
OEM Connector: 33358809
Service Connector: 19371199
Description: 3-Way F 1.2 MCON-CB Series, Sealed(BK)

Terminal Part Information

Terminal Type ID	Terminated Lead	Diagnostic Test Probe	Terminal Removal Tool
I	Not required	J-35616-16 (L-GN)	No Tool Required

B36 Engine Oil Temperature Sensor (L4B)

Pin	Size	Color	Circuit	Function	Terminal Type ID	Option
1	0.5	BK / YE	548	Engine Control Sensors Low Reference 1	I	—
2	0.5	BN / BU	357	Oil Temperature Sensor Signal	I	—
3	0.5	VT	7485	Engine Oil Temperature Sensor 2 Signal	I	—

B36 Engine Oil Temperature Sensor (LM2)

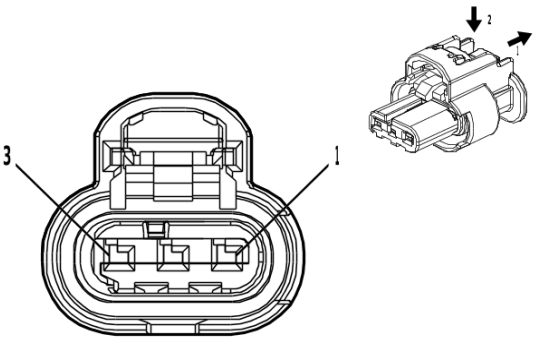

4994602

Connector Part Information

Harness Type: Engine Wiring Harness
OEM Connector: 33358809
Service Connector: 19371199
Description: 3-Way F 1.2 MCON-CB Series, Sealed(BK)

Terminal Part Information

Terminal Type ID	Terminated Lead	Diagnostic Test Probe	Terminal Removal Tool
I	Not required	J-35616-16 (L-GN)	No Tool Required

B36 Engine Oil Temperature Sensor (LM2)

Pin	Size	Color	Circuit	Function	Terminal Type ID	Option
1	0.5	BK / GY	626	Engine Control Vehicle Sensors Low Reference 1	I	—
2	0.5	BN / BU	357	Oil Temperature Sensor Signal	I	—
3	0.5	VT	7485	Engine Oil Temperature Sensor 2 Signal	I	—

B37B Engine Oil Pressure Sensor (L3B)

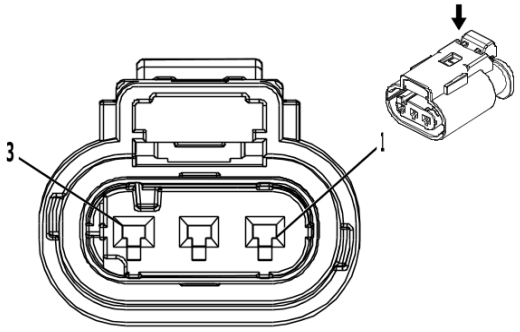

3240107

Connector Part Information

Harness Type: Engine Wiring Harness
OEM Connector: 13889776
Service Connector: 19301717
Description: 3-Way F 1.2 Multilock Series, Sealed(BK)

Terminal Part Information

Terminal Type ID	Terminated Lead	Diagnostic Test Probe	Terminal Removal Tool
I	Not required	J-35616-16 (L-GN)	No Tool Required

B37B Engine Oil Pressure Sensor (L3B)

Pin	Size	Color	Circuit	Function	Terminal Type ID	Option
1	0.5	YE / BN	331	Oil Pressure Sensor Signal	I	—
2	0.5	BK / YE	548	Engine Control Sensors Low Reference 1	I	—
3	0.5	BU / RD	460	Engine Control Sensors 5 Volt Reference 1	I	—

B37B Engine Oil Pressure Sensor (L84/L87)

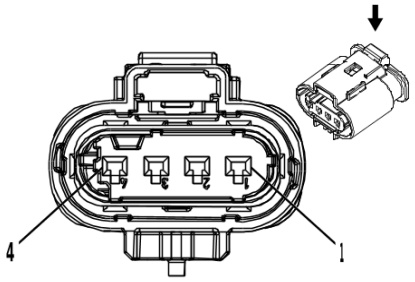

2717079

Connector Part Information

Harness Type: Engine Wiring Harness
OEM Connector: 13815341
Service Connector: 13587299
Description: 4-Way F 1.2 Multilock Series, Sealed(BK)

Terminal Part Information

Terminal Type ID	Terminated Lead	Diagnostic Test Probe	Terminal Removal Tool
I	Not required	J-35616-16 (L-GN)	No Tool Required

B37B Engine Oil Pressure Sensor (L84/L87)

Pin	Size	Color	Circuit	Function	Terminal Type ID	Option
1	0.5	BK / GN	580	Engine Control Sensors Low Reference 2	I	—
2	0.5	YE / BN	331	Oil Pressure Sensor Signal	I	—
3	0.5	BU / RD	460	Engine Control Sensors 5 Volt Reference 1	I	—
4	0.5	BN / BU	357	Oil Temperature Sensor Signal	I	—

B37B Engine Oil Pressure Sensor (LM2)

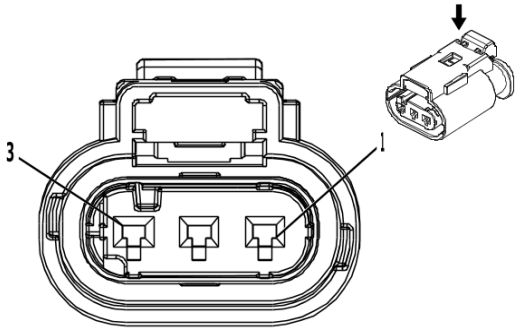

3240107

Connector Part Information

Harness Type: Engine Wiring Harness
OEM Connector: 13889776
Service Connector: 19301717
Description: 3-Way F 1.2 Multilock Series, Sealed(BK)

Terminal Part Information

Terminal Type ID	Terminated Lead	Diagnostic Test Probe	Terminal Removal Tool
I	Not required	J-35616-16 (L-GN)	No Tool Required

B37B Engine Oil Pressure Sensor (LM2)

Pin	Size	Color	Circuit	Function	Terminal Type ID	Option
1	0.5	YE / BN	331	Oil Pressure Sensor Signal	I	—
2	0.5	BK / YE	548	Engine Control Sensors Low Reference 1	I	—
3	0.5	WH / RD	480	Engine Control Vehicle Sensors 5 Volt Reference 1	I	—

B47 Fuel Pressure Sensor (FHS)

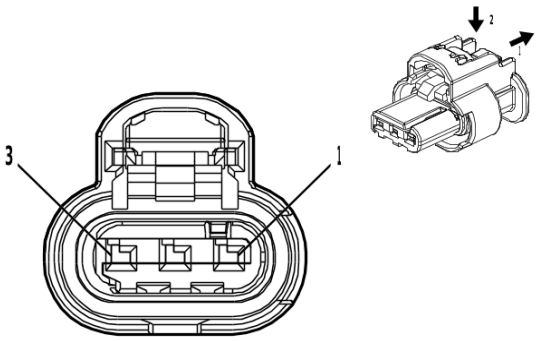

4581126

Connector Part Information

Harness Type: Chassis Wiring Harness
OEM Connector: 33358800
Service Connector: 86792094
Description: 3-Way F 1.2 MCON-CB Series, Sealed(BK)

Terminal Part Information

Terminal Type ID	Terminated Lead	Diagnostic Test Probe	Terminal Removal Tool
I	Not required	J-35616-16 (L-GN)	No Tool Required

B47 Fuel Pressure Sensor (FHS)

Pin	Size	Color	Circuit	Function	Terminal Type ID	Option
1	0.5	BN / RD	7445	Fuel Line Pressure Sensor 5V Reference	I	—
2	0.5	BK / YE	7447	Fuel Pressure Sensor Low Reference	I	—
3	0.5	BU / WH	7446	Fuel Pressure Sensor Signal	I	—

B47 Fuel Pressure Sensor (LM2)

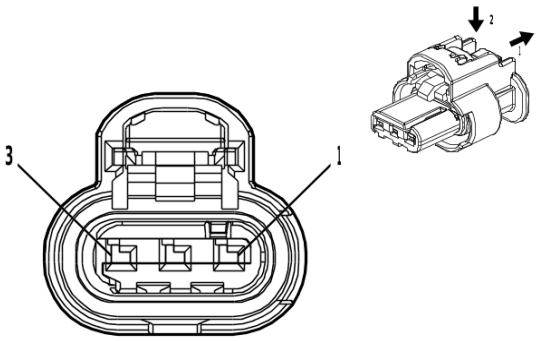

4581126

Connector Part Information

Harness Type: Chassis Wiring Harness
OEM Connector: 33358800
Service Connector: 86792094
Description: 3-Way F 1.2 MCON-CB Series, Sealed(BK)

Terminal Part Information

Terminal Type ID	Terminated Lead	Diagnostic Test Probe	Terminal Removal Tool
I	Not required	J-35616-16 (L-GN)	No Tool Required

B47 Fuel Pressure Sensor (LM2)

Pin	Size	Color	Circuit	Function	Terminal Type ID	Option
1	0.5	BN / RD	7445	Fuel Line Pressure Sensor 5V Reference	I	—
2	0.5	BK / YE	7447	Fuel Pressure Sensor Low Reference	I	—
3	0.5	BU / WH	7446	Fuel Pressure Sensor Signal	I	—

B47B Fuel Rail Pressure Sensor (L3B)

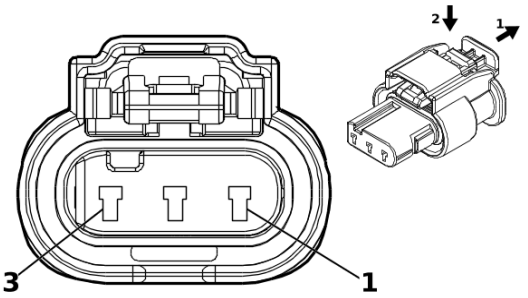

5420917

Connector Part Information

Harness Type: Fuel Injector Wiring Harness
OEM Connector: 34900-3127
Service Connector: Service by Harness - See Part Catalog
Description: 3-Way F 1.2 MCON-LL Series, Sealed(GY)

Terminal Part Information

Terminal Type ID	Terminated Lead	Diagnostic Test Probe	Terminal Removal Tool
I	Not required	No Tool Required	No Tool Required

B47B Fuel Rail Pressure Sensor (L3B)

Pin	Size	Color	Circuit	Function	Terminal Type ID	Option
1	0.5	BK / GN	580	Engine Control Sensors Low Reference 2	I	—
2	0.5	BU / WH	2918	Fuel Rail Pressure Sensor Signal	I	—
3	0.5	WH / RD	480	Engine Control Vehicle Sensors 5 Volt Reference 1	I	—

B47B Fuel Rail Pressure Sensor (L84/L87)

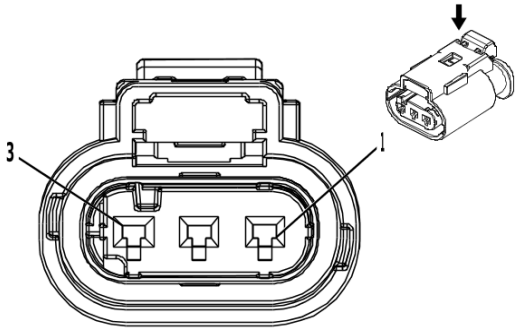

3240107

Connector Part Information

Harness Type: Fuel Injector Wiring Harness - Bank 1
OEM Connector: 10010344
Service Connector: Service by Harness - See Part Catalog
Description: 3-Way F 1.2 Multilock Series, Sealed(BK)

Terminal Part Information

Terminal Type ID	Terminated Lead	Diagnostic Test Probe	Terminal Removal Tool
I	Not required	No Tool Required	No Tool Required

B47B Fuel Rail Pressure Sensor (L84/L87)

Pin	Size	Color	Circuit	Function	Terminal Type ID	Option
1	0.5	BK / GN	548	Engine Control Sensors Low Reference 1	I	—
2	0.5	BU / WH	10786	Fuel Rail Pressure Sensor SENT 1 Signal	I	—
3	0.5	BN / RD	480	Engine Control Vehicle Sensors 5 Volt Reference 1	I	—

B47B Fuel Rail Pressure Sensor (LM2)

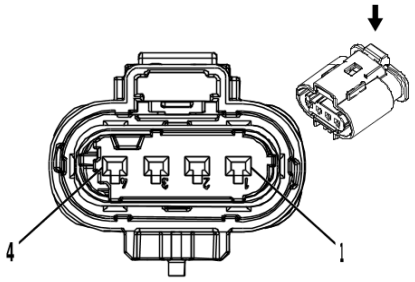

2717079

Connector Part Information

Harness Type: Engine Wiring Harness
OEM Connector: 13815341
Service Connector: 13587299
Description: 4-Way F 1.2 Multilock Series, Sealed(BK)

Terminal Part Information

Terminal Type ID	Terminated Lead	Diagnostic Test Probe	Terminal Removal Tool
I	Not required	J-35616-16 (L-GN)	No Tool Required

B47B Fuel Rail Pressure Sensor (LM2)

Pin	Size	Color	Circuit	Function	Terminal Type ID	Option
1	0.5	BN / RD	2917	Fuel Rail Pressure Sensor 5V Reference	I	—
2	0.5	BN / YE	2161	Fuel Rail Pressure Sensor 2 Signal	I	—
3	0.5	BK / GN	2919	Fuel Rail Pressure Sensor Low Reference	I	—
4	0.5	BU / WH	2918	Fuel Rail Pressure Sensor Signal	I	—

B52B Heated Oxygen Sensor 2 (L3B)

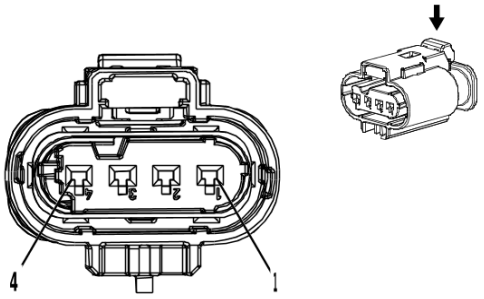

4036496

Connector Part Information

Harness Type: Engine Wiring Harness
OEM Connector: 15532689
Service Connector: 19330904
Description: 4-Way F 1.2 Multilock Series, Sealed(BK)

Terminal Part Information

Terminal Type ID	Terminated Lead	Diagnostic Test Probe	Terminal Removal Tool
I	Not required	J-35616-16 (L-GN)	No Tool Required

B52B Heated Oxygen Sensor 2 (L3B)

Pin	Size	Color	Circuit	Function	Terminal Type ID	Option
1	0.5	GY / WH	3122	HO2S Heater Low Control Bank 1 Sensor 2	I	—
2	0.5	VT / BU	5294	Powertrain Main Relay Fused Supply Voltage 5	I	—
3	0.5	WH / YE	3121	HO2S Low Signal Bank 1 Sensor 2	I	—
4	0.5	VT / BU	3120	HO2S High Signal Bank 1 Sensor 2	I	—

B52C Heated Oxygen Sensor - Bank 1 Sensor 1 (L3B)

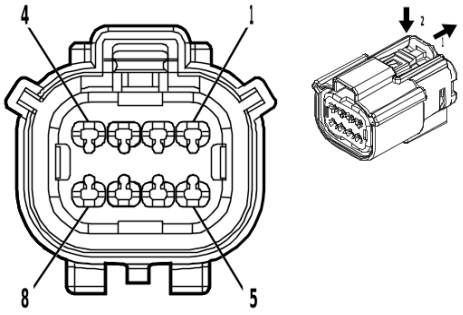

4846403

Connector Part Information

Harness Type: Engine Wiring Harness
OEM Connector: 35037828
Service Connector: 19369368
Description: 8-Way F 1.5 MX Series, Sealed(BK)

Terminal Part Information

Terminal Type ID	Terminated Lead	Diagnostic Test Probe	Terminal Removal Tool
I	Not required	J-35616-14 (GN)	No Tool Required

B52C Heated Oxygen Sensor - Bank 1 Sensor 1 (L3B)

Pin	Size	Color	Circuit	Function	Terminal Type ID	Option
1	0.5	BN	6934	HO2S Ground	I	—
2	0.5	YE / GY	6936	HO2S Signal	I	—
3	0.5	BN / WH	6933	HO2S Pump Current Signal	I	—
4	—	—	—	Not Occupied	—	—
5	0.5	VT / BU	5293	Powertrain Main Relay Fused Supply Voltage 4	I	—
6	0.5	GY / WH	3113	HO2S Heater Low Control Bank 1 Sensor 1	I	—
7	0.5	GN	6935	HO2S Pump Current Trim Signal	I	—
8	—	—	—	Not Occupied	—	—

B52C Heated Oxygen Sensor - Bank 1 Sensor 1 (L84/L87)

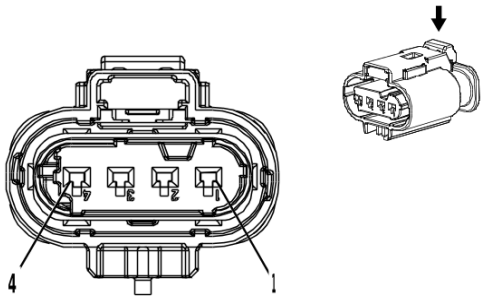

4381050

Connector Part Information

Harness Type: Engine Wiring Harness
OEM Connector: 33253021
Service Connector: 19354075
Description: 4-Way F 1.2 Multilock Series, Sealed(BK)

Terminal Part Information

Terminal Type ID	Terminated Lead	Diagnostic Test Probe	Terminal Removal Tool
I	Not required	J-35616-16 (L-GN)	No Tool Required

B52C Heated Oxygen Sensor - Bank 1 Sensor 1 (L84/L87)

Pin	Size	Color	Circuit	Function	Terminal Type ID	Option
1	0.5	GY / WH	3113	HO2S Heater Low Control Bank 1 Sensor 1	I	—
2	0.5	VT / BU	5293	Powertrain Main Relay Fused Supply Voltage 4	I	—
3	0.5	WH / BK	3111	HO2S Low Signal Bank 1 Sensor 1	I	—
4	0.5	VT / GY	3110	HO2S High Signal Bank 1 Sensor 1	I	—

B52D Heated Oxygen Sensor - Bank 1 Sensor 2 (L84/L87)

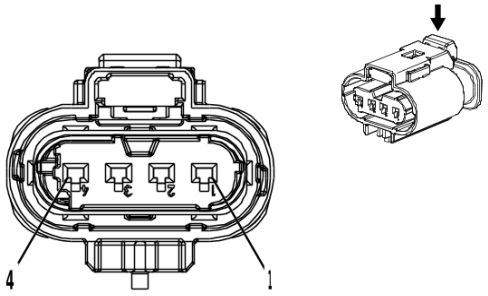

4036370

Connector Part Information

Harness Type: Engine Wiring Harness
OEM Connector: 15532690
Service Connector: 19330920
Description: 4-Way F 1.2 Multilock Series, Sealed(GY)

Terminal Part Information

Terminal Type ID	Terminated Lead	Diagnostic Test Probe	Terminal Removal Tool
I	Not required	J-35616-16 (L-GN)	No Tool Required

B52D Heated Oxygen Sensor - Bank 1 Sensor 2 (L84/L87)

Pin	Size	Color	Circuit	Function	Terminal Type ID	Option
1	0.5	GY / WH	3122	HO2S Heater Low Control Bank 1 Sensor 2	I	—
2	0.5	VT / BU	5294	Powertrain Main Relay Fused Supply Voltage 5	I	—
3	0.5	WH / YE	3121	HO2S Low Signal Bank 1 Sensor 2	I	—
4	0.5	VT / BU	3120	HO2S High Signal Bank 1 Sensor 2	I	—

B52E Heated Oxygen Sensor - Bank 2 Sensor 1 (L84/L87)

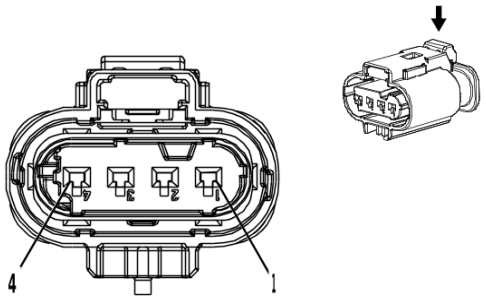

4381050

Connector Part Information

Harness Type: Engine Wiring Harness
OEM Connector: 33253021
Service Connector: 19354075
Description: 4-Way F 1.2 Multilock Series, Sealed(BK)

Terminal Part Information

Terminal Type ID	Terminated Lead	Diagnostic Test Probe	Terminal Removal Tool
I	Not required	J-35616-16 (L-GN)	No Tool Required

B52E Heated Oxygen Sensor - Bank 2 Sensor 1 (L84/L87)

Pin	Size	Color	Circuit	Function	Terminal Type ID	Option
1	0.5	GN / YE	3212	HO2S Heater Low Control Bank 2 Sensor 1	I	—
2	0.5	VT / BU	5293	Powertrain Main Relay Fused Supply Voltage 4	I	—
3	0.5	YE / WH	3211	HO2S Low Signal Bank 2 Sensor 1	I	—
4	0.5	VT / WH	3210	HO2S High Signal Bank 2 Sensor 1	I	—

B52F Heated Oxygen Sensor - Bank 2 Sensor 2 (L84/L87)

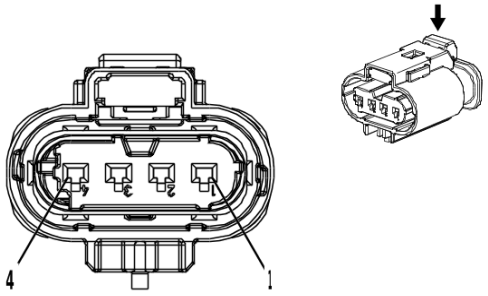

4036370

Connector Part Information

Harness Type: Engine Wiring Harness
OEM Connector: 15532690
Service Connector: 19330920
Description: 4-Way F 1.2 Multilock Series, Sealed(GY)

Terminal Part Information

Terminal Type ID	Terminated Lead	Diagnostic Test Probe	Terminal Removal Tool
I	Not required	J-35616-16 (L-GN)	No Tool Required

B52F Heated Oxygen Sensor - Bank 2 Sensor 2 (L84/L87)

Pin	Size	Color	Circuit	Function	Terminal Type ID	Option
1	0.5	WH / BN	3223	HO2S Heater Low Control Bank 2 Sensor 2	I	—
2	0.5	VT / BU	5294	Powertrain Main Relay Fused Supply Voltage 5	I	—
3	0.5	YE / BU	3221	HO2S Low Signal Bank 2 Sensor 2	I	—
4	0.5	VT / GN	3220	HO2S High Signal Bank 2 Sensor 2	I	—

B55 Engine Compartment Cover Switch

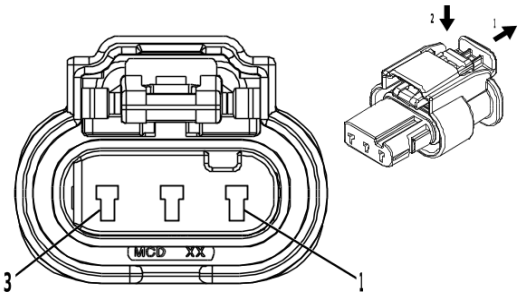

4421568

Connector Part Information

Harness Type: Body Wiring Harness
OEM Connector: 33320864
Service Connector: 19368220
Description: 3-Way F 1.2 MCON-LL Series, Sealed(BK)

Terminal Part Information

Terminal Type ID	Terminated Lead	Diagnostic Test Probe	Terminal Removal Tool
I	Not required	J-35616-16 (L-GN)	No Tool Required

B55 Engine Compartment Cover Switch

Pin	Size	Color	Circuit	Function	Terminal Type ID	Option
1	0.5	YE	4063	Hood Status A Signal	I	—
2	0.35	BN / GN	4064	Hood Status B Signal	I	—
3	0.5	BK / WH	151	Signal Ground	I	—

B58L Airbag Front End Discriminating Sensor - Left

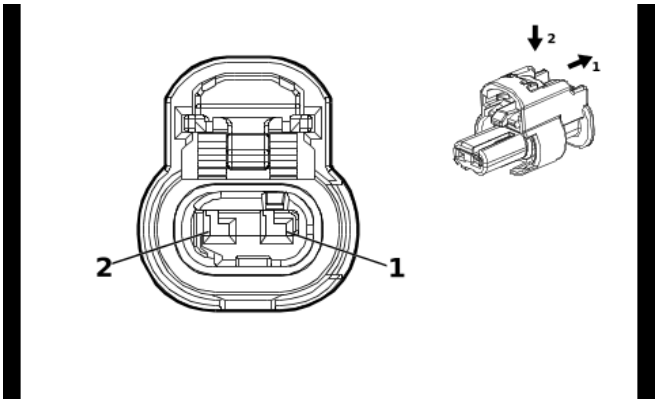

4649903

Connector Part Information

Harness Type: Body Wiring Harness
OEM Connector: 33327048
Service Connector: 85519075
Description: 2-Way F 1.2 MCON Series, Sealed(BK)

Terminal Part Information

Terminal Type ID	Terminated Lead	Diagnostic Test Probe	Terminal Removal Tool
I	Not required	J-35616-16 (L-GN)	No Tool Required

B58L Airbag Front End Discriminating Sensor - Left

Pin	Size	Color	Circuit	Function	Terminal Type ID	Option
1	0.5	OG / YE	354	Left Front Impact Discriminating Sensor Signal	I	—
2	0.5	BK / OG	5045	Left Front Impact Discriminating Sensor Low Reference	I	—

B58R Airbag Front End Discriminating Sensor - Right

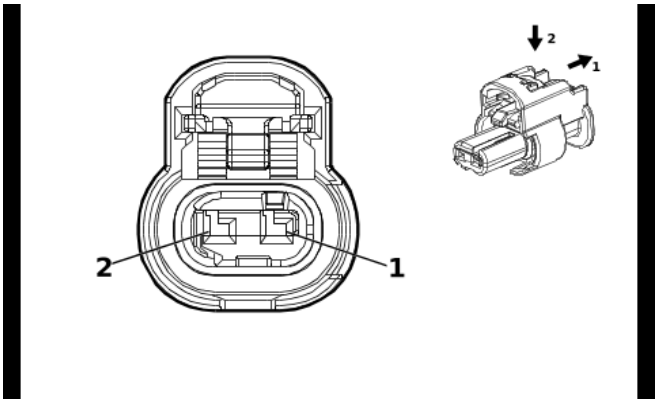

4649903

Connector Part Information

Harness Type: Body Wiring Harness
OEM Connector: 33327048
Service Connector: 85519075
Description: 2-Way F 1.2 MCON Series, Sealed(BK)

Terminal Part Information

Terminal Type ID	Terminated Lead	Diagnostic Test Probe	Terminal Removal Tool
I	Not required	J-35616-16 (L-GN)	No Tool Required

B58R Airbag Front End Discriminating Sensor - Right

Pin	Size	Color	Circuit	Function	Terminal Type ID	Option
1	0.5	OG / GN	1409	Right Front Impact Discriminating Sensor Signal	I	—
2	0.5	BK / OG	5600	Right Front Impact Discriminating Sensor Low Reference	I	—

B61P Seat Belt Tension Sensor - Passenger

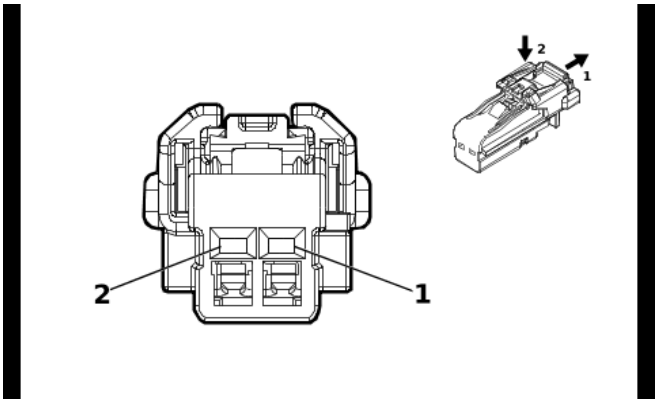

4115691

Connector Part Information

Harness Type: Body Wiring Harness
OEM Connector: 35311666
Service Connector: 19352066
Description: 2-Way F 1.2 MCON Series(BK)

Terminal Part Information

Terminal Type ID	Terminated Lead	Diagnostic Test Probe	Terminal Removal Tool
I	Not required	J-35616-12 (BU)	No Tool Required

B61P Seat Belt Tension Sensor - Passenger

Pin	Size	Color	Circuit	Function	Terminal Type ID	Option
1	0.35	GY / OG	3946	Passenger Automatic Locking Retractor Switch Low Reference	I	—
2	0.35	OG / BN	3947	Passenger Automatic Locking Retractor Switch Signal	I	—

B63LF Airbag Side Impact Sensor - Left Front Door

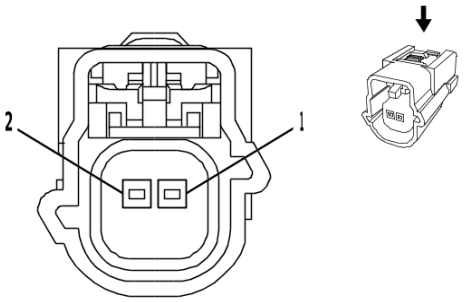

2179777

Connector Part Information

Harness Type: Front Side Door Door Wiring Harness - Driver
OEM Connector: 13610095
Service Connector: Service by Harness - See Part Catalog
Description: 2-Way F 0.64 Series, Sealed(GY)

Terminal Part Information

Terminal Type ID	Terminated Lead	Diagnostic Test Probe	Terminal Removal Tool
I	Not required	J-35616-64B (L-BU)	No Tool Required

B63LF Airbag Side Impact Sensor - Left Front Door

Pin	Size	Color	Circuit	Function	Terminal Type ID	Option
1	0.5	OG / GN	2132	Left Front Side Impact Sensor Signal	I	—
2	0.5	BK / OG	6628	Left Front Side Impact Sensor Low Reference	I	—

B63LR Airbag Side Impact Rear Sensor - Left Door (Extended Cab/Crew Cab)

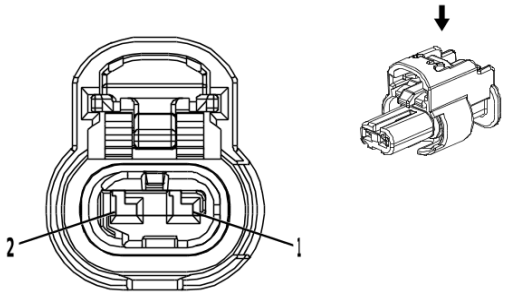

4335931

Connector Part Information

Harness Type: Rear Side Door Door Wiring Harness - Left
OEM Connector: 33371691
Service Connector: Service by Harness - See Part Catalog
Description: 2-Way F 1.2 MCON Series, Sealed(BK)

Terminal Part Information

Terminal Type ID	Terminated Lead	Diagnostic Test Probe	Terminal Removal Tool
I	Not required	J-35616-16 (L-GN)	No Tool Required

B63LR Airbag Side Impact Rear Sensor - Left Door (Extended Cab/Crew Cab)

Pin	Size	Color	Circuit	Function	Terminal Type ID	Option
1	0.5	OG / BU	6622	Left Rear Side Impact Sensor Signal	I	—
2	0.5	BK / OG	6623	Left Rear Side Impact Sensor Low Reference	I	—

B63RF Airbag Side Impact Sensor - Right Front Door

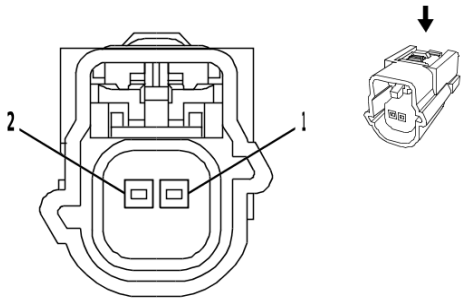

2179777

Connector Part Information

Harness Type: Front Side Door Door Wiring Harness - Passenger
OEM Connector: 13610095
Service Connector: Service by Harness - See Part Catalog
Description: 2-Way F 0.64 Series, Sealed(GY)

Terminal Part Information

Terminal Type ID	Terminated Lead	Diagnostic Test Probe	Terminal Removal Tool
I	Not required	J-35616-64B (L-BU)	No Tool Required

B63RF Airbag Side Impact Sensor - Right Front Door

Pin	Size	Color	Circuit	Function	Terminal Type ID	Option
1	0.5	BN / OG	2134	Right Front Side Impact Sensor Signal	I	—
2	0.5	BK / OG	6629	Right Front Side Impact Sensor Low Reference	I	—

B63RR Airbag Side Impact Rear Sensor - Right Door (Extended Cab/Crew Cab)

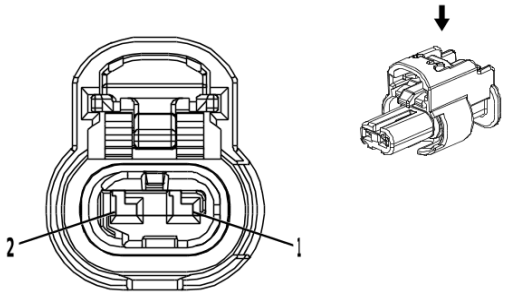

4335931

Connector Part Information

Harness Type: Rear Side Door Door Wiring Harness - Right
OEM Connector: 33371691
Service Connector: Service by Harness - See Part Catalog
Description: 2-Way F 1.2 MCON Series, Sealed(BK)

Terminal Part Information

Terminal Type ID	Terminated Lead	Diagnostic Test Probe	Terminal Removal Tool
I	Not required	J-35616-16 (L-GN)	No Tool Required

B63RR Airbag Side Impact Rear Sensor - Right Door (Extended Cab/Crew Cab)

Pin	Size	Color	Circuit	Function	Terminal Type ID	Option
1	0.5	OG / WH	6626	Right Rear Side Impact Sensor Signal	I	—
2	0.5	BK / OG	6627	Right Rear Side Impact Sensor Low Reference	I	—

B65 Manifold Absolute Pressure and Intake Air Temperature Sensor (L3B)

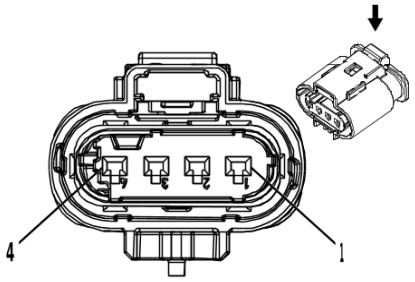

2717079

Connector Part Information

Harness Type: Engine Wiring Harness
OEM Connector: 13815341
Service Connector: 13587299
Description: 4-Way F 1.2 Multilock Series, Sealed(BK)

Terminal Part Information

Terminal Type ID	Terminated Lead	Diagnostic Test Probe	Terminal Removal Tool
I	Not required	J-35616-16 (L-GN)	No Tool Required

B65 Manifold Absolute Pressure and Intake Air Temperature Sensor (L3B)

Pin	Size	Color	Circuit	Function	Terminal Type ID	Option
1	0.5	WH / BU	7329	Pre-Throttle Air Temperature Signal	I	—
2	0.5	GY / RD	2704	Manifold Absolute Pressure Sensor 5V Reference	I	—
3	0.5	BK / GN	469	Manifold Absolute Pressure Sensor Low Reference	I	—
4	0.5	GN / WH	432	Manifold Absolute Pressure Sensor Signal	I	—

B65 Manifold Absolute Pressure and Intake Air Temperature Sensor (LM2)

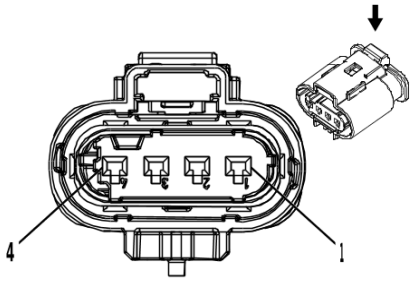

2717079

Connector Part Information

Harness Type: Engine Wiring Harness
OEM Connector: 13815341
Service Connector: 13587299
Description: 4-Way F 1.2 Multilock Series, Sealed(BK)

Terminal Part Information

Terminal Type ID	Terminated Lead	Diagnostic Test Probe	Terminal Removal Tool
I	Not required	J-35616-16 (L-GN)	No Tool Required

B65 Manifold Absolute Pressure and Intake Air Temperature Sensor (LM2)

Pin	Size	Color	Circuit	Function	Terminal Type ID	Option
1	0.5	WH / BU	7329	Pre-Throttle Air Temperature Signal	I	—
2	0.5	WH / RD	480	Engine Control Vehicle Sensors 5 Volt Reference 1	I	—
3	0.5	BK / GN	580	Engine Control Sensors Low Reference 2	I	—
4	0.5	GN / WH	432	Manifold Absolute Pressure Sensor Signal	I	—

B68A Knock Sensor 1 (L3B)

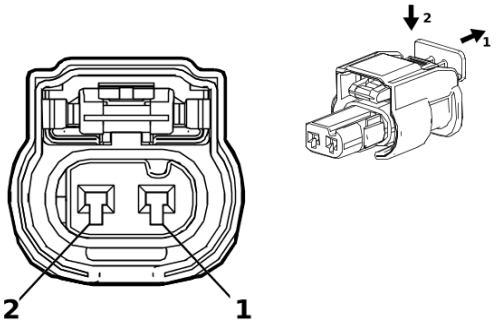

3960139

Connector Part Information

Harness Type: Fuel Injector Wiring Harness
OEM Connector: 34900-2120
Service Connector: Service by Harness - See Part Catalog
Description: 2-Way F 1.2 MCON Series, Sealed(BK)

Terminal Part Information

Terminal Type ID	Terminated Lead	Diagnostic Test Probe	Terminal Removal Tool
I	Not required	No Tool Required	No Tool Required

B68A Knock Sensor 1 (L3B)

Pin	Size	Color	Circuit	Function	Terminal Type ID	Option
1	0.5	VT / GY	496	Knock Sensor 1 Signal	I	—
2	0.5	BK / YE	1716	Knock Sensor Low Reference 1	I	—

B68A Knock Sensor 1 (L84/L87)

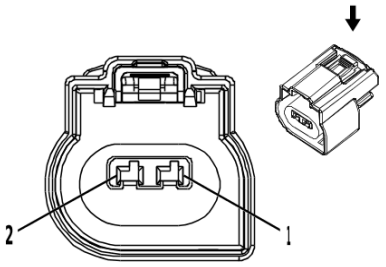

2717073

Connector Part Information

Harness Type: Engine Wiring Harness
OEM Connector: 13814755
Service Connector: 19301207
Description: 2-Way F 1.5 MX Series, Sealed(BK)

Terminal Part Information

Terminal Type ID	Terminated Lead	Diagnostic Test Probe	Terminal Removal Tool
I	Not required	J-35616-2A (GY)	No Tool Required

B68A Knock Sensor 1 (L84/L87)

Pin	Size	Color	Circuit	Function	Terminal Type ID	Option
1	0.75	VT / GY	496	Knock Sensor 1 Signal	I	—
2	0.75	BK / YE	1716	Knock Sensor Low Reference 1	I	—

B68B Knock Sensor 2 (L3B)

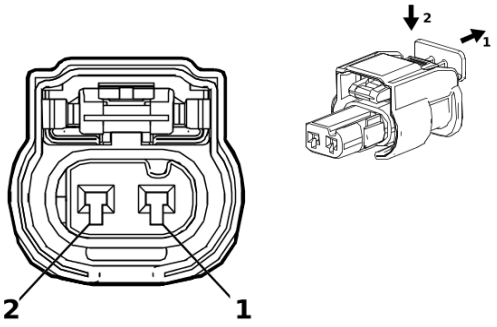

3960139

Connector Part Information

Harness Type: Fuel Injector Wiring Harness
OEM Connector: 34900-2120
Service Connector: Service by Harness - See Part Catalog
Description: 2-Way F 1.2 MCON Series, Sealed(BK)

Terminal Part Information

Terminal Type ID	Terminated Lead	Diagnostic Test Probe	Terminal Removal Tool
I	Not required	No Tool Required	No Tool Required

B68B Knock Sensor 2 (L3B)

Pin	Size	Color	Circuit	Function	Terminal Type ID	Option
1	0.5	WH / GY	1876	Knock Sensor 2 Signal	I	—
2	0.5	BK / GY	2303	Knock Sensor Low Reference 2	I	—

B68B Knock Sensor 2 (L84/L87)

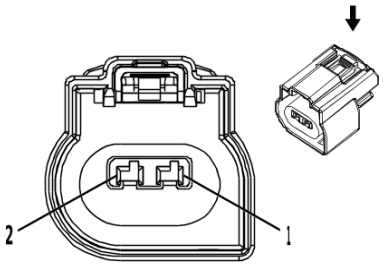

2717073

Connector Part Information

Harness Type: Engine Wiring Harness
OEM Connector: 13814755
Service Connector: 19301207
Description: 2-Way F 1.5 MX Series, Sealed(BK)

Terminal Part Information

Terminal Type ID	Terminated Lead	Diagnostic Test Probe	Terminal Removal Tool
I	Not required	J-35616-2A (GY)	No Tool Required

B68B Knock Sensor 2 (L84/L87)

Pin	Size	Color	Circuit	Function	Terminal Type ID	Option
1	0.75	WH / GY	1876	Knock Sensor 2 Signal	I	—
2	0.75	BK / GY	2303	Knock Sensor Low Reference 2	I	—

B74 Manifold Absolute Pressure Sensor (L84/L87)

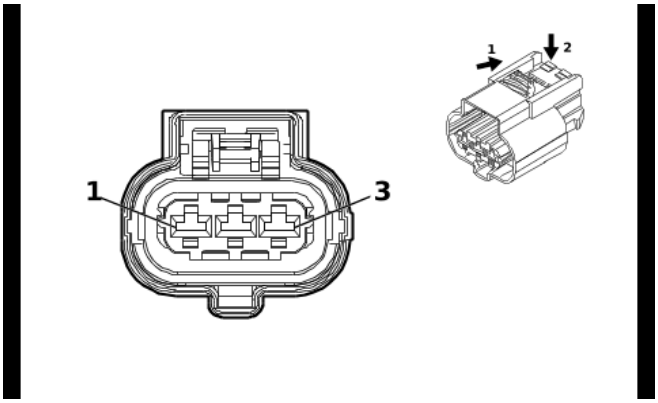

4900977

Connector Part Information

Harness Type: Engine Wiring Harness
OEM Connector: 35133579
Service Connector: 84815530
Description: 3-Way F 2.8 CTS Series, Sealed(BK)

Terminal Part Information

Terminal Type ID	Terminated Lead	Diagnostic Test Probe	Terminal Removal Tool
I	Not required	J-35616-35 (VT)	No Tool Required

B74 Manifold Absolute Pressure Sensor (L84/L87)

Pin	Size	Color	Circuit	Function	Terminal Type ID	Option
1	0.5	GY / RD	2704	Manifold Absolute Pressure Sensor 5V Reference	I	—
2	0.5	BK / GN	469	Manifold Absolute Pressure Sensor Low Reference	I	—
3	0.5	GN / WH	432	Manifold Absolute Pressure Sensor Signal	I	—

B75 Mass Airflow Sensor (L3B)

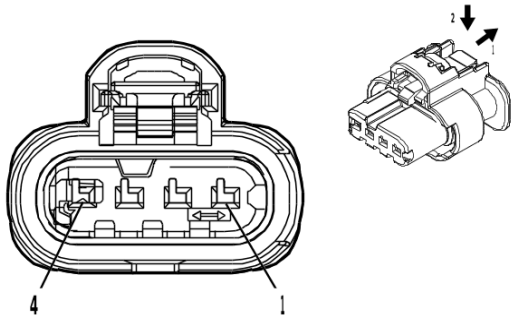

4934614

Connector Part Information

Harness Type: Engine Wiring Harness
OEM Connector: 33367416
Service Connector: 85519071
Description: 4-Way F 1.2 MCON-CB Series, Sealed(BK)

Terminal Part Information

Terminal Type ID	Terminated Lead	Diagnostic Test Probe	Terminal Removal Tool
I	Not required	J-35616-16 (L-GN)	No Tool Required

B75 Mass Airflow Sensor (L3B)

Pin	Size	Color	Circuit	Function	Terminal Type ID	Option
1	0.5	VT / BU	5294	Powertrain Main Relay Fused Supply Voltage 5	I	—
2	0.5	GN / WH	492	Mass Air Flow Sensor Signal	I	—
3	0.5	GN / WH	4622	Engine Control Module LIN Bus 2	I	—
4	0.5	BK	6550	Ground	I	—

B75 Mass Airflow Sensor (L84/L87)

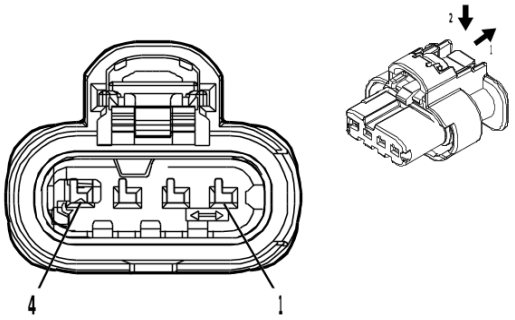

4934614

Connector Part Information

Harness Type: Engine Wiring Harness
OEM Connector: 33367416
Service Connector: 85519071
Description: 4-Way F 1.2 MCON-CB Series, Sealed(BK)

Terminal Part Information

Terminal Type ID	Terminated Lead	Diagnostic Test Probe	Terminal Removal Tool
I	Not required	J-35616-16 (L-GN)	No Tool Required

B75 Mass Airflow Sensor (L84/L87)

Pin	Size	Color	Circuit	Function	Terminal Type ID	Option
1	0.5	VT / BU	5294	Powertrain Main Relay Fused Supply Voltage 5	I	—
2	0.5	GN / WH	492	Mass Air Flow Sensor Signal	I	—
3	0.5	GN / WH	4622	Engine Control Module LIN Bus 2	I	—
4	0.75	BK / WH	251	Signal Ground	I	—

B75 Mass Airflow Sensor (LM2)

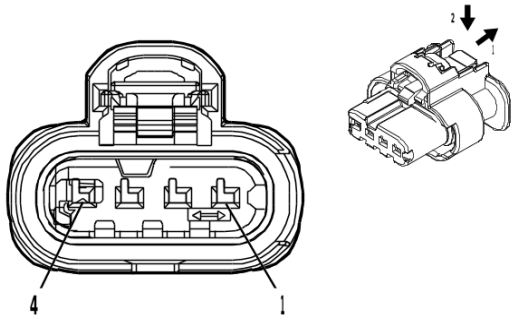

4934614

Connector Part Information

Harness Type: Engine Wiring Harness
OEM Connector: 33367416
Service Connector: 85519071
Description: 4-Way F 1.2 MCON-CB Series, Sealed(BK)

Terminal Part Information

Terminal Type ID	Terminated Lead	Diagnostic Test Probe	Terminal Removal Tool
I	Not required	J-35616-16 (L-GN)	No Tool Required

B75 Mass Airflow Sensor (LM2)

Pin	Size	Color	Circuit	Function	Terminal Type ID	Option
1	0.5	VT / BU	5294	Powertrain Main Relay Fused Supply Voltage 5	I	—
2	0.5	GN / WH	492	Mass Air Flow Sensor Signal	I	—
3	0.5	GN / WH	4622	Engine Control Module LIN Bus 2	I	—
4	0.75	BK / WH	251	Signal Ground	I	—

B87 Rearview Driver Information Camera (UV2)

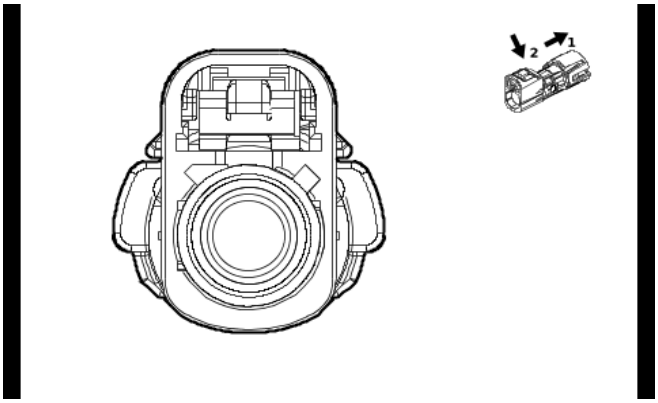

5758030

Connector Part Information

Harness Type: Endgate Wiring Harness COAX
OEM Connector: 35187032
Service Connector: Service by Cable Assembly — See Part Catalog
Description: 1-Way F Coax Type(BK)

Terminal Part Information

Terminal Type ID	Terminated Lead	Diagnostic Test Probe	Terminal Removal Tool
I	Not required	No Tool Required	No Tool Required

B87 Rearview Driver Information Camera (UV2)

Pin	Size	Color	Circuit	Function	Terminal Type ID	Option
—	—	Coax Cable	—	Rear Vision Camera Coaxial Video Signal	I	—

B87 Rearview Driver Information Camera (UVB)

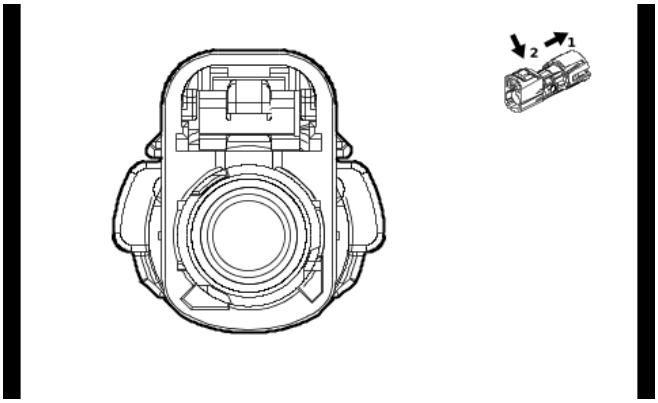

5757455

Connector Part Information

Harness Type: Endgate Wiring Harness COAX
OEM Connector: 35187043
Service Connector: Service by Cable Assembly — See Part Catalog
Description: 1-Way F Coax Type(OG)

Terminal Part Information

Terminal Type ID	Terminated Lead	Diagnostic Test Probe	Terminal Removal Tool
I	Not required	No Tool Required	No Tool Required

B87 Rearview Driver Information Camera (UVB)

Pin	Size	Color	Circuit	Function	Terminal Type ID	Option
—	—	Coax Cable	—	Rear Vision Camera Coaxial Video Signal	I	—

B87CA Auxiliary Rearview Camera - Cargo Area (UVN)

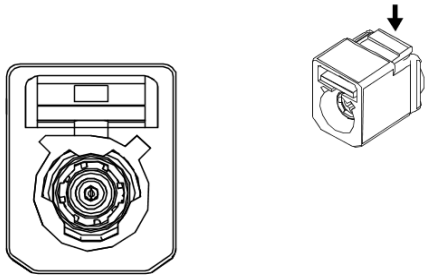

3293633

Connector Part Information

Harness Type: Inside Rearview Mirror Wiring Harness COAX
OEM Connector: 13519801
Service Connector: Service by Cable Assembly — See Part Catalog
Description: 1-Way F Coax Type(BK)

Terminal Part Information

Terminal Type ID	Terminated Lead	Diagnostic Test Probe	Terminal Removal Tool
I	Not required	No Tool Required	No Tool Required

B87CA Auxiliary Rearview Camera - Cargo Area (UVN)

Pin	Size	Color	Circuit	Function	Terminal Type ID	Option
—	—	Coax Cable	—	Cargo Bed Rear Vision Camera Coaxial Video Signal	I	—

B88D Seat Belt Switch - Driver

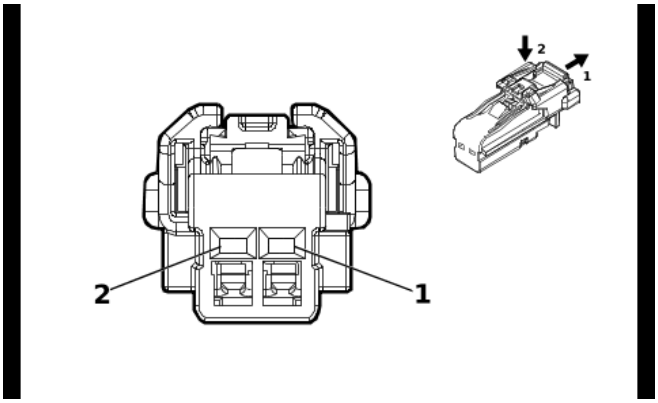

4115691

Connector Part Information

Harness Type: Front Seat Wiring Harness - Driver
OEM Connector: 6098-8988
Service Connector: Service by Harness - See Part Catalog
Description: 2-Way F 1.2 MCON Series(BK)

Terminal Part Information

Terminal Type ID	Terminated Lead	Diagnostic Test Probe	Terminal Removal Tool
I	Not required	J-35616-16 (L-GN)	No Tool Required

B88D Seat Belt Switch - Driver

Pin	Size	Color	Circuit	Function	Terminal Type ID	Option
1	0.5	BK / OG	1363	Driver Seat Belt Switch Low Reference	I	—
2	0.5	OG / GY	2652	Driver Seat Belt Sensor Signal	I	—

B88P Seat Belt Switch - Passenger

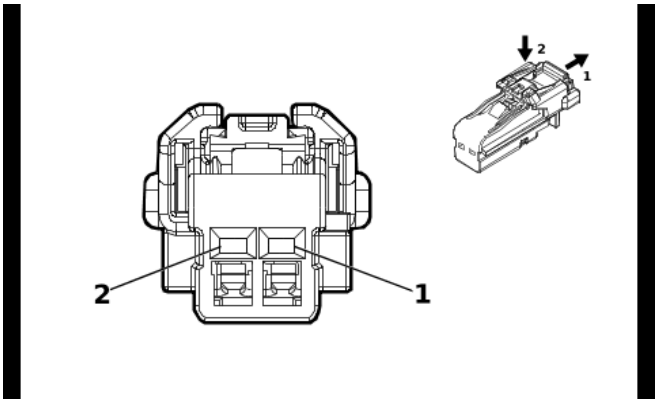

4115691

Connector Part Information

Harness Type: Front Seat Wiring Harness - Passenger
OEM Connector: 6098-8988
Service Connector: Service by Harness - See Part Catalog
Description: 2-Way F 1.2 MCON Series(BK)

Terminal Part Information

Terminal Type ID	Terminated Lead	Diagnostic Test Probe	Terminal Removal Tool
I	Not required	J-35616-16 (L-GN)	No Tool Required

B88P Seat Belt Switch - Passenger

Pin	Size	Color	Circuit	Function	Terminal Type ID	Option
1	0.5	BK / OG	1363	Driver Seat Belt Switch Low Reference	I	—
2	0.5	OG / VT	1362	Passenger Seat Belt Switch Signal	I	—

B96 Cylinder Head Temperature Sensor (LM2)

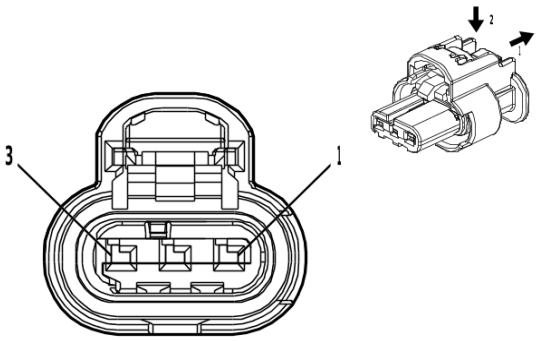

4994602

Connector Part Information

Harness Type: Engine Wiring Harness
OEM Connector: 33358809
Service Connector: 19371199
Description: 3-Way F 1.2 MCON-CB Series, Sealed(BK)

Terminal Part Information

Terminal Type ID	Terminated Lead	Diagnostic Test Probe	Terminal Removal Tool
I	Not required	J-35616-16 (L-GN)	No Tool Required

B96 Cylinder Head Temperature Sensor (LM2)

Pin	Size	Color	Circuit	Function	Terminal Type ID	Option
1	0.5	BK / GN	580	Engine Control Sensors Low Reference 2	I	—
2	0.5	GN / YE	37	Engine Block Temperature Sensor Signal	I	—
3	0.5	BN / YE	1372	Engine Metal Temperature Sensor Signal 2	I	—

B107 Accelerator Pedal Position Sensor

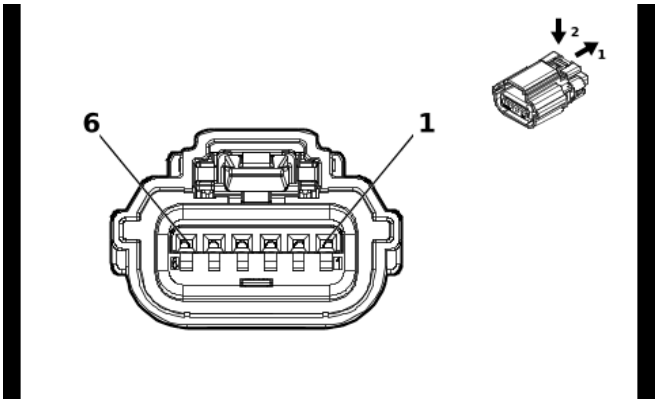

5921819

Connector Part Information

Harness Type: Body Wiring Harness
OEM Connector: 35390637
Service Connector: 86825466
Description: 6-Way F 0.64 OCS Series, Sealed(BK)

Terminal Part Information

Terminal Type ID	Terminated Lead	Diagnostic Test Probe	Terminal Removal Tool
I	Not required	J-35616-64B (L-BU)	No Tool Required

B107 Accelerator Pedal Position Sensor

Pin	Size	Color	Circuit	Function	Terminal Type ID	Option
1	0.35	WH / RD	1164	Accelerator Pedal Position 5V Reference 1	I	—
2	0.35	YE / WH	1161	Accelerator Pedal Position Signal 1	I	—
3	0.35	BK / BU	1271	Accelerator Pedal Position Low Reference 1	I	—
4	0.35	BK / VT	1272	Accelerator Pedal Position Low Reference 2	I	—
5	0.35	GN / WH	1162	Accelerator Pedal Position Signal 2	I	—
6	0.35	BN / RD	1274	Accelerator Pedal Position 5V Reference 2	I	—

B110 Battery Monitor Module X1

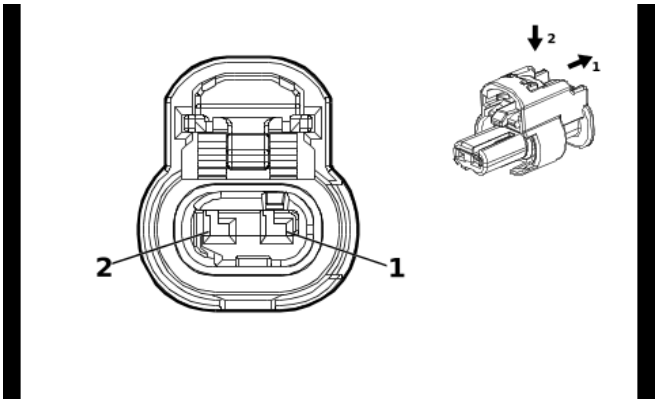

4649903

Connector Part Information

Harness Type: Body Wiring Harness
OEM Connector: 33327048
Service Connector: 85519075
Description: 2-Way F 1.2 MCON Series, Sealed(BK)

Terminal Part Information

Terminal Type ID	Terminated Lead	Diagnostic Test Probe	Terminal Removal Tool
I	Not required	J-35616-16 (L-GN)	No Tool Required

B110 Battery Monitor Module X1

Pin	Size	Color	Circuit	Function	Terminal Type ID	Option
1	0.35	GN / YE	2855	Body Control Module LIN Bus 9	I	—
2	0.75	RD / YE	2340	Battery Positive Voltage	I	—

B110 Battery Monitor Module X2 (L3B/L84/L87)

—

Connector Part Information

Harness Type: Battery Negative Cable
OEM Connector: 13516387
Service Connector: Service by Cable Assembly — See Part Catalog
Description: 1-Way F Ring Terminal

Terminal Part Information

Terminal Type ID	Terminated Lead	Diagnostic Test Probe	Terminal Removal Tool
I	Not required	No Tool Required	No Tool Required

B110 Battery Monitor Module X2 (L3B/L84/L87)

Pin	Size	Color	Circuit	Function	Terminal Type ID	Option
1	50	BK	550	Ground	I	—

B110 Battery Monitor Module X2 (LM2)

—

Connector Part Information

Harness Type: Battery Negative Cable
OEM Connector: 13516387
Service Connector: Service by Cable Assembly — See Part Catalog
Description: 1-Way F Ring Terminal

Terminal Part Information

Terminal Type ID	Terminated Lead	Diagnostic Test Probe	Terminal Removal Tool
I	Not required	No Tool Required	No Tool Required

B110 Battery Monitor Module X2 (LM2)

Pin	Size	Color	Circuit	Function	Terminal Type ID	Option
1	50	BK	550	Ground	I	—

B111 Turbocharger/Supercharger Boost Pressure Sensor (L3B)

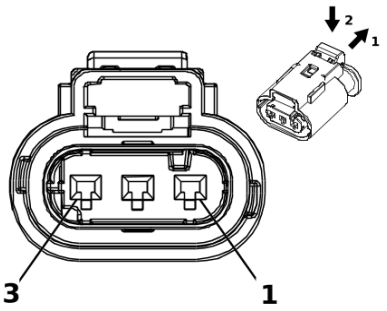

2717069

Connector Part Information

Harness Type: Engine Wiring Harness
OEM Connector: 13763990
Service Connector: 84601390
Description: 3-Way F 1.2 Multilock Series, Sealed(BK)

Terminal Part Information

Terminal Type ID	Terminated Lead	Diagnostic Test Probe	Terminal Removal Tool
I	Not required	J-35616-16 (L-GN)	No Tool Required

B111 Turbocharger/Supercharger Boost Pressure Sensor (L3B)

Pin	Size	Color	Circuit	Function	Terminal Type ID	Option
1	0.5	BU / RD	460	Engine Control Sensors 5 Volt Reference 1	I	—
2	0.5	BK / YE	548	Engine Control Sensors Low Reference 1	I	—
3	0.5	YE / WH	3200	Throttle Inlet Absolute Pressure Sensor Signal	I	—

B117A Windshield Outside Moisture/Ambient Light and Humidity Sensor (ASV+CE1)

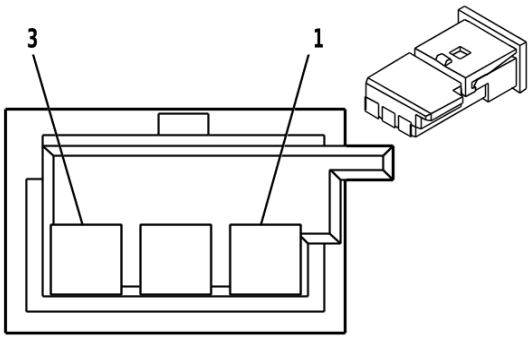

647970

Connector Part Information

Harness Type: Headlamp Automatic Control Ambient Light Sensor Wiring Harness
OEM Connector: 13153088
Service Connector: Service by Harness - See Part Catalog
Description: 3-Way F 0.64 Micro-Quadlock Series(BK)

Terminal Part Information

Terminal Type ID	Terminated Lead	Diagnostic Test Probe	Terminal Removal Tool
I	Not required	Not Available	No Tool Required

B117A Windshield Outside Moisture/Ambient Light and Humidity Sensor (ASV+CE1)

Pin	Size	Color	Circuit	Function	Terminal Type ID	Option
1	0.35	RD / VT	339	Run/Crank Ignition 1 Voltage	I	—
2	0.35	GN / BN	4115	Body Control Module LIN Bus 5	I	—
3	0.35	BK	851	Signal Ground	I	—

B118 Windshield Washer Solvent Container Level Sensor

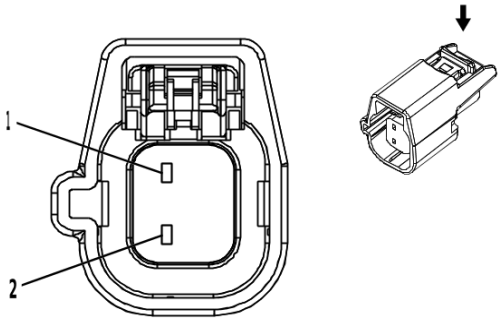

3958652

Connector Part Information

Harness Type: Body Wiring Harness
OEM Connector: 33113086
Service Connector: 13593220
Description: 2-Way F 1.5 Series, Sealed(L-GY)

Terminal Part Information

Terminal Type ID	Terminated Lead	Diagnostic Test Probe	Terminal Removal Tool
I	Not required	J-35616-14 (GN)	No Tool Required

B118 Windshield Washer Solvent Container Level Sensor

Pin	Size	Color	Circuit	Function	Terminal Type ID	Option
1	0.35	VT	185	Low Washer Fluid Indicator Control	I	—
2	0.5	BK / WH	151	Signal Ground	I	—

B130A Exhaust Gas Recirculation Temperature Sensor 1 (LM2)

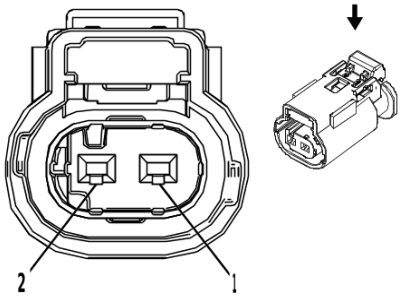

2830969

Connector Part Information

Harness Type: Engine Wiring Harness
OEM Connector: 13840071
Service Connector: 13587321
Description: 2-Way F 1.2 Multilock Series, Sealed(D-GY)

Terminal Part Information

Terminal Type ID	Terminated Lead	Diagnostic Test Probe	Terminal Removal Tool
I	Not required	J-35616-16 (L-GN)	No Tool Required

B130A Exhaust Gas Recirculation Temperature Sensor 1 (LM2)

Pin	Size	Color	Circuit	Function	Terminal Type ID	Option
1	0.5	BK / BU	6274	Exhaust Gas Recirculation Temperature Sensor Low Reference	I	—
2	0.5	WH / BN	3237	Exhaust Gas Recirculation Temperature Sensor Signal	I	—

B130C Exhaust Gas Recirculation Temperature Sensor 3 (LM2)

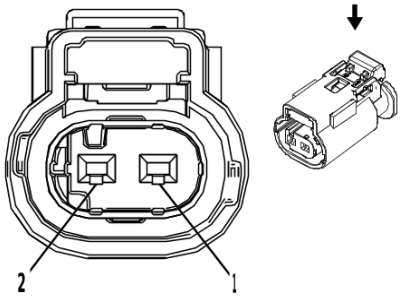

2830969

Connector Part Information

Harness Type: Engine Wiring Harness
OEM Connector: 13840071
Service Connector: 13587321
Description: 2-Way F 1.2 Multilock Series, Sealed(D-GY)

Terminal Part Information

Terminal Type ID	Terminated Lead	Diagnostic Test Probe	Terminal Removal Tool
I	Not required	J-35616-16 (L-GN)	No Tool Required

B130C Exhaust Gas Recirculation Temperature Sensor 3 (LM2)

Pin	Size	Color	Circuit	Function	Terminal Type ID	Option
1	0.5	BK / GN	3235	Exhaust Gas Recirculation Temperature Sensor 3 Low Reference	I	—
2	0.5	WH / GY	3234	Exhaust Gas Recirculation Temperature Sensor 3 Signal	I	—

B131A Exhaust Gas Temperature Sensor 1 (LM2)

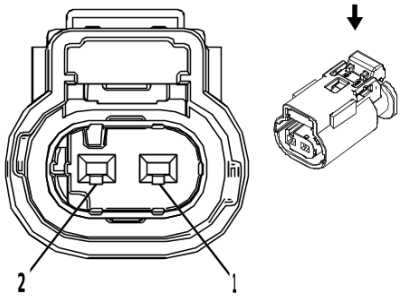

2830969

Connector Part Information

Harness Type: Engine Wiring Harness
OEM Connector: 13840071
Service Connector: 13587321
Description: 2-Way F 1.2 Multilock Series, Sealed(D-GY)

Terminal Part Information

Terminal Type ID	Terminated Lead	Diagnostic Test Probe	Terminal Removal Tool
I	Not required	J-35616-16 (L-GN)	No Tool Required

B131A Exhaust Gas Temperature Sensor 1 (LM2)

Pin	Size	Color	Circuit	Function	Terminal Type ID	Option
1	0.5	BU / WH	5277	Exhaust Gas Temperature Sensor 1 Signal	I	—
2	0.5	BK / BN	6782	Exhaust Gas Temperature Sensor 1 Low Reference	I	—

B131B Exhaust Gas Temperature Sensor 2 (LM2)

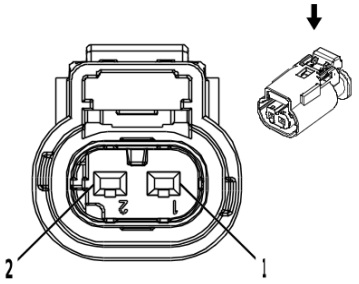

2717037

Connector Part Information

Harness Type: Engine Wiring Harness
OEM Connector: 13735325
Service Connector: 13587325
Description: 2-Way F 1.2 Multilock Series, Sealed(L-GY)

Terminal Part Information

Terminal Type ID	Terminated Lead	Diagnostic Test Probe	Terminal Removal Tool
I	Not required	J-35616-16 (L-GN)	No Tool Required

B131B Exhaust Gas Temperature Sensor 2 (LM2)

Pin	Size	Color	Circuit	Function	Terminal Type ID	Option
1	0.5	BU / GN	5377	Exhaust Gas Temperature Sensor 2 Signal	I	—
2	0.5	BK / BU	6783	Exhaust Gas Temperature Sensor 2 Low Reference	I	—

B131C Exhaust Gas Temperature Sensor 3 (LM2)

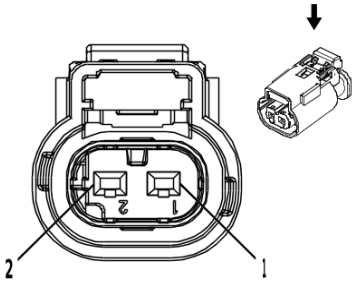

2717037

Connector Part Information

Harness Type: Engine Wiring Harness
OEM Connector: 13735325
Service Connector: 13587325
Description: 2-Way F 1.2 Multilock Series, Sealed(L-GY)

Terminal Part Information

Terminal Type ID	Terminated Lead	Diagnostic Test Probe	Terminal Removal Tool
I	Not required	J-35616-16 (L-GN)	No Tool Required

B131C Exhaust Gas Temperature Sensor 3 (LM2)

Pin	Size	Color	Circuit	Function	Terminal Type ID	Option
1	0.5	GY / GN	5378	Exhaust Gas Temperature Sensor 3 Signal	I	—
2	0.5	BK / GN	3657	Exhaust Gas Temperature Sensor 3 Low Reference	I	—

B136 Exhaust Particulate Matter Sensor (LM2)

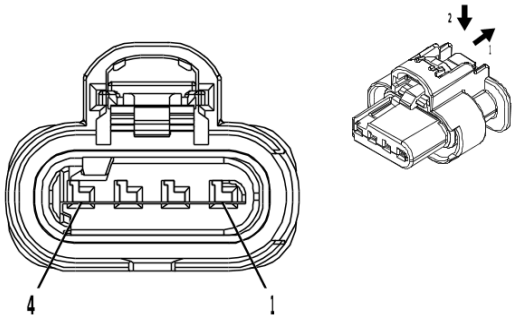

4210809

Connector Part Information

Harness Type: Chassis Wiring Harness
OEM Connector: 33390897
Service Connector: 85518225
Description: 4-Way F 1.2 MCON-CB Series, Sealed(BK)

Terminal Part Information

Terminal Type ID	Terminated Lead	Diagnostic Test Probe	Terminal Removal Tool
I	Not required	J-35616-16 (L-GN)	No Tool Required

B136 Exhaust Particulate Matter Sensor (LM2)

Pin	Size	Color	Circuit	Function	Terminal Type ID	Option
1	1	BK / WH	1151	Signal Ground	I	—
2	0.5	BU / GY	4054	Private Serial Data Powertrain CAN Bus [-] Serial Data	I	—
3	0.5	WH	4055	Private Serial Data Powertrain CAN Bus [+] Serial Data	I	—
4	1	VT / GN	4320	Powertrain Sensor Bus Enable	I	—

B137B Power Steering Shaft Torque/Position Sensor

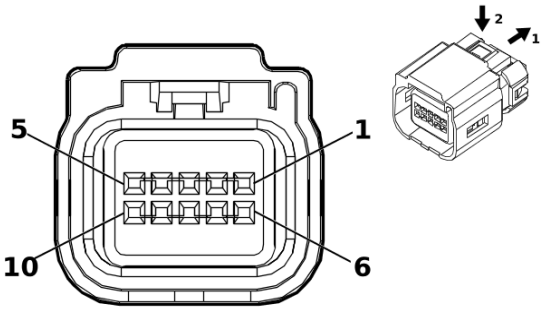

3608469

Connector Part Information

Harness Type: Power Steering Control Module Wiring Harness - Shaft Sensor
OEM Connector: 13587225
Service Connector: Service by Harness - See Part Catalog
Description: 10-Way F 0.64 Kaizen Series, Sealed(GY)

Terminal Part Information

Terminal Type ID	Terminated Lead	Diagnostic Test Probe	Terminal Removal Tool
I	Not required	No Tool Required	No Tool Required

B137B Power Steering Shaft Torque/Position Sensor

Pin	Size	Color	Circuit	Function	Terminal Type ID	Option
1	0.5	BU	8367	Handwheel Channel A Torque Pressure Sensor 1 SENT Signal	I	—
2	0.5	RD	8366	Handwheel Channel A High Reference	I	—
3	0.5	BK	8370	Handwheel Channel A Low Reference	I	—
4	0.5	WH / RD	8371	Handwheel Channel B High Reference	I	—
5	0.5	WH / BU	8372	Handwheel Channel B Torque Pressure Sensor 1 SENT Signal	I	—
6	0.5	VT	8368	Handwheel Channel A Torque Pressure Sensor 2 SENT Signal	I	—
7	0.5	OG	8369	Handwheel Channel A Angle Position Sensor SENT Signal	I	—
8	0.5	GY	8375	Handwheel Channel B Low Reference	I	—
9	0.5	YE	8374	Handwheel Channel B Angle Position Sensor SENT Signal	I	—
10	0.5	GN	8373	Handwheel Channel B Torque Pressure Sensor 2 SENT Signal	I	—

B139 Transfer Case Two/Four Wheel Drive Actuator Position Sensor (NP0/NQH)

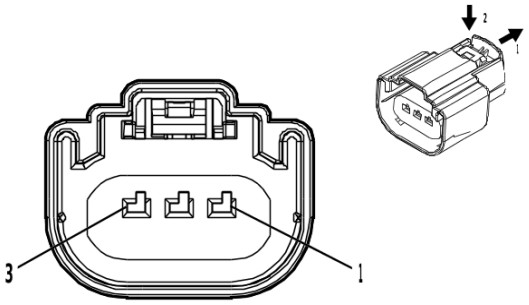

4569745

Connector Part Information

Harness Type: Engine Wiring Harness
OEM Connector: 33343869
Service Connector: 19179750
Description: 3-Way F 1.5 MX Series, Sealed(BK)

Terminal Part Information

Terminal Type ID	Terminated Lead	Diagnostic Test Probe	Terminal Removal Tool
I	Not required	J-35616-2A (GY)	No Tool Required

B139 Transfer Case Two/Four Wheel Drive Actuator Position Sensor (NP0/NQH)

Pin	Size	Color	Circuit	Function	Terminal Type ID	Option
1	0.5	WH / RD	7477	Gear Position Sensor 5V Reference	I	—
2	0.5	WH / GN	7479	Rotary Position Sensor Signal	I	—
3	0.5	YE / BK	7478	Gear Position Sensor Low Reference	I	—

B150 Fuel Tank Pressure Sensor (FHS)

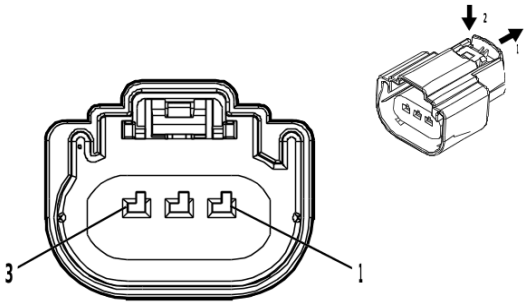

4589538

Connector Part Information

Harness Type: Chassis Wiring Harness
OEM Connector: 33343864
Service Connector: 84569854
Description: 3-Way F 1.5 MX Series, Sealed(GY)

Terminal Part Information

Terminal Type ID	Terminated Lead	Diagnostic Test Probe	Terminal Removal Tool
I	Not required	J-35616-14 (GN)	No Tool Required

B150 Fuel Tank Pressure Sensor (FHS)

Pin	Size	Color	Circuit	Function	Terminal Type ID	Option
1	0.5	BU / WH	890	Fuel Tank Pressure Sensor Signal	I	—
2	0.5	BK / BN	6284	Fuel Tank Pressure Sensor Low Reference	I	—
3	0.5	YE / RD	2709	Fuel Tank Pressure Sensor 5V Reference	I	—

B160 Inside Air Moisture and Windshield Temperature Sensor (ASV-CE1)

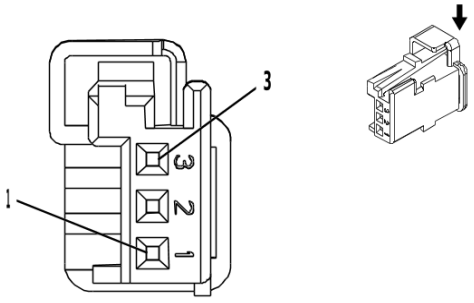

4218883

Connector Part Information

Harness Type: Headlamp Automatic Control Ambient Light Sensor Wiring Harness
OEM Connector: 13593004
Service Connector: Service by Harness - See Part Catalog
Description: 3-Way F 0.64 Micro-Quadlock Series(BK)

Terminal Part Information

Terminal Type ID	Terminated Lead	Diagnostic Test Probe	Terminal Removal Tool
I	Not required	Not Available	No Tool Required

B160 Inside Air Moisture and Windshield Temperature Sensor (ASV-CE1)

Pin	Size	Color	Circuit	Function	Terminal Type ID	Option
1	0.35	VT / BK	339	Run/Crank Ignition 1 Voltage	I	—
2	0.35	BK / WH	851	Signal Ground	I	—
3	0.35	GN / WH	4115	Body Control Module LIN Bus 5	I	—

B172LF Front Disc Brake Pad Wear Sensor - Left (JBP)

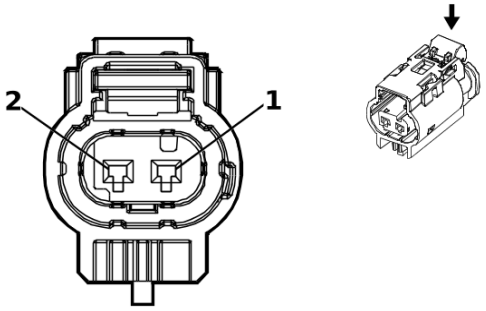

3747581

Connector Part Information

Harness Type: Chassis Wiring Harness
OEM Connector: 33226772
Service Connector: 84727362
Description: 2-Way F 1.2 Multilock Series, Sealed(BK)

Terminal Part Information

Terminal Type ID	Terminated Lead	Diagnostic Test Probe	Terminal Removal Tool
I	Not required	J-35616-16 (L-GN)	No Tool Required

B172LF Front Disc Brake Pad Wear Sensor - Left (JBP)

Pin	Size	Color	Circuit	Function	Terminal Type ID	Option
1	0.5	BN / BU	1602	Front Brake Pad Wear Sensor Signal	I	—
2	0.5	BK / WH	1151	Signal Ground	I	—

B172LR Rear Disc Brake Pad Wear Sensor - Left (JBP)

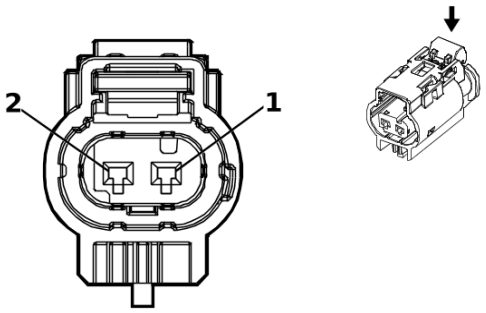

3747581

Connector Part Information

Harness Type: Chassis Rear Wiring Harness Extension Harness
OEM Connector: 10094234
Service Connector: Service by Harness - See Part Catalog
Description: 2-Way F 1.2 Multilock Series, Sealed(BK)

Terminal Part Information

Terminal Type ID	Terminated Lead	Diagnostic Test Probe	Terminal Removal Tool
I	Not required	J-35616-16 (L-GN)	No Tool Required

B172LR Rear Disc Brake Pad Wear Sensor - Left (JBP)

Pin	Size	Color	Circuit	Function	Terminal Type ID	Option
1	0.75	GN / YE	1616	Rear Brake Pad Wear Sensor Signal	I	
2	0.75	BK / WH	1751	Signal Ground	I	

B174G Front View Driver Information Camera - Grille (UV2)

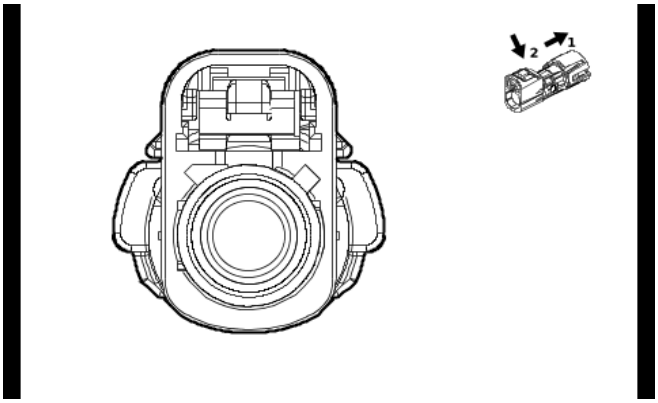

5758030

Connector Part Information

Harness Type: Front View Camera Switch Wiring Harness COAX
OEM Connector: 35187032
Service Connector: Service by Cable Assembly — See Part Catalog
Description: 1-Way F Coax Type(BK)

Terminal Part Information

Terminal Type ID	Terminated Lead	Diagnostic Test Probe	Terminal Removal Tool
I	Not required	No Tool Required	No Tool Required

B174G Front View Driver Information Camera - Grille (UV2)

Pin	Size	Color	Circuit	Function	Terminal Type ID	Option
—	—	Coax Cable	—	Front Vision Camera 1 Coaxial Video Signal	I	—

B174W Front View Camera - Windshield (UHY/UGN)

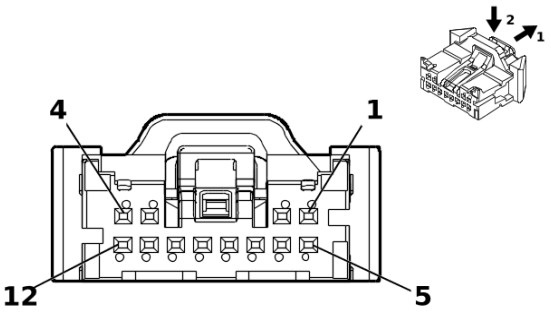

5360826

Connector Part Information

Harness Type: Dome Lamp Wiring Harness
OEM Connector: 35068239
Service Connector: 13529935
Description: 12-Way F 050 CTS Series(BK)

Terminal Part Information

Terminal Type ID	Terminated Lead	Diagnostic Test Probe	Terminal Removal Tool
I	84944580	EL-35616-58 (BK)	EL-38125-58

B174W Front View Camera - Windshield (UHY/UGN)

Pin	Size	Color	Circuit	Function	Terminal Type ID	Option
1	0.35	BK / WH	851	Signal Ground	I	—
2	—	—	—	Not Occupied	—	—
3	0.35	RD / YE	240	Battery Positive Voltage	I	—
4	—	—	—	Not Occupied	—	—
5	0.35 0.35	BU / YE BU / GY	4979 4105	AUTOSAR CAN Bus [+] 2 Serial Data AUTOSAR CAN Bus [+] 8 Serial Data	I I	(GF2/ GF5/ GFF/ GPZ) + UHY - GF2- GF5- GFF- GPZ+ UGN
6	0.35 0.35	WH WH / GY	4978 4104	AUTOSAR CAN Bus [-] 2 Serial Data AUTOSAR CAN Bus [-] 8 Serial Data	I I	(GF2/ GF5/ GFF/ GPZ) + UHY - GF2- GF5- GFF- GPZ+ UGN
7	0.35 0.35	BU / YE BU / GY	4979 4105	AUTOSAR CAN Bus [+] 2 Serial Data AUTOSAR CAN Bus [+] 8 Serial Data	I I	(GF2/ GF5/ GFF/ GPZ) + UHY - GF2- GF5- GFF- GPZ+ UGN
8	0.35 0.35	WH WH / GY	4978 4104	AUTOSAR CAN Bus [-] 2 Serial Data AUTOSAR CAN Bus [-] 8 Serial Data	I I	(GF2/ GF5/ GFF/ GPZ) + UHY - GF2- GF5- GFF- GPZ+ UGN

B174W Front View Camera - Windshield (UHY/UGN) (cont'd)

Pin	Size	Color	Circuit	Function	Terminal Type ID	Option
9 - 12	—	—	—	Not Occupied	—	—

B193A Charge Air Cooler Air Temperature Sensor - Inlet (LM2)

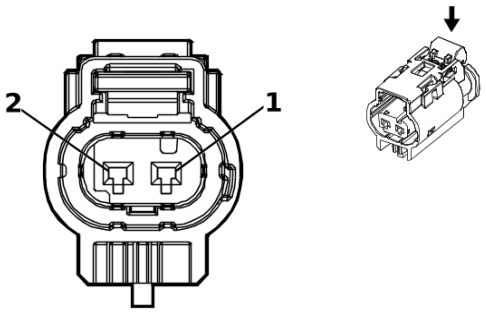

3747581

Connector Part Information

Harness Type: Engine Wiring Harness
OEM Connector: 33226772
Service Connector: 84727362
Description: 2-Way F 1.2 Multilock Series, Sealed(BK)

Terminal Part Information

Terminal Type ID	Terminated Lead	Diagnostic Test Probe	Terminal Removal Tool
I	Not required	J-35616-16 (L-GN)	No Tool Required

B193A Charge Air Cooler Air Temperature Sensor - Inlet (LM2)

Pin	Size	Color	Circuit	Function	Terminal Type ID	Option
1	0.5	GN	3683	Charge Air Cooler Inlet Temperature Sensor Signal	I	—
2	0.5	YE / BK	3682	Charge Air Cooler Inlet Temperature Sensor Low Reference	I	—

B193B Charge Air Cooler Air Temperature Sensor - Outlet (LM2)

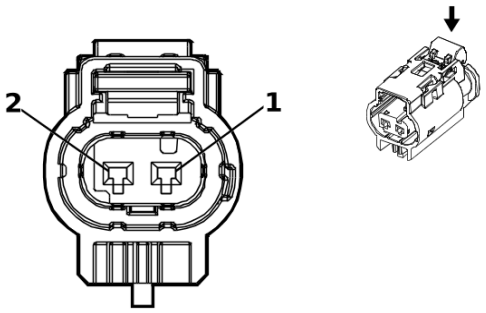

3747581

Connector Part Information

Harness Type: Engine Wiring Harness
OEM Connector: 33226772
Service Connector: 84727362
Description: 2-Way F 1.2 Multilock Series, Sealed(BK)

Terminal Part Information

Terminal Type ID	Terminated Lead	Diagnostic Test Probe	Terminal Removal Tool
I	Not required	J-35616-16 (L-GN)	No Tool Required

B193B Charge Air Cooler Air Temperature Sensor - Outlet (LM2)

Pin	Size	Color	Circuit	Function	Terminal Type ID	Option
1	0.5	BN	3681	Charge Air Cooler Outlet Temperature Sensor Signal	I	—
2	0.5	YE / BU	3680	Charge Air Cooler Outlet Temperature Sensor Low Reference	I	—

B195A Nitrogen Oxides Sensor 1 (LM2)

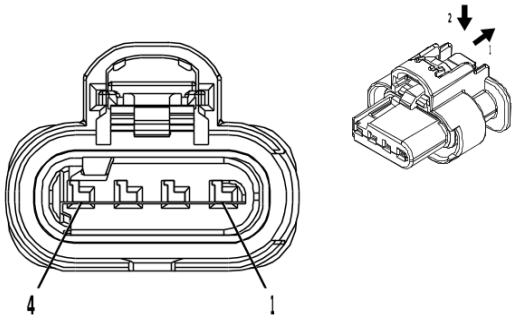

4210809

Connector Part Information

Harness Type: Engine Wiring Harness
OEM Connector: 33390897
Service Connector: 85518225
Description: 4-Way F 1.2 MCON-CB Series, Sealed(BK)

Terminal Part Information

Terminal Type ID	Terminated Lead	Diagnostic Test Probe	Terminal Removal Tool
I	Not required	J-35616-16 (L-GN)	No Tool Required

B195A Nitrogen Oxides Sensor 1 (LM2)

Pin	Size	Color	Circuit	Function	Terminal Type ID	Option
1	1	VT / GN	4320	Powertrain Sensor Bus Enable	I	—
2	0.5	WH	4055	Private Serial Data Powertrain CAN Bus [+] Serial Data	I	—
3	0.5	BU / GY	4054	Private Serial Data Powertrain CAN Bus [-] Serial Data	I	—
4	1	BK / WH	1151	Signal Ground	I	—

B195B Nitrogen Oxides Sensor 2 (LM2)

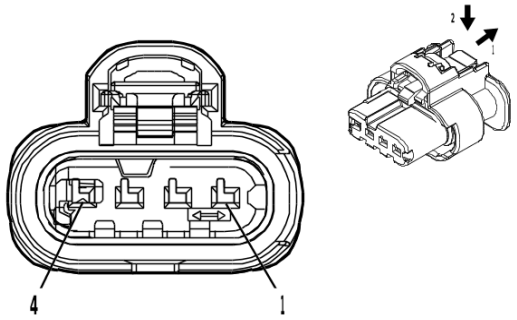

4934614

Connector Part Information

Harness Type: Chassis Wiring Harness
OEM Connector: 33367416
Service Connector: 85519071
Description: 4-Way F 1.2 MCON-CB Series, Sealed(BK)

Terminal Part Information

Terminal Type ID	Terminated Lead	Diagnostic Test Probe	Terminal Removal Tool
I	Not required	J-35616-16 (L-GN)	No Tool Required

B195B Nitrogen Oxides Sensor 2 (LM2)

Pin	Size	Color	Circuit	Function	Terminal Type ID	Option
1	1	VT / GN	4320	Powertrain Sensor Bus Enable	I	—
2	0.5	WH	4055	Private Serial Data Powertrain CAN Bus [+] Serial Data	I	—
3	0.5	BU / GY	4054	Private Serial Data Powertrain CAN Bus [-] Serial Data	I	—
4	1	BK / WH	1151	Signal Ground	I	—

B195C Nitrogen Oxides Sensor 3 (LM2)

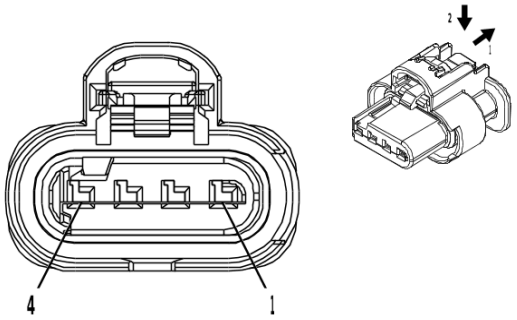

4210809

Connector Part Information

Harness Type: Chassis Wiring Harness
OEM Connector: 33390897
Service Connector: 85518225
Description: 4-Way F 1.2 MCON-CB Series, Sealed(BK)

Terminal Part Information

Terminal Type ID	Terminated Lead	Diagnostic Test Probe	Terminal Removal Tool
I	Not required	J-35616-16 (L-GN)	No Tool Required

B195C Nitrogen Oxides Sensor 3 (LM2)

Pin	Size	Color	Circuit	Function	Terminal Type ID	Option
1	1	VT / GN	4320	Powertrain Sensor Bus Enable	I	—
2	0.5	WH	4055	Private Serial Data Powertrain CAN Bus [+] Serial Data	I	—
3	0.5	BU / GY	4054	Private Serial Data Powertrain CAN Bus [-] Serial Data	I	—
4	1	BK / WH	1151	Signal Ground	I	—

B203 Radiator Coolant Temperature Sensor (L3B/LM2)

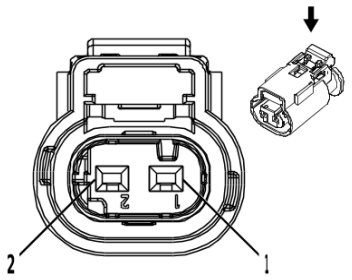

2717066

Connector Part Information

Harness Type: Engine Wiring Harness
OEM Connector: 13735326
Service Connector: 13587326
Description: 2-Way F 1.2 Multilock Series, Sealed(BK)

Terminal Part Information

Terminal Type ID	Terminated Lead	Diagnostic Test Probe	Terminal Removal Tool
I	Not required	J-35616-16 (L-GN)	No Tool Required

B203 Radiator Coolant Temperature Sensor (L3B/LM2)

Pin	Size	Color	Circuit	Function	Terminal Type ID	Option
1	0.5	YE / BK	3000	Coolant Temperature Sensor 2 Signal	I	—
2	0.5	BK / GN	580	Engine Control Sensors Low Reference 2	I	—

B212 Reductant Tank Fluid Sensor (LM2)

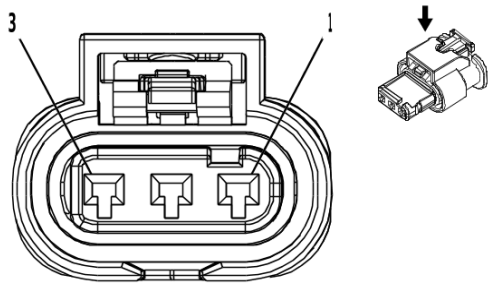

2750649

Connector Part Information

Harness Type: Emission Reduction Fluid Tank Reservoir Wire Harness
OEM Connector: 13722729
Service Connector: Service by Harness - See Part Catalog
Description: 3-Way F 1.2 MCON Series, Sealed(BK)

Terminal Part Information

Terminal Type ID	Terminated Lead	Diagnostic Test Probe	Terminal Removal Tool
I	Not required	J-35616-16 (L-GN)	No Tool Required

B212 Reductant Tank Fluid Sensor (LM2)

Pin	Size	Color	Circuit	Function	Terminal Type ID	Option
1	0.5	BK	7290	Diesel Exhaust Fluid Sensor Voltage Reference 1	I	—
2	0.5	YE / GN	7284	Diesel Exhaust Fluid Liquid Quality Temperature Signal	I	—
3	0.5	BK / YE	8434	Diesel Exhaust Fluid Sensor Low Reference	I	—

B218L Side Obstacle Detection Control Module - Left ((UKC/UKV)-UKL)

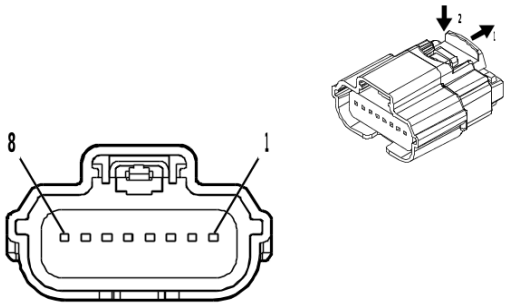

4708234

Connector Part Information

Harness Type: Rear Object Alarm Sensor Wiring Harness
OEM Connector: 35192853
Service Connector: Service by Harness - See Part Catalog
Description: 8-Way F 64 Series, Sealed(BK)

Terminal Part Information

Terminal Type ID	Terminated Lead	Diagnostic Test Probe	Terminal Removal Tool
I	Not required	J-35616-64B (L-BU)	No Tool Required

B218L Side Obstacle Detection Control Module - Left ((UKC/UKV)-UKL)

Pin	Size	Color	Circuit	Function	Terminal Type ID	Option
1	0.5	WH	4087	Private Serial Data Side Obstacle Detection CAN Bus [-] Serial Data	I	—
2	0.5	BU / VT	4088	Private Serial Data Side Obstacle Detection CAN Bus [+] Serial Data	I	—
3	0.5	BK / WH	1951	Signal Ground	I	—
4	0.5	WH	4100	AUTOSAR CAN Bus [-] 4 Serial Data	I	—
5	0.5	WH	4100	AUTOSAR CAN Bus [-] 4 Serial Data	I	—
6	0.5	BU / VT	4101	AUTOSAR CAN Bus [+] 4 Serial Data	I	—
7	0.5	BU / VT	4101	AUTOSAR CAN Bus [+] 4 Serial Data	I	—
8	0.5	RD / GN	6940	Battery Positive Voltage	I	—

B218R Side Obstacle Detection Control Module - Right ((UKC/UKV)-UKL)

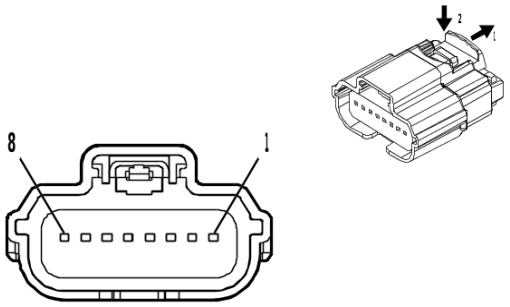

4708234

Connector Part Information

Harness Type: Rear Object Alarm Sensor Wiring Harness
OEM Connector: 35200888
Service Connector: Service by Harness - See Part Catalog
Description: 8-Way F 64 Series, Sealed(BK)

Terminal Part Information

Terminal Type ID	Terminated Lead	Diagnostic Test Probe	Terminal Removal Tool
I	Not required	J-35616-64B (L-BU)	No Tool Required

B218R Side Obstacle Detection Control Module - Right ((UKC/UKV)-UKL)

Pin	Size	Color	Circuit	Function	Terminal Type ID	Option
1	0.5	WH	4087	Private Serial Data Side Obstacle Detection CAN Bus [-] Serial Data	I	—
2	0.5	BU / VT	4088	Private Serial Data Side Obstacle Detection CAN Bus [+] Serial Data	I	—
3	0.5	BK / WH	1951	Signal Ground	I	—
4	—	—	—	Not Occupied	—	—
5	0.5	WH	4100	AUTOSAR CAN Bus [-] 4 Serial Data	I	—
6	0.5	BU / VT	4101	AUTOSAR CAN Bus [+] 4 Serial Data	I	—
7	—	—	—	Not Occupied	—	—
8	0.5	RD / GN	6940	Battery Positive Voltage	I	—

B233B Forward Range Radar Sensor - Long Range (UKL)

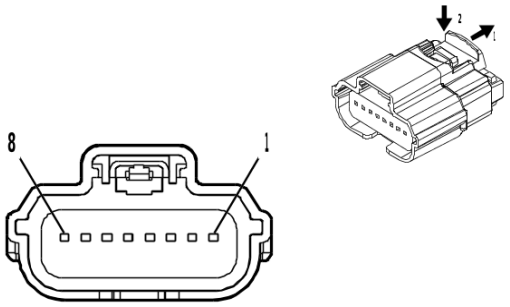

4708234

Connector Part Information

Harness Type: Front Object Alarm Sensor Wiring Harness
OEM Connector: 35211138
Service Connector: Service by Harness - See Part Catalog
Description: 8-Way F 64 Series, Sealed(BK)

Terminal Part Information

Terminal Type ID	Terminated Lead	Diagnostic Test Probe	Terminal Removal Tool
I	Not required	J-35616-64B (L-BU)	No Tool Required

B233B Forward Range Radar Sensor - Long Range (UKL)

Pin	Size	Color	Circuit	Function	Terminal Type ID	Option
1 - 2	—	—	—	Not Occupied	—	—
3	0.5	BU / GY	4105	AUTOSAR CAN Bus [+] 8 Serial Data	I	—
4	0.5	WH / GY	4104	AUTOSAR CAN Bus [-] 8 Serial Data	I	—
5	0.5	RD / GN	3140	Battery Positive Voltage	I	—
6 - 7	—	—	—	Not Occupied	—	—
8	0.5	BK / WH	651	Signal Ground	I	—

B233LF Short Range Radar Sensor - Left Front (UKL)

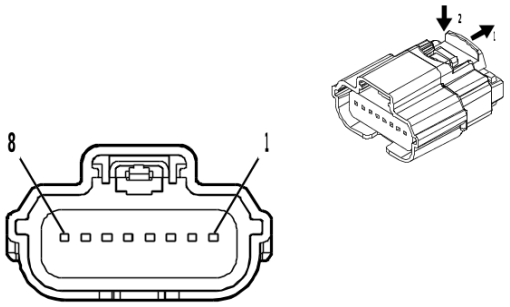

4708234

Connector Part Information

Harness Type: Front Object Alarm Sensor Wiring Harness - Jumper
OEM Connector: 13526715
Service Connector: Service by Harness - See Part Catalog
Description: 8-Way F 64 Series, Sealed(BK)

Terminal Part Information

Terminal Type ID	Terminated Lead	Diagnostic Test Probe	Terminal Removal Tool
I	Not required	J-35616-64B (L-BU)	No Tool Required

B233LF Short Range Radar Sensor - Left Front (UKL)

Pin	Size	Color	Circuit	Function	Terminal Type ID	Option
1	0.5	BK / WH	651	Signal Ground	I	—
2	0.5	BK / WH	651	Signal Ground	I	—
3	—	—	—	Not Occupied	—	—
4	0.5	RD / GN	3140	Battery Positive Voltage	I	—
5	0.5	WH / GY	4104	AUTOSAR CAN Bus [-] 8 Serial Data	I	—
6	0.5	BU / GY	4105	AUTOSAR CAN Bus [+] 8 Serial Data	I	—
7	0.5	WH / GY	4104	AUTOSAR CAN Bus [-] 8 Serial Data	I	—
8	0.5	BU / GY	4105	AUTOSAR CAN Bus [+] 8 Serial Data	I	—

B233LR Short Range Radar Rear Sensor - Left (UKL)

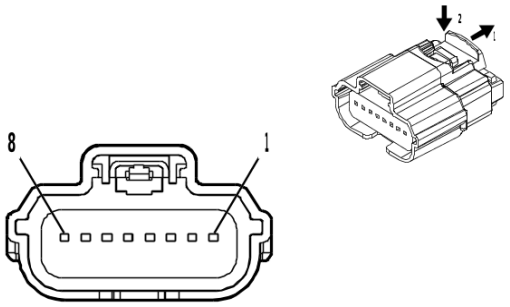

4708234

Connector Part Information

Harness Type: Rear Object Alarm Sensor Wiring Harness
OEM Connector: 35200889
Service Connector: Service by Harness - See Part Catalog
Description: 8-Way F 64 Series, Sealed(BK)

Terminal Part Information

Terminal Type ID	Terminated Lead	Diagnostic Test Probe	Terminal Removal Tool
I	Not required	J-35616-64B (L-BU)	No Tool Required

B233LR Short Range Radar Rear Sensor - Left (UKL)

Pin	Size	Color	Circuit	Function	Terminal Type ID	Option
1	0.5	BK / WH	1951	Signal Ground	I	—
2 - 3	—	—	—	Not Occupied	—	—
4	0.5	RD / BU	5240	Battery Positive Voltage	I	—
5	0.5	WH / GY	4104	AUTOSAR CAN Bus [-] 8 Serial Data	I	—
6	0.5	BU / GY	4105	AUTOSAR CAN Bus [+] 8 Serial Data	I	—
7	0.5	WH / GY	4104	AUTOSAR CAN Bus [-] 8 Serial Data	I	—
8	0.5	BU / GY	4105	AUTOSAR CAN Bus [+] 8 Serial Data	I	—

B233RF Short Range Radar Sensor - Right Front (UKL)

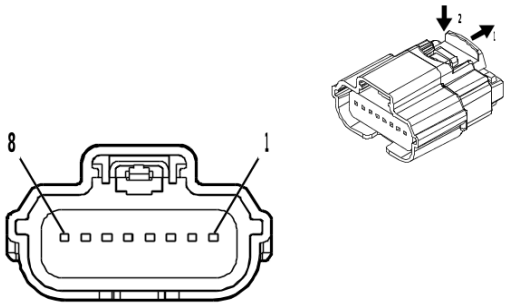

4708234

Connector Part Information

Harness Type: Front Object Alarm Sensor Wiring Harness - Jumper Right
OEM Connector: 35200887
Service Connector: Service by Harness - See Part Catalog
Description: 8-Way F 64 Series, Sealed(BK)

Terminal Part Information

Terminal Type ID	Terminated Lead	Diagnostic Test Probe	Terminal Removal Tool
I	Not required	J-35616-64B (L-BU)	No Tool Required

B233RF Short Range Radar Sensor - Right Front (UKL)

Pin	Size	Color	Circuit	Function	Terminal Type ID	Option
1	0.5	BK / WH	651	Signal Ground	I	—
2	—	—	—	Not Occupied	—	—
3	0.5	BK / WH	651	Signal Ground	I	—
4	0.5	RD / GN	3140	Battery Positive Voltage	I	—
5	0.5	WH / GY	4104	AUTOSAR CAN Bus [-] 8 Serial Data	I	—
6	0.5	BU / GY	4105	AUTOSAR CAN Bus [+] 8 Serial Data	I	—
7	0.5	WH / GY	4104	AUTOSAR CAN Bus [-] 8 Serial Data	I	—
8	0.5	BU / GY	4105	AUTOSAR CAN Bus [+] 8 Serial Data	I	—

B233RR Short Range Radar Rear Sensor - Right (UKL)

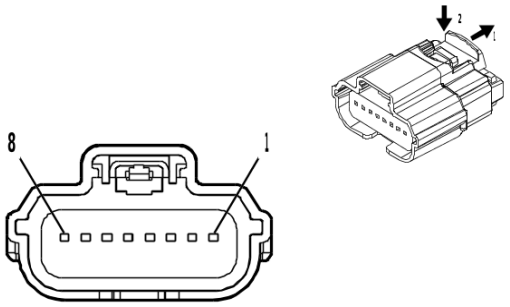

4708234

Connector Part Information

Harness Type: Rear Object Alarm Sensor Wiring Harness
OEM Connector: 35192853
Service Connector: Service by Harness - See Part Catalog
Description: 8-Way F 64 Series, Sealed(BK)

Terminal Part Information

Terminal Type ID	Terminated Lead	Diagnostic Test Probe	Terminal Removal Tool
I	Not required	J-35616-64B (L-BU)	No Tool Required

B233RR Short Range Radar Rear Sensor - Right (UKL)

Pin	Size	Color	Circuit	Function	Terminal Type ID	Option
1	0.5	BK / WH	1951	Signal Ground	I	—
2	0.5	BK / WH	1951	Signal Ground	I	—
3	0.5	BK / WH	1951	Signal Ground	I	—
4	0.5	RD / BU	5240	Battery Positive Voltage	I	—
5	0.5	WH / GY	4104	AUTOSAR CAN Bus [-] 8 Serial Data	I	—
6	0.5	BU / GY	4105	AUTOSAR CAN Bus [+] 8 Serial Data	I	—
7	0.5	WH / GY	4104	AUTOSAR CAN Bus [-] 8 Serial Data	I	—
8	0.5	BU / GY	4105	AUTOSAR CAN Bus [+] 8 Serial Data	I	—

B233SL Short Range Radar Rear Side Sensor - Left (UKL)

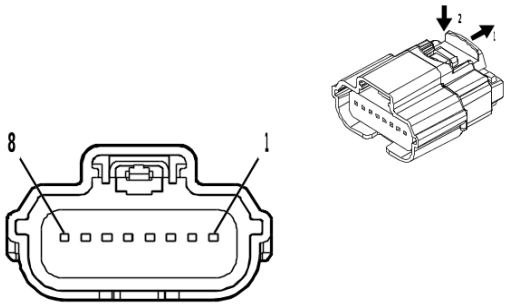

4708234

Connector Part Information

Harness Type: Rear Object Alarm Sensor Wiring Harness
OEM Connector: 35200889
Service Connector: Service by Harness - See Part Catalog
Description: 8-Way F 64 Series, Sealed(BK)

Terminal Part Information

Terminal Type ID	Terminated Lead	Diagnostic Test Probe	Terminal Removal Tool
I	Not required	J-35616-64B (L-BU)	No Tool Required

B233SL Short Range Radar Rear Side Sensor - Left (UKL)

Pin	Size	Color	Circuit	Function	Terminal Type ID	Option
1	0.5	BK / WH	1951	Signal Ground	I	—
2 - 3	—	—	—	Not Occupied	—	—
4	0.5	RD / BU	5240	Battery Positive Voltage	I	—
5	0.5	WH / GY	4104	AUTOSAR CAN Bus [-] 8 Serial Data	I	—
6	0.5	BU / GY	4105	AUTOSAR CAN Bus [+] 8 Serial Data	I	—
7	0.5	WH / GY	4104	AUTOSAR CAN Bus [-] 8 Serial Data	I	—
8	0.5	BU / GY	4105	AUTOSAR CAN Bus [+] 8 Serial Data	I	—

B233SR Short Range Radar Rear Side Sensor - Right (UKL)

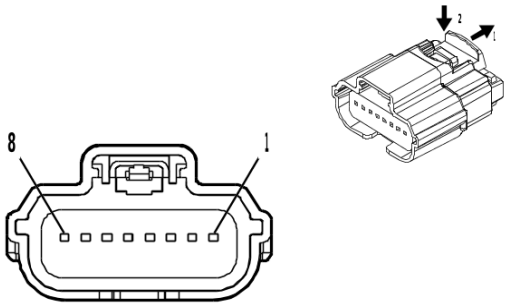

4708234

Connector Part Information

Harness Type: Rear Object Alarm Sensor Wiring Harness
OEM Connector: 35192853
Service Connector: Service by Harness - See Part Catalog
Description: 8-Way F 64 Series, Sealed(BK)

Terminal Part Information

Terminal Type ID	Terminated Lead	Diagnostic Test Probe	Terminal Removal Tool
I	Not required	J-35616-64B (L-BU)	No Tool Required

B233SR Short Range Radar Rear Side Sensor - Right (UKL)

Pin	Size	Color	Circuit	Function	Terminal Type ID	Option
1	0.5	BK / WH	1951	Signal Ground	I	—
2	0.5	BK / WH	1951	Signal Ground	I	—
3	0.5	BK / WH	1951	Signal Ground	I	—
4	0.5	RD / BU	5240	Battery Positive Voltage	I	—
5	0.5	WH / GY	4104	AUTOSAR CAN Bus [-] 8 Serial Data	I	—
6	0.5	BU / GY	4105	AUTOSAR CAN Bus [+] 8 Serial Data	I	—
7	0.5	WH / GY	4104	AUTOSAR CAN Bus [-] 8 Serial Data	I	—
8	0.5	BU / GY	4105	AUTOSAR CAN Bus [+] 8 Serial Data	I	—

B280 Transmission Fluid Pressure Accumulator Solenoid Valve (M5X/MQE)

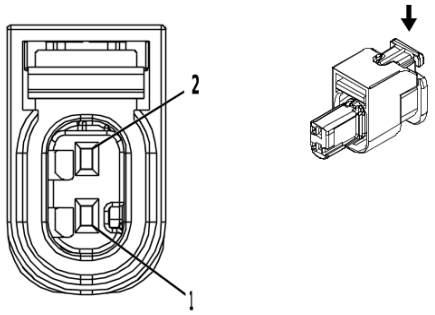

4051102

Connector Part Information

Harness Type: Automatic Transmission Wiring Harness - Case
OEM Connector: 2138873-4
Service Connector: Service by Harness - See Part Catalog
Description: 2-Way F 1.2 MCON Series, Sealed(BN)

Terminal Part Information

Terminal Type ID	Terminated Lead	Diagnostic Test Probe	Terminal Removal Tool
I	Not required	Not Available	No Tool Required

B280 Transmission Fluid Pressure Accumulator Solenoid Valve (M5X/MQE)

Pin	Size	Color	Circuit	Function	Terminal Type ID	Option
1	.5	YE / GN	6387	Transmission High Side Driver 1 Control	I	—
2	.5	WH / GY	4578	Surge Accumulator Solenoid Valve Low Side Control	I	—

B284 Vehicle Dynamics Sensor (UKL)

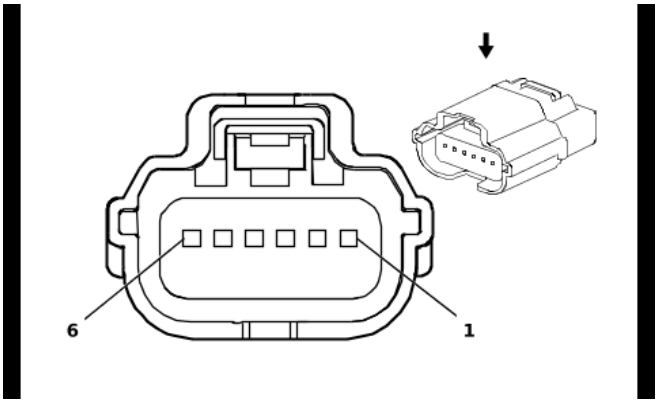

1974974

Connector Part Information

Harness Type: Body Wiring Harness
OEM Connector: 35473844
Service Connector: 84773558
Description: 6-Way F 0.64 Series, Sealed(BK)

Terminal Part Information

Terminal Type ID	Terminated Lead	Diagnostic Test Probe	Terminal Removal Tool
I	Not required	J-35616-64B (L-BU)	No Tool Required

B284 Vehicle Dynamics Sensor (UKL)

Pin	Size	Color	Circuit	Function	Terminal Type ID	Option
1	0.35	VT / GY	8978	Inertial Sensor Supply Voltage	I	—
2	0.5	BU / YE	8977	Private Serial Data Active Safety CAN Bus [+] Serial Data	I	—
3	0.5	WH / YE	8976	Private Serial Data Active Safety CAN Bus [-] Serial Data	I	—
4 - 5	—	—	—	Not Occupied	—	—
6	0.5	BK / WH	1551	Signal Ground	I	—

B292 Driver Monitoring Camera (UKL)

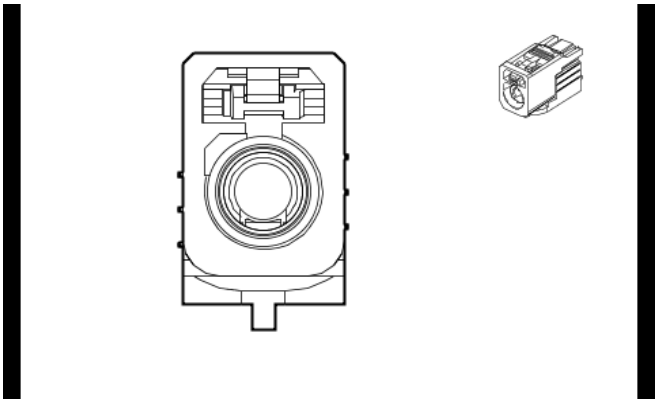

5633912

Connector Part Information

Harness Type: Instrument Panel Wiring Harness COAX
OEM Connector: 33351016
Service Connector: Service by Cable Assembly — See Part Catalog
Description: 1-Way F Coax Type(GN)

Terminal Part Information

Terminal Type ID	Terminated Lead	Diagnostic Test Probe	Terminal Removal Tool
I	Not required	No Tool Required	No Tool Required

B292 Driver Monitoring Camera (UKL)

Pin	Size	Color	Circuit	Function	Terminal Type ID	Option
—	—	Coax Cable	—	Driver Monitoring System Camera Coaxial Signal	I	—

B303 Transmission Range Sensor (M5X/MQE)

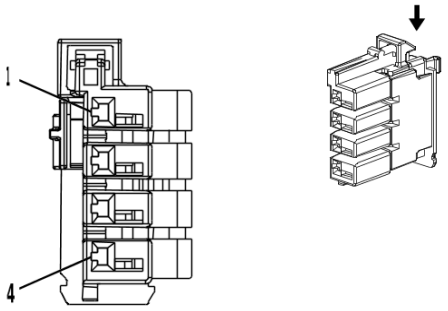

4364148

Connector Part Information

Harness Type: Automatic Transmission Wiring Harness - Control
OEM Connector: 2289524-1
Service Connector: Service by Harness - See Part Catalog
Description: 4-Way F 1.2 MCON Series(BN)

Terminal Part Information

Terminal Type ID	Terminated Lead	Diagnostic Test Probe	Terminal Removal Tool
I	Not required	Not Available	No Tool Required

B303 Transmission Range Sensor (M5X/MQE)

Pin	Size	Color	Circuit	Function	Terminal Type ID	Option
1	0.5	BK / GY	626	Engine Control Vehicle Sensors Low Reference 1	I	—
2	0.5	BU / WH	3338	Transmission Internal Mode Switch Mode Control X	I	—
3	0.5	GN / YE	3337	Transmission Internal Mode Switch Mode Control Y	I	—
4	0.5	WH / RD	480	Engine Control Vehicle Sensors 5 Volt Reference 1	I	—

B303 Transmission Range Sensor (MHT/MQB)

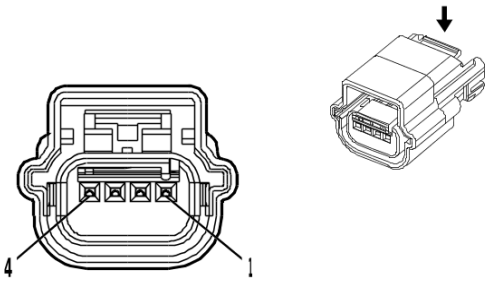

4789353

Connector Part Information

Harness Type: Automatic Transmission Wiring Harness - Case
OEM Connector: 6006314801
Service Connector: Service by Harness - See Part Catalog
Description: 4-Way F 0.64 Series, Sealed(BK)

Terminal Part Information

Terminal Type ID	Terminated Lead	Diagnostic Test Probe	Terminal Removal Tool
I	Not required	Not Available	No Tool Required

B303 Transmission Range Sensor (MHT/MQB)

Pin	Size	Color	Circuit	Function	Terminal Type ID	Option
1	0.5	BK / GY	3927	Transmission Internal Mode Switch Feedback Signal	I	—
2	0.5	YE	5724	Ignition Mode Switch Mode Control	I	—
3	0.5	YE / GY	5726	Ignition Mode Switch Mode Control Backup	I	—
4	0.5	OG	4162	Transmission Fluid Pressure Sensor 1 Circuit 5V Reference	I	—

B306A Parking Assist Alarm Sensor - Front Left Outer (UD5)

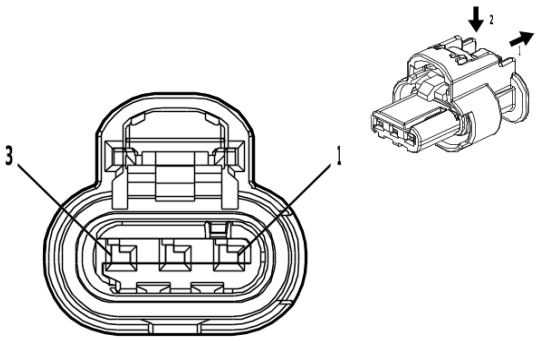

4581126

Connector Part Information

Harness Type: Front Object Alarm Sensor Wiring Harness
OEM Connector: 33358800
Service Connector: Service by Harness - See Part Catalog
Description: 3-Way F 1.2 MCON-CB Series, Sealed(BK)

Terminal Part Information

Terminal Type ID	Terminated Lead	Diagnostic Test Probe	Terminal Removal Tool
I	Not required	J-35616-16 (L-GN)	No Tool Required

B306A Parking Assist Alarm Sensor - Front Left Outer (UD5)

Pin	Size	Color	Circuit	Function	Terminal Type ID	Option
1	0.5	BN	6581	Front Parking Assist Display Control	I	—
2	0.5	VT / WH	5215	Left Front Outer Parking Assist Sensor	I	—
3	0.5	BK / BU	5214	Front Parking Assist Sensor Low Reference	I	—

B306B Parking Assist Alarm Sensor - Front Left Middle (UD5)

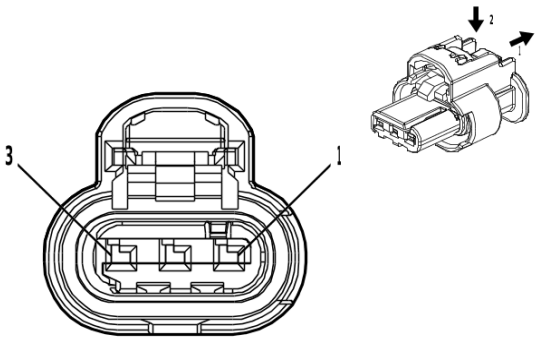

4581126

Connector Part Information

Harness Type: Front Object Alarm Sensor Wiring Harness
OEM Connector: 33358800
Service Connector: Service by Harness - See Part Catalog
Description: 3-Way F 1.2 MCON-CB Series, Sealed(BK)

Terminal Part Information

Terminal Type ID	Terminated Lead	Diagnostic Test Probe	Terminal Removal Tool
I	Not required	J-35616-16 (L-GN)	No Tool Required

B306B Parking Assist Alarm Sensor - Front Left Middle (UD5)

Pin	Size	Color	Circuit	Function	Terminal Type ID	Option
1	0.5	BN	6581	Front Parking Assist Display Control	I	—
2	0.5	YE / GY	5216	Left Front Middle Parking Assist Sensor	I	—
3	0.5	BK / BU	5214	Front Parking Assist Sensor Low Reference	I	—

B306C Parking Assist Alarm Sensor - Front Right Middle (UD5)

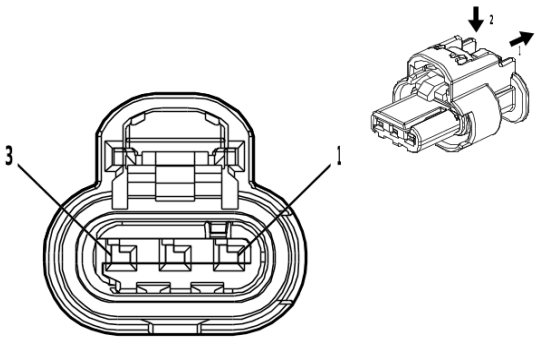

4581126

Connector Part Information

Harness Type: Front Object Alarm Sensor Wiring Harness
OEM Connector: 33358800
Service Connector: Service by Harness - See Part Catalog
Description: 3-Way F 1.2 MCON-CB Series, Sealed(BK)

Terminal Part Information

Terminal Type ID	Terminated Lead	Diagnostic Test Probe	Terminal Removal Tool
I	Not required	J-35616-16 (L-GN)	No Tool Required

B306C Parking Assist Alarm Sensor - Front Right Middle (UD5)

Pin	Size	Color	Circuit	Function	Terminal Type ID	Option
1	0.5	BN	6581	Front Parking Assist Display Control	I	—
2	0.5	VT / GY	5218	Right Front Middle Parking Assist Sensor	I	—
3	0.5	BK / BU	5214	Front Parking Assist Sensor Low Reference	I	—

B306D Parking Assist Alarm Sensor - Front Right Outer (UD5)

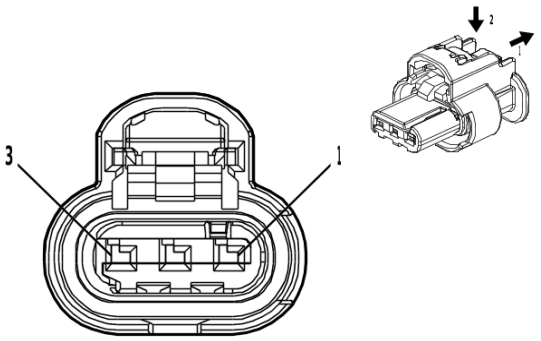

4581126

Connector Part Information

Harness Type: Front Object Alarm Sensor Wiring Harness
OEM Connector: 33358800
Service Connector: Service by Harness - See Part Catalog
Description: 3-Way F 1.2 MCON-CB Series, Sealed(BK)

Terminal Part Information

Terminal Type ID	Terminated Lead	Diagnostic Test Probe	Terminal Removal Tool
I	Not required	J-35616-16 (L-GN)	No Tool Required

B306D Parking Assist Alarm Sensor - Front Right Outer (UD5)

Pin	Size	Color	Circuit	Function	Terminal Type ID	Option
1	0.5	BN	6581	Front Parking Assist Display Control	I	—
2	0.5	WH / GY	5217	Right Front Outer Parking Assist Sensor	I	—
3	0.5	BK / BU	5214	Front Parking Assist Sensor Low Reference	I	—

B306E Parking Assist Alarm Sensor - Rear Left Outer (UD5/UD7)

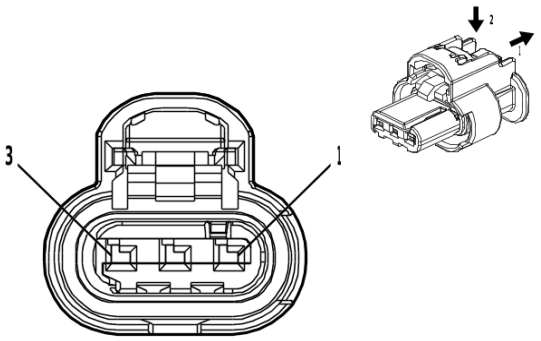

4581126

Connector Part Information

Harness Type: Rear Object Alarm Sensor Wiring Harness
OEM Connector: 33358800
Service Connector: Service by Harness - See Part Catalog
Description: 3-Way F 1.2 MCON-CB Series, Sealed(BK)

Terminal Part Information

Terminal Type ID	Terminated Lead	Diagnostic Test Probe	Terminal Removal Tool
I	Not required	J-35616-16 (L-GN)	No Tool Required

B306E Parking Assist Alarm Sensor - Rear Left Outer (UD5/UD7)

Pin	Size	Color	Circuit	Function	Terminal Type ID	Option
1	0.5	BN / WH	2374	Object Sensor Voltage Reference	I	—
2	0.5	YE	2375	Left Rear Outer Parking Assist Sensor Signal	I	—
3	0.5	BK / GY	2379	Object Sensor Low Reference	I	—

B306F Parking Assist Alarm Sensor - Rear Left Middle (UD5/UD7)

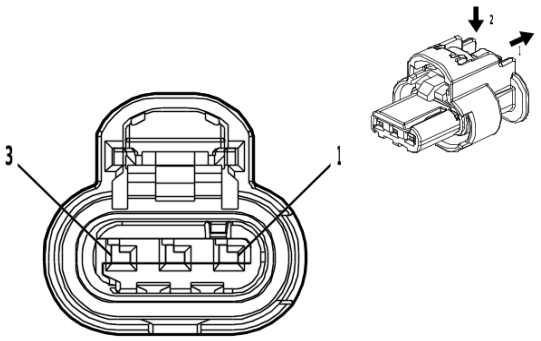

4581126

Connector Part Information

Harness Type: Rear Object Alarm Sensor Wiring Harness
OEM Connector: 33358800
Service Connector: Service by Harness - See Part Catalog
Description: 3-Way F 1.2 MCON-CB Series, Sealed(BK)

Terminal Part Information

Terminal Type ID	Terminated Lead	Diagnostic Test Probe	Terminal Removal Tool
I	Not required	J-35616-16 (L-GN)	No Tool Required

B306F Parking Assist Alarm Sensor - Rear Left Middle (UD5/UD7)

Pin	Size	Color	Circuit	Function	Terminal Type ID	Option
1	0.5	BN / WH	2374	Object Sensor Voltage Reference	I	—
2	0.5	YE / BU	2376	Left Rear Middle Parking Assist Sensor Signal	I	—
3	0.5	BK / GY	2379	Object Sensor Low Reference	I	—

B306G Parking Assist Alarm Sensor - Rear Right Middle (UD5/UD7)

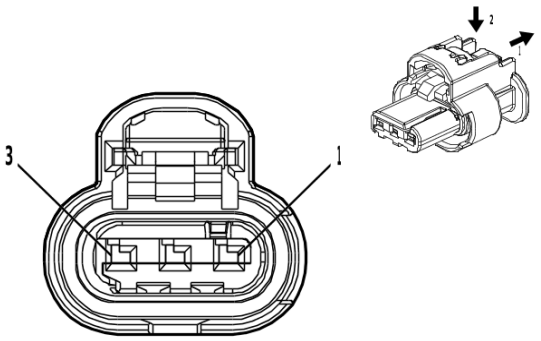

4581126

Connector Part Information

Harness Type: Rear Object Alarm Sensor Wiring Harness
OEM Connector: 33358800
Service Connector: Service by Harness - See Part Catalog
Description: 3-Way F 1.2 MCON-CB Series, Sealed(BK)

Terminal Part Information

Terminal Type ID	Terminated Lead	Diagnostic Test Probe	Terminal Removal Tool
I	Not required	J-35616-16 (L-GN)	No Tool Required

B306G Parking Assist Alarm Sensor - Rear Right Middle (UD5/UD7)

Pin	Size	Color	Circuit	Function	Terminal Type ID	Option
1	0.5	BN / WH	2374	Object Sensor Voltage Reference	I	—
2	0.5	YE / WH	2377	Right Rear Middle Parking Assist Sensor Signal	I	—
3	0.5	BK / GY	2379	Object Sensor Low Reference	I	—

B306H Parking Assist Alarm Sensor - Rear Right Outer (UD5/UD7)

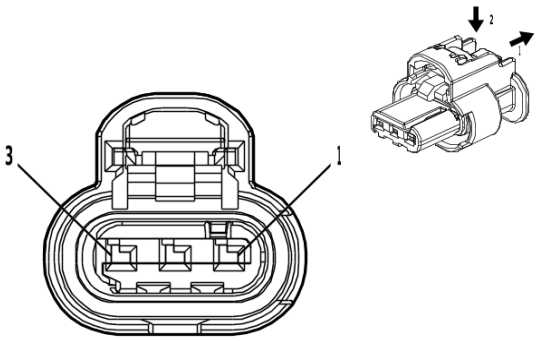

4581126

Connector Part Information

Harness Type: Rear Object Alarm Sensor Wiring Harness
OEM Connector: 33358800
Service Connector: Service by Harness - See Part Catalog
Description: 3-Way F 1.2 MCON-CB Series, Sealed(BK)

Terminal Part Information

Terminal Type ID	Terminated Lead	Diagnostic Test Probe	Terminal Removal Tool
I	Not required	J-35616-16 (L-GN)	No Tool Required

B306H Parking Assist Alarm Sensor - Rear Right Outer (UD5/UD7)

Pin	Size	Color	Circuit	Function	Terminal Type ID	Option
1	0.5	BN / WH	2374	Object Sensor Voltage Reference	I	—
2	0.5	YE / VT	2378	Right Rear Outer Parking Assist Sensor Signal	I	—
3	0.5	BK / GY	2379	Object Sensor Low Reference	I	—

B315A Transmission Range Control Valve 1 Position Switch (MHS/MQC)

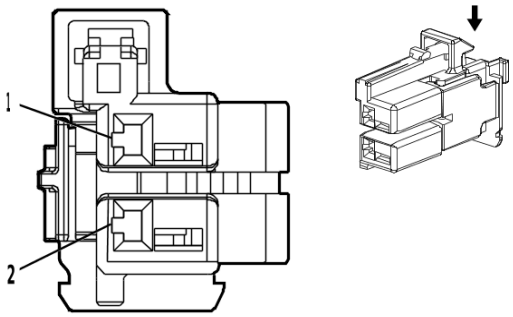

4672650

Connector Part Information

Harness Type: Automatic Transmission Wiring Harness - Control Extension
OEM Connector: 2289523-1
Service Connector: Service by Harness - See Part Catalog
Description: 2-Way F 1.2 MCON Series(BN)

Terminal Part Information

Terminal Type ID	Terminated Lead	Diagnostic Test Probe	Terminal Removal Tool
I	Not required	J-35616-16 (LT GN)	No Tool Required

B315A Transmission Range Control Valve 1 Position Switch (MHS/MQC)

Pin	Size	Color	Circuit	Function	Terminal Type ID	Option
1	0.5	BU	4171	Transmission Input Shaft Speed Sensor Circuit 9V Reference	I	—
2	0.5	BK / GY	3706	Electronic Transmission Range Select Switch Analog Signal 1	I	—

B316 Transmission Park Valve Position Switch (MHS/MQC)

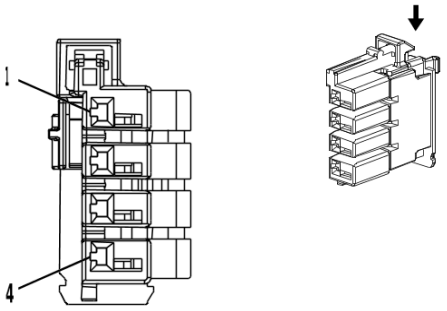

4364148

Connector Part Information

Harness Type: Automatic Transmission Wiring Harness - Control
OEM Connector: 2289524-1
Service Connector: Service by Harness - See Part Catalog
Description: 4-Way F 1.2 MCON Series(BN)

Terminal Part Information

Terminal Type ID	Terminated Lead	Diagnostic Test Probe	Terminal Removal Tool
I	Not required	J-35616-16 (LT GN)	No Tool Required

B316 Transmission Park Valve Position Switch (MHS/MQC)

Pin	Size	Color	Circuit	Function	Terminal Type ID	Option
1	—	—	—	Not Occupied	—	—
2	0.5	GN	4170	Transmission Output Shaft Speed Sensor Circuit 9V Reference	I	—
3	0.5	YE	6317	Electronic Transmission Range Select Out of Park Switch Signal	I	—
4	0.5	YE / GY	6319	Electronic Transmission Range Select Out of Park Switch 2 Signal	I	—

B321 Crankcase Pressure Sensor (LM2)

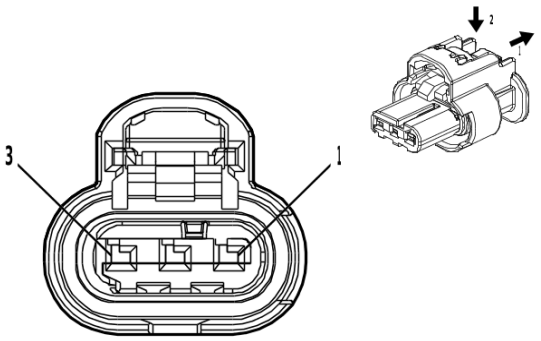

4778903

Connector Part Information

Harness Type: Engine Wiring Harness
OEM Connector: 33358808
Service Connector: 86792095
Description: 3-Way F 1.2 MCON-CB Series, Sealed(BK)

Terminal Part Information

Terminal Type ID	Terminated Lead	Diagnostic Test Probe	Terminal Removal Tool
I	Not required	J-35616-16 (L-GN)	No Tool Required

B321 Crankcase Pressure Sensor (LM2)

Pin	Size	Color	Circuit	Function	Terminal Type ID	Option
1	0.5	BU / RD	460	Engine Control Sensors 5 Volt Reference 1	I	—
2	0.5	YE / GY	3926	Crankcase Differential Pressure Sensor Signal	I	—
3	0.5	BK / YE	548	Engine Control Sensors Low Reference 1	I	—

B338A Intake Camshaft Profile Sleeve Position Sensor 1 (L3B)

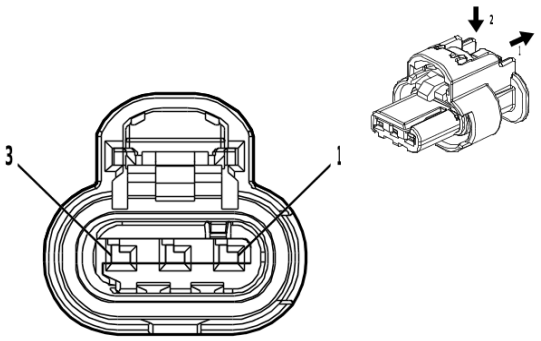

4581126

Connector Part Information

Harness Type: Engine Wiring Harness
OEM Connector: 33358800
Service Connector: 86792094
Description: 3-Way F 1.2 MCON-CB Series, Sealed(BK)

Terminal Part Information

Terminal Type ID	Terminated Lead	Diagnostic Test Probe	Terminal Removal Tool
I	Not required	J-35616-16 (L-GN)	No Tool Required

B338A Intake Camshaft Profile Sleeve Position Sensor 1 (L3B)

Pin	Size	Color	Circuit	Function	Terminal Type ID	Option
1	0.5	WH / RD	480	Engine Control Vehicle Sensors 5 Volt Reference 1	I	—
2	0.5	BK / GN	580	Engine Control Sensors Low Reference 2	I	—
3	0.5	VT / WH	3744	Camshaft Intake Lobe Axial Position Signal 1	I	—

B338B Intake Camshaft Profile Sleeve Position Sensor 2 (L3B)

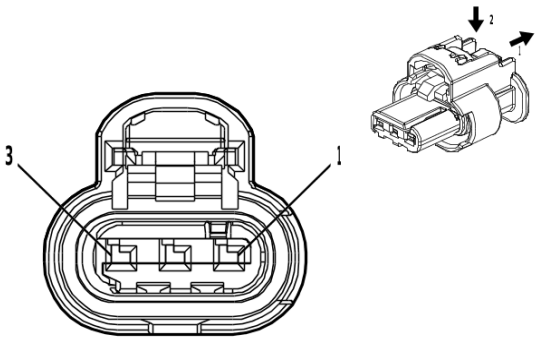

4581126

Connector Part Information

Harness Type: Engine Wiring Harness
OEM Connector: 33358800
Service Connector: 86792094
Description: 3-Way F 1.2 MCON-CB Series, Sealed(BK)

Terminal Part Information

Terminal Type ID	Terminated Lead	Diagnostic Test Probe	Terminal Removal Tool
I	Not required	J-35616-16 (L-GN)	No Tool Required

B338B Intake Camshaft Profile Sleeve Position Sensor 2 (L3B)

Pin	Size	Color	Circuit	Function	Terminal Type ID	Option
1	0.5	WH / RD	480	Engine Control Vehicle Sensors 5 Volt Reference 1	I	—
2	0.5	BK / GN	580	Engine Control Sensors Low Reference 2	I	—
3	0.5	VT / GN	3745	Camshaft Intake Lobe Axial Position Signal 2	I	—

B339A Exhaust Camshaft Profile Sleeve Position Sensor 1 (L3B)

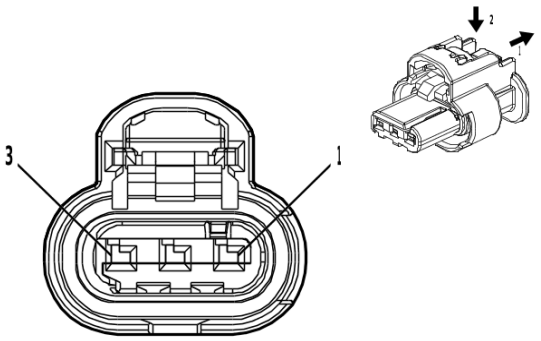

4581126

Connector Part Information

Harness Type: Engine Wiring Harness
OEM Connector: 33358800
Service Connector: 86792094
Description: 3-Way F 1.2 MCON-CB Series, Sealed(BK)

Terminal Part Information

Terminal Type ID	Terminated Lead	Diagnostic Test Probe	Terminal Removal Tool
I	Not required	J-35616-16 (L-GN)	No Tool Required

B339A Exhaust Camshaft Profile Sleeve Position Sensor 1 (L3B)

Pin	Size	Color	Circuit	Function	Terminal Type ID	Option
1	0.5	WH / RD	480	Engine Control Vehicle Sensors 5 Volt Reference 1	I	—
2	0.5	BK / GN	580	Engine Control Sensors Low Reference 2	I	—
3	0.5	YE / WH	3746	Camshaft Exhaust Lobe Axial Position Signal 1	I	—

B339B Exhaust Camshaft Profile Sleeve Position Sensor 2 (L3B)

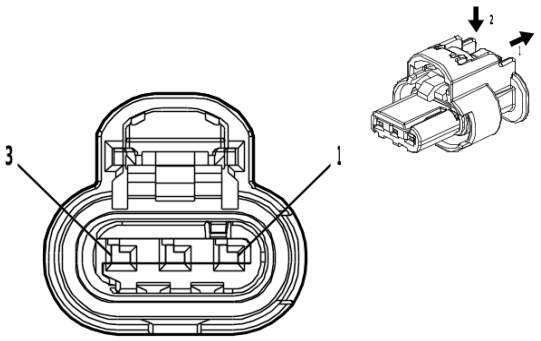

4581126

Connector Part Information

Harness Type: Engine Wiring Harness
OEM Connector: 33358800
Service Connector: 86792094
Description: 3-Way F 1.2 MCON-CB Series, Sealed(BK)

Terminal Part Information

Terminal Type ID	Terminated Lead	Diagnostic Test Probe	Terminal Removal Tool
I	Not required	J-35616-16 (L-GN)	No Tool Required

B339B Exhaust Camshaft Profile Sleeve Position Sensor 2 (L3B)

Pin	Size	Color	Circuit	Function	Terminal Type ID	Option
1	0.5	WH / RD	480	Engine Control Vehicle Sensors 5 Volt Reference 1	I	—
2	0.5	BK / GN	580	Engine Control Sensors Low Reference 2	I	—
3	0.5	YE / GN	3747	Camshaft Exhaust Lobe Axial Position Signal 2	I	—

B345P Exhaust Pressure Differential Sensor - Particulate Filter (LM2)

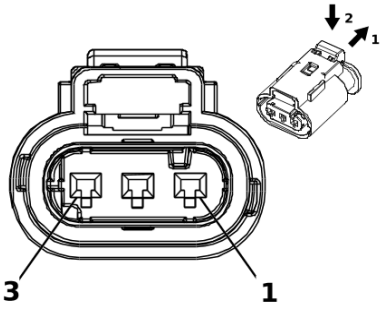

2717069

Connector Part Information

Harness Type: Engine Wiring Harness
OEM Connector: 13763990
Service Connector: 84601390
Description: 3-Way F 1.2 Multilock Series, Sealed(BK)

Terminal Part Information

Terminal Type ID	Terminated Lead	Diagnostic Test Probe	Terminal Removal Tool
I	Not required	J-35616-16 (L-GN)	No Tool Required

B345P Exhaust Pressure Differential Sensor - Particulate Filter (LM2)

Pin	Size	Color	Circuit	Function	Terminal Type ID	Option
1	0.5	BU / RD	460	Engine Control Sensors 5 Volt Reference 1	I	—
2	0.5	BU	6053	Exhaust Pressure Sensor 1 Signal	I	—
3	0.5	BK / YE	548	Engine Control Sensors Low Reference 1	I	—

B345R Exhaust Pressure Differential Sensor - Exhaust Gas Recirculation (LM2)

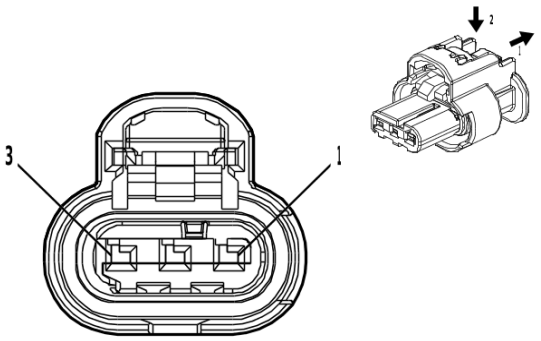

4778903

Connector Part Information

Harness Type: Engine Wiring Harness
OEM Connector: 33358808
Service Connector: 86792095
Description: 3-Way F 1.2 MCON-CB Series, Sealed(BK)

Terminal Part Information

Terminal Type ID	Terminated Lead	Diagnostic Test Probe	Terminal Removal Tool
I	Not required	J-35616-16 (L-GN)	No Tool Required

B345R Exhaust Pressure Differential Sensor - Exhaust Gas Recirculation (LM2)

Pin	Size	Color	Circuit	Function	Terminal Type ID	Option
1	0.5	BU / RD	460	Engine Control Sensors 5 Volt Reference 1	I	—
2	0.5	VT / GY	7246	Exhaust Gas Recirculation Differential Pressure Signal 1	I	—
3	0.5	BK / YE	548	Engine Control Sensors Low Reference 1	I	—

B352 Video Display Inside Rearview Mirror Camera (DRZ)

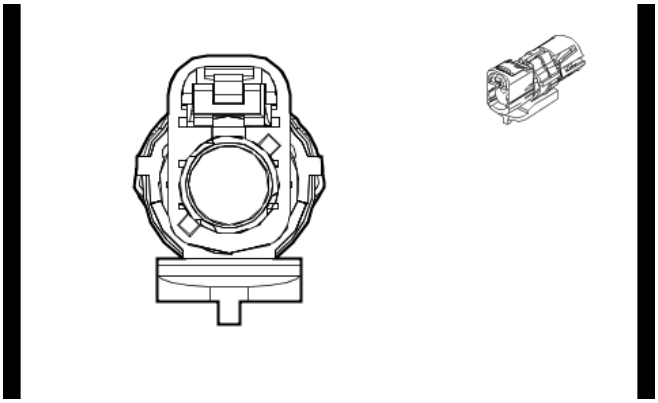

5633894

Connector Part Information

Harness Type: Inside Rearview Mirror Wiring Harness COAX
OEM Connector: 35187049
Service Connector: Service by Cable Assembly — See Part Catalog
Description: 1-Way F Coax Type, Sealed(BU)

Terminal Part Information

Terminal Type ID	Terminated Lead	Diagnostic Test Probe	Terminal Removal Tool
I	Not required	No Tool Required	No Tool Required

B352 Video Display Inside Rearview Mirror Camera (DRZ)

Pin	Size	Color	Circuit	Function	Terminal Type ID	Option
—	—	Coax Cable	—	Rear Vision Camera Coaxial Video Signal	I	—

E2LRB Side Marker Bulb - Left Rear

—

Connector Part Information

Harness Type: —
OEM Connector: Not Available
Service Connector: Service by Harness - See Part Catalog
Description: Bulb Socket

Terminal Part Information

Terminal Type ID	Terminated Lead	Diagnostic Test Probe	Terminal Removal Tool
I	Not required	Pending	No Tool Required

E2LRB Side Marker Bulb - Left Rear

Pin	Size	Color	Circuit	Function	Terminal Type ID	Option
1	0.75	BN	6993	Left Rear Park Lamp Control	I	—
	0.75	BN	6993	Left Rear Park Lamp Control		—
2	0.75	BK	1850	Ground	I	—
	0.75	BK	1850	Ground		—

E2RRB Side Marker Bulb - Right Rear

—

Connector Part Information

Harness Type: —
OEM Connector: Not Available
Service Connector: Service by Harness - See Part Catalog
Description: Bulb Socket

Terminal Part Information

Terminal Type ID	Terminated Lead	Diagnostic Test Probe	Terminal Removal Tool
I	Not required	Pending	No Tool Required

E2RRB Side Marker Bulb - Right Rear

Pin	Size	Color	Circuit	Function	Terminal Type ID	Option
1	0.75	BN	6995	Right Rear Park Lamp Control	I	—
	0.75	BN	6995	Right Rear Park Lamp Control		—
2	0.75	BK	1850	Ground	I	—
	0.75	BK	1850	Ground		—

E5A Backup Bulb - Left

—

Connector Part Information

Harness Type: —
OEM Connector: Not Available
Service Connector: Service by Harness - See Part Catalog
Description: Bulb Socket

Terminal Part Information

Terminal Type ID	Terminated Lead	Diagnostic Test Probe	Terminal Removal Tool
I	Not required	Not Available	No Tool Required
II	Not required	Pending	No Tool Required

E5A Backup Bulb - Left

Pin	Size	Color	Circuit	Function	Terminal Type ID	Option
1	0.75	GN	24	Backup Lamp Control	I	—
2	0.75 0.75	BK BK	1850 1850	Ground Ground	I II	— GF2/ GF3/ GF5/ GG0/ GPZ

E5B Backup Bulb - Right

—

Connector Part Information

Harness Type: —
OEM Connector: Not Available
Service Connector: Service by Harness - See Part Catalog
Description: Bulb Socket

Terminal Part Information

Terminal Type ID	Terminated Lead	Diagnostic Test Probe	Terminal Removal Tool
I	Not required	Not Available	No Tool Required
II	Not required	Pending	No Tool Required

E5B Backup Bulb - Right

Pin	Size	Color	Circuit	Function	Terminal Type ID	Option
1	0.75	GN	24	Backup Lamp Control	I	—
2	0.75 0.75	BK BK	1850 1850	Ground Ground	I II	— GF2/ GF3/ GF5/ GG0/ GPZ

E5SBL Stop and Turn Signal and Tail Lamp Bulb - Left Lower

—

Connector Part Information

Harness Type: Tail Lamp Wiring Harness - Right
OEM Connector: EEM1214-BLK
Service Connector: Service by Harness - See Part Catalog
Description: Bulb Socket

Terminal Part Information

Terminal Type ID	Terminated Lead	Diagnostic Test Probe	Terminal Removal Tool
I	Not required	Pending	No Tool Required

E5SBL Stop and Turn Signal and Tail Lamp Bulb - Left Lower

Pin	Size	Color	Circuit	Function	Terminal Type ID	Option
GRND	0.75	BK	288	Passenger Seat Rear Vertical Motor Up Control	I	—
	0.75	BK	288	Passenger Seat Rear Vertical Motor Up Control		—
MAJ	0.75	GN	288	Passenger Seat Rear Vertical Motor Up Control	I	—
	0.75	GN	288	Passenger Seat Rear Vertical Motor Up Control		—
MIN	0.75	BN	288	Passenger Seat Rear Vertical Motor Up Control	I	—
	0.75	BN	288	Passenger Seat Rear Vertical Motor Up Control		—

E5SBU Stop and Turn Signal and Tail Lamp Bulb - Left Upper

—

Connector Part Information

Harness Type: Tail Lamp Wiring Harness - Right
OEM Connector: EEM1214-BLK
Service Connector: Service by Harness - See Part Catalog
Description: Bulb Socket

Terminal Part Information

Terminal Type ID	Terminated Lead	Diagnostic Test Probe	Terminal Removal Tool
I	Not required	Pending	No Tool Required

E5SBU Stop and Turn Signal and Tail Lamp Bulb - Left Upper

Pin	Size	Color	Circuit	Function	Terminal Type ID	Option
GRND	0.75	BK	1951	Signal Ground	I	—
	0.75	BK	1951	Signal Ground		—
MAJ	0.75	GN	1334	Left Rear Turn Signal Lamp Control 2	I	—
MIN	0.75	BN	6993	Left Rear Park Lamp Control	I	—

E5TBL Stop and Turn Signal and Tail Lamp Bulb - Right Lower

—

Connector Part Information

Harness Type: —
OEM Connector: Not Available
Service Connector: Service by Harness - See Part Catalog
Description: Bulb Socket

Terminal Part Information

Terminal Type ID	Terminated Lead	Diagnostic Test Probe	Terminal Removal Tool
I	Not required	Pending	No Tool Required
I	Not required	Pending	No Tool Required

E5TBL Stop and Turn Signal and Tail Lamp Bulb - Right Lower

Pin	Size	Color	Circuit	Function	Terminal Type ID	Option
GRND	0.75	BK	1850	Ground	I	—
	0.75	BK	1850	Ground		—
MAJ	0.75	GN	1335	Right Rear Turn Signal Lamp Control 2	I	—
	0.75	GN	1335	Right Rear Turn Signal Lamp Control 2		—
MIN	0.75	BN	6995	Right Rear Park Lamp Control	I	—
	0.75	BN	6995	Right Rear Park Lamp Control		—

E5TBU Stop and Turn Signal and Tail Lamp Bulb - Right Upper

—

Connector Part Information

Harness Type: Tail Lamp Wiring Harness - Right
OEM Connector: EEM1214-BLK
Service Connector: Service by Harness - See Part Catalog
Description: Bulb Socket

Terminal Part Information

Terminal Type ID	Terminated Lead	Diagnostic Test Probe	Terminal Removal Tool
I	Not required	Pending	No Tool Required

E5TBU Stop and Turn Signal and Tail Lamp Bulb - Right Upper

Pin	Size	Color	Circuit	Function	Terminal Type ID	Option
GRND	0.75	BK	1951	Signal Ground	I	—
	0.75	BK	1951	Signal Ground		—
MAJ	0.75	GN	1334	Left Rear Turn Signal Lamp Control 2	I	—
MIN	0.75	BN	6993	Left Rear Park Lamp Control	I	—

E6A High Mount Stop and Cargo Lamp

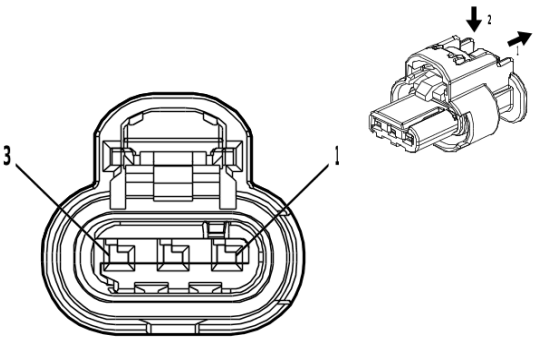

4581126

Connector Part Information

Harness Type: Inside Rearview Mirror Wiring Harness
OEM Connector: 33358800
Service Connector: Service by Harness - See Part Catalog
Description: 3-Way F 1.2 MCON-CB Series, Sealed(BK)

Terminal Part Information

Terminal Type ID	Terminated Lead	Diagnostic Test Probe	Terminal Removal Tool
I	Not required	J-35616-16 (L-GN)	No Tool Required

E6A High Mount Stop and Cargo Lamp

Pin	Size	Color	Circuit	Function	Terminal Type ID	Option
1	0.5	WH / VT	1430	Exterior Courtesy Lamp Control	I	—
2	0.5	BN / YE	820	Center High Mounted Stop Lamp Supply Voltage	I	—
3	0.5	BK	1050	Ground	I	—

E6A High Mount Stop and Cargo Lamp (Regular Cab)

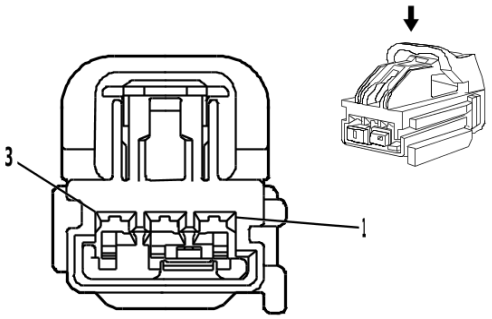

1787799

Connector Part Information

Harness Type: Dome Lamp Wiring Harness
OEM Connector: 10847008
Service Connector: 86825460
Description: 3-Way F 1.5 Kaizen Series(L-GY)

Terminal Part Information

Terminal Type ID	Terminated Lead	Diagnostic Test Probe	Terminal Removal Tool
I	Not required	J-35616-2A (GY)	No Tool Required

E6A High Mount Stop and Cargo Lamp (Regular Cab)

Pin	Size	Color	Circuit	Function	Terminal Type ID	Option
1	0.5	WH / VT	1430	Exterior Courtesy Lamp Control	I	—
2	0.5	BU / BK	1053	Center High Mounted Stop Lamp Control 3	I	—
3	1	BK	1050	Ground	I	—

E7L Rear License Plate Lamp - Left

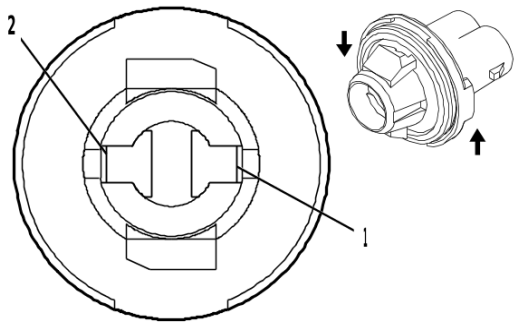

5153536

Connector Part Information

Harness Type: Rear Object Alarm Sensor Wiring Harness
OEM Connector: 15324946
Service Connector: Service by Harness - See Part Catalog
Description: 2-Way F Lamp Socket Wedge Base, Type W-2(D-GY)

Terminal Part Information

Terminal Type ID	Terminated Lead	Diagnostic Test Probe	Terminal Removal Tool
I	Not required	No Tool Required	No Tool Required

E7L Rear License Plate Lamp - Left

Pin	Size	Color	Circuit	Function	Terminal Type ID	Option
1	0.5	GN / YE	6846	Rear License Plate Lamp Control	I	—
2	0.5	BK	1850	Ground	I	—

E7R Rear License Plate Lamp - Right

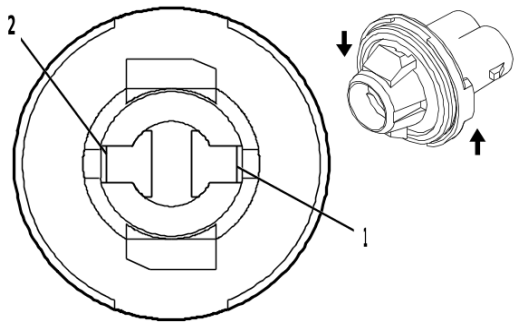

5153536

Connector Part Information

Harness Type: Rear Object Alarm Sensor Wiring Harness
OEM Connector: 15324946
Service Connector: Service by Harness - See Part Catalog
Description: 2-Way F Lamp Socket Wedge Base, Type W-2(D-GY)

Terminal Part Information

Terminal Type ID	Terminated Lead	Diagnostic Test Probe	Terminal Removal Tool
I	Not required	No Tool Required	No Tool Required

E7R Rear License Plate Lamp - Right

Pin	Size	Color	Circuit	Function	Terminal Type ID	Option
1	0.5	GN / YE	6846	Rear License Plate Lamp Control	I	—
2	0.5	BK	1850	Ground	I	—

E12A Glow Plug 1 (LM2)

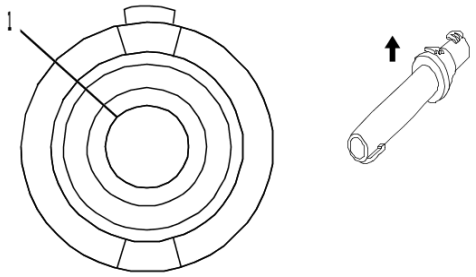

2231591

Connector Part Information

Harness Type: Diesel Glow Plug Wiring Harness
OEM Connector: 284818-1
Service Connector: Service by Cable Assembly - See Part Catalog
Description: 1-Way F 4.0 Series(BK)

Terminal Part Information

Terminal Type ID	Terminated Lead	Diagnostic Test Probe	Terminal Removal Tool
I	Not required	No Tool Required	No Tool Required

E12A Glow Plug 1 (LM2)

Pin	Size	Color	Circuit	Function	Terminal Type ID	Option
1	2.5	GY / RD	1581	Glow Plug 1 Control	I	—

E12B Glow Plug 2 (LM2)

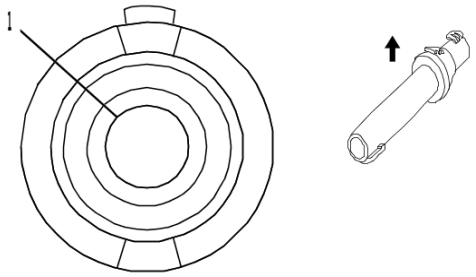

2231591

Connector Part Information

Harness Type: Diesel Glow Plug Wiring Harness
OEM Connector: 284818-1
Service Connector: Service by Cable Assembly - See Part Catalog
Description: 1-Way F 4.0 Series(BK)

Terminal Part Information

Terminal Type ID	Terminated Lead	Diagnostic Test Probe	Terminal Removal Tool
I	Not required	No Tool Required	No Tool Required

E12B Glow Plug 2 (LM2)

Pin	Size	Color	Circuit	Function	Terminal Type ID	Option
1	2.5	GY / BK	1582	Glow Plug 2 Control	I	—

E12C Glow Plug 3 (LM2)

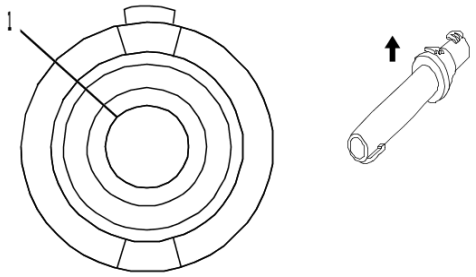

2231591

Connector Part Information

Harness Type: Diesel Glow Plug Wiring Harness
OEM Connector: 284818-1
Service Connector: Service by Cable Assembly - See Part Catalog
Description: 1-Way F 4.0 Series(BK)

Terminal Part Information

Terminal Type ID	Terminated Lead	Diagnostic Test Probe	Terminal Removal Tool
I	Not required	No Tool Required	No Tool Required

E12C Glow Plug 3 (LM2)

Pin	Size	Color	Circuit	Function	Terminal Type ID	Option
1	2.5	GY / GN	1583	Glow Plug 3 Control	I	—

E12D Glow Plug 4 (LM2)

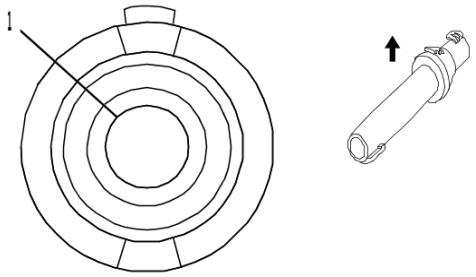

2231591

Connector Part Information

Harness Type: Diesel Glow Plug Wiring Harness
OEM Connector: 284818-1
Service Connector: Service by Cable Assembly - See Part Catalog
Description: 1-Way F 4.0 Series(BK)

Terminal Part Information

Terminal Type ID	Terminated Lead	Diagnostic Test Probe	Terminal Removal Tool
I	Not required	No Tool Required	No Tool Required

E12D Glow Plug 4 (LM2)

Pin	Size	Color	Circuit	Function	Terminal Type ID	Option
1	2.5	GY / YE	1584	Glow Plug 4 Control	I	—

E12E Glow Plug 5 (LM2)

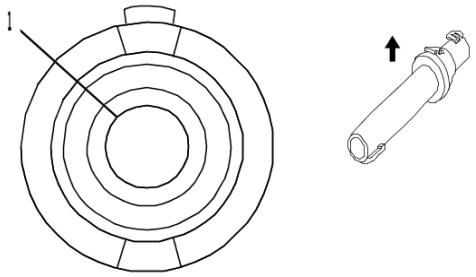

2231591

Connector Part Information

Harness Type: Diesel Glow Plug Wiring Harness
OEM Connector: 284818-1
Service Connector: Service by Cable Assembly - See Part Catalog
Description: 1-Way F 4.0 Series(BK)

Terminal Part Information

Terminal Type ID	Terminated Lead	Diagnostic Test Probe	Terminal Removal Tool
I	Not required	No Tool Required	No Tool Required

E12E Glow Plug 5 (LM2)

Pin	Size	Color	Circuit	Function	Terminal Type ID	Option
1	2.5	GY / WH	1585	Glow Plug 5 Control	I	—

E12F Glow Plug 6 (LM2)

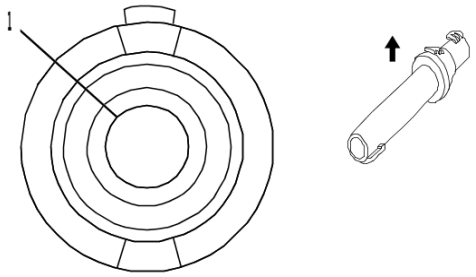

2231591

Connector Part Information

Harness Type: Diesel Glow Plug Wiring Harness
OEM Connector: 284818-1
Service Connector: Service by Cable Assembly - See Part Catalog
Description: 1-Way F 4.0 Series(BK)

Terminal Part Information

Terminal Type ID	Terminated Lead	Diagnostic Test Probe	Terminal Removal Tool
I	Not required	No Tool Required	No Tool Required

E12F Glow Plug 6 (LM2)

Pin	Size	Color	Circuit	Function	Terminal Type ID	Option
1	2.5	GY	1586	Glow Plug 6 Control	I	—

E13LA Front Headlamp - Left

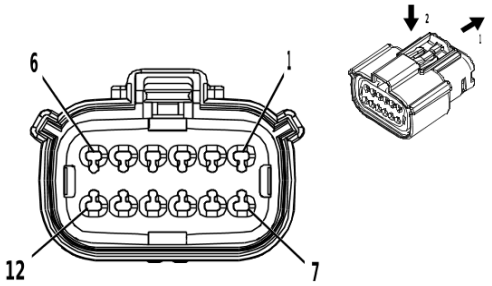

2871860

Connector Part Information

Harness Type: Body Wiring Harness
OEM Connector: 33362189
Service Connector: 19352907
Description: 12-Way F 1.5 MX Series, Sealed(BK)

Terminal Part Information

Terminal Type ID	Terminated Lead	Diagnostic Test Probe	Terminal Removal Tool
I	19368973	J-35616-2A (GY)	J-38125-217

E13LA Front Headlamp - Left

Pin	Size	Color	Circuit	Function	Terminal Type ID	Option
1	1	BK	250	Ground	I	—
2	1.5	RD / WH	640	Battery Positive Voltage	I	—
3	0.75	YE	712	Left Headlamp Low Beam Control	I	—
4	0.75	WH	711	Left Headlamp High Beam Control	I	—
5	0.35	GY / BU	7538	Left Front DRL Control	I	—
6	0.5	WH / YE	1254	Left Front Park Lamp Control	I	—
7	0.5	BU / WH	1314	Left Front Turn Signal Lamp Control	I	—
8	0.35	VT / BK	6568	Front Turn Signal Lamp Feedback Signal	I	—
9	0.5	YE / GN	2024	Animation Lighting Control	I	—
10	0.5	GN / VT	1315	Right Front Turn Signal Lamp Control	I	—
11 - 12	—	—	—	Not Occupied	—	—

E13RA Front Headlamp - Right

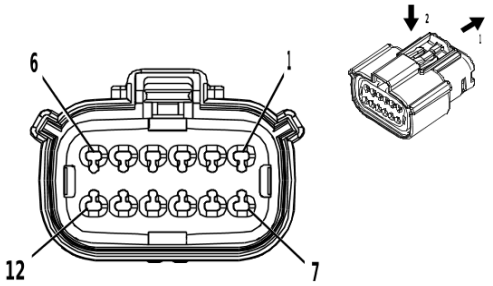

2871860

Connector Part Information

Harness Type: Body Wiring Harness
OEM Connector: 33362189
Service Connector: 19352907
Description: 12-Way F 1.5 MX Series, Sealed(BK)

Terminal Part Information

Terminal Type ID	Terminated Lead	Diagnostic Test Probe	Terminal Removal Tool
I	19368973	J-35616-2A (GY)	J-38125-217

E13RA Front Headlamp - Right

Pin	Size	Color	Circuit	Function	Terminal Type ID	Option
1	0.75 1	BK BK	650 650	Ground Ground	I I	(GF2/ GF5/ GPZ) - GFF (- GF2- GF5- GPZ) / GFF
2	1.5	RD / YE	740	Battery Positive Voltage	I	—
3	1	YE	312	Right Headlamp Low Beam Control	I	—
4	0.75	WH	311	Right Headlamp High Beam Control	I	—
5	0.35	BU / BN	7539	Right Front DRL Control	I	—
6	0.5	BU / GN	1253	Right Front Park Lamp Control	I	—
7	0.5	GN / VT	1315	Right Front Turn Signal Lamp Control	I	—
8	0.35	WH / YE	7545	Right Front Turn Signal Lamp Feedback Signal	I	—
9	0.5	YE / GN	2024	Animation Lighting Control	I	—
10	0.5	BU / WH	1314	Left Front Turn Signal Lamp Control	I	—
11 - 12	—	—	—	Not Occupied	—	—

E14A Front Seat Back Heater - Driver (KA1)

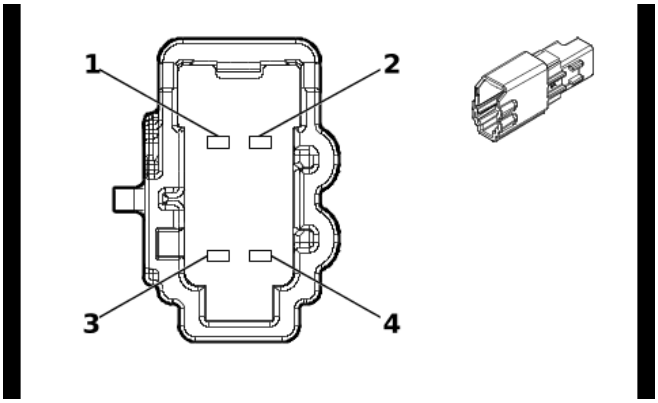

5423974

Connector Part Information

Harness Type: Front Seat Wiring Harness - Driver
OEM Connector: 6098-9049
Service Connector: Service by Harness - See Part Catalog
Description: 4-Way M 1.2 MCON Series(GY)

Terminal Part Information

Terminal Type ID	Terminated Lead	Diagnostic Test Probe	Terminal Removal Tool
I	Not required	J-35616-17 (L-GN)	No Tool Required

E14A Front Seat Back Heater - Driver (KA1)

Pin	Size	Color	Circuit	Function	Terminal Type ID	Option
1	0.75	BN	2432	Driver Seat Back Heating Element Control	I	—
2	0.5	BU	2425	Driver Seat Back Heating Temperature Sensor Signal	I	—
3	0.5	BK / YE	2080	Driver Heated Seat Thermistor Low Reference	I	—
4	0.75	BN / BK	2078	Driver Seat Heating Element Low Reference	I	—

E14B Front Seat Cushion Heater - Driver (KA1)

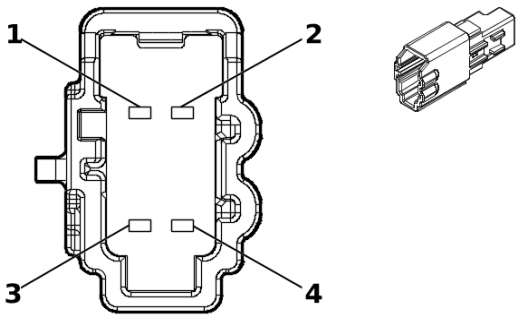

5360963

Connector Part Information

Harness Type: Front Seat Wiring Harness - Driver
OEM Connector: 6098-9046
Service Connector: Service by Harness - See Part Catalog
Description: 4-Way M 1.2 MCON Series(BK)

Terminal Part Information

Terminal Type ID	Terminated Lead	Diagnostic Test Probe	Terminal Removal Tool
I	Not required	J-35616-17 (L-GN)	No Tool Required

E14B Front Seat Cushion Heater - Driver (KA1)

Pin	Size	Color	Circuit	Function	Terminal Type ID	Option
1	0.75	BN / VT	2077	Driver Seat Heating Element Control	I	—
2	0.5	YE / GY	2079	Driver Seat Heating Temperature Sensor Signal	I	—
3	0.5	BK / YE	2080	Driver Heated Seat Thermistor Low Reference	I	—
4	0.75	BN / BK	2078	Driver Seat Heating Element Low Reference	I	—

E14C Front Seat Back Heater - Passenger (KA1)

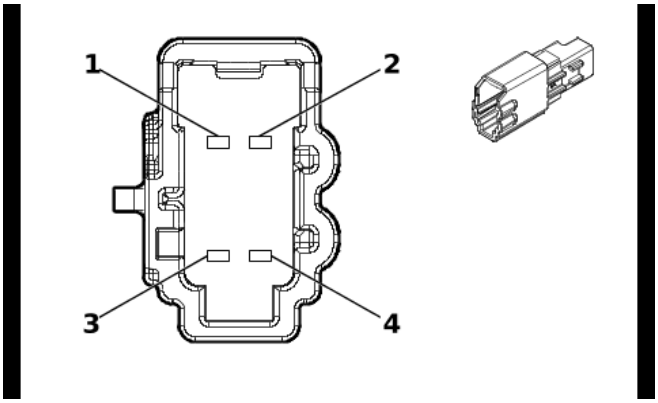

5423974

Connector Part Information

Harness Type: Front Seat Wiring Harness - Passenger
OEM Connector: 6098-9049
Service Connector: Service by Harness - See Part Catalog
Description: 4-Way M 1.2 MCON Series(GY)

Terminal Part Information

Terminal Type ID	Terminated Lead	Diagnostic Test Probe	Terminal Removal Tool
I	Not required	J-35616-17 (L-GN)	No Tool Required

E14C Front Seat Back Heater - Passenger (KA1)

Pin	Size	Color	Circuit	Function	Terminal Type ID	Option
1	0.75	WH / BN	2481	Passenger Seat Back Heating Element Control	I	—
2	0.5	WH / BU	2436	Passenger Seat Back Heating Temperature Sensor Signal	I	—
3	0.5	BK / GN	2482	Passenger Heated Back Thermistor Low Reference	I	—
4	0.75	GY / BK	2480	Passenger Seat Heating Element Low Reference	I	—

E14D Front Seat Cushion Heater - Passenger (KA1)

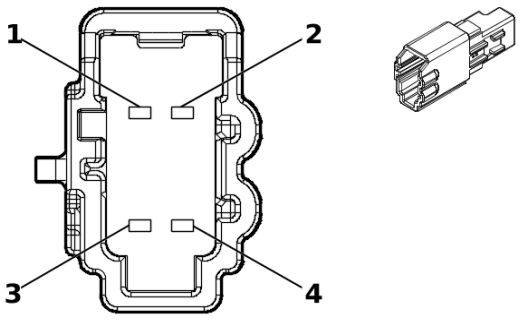

5360963

Connector Part Information

Harness Type: Front Seat Wiring Harness - Passenger
OEM Connector: 6098-9046
Service Connector: Service by Harness - See Part Catalog
Description: 4-Way M 1.2 MCON Series(BK)

Terminal Part Information

Terminal Type ID	Terminated Lead	Diagnostic Test Probe	Terminal Removal Tool
I	Not required	J-35616-17 (L-GN)	No Tool Required

E14D Front Seat Cushion Heater - Passenger (KA1)

Pin	Size	Color	Circuit	Function	Terminal Type ID	Option
1	0.75	BN / BU	2479	Passenger Seat Heating Element Control	I	—
2	0.5	WH / GY	2434	Passenger Seat Heating Temperature Sensor Signal	I	—
3	0.5	BK / GY	2435	Passenger Heated Seat Thermistor Low Reference	I	—
4	0.75	GY / BK	2480	Passenger Seat Heating Element Low Reference	I	—

E18 Rear Window Defogger Grid X1

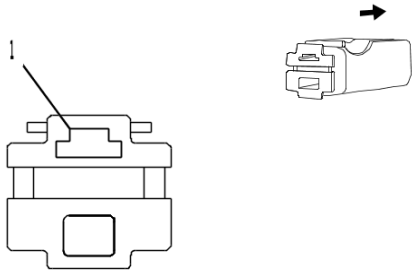

1413086

Connector Part Information

Harness Type: Body Wiring Harness
OEM Connector: 13511619
Service Connector: 19367647
Description: 1-Way F 250 Series(BK)

Terminal Part Information

Terminal Type ID	Terminated Lead	Diagnostic Test Probe	Terminal Removal Tool
I	Not required	J-35616-42 (RD)	No Tool Required

E18 Rear Window Defogger Grid X1

Pin	Size	Color	Circuit	Function	Terminal Type ID	Option
1	2.5	BN / VT	293	Rear Defogger Grid Control	I	—

E18 Rear Window Defogger Grid X2

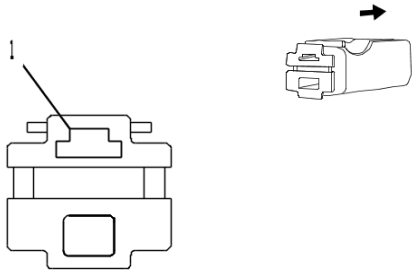

1413086

Connector Part Information

Harness Type: Body Wiring Harness
OEM Connector: 13511619
Service Connector: 19367647
Description: 1-Way F 250 Series(BK)

Terminal Part Information

Terminal Type ID	Terminated Lead	Diagnostic Test Probe	Terminal Removal Tool
I	Not required	J-35616-42 (RD)	No Tool Required

E18 Rear Window Defogger Grid X2

Pin	Size	Color	Circuit	Function	Terminal Type ID	Option
1	2.5	BK	1450	Ground	I	—

E28 Front Floor Console Compartment Lamp

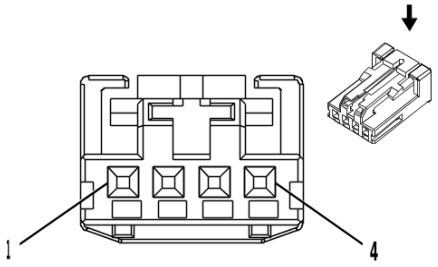

2717162

Connector Part Information

Harness Type: Front Floor Console Wiring Harness
OEM Connector: 13969166
Service Connector: Service by Harness - See Part Catalog
Description: 4-Way F 0.64 Micro-Quadlock Series(BK)

Terminal Part Information

Terminal Type ID	Terminated Lead	Diagnostic Test Probe	Terminal Removal Tool
I	Not required	J-35616-64B (L-BU)	No Tool Required

E28 Front Floor Console Compartment Lamp

Pin	Size	Color	Circuit	Function	Terminal Type ID	Option
1	0.35	BK	1451	Signal Ground	I	—
2	—	—	—	Not Occupied	—	—
3	0.5	GN / VT	4786	Dome/Reading Lamp Enable Signal	I	—
4	—	—	—	Not Occupied	—	—

E29LF Front Fog Lamp - Left (T3U)

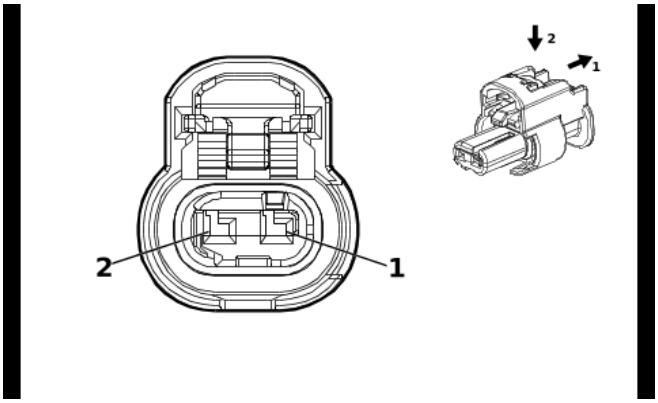

4649903

Connector Part Information

Harness Type: Front Object Alarm Sensor Wiring Harness
OEM Connector: 33327048
Service Connector: Service by Harness - See Part Catalog
Description: 2-Way F 1.2 MCON Series, Sealed(BK)

Terminal Part Information

Terminal Type ID	Terminated Lead	Diagnostic Test Probe	Terminal Removal Tool
I	Not required	J-35616-16 (L-GN)	No Tool Required

E29LF Front Fog Lamp - Left (T3U)

Pin	Size	Color	Circuit	Function	Terminal Type ID	Option
1	0.5	BK	650	Ground	I	—
2	0.5	BN / GY	5061	Left Front Fog Lamp Control	I	—

E29RF Front Fog Lamp - Right (T3U)

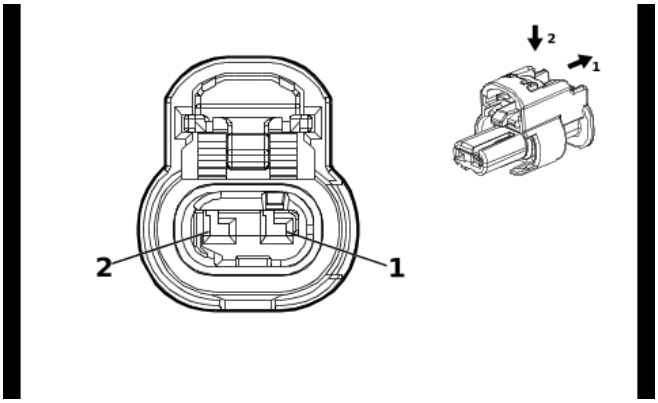

4649903

Connector Part Information

Harness Type: Front Object Alarm Sensor Wiring Harness
OEM Connector: 33327048
Service Connector: Service by Harness - See Part Catalog
Description: 2-Way F 1.2 MCON Series, Sealed(BK)

Terminal Part Information

Terminal Type ID	Terminated Lead	Diagnostic Test Probe	Terminal Removal Tool
I	Not required	J-35616-16 (L-GN)	No Tool Required

E29RF Front Fog Lamp - Right (T3U)

Pin	Size	Color	Circuit	Function	Terminal Type ID	Option
1	0.5	BK	650	Ground	I	—
2	0.5	BN / GN	5062	Right Front Fog Lamp Control	I	—

E31L Sunshade Mirror Lamp - Left

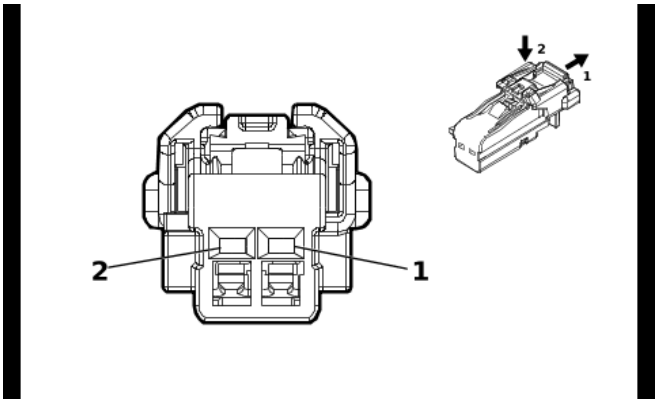

5377746

Connector Part Information

Harness Type: Dome Lamp Wiring Harness
OEM Connector: 35327306
Service Connector: 84867147
Description: 2-Way F 1.2 MCON Series(BN)

Terminal Part Information

Terminal Type ID	Terminated Lead	Diagnostic Test Probe	Terminal Removal Tool
I	Not required	J-35616-16 (L-GN)	No Tool Required

E31L Sunshade Mirror Lamp - Left

Pin	Size	Color	Circuit	Function	Terminal Type ID	Option
1	0.35	BU / GN	4785	Interior Lamp Overhead Enable Signal	I	—
2	0.5	BK	1050	Ground	I	—

E31R Sunshade Mirror Lamp - Right

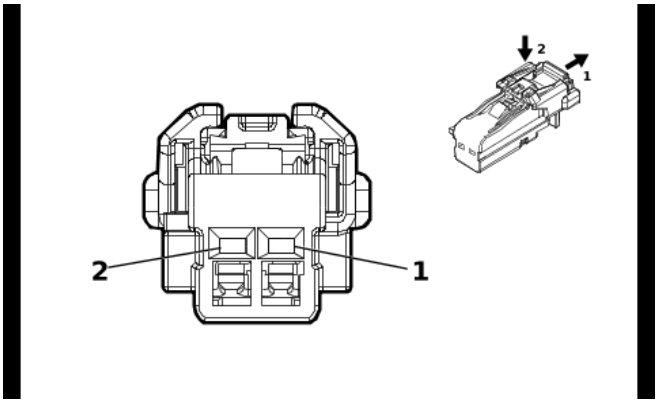

5377746

Connector Part Information

Harness Type: Dome Lamp Wiring Harness
OEM Connector: 35327306
Service Connector: 84867147
Description: 2-Way F 1.2 MCON Series(BN)

Terminal Part Information

Terminal Type ID	Terminated Lead	Diagnostic Test Probe	Terminal Removal Tool
I	Not required	J-35616-16 (L-GN)	No Tool Required

E31R Sunshade Mirror Lamp - Right

Pin	Size	Color	Circuit	Function	Terminal Type ID	Option
1	0.35	GY / WH	2369	Interior Lamp Overhead 2 Enable Signal	I	—
2	0.5	BK	1050	Ground	I	—

E33LB Cargo Box Lamp Bulb - Left

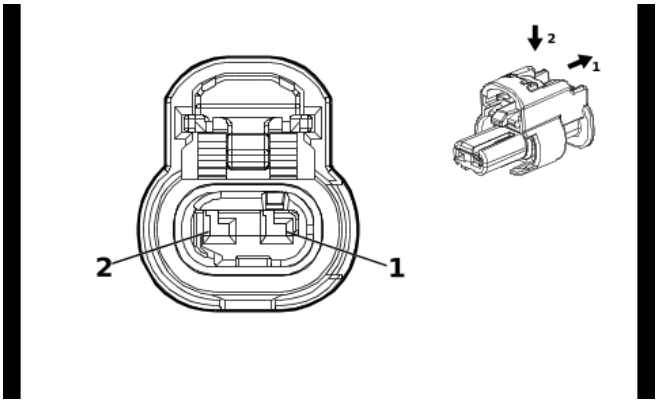

4649903

Connector Part Information

Harness Type: Tail Lamp Wiring Harness
OEM Connector: 1-2296694-1
Service Connector: Service by Harness - See Part Catalog
Description: 2-Way F 1.2 MCON Series, Sealed(BK)

Terminal Part Information

Terminal Type ID	Terminated Lead	Diagnostic Test Probe	Terminal Removal Tool
I	Not required	Not required	No Tool Required

E33LB Cargo Box Lamp Bulb - Left

Pin	Size	Color	Circuit	Function	Terminal Type ID	Option
1	0.75	BU / BU	7762	Cargo Lamp Control	I	—
2	0.75	BK / BK	1850	Ground	I	—

E33RB Cargo Box Lamp Bulb - Right

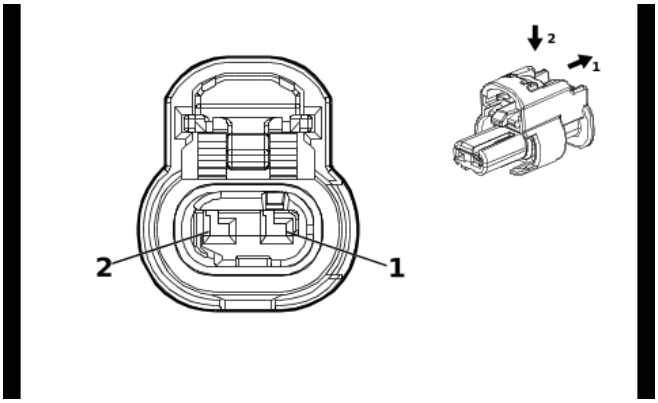

4649903

Connector Part Information

Harness Type: Tail Lamp Wiring Harness
OEM Connector: 1-2296694-1
Service Connector: Service by Harness - See Part Catalog
Description: 2-Way F 1.2 MCON Series, Sealed(BK)

Terminal Part Information

Terminal Type ID	Terminated Lead	Diagnostic Test Probe	Terminal Removal Tool
I	Not required	J-35616-16 (L-GN)	No Tool Required

E33RB Cargo Box Lamp Bulb - Right

Pin	Size	Color	Circuit	Function	Terminal Type ID	Option
1	0.75	BU / BU	7762	Cargo Lamp Control	I	—
2	0.75	BU / BU	1850	Ground	I	—

E33TH Rear Closure Auxiliary Signal Lamp (QT5/QT6)

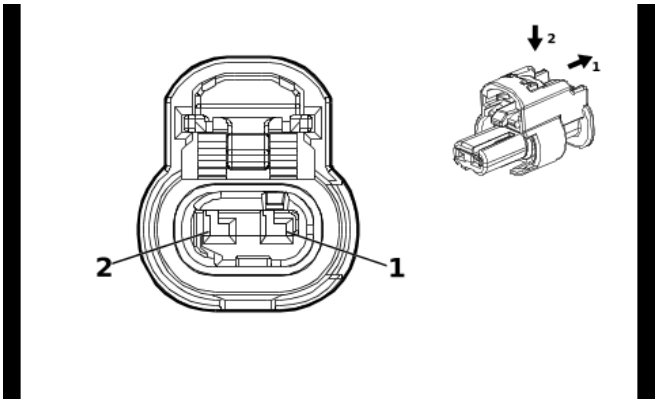

4649903

Connector Part Information

Harness Type: Endgate Wiring Harness
OEM Connector: 33327048
Service Connector: Service by Harness - See Part Catalog
Description: 2-Way F 1.2 MCON Series, Sealed(BK)

Terminal Part Information

Terminal Type ID	Terminated Lead	Diagnostic Test Probe	Terminal Removal Tool
I	Not required	J-35616-16 (L-GN)	No Tool Required

E33TH Rear Closure Auxiliary Signal Lamp (QT5/QT6)

Pin	Size	Color	Circuit	Function	Terminal Type ID	Option
1	0.5	WH / VT	1430	Exterior Courtesy Lamp Control	I	—
2	0.5	BK	1850	Ground	I	—

E37SMC Rear Seat Position Center Reading and Courtesy Lamp (Extended Cab/ Crew Cab)

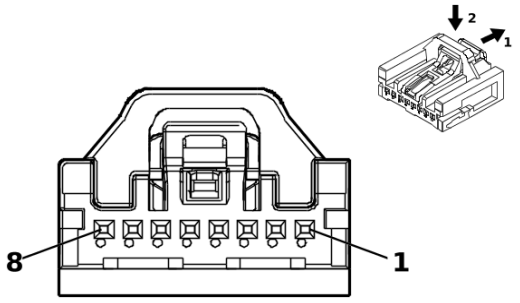

5200269

Connector Part Information

Harness Type: Dome Lamp Wiring Harness
OEM Connector: 35068228
Service Connector: 84769201
Description: 8-Way F Mini 50 Series(BK)

Terminal Part Information

Terminal Type ID	Terminated Lead	Diagnostic Test Probe	Terminal Removal Tool
I	Not required	EL-35616-58 (BK)	No Tool Required

E37SMC Rear Seat Position Center Reading and Courtesy Lamp (Extended Cab/ Crew Cab)

Pin	Size	Color	Circuit	Function	Terminal Type ID	Option
1	0.35	GN / YE	2903	Row 2 Dome Reading Lamp Interior Lamp Control	I	—
2	0.35	BN / BU	2905	Row 2 Dome Reading Lamp 2 Interior Lamp Control	I	—
3	0.35	BK	1050	Ground	I	—
4	0.35	WH / BN	2904	Row 2 Dome Reading Lamp Switch Signal	I	—
5	0.35	VT / GY	2906	Row 2 Dome Reading Lamp 2 Switch Signal	I	—
6 - 8	—	—	—	Not Occupied	—	—

E42L Rear Body Structure Stop Lamp - Left (GF4/GF9/GFC/GFD/GRZ)

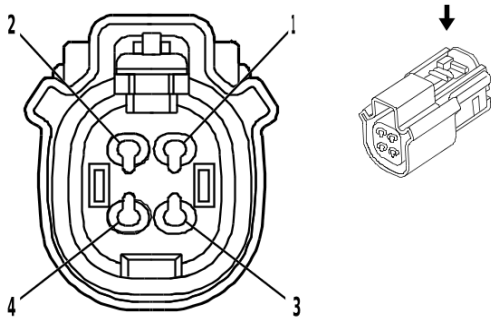

1960031

Connector Part Information

Harness Type: Tail Lamp Wiring Harness
OEM Connector: 33472-4006
Service Connector: Service by Harness - See Part Catalog
Description: 4-Way F 1.5 MX Series, Sealed(BK)

Terminal Part Information

Terminal Type ID	Terminated Lead	Diagnostic Test Probe	Terminal Removal Tool
I	Not required	Pending	No Tool Required

E42L Rear Body Structure Stop Lamp - Left (GF4/GF9/GFC/GFD/GRZ)

Pin	Size	Color	Circuit	Function	Terminal Type ID	Option
1	0.75	BN	6993	Left Rear Park Lamp Control	I	—
2	0.75	RD	6567	Rear Turn Signal Lamp Feedback Signal	I	—
3	0.75	GN	1334	Left Rear Turn Signal Lamp Control 2	I	—
4	0.75	BK	1950	Ground	I	—

E42R Rear Body Structure Stop Lamp - Right (GF4/GF9/GFC/GFD/GRZ)

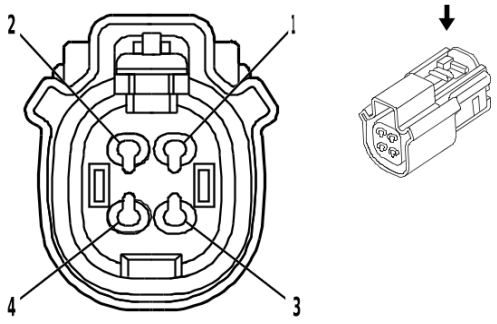

1960031

Connector Part Information

Harness Type: Tail Lamp Wiring Harness
OEM Connector: 33472-4006
Service Connector: Service by Harness - See Part Catalog
Description: 4-Way F 1.5 MX Series, Sealed(BK)

Terminal Part Information

Terminal Type ID	Terminated Lead	Diagnostic Test Probe	Terminal Removal Tool
I	Not required	Pending	No Tool Required

E42R Rear Body Structure Stop Lamp - Right (GF4/GF9/GFC/GFD/GRZ)

Pin	Size	Color	Circuit	Function	Terminal Type ID	Option
1	0.75	BN	6995	Right Rear Park Lamp Control	I	—
2	0.75	RD	7544	Right Rear Turn Signal Lamp Feedback Signal	I	—
3	0.75	GN	1335	Right Rear Turn Signal Lamp Control 2	I	—
4	0.75	BK	1850	Ground	I	—

E52 Reductant Heater 2 - Injector Supply Pipe (LM2)

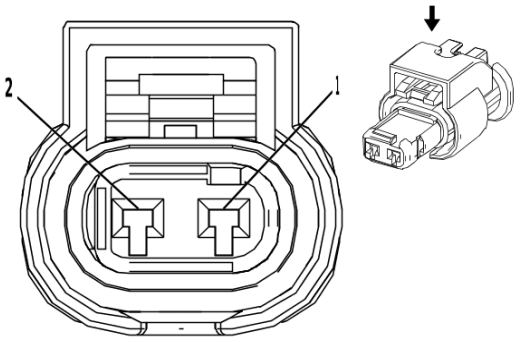

2474752

Connector Part Information

Harness Type: Emission Reduction Fluid Tank Reservoir Wire Harness
OEM Connector: 13586143
Service Connector: Service by Harness - See Part Catalog
Description: 2-Way F 1.2 MCON Series, Sealed(BK)

Terminal Part Information

Terminal Type ID	Terminated Lead	Diagnostic Test Probe	Terminal Removal Tool
I	Not required	Not Available	No Tool Required

E52 Reductant Heater 2 - Injector Supply Pipe (LM2)

Pin	Size	Color	Circuit	Function	Terminal Type ID	Option
1	1	WH	3199	Diesel Exhaust Fluid Pressure Line Heater Control	I	—
2	1	BN	4319	Diesel Exhaust Fluid Line Heater Low Control	I	—

E63D Front Side Door Inside Handle Illumination Lamp - Left

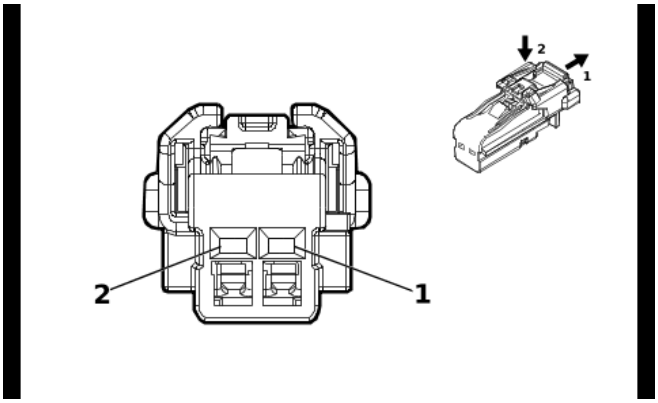

4115691

Connector Part Information

Harness Type: Front Side Door Door Lock Door Wiring Harness - Driver
OEM Connector: 35311666
Service Connector: Service by Harness - See Part Catalog
Description: 2-Way F 1.2 MCON Series(BK)

Terminal Part Information

Terminal Type ID	Terminated Lead	Diagnostic Test Probe	Terminal Removal Tool
I	Not required	J-35616-16 (L-GN)	No Tool Required

E63D Front Side Door Inside Handle Illumination Lamp - Left

Pin	Size	Color	Circuit	Function	Terminal Type ID	Option
1	0.5	GY / VT	2767	LED Ambient Lighting Control Left Front Door	I	—
2	0.5	BK	1550	Ground	I	—

E63P Front Side Door Inside Handle Illumination Lamp - Right

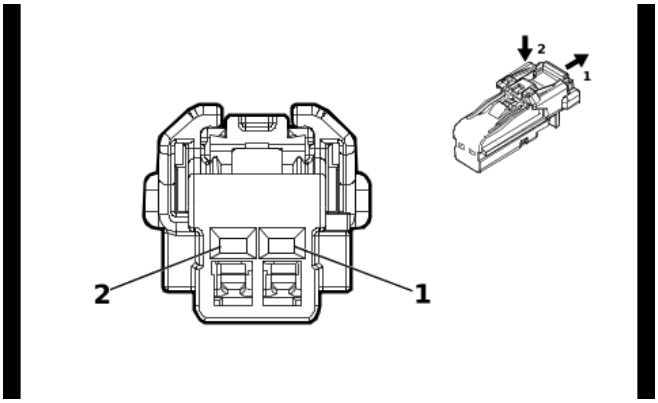

4115691

Connector Part Information

Harness Type: Front Side Door Door Lock Door Wiring Harness - Passenger
OEM Connector: 35311666
Service Connector: Service by Harness - See Part Catalog
Description: 2-Way F 1.2 MCON Series(BK)

Terminal Part Information

Terminal Type ID	Terminated Lead	Diagnostic Test Probe	Terminal Removal Tool
I	Not required	J-35616-16 (L-GN)	No Tool Required

E63P Front Side Door Inside Handle Illumination Lamp - Right

Pin	Size	Color	Circuit	Function	Terminal Type ID	Option
1	0.5	WH / BN	2768	LED Ambient Lighting Control Right Front Door	I	—
2	0.5	BK	1350	Ground	I	—

E135L Front Bumper Fascia Auxiliary Signal Lamp - Left (GRZ)

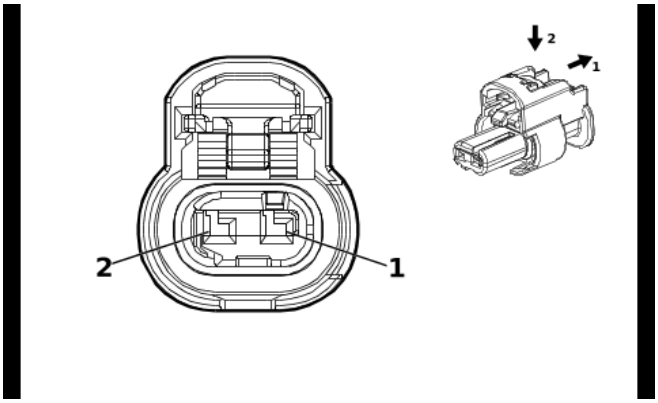

4649903

Connector Part Information

Harness Type: Grille Light Wiring Harness
OEM Connector: 13512365
Service Connector: Service by Harness - See Part Catalog
Description: 2-Way F 1.2 MCON Series, Sealed(BK)

Terminal Part Information

Terminal Type ID	Terminated Lead	Diagnostic Test Probe	Terminal Removal Tool
I	Not required	No Tool Required	No Tool Required

E135L Front Bumper Fascia Auxiliary Signal Lamp - Left (GRZ)

Pin	Size	Color	Circuit	Function	Terminal Type ID	Option
1	1.5	BK	650	Ground	I	—
2	1.5	BN / GN	4246	Identification Lamp Control	I	—

E135R Front Bumper Fascia Auxiliary Signal Lamp - Right (GRZ)

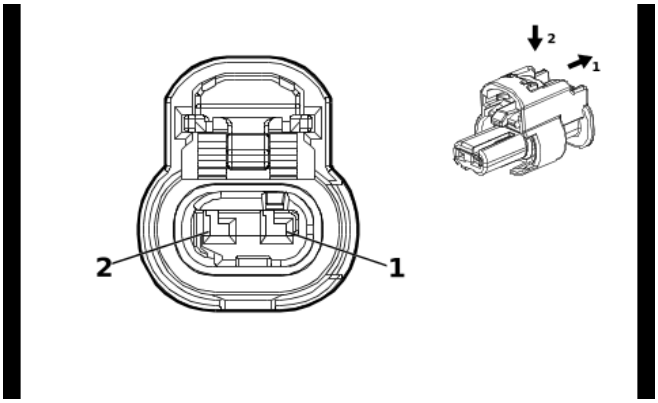

4649903

Connector Part Information

Harness Type: Grille Light Wiring Harness
OEM Connector: 13512365
Service Connector: Service by Harness - See Part Catalog
Description: 2-Way F 1.2 MCON Series, Sealed(BK)

Terminal Part Information

Terminal Type ID	Terminated Lead	Diagnostic Test Probe	Terminal Removal Tool
I	Not required	No Tool Required	No Tool Required

E135R Front Bumper Fascia Auxiliary Signal Lamp - Right (GRZ)

Pin	Size	Color	Circuit	Function	Terminal Type ID	Option
1	1.5	BK	650	Ground	I	—
2	1.5	BN / GN	4246	Identification Lamp Control	I	—

F101 Instrument Panel Airbag X1

—

Connector Part Information

Harness Type: Instrument Panel Airbag Wiring Harness
OEM Connector: 13530531
Service Connector: Service by Harness - See Part Catalog
Description: 2-Way

Terminal Part Information

Terminal Type ID	Terminated Lead	Diagnostic Test Probe	Terminal Removal Tool
I	Not required	No Tool Required	No Tool Required

F101 Instrument Panel Airbag X1

Pin	Size	Color	Circuit	Function	Terminal Type ID	Option
1	0.35	YE / OG	3025	Passenger Instrument Panel Air Bag Stage 1 High Control	I	—
2	0.35	OG / WH	3024	Passenger Instrument Panel Air Bag Stage 1 Low Control	I	—

F101 Instrument Panel Airbag X2

—

Connector Part Information

Harness Type: Instrument Panel Airbag Wiring Harness
OEM Connector: 13530532
Service Connector: Service by Harness - See Part Catalog
Description: 2-Way

Terminal Part Information

Terminal Type ID	Terminated Lead	Diagnostic Test Probe	Terminal Removal Tool
I	Not required	No Tool Required	No Tool Required

F101 Instrument Panel Airbag X2

Pin	Size	Color	Circuit	Function	Terminal Type ID	Option
1	0.35	GY / OG	3027	Passenger Instrument Panel Air Bag Stage 2 High Control	I	—
2	0.35	OG / VT	3026	Passenger Instrument Panel Air Bag Stage 2 Low Control	I	—

F105LF Front Row Roof Rail Airbag - Left

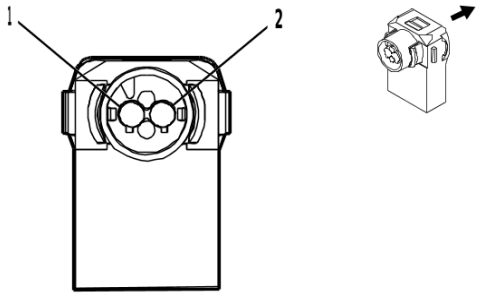

4679778

Connector Part Information

Harness Type: Body Wiring Harness
OEM Connector: 13516030
Service Connector: 19355491
Description: 2-Way F ABX-5 Series(GY with YE Cover)

Terminal Part Information

Terminal Type ID	Terminated Lead	Diagnostic Test Probe	Terminal Removal Tool
I	Not required	J-35616-64B (L-BU)	No Tool Required

F105LF Front Row Roof Rail Airbag - Left

Pin	Size	Color	Circuit	Function	Terminal Type ID	Option
1	0.5	OG / GN	5019	Left Front Roof Rail Air Bag High Control	I	—
2	0.5	VT / OG	5020	Left Front Roof Rail Air Bag Low Control	I	—

F105RF Front Row Roof Rail Airbag - Right

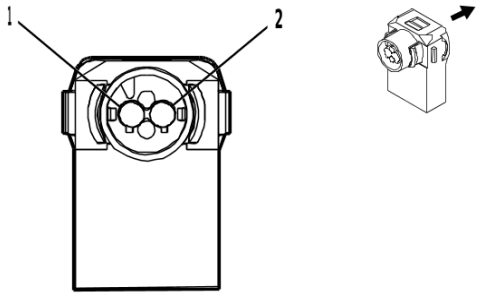

4679778

Connector Part Information

Harness Type: Body Wiring Harness
OEM Connector: 13516030
Service Connector: 19355491
Description: 2-Way F ABX-5 Series(GY with YE Cover)

Terminal Part Information

Terminal Type ID	Terminated Lead	Diagnostic Test Probe	Terminal Removal Tool
I	Not required	J-35616-64B (L-BU)	No Tool Required

F105RF Front Row Roof Rail Airbag - Right

Pin	Size	Color	Circuit	Function	Terminal Type ID	Option
1	0.5	OG / GY	5021	Right Front Roof Rail Air Bag High Control	I	—
2	0.5	WH / OG	5022	Right Front Roof Rail Air Bag Low Control	I	—

F106D Front Seat Outboard Seat Back Airbag - Driver

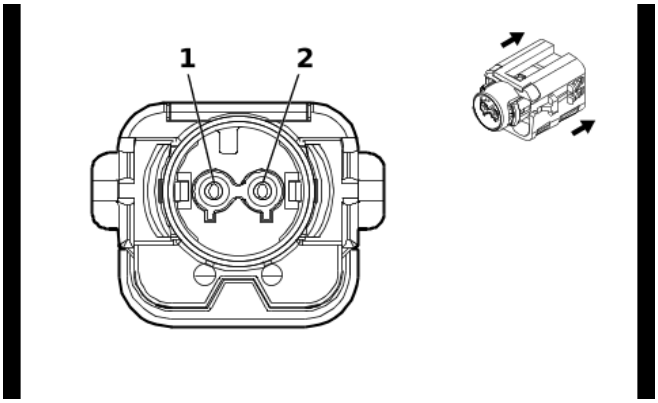

5499727

Connector Part Information

Harness Type: Front Seat Wiring Harness - Driver
OEM Connector: 13535270
Service Connector: Service by Harness - See Part Catalog
Description: 2-Way F ABX-5 Series(PK with YE Cover)

Terminal Part Information

Terminal Type ID	Terminated Lead	Diagnostic Test Probe	Terminal Removal Tool
I	Not required	J-35616-10 (GN)	No Tool Required

F106D Front Seat Outboard Seat Back Airbag - Driver

Pin	Size	Color	Circuit	Function	Terminal Type ID	Option
1	0.5	OG / BU	4962	Driver Seat Back Air Bag High Control	I	—
2	0.5	BK / OG	4963	Driver Seat Back Air Bag Low Control	I	—

F106P Front Seat Outboard Seat Back Airbag - Passenger

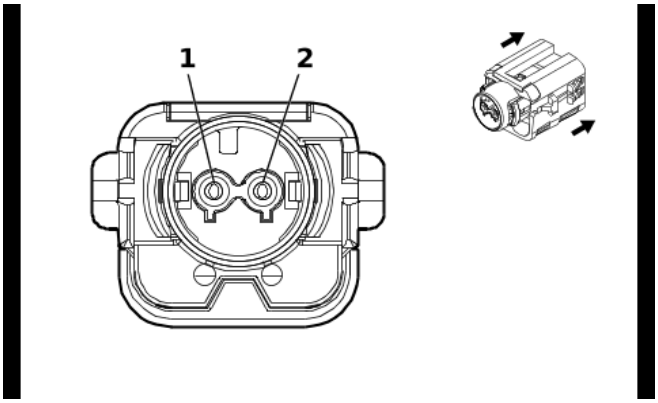

5499727

Connector Part Information

Harness Type: Front Seat Wiring Harness - Passenger
OEM Connector: 13535270
Service Connector: Service by Harness - See Part Catalog
Description: 2-Way F ABX-5 Series(PK with YE Cover)

Terminal Part Information

Terminal Type ID	Terminated Lead	Diagnostic Test Probe	Terminal Removal Tool
I	Not required	J-35616-10 (GN)	No Tool Required

F106P Front Seat Outboard Seat Back Airbag - Passenger

Pin	Size	Color	Circuit	Function	Terminal Type ID	Option
1	0.5	OG / GY	4956	Passenger Seat Back Air Bag High Control	I	—
2	0.5	BU / OG	4957	Passenger Seat Back Air Bag Low Control	I	—

F107 Steering Wheel Airbag X1

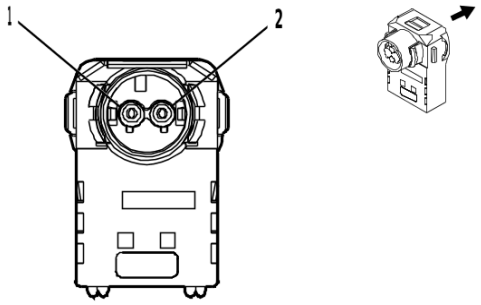

4231869

Connector Part Information

Harness Type: Steering Wheel Horn Switch Wiring Harness
OEM Connector: 13516028
Service Connector: Service by Harness - See Part Catalog
Description: 2-Way F ABX-5 Series(PK with YE Cover)

Terminal Part Information

Terminal Type ID	Terminated Lead	Diagnostic Test Probe	Terminal Removal Tool
I	Not required	Not Available	No Tool Required

F107 Steering Wheel Airbag X1

Pin	Size	Color	Circuit	Function	Terminal Type ID	Option
1	0.5	YE / VT	3021	Steering Wheel Air Bag Stage 1 High Control	I	—
2	0.5	BN / WH	3020	Steering Wheel Air Bag Stage 1 Low Control	I	—

F107 Steering Wheel Airbag X2

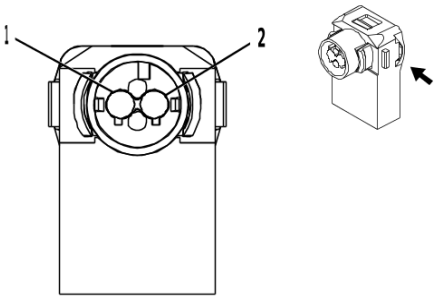

4241364

Connector Part Information

Harness Type: Steering Wheel Horn Switch Wiring Harness
OEM Connector: 13516029
Service Connector: Service by Harness - See Part Catalog
Description: 2-Way F ABX-5 Series(PU with YE Cover)

Terminal Part Information

Terminal Type ID	Terminated Lead	Diagnostic Test Probe	Terminal Removal Tool
I	Not required	Not Available	No Tool Required

F107 Steering Wheel Airbag X2

Pin	Size	Color	Circuit	Function	Terminal Type ID	Option
1	0.5	GY / GN	3023	Steering Wheel Air Bag Stage 2 High Control	I	—
2	0.5	WH / VT	3022	Steering Wheel Air Bag Stage 2 Low Control	I	—

F112D Front Seat Belt Retractor - Driver

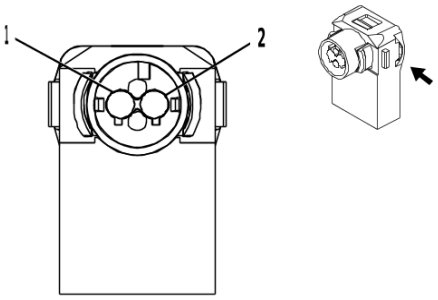

4241364

Connector Part Information

Harness Type: Body Wiring Harness
OEM Connector: 13516029
Service Connector: 19355490
Description: 2-Way F ABX-5 Series(PU with YE Cover)

Terminal Part Information

Terminal Type ID	Terminated Lead	Diagnostic Test Probe	Terminal Removal Tool
I	Not required	J-35616-64B (L-BU)	No Tool Required

F112D Front Seat Belt Retractor - Driver

Pin	Size	Color	Circuit	Function	Terminal Type ID	Option
1	0.5	OG / WH	3477	Driver Seat Belt Retractor Pretensioner High Control	I	—
2	0.5	VT / OG	3478	Driver Seat Belt Retractor Pretensioner Low Control	I	—

F112P Front Seat Belt Retractor - Passenger

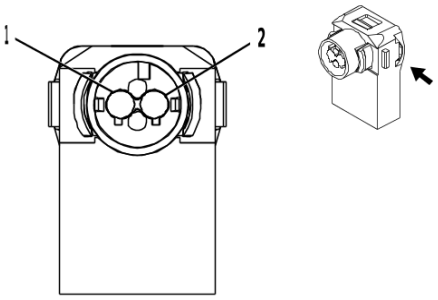

4241364

Connector Part Information

Harness Type: Body Wiring Harness
OEM Connector: 13516029
Service Connector: 19355490
Description: 2-Way F ABX-5 Series(PU with YE Cover)

Terminal Part Information

Terminal Type ID	Terminated Lead	Diagnostic Test Probe	Terminal Removal Tool
I	Not required	J-35616-64B (L-BU)	No Tool Required

F112P Front Seat Belt Retractor - Passenger

Pin	Size	Color	Circuit	Function	Terminal Type ID	Option
1	0.5	OG / GN	3475	Passenger Seat Belt Retractor Pretensioner High Control	I	—
2	0.5	WH / OG	3476	Passenger Seat Belt Retractor Pretensioner Low Control	I	—

F113D Front Seat Belt Anchor Plate Tensioner - Driver

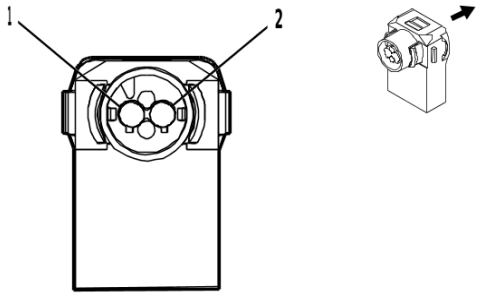

4679778

Connector Part Information

Harness Type: Body Wiring Harness
OEM Connector: 13516030
Service Connector: 19355491
Description: 2-Way F ABX-5 Series(GY with YE Cover)

Terminal Part Information

Terminal Type ID	Terminated Lead	Diagnostic Test Probe	Terminal Removal Tool
I	Not required	J-35616-64B (L-BU)	No Tool Required

F113D Front Seat Belt Anchor Plate Tensioner - Driver

Pin	Size	Color	Circuit	Function	Terminal Type ID	Option
1	0.5	OG / YE	3481	Driver Seat Belt Anchor Pretensioner High Control	I	—
2	0.5	VT / OG	3482	Driver Seat Belt Anchor Pretensioner Low Control	I	—

F113P Front Seat Belt Anchor Plate Tensioner - Passenger

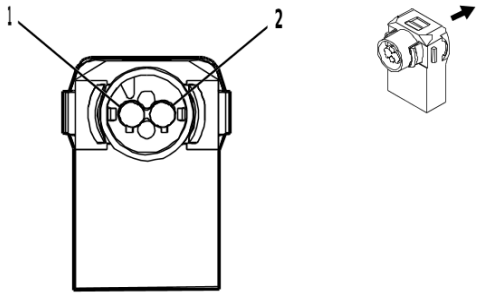

4679778

Connector Part Information

Harness Type: Body Wiring Harness
OEM Connector: 13516030
Service Connector: 19355491
Description: 2-Way F ABX-5 Series(GY with YE Cover)

Terminal Part Information

Terminal Type ID	Terminated Lead	Diagnostic Test Probe	Terminal Removal Tool
I	Not required	J-35616-64B (L-BU)	No Tool Required

F113P Front Seat Belt Anchor Plate Tensioner - Passenger

Pin	Size	Color	Circuit	Function	Terminal Type ID	Option
1	0.5	OG / BN	3479	Passenger Seat Belt Anchor Pretensioner High Control	I	—
2	0.5	GY / OG	3480	Passenger Seat Belt Anchor Pretensioner Low Control	I	—

G5 Transmission Fluid Pump - Electric/Auxiliary (MHS/MQC)

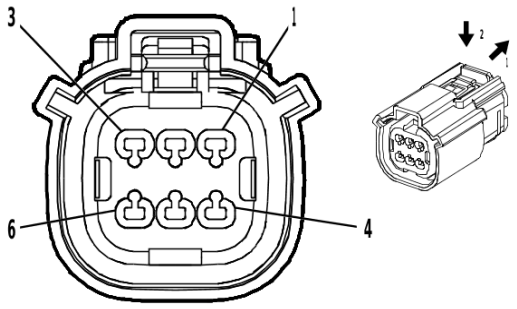

4574736

Connector Part Information

Harness Type: Automatic Transmission Wiring Harness - Case
OEM Connector: 160038-3009
Service Connector: Service by Harness - See Part Catalog
Description: 6-Way F 1.5 MX Series, Sealed(WH)

Terminal Part Information

Terminal Type ID	Terminated Lead	Diagnostic Test Probe	Terminal Removal Tool
I	Not required	J-35616-2A (GY)	No Tool Required

G5 Transmission Fluid Pump - Electric/Auxiliary (MHS/MQC)

Pin	Size	Color	Circuit	Function	Terminal Type ID	Option
1	1.5	GN / VT	8540	Battery Positive Voltage	I	—
2	—	—	—	Not Occupied	—	—
3	0.5	BN	6387	Transmission High Side Driver 1 Control	I	—
4	0.5	GY / OG	2968	Transmission Auxiliary Fluid Pump Control	I	—
5	—	—	—	Not Occupied	—	—
6	1.5	BK / YE	450	Ground	I	—

G5 Transmission Fluid Pump - Electric/Auxiliary (MHT/MQB)

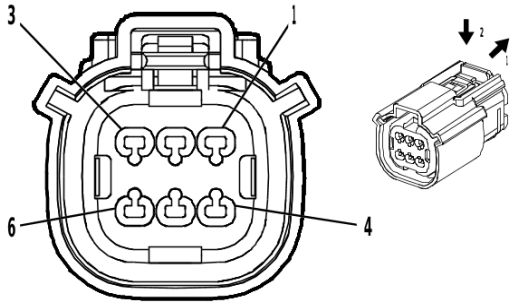

4574736

Connector Part Information

Harness Type: Automatic Transmission Wiring Harness - Case
OEM Connector: 160038-3009
Service Connector: Service by Harness - See Part Catalog
Description: 6-Way F 1.5 MX Series, Sealed(WH)

Terminal Part Information

Terminal Type ID	Terminated Lead	Diagnostic Test Probe	Terminal Removal Tool
I	Not required	J-35616-2A (GY)	No Tool Required

G5 Transmission Fluid Pump - Electric/Auxiliary (MHT/MQB)

Pin	Size	Color	Circuit	Function	Terminal Type ID	Option
1	1.5	GN / VT	8640	Battery Positive Voltage	I	—
2	—	—	—	Not Occupied	—	—
3	0.5	BN	6387	Transmission High Side Driver 1 Control	I	—
4	0.5	GY / OG	2968	Transmission Auxiliary Fluid Pump Control	I	—
5	—	—	—	Not Occupied	—	—
6	1.5	BK / YE	150	Ground	I	—

G8 Engine Coolant Pump - Auxiliary

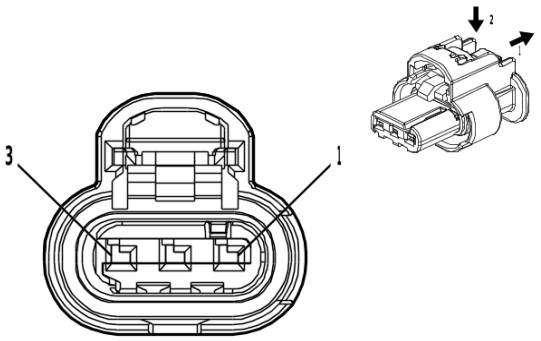

4581126

Connector Part Information

Harness Type: Engine Wiring Harness
OEM Connector: 33358800
Service Connector: 86792094
Description: 3-Way F 1.2 MCON-CB Series, Sealed(BK)

Terminal Part Information

Terminal Type ID	Terminated Lead	Diagnostic Test Probe	Terminal Removal Tool
I	Not required	J-35616-16 (L-GN)	No Tool Required

G8 Engine Coolant Pump - Auxiliary

Pin	Size	Color	Circuit	Function	Terminal Type ID	Option
1	1	BK	450	Ground	I	L84/ L87
	0.75	BK	450	Ground	I	LM2
2	0.5	RD / BU	6040	Battery Positive Voltage	I	—
3	0.5	GN / VT	4621	Engine Control Module LIN Bus 1	I	—

G10L Cooling Fan Motor - Left (L3B)

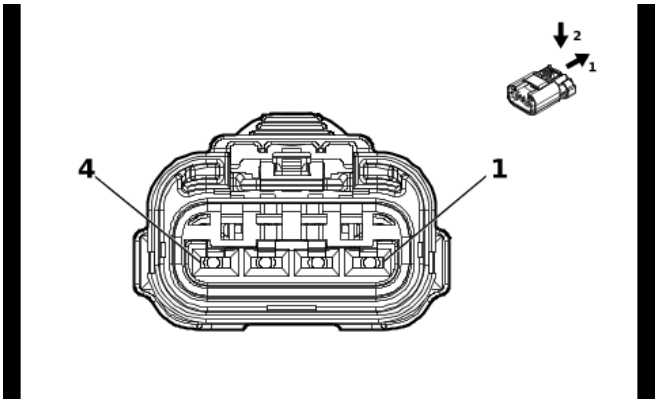

5838592

Connector Part Information

Harness Type: Engine Wiring Harness
OEM Connector: 35243535
Service Connector: Service by Harness - See Part Catalog
Description: 4-Way F 2.8 APEX Series, Sealed(BK)

Terminal Part Information

Terminal Type ID	Terminated Lead	Diagnostic Test Probe	Terminal Removal Tool
I	Not required	J-35616-35 (VT)	No Tool Required
II	Not required	J-35616-4A (PU)	No Tool Required

G10L Cooling Fan Motor - Left (L3B)

Pin	Size	Color	Circuit	Function	Terminal Type ID	Option
1	5	BK	6550	Ground	II	—
2	5	RD / GN	3840	Battery Positive Voltage	II	—
3	—	—	—	Not Occupied	—	—
4	0.75	GN / VT	4621	Engine Control Module LIN Bus 1	I	—

G10L Cooling Fan Motor - Left (L84/L87)

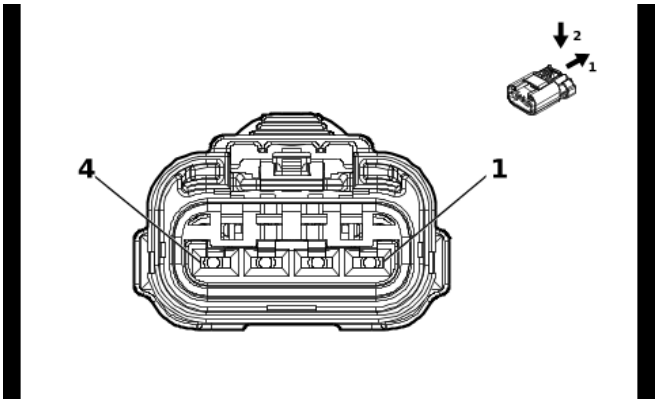

5838592

Connector Part Information

Harness Type: Engine Wiring Harness
OEM Connector: 35243535
Service Connector: Service by Harness - See Part Catalog
Description: 4-Way F 2.8 APEX Series, Sealed(BK)

Terminal Part Information

Terminal Type ID	Terminated Lead	Diagnostic Test Probe	Terminal Removal Tool
I	Not required	J-35616-2A (GY)	No Tool Required
II	Not required	J-35616-4A (PU)	No Tool Required

G10L Cooling Fan Motor - Left (L84/L87)

Pin	Size	Color	Circuit	Function	Terminal Type ID	Option
1	5	BK	450	Ground	II	—
2	5	RD / GN	3840	Battery Positive Voltage	II	—
3	—	—	—	Not Occupied	—	—
4	0.75	GN / VT	4621	Engine Control Module LIN Bus 1	I	—

G10L Cooling Fan Motor - Left (LM2)

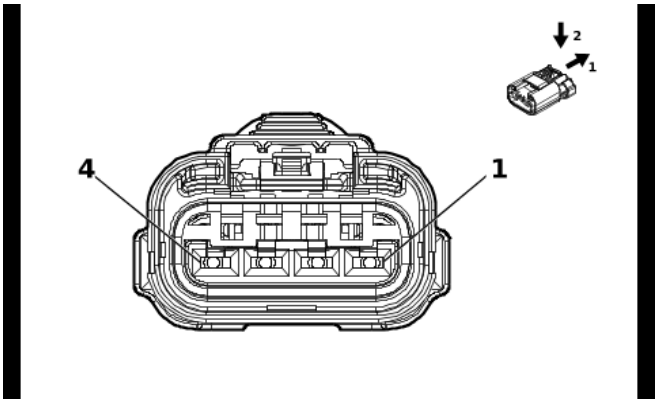

5838592

Connector Part Information

Harness Type: Engine Wiring Harness
OEM Connector: 35243535
Service Connector: Service by Harness - See Part Catalog
Description: 4-Way F 2.8 APEX Series, Sealed(BK)

Terminal Part Information

Terminal Type ID	Terminated Lead	Diagnostic Test Probe	Terminal Removal Tool
I	Not required	J-35616-35 (VT)	No Tool Required
II	Not required	J-35616-4A (PU)	No Tool Required

G10L Cooling Fan Motor - Left (LM2)

Pin	Size	Color	Circuit	Function	Terminal Type ID	Option
1	5	BK	4450	Ground	II	—
2	5	RD / GN	3840	Battery Positive Voltage	II	—
3	—	—	—	Not Occupied	—	—
4	0.75	GN / VT	4621	Engine Control Module LIN Bus 1	I	—

G10LW Cooling Fan Motor - Lower (L3B)

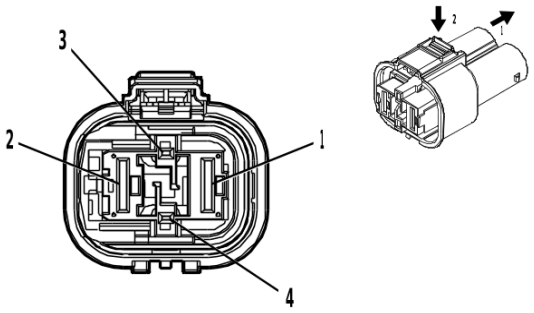

4847569

Connector Part Information

Harness Type: Engine Wiring Harness
OEM Connector: 33376654
Service Connector: 84766431
Description: 4-Way F 1.2, 9.5 MCON Series, Sealed(BK)

Terminal Part Information

Terminal Type ID	Terminated Lead	Diagnostic Test Probe	Terminal Removal Tool
I	Not required	J-35616-16 (L-GN)	No Tool Required
II	Not required	J-35616-22 (RD)	No Tool Required

G10LW Cooling Fan Motor - Lower (L3B)

Pin	Size	Color	Circuit	Function	Terminal Type ID	Option
1	5	RD / GY	4140	Battery Positive Voltage	II	—
2	5	BK	6550	Ground	II	—
3	0.5	GN / YE	4623	Engine Control Module LIN Bus 3	I	—
4	—	—	—	Not Occupied	—	—

G10LW Cooling Fan Motor - Lower (LM2)

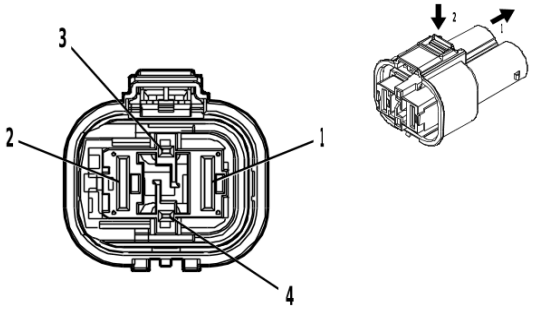

4847569

Connector Part Information

Harness Type: Engine Wiring Harness
OEM Connector: 33376654
Service Connector: 84766431
Description: 4-Way F 1.2, 9.5 MCON Series, Sealed(BK)

Terminal Part Information

Terminal Type ID	Terminated Lead	Diagnostic Test Probe	Terminal Removal Tool
I	Not required	J-35616-16 (L-GN)	No Tool Required
II	Not required	J-35616-22 (RD)	No Tool Required

G10LW Cooling Fan Motor - Lower (LM2)

Pin	Size	Color	Circuit	Function	Terminal Type ID	Option
1	5	RD / GY	4140	Battery Positive Voltage	II	—
2	5	BK	4450	Ground	II	—
3	0.5	GN / YE	4623	Engine Control Module LIN Bus 3	I	—
4	—	—	—	Not Occupied	—	—

G10R Cooling Fan Motor - Right (L3B)

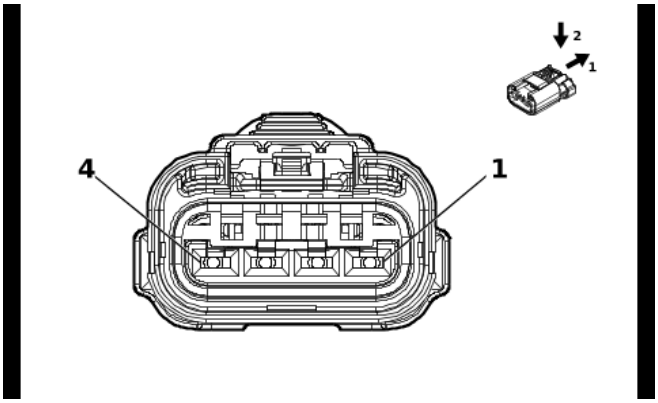

5838592

Connector Part Information

Harness Type: Engine Wiring Harness
OEM Connector: 35243535
Service Connector: Service by Harness - See Part Catalog
Description: 4-Way F 2.8 APEX Series, Sealed(BK)

Terminal Part Information

Terminal Type ID	Terminated Lead	Diagnostic Test Probe	Terminal Removal Tool
I	Not required	J-35616-35 (VT)	No Tool Required
II	Not required	J-35616-4A (PU)	No Tool Required

G10R Cooling Fan Motor - Right (L3B)

Pin	Size	Color	Circuit	Function	Terminal Type ID	Option
1	5	BK	6550	Ground	II	—
2	5	RD / VT	4040	Battery Positive Voltage	II	—
3	—	—	—	Not Occupied	—	—
4	0.75	GN / VT	4621	Engine Control Module LIN Bus 1	I	—

G10R Cooling Fan Motor - Right (L84/L87)

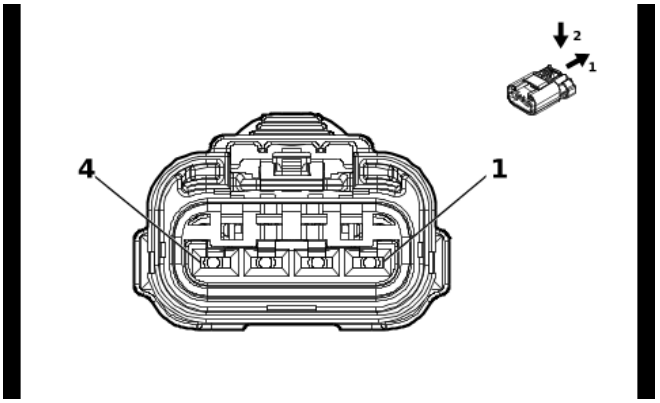

5838592

Connector Part Information

Harness Type: Engine Wiring Harness
OEM Connector: 35243535
Service Connector: Service by Harness - See Part Catalog
Description: 4-Way F 2.8 APEX Series, Sealed(BK)

Terminal Part Information

Terminal Type ID	Terminated Lead	Diagnostic Test Probe	Terminal Removal Tool
I	Not required	J-35616-2A (GY)	No Tool Required
II	Not required	J-35616-4A (PU)	No Tool Required

G10R Cooling Fan Motor - Right (L84/L87)

Pin	Size	Color	Circuit	Function	Terminal Type ID	Option
1	5	BK	450	Ground	II	—
2	5	RD / VT	4040	Battery Positive Voltage	II	—
3	—	—	—	Not Occupied	—	—
4	0.75	GN / VT	4621	Engine Control Module LIN Bus 1	I	—

G10R Cooling Fan Motor - Right (LM2)

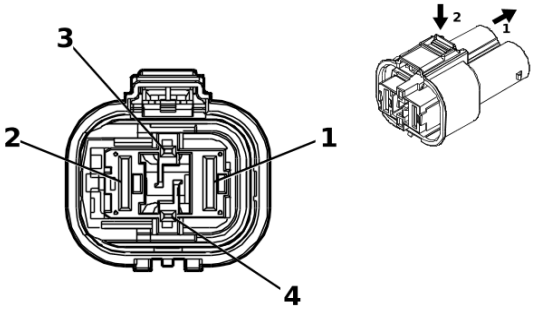

5187743

Connector Part Information

Harness Type: Engine Wiring Harness
OEM Connector: 35194180
Service Connector: Service by Harness - See Part Catalog
Description: 4-Way F 1.2, 9.5 MCON Series(GY)

Terminal Part Information

Terminal Type ID	Terminated Lead	Diagnostic Test Probe	Terminal Removal Tool
I	Not required	J-35616-16 (L-GN)	No Tool Required
II	Not required	J-35616-22 (RD)	No Tool Required

G10R Cooling Fan Motor - Right (LM2)

Pin	Size	Color	Circuit	Function	Terminal Type ID	Option
1	8	RD / BN	1742	Battery Positive Voltage	II	—
2	8	BK	4450	Ground	II	—
3	0.5	GN / VT	4621	Engine Control Module LIN Bus 1	I	—
4	—	—	—	Not Occupied	—	—

G13 Generator X1 ((L84/L87)-VYU)

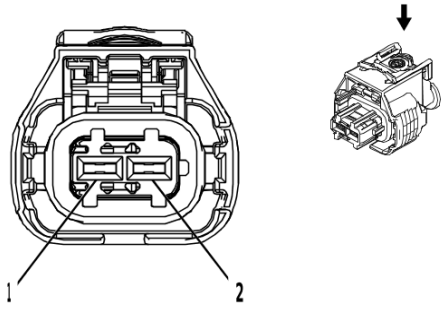

2577394

Connector Part Information

Harness Type: Engine Wiring Harness
OEM Connector: 13930085
Service Connector: 84941154
Description: 2-Way F 2.8 Series, Sealed(BK)

Terminal Part Information

Terminal Type ID	Terminated Lead	Diagnostic Test Probe	Terminal Removal Tool
I	Not required	J-35616-35 (VT)	No Tool Required

G13 Generator X1 ((L84/L87)-VYU)

Pin	Size	Color	Circuit	Function	Terminal Type ID	Option
1	0.5	BN	25	Charge Indicator Control	I	—
2	0.5	GY	23	Generator Field Duty Cycle Signal	I	—

G13 Generator X1 (L3B-VYU)

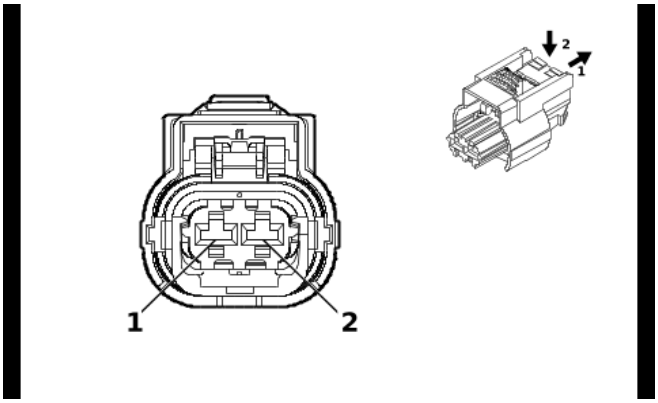

4992524

Connector Part Information

Harness Type: Engine Wiring Harness
OEM Connector: 35182447
Service Connector: 84941154
Description: 2-Way F 2.8 CTS Series, Sealed(BK)

Terminal Part Information

Terminal Type ID	Terminated Lead	Diagnostic Test Probe	Terminal Removal Tool
I	Not required	J-35616-35 (VT)	No Tool Required

G13 Generator X1 (L3B-VYU)

Pin	Size	Color	Circuit	Function	Terminal Type ID	Option
1	0.5	BN	25	Charge Indicator Control	I	—
2	0.5	GY	23	Generator Field Duty Cycle Signal	I	—

G13 Generator X1 (LM2-VYU)

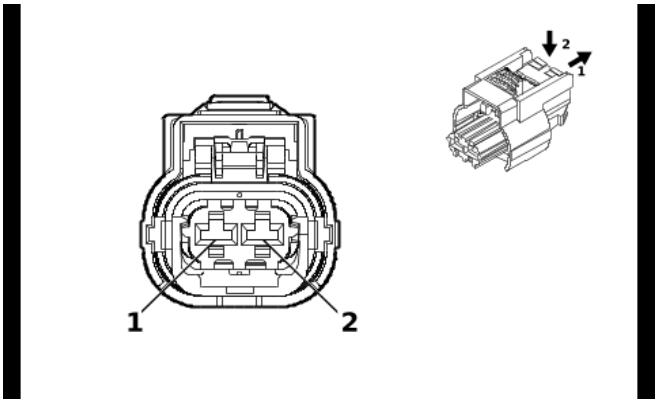

4992524

Connector Part Information

Harness Type: Engine Wiring Harness
OEM Connector: 35182447
Service Connector: 84941154
Description: 2-Way F 2.8 CTS Series, Sealed(BK)

Terminal Part Information

Terminal Type ID	Terminated Lead	Diagnostic Test Probe	Terminal Removal Tool
I	Not required	J-35616-35 (VT)	No Tool Required

G13 Generator X1 (LM2-VYU)

Pin	Size	Color	Circuit	Function	Terminal Type ID	Option
1	0.5	BN	25	Charge Indicator Control	I	—
2	0.5	GY	23	Generator Field Duty Cycle Signal	I	—

G13 Generator X1 (VYU)

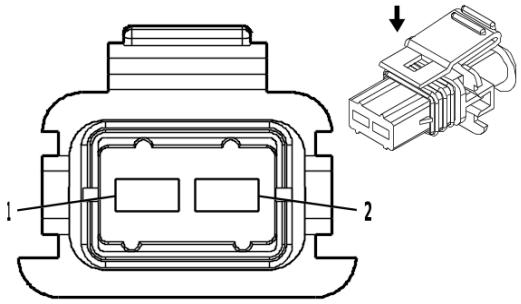

1522871

Connector Part Information

Harness Type: Accessory Wiring Harness
OEM Connector: 12186308
Service Connector: Service by Harness - See Part Catalog
Description: 2-Way F Junior Power Timer Series, Sealed(BK)

Terminal Part Information

Terminal Type ID	Terminated Lead	Diagnostic Test Probe	Terminal Removal Tool
I	Not required	J-35616-35 (VT)	No Tool Required

G13 Generator X1 (VYU)

Pin	Size	Color	Circuit	Function	Terminal Type ID	Option
1	0.5	BN	9025	Charge Indicator Control Switch Signal	I	—
2	0.5	GY	23	Generator Field Duty Cycle Signal	I	—

G13 Generator X2 (L3B)

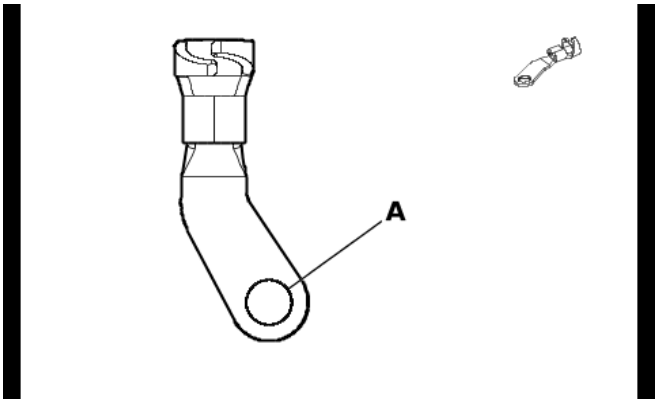

5911279

Connector Part Information

Harness Type: Starter Solenoid Cable - L3B
OEM Connector: 84238913
Service Connector: Service by Cable Assembly — See Part Catalog
Description: 1-Way F Ring Terminal

Terminal Part Information

Terminal Type ID	Terminated Lead	Diagnostic Test Probe	Terminal Removal Tool
I	Not required	No Tool Required	No Tool Required

G13 Generator X2 (L3B)

Pin	Size	Color	Circuit	Function	Terminal Type ID	Option
1	35	RD / BU	42	Battery Positive Voltage	I	—
A	—	—	—	Not Occupied	—	—

G13 Generator X2 (L84/L87)

—

Connector Part Information

Harness Type: Starter Solenoid Cable
OEM Connector: 84223343
Service Connector: Service by Cable Assembly — See Part Catalog
Description: 1-Way F Ring Terminal

Terminal Part Information

Terminal Type ID	Terminated Lead	Diagnostic Test Probe	Terminal Removal Tool
I	Not required	No Tool Required	No Tool Required

G13 Generator X2 (L84/L87)

Pin	Size	Color	Circuit	Function	Terminal Type ID	Option
1	35	RD / BU	42	Battery Positive Voltage	I	—

G13 Generator X2 (LM2)

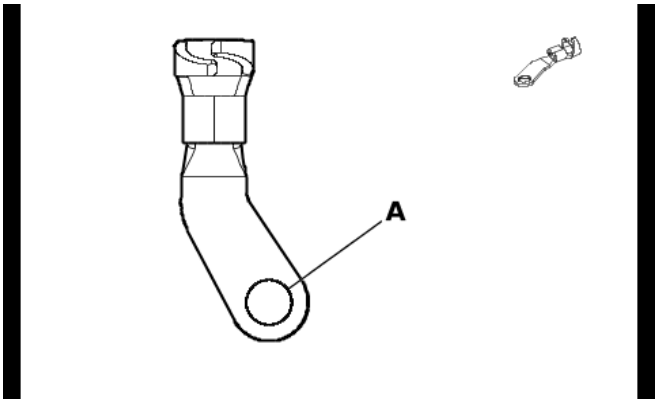

5911279

Connector Part Information

Harness Type: Generator Battery Jumper Cable
OEM Connector: 84238913
Service Connector: Service by Cable Assembly — See Part Catalog
Description: 1-Way F Ring Terminal

Terminal Part Information

Terminal Type ID	Terminated Lead	Diagnostic Test Probe	Terminal Removal Tool
I	Not required	No Tool Required	No Tool Required

G13 Generator X2 (LM2)

Pin	Size	Color	Circuit	Function	Terminal Type ID	Option
1	35	RD / BU	42	Battery Positive Voltage	I	—
A	—	—	—	Not Occupied	—	—

G18 Fuel Pump - High Pressure (L3B)

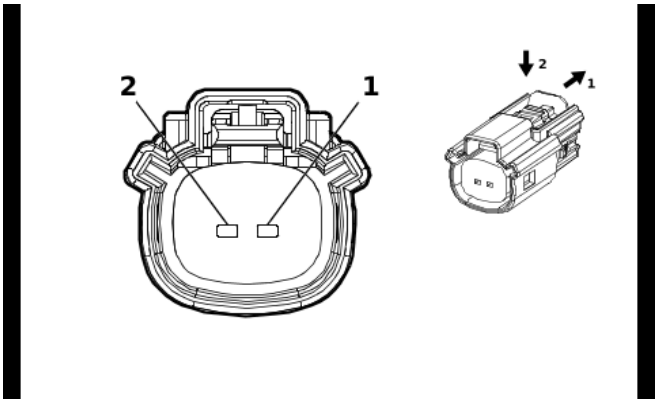

2474713

Connector Part Information

Harness Type: Engine Wiring Harness
OEM Connector: 13782480
Service Connector: 13577534
Description: 2-Way F 1.5 MX Series, Sealed(BK)

Terminal Part Information

Terminal Type ID	Terminated Lead	Diagnostic Test Probe	Terminal Removal Tool
I	Not required	J-35616-14 (GN)	No Tool Required

G18 Fuel Pump - High Pressure (L3B)

Pin	Size	Color	Circuit	Function	Terminal Type ID	Option
1	0.5	VT / BK	7300	High Pressure Fuel Pump Low Control	I	—
2	0.5	YE	7301	High Pressure Fuel Pump High Control	I	—

G18 High Pressure Fuel Pump (L84/L87)

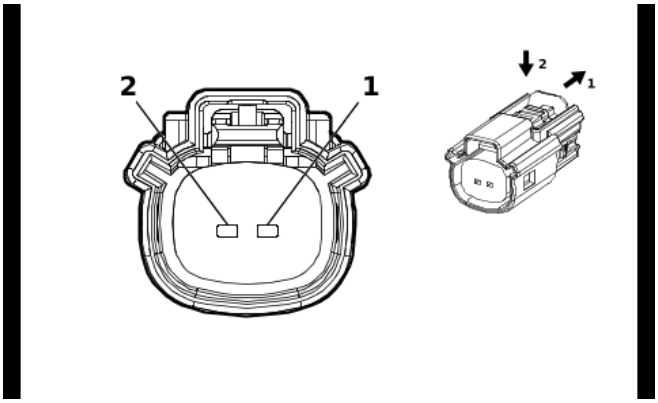

2474713

Connector Part Information

Harness Type: Fuel Injector Wiring Harness - Bank 2
OEM Connector: 13583151
Service Connector: Service by Harness - See Part Catalog
Description: 2-Way F 1.5 MX Series, Sealed(BK)

Terminal Part Information

Terminal Type ID	Terminated Lead	Diagnostic Test Probe	Terminal Removal Tool
I	Not required	No Tool Required	No Tool Required

G18 High Pressure Fuel Pump (L84/L87)

Pin	Size	Color	Circuit	Function	Terminal Type ID	Option
1	0.75	VT / BK	7300	High Pressure Fuel Pump Low Control	I	—
2	0.75	YE	7301	High Pressure Fuel Pump High Control	I	—

G24 Windshield Washer Pump

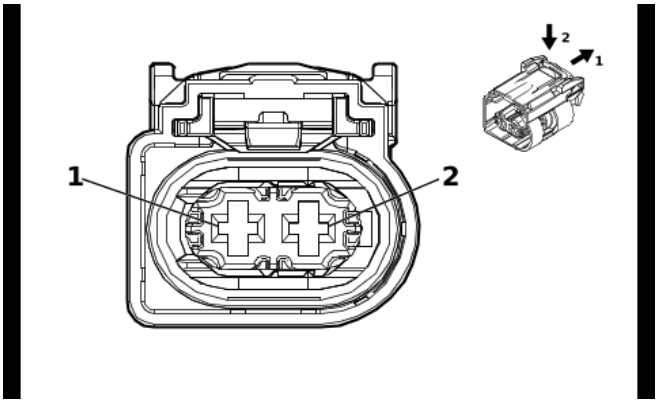

5580410

Connector Part Information

Harness Type: Body Wiring Harness
OEM Connector: 35459954
Service Connector: 85005016
Description: 2-Way F 2.8 MCP Series, Sealed(BK)

Terminal Part Information

Terminal Type ID	Terminated Lead	Diagnostic Test Probe	Terminal Removal Tool
I	Not required	J-35616-4A (PU)	No Tool Required

G24 Windshield Washer Pump

Pin	Size	Color	Circuit	Function	Terminal Type ID	Option
1	0.75	GY / VT	228	Windshield Washer Pump Control	I	—
2	0.75	BK	150	Ground	I	—

G31P Front Seat Back Lumbar Pump - Passenger (-(AKE/AVU))

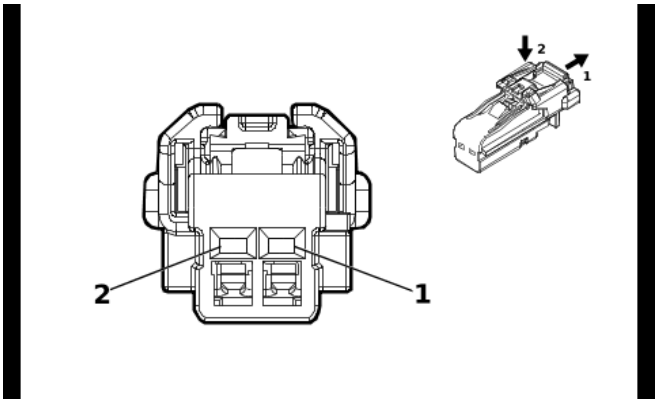

4115691

Connector Part Information

Harness Type: Front Seat Wiring Harness - Passenger
OEM Connector: 6098-8988
Service Connector: Service by Harness - See Part Catalog
Description: 2-Way F 1.2 MCON Series(BK)

Terminal Part Information

Terminal Type ID	Terminated Lead	Diagnostic Test Probe	Terminal Removal Tool
I	Not required	J-35616-16 (L-GN)	No Tool Required

G31P Front Seat Back Lumbar Pump - Passenger (-(AKE/AVU))

Pin	Size	Color	Circuit	Function	Terminal Type ID	Option
1	0.5	GY / WH	4890	Passenger Seat Lumbar/Bolster Pump Control	I	—
2	0.5	BK	1350	Ground	I	—

G31P Front Seat Back Lumbar Pump - Passenger (AKE+AVU)

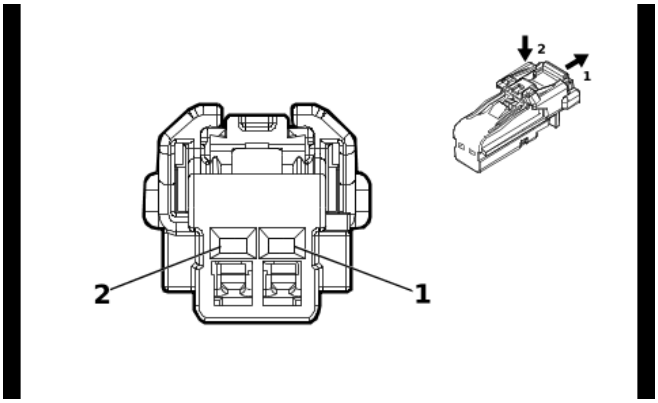

4115691

Connector Part Information

Harness Type: Front Seat Wiring Harness - Passenger
OEM Connector: 6098-8988
Service Connector: Service by Harness - See Part Catalog
Description: 2-Way F 1.2 MCON Series(BK)

Terminal Part Information

Terminal Type ID	Terminated Lead	Diagnostic Test Probe	Terminal Removal Tool
I	Not required	J-35616-16 (L-GN)	No Tool Required

G31P Front Seat Back Lumbar Pump - Passenger (AKE+AVU)

Pin	Size	Color	Circuit	Function	Terminal Type ID	Option
1	0.5	GY / WH	4890	Passenger Seat Lumbar/Bolster Pump Control	I	—
2	0.5	GY / BK	2306	Passenger Seat Bolster Pump Low Reference	I	—

G58 Evaporative Emission Canister Purge Pump (L3B)

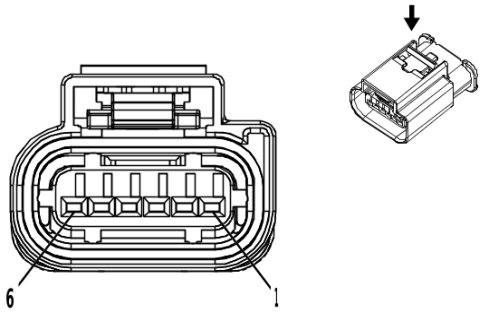

3747579

Connector Part Information

Harness Type: Engine Wiring Harness
OEM Connector: 33225994
Service Connector: 19354437
Description: 6-Way F 1.2 MCON Series, Sealed(BK)

Terminal Part Information

Terminal Type ID	Terminated Lead	Diagnostic Test Probe	Terminal Removal Tool
I	Not required	J-35616-16 (L-GN)	No Tool Required

G58 Evaporative Emission Canister Purge Pump (L3B)

Pin	Size	Color	Circuit	Function	Terminal Type ID	Option
1	0.5	BN / BU	2447	Evaporative Purge Pump Pressure Signal	I	—
2	0.5	BK / YE	548	Engine Control Sensors Low Reference 1	I	—
3	0.5	BU / RD	460	Engine Control Sensors 5 Volt Reference 1	I	—
4	0.5	GN / BN	2732	Engine Control Module LIN Bus 4	I	—
5	0.75	BK	6550	Ground	I	—
6	0.75	VT / BU	5294	Powertrain Main Relay Fused Supply Voltage 5	I	—

G59 Engine Coolant Pump (L3B)

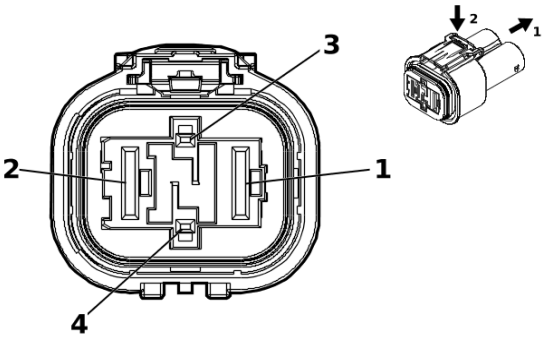

5389785

Connector Part Information

Harness Type: Engine Wiring Harness
OEM Connector: 35485244
Service Connector: Service by Harness - See Part Catalog
Description: 4-Way F 1.2, 9.5 MCON Series(BK)

Terminal Part Information

Terminal Type ID	Terminated Lead	Diagnostic Test Probe	Terminal Removal Tool
I	Not required	J-35616-16 (L-GN)	No Tool Required
II	Not required	J-35616-22 (RD)	No Tool Required

G59 Engine Coolant Pump (L3B)

Pin	Size	Color	Circuit	Function	Terminal Type ID	Option
1	10	RD / BN	1742	Battery Positive Voltage	II	—
2	10	BK	6550	Ground	II	—
3	0.5	GN / BN	2732	Engine Control Module LIN Bus 4	I	—
4	—	—	—	Not Occupied	—	—

K4 Running Board Control Module X1 (BRS)

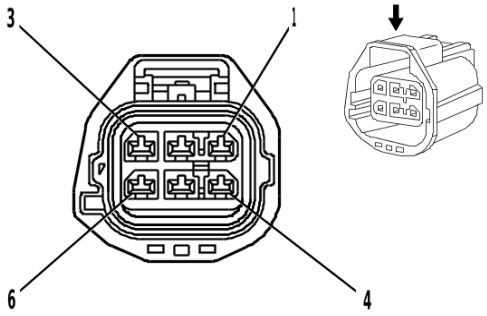

1420587

Connector Part Information

Harness Type: Chassis Wiring Harness
OEM Connector: 33334914
Service Connector: 19368306
Description: 6-Way F 2.8 Series, Sealed(GY)

Terminal Part Information

Terminal Type ID	Terminated Lead	Diagnostic Test Probe	Terminal Removal Tool
I	Not required	J-35616-35 (VT)	No Tool Required

K4 Running Board Control Module X1 (BRS)

Pin	Size	Color	Circuit	Function	Terminal Type ID	Option
1	2.5	RD / WH	1040	Battery Positive Voltage	I	—
2	2	GY	7472	Left Running Board Step Motor Control Retract	I	—
3	2	BU	7470	Right Running Board Step Motor Control Extend	I	—
4	2.5	BK	1650	Ground	I	—
5	2	WH / BN	7471	Left Running Board Step Motor Control Extend	I	—
6	2	GN	7469	Right Left Running Board Step Motor Control Retract	I	—

K4 Running Board Control Module X2 (BRS)

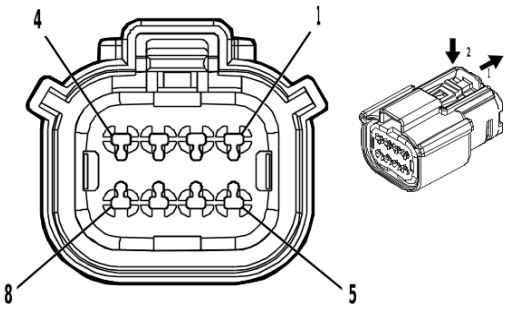

4846407

Connector Part Information

Harness Type: Chassis Wiring Harness
OEM Connector: 35105969
Service Connector: 84928314
Description: 8-Way F 1.5 MX Series, Sealed(BK)

Terminal Part Information

Terminal Type ID	Terminated Lead	Diagnostic Test Probe	Terminal Removal Tool
I	Not required	J-35616-2A (GY)	No Tool Required

K4 Running Board Control Module X2 (BRS)

Pin	Size	Color	Circuit	Function	Terminal Type ID	Option
1	0.5	WH	4986	AUTOSAR CAN Bus [-] 1 Serial Data	I	—
2	0.5	WH	4986	AUTOSAR CAN Bus [-] 1 Serial Data	I	—
3	0.5	BU	4987	AUTOSAR CAN Bus [+] 1 Serial Data	I	—
4	—	—	—	Not Occupied	—	—
5	0.5	BU	4987	AUTOSAR CAN Bus [+] 1 Serial Data	I	—
6	0.5	WH	4986	AUTOSAR CAN Bus [-] 1 Serial Data	I	—
7	0.5	BU	4987	AUTOSAR CAN Bus [+] 1 Serial Data	I	—
8	—	—	—	Not Occupied	—	—

K4 Running Board Control Module X3 (BRS)

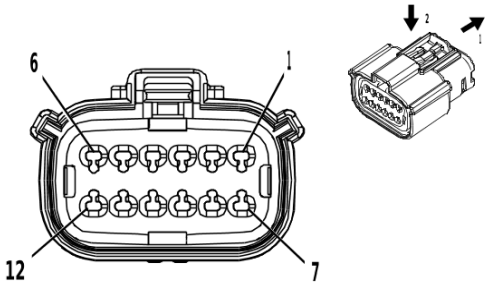

2871860

Connector Part Information

Harness Type: Chassis Wiring Harness
OEM Connector: 35554985
Service Connector: 19352907
Description: 12-Way F 1.5 MX Series, Sealed(BK)

Terminal Part Information

Terminal Type ID	Terminated Lead	Diagnostic Test Probe	Terminal Removal Tool
I	19300432	J-35616-14 (GN)	J-38125-557

K4 Running Board Control Module X3 (BRS)

Pin	Size	Color	Circuit	Function	Terminal Type ID	Option
1	0.5	GN / RD	7464	Right Running Board Step Motor Hall Sensor 5V Reference	I	—
2	0.5	VT	7465	Right Running Board Step Motor Hall Sensor Signal	I	—
3	0.5	YE / BK	7463	Right Running Board Step Motor Hall Sensor Low Reference	I	—
4 - 6	—	—	—	Not Occupied	—	—
7	0.5	VT / RD	7468	Left Running Board Step Motor Hall Sensor 5V Reference	I	—
8	0.5	YE	7467	Left Running Board Step Motor Hall Sensor Signal	I	—
9	0.5	YE / BN	7466	Left Running Board Step Motor Hall Sensor Low Reference	I	—
10	0.5	BU / GN	4746	Running Board Step Left Kick Switch Signal	I	—
11	0.5	WH	4747	Running Board Step Right Kick Switch Signal	I	—
12	—	—	—	Not Occupied	—	—

K9 Body Control Module X1

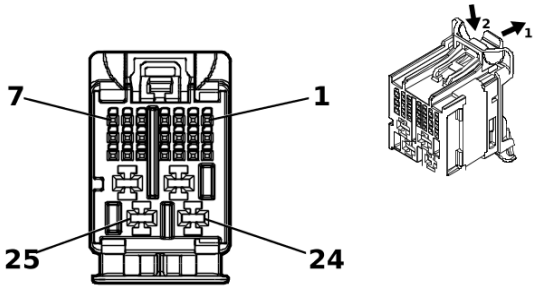

5203995

Connector Part Information

Harness Type: Instrument Panel Wiring Harness
OEM Connector: 35392285
Service Connector: 13534967
Description: 25-Way F 0.5 MQS, 2.8 MCP Series(BK with GY Inner Connector)

Terminal Part Information

Terminal Type ID	Terminated Lead	Diagnostic Test Probe	Terminal Removal Tool
I	13575435	J-35616-4A (PU)	J-38125-557
II	19370262	EL-35616-58 (BK)	EL-38125-58

K9 Body Control Module X1

Pin	Size	Color	Circuit	Function	Terminal Type ID	Option
1	—	—	—	Not Occupied	—	—
2	0.35	BU / GN	4248	Cargo Lamp Indicator Control	II	—
3 - 4	—	—	—	Not Occupied	—	—
5	0.35	BU / GY	754	Blower Motor Speed Control	II	—
6	0.35	WH / YE	4634	HVAC Remote Enable Signal	II	—
7	0.35	WH / GY	7297	Minor Endgate High Relay Control	II	—
8 - 10	—	—	—	Not Occupied	—	—
11	0.35	GY / GN	4636	HVAC System Enable Signal	II	—
12	0.35	GY	728	Security Indicator Control	II	—
13 - 14	—	—	—	Not Occupied	—	—
15	0.35	GY	590	Driver Solar Sensor Signal	II	—
16	0.35	GY	6137	A/C Evaporator Temperature Sensor Signal	II	—
17	0.35	WH / BU	278	Ambient Light Sensor Signal	II	—
18	0.35	BU / WH	734	Inside Air Temperature Sensor Signal	II	—
19	0.35	GY	158	Cargo Lamp Switch Signal	II	—
20	0.35	GN / VT	2852	Body Control Module LIN Bus 6	II	—
21 - 22	—	—	—	Not Occupied	—	—
23	1	GN / YE	6840	Auxiliary Device 2 Switched Voltage	I	—
24	—	—	—	Not Occupied	—	—
25	1	RD / GY	2140	Battery Positive Voltage	I	—

K9 Body Control Module X2

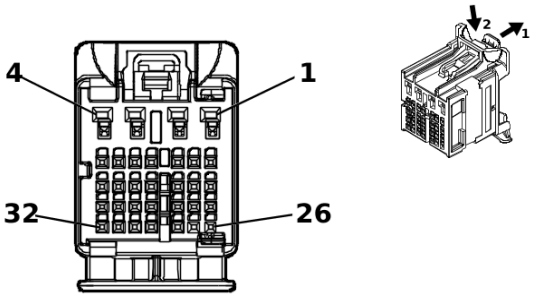

5204222

Connector Part Information

Harness Type: Instrument Panel Wiring Harness
OEM Connector: 35392289
Service Connector: 13534980
Description: 32-Way F 0.5 NANO, 1.2 MCON, stAK50h Series(PK with GY Inner Connector)

Terminal Part Information

Terminal Type ID	Terminated Lead	Diagnostic Test Probe	Terminal Removal Tool
I	19370262	EL-35616-58 (BK)	EL-38125-58

K9 Body Control Module X2

Pin	Size	Color	Circuit	Function	Terminal Type ID	Option
1 - 4	—	—	—	Not Occupied	—	—
5	0.35	BU / GN	5723	Ignition Mode Switch Mode Voltage	I	—
6 - 8	—	—	—	Not Occupied	—	—
9	0.35 0.35	VT / YE GN / BU	5526 3738	Tap Up/Tap Down Switch Signal Tap Up/Tap Down Switch Signal 2	I I	(MQC/ MHS) + N38 (MQE/ M5X) / (MQB/ MHT)
10	0.35	WH / BN	2203	Enhanced Driver Mode 2 Switch Signal	I	—
11	0.35	GY	1198	Endgate Release Switch Analog Signal Interior	I	—
12	0.35	YE / BU	1714	Windshield Wiper Switch Low Signal	I	—
13	0.35	GY / GN	5737	Distance Sensing Cruise Control Gap Up/Down Switch Signal	I	—
14	0.35	BN / GN	1884	Cruise Control Set/Coast/Resume/Accelerate Switch Signal	I	—
15	—	—	—	Not Occupied	—	—
16	0.35	BN / BK	5720	Ignition Mode Switch Accessory LED Signal	I	—
17 - 18	—	—	—	Not Occupied	—	—
19	0.35	WH / VT	103	Headlamp Switch On Signal	I	—
20	0.35	GN / GY	13	Headlamp Switch Park Lamp Signal	I	—
21	0.35	GN / BN	306	Headlamp Switch Off Signal	I	—
22	—	—	—	Not Occupied	—	—
23	0.35	VT / BU	2916	Right Turn Signal Switch Signal	I	—
24	—	—	—	Not Occupied	—	—

K9 Body Control Module X2 (cont'd)

Pin	Size	Color	Circuit	Function	Terminal Type ID	Option
25	0.35	BK / GY	6009	Windshield Wiper Switch Low Reference	I	—
26	0.35	WH / BK	94	Windshield Washer Switch Signal	I	—
27	0.35	YE / BN	307	Headlamp Switch Flash Signal	I	—
28	0.35	GN / WH	3287	Horn Switch Signal	I	—
29	0.35	WH / GN	2915	Left Turn Signal Switch Signal	I	—
30	0.35	BK / YE	407	Sensor Low Reference	I	—
31	0.35	GN / WH	111	Hazard Warning Switch Signal	I	—
32	0.35	WH	524	High Beam Select Switch High Beam Signal	I	—

K9 Body Control Module X3

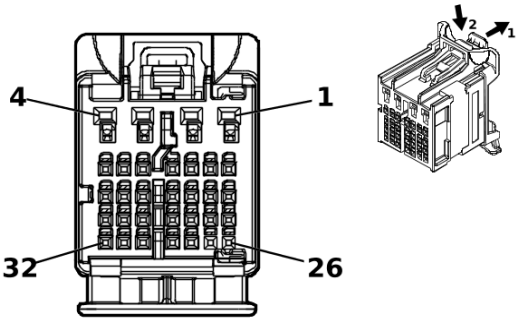

5203925

Connector Part Information

Harness Type: Instrument Panel Wiring Harness
OEM Connector: 35392288
Service Connector: 13534977
Description: 32-Way F 0.5 NANO, 1.2 MCON, stAK50h Series(BU with GY Inner Connector)

Terminal Part Information

Terminal Type ID	Terminated Lead	Diagnostic Test Probe	Terminal Removal Tool
I	19370262	EL-35616-58 (BK)	EL-38125-58
II	84729890	J-35616-12 (BU)	J-38125-553

K9 Body Control Module X3

Pin	Size	Color	Circuit	Function	Terminal Type ID	Option
1 - 2	—	—	—	Not Occupied	—	—
3	0.35	GN / VT	4786	Dome/Reading Lamp Enable Signal	II	—
4 - 6	—	—	—	Not Occupied	—	—
7	0.35	WH / BN	7555	Headlamp Switch Signal	I	—
8 - 9	—	—	—	Not Occupied	—	—
10	0.35	GN / BK	2858	Body Control Module LIN Bus 12	I	—
11	—	—	—	Not Occupied	—	—
12	0.35	YE / WH	816	Brake Transmission Shift Interlock Solenoid Actuator Control	I	—
13	0.35	WH	3152	Lane Departure Warning Indicator Control	I	—
14	0.35	GN / BN	5852	Rear Parking Assist Disable LED Signal	I	—
15	0.35	GN	1110	Stop/Start Indicator Control	I	—
16	0.35	GN / BU	761	Blower Speed Feedback Signal	I	—
17	0.35	VT / BK	7553	Park Lock Solenoid Actuator Control	I	—
18	0.35	YE	7556	Headlamp Switch Reference	I	—
19	0.35	BU / BK	5719	Ignition Mode Switch Start LED Signal	I	—
20	—	—	—	Not Occupied	—	—
21	0.35	BN	7291	Major Endgate Release Switch Signal Interior	I	—
22	—	—	—	Not Occupied	—	—
23	0.35	BU	1111	Stop/Start Switch Signal	I	—
24	0.35	WH / BU	3691	Trailer Brake Apply Signal	I	—

K9 Body Control Module X3 (cont'd)

Pin	Size	Color	Circuit	Function	Terminal Type ID	Option
25	0.35	BU / GY	4990	Driver Mode 1 Switch Signal	I	—
26	0.35	GY / BN	3904	Auto High Beam Assist Switch Signal	I	—
27	0.35	GY / WH	3153	Lane Departure Warning Disable Switch Signal	I	—
28 - 29	—	—	—	Not Occupied	—	—
30	0.35	BU / YE	6844	ABS/Traction Control Hill Descent Control Switch Signal	I	—
31	0.35	GY / GN	2555	Rear Parking Assist Disable Signal	I	—
32	—	—	—	Not Occupied	—	—

K9 Body Control Module X4

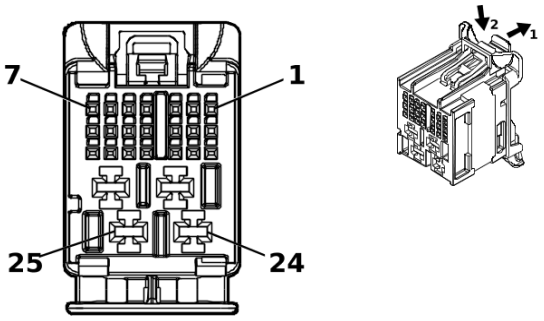

5203893

Connector Part Information

Harness Type: Instrument Panel Wiring Harness
OEM Connector: 35392284
Service Connector: 13534970
Description: 25-Way F 0.5 MQS, 2.8 MCP Series(GY)

Terminal Part Information

Terminal Type ID	Terminated Lead	Diagnostic Test Probe	Terminal Removal Tool
I	13575435	J-35616-4A (PU)	J-38125-557
II	19370262	EL-35616-58 (BK)	EL-38125-58

K9 Body Control Module X4

Pin	Size	Color	Circuit	Function	Terminal Type ID	Option
1	0.35	BN / BK	3552	Interior Passive Entry Antenna 1 High Signal	II	—
2	0.35	WH	3553	Interior Passive Entry Antenna 1 Low Signal	II	—
3	0.35	BK / VT	1449	Steering Wheel Resistor Ladder Low Reference	II	—
4	0.35	WH / GN	7728	Major Endgate High Relay Control	II	—
5	0.35	GN / VT	5199	Run/Crank Relay Coil Control	II	—
6	—	—	—	Not Occupied	—	—
7	0.35	BN / BK	4996	Immobilizer Antenna Signal [+]	II	—
8 - 9	—	—	—	Not Occupied	—	—
10	0.35	GY / GN	4083	Retained Accessory Power Relay 2 Coil Control	II	—
11	0.35	BU / YE	7176	All Windows Open Switch Signal	II	—
12	0.35	BU / VT	7729	Major Endgate Low Relay Control	II	—
13	—	—	—	Not Occupied	—	—
14	0.35	WH / GY	4997	Immobilizer Antenna Low Signal	II	—
15	0.35	BU / VT	1788	Traction Control Switch Signal 1	II	—
16	0.35	GN / WH	4115	Body Control Module LIN Bus 5	II	—
17 - 18	—	—	—	Not Occupied	—	—
19	0.35	BU / YE	4979	AUTOSAR CAN Bus [+] 2 Serial Data	II	—
20	0.35	WH	4978	AUTOSAR CAN Bus [-] 2 Serial Data	II	—
21	0.35	WH	6816	Indicator Dimming Control	II	—
22	0.5	RD / WH	2740	Battery Positive Voltage	I	—
23	2	RD / BU	2540	Battery Positive Voltage	I	—

K9 Body Control Module X4 (cont'd)

Pin	Size	Color	Circuit	Function	Terminal Type ID	Option
24	1	BK	1050	Ground	I	—
25	1	BK	1050	Ground	I	—

K9 Body Control Module X5

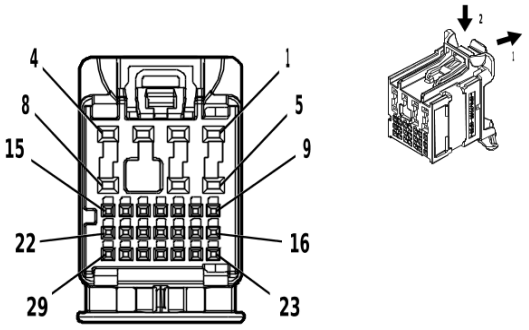

4584346

Connector Part Information

Harness Type: Body Wiring Harness
OEM Connector: 35364128
Service Connector: 13534972
Description: 29-Way F 0.5 NANO, 1.2 MCON Series(GN)

Terminal Part Information

Terminal Type ID	Terminated Lead	Diagnostic Test Probe	Terminal Removal Tool
I	19370262	EL-35616-58 (BK)	EL-38125-58
II	84729890	J-35616-12 (BU)	J-38125-553

K9 Body Control Module X5

Pin	Size	Color	Circuit	Function	Terminal Type ID	Option
1	—	—	—	Not Occupied	—	—
2	0.5	BU / BN	7573	A/C Compressor Solenoid Valve Control	II	—
3	0.5	BU / YE	7574	A/C Compressor Solenoid Valve Control	II	—
4	0.75	WH	2679	Lock Actuators Unlock Control 1	II	—
5	—	—	—	Not Occupied	—	—
6	0.5	YE	6817	LED Backlight Dimming Control 1	II	—
7	—	—	—	Not Occupied	—	—
8	0.75	GY	2681	Left Front Door Lock Actuator Lock Control	II	—
9 - 10	—	—	—	Not Occupied	—	—
11	0.35	BN / WH	28	Horn Relay Control	I	—
12	0.35	WH	4978	AUTOSAR CAN Bus [-] 2 Serial Data	I	—
13	0.35	BU / YE	4979	AUTOSAR CAN Bus [+] 2 Serial Data	I	—
14 - 15	—	—	—	Not Occupied	—	—
16	0.35	VT	4301	Passive Entry Left Front Antenna Signal High	I	—
17	0.35	GN / YE	2855	Body Control Module LIN Bus 9	I	—
18	0.35	VT / GY	126	Left Front Door Open Switch Signal	I	—
19	0.35	GN / YE	6134	Body Control Module LIN Bus 3	I	—
20	—	—	—	Not Occupied	—	—
21	0.35	WH / BU	6311	Cruise/ETC/TCC Brake Signal	I	—
22	0.35	BN / VT	193	Rear Defogger Relay Control	I	—
23	0.35	VT / GY	4302	Passive Entry Left Front Antenna Signal Low	I	—

K9 Body Control Module X5 (cont'd)

Pin	Size	Color	Circuit	Function	Terminal Type ID	Option
24	0.35	WH	5359	Brake Apply Sensor Control	I	—
25	0.35	BU / YE	5361	Brake Apply Sensor Signal	I	—
26	0.35	BK / BN	5360	Brake Apply Sensor Low Reference	I	—
27	0.35	YE	1144	Endgate Release Switch Discrete Signal Exterior	I	—
28 - 29	—	—	—	Not Occupied	—	—

K9 Body Control Module X6

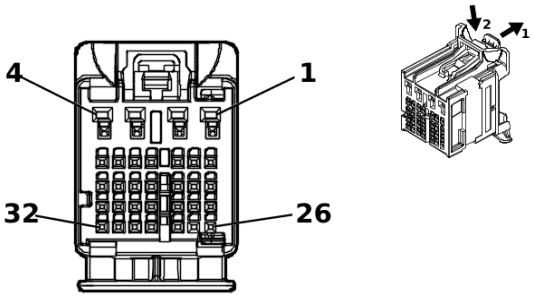

5202291

Connector Part Information

Harness Type: Body Wiring Harness
OEM Connector: 35392287
Service Connector: 13534981
Description: 32-Way F 0.5 MQS, 1.2 OCS Series(BN with GY Inner Connector)

Terminal Part Information

Terminal Type ID	Terminated Lead	Diagnostic Test Probe	Terminal Removal Tool
I	19370262	EL-35616-58 (BK)	EL-38125-58
II	84729890	J-35616-12 (BU)	J-38125-553

K9 Body Control Module X6

Pin	Size	Color	Circuit	Function	Terminal Type ID	Option
1	—	—	—	Not Occupied	—	—
2	0.75	VT / WH	1094	Right Rear Door Lock Actuator Lock Control	II	—
3	0.75	GY / BK	2680	Lock Actuators Unlock Control 2	II	—
4 - 6	—	—	—	Not Occupied	—	—
7	0.35	BN / GN	3568	Rear Closure Passive Entry Antenna High Signal	I	—
8	0.35	GN / GY	3569	Rear Closure Passive Entry Antenna Low Signal	I	—
9 - 10	—	—	—	Not Occupied	—	—
11	0.35	GN / BU	6133	Body Control Module LIN Bus 2	I	—
12	0.35	GY	7292	Major Endgate Release Switch Signal Exterior	I	—
13	—	—	—	Not Occupied	—	—
14	0.35	VT	801	Retained Accessory Power Control	I	—
15 - 18	—	—	—	Not Occupied	—	—
19	0.35	YE	7294	Minor Endgate Release Switch Discrete Signal Exterior	I	—
20	—	—	—	Not Occupied	—	—
21	0.35	YE / BU	7295	Left Minor Endgate Ajar Signal	I	—
22	0.35	BN / GN	4064	Hood Status B Signal	I	—
23 - 27	—	—	—	Not Occupied	—	—
28	0.35	BU	2675	Left Front Exterior Door Handle Switch Unlock Signal	I	—
29 - 32	—	—	—	Not Occupied	—	—

K9 Body Control Module X7

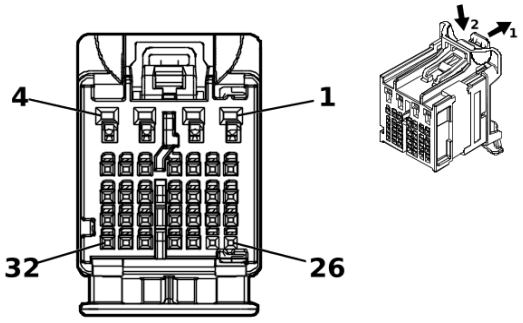

5202294

Connector Part Information

Harness Type: Body Wiring Harness
OEM Connector: 35397992
Service Connector: 13534979
Description: 32-Way F 0.5 MQS, 1.2 OCS Series(PU with GY Inner Connector)

Terminal Part Information

Terminal Type ID	Terminated Lead	Diagnostic Test Probe	Terminal Removal Tool
I	19370262	EL-35616-58 (BK)	EL-38125-58

K9 Body Control Module X7

Pin	Size	Color	Circuit	Function	Terminal Type ID	Option
1 - 8	—	—	—	Not Occupied	—	—
9	0.35	YE	900	Body Control Module Accessory Output	I	—
10 - 18	—	—	—	Not Occupied	—	—
19	0.35	GN / VT	2857	Body Control Module LIN Bus 11	I	—
20	0.35	YE	901	Body Control Module Accessory Output	I	—
21	—	—	—	Not Occupied	—	—
22	0.35	YE	902	Body Control Module Accessory Output	I	—
23 - 32	—	—	—	Not Occupied	—	—

K9 Body Control Module X8

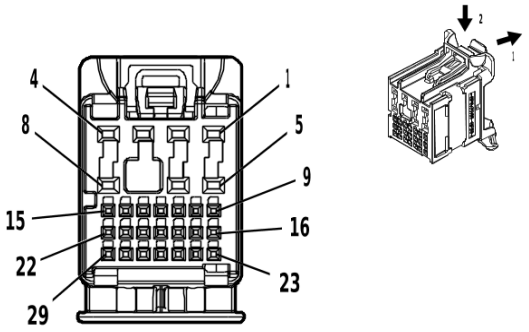

4578560

Connector Part Information

Harness Type: Body Wiring Harness
OEM Connector: 35364137
Service Connector: 13534971
Description: 29-Way F 0.5 NANO, 1.2 MCON, stAK50h Series(GY)

Terminal Part Information

Terminal Type ID	Terminated Lead	Diagnostic Test Probe	Terminal Removal Tool
I	19370262	EL-35616-58 (BK)	EL-38125-58
II	84729890	J-35616-12 (BU)	J-38125-553

K9 Body Control Module X8

Pin	Size	Color	Circuit	Function	Terminal Type ID	Option
1 - 2	—	—	—	Not Occupied	—	—
3	0.75	BU / YE	1091	Left Rear Door Lock Actuator Lock Control	II	—
4	0.75	YE / GN	2682	Right Front Door Lock Actuator Lock Control	II	—
5 - 8	—	—	—	Not Occupied	—	—
9	0.35	GN / BK	4304	Passive Entry Right Front Door Antenna Signal Low	I	—
10	0.35	GN / YE	4303	Passive Entry Right Front Door Antenna Signal High	I	—
11 - 16	—	—	—	Not Occupied	—	—
17	0.35	GN / YE	2862	Body Control Module LIN Bus 16	I	—
18	0.35	GN / WH	2854	Body Control Module LIN Bus 8	I	—
19 - 27	—	—	—	Not Occupied	—	—
28	0.35	GY / VT	2676	Right Front Door Exterior Switch Unlock Signal	I	—
29	0.35	GN / GY	6135	Body Control Module LIN Bus 4	I	—

K19 Suspension Control Module (Z45)

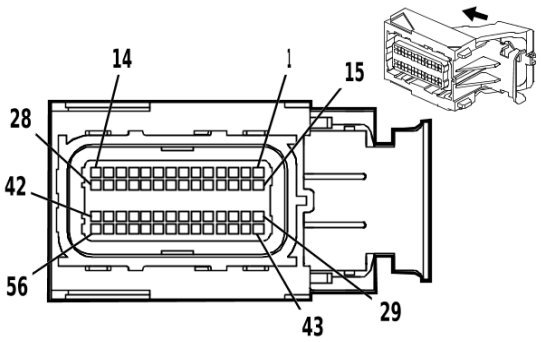

1590948

Connector Part Information

Harness Type: Chassis Wiring Harness
OEM Connector: 35554991
Service Connector: 88988373
Description: 56-Way F MX123 Series, Sealed(BK with BU Terminal Position Assurance)

Terminal Part Information

Terminal Type ID	Terminated Lead	Diagnostic Test Probe	Terminal Removal Tool
I	19351723	J-35616-64B (L-BU)	J-38125-213
II	19354746	J-35616-64B (L-BU)	J-38125-215A

K19 Suspension Control Module (Z45)

Pin	Size	Color	Circuit	Function	Terminal Type ID	Option
1	0.75	BU / GY	1114	Left Rear Shock Absorber Actuator Control	I	—
2	0.5	BN / WH	1207	Left Front Suspension Position Sensor Signal	II	—
3	—	—	—	Not Occupied	—	—
4	0.5	BK / BU	1206	Left Front Suspension Position Sensor Low Reference	II	—
5	0.5	GN / WH	1210	Left Rear Suspension Position Sensor Signal	II	—
6 - 10	—	—	—	Not Occupied	—	—
11	0.5	YE / WH	1213	Right Front Suspension Position Sensor Signal	II	—
12 - 13	—	—	—	Not Occupied	—	—
14	0.75	BN / GN	1118	Right Rear Shock Absorber Actuator Control	I	—
15	0.75	GN / VT	1115	Left Rear Shock Absorber Actuator Control	I	—
16	0.5	BU / RD	1205	Left Front Suspension Position Sensor Voltage Reference	II	—
17	0.75	BK / WH	1951	Signal Ground	II	—
18 - 19	—	—	—	Not Occupied	—	—
20	0.5	WH	4986	AUTOSAR CAN Bus [-] 1 Serial Data	II	—
21 - 22	—	—	—	Not Occupied	—	—
23	0.5	BU	4987	AUTOSAR CAN Bus [+] 1 Serial Data	II	—
24 - 25	—	—	—	Not Occupied	—	—
26	0.75	RD / GN	2440	Battery Positive Voltage	II	—
27	—	—	—	Not Occupied	—	—
28	0.75	GN / GY	1119	Right Rear Shock Absorber Actuator Control	I	—

K19 Suspension Control Module (Z45) (cont'd)

Pin	Size	Color	Circuit	Function	Terminal Type ID	Option
29	0.75	BN / WH	1107	Left Front Shock Absorber Actuator Control	I	—
30	0.75	GY / BU	1113	Left Front Shock Absorber Actuator Control	I	—
31	—	—	—	Not Occupied	—	—
32	0.5	BK / GN	1209	Left Rear Suspension Position Sensor Low Reference	II	—
33	0.5	YE / RD	1208	Left Rear Suspension Position Sensor Voltage Reference	II	—
34	0.5	WH	4986	AUTOSAR CAN Bus [-] 1 Serial Data	II	—
35	0.5	WH	4986	AUTOSAR CAN Bus [-] 1 Serial Data	II	—
36	0.5	BU	4987	AUTOSAR CAN Bus [+] 1 Serial Data	II	—
37	0.5	BU	4987	AUTOSAR CAN Bus [+] 1 Serial Data	II	—
38	0.5	BK / GY	1212	Right Front Suspension Position Sensor Low Reference	II	—
39	0.5	BN / RD	1211	Right Front Suspension Position Sensor Voltage Reference	II	—
40	—	—	—	Not Occupied	—	—
41	0.75	GY / WH	1117	Right Front Shock Absorber Actuator Control	I	—
42	0.75	BN / BU	1116	Right Front Shock Absorber Actuator Control	I	—
43 - 56	—	—	—	Not Occupied	—	—

K20 Engine Control Module X1 (L3B)

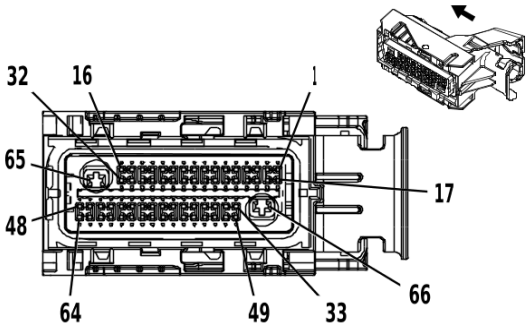

4504420

Connector Part Information

Harness Type: Engine Wiring Harness
OEM Connector: 33303655
Service Connector: 19371186
Description: 66-Way F 0.64, 2.8 Series, Sealed(BK with BU Terminal Position Assurance)

Terminal Part Information

Terminal Type ID	Terminated Lead	Diagnostic Test Probe	Terminal Removal Tool
I	13587518	J-35616-35 (VT)	J-38125-11A
II	19351723	J-35616-64B (L-BU)	J-38125-213

K20 Engine Control Module X1 (L3B)

Pin	Size	Color	Circuit	Function	Terminal Type ID	Option
1	0.5	YE	5991	Powertrain Relay Coil Control	II	—
2	0.5	YE / BK	625	Starter Enable Relay Control	II	—
3	0.5	YE / VT	4325	Starter Pinion Solenoid Actuator Relay Control	II	—
4 - 5	—	—	—	Not Occupied	—	—
6	0.5	VT / GY	3615	Step Cam A Control	II	—
7	0.5	GN / BK	3616	Step Cam B Control	II	—
8	0.5	GN	3585	Camshaft Position Motor Control B	II	—
9	0.5	BU	3584	Camshaft Position Motor Control A	II	—
10	0.5	YE / BU	3587	Camshaft Position Motor Control D	II	—
11	0.5	GY	3586	Camshaft Position Motor Control C	II	—
12	0.5	BU / WH	3589	Camshaft Position Motor Position Sensor 1 Signal	II	—
13	0.5	GN / WH	3592	Camshaft Position Motor Position Sensor 2 Signal	II	—
14	0.5	BK / GN	3593	Camshaft Position Sensor 2 Ground	II	—
15	0.5	WH / BU	6311	Cruise/ETC/TCC Brake Signal	II	—
16	0.75	VT / BU	5291	Powertrain Main Relay Fused Supply Voltage 2	II	—
17	0.5	GN / GY	465	Fuel Pump Primary Relay Control	II	—
18	0.5	WH / GY	459	A/C Compressor Clutch Relay Control	II	—
19 - 21	—	—	—	Not Occupied	—	—
22	0.5	GN / YE	1402	Camshaft Intake Stepper Cylinder 4 Front Solenoid Control	II	—

K20 Engine Control Module X1 (L3B) (cont'd)

Pin	Size	Color	Circuit	Function	Terminal Type ID	Option
23	0.5	GY / YE	1502	Camshaft Intake Stepper Cylinder 4 Rear Solenoid Control	II	—
24	0.5	YE / VT	6265	Camshaft Exhaust Stepper Cylinder 2 Rear Solenoid Control	II	—
25	0.5	VT / BK	6264	Camshaft Exhaust Stepper Cylinder 2 Front Solenoid Control	II	—
26	0.5	GY / BN	6262	Camshaft Exhaust Stepper Cylinder 3 Rear Solenoid Control	II	—
27	0.5	GN / BN	6261	Camshaft Exhaust Stepper Cylinder 3 Front Solenoid Control	II	—
28	0.5	YE / BN	1702	Camshaft Intake Stepper Cylinder 4 Position Sensor Signal	II	—
29	0.5	GN / BK	6266	Camshaft Exhaust Stepper Cylinder 2 Position Signal	II	—
30	0.5	YE	6263	Camshaft Exhaust Stepper Cylinder 3 Position Signal	II	—
31	—	—	—	Not Occupied	—	—
32	0.5	VT / GN	439	Run/Crank Ignition 1 Voltage	II	—
33	0.5	BK / BU	1271	Accelerator Pedal Position Low Reference 1	II	—
34	0.5	YE / WH	3746	Camshaft Exhaust Lobe Axial Position Signal 1	II	—
35	0.5	BK / VT	1272	Accelerator Pedal Position Low Reference 2	II	—
36	0.5	YE / GN	3747	Camshaft Exhaust Lobe Axial Position Signal 2	II	—
37	—	—	—	Not Occupied	—	—
38	0.5	YE	4063	Hood Status A Signal	II	—
39	0.5	YE / WH	1161	Accelerator Pedal Position Signal 1	II	—
40 - 41	—	—	—	Not Occupied	—	—
42	0.5	GN / BN	2732	Engine Control Module LIN Bus 4	II	—
43 - 44	—	—	—	Not Occupied	—	—
45	0.5	BU / GY	4054	Private Serial Data Powertrain CAN Bus [-] Serial Data	II	—
46	0.5	WH	4055	Private Serial Data Powertrain CAN Bus [+] Serial Data	II	—
47	0.5	GN / WH	492	Mass Air Flow Sensor Signal	II	—
48	0.5	RD / BN	440	Battery Positive Voltage	II	—
49	0.5	WH / RD	1164	Accelerator Pedal Position 5V Reference 1	II	—
50	0.5	VT / WH	3744	Camshaft Intake Lobe Axial Position Signal 1	II	—
51	0.5	BN / RD	1274	Accelerator Pedal Position 5V Reference 2	II	—
52	0.5	VT / GN	3745	Camshaft Intake Lobe Axial Position Signal 2	II	—
53	0.5	BU / GY	636	Ambient Air Temperature Sensor Signal	II	—
54	—	—	—	Not Occupied	—	—
55	0.5	GN	380	A/C Refrigerant Pressure Sensor Signal	II	—
56	0.5	WH / GN	5380	Brake Position Sensor Signal	II	—
57	0.5	GN / WH	1162	Accelerator Pedal Position Signal 2	II	—
58	—	—	—	Not Occupied	—	—
59	0.5	WH	4978	AUTOSAR CAN Bus [-] 2 Serial Data	II	—
60	0.5	BU / YE	4979	AUTOSAR CAN Bus [+] 2 Serial Data	II	—
61 - 62	—	—	—	Not Occupied	—	—
63	0.5	WH	4976	AUTOSAR CAN Bus [-] 3 Serial Data	II	—

K20 Engine Control Module X1 (L3B) (cont'd)

Pin	Size	Color	Circuit	Function	Terminal Type ID	Option
64	0.5	BU / BK	4977	AUTOSAR CAN Bus [+] 3 Serial Data	II	—
65	2	BK / WH	251	Signal Ground	I	—
66	2	VT / BU	5290	Powertrain Main Relay Fused Supply Voltage 1	I	—

K20 Engine Control Module X2 (L3B)

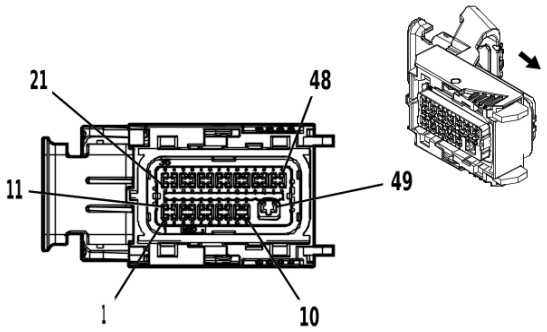

4596458

Connector Part Information

Harness Type: Engine Wiring Harness
OEM Connector: 33303656
Service Connector: 19355678
Description: 49-Way F 0.64, 2.8 Series, Sealed(BK with BK Terminal Position Assurance)

Terminal Part Information

Terminal Type ID	Terminated Lead	Diagnostic Test Probe	Terminal Removal Tool
I	13587518	J-35616-35 (VT)	J-38125-11A
II	19351723	J-35616-64B (L-BU)	J-38125-213

K20 Engine Control Module X2 (L3B)

Pin	Size	Color	Circuit	Function	Terminal Type ID	Option
1	0.5	VT / GN	4320	Powertrain Sensor Bus Enable	II	—
2	0.5	BU / RD	460	Engine Control Sensors 5 Volt Reference 1	II	—
3 - 4	—	—	—	Not Occupied	—	—
5	0.5	BN / BU	2447	Evaporative Purge Pump Pressure Signal	II	—
6 - 8	—	—	—	Not Occupied	—	—
9	0.75	VT / BU	5294	Powertrain Main Relay Fused Supply Voltage 5	II	—
10	0.5	BU / GY	2978	Coolant Diverter Valve Position Signal	II	—
11	—	—	—	Not Occupied	—	—
12	0.5	BK / GN	580	Engine Control Sensors Low Reference 2	II	—
13 - 14	—	—	—	Not Occupied	—	—
15	0.5	GN / YE	3337	Transmission Internal Mode Switch Mode Control Y	II	—
16	0.5	YE / BN	331	Oil Pressure Sensor Signal	II	—
17 - 18	—	—	—	Not Occupied	—	—
19	0.5	BU / WH	10786	Fuel Rail Pressure Sensor SENT 1 Signal	II	—
20	0.5	WH	2590	Turbocharger Wastegate Motor Feedback Signal	II	—
21	—	—	—	Not Occupied	—	—
22	0.5	BK / GY	626	Engine Control Vehicle Sensors Low Reference 1	II	—
23	0.5	VT	7485	Engine Oil Temperature Sensor 2 Signal	II	—
24	0.5	BN / BU	357	Oil Temperature Sensor Signal	II	—
25	0.5	YE / WH	3200	Throttle Inlet Absolute Pressure Sensor Signal	II	—

K20 Engine Control Module X2 (L3B) (cont'd)

Pin	Size	Color	Circuit	Function	Terminal Type ID	Option
26 - 30	—	—	—	Not Occupied	—	—
31	0.5	YE / GY	6936	HO2S Signal	II	—
32	0.5	BN	6934	HO2S Ground	II	—
33	0.5	GN / YE	4623	Engine Control Module LIN Bus 3	II	—
34	0.5	GY / WH	3113	HO2S Heater Low Control Bank 1 Sensor 1	II	—
35	—	—	—	Not Occupied	—	—
36	0.5	WH / RD	480	Engine Control Vehicle Sensors 5 Volt Reference 1	II	—
37	0.5	YE / BK	3000	Coolant Temperature Sensor 2 Signal	II	—
38 - 39	—	—	—	Not Occupied	—	—
40	0.5	GY / VT	2404	Engine Block Coolant Temperature Signal	II	—
41 - 44	—	—	—	Not Occupied	—	—
45	0.5	GN	6935	HO2S Pump Current Trim Signal	II	—
46	0.5	BN / WH	6933	HO2S Pump Current Signal	II	—
47	0.5	GN / VT	4621	Engine Control Module LIN Bus 1	II	—
48	0.5	GN / WH	4622	Engine Control Module LIN Bus 2	II	—
49	2	BK / WH	251	Signal Ground	I	—

K20 Engine Control Module X3 (L3B)

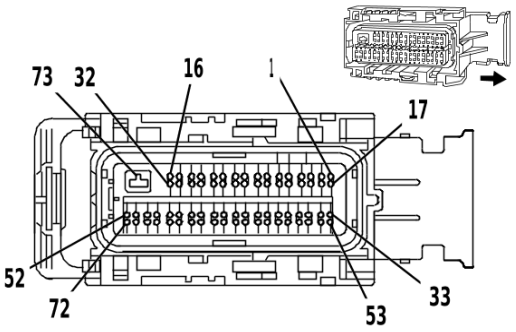

1590596

Connector Part Information

Harness Type: Engine Wiring Harness
OEM Connector: 35406518
Service Connector: 19333091
Description: 73-Way F 0.64, 2.8 Series, Sealed(BK with GY Terminal Position Assurance)

Terminal Part Information

Terminal Type ID	Terminated Lead	Diagnostic Test Probe	Terminal Removal Tool
I	13575351	J-35616-35 (VT)	J-38125-12A
II	19354746	J-35616-64B (L-BU)	J-38125-215A

K20 Engine Control Module X3 (L3B)

Pin	Size	Color	Circuit	Function	Terminal Type ID	Option
1	—	—	—	Not Occupied	—	—
2	0.5	GN	3060	Turbocharger Bypass Solenoid Valve Control Bank 1	II	—
3	0.5	BN	25	Charge Indicator Control	II	—
4 - 5	—	—	—	Not Occupied	—	—
6	0.5	VT / BU	6270	Crankshaft Position Sensor Voltage	II	—
7	0.5	BN / RD	2701	Throttle Position Sensor 5V Reference	II	—
8	—	—	—	Not Occupied	—	—
9	0.5	GN / WH	432	Manifold Absolute Pressure Sensor Signal	II	—
10	0.5	VT / BU	3120	HO2S High Signal Bank 1 Sensor 2	II	—
11	0.5	WH / YE	3121	HO2S Low Signal Bank 1 Sensor 2	II	—
12	0.5	VT / BN	5284	Intake Camshaft Position Actuator Solenoid Valve 1	II	—
13	0.5	GY / BU	5282	Exhaust Camshaft Position Actuator Solenoid Valve 1	II	—
14	0.75	BU	2976	Coolant Diverter Valve Actuator Control Open	II	—
15	0.75	WH / BN	2591	Turbocharger Wastegate Motor Open Control	II	—
16	0.75	WH / BU	2592	Turbocharger Wastegate Motor Close Control	II	—
17 - 20	—	—	—	Not Occupied	—	—
21	0.5	BK / YE	548	Engine Control Sensors Low Reference 1	II	—
22	0.5	BK / VT	6272	Crankshaft Position Sensor Low Reference	II	—
23	0.5	BK / BN	2752	Throttle Position Sensor Low Reference	II	—

K20 Engine Control Module X3 (L3B) (cont'd)

Pin	Size	Color	Circuit	Function	Terminal Type ID	Option
24	0.5	YE / BU	2408	Engine Inlet Coolant Temperature Signal	II	—
25	0.5	VT	2988	Engine Outlet Coolant Temperature Signal	II	—
26	0.5	WH / BU	7329	Pre-Throttle Air Temperature Signal	II	—
27	0.5	BU / YE	8938	Engine Integrated Exhaust Manifold Temperature Signal	II	—
28	0.5	BK / BN	6753	Camshaft Position Actuator Solenoid Valve W Low Reference	II	—
29	0.5	BK / VT	6754	Camshaft Position Actuator Solenoid Valve X Low Reference	II	—
30	0.5	YE	581	Throttle Actuator Open Control	II	—
31	0.5	BN / WH	582	Throttle Actuator Close Control	II	—
32	0.75	BU / BN	2977	Coolant Diverter Valve Actuator Control Close	II	—
33	0.5	VT / GY	496	Knock Sensor 1 Signal	II	—
34	0.5	WH / GY	1876	Knock Sensor 2 Signal	II	—
35	0.5	BK / GN	469	Manifold Absolute Pressure Sensor Low Reference	II	—
36	0.5	GN / BU	428	EVAP Canister Purge Solenoid Control	II	—
37 - 38	—	—	—	Not Occupied	—	—
39	0.5	BK / GN	5301	Intake Camshaft Position Sensor Low Reference 1	II	—
40	0.5	BK / GY	5296	Exhaust Camshaft Position Sensor Low Reference 1	II	—
41	—	—	—	Not Occupied	—	—
42	0.5	VT / BK	5273	Exhaust Camshaft Position Sensor 1	II	—
43	0.5	GN	6271	Crankshaft Position Sensor Signal	II	—
44	0.5	YE / BU	2124	Ignition Control 4	II	—
45	0.5	BU / WH	2122	Ignition Control 2	II	—
46	0.5	BK / BU	2129	Ignition Control Low Reference Bank 1	II	—
47	0.5	GY / WH	3122	HO2S Heater Low Control Bank 1 Sensor 2	II	—
48	0.5	BU / WH	3630	Throttle Position Sensor SENT 1 Signal	II	—
49	0.75	BU / WH	4904	Direct Fuel Injector High Voltage Supply Cylinder 4	II	—
50	0.75	GY / BU	4804	Direct Fuel Injector High Voltage Control Cylinder 4	II	—
51	0.75	BU / GY	4902	Direct Fuel Injector High Voltage Supply Cylinder 2	II	—
52	0.75	BU	4802	Direct Fuel Injector High Voltage Control Cylinder 2	II	—
53	0.5	BK / YE	1716	Knock Sensor Low Reference 1	II	—
54	0.5	BK / GY	2303	Knock Sensor Low Reference 2	II	—
55	0.5	GY / RD	2704	Manifold Absolute Pressure Sensor 5V Reference	II	—
56	0.5	YE / BN	106	Oil Pump Motor Control	II	—
57	0.5	BU	179	Engine Oil Pump Control	II	—
58	—	—	—	Not Occupied	—	—
59	0.5	GY / BU	5300	Intake Camshaft Position Sensor 1 Voltage Reference	II	—
60	0.5	GY / YE	5297	Exhaust Camshaft Position Sensor 1 Voltage Reference	II	—

K20 Engine Control Module X3 (L3B) (cont'd)

Pin	Size	Color	Circuit	Function	Terminal Type ID	Option
61	0.5	GY	23	Generator Field Duty Cycle Signal	II	—
62	—	—	—	Not Occupied	—	—
63	0.5	YE / VT	5275	Intake Camshaft Position Sensor 1	II	—
64	0.5	BU / VT	2121	Ignition Control 1	II	—
65	0.5	GN / BU	2123	Ignition Control 3	II	—
66	—	—	—	Not Occupied	—	—
67	0.5	VT / BK	7300	High Pressure Fuel Pump Low Control	II	—
68	0.5	YE	7301	High Pressure Fuel Pump High Control	II	—
69	0.75	BN / WH	4901	Direct Fuel Injector High Voltage Supply Cylinder 1	II	—
70	0.75	BN	4801	Direct Fuel Injector High Voltage Control Cylinder 1	II	—
71	0.75	GN / GY	4903	Direct Fuel Injector High Voltage Supply Cylinder 3	II	—
72	0.75	GN	4803	Direct Fuel Injector High Voltage Control Cylinder 3	II	—
73	2	VT / BU	5290	Powertrain Main Relay Fused Supply Voltage 1	I	—

K20 Engine Control Module X1 (L84/L87)

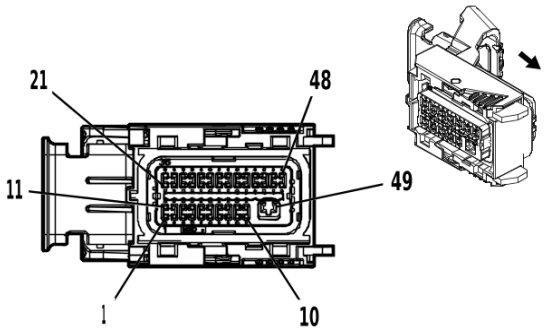

4596458

Connector Part Information

Harness Type: Engine Wiring Harness
OEM Connector: 33315785
Service Connector: 19368142
Description: 49-Way F 0.64, 2.8 Series, Sealed(BK with BU Terminal Position Assurance)

Terminal Part Information

Terminal Type ID	Terminated Lead	Diagnostic Test Probe	Terminal Removal Tool
I	13587518	J-35616-35 (VT)	J-38125-11A
II	19351723	J-35616-64B (L-BU)	J-38125-213

K20 Engine Control Module X1 (L84/L87)

Pin	Size	Color	Circuit	Function	Terminal Type ID	Option
1	0.5	GN / WH	492	Mass Air Flow Sensor Signal	II	—
2	—	—	—	Not Occupied	—	—
3	0.5	BU / GY	4054	Private Serial Data Powertrain CAN Bus [-] Serial Data	II	—
4	—	—	—	Not Occupied	—	—
5	0.5	WH	4976	AUTOSAR CAN Bus [-] 3 Serial Data	II	—
6	0.5	WH / BU	6311	Cruise/ETC/TCC Brake Signal	II	—
7	0.5	WH	4978	AUTOSAR CAN Bus [-] 2 Serial Data	II	—
8	—	—	—	Not Occupied	—	—
9	0.5	YE	5991	Powertrain Relay Coil Control	II	—
10	—	—	—	Not Occupied	—	—
11	0.5	YE	4063	Hood Status A Signal	II	—
12	0.5	BU / GY	636	Ambient Air Temperature Sensor Signal	II	—
13	0.5	WH	4055	Private Serial Data Powertrain CAN Bus [+] Serial Data	II	—
14	0.5	WH / GN	5380	Brake Position Sensor Signal	II	—
15	0.5	BU / BK	4977	AUTOSAR CAN Bus [+] 3 Serial Data	II	—
16	—	—	—	Not Occupied	—	—
17	0.5	BU / YE	4979	AUTOSAR CAN Bus [+] 2 Serial Data	II	—
18	0.5	WH / GY	459	A/C Compressor Clutch Relay Control	II	—
19 - 20	—	—	—	Not Occupied	—	—
21	0.5	GN / BU	428	EVAP Canister Purge Solenoid Control	II	—

K20 Engine Control Module X1 (L84/L87) (cont'd)

Pin	Size	Color	Circuit	Function	Terminal Type ID	Option
22	—	—	—	Not Occupied	—	—
23	0.5	BK / GN	580	Engine Control Sensors Low Reference 2	II	—
24	0.5	BK / BU	1271	Accelerator Pedal Position Low Reference 1	II	—
25 - 26	—	—	—	Not Occupied	—	—
27	0.5	GN / YE	3337	Transmission Internal Mode Switch Mode Control Y	II	—
28	0.5	BN / GN	1174	Oil Level Switch Signal	II	—
29	—	—	—	Not Occupied	—	—
30	0.5	BK / VT	1272	Accelerator Pedal Position Low Reference 2	II	—
31	—	—	—	Not Occupied	—	—
32	0.75	VT / BU	5291	Powertrain Main Relay Fused Supply Voltage 2	II	—
33	—	—	—	Not Occupied	—	—
34	0.5	RD / BN	440	Battery Positive Voltage	II	—
35	—	—	—	Not Occupied	—	—
36	0.5	YE / BK	625	Starter Enable Relay Control	II	—
37	0.5	GN / GY	465	Fuel Pump Primary Relay Control	II	—
38	0.5	WH / RD	1164	Accelerator Pedal Position 5V Reference 1	II	—
39	0.5	YE / WH	1161	Accelerator Pedal Position Signal 1	II	—
40	0.5	YE / BN	331	Oil Pressure Sensor Signal	II	—
41	0.5	GN	380	A/C Refrigerant Pressure Sensor Signal	II	—
42 - 43	—	—	—	Not Occupied	—	—
44	0.5	GN / WH	1162	Accelerator Pedal Position Signal 2	II	—
45	0.5	BN / RD	1274	Accelerator Pedal Position 5V Reference 2	II	—
46	—	—	—	Not Occupied	—	—
47	0.5	VT / GN	439	Run/Crank Ignition 1 Voltage	II	—
48	0.75	VT / BU	5291	Powertrain Main Relay Fused Supply Voltage 2	II	—
49	2	VT / BU	5290	Powertrain Main Relay Fused Supply Voltage 1	I	—

K20 Engine Control Module X2 (L84/L87)

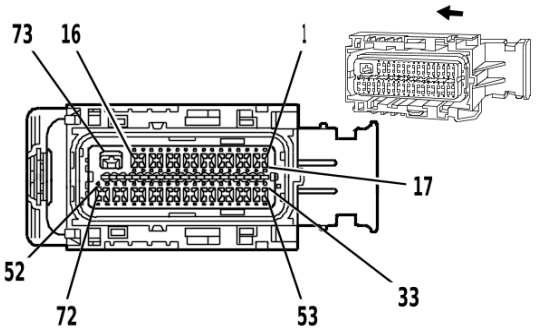

1673472

Connector Part Information

Harness Type: Engine Wiring Harness
OEM Connector: 35208299
Service Connector: 19333090
Description: 73-Way F 0.64, 2.8 Series, Sealed(BK with BK Terminal Position Assurance)

Terminal Part Information

Terminal Type ID	Terminated Lead	Diagnostic Test Probe	Terminal Removal Tool
I	13587518	J-35616-35 (VT)	J-38125-11A
II	19354746	J-35616-64B (L-BU)	J-38125-215A

K20 Engine Control Module X2 (L84/L87)

Pin	Size	Color	Circuit	Function	Terminal Type ID	Option
1	0.5	GN / YE	3212	HO2S Heater Low Control Bank 2 Sensor 1	II	—
2	0.5	GY	5493	Cylinder Deactivation Solenoid Valve Control 3	II	—
3	0.5	BK / YE	548	Engine Control Sensors Low Reference 1	II	—
4 - 6	—	—	—	Not Occupied	—	—
7	0.5	GN / WH	4622	Engine Control Module LIN Bus 2	II	—
8	0.5	GN / VT	4621	Engine Control Module LIN Bus 1	II	—
9	—	—	—	Not Occupied	—	—
10	0.5	VT / GY	3110	HO2S High Signal Bank 1 Sensor 1	II	—
11	0.5	WH / BK	3111	HO2S Low Signal Bank 1 Sensor 1	II	—
12	0.5	YE / BU	2124	Ignition Control 4	II	—
13	0.5	BN / BU	2126	Ignition Control 6	II	—
14	0.5	VT / BU	5294	Powertrain Main Relay Fused Supply Voltage 5	II	—
15	0.5	VT / BU	5294	Powertrain Main Relay Fused Supply Voltage 5	II	—
16	0.5	VT / BU	5294	Powertrain Main Relay Fused Supply Voltage 5	II	—
17	0.5	GY / WH	3113	HO2S Heater Low Control Bank 1 Sensor 1	II	—
18	0.5	YE / GY	2493	Cylinder Shutoff Solenoid Enable Signal 3	II	—
19 - 25	—	—	—	Not Occupied	—	—
26	0.5	VT / WH	3210	HO2S High Signal Bank 2 Sensor 1	II	—
27	0.5	YE / WH	3211	HO2S Low Signal Bank 2 Sensor 1	II	—
28	0.5	GN / BU	2123	Ignition Control 3	II	—
29	0.5	BU / GY	2125	Ignition Control 5	II	—

K20 Engine Control Module X2 (L84/L87) (cont'd)

Pin	Size	Color	Circuit	Function	Terminal Type ID	Option
30	0.5	BK / GY	2130	Ignition Control Low Reference Bank 2	II	—
31	0.5	BN	5496	Cylinder Deactivation Solenoid Valve Control 6	II	—
32	0.5	YE / BN	2496	Cylinder Shutoff Solenoid Enable Signal 6	II	—
33	0.5	WH / BN	3223	HO2S Heater Low Control Bank 2 Sensor 2	II	—
34	—	—	—	Not Occupied	—	—
35	0.5	BU	179	Engine Oil Pump Control	II	—
36	0.5	YE / GN	2494	Cylinder Shutoff Solenoid Enable Signal 4	II	—
37	0.5	VT / BU	5294	Powertrain Main Relay Fused Supply Voltage 5	II	—
38	—	—	—	Not Occupied	—	—
39	0.5	WH / RD	480	Engine Control Vehicle Sensors 5 Volt Reference 1	II	—
40 - 45	—	—	—	Not Occupied	—	—
46	0.5	YE / BU	3221	HO2S Low Signal Bank 2 Sensor 2	II	—
47	0.5	VT / GN	3220	HO2S High Signal Bank 2 Sensor 2	II	—
48 - 49	—	—	—	Not Occupied	—	—
50	0.75	BK / GY	2303	Knock Sensor Low Reference 2	II	—
51	0.75	BK / YE	1716	Knock Sensor Low Reference 1	II	—
52	0.5	BN / WH	582	Throttle Actuator Close Control	II	—
53	0.5	GY / WH	3122	HO2S Heater Low Control Bank 1 Sensor 2	II	—
54	0.5	VT	5495	Cylinder Deactivation Solenoid Valve Control 5	II	—
55	0.5	WH / VT	2495	Cylinder Shutoff Solenoid Enable Signal 5	II	—
56	0.5	YE / BU	5494	Cylinder Deactivation Solenoid Valve Control 4	II	—
57	0.5	GN	5492	Cylinder Deactivation Solenoid Valve Control 2	II	—
58	0.5	WH / GN	2492	Cylinder Shutoff Solenoid Enable Signal 2	II	—
59	0.5	BU / RD	460	Engine Control Sensors 5 Volt Reference 1	II	—
60 - 65	—	—	—	Not Occupied	—	—
66	0.5	WH / YE	3121	HO2S Low Signal Bank 1 Sensor 2	II	—
67	0.5	VT / BU	3120	HO2S High Signal Bank 1 Sensor 2	II	—
68 - 69	—	—	—	Not Occupied	—	—
70	0.75	WH / GY	1876	Knock Sensor 2 Signal	II	—
71	0.75	VT / GY	496	Knock Sensor 1 Signal	II	—
72	0.5	YE	581	Throttle Actuator Open Control	II	—
73	2.5	BK / WH	251	Signal Ground	I	—

K20 Engine Control Module X3 (L84/L87)

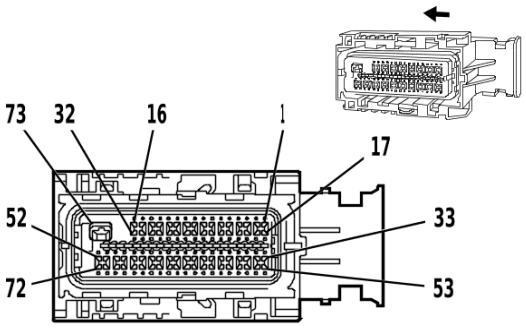

1650395

Connector Part Information

Harness Type: Engine Wiring Harness
OEM Connector: 35208354
Service Connector: 19333091
Description: 73-Way F 0.64, 2.8 Series, Sealed(BK with GY Terminal Position Assurance)

Terminal Part Information

Terminal Type ID	Terminated Lead	Diagnostic Test Probe	Terminal Removal Tool
I	13587518	J-35616-35 (VT)	J-38125-11A
II	19354746	J-35616-64B (L-BU)	J-38125-215A

K20 Engine Control Module X3 (L84/L87)

Pin	Size	Color	Circuit	Function	Terminal Type ID	Option
1	0.5	WH	5497	Cylinder Deactivation Solenoid Valve Control 7	II	—
2	0.5	GN / GY	2497	Cylinder Shutoff Solenoid Enable Signal 7	II	—
3 - 4	—	—	—	Not Occupied	—	—
5	0.5	VT / BN	5284	Intake Camshaft Position Actuator Solenoid Valve 1	II	—
6	0.5	VT / GN	4320	Powertrain Sensor Bus Enable	II	—
7	—	—	—	Not Occupied	—	—
8	0.5	YE / VT	5275	Intake Camshaft Position Sensor 1	II	—
9	0.5	GY / BU	5300	Intake Camshaft Position Sensor 1 Voltage Reference	II	—
10	0.5	GN	6271	Crankshaft Position Sensor Signal	II	—
11	—	—	—	Not Occupied	—	—
12	0.5	BU / WH	2122	Ignition Control 2	II	—
13	0.5	VT / WH	2128	Ignition Control 8	II	—
14	0.5	BN	25	Charge Indicator Control	II	—
15	—	—	—	Not Occupied	—	—
16	0.75	YE	7301	High Pressure Fuel Pump High Control	II	—
17 - 20	—	—	—	Not Occupied	—	—
21	0.5	BK / BN	6753	Camshaft Position Actuator Solenoid Valve W Low Reference	II	—
22 - 23	—	—	—	Not Occupied	—	—

K20 Engine Control Module X3 (L84/L87) (cont'd)

Pin	Size	Color	Circuit	Function	Terminal Type ID	Option
24	0.5	BK / GN	5301	Intake Camshaft Position Sensor Low Reference 1	II	—
25	0.5	VT / BU	6270	Crankshaft Position Sensor Voltage	II	—
26	0.5	BK / VT	6272	Crankshaft Position Sensor Low Reference	II	—
27	—	—	—	Not Occupied	—	—
28	0.5	GN / GY	2127	Ignition Control 7	II	—
29	0.5	BU / VT	2121	Ignition Control 1	II	—
30	0.5	BK / BU	2129	Ignition Control Low Reference Bank 1	II	—
31	—	—	—	Not Occupied	—	—
32	0.75	VT / BK	7300	High Pressure Fuel Pump Low Control	II	—
33	0.5	YE / VT	4325	Starter Pinion Solenoid Actuator Relay Control	II	—
34	0.5	WH / BU	2491	Cylinder Shutoff Solenoid Enable Signal 1	II	—
35	0.5	WH / YE	2498	Cylinder Shutoff Solenoid Enable Signal 8	II	—
36	0.5	BK / BN	2752	Throttle Position Sensor Low Reference	II	—
37	0.5	BK / GN	469	Manifold Absolute Pressure Sensor Low Reference	II	—
38 - 39	—	—	—	Not Occupied	—	—
40	0.5	BN / BU	357	Oil Temperature Sensor Signal	II	—
41 - 42	—	—	—	Not Occupied	—	—
43	0.5	BK / GY	626	Engine Control Vehicle Sensors Low Reference 1	II	—
44	0.75	VT / BU	5292	Powertrain Main Relay Fused Supply Voltage 3	II	—
45	0.75	GN	4803	Direct Fuel Injector High Voltage Control Cylinder 3	II	—
46	0.75	GY / BU	4804	Direct Fuel Injector High Voltage Control Cylinder 4	II	—
47	0.75	WH / GN	4805	Direct Fuel Injector High Voltage Control Cylinder 5	II	—
48	0.75	VT / GN	4806	Direct Fuel Injector High Voltage Control Cylinder 6	II	—
49	0.75	BU	4802	Direct Fuel Injector High Voltage Control Cylinder 2	II	—
50	0.75	YE / GY	4807	Direct Fuel Injector High Voltage Control Cylinder 7	II	—
51	0.75	GY	4808	Direct Fuel Injector High Voltage Control Cylinder 8	II	—
52	0.75	BN	4801	Direct Fuel Injector High Voltage Control Cylinder 1	II	—
53	0.5	BU	5491	Cylinder Deactivation Solenoid Valve Control 1	II	—
54	0.5	YE	5498	Cylinder Deactivation Solenoid Valve Control 8	II	—
55	0.5	BN / RD	2701	Throttle Position Sensor 5V Reference	II	—
56	0.5	BU / WH	3630	Throttle Position Sensor SENT 1 Signal	II	—
57	0.5	GY / RD	2704	Manifold Absolute Pressure Sensor 5V Reference	II	—
58	0.5	GN / WH	432	Manifold Absolute Pressure Sensor Signal	II	—
59 - 60	—	—	—	Not Occupied	—	—
61	0.5	BU	410	Engine Coolant Temperature Sensor Signal	II	—
62	—	—	—	Not Occupied	—	—
63	0.5	BU / WH	10786	Fuel Rail Pressure Sensor SENT 1 Signal	II	—

K20 Engine Control Module X3 (L84/L87) (cont'd)

Pin	Size	Color	Circuit	Function	Terminal Type ID	Option
64	0.5	GY	23	Generator Field Duty Cycle Signal	II	—
65	0.75	GN / GY	4903	Direct Fuel Injector High Voltage Supply Cylinder 3	II	—
66	0.75	BU / WH	4904	Direct Fuel Injector High Voltage Supply Cylinder 4	II	—
67	0.75	GN / WH	4905	Direct Fuel Injector High Voltage Supply Cylinder 5	II	—
68	0.75	VT / GY	4906	Direct Fuel Injector High Voltage Supply Cylinder 6	II	—
69	0.75	BU / GY	4902	Direct Fuel Injector High Voltage Supply Cylinder 2	II	—
70	0.75	WH / YE	4907	Direct Fuel Injector High Voltage Supply Cylinder 7	II	—
71	0.75	GY / WH	4908	Direct Fuel Injector High Voltage Supply Cylinder 8	II	—
72	0.75	BN / WH	4901	Direct Fuel Injector High Voltage Supply Cylinder 1	II	—
73	2.5	BK / WH	251	Signal Ground	I	—

K20 Engine Control Module X1 (LM2)

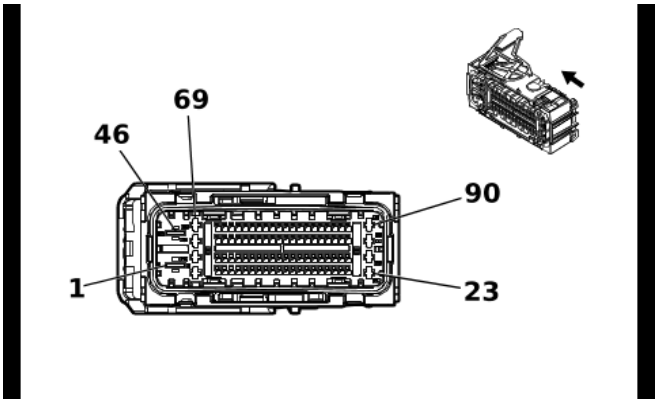

5492269

Connector Part Information

Harness Type: Engine Wiring Harness
OEM Connector: 35388154
Service Connector: 84941451
Description: 90-Way F 0.64 GEN-Y, 2.8, 6.3 MCP Series, Sealed(BK with BU Terminal Position Assurance)

Terminal Part Information

Terminal Type ID	Terminated Lead	Diagnostic Test Probe	Terminal Removal Tool
I	19367373	J-35616-64B (L-BU)	J-38125-215A
II	19371214	J-35616-4A (PU)	J-38125-215A
III	84616649	J-35616-42 (RD)	J-38125-556

K20 Engine Control Module X1 (LM2)

Pin	Size	Color	Circuit	Function	Terminal Type ID	Option
1	6	BN / BU	104	Glow Plug Control	III	—
2	2.5	GY / VT	1586	Glow Plug 6 Control	II	—
3 - 5	—	—	—	Not Occupied	—	—
6	0.5	WH / GY	459	A/C Compressor Clutch Relay Control	I	—
7	0.75	RD / BN	440	Battery Positive Voltage	I	—
8	0.5	GN / WH	492	Mass Air Flow Sensor Signal	I	—
9	—	—	—	Not Occupied	—	—
10	0.5	WH / BU	6311	Cruise/ETC/TCC Brake Signal	I	—
11	0.5	GY	2973	Coolant Flow Control Valve Position Signal	I	—
12	0.5	GN / GY	7316	Intake Manifold Runner Valve Actuator Control	I	—
13 - 14	—	—	—	Not Occupied	—	—
15	0.5	BN / GN	4305	Exhaust Flow Control Valve 1	I	—
16	0.5	WH	4055	Private Serial Data Powertrain CAN Bus [+] Serial Data	I	—
17	0.5	BU / BK	4977	AUTOSAR CAN Bus [+] 3 Serial Data	I	—
18	0.5	BU / YE	4979	AUTOSAR CAN Bus [+] 2 Serial Data	I	—
19	0.5	BK / GN	580	Engine Control Sensors Low Reference 2	I	—
20	—	—	—	Not Occupied	—	—
21	0.75	GY / BK	1330	Variable Geometry Turbocharger Position Sensor Motor Close Control	I	—

K20 Engine Control Module X1 (LM2) (cont'd)

Pin	Size	Color	Circuit	Function	Terminal Type ID	Option
22	0.75	WH / BN	1313	Variable Geometry Turbocharger Position Sensor Motor Open Control	I	—
23	2.5	GY / GN	1583	Glow Plug 3 Control	II	—
24	2.5	GY / WH	1585	Glow Plug 5 Control	II	—
25	0.75	VT / GN	439	Run/Crank Ignition 1 Voltage	I	—
26	0.5	YE	5991	Powertrain Relay Coil Control	I	—
27	—	—	—	Not Occupied	—	—
28	0.5	GN / BN	507	Wait To Start Indicator Control	I	—
29	—	—	—	Not Occupied	—	—
30	0.5	BK / GY	626	Engine Control Vehicle Sensors Low Reference 1	I	—
31 - 33	—	—	—	Not Occupied	—	—
34	0.5	VT / YE	5947	Turbocharger Vane Position Sensor Signal	I	—
35	0.5	BN / WH	5763	Exhaust Gas Recirculation Position Signal	I	—
36	0.5	BU / GY	2978	Coolant Diverter Valve Position Signal	I	—
37	—	—	—	Not Occupied	—	—
38	0.5	BU / GY	4054	Private Serial Data Powertrain CAN Bus [-] Serial Data	I	—
39	0.5	WH	4976	AUTOSAR CAN Bus [-] 3 Serial Data	I	—
40	0.5	WH	4978	AUTOSAR CAN Bus [-] 2 Serial Data	I	—
41	—	—	—	Not Occupied	—	—
42	0.5	YE / BK	625	Starter Enable Relay Control	I	—
43	0.75	VT / BK	5746	Exhaust Gas Recirculation Valve Low Control	I	—
44	0.75	WH / VT	5764	Exhaust Gas Recirculation Valve High Control	I	—
45	2.5	GY / BN	1582	Glow Plug 2 Control	II	—
46	4	BK / WH	251	Signal Ground	III	—
47	2.5	GY / YE	1584	Glow Plug 4 Control	II	—
48	0.5	WH / RD	480	Engine Control Vehicle Sensors 5 Volt Reference 1	I	—
49	0.5	GN / WH	1162	Accelerator Pedal Position Signal 2	I	—
50	0.5	BK / VT	1272	Accelerator Pedal Position Low Reference 2	I	—
51	0.5	BK / BU	1271	Accelerator Pedal Position Low Reference 1	I	—
52	0.5	WH / GN	5380	Brake Position Sensor Signal	I	—
53 - 54	—	—	—	Not Occupied	—	—
55	0.5	YE	4063	Hood Status A Signal	I	—
56 - 58	—	—	—	Not Occupied	—	—
59	0.5	GN	380	A/C Refrigerant Pressure Sensor Signal	I	—
60	0.5	YE / BN	331	Oil Pressure Sensor Signal	I	—
61	0.5	YE / GY	3926	Crankcase Differential Pressure Sensor Signal	I	—
62 - 63	—	—	—	Not Occupied	—	—
64	0.5	GN / BU	3889	Powertrain Sensor Bus Relay Control	I	—
65	—	—	—	Not Occupied	—	—
66	0.75	BN	1421	Exhaust Restrictor Motor Closed Control	I	—
67	0.75	YE / BN	1420	Exhaust Restrictor Motor Open Control	I	—
68	2.5	GY / BU	1581	Glow Plug 1 Control	II	—
69	2.5	VT / BU	5291	Powertrain Main Relay Fused Supply Voltage 2	II	—

K20 Engine Control Module X1 (LM2) (cont'd)

Pin	Size	Color	Circuit	Function	Terminal Type ID	Option
70	0.5	BU / RD	460	Engine Control Sensors 5 Volt Reference 1	I	—
71	0.5	BN / RD	1274	Accelerator Pedal Position 5V Reference 2	I	—
72	0.5	WH / RD	1164	Accelerator Pedal Position 5V Reference 1	I	—
73	0.5	YE / WH	1161	Accelerator Pedal Position Signal 1	I	—
74	0.5	BU / GY	636	Ambient Air Temperature Sensor Signal	I	—
75	0.5	VT	7485	Engine Oil Temperature Sensor 2 Signal	I	—
76 - 77	—	—	—	Not Occupied	—	—
78	0.5	GY / VT	2404	Engine Block Coolant Temperature Signal	I	—
79 - 83	—	—	—	Not Occupied	—	—
84	0.5	VT / GY	7246	Exhaust Gas Recirculation Differential Pressure Signal 1	I	—
85	—	—	—	Not Occupied	—	—
86	0.5	GN / GY	465	Fuel Pump Primary Relay Control	I	—
87	0.75	VT / BU	5294	Powertrain Main Relay Fused Supply Voltage 5	I	—
88	0.75	GY / BN	2972	Coolant Flow Control Actuator Control Close	I	—
89	0.75	GY / BU	2971	Coolant Flow Control Actuator Control Open	I	—
90	2.5	VT / BU	5290	Powertrain Main Relay Fused Supply Voltage 1	II	—

K20 Engine Control Module X2 (LM2)

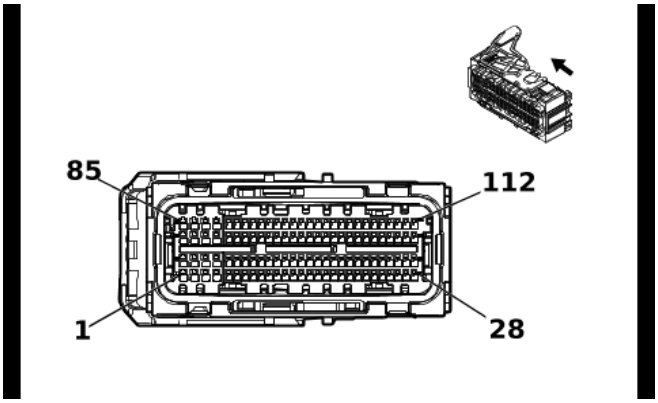

5491584

Connector Part Information

Harness Type: Engine Wiring Harness
OEM Connector: 35294571
Service Connector: 84941452
Description: 112-Way F 0.64 GEN-Y, 1.2 MCON Series, Sealed(BK with BK Terminal Position Assurance)

Terminal Part Information

Terminal Type ID	Terminated Lead	Diagnostic Test Probe	Terminal Removal Tool
I	19367373	J-35616-64B (L-BU)	J-38125-215A
II	84963773	J-35616-12 (BU)	J-38125-215A

K20 Engine Control Module X2 (LM2)

Pin	Size	Color	Circuit	Function	Terminal Type ID	Option
1	1.5	GN	4803	Direct Fuel Injector High Voltage Control Cylinder 3	II	—
2	1.5	GY / BU	4804	Direct Fuel Injector High Voltage Control Cylinder 4	II	—
3	0.75	YE / VT	2420	Fuel High Pressure Pump Low Enable Signal	II	—
4	0.75	YE / VT	7245	High Pressure Fuel Pump Low Enable Signal	II	—
5	0.5	GY / YE	5297	Exhaust Camshaft Position Sensor 1 Voltage Reference	I	—
6	0.5	GN	6271	Crankshaft Position Sensor Signal	I	—
7	0.5	VT / BU	6270	Crankshaft Position Sensor Voltage	I	—
8	—	—	—	Not Occupied	—	—
9	0.5	BN	25	Charge Indicator Control	I	—
10	—	—	—	Not Occupied	—	—
11	0.5	BK / GN	3235	Exhaust Gas Recirculation Temperature Sensor 3 Low Reference	I	—
12	0.5	YE / BU	3680	Charge Air Cooler Outlet Temperature Sensor Low Reference	I	—
13	0.5	YE / BK	3682	Charge Air Cooler Inlet Temperature Sensor Low Reference	I	—
14	0.5	BK / BU	6274	Exhaust Gas Recirculation Temperature Sensor Low Reference	I	—
15	—	—	—	Not Occupied	—	—
16	0.5	BK / GN	3657	Exhaust Gas Temperature Sensor 3 Low Reference	I	—

K20 Engine Control Module X2 (LM2) (cont'd)

Pin	Size	Color	Circuit	Function	Terminal Type ID	Option
17	—	—	—	Not Occupied	—	—
18	0.5	BK / BU	6783	Exhaust Gas Temperature Sensor 2 Low Reference	I	—
19	—	—	—	Not Occupied	—	—
20	0.5	BK / BN	6782	Exhaust Gas Temperature Sensor 1 Low Reference	I	—
21 - 22	—	—	—	Not Occupied	—	—
23	0.75	BN / WH	3100	Diesel Exhaust Fluid Dosing Valve Low Control	I	—
24	0.5	BK / YE	2834	Fuel Rail Pressure Solenoid Valve Low Reference	I	—
25	0.5	BU	179	Engine Oil Pump Control	I	—
26	—	—	—	Not Occupied	—	—
27	0.75	BN / WH	582	Throttle Actuator Close Control	I	—
28	0.75	YE	581	Throttle Actuator Open Control	I	—
29	1.5	GN / GY	4903	Direct Fuel Injector High Voltage Supply Cylinder 3	II	—
30	1.5	BU / WH	4904	Direct Fuel Injector High Voltage Supply Cylinder 4	II	—
31	0.75	GY / BN	2419	Fuel High Pressure Pump High Side Supply Voltage	II	—
32	0.75	GY / BN	7244	High Pressure Fuel Pump High Side Control	II	—
33	0.5	BK / GY	5296	Exhaust Camshaft Position Sensor Low Reference 1	I	—
34	0.5	VT / BK	5273	Exhaust Camshaft Position Sensor 1	I	—
35	0.5	BK / VT	6272	Crankshaft Position Sensor Low Reference	I	—
36	—	—	—	Not Occupied	—	—
37	0.5	BU	3017	Fuel Heater Relay 1 Control	I	—
38	—	—	—	Not Occupied	—	—
39	0.5	WH / GY	3234	Exhaust Gas Recirculation Temperature Sensor 3 Signal	I	—
40	0.5	BN	3681	Charge Air Cooler Outlet Temperature Sensor Signal	I	—
41	0.5	GN	3683	Charge Air Cooler Inlet Temperature Sensor Signal	I	—
42	0.5	WH / BN	3237	Exhaust Gas Recirculation Temperature Sensor Signal	I	—
43	—	—	—	Not Occupied	—	—
44	0.5	GY / GN	5378	Exhaust Gas Temperature Sensor 3 Signal	I	—
45	—	—	—	Not Occupied	—	—
46	0.5	BU / GN	5377	Exhaust Gas Temperature Sensor 2 Signal	I	—
47	—	—	—	Not Occupied	—	—
48	0.5	BU / WH	5277	Exhaust Gas Temperature Sensor 1 Signal	I	—
49 - 50	—	—	—	Not Occupied	—	—
51	0.75	BN	3099	Diesel Exhaust Fluid Dosing Valve High Control	I	—
52	0.5	BU / WH	2530	Fuel Rail Pressure Solenoid Valve Control	I	—
53	0.5	YE / BN	106	Oil Pump Motor Control	I	—
54	—	—	—	Not Occupied	—	—
55	0.75	BK / BU	1408	Variable Swirl Valve Close Control	I	—
56	0.75	BK / GN	1389	Variable Swirl Valve Open Control	I	—

K20 Engine Control Module X2 (LM2) (cont'd)

Pin	Size	Color	Circuit	Function	Terminal Type ID	Option
57	1.5	VT / GY	4906	Direct Fuel Injector High Voltage Supply Cylinder 6	II	—
58	1.5	BN / WH	4901	Direct Fuel Injector High Voltage Supply Cylinder 1	II	—
59	1.5	GN / WH	4905	Direct Fuel Injector High Voltage Supply Cylinder 5	II	—
60	1.5	BU / GY	4902	Direct Fuel Injector High Voltage Supply Cylinder 2	II	—
61	—	—	—	Not Occupied	—	—
62	0.5	GN / YE	3337	Transmission Internal Mode Switch Mode Control Y	I	—
63 - 65	—	—	—	Not Occupied	—	—
66	0.5	BN / RD	2917	Fuel Rail Pressure Sensor 5V Reference	I	—
67	0.5	BK / GN	2919	Fuel Rail Pressure Sensor Low Reference	I	—
68	—	—	—	Not Occupied	—	—
69	0.5	BN / BU	357	Oil Temperature Sensor Signal	I	—
70	0.5	YE / BK	3000	Coolant Temperature Sensor 2 Signal	I	—
71	—	—	—	Not Occupied	—	—
72	0.5	BN / YE	1372	Engine Metal Temperature Sensor Signal 2	I	—
73	0.5	WH / BU	7329	Pre-Throttle Air Temperature Signal	I	—
74	0.5	BU	6053	Exhaust Pressure Sensor 1 Signal	I	—
75	0.5	BK / YE	548	Engine Control Sensors Low Reference 1	I	—
76	0.5	GN / VT	4621	Engine Control Module LIN Bus 1	I	—
77	0.5	GN / WH	4622	Engine Control Module LIN Bus 2	I	—
78	0.5	GN / YE	4623	Engine Control Module LIN Bus 3	I	—
79 - 82	—	—	—	Not Occupied	—	—
83	0.75	BU / BN	2977	Coolant Diverter Valve Actuator Control Close	I	—
84	0.75	BU	2976	Coolant Diverter Valve Actuator Control Open	I	—
85	1.5	VT / GN	4806	Direct Fuel Injector High Voltage Control Cylinder 6	II	—
86	1.5	BN	4801	Direct Fuel Injector High Voltage Control Cylinder 1	II	—
87	1.5	BU	4802	Direct Fuel Injector High Voltage Control Cylinder 2	II	—
88	1.5	WH / GN	4805	Direct Fuel Injector High Voltage Control Cylinder 5	II	—
89	—	—	—	Not Occupied	—	—
90	0.5	BU / WH	3630	Throttle Position Sensor SENT 1 Signal	I	—
91	0.5	BU / GN	4012	Exhaust Gas Recirculation 2 Valve Position Sensor Signal	I	—
92	0.5	GY	23	Generator Field Duty Cycle Signal	I	—
93	—	—	—	Not Occupied	—	—
94	0.5	BU / WH	2918	Fuel Rail Pressure Sensor Signal	I	—
95	0.5	YE / BU	2408	Engine Inlet Coolant Temperature Signal	I	—
96	0.5	BN / YE	2161	Fuel Rail Pressure Sensor 2 Signal	I	—
97	0.5	VT	2988	Engine Outlet Coolant Temperature Signal	I	—
98 - 100	—	—	—	Not Occupied	—	—
101	0.5	GN / WH	432	Manifold Absolute Pressure Sensor Signal	I	—

K20 Engine Control Module X2 (LM2) (cont'd)

Pin	Size	Color	Circuit	Function	Terminal Type ID	Option
102	0.5	GN / YE	37	Engine Block Temperature Sensor Signal	I	—
103	0.5	BU / BK	1422	Engine Water Charge Air Coolant Temperature Signal	I	—
104	—	—	—	Not Occupied	—	—
105	0.5	GN / BN	2732	Engine Control Module LIN Bus 4	I	—
106 - 110	—	—	—	Not Occupied	—	—
111	0.75	BU / BN	4013	Exhaust Gas Recirculation 2 Valve Close Control	I	—
112	0.75	BU / WH	4014	Exhaust Gas Recirculation 2 Valve Open Control	I	—

K29FV Front Seat Heater Vent Control Module X1 (KA1+KQV)

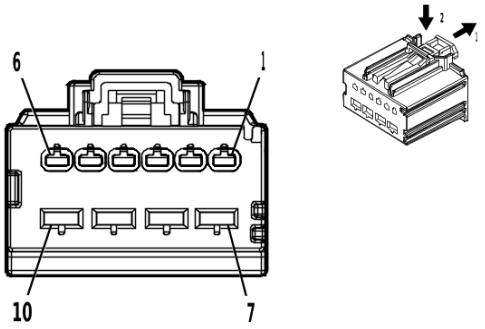

5035058

Connector Part Information

Harness Type: Front Seat Wiring Harness - Passenger
OEM Connector: 31372-1600
Service Connector: Service by Harness - See Part Catalog
Description: 10-Way F 1.5, 2.8 MX Series(BK)

Terminal Part Information

Terminal Type ID	Terminated Lead	Diagnostic Test Probe	Terminal Removal Tool
I	Not required	J-35616-2A (GY)	No Tool Required
II	Not required	J-35616-4A (PU)	No Tool Required

K29FV Front Seat Heater Vent Control Module X1 (KA1+KQV)

Pin	Size	Color	Circuit	Function	Terminal Type ID	Option
1	0.75	WH / BN	2481	Passenger Seat Back Heating Element Control	I	—
2	0.75	BN / BU	2479	Passenger Seat Heating Element Control	I	—
3	0.75	GY / BK	2480	Passenger Seat Heating Element Low Reference	I	—
4	0.75	BN / BK	2078	Driver Seat Heating Element Low Reference	I	—
5	0.75	BN	2432	Driver Seat Back Heating Element Control	I	—
6	0.75	BN / VT	2077	Driver Seat Heating Element Control	I	—
7	0.75	RD / GN	6140	Battery Positive Voltage	II	—
8	0.75	BK	1350	Ground	II	—
9	—	—	—	Not Occupied	—	—
10	0.75	RD / BN	6640	Battery Positive Voltage	II	—

K29FV Front Seat Heater Vent Control Module X2 (KA1+KQV)

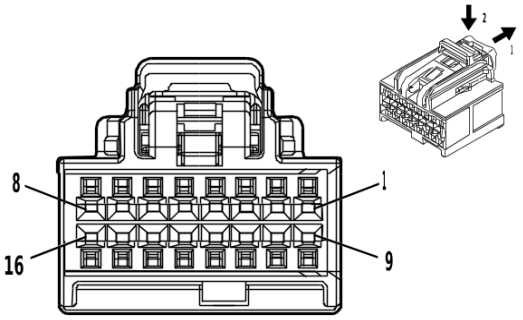

4873243

Connector Part Information

Harness Type: Front Seat Wiring Harness - Passenger
OEM Connector: 35016343
Service Connector: Service by Harness - See Part Catalog
Description: 16-Way F 0.64 OCS Series(BK)

Terminal Part Information

Terminal Type ID	Terminated Lead	Diagnostic Test Probe	Terminal Removal Tool
I	Not required	J-35616-64B (L-BU)	No Tool Required

K29FV Front Seat Heater Vent Control Module X2 (KA1+KQV)

Pin	Size	Color	Circuit	Function	Terminal Type ID	Option
1	0.5	BK / YE	2080	Driver Heated Seat Thermistor Low Reference	I	—
2	0.5	BK / GY	2435	Passenger Heated Seat Thermistor Low Reference	I	—
3	0.5	BU	2425	Driver Seat Back Heating Temperature Sensor Signal	I	—
4	0.5	WH / BU	2436	Passenger Seat Back Heating Temperature Sensor Signal	I	—
5	0.5	WH / GY	2434	Passenger Seat Heating Temperature Sensor Signal	I	—
6	0.5	YE / GY	2079	Driver Seat Heating Temperature Sensor Signal	I	—
7	—	—	—	Not Occupied	—	—
8	0.5	GN / VT	2857	Body Control Module LIN Bus 11	I	—
9	0.5	GN / VT	5906	Driver Seat Blower Motor Control 1	I	—
10	0.5	VT / WH	5908	Passenger Seat Blower Motor Control 1	I	—
11	—	—	—	Not Occupied	—	—
12	0.5	BK / GN	2482	Passenger Heated Back Thermistor Low Reference	I	—
13 - 16	—	—	—	Not Occupied	—	—

K32 Heated Steering Wheel Module X1 (KI3)

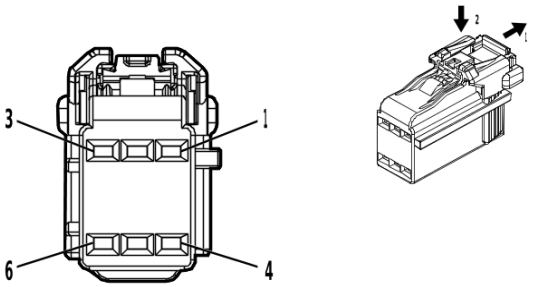

4862126

Connector Part Information

Harness Type: Steering Wheel Horn Switch Wiring Harness
OEM Connector: 13532426
Service Connector: Service by Harness - See Part Catalog
Description: 6-Way F 1.2 Series(BK)

Terminal Part Information

Terminal Type ID	Terminated Lead	Diagnostic Test Probe	Terminal Removal Tool
I	Not required	Not Available	No Tool Required

K32 Heated Steering Wheel Module X1 (KI3)

Pin	Size	Color	Circuit	Function	Terminal Type ID	Option
1	0.35	YE / GY	5883	Steering Wheel Heating Switch Signal	I	—
2	0.35	BN / WH	5884	Steering Wheel Heating Switch LED Control	I	—
3	0.5	RD / GN	10040	Secondary Fused Battery Positive Voltage	I	—
4	0.5	BK	6050	Steering Wheel Ground	I	—
5	0.35	BK / WH	6051	Steering Wheel Ground	I	—
6	0.35	GN / BK	2858	Body Control Module LIN Bus 12	I	—

K32 Heated Steering Wheel Module X2 (KI3-UKL)

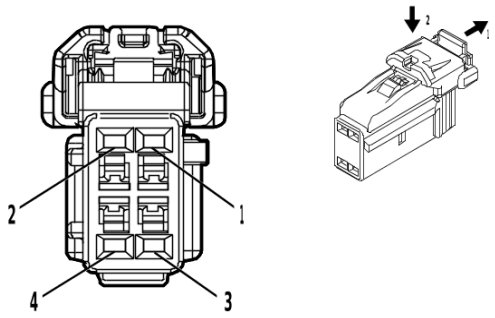

4872683

Connector Part Information

Harness Type: Steering Wheel Heater
OEM Connector: 13533335
Service Connector: Service by Harness - See Part Catalog
Description: 4-Way F 1.2 Series(BK)

Terminal Part Information

Terminal Type ID	Terminated Lead	Diagnostic Test Probe	Terminal Removal Tool
I	Not required	No Tool Required	No Tool Required

K32 Heated Steering Wheel Module X2 (KI3-UKL)

Pin	Size	Color	Circuit	Function	Terminal Type ID	Option
1	0.75	WH / YE	5888	Steering Wheel Heating High Control	I	—
2	0.75	GY / YE	5887	Steering Wheel Heating Low Control	I	—
3	0.35	VT / BU	5886	Steering Wheel Heating Temperature Sensor Signal	I	—
4	0.35	YE / RD	5885	Steering Wheel Heating Voltage Reference	I	—

K36 Restraints Control Module X1

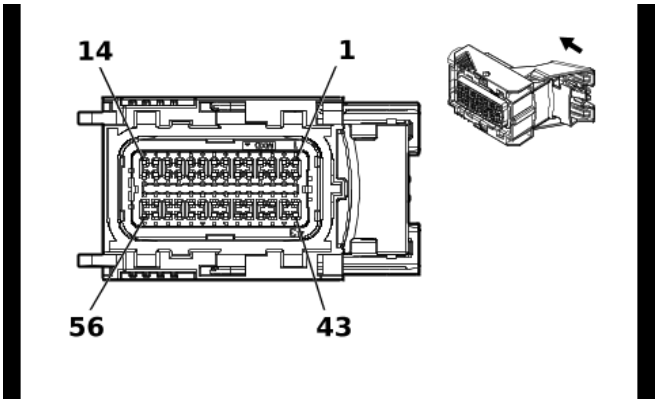

5377109

Connector Part Information

Harness Type: Body Wiring Harness
OEM Connector: 35554344
Service Connector: 26314571
Description: 56-Way F 0.64 Series, Sealed(BU)

Terminal Part Information

Terminal Type ID	Terminated Lead	Diagnostic Test Probe	Terminal Removal Tool
I	19354746	J-35616-64B (L-BU)	J-38125-215A

K36 Restraints Control Module X1

Pin	Size	Color	Circuit	Function	Terminal Type ID	Option
1 - 6	—	—	—	Not Occupied	—	—
7	0.5	BK / OG	5045	Left Front Impact Discriminating Sensor Low Reference	I	—
8	0.5	OG / YE	354	Left Front Impact Discriminating Sensor Signal	I	—
9	0.5	OG / GN	1409	Right Front Impact Discriminating Sensor Signal	I	—
10	0.5	BK / OG	5600	Right Front Impact Discriminating Sensor Low Reference	I	—
11	0.5	WH / OG	3476	Passenger Seat Belt Retractor Pretensioner Low Control	I	—
12	0.5	OG / GN	3475	Passenger Seat Belt Retractor Pretensioner High Control	I	—
13	0.35	YE / OG	3025	Passenger Instrument Panel Air Bag Stage 1 High Control	I	—
14	0.35	OG / WH	3024	Passenger Instrument Panel Air Bag Stage 1 Low Control	I	—
15 - 24	—	—	—	Not Occupied	—	—
25	0.5	VT / OG	3478	Driver Seat Belt Retractor Pretensioner Low Control	I	—
26	0.5	OG / WH	3477	Driver Seat Belt Retractor Pretensioner High Control	I	—
27	0.35	OG / VT	3021	Steering Wheel Air Bag Stage 1 High Control	I	—
28	0.35	BN / OG	3020	Steering Wheel Air Bag Stage 1 Low Control	I	—
29	0.5	BU	4987	AUTOSAR CAN Bus [+] 1 Serial Data	I	—
30	0.5	WH	4986	AUTOSAR CAN Bus [-] 1 Serial Data	I	—
31	—	—	—	Not Occupied	—	—

K36 Restraints Control Module X1 (cont'd)

Pin	Size	Color	Circuit	Function	Terminal Type ID	Option
32	0.5	OG / BN	3479	Passenger Seat Belt Anchor Pretensioner High Control	I	—
33	0.5	GY / OG	3480	Passenger Seat Belt Anchor Pretensioner Low Control	I	—
34 - 37	—	—	—	Not Occupied	—	—
38	0.35	OG / VT	3026	Passenger Instrument Panel Air Bag Stage 2 Low Control	I	—
39	0.35	GY / OG	3027	Passenger Instrument Panel Air Bag Stage 2 High Control	I	—
40 - 41	—	—	—	Not Occupied	—	—
42	0.5	BK / WH	1251	Signal Ground	I	—
43	0.5	BU	4987	AUTOSAR CAN Bus [+] 1 Serial Data	I	—
44	0.5	WH	4986	AUTOSAR CAN Bus [-] 1 Serial Data	I	—
45	—	—	—	Not Occupied	—	—
46	0.5	VT / OG	3482	Driver Seat Belt Anchor Pretensioner Low Control	I	—
47	0.5	OG / YE	3481	Driver Seat Belt Anchor Pretensioner High Control	I	—
48 - 49	—	—	—	Not Occupied	—	—
50	0.35	BN / WH	3895	Roof Rail Air Bag Disable Switch Low Reference	I	—
51	0.35	BU / WH	3119	Roof Rail Air Bag Disable Switch Signal	I	—
52	—	—	—	Not Occupied	—	—
53	0.35	WH / OG	3022	Steering Wheel Air Bag Stage 2 Low Control	I	—
54	0.35	OG / GN	3023	Steering Wheel Air Bag Stage 2 High Control	I	—
55	0.35	VT / WH	239	Run/Crank Ignition 1 Voltage	I	—
56	0.5	RD / GN	4440	Battery Positive Voltage	I	—

K36 Restraints Control Module X2

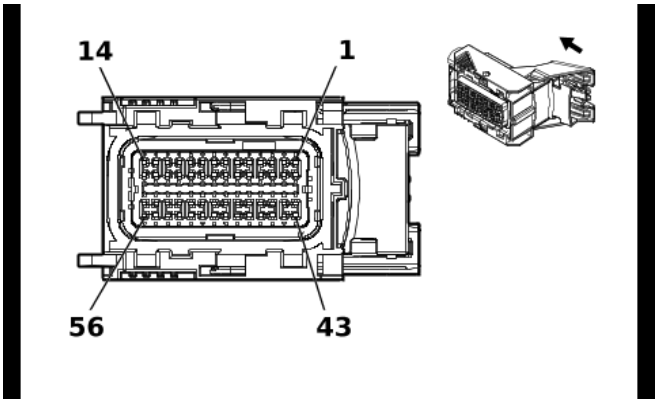

5377124

Connector Part Information

Harness Type: Body Wiring Harness
OEM Connector: 35491879
Service Connector: 85004498
Description: 56-Way F 0.64 Series, Sealed(BK)

Terminal Part Information

Terminal Type ID	Terminated Lead	Diagnostic Test Probe	Terminal Removal Tool
I	19354746	J-35616-64B (L-BU)	J-38125-215A

K36 Restraints Control Module X2

Pin	Size	Color	Circuit	Function	Terminal Type ID	Option
1 - 11	—	—	—	Not Occupied	—	—
12	0.35	OG / GY	2652	Driver Seat Belt Sensor Signal	I	—
13	0.5	BK / OG	6627	Right Rear Side Impact Sensor Low Reference	I	—
14	0.5	OG / WH	6626	Right Rear Side Impact Sensor Signal	I	—
15 - 22	—	—	—	Not Occupied	—	—
23	0.5	BK / OG	1363	Driver Seat Belt Switch Low Reference	I	—
24	—	—	—	Not Occupied	—	—
25	0.35	OG / VT	1362	Passenger Seat Belt Switch Signal	I	—
26	—	—	—	Not Occupied	—	—
27	0.5	BK / OG	6628	Left Front Side Impact Sensor Low Reference	I	—
28	0.5	OG / GN	2132	Left Front Side Impact Sensor Signal	I	—
29 - 36	—	—	—	Not Occupied	—	—
37	0.5	OG / GY	5021	Right Front Roof Rail Air Bag High Control	I	—
38	0.5	WH / OG	5022	Right Front Roof Rail Air Bag Low Control	I	—
39	0.5	BU / OG	4957	Passenger Seat Back Air Bag Low Control	I	—
40	0.5	OG / GY	4956	Passenger Seat Back Air Bag High Control	I	—
41	0.5	BK / OG	6629	Right Front Side Impact Sensor Low Reference	I	—
42	0.5	BN / OG	2134	Right Front Side Impact Sensor Signal	I	—
43 - 50	—	—	—	Not Occupied	—	—
51	0.5	OG / GN	5019	Left Front Roof Rail Air Bag High Control	I	—
52	0.5	VT / OG	5020	Left Front Roof Rail Air Bag Low Control	I	—
53	0.5	BK / OG	4963	Driver Seat Back Air Bag Low Control	I	—

K36 Restraints Control Module X2 (cont'd)

Pin	Size	Color	Circuit	Function	Terminal Type ID	Option
54	0.5	OG / BU	4962	Driver Seat Back Air Bag High Control	I	—
55	0.5	BK / OG	6623	Left Rear Side Impact Sensor Low Reference	I	—
56	0.5	OG / BU	6622	Left Rear Side Impact Sensor Signal	I	—

K38 Chassis Control Module (G93/G94)

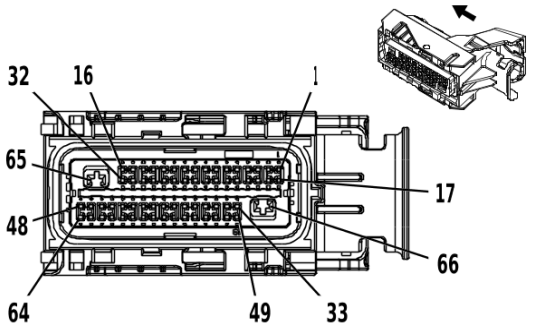

3621452

Connector Part Information

Harness Type: Chassis Wiring Harness
OEM Connector: 13965710
Service Connector: 19329822
Description: 66-Way F 0.64, 2.8 Series, Sealed(BK with BK Terminal Position Assurance)

Terminal Part Information

Terminal Type ID	Terminated Lead	Diagnostic Test Probe	Terminal Removal Tool
I	13587518	J-35616-35 (VT)	J-38125-11A
II	19351723	J-35616-64B (L-BU)	J-38125-213

K38 Chassis Control Module (G93/G94)

Pin	Size	Color	Circuit	Function	Terminal Type ID	Option
1 - 5	—	—	—	Not Occupied	—	—
6	0.5	VT / WH	639	Run/Crank Ignition 1 Voltage	II	—
7 - 12	—	—	—	Not Occupied	—	—
13	0.5	YE / GN	7122	Axle Differential Lock Switch Signal	II	—
14 - 31	—	—	—	Not Occupied	—	—
32	0.5	VT / GY	7117	Front Axle Differential Lock Indicator Control	II	—
33	0.75	VT / WH	7256	Front Differential Lock Actuator Control	II	—
34	0.5	BU / YE	4979	AUTOSAR CAN Bus [+] 2 Serial Data	II	—
35	0.5	BU / YE	4979	AUTOSAR CAN Bus [+] 2 Serial Data	II	—
36	0.5	WH	4978	AUTOSAR CAN Bus [-] 2 Serial Data	II	—
37	0.5	WH	4978	AUTOSAR CAN Bus [-] 2 Serial Data	II	—
38	0.5	YE	7115	Rear Axle Differential Lock Indicator Control	II	—
39 - 43	—	—	—	Not Occupied	—	—
44	0.75	GY / BK	7253	Rear Differential Lock Actuator Low Control	II	—
45 - 49	—	—	—	Not Occupied	—	—
50	0.75	VT / BN	7258	Rear Differential Lock Actuator Control	II	—
51 - 59	—	—	—	Not Occupied	—	—
60	0.75	WH / BK	7254	Front Differential Lock Actuator Low Control	II	—
61 - 64	—	—	—	Not Occupied	—	—
65	1.5	BK	1850	Ground	I	—
66	1.5	RD / BN	5940	Battery Positive Voltage	I	—

K40D Driver Seat Adjuster Memory Module X1 (A45)

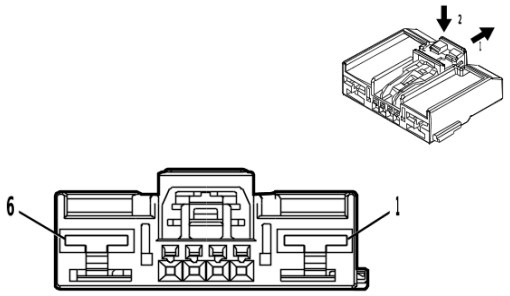

4650258

Connector Part Information

Harness Type: Front Seat Wiring Harness - Driver
OEM Connector: 7289-7139-30
Service Connector: Service by Harness - See Part Catalog
Description: 6-Way F 0.64, 6.3 Series(BK)

Terminal Part Information

Terminal Type ID	Terminated Lead	Diagnostic Test Probe	Terminal Removal Tool
I	Not required	J-35616-42 (RD)	No Tool Required
II	Not required	J-35616-64B (L-BU)	No Tool Required

K40D Driver Seat Adjuster Memory Module X1 (A45)

Pin	Size	Color	Circuit	Function	Terminal Type ID	Option
1	2.5	BK	1550	Ground	I	—
2	—	—	—	Not Occupied	—	—
3	0.5	RD / BN	2240	Battery Positive Voltage	II	—
4 - 5	—	—	—	Not Occupied	—	—
6	2.5	RD / YE	5040	Battery Positive Voltage	I	—

K40D Driver Seat Adjuster Memory Module X2 (A45)

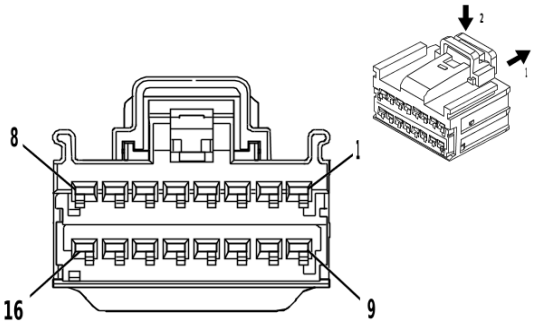

4332214

Connector Part Information

Harness Type: Front Seat Wiring Harness - Driver
OEM Connector: 15512506
Service Connector: Service by Harness - See Part Catalog
Description: 16-Way F 1.5 OCS Series(BK)

Terminal Part Information

Terminal Type ID	Terminated Lead	Diagnostic Test Probe	Terminal Removal Tool
I	Not required	J-35616-14 (GN)	No Tool Required

K40D Driver Seat Adjuster Memory Module X2 (A45)

Pin	Size	Color	Circuit	Function	Terminal Type ID	Option
1	1.5	YE / BU	285	Driver Seat Horizontal Motor Forward Control	I	—
2	—	—	—	Not Occupied	—	—
3	1.5	GN / YE	276	Driver Seat Recline Motor Forward Control	I	—
4 - 5	—	—	—	Not Occupied	—	—
6	1.5	BU / VT	287	Driver Seat Front Vertical Motor Down Control	I	—
7	1.5	YE	282	Driver Seat Rear Vertical Motor Up Control	I	—
8	—	—	—	Not Occupied	—	—
9	1.5	BU / YE	277	Driver Seat Recline Motor Rearward Control	I	—
10	—	—	—	Not Occupied	—	—
11	1.5	GY / GN	284	Driver Seat Horizontal Motor Rearward Control	I	—
12	—	—	—	Not Occupied	—	—
13	1.5	GY / BU	283	Driver Seat Rear Vertical Motor Down Control	I	—
14 - 15	—	—	—	Not Occupied	—	—
16	1.5	GN / BN	286	Driver Seat Front Vertical Motor Up Control	I	—

K40D Driver Seat Adjuster Memory Module X3 (A45)

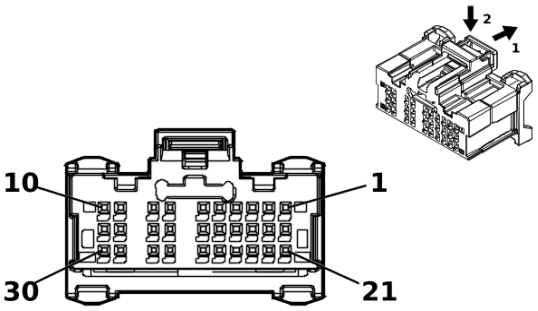

5202284

Connector Part Information

Harness Type: Front Seat Wiring Harness - Driver
OEM Connector: 2309644-1
Service Connector: Service by Harness - See Part Catalog
Description: 30-Way F 0.5 MQS Series(BK)

Terminal Part Information

Terminal Type ID	Terminated Lead	Diagnostic Test Probe	Terminal Removal Tool
I	Not required	EL-35616-58 (BK)	No Tool Required

K40D Driver Seat Adjuster Memory Module X3 (A45)

Pin	Size	Color	Circuit	Function	Terminal Type ID	Option
1	—	—	—	Not Occupied	—	—
2	0.35	BU / GN	614	Seat Memory Switch Set Signal	I	—
3 - 4	—	—	—	Not Occupied	—	—
5	0.35	BN	3038	Driver Seat Right Rear Haptic Movement Motor Control	I	—
6	0.35	YE / BN	3037	Driver Seat Left Rear Haptic Movement Motor Control	I	—
7	—	—	—	Not Occupied	—	—
8	0.35	GN / WH	7530	Driver Seat Adjuster Memory Module LIN Bus 1	I	—
9	0.35	WH	4100	AUTOSAR CAN Bus [-] 4 Serial Data	I	—
10	0.35	BU / VT	4101	AUTOSAR CAN Bus [+] 4 Serial Data	I	—
11 - 15	—	—	—	Not Occupied	—	—
16	0.35	WH	615	Seat Memory Switch Signal 1	I	—
17	—	—	—	Not Occupied	—	—
18	0.35	GN / GY	3758	Driver Seat Adjuster Memory Module LIN Bus 2	I	—
19	0.35	WH	4100	AUTOSAR CAN Bus [-] 4 Serial Data	I	—
20	0.35	BU / VT	4101	AUTOSAR CAN Bus [+] 4 Serial Data	I	—
21 - 30	—	—	—	Not Occupied	—	—

K40P Passenger Seat Adjuster Memory Module X1 (A45/AUN)

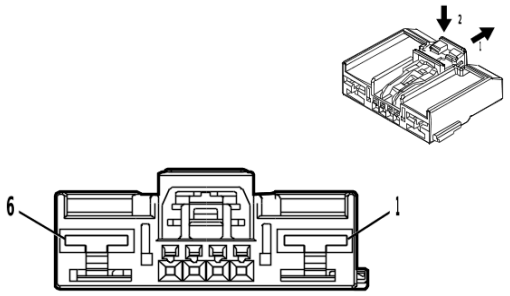

4650258

Connector Part Information

Harness Type: Front Seat Wiring Harness - Passenger
OEM Connector: 7289-7139-30
Service Connector: Service by Harness - See Part Catalog
Description: 6-Way F 0.64, 6.3 Series(BK)

Terminal Part Information

Terminal Type ID	Terminated Lead	Diagnostic Test Probe	Terminal Removal Tool
I	Not required	J-35616-42 (RD)	No Tool Required
II	Not required	J-35616-64B (L-BU)	No Tool Required

K40P Passenger Seat Adjuster Memory Module X1 (A45/AUN)

Pin	Size	Color	Circuit	Function	Terminal Type ID	Option
1	2.5	BK	1350	Ground	I	—
2	—	—	—	Not Occupied	—	—
3	0.5	RD / BN	2240	Battery Positive Voltage	II	—
4 - 5	—	—	—	Not Occupied	—	—
6	2.5	RD / YE	7440	Battery Positive Voltage	I	—

K40P Passenger Seat Adjuster Memory Module X2 (AVU+(AHH/AKE))

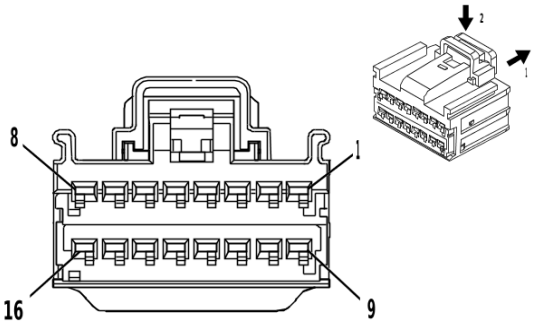

4332214

Connector Part Information

Harness Type: Front Seat Wiring Harness - Passenger
OEM Connector: 15512506
Service Connector: Service by Harness - See Part Catalog
Description: 16-Way F 1.5 OCS Series(BK)

Terminal Part Information

Terminal Type ID	Terminated Lead	Diagnostic Test Probe	Terminal Removal Tool
I	Not required	J-35616-14 (GN)	No Tool Required

K40P Passenger Seat Adjuster Memory Module X2 (AVU+(AHH/AKE))

Pin	Size	Color	Circuit	Function	Terminal Type ID	Option
1	1.5	YE / WH	296	Passenger Seat Horizontal Motor Forward Control	I	—
2	—	—	—	Not Occupied	—	—
3	1.5	GN	76	Passenger Seat Recline Motor Forward Control	I	—
4 - 5	—	—	—	Not Occupied	—	—
6	1.5	GN / BU	298	Passenger Seat Front Vertical Motor Down Control	I	—
7	1.5	GN / WH	288	Passenger Seat Rear Vertical Motor Up Control	I	—
8	—	—	—	Not Occupied	—	—
9	1.5	BU / BN	77	Passenger Seat Recline Motor Rearward Control	I	—
10	—	—	—	Not Occupied	—	—
11	1.5	YE / BU	290	Passenger Seat Horizontal Motor Rearward Control	I	—
12	—	—	—	Not Occupied	—	—
13	1.5	BU / WH	289	Passenger Seat Rear Vertical Motor Down Control	I	—
14 - 15	—	—	—	Not Occupied	—	—
16	1.5	GN / VT	297	Passenger Seat Front Vertical Motor Up Control	I	—

K40P Passenger Seat Adjuster Memory Module X3 (AVU+(AHH/AKE))

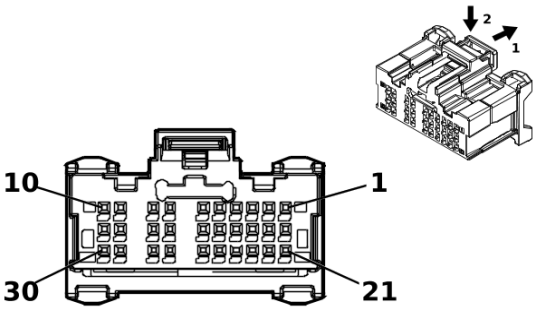

5202284

Connector Part Information

Harness Type: Front Seat Wiring Harness - Passenger
OEM Connector: 2309644-1
Service Connector: Service by Harness - See Part Catalog
Description: 30-Way F 0.5 MQS Series(BK)

Terminal Part Information

Terminal Type ID	Terminated Lead	Diagnostic Test Probe	Terminal Removal Tool
I	Not required	EL-35616-58 (BK)	No Tool Required

K40P Passenger Seat Adjuster Memory Module X3 (AVU+(AHH/AKE))

Pin	Size	Color	Circuit	Function	Terminal Type ID	Option
1 - 8	—	—	—	Not Occupied	—	—
9	0.35	WH	4100	AUTOSAR CAN Bus [-] 4 Serial Data	I	—
10	0.35	BU / VT	4101	AUTOSAR CAN Bus [+] 4 Serial Data	I	—
11 - 17	—	—	—	Not Occupied	—	—
18	0.35	GN / YE	4116	Passenger Seat Adjuster Memory Module LIN Bus 2	I	—
19	0.35	WH	4100	AUTOSAR CAN Bus [-] 4 Serial Data	I	—
20	0.35	BU / VT	4101	AUTOSAR CAN Bus [+] 4 Serial Data	I	—
21	—	—	—	Not Occupied	—	—
22	0.35	BN / VT	2452	Seat Memory Module Configuration 2	I	—
23	0.35	BN / VT	2452	Seat Memory Module Configuration 2	I	—
24 - 30	—	—	—	Not Occupied	—	—

K43 Power Steering Control Module X1

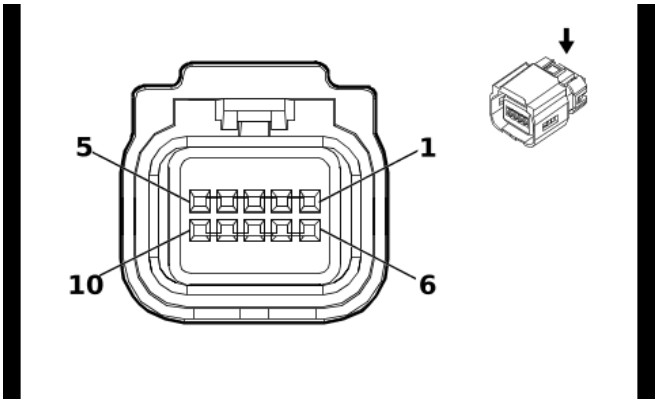

5924496

Connector Part Information

Harness Type: Power Steering Wiring Harness Extension Harness
OEM Connector: 13529266
Service Connector: Service by Harness - See Part Catalog
Description: 10-Way F 0.64 Kaizen Series, Sealed(GN)

Terminal Part Information

Terminal Type ID	Terminated Lead	Diagnostic Test Probe	Terminal Removal Tool
I	Not required	J-35616-64B (L-BU)	No Tool Required

K43 Power Steering Control Module X1

Pin	Size	Color	Circuit	Function	Terminal Type ID	Option
1 - 6	—	—	—	Not Occupied	—	—
7	0.5	WH / BU	4987	AUTOSAR CAN Bus [+] 1 Serial Data	I	—
8	0.5	BU / WH	4986	AUTOSAR CAN Bus [-] 1 Serial Data	I	—
9 - 10	—	—	—	Not Occupied	—	—

K43 Power Steering Control Module X2

—

Connector Part Information

Harness Type: Power Steering Control Module Wiring Harness
OEM Connector: 13598847
Service Connector: Service by Harness - See Part Catalog
Description: 2-Way

Terminal Part Information

Terminal Type ID	Terminated Lead	Diagnostic Test Probe	Terminal Removal Tool
I	Not required	No Tool Required	No Tool Required

K43 Power Steering Control Module X2

Pin	Size	Color	Circuit	Function	Terminal Type ID	Option
1	20	RD / VT	3542	Battery Positive Voltage	I	—
2	20	BK	350	Ground	I	—

K43 Power Steering Control Module X3

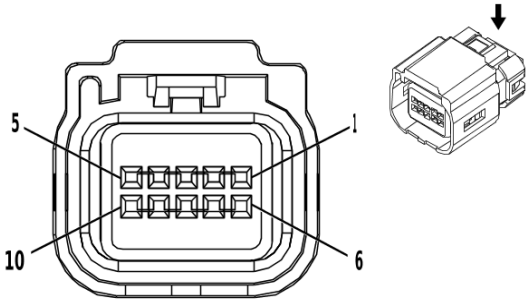

3608468

Connector Part Information

Harness Type: Power Steering Control Module Wiring Harness - Shaft Sensor
OEM Connector: 13587226
Service Connector: Service by Harness - See Part Catalog
Description: 10-Way F 0.64 Kaizen Series, Sealed(BN)

Terminal Part Information

Terminal Type ID	Terminated Lead	Diagnostic Test Probe	Terminal Removal Tool
I	Not required	No Tool Required	No Tool Required

K43 Power Steering Control Module X3

Pin	Size	Color	Circuit	Function	Terminal Type ID	Option
1	0.5	BU	8367	Handwheel Channel A Torque Pressure Sensor 1 SENT Signal	I	—
2	0.5	RD	8366	Handwheel Channel A High Reference	I	—
3	0.5	BK	8370	Handwheel Channel A Low Reference	I	—
4	0.5	WH / RD	8371	Handwheel Channel B High Reference	I	—
5	0.5	WH / BU	8372	Handwheel Channel B Torque Pressure Sensor 1 SENT Signal	I	—
6	0.5	VT	8368	Handwheel Channel A Torque Pressure Sensor 2 SENT Signal	I	—
7	0.5	OG	8369	Handwheel Channel A Angle Position Sensor SENT Signal	I	—
8	0.5	GY	8375	Handwheel Channel B Low Reference	I	—
9	0.5	YE	8374	Handwheel Channel B Angle Position Sensor SENT Signal	I	—
10	0.5	GN	8373	Handwheel Channel B Torque Pressure Sensor 2 SENT Signal	I	—

K56 Serial Data Gateway Module X1

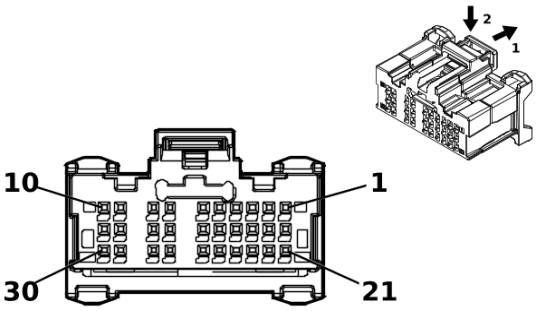

5202284

Connector Part Information

Harness Type: Instrument Panel Wiring Harness
OEM Connector: 35085331
Service Connector: 84766507
Description: 30-Way F 0.5 MQS Series(BK)

Terminal Part Information

Terminal Type ID	Terminated Lead	Diagnostic Test Probe	Terminal Removal Tool
I	19370262	EL-35616-58 (BK)	EL-38125-58

K56 Serial Data Gateway Module X1

Pin	Size	Color	Circuit	Function	Terminal Type ID	Option
1	0.35	RD / BN	4940	Battery Positive Voltage	I	—
2	0.35	BU / GY	4105	AUTOSAR CAN Bus [+] 8 Serial Data	I	—
3	0.35	WH / GY	4104	AUTOSAR CAN Bus [-] 8 Serial Data	I	—
4	0.35	BK / WH	851	Signal Ground	I	—
5	0.35	BU	4987	AUTOSAR CAN Bus [+] 1 Serial Data	I	—
6	0.35	WH	4986	AUTOSAR CAN Bus [-] 1 Serial Data	I	—
7	0.35	WH	4100	AUTOSAR CAN Bus [-] 4 Serial Data	I	—
8	0.35	BU / VT	4101	AUTOSAR CAN Bus [+] 4 Serial Data	I	—
9	0.35	WH	4976	AUTOSAR CAN Bus [-] 3 Serial Data	I	—
10	0.35	BU / BK	4977	AUTOSAR CAN Bus [+] 3 Serial Data	I	—
11 - 12	—	—	—	Not Occupied	—	—
13	0.35	WH / GY	4104	AUTOSAR CAN Bus [-] 8 Serial Data	I	—
14	0.35	BU / GY	4105	AUTOSAR CAN Bus [+] 8 Serial Data	I	—
15	0.35	BU	4987	AUTOSAR CAN Bus [+] 1 Serial Data	I	—
16	0.35	WH	4986	AUTOSAR CAN Bus [-] 1 Serial Data	I	—
17	0.35	WH	4978	AUTOSAR CAN Bus [-] 2 Serial Data	I	—
18	0.35	BU / YE	4979	AUTOSAR CAN Bus [+] 2 Serial Data	I	—
19	0.35	BU / YE	4984	AUTOSAR CAN Bus [-] 5 Serial Data	I	—
20	0.35	BU / WH	4985	AUTOSAR CAN Bus [+] 5 Serial Data	I	—
21	0.35	GN	7209	Ethernet Bus 3 [+]	I	—
22	0.35	BU	7208	Ethernet Bus 3 [-]	I	—
23 - 24	—	—	—	Not Occupied	—	—

K56 Serial Data Gateway Module X1 (cont'd)

Pin	Size	Color	Circuit	Function	Terminal Type ID	Option
25	0.35	BU	4987	AUTOSAR CAN Bus [+] 1 Serial Data	I	—
26	0.35	WH	4986	AUTOSAR CAN Bus [-] 1 Serial Data	I	—
27	0.35	WH	4978	AUTOSAR CAN Bus [-] 2 Serial Data	I	—
28	0.35	BU / YE	4979	AUTOSAR CAN Bus [+] 2 Serial Data	I	—
29	0.35	BU / YE	4984	AUTOSAR CAN Bus [-] 5 Serial Data	I	—
30	0.35	BU / WH	4985	AUTOSAR CAN Bus [+] 5 Serial Data	I	—

K56 Serial Data Gateway Module X2

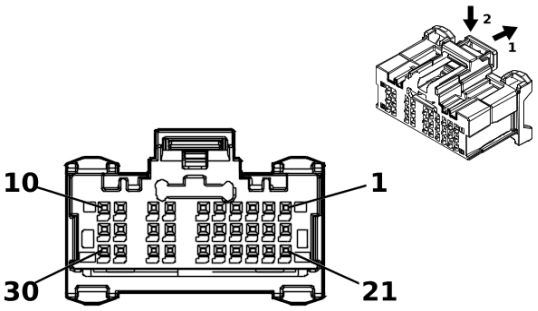

5203942

Connector Part Information

Harness Type: Instrument Panel Wiring Harness
OEM Connector: 35094158
Service Connector: 84766509
Description: 30-Way F 0.5 MQS Series(BK with GY Terminal Position Assurance)

Terminal Part Information

Terminal Type ID	Terminated Lead	Diagnostic Test Probe	Terminal Removal Tool
I	19370262	EL-35616-58 (BK)	EL-38125-58

K56 Serial Data Gateway Module X2

Pin	Size	Color	Circuit	Function	Terminal Type ID	Option
1 - 4	—	—	—	Not Occupied	—	—
5	0.35	BK / GY	3559	Passive Start Switch 2 Low Reference	I	—
6	—	—	—	Not Occupied	—	—
7	0.35	GN / VT	5199	Run/Crank Relay Coil Control	I	—
8	—	—	—	Not Occupied	—	—
9	0.35	BU	4973	Ethernet Bus 1R [+]	I	—
10	0.35	YE	4972	Ethernet Bus 1R [-]	I	—
11	0.35	WH	4100	AUTOSAR CAN Bus [-] 4 Serial Data	I	—
12	0.35	BU / VT	4101	AUTOSAR CAN Bus [+] 4 Serial Data	I	—
13	0.35	BU / BN	4983	AUTOSAR CAN Bus [+] 7 Serial Data	I	—
14	0.35	WH	4982	AUTOSAR CAN Bus [-] 7 Serial Data	I	—
15	0.35	GN / BK	3558	Passive Start Switch Signal 2	I	—
16	0.35	WH	4980	AUTOSAR CAN Bus [-] 6 Serial Data	I	—
17	0.35	GN	2578	Private Serial Data Presentation CAN Bus [+] 1 Serial Data	I	—
18	0.35	BN	2577	Private Serial Data Presentation CAN Bus [-] 1 Serial Data	I	—
19	0.35	WH	7207	Ethernet Bus 1 Enable Signal	I	—
20 - 22	—	—	—	Not Occupied	—	—
23	0.35	BU / WH	4985	AUTOSAR CAN Bus [+] 5 Serial Data	I	—
24	0.35	BU / YE	4984	AUTOSAR CAN Bus [-] 5 Serial Data	I	—
25	—	—	—	Not Occupied	—	—
26	0.35	YE	4981	AUTOSAR CAN Bus [+] 6 Serial Data	I	—

K56 Serial Data Gateway Module X2 (cont'd)

Pin	Size	Color	Circuit	Function	Terminal Type ID	Option
27	0.35	VT	2580	Private Serial Data Presentation CAN Bus [+] 2 Serial Data	I	—
28	0.35	GY	2579	Private Serial Data Presentation CAN Bus [-] 2 Serial Data	I	—
29	0.35	WH	4975	Ethernet Bus 1T [+]	I	—
30	0.35	GN	4974	Ethernet Bus 1T [-]	I	—

K56 Serial Data Gateway Module X3

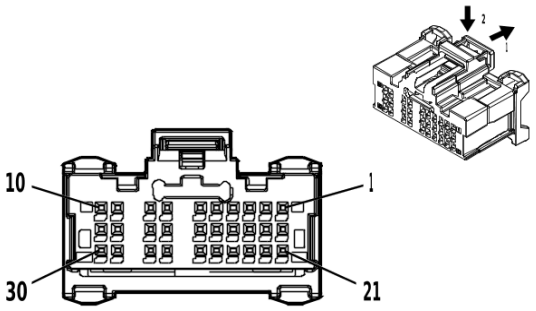

4900333

Connector Part Information

Harness Type: Instrument Panel Wiring Harness
OEM Connector: 35077574
Service Connector: 13519319
Description: 30-Way F 0.5 MQS Series(BK with GY Terminal Position Assurance)

Terminal Part Information

Terminal Type ID	Terminated Lead	Diagnostic Test Probe	Terminal Removal Tool
I	19370262	EL-35616-58 (BK)	EL-38125-58

K56 Serial Data Gateway Module X3

Pin	Size	Color	Circuit	Function	Terminal Type ID	Option
1 - 6	—	—	—	Not Occupied	—	—
7	0.35 0.35	YE BN	4758 7211	Ethernet Bus 2 [+] Ethernet Bus 4 [+]	I I	(IOK/ IOS) + (IOS/ IOK) (IOR/ UDA/ IOR/ UE1) + (IOR)
8	0.35 0.35	BU GY	4757 7210	Ethernet Bus 2 [-] Ethernet Bus 4 [-]	I I	(IOK/ IOS) + (IOS/ IOK) (IOR/ UDA/ IOR/ UE1) + (IOR)
9	0.35	YE	4758	Ethernet Bus 2 [+]	I	—
10	0.35	BU	4757	Ethernet Bus 2 [-]	I	—
11 - 26	—	—	—	Not Occupied	—	—
27	0.35	GN	7217	Ethernet Bus 7 [+]	I	—
28	0.35	WH	7216	Ethernet Bus 7 [-]	I	—
29 - 30	—	—	—	Not Occupied	—	—

K60 Column Lock Module (N06)

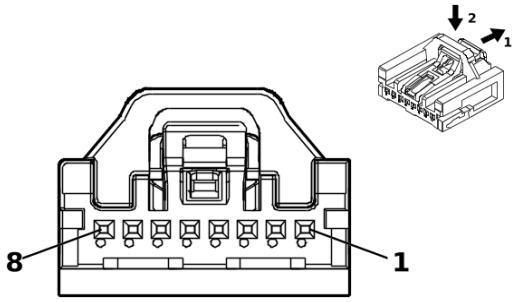

5200269

Connector Part Information

Harness Type: Instrument Panel Wiring Harness
OEM Connector: 35068228
Service Connector: 84769201
Description: 8-Way F Mini 50 Series(BK)

Terminal Part Information

Terminal Type ID	Terminated Lead	Diagnostic Test Probe	Terminal Removal Tool
I	Not required	EL-35616-58 (BK)	No Tool Required

K60 Column Lock Module (N06)

Pin	Size	Color	Circuit	Function	Terminal Type ID	Option
1	0.35	RD / BN	4940	Battery Positive Voltage	I	—
2	—	—	—	Not Occupied	—	—
3	0.35	BK / WH	851	Signal Ground	I	—
4	0.35	BU	4987	AUTOSAR CAN Bus [+] 1 Serial Data	I	—
5	0.35	BU	4987	AUTOSAR CAN Bus [+] 1 Serial Data	I	—
6	0.35	WH	4986	AUTOSAR CAN Bus [-] 1 Serial Data	I	—
7	0.35	WH	4986	AUTOSAR CAN Bus [-] 1 Serial Data	I	—
8	0.35	BU / VT	807	Ignition Off/Accessory Ignition Voltage	I	—

K61 Sunroof Control Module (CF5)

—

Connector Part Information

Harness Type: Sunroof Wiring Harness
OEM Connector: 15512475
Service Connector: Service by Harness - See Part Catalog
Description: 10-Way F

Terminal Part Information

Terminal Type ID	Terminated Lead	Diagnostic Test Probe	Terminal Removal Tool
I	Not required	Not Available	No Tool Required

K61 Sunroof Control Module (CF5)

Pin	Size	Color	Circuit	Function	Terminal Type ID	Option
6	0.35	GN / WH	2854	Body Control Module LIN Bus 8	I	—
8	1.5	RD / BN	1050	Ground	I	—
10	1.5	BK	4540	Battery Positive Voltage	I	—

K67 Trailer Brake Control Module (JL1)

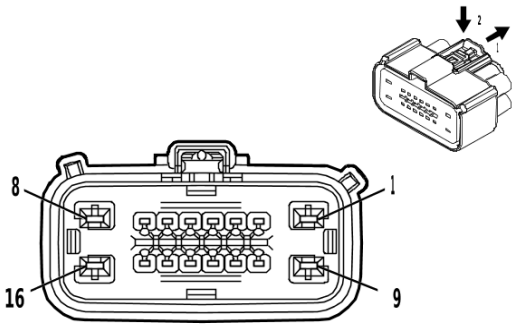

4624589

Connector Part Information

Harness Type: Chassis Wiring Harness
OEM Connector: 33297568
Service Connector: 13599889
Description: 16-Way F 1.5, 2.8 MX Series, Sealed(GY)

Terminal Part Information

Terminal Type ID	Terminated Lead	Diagnostic Test Probe	Terminal Removal Tool
I	13576377	J-35616-35 (VT)	J-38125-12A
II	85528055	J-35616-2A (GY)	J-38125-217

K67 Trailer Brake Control Module (JL1)

Pin	Size	Color	Circuit	Function	Terminal Type ID	Option
1	2.5	RD / BN	3640	Battery Positive Voltage	I	—
2	0.5	WH / BK	2223	Trailer Brake Apply Signal	II	—
3 - 4	—	—	—	Not Occupied	—	—
5	0.5	YE / BK	2224	Trailer Brake Enable Signal	II	—
6 - 7	—	—	—	Not Occupied	—	—
8	2.5	BU	47	Trailer Auxiliary Control	I	—
9	2.5	BK	1850	Ground	I	—
10 - 11	—	—	—	Not Occupied	—	—
12	0.5	GN / BU	2733	Brake System Control Module LIN Bus 2	II	—
13 - 16	—	—	—	Not Occupied	—	—

K68 Trailer Lamp Control Module (UET)

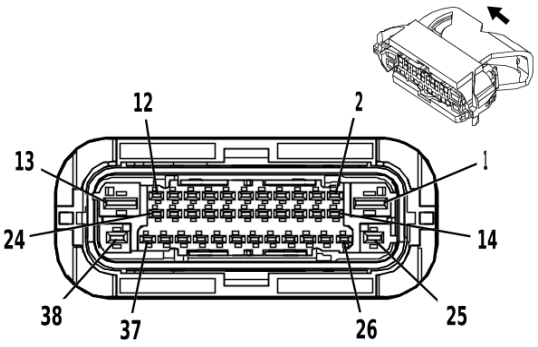

5141918

Connector Part Information

Harness Type: Chassis Wiring Harness
OEM Connector: 35497871
Service Connector: 19371190
Description: 38-Way F 1.5, 2.8, 4.8 MCP Series, Sealed(BK with BN Inner Connector)

Terminal Part Information

Terminal Type ID	Terminated Lead	Diagnostic Test Probe	Terminal Removal Tool
I	19368624	J-35616-35 (VT)	J-38125-212
II	19369235	J-35616-14 (GN)	J-38125-212
III	85158596	J-35616-40 (BU)	J-38125-212

K68 Trailer Lamp Control Module (UET)

Pin	Size	Color	Circuit	Function	Terminal Type ID	Option
1	2.5	RD / VT	5640	Battery Positive Voltage	III	—
2	1	YE	1618	Left Rear Trailer Stop/Turn Lamp Control	II	—
3	1	GN	1619	Right Rear Trailer Stop/Turn Lamp Control	II	—
4 - 6	—	—	—	Not Occupied	—	—
7	1	GY	5189	Trailer Backup Lamp Control	II	—
8 - 9	—	—	—	Not Occupied	—	—
10	0.35	VT / WH	639	Run/Crank Ignition 1 Voltage	II	—
11	0.5	BN / YE	820	Center High Mounted Stop Lamp Supply Voltage	II	—
12	—	—	—	Not Occupied	—	—
13	2.5	BK	1750	Ground	III	—
14 - 24	—	—	—	Not Occupied	—	—
25	1	BN	2109	Trailer Park Lamp Control	I	—
26	—	—	—	Not Occupied	—	—
27	0.5	BU / VT	4101	AUTOSAR CAN Bus [+] 4 Serial Data	II	—
28	0.5	WH	4100	AUTOSAR CAN Bus [-] 4 Serial Data	II	—
29	0.5	BU / VT	4101	AUTOSAR CAN Bus [+] 4 Serial Data	II	—
30	0.5	WH	4100	AUTOSAR CAN Bus [-] 4 Serial Data	II	—
31 - 37	—	—	—	Not Occupied	—	—
38	2.5	RD / YE	5840	Battery Positive Voltage	I	—

K69 Transfer Case Control Module (NP0/NQH)

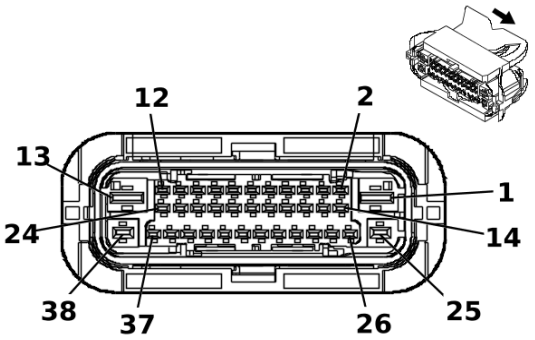

5199340

Connector Part Information

Harness Type: Engine Wiring Harness
OEM Connector: 35497867
Service Connector: 19303771
Description: 38-Way F 1.5, 2.8, 4.8 MCP Series, Sealed(BK with BN Inner Connector)

Terminal Part Information

Terminal Type ID	Terminated Lead	Diagnostic Test Probe	Terminal Removal Tool
I	19368624	J-35616-35 (VT)	J-38125-560A
II	19369235	J-35616-14 (GN)	J-38125-665
III	85158596	J-35616-40 (BU)	J-38125-212

K69 Transfer Case Control Module (NP0/NQH)

Pin	Size	Color	Circuit	Function	Terminal Type ID	Option
1	3	GN / RD	6042	Cruise Control Switch 5V Reference	III	—
2	—	—	—	Not Occupied	—	—
3	0.5	BU / YE	4979	AUTOSAR CAN Bus [+] 2 Serial Data	II	—
4	0.5	WH	4978	AUTOSAR CAN Bus [-] 2 Serial Data	II	—
5	0.5	WH / GN	7479	Rotary Position Sensor Signal	II	—
6	—	—	—	Not Occupied	—	—
7	0.5	YE	7474	Incremental Encoder Direction Signal	II	—
8	—	—	—	Not Occupied	—	—
9	0.5	YE / WH	1695	4WD Locked Range Indicator Control	II	—
10	—	—	—	Not Occupied	—	—
11	0.5	VT / GY	8017	Secondary Axle Motor Relay Control	II	—
12	0.5	GY / BK	1570	Front Axle Actuator Control	II	—
13	4	YE / VT	1553	Transfer Case Motor Counter Clockwise Control	III	—
14	—	—	—	Not Occupied	—	—
15	0.5	BU / YE	4979	AUTOSAR CAN Bus [+] 2 Serial Data	II	—
16	0.5	WH	4978	AUTOSAR CAN Bus [-] 2 Serial Data	II	—
17	—	—	—	Not Occupied	—	—
18	0.5	VT / GN	439	Run/Crank Ignition 1 Voltage	II	—
19	0.5	BU / GY	7473	Incremental Encoder Impulse Signal	II	—
20	0.5	WH / RD	7477	Gear Position Sensor 5V Reference	II	—

K69 Transfer Case Control Module (NP0/NQH) (cont'd)

Pin	Size	Color	Circuit	Function	Terminal Type ID	Option
21 - 23	—	—	—	Not Occupied	—	—
24	0.5	GN	8015	Transfer Case Motor Low Reference	II	—
25	2.5	BK	450	Ground	I	—
26	—	—	—	Not Occupied	—	—
27	0.5	GN	8014	Transfer Case Lock Solenoid Low Reference	II	—
28 - 29	—	—	—	Not Occupied	—	—
30	0.5	YE / BK	7478	Gear Position Sensor Low Reference	II	—
31	0.5	WH / GN	7475	Incremental Encoder Sensor 8V Reference	II	—
32	—	—	—	Not Occupied	—	—
33	0.75	BU	8013	Transfer Case Lock Solenoid Control 2	II	—
34	0.75	YE / BN	1569	Transfer Case Lock Solenoid Valve Control	II	—
35	—	—	—	Not Occupied	—	—
36	0.5	VT	7476	Incremental Encoder Sensor Low Reference	II	—
37	—	—	—	Not Occupied	—	—
38	2.5	YE / GY	1552	Transfer Case Motor Clockwise Control	I	—

K71 Transmission Control Module (L3B)

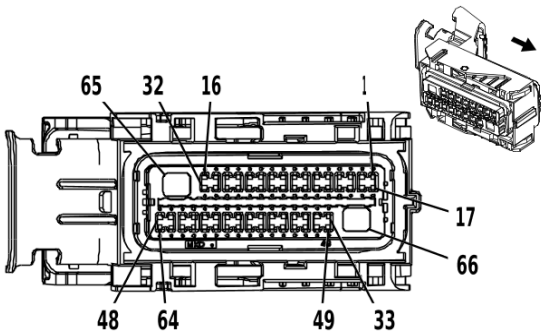

4024881

Connector Part Information

Harness Type: Engine Wiring Harness
OEM Connector: 35309373
Service Connector: 19330900
Description: 66-Way F 0.64, 2.8 Series, Sealed(BK with BK Terminal Position Assurance)

Terminal Part Information

Terminal Type ID	Terminated Lead	Diagnostic Test Probe	Terminal Removal Tool
I	13587518	J-35616-35 (VT)	J-38125-11A
II	19351723	J-35616-64B (L-BU)	J-38125-213

K71 Transmission Control Module (L3B)

Pin	Size	Color	Circuit	Function	Terminal Type ID	Option
1	0.5	WH / BU	4507	Transmission Clutch H Control	II	—
2	0.5	BU	6401	Clutch Solenoid Valve B Control	II	—
3	0.5	GN / WH	1530	Transmission Line Pressure Control Solenoid Valve Control	II	—
4 - 6	—	—	—	Not Occupied	—	—
7	0.5	YE / GN	4170	Transmission Output Shaft Speed Sensor Circuit 9V Reference	II	—
8	0.5	YE / BU	4171	Transmission Input Shaft Speed Sensor Circuit 9V Reference	II	—
9 - 12	—	—	—	Not Occupied	—	—
13	0.5	GN / VT	4510	Transmission Intermediate Speed Signal	II	—
14	0.5	GY / BU	6358	Output Speed Signal	II	—
15	0.5	BK / BU	6253	Transmission Input Speed Sensor Ground	II	—
16	—	—	—	Not Occupied	—	—
17	0.5	WH	4508	Transmission Clutch G Control	II	—
18	0.5	BN	6400	Clutch Solenoid Valve A Control	II	—
19	0.5	GY	6402	Clutch Solenoid Valve C Control	II	—
20	0.5	VT / WH	422	Torque Converter Clutch Solenoid Valve Control	II	—
21	0.5	GN / WH	6380	Torque Converter Clutch Enable Solenoid Valve A Control	II	—
22	0.5	YE / BN	6210	Torque Converter Clutch Enable Solenoid Valve B Control	II	—
23	—	—	—	Not Occupied	—	—

K71 Transmission Control Module (L3B) (cont'd)

Pin	Size	Color	Circuit	Function	Terminal Type ID	Option
24	0.5	WH / GY	4578	Surge Accumulator Solenoid Valve Low Side Control	II	—
25 - 27	—	—	—	Not Occupied	—	—
28	0.5	BK / BN	586	Transmission Fluid Temperature Sensor Low Reference	II	—
29 - 32	—	—	—	Not Occupied	—	—
33	0.5	GN / GY	6387	Transmission High Side Driver 1 Control	II	—
34	—	—	—	Not Occupied	—	—
35	0.5	VT / GN	439	Run/Crank Ignition 1 Voltage	II	—
36	—	—	—	Not Occupied	—	—
37	0.5	BU / YE	4979	AUTOSAR CAN Bus [+] 2 Serial Data	II	—
38	0.5	WH	4978	AUTOSAR CAN Bus [-] 2 Serial Data	II	—
39 - 48	—	—	—	Not Occupied	—	—
49	0.5	GY / BN	6388	Transmission High Side Driver 2 Control	II	—
50 - 52	—	—	—	Not Occupied	—	—
53	0.5	BU / YE	4979	AUTOSAR CAN Bus [+] 2 Serial Data	II	—
54	0.5	WH	4978	AUTOSAR CAN Bus [-] 2 Serial Data	II	—
55 - 62	—	—	—	Not Occupied	—	—
63	0.5	BN / WH	585	Transmission Fluid Temperature Sensor Signal	II	—
64	0.5	BU / WH	3338	Transmission Internal Mode Switch Mode Control X	II	—
65	1.5	BK / WH	251	Signal Ground	I	—
66	1.5	RD / GN	1840	Battery Positive Voltage	I	—

K71 Transmission Control Module (L84/L87)

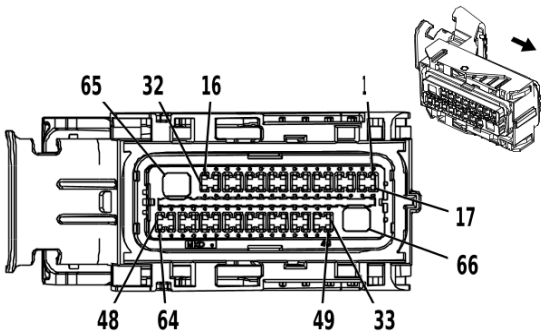

4024881

Connector Part Information

Harness Type: Engine Wiring Harness
OEM Connector: 33344977
Service Connector: 19330900
Description: 66-Way F 0.64, 2.8 Series, Sealed(BK with BK Terminal Position Assurance)

Terminal Part Information

Terminal Type ID	Terminated Lead	Diagnostic Test Probe	Terminal Removal Tool
I	13587518	J-35616-35 (VT)	J-38125-11A
II	19351723	J-35616-64B (L-BU)	J-38125-213

K71 Transmission Control Module (L84/L87)

Pin	Size	Color	Circuit	Function	Terminal Type ID	Option
1	0.5 0.5	VT / WH WH / BU	422 4507	Torque Converter Clutch Solenoid Valve Control Transmission Clutch H Control	II II	(MQC/ MHS) (MQE/ M5X)
2	0.5 0.5	BU GY / GN	6401 6403	Clutch Solenoid Valve B Control Clutch Solenoid Valve D Control	II II	(MQC/ MHS) (MQE/ M5X)
3	0.5 0.5	WH / BU GN / WH	4507 1530	Transmission Clutch H Control Transmission Line Pressure Control Solenoid Valve Control	II II	(MQC/ MHS) (MQE/ M5X)
4	0.5	WH	4508	Transmission Clutch G Control	II	—
5 - 6	—	—	—	Not Occupied	—	—
7	0.5	YE / GN	4170	Transmission Output Shaft Speed Sensor Circuit 9V Reference	II	—
8	0.5	YE / BU	4171	Transmission Input Shaft Speed Sensor Circuit 9V Reference	II	—
9 - 11	—	—	—	Not Occupied	—	—
12	0.5	GN / YE	6353	Input Speed Signal	II	—
13	0.5	GN / VT	4510	Transmission Intermediate Speed Signal	II	—
14	0.5	GY / BU	6358	Output Speed Signal	II	—
15	0.5 0.5	BN / WH BK / BU	6254 6253	Transmission Input Speed Sensor Signal Transmission Input Speed Sensor Ground	II II	(MQC/ MHS) (MQE/ M5X)
16	—	—	—	Not Occupied	—	—
17	0.5 0.5	GN / WH WH	1530 4508	Transmission Line Pressure Control Solenoid Valve Control Transmission Clutch G Control	II II	(MQC/ MHS) (MQE/ M5X)

K71 Transmission Control Module (L84/L87) (cont'd)

Pin	Size	Color	Circuit	Function	Terminal Type ID	Option
18	0.5 0.5	YE / BN BN	6404 6400	Clutch Solenoid Valve E Control Clutch Solenoid Valve A Control	II II	(MQC/ MHS) (MQE/ M5X)
19	0.5	GY	6402	Clutch Solenoid Valve C Control	II	—
20	0.5 0.5	VT VT / WH	4509 422	Transmission Clutch F Control Torque Converter Clutch Solenoid Valve Control	II II	(MQC/ MHS) (MQE/ M5X)
21	0.5 0.5	WH / YE GN / WH	2159 6380	Park Inhibit Solenoid Assembly Control Torque Converter Clutch Enable Solenoid Valve A Control	II II	(MQC/ MHS) (MQE/ M5X)
22	0.5 0.5	GN / BK YE / BN	7819 6210	Default Disable Solenoid Control Torque Converter Clutch Enable Solenoid Valve B Control	II II	(MQC/ MHS) (MQE/ M5X)
23	—	—	—	Not Occupied	—	—
24	0.5 0.5	GN / WH WH / GY	2968 4578	Transmission Auxiliary Fluid Pump Control Surge Accumulator Solenoid Valve Low Side Control	II II	(MQC/ MHS) (MQE/ M5X)
25 - 27	—	—	—	Not Occupied	—	—
28	0.5	BK / BN	586	Transmission Fluid Temperature Sensor Low Reference	II	—
29 - 30	—	—	—	Not Occupied	—	—
31	0.5	GN / VT	4621	Engine Control Module LIN Bus 1	II	—
32	—	—	—	Not Occupied	—	—
33	0.5	GN / GY	6387	Transmission High Side Driver 1 Control	II	—
34	—	—	—	Not Occupied	—	—
35	0.5	VT / GN	439	Run/Crank Ignition 1 Voltage	II	—
36	—	—	—	Not Occupied	—	—
37	0.5	BU / YE	4979	AUTOSAR CAN Bus [+] 2 Serial Data	II	—
38	0.5	WH	4978	AUTOSAR CAN Bus [-] 2 Serial Data	II	—
39 - 48	—	—	—	Not Occupied	—	—
49	0.5	GY / BN	6388	Transmission High Side Driver 2 Control	II	—
50 - 52	—	—	—	Not Occupied	—	—
53	0.5	BU / YE	4979	AUTOSAR CAN Bus [+] 2 Serial Data	II	—
54	0.5	WH	4978	AUTOSAR CAN Bus [-] 2 Serial Data	II	—
55 - 58	—	—	—	Not Occupied	—	—
59	0.5	VT / WH	6319	Electronic Transmission Range Select Out of Park Switch 2 Signal	II	—
60	—	—	—	Not Occupied	—	—
61	0.5	WH / YE	6317	Electronic Transmission Range Select Out of Park Switch Signal	II	—
62	0.5	BN	3706	Electronic Transmission Range Select Switch Analog Signal 1	II	—
63	0.5	BN / WH	585	Transmission Fluid Temperature Sensor Signal	II	—
64	0.5	BU / WH	3338	Transmission Internal Mode Switch Mode Control X	II	—
65	1.5	BK / WH	251	Signal Ground	I	—
66	1.5	RD / GN	1840	Battery Positive Voltage	I	—

K71 Transmission Control Module (LM2)

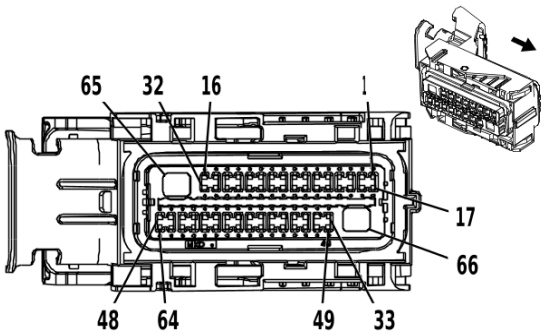

4024881

Connector Part Information

Harness Type: Engine Wiring Harness
OEM Connector: 33344977
Service Connector: 19330900
Description: 66-Way F 0.64, 2.8 Series, Sealed(BK with BK Terminal Position Assurance)

Terminal Part Information

Terminal Type ID	Terminated Lead	Diagnostic Test Probe	Terminal Removal Tool
I	13587518	J-35616-35 (VT)	J-38125-11A
II	19351723	J-35616-64B (L-BU)	J-38125-213

K71 Transmission Control Module (LM2)

Pin	Size	Color	Circuit	Function	Terminal Type ID	Option
1	0.5	VT / WH	422	Torque Converter Clutch Solenoid Valve Control	II	—
2	0.5	GY / GN	6403	Clutch Solenoid Valve D Control	II	—
3	0.5	WH / BU	4507	Transmission Clutch H Control	II	—
4	0.5	WH	4508	Transmission Clutch G Control	II	—
5 - 6	—	—	—	Not Occupied	—	—
7	0.5	YE / GN	4170	Transmission Output Shaft Speed Sensor Circuit 9V Reference	II	—
8	0.5	YE / BU	4171	Transmission Input Shaft Speed Sensor Circuit 9V Reference	II	—
9 - 11	—	—	—	Not Occupied	—	—
12	0.5	GN / YE	6353	Input Speed Signal	II	—
13	0.5	GN / VT	4510	Transmission Intermediate Speed Signal	II	—
14	0.5	GY / BU	6358	Output Speed Signal	II	—
15	0.5	BN / WH	6254	Transmission Input Speed Sensor Signal	II	—
16	—	—	—	Not Occupied	—	—
17	0.5	GN / WH	1530	Transmission Line Pressure Control Solenoid Valve Control	II	—
18	0.5	YE / BN	6404	Clutch Solenoid Valve E Control	II	—
19	0.5	GY	6402	Clutch Solenoid Valve C Control	II	—
20	0.5	VT	4509	Transmission Clutch F Control	II	—
21	0.5	WH / YE	2159	Park Inhibit Solenoid Assembly Control	II	—
22	0.5	GN / BK	7819	Default Disable Solenoid Control	II	—

K71 Transmission Control Module (LM2) (cont'd)

Pin	Size	Color	Circuit	Function	Terminal Type ID	Option
23	—	—	—	Not Occupied	—	—
24	0.5	GN / WH	2968	Transmission Auxiliary Fluid Pump Control	II	—
25 - 27	—	—	—	Not Occupied	—	—
28	0.5	BK / BN	586	Transmission Fluid Temperature Sensor Low Reference	II	—
29 - 30	—	—	—	Not Occupied	—	—
31	0.5	GN / VT	4621	Engine Control Module LIN Bus 1	II	—
32	—	—	—	Not Occupied	—	—
33	0.5	GN / GY	6387	Transmission High Side Driver 1 Control	II	—
34	—	—	—	Not Occupied	—	—
35	0.5	VT / GN	439	Run/Crank Ignition 1 Voltage	II	—
36	—	—	—	Not Occupied	—	—
37	0.5	BU / YE	4979	AUTOSAR CAN Bus [+] 2 Serial Data	II	—
38	0.5	WH	4978	AUTOSAR CAN Bus [-] 2 Serial Data	II	—
39 - 48	—	—	—	Not Occupied	—	—
49	0.5	GY / BN	6388	Transmission High Side Driver 2 Control	II	—
50 - 52	—	—	—	Not Occupied	—	—
53	0.5	BU / YE	4979	AUTOSAR CAN Bus [+] 2 Serial Data	II	—
54	0.5	WH	4978	AUTOSAR CAN Bus [-] 2 Serial Data	II	—
55 - 58	—	—	—	Not Occupied	—	—
59	0.5	VT / WH	6319	Electronic Transmission Range Select Out of Park Switch 2 Signal	II	—
60	—	—	—	Not Occupied	—	—
61	0.5	WH / YE	6317	Electronic Transmission Range Select Out of Park Switch Signal	II	—
62	0.5	BN	3706	Electronic Transmission Range Select Switch Analog Signal 1	II	—
63	0.5	BN / WH	585	Transmission Fluid Temperature Sensor Signal	II	—
64	0.5	BU / WH	3338	Transmission Internal Mode Switch Mode Control X	II	—
65	1.5	BK / WH	251	Signal Ground	I	—
66	1.5	RD / GN	1840	Battery Positive Voltage	I	—

K73 Telematic Control Module X1

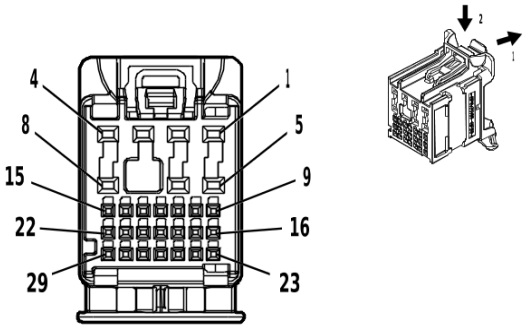

4496253

Connector Part Information

Harness Type: Instrument Panel Wiring Harness
OEM Connector: 35364134
Service Connector: 13534974
Description: 29-Way F 0.5 NANO, 1.2 MCON, stAK50h Series(BK)

Terminal Part Information

Terminal Type ID	Terminated Lead	Diagnostic Test Probe	Terminal Removal Tool
I	19370262	EL-35616-58 (BK)	EL-38125-58
II	84729890	J-35616-12 (BU)	J-38125-553

K73 Telematic Control Module X1

Pin	Size	Color	Circuit	Function	Terminal Type ID	Option
1	0.5	RD / YE	3040	Battery Positive Voltage	II	—
2 - 3	—	—	—	Not Occupied	—	—
4	0.75	BK / WH	1051	Signal Ground	II	—
5	—	—	—	Not Occupied	—	—
6	0.35	GN / BK	2515	Telematics Switch Supply Voltage	II	—
7 - 8	—	—	—	Not Occupied	—	—
9	0.35	BU / YE	4984	AUTOSAR CAN Bus [-] 5 Serial Data	I	—
10	0.35	BU / WH	4985	AUTOSAR CAN Bus [+] 5 Serial Data	I	—
11	0.35	GN / WH	2514	Telematics Switch Signal	I	—
12	—	—	—	Not Occupied	—	—
13	0.35	Bare	1792	Low Reference	I	—
14	0.35	BK / GY	5152	Voice Recognition Audio [-] Control	I	—
15	0.35	GY / YE	5149	Voice Recognition Audio Signal	I	—
16	0.35	BU / YE	4984	AUTOSAR CAN Bus [-] 5 Serial Data	I	—
17	0.35	BU / WH	4985	AUTOSAR CAN Bus [+] 5 Serial Data	I	—
18	—	—	—	Not Occupied	—	—
19	0.35	YE / VT	2516	Telematics Switch Green LED Indicator Control	I	—
20	—	—	—	Not Occupied	—	—
21	0.35	BK / BN	654	Cellular Telephone Microphone Low Reference	I	—
22	0.35	BU	655	Cellular Telephone Microphone Signal	I	—
23 - 25	—	—	—	Not Occupied	—	—

K73 Telematic Control Module X1 (cont'd)

Pin	Size	Color	Circuit	Function	Terminal Type ID	Option
26	0.35	BN / WH	2517	Telematics Switch Red LED Indicator Control	I	—
27	—	—	—	Not Occupied	—	—
28	0.35	BN	7211	Ethernet Bus 4 [+]	I	—
29	0.35	GY	7210	Ethernet Bus 4 [-]	I	—

K73 Telematic Control Module X2

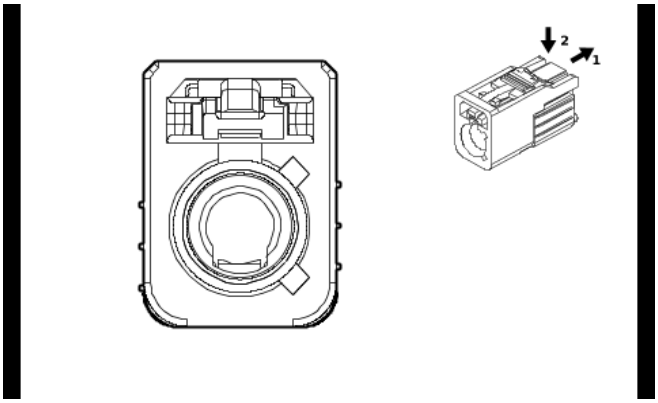

5630760

Connector Part Information

Harness Type: Instrument Panel Wiring Harness COAX
OEM Connector: 33340312
Service Connector: Service by Cable Assembly — See Part Catalog
Description: 1-Way F Coax Type(VT)

Terminal Part Information

Terminal Type ID	Terminated Lead	Diagnostic Test Probe	Terminal Removal Tool
I	Not required	No Tool Required	No Tool Required

K73 Telematic Control Module X2

Pin	Size	Color	Circuit	Function	Terminal Type ID	Option
—	—	Coax Cable	—	(Cell only) Coaxial Antenna Cell Phone Signal	I	—

K73 Telematic Control Module X3

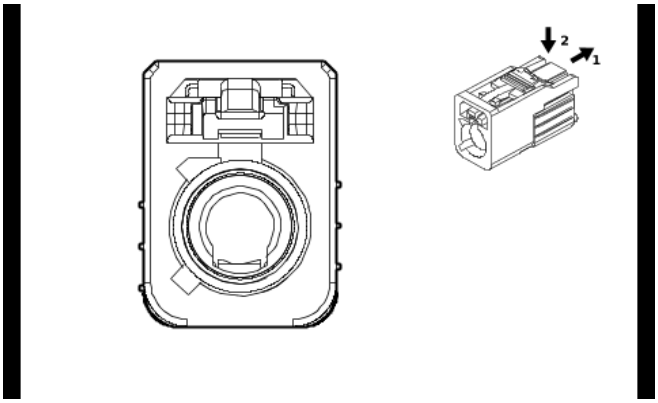

5630785

Connector Part Information

Harness Type: Instrument Panel Wiring Harness COAX
OEM Connector: 33340314
Service Connector: Service by Cable Assembly — See Part Catalog
Description: 1-Way F Coax Type(BN)

Terminal Part Information

Terminal Type ID	Terminated Lead	Diagnostic Test Probe	Terminal Removal Tool
I	Not required	No Tool Required	No Tool Required

K73 Telematic Control Module X3

Pin	Size	Color	Circuit	Function	Terminal Type ID	Option
—	—	Coax Cable	—	(GPS/Cell) Coaxial Antenna Cell/GPS combined Signal	I	—

K77 Remote Function Actuator Module

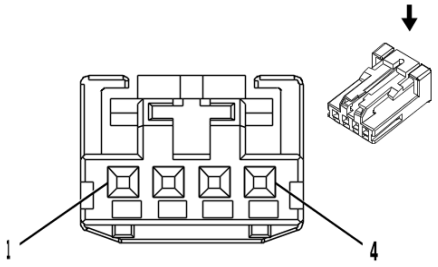

2717162

Connector Part Information

Harness Type: Body Wiring Harness
OEM Connector: 13969166
Service Connector: 19367524
Description: 4-Way F 0.64 Micro-Quadlock Series(BK)

Terminal Part Information

Terminal Type ID	Terminated Lead	Diagnostic Test Probe	Terminal Removal Tool
I	Not required	J-35616-64B (L-BU)	No Tool Required

K77 Remote Function Actuator Module

Pin	Size	Color	Circuit	Function	Terminal Type ID	Option
1	0.5	RD / VT	2640	Battery Positive Voltage	I	—
2	0.35	GN / YE	2862	Body Control Module LIN Bus 16	I	—
3	—	—	—	Not Occupied	—	—
4	0.75	BK / WH	1451	Signal Ground	I	—

K85P Restraints Occupant Classification System Module - Passenger (AL0)

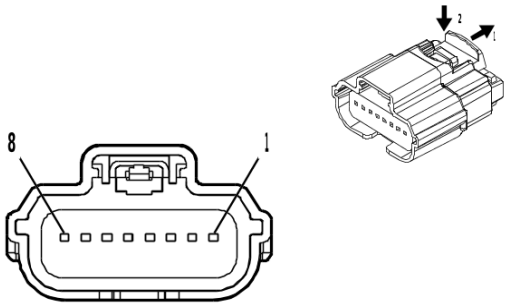

4708234

Connector Part Information

Harness Type: Front Seat Wiring Harness - Passenger
OEM Connector: 31404-9110
Service Connector: Service by Harness - See Part Catalog
Description: 8-Way F 64 Series, Sealed(BK)

Terminal Part Information

Terminal Type ID	Terminated Lead	Diagnostic Test Probe	Terminal Removal Tool
I	Not required	J-35616-64B (L-BU)	No Tool Required

K85P Restraints Occupant Classification System Module - Passenger (AL0)

Pin	Size	Color	Circuit	Function	Terminal Type ID	Option
1	0.5	RD / GN	4440	Battery Positive Voltage	I	—
2	0.5	BU	4987	AUTOSAR CAN Bus [+] 1 Serial Data	I	—
3	0.5	BU	4987	AUTOSAR CAN Bus [+] 1 Serial Data	I	—
4	0.5	WH	4986	AUTOSAR CAN Bus [-] 1 Serial Data	I	—
5	0.5	WH	4986	AUTOSAR CAN Bus [-] 1 Serial Data	I	—
6	0.5	BK / WH	1251	Signal Ground	I	—
7	0.5	OG / BN	3947	Passenger Automatic Locking Retractor Switch Signal	I	—
8	0.5	GY / OG	3946	Passenger Automatic Locking Retractor Switch Low Reference	I	—

K99 Steering Column Control Module X1 (N38)

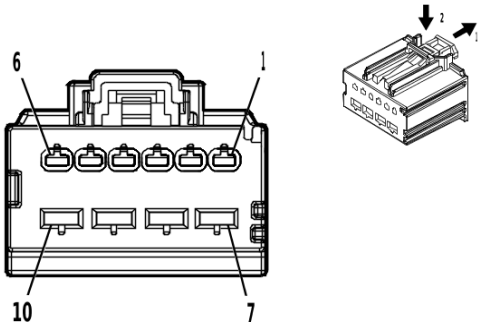

5035058

Connector Part Information

Harness Type: Instrument Panel Wiring Harness
OEM Connector: 35152553
Service Connector: 13525907
Description: 10-Way F 1.5, 2.8 MX Series(BK)

Terminal Part Information

Terminal Type ID	Terminated Lead	Diagnostic Test Probe	Terminal Removal Tool
I	13575832	J-35616-4A (PU)	J-38125-11A
II	19300432	J-35616-14 (GN)	J-38125-557

K99 Steering Column Control Module X1 (N38)

Pin	Size	Color	Circuit	Function	Terminal Type ID	Option
1	0.5	VT / BK	2020	Steering Column Tilt and Telescope Switch Feedback Signal	II	—
2	0.5	GN / WH	7530	Driver Seat Adjuster Memory Module LIN Bus 1	II	—
3	0.5	GN / BN	2095	Steering Column Tilt and Telescope Switch Rearward Signal	II	—
4	0.5	BN / GY	2096	Steering Column Tilt and Telescope Switch Up Signal	II	—
5	0.5	YE / BN	2097	Steering Column Tilt and Telescope Switch Down Signal	II	—
6	0.5	BU / YE	2094	Steering Column Tilt and Telescope Switch Forward Signal	II	—
7	0.75	RD / VT	4640	Battery Positive Voltage	I	—
8	1.5	BK	1050	Ground	I	—
9 - 10	—	—	—	Not Occupied	—	—

K99 Steering Column Tilt Wheel and Telescope Control Module X2 (N38)

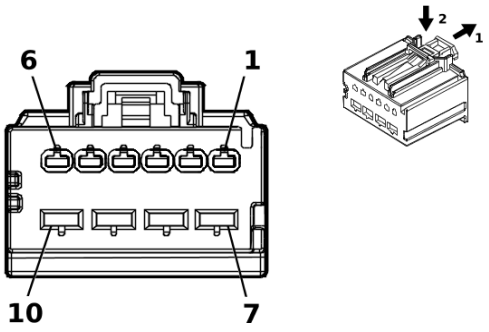

5190551

Connector Part Information

Harness Type: Steering Column Tilt and Telescope Wheel Actuator Motor Harness
OEM Connector: 31372-1700
Service Connector: Service by Harness - See Part Catalog
Description: 10-Way F 1.5, 2.8 MX Series(GY)

Terminal Part Information

Terminal Type ID	Terminated Lead	Diagnostic Test Probe	Terminal Removal Tool
I	Not required	No Tool Required	No Tool Required

K99 Steering Column Tilt Wheel and Telescope Control Module X2 (N38)

Pin	Size	Color	Circuit	Function	Terminal Type ID	Option
1	0.35	VT / GY	2153	Steering Column Telescope Motor Signal	I	—
2	0.35	YE / BK	2152	Steering Column Telescope Motor Low Reference	I	—
3	0.35	YE	2154	Steering Column Tilt Motor Signal	I	—
4	0.35	WH / BK	2157	Steering Column Tilt Motor Low Reference	I	—
5 - 6	—	—	—	Not Occupied	—	—
7	1	GN / BK	2098	Steering Column Telescope Motor Forward Control	I	—
8	1	YE / BN	2110	Steering Column Telescope Motor Rearward Control	I	—
9	1	BN / GY	2112	Steering Column Tilt Motor Down Control	I	—
10	1	GY / VT	2111	Steering Column Tilt Motor Up Control	I	—

K104D Front Seat Bladder Control Module - Driver (A45)

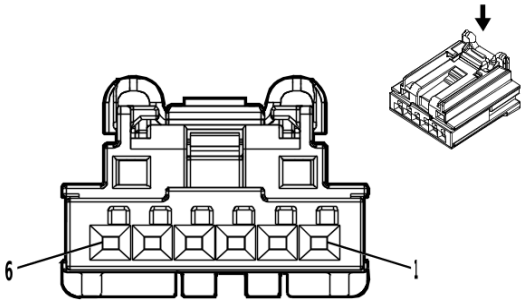

5020940

Connector Part Information

Harness Type: Front Seat Wiring Harness - Driver
OEM Connector: 2035363-6
Service Connector: Service by Harness - See Part Catalog
Description: 6-Way F 0.64 Generation Y Series(BK)

Terminal Part Information

Terminal Type ID	Terminated Lead	Diagnostic Test Probe	Terminal Removal Tool
I	Not required	J-35616-64B (L-BU)	No Tool Required

K104D Front Seat Bladder Control Module - Driver (A45)

Pin	Size	Color	Circuit	Function	Terminal Type ID	Option
1	0.5	RD / BN	2240	Battery Positive Voltage	I	—
2	0.5	GN / BK	2637	Front Seat Bolster Memory Module - Driver LIN Bus 1	I	—
3	—	—	—	Not Occupied	—	—
4	0.5	BK	1550	Ground	I	—
5 - 6	—	—	—	Not Occupied	—	—

K111 Fuel Pump Power Control Module (Extended Cab/Crew Cab)

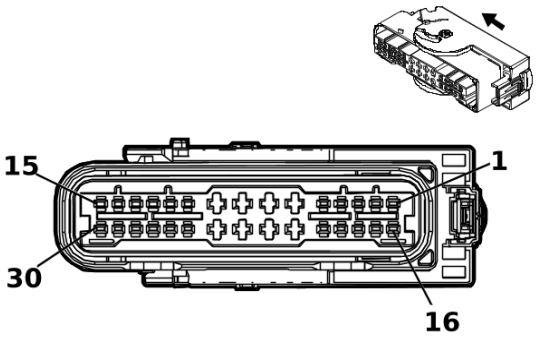

3240109

Connector Part Information

Harness Type: Chassis Wiring Harness
OEM Connector: 35449315
Service Connector: 85140064
Description: 30-Way F 1.5, 2.8 MCP Series, Sealed(GN)

Terminal Part Information

Terminal Type ID	Terminated Lead	Diagnostic Test Probe	Terminal Removal Tool
I	19329958	J-35616-2A (GY)	J-38125-11A
II	19371214	J-35616-4A (PU)	J-38125-215A

K111 Fuel Pump Power Control Module (Extended Cab/Crew Cab)

Pin	Size	Color	Circuit	Function	Terminal Type ID	Option
1	—	—	—	Not Occupied	—	—
2	0.5	BU / YE	6861	Water In Fuel Sensor Signal	I	—
3	0.5	BK / BU	6863	Water In Fuel Sensor Low Reference	I	—
4	0.5	BN / GY	7072	Fuel Temperature Sensor 1 Signal	I	—
5 - 6	—	—	—	Not Occupied	—	—
7	2.5	RD / VT	1940	Battery Positive Voltage	II	—
8	2.5	GY	120	Fuel Pump Control	II	—
9	2.5	YE / GY	4137	Fuel Pump Supply Voltage Phase 2	II	—
10	0.5	YE / RD	2709	Fuel Tank Pressure Sensor 5V Reference	I	—
11	0.5	BU / WH	890	Fuel Tank Pressure Sensor Signal	I	—
12	0.5	BN / RD	7445	Fuel Line Pressure Sensor 5V Reference	I	—
13	0.5	BU / GN	1936	Primary Fuel Level Sensor Signal	I	—
14	—	—	—	Not Occupied	—	—
15	0.5	BU / GY	4054	Private Serial Data Powertrain CAN Bus [-] Serial Data	I	—
16	1 0.5	VT / GN VT / GN	4320 4320	Powertrain Sensor Bus Enable Powertrain Sensor Bus Enable	I I	FHX FJW
17	—	—	—	Not Occupied	—	—
18	0.5	GN / GY	465	Fuel Pump Primary Relay Control	I	—
19	0.5	BN / WH	7073	Fuel Temperature Sensor 1 Low Reference	I	—
20	—	—	—	Not Occupied	—	—

K111 Fuel Pump Power Control Module (Extended Cab/Crew Cab) (cont'd)

Pin	Size	Color	Circuit	Function	Terminal Type ID	Option
21	0.5	WH	1310	EVAP Vent Solenoid Valve Control	II	—
22	2.5	BK	1650	Ground	II	—
23	0.5	WH	7444	Fuel Pump Assembly Shield Ground	II	—
24	2.5	WH / BN	4138	Fuel Pump Supply Voltage Phase 3	II	—
25	0.5	BK / BN	6284	Fuel Tank Pressure Sensor Low Reference	I	—
26	0.5	BU / WH	7446	Fuel Pressure Sensor Signal	I	—
27	0.5	BK / YE	7447	Fuel Pressure Sensor Low Reference	I	—
28	0.5	BK / GN	6281	Fuel Level Sensor Low Reference	I	—
29	—	—	—	Not Occupied	—	—
30	0.5	WH	4055	Private Serial Data Powertrain CAN Bus [+] Serial Data	I	—

K111 Fuel Pump Power Control Module (Regular Cab)

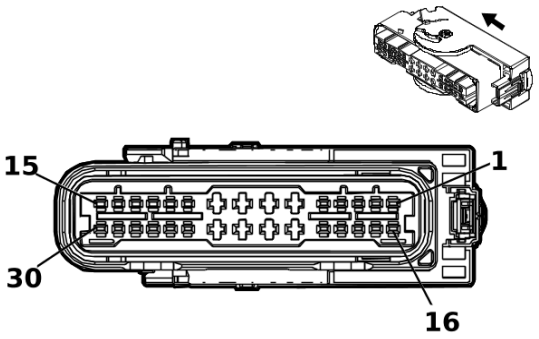

3240109

Connector Part Information

Harness Type: Chassis Wiring Harness
OEM Connector: 35373123
Service Connector: 85140064
Description: 30-Way F 1.5, 2.8 MCP Series, Sealed(BK)

Terminal Part Information

Terminal Type ID	Terminated Lead	Diagnostic Test Probe	Terminal Removal Tool
I	19329958	J-35616-2A (GY)	J-38125-11A
II	19371214	J-35616-4A (PU)	J-38125-215A

K111 Fuel Pump Power Control Module (Regular Cab)

Pin	Size	Color	Circuit	Function	Terminal Type ID	Option
1 - 6	—	—	—	Not Occupied	—	—
7	2.5	RD / VT	1940	Battery Positive Voltage	II	—
8	2.5	GY	120	Fuel Pump Control	II	—
9	2.5	YE / GY	4137	Fuel Pump Supply Voltage Phase 2	II	—
10	0.5	YE / RD	2709	Fuel Tank Pressure Sensor 5V Reference	I	—
11	0.5	BU / WH	890	Fuel Tank Pressure Sensor Signal	I	—
12	0.5	BN / RD	7445	Fuel Line Pressure Sensor 5V Reference	I	—
13	0.5	BU / GN	1936	Primary Fuel Level Sensor Signal	I	—
14	—	—	—	Not Occupied	—	—
15	0.5	BU / GY	4054	Private Serial Data Powertrain CAN Bus [-] Serial Data	I	—
16	0.5	VT / GN	4320	Powertrain Sensor Bus Enable	I	—
17	—	—	—	Not Occupied	—	—
18	0.5	GN / GY	465	Fuel Pump Primary Relay Control	I	—
19 - 20	—	—	—	Not Occupied	—	—
21	0.5	WH	1310	EVAP Vent Solenoid Valve Control	II	—
22	2.5	BK	1650	Ground	II	—
23	0.5	WH	7444	Fuel Pump Assembly Shield Ground	II	—
24	2.5	WH / BN	4138	Fuel Pump Supply Voltage Phase 3	II	—
25	0.5	BK / BN	6284	Fuel Tank Pressure Sensor Low Reference	I	—
26	0.5	BU / WH	7446	Fuel Pressure Sensor Signal	I	—

K111 Fuel Pump Power Control Module (Regular Cab) (cont'd)

Pin	Size	Color	Circuit	Function	Terminal Type ID	Option
27	0.5	BK / YE	7447	Fuel Pressure Sensor Low Reference	I	—
28	0.5	BK / GN	6281	Fuel Level Sensor Low Reference	I	—
29	—	—	—	Not Occupied	—	—
30	0.5	WH	4055	Private Serial Data Powertrain CAN Bus [+] Serial Data	I	—

K115 Reductant Control Module (LM2)

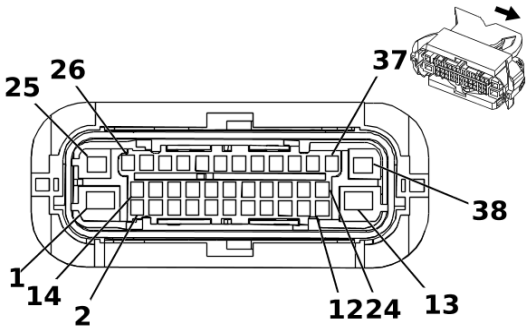

3240110

Connector Part Information

Harness Type: Emission Reduction Fluid Tank Reservoir Wire Harness
OEM Connector: 13582126
Service Connector: Service by Harness - See Part Catalog
Description: 38-Way F 1.5 CTS, 2.8 MCP, 4.8 MCP Series, Sealed(BK with BK Inner Connector)

Terminal Part Information

Terminal Type ID	Terminated Lead	Diagnostic Test Probe	Terminal Removal Tool
I	Not required	J-35616-14 (GN)	No Tool Required
II	Not required	J-35616-40 (BU)	No Tool Required
III	Not required	J-35616-4A (PU)	No Tool Required

K115 Reductant Control Module (LM2)

Pin	Size	Color	Circuit	Function	Terminal Type ID	Option
1	3.0	BK	2040	Battery Positive Voltage	II	—
2	1.0	BN	3676	Diesel Exhaust Fluid Heating Tank 2 Heater Control	I	—
3	—	—	—	Not Occupied	—	—
4	1.0	YE	3677	Diesel Exhaust Fluid Reservoir Heater Control	I	—
5	—	—	—	Not Occupied	—	—
6	0.5	BK	3244	Diesel Exhaust Fluid Tank Temperature Sensor Signal	I	—
7	0.5	BK	7290	Diesel Exhaust Fluid Sensor Voltage Reference 1	I	—
8	0.5	BN	7284	Diesel Exhaust Fluid Liquid Quality Temperature Signal	I	—
9	0.5	BK	8434	Diesel Exhaust Fluid Sensor Low Reference	I	—
10	—	—	—	Not Occupied	—	—
11	1.0	YE	3876	Diesel Exhaust Fluid Smart Pump Supply Voltage Phase 3	I	—
12	—	—	—	Not Occupied	—	—
13	3.0	WH	1650	Ground	II	—
14	1.0	BN	2936	Diesel Exhaust Fluid Heating Tank 2 Heater Control Low	I	—
15	—	—	—	Not Occupied	—	—
16	1.0	BU	4318	Diesel Exhaust Fluid Tank Heater Low Control	I	—

K115 Reductant Control Module (LM2) (cont'd)

Pin	Size	Color	Circuit	Function	Terminal Type ID	Option
17	—	—	—	Not Occupied	—	—
18	0.5	BN	3245	Diesel Exhaust Fluid Tank Temperature Sensor Low Reference	I	—
19	0.5	BN	3106	Diesel Exhaust Fluid Pressure Sensor 5 Volt Reference	I	—
20	0.5	BU	3108	Diesel Exhaust Fluid Pressure Sensor Signal	I	—
21	0.5	BU	3107	Diesel Exhaust Fluid Pressure Sensor Low Reference	I	—
22 - 23	—	—	—	Not Occupied	—	—
24	1.0	BN	3875	Diesel Exhaust Fluid Smart Pump Supply Voltage Phase 2	I	—
25	2.0	BK	1650	Ground	III	—
26	1.0	WH	3199	Diesel Exhaust Fluid Pressure Line Heater Control	I	—
27	—	—	—	Not Occupied	—	—
28	1.0	BN	4319	Diesel Exhaust Fluid Line Heater Low Control	I	—
29	—	—	—	Not Occupied	—	—
30	0.5	BN	639	Run/Crank Ignition 1 Voltage	I	—
31	0.5	BU	4977	AUTOSAR CAN Bus [+] 3 Serial Data	I	—
32	0.5	BU	4977	AUTOSAR CAN Bus [+] 3 Serial Data	I	—
33	0.5	BN	4976	AUTOSAR CAN Bus [-] 3 Serial Data	I	—
34	0.5	BN	4976	AUTOSAR CAN Bus [-] 3 Serial Data	I	—
35	—	—	—	Not Occupied	—	—
36	1.0	BU	2937	Diesel Exhaust Fluid Pump Motor Stator Low Reference	I	—
37	1.0	WH	3103	Diesel Exhaust Fluid Smart Pump Control	I	—
38	2.0	RD	3440	Battery Positive Voltage	III	—

K124 Image Processing Module X1 (UGN+UKL)

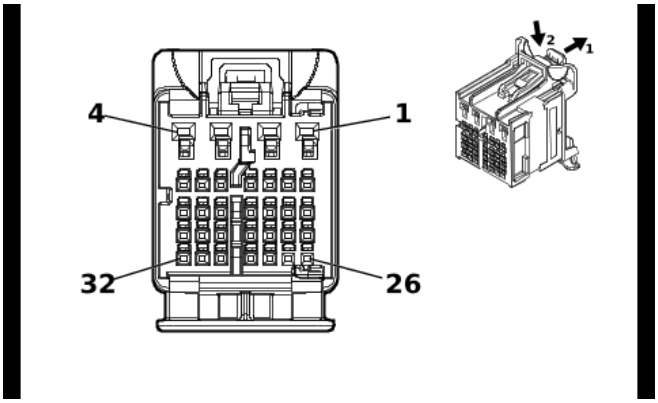

5493608

Connector Part Information

Harness Type: Front Floor Console Wiring Harness
OEM Connector: 35392290
Service Connector: Service by Harness - See Part Catalog
Description: 32-Way F 0.5 NANO, 1.2 MCON, stAK50h Series(BK with GY Inner Connector)

Terminal Part Information

Terminal Type ID	Terminated Lead	Diagnostic Test Probe	Terminal Removal Tool
I	Not required	EL-35616-58 (BK)	No Tool Required

K124 Image Processing Module X1 (UGN+UKL)

Pin	Size	Color	Circuit	Function	Terminal Type ID	Option
1 - 4	—	—	—	Not Occupied	—	—
5	0.35	RD / WH	4740	Battery Positive Voltage	I	—
6 - 8	—	—	—	Not Occupied	—	—
9	0.35	WH	4986	AUTOSAR CAN Bus [-] 1 Serial Data	I	—
10	0.35	BU	4987	AUTOSAR CAN Bus [+] 1 Serial Data	I	—
11 - 15	—	—	—	Not Occupied	—	—
16	0.35	WH	4986	AUTOSAR CAN Bus [-] 1 Serial Data	I	—
17	0.35	BU	4987	AUTOSAR CAN Bus [+] 1 Serial Data	I	—
18	—	—	—	Not Occupied	—	—
19	0.35	BK / WH	1451	Signal Ground	I	—
20 - 22	—	—	—	Not Occupied	—	—
23	0.35	GN / GY	4627	Image Processing Module LIN Bus 1	I	—
24 - 26	—	—	—	Not Occupied	—	—
27	0.35	VT / GY	8978	Inertial Sensor Supply Voltage	I	—
28 - 30	—	—	—	Not Occupied	—	—
31	0.35	WH	7225	Ethernet Bus 11 [+]	I	—
32	0.35	BU	7224	Ethernet Bus 11 [-]	I	—

K124 Image Processing Module X1 (UGN-UKL)

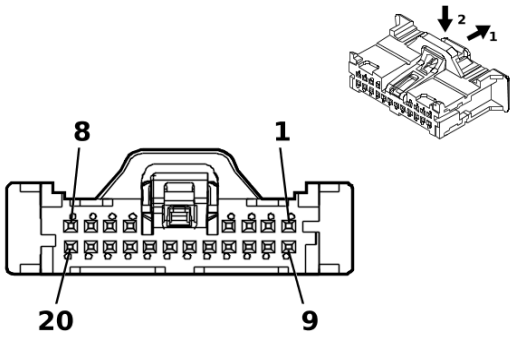

5200955

Connector Part Information

Harness Type: Front Floor Console Wiring Harness
OEM Connector: 35068196
Service Connector: Service by Harness - See Part Catalog
Description: 20-Way F Mini 50 Series(BK)

Terminal Part Information

Terminal Type ID	Terminated Lead	Diagnostic Test Probe	Terminal Removal Tool
I	Not required	EL-35616-58 (BK)	No Tool Required

K124 Image Processing Module X1 (UGN-UKL)

Pin	Size	Color	Circuit	Function	Terminal Type ID	Option
1	0.35	BK / WH	1451	Signal Ground	I	—
2	0.35	RD / WH	4740	Battery Positive Voltage	I	—
3 - 5	—	—	—	Not Occupied	—	—
6	0.35	WH	4986	AUTOSAR CAN Bus [-] 1 Serial Data	I	—
7	0.35	BU	4987	AUTOSAR CAN Bus [+] 1 Serial Data	I	—
8 - 17	—	—	—	Not Occupied	—	—
18	0.35	WH	4986	AUTOSAR CAN Bus [-] 1 Serial Data	I	—
19	0.35	BU	4987	AUTOSAR CAN Bus [+] 1 Serial Data	I	—
20	—	—	—	Not Occupied	—	—

K124 Image Processing Module X2 (UGN+UKL)

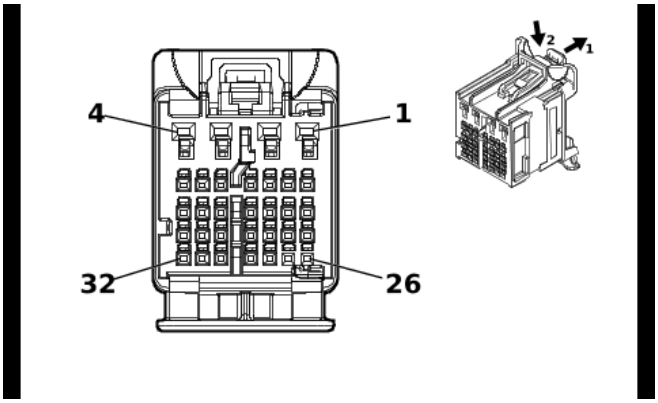

5493614

Connector Part Information

Harness Type: Front Floor Console Wiring Harness
OEM Connector: 35392291
Service Connector: Service by Harness - See Part Catalog
Description: 32-Way F 0.5 NANO, 1.2 MCON, stAK50h Series(GY with GY Inner Connector)

Terminal Part Information

Terminal Type ID	Terminated Lead	Diagnostic Test Probe	Terminal Removal Tool
I	Not required	EL-35616-58 (BK)	No Tool Required

K124 Image Processing Module X2 (UGN+UKL)

Pin	Size	Color	Circuit	Function	Terminal Type ID	Option
1 - 4	—	—	—	Not Occupied	—	—
5	0.35	WH	4978	AUTOSAR CAN Bus [-] 2 Serial Data	I	—
6	0.35	WH	4978	AUTOSAR CAN Bus [-] 2 Serial Data	I	—
7	0.35	BU / YE	4979	AUTOSAR CAN Bus [+] 2 Serial Data	I	—
8	0.35	BU / YE	4979	AUTOSAR CAN Bus [+] 2 Serial Data	I	—
9	0.35	WH / GY	4104	AUTOSAR CAN Bus [-] 8 Serial Data	I	—
10	0.35	BU / GY	4105	AUTOSAR CAN Bus [+] 8 Serial Data	I	—
11 - 12	—	—	—	Not Occupied	—	—
13	0.35	WH	4978	AUTOSAR CAN Bus [-] 2 Serial Data	I	—
14	0.35	BU / YE	4979	AUTOSAR CAN Bus [+] 2 Serial Data	I	—
15	0.35	WH / GY	4104	AUTOSAR CAN Bus [-] 8 Serial Data	I	—
16	0.35	WH / GY	4104	AUTOSAR CAN Bus [-] 8 Serial Data	I	—
17	0.35	BU / GY	4105	AUTOSAR CAN Bus [+] 8 Serial Data	I	—
18	0.35	BU / GY	4105	AUTOSAR CAN Bus [+] 8 Serial Data	I	—
19 - 20	—	—	—	Not Occupied	—	—
21	0.35	BU / YE	8977	Private Serial Data Active Safety CAN Bus [+] Serial Data	I	—
22	0.35	WH / YE	8976	Private Serial Data Active Safety CAN Bus [-] Serial Data	I	—
23 - 32	—	—	—	Not Occupied	—	—

K124 Image Processing Module X2 (UGN-UKL)

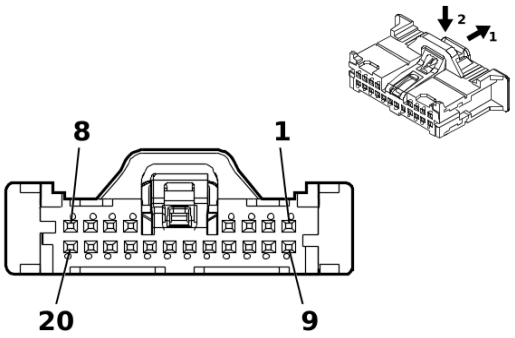

5360760

Connector Part Information

Harness Type: Front Floor Console Wiring Harness
OEM Connector: 35068197
Service Connector: Service by Harness - See Part Catalog
Description: 20-Way F 050 CTS Series(GY)

Terminal Part Information

Terminal Type ID	Terminated Lead	Diagnostic Test Probe	Terminal Removal Tool
I	Not required	EL-35616-58 (BK)	No Tool Required

K124 Image Processing Module X2 (UGN-UKL)

Pin	Size	Color	Circuit	Function	Terminal Type ID	Option
1	0.35	WH	4978	AUTOSAR CAN Bus [-] 2 Serial Data	I	—
2	0.35	WH	4978	AUTOSAR CAN Bus [-] 2 Serial Data	I	—
3	0.35	BU / YE	4979	AUTOSAR CAN Bus [+] 2 Serial Data	I	—
4	0.35	BU / YE	4979	AUTOSAR CAN Bus [+] 2 Serial Data	I	—
5	0.35	WH / GY	4104	AUTOSAR CAN Bus [-] 8 Serial Data	I	—
6 - 9	—	—	—	Not Occupied	—	—
10	0.35	WH	4978	AUTOSAR CAN Bus [-] 2 Serial Data	I	—
11	0.35	BU / YE	4979	AUTOSAR CAN Bus [+] 2 Serial Data	I	—
12 - 16	—	—	—	Not Occupied	—	—
17	0.35	BU / GY	4105	AUTOSAR CAN Bus [+] 8 Serial Data	I	—
18 - 20	—	—	—	Not Occupied	—	—

K157 Video Processing Module X1 (UV2)

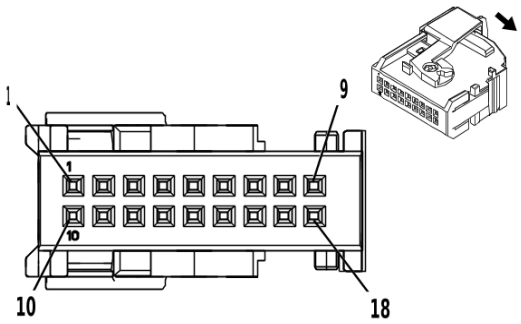

4329088

Connector Part Information

Harness Type: Body Wiring Harness
OEM Connector: 35332167
Service Connector: 84976200
Description: 18-Way F Micro-Quadlock Series(BK)

Terminal Part Information

Terminal Type ID	Terminated Lead	Diagnostic Test Probe	Terminal Removal Tool
I	19300632	J-35616-64B (L-BU)	J-38125-215A

K157 Video Processing Module X1 (UV2)

Pin	Size	Color	Circuit	Function	Terminal Type ID	Option
1 - 2	—	—	—	Not Occupied	—	—
3	0.75	BK / WH	1451	Signal Ground	I	—
4 - 9	—	—	—	Not Occupied	—	—
10	0.5	RD / VT	1640	Battery Positive Voltage	I	—
11 - 12	—	—	—	Not Occupied	—	—
13	0.5	WH	4986	AUTOSAR CAN Bus [-] 1 Serial Data	I	—
14	0.5	WH	4986	AUTOSAR CAN Bus [-] 1 Serial Data	I	—
15	0.5	BU	4987	AUTOSAR CAN Bus [+] 1 Serial Data	I	—
16	0.5	BU	4987	AUTOSAR CAN Bus [+] 1 Serial Data	I	—
17 - 18	—	—	—	Not Occupied	—	—

K157 Video Processing Module X3 (UV2)

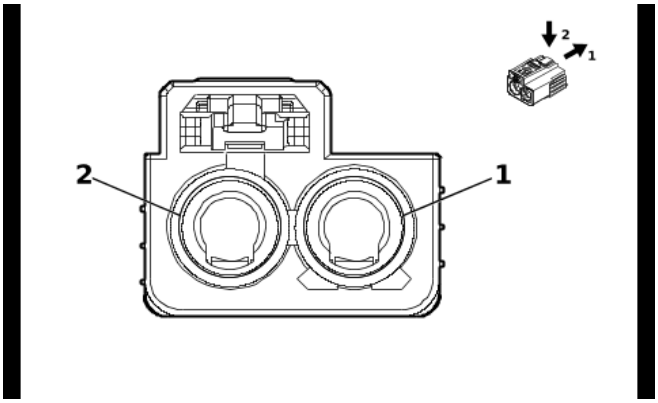

5810808

Connector Part Information

Harness Type: Body Wiring Harness
OEM Connector: 33340388
Service Connector: Service by Cable Assembly — See Part Catalog
Description: 2-Way F Coax Type(RD)

Terminal Part Information

Terminal Type ID	Terminated Lead	Diagnostic Test Probe	Terminal Removal Tool
I	Not required	No Tool Required	No Tool Required

K157 Video Processing Module X3 (UV2)

Pin	Size	Color	Circuit	Function	Terminal Type ID	Option
1	—	—	4723	Video Processing Module LVDS (Low Voltage Differential Signaling) Coaxial Signal	I	—
2	—	—	—	Not Occupied	—	—

K157 Video Processing Module X4 (UV2)

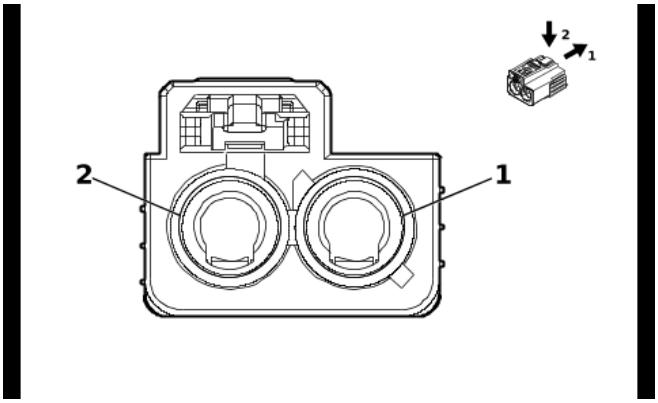

5810836

Connector Part Information

Harness Type: Body Wiring Harness
OEM Connector: 33340386
Service Connector: Service by Cable Assembly — See Part Catalog
Description: 2-Way F Coax Type(BG)

Terminal Part Information

Terminal Type ID	Terminated Lead	Diagnostic Test Probe	Terminal Removal Tool
I	Not required	No Tool Required	No Tool Required

K157 Video Processing Module X4 (UV2)

Pin	Size	Color	Circuit	Function	Terminal Type ID	Option
1	—	—	4721	Rearview Camera LVDS (Low Voltage Differential Signaling) Coaxial Signal	I	—
2	—	—	—	Not Occupied	—	—

K157 Video Processing Module X5 (UV2)

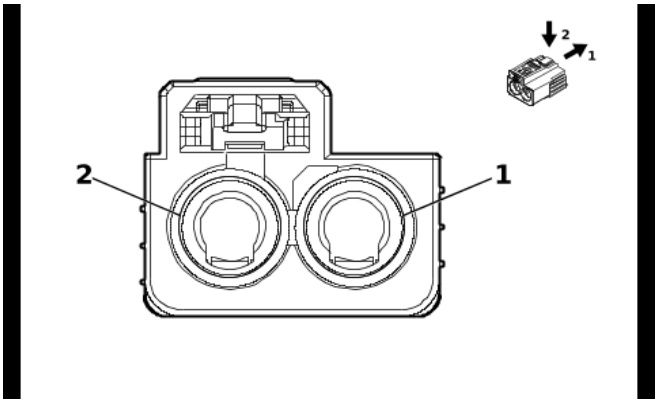

5810827

Connector Part Information

Harness Type: Body Wiring Harness
OEM Connector: 33340382
Service Connector: Service by Cable Assembly — See Part Catalog
Description: 2-Way F Coax Type(GN)

Terminal Part Information

Terminal Type ID	Terminated Lead	Diagnostic Test Probe	Terminal Removal Tool
I	Not required	No Tool Required	No Tool Required

K157 Video Processing Module X5 (UV2)

Pin	Size	Color	Circuit	Function	Terminal Type ID	Option
1	—	—	7886	Trailer 2 Rear Vision Camera LVDS (Low Voltage Differential Signaling) Coaxial Signal	I	—
2	—	—	2548	Cargo Bed Rear Vision Camera LVDS (Low Voltage Differential Signaling) Coaxial Signal	I	—

K157 Video Processing Module X6 (UV2)

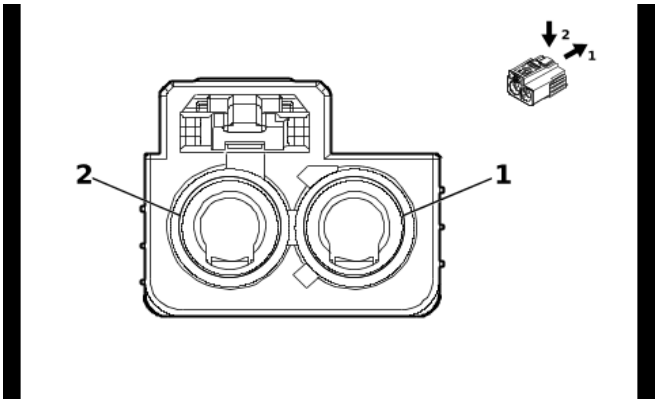

5810832

Connector Part Information

Harness Type: Body Wiring Harness
OEM Connector: 33340383
Service Connector: Service by Cable Assembly — See Part Catalog
Description: 2-Way F Coax Type(BN)

Terminal Part Information

Terminal Type ID	Terminated Lead	Diagnostic Test Probe	Terminal Removal Tool
I	Not required	No Tool Required	No Tool Required

K157 Video Processing Module X6 (UV2)

Pin	Size	Color	Circuit	Function	Terminal Type ID	Option
1	—	—	2421	Trailer Rear Vision Camera LVDS (Low Voltage Differential Signaling) Coaxial Signal	I	—
2	—	—	4725	Left Sideview Camera LVDS (Low Voltage Differential Signaling) Coaxial Signal	I	—

K157 Video Processing Module X7 (UV2)

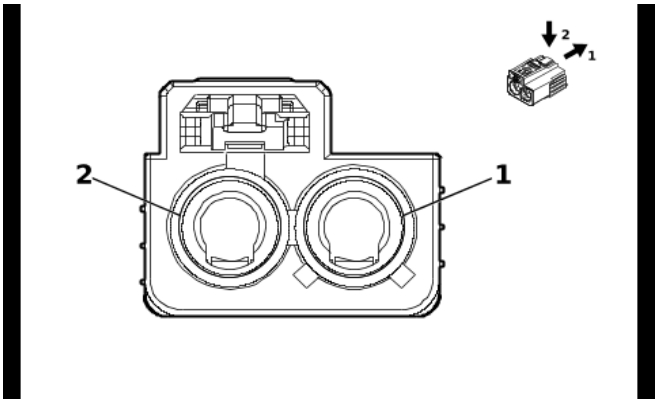

5810835

Connector Part Information

Harness Type: Body Wiring Harness
OEM Connector: 33340387
Service Connector: Service by Cable Assembly — See Part Catalog
Description: 2-Way F Coax Type(CU)

Terminal Part Information

Terminal Type ID	Terminated Lead	Diagnostic Test Probe	Terminal Removal Tool
I	Not required	No Tool Required	No Tool Required

K157 Video Processing Module X7 (UV2)

Pin	Size	Color	Circuit	Function	Terminal Type ID	Option
1	—	—	4722	Frontview Camera LVDS (Low Voltage Differential Signaling) Coaxial Signal	I	—
2	—	—	4724	Right Sideview Camera LVDS (Low Voltage Differential Signaling) Coaxial Signal	I	—

K160 Brake System Control Module

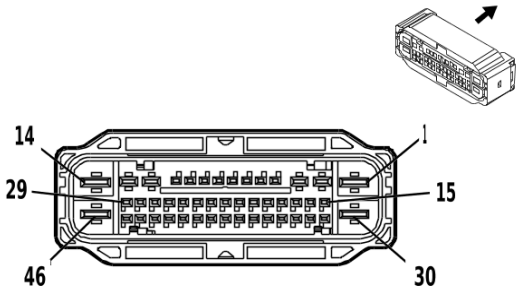

4162046

Connector Part Information

Harness Type: Body Wiring Harness
OEM Connector: 35495608
Service Connector: 19333026
Description: 46-Way F 1.2 OCS, 2.8, 6.3 CTS Series, Sealed(GY)

Terminal Part Information

Terminal Type ID	Terminated Lead	Diagnostic Test Probe	Terminal Removal Tool
I	19332901	J-35616-35 (VT)	J-38125-212
II	84634921	J-35616-42 (RD)	J-38125-212
III	84729890	J-35616-12 (BU)	J-38125-553

K160 Brake System Control Module

Pin	Size	Color	Circuit	Function	Terminal Type ID	Option
1	6	BK	150	Ground	II	—
2	2.5	WH	2001	Left Park Brake Motor Apply Control	I	—
3	2.5	GY / BK	4369	Left Park Brake Motor Low Reference	I	—
4	0.5	GY / WH	7064	Left Front Wheel Speed Sensor Control	III	—
5	0.5	GY	830	Left Front Wheel Speed Sensor Signal	III	—
6 - 8	—	—	—	Not Occupied	—	—
9	0.5	VT / WH	239	Run/Crank Ignition 1 Voltage	III	—
10	0.5	GY / BN	7065	Right Front Wheel Speed Sensor Control	III	—
11	0.5	YE	872	Right Front Wheel Speed Sensor Signal	III	—
12	2.5	GN / VT	1988	Right Park Brake Motor Apply Control	I	—
13	2.5	GY	4368	Right Park Brake Motor Low Reference	I	—
14	6	RD / WH	1642	Battery Positive Voltage	II	—
15	0.5	GY / BK	7127	Left Rear Wheel Speed Sensor Control	III	—
16	0.5	BU	884	Left Rear Wheel Speed Sensor Signal	III	—
17	0.35	BU / YE	4979	AUTOSAR CAN Bus [+] 2 Serial Data	III	—
18	0.5	BU / YE	4979	AUTOSAR CAN Bus [+] 2 Serial Data	III	—
19	0.35	GN / GY	817	Vehicle Speed Signal	III	—
20 - 22	—	—	—	Not Occupied	—	—
23	0.5	GN / YE	2731	Brake System Control Module LIN Bus 1	III	—
24	—	—	—	Not Occupied	—	—

K160 Brake System Control Module (cont'd)

Pin	Size	Color	Circuit	Function	Terminal Type ID	Option
25	0.5	WH	4986	AUTOSAR CAN Bus [-] 1 Serial Data	III	—
26	0.5	WH	4986	AUTOSAR CAN Bus [-] 1 Serial Data	III	—
27	—	—	—	Not Occupied	—	—
28	0.5	GY / YE	7128	Right Rear Wheel Speed Sensor Control	III	—
29	0.5	VT	882	Right Rear Wheel Speed Sensor Signal	III	—
30	6	BK	250	Ground	II	—
31 - 32	—	—	—	Not Occupied	—	—
33	0.35	WH	4978	AUTOSAR CAN Bus [-] 2 Serial Data	III	—
34	0.5	WH	4978	AUTOSAR CAN Bus [-] 2 Serial Data	III	—
35	0.5	GN / BU	2733	Brake System Control Module LIN Bus 2	III	—
36	0.5	WH / BK	2223	Trailer Brake Apply Signal	III	—
37	0.5	YE / BK	2224	Trailer Brake Enable Signal	III	—
38	0.5	GN / GY	333	Brake Fluid Level Signal	III	—
39	0.5	BN / BU	1602	Front Brake Pad Wear Sensor Signal	III	—
40	—	—	—	Not Occupied	—	—
41	0.5	BU	4987	AUTOSAR CAN Bus [+] 1 Serial Data	III	—
42	0.5	BU	4987	AUTOSAR CAN Bus [+] 1 Serial Data	III	—
43	—	—	—	Not Occupied	—	—
44	0.5	GN / YE	1616	Rear Brake Pad Wear Sensor Signal	III	—
45	—	—	—	Not Occupied	—	—
46	6	RD / WH	1040	Battery Positive Voltage	II	—

K179 Automated Driving Mapping Module X1 (UKL)

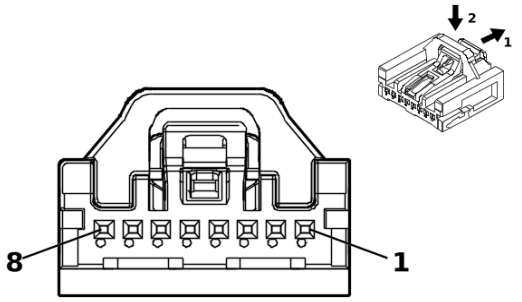

5200269

Connector Part Information

Harness Type: Instrument Panel Wiring Harness
OEM Connector: 35068228
Service Connector: 84769201
Description: 8-Way F Mini 50 Series(BK)

Terminal Part Information

Terminal Type ID	Terminated Lead	Diagnostic Test Probe	Terminal Removal Tool
I	Not required	EL-35616-58 (BK)	No Tool Required

K179 Automated Driving Mapping Module X1 (UKL)

Pin	Size	Color	Circuit	Function	Terminal Type ID	Option
1	0.35	RD / WH	1340	Battery Positive Voltage	I	—
2	0.35	BU / GY	4105	AUTOSAR CAN Bus [+] 8 Serial Data	I	—
3	0.35	WH / GY	4104	AUTOSAR CAN Bus [-] 8 Serial Data	I	—
4	0.35	BU / GY	4105	AUTOSAR CAN Bus [+] 8 Serial Data	I	—
5	0.35	WH / GY	4104	AUTOSAR CAN Bus [-] 8 Serial Data	I	—
6 - 7	—	—	—	Not Occupied	—	—
8	0.35	BK / WH	851	Signal Ground	I	—

K179 Automated Driving Mapping Module X2 (UKL)

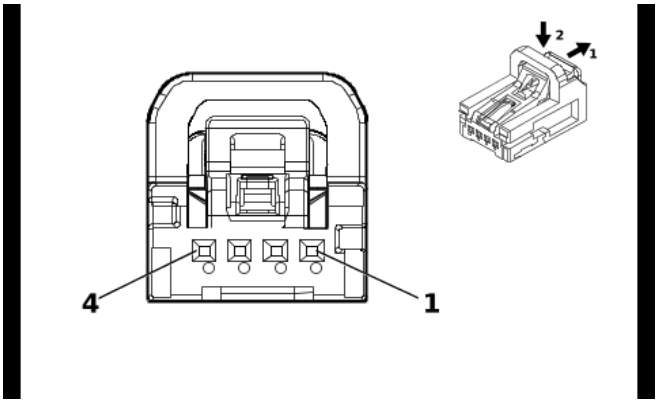

5921812

Connector Part Information

Harness Type: Instrument Panel Wiring Harness
OEM Connector: 35068221
Service Connector: 86825465
Description: 4-Way F Mini 50 Series(GN)

Terminal Part Information

Terminal Type ID	Terminated Lead	Diagnostic Test Probe	Terminal Removal Tool
I	Not required	EL-35616-58 (BK)	No Tool Required

K179 Automated Driving Mapping Module X2 (UKL)

Pin	Size	Color	Circuit	Function	Terminal Type ID	Option
1	—	—	—	Not Occupied	—	—
2	0.35	BU	7208	Ethernet Bus 3 [-]	I	—
3	0.35	GN	7209	Ethernet Bus 3 [+]	I	—
4	—	—	—	Not Occupied	—	—

K179 Automated Driving Mapping Module X3 (UKL)

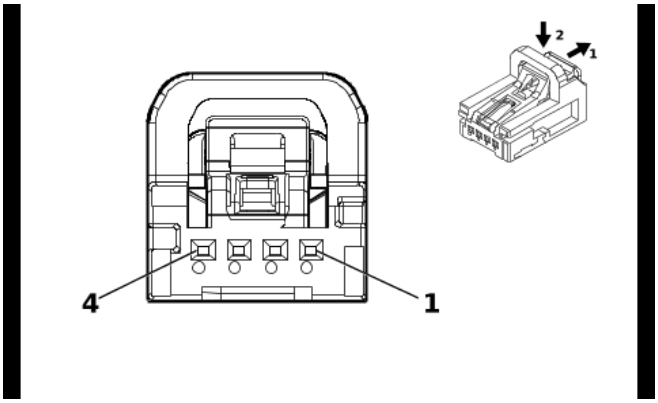

5921811

Connector Part Information

Harness Type: Instrument Panel Wiring Harness
OEM Connector: 35068220
Service Connector: 86825464
Description: 4-Way F Mini 50 Series(BN)

Terminal Part Information

Terminal Type ID	Terminated Lead	Diagnostic Test Probe	Terminal Removal Tool
I	Not required	EL-35616-58 (BK)	No Tool Required

K179 Automated Driving Mapping Module X3 (UKL)

Pin	Size	Color	Circuit	Function	Terminal Type ID	Option
1	—	—	—	Not Occupied	—	—
2	0.35	BU	7224	Ethernet Bus 11 [-]	I	—
3	0.35	WH	7225	Ethernet Bus 11 [+]	I	—
4	—	—	—	Not Occupied	—	—

K180 Driver Monitoring System Module X1 (UKL)

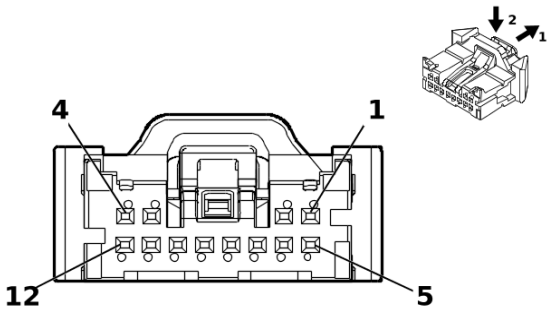

5360826

Connector Part Information

Harness Type: Instrument Panel Wiring Harness
OEM Connector: 35068239
Service Connector: 13529935
Description: 12-Way F 050 CTS Series(BK)

Terminal Part Information

Terminal Type ID	Terminated Lead	Diagnostic Test Probe	Terminal Removal Tool
I	84944580	EL-35616-58 (BK)	EL-38125-58

K180 Driver Monitoring System Module X1 (UKL)

Pin	Size	Color	Circuit	Function	Terminal Type ID	Option
1	0.35	RD / YE	3040	Battery Positive Voltage	I	—
2	0.35	BK / WH	851	Signal Ground	I	—
3	0.35	BU / YE	4979	AUTOSAR CAN Bus [+] 2 Serial Data	I	—
4	0.35	WH	4978	AUTOSAR CAN Bus [-] 2 Serial Data	I	—
5 - 6	—	—	—	Not Occupied	—	—
7	0.35	BU / BN	7744	Driver Illumination Lamp Ground	I	—
8	0.35	YE / BU	2245	Driver Illumination Lamp 2 Control	I	—
9	0.35	WH / VT	2246	Driver Illumination Lamp 1 Control	I	—
10	—	—	—	Not Occupied	—	—
11	0.35	BU / YE	4979	AUTOSAR CAN Bus [+] 2 Serial Data	I	—
12	0.35	WH	4978	AUTOSAR CAN Bus [-] 2 Serial Data	I	—

K180 Driver Monitoring System Module X2 (UKL)

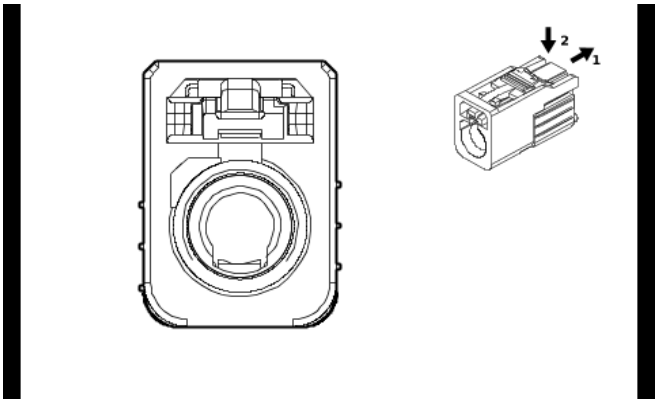

5519144

Connector Part Information

Harness Type: Instrument Panel Wiring Harness COAX
OEM Connector: 33340313
Service Connector: Service by Cable Assembly — See Part Catalog
Description: 1-Way F Coax Type(GN)

Terminal Part Information

Terminal Type ID	Terminated Lead	Diagnostic Test Probe	Terminal Removal Tool
I	Not required	No Tool Required	No Tool Required

K180 Driver Monitoring System Module X2 (UKL)

Pin	Size	Color	Circuit	Function	Terminal Type ID	Option
—	—	Coax Cable	—	Driver Monitoring System Camera Coaxial Signal	I	—

K182 Parking Assist Control Module X1 (UD5/UD7)

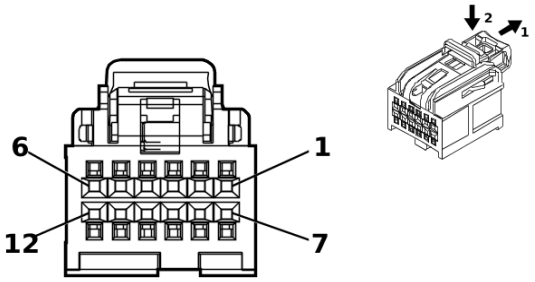

4975223

Connector Part Information

Harness Type: Body Wiring Harness
OEM Connector: 35016616
Service Connector: 13519750
Description: 12-Way F 0.64 OCS Series(BK)

Terminal Part Information

Terminal Type ID	Terminated Lead	Diagnostic Test Probe	Terminal Removal Tool
I	19300660	J-35616-64B (L-BU)	J-38125-215A

K182 Parking Assist Control Module X1 (UD5/UD7)

Pin	Size	Color	Circuit	Function	Terminal Type ID	Option
1	0.5	RD / WH	4740	Battery Positive Voltage	I	—
2	0.5	WH	4986	AUTOSAR CAN Bus [-] 1 Serial Data	I	—
3	0.5	BU	4987	AUTOSAR CAN Bus [+] 1 Serial Data	I	—
4 - 5	—	—	—	Not Occupied	—	—
6	0.75 0.5	BK / WH BK / WH	1551 1551	Signal Ground Signal Ground	I I	(UD5/ UD7) + CREW CAB/ EXTENDED (UD5/ UD7) + REGULAR
7	—	—	—	Not Occupied	—	—
8	0.5	WH	4986	AUTOSAR CAN Bus [-] 1 Serial Data	I	—
9	0.5	BU	4987	AUTOSAR CAN Bus [+] 1 Serial Data	I	—
10 - 12	—	—	—	Not Occupied	—	—

K182 Parking Assist Control Module X2 (UD5/UD7)

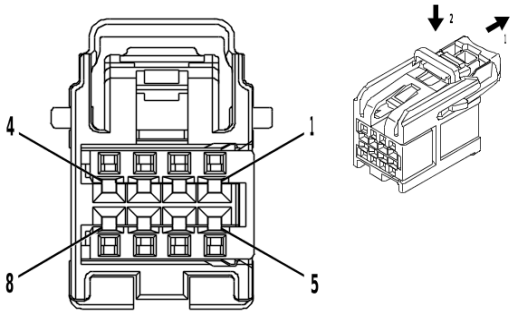

4232228

Connector Part Information

Harness Type: Body Wiring Harness
OEM Connector: 15526973
Service Connector: 19353873
Description: 8-Way F 0.64 OCS Series(GY)

Terminal Part Information

Terminal Type ID	Terminated Lead	Diagnostic Test Probe	Terminal Removal Tool
I	Not required	J-35616-64B (L-BU)	No Tool Required

K182 Parking Assist Control Module X2 (UD5/UD7)

Pin	Size	Color	Circuit	Function	Terminal Type ID	Option
1	—	—	—	Not Occupied	—	—
2	0.5	YE / WH	2377	Right Rear Middle Parking Assist Sensor Signal	I	—
3	0.5	YE	2375	Left Rear Outer Parking Assist Sensor Signal	I	—
4	0.5	BN / WH	2374	Object Sensor Voltage Reference	I	—
5	0.5	YE / VT	2378	Right Rear Outer Parking Assist Sensor Signal	I	—
6	0.5	YE / BU	2376	Left Rear Middle Parking Assist Sensor Signal	I	—
7	—	—	—	Not Occupied	—	—
8	0.5	BK / GY	2379	Object Sensor Low Reference	I	—

K182 Parking Assist Control Module X3 (UD5/UD7)

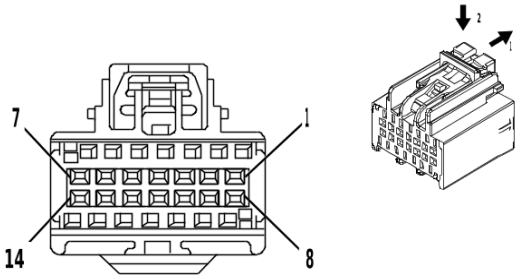

4547098

Connector Part Information

Harness Type: Body Wiring Harness
OEM Connector: 35014564
Service Connector: 19354933
Description: 14-Way F 0.64 Kaizen Series(BU)

Terminal Part Information

Terminal Type ID	Terminated Lead	Diagnostic Test Probe	Terminal Removal Tool
I	19303553	J-35616-64B (L-BU)	J-38125-215A

K182 Parking Assist Control Module X3 (UD5/UD7)

Pin	Size	Color	Circuit	Function	Terminal Type ID	Option
1 - 4	—	—	—	Not Occupied	—	—
5	0.5	YE / GY	5216	Left Front Middle Parking Assist Sensor	I	—
6	0.5	WH / GY	5217	Right Front Outer Parking Assist Sensor	I	—
7	0.5	BN	6581	Front Parking Assist Display Control	I	—
8 - 10	—	—	—	Not Occupied	—	—
11	0.5	VT / WH	5215	Left Front Outer Parking Assist Sensor	I	—
12	0.5	VT / GY	5218	Right Front Middle Parking Assist Sensor	I	—
13	—	—	—	Not Occupied	—	—
14	0.5	BK / BU	5214	Front Parking Assist Sensor Low Reference	I	—

K194 Rear Gate Module (QK1+QT6)

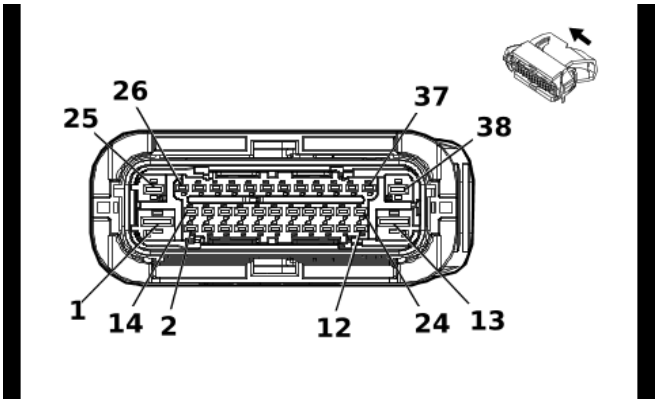

3240112

Connector Part Information

Harness Type: Endgate Wiring Harness
OEM Connector: 35503407
Service Connector: Service by Harness - See Part Catalog
Description: 38-Way F 1.5 CTS, 2.8 MCP, 4.8 MCP Series, Sealed(BK with BU Inner Connector)

Terminal Part Information

Terminal Type ID	Terminated Lead	Diagnostic Test Probe	Terminal Removal Tool
I	Not required	J-35616-14 (GN)	No Tool Required
II	Not required	J-35616-35 (VT)	No Tool Required
III	Not required	J-35616-40 (BU)	No Tool Required

K194 Rear Gate Module (QK1+QT6)

Pin	Size	Color	Circuit	Function	Terminal Type ID	Option
1	2.5	BK	1850	Ground	III	—
2	0.5	WH	4100	AUTOSAR CAN Bus [-] 4 Serial Data	I	—
3	0.5	WH	4100	AUTOSAR CAN Bus [-] 4 Serial Data	I	—
4	—	—	—	Not Occupied	—	—
5	0.5	YE / BK	8085	Rear Closure Latch Primary Status	I	—
6	0.5	BN / GY	10281	Rear Closure Latch Secondary Status Signal	I	—
7	0.5	WH / GN	8084	Rear Closure Latch Neutral Status	I	—
8	0.5	GY / VT	4678	Rear Closure Latch Unlatch Status	I	—
9 - 12	—	—	—	Not Occupied	—	—
13	2.5	RD / VT	4442	Primary Fused Battery Positive Voltage	III	—
14	0.5	BU / VT	4101	AUTOSAR CAN Bus [+] 4 Serial Data	I	—
15	0.5	BU / VT	4101	AUTOSAR CAN Bus [+] 4 Serial Data	I	—
16	0.5	BN	7736	Rear Closure Latch 2 Unlatch Status Signal	I	—
17	—	—	—	Not Occupied	—	—
18	0.5	BN / RD	4683	Rear Closure Position Sensor Voltage Reference	I	—
19	0.5	BK / GN	4687	Rear Closure Position Sensor Low Reference	I	—
20	—	—	—	Not Occupied	—	—
21	0.5	BN / YE	4686	Rear Closure Position Sensor Signal 2	I	—
22	0.5	BU / WH	4685	Rear Closure Position Sensor Signal 1	I	—

K194 Rear Gate Module (QK1+QT6) (cont'd)

Pin	Size	Color	Circuit	Function	Terminal Type ID	Option
23	0.5	GN / BU	10283	Rear Closure Latch 2 Primary Status Signal	I	—
24	0.5	VT / WH	10284	Rear Closure Latch 2 Secondary Status Signal	I	—
25	1	BN / WH	4690	Rear Closure Open/Close Motor Close Control	II	—
26	0.5	BU / BN	10282	Rear Closure Latch 2 Neutral Status Signal	I	—
27	0.5	GY / BK	1575	Rear Closure Sensor Low Reference 2	I	—
28	0.5	BK / VT	4656	Rear Closure Object Sensor Low Reference	I	—
29	—	—	—	Not Occupied	—	—
30	1	BU	1509	Rear Closure Cinch Latch Motor 2 Release Control	I	—
31	1	GN	1499	Rear Closure Cinch Latch Motor 2 Cinch Control	I	—
32	—	—	—	Not Occupied	—	—
33	1	BU / GY	4682	Rear Closure Cinch Latch Motor Release Control	I	—
34	1	BN	4681	Rear Closure Cinch Latch Motor Cinch Control	I	—
35	0.5	GN	1577	Rear Closure Clutch Control	I	—
36	0.5	BU / BK	1590	Rear Closure Clutch Low Return	I	—
37	—	—	—	Not Occupied	—	—
38	1	WH	4689	Rear Closure Open/Close Motor Open Control	II	—

K212 Gear Shift Control Module ((MQC/MHS)+D07)

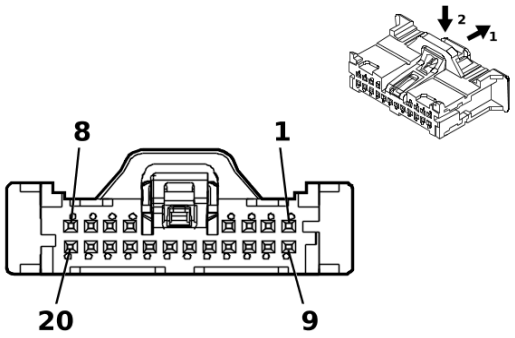

5200955

Connector Part Information

Harness Type: Front Floor Console Wiring Harness
OEM Connector: 35068196
Service Connector: Service by Harness - See Part Catalog
Description: 20-Way F Mini 50 Series(BK)

Terminal Part Information

Terminal Type ID	Terminated Lead	Diagnostic Test Probe	Terminal Removal Tool
I	Not required	EL-35616-58 (BK)	No Tool Required

K212 Gear Shift Control Module ((MQC/MHS)+D07)

Pin	Size	Color	Circuit	Function	Terminal Type ID	Option
1	0.35	BU / BK	4977	AUTOSAR CAN Bus [+] 3 Serial Data	I	—
2	0.35	BU / BK	4977	AUTOSAR CAN Bus [+] 3 Serial Data	I	—
3	0.35	WH	4976	AUTOSAR CAN Bus [-] 3 Serial Data	I	—
4	0.35	WH	4976	AUTOSAR CAN Bus [-] 3 Serial Data	I	—
5	0.35	WH	4055	Private Serial Data Powertrain CAN Bus [+] Serial Data	I	—
6	0.35	WH	4055	Private Serial Data Powertrain CAN Bus [+] Serial Data	I	—
7	0.35	BU / GY	4054	Private Serial Data Powertrain CAN Bus [-] Serial Data	I	—
8	0.35	BU / GY	4054	Private Serial Data Powertrain CAN Bus [-] Serial Data	I	—
9	0.35	RD / WH	5440	Battery Positive Voltage	I	—
10 - 15	—	—	—	Not Occupied	—	—
16	0.35	VT / GN	4320	Powertrain Sensor Bus Enable	I	—
17	0.35	VT / WH	239	Run/Crank Ignition 1 Voltage	I	—
18 - 19	—	—	—	Not Occupied	—	—
20	0.35	BK	1350	Ground	I	—

K214 Trailer Tire Pressure Indicator Module (UET)

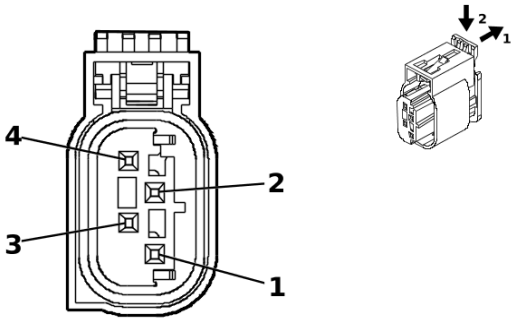

5215490

Connector Part Information

Harness Type: Chassis Wiring Harness
OEM Connector: 13655424
Service Connector: 86825461
Description: 4-Way F 0.64 MTS Series, Sealed(BK)

Terminal Part Information

Terminal Type ID	Terminated Lead	Diagnostic Test Probe	Terminal Removal Tool
I	Not required	J-35616-64B (L-BU)	No Tool Required

K214 Trailer Tire Pressure Indicator Module (UET)

Pin	Size	Color	Circuit	Function	Terminal Type ID	Option
1	0.5	RD / GN	6940	Battery Positive Voltage	I	—
2	0.5	BK / WH	1951	Signal Ground	I	—
3	0.5	GN / YE	2862	Body Control Module LIN Bus 16	I	—
4	—	—	—	Not Occupied	—	—

K219 Lighting Control Module X1

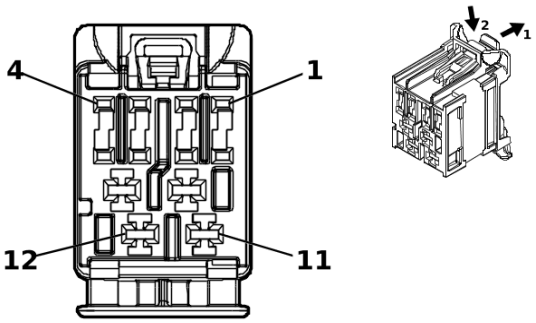

5203784

Connector Part Information

Harness Type: Body Wiring Harness
OEM Connector: 33382115
Service Connector: 13509990
Description: 12-Way F 1.2, 2.8 stAK50h Series(L-PU)

Terminal Part Information

Terminal Type ID	Terminated Lead	Diagnostic Test Probe	Terminal Removal Tool
I	13575435	J-35616-4A (PU)	J-38125-557
II	84729890	J-35616-12 (BU)	J-38125-553

K219 Lighting Control Module X1

Pin	Size	Color	Circuit	Function	Terminal Type ID	Option
1	0.5	WH / YE	1254	Left Front Park Lamp Control	II	—
2	—	—	—	Not Occupied	—	—
3	0.5	GN / WH	24	Backup Lamp Control	II	—
4	—	—	—	Not Occupied	—	—
5	0.5	BU / WH	1314	Left Front Turn Signal Lamp Control	II	—
6	0.5	BN / GY	5061	Left Front Fog Lamp Control	II	—
7	0.5	GN / YE	6846	Rear License Plate Lamp Control	II	—
8	0.35	GY / BU	7538	Left Front DRL Control	II	—
9	1.5	RD / VT	7140	Battery Positive Voltage	I	—
10	0.75	YE	712	Left Headlamp Low Beam Control	I	—
11	—	—	—	Not Occupied	—	—
12	0.75	WH	711	Left Headlamp High Beam Control	I	—

K219 Lighting Control Module X2

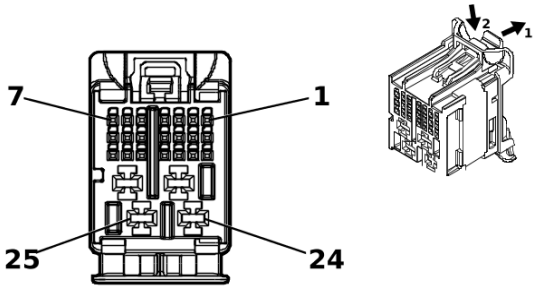

5203807

Connector Part Information

Harness Type: Body Wiring Harness
OEM Connector: 35392286
Service Connector: 13534966
Description: 25-Way F 0.5 MQS, 2.8 MCP Series(GY with GY Inner Connector)

Terminal Part Information

Terminal Type ID	Terminated Lead	Diagnostic Test Probe	Terminal Removal Tool
I	13575435	J-35616-4A (PU)	J-38125-557
II	19370262	EL-35616-58 (BK)	EL-38125-58

K219 Lighting Control Module X2

Pin	Size	Color	Circuit	Function	Terminal Type ID	Option
1 - 2	—	—	—	Not Occupied	—	—
3	0.35	BN / GY	2268	Windshield Washer Relay Control	II	—
4	0.35	BU / BN	38	Backup Lamp Relay Control	II	—
5 - 9	—	—	—	Not Occupied	—	—
10	0.35	BN / GN	196	Windshield Wiper Motor Park Switch Signal	II	—
11	0.35	VT / BK	6568	Front Turn Signal Lamp Feedback Signal	II	—
12	0.35	GY	91	Windshield Wiper Motor Relay Coil Control	II	—
13	—	—	—	Not Occupied	—	—
14	0.35	VT	185	Low Washer Fluid Indicator Control	II	—
15 - 18	—	—	—	Not Occupied	—	—
19	0.35	WH / BN	7055	Auxiliary Park Lamp Relay Control	II	—
20	0.35	WH / YE	7545	Right Front Turn Signal Lamp Feedback Signal	II	—
21	0.35	WH / VT	860	Windshield Wiper Switch High Signal	II	—
22	1.5	RD / GN	7740	Battery Positive Voltage	I	—
23	0.5	RD / BU	840	Battery Positive Voltage	I	—
24 - 25	—	—	—	Not Occupied	—	—

K219 Lighting Control Module X3

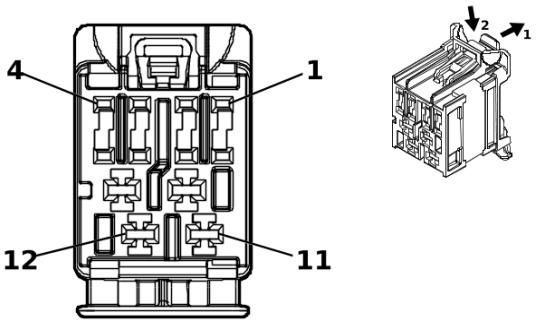

5203797

Connector Part Information

Harness Type: Body Wiring Harness
OEM Connector: 33382116
Service Connector: 13509989
Description: 12-Way F 1.2, 2.8 stAK50h Series(GN)

Terminal Part Information

Terminal Type ID	Terminated Lead	Diagnostic Test Probe	Terminal Removal Tool
I	13575435	J-35616-4A (PU)	J-38125-557
II	84729890	J-35616-12 (BU)	J-38125-553

K219 Lighting Control Module X3

Pin	Size	Color	Circuit	Function	Terminal Type ID	Option
1	0.35	BU / BN	7539	Right Front DRL Control	II	—
2 - 3	—	—	—	Not Occupied	—	—
4	0.5	BU / GN	1253	Right Front Park Lamp Control	II	—
5	—	—	—	Not Occupied	—	—
6	0.75	BU / VT	1335	Right Rear Turn Signal Lamp Control 2	II	—
7	0.35	BU / YE	7761	Backup Illumination Lamp Control	II	—
8	—	—	—	Not Occupied	—	—
9	1.5	RD / BU	540	Battery Positive Voltage	I	—
10	1.5	RD / BN	1440	Battery Positive Voltage	I	—
11	0.75	WH	311	Right Headlamp High Beam Control	I	—
12	1	YE	312	Right Headlamp Low Beam Control	I	—

K219 Lighting Control Module X4

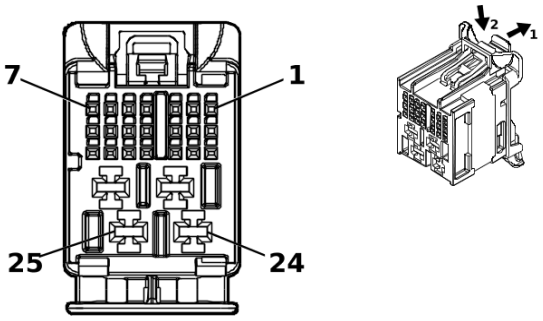

5203416

Connector Part Information

Harness Type: Body Wiring Harness
OEM Connector: 35392283
Service Connector: 13534969
Description: 25-Way F 0.5 MQS, 2.8 MCP Series(PU with GY Inner Connector)

Terminal Part Information

Terminal Type ID	Terminated Lead	Diagnostic Test Probe	Terminal Removal Tool
I	13575435	J-35616-4A (PU)	J-38125-557
II	19370262	EL-35616-58 (BK)	EL-38125-58

K219 Lighting Control Module X4

Pin	Size	Color	Circuit	Function	Terminal Type ID	Option
1 - 2	—	—	—	Not Occupied	—	—
3	0.35	BU / YE	4979	AUTOSAR CAN Bus [+] 2 Serial Data	II	—
4	0.35	WH	4978	AUTOSAR CAN Bus [-] 2 Serial Data	II	—
5	0.35	BU / YE	4979	AUTOSAR CAN Bus [+] 2 Serial Data	II	—
6	0.35	WH	4978	AUTOSAR CAN Bus [-] 2 Serial Data	II	—
7	0.35	WH / BU	6311	Cruise/ETC/TCC Brake Signal	II	—
8 - 9	—	—	—	Not Occupied	—	—
10	0.35	WH	4978	AUTOSAR CAN Bus [-] 2 Serial Data	II	—
11	0.35	BU / YE	4979	AUTOSAR CAN Bus [+] 2 Serial Data	II	—
12 - 21	—	—	—	Not Occupied	—	—
22	1	RD / BN	1140	Battery Positive Voltage	I	—
23	1	BK / WH	1551	Signal Ground	I	—
24	0.5	RD / GN	1540	Battery Positive Voltage	I	—
25	1	BK / WH	1451	Signal Ground	I	—

K219 Lighting Control Module X5

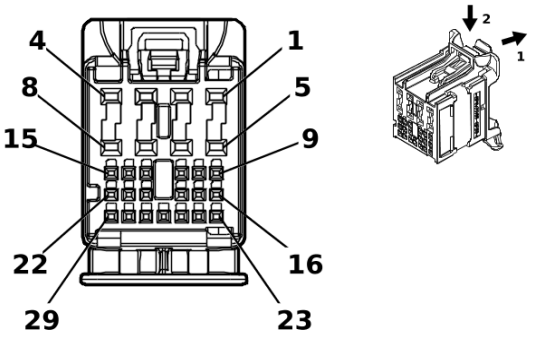

5203373

Connector Part Information

Harness Type: Body Wiring Harness
OEM Connector: 35392292
Service Connector: 13534975
Description: 29-Way F 0.5 NANO, 1.2 MCON, stAK50h Series(BU with GY Inner Connector)

Terminal Part Information

Terminal Type ID	Terminated Lead	Diagnostic Test Probe	Terminal Removal Tool
I	19370262	EL-35616-58 (BK)	EL-38125-58
II	84729890	J-35616-12 (BU)	J-38125-553

K219 Lighting Control Module X5

Pin	Size	Color	Circuit	Function	Terminal Type ID	Option
1	0.5	WH / GN	5966	Approach Lamp Control	II	—
2	0.75	BN / GY	6995	Right Rear Park Lamp Control	II	—
3	0.5	GY / BU	7762	Cargo Lamp Control	II	—
4	0.5	WH / VT	1430	Exterior Courtesy Lamp Control	II	—
5	0.5	YE / GN	2024	Animation Lighting Control	II	—
6	0.75	BN / BU	6993	Left Rear Park Lamp Control	II	—
7	0.5	GN / VT	1315	Right Front Turn Signal Lamp Control	II	—
8	0.75	BU / WH	1334	Left Rear Turn Signal Lamp Control 2	II	—
9	0.35	GN / GY	2115	Right Turn Signal Lamp Control 2	I	—
10	0.35	WH / GY	2114	Left Turn Signal Lamp Control 2	I	—
11	0.35	GY	1715	Windshield Wiper Switch High Signal	I	—
13	0.35	GN / BN	319	Right Rear Trailer Stop/Turn Lamp Control	I	—
14	—	—	—	Not Occupied	—	—
15	0.35	WH / GY	2935	Task Lamp Switch Signal	I	—
16	0.35	YE / WH	2934	Task Lamp Control Right	I	—
17	—	—	—	Not Occupied	—	—
18	0.35	VT / WH	239	Run/Crank Ignition 1 Voltage	I	—
20 - 22	—	—	—	Not Occupied	—	—
23	0.35	WH / VT	6567	Rear Turn Signal Lamp Feedback Signal	I	—
24	0.35	WH / BK	7544	Right Rear Turn Signal Lamp Feedback Signal	I	—
25	0.35	BN / YE	820	Center High Mounted Stop Lamp Supply Voltage	I	—

K219 Lighting Control Module X5 (cont'd)

Pin	Size	Color	Circuit	Function	Terminal Type ID	Option
26 - 27	—	—	—	Not Occupied	—	—
28	0.35	YE / GY	2933	Task Lamp Control Left	I	—
29	0.35	YE / BU	318	Left Rear Trailer Stop/Turn Lamp Control	I	—

M8 Blower Motor

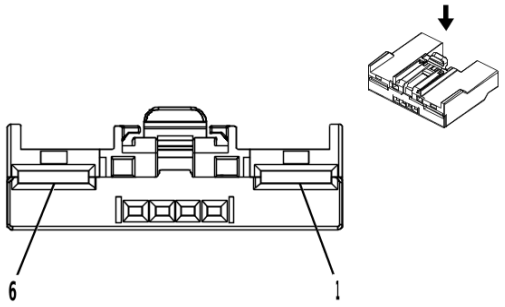

2904463

Connector Part Information

Harness Type: Instrument Panel Wiring Harness
OEM Connector: 13965831
Service Connector: 19356432
Description: 6-Way F 0.64 GET, 6.3 Series(BK)

Terminal Part Information

Terminal Type ID	Terminated Lead	Diagnostic Test Probe	Terminal Removal Tool
I	Not required	J-35616-42 (RD)	No Tool Required
II	Not required	J-35616-64B (L-BU)	No Tool Required

M8 Blower Motor

Pin	Size	Color	Circuit	Function	Terminal Type ID	Option
1	4	RD / GY	1740	Battery Positive Voltage	I	—
2	0.35	BU / GY	754	Blower Motor Speed Control	II	—
3	0.35	GN / BU	761	Blower Speed Feedback Signal	II	—
4 - 5	—	—	—	Not Occupied	—	—
6	4	BK	1050	Ground	I	—

M10 Charge Air Cooler Coolant Pump (LM2)

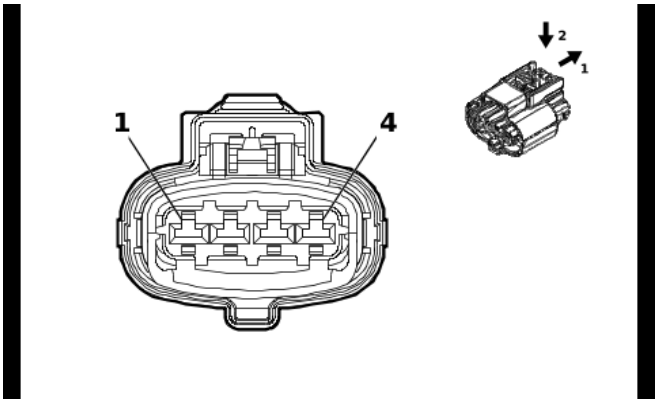

5869064

Connector Part Information

Harness Type: Engine Wiring Harness
OEM Connector: 35133588
Service Connector: 19371209
Description: 4-Way F 2.8 CTS Series, Sealed(BK)

Terminal Part Information

Terminal Type ID	Terminated Lead	Diagnostic Test Probe	Terminal Removal Tool
I	Not required	J-35616-4A (PU)	No Tool Required

M10 Charge Air Cooler Coolant Pump (LM2)

Pin	Size	Color	Circuit	Function	Terminal Type ID	Option
1	1	VT / BU	5294	Powertrain Main Relay Fused Supply Voltage 5	I	—
2	0.5	GN / VT	4621	Engine Control Module LIN Bus 1	I	—
3	—	—	—	Not Occupied	—	—
4	1	BK	6150	Engine Odd Bank Ground	I	—

M14A Pickup Box Endgate Lock Actuator (QK1+QT5)

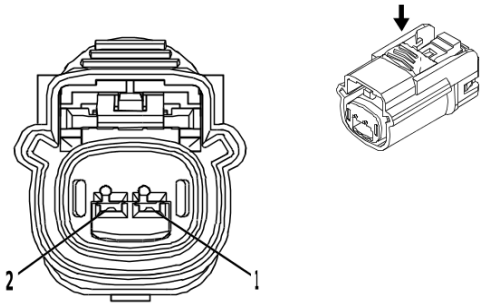

4332222

Connector Part Information

Harness Type: Endgate Wiring Harness
OEM Connector: 15514573
Service Connector: Service by Harness - See Part Catalog
Description: 2-Way F 1.5 OCS Series, Sealed(BK)

Terminal Part Information

Terminal Type ID	Terminated Lead	Diagnostic Test Probe	Terminal Removal Tool
I	Not required	J-35616-2A (GY)	No Tool Required

M14A Pickup Box Endgate Lock Actuator (QK1+QT5)

Pin	Size	Color	Circuit	Function	Terminal Type ID	Option
1	1	GN	1299	Major Endgate Motor Control	I	—
2	1	YE / BK	7730	Major Endgate Motor Low Reference	I	—

M26 Front Drive Axle Actuator (NP0/NQH)

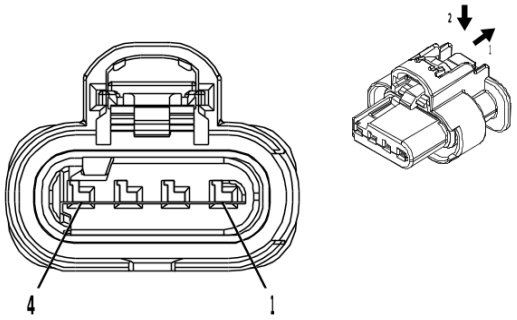

4210809

Connector Part Information

Harness Type: Transfer Case Selector Shift Control Switch Wiring Harness Extension Harness
OEM Connector: 33390897
Service Connector: Service by Harness - See Part Catalog
Description: 4-Way F 1.2 MCON-CB Series, Sealed(BK)

Terminal Part Information

Terminal Type ID	Terminated Lead	Diagnostic Test Probe	Terminal Removal Tool
I	Not required	J-35616-16 (L-GN)	No Tool Required

M26 Front Drive Axle Actuator (NP0/NQH)

Pin	Size	Color	Circuit	Function	Terminal Type ID	Option
1	0.5	GN	8016	Secondary Axle Motor Control	I	—
2	0.5	GY / BK	1570	Front Axle Actuator Control	I	—
3	0.5	YE / WH	1695	4WD Locked Range Indicator Control	I	—
4	0.5	BK	450	Ground	I	—

M50D Front Seat Tilt Adjuster Actuator - Driver (A2X)

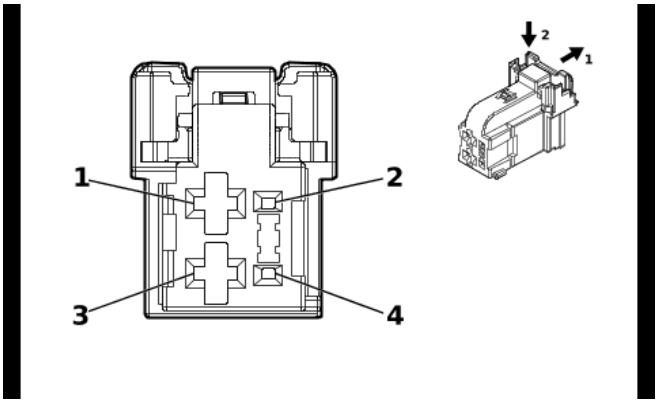

5410027

Connector Part Information

Harness Type: Front Seat Wiring Harness - Driver
OEM Connector: 2316171-1
Service Connector: Service by Harness - See Part Catalog
Description: 4-Way F 0.64, 2.8 Series(BK)

Terminal Part Information

Terminal Type ID	Terminated Lead	Diagnostic Test Probe	Terminal Removal Tool
I	Not required	J-35616-35 (VT)	No Tool Required

M50D Front Seat Tilt Adjuster Actuator - Driver (A2X)

Pin	Size	Color	Circuit	Function	Terminal Type ID	Option
1	1.5	BU / VT	287	Driver Seat Front Vertical Motor Down Control	I	—
2	—	—	—	Not Occupied	—	—
3	1.5	GN / BN	286	Driver Seat Front Vertical Motor Up Control	I	—
4	—	—	—	Not Occupied	—	—

M50P Front Seat Tilt Adjuster Actuator - Passenger

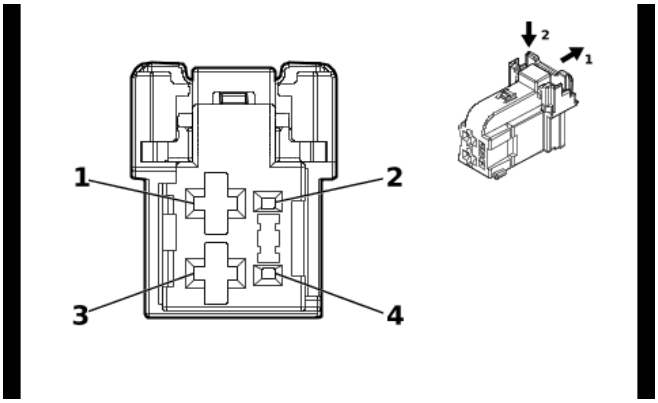

5410027

Connector Part Information

Harness Type: Front Seat Wiring Harness - Passenger
OEM Connector: 2316171-1
Service Connector: Service by Harness - See Part Catalog
Description: 4-Way F 0.64, 2.8 Series(BK)

Terminal Part Information

Terminal Type ID	Terminated Lead	Diagnostic Test Probe	Terminal Removal Tool
I	Not required	J-35616-35 (VT)	No Tool Required

M50P Front Seat Tilt Adjuster Actuator - Passenger

Pin	Size	Color	Circuit	Function	Terminal Type ID	Option
1	1.5	GN / VT	297	Passenger Seat Front Vertical Motor Up Control	I	—
2	—	—	—	Not Occupied	—	—
3	1.5	GN / BU	298	Passenger Seat Front Vertical Motor Down Control	I	—
4	—	—	—	Not Occupied	—	—

M51D Front Seat Adjuster Actuator - Driver (A2X)

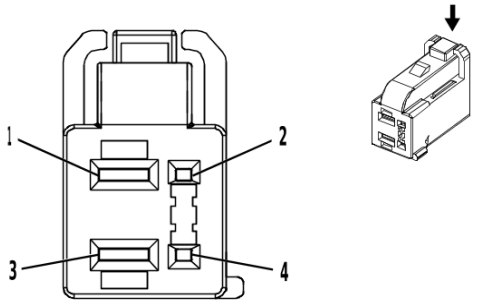

3683652

Connector Part Information

Harness Type: Front Seat Wiring Harness - Driver
OEM Connector: 13583828
Service Connector: Service by Harness - See Part Catalog
Description: 4-Way F 0.64, 2.8 Series(BK)

Terminal Part Information

Terminal Type ID	Terminated Lead	Diagnostic Test Probe	Terminal Removal Tool
I	Not required	J-35616-4A (PU)	No Tool Required

M51D Front Seat Adjuster Actuator - Driver (A2X)

Pin	Size	Color	Circuit	Function	Terminal Type ID	Option
1	1.5	GY / GN	284	Driver Seat Horizontal Motor Rearward Control	I	—
2	—	—	—	Not Occupied	—	—
3	1.5	YE / BU	285	Driver Seat Horizontal Motor Forward Control	I	—
4	—	—	—	Not Occupied	—	—

M51P Front Seat Adjuster Actuator - Passenger

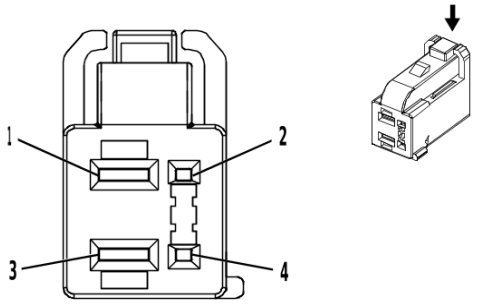

3683652

Connector Part Information

Harness Type: Front Seat Wiring Harness - Passenger
OEM Connector: 13583828
Service Connector: Service by Harness - See Part Catalog
Description: 4-Way F 0.64, 2.8 Series(BK)

Terminal Part Information

Terminal Type ID	Terminated Lead	Diagnostic Test Probe	Terminal Removal Tool
I	Not required	J-35616-4A (PU)	No Tool Required

M51P Front Seat Adjuster Actuator - Passenger

Pin	Size	Color	Circuit	Function	Terminal Type ID	Option
1	1.5	YE / BU	290	Passenger Seat Horizontal Motor Rearward Control	I	—
2	—	—	—	Not Occupied	—	—
3	1.5	YE / WH	296	Passenger Seat Horizontal Motor Forward Control	I	—
4	—	—	—	Not Occupied	—	—

M53D Front Seat Back Lumbar Motor - Driver (A2X)

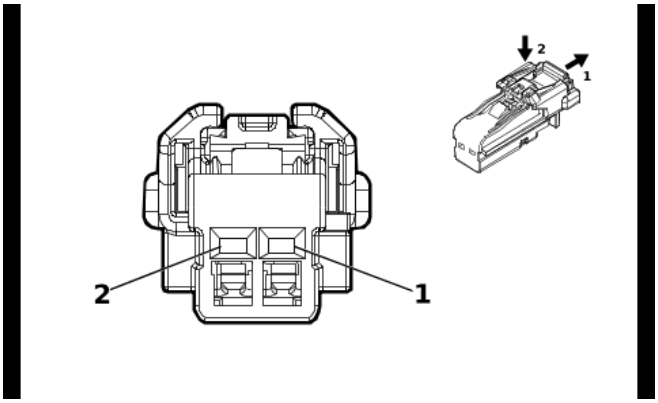

4115691

Connector Part Information

Harness Type: Front Seat Wiring Harness - Driver
OEM Connector: 6098-8988
Service Connector: Service by Harness - See Part Catalog
Description: 2-Way F 1.2 MCON Series(BK)

Terminal Part Information

Terminal Type ID	Terminated Lead	Diagnostic Test Probe	Terminal Removal Tool
I	Not required	J-35616-16 (L-GN)	No Tool Required

M53D Front Seat Back Lumbar Motor - Driver (A2X)

Pin	Size	Color	Circuit	Function	Terminal Type ID	Option
1	0.75	BU	611	Driver Seat Lumbar Support Motor Forward Control	I	—
2	0.75	VT	610	Driver Seat Lumbar Support Motor Backward Control	I	—

M53P Front Seat Back Lumbar Motor - Passenger

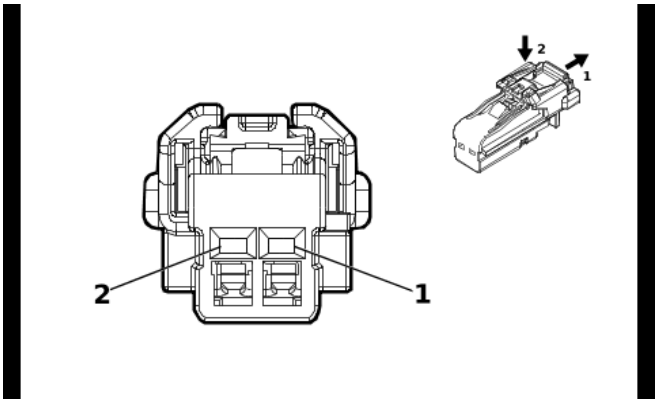

4115691

Connector Part Information

Harness Type: Front Seat Wiring Harness - Passenger
OEM Connector: 6098-8988
Service Connector: Service by Harness - See Part Catalog
Description: 2-Way F 1.2 MCON Series(BK)

Terminal Part Information

Terminal Type ID	Terminated Lead	Diagnostic Test Probe	Terminal Removal Tool
I	Not required	J-35616-16 (L-GN)	No Tool Required

M53P Front Seat Back Lumbar Motor - Passenger

Pin	Size	Color	Circuit	Function	Terminal Type ID	Option
1	0.75	BU	211	Passenger Seat Lumbar Support Motor Forward Control	I	—
2	0.75	VT	210	Passenger Seat Lumbar Support Motor Backward Control	I	—

M55D Front Seat Vertical Adjuster Actuator - Driver (A2X)

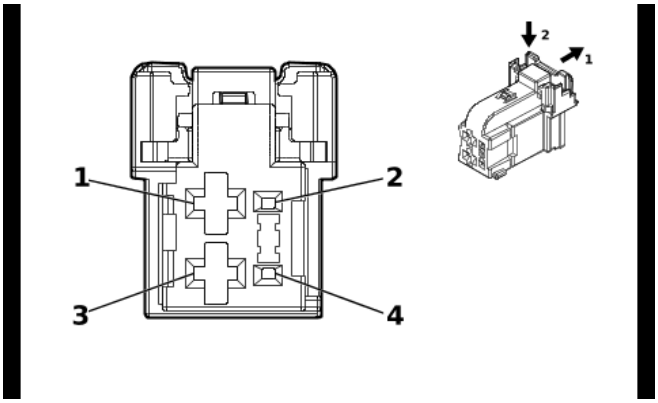

5410027

Connector Part Information

Harness Type: Front Seat Wiring Harness - Driver
OEM Connector: 2316171-1
Service Connector: Service by Harness - See Part Catalog
Description: 4-Way F 0.64, 2.8 Series(BK)

Terminal Part Information

Terminal Type ID	Terminated Lead	Diagnostic Test Probe	Terminal Removal Tool
I	Not required	J-35616-35 (VT)	No Tool Required

M55D Front Seat Vertical Adjuster Actuator - Driver (A2X)

Pin	Size	Color	Circuit	Function	Terminal Type ID	Option
1	1.5	GY / BU	283	Driver Seat Rear Vertical Motor Down Control	I	—
2	—	—	—	Not Occupied	—	—
3	1.5	YE	282	Driver Seat Rear Vertical Motor Up Control	I	—
4	—	—	—	Not Occupied	—	—

M55P Front Seat Vertical Adjuster Actuator - Passenger

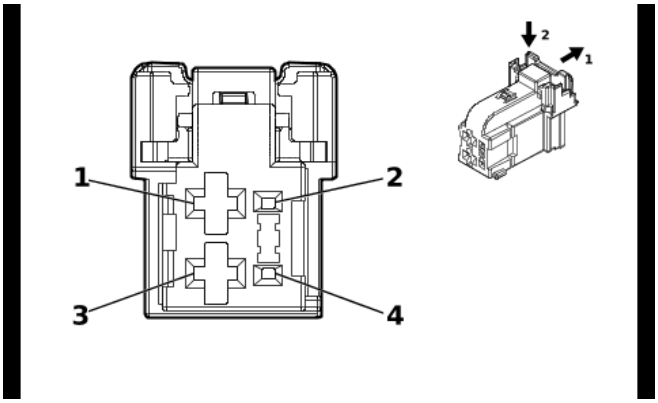

5410027

Connector Part Information

Harness Type: Front Seat Wiring Harness - Passenger
OEM Connector: 2316171-1
Service Connector: Service by Harness - See Part Catalog
Description: 4-Way F 0.64, 2.8 Series(BK)

Terminal Part Information

Terminal Type ID	Terminated Lead	Diagnostic Test Probe	Terminal Removal Tool
I	Not required	J-35616-35 (VT)	No Tool Required

M55P Front Seat Vertical Adjuster Actuator - Passenger

Pin	Size	Color	Circuit	Function	Terminal Type ID	Option
1	1.5	BU / WH	289	Passenger Seat Rear Vertical Motor Down Control	I	—
2	—	—	—	Not Occupied	—	—
3	1.5	GN / WH	288	Passenger Seat Rear Vertical Motor Up Control	I	—
4	—	—	—	Not Occupied	—	—

M56D Front Seat Recliner Actuator - Driver (A2X)

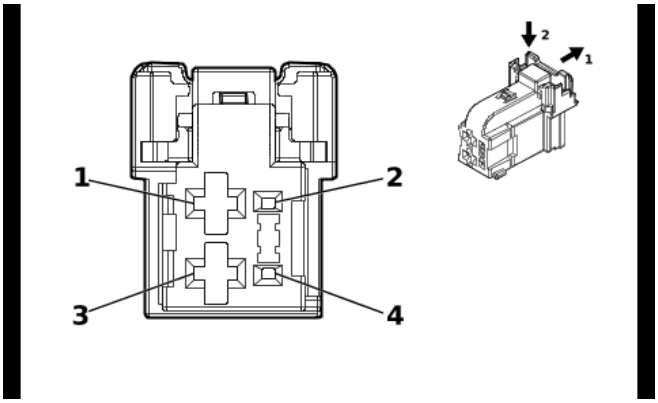

5410027

Connector Part Information

Harness Type: Front Seat Wiring Harness - Driver
OEM Connector: 2316171-1
Service Connector: Service by Harness - See Part Catalog
Description: 4-Way F 0.64, 2.8 Series(BK)

Terminal Part Information

Terminal Type ID	Terminated Lead	Diagnostic Test Probe	Terminal Removal Tool
I	Not required	J-35616-35 (VT)	No Tool Required

M56D Front Seat Recliner Actuator - Driver (A2X)

Pin	Size	Color	Circuit	Function	Terminal Type ID	Option
1	1.5	GN / YE	276	Driver Seat Recline Motor Forward Control	I	—
2	—	—	—	Not Occupied	—	—
3	1.5	BU / YE	277	Driver Seat Recline Motor Rearward Control	I	—
4	—	—	—	Not Occupied	—	—

M56P Front Seat Recliner Actuator - Passenger

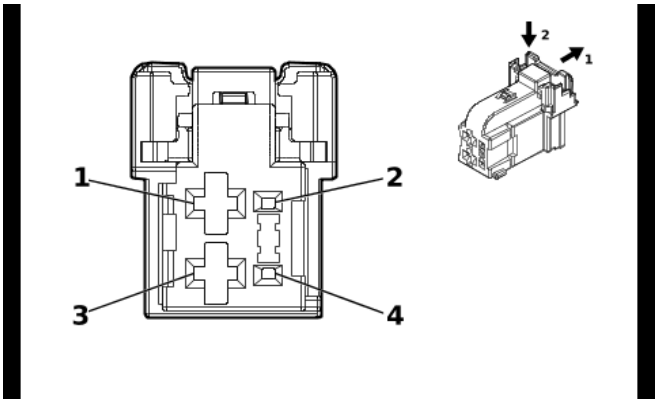

5410027

Connector Part Information

Harness Type: Front Seat Wiring Harness - Passenger
OEM Connector: 2316171-1
Service Connector: Service by Harness - See Part Catalog
Description: 4-Way F 0.64, 2.8 Series(BK)

Terminal Part Information

Terminal Type ID	Terminated Lead	Diagnostic Test Probe	Terminal Removal Tool
I	Not required	J-35616-35 (VT)	No Tool Required

M56P Front Seat Recliner Actuator - Passenger

Pin	Size	Color	Circuit	Function	Terminal Type ID	Option
1	1.5	GN	76	Passenger Seat Recline Motor Forward Control	I	—
2	—	—	—	Not Occupied	—	—
3	1.5	BU / BN	77	Passenger Seat Recline Motor Rearward Control	I	—
4	—	—	—	Not Occupied	—	—

M63 Rear Sliding Window Motor (A48)

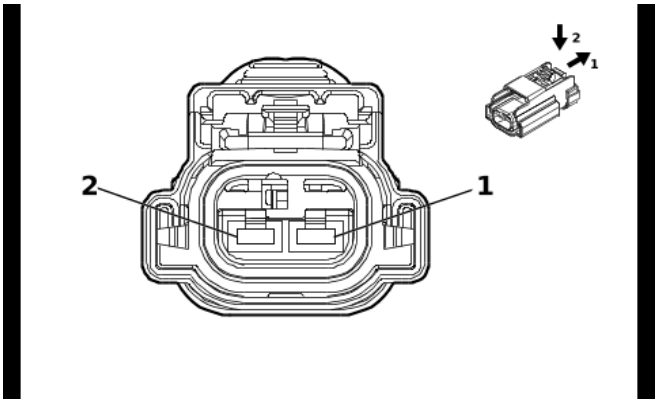

5795169

Connector Part Information

Harness Type: Body Wiring Harness
OEM Connector: 35286783
Service Connector: 19301518
Description: 2-Way F 2.8 APEX Series, Sealed(BK)

Terminal Part Information

Terminal Type ID	Terminated Lead	Diagnostic Test Probe	Terminal Removal Tool
I	Not required	J-35616-35 (VT)	No Tool Required

M63 Rear Sliding Window Motor (A48)

Pin	Size	Color	Circuit	Function	Terminal Type ID	Option
1	2	VT / YE	7453	Window Motor Rear Auxiliary Open Control	I	—
2	2	YE	7454	Window Motor Rear Auxiliary Close Control	I	—

M64 Starter X1 (L3B)

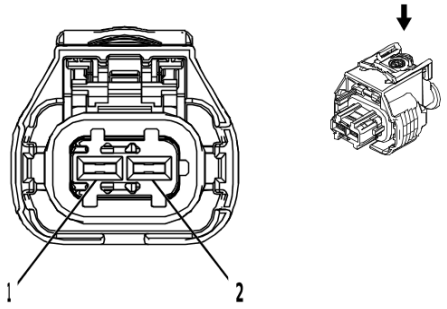

2577394

Connector Part Information

Harness Type: Engine Wiring Harness
OEM Connector: 13930085
Service Connector: 84941154
Description: 2-Way F 2.8 Series, Sealed(BK)

Terminal Part Information

Terminal Type ID	Terminated Lead	Diagnostic Test Probe	Terminal Removal Tool
I	Not required	J-35616-35 (VT)	No Tool Required

M64 Starter X1 (L3B)

Pin	Size	Color	Circuit	Function	Terminal Type ID	Option
1	2.5	YE	6	Starter Solenoid Crank Ignition Voltage	I	—
2	2.5	YE / GN	4358	Starter Pinion Solenoid Voltage	I	—

M64 Starter X1 (L84/L87)

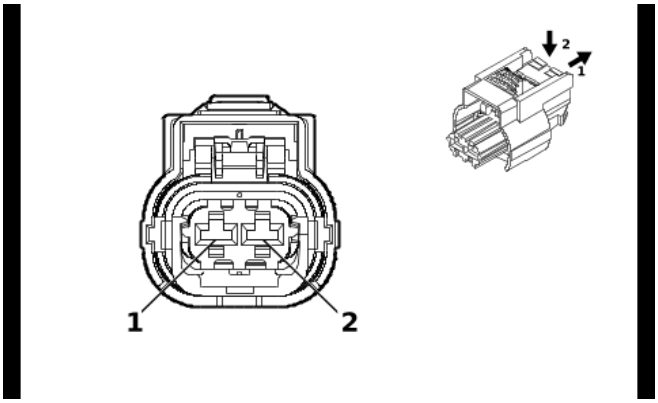

4992524

Connector Part Information

Harness Type: Engine Wiring Harness
OEM Connector: 35182447
Service Connector: 84941154
Description: 2-Way F 2.8 CTS Series, Sealed(BK)

Terminal Part Information

Terminal Type ID	Terminated Lead	Diagnostic Test Probe	Terminal Removal Tool
I	Not required	J-35616-4A (PU)	No Tool Required

M64 Starter X1 (L84/L87)

Pin	Size	Color	Circuit	Function	Terminal Type ID	Option
1	2.5	YE	6	Starter Solenoid Crank Ignition Voltage	I	—
2	2.5	YE / GN	4358	Starter Pinion Solenoid Voltage	I	—

M64 Starter X1 (LM2)

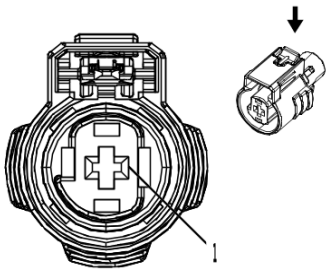

2717134

Connector Part Information

Harness Type: Engine Wiring Harness
OEM Connector: 15526411
Service Connector: 19300471
Description: 1-Way F 2.8 MCP Series, Sealed(BK)

Terminal Part Information

Terminal Type ID	Terminated Lead	Diagnostic Test Probe	Terminal Removal Tool
I	Not required	J-35616-35 (VT)	No Tool Required

M64 Starter X1 (LM2)

Pin	Size	Color	Circuit	Function	Terminal Type ID	Option
1	2.5	YE	6	Starter Solenoid Crank Ignition Voltage	I	—

M64 Starter X2 (L3B)

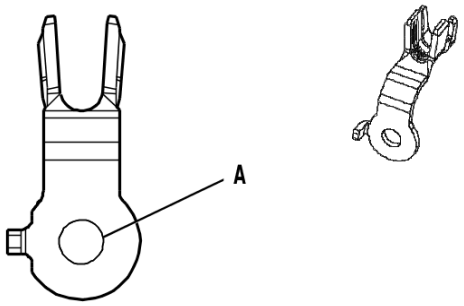

5020399

Connector Part Information

Harness Type: Starter Solenoid Cable - L3B
OEM Connector: 13516388
Service Connector: Service by Cable Assembly — See Part Catalog
Description: 1-Way F Ring Terminal

Terminal Part Information

Terminal Type ID	Terminated Lead	Diagnostic Test Probe	Terminal Removal Tool
I	Not required	No Tool Required	No Tool Required

M64 Starter X2 (L3B)

Pin	Size	Color	Circuit	Function	Terminal Type ID	Option
1	35	RD / YE	2	Battery Positive Voltage	I	—
A	—	—	—	Not Occupied	—	—

M64 Starter X2 (L84/L87)

—

Connector Part Information

Harness Type: Starter Solenoid Cable
OEM Connector: 84406835
Service Connector: Service by Cable Assembly — See Part Catalog
Description: 1-Way F Ring Terminal

Terminal Part Information

Terminal Type ID	Terminated Lead	Diagnostic Test Probe	Terminal Removal Tool
I	Not required	No Tool Required	No Tool Required

M64 Starter X2 (L84/L87)

Pin	Size	Color	Circuit	Function	Terminal Type ID	Option
1	35	RD / YE	2	Battery Positive Voltage	I	—

M64 Starter X2 (LM2)

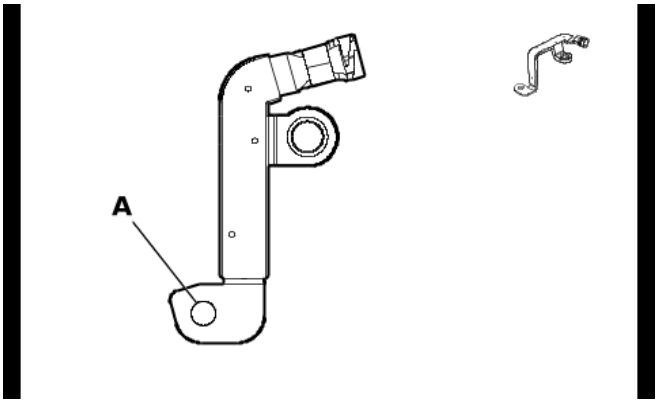

5911297

Connector Part Information

Harness Type: Starter Solenoid Cable - LM2
OEM Connector: 84892630
Service Connector: Service by Cable Assembly — See Part Catalog
Description: 1-Way F Ring Terminal

Terminal Part Information

Terminal Type ID	Terminated Lead	Diagnostic Test Probe	Terminal Removal Tool
I	Not required	No Tool Required	No Tool Required

M64 Starter X2 (LM2)

Pin	Size	Color	Circuit	Function	Terminal Type ID	Option
1	35	RD / YE	2	Battery Positive Voltage	I	—
A	—	—	—	Not Occupied	—	—

M65 Steering Column Telescope Actuator (N38)

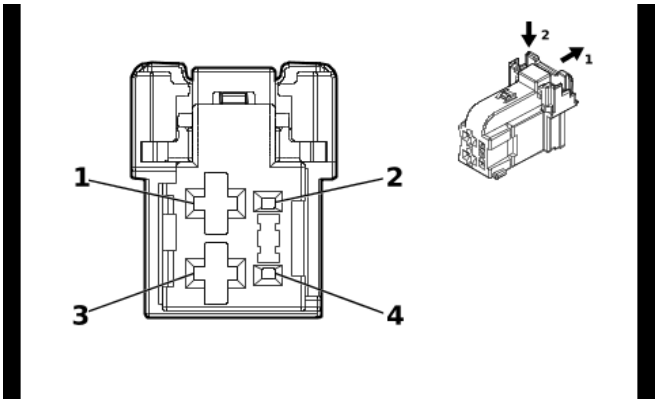

5410027

Connector Part Information

Harness Type: Steering Column Tilt and Telescope Wheel Actuator Motor Harness
OEM Connector: 2316171-1
Service Connector: Service by Harness - See Part Catalog
Description: 4-Way F 0.64, 2.8 Series(BK)

Terminal Part Information

Terminal Type ID	Terminated Lead	Diagnostic Test Probe	Terminal Removal Tool
I	Not required	No Tool Required	No Tool Required

M65 Steering Column Telescope Actuator (N38)

Pin	Size	Color	Circuit	Function	Terminal Type ID	Option
1	1	GN / BK	2098	Steering Column Telescope Motor Forward Control	I	—
2	0.35	YE / BN	2110	Steering Column Telescope Motor Rearward Control	I	—
3	1	VT / GY	2153	Steering Column Telescope Motor Signal	I	—
4	0.35	YE / BK	2152	Steering Column Telescope Motor Low Reference	I	—

M68 Steering Column Tilt Wheel Actuator (N38)

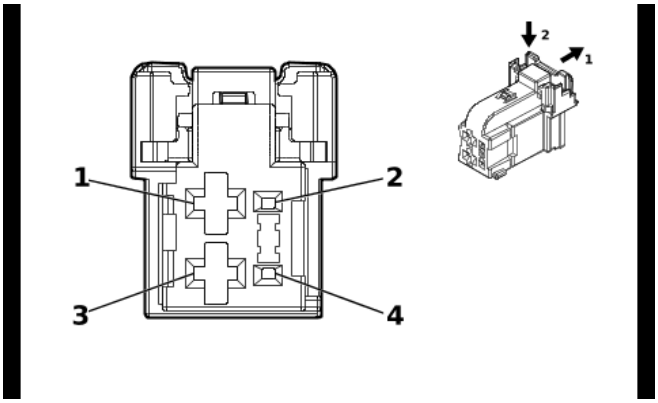

5410027

Connector Part Information

Harness Type: Steering Column Tilt and Telescope Wheel Actuator Motor Harness
OEM Connector: 2316171-1
Service Connector: Service by Harness - See Part Catalog
Description: 4-Way F 0.64, 2.8 Series(BK)

Terminal Part Information

Terminal Type ID	Terminated Lead	Diagnostic Test Probe	Terminal Removal Tool
I	Not required	No Tool Required	No Tool Required

M68 Steering Column Tilt Wheel Actuator (N38)

Pin	Size	Color	Circuit	Function	Terminal Type ID	Option
1	1	GY / VT	2111	Steering Column Tilt Motor Up Control	I	—
2	0.35	BN / GY	2112	Steering Column Tilt Motor Down Control	I	—
3	1	YE	2154	Steering Column Tilt Motor Signal	I	—
4	0.35	WH / BK	2157	Steering Column Tilt Motor Low Reference	I	—

M73A Front Seat Back Ventilation Blower - Driver (KQV)

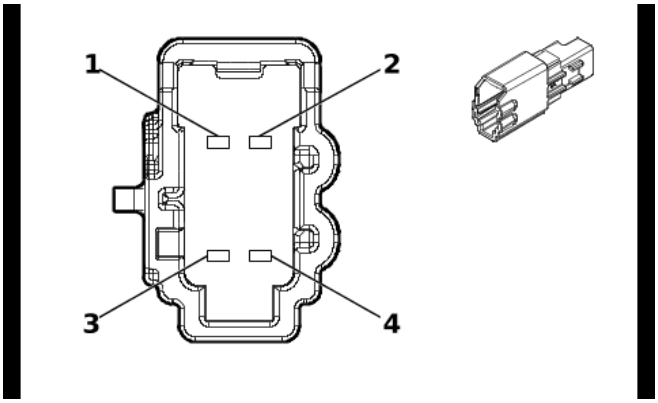

5423974

Connector Part Information

Harness Type: Front Seat Wiring Harness - Driver
OEM Connector: 6098-9049
Service Connector: Service by Harness - See Part Catalog
Description: 4-Way M 1.2 MCON Series(GY)

Terminal Part Information

Terminal Type ID	Terminated Lead	Diagnostic Test Probe	Terminal Removal Tool
I	Not required	J-35616-17 (L-GN)	No Tool Required

M73A Front Seat Back Ventilation Blower - Driver (KQV)

Pin	Size	Color	Circuit	Function	Terminal Type ID	Option
1	0.75	VT / WH	1139	Run/Crank Ignition 1 Voltage	I	—
2	0.5	GN / VT	5906	Driver Seat Blower Motor Control 1	I	—
3	0.75	BK	1550	Ground	I	—
4	—	—	—	Not Occupied	—	—

M73B Front Seat Back Ventilation Blower - Passenger (KQV)

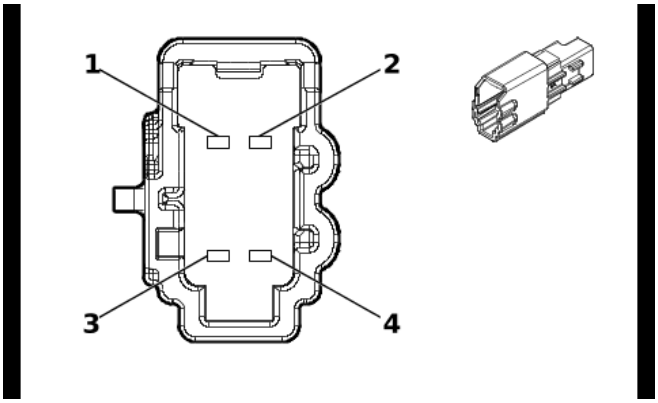

5423974

Connector Part Information

Harness Type: Front Seat Wiring Harness - Passenger
OEM Connector: 6098-9049
Service Connector: Service by Harness - See Part Catalog
Description: 4-Way M 1.2 MCON Series(GY)

Terminal Part Information

Terminal Type ID	Terminated Lead	Diagnostic Test Probe	Terminal Removal Tool
I	Not required	J-35616-17 (L-GN)	No Tool Required

M73B Front Seat Back Ventilation Blower - Passenger (KQV)

Pin	Size	Color	Circuit	Function	Terminal Type ID	Option
1	0.75	VT / WH	1139	Run/Crank Ignition 1 Voltage	I	—
2	0.5	VT / WH	5908	Passenger Seat Blower Motor Control 1	I	—
3	0.75	BK	1350	Ground	I	—
4	—	—	—	Not Occupied	—	—

M73D Front Seat Cushion Ventilation Blower - Driver (KQV)

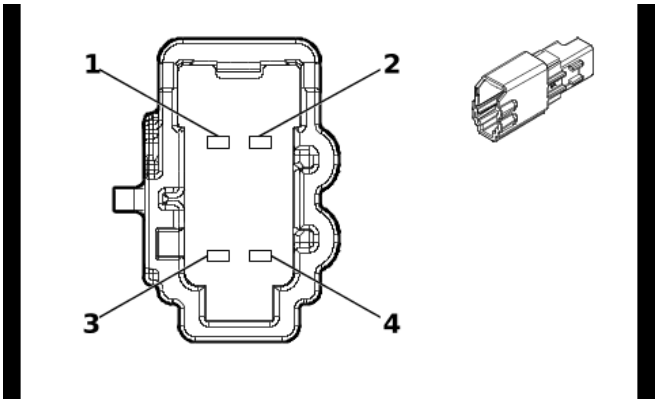

5423974

Connector Part Information

Harness Type: Front Seat Wiring Harness - Driver
OEM Connector: 6098-9049
Service Connector: Service by Harness - See Part Catalog
Description: 4-Way M 1.2 MCON Series(GY)

Terminal Part Information

Terminal Type ID	Terminated Lead	Diagnostic Test Probe	Terminal Removal Tool
I	Not required	J-35616-17 (L-GN)	No Tool Required

M73D Front Seat Cushion Ventilation Blower - Driver (KQV)

Pin	Size	Color	Circuit	Function	Terminal Type ID	Option
1	0.75	VT / WH	1139	Run/Crank Ignition 1 Voltage	I	—
2	0.5	GN / VT	5906	Driver Seat Blower Motor Control 1	I	—
3	0.75	BK	1550	Ground	I	—
4	—	—	—	Not Occupied	—	—

M73P Front Seat Cushion Ventilation Blower - Passenger (KQV)

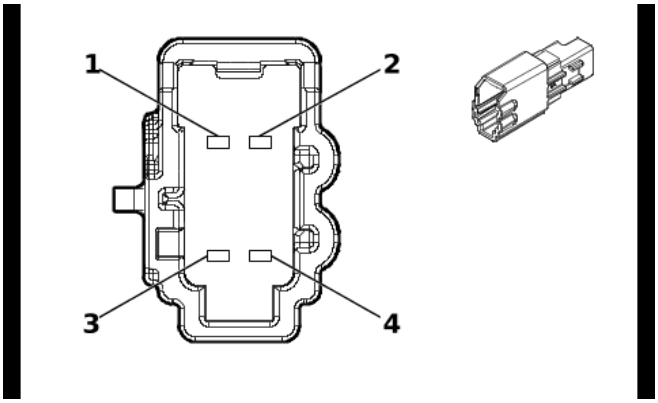

5423974

Connector Part Information

Harness Type: Front Seat Wiring Harness - Passenger
OEM Connector: 6098-9049
Service Connector: Service by Harness - See Part Catalog
Description: 4-Way M 1.2 MCON Series(GY)

Terminal Part Information

Terminal Type ID	Terminated Lead	Diagnostic Test Probe	Terminal Removal Tool
I	Not required	J-35616-17 (L-GN)	No Tool Required

M73P Front Seat Cushion Ventilation Blower - Passenger (KQV)

Pin	Size	Color	Circuit	Function	Terminal Type ID	Option
1	0.75	VT / WH	1139	Run/Crank Ignition 1 Voltage	I	—
2	0.5	VT / WH	5908	Passenger Seat Blower Motor Control 1	I	—
3	0.75	BK	1350	Ground	I	—
4	—	—	—	Not Occupied	—	—

M74D Front Side Door Window Regulator Motor - Driver

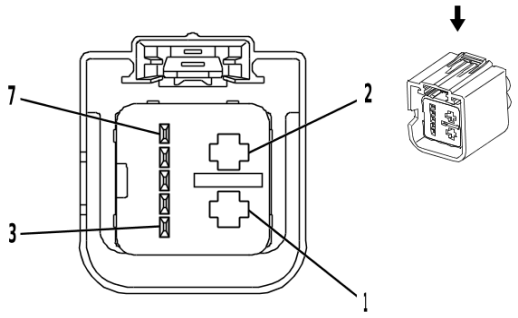

2282932

Connector Part Information

Harness Type: Front Side Door Door Wiring Harness - Driver
OEM Connector: 15504732
Service Connector: Service by Harness - See Part Catalog
Description: 7-Way F 0.64, 2.8 Kaizen Timer Series, Sealed(GY)

Terminal Part Information

Terminal Type ID	Terminated Lead	Diagnostic Test Probe	Terminal Removal Tool
I	Not required	J-35616-4A (PU)	No Tool Required
II	Not required	J-35616-64B (L-BU)	No Tool Required

M74D Front Side Door Window Regulator Motor - Driver

Pin	Size	Color	Circuit	Function	Terminal Type ID	Option
1	2.5	BK	1550	Ground	I	—
2	2.5	RD / GY	3540	Battery Positive Voltage	I	—
3	0.5	GY / GN	2763	Window Switch Left Front Up Signal	II	—
4	0.5	GN / YE	6134	Body Control Module LIN Bus 3	II	—
5	0.5	GN	2766	Power Window Switch Left Front Express Signal	II	—
6	0.5	GY	745	Left Front Door Ajar Switch Signal	II	—
7	0.5	WH / BN	2764	Window Switch Left Front Down Signal	II	—

M74LR Rear Side Door Window Regulator Motor - Left (Extended Cab/Crew Cab)

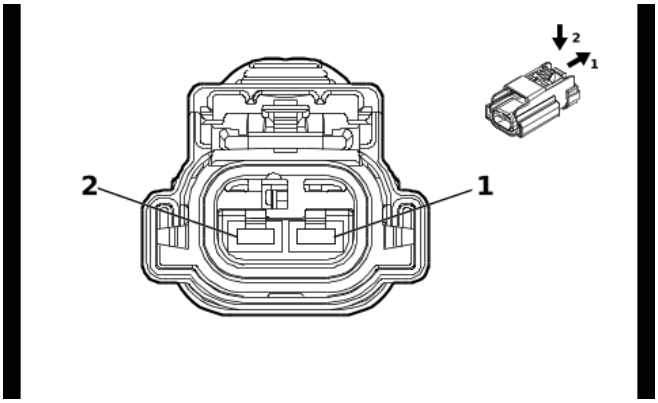

5795169

Connector Part Information

Harness Type: Rear Side Door Door Wiring Harness - Left
OEM Connector: 35286783
Service Connector: Service by Harness - See Part Catalog
Description: 2-Way F 2.8 APEX Series, Sealed(BK)

Terminal Part Information

Terminal Type ID	Terminated Lead	Diagnostic Test Probe	Terminal Removal Tool
I	Not required	J-35616-35 (VT)	No Tool Required

M74LR Rear Side Door Window Regulator Motor - Left (Extended Cab/Crew Cab)

Pin	Size	Color	Circuit	Function	Terminal Type ID	Option
1	2	BU / VT	668	Left Rear Window Motor Up Control	I	—
2	2	YE / BU	669	Left Rear Window Motor Down Control	I	—

M74P Front Side Door Window Regulator Motor - Passenger (AED)

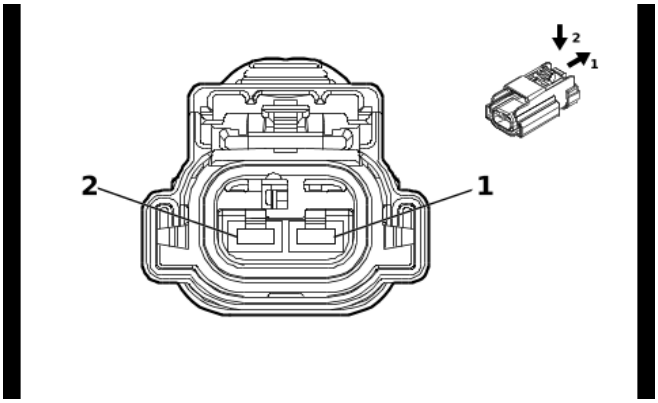

5795169

Connector Part Information

Harness Type: Front Side Door Door Wiring Harness - Passenger
OEM Connector: 35286783
Service Connector: Service by Harness - See Part Catalog
Description: 2-Way F 2.8 APEX Series, Sealed(BK)

Terminal Part Information

Terminal Type ID	Terminated Lead	Diagnostic Test Probe	Terminal Removal Tool
I	Not required	J-35616-35 (VT)	No Tool Required

M74P Front Side Door Window Regulator Motor - Passenger (AED)

Pin	Size	Color	Circuit	Function	Terminal Type ID	Option
1	2	GN / GY	666	Right Front Window Motor Up Control	I	—
2	2	YE / BU	667	Right Front Window Motor Down Control	I	—

M74P Front Side Door Window Regulator Motor - Passenger (AEF)

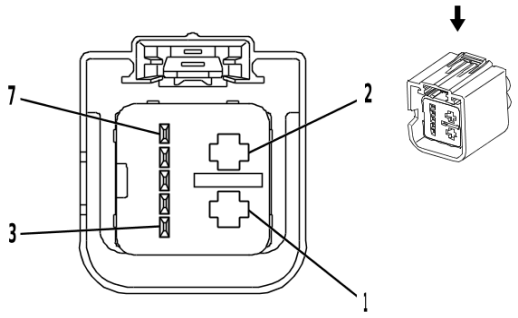

2282932

Connector Part Information

Harness Type: Front Side Door Door Wiring Harness - Passenger
OEM Connector: 15504732
Service Connector: Service by Harness - See Part Catalog
Description: 7-Way F 0.64, 2.8 Kaizen Timer Series, Sealed(GY)

Terminal Part Information

Terminal Type ID	Terminated Lead	Diagnostic Test Probe	Terminal Removal Tool
I	Not required	J-35616-4A (PU)	No Tool Required
II	Not required	J-35616-64B (L-BU)	No Tool Required

M74P Front Side Door Window Regulator Motor - Passenger (AEF)

Pin	Size	Color	Circuit	Function	Terminal Type ID	Option
1	2.5	BK	1350	Ground	I	—
2	2.5	RD / BN	4240	Battery Positive Voltage	I	—
3	0.5	GN	1184	Window Switch Right Front Up Signal	II	—
4	0.5	GN / YE	6134	Body Control Module LIN Bus 3	II	—
5	0.5	VT / GY	2765	Window Switch Right Front Express Signal	II	—
6	0.5	GY	746	Right Front Door Ajar Switch Signal	II	—
7	0.5	BN	5295	Window Switch Right Front Down Signal	II	—

M74RR Rear Side Door Window Regulator Motor - Right (Extended Cab/Crew Cab)

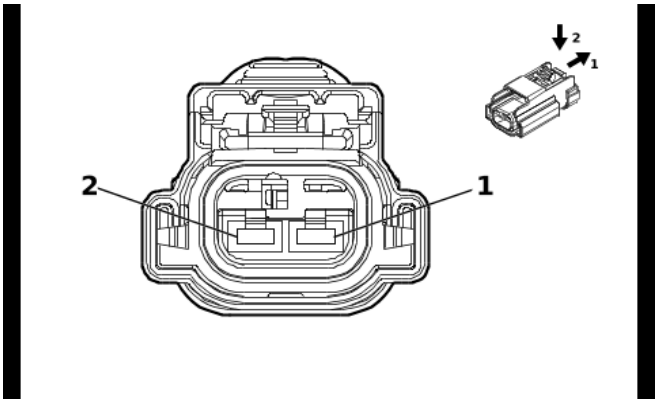

5795169

Connector Part Information

Harness Type: Rear Side Door Door Wiring Harness - Right
OEM Connector: 35286783
Service Connector: Service by Harness - See Part Catalog
Description: 2-Way F 2.8 APEX Series, Sealed(BK)

Terminal Part Information

Terminal Type ID	Terminated Lead	Diagnostic Test Probe	Terminal Removal Tool
I	Not required	J-35616-35 (VT)	No Tool Required

M74RR Rear Side Door Window Regulator Motor - Right (Extended Cab/Crew Cab)

Pin	Size	Color	Circuit	Function	Terminal Type ID	Option
1	2	BU / GY	670	Right Rear Window Motor Up Control	I	—
2	2	GN / BK	671	Right Rear Window Motor Down Control	I	—

M75 Windshield Wiper Motor

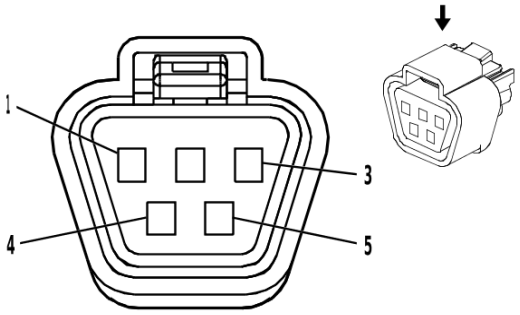

1715213

Connector Part Information

Harness Type: Body Wiring Harness
OEM Connector: 15316488
Service Connector: 13587179
Description: 5-Way F 090 Series, Sealed(BK)

Terminal Part Information

Terminal Type ID	Terminated Lead	Diagnostic Test Probe	Terminal Removal Tool
I	Not required	J-35616-14 (GN)	No Tool Required
II	Not required	J-35616-18 (BK)	No Tool Required

M75 Windshield Wiper Motor

Pin	Size	Color	Circuit	Function	Terminal Type ID	Option
1	2	YE / BN	95	Windshield Wiper Motor Low Speed Control	II	—
2	—	—	—	Not Occupied	—	—
3	0.35	BN / GN	196	Windshield Wiper Motor Park Switch Signal	I	—
4	2	WH	92	Windshield Wiper Motor High Speed Control	II	—
5	2	BK	150	Ground	II	—

M103 Turbocharger Vane Position Actuator (LM2)

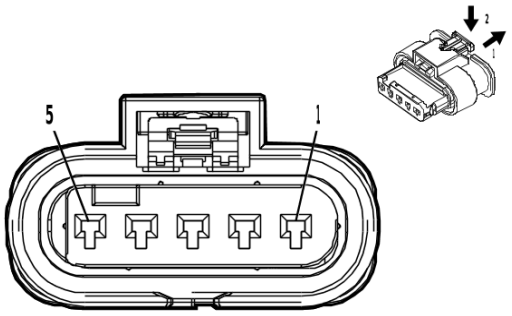

3338689

Connector Part Information

Harness Type: Engine Wiring Harness
OEM Connector: 13943325
Service Connector: 19119351
Description: 5-Way F 1.2 MCON-LL Series, Sealed(BK)

Terminal Part Information

Terminal Type ID	Terminated Lead	Diagnostic Test Probe	Terminal Removal Tool
I	Not required	J-35616-16 (L-GN)	No Tool Required

M103 Turbocharger Vane Position Actuator (LM2)

Pin	Size	Color	Circuit	Function	Terminal Type ID	Option
1	0.75	WH / BN	1313	Variable Geometry Turbocharger Position Sensor Motor Open Control	I	—
2	0.5	VT / YE	5947	Turbocharger Vane Position Sensor Signal	I	—
3	0.5	BK / GN	580	Engine Control Sensors Low Reference 2	I	—
4	0.5	WH / RD	480	Engine Control Vehicle Sensors 5 Volt Reference 1	I	—
5	0.75	GY / BK	1330	Variable Geometry Turbocharger Position Sensor Motor Close Control	I	—

M104L Parking Brake Actuator - Left

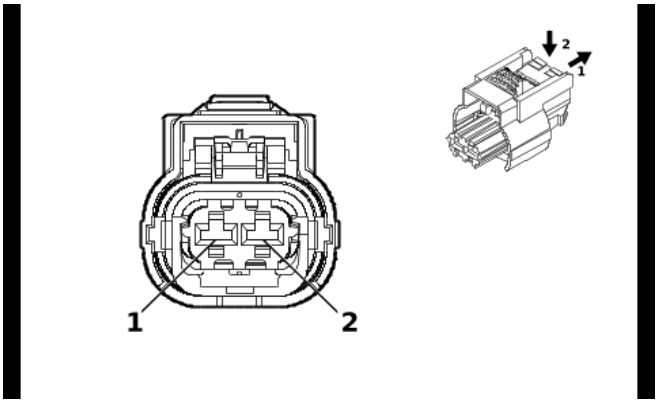

4992524

Connector Part Information

Harness Type: Chassis Rear Wiring Harness Extension Harness
OEM Connector: 35182447
Service Connector: Service by Harness - See Part Catalog
Description: 2-Way F 2.8 CTS Series, Sealed(BK)

Terminal Part Information

Terminal Type ID	Terminated Lead	Diagnostic Test Probe	Terminal Removal Tool
I	Not required	J-35616-35 (VT)	No Tool Required

M104L Parking Brake Actuator - Left

Pin	Size	Color	Circuit	Function	Terminal Type ID	Option
1	2.5	WH	2001	Left Park Brake Motor Apply Control	I	
2	2.5	GY / BK	4369	Left Park Brake Motor Low Reference	I	

M104R Parking Brake Actuator - Right

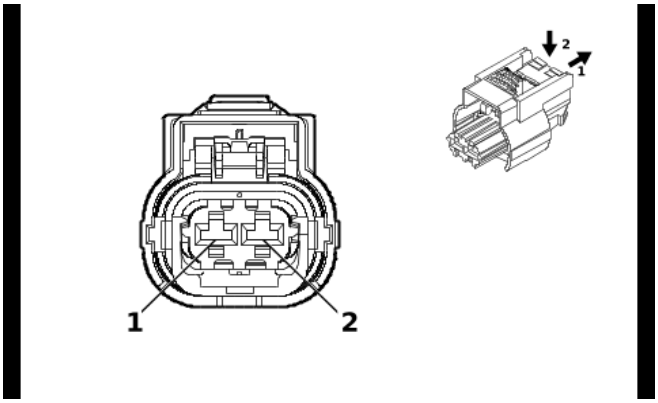

4992524

Connector Part Information

Harness Type: Chassis Rear Wiring Harness Extension Harness
OEM Connector: 35182447
Service Connector: Service by Harness - See Part Catalog
Description: 2-Way F 2.8 CTS Series, Sealed(BK)

Terminal Part Information

Terminal Type ID	Terminated Lead	Diagnostic Test Probe	Terminal Removal Tool
I	Not required	J-35616-35 (VT)	No Tool Required

M104R Parking Brake Actuator - Right

Pin	Size	Color	Circuit	Function	Terminal Type ID	Option
1	2.5	GN / VT	1988	Right Park Brake Motor Apply Control	I	
2	2.5	GY	4368	Right Park Brake Motor Low Reference	I	

M122 Exhaust Pressure Regulator Valve (LM2)

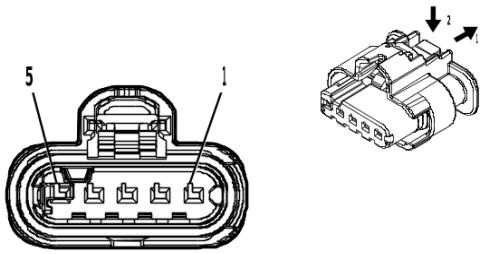

4997783

Connector Part Information

Harness Type: Engine Wiring Harness
OEM Connector: 35026727
Service Connector: 19371195
Description: 5-Way F 1.2 MCON-CB Series, Sealed(BK)

Terminal Part Information

Terminal Type ID	Terminated Lead	Diagnostic Test Probe	Terminal Removal Tool
I	Not required	J-35616-16 (L-GN)	No Tool Required

M122 Exhaust Pressure Regulator Valve (LM2)

Pin	Size	Color	Circuit	Function	Terminal Type ID	Option
1	0.5	BK / YE	548	Engine Control Sensors Low Reference 1	I	—
2	0.5	BN / GN	4305	Exhaust Flow Control Valve 1	I	—
3	0.5	BU / RD	460	Engine Control Sensors 5 Volt Reference 1	I	—
4	0.75	BN	1421	Exhaust Restrictor Motor Closed Control	I	—
5	0.75	YE / BN	1420	Exhaust Restrictor Motor Open Control	I	—

M123 Transmission Park Valve Lock Solenoid Actuator (MHS/MQC)

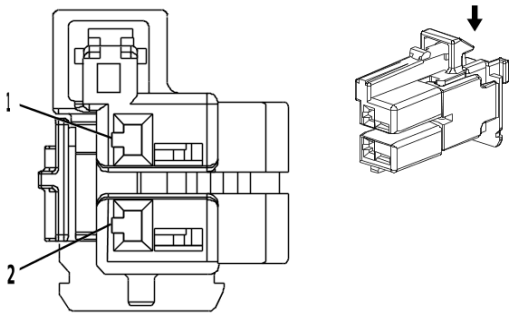

4364736

Connector Part Information

Harness Type: Automatic Transmission Wiring Harness - Control
OEM Connector: 2289523-2
Service Connector: Service by Harness - See Part Catalog
Description: 2-Way F 1.2 MCON Series(BU)

Terminal Part Information

Terminal Type ID	Terminated Lead	Diagnostic Test Probe	Terminal Removal Tool
I	Not required	J-35616-16 (LT GN)	No Tool Required

M123 Transmission Park Valve Lock Solenoid Actuator (MHS/MQC)

Pin	Size	Color	Circuit	Function	Terminal Type ID	Option
1	0.5	BN	6387	Transmission High Side Driver 1 Control	I	—
2	0.5	OG	2159	Park Inhibit Solenoid Assembly Control	I	—

M125 Pickup Box Endgate Power Assist Actuator (QT6)

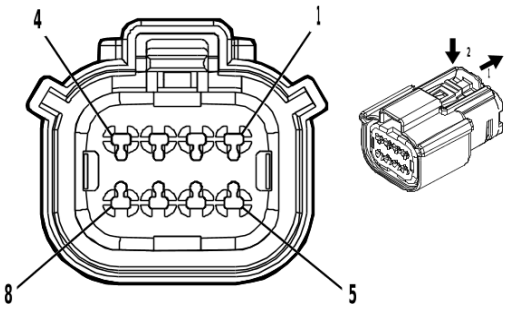

4846407

Connector Part Information

Harness Type: Endgate Wiring Harness
OEM Connector: 35037827
Service Connector: Service by Harness - See Part Catalog
Description: 8-Way F 1.5 MX Series, Sealed(BK)

Terminal Part Information

Terminal Type ID	Terminated Lead	Diagnostic Test Probe	Terminal Removal Tool
I	Not required	J-35616-2A (GY)	No Tool Required

M125 Pickup Box Endgate Power Assist Actuator (QT6)

Pin	Size	Color	Circuit	Function	Terminal Type ID	Option
1	1	BN / WH	4690	Rear Closure Open/Close Motor Close Control	I	—
2	0.5	GN	1577	Rear Closure Clutch Control	I	—
3	0.5	BU / BK	1590	Rear Closure Clutch Low Return	I	—
4	0.5	BN / RD	4683	Rear Closure Position Sensor Voltage Reference	I	—
5	1	WH	4689	Rear Closure Open/Close Motor Open Control	I	—
6	0.5	BN / YE	4686	Rear Closure Position Sensor Signal 2	I	—
7	0.5	BK / GN	4687	Rear Closure Position Sensor Low Reference	I	—
8	0.5	BU / WH	4685	Rear Closure Position Sensor Signal 1	I	—

M128 Turbocharger Wastegate Actuator (L3B)

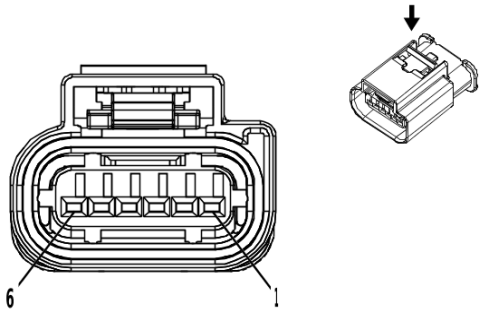

3747579

Connector Part Information

Harness Type: Engine Wiring Harness
OEM Connector: 33220833
Service Connector: 19352911
Description: 6-Way F 1.2 MCON Series, Sealed(BK)

Terminal Part Information

Terminal Type ID	Terminated Lead	Diagnostic Test Probe	Terminal Removal Tool
I	Not required	J-35616-16 (L-GN)	No Tool Required

M128 Turbocharger Wastegate Actuator (L3B)

Pin	Size	Color	Circuit	Function	Terminal Type ID	Option
1	0.5	BK / YE	548	Engine Control Sensors Low Reference 1	I	—
2	0.5	WH	2590	Turbocharger Wastegate Motor Feedback Signal	I	—
3	0.5	BU / RD	460	Engine Control Sensors 5 Volt Reference 1	I	—
4	0.75	WH / BU	2592	Turbocharger Wastegate Motor Close Control	I	—
5	0.75	WH / BN	2591	Turbocharger Wastegate Motor Open Control	I	—
6	—	—	—	Not Occupied	—	—

M129A Intake Camshaft Profile Actuator 1 (L3B)

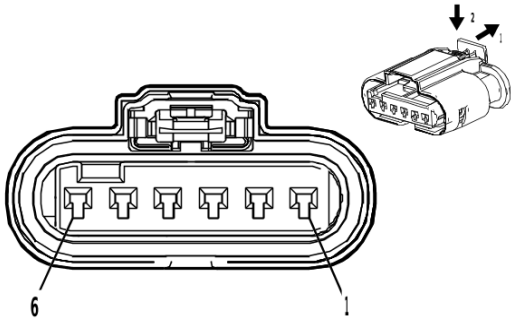

3960142

Connector Part Information

Harness Type: Engine Wiring Harness
OEM Connector: 35360829
Service Connector: 85005020
Description: 6-Way F 1.2 MCON-LL Series, Sealed(BK)

Terminal Part Information

Terminal Type ID	Terminated Lead	Diagnostic Test Probe	Terminal Removal Tool
I	Not required	J-35616-16 (L-GN)	No Tool Required

M129A Intake Camshaft Profile Actuator 1 (L3B)

Pin	Size	Color	Circuit	Function	Terminal Type ID	Option
1	0.5	VT / GY	3615	Step Cam A Control	I	—
2	0.5	BU / WH	3589	Camshaft Position Motor Position Sensor 1 Signal	I	—
3	0.5	BK / YE	548	Engine Control Sensors Low Reference 1	I	—
4	0.5	BU / RD	460	Engine Control Sensors 5 Volt Reference 1	I	—
5	0.5	VT / BU	5293	Powertrain Main Relay Fused Supply Voltage 4	I	—
6	0.5	GN / BK	3616	Step Cam B Control	I	—

M129B Intake Camshaft Profile Actuator 2 (L3B)

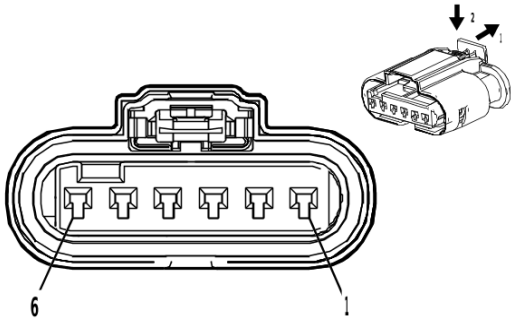

3960142

Connector Part Information

Harness Type: Engine Wiring Harness
OEM Connector: 35360829
Service Connector: 85005020
Description: 6-Way F 1.2 MCON-LL Series, Sealed(BK)

Terminal Part Information

Terminal Type ID	Terminated Lead	Diagnostic Test Probe	Terminal Removal Tool
I	Not required	J-35616-16 (L-GN)	No Tool Required

M129B Intake Camshaft Profile Actuator 2 (L3B)

Pin	Size	Color	Circuit	Function	Terminal Type ID	Option
1	0.5	GN	3585	Camshaft Position Motor Control B	I	—
2	0.5	GN / WH	3592	Camshaft Position Motor Position Sensor 2 Signal	I	—
3	0.5	BK / YE	548	Engine Control Sensors Low Reference 1	I	—
4	0.5	BU / RD	460	Engine Control Sensors 5 Volt Reference 1	I	—
5	0.5	VT / BU	5293	Powertrain Main Relay Fused Supply Voltage 4	I	—
6	0.5	BU	3584	Camshaft Position Motor Control A	I	—

M129C Intake Camshaft Profile Actuator 3 (L3B)

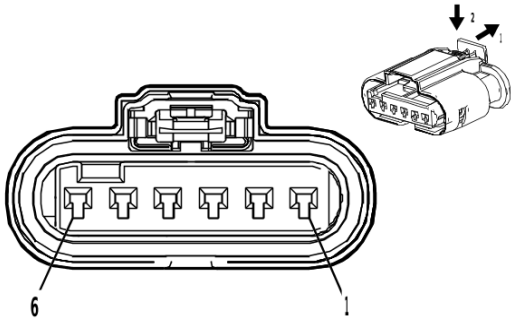

3960142

Connector Part Information

Harness Type: Engine Wiring Harness
OEM Connector: 35360829
Service Connector: 85005020
Description: 6-Way F 1.2 MCON-LL Series, Sealed(BK)

Terminal Part Information

Terminal Type ID	Terminated Lead	Diagnostic Test Probe	Terminal Removal Tool
I	Not required	J-35616-16 (L-GN)	No Tool Required

M129C Intake Camshaft Profile Actuator 3 (L3B)

Pin	Size	Color	Circuit	Function	Terminal Type ID	Option
1	0.5	YE / BU	3587	Camshaft Position Motor Control D	I	—
2	0.5	BK / GN	3593	Camshaft Position Sensor 2 Ground	I	—
3	0.5	BK / YE	548	Engine Control Sensors Low Reference 1	I	—
4	0.5	BU / RD	460	Engine Control Sensors 5 Volt Reference 1	I	—
5	0.5	VT / BU	5293	Powertrain Main Relay Fused Supply Voltage 4	I	—
6	0.5	GY	3586	Camshaft Position Motor Control C	I	—

M129D Intake Camshaft Profile Actuator 4 (L3B)

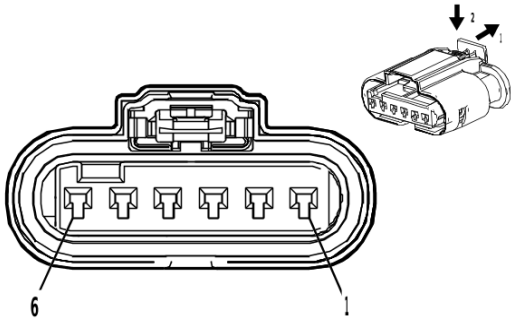

3960142

Connector Part Information

Harness Type: Engine Wiring Harness
OEM Connector: 35360829
Service Connector: 85005020
Description: 6-Way F 1.2 MCON-LL Series, Sealed(BK)

Terminal Part Information

Terminal Type ID	Terminated Lead	Diagnostic Test Probe	Terminal Removal Tool
I	Not required	J-35616-16 (L-GN)	No Tool Required

M129D Intake Camshaft Profile Actuator 4 (L3B)

Pin	Size	Color	Circuit	Function	Terminal Type ID	Option
1	0.5	GN / YE	1402	Camshaft Intake Stepper Cylinder 4 Front Solenoid Control	I	—
2	0.5	YE / BN	1702	Camshaft Intake Stepper Cylinder 4 Position Sensor Signal	I	—
3	0.5	BK / YE	548	Engine Control Sensors Low Reference 1	I	—
4	0.5	BU / RD	460	Engine Control Sensors 5 Volt Reference 1	I	—
5	0.5	VT / BU	5293	Powertrain Main Relay Fused Supply Voltage 4	I	—
6	0.5	GY / YE	1502	Camshaft Intake Stepper Cylinder 4 Rear Solenoid Control	I	—

M130A Exhaust Camshaft Profile Actuator 1 (L3B)

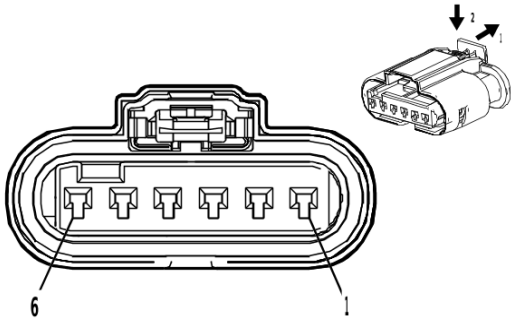

3960142

Connector Part Information

Harness Type: Engine Wiring Harness
OEM Connector: 35360829
Service Connector: 85005020
Description: 6-Way F 1.2 MCON-LL Series, Sealed(BK)

Terminal Part Information

Terminal Type ID	Terminated Lead	Diagnostic Test Probe	Terminal Removal Tool
I	Not required	J-35616-16 (L-GN)	No Tool Required

M130A Exhaust Camshaft Profile Actuator 1 (L3B)

Pin	Size	Color	Circuit	Function	Terminal Type ID	Option
1	0.5	YE / VT	6265	Camshaft Exhaust Stepper Cylinder 2 Rear Solenoid Control	I	—
2	0.5	GN / BK	6266	Camshaft Exhaust Stepper Cylinder 2 Position Signal	I	—
3	0.5	BK / YE	548	Engine Control Sensors Low Reference 1	I	—
4	0.5	BU / RD	460	Engine Control Sensors 5 Volt Reference 1	I	—
5	0.5	VT / BU	5293	Powertrain Main Relay Fused Supply Voltage 4	I	—
6	0.5	VT / BK	6264	Camshaft Exhaust Stepper Cylinder 2 Front Solenoid Control	I	—

M130B Exhaust Camshaft Profile Actuator 2 (L3B)

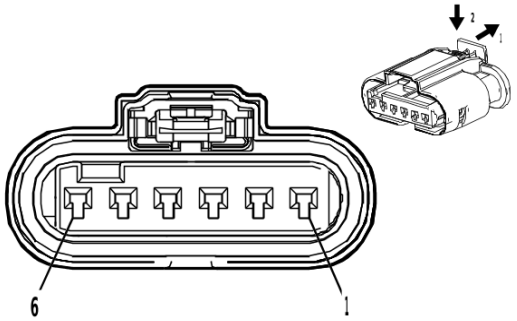

3960142

Connector Part Information

Harness Type: Engine Wiring Harness
OEM Connector: 35360829
Service Connector: 85005020
Description: 6-Way F 1.2 MCON-LL Series, Sealed(BK)

Terminal Part Information

Terminal Type ID	Terminated Lead	Diagnostic Test Probe	Terminal Removal Tool
I	Not required	J-35616-16 (L-GN)	No Tool Required

M130B Exhaust Camshaft Profile Actuator 2 (L3B)

Pin	Size	Color	Circuit	Function	Terminal Type ID	Option
1	0.5	GY / BN	6262	Camshaft Exhaust Stepper Cylinder 3 Rear Solenoid Control	I	—
2	0.5	YE	6263	Camshaft Exhaust Stepper Cylinder 3 Position Signal	I	—
3	0.5	BK / YE	548	Engine Control Sensors Low Reference 1	I	—
4	0.5	BU / RD	460	Engine Control Sensors 5 Volt Reference 1	I	—
5	0.5	VT / BU	5293	Powertrain Main Relay Fused Supply Voltage 4	I	—
6	0.5	GN / BN	6261	Camshaft Exhaust Stepper Cylinder 3 Front Solenoid Control	I	—

M151L Pickup Box Endgate Cinch Latch Actuator - Left (QT6)

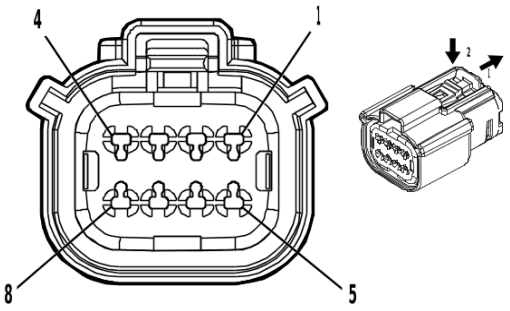

4846407

Connector Part Information

Harness Type: Endgate Wiring Harness
OEM Connector: 35037827
Service Connector: Service by Harness - See Part Catalog
Description: 8-Way F 1.5 MX Series, Sealed(BK)

Terminal Part Information

Terminal Type ID	Terminated Lead	Diagnostic Test Probe	Terminal Removal Tool
I	Not required	J-35616-2A (GY)	No Tool Required

M151L Pickup Box Endgate Cinch Latch Actuator - Left (QT6)

Pin	Size	Color	Circuit	Function	Terminal Type ID	Option
1	—	—	—	Not Occupied	—	—
2	0.5	BN / GY	10281	Rear Closure Latch Secondary Status Signal	I	—
3	0.5	GY / VT	4678	Rear Closure Latch Unlatch Status	I	—
4	0.5	BK / VT	4656	Rear Closure Object Sensor Low Reference	I	—
5	1	BN	4681	Rear Closure Cinch Latch Motor Cinch Control	I	—
6	1	BU / GY	4682	Rear Closure Cinch Latch Motor Release Control	I	—
7	0.5	WH / GN	8084	Rear Closure Latch Neutral Status	I	—
8	0.5	YE / BK	8085	Rear Closure Latch Primary Status	I	—

M151R Pickup Box Endgate Cinch Latch Actuator - Right (QT6)

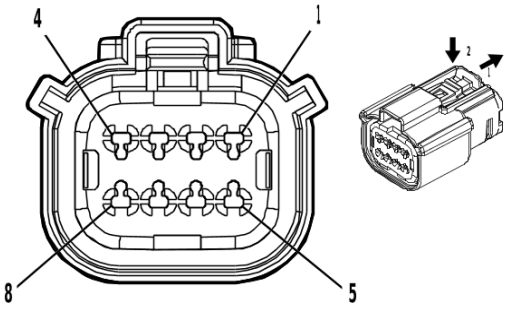

4846407

Connector Part Information

Harness Type: Endgate Wiring Harness
OEM Connector: 35037827
Service Connector: Service by Harness - See Part Catalog
Description: 8-Way F 1.5 MX Series, Sealed(BK)

Terminal Part Information

Terminal Type ID	Terminated Lead	Diagnostic Test Probe	Terminal Removal Tool
I	Not required	J-35616-2A (GY)	No Tool Required

M151R Pickup Box Endgate Cinch Latch Actuator - Right (QT6)

Pin	Size	Color	Circuit	Function	Terminal Type ID	Option
1	0.5	GY / BK	1575	Rear Closure Sensor Low Reference 2	I	—
2	0.5	BN	7736	Rear Closure Latch 2 Unlatch Status Signal	I	—
3	0.5	VT / WH	10284	Rear Closure Latch 2 Secondary Status Signal	I	—
4	—	—	—	Not Occupied	—	—
5	0.5	GN / BU	10283	Rear Closure Latch 2 Primary Status Signal	I	—
6	0.5	BU / BN	10282	Rear Closure Latch 2 Neutral Status Signal	I	—
7	1	GN	1499	Rear Closure Cinch Latch Motor 2 Cinch Control	I	—
8	1	BU	1509	Rear Closure Cinch Latch Motor 2 Release Control	I	—

P13 Horn

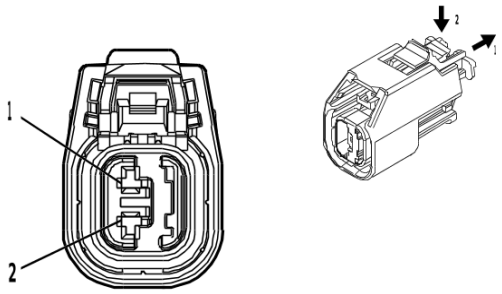

4889830

Connector Part Information

Harness Type: Body Wiring Harness
OEM Connector: 33164011
Service Connector: 86802964
Description: 2-Way F 1.5 OCS Series, Sealed(BK)

Terminal Part Information

Terminal Type ID	Terminated Lead	Diagnostic Test Probe	Terminal Removal Tool
I	Not required	J-35616-2A (GY)	No Tool Required

P13 Horn

Pin	Size	Color	Circuit	Function	Terminal Type ID	Option
1	0.75	BK	650	Ground	I	—
2	0.75	BN / GY	29	Horn Control	I	—

P16 Instrument Panel Cluster Control Module X1

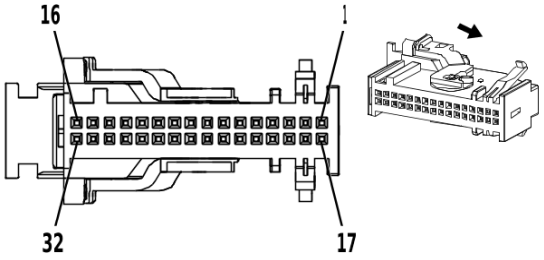

627214

Connector Part Information

Harness Type: Instrument Panel Wiring Harness
OEM Connector: 33323630
Service Connector: 13511333
Description: 32-Way F 0.64 Micro-Quadlock Series(GY)

Terminal Part Information

Terminal Type ID	Terminated Lead	Diagnostic Test Probe	Terminal Removal Tool
I	19300632	J-35616-64B (L-BU)	J-38125-215A

P16 Instrument Panel Cluster Control Module X1

Pin	Size	Color	Circuit	Function	Terminal Type ID	Option
1	0.35	WH	7216	Ethernet Bus 7 [-]	I	—
2 - 6	—	—	—	Not Occupied	—	—
7	0.5	RD / WH	1340	Battery Positive Voltage	I	—
8	0.35	VT / BK	339	Run/Crank Ignition 1 Voltage	I	—
9 - 10	—	—	—	Not Occupied	—	—
11	0.35	GY / BK	4787	Day Night LED Control	I	—
12	0.35	GY / YE	3885	Forward Collision Alert LED Control	I	—
13	0.35	BU / WH	4985	AUTOSAR CAN Bus [+] 5 Serial Data	I	—
14	0.35	BU / YE	4984	AUTOSAR CAN Bus [-] 5 Serial Data	I	—
15 - 16	—	—	—	Not Occupied	—	—
17	0.35	GN	7217	Ethernet Bus 7 [+]	I	—
18	—	—	—	Not Occupied	—	—
19	0.5	BK	851	Signal Ground	I	—
20	0.5	GN / BK	3894	Instrument Panel Cluster Control Module LIN Bus 1	I	—
21 - 28	—	—	—	Not Occupied	—	—
29	0.35	BU / WH	4985	AUTOSAR CAN Bus [+] 5 Serial Data	I	—
30	0.35	BU / YE	4984	AUTOSAR CAN Bus [-] 5 Serial Data	I	—
31	—	—	—	Not Occupied	—	—
32	0.35	GN / BN	507	Wait To Start Indicator Control	I	—

P16 Instrument Panel Cluster Control Module X2 (UV6)

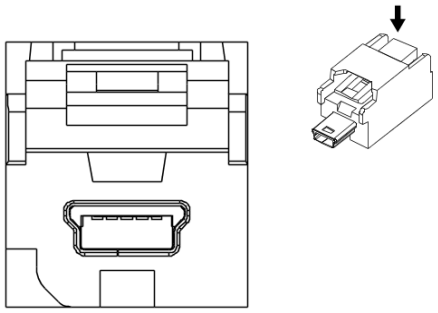

3214018

Connector Part Information

Harness Type: Instrument Panel Wiring Harness USB
OEM Connector: 13893437
Service Connector: Service by Cable Assembly — See Part Catalog
Description: 5-Way M 2.0 Mini-B USB Type(GY)

Terminal Part Information

Terminal Type ID	Terminated Lead	Diagnostic Test Probe	Terminal Removal Tool
I	Not required	No Tool Required	No Tool Required

P16 Instrument Panel Cluster Control Module X2 (UV6)

Pin	Size	Color	Circuit	Function	Terminal Type ID	Option
—	—	USB	—	USB Serial Data	I	—

P19AFC Front Floor Speaker - Console (UQA/UQS)

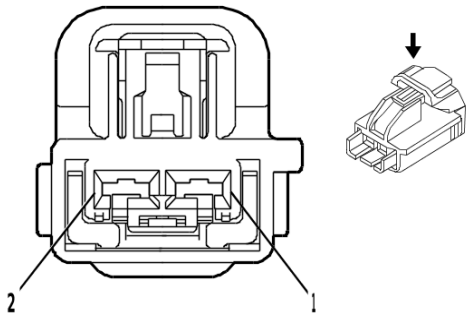

1803142

Connector Part Information

Harness Type: Body Wiring Harness
OEM Connector: 10846819
Service Connector: 19367562
Description: 2-Way F YESC Kaizen Series(L-GY)

Terminal Part Information

Terminal Type ID	Terminated Lead	Diagnostic Test Probe	Terminal Removal Tool
I	Not required	J-35616-4A (PU)	No Tool Required

P19AFC Front Floor Speaker - Console (UQA/UQS)

Pin	Size	Color	Circuit	Function	Terminal Type ID	Option
1	2.5	GN / BK	1794	Left/Rear Subwoofer [-] Control	I	—
2	2.5	BU / GY	346	Left/Rear Subwoofer [+] Control	I	—

P19AG Radio Front Side Door Speaker - Left

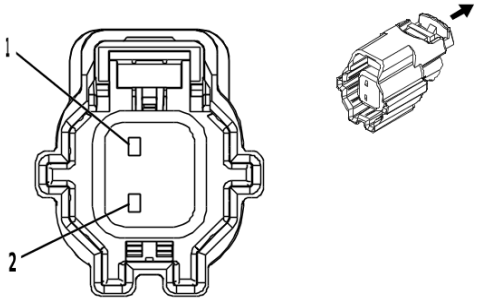

4223204

Connector Part Information

Harness Type: Front Side Door Door Wiring Harness - Driver
OEM Connector: 15548606
Service Connector: Service by Harness - See Part Catalog
Description: 2-Way F 1.5 MX Series, Sealed(BK)

Terminal Part Information

Terminal Type ID	Terminated Lead	Diagnostic Test Probe	Terminal Removal Tool
I	Not required	J-35616-14 (GN)	No Tool Required

P19AG Radio Front Side Door Speaker - Left

Pin	Size	Color	Circuit	Function	Terminal Type ID	Option
1	0.75	BN / BU	118	Left Front Speaker [-] Control 1	I	—
2	0.75	BU	201	Left Front Speaker 1 [+] Control	I	—

P19AH Radio Front Side Door Speaker - Right

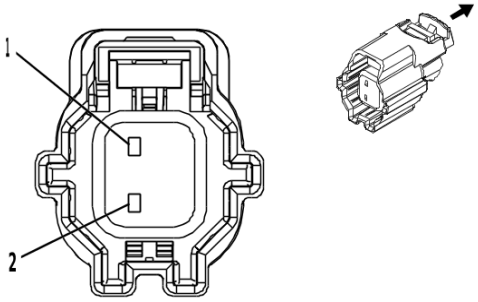

4223204

Connector Part Information

Harness Type: Front Side Door Door Wiring Harness - Passenger
OEM Connector: 15548606
Service Connector: Service by Harness - See Part Catalog
Description: 2-Way F 1.5 MX Series, Sealed(BK)

Terminal Part Information

Terminal Type ID	Terminated Lead	Diagnostic Test Probe	Terminal Removal Tool
I	Not required	J-35616-14 (GN)	No Tool Required

P19AH Radio Front Side Door Speaker - Right

Pin	Size	Color	Circuit	Function	Terminal Type ID	Option
1	0.75	YE / BK	117	Right Front Speaker [-] Control 1	I	—
2	0.75	YE	200	Right Front Speaker 1 [+] Control	I	—

P19AL Radio Rear Side Door Speaker - Left

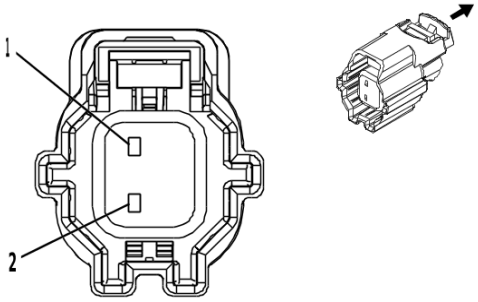

4223204

Connector Part Information

Harness Type: Rear Side Door Door Wiring Harness - Left
OEM Connector: 15548606
Service Connector: Service by Harness - See Part Catalog
Description: 2-Way F 1.5 MX Series, Sealed(BK)

Terminal Part Information

Terminal Type ID	Terminated Lead	Diagnostic Test Probe	Terminal Removal Tool
I	Not required	J-35616-14 (GN)	No Tool Required

P19AL Radio Rear Side Door Speaker - Left

Pin	Size	Color	Circuit	Function	Terminal Type ID	Option
1	0.75	GN / BK	116	Left Rear Speaker [-] Control	I	—
2	0.75	GN	199	Left Rear Speaker [+] Control	I	—

P19AM Radio Rear Side Door Speaker - Right

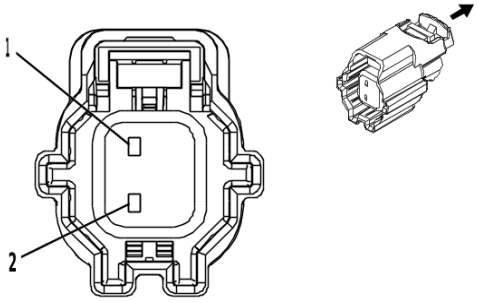

4223204

Connector Part Information

Harness Type: Rear Side Door Door Wiring Harness - Right
OEM Connector: 15548606
Service Connector: Service by Harness - See Part Catalog
Description: 2-Way F 1.5 MX Series, Sealed(BK)

Terminal Part Information

Terminal Type ID	Terminated Lead	Diagnostic Test Probe	Terminal Removal Tool
I	Not required	J-35616-14 (GN)	No Tool Required

P19AM Radio Rear Side Door Speaker - Right

Pin	Size	Color	Circuit	Function	Terminal Type ID	Option
1	0.75	BU / BK	115	Right Rear Speaker [-] Control	I	—
2	0.75	WH	46	Right Rear Speaker [+] Control	I	—

P19H Radio Windshield Side Garnish Molding Speaker - Left Front (UQA)

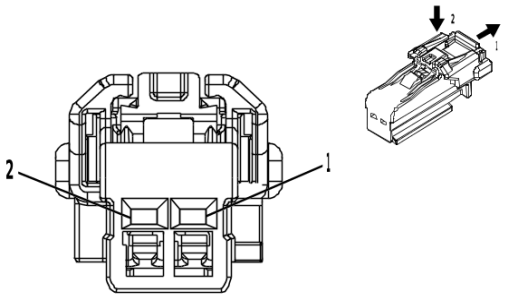

4373379

Connector Part Information

Harness Type: Instrument Panel Wiring Harness
OEM Connector: 35311601
Service Connector: 19369632
Description: 2-Way F 1.2 MCON Series(GY)

Terminal Part Information

Terminal Type ID	Terminated Lead	Diagnostic Test Probe	Terminal Removal Tool
I	Not required	J-35616-16 (L-GN)	No Tool Required

P19H Radio Windshield Side Garnish Molding Speaker - Left Front (UQA)

Pin	Size	Color	Circuit	Function	Terminal Type ID	Option
1	0.75	BU / BN	1957	Left Front Midrange Speaker [-] Control	I	—
2	0.75	BU / VT	1857	Left Front Midrange Speaker [+] Control	I	—

P19J Radio Front Speaker - Instrument Panel Left

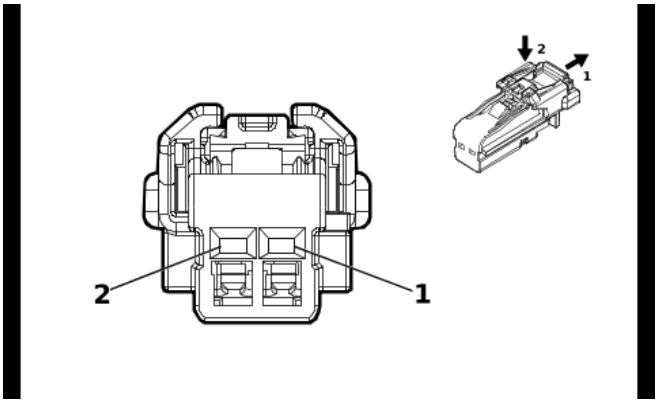

4115691

Connector Part Information

Harness Type: Instrument Panel Wiring Harness
OEM Connector: 35311666
Service Connector: 19352066
Description: 2-Way F 1.2 MCON Series(BK)

Terminal Part Information

Terminal Type ID	Terminated Lead	Diagnostic Test Probe	Terminal Removal Tool
I	Not required	J-35616-16 (L-GN)	No Tool Required

P19J Radio Front Speaker - Instrument Panel Left

Pin	Size	Color	Circuit	Function	Terminal Type ID	Option
1	0.75	BN / BU	118	Left Front Speaker [-] Control 1	I	—
2	0.75	BU	201	Left Front Speaker 1 [+] Control	I	—

P19V Radio Windshield Side Garnish Molding Speaker - Right Front

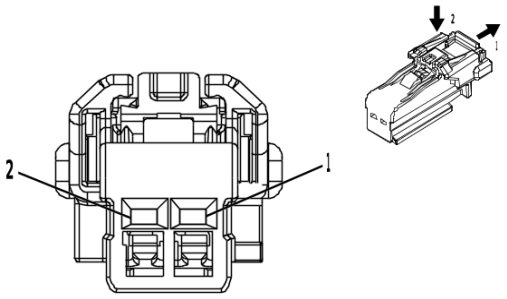

4373379

Connector Part Information

Harness Type: Instrument Panel Wiring Harness
OEM Connector: 35311601
Service Connector: 19369632
Description: 2-Way F 1.2 MCON Series(GY)

Terminal Part Information

Terminal Type ID	Terminated Lead	Diagnostic Test Probe	Terminal Removal Tool
I	Not required	J-35616-16 (L-GN)	No Tool Required

P19V Radio Windshield Side Garnish Molding Speaker - Right Front

Pin	Size	Color	Circuit	Function	Terminal Type ID	Option
1	0.75	BN / BK	1953	Right Front Midrange Speaker [-] Control	I	—
2	0.75	WH / YE	1853	Right Front Midrange Speaker [+] Control	I	—

P19W Radio Front Speaker - Instrument Panel Right

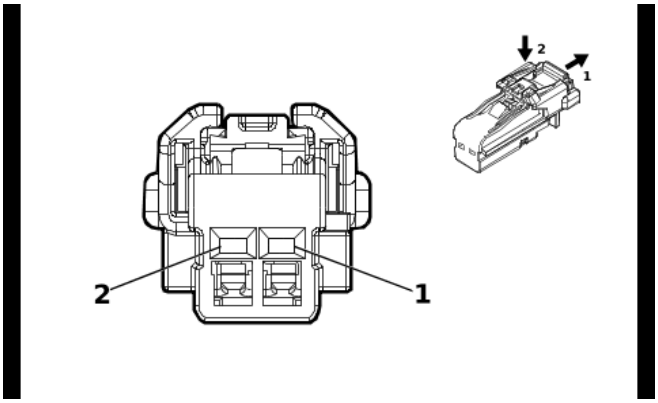

4115691

Connector Part Information

Harness Type: Instrument Panel Wiring Harness
OEM Connector: 35311666
Service Connector: 19352066
Description: 2-Way F 1.2 MCON Series(BK)

Terminal Part Information

Terminal Type ID	Terminated Lead	Diagnostic Test Probe	Terminal Removal Tool
I	Not required	J-35616-16 (L-GN)	No Tool Required

P19W Radio Front Speaker - Instrument Panel Right

Pin	Size	Color	Circuit	Function	Terminal Type ID	Option
1	0.75	YE / BK	117	Right Front Speaker [-] Control 1	I	—
2	0.75	YE	200	Right Front Speaker 1 [+] Control	I	—

P29 Head-Up Display X1 (UV6)

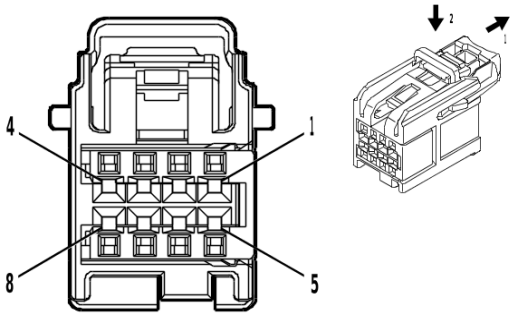

4935776

Connector Part Information

Harness Type: Instrument Panel Wiring Harness
OEM Connector: 15526972
Service Connector: 19370429
Description: 8-Way F 0.64 OCS Series(BK)

Terminal Part Information

Terminal Type ID	Terminated Lead	Diagnostic Test Probe	Terminal Removal Tool
I	Not required	J-35616-64B (L-BU)	No Tool Required

P29 Head-Up Display X1 (UV6)

Pin	Size	Color	Circuit	Function	Terminal Type ID	Option
1	0.35	GN / BK	3894	Instrument Panel Cluster Control Module LIN Bus 1	I	—
2	—	—	—	Not Occupied	—	—
3	0.35	YE / WH	622	Head-Up Display Switch Signal	I	—
4	0.5	BK / WH	851	Signal Ground	I	—
5	—	—	—	Not Occupied	—	—
6	0.5	RD / WH	1340	Battery Positive Voltage	I	—
7	—	—	—	Not Occupied	—	—
8	0.35	BK / GN	5699	Head-Up Display Switch Low Reference	I	—

P29 Head-Up Display X2 (UV6)

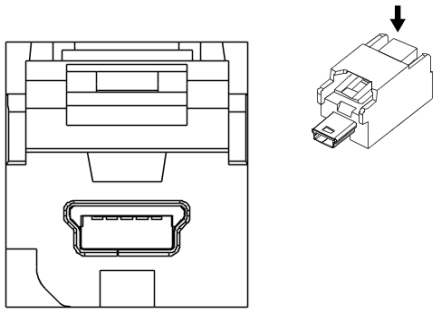

3214018

Connector Part Information

Harness Type: Instrument Panel Wiring Harness USB
OEM Connector: 13871470
Service Connector: Service by Cable Assembly — See Part Catalog
Description: 5-Way M 2.0 Mini-B USB Type(GY)

Terminal Part Information

Terminal Type ID	Terminated Lead	Diagnostic Test Probe	Terminal Removal Tool
I	Not required	No Tool Required	No Tool Required

P29 Head-Up Display X2 (UV6)

Pin	Size	Color	Circuit	Function	Terminal Type ID	Option
—	—	USB	—	USB Serial Data	I	—

P43 Forward Collision Alert Display ((UEU/UHX)-UV6)

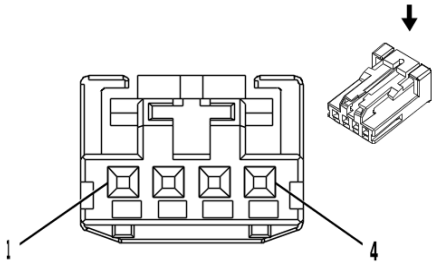

2717162

Connector Part Information

Harness Type: Instrument Panel Wiring Harness
OEM Connector: 13969166
Service Connector: 19367524
Description: 4-Way F 0.64 Micro-Quadlock Series(BK)

Terminal Part Information

Terminal Type ID	Terminated Lead	Diagnostic Test Probe	Terminal Removal Tool
I	Not required	J-35616-64B (L-BU)	No Tool Required

P43 Forward Collision Alert Display ((UEU/UHX)-UV6)

Pin	Size	Color	Circuit	Function	Terminal Type ID	Option
1	0.35	VT / BK	339	Run/Crank Ignition 1 Voltage	I	—
2	0.35	GY / YE	3885	Forward Collision Alert LED Control	I	—
3	0.35	GY / BK	4787	Day Night LED Control	I	—
4	0.35	BK / WH	851	Signal Ground	I	—

P45L Front Seat Lane Departure Warning Actuator - Left (HS1)

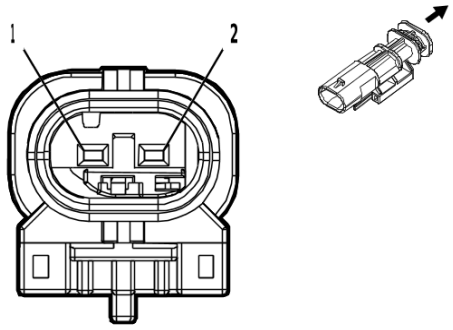

4569729

Connector Part Information

Harness Type: Front Seat Wiring Harness - Driver
OEM Connector: 34899-2080
Service Connector: Service by Harness - See Part Catalog
Description: 2-Way M 1.2 MCON Series, Sealed(BK)

Terminal Part Information

Terminal Type ID	Terminated Lead	Diagnostic Test Probe	Terminal Removal Tool
I	Not required	J-35616-13 (BU)	No Tool Required

P45L Front Seat Lane Departure Warning Actuator - Left (HS1)

Pin	Size	Color	Circuit	Function	Terminal Type ID	Option
1	0.5	BK	1550	Ground	I	—
2	0.35	YE / BN	3037	Driver Seat Left Rear Haptic Movement Motor Control	I	—

P45R Front Seat Lane Departure Warning Actuator - Right (HS1)

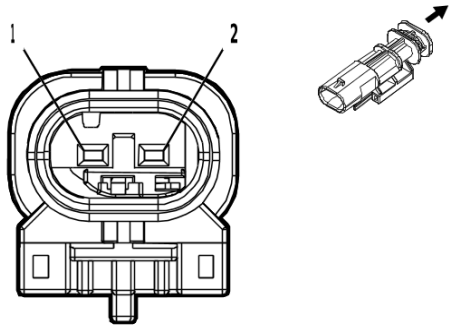

4569729

Connector Part Information

Harness Type: Front Seat Wiring Harness - Driver
OEM Connector: 34899-2080
Service Connector: Service by Harness - See Part Catalog
Description: 2-Way M 1.2 MCON Series, Sealed(BK)

Terminal Part Information

Terminal Type ID	Terminated Lead	Diagnostic Test Probe	Terminal Removal Tool
I	Not required	J-35616-13 (BU)	No Tool Required

P45R Front Seat Lane Departure Warning Actuator - Right (HS1)

Pin	Size	Color	Circuit	Function	Terminal Type ID	Option
1	0.5	BK	1550	Ground	I	—
2	0.35	BN	3038	Driver Seat Right Rear Haptic Movement Motor Control	I	—

P53 Driver Information Display X1 (IOR)

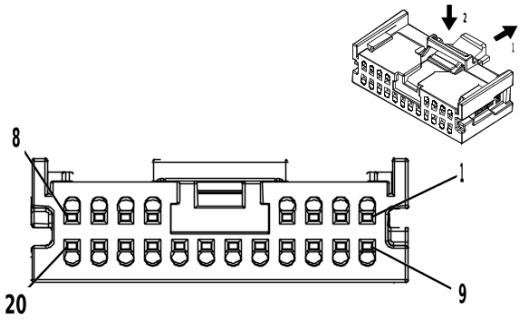

4231339

Connector Part Information

Harness Type: Instrument Panel Wiring Harness
OEM Connector: 35340139
Service Connector: 13544280
Description: 20-Way F Mini 50 Series(BK)

Terminal Part Information

Terminal Type ID	Terminated Lead	Diagnostic Test Probe	Terminal Removal Tool
I	19333221	EL-35616-58 (BK)	EL-38125-58

P53 Driver Information Display X1 (IOR)

Pin	Size	Color	Circuit	Function	Terminal Type ID	Option
1	0.35	BU / RD	11246	Infotainment Display 5 Volt Reference	I	—
2	0.35	GY / BU	11247	Infotainment Display LCD Enable Signal	I	—
3	—	—	—	Not Occupied	—	—
4	0.35	BU	11235	Radio Switch Volume Up Signal	I	—
5	0.35	GY / BN	11234	Radio Switch Volume Down Signal	I	—
6	0.35	BN / WH	11233	Radio Switch Power ON/OFF Switch Signal	I	—
7	0.35	VT / WH	11245	Radio Switch Buttons Signal	I	—
8	0.35	BU / GY	11244	Radio Switch Dimming Control	I	—
9	0.35	BU / GN	11248	Infotainment Display Backlight Dimming Control	I	—
10	—	—	—	Not Occupied	—	—
11	0.35	BK / WH	11252	Infotainment Display Low Reference	I	—
12	0.35	YE / RD	11236	Radio Switch 5 Volt Reference	I	—
13	0.35	BK / BU	11237	Radio Switch Low Reference 1	I	—
14	0.35	BU	11235	Radio Switch Volume Up Signal	I	—
15	0.35	GY / BN	11234	Radio Switch Volume Down Signal	I	—
16	0.35	BN / WH	11233	Radio Switch Power ON/OFF Switch Signal	I	—
17	0.35	VT / WH	11245	Radio Switch Buttons Signal	I	—
18	0.35	BU / GY	11244	Radio Switch Dimming Control	I	—
19	0.35	GY / VT	11249	Infotainment Display Backlight Enable Control	I	—
20	0.35	BK / GN	11238	Radio Switch Low Reference 2	I	—

P53 Driver Information Display X2 (IOR)

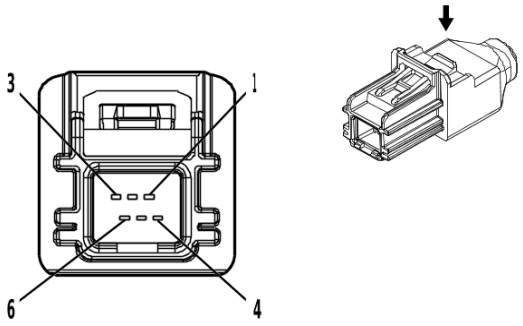

4806625

Connector Part Information

Harness Type: Instrument Panel Wiring Harness
OEM Connector: VP000160
Service Connector: Service by Cable Assembly — See Part Catalog
Description: 6-Way M HSAL-2 Series(BK)

Terminal Part Information

Terminal Type ID	Terminated Lead	Diagnostic Test Probe	Terminal Removal Tool
I	Not required	No Tool Required	No Tool Required

P53 Driver Information Display X2 (IOR)

Pin	Size	Color	Circuit	Function	Terminal Type ID	Option
1	—	—	4844	Radio LVDS (Low Voltage Differential Signaling) Low Reference	I	—
2	—	—	4845	Radio LVDS (Low Voltage Differential Signaling) Signal [+]	I	—
3	—	—	4846	Radio LVDS (Low Voltage Differential Signaling) Signal [-]	I	—
4 - 6	—	—	—	Not Occupied	—	—

Q2 Air Conditioning Clutch

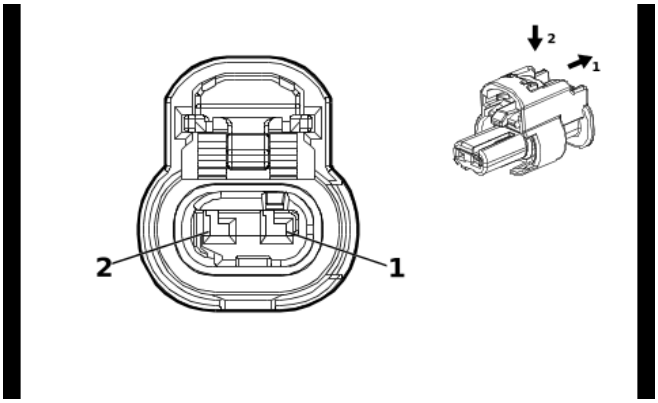

4649903

Connector Part Information

Harness Type: Engine Wiring Harness
OEM Connector: 33327048
Service Connector: 85519075
Description: 2-Way F 1.2 MCON Series, Sealed(BK)

Terminal Part Information

Terminal Type ID	Terminated Lead	Diagnostic Test Probe	Terminal Removal Tool
I	Not required	J-35616-16 (L-GN)	No Tool Required

Q2 Air Conditioning Clutch

Pin	Size	Color	Circuit	Function	Terminal Type ID	Option
1	0.5	BK	450	Ground	I	L3B
	1	BK	450	Ground	I	L84/ L87
	0.75	BK	450	Ground	I	LM2
2	0.75	BN / GN	59	A/C Compressor Clutch Control	I	—

Q6 Camshaft Position Actuator Solenoid Valve (L84/L87)

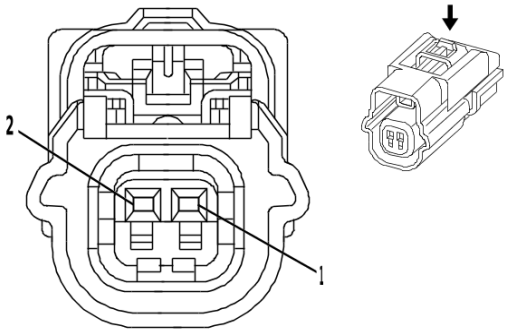

1664592

Connector Part Information

Harness Type: Camshaft Position Sensor Wire
OEM Connector: 89047381
Service Connector: Service by Harness - See Part Catalog
Description: 2-Way F 0.64 Kaizen Series, Sealed(BK)

Terminal Part Information

Terminal Type ID	Terminated Lead	Diagnostic Test Probe	Terminal Removal Tool
I	Not required	No Tool Required	No Tool Required

Q6 Camshaft Position Actuator Solenoid Valve (L84/L87)

Pin	Size	Color	Circuit	Function	Terminal Type ID	Option
1	0.5	BK / BN	6753	Camshaft Position Actuator Solenoid Valve W Low Reference	I	—
2	0.5	VT / BN	5284	Intake Camshaft Position Actuator Solenoid Valve 1	I	—

Q6E Camshaft Position Actuator Solenoid Valve - Exhaust (L3B)

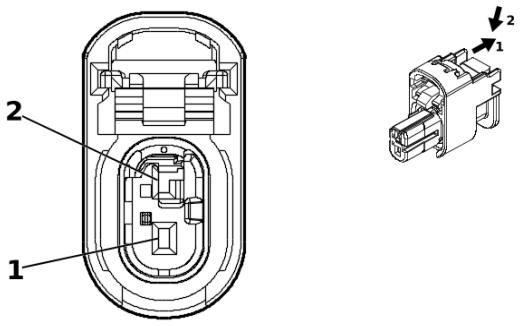

5340268

Connector Part Information

Harness Type: Engine Wiring Harness
OEM Connector: 35270627
Service Connector: 19371204
Description: 2-Way F 1.2 MCON-CB Series, Sealed(BK)

Terminal Part Information

Terminal Type ID	Terminated Lead	Diagnostic Test Probe	Terminal Removal Tool
I	Not required	J-35616-16 (L-GN)	No Tool Required

Q6E Camshaft Position Actuator Solenoid Valve - Exhaust (L3B)

Pin	Size	Color	Circuit	Function	Terminal Type ID	Option
1	0.5	GY / BU	5282	Exhaust Camshaft Position Actuator Solenoid Valve 1	I	—
2	0.5	BK / VT	6754	Camshaft Position Actuator Solenoid Valve X Low Reference	I	—

Q6F Camshaft Position Actuator Solenoid Valve - Intake (L3B)

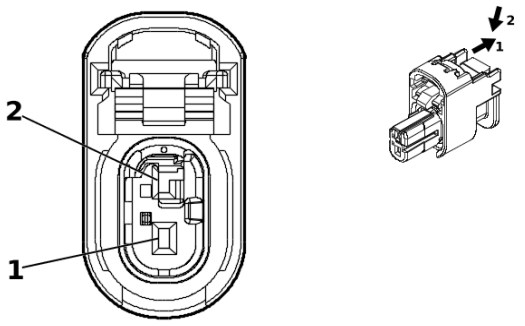

5340268

Connector Part Information

Harness Type: Engine Wiring Harness
OEM Connector: 35270627
Service Connector: 19371204
Description: 2-Way F 1.2 MCON-CB Series, Sealed(BK)

Terminal Part Information

Terminal Type ID	Terminated Lead	Diagnostic Test Probe	Terminal Removal Tool
I	Not required	J-35616-16 (L-GN)	No Tool Required

Q6F Camshaft Position Actuator Solenoid Valve - Intake (L3B)

Pin	Size	Color	Circuit	Function	Terminal Type ID	Option
1	0.5	VT / BN	5284	Intake Camshaft Position Actuator Solenoid Valve 1	I	—
2	0.5	BK / BN	6753	Camshaft Position Actuator Solenoid Valve W Low Reference	I	—

Q9F Differential Locking Actuator - Front (G93)

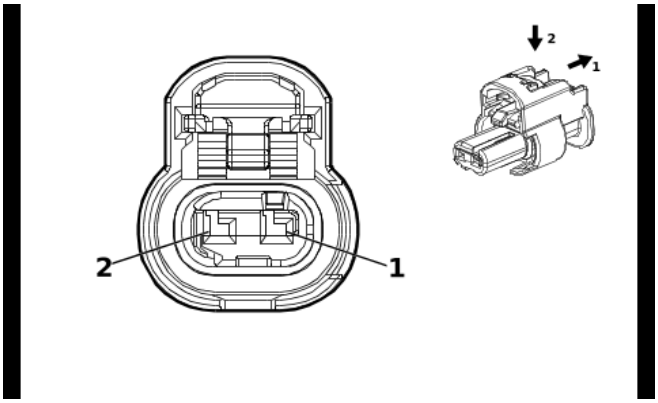

4649903

Connector Part Information

Harness Type: Transfer Case Selector Shift Control Switch Wiring Harness Extension Harness
OEM Connector: 33327048
Service Connector: Service by Harness - See Part Catalog
Description: 2-Way F 1.2 MCON Series, Sealed(BK)

Terminal Part Information

Terminal Type ID	Terminated Lead	Diagnostic Test Probe	Terminal Removal Tool
I	Not required	J-35616-16 (L-GN)	No Tool Required

Q9F Differential Locking Actuator - Front (G93)

Pin	Size	Color	Circuit	Function	Terminal Type ID	Option
1	0.75	VT / WH	7256	Front Differential Lock Actuator Control	I	—
2	0.75	WH / BK	7254	Front Differential Lock Actuator Low Control	I	—

Q9R Differential Locking Actuator - Rear (G94)

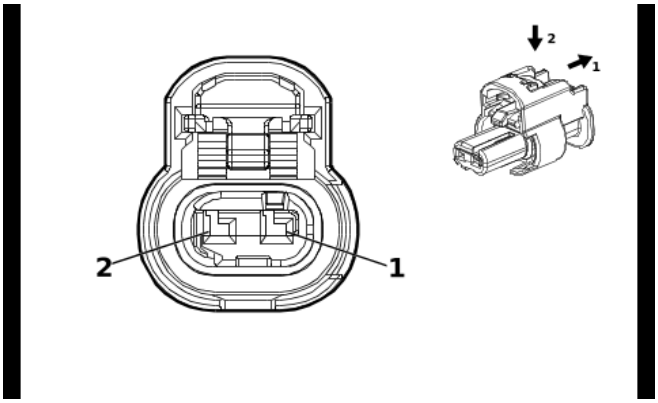

4649903

Connector Part Information

Harness Type: Chassis Rear Wiring Harness Extension Harness
OEM Connector: 1-2296694-1
Service Connector: Service by Harness - See Part Catalog
Description: 2-Way F 1.2 MCON Series, Sealed(BK)

Terminal Part Information

Terminal Type ID	Terminated Lead	Diagnostic Test Probe	Terminal Removal Tool
I	Not required	J-35616-16 (L-GN)	No Tool Required

Q9R Differential Locking Actuator - Rear (G94)

Pin	Size	Color	Circuit	Function	Terminal Type ID	Option
1	0.75	VT / BN	7258	Rear Differential Lock Actuator Control	I	G94
2	0.75	GY / BK	7253	Rear Differential Lock Actuator Low Control	I	G94

Q12 Evaporative Emission Canister Purge Solenoid Valve (L3B)

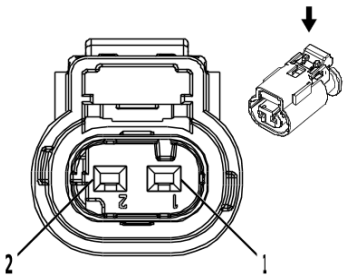

2717066

Connector Part Information

Harness Type: Engine Wiring Harness
OEM Connector: 13735326
Service Connector: 13587326
Description: 2-Way F 1.2 Multilock Series, Sealed(BK)

Terminal Part Information

Terminal Type ID	Terminated Lead	Diagnostic Test Probe	Terminal Removal Tool
I	Not required	J-35616-16 (L-GN)	No Tool Required

Q12 Evaporative Emission Canister Purge Solenoid Valve (L3B)

Pin	Size	Color	Circuit	Function	Terminal Type ID	Option
1	0.5	VT / BU	5293	Powertrain Main Relay Fused Supply Voltage 4	I	—
2	0.5	GN / BU	428	EVAP Canister Purge Solenoid Control	I	—

Q12 Evaporative Emission Canister Purge Solenoid Valve (L84/L87)

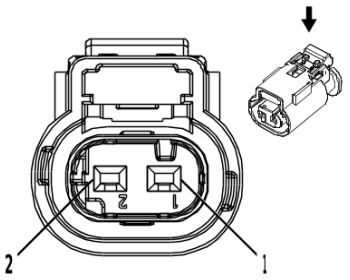

2717066

Connector Part Information

Harness Type: Engine Wiring Harness
OEM Connector: 13735326
Service Connector: 13587326
Description: 2-Way F 1.2 Multilock Series, Sealed(BK)

Terminal Part Information

Terminal Type ID	Terminated Lead	Diagnostic Test Probe	Terminal Removal Tool
I	Not required	J-35616-16 (L-GN)	No Tool Required

Q12 Evaporative Emission Canister Purge Solenoid Valve (L84/L87)

Pin	Size	Color	Circuit	Function	Terminal Type ID	Option
1	0.5	VT / BU	5293	Powertrain Main Relay Fused Supply Voltage 4	I	—
2	0.5	GN / BU	428	EVAP Canister Purge Solenoid Control	I	—

Q13 Evaporative Emission Canister Vent Solenoid Valve (FHS)

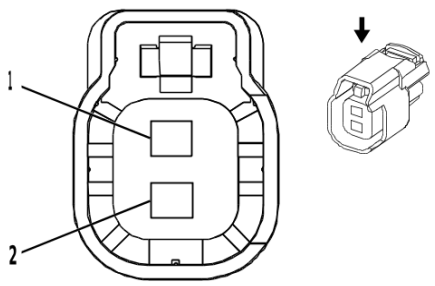

2422378

Connector Part Information

Harness Type: Chassis Wiring Harness
OEM Connector: 13771883
Service Connector: 13579002
Description: 2-Way F 1.5 Series, Sealed(BK)

Terminal Part Information

Terminal Type ID	Terminated Lead	Diagnostic Test Probe	Terminal Removal Tool
I	Not required	J-35616-14 (GN)	No Tool Required

Q13 Evaporative Emission Canister Vent Solenoid Valve (FHS)

Pin	Size	Color	Circuit	Function	Terminal Type ID	Option
1	0.5	WH	1310	EVAP Vent Solenoid Valve Control	I	—
2	0.5	RD / WH	3440	Battery Positive Voltage	I	—

Q14A Exhaust Gas Recirculation Valve 1 (LM2)

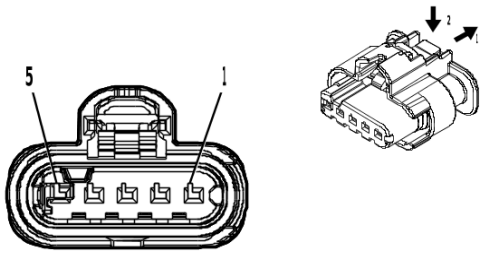

4997783

Connector Part Information

Harness Type: Engine Wiring Harness
OEM Connector: 35026727
Service Connector: 19371195
Description: 5-Way F 1.2 MCON-CB Series, Sealed(BK)

Terminal Part Information

Terminal Type ID	Terminated Lead	Diagnostic Test Probe	Terminal Removal Tool
I	Not required	J-35616-16 (L-GN)	No Tool Required

Q14A Exhaust Gas Recirculation Valve 1 (LM2)

Pin	Size	Color	Circuit	Function	Terminal Type ID	Option
1	0.5	BU / RD	460	Engine Control Sensors 5 Volt Reference 1	I	—
2	0.5	BN / WH	5763	Exhaust Gas Recirculation Position Signal	I	—
3	0.5	BK / YE	548	Engine Control Sensors Low Reference 1	I	—
4	0.75	WH / VT	5764	Exhaust Gas Recirculation Valve High Control	I	—
5	0.75	VT / BK	5746	Exhaust Gas Recirculation Valve Low Control	I	—

Q14B Exhaust Gas Recirculation Valve 2 (LM2)

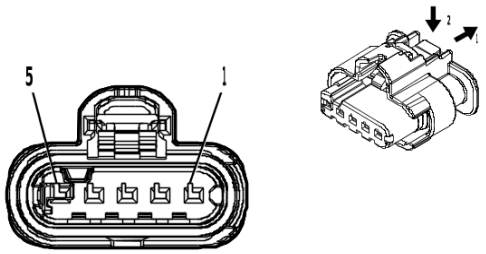

4997783

Connector Part Information

Harness Type: Engine Wiring Harness
OEM Connector: 35026727
Service Connector: 19371195
Description: 5-Way F 1.2 MCON-CB Series, Sealed(BK)

Terminal Part Information

Terminal Type ID	Terminated Lead	Diagnostic Test Probe	Terminal Removal Tool
I	Not required	J-35616-16 (L-GN)	No Tool Required

Q14B Exhaust Gas Recirculation Valve 2 (LM2)

Pin	Size	Color	Circuit	Function	Terminal Type ID	Option
1	0.5	BK / YE	548	Engine Control Sensors Low Reference 1	I	—
2	0.5	BU / GN	4012	Exhaust Gas Recirculation 2 Valve Position Sensor Signal	I	—
3	0.5	BU / RD	460	Engine Control Sensors 5 Volt Reference 1	I	—
4	0.75	BU / WH	4014	Exhaust Gas Recirculation 2 Valve Open Control	I	—
5	0.75	BU / BN	4013	Exhaust Gas Recirculation 2 Valve Close Control	I	—

Q17A Fuel Injector 1 (L3B)

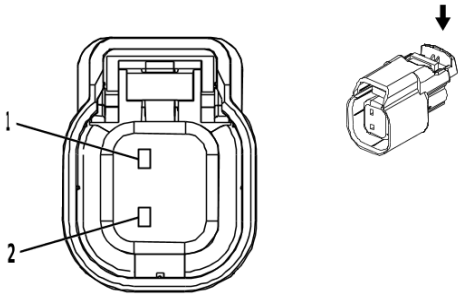

2792100

Connector Part Information

Harness Type: Fuel Injector Wiring Harness
OEM Connector: 34062-4008
Service Connector: Service by Harness - See Part Catalog
Description: 2-Way F 1.5 Series, Sealed(BK)

Terminal Part Information

Terminal Type ID	Terminated Lead	Diagnostic Test Probe	Terminal Removal Tool
I	Not required	Not Available	No Tool Required

Q17A Fuel Injector 1 (L3B)

Pin	Size	Color	Circuit	Function	Terminal Type ID	Option
1	0.8	BN	4801	Direct Fuel Injector High Voltage Control Cylinder 1	I	—
2	0.8	BN / WH	4901	Direct Fuel Injector High Voltage Supply Cylinder 1	I	—

Q17A Fuel Injector 1 (L84/L87)

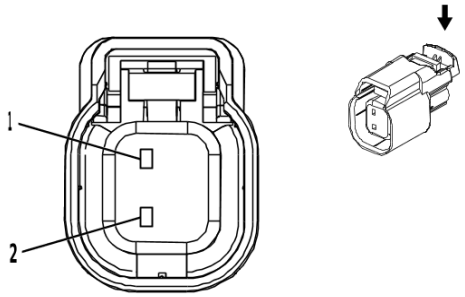

2792100

Connector Part Information

Harness Type: Fuel Injector Wiring Harness - Bank 1
OEM Connector: 13581410
Service Connector: Service by Harness - See Part Catalog
Description: 2-Way F 1.5 Series, Sealed(BK)

Terminal Part Information

Terminal Type ID	Terminated Lead	Diagnostic Test Probe	Terminal Removal Tool
I	Not required	No Tool Required	No Tool Required

Q17A Fuel Injector 1 (L84/L87)

Pin	Size	Color	Circuit	Function	Terminal Type ID	Option
1	0.75	BN / WH	4901	Direct Fuel Injector High Voltage Supply Cylinder 1	I	—
2	0.75	BN	4801	Direct Fuel Injector High Voltage Control Cylinder 1	I	—

Q17A Fuel Injector 1 (LM2)

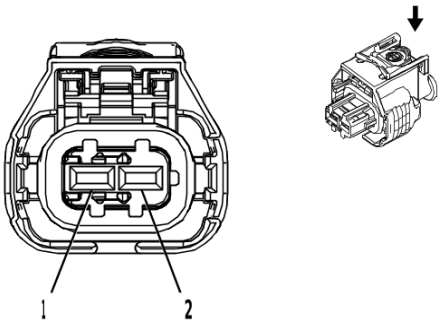

2845578

Connector Part Information

Harness Type: Fuel Injector Wiring Harness
OEM Connector: 13343445
Service Connector: Service by Harness - See Part Catalog
Description: 2-Way F 2.8 Series, Sealed(BK)

Terminal Part Information

Terminal Type ID	Terminated Lead	Diagnostic Test Probe	Terminal Removal Tool
I	Not required	J-35616-35 (VT)	No Tool Required

Q17A Fuel Injector 1 (LM2)

Pin	Size	Color	Circuit	Function	Terminal Type ID	Option
1	1.5	BN / WH	4901	Direct Fuel Injector High Voltage Supply Cylinder 1	I	—
2	1.5	BN	4801	Direct Fuel Injector High Voltage Control Cylinder 1	I	—

Q17B Fuel Injector 2 (L3B)

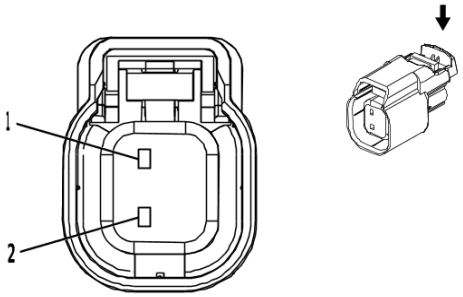

2792100

Connector Part Information

Harness Type: Fuel Injector Wiring Harness
OEM Connector: 34062-4008
Service Connector: Service by Harness - See Part Catalog
Description: 2-Way F 1.5 Series, Sealed(BK)

Terminal Part Information

Terminal Type ID	Terminated Lead	Diagnostic Test Probe	Terminal Removal Tool
I	Not required	Not Available	No Tool Required

Q17B Fuel Injector 2 (L3B)

Pin	Size	Color	Circuit	Function	Terminal Type ID	Option
1	0.8	BU	4802	Direct Fuel Injector High Voltage Control Cylinder 2	I	—
2	0.8	BU / GY	4902	Direct Fuel Injector High Voltage Supply Cylinder 2	I	—

Q17B Fuel Injector 2 (L84/L87)

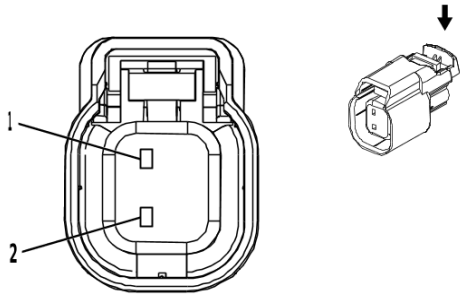

2792100

Connector Part Information

Harness Type: Fuel Injector Wiring Harness - Bank 2
OEM Connector: 13581410
Service Connector: Service by Harness - See Part Catalog
Description: 2-Way F 1.5 Series, Sealed(BK)

Terminal Part Information

Terminal Type ID	Terminated Lead	Diagnostic Test Probe	Terminal Removal Tool
I	Not required	No Tool Required	No Tool Required

Q17B Fuel Injector 2 (L84/L87)

Pin	Size	Color	Circuit	Function	Terminal Type ID	Option
1	—	BU / GY	4902	Direct Fuel Injector High Voltage Supply Cylinder 2	I	—
2	—	BU	4802	Direct Fuel Injector High Voltage Control Cylinder 2	I	—

Q17B Fuel Injector 2 (LM2)

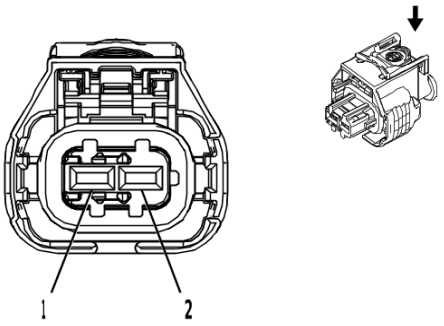

2845578

Connector Part Information

Harness Type: Fuel Injector Wiring Harness
OEM Connector: 13343445
Service Connector: Service by Harness - See Part Catalog
Description: 2-Way F 2.8 Series, Sealed(BK)

Terminal Part Information

Terminal Type ID	Terminated Lead	Diagnostic Test Probe	Terminal Removal Tool
I	Not required	J-35616-35 (VT)	No Tool Required

Q17B Fuel Injector 2 (LM2)

Pin	Size	Color	Circuit	Function	Terminal Type ID	Option
1	1.5	BU / GY	4902	Direct Fuel Injector High Voltage Supply Cylinder 2	I	—
2	1.5	BU	4802	Direct Fuel Injector High Voltage Control Cylinder 2	I	—

Q17C Fuel Injector 3 (L3B)

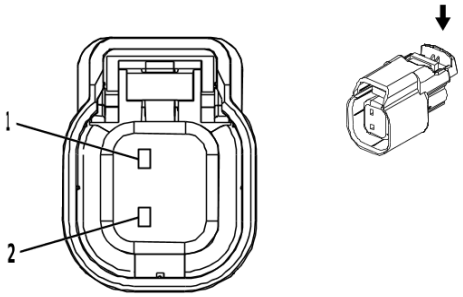

2792100

Connector Part Information

Harness Type: Fuel Injector Wiring Harness
OEM Connector: 34062-4008
Service Connector: Service by Harness - See Part Catalog
Description: 2-Way F 1.5 Series, Sealed(BK)

Terminal Part Information

Terminal Type ID	Terminated Lead	Diagnostic Test Probe	Terminal Removal Tool
I	Not required	Not Available	No Tool Required

Q17C Fuel Injector 3 (L3B)

Pin	Size	Color	Circuit	Function	Terminal Type ID	Option
1	0.8	GN	4803	Direct Fuel Injector High Voltage Control Cylinder 3	I	—
2	0.8	GN / GY	4903	Direct Fuel Injector High Voltage Supply Cylinder 3	I	—

Q17C Fuel Injector 3 (L84/L87)

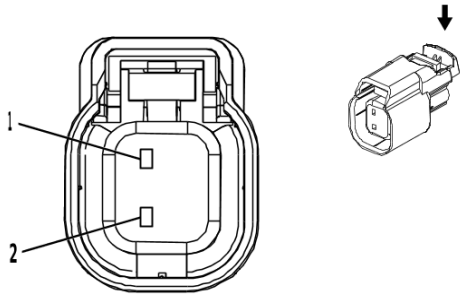

2792100

Connector Part Information

Harness Type: Fuel Injector Wiring Harness - Bank 1
OEM Connector: 13581410
Service Connector: Service by Harness - See Part Catalog
Description: 2-Way F 1.5 Series, Sealed(BK)

Terminal Part Information

Terminal Type ID	Terminated Lead	Diagnostic Test Probe	Terminal Removal Tool
I	Not required	No Tool Required	No Tool Required

Q17C Fuel Injector 3 (L84/L87)

Pin	Size	Color	Circuit	Function	Terminal Type ID	Option
1	0.75	GN / GY	4903	Direct Fuel Injector High Voltage Supply Cylinder 3	I	—
2	0.75	GN	4803	Direct Fuel Injector High Voltage Control Cylinder 3	I	—

Q17C Fuel Injector 3 (LM2)

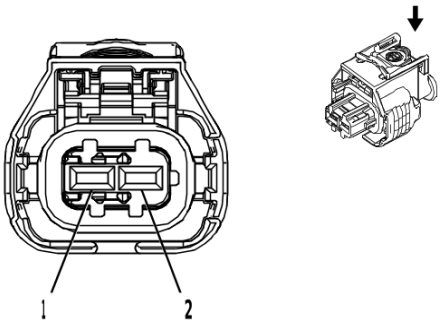

2845578

Connector Part Information

Harness Type: Fuel Injector Wiring Harness
OEM Connector: 13343445
Service Connector: Service by Harness - See Part Catalog
Description: 2-Way F 2.8 Series, Sealed(BK)

Terminal Part Information

Terminal Type ID	Terminated Lead	Diagnostic Test Probe	Terminal Removal Tool
I	Not required	J-35616-35 (VT)	No Tool Required

Q17C Fuel Injector 3 (LM2)

Pin	Size	Color	Circuit	Function	Terminal Type ID	Option
1	1.5	GN / GY	4903	Direct Fuel Injector High Voltage Supply Cylinder 3	I	—
2	1.5	GN	4803	Direct Fuel Injector High Voltage Control Cylinder 3	I	—

Q17D Fuel Injector 4 (L3B)

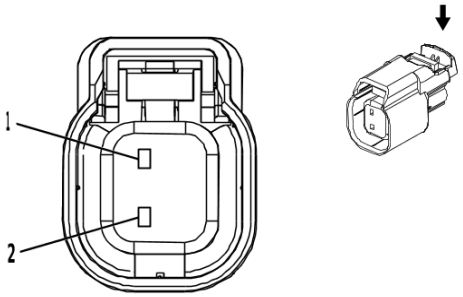

2792100

Connector Part Information

Harness Type: Fuel Injector Wiring Harness
OEM Connector: 34062-4008
Service Connector: Service by Harness - See Part Catalog
Description: 2-Way F 1.5 Series, Sealed(BK)

Terminal Part Information

Terminal Type ID	Terminated Lead	Diagnostic Test Probe	Terminal Removal Tool
I	Not required	Not Available	No Tool Required

Q17D Fuel Injector 4 (L3B)

Pin	Size	Color	Circuit	Function	Terminal Type ID	Option
1	0.8	GY / BU	4804	Direct Fuel Injector High Voltage Control Cylinder 4	I	—
2	0.8	BU / WH	4904	Direct Fuel Injector High Voltage Supply Cylinder 4	I	—

Q17D Fuel Injector 4 (L84/L87)

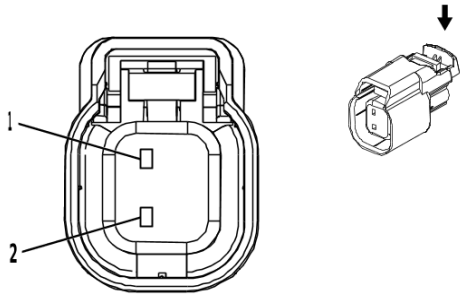

2792100

Connector Part Information

Harness Type: Fuel Injector Wiring Harness - Bank 2
OEM Connector: 13581410
Service Connector: Service by Harness - See Part Catalog
Description: 2-Way F 1.5 Series, Sealed(BK)

Terminal Part Information

Terminal Type ID	Terminated Lead	Diagnostic Test Probe	Terminal Removal Tool
I	Not required	No Tool Required	No Tool Required

Q17D Fuel Injector 4 (L84/L87)

Pin	Size	Color	Circuit	Function	Terminal Type ID	Option
1	—	BU / WH	4904	Direct Fuel Injector High Voltage Supply Cylinder 4	I	—
2	—	GY / BU	4804	Direct Fuel Injector High Voltage Control Cylinder 4	I	—

Q17D Fuel Injector 4 (LM2)

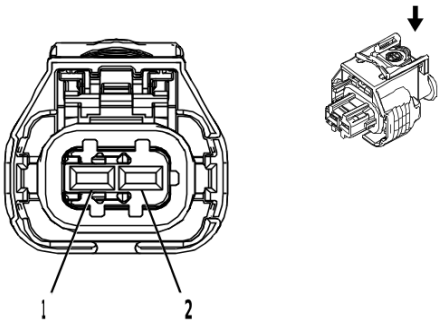

2845578

Connector Part Information

Harness Type: Fuel Injector Wiring Harness
OEM Connector: 13343445
Service Connector: Service by Harness - See Part Catalog
Description: 2-Way F 2.8 Series, Sealed(BK)

Terminal Part Information

Terminal Type ID	Terminated Lead	Diagnostic Test Probe	Terminal Removal Tool
I	Not required	J-35616-35 (VT)	No Tool Required

Q17D Fuel Injector 4 (LM2)

Pin	Size	Color	Circuit	Function	Terminal Type ID	Option
1	1.5	BU / WH	4904	Direct Fuel Injector High Voltage Supply Cylinder 4	I	—
2	1.5	GY / BU	4804	Direct Fuel Injector High Voltage Control Cylinder 4	I	—

Q17E Fuel Injector 5 (L84/L87)

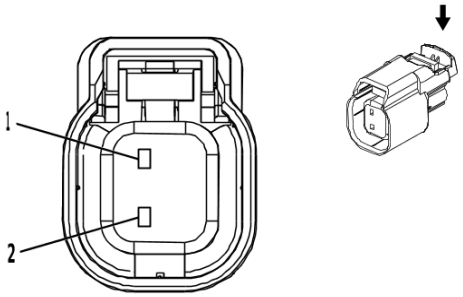

2792100

Connector Part Information

Harness Type: Fuel Injector Wiring Harness - Bank 1
OEM Connector: 13581410
Service Connector: Service by Harness - See Part Catalog
Description: 2-Way F 1.5 Series, Sealed(BK)

Terminal Part Information

Terminal Type ID	Terminated Lead	Diagnostic Test Probe	Terminal Removal Tool
I	Not required	No Tool Required	No Tool Required

Q17E Fuel Injector 5 (L84/L87)

Pin	Size	Color	Circuit	Function	Terminal Type ID	Option
1	—	GN / WH	4905	Direct Fuel Injector High Voltage Supply Cylinder 5	I	—
2	—	WH / GN	4805	Direct Fuel Injector High Voltage Control Cylinder 5	I	—

Q17E Fuel Injector 5 (LM2)

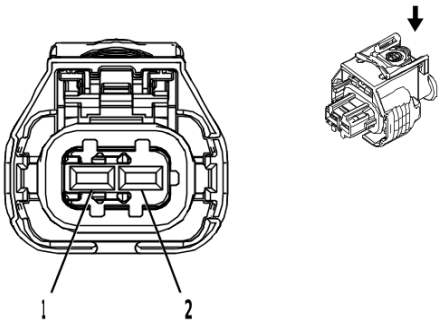

2845578

Connector Part Information

Harness Type: Fuel Injector Wiring Harness
OEM Connector: 13343445
Service Connector: Service by Harness - See Part Catalog
Description: 2-Way F 2.8 Series, Sealed(BK)

Terminal Part Information

Terminal Type ID	Terminated Lead	Diagnostic Test Probe	Terminal Removal Tool
I	Not required	J-35616-35 (VT)	No Tool Required

Q17E Fuel Injector 5 (LM2)

Pin	Size	Color	Circuit	Function	Terminal Type ID	Option
1	1.5	GN / WH	4905	Direct Fuel Injector High Voltage Supply Cylinder 5	I	—
2	1.5	WH / GN	4805	Direct Fuel Injector High Voltage Control Cylinder 5	I	—

Q17F Fuel Injector 6 (L84/L87)

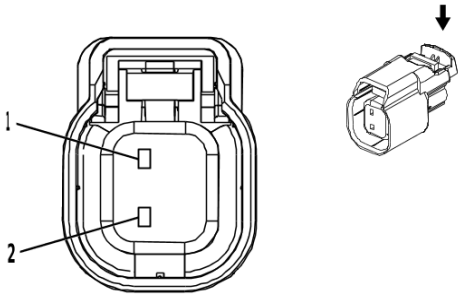

2792100

Connector Part Information

Harness Type: Fuel Injector Wiring Harness - Bank 2
OEM Connector: 13581410
Service Connector: Service by Harness - See Part Catalog
Description: 2-Way F 1.5 Series, Sealed(BK)

Terminal Part Information

Terminal Type ID	Terminated Lead	Diagnostic Test Probe	Terminal Removal Tool
I	Not required	No Tool Required	No Tool Required

Q17F Fuel Injector 6 (L84/L87)

Pin	Size	Color	Circuit	Function	Terminal Type ID	Option
1	—	VT / GY	4906	Direct Fuel Injector High Voltage Supply Cylinder 6	I	—
2	—	VT / GN	4806	Direct Fuel Injector High Voltage Control Cylinder 6	I	—

Q17F Fuel Injector 6 (LM2)

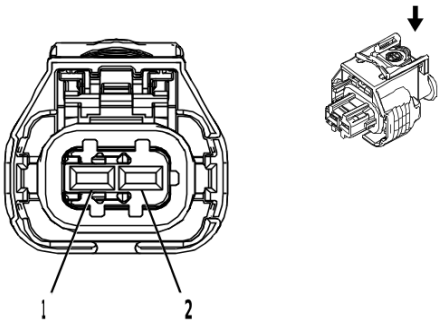

2845578

Connector Part Information

Harness Type: Fuel Injector Wiring Harness
OEM Connector: 13343445
Service Connector: Service by Harness - See Part Catalog
Description: 2-Way F 2.8 Series, Sealed(BK)

Terminal Part Information

Terminal Type ID	Terminated Lead	Diagnostic Test Probe	Terminal Removal Tool
I	Not required	J-35616-35 (VT)	No Tool Required

Q17F Fuel Injector 6 (LM2)

Pin	Size	Color	Circuit	Function	Terminal Type ID	Option
1	1.5	VT / GY	4906	Direct Fuel Injector High Voltage Supply Cylinder 6	I	—
2	1.5	VT / GN	4806	Direct Fuel Injector High Voltage Control Cylinder 6	I	—

Q17G Fuel Injector 7 (L84/L87)

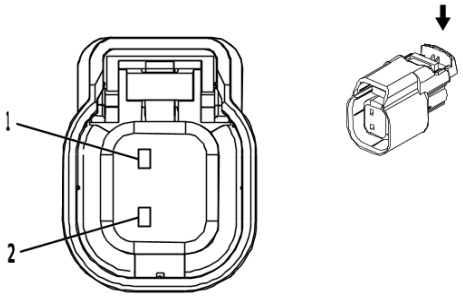

2792100

Connector Part Information

Harness Type: Fuel Injector Wiring Harness - Bank 1
OEM Connector: 13581410
Service Connector: Service by Harness - See Part Catalog
Description: 2-Way F 1.5 Series, Sealed(BK)

Terminal Part Information

Terminal Type ID	Terminated Lead	Diagnostic Test Probe	Terminal Removal Tool
I	Not required	No Tool Required	No Tool Required

Q17G Fuel Injector 7 (L84/L87)

Pin	Size	Color	Circuit	Function	Terminal Type ID	Option
1	—	WH / YE	4907	Direct Fuel Injector High Voltage Supply Cylinder 7	I	—
2	—	YE / GY	4807	Direct Fuel Injector High Voltage Control Cylinder 7	I	—

Q17H Fuel Injector 8 (L84/L87)

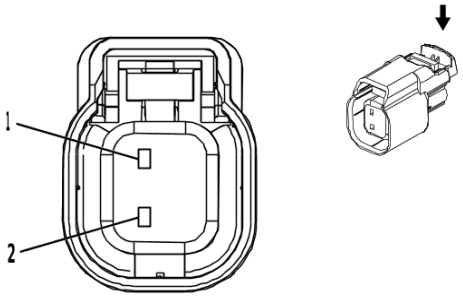

2792100

Connector Part Information

Harness Type: Fuel Injector Wiring Harness - Bank 2
OEM Connector: 13581410
Service Connector: Service by Harness - See Part Catalog
Description: 2-Way F 1.5 Series, Sealed(BK)

Terminal Part Information

Terminal Type ID	Terminated Lead	Diagnostic Test Probe	Terminal Removal Tool
I	Not required	No Tool Required	No Tool Required

Q17H Fuel Injector 8 (L84/L87)

Pin	Size	Color	Circuit	Function	Terminal Type ID	Option
1	—	GY / WH	4908	Direct Fuel Injector High Voltage Supply Cylinder 8	I	—
2	—	GY	4808	Direct Fuel Injector High Voltage Control Cylinder 8	I	—

Q18A Fuel Pressure Regulator 1 (LM2)

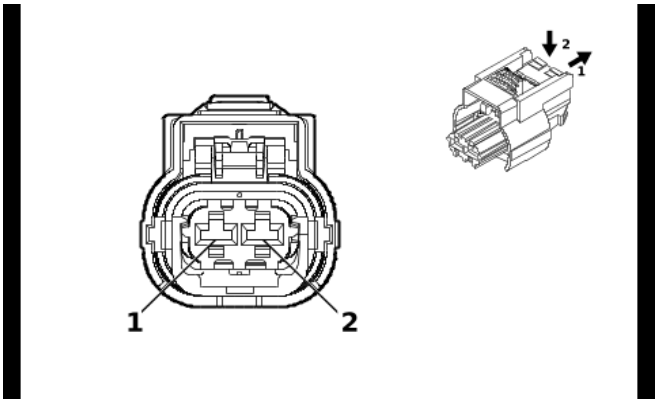

4992524

Connector Part Information

Harness Type: Engine Wiring Harness
OEM Connector: 35182447
Service Connector: 84941154
Description: 2-Way F 2.8 CTS Series, Sealed(BK)

Terminal Part Information

Terminal Type ID	Terminated Lead	Diagnostic Test Probe	Terminal Removal Tool
I	Not required	J-35616-4A (PU)	No Tool Required

Q18A Fuel Pressure Regulator 1 (LM2)

Pin	Size	Color	Circuit	Function	Terminal Type ID	Option
1	0.75	YE / VT	7245	High Pressure Fuel Pump Low Enable Signal	I	—
2	0.75	GY / BN	7244	High Pressure Fuel Pump High Side Control	I	—

Q18B Fuel Pressure Regulator 2 (LM2)

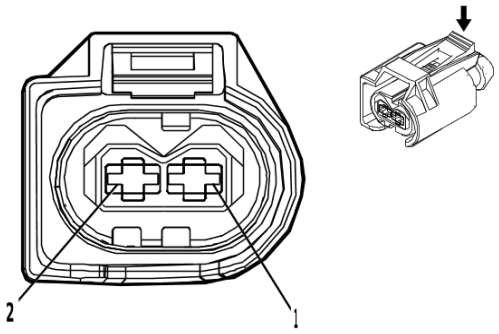

5095463

Connector Part Information

Harness Type: Engine Wiring Harness
OEM Connector: 33163309
Service Connector: 84616656
Description: 2-Way F 2.8 Series, Sealed(BK)

Terminal Part Information

Terminal Type ID	Terminated Lead	Diagnostic Test Probe	Terminal Removal Tool
I	Not required	J-35616-4A (PU)	No Tool Required

Q18B Fuel Pressure Regulator 2 (LM2)

Pin	Size	Color	Circuit	Function	Terminal Type ID	Option
1	0.5	BK / YE	2834	Fuel Rail Pressure Solenoid Valve Low Reference	I	—
2	0.5	BU / WH	2530	Fuel Rail Pressure Solenoid Valve Control	I	—

Q18C Fuel Pressure Regulator 3 (LM2)

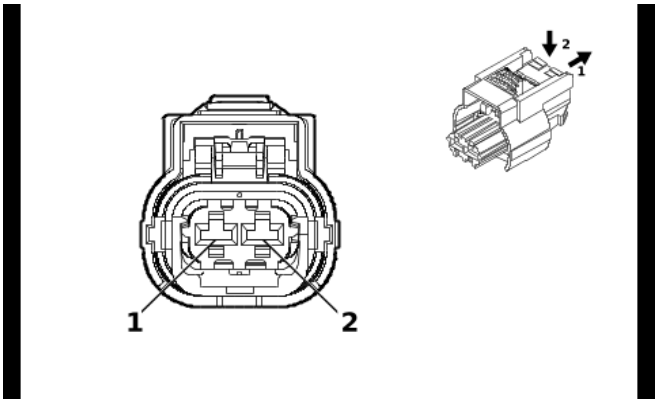

4992524

Connector Part Information

Harness Type: Engine Wiring Harness
OEM Connector: 35182447
Service Connector: 84941154
Description: 2-Way F 2.8 CTS Series, Sealed(BK)

Terminal Part Information

Terminal Type ID	Terminated Lead	Diagnostic Test Probe	Terminal Removal Tool
I	Not required	J-35616-4A (PU)	No Tool Required

Q18C Fuel Pressure Regulator 3 (LM2)

Pin	Size	Color	Circuit	Function	Terminal Type ID	Option
1	0.75	YE / VT	2420	Fuel High Pressure Pump Low Enable Signal	I	—
2	0.75	GY / BN	2419	Fuel High Pressure Pump High Side Supply Voltage	I	—

Q22 Intake Manifold Tuning Solenoid Valve (LM2)

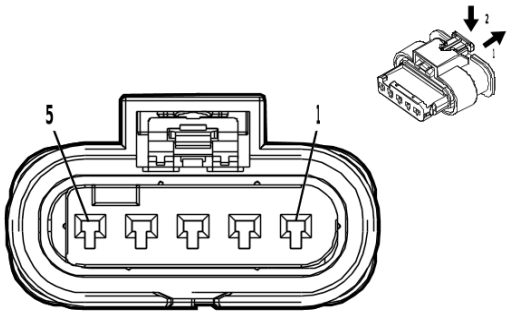

3338689

Connector Part Information

Harness Type: Engine Wiring Harness
OEM Connector: 13943325
Service Connector: 19119351
Description: 5-Way F 1.2 MCON-LL Series, Sealed(BK)

Terminal Part Information

Terminal Type ID	Terminated Lead	Diagnostic Test Probe	Terminal Removal Tool
I	Not required	J-35616-16 (L-GN)	No Tool Required

Q22 Intake Manifold Tuning Solenoid Valve (LM2)

Pin	Size	Color	Circuit	Function	Terminal Type ID	Option
1	0.5	BK / YE	548	Engine Control Sensors Low Reference 1	I	—
2	0.5	GN / GY	7316	Intake Manifold Runner Valve Actuator Control	I	—
3	0.5	BU / RD	460	Engine Control Sensors 5 Volt Reference 1	I	—
4	0.75	BK / BU	1408	Variable Swirl Valve Close Control	I	—
5	0.75	BK / GN	1389	Variable Swirl Valve Open Control	I	—

Q37LFB Front Shock Absorber Actuator - Left (Z45)

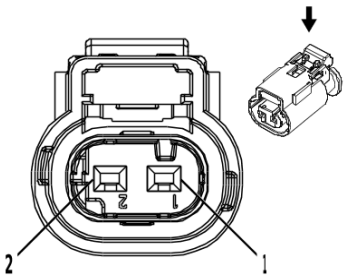

2717066

Connector Part Information

Harness Type: Electronic Suspension Strut Wiring Harness Extension Harness
OEM Connector: 10010337
Service Connector: Service by Harness - See Part Catalog
Description: 2-Way F 1.2 Multilock Series, Sealed(BK)

Terminal Part Information

Terminal Type ID	Terminated Lead	Diagnostic Test Probe	Terminal Removal Tool
I	Not required	J-35616-16 (L-GN)	No Tool Required

Q37LFB Front Shock Absorber Actuator - Left (Z45)

Pin	Size	Color	Circuit	Function	Terminal Type ID	Option
1	0.75	BU / WH	1107	Left Front Shock Absorber Actuator Control	I	—
2	0.75	GY	1113	Left Front Shock Absorber Actuator Control	I	—

Q37LRB Rear Shock Absorber Actuator - Left (Z45)

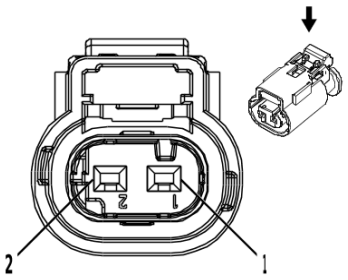

2717066

Connector Part Information

Harness Type: Chassis Rear Wiring Harness Extension Harness
OEM Connector: 10010337
Service Connector: Service by Harness - See Part Catalog
Description: 2-Way F 1.2 Multilock Series, Sealed(BK)

Terminal Part Information

Terminal Type ID	Terminated Lead	Diagnostic Test Probe	Terminal Removal Tool
I	Not required	J-35616-16 (L-GN)	No Tool Required

Q37LRB Rear Shock Absorber Actuator - Left (Z45)

Pin	Size	Color	Circuit	Function	Terminal Type ID	Option
1	0.75	BU / GY	1114	Left Rear Shock Absorber Actuator Control	I	Z45
2	0.75	GN / VT	1115	Left Rear Shock Absorber Actuator Control	I	Z45

Q37RFB Front Shock Absorber Actuator - Right (Z45)

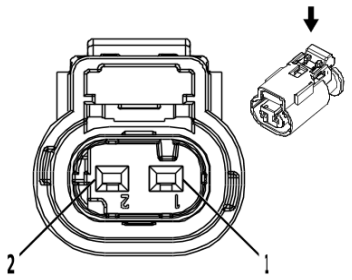

2717066

Connector Part Information

Harness Type: Electronic Suspension Strut Wiring Harness Extension Harness
OEM Connector: 10010337
Service Connector: Service by Harness - See Part Catalog
Description: 2-Way F 1.2 Multilock Series, Sealed(BK)

Terminal Part Information

Terminal Type ID	Terminated Lead	Diagnostic Test Probe	Terminal Removal Tool
I	Not required	J-35616-16 (L-GN)	No Tool Required

Q37RFB Front Shock Absorber Actuator - Right (Z45)

Pin	Size	Color	Circuit	Function	Terminal Type ID	Option
1	0.75	BU / WH	1116	Right Front Shock Absorber Actuator Control	I	—
2	0.75	GY	1117	Right Front Shock Absorber Actuator Control	I	—

Q37RRB Rear Shock Absorber Actuator - Right (Z45)

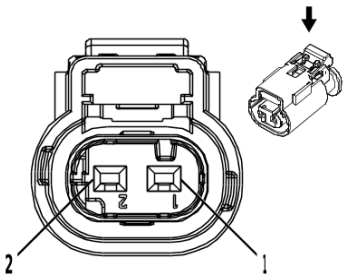

2717066

Connector Part Information

Harness Type: Chassis Rear Wiring Harness Extension Harness
OEM Connector: 10010337
Service Connector: Service by Harness - See Part Catalog
Description: 2-Way F 1.2 Multilock Series, Sealed(BK)

Terminal Part Information

Terminal Type ID	Terminated Lead	Diagnostic Test Probe	Terminal Removal Tool
I	Not required	J-35616-16 (L-GN)	No Tool Required

Q37RRB Rear Shock Absorber Actuator - Right (Z45)

Pin	Size	Color	Circuit	Function	Terminal Type ID	Option
1	0.75	BN / GN	1118	Right Rear Shock Absorber Actuator Control	I	Z45
2	0.75	GN / GY	1119	Right Rear Shock Absorber Actuator Control	I	Z45

Q38 Throttle Body (L3B)

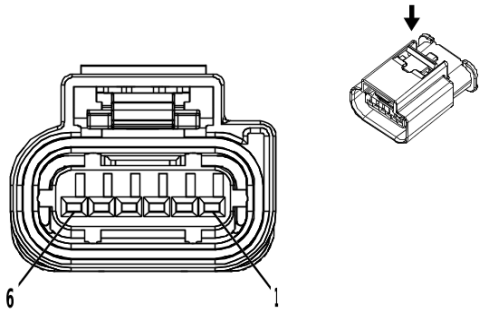

3747579

Connector Part Information

Harness Type: Engine Wiring Harness
OEM Connector: 33220833
Service Connector: 19352911
Description: 6-Way F 1.2 MCON Series, Sealed(BK)

Terminal Part Information

Terminal Type ID	Terminated Lead	Diagnostic Test Probe	Terminal Removal Tool
I	Not required	J-35616-16 (L-GN)	No Tool Required

Q38 Throttle Body (L3B)

Pin	Size	Color	Circuit	Function	Terminal Type ID	Option
1	0.5	YE	581	Throttle Actuator Open Control	I	—
2	0.5	BN / WH	582	Throttle Actuator Close Control	I	—
3	0.5	BU / WH	3630	Throttle Position Sensor SENT 1 Signal	I	—
4	0.5	BK / BN	2752	Throttle Position Sensor Low Reference	I	—
5	0.5	BN / RD	2701	Throttle Position Sensor 5V Reference	I	—
6	—	—	—	Not Occupied	—	—

Q38 Throttle Body (L84/L87)

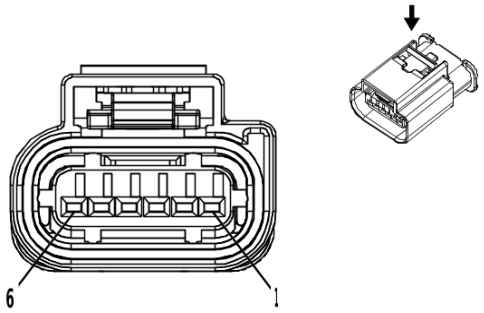

3747579

Connector Part Information

Harness Type: Engine Wiring Harness
OEM Connector: 33220833
Service Connector: 19352911
Description: 6-Way F 1.2 MCON Series, Sealed(BK)

Terminal Part Information

Terminal Type ID	Terminated Lead	Diagnostic Test Probe	Terminal Removal Tool
I	Not required	J-35616-16 (L-GN)	No Tool Required

Q38 Throttle Body (L84/L87)

Pin	Size	Color	Circuit	Function	Terminal Type ID	Option
1	0.5	YE	581	Throttle Actuator Open Control	I	—
2	0.5	BN / WH	582	Throttle Actuator Close Control	I	—
3	0.5	BU / WH	3630	Throttle Position Sensor SENT 1 Signal	I	—
4	0.5	BK / BN	2752	Throttle Position Sensor Low Reference	I	—
5	0.5	BN / RD	2701	Throttle Position Sensor 5V Reference	I	—
6	—	—	—	Not Occupied	—	—

Q38 Throttle Body (LM2)

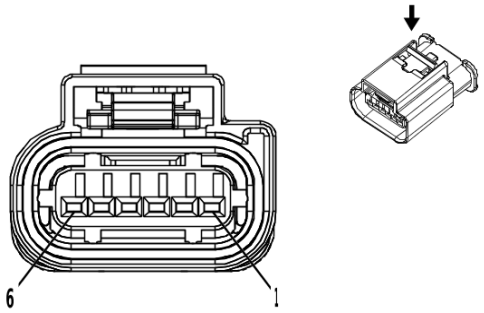

3747579

Connector Part Information

Harness Type: Engine Wiring Harness
OEM Connector: 33220833
Service Connector: 19352911
Description: 6-Way F 1.2 MCON Series, Sealed(BK)

Terminal Part Information

Terminal Type ID	Terminated Lead	Diagnostic Test Probe	Terminal Removal Tool
I	Not required	J-35616-16 (L-GN)	No Tool Required

Q38 Throttle Body (LM2)

Pin	Size	Color	Circuit	Function	Terminal Type ID	Option
1	0.75	YE	581	Throttle Actuator Open Control	I	—
2	0.75	BN / WH	582	Throttle Actuator Close Control	I	—
3	0.5	BU / WH	3630	Throttle Position Sensor SENT 1 Signal	I	—
4	0.5	BK / GN	580	Engine Control Sensors Low Reference 2	I	—
5	0.5	WH / RD	480	Engine Control Vehicle Sensors 5 Volt Reference 1	I	—
6	—	—	—	Not Occupied	—	—

Q40 Turbocharger Bypass Valve Solenoid (L3B)

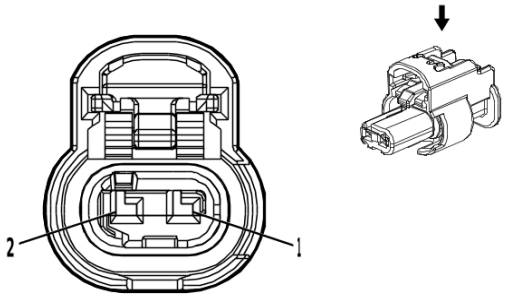

4690744

Connector Part Information

Harness Type: Engine Wiring Harness
OEM Connector: 33375932
Service Connector: 19366871
Description: 2-Way F 1.2 MCON Series, Sealed(BK)

Terminal Part Information

Terminal Type ID	Terminated Lead	Diagnostic Test Probe	Terminal Removal Tool
I	Not required	J-35616-16 (L-GN)	No Tool Required

Q40 Turbocharger Bypass Valve Solenoid (L3B)

Pin	Size	Color	Circuit	Function	Terminal Type ID	Option
1	0.5	VT / BU	5293	Powertrain Main Relay Fused Supply Voltage 4	I	—
2	0.5	GN	3060	Turbocharger Bypass Solenoid Valve Control Bank 1	I	—

Q44 Engine Oil Pressure Control Solenoid Valve (L87)

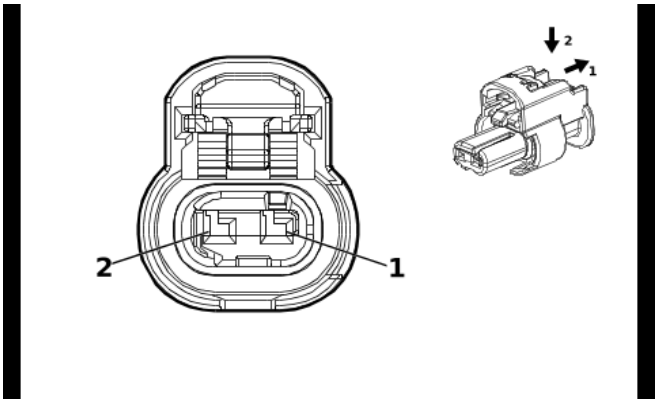

4036662

Connector Part Information

Harness Type: Oil Pump Flow Control Solenoid Valve Wire
OEM Connector: 13514238
Service Connector: Service by Harness - See Part Catalog
Description: 2-Way F 1.2 MCON-CB Series, Sealed(BK)

Terminal Part Information

Terminal Type ID	Terminated Lead	Diagnostic Test Probe	Terminal Removal Tool
I	Not required	J-35616-16 (L-GN)	No Tool Required

Q44 Engine Oil Pressure Control Solenoid Valve (L87)

Pin	Size	Color	Circuit	Function	Terminal Type ID	Option
1	0.5	VT / BU	5293	Powertrain Main Relay Fused Supply Voltage 4	I	—
2	0.5	BU	179	Engine Oil Pump Control	I	—

Q44 Engine Oil Pressure Control Solenoid Valve (LM2)

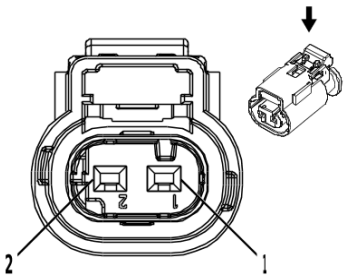

2717066

Connector Part Information

Harness Type: Oil Pump Flow Control Solenoid Valve Harness
OEM Connector: 13503566
Service Connector: Service by Harness - See Part Catalog
Description: 2-Way F 1.2 Multilock Series, Sealed(BK)

Terminal Part Information

Terminal Type ID	Terminated Lead	Diagnostic Test Probe	Terminal Removal Tool
I	Not required	No Tool Required	No Tool Required

Q44 Engine Oil Pressure Control Solenoid Valve (LM2)

Pin	Size	Color	Circuit	Function	Terminal Type ID	Option
1	0.5	YE / BN	106	Oil Pump Motor Control	I	—
2	0.5	BU	179	Engine Oil Pump Control	I	—

Q46 Air Conditioning Compressor Solenoid Valve

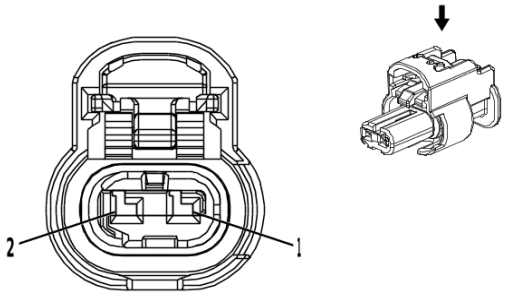

4335931

Connector Part Information

Harness Type: Engine Wiring Harness
OEM Connector: 33371691
Service Connector: 19366843
Description: 2-Way F 1.2 MCON Series, Sealed(BK)

Terminal Part Information

Terminal Type ID	Terminated Lead	Diagnostic Test Probe	Terminal Removal Tool
I	Not required	J-35616-16 (L-GN)	No Tool Required

Q46 Air Conditioning Compressor Solenoid Valve

Pin	Size	Color	Circuit	Function	Terminal Type ID	Option
1	0.75	BU / YE	7574	A/C Compressor Solenoid Valve Control	I	—
2	0.75	BU / BN	7573	A/C Compressor Solenoid Valve Control	I	—

Q61 Reductant Fluid Injector (LM2)

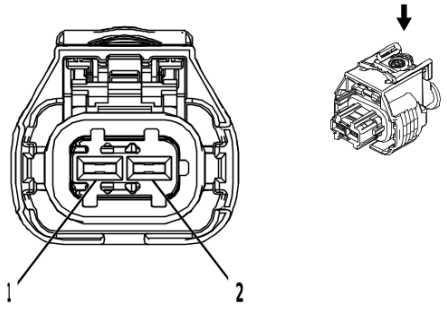

2577394

Connector Part Information

Harness Type: Engine Wiring Harness
OEM Connector: 13930085
Service Connector: 84941154
Description: 2-Way F 2.8 Series, Sealed(BK)

Terminal Part Information

Terminal Type ID	Terminated Lead	Diagnostic Test Probe	Terminal Removal Tool
I	Not required	J-35616-35 (VT)	No Tool Required

Q61 Reductant Fluid Injector (LM2)

Pin	Size	Color	Circuit	Function	Terminal Type ID	Option
1	0.75	BN / WH	3100	Diesel Exhaust Fluid Dosing Valve Low Control	I	—
2	0.75	BN	3099	Diesel Exhaust Fluid Dosing Valve High Control	I	—

Q74 Engine Coolant Bypass Valve (L3B)

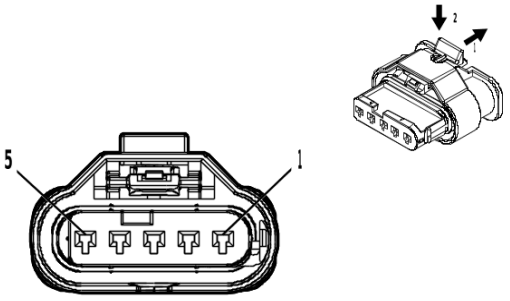

4994456

Connector Part Information

Harness Type: Engine Wiring Harness
OEM Connector: 35110578
Service Connector: 19371191
Description: 5-Way F 1.2 MCON-LL Series, Sealed(NA)

Terminal Part Information

Terminal Type ID	Terminated Lead	Diagnostic Test Probe	Terminal Removal Tool
I	Not required	J-35616-16 (L-GN)	No Tool Required

Q74 Engine Coolant Bypass Valve (L3B)

Pin	Size	Color	Circuit	Function	Terminal Type ID	Option
1	0.75	BU	2976	Coolant Diverter Valve Actuator Control Open	I	—
2	0.75	BU / BN	2977	Coolant Diverter Valve Actuator Control Close	I	—
3	0.5	WH / RD	480	Engine Control Vehicle Sensors 5 Volt Reference 1	I	—
4	0.5	BU / GY	2978	Coolant Diverter Valve Position Signal	I	—
5	0.5	BK / GN	580	Engine Control Sensors Low Reference 2	I	—

Q74 Engine Coolant Bypass Valve (LM2)

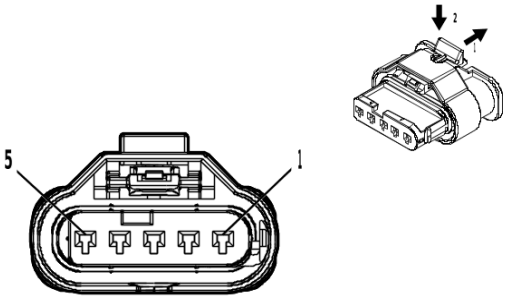

4994456

Connector Part Information

Harness Type: Engine Wiring Harness
OEM Connector: 35110578
Service Connector: 19371191
Description: 5-Way F 1.2 MCON-LL Series, Sealed(NA)

Terminal Part Information

Terminal Type ID	Terminated Lead	Diagnostic Test Probe	Terminal Removal Tool
I	Not required	J-35616-16 (L-GN)	No Tool Required

Q74 Engine Coolant Bypass Valve (LM2)

Pin	Size	Color	Circuit	Function	Terminal Type ID	Option
1	0.75	BU	2976	Coolant Diverter Valve Actuator Control Open	I	—
2	0.75	BU / BN	2977	Coolant Diverter Valve Actuator Control Close	I	—
3	0.5	WH / RD	480	Engine Control Vehicle Sensors 5 Volt Reference 1	I	—
4	0.5	BU / GY	2978	Coolant Diverter Valve Position Signal	I	—
5	0.5	BK / GN	580	Engine Control Sensors Low Reference 2	I	—

Q77A Transmission Control Solenoid Valve 1 (M5X/MQE)

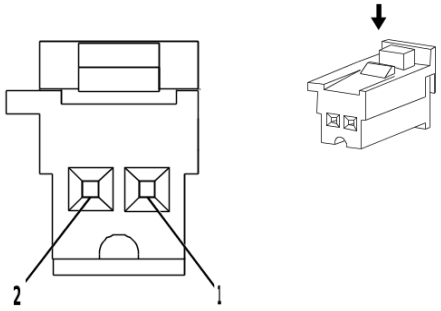

4051391

Connector Part Information

Harness Type: Automatic Transmission Wiring Harness - Control
OEM Connector: 13956948
Service Connector: Service by Harness - See Part Catalog
Description: 2-Way F 0.64 MTS Series(VT)

Terminal Part Information

Terminal Type ID	Terminated Lead	Diagnostic Test Probe	Terminal Removal Tool
I	Not required	J-35616-64B (L-BU)	No Tool Required

Q77A Transmission Control Solenoid Valve 1 (M5X/MQE)

Pin	Size	Color	Circuit	Function	Terminal Type ID	Option
1	0.5	BN	6400	Clutch Solenoid Valve A Control	I	—
2	0.5	GY / BN	6388	Transmission High Side Driver 2 Control	I	—

Q77A Transmission Control Solenoid Valve 1 (MHS/MQC)

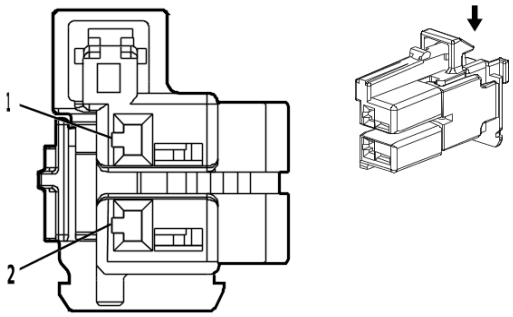

4672650

Connector Part Information

Harness Type: Automatic Transmission Wiring Harness - Control
OEM Connector: 2289523-1
Service Connector: Service by Harness - See Part Catalog
Description: 2-Way F 1.2 MCON Series(BN)

Terminal Part Information

Terminal Type ID	Terminated Lead	Diagnostic Test Probe	Terminal Removal Tool
I	Not required	J-35616-16 (LT GN)	No Tool Required

Q77A Transmission Control Solenoid Valve 1 (MHS/MQC)

Pin	Size	Color	Circuit	Function	Terminal Type ID	Option
1	0.5	WH	6388	Transmission High Side Driver 2 Control	I	—
2	0.5	BU / GN	6404	Clutch Solenoid Valve E Control	I	—

Q77A Transmission Control Solenoid Valve 1 (MHT/MQB)

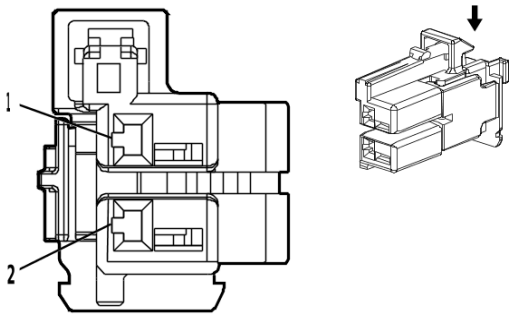

4672650

Connector Part Information

Harness Type: Automatic Transmission Wiring Harness - Control
OEM Connector: 2289523-1
Service Connector: Service by Harness - See Part Catalog
Description: 2-Way F 1.2 MCON Series(BN)

Terminal Part Information

Terminal Type ID	Terminated Lead	Diagnostic Test Probe	Terminal Removal Tool
I	Not required	Not Available	No Tool Required

Q77A Transmission Control Solenoid Valve 1 (MHT/MQB)

Pin	Size	Color	Circuit	Function	Terminal Type ID	Option
1	0.5	WH	6404	Clutch Solenoid Valve E Control	I	—
2	0.5	BU / GN	6388	Transmission High Side Driver 2 Control	I	—

Q77B Transmission Control Solenoid Valve 2 (M5X/MQE)

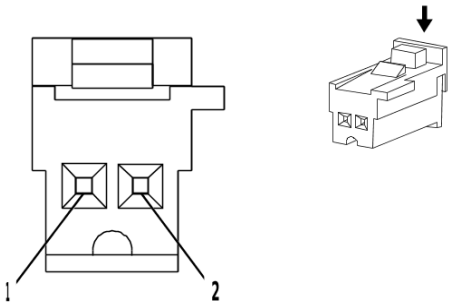

4008644

Connector Part Information

Harness Type: Automatic Transmission Wiring Harness - Control
OEM Connector: 13941672
Service Connector: Service by Harness - See Part Catalog
Description: 2-Way F 0.64 MTS Series(GY)

Terminal Part Information

Terminal Type ID	Terminated Lead	Diagnostic Test Probe	Terminal Removal Tool
I	Not required	J-35616-64B (L-BU)	No Tool Required

Q77B Transmission Control Solenoid Valve 2 (M5X/MQE)

Pin	Size	Color	Circuit	Function	Terminal Type ID	Option
1	0.5	BU	6401	Clutch Solenoid Valve B Control	I	—
2	0.5	GY / BN	6388	Transmission High Side Driver 2 Control	I	—

Q77B Transmission Control Solenoid Valve 2 (MHS/MQC)

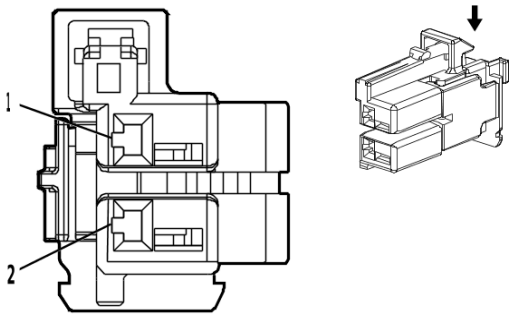

4672650

Connector Part Information

Harness Type: Automatic Transmission Wiring Harness - Control
OEM Connector: 2289523-1
Service Connector: Service by Harness - See Part Catalog
Description: 2-Way F 1.2 MCON Series(BN)

Terminal Part Information

Terminal Type ID	Terminated Lead	Diagnostic Test Probe	Terminal Removal Tool
I	Not required	J-35616-16 (LT GN)	No Tool Required

Q77B Transmission Control Solenoid Valve 2 (MHS/MQC)

Pin	Size	Color	Circuit	Function	Terminal Type ID	Option
1	0.5	WH	6388	Transmission High Side Driver 2 Control	I	—
2	0.5	GN / BN	6403	Clutch Solenoid Valve D Control	I	—

Q77B Transmission Control Solenoid Valve 2 (MHT/MQB)

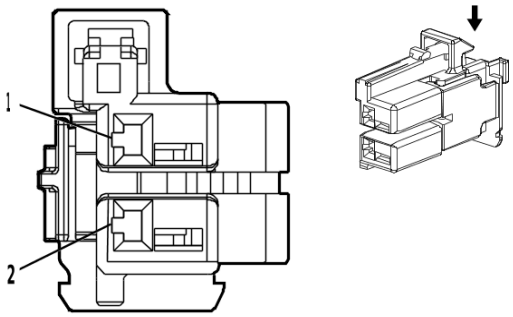

4672650

Connector Part Information

Harness Type: Automatic Transmission Wiring Harness - Control
OEM Connector: 2289523-1
Service Connector: Service by Harness - See Part Catalog
Description: 2-Way F 1.2 MCON Series(BN)

Terminal Part Information

Terminal Type ID	Terminated Lead	Diagnostic Test Probe	Terminal Removal Tool
I	Not required	Not Available	No Tool Required

Q77B Transmission Control Solenoid Valve 2 (MHT/MQB)

Pin	Size	Color	Circuit	Function	Terminal Type ID	Option
1	0.5	WH	6403	Clutch Solenoid Valve D Control	I	—
2	0.5	GN / BN	6388	Transmission High Side Driver 2 Control	I	—

Q77C Transmission Control Solenoid Valve 3 (M5X/MQE)

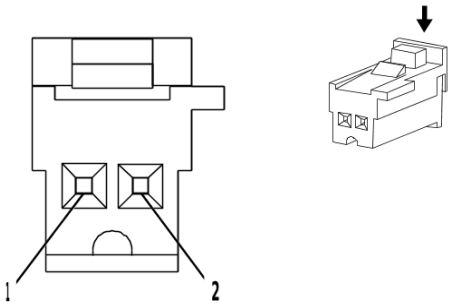

4008644

Connector Part Information

Harness Type: Automatic Transmission Wiring Harness - Control
OEM Connector: 13941672
Service Connector: Service by Harness - See Part Catalog
Description: 2-Way F 0.64 MTS Series(GY)

Terminal Part Information

Terminal Type ID	Terminated Lead	Diagnostic Test Probe	Terminal Removal Tool
I	Not required	J-35616-64B (L-BU)	No Tool Required

Q77C Transmission Control Solenoid Valve 3 (M5X/MQE)

Pin	Size	Color	Circuit	Function	Terminal Type ID	Option
1	0.5	GY	6402	Clutch Solenoid Valve C Control	I	—
2	0.5	GY / BN	6388	Transmission High Side Driver 2 Control	I	—

Q77C Transmission Control Solenoid Valve 3 (MHS/MQC)

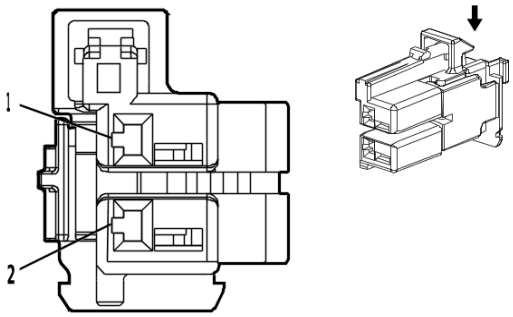

4672650

Connector Part Information

Harness Type: Automatic Transmission Wiring Harness - Control
OEM Connector: 2289523-1
Service Connector: Service by Harness - See Part Catalog
Description: 2-Way F 1.2 MCON Series(BN)

Terminal Part Information

Terminal Type ID	Terminated Lead	Diagnostic Test Probe	Terminal Removal Tool
I	Not required	J-35616-16 (LT GN)	No Tool Required

Q77C Transmission Control Solenoid Valve 3 (MHS/MQC)

Pin	Size	Color	Circuit	Function	Terminal Type ID	Option
1	0.5	WH	6388	Transmission High Side Driver 2 Control	I	—
2	0.5	GY	6402	Clutch Solenoid Valve C Control	I	—

Q77C Transmission Control Solenoid Valve 3 (MHT/MQB)

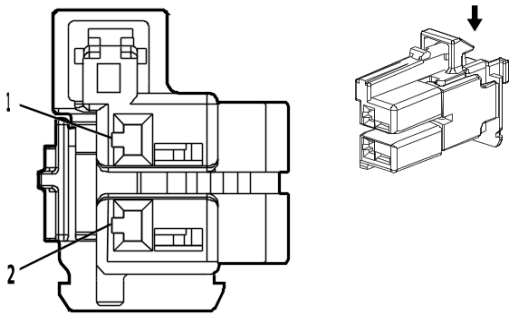

4672650

Connector Part Information

Harness Type: Automatic Transmission Wiring Harness - Control
OEM Connector: 2289523-1
Service Connector: Service by Harness - See Part Catalog
Description: 2-Way F 1.2 MCON Series(BN)

Terminal Part Information

Terminal Type ID	Terminated Lead	Diagnostic Test Probe	Terminal Removal Tool
I	Not required	Not Available	No Tool Required

Q77C Transmission Control Solenoid Valve 3 (MHT/MQB)

Pin	Size	Color	Circuit	Function	Terminal Type ID	Option
1	0.5	WH	6402	Clutch Solenoid Valve C Control	I	—
2	0.5	GY	6388	Transmission High Side Driver 2 Control	I	—

Q77D Transmission Control Solenoid Valve 4 (M5X/MQE)

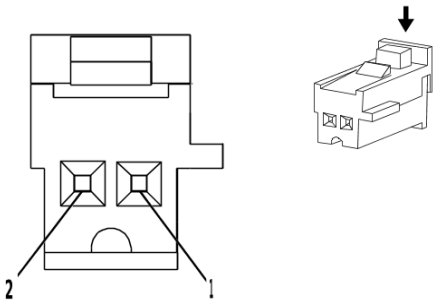

4008636

Connector Part Information

Harness Type: Automatic Transmission Wiring Harness - Control
OEM Connector: 13947283
Service Connector: Service by Harness - See Part Catalog
Description: 2-Way F 0.64 MTS Series(NA)

Terminal Part Information

Terminal Type ID	Terminated Lead	Diagnostic Test Probe	Terminal Removal Tool
I	Not required	J-35616-64B (L-BU)	No Tool Required

Q77D Transmission Control Solenoid Valve 4 (M5X/MQE)

Pin	Size	Color	Circuit	Function	Terminal Type ID	Option
1	0.5	WH	4508	Transmission Clutch G Control	I	—
2	0.5	GN / GY	6387	Transmission High Side Driver 1 Control	I	—

Q77D Transmission Control Solenoid Valve 4 (MHS/MQC)

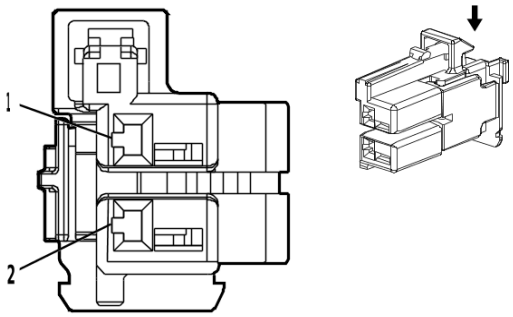

4672650

Connector Part Information

Harness Type: Automatic Transmission Wiring Harness - Control
OEM Connector: 2289523-1
Service Connector: Service by Harness - See Part Catalog
Description: 2-Way F 1.2 MCON Series(BN)

Terminal Part Information

Terminal Type ID	Terminated Lead	Diagnostic Test Probe	Terminal Removal Tool
I	Not required	J-35616-16 (LT GN)	No Tool Required

Q77D Transmission Control Solenoid Valve 4 (MHS/MQC)

Pin	Size	Color	Circuit	Function	Terminal Type ID	Option
1	0.5	WH	6388	Transmission High Side Driver 2 Control	I	—
2	0.5	BN / WH	4509	Transmission Clutch F Control	I	—

Q77D Transmission Control Solenoid Valve 4 (MHT/MQB)

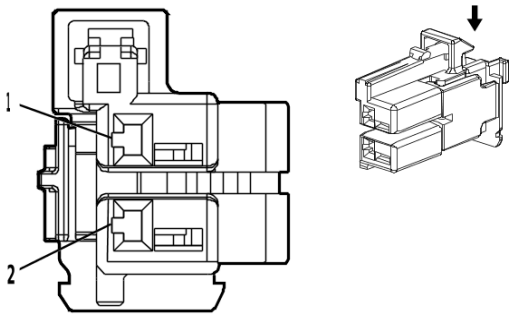

4672650

Connector Part Information

Harness Type: Automatic Transmission Wiring Harness - Control
OEM Connector: 2289523-1
Service Connector: Service by Harness - See Part Catalog
Description: 2-Way F 1.2 MCON Series(BN)

Terminal Part Information

Terminal Type ID	Terminated Lead	Diagnostic Test Probe	Terminal Removal Tool
I	Not required	Not Available	No Tool Required

Q77D Transmission Control Solenoid Valve 4 (MHT/MQB)

Pin	Size	Color	Circuit	Function	Terminal Type ID	Option
1	0.5	WH	4509	Transmission Clutch F Control	I	—
2	0.5	BN / WH	6388	Transmission High Side Driver 2 Control	I	—

Q77E Transmission Control Solenoid Valve 5 (M5X/MQE)

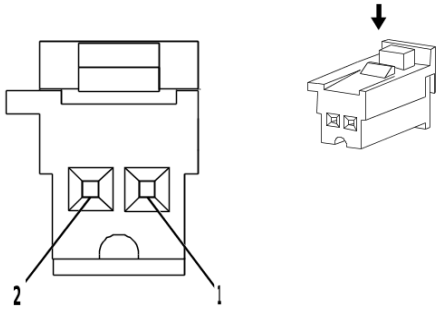

4051391

Connector Part Information

Harness Type: Automatic Transmission Wiring Harness - Control
OEM Connector: 13956948
Service Connector: Service by Harness - See Part Catalog
Description: 2-Way F 0.64 MTS Series(VT)

Terminal Part Information

Terminal Type ID	Terminated Lead	Diagnostic Test Probe	Terminal Removal Tool
I	Not required	J-35616-64B (L-BU)	No Tool Required

Q77E Transmission Control Solenoid Valve 5 (M5X/MQE)

Pin	Size	Color	Circuit	Function	Terminal Type ID	Option
1	0.5	WH / BU	6388	Transmission High Side Driver 2 Control	I	—
2	0.5	GN / GY	4507	Transmission Clutch H Control	I	—

Q77E Transmission Control Solenoid Valve 5 (MHS/MQC)

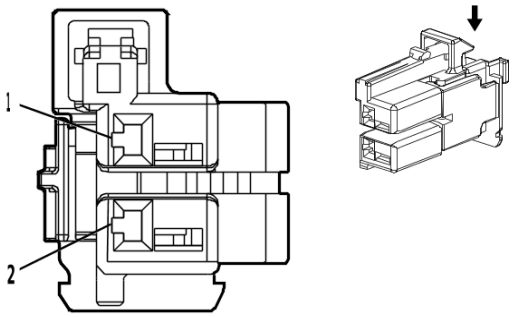

4672650

Connector Part Information

Harness Type: Automatic Transmission Wiring Harness - Control
OEM Connector: 2289523-1
Service Connector: Service by Harness - See Part Catalog
Description: 2-Way F 1.2 MCON Series(BN)

Terminal Part Information

Terminal Type ID	Terminated Lead	Diagnostic Test Probe	Terminal Removal Tool
I	Not required	J-35616-16 (LT GN)	No Tool Required

Q77E Transmission Control Solenoid Valve 5 (MHS/MQC)

Pin	Size	Color	Circuit	Function	Terminal Type ID	Option
1	0.5	WH	6388	Transmission High Side Driver 2 Control	I	—
2	0.5	YE / VT	4507	Transmission Clutch H Control	I	—

Q77E Transmission Control Solenoid Valve 5 (MHT/MQB)

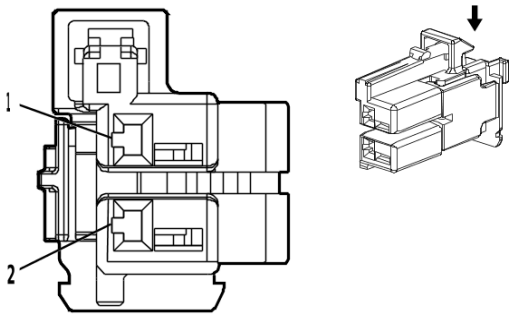

4672650

Connector Part Information

Harness Type: Automatic Transmission Wiring Harness - Control
OEM Connector: 2289523-1
Service Connector: Service by Harness - See Part Catalog
Description: 2-Way F 1.2 MCON Series(BN)

Terminal Part Information

Terminal Type ID	Terminated Lead	Diagnostic Test Probe	Terminal Removal Tool
I	Not required	Not Available	No Tool Required

Q77E Transmission Control Solenoid Valve 5 (MHT/MQB)

Pin	Size	Color	Circuit	Function	Terminal Type ID	Option
1	0.5	WH	4507	Transmission Clutch H Control	I	—
2	0.5	YE / VT	6388	Transmission High Side Driver 2 Control	I	—

Q77F Transmission Control Solenoid Valve 6 (M5X/MQE)

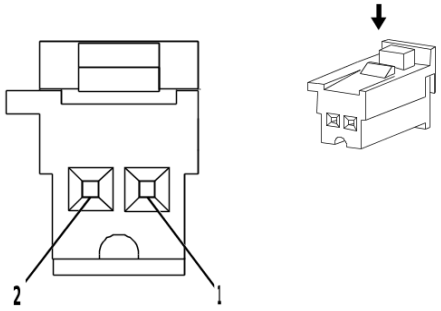

4051391

Connector Part Information

Harness Type: Automatic Transmission Wiring Harness - Control
OEM Connector: 13956948
Service Connector: Service by Harness - See Part Catalog
Description: 2-Way F 0.64 MTS Series(VT)

Terminal Part Information

Terminal Type ID	Terminated Lead	Diagnostic Test Probe	Terminal Removal Tool
I	Not required	Not Available	No Tool Required

Q77F Transmission Control Solenoid Valve 6 (M5X/MQE)

Pin	Size	Color	Circuit	Function	Terminal Type ID	Option
1	0.5	GY / GN	4507	Transmission Clutch H Control	I	—
2	0.5	GY / BN	6387	Transmission High Side Driver 1 Control	I	—

Q77F Transmission Control Solenoid Valve 6 (MHS/MQC)

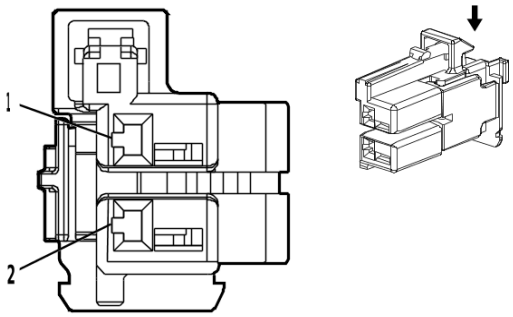

4672650

Connector Part Information

Harness Type: Automatic Transmission Wiring Harness - Control
OEM Connector: 2289523-1
Service Connector: Service by Harness - See Part Catalog
Description: 2-Way F 1.2 MCON Series(BN)

Terminal Part Information

Terminal Type ID	Terminated Lead	Diagnostic Test Probe	Terminal Removal Tool
I	Not required	J-35616-16 (LT GN)	No Tool Required

Q77F Transmission Control Solenoid Valve 6 (MHS/MQC)

Pin	Size	Color	Circuit	Function	Terminal Type ID	Option
1	0.5	WH	6388	Transmission High Side Driver 2 Control	I	—
2	0.5	BU / GY	4508	Transmission Clutch G Control	I	—

Q77F Transmission Control Solenoid Valve 6 (MHT/MQB)

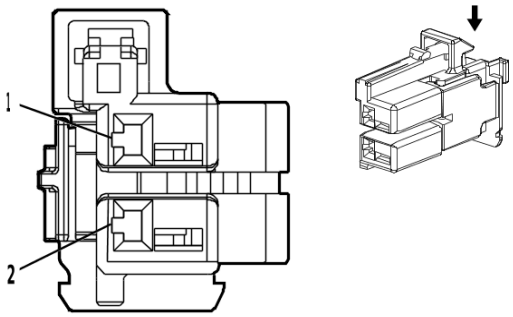

4672650

Connector Part Information

Harness Type: Automatic Transmission Wiring Harness - Control
OEM Connector: 2289523-1
Service Connector: Service by Harness - See Part Catalog
Description: 2-Way F 1.2 MCON Series(BN)

Terminal Part Information

Terminal Type ID	Terminated Lead	Diagnostic Test Probe	Terminal Removal Tool
I	Not required	Not Available	No Tool Required

Q77F Transmission Control Solenoid Valve 6 (MHT/MQB)

Pin	Size	Color	Circuit	Function	Terminal Type ID	Option
1	0.5	WH	4508	Transmission Clutch G Control	I	—
2	0.5	BU / GY	6388	Transmission High Side Driver 2 Control	I	—

Q77G Transmission Control Solenoid Valve 7 (M5X/MQE)

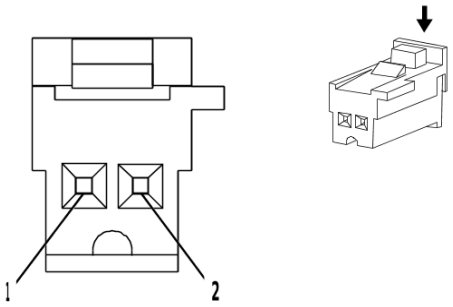

4008644

Connector Part Information

Harness Type: Automatic Transmission Wiring Harness - Control
OEM Connector: 13941672
Service Connector: Service by Harness - See Part Catalog
Description: 2-Way F 0.64 MTS Series(GY)

Terminal Part Information

Terminal Type ID	Terminated Lead	Diagnostic Test Probe	Terminal Removal Tool
I	Not required	J-35616-64B (L-BU)	No Tool Required

Q77G Transmission Control Solenoid Valve 7 (M5X/MQE)

Pin	Size	Color	Circuit	Function	Terminal Type ID	Option
1	0.5	YE / BN	4508	Transmission Clutch G Control	I	—
2	0.5	GY / BN	6387	Transmission High Side Driver 1 Control	I	—

Q77G Transmission Control Solenoid Valve 7 (MHS/MQC)

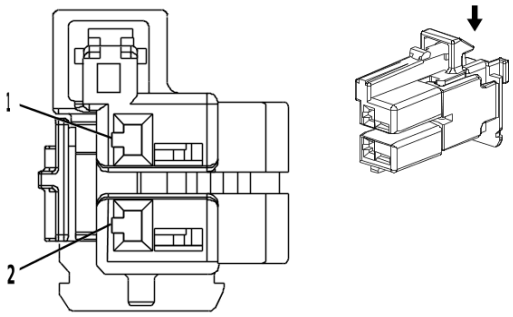

4364736

Connector Part Information

Harness Type: Automatic Transmission Wiring Harness - Control Extension
OEM Connector: 2289523-2
Service Connector: Service by Harness - See Part Catalog
Description: 2-Way F 1.2 MCON Series(BU)

Terminal Part Information

Terminal Type ID	Terminated Lead	Diagnostic Test Probe	Terminal Removal Tool
I	Not required	J-35616-16 (LT GN)	No Tool Required

Q77G Transmission Control Solenoid Valve 7 (MHS/MQC)

Pin	Size	Color	Circuit	Function	Terminal Type ID	Option
1	0.5	BN	6387	Transmission High Side Driver 1 Control	I	—
2	0.5	GN / OG	1530	Transmission Line Pressure Control Solenoid Valve Control	I	—

Q77G Transmission Control Solenoid Valve 7 (MHT/MQB)

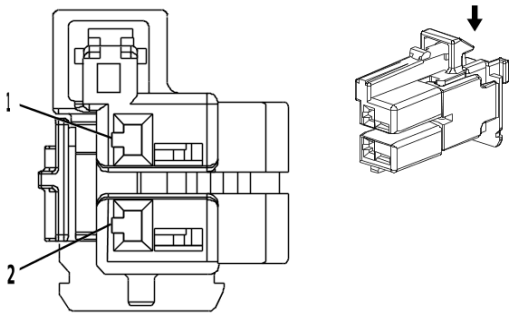

4364736

Connector Part Information

Harness Type: Automatic Transmission Wiring Harness - Control Extension
OEM Connector: 2289523-2
Service Connector: Service by Harness - See Part Catalog
Description: 2-Way F 1.2 MCON Series(BU)

Terminal Part Information

Terminal Type ID	Terminated Lead	Diagnostic Test Probe	Terminal Removal Tool
I	Not required	J-35616-16 (LT GN)	No Tool Required

Q77G Transmission Control Solenoid Valve 7 (MHT/MQB)

Pin	Size	Color	Circuit	Function	Terminal Type ID	Option
1	0.5	BN	6387	Transmission High Side Driver 1 Control	I	—
2	0.5	GN / OG	1530	Transmission Line Pressure Control Solenoid Valve Control	I	—

Q77H Transmission Control Solenoid Valve 8 (M5X/MQE)

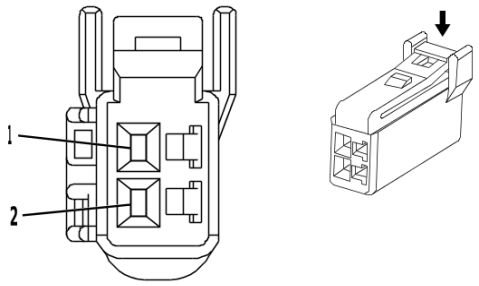

4051682

Connector Part Information

Harness Type: Automatic Transmission Wiring Harness - Control
OEM Connector: 7287-0122
Service Connector: Service by Harness - See Part Catalog
Description: 2-Way F 040 III Series(NA)

Terminal Part Information

Terminal Type ID	Terminated Lead	Diagnostic Test Probe	Terminal Removal Tool
I	Not required	J-35616-16 (L-GN)	No Tool Required

Q77H Transmission Control Solenoid Valve 8 (M5X/MQE)

Pin	Size	Color	Circuit	Function	Terminal Type ID	Option
1	0.5	GN / GY	6380	Torque Converter Clutch Enable Solenoid Valve A Control	I	—
2	0.5	GN / WH	6387	Transmission High Side Driver 1 Control	I	—

Q77H Transmission Control Solenoid Valve 8 (MHS/MQC)

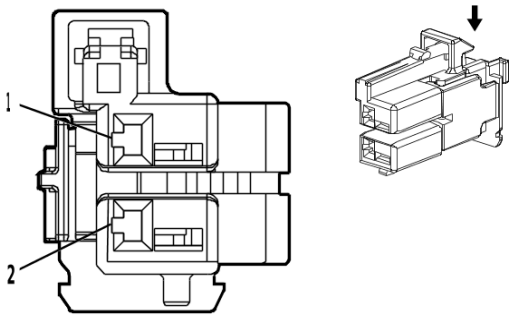

4672683

Connector Part Information

Harness Type: Automatic Transmission Wiring Harness - Control Extension
OEM Connector: 2289523-3
Service Connector: Service by Harness - See Part Catalog
Description: 2-Way F 1.2 MCON Series(GN)

Terminal Part Information

Terminal Type ID	Terminated Lead	Diagnostic Test Probe	Terminal Removal Tool
I	Not required	J-35616-16 (LT GN)	No Tool Required

Q77H Transmission Control Solenoid Valve 8 (MHS/MQC)

Pin	Size	Color	Circuit	Function	Terminal Type ID	Option
1	0.5	BN	6387	Transmission High Side Driver 1 Control	I	—
2	0.5	GY / BN	422	Torque Converter Clutch Solenoid Valve Control	I	—

Q77H Transmission Control Solenoid Valve 8 (MHT/MQB)

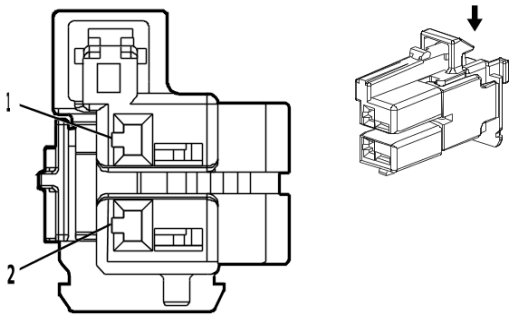

4672683

Connector Part Information

Harness Type: Automatic Transmission Wiring Harness - Control Extension
OEM Connector: 2289523-3
Service Connector: Service by Harness - See Part Catalog
Description: 2-Way F 1.2 MCON Series(GN)

Terminal Part Information

Terminal Type ID	Terminated Lead	Diagnostic Test Probe	Terminal Removal Tool
I	Not required	J-35616-16 (LT GN)	No Tool Required

Q77H Transmission Control Solenoid Valve 8 (MHT/MQB)

Pin	Size	Color	Circuit	Function	Terminal Type ID	Option
1	0.5	BN	6387	Transmission High Side Driver 1 Control	I	—
2	0.5	GY / BN	422	Torque Converter Clutch Solenoid Valve Control	I	—

Q77J Transmission Control Solenoid Valve 9 (M5X/MQE)

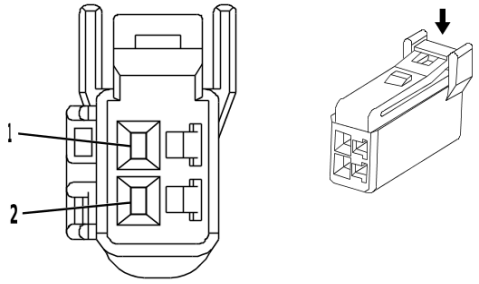

4051682

Connector Part Information

Harness Type: Automatic Transmission Wiring Harness - Control
OEM Connector: 7287-0122
Service Connector: Service by Harness - See Part Catalog
Description: 2-Way F 040 III Series(NA)

Terminal Part Information

Terminal Type ID	Terminated Lead	Diagnostic Test Probe	Terminal Removal Tool
I	Not required	J-35616-16 (L-GN)	No Tool Required

Q77J Transmission Control Solenoid Valve 9 (M5X/MQE)

Pin	Size	Color	Circuit	Function	Terminal Type ID	Option
1	0.5	GY / BN	6210	Torque Converter Clutch Enable Solenoid Valve B Control	I	—
2	0.5	YE / BN	6388	Transmission High Side Driver 2 Control	I	—

Q77J Transmission Control Solenoid Valve 9 (MHS/MQC)

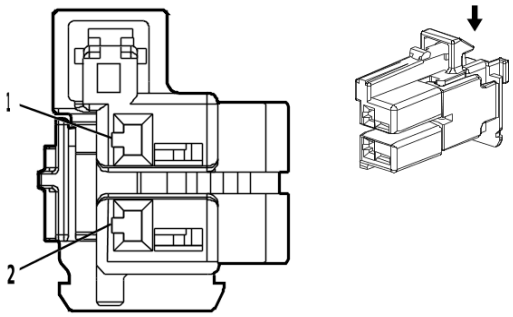

4672650

Connector Part Information

Harness Type: Automatic Transmission Wiring Harness - Control Extension
OEM Connector: 2289523-1
Service Connector: Service by Harness - See Part Catalog
Description: 2-Way F 1.2 MCON Series(BN)

Terminal Part Information

Terminal Type ID	Terminated Lead	Diagnostic Test Probe	Terminal Removal Tool
I	Not required	J-35616-16 (LT GN)	No Tool Required

Q77J Transmission Control Solenoid Valve 9 (MHS/MQC)

Pin	Size	Color	Circuit	Function	Terminal Type ID	Option
1	0.5	WH	6388	Transmission High Side Driver 2 Control	I	—
2	0.5	VT	7819	Default Disable Solenoid Control	I	—

Q77J Transmission Control Solenoid Valve 9 (MHT/MQB)

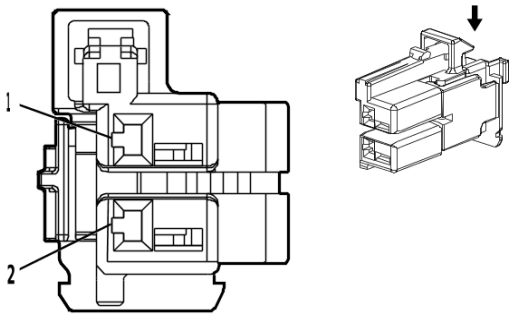

4672650

Connector Part Information

Harness Type: Automatic Transmission Wiring Harness - Control Extension
OEM Connector: 2289523-1
Service Connector: Service by Harness - See Part Catalog
Description: 2-Way F 1.2 MCON Series(BN)

Terminal Part Information

Terminal Type ID	Terminated Lead	Diagnostic Test Probe	Terminal Removal Tool
I	Not required	J-35616-16 (LT GN)	No Tool Required

Q77J Transmission Control Solenoid Valve 9 (MHT/MQB)

Pin	Size	Color	Circuit	Function	Terminal Type ID	Option
1	0.5	WH	6388	Transmission High Side Driver 2 Control	I	—
2	0.5	VT	7819	Default Disable Solenoid Control	I	—

Q83AA Valve Lifter Oil Solenoid Valve - Cylinder 1 (L84/L87)

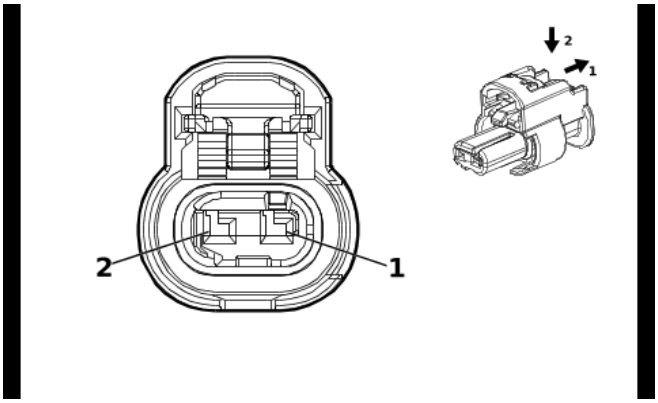

4036662

Connector Part Information

Harness Type: Valve Rocker Arm Oil Control Valve Harness
OEM Connector: 1-2296704-1
Service Connector: Service by Harness - See Part Catalog
Description: 2-Way F 1.2 MCON-CB Series, Sealed(BK)

Terminal Part Information

Terminal Type ID	Terminated Lead	Diagnostic Test Probe	Terminal Removal Tool
I	Not required	Not Available	No Tool Required

Q83AA Valve Lifter Oil Solenoid Valve - Cylinder 1 (L84/L87)

Pin	Size	Color	Circuit	Function	Terminal Type ID	Option
1	0.5	WH / BU	2491	Cylinder Shutoff Solenoid Enable Signal 1	I	—
2	0.5	BU	5491	Cylinder Deactivation Solenoid Valve Control 1	I	—

Q83AB Valve Lifter Oil Solenoid Valve - Cylinder 2 (L84/L87)

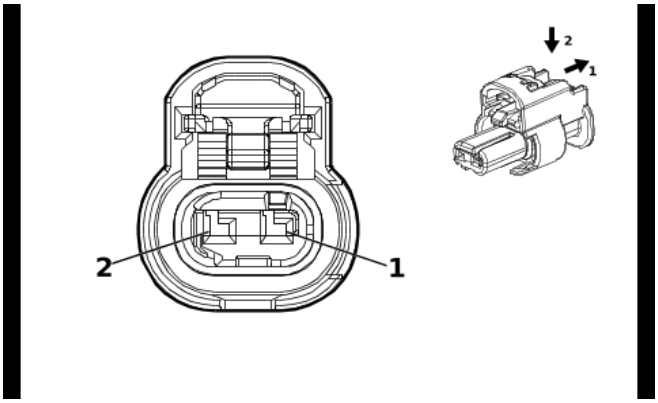

4036662

Connector Part Information

Harness Type: Valve Rocker Arm Oil Control Valve Harness
OEM Connector: 1-2296704-1
Service Connector: Service by Harness - See Part Catalog
Description: 2-Way F 1.2 MCON-CB Series, Sealed(BK)

Terminal Part Information

Terminal Type ID	Terminated Lead	Diagnostic Test Probe	Terminal Removal Tool
I	Not required	Not Available	No Tool Required

Q83AB Valve Lifter Oil Solenoid Valve - Cylinder 2 (L84/L87)

Pin	Size	Color	Circuit	Function	Terminal Type ID	Option
1	0.5	WH / GN	2492	Cylinder Shutoff Solenoid Enable Signal 2	I	—
2	0.5	GN	5492	Cylinder Deactivation Solenoid Valve Control 2	I	—

Q83AC Valve Lifter Oil Solenoid Valve - Cylinder 3 (L84/L87)

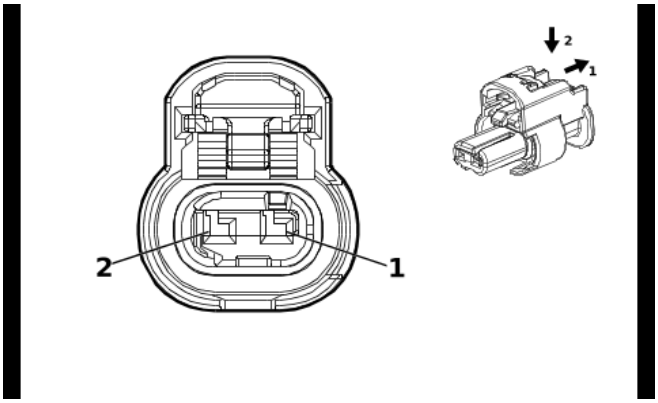

4036662

Connector Part Information

Harness Type: Valve Rocker Arm Oil Control Valve Harness
OEM Connector: 1-2296704-1
Service Connector: Service by Harness - See Part Catalog
Description: 2-Way F 1.2 MCON-CB Series, Sealed(BK)

Terminal Part Information

Terminal Type ID	Terminated Lead	Diagnostic Test Probe	Terminal Removal Tool
I	Not required	Not Available	No Tool Required

Q83AC Valve Lifter Oil Solenoid Valve - Cylinder 3 (L84/L87)

Pin	Size	Color	Circuit	Function	Terminal Type ID	Option
1	0.5	YE / GY	2493	Cylinder Shutoff Solenoid Enable Signal 3	I	—
2	0.5	GY	5493	Cylinder Deactivation Solenoid Valve Control 3	I	—

Q83AD Valve Lifter Oil Solenoid Valve - Cylinder 4 (L84/L87)

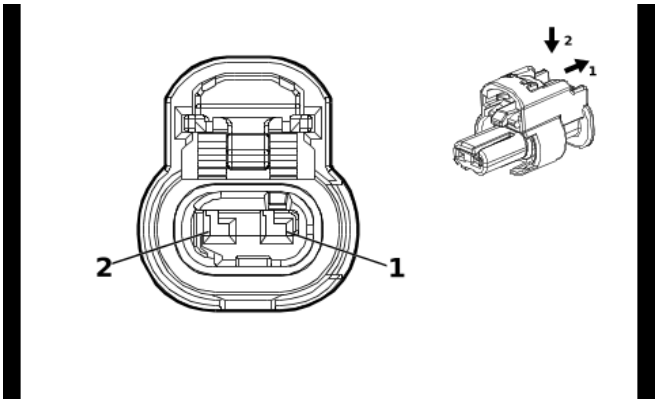

4036662

Connector Part Information

Harness Type: Valve Rocker Arm Oil Control Valve Harness
OEM Connector: 1-2296704-1
Service Connector: Service by Harness - See Part Catalog
Description: 2-Way F 1.2 MCON-CB Series, Sealed(BK)

Terminal Part Information

Terminal Type ID	Terminated Lead	Diagnostic Test Probe	Terminal Removal Tool
I	Not required	Not Available	No Tool Required

Q83AD Valve Lifter Oil Solenoid Valve - Cylinder 4 (L84/L87)

Pin	Size	Color	Circuit	Function	Terminal Type ID	Option
1	0.5	YE / GN	2494	Cylinder Shutoff Solenoid Enable Signal 4	I	—
2	0.5	YE / BU	5494	Cylinder Deactivation Solenoid Valve Control 4	I	—

Q83AE Valve Lifter Oil Solenoid Valve - Cylinder 5 (L84/L87)

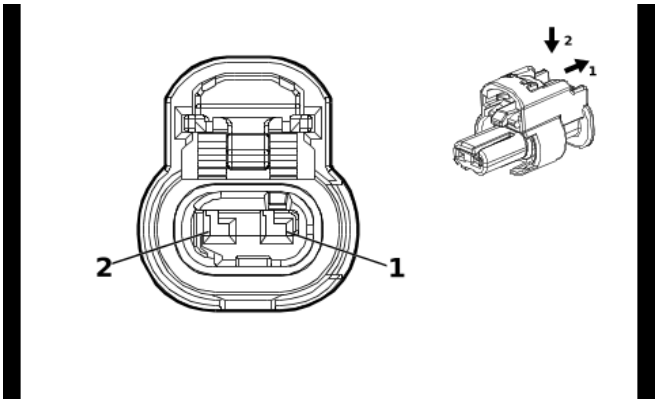

4036662

Connector Part Information

Harness Type: Valve Rocker Arm Oil Control Valve Harness
OEM Connector: 1-2296704-1
Service Connector: Service by Harness - See Part Catalog
Description: 2-Way F 1.2 MCON-CB Series, Sealed(BK)

Terminal Part Information

Terminal Type ID	Terminated Lead	Diagnostic Test Probe	Terminal Removal Tool
I	Not required	Not Available	No Tool Required

Q83AE Valve Lifter Oil Solenoid Valve - Cylinder 5 (L84/L87)

Pin	Size	Color	Circuit	Function	Terminal Type ID	Option
1	0.5	WH / VT	2495	Cylinder Shutoff Solenoid Enable Signal 5	I	—
2	0.5	VT	5495	Cylinder Deactivation Solenoid Valve Control 5	I	—

Q83AF Valve Lifter Oil Solenoid Valve - Cylinder 6 (L84/L87)

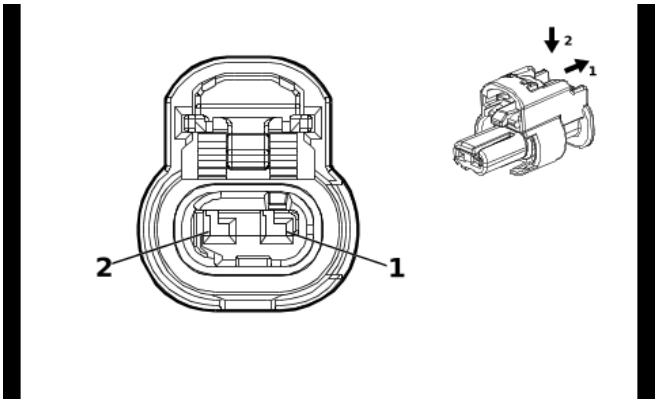

4036662

Connector Part Information

Harness Type: Valve Rocker Arm Oil Control Valve Harness
OEM Connector: 1-2296704-1
Service Connector: Service by Harness - See Part Catalog
Description: 2-Way F 1.2 MCON-CB Series, Sealed(BK)

Terminal Part Information

Terminal Type ID	Terminated Lead	Diagnostic Test Probe	Terminal Removal Tool
I	Not required	Not Available	No Tool Required

Q83AF Valve Lifter Oil Solenoid Valve - Cylinder 6 (L84/L87)

Pin	Size	Color	Circuit	Function	Terminal Type ID	Option
1	0.5	YE / BN	2496	Cylinder Shutoff Solenoid Enable Signal 6	I	—
2	0.5	BN	5496	Cylinder Deactivation Solenoid Valve Control 6	I	—

Q83AG Valve Lifter Oil Solenoid Valve - Cylinder 7 (L84/L87)

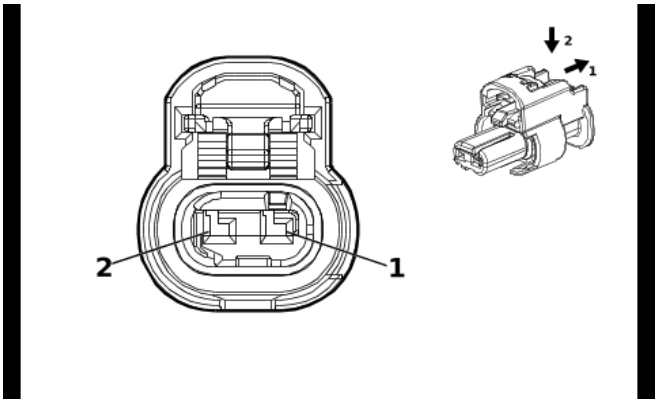

4036662

Connector Part Information

Harness Type: Valve Rocker Arm Oil Control Valve Harness
OEM Connector: 1-2296704-1
Service Connector: Service by Harness - See Part Catalog
Description: 2-Way F 1.2 MCON-CB Series, Sealed(BK)

Terminal Part Information

Terminal Type ID	Terminated Lead	Diagnostic Test Probe	Terminal Removal Tool
I	Not required	Not Available	No Tool Required

Q83AG Valve Lifter Oil Solenoid Valve - Cylinder 7 (L84/L87)

Pin	Size	Color	Circuit	Function	Terminal Type ID	Option
1	0.5	GN / GY	2497	Cylinder Shutoff Solenoid Enable Signal 7	I	—
2	0.5	WH	5497	Cylinder Deactivation Solenoid Valve Control 7	I	—

Q83AH Valve Lifter Oil Solenoid Valve - Cylinder 8 (L84/L87)

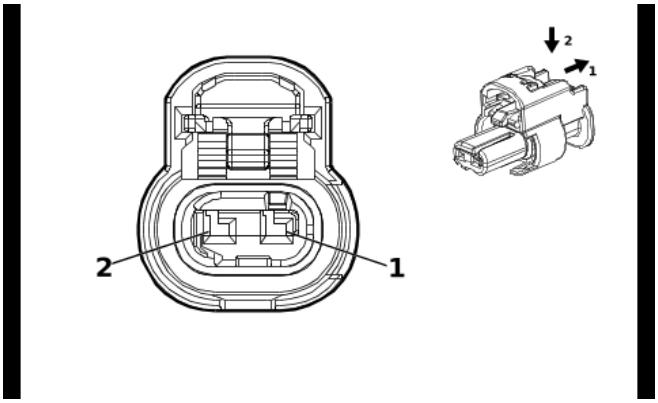

4036662

Connector Part Information

Harness Type: Valve Rocker Arm Oil Control Valve Harness
OEM Connector: 1-2296704-1
Service Connector: Service by Harness - See Part Catalog
Description: 2-Way F 1.2 MCON-CB Series, Sealed(BK)

Terminal Part Information

Terminal Type ID	Terminated Lead	Diagnostic Test Probe	Terminal Removal Tool
I	Not required	Not Available	No Tool Required

Q83AH Valve Lifter Oil Solenoid Valve - Cylinder 8 (L84/L87)

Pin	Size	Color	Circuit	Function	Terminal Type ID	Option
1	0.5	WH / YE	2498	Cylinder Shutoff Solenoid Enable Signal 8	I	—
2	0.5	YE	5498	Cylinder Deactivation Solenoid Valve Control 8	I	—

Q97B Engine Coolant Flow Control Valve - Block (L3B)

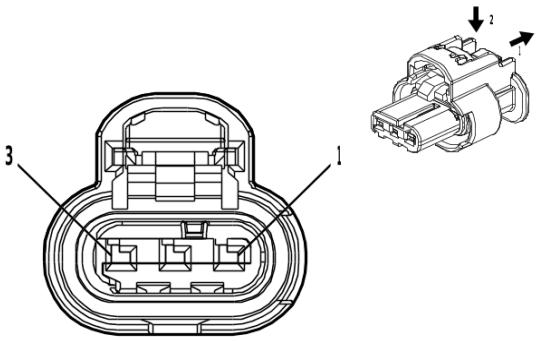

4778903

Connector Part Information

Harness Type: Engine Wiring Harness
OEM Connector: 33358808
Service Connector: 86792095
Description: 3-Way F 1.2 MCON-CB Series, Sealed(BK)

Terminal Part Information

Terminal Type ID	Terminated Lead	Diagnostic Test Probe	Terminal Removal Tool
I	Not required	J-35616-16 (L-GN)	No Tool Required

Q97B Engine Coolant Flow Control Valve - Block (L3B)

Pin	Size	Color	Circuit	Function	Terminal Type ID	Option
1	0.5	GN / BN	2732	Engine Control Module LIN Bus 4	I	—
2	0.5	BK	6550	Ground	I	—
3	0.5	VT / BU	5294	Powertrain Main Relay Fused Supply Voltage 5	I	—

Q97M Engine Coolant Flow Control Valve - Main (LM2)

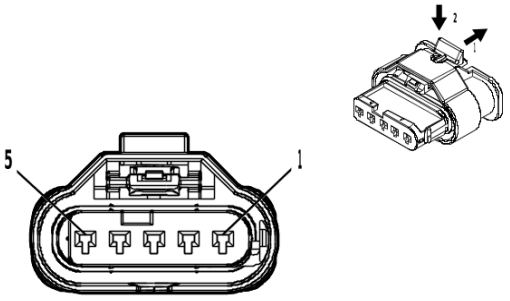

4994456

Connector Part Information

Harness Type: Engine Wiring Harness
OEM Connector: 35110578
Service Connector: 19371191
Description: 5-Way F 1.2 MCON-LL Series, Sealed(NA)

Terminal Part Information

Terminal Type ID	Terminated Lead	Diagnostic Test Probe	Terminal Removal Tool
I	Not required	J-35616-16 (L-GN)	No Tool Required

Q97M Engine Coolant Flow Control Valve - Main (LM2)

Pin	Size	Color	Circuit	Function	Terminal Type ID	Option
1	0.75	GY / BN	2972	Coolant Flow Control Actuator Control Close	I	—
2	0.75	GY / BU	2971	Coolant Flow Control Actuator Control Open	I	—
3	0.5	WH / RD	480	Engine Control Vehicle Sensors 5 Volt Reference 1	I	—
4	0.5	GY	2973	Coolant Flow Control Valve Position Signal	I	—
5	0.5	BK / GN	580	Engine Control Sensors Low Reference 2	I	—

R29 Fuel Filter (LM2)

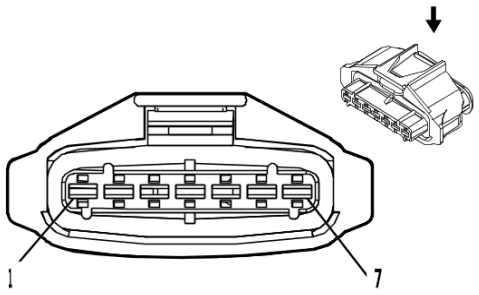

2537256

Connector Part Information

Harness Type: Chassis Wiring Harness
OEM Connector: 10774827
Service Connector: 19354080
Description: 7-Way F 2.8 Junior Power Timer Series, Sealed(BK)

Terminal Part Information

Terminal Type ID	Terminated Lead	Diagnostic Test Probe	Terminal Removal Tool
I	Not required	J-35616-35 (VT)	No Tool Required

R29 Fuel Filter (LM2)

Pin	Size	Color	Circuit	Function	Terminal Type ID	Option
1	2.5	BK	1650	Ground	I	—
2	2.5	BN / YE	2996	Fuel Heater Control 1	I	—
3	1	VT / GN	4320	Powertrain Sensor Bus Enable	I	—
4	0.5	BK / BU	6863	Water In Fuel Sensor Low Reference	I	—
5	0.5	BU / YE	6861	Water In Fuel Sensor Signal	I	—
6	0.5	BN / GY	7072	Fuel Temperature Sensor 1 Signal	I	—
7	0.5	BN / WH	7073	Fuel Temperature Sensor 1 Low Reference	I	—

S3 Automatic Transmission Control

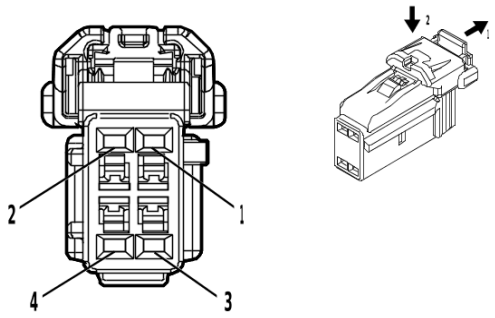

4872683

Connector Part Information

Harness Type: Instrument Panel Wiring Harness
OEM Connector: 35029308
Service Connector: 19369633
Description: 4-Way F 1.2 Series(BK)

Terminal Part Information

Terminal Type ID	Terminated Lead	Diagnostic Test Probe	Terminal Removal Tool
I	Not required	J-35616-12 (BU)	No Tool Required
II	Not required	J-35616-16 (L-GN)	No Tool Required

S3 Automatic Transmission Control

Pin	Size	Color	Circuit	Function	Terminal Type ID	Option
1	0.35	YE / WH	816	Brake Transmission Shift Interlock Solenoid Actuator Control	I	—
2	0.5	BK	1050	Ground	II	—
3	0.35	VT / BK	7553	Park Lock Solenoid Actuator Control	I	—
4	0.5	BK	1050	Ground	II	—

S3C Automatic Transmission Control Lever (M5X/MHT/MQB/MQE)

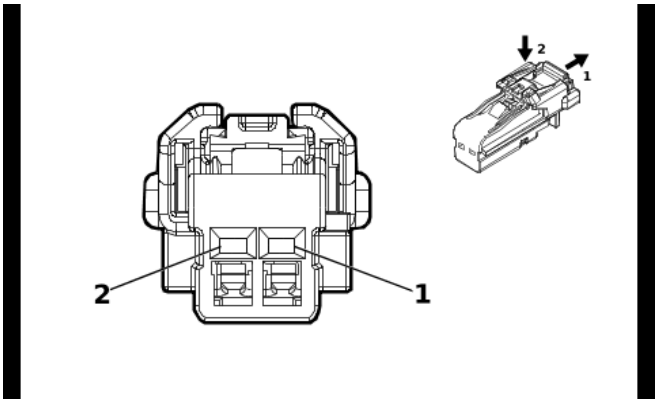

4115691

Connector Part Information

Harness Type: Instrument Panel Wiring Harness
OEM Connector: 35311666
Service Connector: 19352066
Description: 2-Way F 1.2 MCON Series(BK)

Terminal Part Information

Terminal Type ID	Terminated Lead	Diagnostic Test Probe	Terminal Removal Tool
I	Not required	J-35616-12 (BU)	No Tool Required
II	Not required	J-35616-16 (L-GN)	No Tool Required

S3C Automatic Transmission Control Lever (M5X/MHT/MQB/MQE)

Pin	Size	Color	Circuit	Function	Terminal Type ID	Option
1	0.35	GN / BU	3738	Tap Up/Tap Down Switch Signal 2	I	—
2	0.5	BK / WH	851	Signal Ground	II	—

S13D Door Lock Switch - Driver (-AEQ)

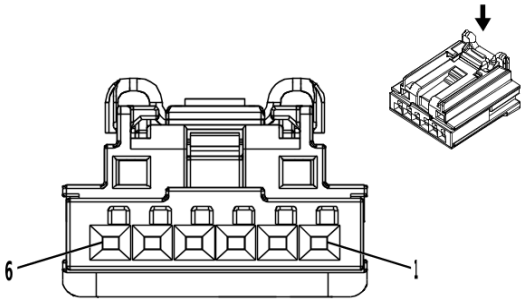

4145138

Connector Part Information

Harness Type: Front Side Door Door Lock Door Wiring Harness - Driver
OEM Connector: 33251915
Service Connector: Service by Harness - See Part Catalog
Description: 6-Way F 0.64 Generation Y Series(BK)

Terminal Part Information

Terminal Type ID	Terminated Lead	Diagnostic Test Probe	Terminal Removal Tool
I	Not required	J-35616-64B (L-BU)	No Tool Required

S13D Door Lock Switch - Driver (-AEQ)

Pin	Size	Color	Circuit	Function	Terminal Type ID	Option
1	0.5	BN / GY	4784	Left Front Door LED Backlight Dimming Control	I	—
2	—	—	—	Not Occupied	—	—
3	0.5	BN / YE	2771	Left Front Door Lock Switch Lock Signal	I	—
4	0.5	BN / WH	2772	Left Front Door Lock Switch Unlock Signal	I	—
5	0.5	BK	1550	Ground	I	—
6	—	—	—	Not Occupied	—	—

S13D Door Lock Switch - Driver (AEQ)

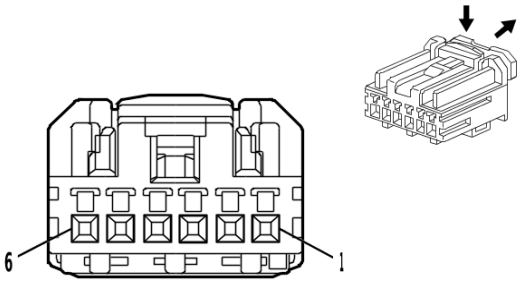

4650256

Connector Part Information

Harness Type: Front Side Door Door Lock Door Wiring Harness - Driver
OEM Connector: 33315784
Service Connector: Service by Harness - See Part Catalog
Description: 6-Way F 0.64 HCM Series(BK)

Terminal Part Information

Terminal Type ID	Terminated Lead	Diagnostic Test Probe	Terminal Removal Tool
I	Not required	J-35616-64B (L-BU)	No Tool Required

S13D Door Lock Switch - Driver (AEQ)

Pin	Size	Color	Circuit	Function	Terminal Type ID	Option
1	0.5 0.5	BN / GY YE	4784 6817	Left Front Door LED Backlight Dimming Control LED Backlight Dimming Control 1	I	— —
2	0.5	BN / YE	2771	Left Front Door Lock Switch Lock Signal	I	—
3	0.5	BN / WH	2772	Left Front Door Lock Switch Unlock Signal	I	—
4	0.5	BK	1550	Ground	I	—
5 - 6	—	—	—	Not Occupied	—	—

S13P Door Lock Switch - Passenger ((Extended Cab/Crew Cab))+(GF2/GF5/GPZ))

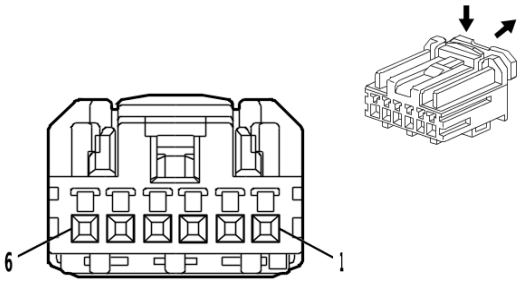

4650256

Connector Part Information

Harness Type: Front Side Door Door Lock Door Wiring Harness - Passenger
OEM Connector: 33315784
Service Connector: Service by Harness - See Part Catalog
Description: 6-Way F 0.64 HCM Series(BK)

Terminal Part Information

Terminal Type ID	Terminated Lead	Diagnostic Test Probe	Terminal Removal Tool
I	Not required	J-35616-64B (L-BU)	No Tool Required

S13P Door Lock Switch - Passenger ((Extended Cab/Crew Cab))+(GF2/GF5/GPZ))

Pin	Size	Color	Circuit	Function	Terminal Type ID	Option
1	0.5 0.5	GY / VT YE	4638 6817	LED Backlight Dimming Control Right Front Door LED Backlight Dimming Control 1	I	— —
2	0.5	YE / VT	2773	Right Front Door Lock Switch Lock Control	I	—
3	0.5	BN / VT	2774	Right Front Door Lock Switch Unlock Control	I	—
4	0.5	BK	1350	Ground	I	—
5 - 6	—	—	—	Not Occupied	—	—

S13P Door Lock Switch - Passenger ((Extended Cab/Crew Cab))+(GF3/GF4/GFC/GRZ))

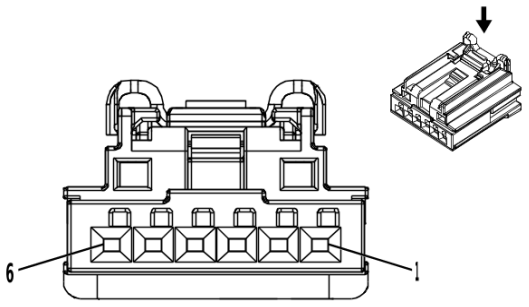

4145138

Connector Part Information

Harness Type: Front Side Door Door Lock Door Wiring Harness - Passenger
OEM Connector: 33251915
Service Connector: Service by Harness - See Part Catalog
Description: 6-Way F 0.64 Generation Y Series(BK)

Terminal Part Information

Terminal Type ID	Terminated Lead	Diagnostic Test Probe	Terminal Removal Tool
I	Not required	J-35616-64B (L-BU)	No Tool Required

S13P Door Lock Switch - Passenger ((Extended Cab/Crew Cab))+(GF3/GF4/GFC/GRZ))

Pin	Size	Color	Circuit	Function	Terminal Type ID	Option
1	0.5	GY / VT	4638	LED Backlight Dimming Control Right Front Door	I	—
2	—	—	—	Not Occupied	—	—
3	0.5	YE / VT	2773	Right Front Door Lock Switch Lock Control	I	—
4	0.5	BN / VT	2774	Right Front Door Lock Switch Unlock Control	I	—
5	0.5	BK	1350	Ground	I	—
6	—	—	—	Not Occupied	—	—

S13P Door Lock Switch - Passenger (Regular Cab+(GF4/GFC))

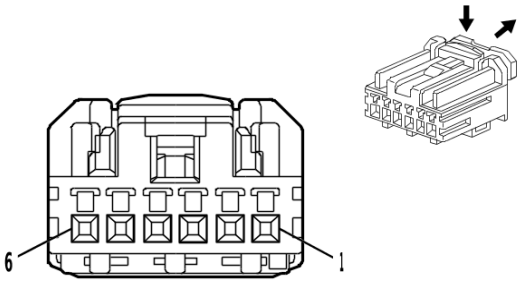

4650256

Connector Part Information

Harness Type: Front Side Door Door Lock Door Wiring Harness - Passenger
OEM Connector: 33315784
Service Connector: Service by Harness - See Part Catalog
Description: 6-Way F 0.64 HCM Series(BK)

Terminal Part Information

Terminal Type ID	Terminated Lead	Diagnostic Test Probe	Terminal Removal Tool
I	Not required	J-35616-64B (L-BU)	No Tool Required

S13P Door Lock Switch - Passenger (Regular Cab+(GF4/GFC))

Pin	Size	Color	Circuit	Function	Terminal Type ID	Option
1	0.5	GY / VT	4638	LED Backlight Dimming Control Right Front Door	I	—
2	0.5	YE / VT	2773	Right Front Door Lock Switch Lock Control	I	—
3	0.5	BN / VT	2774	Right Front Door Lock Switch Unlock Control	I	—
4	0.5	BK	1350	Ground	I	—
5 - 6	—	—	—	Not Occupied	—	—

S27 Head-Up Display Switch (UV6)

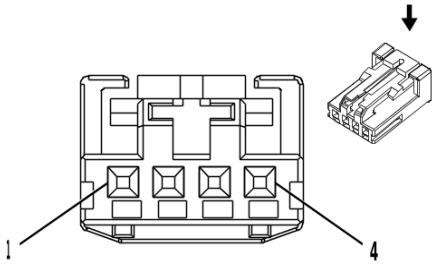

2717162

Connector Part Information

Harness Type: Instrument Panel Wiring Harness
OEM Connector: 13969166
Service Connector: 19367524
Description: 4-Way F 0.64 Micro-Quadlock Series(BK)

Terminal Part Information

Terminal Type ID	Terminated Lead	Diagnostic Test Probe	Terminal Removal Tool
I	Not required	J-35616-64B (L-BU)	No Tool Required

S27 Head-Up Display Switch (UV6)

Pin	Size	Color	Circuit	Function	Terminal Type ID	Option
1	0.35	YE	6817	LED Backlight Dimming Control 1	I	—
2	0.35	BK / WH	851	Signal Ground	I	—
3	0.35	BK / GN	5699	Head-Up Display Switch Low Reference	I	—
4	0.35	YE / WH	622	Head-Up Display Switch Signal	I	—

S30 Headlamp Switch

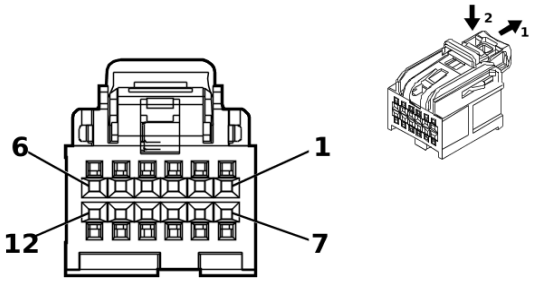

4975223

Connector Part Information

Harness Type: Instrument Panel Wiring Harness
OEM Connector: 35016616
Service Connector: 13519750
Description: 12-Way F 0.64 OCS Series(BK)

Terminal Part Information

Terminal Type ID	Terminated Lead	Diagnostic Test Probe	Terminal Removal Tool
I	19300660	J-35616-64B (L-BU)	J-38125-215A

S30 Headlamp Switch

Pin	Size	Color	Circuit	Function	Terminal Type ID	Option
1	0.35	WH / VT	103	Headlamp Switch On Signal	I	—
2	0.35	YE	6817	LED Backlight Dimming Control 1	I	—
3	0.35	GN / BN	306	Headlamp Switch Off Signal	I	—
4	0.35	GY	158	Cargo Lamp Switch Signal	I	—
5	0.35	GN / GY	13	Headlamp Switch Park Lamp Signal	I	—
6	0.35	BU / GN	4248	Cargo Lamp Indicator Control	I	—
7	0.35	WH / GY	2935	Task Lamp Switch Signal	I	—
8	0.35	BK / WH	851	Signal Ground	I	—
9 - 10	—	—	—	Not Occupied	—	—
11	0.35	WH / BN	7555	Headlamp Switch Signal	I	—
12	0.35	YE	7556	Headlamp Switch Reference	I	—

S32R Rear Seat Heater Switch (KA6)

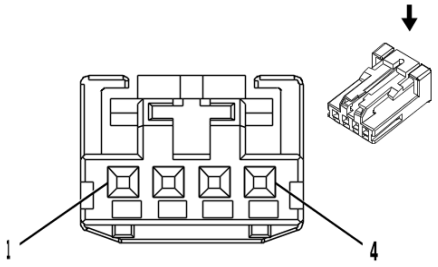

2717162

Connector Part Information

Harness Type: Front Floor Console Wiring Harness
OEM Connector: 13969166
Service Connector: Service by Harness - See Part Catalog
Description: 4-Way F 0.64 Micro-Quadlock Series(BK)

Terminal Part Information

Terminal Type ID	Terminated Lead	Diagnostic Test Probe	Terminal Removal Tool
I	Not required	J-35616-64B (L-BU)	No Tool Required

S32R Rear Seat Heater Switch (KA6)

Pin	Size	Color	Circuit	Function	Terminal Type ID	Option
1	0.5	RD / BU	1240	Battery Positive Voltage	I	—
2	—	—	—	Not Occupied	—	—
3	0.5	GN / VT	2857	Body Control Module LIN Bus 11	I	—
4	0.5	BK / WH	1451	Signal Ground	I	—

S33 Steering Wheel Horn Contact

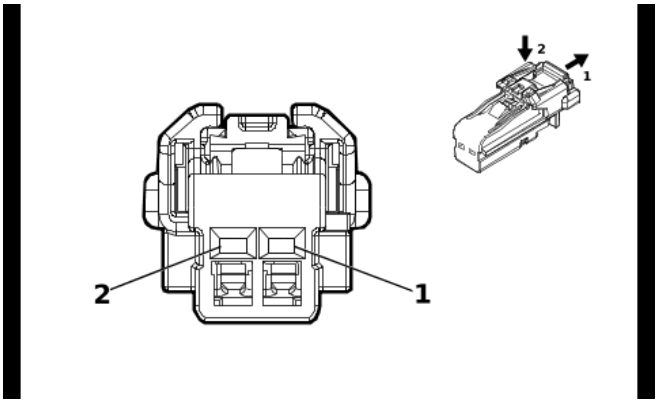

4115691

Connector Part Information

Harness Type: Steering Wheel Horn Switch Wiring Harness
OEM Connector: 13532422
Service Connector: Service by Harness - See Part Catalog
Description: 2-Way F 1.2 MCON Series(BK)

Terminal Part Information

Terminal Type ID	Terminated Lead	Diagnostic Test Probe	Terminal Removal Tool
I	Not required	Not Available	No Tool Required

S33 Steering Wheel Horn Contact

Pin	Size	Color	Circuit	Function	Terminal Type ID	Option
1	0.35	BK / WH	6051	Steering Wheel Ground	I	—
2	0.35	GN / WH	3287	Horn Switch Signal	I	—

S38 On/Off Vehicle Switch

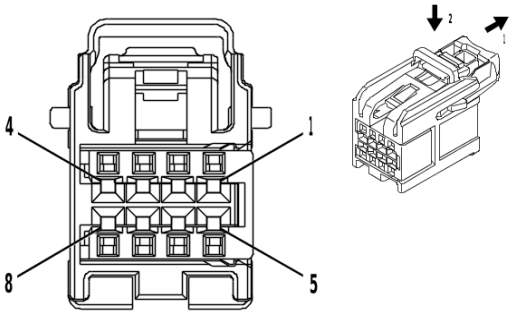

4232228

Connector Part Information

Harness Type: Instrument Panel Wiring Harness
OEM Connector: 15526973
Service Connector: 19353873
Description: 8-Way F 0.64 OCS Series(GY)

Terminal Part Information

Terminal Type ID	Terminated Lead	Diagnostic Test Probe	Terminal Removal Tool
I	Not required	J-35616-64B (L-BU)	No Tool Required

S38 On/Off Vehicle Switch

Pin	Size	Color	Circuit	Function	Terminal Type ID	Option
1	0.35	BU / BK	5719	Ignition Mode Switch Start LED Signal	I	—
2	0.35	BN / BK	5720	Ignition Mode Switch Accessory LED Signal	I	—
3	0.35	BK / WH	851	Signal Ground	I	—
4	0.35	BU / GN	5723	Ignition Mode Switch Mode Voltage	I	—
5	0.35	YE	6817	LED Backlight Dimming Control 1	I	—
6	—	—	—	Not Occupied	—	—
7	0.35	BK / GY	3559	Passive Start Switch 2 Low Reference	I	—
8	0.35	GN / BK	3558	Passive Start Switch Signal 2	I	—

S47D Front Seat Adjuster Memory Switch - Driver (A45+(Extended Cab/Crew Cab))

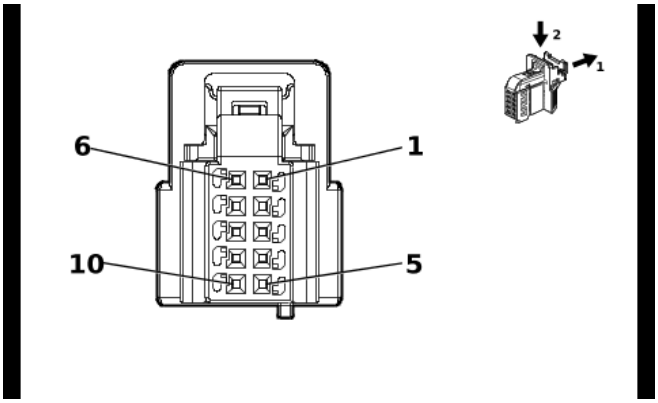

5838155

Connector Part Information

Harness Type: Front Side Door Door Lock Door Wiring Harness - Driver
OEM Connector: 35380960
Service Connector: Service by Harness - See Part Catalog
Description: 10-Way F 0.64 MQS Series(BK)

Terminal Part Information

Terminal Type ID	Terminated Lead	Diagnostic Test Probe	Terminal Removal Tool
I	Not required	J-35616-64B (L-BU)	No Tool Required

S47D Front Seat Adjuster Memory Switch - Driver (A45+(Extended Cab/Crew Cab))

Pin	Size	Color	Circuit	Function	Terminal Type ID	Option
1	0.5	BN / GY	4784	Left Front Door LED Backlight Dimming Control	I	—
2	—	—	—	Not Occupied	—	—
3	0.5	BN / YE	2771	Left Front Door Lock Switch Lock Signal	I	—
4	0.5	BN / WH	2772	Left Front Door Lock Switch Unlock Signal	I	—
5	0.5	BK / WH	1551	Signal Ground	I	—
6	0.5	BU / GN	614	Seat Memory Switch Set Signal	I	—
7	0.5	WH	615	Seat Memory Switch Signal 1	I	—
8 - 10	—	—	—	Not Occupied	—	—

S47D Front Seat Adjuster Memory Switch - Driver (A45+Regular Cab)

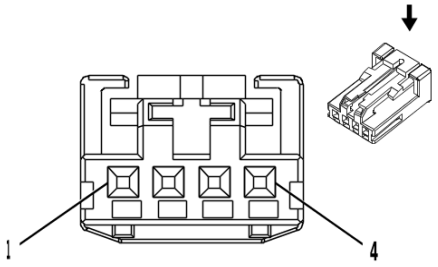

2717162

Connector Part Information

Harness Type: Front Side Door Door Lock Door Wiring Harness - Driver
OEM Connector: 13969166
Service Connector: Service by Harness - See Part Catalog
Description: 4-Way F 0.64 Micro-Quadlock Series(BK)

Terminal Part Information

Terminal Type ID	Terminated Lead	Diagnostic Test Probe	Terminal Removal Tool
I	Not required	J-35616-64B (L-BU)	No Tool Required

S47D Front Seat Adjuster Memory Switch - Driver (A45+Regular Cab)

Pin	Size	Color	Circuit	Function	Terminal Type ID	Option
1	0.5	BN / GY	4784	Left Front Door LED Backlight Dimming Control	I	—
2	0.5	BK / WH	1551	Signal Ground	I	—
3	0.5	WH	615	Seat Memory Switch Signal 1	I	—
4	0.5	BU / GN	614	Seat Memory Switch Set Signal	I	—

S64D Front Seat Adjuster Switch - Driver (A45)

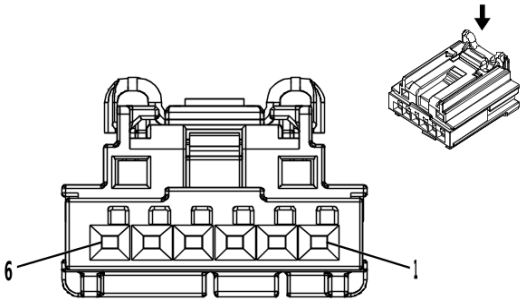

3960313

Connector Part Information

Harness Type: Front Seat Wiring Harness - Driver
OEM Connector: 2035363-4
Service Connector: Service by Harness - See Part Catalog
Description: 6-Way F 0.64 Generation Y Series(BK)

Terminal Part Information

Terminal Type ID	Terminated Lead	Diagnostic Test Probe	Terminal Removal Tool
I	Not required	J-35616-64B (L-BU)	No Tool Required

S64D Front Seat Adjuster Switch - Driver (A45)

Pin	Size	Color	Circuit	Function	Terminal Type ID	Option
1	0.5	RD / BN	2240	Battery Positive Voltage	I	—
2	—	—	—	Not Occupied	—	—
3	0.5	GN / GY	3758	Driver Seat Adjuster Memory Module LIN Bus 2	I	A45
	0.35	GN / GY	3758	Driver Seat Adjuster Memory Module LIN Bus 2	I	- A45
4	0.5	BK	1550	Ground	I	—
5	0.5	BU / YE	2818	Driver Seat Auxiliary Adjustment Switch Signal	I	—
6	0.5	BK / VT	2817	Auxiliary Driver Seat Adjustment Switch Low Reference	I	—

S64D Front Seat Adjuster Switch - Driver (A7K-A45)

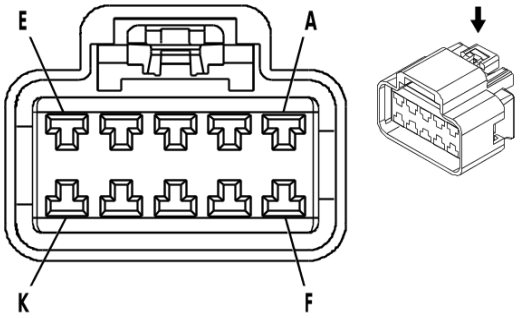

623046

Connector Part Information

Harness Type: Front Seat Wiring Harness - Driver
OEM Connector: 35058909
Service Connector: Service by Harness - See Part Catalog
Description: 10-Way F 280 GT Series(BK)

Terminal Part Information

Terminal Type ID	Terminated Lead	Diagnostic Test Probe	Terminal Removal Tool
I	Not required	J-35616-4A (PU)	No Tool Required

S64D Front Seat Adjuster Switch - Driver (A7K-A45)

Pin	Size	Color	Circuit	Function	Terminal Type ID	Option
A	2.5	RD / YE	5040	Battery Positive Voltage	I	—
B	1.5	BU / YE	277	Driver Seat Recline Motor Rearward Control	I	—
C	1.5	YE / BU	285	Driver Seat Horizontal Motor Forward Control	I	—
D	1.5	GY / GN	284	Driver Seat Horizontal Motor Rearward Control	I	—
E	1.5	GY / BU	283	Driver Seat Rear Vertical Motor Down Control	I	—
F	1.5	GN / BN	286	Driver Seat Front Vertical Motor Up Control	I	—
G	1.5	YE	282	Driver Seat Rear Vertical Motor Up Control	I	—
H	1.5	GN / YE	276	Driver Seat Recline Motor Forward Control	I	—
J	2.5	BK	1550	Ground	I	—
K	1.5	BU / VT	287	Driver Seat Front Vertical Motor Down Control	I	—

S64P Front Seat Adjuster Switch - Passenger (A7K)

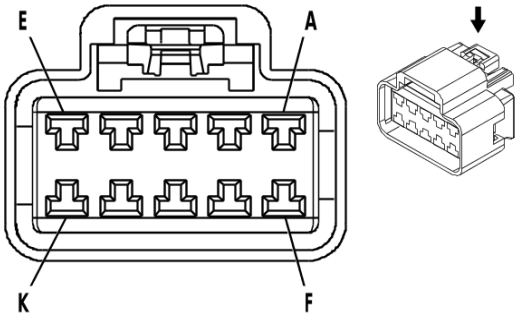

623046

Connector Part Information

Harness Type: Front Seat Wiring Harness - Passenger
OEM Connector: 35058909
Service Connector: Service by Harness - See Part Catalog
Description: 10-Way F 280 GT Series(BK)

Terminal Part Information

Terminal Type ID	Terminated Lead	Diagnostic Test Probe	Terminal Removal Tool
I	Not required	J-35616-4A (PU)	No Tool Required

S64P Front Seat Adjuster Switch - Passenger (A7K)

Pin	Size	Color	Circuit	Function	Terminal Type ID	Option
A	1.5	BU / WH	289	Passenger Seat Rear Vertical Motor Down Control	I	—
B	1.5	YE / BU	290	Passenger Seat Horizontal Motor Rearward Control	I	—
C	1.5	YE / WH	296	Passenger Seat Horizontal Motor Forward Control	I	—
D	1.5	BU / BN	77	Passenger Seat Recline Motor Rearward Control	I	—
E	2.5	BK	1350	Ground	I	—
F	1.5	GN / BU	298	Passenger Seat Front Vertical Motor Down Control	I	—
G	2.5	RD / GY	7440	Battery Positive Voltage	I	—
H	1.5	GN	76	Passenger Seat Recline Motor Forward Control	I	—
J	1.5	GN / WH	288	Passenger Seat Rear Vertical Motor Up Control	I	—
K	1.5	GN / VT	297	Passenger Seat Front Vertical Motor Up Control	I	—

S64P Front Seat Adjuster Switch - Passenger (AKE+AVU)

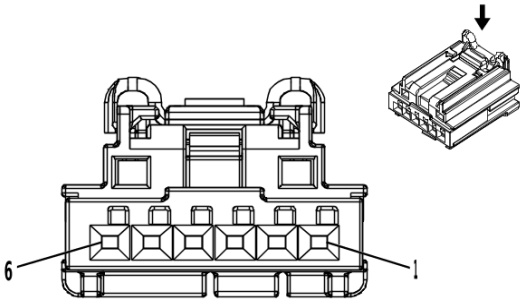

3960313

Connector Part Information

Harness Type: Front Seat Wiring Harness - Passenger
OEM Connector: 2035363-4
Service Connector: Service by Harness - See Part Catalog
Description: 6-Way F 0.64 Generation Y Series(BK)

Terminal Part Information

Terminal Type ID	Terminated Lead	Diagnostic Test Probe	Terminal Removal Tool
I	Not required	J-35616-64B (L-BU)	No Tool Required

S64P Front Seat Adjuster Switch - Passenger (AKE+AVU)

Pin	Size	Color	Circuit	Function	Terminal Type ID	Option
1	0.5	RD / BN	2240	Battery Positive Voltage	I	—
2	—	—	—	Not Occupied	—	—
3	0.5	GN / YE	4116	Passenger Seat Adjuster Memory Module LIN Bus 2	I	—
4	0.5	BK	1350	Ground	I	—
5	0.5	GN / WH	2816	Passenger Seat Auxiliary Adjustment Switch Signal	I	—
6	0.5	BK / BN	2815	Auxiliary Passenger Seat Adjustment Switch Low Reference	I	—

S65D Front Seat Lumbar Switch - Driver (A45)

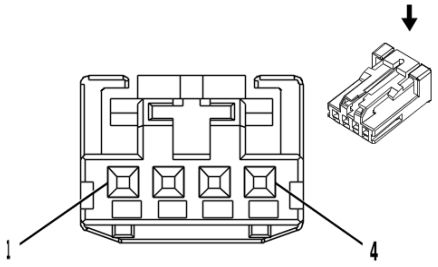

2717162

Connector Part Information

Harness Type: Front Seat Wiring Harness - Driver
OEM Connector: 1-936119-1
Service Connector: Service by Harness - See Part Catalog
Description: 4-Way F 0.64 Micro-Quadlock Series(BK)

Terminal Part Information

Terminal Type ID	Terminated Lead	Diagnostic Test Probe	Terminal Removal Tool
I	Not required	J-35616-64B (L-BU)	No Tool Required

S65D Front Seat Lumbar Switch - Driver (A45)

Pin	Size	Color	Circuit	Function	Terminal Type ID	Option
1 - 2	—	—	—	Not Occupied	—	—
3	0.5	BU / YE	2818	Driver Seat Auxiliary Adjustment Switch Signal	I	—
4	0.5	BK / VT	2817	Auxiliary Driver Seat Adjustment Switch Low Reference	I	—

S65D Front Seat Lumbar Switch - Driver (AVK)

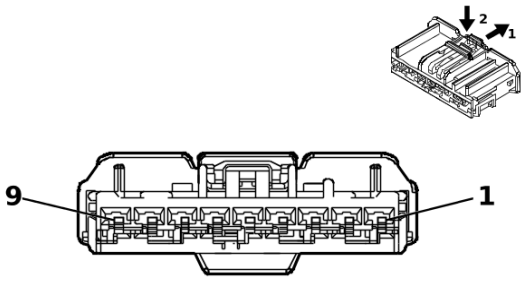

5204289

Connector Part Information

Harness Type: Front Seat Wiring Harness - Driver
OEM Connector: 7289-6875-40
Service Connector: Service by Harness - See Part Catalog
Description: 9-Way F 2.8 YESC Series(GY)

Terminal Part Information

Terminal Type ID	Terminated Lead	Diagnostic Test Probe	Terminal Removal Tool
I	Not required	J-35616-4A (PU)	No Tool Required

S65D Front Seat Lumbar Switch - Driver (AVK)

Pin	Size	Color	Circuit	Function	Terminal Type ID	Option
1	0.75	BK	1550	Ground	I	—
2	—	—	—	Not Occupied	—	—
3	0.75	RD / BN	2240	Battery Positive Voltage	I	—
4	—	—	—	Not Occupied	—	—
5	0.75	BU	611	Driver Seat Lumbar Support Motor Forward Control	I	—
6	—	—	—	Not Occupied	—	—
7	0.75	VT	610	Driver Seat Lumbar Support Motor Backward Control	I	—
8 - 9	—	—	—	Not Occupied	—	—

S65P Front Seat Lumbar Switch - Passenger (-(AKE/AVU))

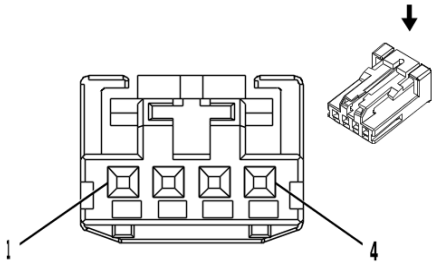

2717162

Connector Part Information

Harness Type: Front Seat Wiring Harness - Passenger
OEM Connector: 1-936119-1
Service Connector: Service by Harness - See Part Catalog
Description: 4-Way F 0.64 Micro-Quadlock Series(BK)

Terminal Part Information

Terminal Type ID	Terminated Lead	Diagnostic Test Probe	Terminal Removal Tool
I	Not required	J-35616-64B (L-BU)	No Tool Required

S65P Front Seat Lumbar Switch - Passenger (-(AKE/AVU))

Pin	Size	Color	Circuit	Function	Terminal Type ID	Option
1 - 2	—	—	—	Not Occupied	—	—
3	0.5	YE / GN	1068	Passenger Seat Lumbar Support Switch Analog Signal	I	—
4	0.5	BK / BU	2194	Passenger Seat Position Switch Low Reference	I	—

S65P Front Seat Lumbar Switch - Passenger (A7K-AVU)

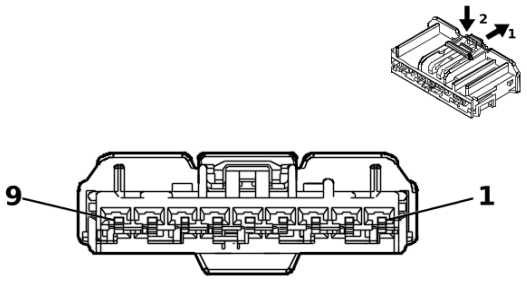

5204289

Connector Part Information

Harness Type: Front Seat Wiring Harness - Passenger
OEM Connector: 7289-6875-40
Service Connector: Service by Harness - See Part Catalog
Description: 9-Way F 2.8 YESC Series(GY)

Terminal Part Information

Terminal Type ID	Terminated Lead	Diagnostic Test Probe	Terminal Removal Tool
I	Not required	J-35616-4A (PU)	No Tool Required

S65P Front Seat Lumbar Switch - Passenger (A7K-AVU)

Pin	Size	Color	Circuit	Function	Terminal Type ID	Option
1	0.75	BK	1350	Ground	I	—
2	—	—	—	Not Occupied	—	—
3	0.75	RD / BN	2240	Battery Positive Voltage	I	—
4	—	—	—	Not Occupied	—	—
5	0.75	BU	211	Passenger Seat Lumbar Support Motor Forward Control	I	—
6	—	—	—	Not Occupied	—	—
7	0.75	VT	210	Passenger Seat Lumbar Support Motor Backward Control	I	—
8 - 9	—	—	—	Not Occupied	—	—

S65P Front Seat Lumbar Switch - Passenger (AKE+AVU)

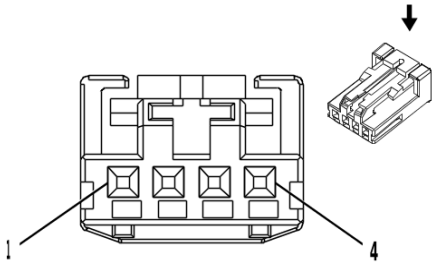

2717162

Connector Part Information

Harness Type: Front Seat Wiring Harness - Passenger
OEM Connector: 1-936119-1
Service Connector: Service by Harness - See Part Catalog
Description: 4-Way F 0.64 Micro-Quadlock Series(BK)

Terminal Part Information

Terminal Type ID	Terminated Lead	Diagnostic Test Probe	Terminal Removal Tool
I	Not required	J-35616-64B (L-BU)	No Tool Required

S65P Front Seat Lumbar Switch - Passenger (AKE+AVU)

Pin	Size	Color	Circuit	Function	Terminal Type ID	Option
1 - 2	—	—	—	Not Occupied	—	—
3	0.5	GN / WH	2816	Passenger Seat Auxiliary Adjustment Switch Signal	I	—
4	0.5	BK / BN	2815	Auxiliary Passenger Seat Adjustment Switch Low Reference	I	—

S70E Radio Favorites Switch - Steering Wheel

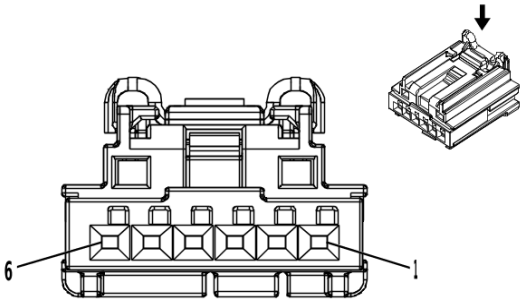

3960313

Connector Part Information

Harness Type: Steering Wheel Horn Switch Wiring Harness
OEM Connector: 13583825
Service Connector: Service by Harness - See Part Catalog
Description: 6-Way F 0.64 Generation Y Series(BK)

Terminal Part Information

Terminal Type ID	Terminated Lead	Diagnostic Test Probe	Terminal Removal Tool
I	Not required	Not Available	No Tool Required

S70E Radio Favorites Switch - Steering Wheel

Pin	Size	Color	Circuit	Function	Terminal Type ID	Option
1	0.35	YE / BK	6051	Steering Wheel Ground	I	—
2	0.35	WH / YE	4313	Radio Favorite Forward Switch Signal	I	—
3	0.35	YE / YE	4312	Radio Favorite Back Switch Signal	I	—
4	0.35	YE / BU	6855	Transmission Tap Down Switch Signal	I	—
5 - 6	—	—	—	Not Occupied	—	—

S70F Radio Volume Switch - Steering Wheel

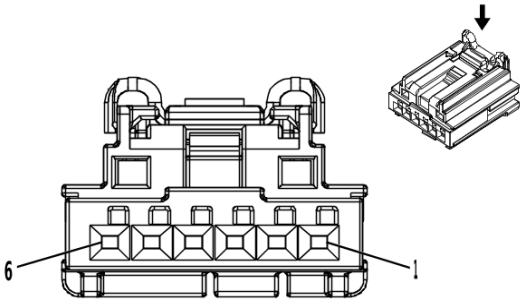

3960313

Connector Part Information

Harness Type: Steering Wheel Horn Switch Wiring Harness
OEM Connector: 13583825
Service Connector: Service by Harness - See Part Catalog
Description: 6-Way F 0.64 Generation Y Series(BK)

Terminal Part Information

Terminal Type ID	Terminated Lead	Diagnostic Test Probe	Terminal Removal Tool
I	Not required	Not Available	No Tool Required

S70F Radio Volume Switch - Steering Wheel

Pin	Size	Color	Circuit	Function	Terminal Type ID	Option
1	0.35	BK / WH	6051	Steering Wheel Ground	I	—
2	0.35	GY / BN	4314	Radio Volume Down Switch Signal	I	—
3	0.35	GN / BN	4315	Radio Volume Up Switch Signal	I	—
4	0.35	YE / BU	6855	Transmission Tap Down Switch Signal	I	—
5	0.35	VT / YE	5526	Tap Up/Tap Down Switch Signal	I	—
6	—	—	—	Not Occupied	—	—

S70L Cruise Control Switch

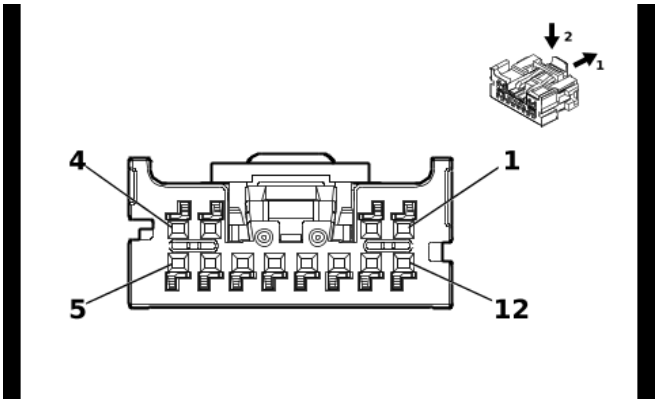

5823893

Connector Part Information

Harness Type: Steering Wheel Horn Switch Wiring Harness
OEM Connector: 13541203
Service Connector: Service by Harness - See Part Catalog
Description: 12-Way F Mini 50 Series(GY)

Terminal Part Information

Terminal Type ID	Terminated Lead	Diagnostic Test Probe	Terminal Removal Tool
I	Not required	EL-35616-58 (BK)	No Tool Required

S70L Cruise Control Switch

Pin	Size	Color	Circuit	Function	Terminal Type ID	Option
1	0.35	RD / GN	5140	Battery Positive Voltage	I	—
2	0.35	YE / BK	3893	Steering Wheel LED Backlight Dimming Control	I	—
3	0.35	BN / GN	1884	Cruise Control Set/Coast/Resume/Accelerate Switch Signal	I	—
4	0.35	GY / GN	5737	Distance Sensing Cruise Control Gap Up/Down Switch Signal	I	—
5	—	—	—	Not Occupied	—	—
6	0.35	BK / WH	6051	Steering Wheel Ground	I	—
7	0.35	GY / WH	5884	Steering Wheel Heating Switch LED Control	I	KI3
8	0.35	YE / GY	5883	Steering Wheel Heating Switch Signal	I	KI3
9	0.35	VT	3892	Indicator Dimming Control 2	I	—
10	0.35	BK / VT	1449	Steering Wheel Resistor Ladder Low Reference	I	KI3
11 - 12	—	—	—	Not Occupied	—	—

S70R Radio Control Switch - Steering Wheel

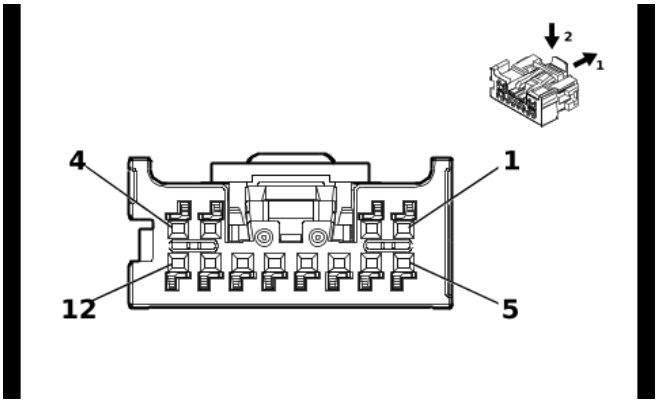

5911307

Connector Part Information

Harness Type: Steering Wheel Horn Switch Wiring Harness
OEM Connector: 13541204
Service Connector: Service by Harness - See Part Catalog
Description: 12-Way F Mini 50 Series(GY)

Terminal Part Information

Terminal Type ID	Terminated Lead	Diagnostic Test Probe	Terminal Removal Tool
I	Not required	EL-35616-58 (BK)	No Tool Required

S70R Radio Control Switch - Steering Wheel

Pin	Size	Color	Circuit	Function	Terminal Type ID	Option
1	0.35	GN / GN	5140	Battery Positive Voltage	I	—
2	0.35	YE / BK	3893	Steering Wheel LED Backlight Dimming Control	I	—
3	0.35	GN / BK	3894	Instrument Panel Cluster Control Module LIN Bus 1	I	—
4 - 5	—	—	—	Not Occupied	—	—
6	0.35	BK / WH	6051	Steering Wheel Ground	I	—
7	0.35	WH / YE	4313	Radio Favorite Forward Switch Signal	I	—
8	0.35	YE / BU	4312	Radio Favorite Back Switch Signal	I	—
9	0.35	VT	3892	Indicator Dimming Control 2	I	—
10	0.35	BU	4315	Radio Volume Up Switch Signal	I	—
11	0.35	GN / BN	4314	Radio Volume Down Switch Signal	I	—
12	—	—	—	Not Occupied	—	—

S71 Steering Column Tilt Wheel and Telescope Switch (N38)

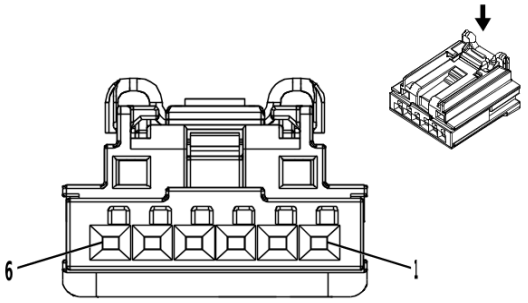

4145138

Connector Part Information

Harness Type: Instrument Panel Wiring Harness
OEM Connector: 33251915
Service Connector: 19356359
Description: 6-Way F 0.64 Generation Y Series(BK)

Terminal Part Information

Terminal Type ID	Terminated Lead	Diagnostic Test Probe	Terminal Removal Tool
I	Not required	J-35616-64B (L-BU)	No Tool Required

S71 Steering Column Tilt Wheel and Telescope Switch (N38)

Pin	Size	Color	Circuit	Function	Terminal Type ID	Option
1	0.5	BU / YE	2094	Steering Column Tilt and Telescope Switch Forward Signal	I	—
2	0.5	YE / BN	2097	Steering Column Tilt and Telescope Switch Down Signal	I	—
3	0.5	BN / GY	2096	Steering Column Tilt and Telescope Switch Up Signal	I	—
4	—	—	—	Not Occupied	—	—
5	0.5	GN / BN	2095	Steering Column Tilt and Telescope Switch Rearward Signal	I	—
6	0.5	VT / BK	2020	Steering Column Tilt and Telescope Switch Feedback Signal	I	—

S76 Trailer Brake Control Switch (-D07)

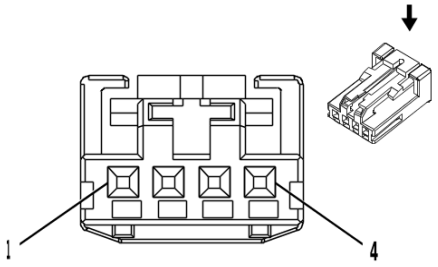

2717162

Connector Part Information

Harness Type: Instrument Panel Wiring Harness
OEM Connector: 13969166
Service Connector: 19367524
Description: 4-Way F 0.64 Micro-Quadlock Series(BK)

Terminal Part Information

Terminal Type ID	Terminated Lead	Diagnostic Test Probe	Terminal Removal Tool
I	Not required	J-35616-64B (L-BU)	No Tool Required

S76 Trailer Brake Control Switch (-D07)

Pin	Size	Color	Circuit	Function	Terminal Type ID	Option
1	0.5	RD / YE	2340	Battery Positive Voltage	I	—
2	0.35	GN / BU	2733	Brake System Control Module LIN Bus 2	I	—
3	0.5	BK	1050	Ground	I	—
4	—	—	—	Not Occupied	—	—

S76 Trailer Brake Control Switch (D07)

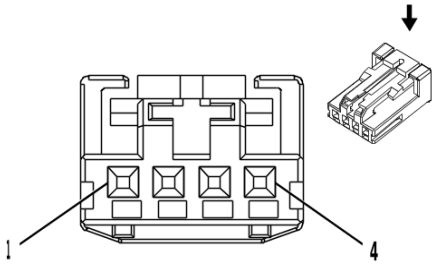

2717162

Connector Part Information

Harness Type: Front Floor Console Wiring Harness
OEM Connector: 13969166
Service Connector: Service by Harness - See Part Catalog
Description: 4-Way F 0.64 Micro-Quadlock Series(BK)

Terminal Part Information

Terminal Type ID	Terminated Lead	Diagnostic Test Probe	Terminal Removal Tool
I	Not required	J-35616-64B (L-BU)	No Tool Required

S76 Trailer Brake Control Switch (D07)

Pin	Size	Color	Circuit	Function	Terminal Type ID	Option
1	0.5	RD / YE	2340	Battery Positive Voltage	I	—
2	0.35	GN / BU	2733	Brake System Control Module LIN Bus 2	I	—
3	0.5	BK	1350	Ground	I	—
4	—	—	—	Not Occupied	—	—

S78 Turn Signal Switch

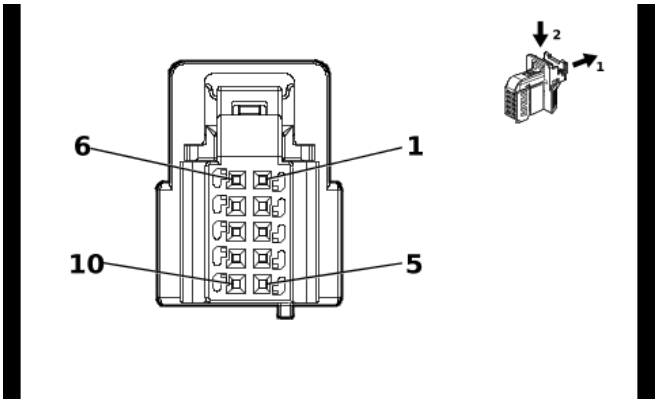

5838155

Connector Part Information

Harness Type: Instrument Panel Wiring Harness
OEM Connector: 35380960
Service Connector: 13518417
Description: 10-Way F 0.64 MQS Series(BK)

Terminal Part Information

Terminal Type ID	Terminated Lead	Diagnostic Test Probe	Terminal Removal Tool
I	19300632	J-35616-64B (L-BU)	J-38125-215A

S78 Turn Signal Switch

Pin	Size	Color	Circuit	Function	Terminal Type ID	Option
1	0.35	WH / GN	2915	Left Turn Signal Switch Signal	I	—
2	0.35	VT / BU	2916	Right Turn Signal Switch Signal	I	—
3	0.5	BK / WH	851	Signal Ground	I	—
4	0.35	GY / BN	3904	Auto High Beam Assist Switch Signal	I	—
5	0.35	WH / BK	94	Windshield Washer Switch Signal	I	—
6	0.35	YE / BN	307	Headlamp Switch Flash Signal	I	—
7	0.35	WH	524	High Beam Select Switch High Beam Signal	I	—
8	0.35	BK / GY	6009	Windshield Wiper Switch Low Reference	I	—
9	0.5	GY	1715	Windshield Wiper Switch High Signal	I	—
10	0.35	YE / BU	1714	Windshield Wiper Switch Low Signal	I	—

S79D Front Side Door Window Control Switch - Driver X1

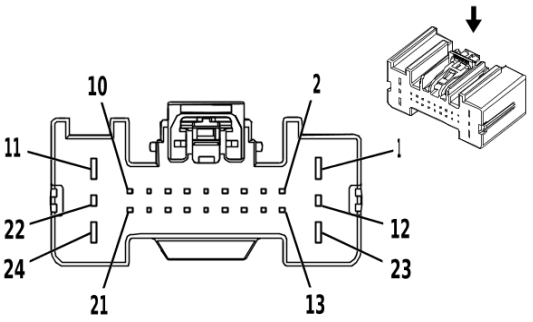

2871905

Connector Part Information

Harness Type: Front Side Door Door Lock Door Wiring Harness - Driver
OEM Connector: 13706537
Service Connector: Service by Harness - See Part Catalog
Description: 24-Way F 0.64, 1.5, 2.8 Series(BK)

Terminal Part Information

Terminal Type ID	Terminated Lead	Diagnostic Test Probe	Terminal Removal Tool
I	Not required	J-35616-2A (GY)	No Tool Required
II	Not required	J-35616-4A (PU)	No Tool Required
III	Not required	J-35616-64B (L-BU)	No Tool Required

S79D Front Side Door Window Control Switch - Driver X1

Pin	Size	Color	Circuit	Function	Terminal Type ID	Option
1	0.5	WH / BN	2764	Window Switch Left Front Down Signal	II	—
2	0.5	GN	2766	Power Window Switch Left Front Express Signal	III	—
3	0.5	BN / YE	2771	Left Front Door Lock Switch Lock Signal	III	—
4	0.5	BN / WH	2772	Left Front Door Lock Switch Unlock Signal	III	—
5	0.5	GY / VT	2767	LED Ambient Lighting Control Left Front Door	III	—
6	—	—	—	Not Occupied	—	—
7	0.5	BN / GY	4784	Left Front Door LED Backlight Dimming Control	III	—
8	0.35	GY / YE	1760	Left Side Object Detection LED Control	III	—
9	0.5	WH / GN	2786	Left Front Mirror Motor Fold In Control	III	—
10	0.5	YE / BN	2789	Left Front Mirror Motor Common Control	III	—
11	0.5	BK	1550	Ground	II	—
12	0.5	GY / WH	2785	Left Front Mirror Motor Fold Out Control	I	—
13 - 16	—	—	—	Not Occupied	—	—
17	0.5	WH / VT	4258	Left Front Door Lock Status Signal	III	—
18	0.5	VT / BU	2788	Left Front Mirror Motor Up [+] Down [-] Control	III	—
19	0.5	BN / BK	2790	Left Front Mirror Motor Right [+] Left [-] Control	III	—
20	—	—	—	Not Occupied	—	—
21	0.5	GN / YE	6134	Body Control Module LIN Bus 3	III	—
22	0.5	WH	606	Left Outside Rearview Mirror Heater Control	I	—
23	0.5	GY / GN	2763	Window Switch Left Front Up Signal	II	—

S79D Front Side Door Window Control Switch - Driver X1 (cont'd)

Pin	Size	Color	Circuit	Function	Terminal Type ID	Option
24	0.5	RD / BU	1240	Battery Positive Voltage	II	—

S79D Front Side Door Window Control Switch - Driver X2 (A45)

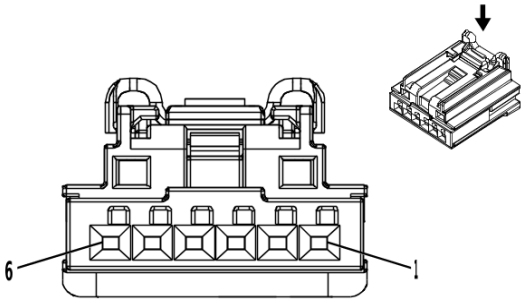

4145138

Connector Part Information

Harness Type: Front Side Door Door Lock Door Wiring Harness - Driver
OEM Connector: 33251915
Service Connector: Service by Harness - See Part Catalog
Description: 6-Way F 0.64 Generation Y Series(BK)

Terminal Part Information

Terminal Type ID	Terminated Lead	Diagnostic Test Probe	Terminal Removal Tool
I	Not required	J-35616-64B (L-BU)	No Tool Required

S79D Front Side Door Window Control Switch - Driver X2 (A45)

Pin	Size	Color	Circuit	Function	Terminal Type ID	Option
1	0.5	WH / YE	2792	Left Front Mirror Position Sensor Left [-] Right [+] Signal	I	—
2	0.5	GY / BN	2787	Left Front Mirror Position Sensor Up [+] Down [-] Signal	I	—
3	0.5	VT / RD	2791	Left Front Mirror Position Sensor High Reference	I	—
4	0.5	BK / BN	673	Left Outside Rearview Mirror Position Sensor Low Reference	I	—
5 - 6	—	—	—	Not Occupied	—	—

S79LR Rear Side Door Window Switch - Left (Extended Cab/Crew Cab)

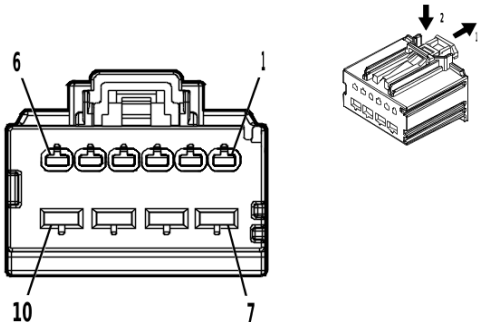

5035058

Connector Part Information

Harness Type: Rear Side Door Door Wiring Harness - Left
OEM Connector: 35152553
Service Connector: Service by Harness - See Part Catalog
Description: 10-Way F 1.5, 2.8 MX Series(BK)

Terminal Part Information

Terminal Type ID	Terminated Lead	Diagnostic Test Probe	Terminal Removal Tool
I	Not required	J-35616-2A (GY)	No Tool Required
II	Not required	J-35616-4A (PU)	No Tool Required

S79LR Rear Side Door Window Switch - Left (Extended Cab/Crew Cab)

Pin	Size	Color	Circuit	Function	Terminal Type ID	Option
1	0.5	GN / GY	6135	Body Control Module LIN Bus 4	I	—
2	0.5	GY	747	Left Rear Door Ajar Switch Signal	I	—
3	0.5	BK	1550	Ground	I	—
4 - 6	—	—	—	Not Occupied	—	—
7	2.5	BK	1550	Ground	II	—
8	2.5	RD / BU	3240	Battery Positive Voltage	II	—
9	2	BU / VT	668	Left Rear Window Motor Up Control	II	—
10	2	YE / BU	669	Left Rear Window Motor Down Control	II	—

S79P Front Side Door Window Switch - Passenger X1

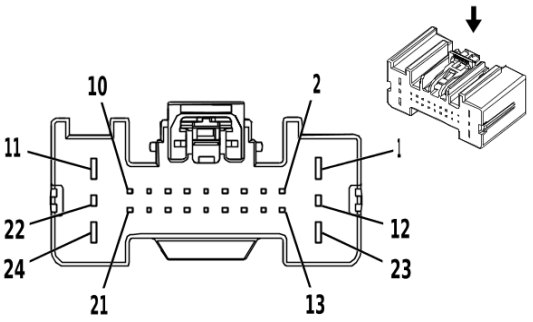

2871905

Connector Part Information

Harness Type: Front Side Door Door Lock Door Wiring Harness - Passenger
OEM Connector: 13706537
Service Connector: Service by Harness - See Part Catalog
Description: 24-Way F 0.64, 1.5, 2.8 Series(BK)

Terminal Part Information

Terminal Type ID	Terminated Lead	Diagnostic Test Probe	Terminal Removal Tool
I	Not required	J-35616-2A (GY)	No Tool Required
II	Not required	J-35616-4A (PU)	No Tool Required
III	Not required	J-35616-64B (L-BU)	No Tool Required

S79P Front Side Door Window Switch - Passenger X1

Pin	Size	Color	Circuit	Function	Terminal Type ID	Option
1	2.5	BK	1350	Ground	II	—
2	0.5	YE / RD	2799	Right Front Mirror Position Sensor High Reference	III	—
3	0.5	GN / BK	2798	Right Front Mirror Motor Right [+] Left [-] Control	III	—
4	0.5	YE / VT	2796	Right Front Mirror Motor Up [+] Down [-] Control	III	—
5	0.5	WH / BN	2768	LED Ambient Lighting Control Right Front Door	III	—
6	—	—	—	Not Occupied	—	—
7	0.5	GY / VT	4638	LED Backlight Dimming Control Right Front Door	III	—
8	0.35	GY	1761	Right Side Object Detection LED Control	III	—
9	0.5	BU / GY	2794	Right Front Mirror Motor Fold In Control	III	—
10	0.5	YE / WH	2793	Right Front Mirror Motor Fold Out Control	III	—
11	2.5 0.5	GN / GY GN	666 1184	Right Front Window Motor Up Control Window Switch Right Front Up Signal	II II	AED+ AXG AXG+ AEF
12	0.5	BN / VT	607	Right Outside Rearview Mirror Heater Control	I	—
13	—	—	—	Not Occupied	—	—
14	0.5	GN / YE	6134	Body Control Module LIN Bus 3	III	—
15	0.5	VT / WH	2800	Right Front Mirror Position Sensor Left [-] Right [+] Signal	III	—
16	0.5	BU / YE	2795	Right Front Mirror Position Sensor Up [+] Down [-] Signal	III	—

S79P Front Side Door Window Switch - Passenger X1 (cont'd)

Pin	Size	Color	Circuit	Function	Terminal Type ID	Option
17	0.5	YE / VT	2773	Right Front Door Lock Switch Lock Control	III	—
18	0.5	BN / VT	2774	Right Front Door Lock Switch Unlock Control	III	—
19	—	—	—	Not Occupied	—	—
20	0.5	GY	746	Right Front Door Ajar Switch Signal	III	AE0
	0.5	VT / GY	2765	Window Switch Right Front Express Signal	III	AXG+ AEF
21	0.5	WH	2797	Right Front Mirror Motor Common Control	III	—
22	0.5	BK / GN	675	Right Outside Rearview Mirror Position Sensor Low Reference	I	—
23	2.5	RD / BN	4240	Battery Positive Voltage	II	—
24	2.5	YE / BU	667	Right Front Window Motor Down Control	II	AED+ AXG
	0.5	BN	5295	Window Switch Right Front Down Signal	II	AXG+ AEF

S79RR Rear Side Door Window Switch - Right (Extended Cab/Crew Cab)

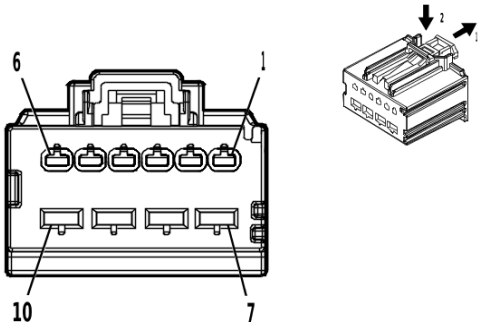

5035058

Connector Part Information

Harness Type: Rear Side Door Door Wiring Harness - Right
OEM Connector: 35152553
Service Connector: Service by Harness - See Part Catalog
Description: 10-Way F 1.5, 2.8 MX Series(BK)

Terminal Part Information

Terminal Type ID	Terminated Lead	Diagnostic Test Probe	Terminal Removal Tool
I	Not required	J-35616-2A (GY)	No Tool Required
II	Not required	J-35616-4A (PU)	No Tool Required

S79RR Rear Side Door Window Switch - Right (Extended Cab/Crew Cab)

Pin	Size	Color	Circuit	Function	Terminal Type ID	Option
1	0.5	GN / GY	6135	Body Control Module LIN Bus 4	I	—
2	0.5	GY	748	Right Rear Door Ajar Switch Signal	I	—
3 - 6	—	—	—	Not Occupied	—	—
7	2.5	BK	1350	Ground	II	—
8	2.5	YE / BK	4840	Battery Positive Voltage	II	—
9	2	BU / GY	670	Right Rear Window Motor Up Control	II	—
10	2	GN / BK	671	Right Rear Window Motor Down Control	II	—

S86 Vehicle Stability Control System Switch

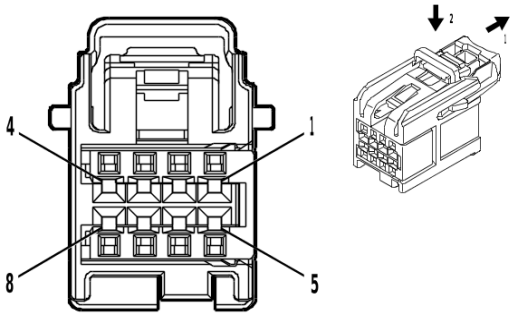

4935776

Connector Part Information

Harness Type: Instrument Panel Wiring Harness
OEM Connector: 15526972
Service Connector: 19370429
Description: 8-Way F 0.64 OCS Series(BK)

Terminal Part Information

Terminal Type ID	Terminated Lead	Diagnostic Test Probe	Terminal Removal Tool
I	Not required	J-35616-64B (L-BU)	No Tool Required

S86 Vehicle Stability Control System Switch

Pin	Size	Color	Circuit	Function	Terminal Type ID	Option
1	0.35	BU / VT	1788	Traction Control Switch Signal 1	I	—
2	0.35	YE	6817	LED Backlight Dimming Control 1	I	—
3	0.35	BN	7291	Major Endgate Release Switch Signal Interior	I	—
4	0.35	BU / YE	6844	ABS/Traction Control Hill Descent Control Switch Signal	I	—
5	—	—	—	Not Occupied	—	—
6	0.35	BK / WH	851	Signal Ground	I	—
7	0.35	GN / WH	111	Hazard Warning Switch Signal	I	—
8	0.35	GY	1198	Endgate Release Switch Analog Signal Interior	I	—

S91 Parking Brake Control Switch

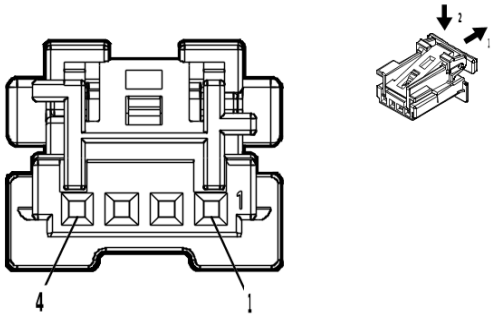

4997407

Connector Part Information

Harness Type: Instrument Panel Wiring Harness
OEM Connector: 35082250
Service Connector: 19371192
Description: 4-Way F 0.64 Micro-Quadlock Series(BK)

Terminal Part Information

Terminal Type ID	Terminated Lead	Diagnostic Test Probe	Terminal Removal Tool
I	Not required	J-35616-64B (L-BU)	No Tool Required

S91 Parking Brake Control Switch

Pin	Size	Color	Circuit	Function	Terminal Type ID	Option
1	0.35	RD / YE	4340	Battery Positive Voltage	I	—
2	0.5	GN / YE	2731	Brake System Control Module LIN Bus 1	I	—
3	—	—	—	Not Occupied	—	—
4	0.35	BK / WH	851	Signal Ground	I	—

S126 Ride Control Switch

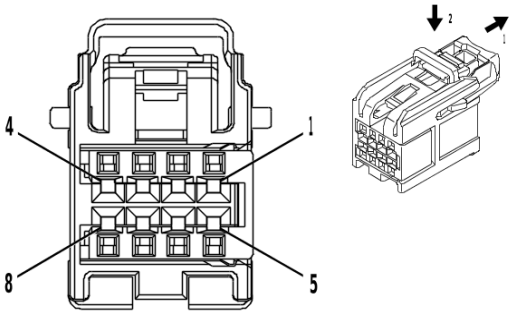

4232228

Connector Part Information

Harness Type: Instrument Panel Wiring Harness
OEM Connector: 15526973
Service Connector: 19353873
Description: 8-Way F 0.64 OCS Series(GY)

Terminal Part Information

Terminal Type ID	Terminated Lead	Diagnostic Test Probe	Terminal Removal Tool
I	Not required	J-35616-64B (L-BU)	No Tool Required

S126 Ride Control Switch

Pin	Size	Color	Circuit	Function	Terminal Type ID	Option
1	0.35	WH / BN	2203	Enhanced Driver Mode 2 Switch Signal	I	—
2	—	—	—	Not Occupied	—	—
3	0.35	BK / VT	1449	Steering Wheel Resistor Ladder Low Reference	I	—
4	0.35	YE	6817	LED Backlight Dimming Control 1	I	—
5	0.35	BK / WH	851	Signal Ground	I	—
6 - 8	—	—	—	Not Occupied	—	—

S158 Liftgate Exterior Release Switch - Auxiliary Endgate (QT5)

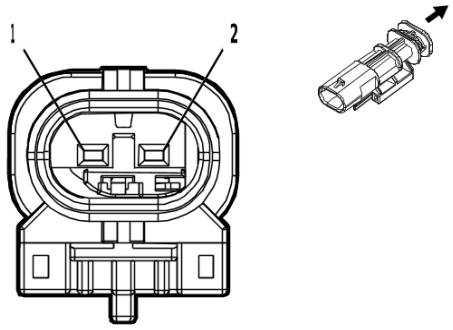

4994410

Connector Part Information

Harness Type: Endgate Wiring Harness
OEM Connector: 35235497
Service Connector: Service by Harness - See Part Catalog
Description: 2-Way M 1.2 MCON Series, Sealed(GY)

Terminal Part Information

Terminal Type ID	Terminated Lead	Diagnostic Test Probe	Terminal Removal Tool
I	Not required	J-35616-17 (L-GN)	No Tool Required

S158 Liftgate Exterior Release Switch - Auxiliary Endgate (QT5)

Pin	Size	Color	Circuit	Function	Terminal Type ID	Option
1	0.5	YE	7294	Minor Endgate Release Switch Discrete Signal Exterior	I	—
2	0.5	BK	1850	Ground	I	—

S159E Liftgate Exterior Release Switch - Endgate (QT5)

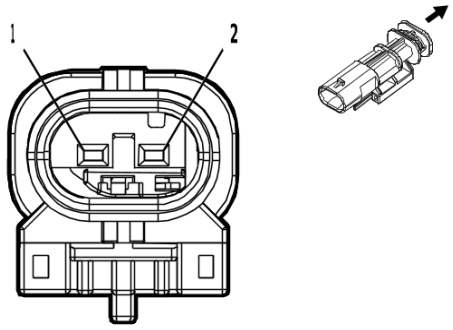

4994411

Connector Part Information

Harness Type: Endgate Wiring Harness
OEM Connector: 35068608
Service Connector: Service by Harness - See Part Catalog
Description: 2-Way M 1.2 MCON Series, Sealed(GY)

Terminal Part Information

Terminal Type ID	Terminated Lead	Diagnostic Test Probe	Terminal Removal Tool
I	Not required	J-35616-17 (L-GN)	No Tool Required

S159E Liftgate Exterior Release Switch - Endgate (QT5)

Pin	Size	Color	Circuit	Function	Terminal Type ID	Option
1	0.5	GY	7292	Major Endgate Release Switch Signal Exterior	I	—
2	0.5	BK	1850	Ground	I	—

S159E Liftgate Exterior Release Switch - Endgate (QT6)

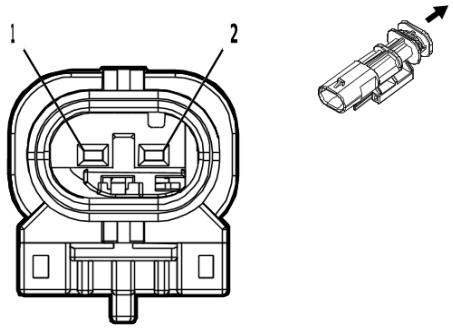

4994411

Connector Part Information

Harness Type: Endgate Wiring Harness
OEM Connector: 35068608
Service Connector: Service by Harness - See Part Catalog
Description: 2-Way M 1.2 MCON Series, Sealed(GY)

Terminal Part Information

Terminal Type ID	Terminated Lead	Diagnostic Test Probe	Terminal Removal Tool
I	Not required	J-35616-17 (L-GN)	No Tool Required

S159E Liftgate Exterior Release Switch - Endgate (QT6)

Pin	Size	Color	Circuit	Function	Terminal Type ID	Option
1	0.5	YE	1144	Endgate Release Switch Discrete Signal Exterior	I	—
2	0.5	BK	1850	Ground	I	—

S171L Instrument Panel Center Accessory Function Switch - Left

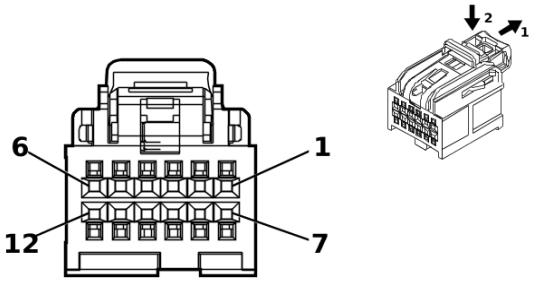

4975223

Connector Part Information

Harness Type: Instrument Panel Wiring Harness
OEM Connector: 35016616
Service Connector: 13519750
Description: 12-Way F 0.64 OCS Series(BK)

Terminal Part Information

Terminal Type ID	Terminated Lead	Diagnostic Test Probe	Terminal Removal Tool
I	19300660	J-35616-64B (L-BU)	J-38125-215A

S171L Instrument Panel Center Accessory Function Switch - Left

Pin	Size	Color	Circuit	Function	Terminal Type ID	Option
1	0.35	GY / GN	2555	Rear Parking Assist Disable Signal	I	—
2	0.35	YE	6817	LED Backlight Dimming Control 1	I	—
3	0.35	BU / WH	3119	Roof Rail Air Bag Disable Switch Signal	I	—
4	0.35	GY / WH	3153	Lane Departure Warning Disable Switch Signal	I	—
5	0.35	WH	3152	Lane Departure Warning Indicator Control	I	—
6	0.35	BU / YE	6844	ABS/Traction Control Hill Descent Control Switch Signal	I	—
7	—	—	—	Not Occupied	—	—
8	0.35	GN / BN	5852	Rear Parking Assist Disable LED Signal	I	—
9	0.35	BK / WH	851	Signal Ground	I	—
10	0.35	BN / WH	3895	Roof Rail Air Bag Disable Switch Low Reference	I	—
11	0.35	GN	1110	Stop/Start Indicator Control	I	—
12	0.35	BU	1111	Stop/Start Switch Signal	I	—

S171R Instrument Panel Center Accessory Function Switch - Right

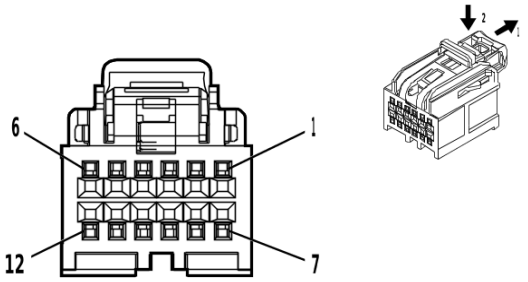

4997362

Connector Part Information

Harness Type: Instrument Panel Wiring Harness
OEM Connector: 35016613
Service Connector: 13519752
Description: 12-Way F 0.64 OCS Series(BN)

Terminal Part Information

Terminal Type ID	Terminated Lead	Diagnostic Test Probe	Terminal Removal Tool
I	19300660	J-35616-64B (L-BU)	J-38125-215A

S171R Instrument Panel Center Accessory Function Switch - Right

Pin	Size	Color	Circuit	Function	Terminal Type ID	Option
1	—	—	—	Not Occupied	—	—
2	0.35	YE	6817	LED Backlight Dimming Control 1	I	—
3	0.35	BU / YE	6844	ABS/Traction Control Hill Descent Control Switch Signal	I	—
4	0.35	YE / GN	7122	Axle Differential Lock Switch Signal	I	—
5	0.35	YE	7115	Rear Axle Differential Lock Indicator Control	I	—
6	0.35	GN	1110	Stop/Start Indicator Control	I	—
7	0.35	VT / GY	7117	Front Axle Differential Lock Indicator Control	I	—
8	0.35	BU / YE	7176	All Windows Open Switch Signal	I	—
9	0.35	BK / WH	851	Signal Ground	I	—
10	0.35	WH	6816	Indicator Dimming Control	I	—
11	—	—	—	Not Occupied	—	—
12	0.35 0.35	BU BU / GY	1111 4990	Stop/Start Switch Signal Driver Mode 1 Switch Signal	I I	URC - URC

S172 Auxiliary Multifunction Switch (9L7)

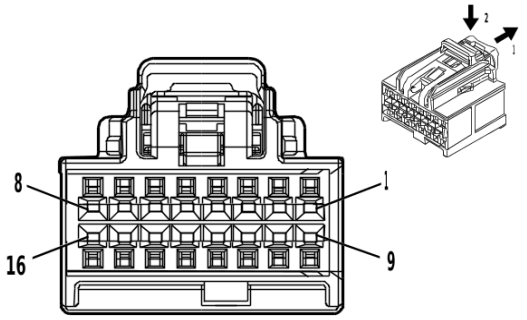

4873243

Connector Part Information

Harness Type: Auxiliary Fuse Block Wiring Harness
OEM Connector: 35016343
Service Connector: Service by Harness - See Part Catalog
Description: 16-Way F 0.64 OCS Series(BK)

Terminal Part Information

Terminal Type ID	Terminated Lead	Diagnostic Test Probe	Terminal Removal Tool
I	Not required	J-35616-64B (L-BU)	No Tool Required

S172 Auxiliary Multifunction Switch (9L7)

Pin	Size	Color	Circuit	Function	Terminal Type ID	Option
1	—	—	—	Not Occupied	—	—
2	0.35	YE	6817	LED Backlight Dimming Control 1	I	—
3	0.35	WH	6816	Indicator Dimming Control	I	—
4 - 5	—	—	—	Not Occupied	—	—
6	0.35	BU / WH	10716	Upfitter Accessory Relay 1 Coil Control	I	—
7	0.35	VT / GY	10717	Upfitter Accessory Relay 2 Coil Control	I	—
8	0.35	GN / BN	10718	Upfitter Accessory Relay 3 Coil Control	I	—
9	0.35	WH / YE	10719	Upfitter Accessory Relay 4 Coil Control	I	—
10	0.35	GY / VT	10720	Upfitter Accessory Relay 5 Coil Control	I	—
11	—	—	—	Not Occupied	—	—
12	0.75	BK / WH	851	Signal Ground	I	—
13 - 16	—	—	—	Not Occupied	—	—

S192 Radio Function Switch (IOR)

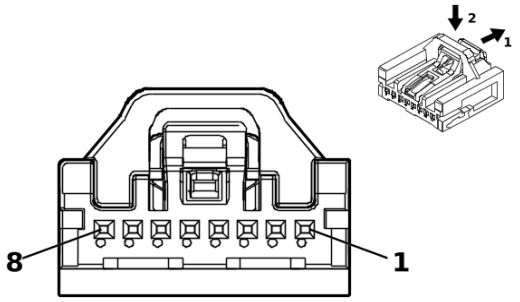

5200269

Connector Part Information

Harness Type: Instrument Panel Wiring Harness
OEM Connector: 35068228
Service Connector: 84769201
Description: 8-Way F Mini 50 Series(BK)

Terminal Part Information

Terminal Type ID	Terminated Lead	Diagnostic Test Probe	Terminal Removal Tool
I	Not required	EL-35616-58 (BK)	No Tool Required

S192 Radio Function Switch (IOR)

Pin	Size	Color	Circuit	Function	Terminal Type ID	Option
1	0.35	YE / RD	11236	Radio Switch 5 Volt Reference	I	—
2	0.35	BK / BU	11237	Radio Switch Low Reference 1	I	—
3	0.35	BN / WH	11233	Radio Switch Power ON/OFF Switch Signal	I	—
4	0.35	BK / GN	11238	Radio Switch Low Reference 2	I	—
5	0.35	BU / GY	11244	Radio Switch Dimming Control	I	—
6	0.35	VT / WH	11245	Radio Switch Buttons Signal	I	—
7	0.35	BU	11235	Radio Switch Volume Up Signal	I	—
8	0.35	GY / BN	11234	Radio Switch Volume Down Signal	I	—

T1 DC/AC Converter Control Module X1 (KI4/KI5)

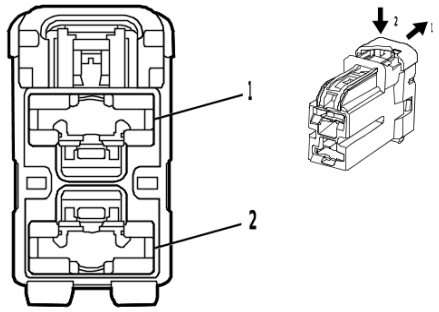

2453116

Connector Part Information

Harness Type: Body Wiring Harness
OEM Connector: 13581928
Service Connector: Service by Harness - See Part Catalog
Description: 2-Way F 9.5 Series(BK)

Terminal Part Information

Terminal Type ID	Terminated Lead	Diagnostic Test Probe	Terminal Removal Tool
I	Not required	J-35616-22 (RD)	No Tool Required

T1 DC/AC Converter Control Module X1 (KI4/KI5)

Pin	Size	Color	Circuit	Function	Terminal Type ID	Option
1	5	BN / BK	4629	DC/AC Inverter Control	I	—
2	5	BK	1550	Ground	I	—

T1 DC/AC Converter Control Module X2 (KI5)

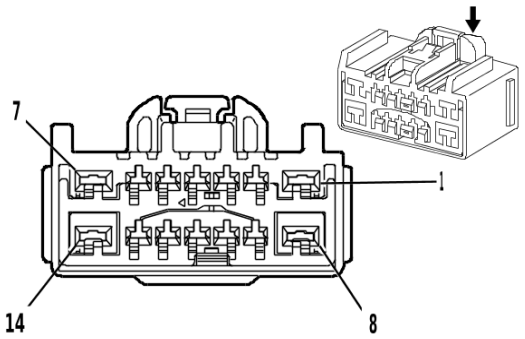

1540775

Connector Part Information

Harness Type: Body Rear Wiring Harness Extension Harness
OEM Connector: 33356826
Service Connector: Service by Harness - See Part Catalog
Description: 14-Way F 1.5, 2.8 YESC Series(BU)

Terminal Part Information

Terminal Type ID	Terminated Lead	Diagnostic Test Probe	Terminal Removal Tool
I	Not required	J-35616-2A (GY)	No Tool Required
II	Not required	J-35616-4A (PU)	No Tool Required

T1 DC/AC Converter Control Module X2 (KI5)

Pin	Size	Color	Circuit	Function	Terminal Type ID	Option
1	0.75	BK	10117	AC Outlet Phase A Control	II	—
2	0.5	VT / RD	4049	AC Power Outlet Sensor High Reference	I	—
3	0.35	VT / WH	239	Run/Crank Ignition 1 Voltage	I	—
4	0.5	WH / GN	4628	DC/AC Inverter Relay Control	I	—
5	0.5	BU / BN	6807	DC/AC Inverter Control	I	—
6	—	—	—	Not Occupied	—	—
7	0.75	BK / WH	10120	AC Outlet 2 Phase A Control	II	—
8	0.75	RD	10118	AC Outlet Phase B Control	II	—
9	0.35	Bare	10116	AC Outlet Low Reference	I	—
10	0.5	GN / BU	6133	Body Control Module LIN Bus 2	I	—
11	—	—	—	Not Occupied	—	—
12	0.5	GN / BN	2266	DC/AC Inverter Control 2	I	—
13	0.35	Bare	10119	AC Outlet 2 Low Reference	I	—
14	0.75	RD / WH	10121	AC Outlet 2 Phase B Control	II	—

T3 Audio Amplifier X1 (UQA)

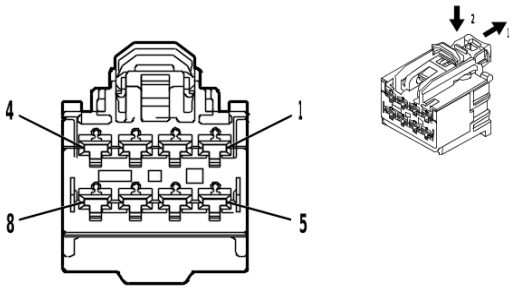

4875738

Connector Part Information

Harness Type: Body Wiring Harness
OEM Connector: 33223792
Service Connector: 19369366
Description: 8-Way F 2.8 OCS Series(BK)

Terminal Part Information

Terminal Type ID	Terminated Lead	Diagnostic Test Probe	Terminal Removal Tool
I	Not required	J-35616-4A (PU)	No Tool Required

T3 Audio Amplifier X1 (UQA)

Pin	Size	Color	Circuit	Function	Terminal Type ID	Option
1	2.5	BU / GY	346	Left/Rear Subwoofer [+] Control	I	—
2	0.75	YE	200	Right Front Speaker 1 [+] Control	I	—
3	0.75	BU	201	Left Front Speaker 1 [+] Control	I	—
4	2.5	RD / YE	3740	Battery Positive Voltage	I	—
5	2.5	GN / BK	1794	Left/Rear Subwoofer [-] Control	I	—
6	0.75	YE / BK	117	Right Front Speaker [-] Control 1	I	—
7	0.75	BN / BU	118	Left Front Speaker [-] Control 1	I	—
8	2.5	BK / WH	1051	Signal Ground	I	—

T3 Audio Amplifier X2 (UQA)

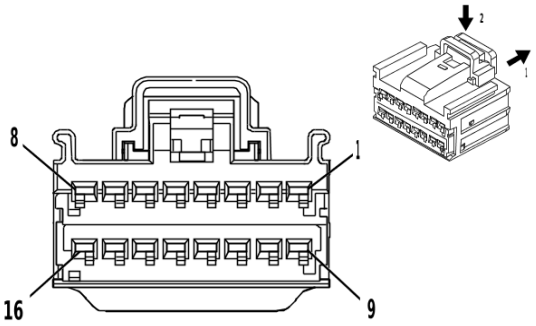

4332214

Connector Part Information

Harness Type: Body Wiring Harness
OEM Connector: 15512506
Service Connector: 13591061
Description: 16-Way F 1.5 OCS Series(BK)

Terminal Part Information

Terminal Type ID	Terminated Lead	Diagnostic Test Probe	Terminal Removal Tool
I	84757974	J-35616-2A (GY)	J-38125-215A

T3 Audio Amplifier X2 (UQA)

Pin	Size	Color	Circuit	Function	Terminal Type ID	Option
1	—	—	—	Not Occupied	—	—
2	0.75	BN / BK	1953	Right Front Midrange Speaker [-] Control	I	—
3	0.75	BU / VT	1857	Left Front Midrange Speaker [+] Control	I	—
4	1.5	WH	46	Right Rear Speaker [+] Control	I	—
5	1.5	GN	199	Left Rear Speaker [+] Control	I	—
6	—	—	—	Not Occupied	—	—
7	0.75	YE / WH	1860	Front Center Speaker [+] Control	I	—
8 - 9	—	—	—	Not Occupied	—	—
10	0.75	WH / YE	1853	Right Front Midrange Speaker [+] Control	I	—
11	0.75	BU / BN	1957	Left Front Midrange Speaker [-] Control	I	—
12	1.5	BU / BK	115	Right Rear Speaker [-] Control	I	—
13	1.5	GN / BK	116	Left Rear Speaker [-] Control	I	—
14	—	—	—	Not Occupied	—	—
15	0.75	BU / YE	1960	Front Center Speaker [-] Control	I	—
16	—	—	—	Not Occupied	—	—

T3 Audio Amplifier X3 (UQA)

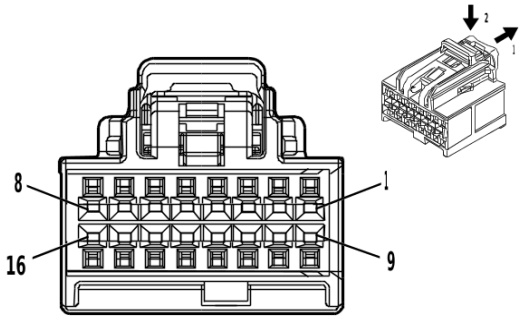

4873243

Connector Part Information

Harness Type: Body Wiring Harness
OEM Connector: 35016343
Service Connector: 13519738
Description: 16-Way F 0.64 OCS Series(BK)

Terminal Part Information

Terminal Type ID	Terminated Lead	Diagnostic Test Probe	Terminal Removal Tool
I	19354230	J-35616-64B (L-BU)	J-38125-215A

T3 Audio Amplifier X3 (UQA)

Pin	Size	Color	Circuit	Function	Terminal Type ID	Option
1	0.35	YE	7215	Ethernet Bus 6 [+]	I	—
2	0.35	GN	7214	Ethernet Bus 6 [-]	I	—
3 - 4	—	—	—	Not Occupied	—	—
5	0.35	GN / BN	3005	Active Noise Cancellation Microphone 1 Signal	I	—
6 - 10	—	—	—	Not Occupied	—	—
11	0.5	BU / WH	4985	AUTOSAR CAN Bus [+] 5 Serial Data	I	—
12	0.5	BU / YE	4984	AUTOSAR CAN Bus [-] 5 Serial Data	I	—
13	0.35	GN / BK	3008	Active Noise Cancellation Microphone 1 Feed-back Signal	I	—
14 - 16	—	—	—	Not Occupied	—	—

T4P High Frequency Antenna X1 (UDA/UE1)

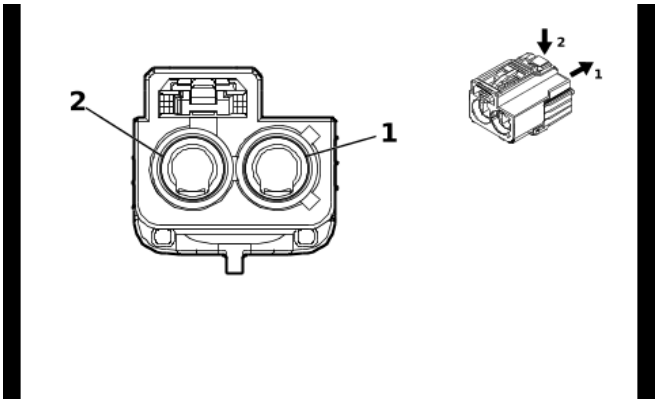

5661671

Connector Part Information

Harness Type: Instrument Panel Wiring Harness
OEM Connector: 33351060
Service Connector: Service by Cable Assembly — See Part Catalog
Description: 2-Way F Coax Type(VT)

Terminal Part Information

Terminal Type ID	Terminated Lead	Diagnostic Test Probe	Terminal Removal Tool
I	Not required	No Tool Required	No Tool Required

T4P High Frequency Antenna X1 (UDA/UE1)

Pin	Size	Color	Circuit	Function	Terminal Type ID	Option
1	—	—	3134	Coaxial Antenna Cell/GPS Combined Signal	I	—
2	—	—	6449	Coaxial Antenna Cell Phone Signal	I	—

T4P High Frequency Antenna X1 (-UDA-UE1)

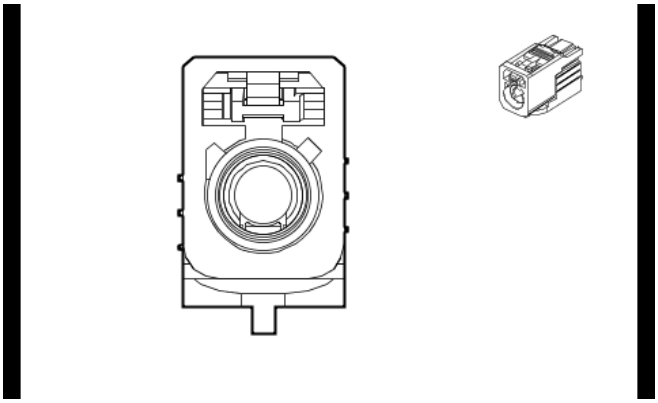

5633890

Connector Part Information

Harness Type: Instrument Panel Wiring Harness COAX
OEM Connector: 33351013
Service Connector: Service by Cable Assembly — See Part Catalog
Description: 1-Way F Coax Type(WH)

Terminal Part Information

Terminal Type ID	Terminated Lead	Diagnostic Test Probe	Terminal Removal Tool
I	Not required	No Tool Required	No Tool Required

T4P High Frequency Antenna X1 (-UDA-UE1)

Pin	Size	Color	Circuit	Function	Terminal Type ID	Option
—	—	Coax Cable	—	(GPS only) Coaxial Antenna GPS Signal	I	—

T4P High Frequency Antenna X2 (U2K)

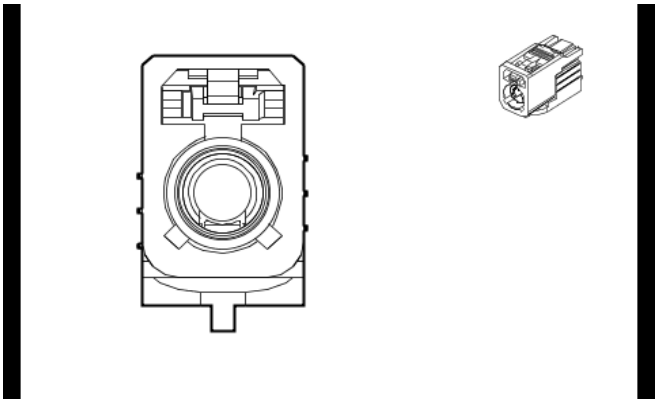

5661657

Connector Part Information

Harness Type: Instrument Panel Wiring Harness COAX
OEM Connector: 33351022
Service Connector: Service by Cable Assembly — See Part Catalog
Description: 1-Way F Coax Type(YE)

Terminal Part Information

Terminal Type ID	Terminated Lead	Diagnostic Test Probe	Terminal Removal Tool
I	Not required	No Tool Required	No Tool Required

T4P High Frequency Antenna X2 (U2K)

Pin	Size	Color	Circuit	Function	Terminal Type ID	Option
—	—	Coax Cable	—	(XM +/-HD) Coaxial Antenna XM Signal	I	—

T4TA Auxiliary Wireless Communication Interface Antenna

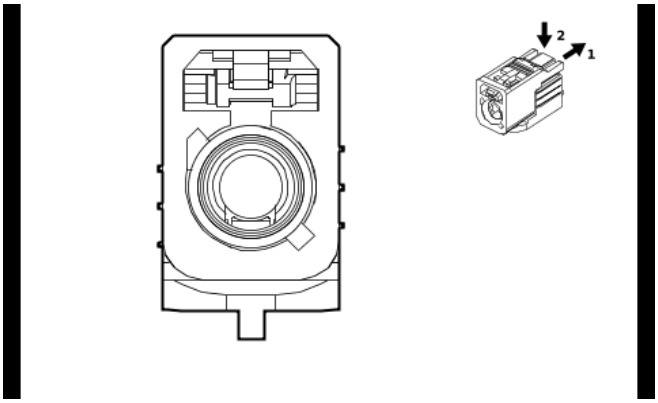

5518436

Connector Part Information

Harness Type: Instrument Panel Wiring Harness COAX
OEM Connector: 33351021
Service Connector: Service by Cable Assembly — See Part Catalog
Description: 1-Way F Coax Type(BG)

Terminal Part Information

Terminal Type ID	Terminated Lead	Diagnostic Test Probe	Terminal Removal Tool
I	Not required	No Tool Required	No Tool Required

T4TA Auxiliary Wireless Communication Interface Antenna

Pin	Size	Color	Circuit	Function	Terminal Type ID	Option
—	—	Coax Cable	—	WiFi Antenna Coaxial Signal	I	—

T8A Ignition Coil 1 (L3B)

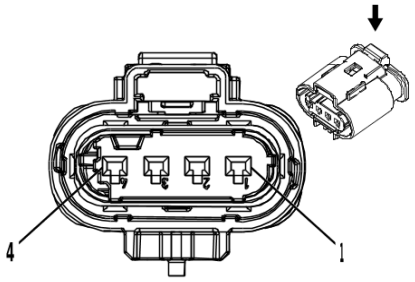

2717079

Connector Part Information

Harness Type: Engine Wiring Harness
OEM Connector: 13815341
Service Connector: 13587299
Description: 4-Way F 1.2 Multilock Series, Sealed(BK)

Terminal Part Information

Terminal Type ID	Terminated Lead	Diagnostic Test Probe	Terminal Removal Tool
I	Not required	J-35616-12 (BU)	No Tool Required
II	Not required	J-35616-16 (L-GN)	No Tool Required

T8A Ignition Coil 1 (L3B)

Pin	Size	Color	Circuit	Function	Terminal Type ID	Option
1	1	BK	6450	Engine Even Bank Ground	I	—
2	0.5	BK / BU	2129	Ignition Control Low Reference Bank 1	II	—
3	0.5	BU / VT	2121	Ignition Control 1	II	—
4	1	VT / BU	5291	Powertrain Main Relay Fused Supply Voltage 2	I	—

T8A Ignition Coil 1 (L84/L87)

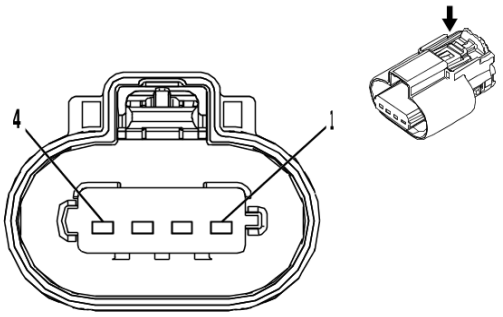

3240115

Connector Part Information

Harness Type: Engine Wiring Harness
OEM Connector: 13863211
Service Connector: Service by Harness - See Part Catalog
Description: 4-Way F 1.5 MX Series, Sealed(BK)

Terminal Part Information

Terminal Type ID	Terminated Lead	Diagnostic Test Probe	Terminal Removal Tool
I	Not required	J-35616-14 (GN)	No Tool Required
II	Not required	J-35616-2A (GY)	No Tool Required

T8A Ignition Coil 1 (L84/L87)

Pin	Size	Color	Circuit	Function	Terminal Type ID	Option
1	1	BK	6150	Engine Odd Bank Ground	II	—
2	0.5	BK / BU	2129	Ignition Control Low Reference Bank 1	I	—
3	0.5	BU / VT	2121	Ignition Control 1	I	—
4	1	VT / BU	5291	Powertrain Main Relay Fused Supply Voltage 2	II	—

T8B Ignition Coil 2 (L3B)

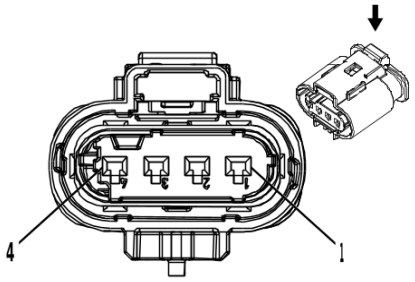

2717079

Connector Part Information

Harness Type: Engine Wiring Harness
OEM Connector: 13815341
Service Connector: 13587299
Description: 4-Way F 1.2 Multilock Series, Sealed(BK)

Terminal Part Information

Terminal Type ID	Terminated Lead	Diagnostic Test Probe	Terminal Removal Tool
I	Not required	J-35616-12 (BU)	No Tool Required
II	Not required	J-35616-16 (L-GN)	No Tool Required

T8B Ignition Coil 2 (L3B)

Pin	Size	Color	Circuit	Function	Terminal Type ID	Option
1	1	BK	6450	Engine Even Bank Ground	I	—
2	0.5	BK / BU	2129	Ignition Control Low Reference Bank 1	II	—
3	0.5	BU / WH	2122	Ignition Control 2	II	—
4	1	VT / BU	5291	Powertrain Main Relay Fused Supply Voltage 2	I	—

T8B Ignition Coil 2 (L84/L87)

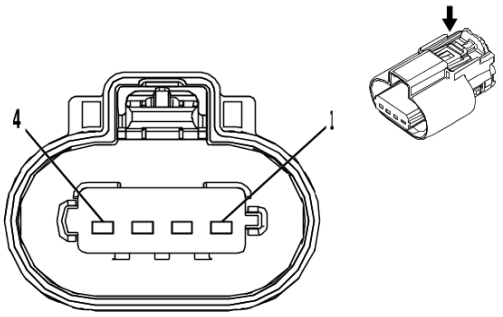

3240115

Connector Part Information

Harness Type: Engine Wiring Harness
OEM Connector: 13863211
Service Connector: Service by Harness - See Part Catalog
Description: 4-Way F 1.5 MX Series, Sealed(BK)

Terminal Part Information

Terminal Type ID	Terminated Lead	Diagnostic Test Probe	Terminal Removal Tool
I	Not required	J-35616-14 (GN)	No Tool Required
II	Not required	J-35616-2A (GY)	No Tool Required

T8B Ignition Coil 2 (L84/L87)

Pin	Size	Color	Circuit	Function	Terminal Type ID	Option
1	1	BK	6450	Engine Even Bank Ground	II	—
2	0.5	BK / GY	2130	Ignition Control Low Reference Bank 2	I	—
3	0.5	BU / WH	2122	Ignition Control 2	I	—
4	1	VT / BU	5292	Powertrain Main Relay Fused Supply Voltage 3	II	—

T8C Ignition Coil 3 (L3B)

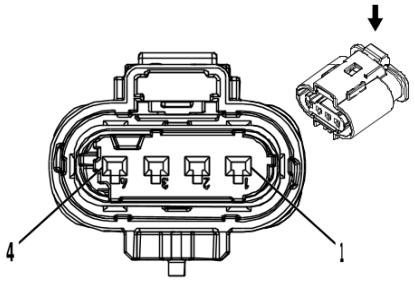

2717079

Connector Part Information

Harness Type: Engine Wiring Harness
OEM Connector: 13815341
Service Connector: 13587299
Description: 4-Way F 1.2 Multilock Series, Sealed(BK)

Terminal Part Information

Terminal Type ID	Terminated Lead	Diagnostic Test Probe	Terminal Removal Tool
I	Not required	J-35616-12 (BU)	No Tool Required
II	Not required	J-35616-16 (L-GN)	No Tool Required

T8C Ignition Coil 3 (L3B)

Pin	Size	Color	Circuit	Function	Terminal Type ID	Option
1	1	BK	6450	Engine Even Bank Ground	I	—
2	0.5	BK / BU	2129	Ignition Control Low Reference Bank 1	II	—
3	0.5	GN / BU	2123	Ignition Control 3	II	—
4	1	VT / BU	5291	Powertrain Main Relay Fused Supply Voltage 2	I	—

T8C Ignition Coil 3 (L84/L87)

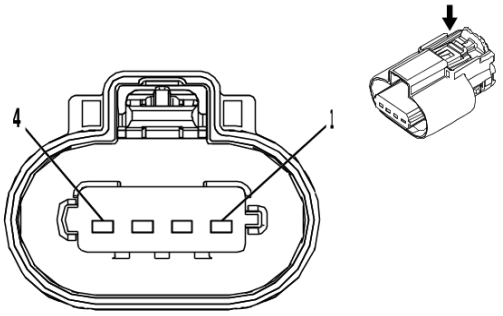

3240115

Connector Part Information

Harness Type: Engine Wiring Harness
OEM Connector: 13863211
Service Connector: Service by Harness - See Part Catalog
Description: 4-Way F 1.5 MX Series, Sealed(BK)

Terminal Part Information

Terminal Type ID	Terminated Lead	Diagnostic Test Probe	Terminal Removal Tool
I	Not required	J-35616-14 (GN)	No Tool Required
II	Not required	J-35616-2A (GY)	No Tool Required

T8C Ignition Coil 3 (L84/L87)

Pin	Size	Color	Circuit	Function	Terminal Type ID	Option
1	1	BK	6150	Engine Odd Bank Ground	II	—
2	0.5	BK / BU	2129	Ignition Control Low Reference Bank 1	I	—
3	0.5	GN / BU	2123	Ignition Control 3	I	—
4	1	VT / BU	5291	Powertrain Main Relay Fused Supply Voltage 2	II	—

T8D Ignition Coil 4 (L3B)

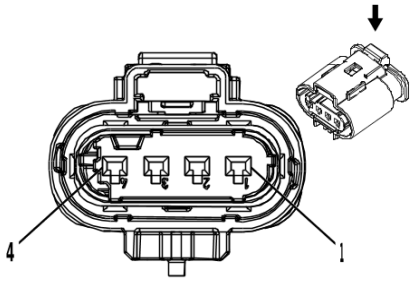

2717079

Connector Part Information

Harness Type: Engine Wiring Harness
OEM Connector: 13815341
Service Connector: 13587299
Description: 4-Way F 1.2 Multilock Series, Sealed(BK)

Terminal Part Information

Terminal Type ID	Terminated Lead	Diagnostic Test Probe	Terminal Removal Tool
I	Not required	J-35616-12 (BU)	No Tool Required
II	Not required	J-35616-16 (L-GN)	No Tool Required

T8D Ignition Coil 4 (L3B)

Pin	Size	Color	Circuit	Function	Terminal Type ID	Option
1	1	BK	6450	Engine Even Bank Ground	I	—
2	0.5	BK / BU	2129	Ignition Control Low Reference Bank 1	II	—
3	0.5	YE / BU	2124	Ignition Control 4	II	—
4	1	VT / BU	5291	Powertrain Main Relay Fused Supply Voltage 2	I	—

T8D Ignition Coil 4 (L84/L87)

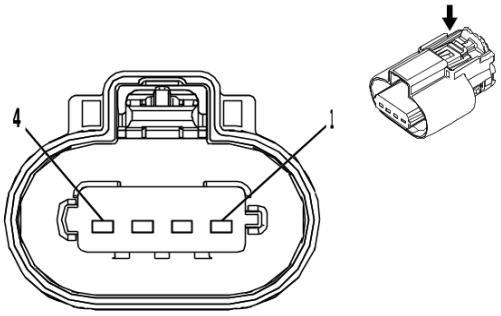

3240115

Connector Part Information

Harness Type: Engine Wiring Harness
OEM Connector: 13863211
Service Connector: Service by Harness - See Part Catalog
Description: 4-Way F 1.5 MX Series, Sealed(BK)

Terminal Part Information

Terminal Type ID	Terminated Lead	Diagnostic Test Probe	Terminal Removal Tool
I	Not required	J-35616-2A (GY)	No Tool Required

T8D Ignition Coil 4 (L84/L87)

Pin	Size	Color	Circuit	Function	Terminal Type ID	Option
1	1	BK	6450	Engine Even Bank Ground	I	—
2	0.5	BK / GY	2130	Ignition Control Low Reference Bank 2	I	—
3	0.5	YE / BU	2124	Ignition Control 4	I	—
4	1	VT / BU	5292	Powertrain Main Relay Fused Supply Voltage 3	I	—

T8E Ignition Coil 5 (L84/L87)

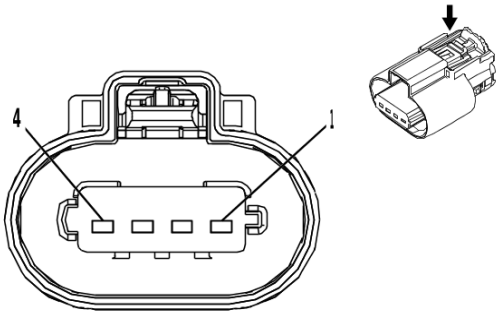

3240115

Connector Part Information

Harness Type: Engine Wiring Harness
OEM Connector: 13863211
Service Connector: Service by Harness - See Part Catalog
Description: 4-Way F 1.5 MX Series, Sealed(BK)

Terminal Part Information

Terminal Type ID	Terminated Lead	Diagnostic Test Probe	Terminal Removal Tool
I	Not required	J-35616-14 (GN)	No Tool Required
II	Not required	J-35616-2A (GY)	No Tool Required

T8E Ignition Coil 5 (L84/L87)

Pin	Size	Color	Circuit	Function	Terminal Type ID	Option
1	1	BK	6150	Engine Odd Bank Ground	II	—
2	0.5	BK / BU	2129	Ignition Control Low Reference Bank 1	I	—
3	0.5	BU / GY	2125	Ignition Control 5	I	—
4	1	VT / BU	5291	Powertrain Main Relay Fused Supply Voltage 2	II	—

T8F Ignition Coil 6 (L84/L87)

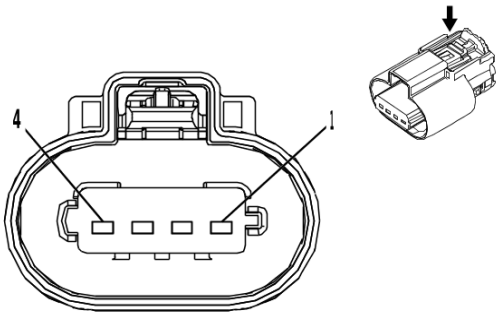

3240115

Connector Part Information

Harness Type: Engine Wiring Harness
OEM Connector: 13863211
Service Connector: Service by Harness - See Part Catalog
Description: 4-Way F 1.5 MX Series, Sealed(BK)

Terminal Part Information

Terminal Type ID	Terminated Lead	Diagnostic Test Probe	Terminal Removal Tool
I	Not required	J-35616-14 (GN)	No Tool Required
II	Not required	J-35616-2A (GY)	No Tool Required

T8F Ignition Coil 6 (L84/L87)

Pin	Size	Color	Circuit	Function	Terminal Type ID	Option
1	1	BK	6450	Engine Even Bank Ground	II	—
2	0.5	BK / GY	2130	Ignition Control Low Reference Bank 2	I	—
3	0.5	BN / BU	2126	Ignition Control 6	I	—
4	1	VT / BU	5292	Powertrain Main Relay Fused Supply Voltage 3	II	—

T8G Ignition Coil 7 (L84/L87)

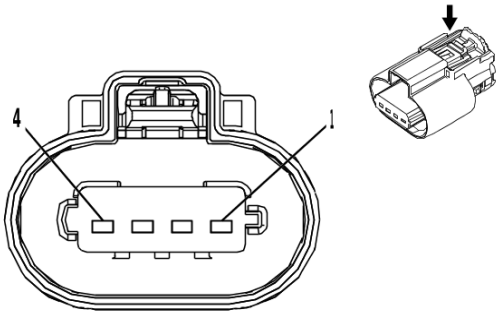

3240115

Connector Part Information

Harness Type: Engine Wiring Harness
OEM Connector: 13863211
Service Connector: Service by Harness - See Part Catalog
Description: 4-Way F 1.5 MX Series, Sealed(BK)

Terminal Part Information

Terminal Type ID	Terminated Lead	Diagnostic Test Probe	Terminal Removal Tool
I	Not required	J-35616-14 (GN)	No Tool Required
II	Not required	J-35616-2A (GY)	No Tool Required

T8G Ignition Coil 7 (L84/L87)

Pin	Size	Color	Circuit	Function	Terminal Type ID	Option
1	1	BK	6150	Engine Odd Bank Ground	II	—
2	0.5	BK / BU	2129	Ignition Control Low Reference Bank 1	I	—
3	0.5	GN / GY	2127	Ignition Control 7	I	—
4	1	VT / BU	5291	Powertrain Main Relay Fused Supply Voltage 2	II	—

T8H Ignition Coil 8 (L84/L87)

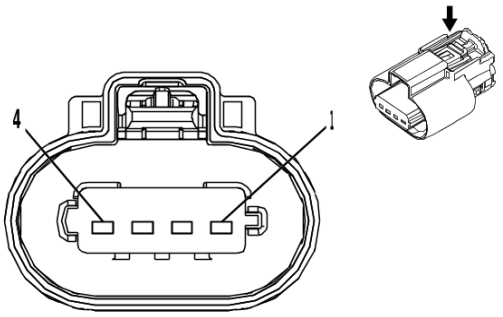

3240115

Connector Part Information

Harness Type: Engine Wiring Harness
OEM Connector: 13863211
Service Connector: Service by Harness - See Part Catalog
Description: 4-Way F 1.5 MX Series, Sealed(BK)

Terminal Part Information

Terminal Type ID	Terminated Lead	Diagnostic Test Probe	Terminal Removal Tool
I	Not required	J-35616-14 (GN)	No Tool Required
II	Not required	J-35616-2A (GY)	No Tool Required

T8H Ignition Coil 8 (L84/L87)

Pin	Size	Color	Circuit	Function	Terminal Type ID	Option
1	1	BK	6450	Engine Even Bank Ground	II	—
2	0.5	BK / GY	2130	Ignition Control Low Reference Bank 2	I	—
3	0.5	VT / WH	2128	Ignition Control 8	I	—
4	1	VT / BU	5292	Powertrain Main Relay Fused Supply Voltage 3	II	—

T10G Low Frequency Rear Bumper Antenna (AVJ)

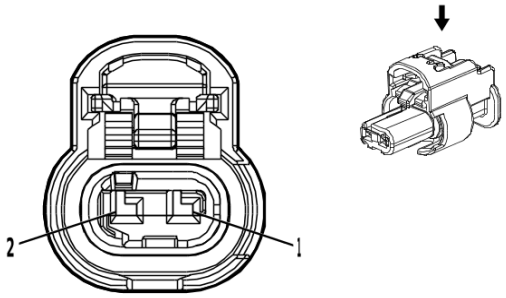

4690744

Connector Part Information

Harness Type: Chassis Wiring Harness
OEM Connector: 33375932
Service Connector: 19366871
Description: 2-Way F 1.2 MCON Series, Sealed(BK)

Terminal Part Information

Terminal Type ID	Terminated Lead	Diagnostic Test Probe	Terminal Removal Tool
I	Not required	J-35616-16 (L-GN)	No Tool Required

T10G Low Frequency Rear Bumper Antenna (AVJ)

Pin	Size	Color	Circuit	Function	Terminal Type ID	Option
1	0.5	BN / GN	3568	Rear Closure Passive Entry Antenna High Signal	I	—
2	0.5	GN / GY	3569	Rear Closure Passive Entry Antenna Low Signal	I	—

T10J Low Frequency Instrument Panel Antenna (-D07)

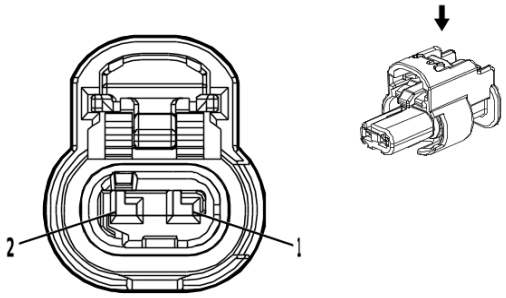

4690744

Connector Part Information

Harness Type: Instrument Panel Wiring Harness
OEM Connector: 33375932
Service Connector: 19366871
Description: 2-Way F 1.2 MCON Series, Sealed(BK)

Terminal Part Information

Terminal Type ID	Terminated Lead	Diagnostic Test Probe	Terminal Removal Tool
I	Not required	J-35616-16 (L-GN)	No Tool Required

T10J Low Frequency Instrument Panel Antenna (-D07)

Pin	Size	Color	Circuit	Function	Terminal Type ID	Option
1	0.35	BN / BK	3552	Interior Passive Entry Antenna 1 High Signal	I	—
2	0.35	WH	3553	Interior Passive Entry Antenna 1 Low Signal	I	—

T10J Low Frequency Instrument Panel Antenna (D07)

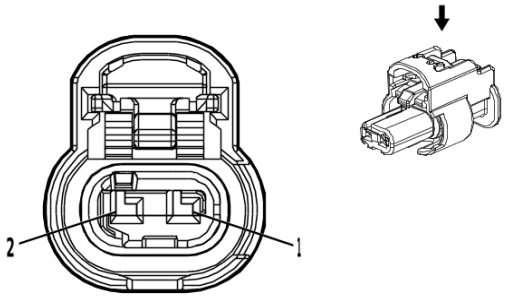

4690744

Connector Part Information

Harness Type: Front Floor Console Wiring Harness
OEM Connector: 33375932
Service Connector: Service by Harness - See Part Catalog
Description: 2-Way F 1.2 MCON Series, Sealed(BK)

Terminal Part Information

Terminal Type ID	Terminated Lead	Diagnostic Test Probe	Terminal Removal Tool
I	Not required	J-35616-16 (L-GN)	No Tool Required

T10J Low Frequency Instrument Panel Antenna (D07)

Pin	Size	Color	Circuit	Function	Terminal Type ID	Option
1	0.35	BN / BK	3552	Interior Passive Entry Antenna 1 High Signal	I	—
2	0.35	WH	3553	Interior Passive Entry Antenna 1 Low Signal	I	—

T10UA Low Frequency Console Antenna (AZ3)

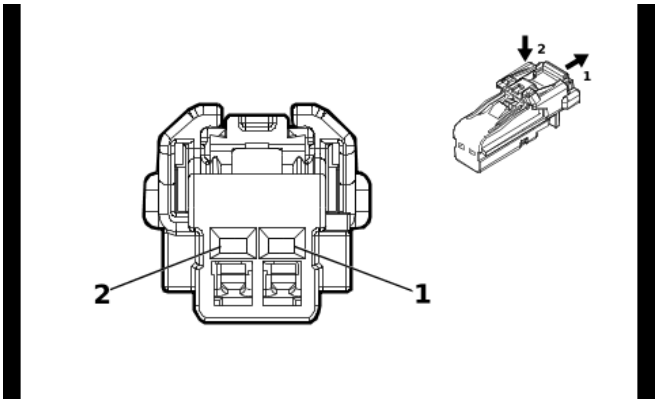

4115691

Connector Part Information

Harness Type: Front Floor Console Wiring Harness
OEM Connector: 35311666
Service Connector: Service by Harness - See Part Catalog
Description: 2-Way F 1.2 MCON Series(BK)

Terminal Part Information

Terminal Type ID	Terminated Lead	Diagnostic Test Probe	Terminal Removal Tool
I	Not required	J-35616-16 (L-GN)	No Tool Required

T10UA Low Frequency Console Antenna (AZ3)

Pin	Size	Color	Circuit	Function	Terminal Type ID	Option
1	0.35	BN / BK	4996	Immobilizer Antenna Signal [+]	I	—
2	0.35	WH / GY	4997	Immobilizer Antenna Low Signal	I	—

T10UA Low Frequency Console Antenna (D07)

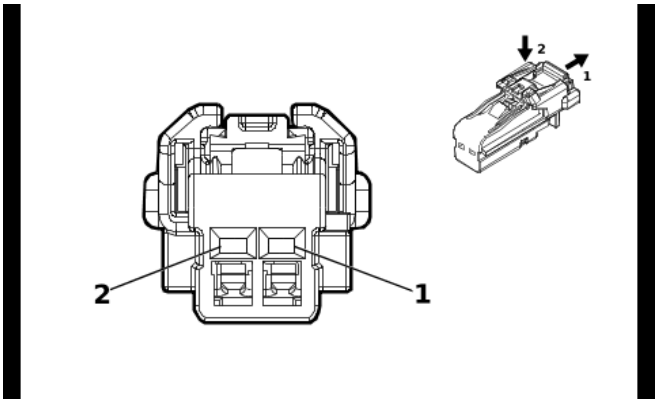

4115691

Connector Part Information

Harness Type: Front Floor Console Wiring Harness
OEM Connector: 35311666
Service Connector: Service by Harness - See Part Catalog
Description: 2-Way F 1.2 MCON Series(BK)

Terminal Part Information

Terminal Type ID	Terminated Lead	Diagnostic Test Probe	Terminal Removal Tool
I	Not required	J-35616-16 (L-GN)	No Tool Required

T10UA Low Frequency Console Antenna (D07)

Pin	Size	Color	Circuit	Function	Terminal Type ID	Option
1	0.35	BN / BK	4996	Immobilizer Antenna Signal [+]	I	—
2	0.35	WH / GY	4997	Immobilizer Antenna Low Signal	I	—

T12 Automatic Transmission X1 (MHT/MQB)

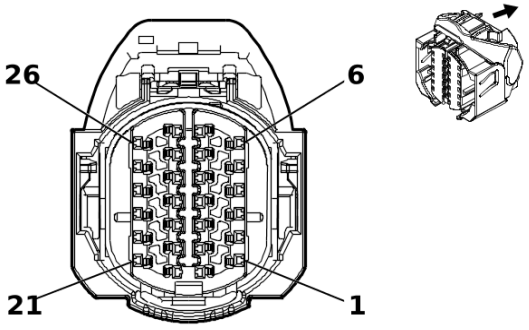

5275597

Connector Part Information

Harness Type: Engine Wiring Harness
OEM Connector: 35345999
Service Connector: 13528029
Description: 26-Way F 1.2 MCON Series, Sealed(BK)

Terminal Part Information

Terminal Type ID	Terminated Lead	Diagnostic Test Probe	Terminal Removal Tool
I	19331733	J-35616-12 (BU)	J-38125-215A
II	84963773	J-35616-12 (BU)	J-38125-215A

T12 Automatic Transmission X1 (MHT/MQB)

Pin	Size	Color	Circuit	Function	Terminal Type ID	Option
1	0.5	GN / YE	6353	Input Speed Signal	I	—
2	0.5	GN / VT	4510	Transmission Intermediate Speed Signal	I	—
3	0.5	BN / WH	6254	Transmission Input Speed Sensor Signal	I	—
4	0.5	GY / BU	6358	Output Speed Signal	I	—
5	0.5	BU / WH	3338	Transmission Internal Mode Switch Mode Control X	I	—
6	0.5	GN / YE	3337	Transmission Internal Mode Switch Mode Control Y	I	—
7	0.5	YE / GN	4170	Transmission Output Shaft Speed Sensor Circuit 9V Reference	I	—
8	0.5	YE / BU	4171	Transmission Input Shaft Speed Sensor Circuit 9V Reference	I	—
9	0.5	GY / BN	6388	Transmission High Side Driver 2 Control	I	—
10	1.5	RD / GY	8540	Battery Positive Voltage	II	—
11	0.5	GN / GY	6387	Transmission High Side Driver 1 Control	I	—
12	0.5	WH / RD	480	Engine Control Vehicle Sensors 5 Volt Reference 1	I	—
13	0.5	BN / WH	585	Transmission Fluid Temperature Sensor Signal	I	—
14	0.5	YE / BN	6404	Clutch Solenoid Valve E Control	I	—
15	0.5	GY / GN	6403	Clutch Solenoid Valve D Control	I	—
16	0.5	GY	6402	Clutch Solenoid Valve C Control	I	—
17	1.5	BK	450	Ground	II	—
18	0.5	GN / WH	2968	Transmission Auxiliary Fluid Pump Control	I	—

T12 Automatic Transmission X1 (MHT/MQB) (cont'd)

Pin	Size	Color	Circuit	Function	Terminal Type ID	Option
19	0.5	GN / BK	7819	Default Disable Solenoid Control	I	—
20	0.5	BK / GY	626	Engine Control Vehicle Sensors Low Reference 1	I	—
21	0.5	VT	4509	Transmission Clutch F Control	I	—
22	0.5	WH / BU	4507	Transmission Clutch H Control	I	—
23	0.5	WH	4508	Transmission Clutch G Control	I	—
24	0.5	GN / WH	1530	Transmission Line Pressure Control Solenoid Valve Control	I	—
25	0.5	VT / WH	422	Torque Converter Clutch Solenoid Valve Control	I	—
26	0.5	BK / BN	586	Transmission Fluid Temperature Sensor Low Reference	I	—

T12 Automatic Transmission Assembly X2 (MHS/MQC)

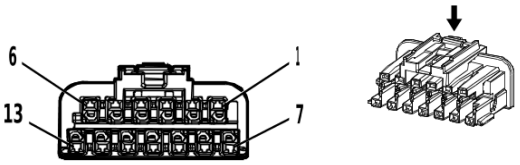

4757907

Connector Part Information

Harness Type: Automatic Transmission Wiring Harness - Case
OEM Connector: 2203990-1
Service Connector: Service by Harness - See Part Catalog
Description: 13-Way F 1.2 MCON Series(BN)

Terminal Part Information

Terminal Type ID	Terminated Lead	Diagnostic Test Probe	Terminal Removal Tool
I	Not required	J-35616-16 (LT GN)	No Tool Required

T12 Automatic Transmission Assembly X2 (MHS/MQC)

Pin	Size	Color	Circuit	Function	Terminal Type ID	Option
1	0.5	YE / GY	6319	Electronic Transmission Range Select Out of Park Switch 2 Signal	I	—
2	0.5	YE	6317	Electronic Transmission Range Select Out of Park Switch Signal	I	—
3	0.5	YE / OG	6358	Output Speed Signal	I	—
4	0.5	WH / BU	4510	Transmission Intermediate Speed Signal	I	—
5	0.5	VT / GN	4174	Transmission Speed Input High Signal	I	—
6	0.5	WH / VT	6353	Input Speed Signal	I	—
7	0.5	BN / YE	585	Transmission Fluid Temperature Sensor Signal	I	—
8	0.5	OG	7553	Park Lock Solenoid Actuator Control	I	—
9	0.5	BN	6387	Transmission High Side Driver 1 Control	I	—
10	1.5	GN / VT	8640	Battery Positive Voltage	I	—
11	0.5	WH	6388	Transmission High Side Driver 2 Control	I	—
12	0.5	BU	4171	Transmission Input Shaft Speed Sensor Circuit 9V Reference	I	—
13	0.5	GN	4170	Transmission Output Shaft Speed Sensor Circuit 9V Reference	I	—

T12 Automatic Transmission Assembly X2 (MHT/MQB)

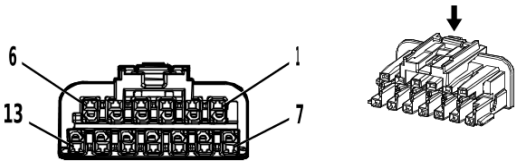

4757907

Connector Part Information

Harness Type: Automatic Transmission Wiring Harness - Case
OEM Connector: 2203990-1
Service Connector: Service by Harness - See Part Catalog
Description: 13-Way F 1.2 MCON Series(BN)

Terminal Part Information

Terminal Type ID	Terminated Lead	Diagnostic Test Probe	Terminal Removal Tool
I	Not required	J-35616-16 (LT GN)	No Tool Required

T12 Automatic Transmission Assembly X2 (MHT/MQB)

Pin	Size	Color	Circuit	Function	Terminal Type ID	Option
1	0.5	YE / GY	5726	Ignition Mode Switch Mode Control Backup	I	—
2	0.5	YE	5724	Ignition Mode Switch Mode Control	I	—
3	0.5	YE / OG	6358	Output Speed Signal	I	—
4	0.5	WH / BU	4510	Transmission Intermediate Speed Signal	I	—
5	0.5	VT / GN	4174	Transmission Speed Input High Signal	I	—
6	0.5	WH / VT	6353	Input Speed Signal	I	—
7	0.5	BN / YE	585	Transmission Fluid Temperature Sensor Signal	I	—
8	0.5	OG	4162	Transmission Fluid Pressure Sensor 1 Circuit 5V Reference	I	—
9	0.5	BN	6387	Transmission High Side Driver 1 Control	I	—
10	1.5	GN / VT	8640	Battery Positive Voltage	I	—
11	0.5	WH	6388	Transmission High Side Driver 2 Control	I	—
12	0.5	BU	4171	Transmission Input Shaft Speed Sensor Circuit 9V Reference	I	—
13	0.5	GN	4170	Transmission Output Shaft Speed Sensor Circuit 9V Reference	I	—

T12 Automatic Transmission Assembly X3 (MHS/MQC)

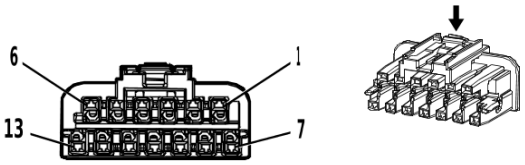

4757999

Connector Part Information

Harness Type: Automatic Transmission Wiring Harness - Case
OEM Connector: 2203990-2
Service Connector: Service by Harness - See Part Catalog
Description: 13-Way F 1.2 MCON Series(BN)

Terminal Part Information

Terminal Type ID	Terminated Lead	Diagnostic Test Probe	Terminal Removal Tool
I	Not required	J-35616-16 (LT GN)	No Tool Required

T12 Automatic Transmission Assembly X3 (MHS/MQC)

Pin	Size	Color	Circuit	Function	Terminal Type ID	Option
1	0.5	BN / WH	4509	Transmission Clutch F Control	I	—
2	0.5	YE / VT	4507	Transmission Clutch H Control	I	—
3	0.5	BU / GY	4508	Transmission Clutch G Control	I	—
4	0.5	GN / OG	1530	Transmission Line Pressure Control Solenoid Valve Control	I	—
5	0.5	GY / BN	422	Torque Converter Clutch Solenoid Valve Control	I	—
6	0.5	BU / BN	1147	Transmission Shift Inhibit Signal	I	—
7	0.5	BU / GN	6404	Clutch Solenoid Valve E Control	I	—
8	0.5	GN / BN	6403	Clutch Solenoid Valve D Control	I	—
9	0.5	GY	6402	Clutch Solenoid Valve C Control	I	—
10	1.5	BK / YE	450	Ground	I	—
11	0.5	GY / OG	2968	Transmission Auxiliary Fluid Pump Control	I	—
12	0.5	VT	7819	Default Disable Solenoid Control	I	—
13	0.5	BK / GY	3706	Electronic Transmission Range Select Switch Analog Signal 1	I	—

T12 Automatic Transmission Assembly X3 (MHT/MQB)

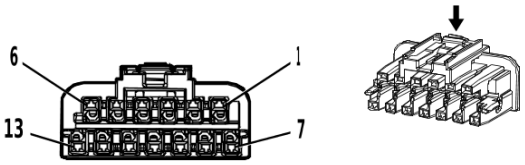

4757999

Connector Part Information

Harness Type: Automatic Transmission Wiring Harness - Case
OEM Connector: 2203990-2
Service Connector: Service by Harness - See Part Catalog
Description: 13-Way F 1.2 MCON Series(BN)

Terminal Part Information

Terminal Type ID	Terminated Lead	Diagnostic Test Probe	Terminal Removal Tool
I	Not required	J-35616-16 (LT GN)	No Tool Required

T12 Automatic Transmission Assembly X3 (MHT/MQB)

Pin	Size	Color	Circuit	Function	Terminal Type ID	Option
1	0.5	BN / WH	4509	Transmission Clutch F Control	I	—
2	0.5	YE / VT	4507	Transmission Clutch H Control	I	—
3	0.5	BU / GY	4508	Transmission Clutch G Control	I	—
4	0.5	GN / OG	1530	Transmission Line Pressure Control Solenoid Valve Control	I	—
5	0.5	GY / BN	422	Torque Converter Clutch Solenoid Valve Control	I	—
6	0.5	BU / BN	1147	Transmission Shift Inhibit Signal	I	—
7	0.5	BU / GN	6404	Clutch Solenoid Valve E Control	I	—
8	0.5	GN / BN	6403	Clutch Solenoid Valve D Control	I	—
9	0.5	GY	6402	Clutch Solenoid Valve C Control	I	—
10	1.5	BK / YE	150	Ground	I	—
11	0.5	GY / OG	2968	Transmission Auxiliary Fluid Pump Control	I	—
12	0.5	VT	7819	Default Disable Solenoid Control	I	—
13	0.5	BK / GY	3927	Transmission Internal Mode Switch Feedback Signal	I	—

T19 Multifunction Power Supply Converter

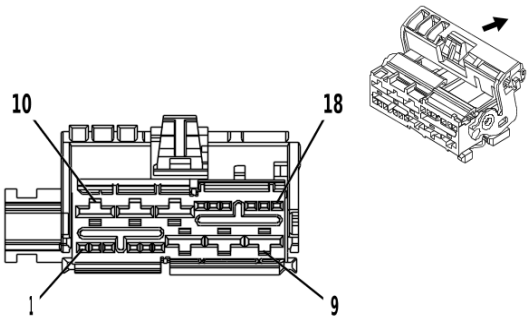

3825662

Connector Part Information

Harness Type: Body Wiring Harness
OEM Connector: 35176467
Service Connector: 84789277
Description: 18-Way F 0.64 MTS, 6.3 MCP Series(BK)

Terminal Part Information

Terminal Type ID	Terminated Lead	Diagnostic Test Probe	Terminal Removal Tool
I	19300632	J-35616-64B (L-BU)	J-38125-215A
II	19367600	J-35616-42 (RD)	J-38125-556

T19 Multifunction Power Supply Converter

Pin	Size	Color	Circuit	Function	Terminal Type ID	Option
1 - 3	—	—	—	Not Occupied	—	—
4	0.35 0.5	VT / GN VT / GN	4320 4320	Powertrain Sensor Bus Enable Powertrain Sensor Bus Enable	I I	D07+ FJW-L3B- L84- L87+ (MQC/ MHS) D07+ HX+ (MQC/ MHS)
5	0.5	YE / BK	625	Starter Enable Relay Control	I	—
6	—	—	—	Not Occupied	—	—
7	2.5	BK	1350	Ground	II	—
8	2.5	RD / YE	8140	Battery Positive Voltage	II	—
9	2.5	RD / GN	2173	12V Regulated Supply Voltage 2	II	—
10	2.5	RD / YE	2172	12V Regulated Supply Voltage 1	II	—
11	2.5	RD / WH	8040	Battery Positive Voltage	II	—
12	2.5	BK	1350	Ground	II	—
13	0.5	BU / GY	4054	Private Serial Data Powertrain CAN Bus [-] Serial Data	I	—
14	0.5	BU / GY	4054	Private Serial Data Powertrain CAN Bus [-] Serial Data	I	—
15	0.5	WH	4055	Private Serial Data Powertrain CAN Bus [+] Serial Data	I	—
16	0.5	WH	4055	Private Serial Data Powertrain CAN Bus [+] Serial Data	I	—
17 - 18	—	—	—	Not Occupied	—	—

T22 Wireless Accessory Charging Module (K4C)

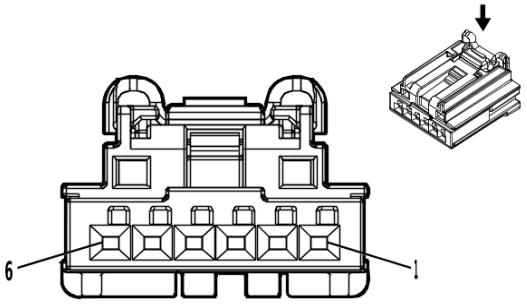

5020940

Connector Part Information

Harness Type: Front Floor Console Wiring Harness
OEM Connector: 13920634
Service Connector: Service by Harness - See Part Catalog
Description: 6-Way F 0.64 Generation Y Series(BK)

Terminal Part Information

Terminal Type ID	Terminated Lead	Diagnostic Test Probe	Terminal Removal Tool
I	Not required	J-35616-64B (L-BU)	No Tool Required

T22 Wireless Accessory Charging Module (K4C)

Pin	Size	Color	Circuit	Function	Terminal Type ID	Option
1	0.5	RD / VT	2640	Battery Positive Voltage	I	—
2	0.5	BK	1350	Ground	I	—
3	0.5	BU / YE	4984	AUTOSAR CAN Bus [-] 5 Serial Data	I	—
4	0.5	BU / WH	4985	AUTOSAR CAN Bus [+] 5 Serial Data	I	—
5	0.5	BU / YE	4984	AUTOSAR CAN Bus [-] 5 Serial Data	I	—
6	0.5	BU / WH	4985	AUTOSAR CAN Bus [+] 5 Serial Data	I	—

X80G Accessory Power Receptacle - Instrument Panel (KC5)

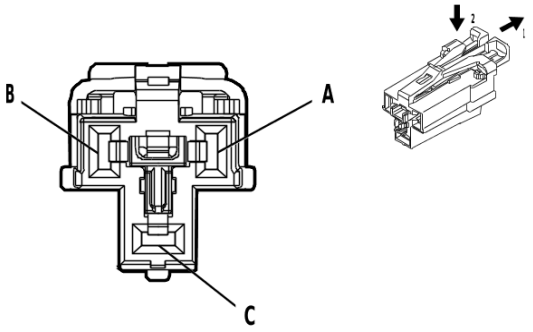

4872413

Connector Part Information

Harness Type: Instrument Panel Wiring Harness
OEM Connector: 33386302
Service Connector: 19369281
Description: 3-Way F 2.8 APEX Series(GY)

Terminal Part Information

Terminal Type ID	Terminated Lead	Diagnostic Test Probe	Terminal Removal Tool
I	Not required	J-35616-35 (VT)	No Tool Required

X80G Accessory Power Receptacle - Instrument Panel (KC5)

Pin	Size	Color	Circuit	Function	Terminal Type ID	Option
A	1.5	VT	1001	Retained Accessory Power Ignition Voltage	I	—
B	—	—	—	Not Occupied	—	—
C	1.5	BK	1050	Ground	I	—

X81ACA Front Floor Console Accessory Power Rear Receptacle - 110V AC (KI4)

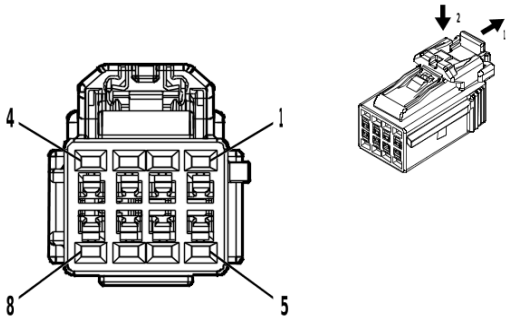

5086387

Connector Part Information

Harness Type: Front Floor Console Wiring Harness
OEM Connector: 35029311
Service Connector: Service by Harness - See Part Catalog
Description: 8-Way F 1.2 Series(BK)

Terminal Part Information

Terminal Type ID	Terminated Lead	Diagnostic Test Probe	Terminal Removal Tool
I	Not required	J-35616-16 (L-GN)	No Tool Required

X81ACA Front Floor Console Accessory Power Rear Receptacle - 110V AC (KI4)

Pin	Size	Color	Circuit	Function	Terminal Type ID	Option
1	0.75	BK	10117	AC Outlet Phase A Control	I	—
2	—	—	—	Not Occupied	—	—
3	0.5	VT / RD	4049	AC Power Outlet Sensor High Reference	I	—
4	0.5	BU / BN	6807	DC/AC Inverter Control	I	—
5	0.75	RD	10118	AC Outlet Phase B Control	I	—
6	—	—	—	Not Occupied	—	—
7	0.5	BK	1350	Ground	I	—
8	0.35	YE	6817	LED Backlight Dimming Control 1	I	—

X81AI Accessory Power Receptacle - Instrument Panel 110V AC (KI4-AZ3-D07)

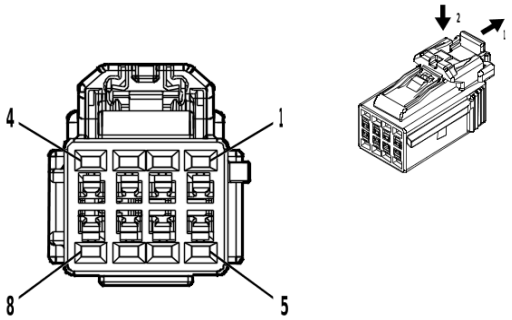

5086387

Connector Part Information

Harness Type: Instrument Panel Wiring Harness
OEM Connector: 35029311
Service Connector: 84613126
Description: 8-Way F 1.2 Series(BK)

Terminal Part Information

Terminal Type ID	Terminated Lead	Diagnostic Test Probe	Terminal Removal Tool
I	Not required	J-35616-12 (BU)	No Tool Required
II	Not required	J-35616-16 (L-GN)	No Tool Required

X81AI Accessory Power Receptacle - Instrument Panel 110V AC (KI4-AZ3-D07)

Pin	Size	Color	Circuit	Function	Terminal Type ID	Option
1	0.75	BK	10117	AC Outlet Phase A Control	II	—
2	—	—	—	Not Occupied	—	—
3	0.5	VT / RD	4049	AC Power Outlet Sensor High Reference	II	—
4	0.5	BU / BN	6807	DC/AC Inverter Control	II	—
5	0.75	RD	10118	AC Outlet Phase B Control	II	—
6	—	—	—	Not Occupied	—	—
7	0.5	BK / WH	851	Signal Ground	II	—
8	0.35	YE	6817	LED Backlight Dimming Control 1	I	—

X81BCA Front Floor Console Accessory Power Rear Receptacle - 220V AC (KI5)

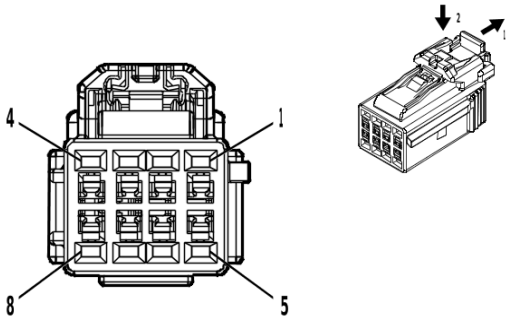

5086387

Connector Part Information

Harness Type: Front Floor Console Wiring Harness
OEM Connector: 35029311
Service Connector: Service by Harness - See Part Catalog
Description: 8-Way F 1.2 Series(BK)

Terminal Part Information

Terminal Type ID	Terminated Lead	Diagnostic Test Probe	Terminal Removal Tool
I	Not required	J-35616-16 (L-GN)	No Tool Required

X81BCA Front Floor Console Accessory Power Rear Receptacle - 220V AC (KI5)

Pin	Size	Color	Circuit	Function	Terminal Type ID	Option
1	0.75	BK	10117	AC Outlet Phase A Control	I	—
2	—	—	—	Not Occupied	—	—
3	0.5	VT / RD	4049	AC Power Outlet Sensor High Reference	I	—
4	0.5	BU / BN	6807	DC/AC Inverter Control	I	—
5	0.75	RD	10118	AC Outlet Phase B Control	I	—
6	—	—	—	Not Occupied	—	—
7	0.5	BK	1350	Ground	I	—
8	0.35	YE	6817	LED Backlight Dimming Control 1	I	—

X81BI Accessory Power Receptacle - Instrument Panel 220V AC (KI5-AZ3-D07)

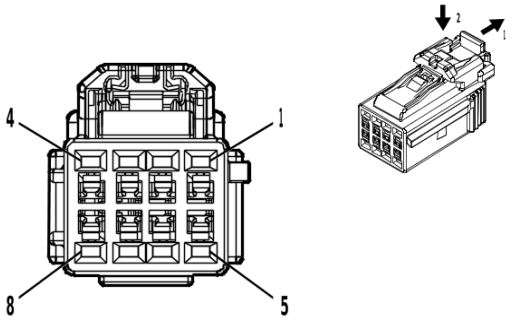

5086387

Connector Part Information

Harness Type: Instrument Panel Wiring Harness
OEM Connector: 35029311
Service Connector: 84613126
Description: 8-Way F 1.2 Series(BK)

Terminal Part Information

Terminal Type ID	Terminated Lead	Diagnostic Test Probe	Terminal Removal Tool
I	Not required	J-35616-12 (BU)	No Tool Required
II	Not required	J-35616-16 (L-GN)	No Tool Required

X81BI Accessory Power Receptacle - Instrument Panel 220V AC (KI5-AZ3-D07)

Pin	Size	Color	Circuit	Function	Terminal Type ID	Option
1	0.75	BK	10117	AC Outlet Phase A Control	II	—
2	—	—	—	Not Occupied	—	—
3	0.5	VT / RD	4049	AC Power Outlet Sensor High Reference	II	—
4	0.5	BU / BN	6807	DC/AC Inverter Control	II	—
5	0.75	RD	10118	AC Outlet Phase B Control	II	—
6	—	—	—	Not Occupied	—	—
7	0.5	BK / WH	851	Signal Ground	II	—
8	0.35	YE	6817	LED Backlight Dimming Control 1	I	—

X81BP Pickup Box Accessory Power Receptacle - 220V AC (KC9/KCA)

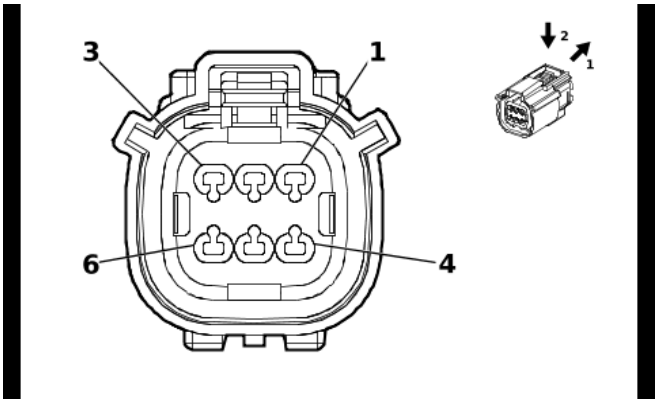

5666225

Connector Part Information

Harness Type: Chassis Rear Wiring Harness
OEM Connector: 35081273
Service Connector: Service by Harness - See Part Catalog
Description: 6-Way F 1.5 MX Series, Sealed(BK)

Terminal Part Information

Terminal Type ID	Terminated Lead	Diagnostic Test Probe	Terminal Removal Tool
I	Not required	J-35616-2A (GY)	No Tool Required

X81BP Pickup Box Accessory Power Receptacle - 220V AC (KC9/KCA)

Pin	Size	Color	Circuit	Function	Terminal Type ID	Option
1	0.5	VT / RD	4049	AC Power Outlet Sensor High Reference	I	—
2	0.5	GN / BN	2266	DC/AC Inverter Control 2	I	—
3	—	—	—	Not Occupied	—	—
4	0.75	BK / WH	10120	AC Outlet 2 Phase A Control	I	—
5	0.5	BK	1750	Ground	I	—
6	0.75	RD / WH	10121	AC Outlet 2 Phase B Control	I	—

X83B Audio/Video Receptacle X1

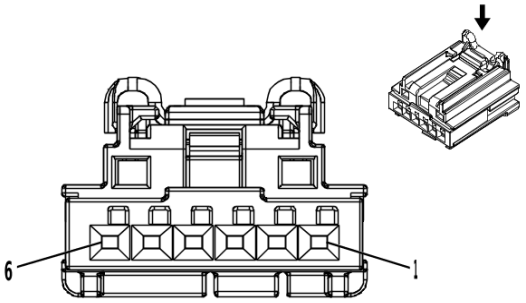

3960313

Connector Part Information

Harness Type: Instrument Panel Wiring Harness
OEM Connector: 13920633
Service Connector: 19332786
Description: 6-Way F 0.64 Generation Y Series(BK)

Terminal Part Information

Terminal Type ID	Terminated Lead	Diagnostic Test Probe	Terminal Removal Tool
I	Not required	J-35616-64B (L-BU)	No Tool Required

X83B Audio/Video Receptacle X1

Pin	Size	Color	Circuit	Function	Terminal Type ID	Option
1	0.5	RD / VT	2640	Battery Positive Voltage	I	—
2	0.5	YE	6817	LED Backlight Dimming Control 1	I	—
3	0.75	BK / WH	1051	Signal Ground	I	—
4 - 6	—	—	—	Not Occupied	—	—

X83B Audio/Video Receptacle X2 (-D07)

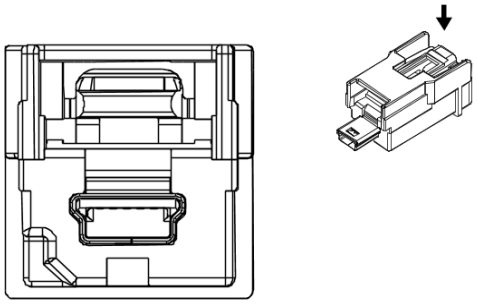

2807491

Connector Part Information

Harness Type: Instrument Panel Wiring Harness USB
OEM Connector: 13946577
Service Connector: Service by Cable Assembly — See Part Catalog
Description: 5-Way M 2.0 Mini-B USB Type(GY)

Terminal Part Information

Terminal Type ID	Terminated Lead	Diagnostic Test Probe	Terminal Removal Tool
I	Not required	No Tool Required	No Tool Required

X83B Audio/Video Receptacle X2 (-D07)

Pin	Size	Color	Circuit	Function	Terminal Type ID	Option
—	—	USB	—	USB Serial Data	I	—

X83B Audio/Video Receptacle X2 (D07)

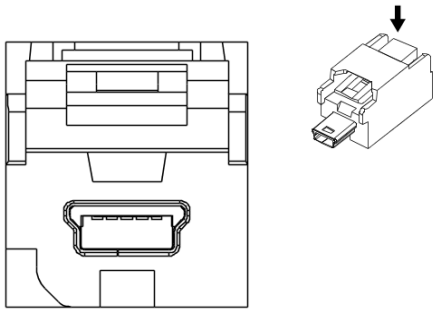

3214018

Connector Part Information

Harness Type: Front Floor Console Wiring Harness USB
OEM Connector: 13890926
Service Connector: Service by Cable Assembly — See Part Catalog
Description: 5-Way M 2.0 Mini-B USB Type(GY)

Terminal Part Information

Terminal Type ID	Terminated Lead	Diagnostic Test Probe	Terminal Removal Tool
I	Not required	No Tool Required	No Tool Required

X83B Audio/Video Receptacle X2 (D07)

Pin	Size	Color	Circuit	Function	Terminal Type ID	Option
—	—	USB	—	USB Serial Data	I	—

X83B Audio/Video Receptacle X3

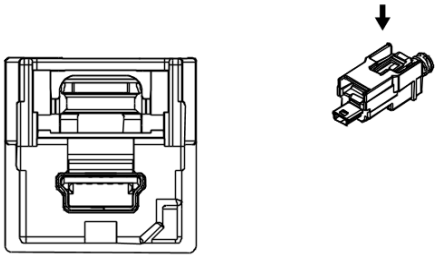

2807425

Connector Part Information

Harness Type: Instrument Panel Wiring Harness USB
OEM Connector: VP000109
Service Connector: Service by Cable Assembly — See Part Catalog
Description: 5-Way M 2.0 Mini-B USB Type(BK)

Terminal Part Information

Terminal Type ID	Terminated Lead	Diagnostic Test Probe	Terminal Removal Tool
I	Not required	No Tool Required	No Tool Required

X83B Audio/Video Receptacle X3

Pin	Size	Color	Circuit	Function	Terminal Type ID	Option
—	—	USB	—	USB Serial Data	I	—

X84 Data Link Connector

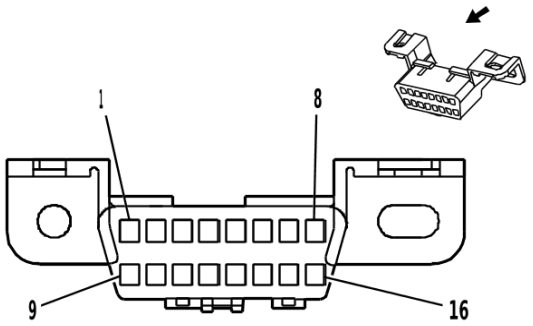

68793

Connector Part Information

Harness Type: Instrument Panel Wiring Harness
OEM Connector: 12110250
Service Connector: 12110250
Description: 16-Way F 150 Metri-Pack Series(BK)

Terminal Part Information

Terminal Type ID	Terminated Lead	Diagnostic Test Probe	Terminal Removal Tool
I	13580059	J-35616-14 (GN)	J-38125-12A

X84 Data Link Connector

Pin	Size	Color	Circuit	Function	Terminal Type ID	Option
1	0.35	BU / BN	4983	AUTOSAR CAN Bus [+] 7 Serial Data	I	—
2	0.35	GN	2578	Private Serial Data Presentation CAN Bus [+] 1 Serial Data	I	—
3	0.35	BU	4973	Ethernet Bus 1R [+]	I	—
4	0.5	BK	1050	Ground	I	—
5	0.5	BK / WH	851	Signal Ground	I	—
6	0.35	YE	4981	AUTOSAR CAN Bus [+] 6 Serial Data	I	—
7	0.35	VT	2580	Private Serial Data Presentation CAN Bus [+] 2 Serial Data	I	—
8	0.35	WH	7207	Ethernet Bus 1 Enable Signal	I	—
9	0.35	WH	4982	AUTOSAR CAN Bus [-] 7 Serial Data	I	—
10	0.35	BN	2577	Private Serial Data Presentation CAN Bus [-] 1 Serial Data	I	—
11	0.35	YE	4972	Ethernet Bus 1R [-]	I	—
12	0.35	WH	4975	Ethernet Bus 1T [+]	I	—
13	0.35	GN	4974	Ethernet Bus 1T [-]	I	—
14	0.35	WH	4980	AUTOSAR CAN Bus [-] 6 Serial Data	I	—
15	0.35	GY	2579	Private Serial Data Presentation CAN Bus [-] 2 Serial Data	I	—
16	0.5	RD / YE	6540	Battery Positive Voltage	I	—

X85 Steering Wheel Airbag Coil X1 (N37)

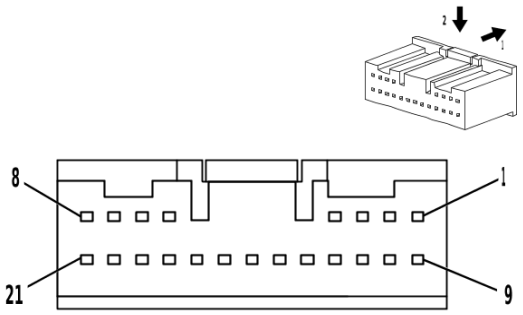

3960237

Connector Part Information

Harness Type: Instrument Panel Wiring Harness
OEM Connector: 33291416
Service Connector: 13510218
Description: 21-Way F 0.64 Series(YE)

Terminal Part Information

Terminal Type ID	Terminated Lead	Diagnostic Test Probe	Terminal Removal Tool
I	13575742	J-35616-64B (L-BU)	J-38125-215A
II	13575865	J-35616-64B (L-BU)	J-38125-215A

X85 Steering Wheel Airbag Coil X1 (N37)

Pin	Size	Color	Circuit	Function	Terminal Type ID	Option
1	0.5	BK / WH	851	Signal Ground	I	—
2	0.35	GN / WH	3287	Horn Switch Signal	I	—
3 - 4	—	—	—	Not Occupied	—	—
5	0.5	OG / GN	3023	Steering Wheel Air Bag Stage 2 High Control	II	—
6	0.5	WH / OG	3022	Steering Wheel Air Bag Stage 2 Low Control	II	—
7	0.5	BN / OG	3020	Steering Wheel Air Bag Stage 1 Low Control	II	—
8	0.5	OG / VT	3021	Steering Wheel Air Bag Stage 1 High Control	II	—
9	0.5	GN / BK	3894	Instrument Panel Cluster Control Module LIN Bus 1	I	—
10	0.35	GN / BK	2858	Body Control Module LIN Bus 12	I	—
11	0.35	BN / GN	1884	Cruise Control Set/Coast/Resume/Accelerate Switch Signal	I	—
12	0.35 0.5	BK / VT BK / VT	1449 1449	Steering Wheel Resistor Ladder Low Reference Steering Wheel Resistor Ladder Low Reference	I I	(K34/ KSG/ UEU) - N38- URC URC- N38+ (K34/ KSG/ UEU)
13	—	—	—	Not Occupied	—	—
14	0.5	RD / GN	5140	Battery Positive Voltage	I	—
15	0.35	GY / GN	5737	Distance Sensing Cruise Control Gap Up/Down Switch Signal	I	—
16	0.35	VT / YE	5526	Tap Up/Tap Down Switch Signal	I	—
17	0.35	YE	6817	LED Backlight Dimming Control 1	I	—

X85 Steering Wheel Airbag Coil X1 (N37) (cont'd)

Pin	Size	Color	Circuit	Function	Terminal Type ID	Option
18 - 19	—	—	—	Not Occupied	—	—
20	0.5	BK	1050	Ground	I	—
21	0.5	RD / BN	10040	Secondary Fused Battery Positive Voltage	I	—

X85 Steering Wheel Airbag Coil X1 (N38)

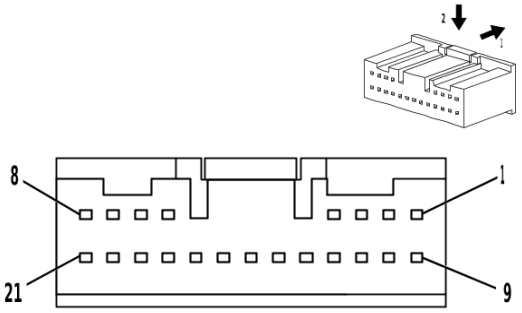

3960237

Connector Part Information

Harness Type: Instrument Panel Wiring Harness
OEM Connector: 33291416
Service Connector: 13510218
Description: 21-Way F 0.64 Series(YE)

Terminal Part Information

Terminal Type ID	Terminated Lead	Diagnostic Test Probe	Terminal Removal Tool
I	13575742	J-35616-64B (L-BU)	J-38125-215A
II	13575865	J-35616-64B (L-BU)	J-38125-215A

X85 Steering Wheel Airbag Coil X1 (N38)

Pin	Size	Color	Circuit	Function	Terminal Type ID	Option
1	0.5	BK / WH	851	Signal Ground	I	—
2	0.35	GN / WH	3287	Horn Switch Signal	I	—
3 - 4	—	—	—	Not Occupied	—	—
5	0.5	OG / GN	3023	Steering Wheel Air Bag Stage 2 High Control	II	—
6	0.5	WH / OG	3022	Steering Wheel Air Bag Stage 2 Low Control	II	—
7	0.5	BN / OG	3020	Steering Wheel Air Bag Stage 1 Low Control	II	—
8	0.5	OG / VT	3021	Steering Wheel Air Bag Stage 1 High Control	II	—
9	0.5	GN / BK	3894	Instrument Panel Cluster Control Module LIN Bus 1	I	—
10	0.5 0.35	GN / GY GN / BK	4627 2858	Image Processing Module LIN Bus 1 Body Control Module LIN Bus 12	I I	D07+ UKL KI3+ N38- UKL
11	0.35	BN / GN	1884	Cruise Control Set/Coast/Resume/Accelerate Switch Signal	I	—
12	0.5	BK / VT	1449	Steering Wheel Resistor Ladder Low Reference	I	—
13	0.35	WH / VT	2246	Driver Illumination Lamp 1 Control	I	—
14	0.5	RD / GN	5140	Battery Positive Voltage	I	—
15	0.35	GY / GN	5737	Distance Sensing Cruise Control Gap Up/Down Switch Signal	I	—
16	0.35	VT / YE	5526	Tap Up/Tap Down Switch Signal	I	—
17	0.35	YE / BU	2245	Driver Illumination Lamp 2 Control	I	—
18	0.35	BU / BN	7744	Driver Illumination Lamp Ground	I	—
19	—	—	—	Not Occupied	—	—

X85 Steering Wheel Airbag Coil X1 (N38) (cont'd)

Pin	Size	Color	Circuit	Function	Terminal Type ID	Option
20	0.5	BK	1050	Ground	I	—
21	0.5	RD / BN	10040	Secondary Fused Battery Positive Voltage	I	—

X85 Steering Wheel Airbag Coil X2

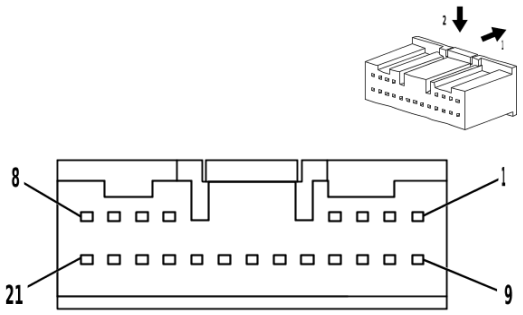

3960237

Connector Part Information

Harness Type: Steering Wheel Horn Switch Wiring Harness
OEM Connector: 13510218
Service Connector: Service by Harness - See Part Catalog
Description: 21-Way F 0.64 Series(YE)

Terminal Part Information

Terminal Type ID	Terminated Lead	Diagnostic Test Probe	Terminal Removal Tool
I	Not required	J-35616-64B (L-BU)	No Tool Required

X85 Steering Wheel Airbag Coil X2

Pin	Size	Color	Circuit	Function	Terminal Type ID	Option
1	0.35	BK / WH	6051	Steering Wheel Ground	I	—
2	0.35	GN / WH	3287	Horn Switch Signal	I	—
3 - 4	—	—	—	Not Occupied	—	—
5	0.5	OG / GN	3023	Steering Wheel Air Bag Stage 2 High Control	I	—
6	0.5	WH / OG	3022	Steering Wheel Air Bag Stage 2 Low Control	I	—
7	0.5	BN / OG	3020	Steering Wheel Air Bag Stage 1 Low Control	I	—
8	0.5	OG / VT	3021	Steering Wheel Air Bag Stage 1 High Control	I	—
9	0.5	RD / BN	10040	Secondary Fused Battery Positive Voltage	I	KI3
10	0.5	BK	6050	Steering Wheel Ground	I	KI3
11 - 13	—	—	—	Not Occupied	—	—
14	0.35	VT / YE	5526	Tap Up/Tap Down Switch Signal	I	—
15	0.35	GY / GN	5737	Distance Sensing Cruise Control Gap Up/Down Switch Signal	I	—
16	0.35	RD / GN	5140	Battery Positive Voltage	I	—
17	—	—	—	Not Occupied	—	—
18	0.35	BK / VT	1449	Steering Wheel Resistor Ladder Low Reference	I	—
19	0.35	BN / GN	1884	Cruise Control Set/Coast/Resume/Accelerate Switch Signal	I	—
20	0.35	GN / BK	2858	Body Control Module LIN Bus 12	I	KI3
21	0.35	GN / BK	3894	Instrument Panel Cluster Control Module LIN Bus 1	I	—

X88B Tow Vehicle Electrical Receptacle X1 (Z82)

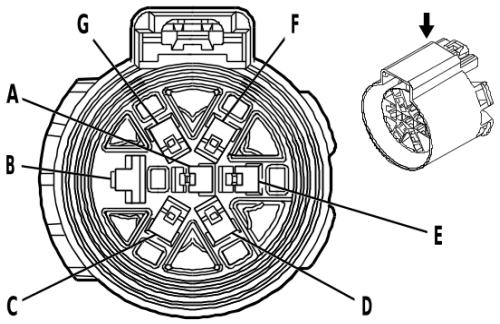

2056936

Connector Part Information

Harness Type: Chassis Wiring Harness
OEM Connector: 13857223
Service Connector: 86816072
Description: 7-Way F 280, 630 Metri-Pack Series, Sealed(BK)

Terminal Part Information

Terminal Type ID	Terminated Lead	Diagnostic Test Probe	Terminal Removal Tool
I	Not required	J-35616-42 (RD)	No Tool Required
II	Not required	J-35616-4A (PU)	No Tool Required

X88B Tow Vehicle Electrical Receptacle X1 (Z82)

Pin	Size	Color	Circuit	Function	Terminal Type ID	Option
A	1	GY	5189	Trailer Backup Lamp Control	II	UET
	1	GY	1624	Trailer Backup Lamp Control	II	- UET
B	5	WH	22	Trailer Ground	I	—
C	2.5	BU	47	Trailer Auxiliary Control	II	—
D	1	GN	1619	Right Rear Trailer Stop/Turn Lamp Control	II	—
E	4	OG	3940	Battery Positive Voltage	II	—
F	1	BN	2109	Trailer Park Lamp Control	II	UET
	1.5	BN	2109	Trailer Park Lamp Control	II	- UET
G	1	YE	1618	Left Rear Trailer Stop/Turn Lamp Control	II	—

X88B Tow Vehicle Electrical Receptacle X2 (TRG)

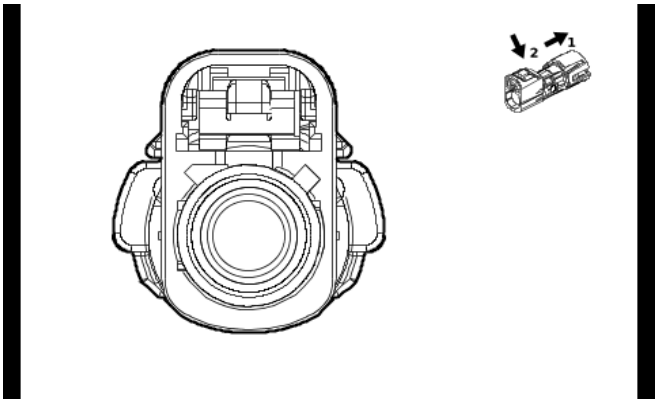

5758030

Connector Part Information

Harness Type: Chassis Wiring Harness COAX
OEM Connector: 35187032
Service Connector: Service by Cable Assembly — See Part Catalog
Description: 1-Way F Coax Type(BK)

Terminal Part Information

Terminal Type ID	Terminated Lead	Diagnostic Test Probe	Terminal Removal Tool
I	Not required	No Tool Required	No Tool Required

X88B Tow Vehicle Electrical Receptacle X2 (TRG)

Pin	Size	Color	Circuit	Function	Terminal Type ID	Option
—	—	Coax Cable	—	Rear Vision Camera Coaxial Video Signal	I	—

X88B Tow Vehicle Electrical Receptacle X3 (TRG)

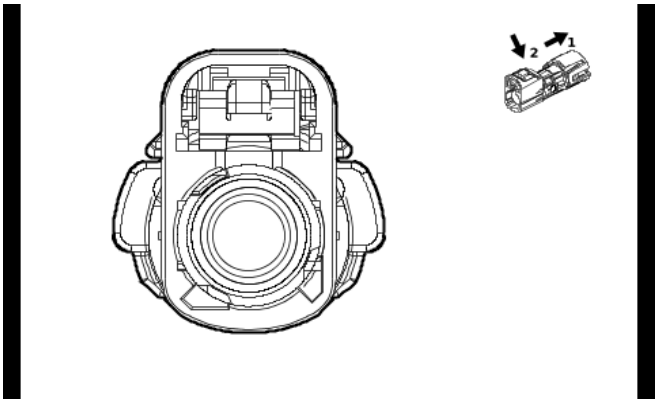

5757455

Connector Part Information

Harness Type: Chassis Wiring Harness COAX
OEM Connector: 35187043
Service Connector: Service by Cable Assembly — See Part Catalog
Description: 1-Way F Coax Type(OG)

Terminal Part Information

Terminal Type ID	Terminated Lead	Diagnostic Test Probe	Terminal Removal Tool
I	Not required	No Tool Required	No Tool Required

X88B Tow Vehicle Electrical Receptacle X3 (TRG)

Pin	Size	Color	Circuit	Function	Terminal Type ID	Option
—	—	Coax Cable	—	Rear Vision Camera Coaxial Video Signal	I	—

X92CD Dual Charge Only Receptacle - Floor Console Rear (UBI)

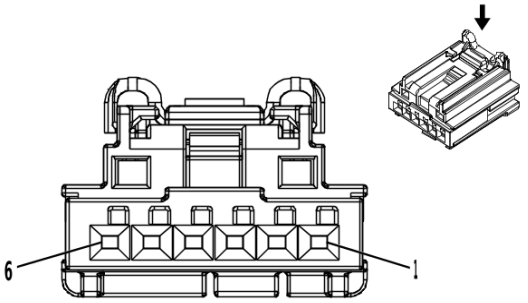

3960313

Connector Part Information

Harness Type: Front Floor Console Wiring Harness
OEM Connector: 13920633
Service Connector: Service by Harness - See Part Catalog
Description: 6-Way F 0.64 Generation Y Series(BK)

Terminal Part Information

Terminal Type ID	Terminated Lead	Diagnostic Test Probe	Terminal Removal Tool
I	Not required	J-35616-64B (L-BU)	No Tool Required

X92CD Dual Charge Only Receptacle - Floor Console Rear (UBI)

Pin	Size	Color	Circuit	Function	Terminal Type ID	Option
1	0.35	VT	4701	Retained Accessory Power Control	I	—
2	0.35	YE	6817	LED Backlight Dimming Control 1	I	—
3	0.35	BK	1350	Ground	I	—
4 - 6	—	—	—	Not Occupied	—	—

X92CF USB 2 Port Receptacle - Floor Console Front X1 (UBC+UBD)

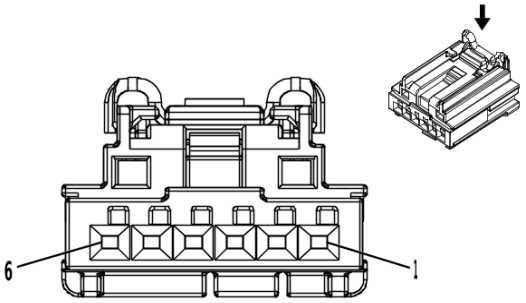

3960313

Connector Part Information

Harness Type: Front Floor Console Wiring Harness
OEM Connector: 13920633
Service Connector: Service by Harness - See Part Catalog
Description: 6-Way F 0.64 Generation Y Series(BK)

Terminal Part Information

Terminal Type ID	Terminated Lead	Diagnostic Test Probe	Terminal Removal Tool
I	Not required	J-35616-64B (L-BU)	No Tool Required

X92CF USB 2 Port Receptacle - Floor Console Front X1 (UBC+UBD)

Pin	Size	Color	Circuit	Function	Terminal Type ID	Option
1	0.5	RD / VT	2640	Battery Positive Voltage	I	—
2	0.5	YE	6817	LED Backlight Dimming Control 1	I	—
3	0.5	BK / WH	1051	Signal Ground	I	—
4 - 6	—	—	—	Not Occupied	—	—

X92CF USB 2 Port Receptacle - Floor Console Front X2 (UBC+UBD)

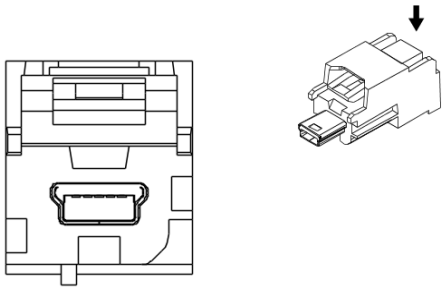

3028807

Connector Part Information

Harness Type: Front Floor Console Wiring Harness USB
OEM Connector: 13921002
Service Connector: Service by Cable Assembly — See Part Catalog
Description: 5-Way M 2.0 Mini-B USB Type(GY)

Terminal Part Information

Terminal Type ID	Terminated Lead	Diagnostic Test Probe	Terminal Removal Tool
I	Not required	No Tool Required	No Tool Required

X92CF USB 2 Port Receptacle - Floor Console Front X2 (UBC+UBD)

Pin	Size	Color	Circuit	Function	Terminal Type ID	Option
—	—	USB	—	USB Serial Data	I	—

X92IP USB 2 Port Receptacle - Instrument Panel X1 (UBC+UBJ)

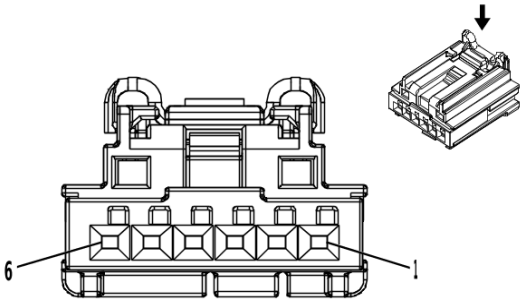

3960313

Connector Part Information

Harness Type: Front Floor Console Wiring Harness
OEM Connector: 13920633
Service Connector: Service by Harness - See Part Catalog
Description: 6-Way F 0.64 Generation Y Series(BK)

Terminal Part Information

Terminal Type ID	Terminated Lead	Diagnostic Test Probe	Terminal Removal Tool
I	Not required	J-35616-64B (L-BU)	No Tool Required

X92IP USB 2 Port Receptacle - Instrument Panel X1 (UBC+UBJ)

Pin	Size	Color	Circuit	Function	Terminal Type ID	Option
1	0.5	RD / VT	2640	Battery Positive Voltage	I	—
2	0.35	YE	6817	LED Backlight Dimming Control 1	I	—
3	0.5	BK / WH	1051	Signal Ground	I	—
4 - 6	—	—	—	Not Occupied	—	—

X92IP USB 2 Port Receptacle - Instrument Panel X3 (UBC+UBJ)

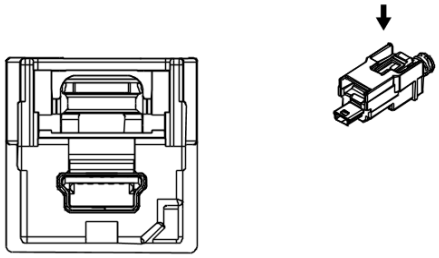

2807425

Connector Part Information

Harness Type: Front Floor Console Wiring Harness USB
OEM Connector: 13890925
Service Connector: Service by Cable Assembly — See Part Catalog
Description: 5-Way M 2.0 Mini-B USB Type(BK)

Terminal Part Information

Terminal Type ID	Terminated Lead	Diagnostic Test Probe	Terminal Removal Tool
I	Not required	No Tool Required	No Tool Required

X92IP USB 2 Port Receptacle - Instrument Panel X3 (UBC+UBJ)

Pin	Size	Color	Circuit	Function	Terminal Type ID	Option
—	—	USB	—	USB Serial Data	I	—

Inline Harness Connector End Views

X122 Front View Camera Switch Wiring Harness to Body Wiring Harness (UV2)

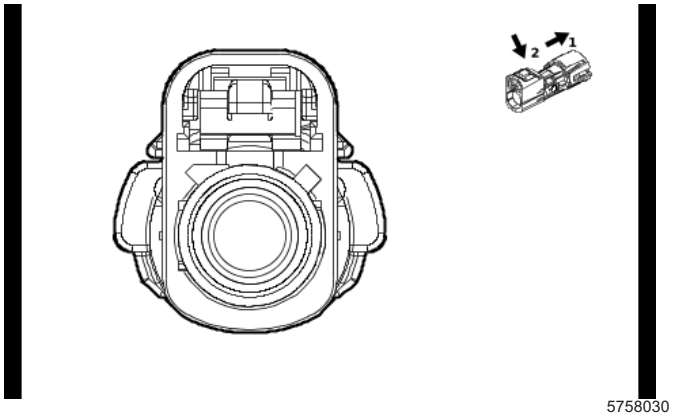

5758030

Connector Part Information

Harness Type: Front View Camera Switch Wiring Harness COAX

OEM Connector: 35187032

Service Connector: Service by Cable Assembly — See Part Catalog

Description: 1-Way F Coax Type(BK)

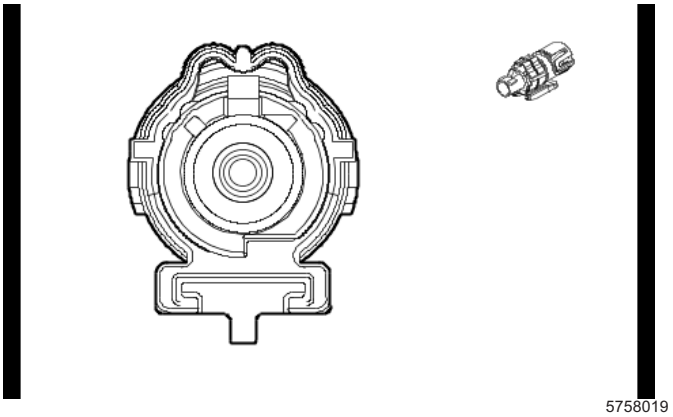

5758019

Connector Part Information

Harness Type: Body Wiring Harness COAX

OEM Connector: 33338239

Service Connector: Service by Cable Assembly — See Part Catalog

Description: 1-Way M Coax Type, Sealed(BK)

Terminal Part Information

Terminal Type ID	Terminated Lead	Diagnostic Test Probe	Terminal Removal Tool
I	Not required	No Tool Required	No Tool Required

X122 Front View Camera Switch Wiring Harness to Body Wiring Harness (UV2)

Pin	Size	Color	Circuit	Terminal Type ID	Option	Function	Pin	Size	Color	Circuit	Terminal Type ID	Option
—	—	Coax Cable	—	I	—	Front Vision Camera 1 Coaxial Video Signal	—	—	Coax Cable	—	I	—

X124 Grille Light Wiring Harness to Body Wiring Harness (GRZ)

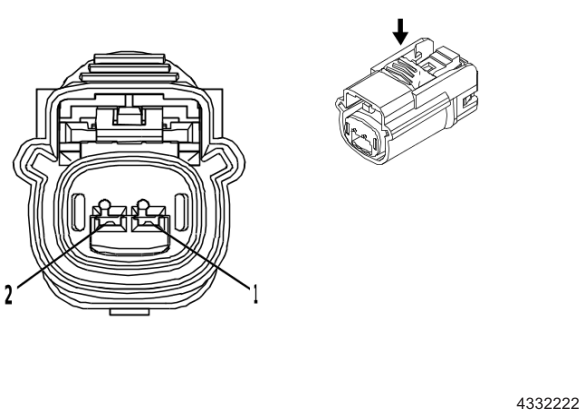

4332222

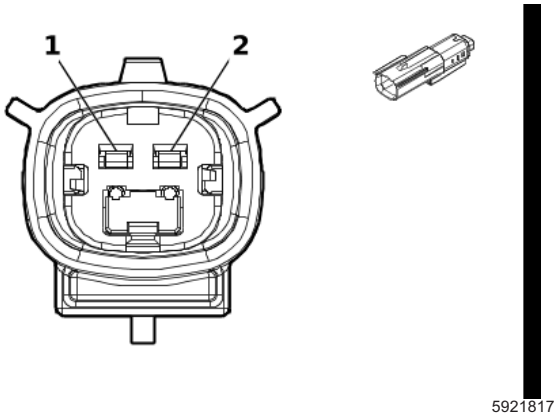

5921817

Connector Part Information

Harness Type: Grille Light Wiring Harness
OEM Connector: 13591139
Service Connector: Service by Harness - See Part Catalog
Description: 2-Way F 1.5 OCS Series, Sealed(BK)

Connector Part Information

Harness Type: Body Wiring Harness
OEM Connector: 15514550
Service Connector: 86825463
Description: 2-Way M 1.5 OCS Series, Sealed(BK)

Terminal Part Information

Terminal Type ID	Terminated Lead	Diagnostic Test Probe	Terminal Removal Tool
I	Not required	J-35616-2A (GY)	No Tool Required
II	Not required	J-35616-3 (GY)	No Tool Required

X124 Grille Light Wiring Harness to Body Wiring Harness (GRZ)

Pin	Size	Color	Circuit	Terminal Type ID	Option	Function	Pin	Size	Color	Circuit	Terminal Type ID	Option
1	1.5	BN / GN	4246	I	—	Identification Lamp Control	1	1.5	BN / GN	4246	II	—
2	1.5	BK	650	I	—	Ground	2	1	BK	650	II	—

X125 Engine Wiring Harness to Body Wiring Harness (L3B)

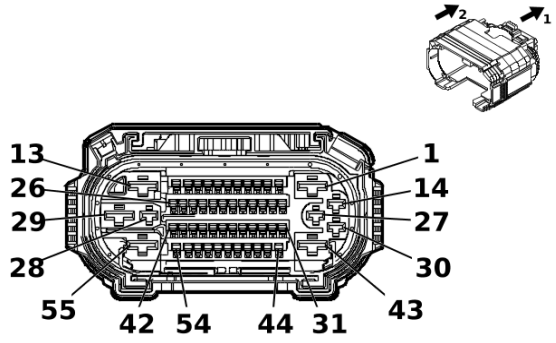

5246872

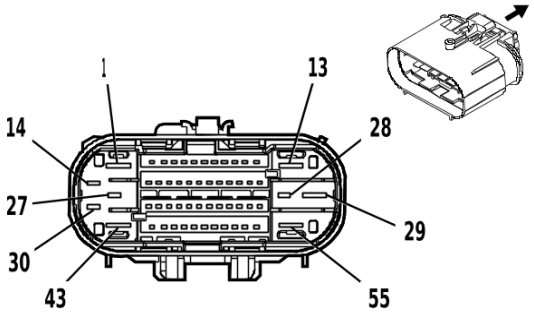

4994369

Connector Part Information

Harness Type: Engine Wiring Harness

OEM Connector: 35580811

Service Connector: 19371184

Description: 55-Way F 1.2 OCS, 2.8, 6.3 CTS Series, Sealed(GY)

Connector Part Information

Harness Type: Body Wiring Harness

OEM Connector: 35588062

Service Connector: 84727363

Description: 55-Way M 1.2 OCS, 2.8, 6.3 CTS Series, Sealed(GY)

Terminal Part Information

Terminal Type ID	Terminated Lead	Diagnostic Test Probe	Terminal Removal Tool
I	19332900	J-35616-42 (RD)	J-38125-215A
II	19332901	J-35616-35 (VT)	J-38125-212
III	19370818	J-35616-12 (BU)	J-38125-215A
IV	19371217	J-35616-12 (BU)	J-38125-553
V	84729890	J-35616-12 (BU)	J-38125-553
VI	13505800	J-35616-5 (PU)	J-38125-215A
VII	19301750	J-35616-32 (OG)	J-38125-36
VIII	84867141	J-35616-13 (BU)	J-38125-215A

X125 Engine Wiring Harness to Body Wiring Harness (L3B)

Pin	Size	Color	Circuit	Terminal Type ID	Option	Function	Pin	Size	Color	Circuit	Terminal Type ID	Option
1	3	BK / WH	251	I	—	Signal Ground	1	3	BK / WH	251	VII	—
2	1.5	RD / GN	1840	V	—	Battery Positive Voltage	2	1.5	RD / GN	1840	VIII	—
3	—	—	—	—	—	Not Occupied	3	—	—	—	—	—
4	0.5	BU / GY	4054	III	—	Private Serial Data Powertrain CAN Bus [-] Serial Data	4	0.5	BU / GY	4054	VIII	—
5	0.5	WH	4055	III	—	Private Serial Data Powertrain CAN Bus [+] Serial Data	5	0.5	WH	4055	VIII	—
6	0.5	WH	4976	III	—	AUTOSAR CAN Bus [-] 3 Serial Data	6	0.5	WH	4976	VIII	—

X125 Engine Wiring Harness to Body Wiring Harness (L3B) (cont'd)

Pin	Size	Color	Circuit	Terminal Type ID	Option	Function	Pin	Size	Color	Circuit	Terminal Type ID	Option
7	0.5	BU / BK	4977	III	—	AUTOSAR CAN Bus [+] 3 Serial Data	7	0.5	BU / BK	4977	VIII	—
8	0.5	WH / RD	1164	IV	—	Accelerator Pedal Position 5V Reference 1	8	0.35	WH / RD	1164	VIII	—
9	0.5	BK / BU	1271	IV	—	Accelerator Pedal Position Low Reference 1	9	0.35	BK / BU	1271	VIII	—
10	0.5	YE / WH	1161	IV	—	Accelerator Pedal Position Signal 1	10	0.35	YE / WH	1161	VIII	—
11	0.5	GN / WH	1162	IV	—	Accelerator Pedal Position Signal 2	11	0.35	GN / WH	1162	VIII	—
12 - 14	—	—	—	—	—	Not Occupied	12 - 14	—	—	—	—	—
15	0.5	BN / RD	1274	IV	—	Accelerator Pedal Position 5V Reference 2	15	0.35	BN / RD	1274	VIII	—
16	0.5	YE	4063	III	—	Hood Status A Signal	16	0.5	YE	4063	VIII	—
17	0.5	VT / GN	4320	III	—	Powertrain Sensor Bus Enable	17	0.5	VT / GN	4320	VIII	—
18	0.5	WH / RD	480	III	—	Engine Control Vehicle Sensors 5 Volt Reference 1	18	0.35	WH / RD	480	VIII	—
19	—	—	—	—	—	Wait To Start Indicator Control	19	0.35	GN / BN	507	VIII	—
20	0.5	WH / GN	5380	III	—	Brake Position Sensor Signal	20	0.35	WH / GN	5380	VIII	—
21	—	—	—	—	—	Not Occupied	21	—	—	—	—	—
22	0.5	BK / VT	1272	IV	—	Accelerator Pedal Position Low Reference 2	22	0.35	BK / VT	1272	VIII	—
23	0.5	BK / GY	626	III	—	Engine Control Vehicle Sensors Low Reference 1	23	0.5	BK / GY	626	VIII	—
24	0.5	WH / BU	6311	III	—	Cruise/ETC/ TCC Brake Signal	24	0.5	WH / BU	6311	VIII	—
25	0.5	BU / GY	636	III	—	Ambient Air Temperature Sensor Signal	25	0.5	BU / GY	636	VIII	—

X125 Engine Wiring Harness to Body Wiring Harness (L3B) (cont'd)

Pin	Size	Color	Circuit	Terminal Type ID	Option	Function	Pin	Size	Color	Circuit	Terminal Type ID	Option
26	0.75	BU / BN	7573	III	—	A/C Compressor Solenoid Valve Control	26	0.5	BU / BN	7573	VIII	—
27	0.75	BU / YE	7574	II	—	A/C Compressor Solenoid Valve Control	27	0.5	BU / YE	7574	VI	—
28	—	—	—	—	—	Powertrain Sensor Bus Enable	28	0.5	VT / GN	4320	VI	—
29 - 30	—	—	—	—	—	Not Occupied	29 - 30	—	—	—	—	—
31	0.5	WH	4978	III	—	AUTOSAR CAN Bus [-] 2 Serial Data	31	0.5	WH	4978	VIII	—
32	0.5	BU / YE	4979	III	—	AUTOSAR CAN Bus [+] 2 Serial Data	32	0.5	BU / YE	4979	VIII	—
33	0.5	YE / BK	625	III	—	Starter Enable Relay Control	33	0.5	YE / BK	625	VIII	—
34 - 36	—	—	—	—	—	Not Occupied	34 - 36	—	—	—	—	—
37	0.5	GN / GY	465	III	—	Fuel Pump Primary Relay Control	37	0.5	GN / GY	465	VIII	—
38 - 55	—	—	—	—	—	Not Occupied	38 - 55	—	—	—	—	—

X125 Engine Wiring Harness to Body Wiring Harness (L84/L87)

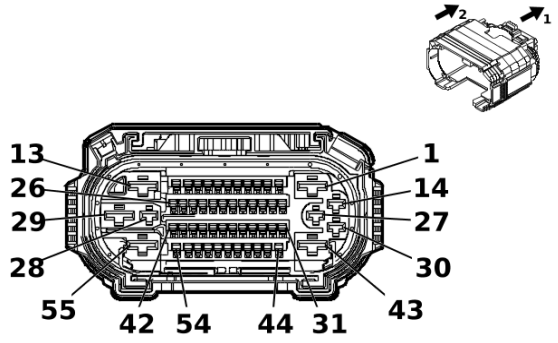

5246872

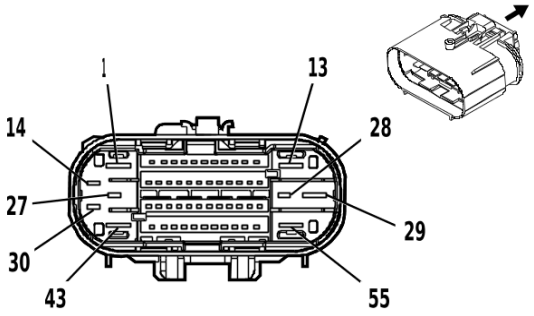

4994369

Connector Part Information

Harness Type: Engine Wiring Harness

OEM Connector: 35580811

Service Connector: 19371184

Description: 55-Way F 1.2 OCS, 2.8, 6.3 CTS Series, Sealed(GY)

Connector Part Information

Harness Type: Body Wiring Harness

OEM Connector: 35588062

Service Connector: 84727363

Description: 55-Way M 1.2 OCS, 2.8, 6.3 CTS Series, Sealed(GY)

Terminal Part Information

Terminal Type ID	Terminated Lead	Diagnostic Test Probe	Terminal Removal Tool
I	19332900	J-35616-42 (RD)	J-38125-215A
II	19332901	J-35616-35 (VT)	J-38125-212
III	19370818	J-35616-12 (BU)	J-38125-215A
IV	19371217	J-35616-12 (BU)	J-38125-553
V	84729890	J-35616-12 (BU)	J-38125-553
VI	13505800	J-35616-5 (PU)	J-38125-215A
VII	19301750	J-35616-32 (OG)	J-38125-36
VIII	84867141	J-35616-13 (BU)	J-38125-215A

X125 Engine Wiring Harness to Body Wiring Harness (L84/L87)

Pin	Size	Color	Circuit	Terminal Type ID	Option	Function	Pin	Size	Color	Circuit	Terminal Type ID	Option
1	3	BK / WH	251	I	—	Signal Ground	1	3	BK / WH	251	VII	—
2	1.5	RD / GN	1840	V	—	Battery Positive Voltage	2	1.5	RD / GN	1840	VIII	—
3	—	—	—	—	—	Not Occupied	3	—	—	—	—	—
4	0.5	BU / GY	4054	III	—	Private Serial Data Powertrain CAN Bus [-] Serial Data	4	0.5	BU / GY	4054	VIII	—
5	0.5	WH	4055	III	—	Private Serial Data Powertrain CAN Bus [+] Serial Data	5	0.5	WH	4055	VIII	—
6	0.5	WH	4976	III	—	AUTOSAR CAN Bus [-] 3 Serial Data	6	0.5	WH	4976	VIII	—

X125 Engine Wiring Harness to Body Wiring Harness (L84/L87) (cont'd)

Pin	Size	Color	Circuit	Terminal Type ID	Option	Function	Pin	Size	Color	Circuit	Terminal Type ID	Option
7	0.5	BU / BK	4977	III	—	AUTOSAR CAN Bus [+] 3 Serial Data	7	0.5	BU / BK	4977	VIII	—
8	0.5	WH / RD	1164	IV	—	Accelerator Pedal Position 5V Reference 1	8	0.35	WH / RD	1164	VIII	—
9	0.5	BK / BU	1271	IV	—	Accelerator Pedal Position Low Reference 1	9	0.35	BK / BU	1271	VIII	—
10	0.5	YE / WH	1161	IV	—	Accelerator Pedal Position Signal 1	10	0.35	YE / WH	1161	VIII	—
11	0.5	GN / WH	1162	IV	—	Accelerator Pedal Position Signal 2	11	0.35	GN / WH	1162	VIII	—
12 - 14	—	—	—	—	—	Not Occupied	12 - 14	—	—	—	—	—
15	0.5	BN / RD	1274	IV	—	Accelerator Pedal Position 5V Reference 2	15	0.35	BN / RD	1274	VIII	—
16	0.5	YE	4063	III	—	Hood Status A Signal	16	0.5	YE	4063	VIII	—
17	0.5	VT / GN	4320	III	—	Powertrain Sensor Bus Enable	17	0.5	VT / GN	4320	VIII	—
18	0.5	WH / RD	480	III	—	Engine Control Vehicle Sensors 5 Volt Reference 1	18	0.35	WH / RD	480	VIII	—
19	—	—	—	—	—	Wait To Start Indicator Control	19	0.35	GN / BN	507	VIII	—
20	0.5	WH / GN	5380	III	—	Brake Position Sensor Signal	20	0.35	WH / GN	5380	VIII	—
21	—	—	—	—	—	Not Occupied	21	—	—	—	—	—
22	0.5	BK / VT	1272	IV	—	Accelerator Pedal Position Low Reference 2	22	0.35	BK / VT	1272	VIII	—
23	0.5	BK / GY	626	III	—	Engine Control Vehicle Sensors Low Reference 1	23	0.5	BK / GY	626	VIII	—
24	0.5	WH / BU	6311	III	—	Cruise/ETC/ TCC Brake Signal	24	0.5	WH / BU	6311	VIII	—
25	0.5	BU / GY	636	III	—	Ambient Air Temperature Sensor Signal	25	0.5	BU / GY	636	VIII	—

X125 Engine Wiring Harness to Body Wiring Harness (L84/L87) (cont'd)

Pin	Size	Color	Circuit	Terminal Type ID	Option	Function	Pin	Size	Color	Circuit	Terminal Type ID	Option
26	0.75	BU / BN	7573	III	—	A/C Compressor Solenoid Valve Control	26	0.5	BU / BN	7573	VIII	—
27	0.75	BU / YE	7574	II	—	A/C Compressor Solenoid Valve Control	27	0.5	BU / YE	7574	VI	—
28	—	—	—	—	—	Powertrain Sensor Bus Enable	28	0.5	VT / GN	4320	VI	—
29 - 30	—	—	—	—	—	Not Occupied	29 - 30	—	—	—	—	—
31	0.5	WH	4978	III	—	AUTOSAR CAN Bus [-] 2 Serial Data	31	0.5	WH	4978	VIII	—
32	0.5	BU / YE	4979	III	—	AUTOSAR CAN Bus [+] 2 Serial Data	32	0.5	BU / YE	4979	VIII	—
33	0.5	YE / BK	625	III	—	Starter Enable Relay Control	33	0.5	YE / BK	625	VIII	—
34 - 36	—	—	—	—	—	Not Occupied	34 - 36	—	—	—	—	—
37	0.5	GN / GY	465	III	—	Fuel Pump Primary Relay Control	37	0.5	GN / GY	465	VIII	—
38 - 55	—	—	—	—	—	Not Occupied	38 - 55	—	—	—	—	—

X125 Engine Wiring Harness to Body Wiring Harness (LM2)

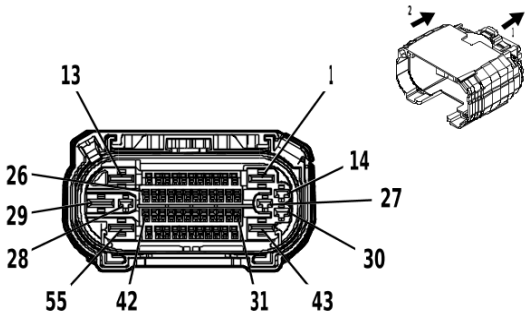

4992329

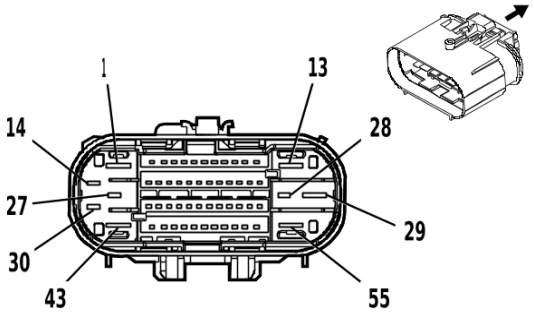

4994369

Connector Part Information

Harness Type: Engine Wiring Harness

OEM Connector: 35016653

Service Connector: 19371184

Description: 55-Way F 1.2 OCS, 2.8, 6.3 CTS Series, Sealed(GY)

Connector Part Information

Harness Type: Body Wiring Harness

OEM Connector: 35588062

Service Connector: 84727363

Description: 55-Way M 1.2 OCS, 2.8, 6.3 CTS Series, Sealed(GY)

Terminal Part Information

Terminal Type ID	Terminated Lead	Diagnostic Test Probe	Terminal Removal Tool
I	19332901	J-35616-35 (VT)	J-38125-212
II	19370818	J-35616-12 (BU)	J-38125-215A
III	19371217	J-35616-12 (BU)	J-38125-553
IV	84634921	J-35616-42 (RD)	J-38125-212
V	13505800	J-35616-5 (PU)	J-38125-215A
VI	19301750	J-35616-32 (OG)	J-38125-36
VII	84867141	J-35616-13 (BU)	J-38125-215A

X125 Engine Wiring Harness to Body Wiring Harness (LM2)

Pin	Size	Color	Circuit	Terminal Type ID	Option	Function	Pin	Size	Color	Circuit	Terminal Type ID	Option
1	3	BK / WH	251	IV	—	Signal Ground	1	3	BK / WH	251	VI	—
2	1.5	RD / GN	1840	III	—	Battery Positive Voltage	2	1.5	RD / GN	1840	VII	—
3	—	—	—	—	—	Not Occupied	3	—	—	—	—	—
4	0.5	BU / GY	4054	II	—	Private Serial Data Powertrain CAN Bus [-] Serial Data	4	0.5	BU / GY	4054	VII	—
5	0.5	WH	4055	II	—	Private Serial Data Powertrain CAN Bus [+] Serial Data	5	0.5	WH	4055	VII	—
6	0.5	WH	4976	II	—	AUTOSAR CAN Bus [-] 3 Serial Data	6	0.5	WH	4976	VII	—

X125 Engine Wiring Harness to Body Wiring Harness (LM2) (cont'd)

Pin	Size	Color	Circuit	Terminal Type ID	Option	Function	Pin	Size	Color	Circuit	Terminal Type ID	Option
7	0.5	BU / BK	4977	II	—	AUTOSAR CAN Bus [+] 3 Serial Data	7	0.5	BU / BK	4977	VII	—
8	0.5	WH / RD	1164	II	—	Accelerator Pedal Position 5V Reference 1	8	0.35	WH / RD	1164	VII	—
9	0.5	BK / BU	1271	II	—	Accelerator Pedal Position Low Reference 1	9	0.35	BK / BU	1271	VII	—
10	0.5	YE / WH	1161	II	—	Accelerator Pedal Position Signal 1	10	0.35	YE / WH	1161	VII	—
11	0.5	GN / WH	1162	II	—	Accelerator Pedal Position Signal 2	11	0.35	GN / WH	1162	VII	—
12 - 14	—	—	—	—	—	Not Occupied	12 - 14	—	—	—	—	—
15	0.5	BN / RD	1274	II	—	Accelerator Pedal Position 5V Reference 2	15	0.35	BN / RD	1274	VII	—
16	0.5	YE	4063	II	—	Hood Status A Signal	16	0.5	YE	4063	VII	—
17	—	—	—	—	—	Powertrain Sensor Bus Enable	17	0.5	VT / GN	4320	VII	—
18	0.5	WH / RD	480	II	—	Engine Control Vehicle Sensors 5 Volt Reference 1	18	0.35	WH / RD	480	VII	—
19	0.5	GN / BN	507	II	—	Wait To Start Indicator Control	19	0.35	GN / BN	507	VII	—
20	0.5	WH / GN	5380	II	—	Brake Position Sensor Signal	20	0.35	WH / GN	5380	VII	—
21	—	—	—	—	—	Not Occupied	21	—	—	—	—	—
22	0.5	BK / VT	1272	II	—	Accelerator Pedal Position Low Reference 2	22	0.35	BK / VT	1272	VII	—
23	0.5	BK / GY	626	II	—	Engine Control Vehicle Sensors Low Reference 1	23	0.5	BK / GY	626	VII	—
24	0.5	WH / BU	6311	II	—	Cruise/ETC/ TCC Brake Signal	24	0.5	WH / BU	6311	VII	—
25	0.5	BU / GY	636	II	—	Ambient Air Temperature Sensor Signal	25	0.5	BU / GY	636	VII	—

X125 Engine Wiring Harness to Body Wiring Harness (LM2) (cont'd)

Pin	Size	Color	Circuit	Terminal Type ID	Option	Function	Pin	Size	Color	Circuit	Terminal Type ID	Option
26	0.75	BU / BN	7573	II	—	A/C Compressor Solenoid Valve Control	26	0.5	BU / BN	7573	VII	—
27	0.75	BU / YE	7574	I	—	A/C Compressor Solenoid Valve Control	27	0.5	BU / YE	7574	V	—
28	0.5	VT / GN	4320	I	—	Powertrain Sensor Bus Enable	28	0.5	VT / GN	4320	V	—
29 - 30	—	—	—	—	—	Not Occupied	29 - 30	—	—	—	—	—
31	0.5	WH	4978	II	—	AUTOSAR CAN Bus [-] 2 Serial Data	31	0.5	WH	4978	VII	—
32	0.5	BU / YE	4979	II	—	AUTOSAR CAN Bus [+] 2 Serial Data	32	0.5	BU / YE	4979	VII	—
33	0.5	YE / BK	625	II	—	Starter Enable Relay Control	33	0.5	YE / BK	625	VII	—
34 - 36	—	—	—	—	—	Not Occupied	34 - 36	—	—	—	—	—
37	—	—	—	—	—	Fuel Pump Primary Relay Control	37	0.5	GN / GY	465	VII	—
38 - 55	—	—	—	—	—	Not Occupied	38 - 55	—	—	—	—	—

X128 Engine Wiring Harness to Engine Control Module Jumper Wiring Harness (L84/L87)

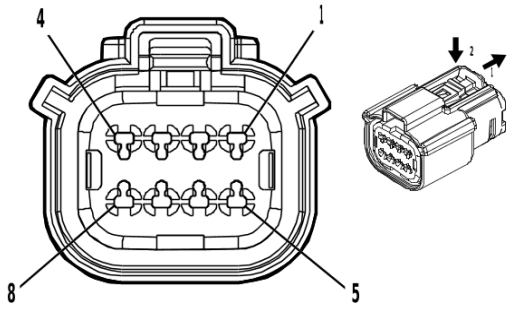

4846407

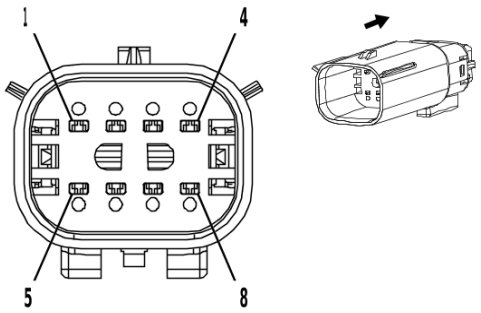

2667653

Connector Part Information

Harness Type: Engine Wiring Harness
OEM Connector: 35063116
Service Connector: 84928314
Description: 8-Way F 1.5 MX Series, Sealed(BK)

Connector Part Information

Harness Type: Camshaft Position Sensor Wire
OEM Connector: 13520589
Service Connector: Service by Harness - See Part Catalog
Description: 8-Way M 1.5 MX Series, Sealed(BK)

Terminal Part Information

Terminal Type ID	Terminated Lead	Diagnostic Test Probe	Terminal Removal Tool
I	Not required	J-35616-14 (GN)	No Tool Required
II	Not required	No Tool Required	No Tool Required

X128 Engine Wiring Harness to Engine Control Module Jumper Wiring Harness (L84/L87)

Pin	Size	Color	Circuit	Terminal Type ID	Option	Function	Pin	Size	Color	Circuit	Terminal Type ID	Option
1	0.5	GY / BU	5300	I	—	Intake Camshaft Position Sensor 1 Voltage Reference	1	0.5	GY / BU	5300	II	—
2	0.5	BK / GN	5301	I	—	Intake Camshaft Position Sensor Low Reference 1	2	0.5	BK / GN	5301	II	—
3	0.5	YE / VT	5275	I	—	Intake Camshaft Position Sensor 1	3	0.5	YE / VT	5275	II	—
4	0.5	BU	179	I	—	Engine Oil Pump Control	4	0.5	BU	179	II	—
5	0.5	VT / BN	5284	I	—	Intake Camshaft Position Actuator Solenoid Valve 1	5	0.5	VT / BN	5284	II	—
6	0.5	BK / BN	6753	I	—	Camshaft Position Actuator Solenoid Valve W Low Reference	6	0.5	BK / BN	6753	II	—

X128 Engine Wiring Harness to Engine Control Module Jumper Wiring Harness (L84/L87) (cont'd)

Pin	Size	Color	Circuit	Terminal Type ID	Option	Function	Pin	Size	Color	Circuit	Terminal Type ID	Option
7	0.5	VT / BU	5293	I	—	Powertrain Main Relay Fused Supply Voltage 4	7	0.75	VT / BU	5293	II	—
8	—	—	—	—	—	Not Occupied	8	—	—	—	—	—

X129 Engine Wiring Harness to Oil Pump Flow Control Solenoid Valve Wire (L3B/LM2)

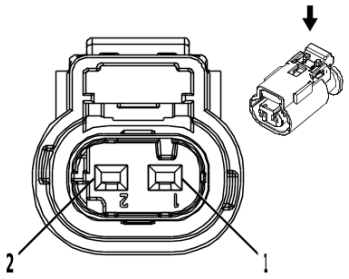

—

2717066

Connector Part Information

Harness Type: Engine Wiring Harness
OEM Connector: 13735326
Service Connector: 13587326
Description: 2-Way F 1.2 Multilock Series, Sealed(BK)

Connector Part Information

Harness Type: Oil Pump Flow Control Solenoid Valve Harness
OEM Connector: 12681015
Service Connector: Service by Harness - See Part Catalog
Description: 2-Way M (BK)

Terminal Part Information

Terminal Type ID	Terminated Lead	Diagnostic Test Probe	Terminal Removal Tool
I	Not required	J-35616-16 (L-GN)	No Tool Required
II	Not required	No Tool Required	No Tool Required

X129 Engine Wiring Harness to Oil Pump Flow Control Solenoid Valve Wire (L3B/LM2)

Pin	Size	Color	Circuit	Terminal Type ID	Option	Function	Pin	Size	Color	Circuit	Terminal Type ID	Option
1	0.5	YE / BN	106	I	—	Oil Pump Motor Control	1	0.5	YE / BN	106	II	—
2	0.5	BU	179	I	—	Engine Oil Pump Control	2	0.5	BU	179	II	—

X129 Engine Wiring Harness to Oil Pump Flow Control Solenoid Valve Wire (L87)

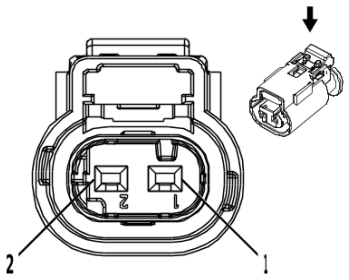

—

2717066

Connector Part Information

Harness Type: Cam Jumper
OEM Connector: 13503566
Service Connector: Service by Harness - See Part Catalog
Description: 2-Way F 1.2 Multilock Series, Sealed(BK)

Connector Part Information

Harness Type: Oil Pump Flow Control Solenoid Valve Wire
OEM Connector: 12681015
Service Connector: Service by Harness - See Part Catalog
Description: 2-Way M (BK)

Terminal Part Information

Terminal Type ID	Terminated Lead	Diagnostic Test Probe	Terminal Removal Tool
I	Not required	No Tool Required	No Tool Required
II	Not required	Not Available	No Tool Required

X129 Engine Wiring Harness to Oil Pump Flow Control Solenoid Valve Wire (L87)

Pin	Size	Color	Circuit	Terminal Type ID	Option	Function	Pin	Size	Color	Circuit	Terminal Type ID	Option
1	0.5	VT / BU	5293	I	—	Powertrain Main Relay Fused Supply Voltage 4	1	0.5	VT / BU	5293	II	—
2	0.5	BU	179	I	—	Engine Oil Pump Control	2	0.5	BU	179	II	—

X150 Front Object Alarm Sensor Wiring Harness to Body Wiring Harness (UKL +(Extended Cab/Crew Cab))

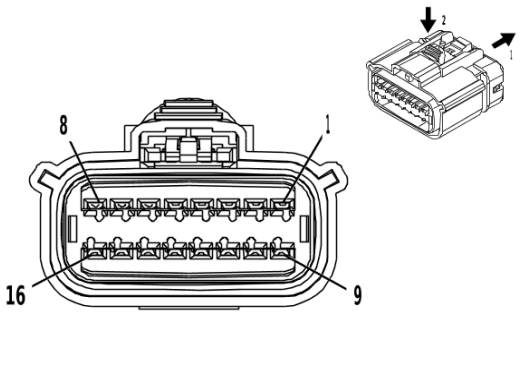

4253394

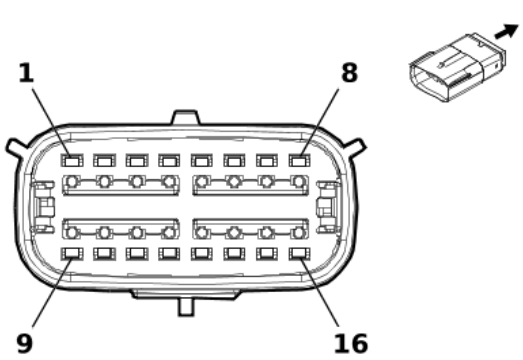

2748079

Connector Part Information

Harness Type: Front Object Alarm Sensor Wiring Harness
OEM Connector: 15514473
Service Connector: Service by Harness - See Part Catalog
Description: 16-Way F 1.5 OCS Series, Sealed(BK)

Connector Part Information

Harness Type: Body Wiring Harness
OEM Connector: 15521020
Service Connector: 26314575
Description: 16-Way M OCS Series, Sealed(BK)

Terminal Part Information

Terminal Type ID	Terminated Lead	Diagnostic Test Probe	Terminal Removal Tool
I	Not required	J-35616-2A (GY)	No Tool Required
II	19352418	J-35616-3 (GY)	J-38125-215A

X150 Front Object Alarm Sensor Wiring Harness to Body Wiring Harness (UKL+(Extended Cab/Crew Cab))

Pin	Size	Color	Circuit	Terminal Type ID	Option	Function	Pin	Size	Color	Circuit	Terminal Type ID	Option
1	0.5	RD / GN	3140	I	—	Battery Positive Voltage	1	0.5	RD / GN	3140	II	—
2	—	—	—	—	—	Not Occupied	2	—	—	—	—	—
3	0.5	BK / BU	5214	I	—	Front Parking Assist Sensor Low Reference	3	0.5	BK / BU	5214	II	—
4	0.5	VT / WH	5215	I	—	Left Front Outer Parking Assist Sensor	4	0.5	VT / WH	5215	II	—
5	0.5	YE / GY	5216	I	—	Left Front Middle Parking Assist Sensor	5	0.5	YE / GY	5216	II	—
6	0.5	WH / GY	5217	I	—	Right Front Outer Parking Assist Sensor	6	0.5	WH / GY	5217	II	—
7	0.5	VT / GY	5218	I	—	Right Front Middle Parking Assist Sensor	7	0.5	VT / GY	5218	II	—
8	0.5	BK	650	I	—	Ground	8	0.5	BK	650	II	—

X150 Front Object Alarm Sensor Wiring Harness to Body Wiring Harness (UKL+(Extended Cab/Crew Cab)) (cont'd)

Pin	Size	Color	Circuit	Terminal Type ID	Option	Function	Pin	Size	Color	Circuit	Terminal Type ID	Option
9	0.5	BK / WH	651	I	—	Signal Ground	9	0.5	BK / WH	651	II	—
10	0.5	BN / GY	5061	I	—	Left Front Fog Lamp Control	10	0.5	BN / GY	5061	II	—
11	0.5	BN	6581	I	—	Front Parking Assist Dis-play Control	11	0.5	BN	6581	II	—
12 - 14	—	—	—	—	—	Not Occu-pied	12 - 14	—	—	—	—	—
15	0.5	WH / GY	4104	I	—	AUTOSAR CAN Bus [-] 8 Serial Data	15	0.5	WH / GY	4104	II	—
16	0.5	BU / GY	4105	I	—	AUTOSAR CAN Bus [+] 8 Serial Data	16	0.5	BU / GY	4105	II	—

X150 Front Object Alarm Sensor Wiring Harness to Body Wiring Harness (UKL +Regular Cab)

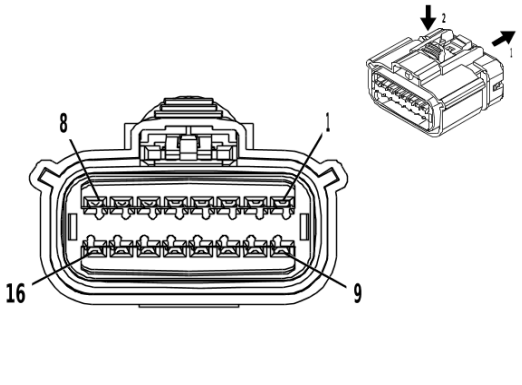

4253394

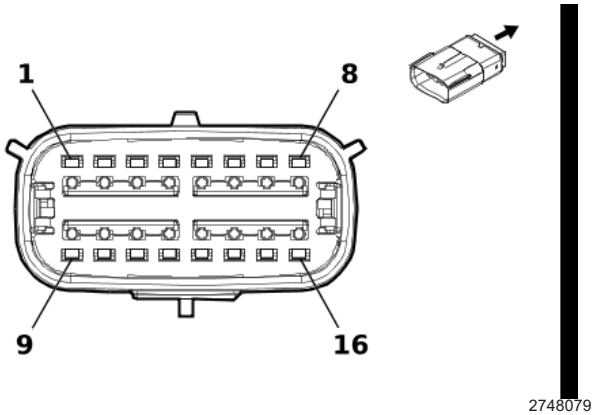

2748079

Connector Part Information

Harness Type: Front Object Alarm Sensor Wiring Harness
OEM Connector: 35502386
Service Connector: Service by Harness - See Part Catalog
Description: 16-Way F 1.5 OCS Series, Sealed(BK)

Connector Part Information

Harness Type: Body Wiring Harness
OEM Connector: 15521020
Service Connector: 26314575
Description: 16-Way M OCS Series, Sealed(BK)

Terminal Part Information

Terminal Type ID	Terminated Lead	Diagnostic Test Probe	Terminal Removal Tool
I	Not required	J-35616-2A (GY)	No Tool Required
II	19352418	J-35616-3 (GY)	J-38125-215A

X150 Front Object Alarm Sensor Wiring Harness to Body Wiring Harness (UKL +Regular Cab)

Pin	Size	Color	Circuit	Terminal Type ID	Option	Function	Pin	Size	Color	Circuit	Terminal Type ID	Option
1 - 7	—	—	—	—	—	Not Occupied	1 - 7	—	—	—	—	—
8	0.5	BK	650	I	—	Ground	8	0.5	BK	650	II	—
9	—	—	—	—	—	Not Occupied	9	—	—	—	—	—
10	0.5	BN / GY	5061	I	—	Left Front Fog Lamp Control	10	0.5	BN / GY	5061	II	—
11 - 16	—	—	—	—	—	Not Occupied	11 - 16	—	—	—	—	—

X160 Engine Wiring Harness to Fuel Injector Wiring Harness (L3B)

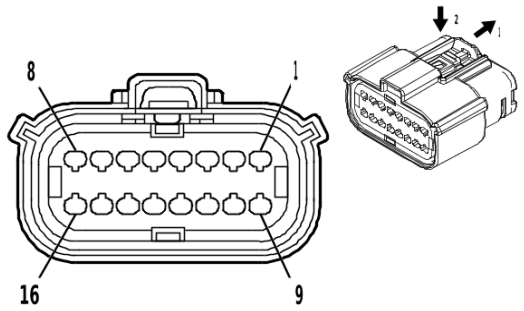

—

4574233

Connector Part Information

Harness Type: Engine Wiring Harness
OEM Connector: 33386201
Service Connector: 19354087
Description: 16-Way F 1.5 MX Series, Sealed(BK)

Connector Part Information

Harness Type: Fuel Injector Wiring Harness
OEM Connector: 13520643
Service Connector: Service by Harness - See Part Catalog
Description: 16-Way M (BK)

Terminal Part Information

Terminal Type ID	Terminated Lead	Diagnostic Test Probe	Terminal Removal Tool
I	19368973	J-35616-2A (GY)	J-38125-217
II	Not required	J-35616-3 (GY)	No Tool Required

X160 Engine Wiring Harness to Fuel Injector Wiring Harness (L3B)

Pin	Size	Color	Circuit	Terminal Type ID	Option	Function	Pin	Size	Color	Circuit	Terminal Type ID	Option
1	0.5	VT / GY	496	I	—	Knock Sensor 1 Signal	1	0.5	VT / GY	496	II	—
2	0.75	BN	4801	I	—	Direct Fuel Injector High Voltage Control Cylinder 1	2	0.75	BN	4801	II	—
3	0.5	WH / RD	480	I	—	Engine Control Vehicle Sensors 5 Volt Reference 1	3	0.5	WH / RD	480	II	—
4	0.75	GY / BU	4804	I	—	Direct Fuel Injector High Voltage Control Cylinder 4	4	0.75	GY / BU	4804	II	—
5	—	—	—	—	—	Not Occupied	5	—	—	—	—	—
6	0.75	GN	4803	I	—	Direct Fuel Injector High Voltage Control Cylinder 3	6	0.75	GN	4803	II	—
7	0.75	BU	4802	I	—	Direct Fuel Injector High Voltage Control Cylinder 2	7	0.75	BU	4802	II	—

X160 Engine Wiring Harness to Fuel Injector Wiring Harness (L3B) (cont'd)

Pin	Size	Color	Circuit	Terminal Type ID	Option	Function	Pin	Size	Color	Circuit	Terminal Type ID	Option
8	0.5	WH / GY	1876	I	—	Knock Sensor 2 Signal	8	0.5	WH / GY	1876	II	—
9	0.5	BK / YE	1716	I	—	Knock Sensor Low Reference 1	9	0.5	BK / YE	1716	II	—
10	0.75	BN / WH	4901	I	—	Direct Fuel Injector High Voltage Supply Cylinder 1	10	0.75	BN / WH	4901	II	—
11	0.5	BU / WH	10786	I	—	Fuel Rail Pressure Sensor SENT 1 Signal	11	0.5	BU / WH	10786	II	—
12	0.5	BK / GN	580	I	—	Engine Control Sensors Low Reference 2	12	0.5	BK / GN	580	II	—
13	0.75	BU / WH	4904	I	—	Direct Fuel Injector High Voltage Supply Cylinder 4	13	0.75	BU / WH	4904	II	—
14	0.75	GN / GY	4903	I	—	Direct Fuel Injector High Voltage Supply Cylinder 3	14	0.75	GN / GY	4903	II	—
15	0.75	BU / GY	4902	I	—	Direct Fuel Injector High Voltage Supply Cylinder 2	15	0.75	BU / GY	4902	II	—
16	0.5	BK / GY	2303	I	—	Knock Sensor Low Reference 2	16	0.5	BK / GY	2303	II	—

X160 Engine Wiring Harness to Fuel Injector Wiring Harness - Bank 1 (L84/L87)

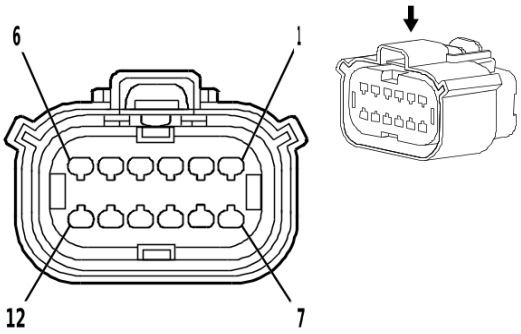

1825165

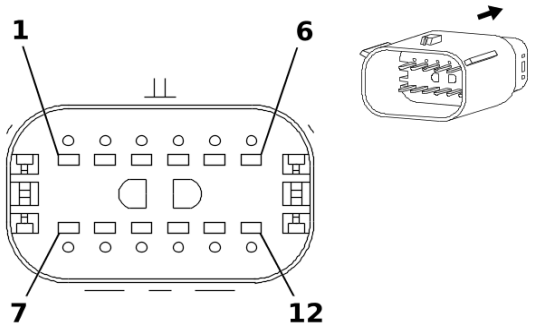

1825167

Connector Part Information

Harness Type: Engine Wiring Harness
OEM Connector: 13595088
Service Connector: 19352907
Description: 12-Way F 1.5 Series, Sealed(BK)

Connector Part Information

Harness Type: Fuel Injector Wiring Harness - Bank 1
OEM Connector: 13520581
Service Connector: Service by Harness - See Part Catalog
Description: 12-Way M 1.5 MX Series, Sealed(BK)

Terminal Part Information

Terminal Type ID	Terminated Lead	Diagnostic Test Probe	Terminal Removal Tool
I	19368973	J-35616-2A (GY)	J-38125-217
II	Not required	No Tool Required	No Tool Required

X160 Engine Wiring Harness to Fuel Injector Wiring Harness - Bank 1 (L84/L87)

Pin	Size	Color	Circuit	Terminal Type ID	Option	Function	Pin	Size	Color	Circuit	Terminal Type ID	Option
1	0.75	BN / WH	4901	I	—	Direct Fuel Injector High Voltage Supply Cylinder 1	1	0.75	BN / WH	4901	II	—
2	0.75	GN / GY	4903	I	—	Direct Fuel Injector High Voltage Supply Cylinder 3	2	0.75	GN / GY	4903	II	—
3	0.75	GN / WH	4905	I	—	Direct Fuel Injector High Voltage Supply Cylinder 5	3	0.75	GN / WH	4905	II	—
4	0.75	WH / YE	4907	I	—	Direct Fuel Injector High Voltage Supply Cylinder 7	4	0.75	WH / YE	4907	II	—
5	0.75	BN	4801	I	—	Direct Fuel Injector High Voltage Control Cylinder 1	5	0.75	BN	4801	II	—
6	—	—	—	—	—	Not Occupied	6	—	—	—	—	—

X160 Engine Wiring Harness to Fuel Injector Wiring Harness - Bank 1 (L84/L87) (cont'd)

Pin	Size	Color	Circuit	Terminal Type ID	Option	Function	Pin	Size	Color	Circuit	Terminal Type ID	Option
7	0.75	GN	4803	I	—	Direct Fuel Injector High Voltage Control Cylinder 3	7	0.75	GN	4803	II	—
8	0.75	WH / GN	4805	I	—	Direct Fuel Injector High Voltage Control Cylinder 5	8	0.75	WH / GN	4805	II	—
9	0.75	YE / GY	4807	I	—	Direct Fuel Injector High Voltage Control Cylinder 7	9	0.75	YE / GY	4807	II	—
10	0.5	WH / RD	480	I	—	Engine Control Vehicle Sensors 5 Volt Reference 1	10	0.5	BN / RD	480	II	—
11	0.5	BU / WH	10786	I	—	Fuel Rail Pressure Sensor SENT 1 Signal	11	0.5	BU / WH	10786	II	—
12	0.5	BK / YE	548	I	—	Engine Control Sensors Low Reference 1	12	0.5	BK / GN	548	II	—

X160 Engine Wiring Harness to Fuel Injector Wiring Harness - Bank 1 (LM2)

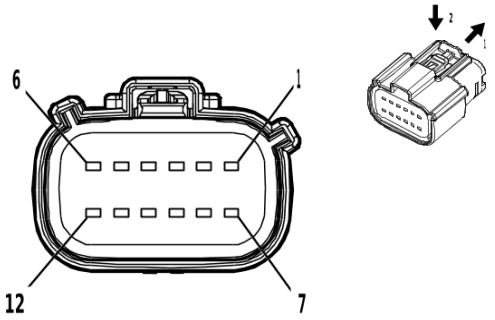

4584248

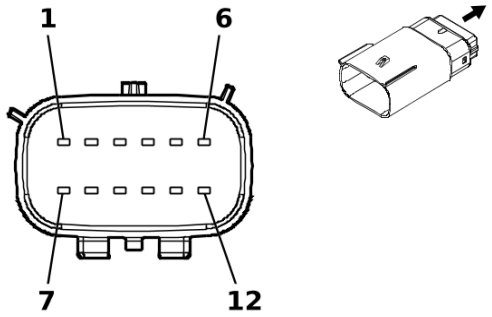

5187933

Connector Part Information

Harness Type: Engine Wiring Harness
OEM Connector: 33221171
Service Connector: 19333239
Description: 12-Way F 1.5 MX Series, Sealed(D-GY)

Connector Part Information

Harness Type: Fuel Injector Wiring Harness
OEM Connector: 33482-6261
Service Connector: Service by Harness - See Part Catalog
Description: 12-Way M 1.5 MX Series, Sealed(GY)

Terminal Part Information

Terminal Type ID	Terminated Lead	Diagnostic Test Probe	Terminal Removal Tool
I	85528055	J-35616-2A (GY)	J-38125-217
II	Not required	J-35616-3 (GY)	No Tool Required

X160 Engine Wiring Harness to Fuel Injector Wiring Harness - Bank 1 (LM2)

Pin	Size	Color	Circuit	Terminal Type ID	Option	Function	Pin	Size	Color	Circuit	Terminal Type ID	Option
1	1.5	BN / WH	4901	I	—	Direct Fuel Injector High Voltage Supply Cylinder 1	1	1.5	BN / WH	4901	II	—
2	1.5	BN	4801	I	—	Direct Fuel Injector High Voltage Control Cylinder 1	2	1.5	BN	4801	II	—
3	1.5	BU / GY	4902	I	—	Direct Fuel Injector High Voltage Supply Cylinder 2	3	1.5	BU / GY	4902	II	—
4	1.5	BU	4802	I	—	Direct Fuel Injector High Voltage Control Cylinder 2	4	1.5	BU	4802	II	—
5	1.5	GN / GY	4903	I	—	Direct Fuel Injector High Voltage Supply Cylinder 3	5	1.5	GN / GY	4903	II	—
6	1.5	GN	4803	I	—	Direct Fuel Injector High Voltage Control Cylinder 3	6	1.5	GN	4803	II	—

X160 Engine Wiring Harness to Fuel Injector Wiring Harness - Bank 1 (LM2) (cont'd)

Pin	Size	Color	Circuit	Terminal Type ID	Option	Function	Pin	Size	Color	Circuit	Terminal Type ID	Option
7	1.5	BU / WH	4904	I	—	Direct Fuel Injector High Voltage Supply Cylinder 4	7	1.5	BU / WH	4904	II	—
8	1.5	GY / BU	4804	I	—	Direct Fuel Injector High Voltage Control Cylinder 4	8	1.5	GY / BU	4804	II	—
9	1.5	GN / WH	4905	I	—	Direct Fuel Injector High Voltage Supply Cylinder 5	9	1.5	GN / WH	4905	II	—
10	1.5	WH / GN	4805	I	—	Direct Fuel Injector High Voltage Control Cylinder 5	10	1.5	WH / GN	4805	II	—
11	1.5	VT / GY	4906	I	—	Direct Fuel Injector High Voltage Supply Cylinder 6	11	1.5	VT / GY	4906	II	—
12	1.5	VT / GN	4806	I	—	Direct Fuel Injector High Voltage Control Cylinder 6	12	1.5	VT / GN	4806	II	—

X161 Engine Wiring Harness to Fuel Injector Wiring Harness - Bank 2 (L84/L87)

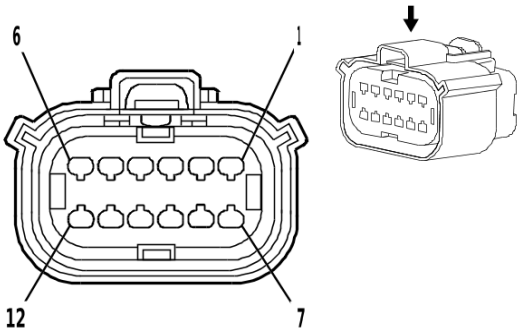

1825165

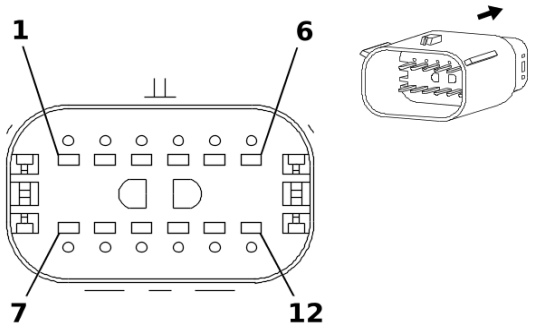

1825167

Connector Part Information

Harness Type: Engine Wiring Harness
OEM Connector: 13922706
Service Connector: 19352907
Description: 12-Way F 1.5 Series, Sealed(BK)

Connector Part Information

Harness Type: Fuel Injector Wiring Harness - Bank 2
OEM Connector: 13520607
Service Connector: Service by Harness - See Part Catalog
Description: 12-Way M 1.5 MX Series, Sealed(BK)

Terminal Part Information

Terminal Type ID	Terminated Lead	Diagnostic Test Probe	Terminal Removal Tool
I	19368973	J-35616-2A (GY)	J-38125-217
II	Not required	J-35616-3 (GY)	No Tool Required

X161 Engine Wiring Harness to Fuel Injector Wiring Harness - Bank 2 (L84/L87)

Pin	Size	Color	Circuit	Terminal Type ID	Option	Function	Pin	Size	Color	Circuit	Terminal Type ID	Option
1	0.75	BU / GY	4902	I	—	Direct Fuel Injector High Voltage Supply Cylinder 2	1	0.75	BU / GY	4902	II	—
2	0.75	BU / WH	4904	I	—	Direct Fuel Injector High Voltage Supply Cylinder 4	2	0.75	BU / WH	4904	II	—
3	0.75	VT / GY	4906	I	—	Direct Fuel Injector High Voltage Supply Cylinder 6	3	0.75	VT / GY	4906	II	—
4	0.75	GY / WH	4908	I	—	Direct Fuel Injector High Voltage Supply Cylinder 8	4	0.75	GY / WH	4908	II	—
5	0.75	BU	4802	I	—	Direct Fuel Injector High Voltage Control Cylinder 2	5	0.75	BU	4802	II	—
6 - 7	—	—	—	—	—	Not Occupied	6 - 7	—	—	—	—	—

X161 Engine Wiring Harness to Fuel Injector Wiring Harness - Bank 2 (L84/L87) (cont'd)

Pin	Size	Color	Circuit	Terminal Type ID	Option	Function	Pin	Size	Color	Circuit	Terminal Type ID	Option
8	0.75	GY / BU	4804	I	—	Direct Fuel Injector High Voltage Control Cylinder 4	8	0.75	GY / BU	4804	II	—
9	0.75	VT / GN	4806	I	—	Direct Fuel Injector High Voltage Control Cylinder 6	9	0.75	VT / GN	4806	II	—
10	0.75	GY	4808	I	—	Direct Fuel Injector High Voltage Control Cylinder 8	10	0.75	GY	4808	II	—
11	0.75	VT / BK	7300	I	—	High Pressure Fuel Pump Low Control	11	0.75	VT / BK	7300	II	—
12	0.75	YE	7301	I	—	High Pressure Fuel Pump High Control	12	0.75	YE	7301	II	—

X162 Front Object Alarm Sensor Wiring Harness to Front Object Alarm Sensor Wiring Harness - Jumper (UKL)

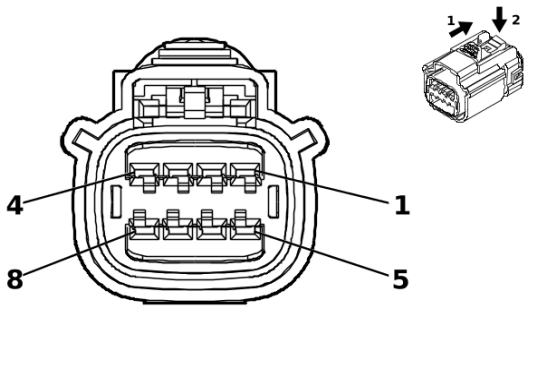

5253496

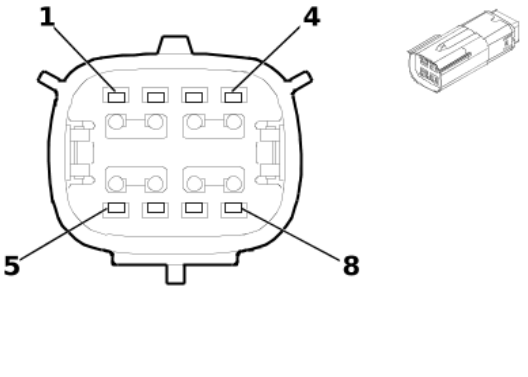

5402096

Connector Part Information

Harness Type: Front Object Alarm Sensor Wiring Harness
OEM Connector: 35507578
Service Connector: Service by Harness - See Part Catalog
Description: 8-Way F 1.5 OCS Series, Sealed(BK)

Connector Part Information

Harness Type: Front Object Alarm Sensor Wiring Harness - Jumper
OEM Connector: 13591113
Service Connector: Service by Harness - See Part Catalog
Description: 8-Way M 1.5 OCS Series, Sealed(BK)

Terminal Part Information

Terminal Type ID	Terminated Lead	Diagnostic Test Probe	Terminal Removal Tool
I	Not required	J-35616-2A (GY)	No Tool Required
II	Not required	J-35616-3 (GY)	No Tool Required

X162 Front Object Alarm Sensor Wiring Harness to Front Object Alarm Sensor Wiring Harness - Jumper (UKL)

Pin	Size	Color	Circuit	Terminal Type ID	Option	Function	Pin	Size	Color	Circuit	Terminal Type ID	Option
1	0.5	RD / GN	3140	I	—	Battery Positive Voltage	1	0.5	RD / GN	3140	II	—
2	0.5	BK / WH	651	I	—	Signal Ground	2	0.5	BK / WH	651	II	—
3	0.5	BU / GY	4105	I	—	AUTOSAR CAN Bus [+] 8 Serial Data	3	0.5	BU / GY	4105	II	—
4	0.5	BU / GY	4105	I	—	AUTOSAR CAN Bus [+] 8 Serial Data	4	0.5	BU / GY	4105	II	—
5	0.5	BK / WH	651	I	—	Signal Ground	5	0.5	BK / WH	651	II	—
6	—	—	—	—	—	Not Occupied	6	—	—	—	—	—
7	0.5	WH / GY	4104	I	—	AUTOSAR CAN Bus [-] 8 Serial Data	7	0.5	WH / GY	4104	II	—
8	0.5	WH / GY	4104	I	—	AUTOSAR CAN Bus [-] 8 Serial Data	8	0.5	WH / GY	4104	II	—

X163 Engine Wiring Harness to Diesel Glow Plug Wiring Harness (LM2)

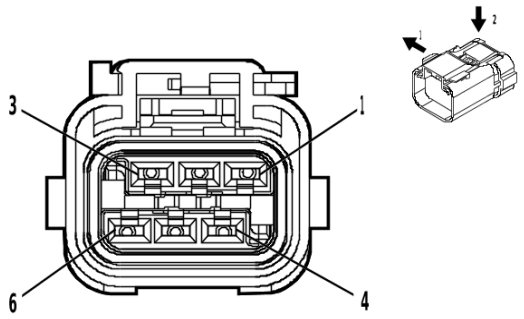

4997615

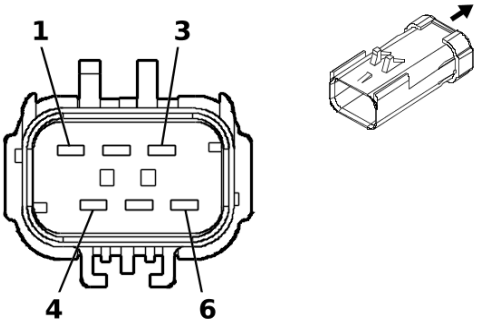

5187846

Connector Part Information

Harness Type: Engine Wiring Harness
OEM Connector: 15419838
Service Connector: 86825462
Description: 6-Way F 2.8 APEX Series, Sealed(BK)

Connector Part Information

Harness Type: Diesel Glow Plug Wiring Harness
OEM Connector: 54200612
Service Connector: Service by Harness - See Part Catalog
Description: 6-Way M 2.8 APEX Series, Sealed(BK)

Terminal Part Information

Terminal Type ID	Terminated Lead	Diagnostic Test Probe	Terminal Removal Tool
I	Not required	J-35616-4A (PU)	No Tool Required
II	Not required	J-35616-5 (PU)	No Tool Required

X163 Engine Wiring Harness to Diesel Glow Plug Wiring Harness (LM2)

Pin	Size	Color	Circuit	Terminal Type ID	Option	Function	Pin	Size	Color	Circuit	Terminal Type ID	Option
1	2.5	GY / BU	1581	I	—	Glow Plug 1 Control	1	2.5	GY / RD	1581	II	—
2	2.5	GY / BN	1582	I	—	Glow Plug 2 Control	2	2.5	GY / BK	1582	II	—
3	2.5	GY / GN	1583	I	—	Glow Plug 3 Control	3	2.5	GY / GN	1583	II	—
4	2.5	GY / YE	1584	I	—	Glow Plug 4 Control	4	2.5	GY / YE	1584	II	—
5	2.5	GY / WH	1585	I	—	Glow Plug 5 Control	5	2.5	GY / WH	1585	II	—
6	2.5	GY / VT	1586	I	—	Glow Plug 6 Control	6	2.5	GY	1586	II	—

X165 Front Object Alarm Sensor Wiring Harness to Front Object Alarm Sensor Wiring Harness - Jumper Right (UKL)

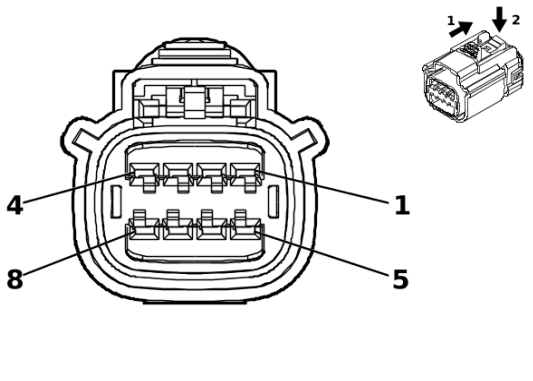

5253496

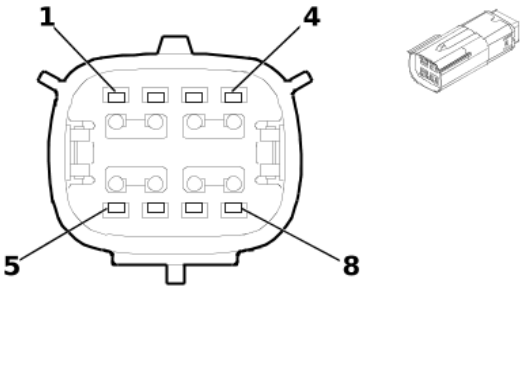

5402096

Connector Part Information

Harness Type: Front Object Alarm Sensor Wiring Harness
OEM Connector: 35507578
Service Connector: Service by Harness - See Part Catalog
Description: 8-Way F 1.5 OCS Series, Sealed(BK)

Connector Part Information

Harness Type: Front Object Alarm Sensor Wiring Harness - Jumper Right
OEM Connector: 15514651
Service Connector: Service by Harness - See Part Catalog
Description: 8-Way M 1.5 OCS Series, Sealed(BK)

Terminal Part Information

Terminal Type ID	Terminated Lead	Diagnostic Test Probe	Terminal Removal Tool
I	Not required	J-35616-2A (GY)	No Tool Required
II	Not required	J-35616-3 (GY)	No Tool Required

X165 Front Object Alarm Sensor Wiring Harness to Front Object Alarm Sensor Wiring Harness - Jumper Right (UKL)

Pin	Size	Color	Circuit	Terminal Type ID	Option	Function	Pin	Size	Color	Circuit	Terminal Type ID	Option
1	0.5	RD / GN	3140	I	—	Battery Positive Voltage	1	0.5	RD / GN	3140	II	—
2	0.5	BK / WH	651	I	—	Signal Ground	2	0.5	BK / WH	651	II	—
3	0.5	BU / GY	4105	I	—	AUTOSAR CAN Bus [+] 8 Serial Data	3	0.5	BU / GY	4105	II	—
4	0.5	BU / GY	4105	I	—	AUTOSAR CAN Bus [+] 8 Serial Data	4	0.5	BU / GY	4105	II	—
5	0.5	BK / WH	651	I	—	Signal Ground	5	0.5	BK / WH	651	II	—
6	—	—	—	—	—	Not Occupied	6	—	—	—	—	—
7	0.5	WH / GY	4104	I	—	AUTOSAR CAN Bus [-] 8 Serial Data	7	0.5	WH / GY	4104	II	—
8	0.5	WH / GY	4104	I	—	AUTOSAR CAN Bus [-] 8 Serial Data	8	0.5	WH / GY	4104	II	—

X175 Engine Wiring Harness to Automatic Transmission Wiring Harness - Case (M5X/MQE)

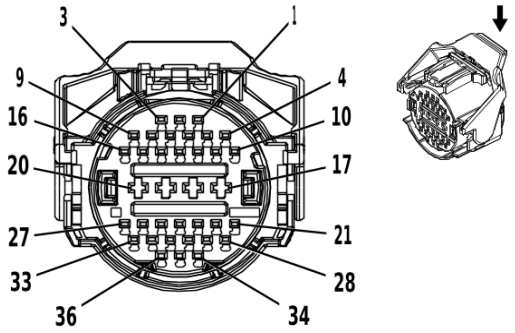

3621473

—

Connector Part Information

Harness Type: Engine Wiring Harness
OEM Connector: 15532799
Service Connector: 19329922
Description: 36-Way F 1.2 MCON-CB, 2.8 MCP Series, Sealed(BK)

Connector Part Information

Harness Type: Automatic Transmission Wiring Harness - Case
OEM Connector: 2321030-7
Service Connector: Service by Harness - See Part Catalog
Description: 36-Way M (BK)

Terminal Part Information

Terminal Type ID	Terminated Lead	Diagnostic Test Probe	Terminal Removal Tool
I	13575368	J-35616-35 (VT)	J-38125-557
II	19300445	J-35616-12 (BU)	J-38125-11A
III	Not required	J-35616-13 (BU)	No Tool Required

X175 Engine Wiring Harness to Automatic Transmission Wiring Harness - Case (M5X/MQE)

Pin	Size	Color	Circuit	Terminal Type ID	Option	Function	Pin	Size	Color	Circuit	Terminal Type ID	Option
1	0.5	GN / WH	6380	II	—	Torque Converter Clutch Enable Solenoid Valve A Control	1	0.5	GN / WH	6380	III	—
2	0.5	GN / GY	6387	II	—	Transmission High Side Driver 1 Control	2	0.5	YE / GN	6387	III	—
3	0.5	VT / WH	422	II	—	Torque Converter Clutch Solenoid Valve Control	3	0.5	YE / BN	422	III	—
4	0.5	GN / WH	1530	II	—	Transmission Line Pressure Control Solenoid Valve Control	4	0.5	GY / GN	1530	III	—
5	0.5	BN	6400	II	—	Clutch Solenoid Valve A Control	5	0.5	BN	6400	III	—
6	0.5	BU	6401	II	—	Clutch Solenoid Valve B Control	6	0.5	BU	6401	III	—

X175 Engine Wiring Harness to Automatic Transmission Wiring Harness - Case (M5X/ MQE) (cont'd)

Pin	Size	Color	Circuit	Terminal Type ID	Option	Function	Pin	Size	Color	Circuit	Terminal Type ID	Option
7	0.5	YE / BN	6210	II	—	Torque Converter Clutch Enable Solenoid Valve B Control	7	0.5	YE / BN	6210	III	—
8	0.5	WH / GY	4578	II	—	Surge Accumulator Solenoid Valve Low Side Control	8	0.5	WH / GY	4578	III	—
9	—	—	—	—	—	Not Occupied	9	—	—	—	—	—
10	0.5	GY	6402	II	—	Clutch Solenoid Valve C Control	10	0.5	GY	6402	III	—
11	0.5	BK / BN	586	II	—	Transmission Fluid Temperature Sensor Low Reference	11	0.5	BK / BN	586	III	—
12	0.5	BN / WH	585	II	—	Transmission Fluid Temperature Sensor Signal	12	0.5	BN / WH	585	III	—
13	0.5	WH	4508	II	—	Transmission Clutch G Control	13	0.5	WH	4508	III	—
14	0.5	WH / BU	4507	II	—	Transmission Clutch H Control	14	0.5	WH / BU	4507	III	—
15 - 17	—	—	—	—	—	Not Occupied	15 - 17	—	—	—	—	—
18	2.5	GN / GY	6387	I	—	Transmission High Side Driver 1 Control	18	2.5	GN / GY	6387	III	—
19	2.5	GY / BN	6388	I	—	Transmission High Side Driver 2 Control	19	2.5	GY / BN	6388	III	—
20	—	—	—	—	—	Not Occupied	20	—	—	—	—	—
21	0.5	GN / YE	3337	II	—	Transmission Internal Mode Switch Mode Control Y	21	0.5	GN / YE	3337	III	—
22	0.5	BU / WH	3338	II	—	Transmission Internal Mode Switch Mode Control X	22	0.5	BU / WH	3338	III	—
23	—	—	—	—	—	Not Occupied	23	—	—	—	—	—
24	0.5	GY / BU	6358	II	—	Output Speed Signal	24	0.5	GY / BU	6358	III	—

X175 Engine Wiring Harness to Automatic Transmission Wiring Harness - Case (M5X/MQE) (cont'd)

Pin	Size	Color	Circuit	Terminal Type ID	Option	Function	Pin	Size	Color	Circuit	Terminal Type ID	Option
25	0.5	YE / GN	4170	II	—	Transmission Output Shaft Speed Sensor Circuit 9V Reference	25	0.5	YE / GN	4170	III	—
26	0.5	BK / BU	6253	II	—	Transmission Input Speed Sensor Ground	26	0.5	GN / YE	6253	III	—
27	0.5	YE / BU	4171	II	—	Transmission Input Shaft Speed Sensor Circuit 9V Reference	27	0.5	WH / RD	4171	III	—
28	—	—	—	—	—	Not Occupied	28	—	—	—	—	—
29	0.5	WH / RD	480	II	—	Engine Control Vehicle Sensors 5 Volt Reference 1	29	0.5	WH / RD	480	III	—
30	0.5	BK / GY	626	II	—	Engine Control Vehicle Sensors Low Reference 1	30	0.5	BK / GY	626	III	—
31	—	—	—	—	—	Not Occupied	31	—	—	—	—	—
32	0.5	GN / VT	4510	II	—	Transmission Intermediate Speed Signal	32	0.5	GN / VT	4510	III	—
33 - 36	—	—	—	—	—	Not Occupied	33 - 36	—	—	—	—	—

X175 Engine Wiring Harness to Automatic Transmission Wiring Harness (MHS/MQC)

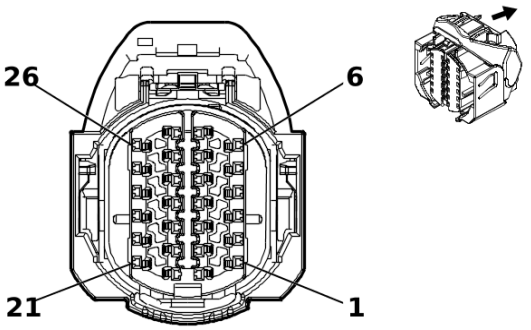

—

5275597

Connector Part Information

Harness Type: Engine Wiring Harness
OEM Connector: 35345999
Service Connector: 13528029
Description: 26-Way F 1.2 MCON Series, Sealed(BK)

Connector Part Information

Harness Type: Automatic Transmission Wiring Harness
OEM Connector: Not Available
Service Connector: Service by Harness - See Part Catalog
Description: 26-Way M (BK)

Terminal Part Information

Terminal Type ID	Terminated Lead	Diagnostic Test Probe	Terminal Removal Tool
I	19331733	J-35616-12 (BU)	J-38125-215A
II	84963773	J-35616-12 (BU)	J-38125-215A
III	Not required	J-35616-13 (BU)	No Tool Required

X175 Engine Wiring Harness to Automatic Transmission Wiring Harness (MHS/MQC)

Pin	Size	Color	Circuit	Terminal Type ID	Option	Function	Pin	Size	Color	Circuit	Terminal Type ID	Option
1	0.5	GN / YE	6353	I	—	Input Speed Signal	1	0.5	GN / YE	6353	III	—
2	0.5	GN / VT	4510	I	—	Transmission Intermediate Speed Signal	2	0.5	GN / VT	4510	III	—
3	0.5	BN / WH	6254	I	—	Transmission Input Speed Sensor Signal	3	0.5	BN / WH	6254	III	—
4	0.5	GY / BU	6358	I	—	Output Speed Signal	4	0.5	GY / BU	6358	III	—
5	0.5	WH / YE	6317	I	—	Electronic Transmission Range Select Out of Park Switch Signal	5	0.5	WH / YE	6317	III	—
6	0.5	VT / WH	6319	I	—	Electronic Transmission Range Select Out of Park Switch 2 Signal	6	0.5	VT / WH	6319	III	—

X175 Engine Wiring Harness to Automatic Transmission Wiring Harness (MHS/MQC) (cont'd)

Pin	Size	Color	Circuit	Terminal Type ID	Option	Function	Pin	Size	Color	Circuit	Terminal Type ID	Option
7	0.5	YE / GN	4170	I	—	Transmission Output Shaft Speed Sensor Circuit 9V Reference	7	0.5	YE / GN	4170	III	—
8	0.5	YE / BU	4171	I	—	Transmission Input Shaft Speed Sensor Circuit 9V Reference	8	0.5	YE / BU	4171	III	—
9	0.5	GY / BN	6388	I	—	Transmission High Side Driver 2 Control	9	0.5	GY / BN	6388	III	—
10	1.5	RD / GY	8540	II	—	Battery Positive Voltage	10	1.5	RD / GY	8540	III	—
11	0.5	GN / GY	6387	I	—	Transmission High Side Driver 1 Control	11	0.5	GN / GY	6387	III	—
12	0.5	WH / YE	2159	I	—	Park Inhibit Solenoid Assembly Control	12	0.5	WH / YE	2159	III	—
13	0.5	BN / WH	585	I	—	Transmission Fluid Temperature Sensor Signal	13	0.5	BN / WH	585	III	—
14	0.5	YE / BN	6404	I	—	Clutch Solenoid Valve E Control	14	0.5	YE / BN	6404	III	—
15	0.5	GY / GN	6403	I	—	Clutch Solenoid Valve D Control	15	0.5	GY / GN	6403	III	—
16	0.5	GY	6402	I	—	Clutch Solenoid Valve C Control	16	0.5	GY	6402	III	—
17	1.5	BK	450	II	—	Ground	17	1.5	BK	450	III	—
18	0.5	GN / WH	2968	I	—	Transmission Auxiliary Fluid Pump Control	18	0.5	GN / WH	2968	III	—
19	0.5	GN / BK	7819	I	—	Default Disable Solenoid Control	19	0.5	GN / BK	7819	III	—
20	0.5	BN	3706	I	—	Electronic Transmission Range Select Switch Analog Signal 1	20	0.5	BN	3706	III	—
21	0.5	VT	4509	I	—	Transmission Clutch F Control	21	0.5	VT	4509	III	—
22	0.5	WH / BU	4507	I	—	Transmission Clutch H Control	22	0.5	WH / BU	4507	III	—
23	0.5	WH	4508	I	—	Transmission Clutch G Control	23	0.5	WH	4508	III	—

X175 Engine Wiring Harness to Automatic Transmission Wiring Harness (MHS/MQC) (cont'd)

Pin	Size	Color	Circuit	Terminal Type ID	Option	Function	Pin	Size	Color	Circuit	Terminal Type ID	Option
24	0.5	GN / WH	1530	I	—	Transmission Line Pressure Control Solenoid Valve Control	24	0.5	GN / WH	1530	III	—
25	0.5	VT / WH	422	I	—	Torque Converter Clutch Solenoid Valve Control	25	0.5	VT / WH	422	III	—
26	0.5	BK / BN	586	I	—	Transmission Fluid Temperature Sensor Low Reference	26	0.5	BK / BN	586	III	—

X176 Automatic Transmission Wiring Harness - Case to Automatic Transmission Wiring Harness (M5X/MQE)

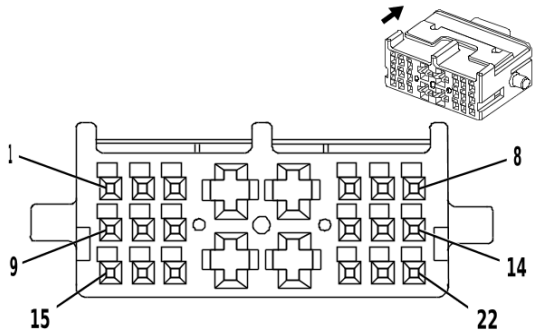

3977748

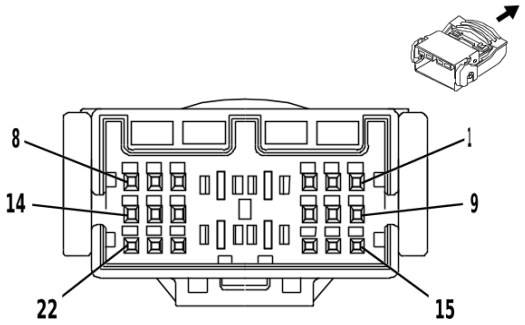

3977770

Connector Part Information

Harness Type: Automatic Transmission Wiring Harness - Case

OEM Connector: 1897543-1

Service Connector: Service by Harness - See Part Catalog

Description: 22-Way F 0.64 Micro-Quadlock, 2.8 Micro-Power Series(NA)

Connector Part Information

Harness Type: Automatic Transmission Wiring Harness - Control

OEM Connector: 1897540-1

Service Connector: Service by Harness - See Part Catalog

Description: 22-Way M 0.64 Micro-Quadlock, 2.8 Micro-Power Series(NA)

Terminal Part Information

Terminal Type ID	Terminated Lead	Diagnostic Test Probe	Terminal Removal Tool
I	Not required	J-35616-35 (VT)	No Tool Required
II	Not required	J-35616-64B (L-BU)	No Tool Required
III	Not required	J-35616-5 (PU)	No Tool Required
IV	Not required	J-35616-65B (L-BU)	No Tool Required

X176 Automatic Transmission Wiring Harness - Case to Automatic Transmission Wiring Harness (M5X/MQE)

Pin	Size	Color	Circuit	Terminal Type ID	Option	Function	Pin	Size	Color	Circuit	Terminal Type ID	Option
1	0.5	GN / WH	6380	II	—	Torque Converter Clutch Enable Solenoid Valve A Control	1	0.5	GN / WH	6380	IV	—
2	0.5	VT / WH	3338	II	—	Transmission Internal Mode Switch Mode Control X	2	0.5	VT / WH	3338	IV	—
3	—	—	—	—	—	Not Occupied	3	—	—	—	—	—
4	2.5	GN / GY	6387	I	—	Transmission High Side Driver 1 Control	4	2.5	GN / GY	6387	III	—
5	0.5	YE / RD	480	I	—	Engine Control Vehicle Sensors 5 Volt Reference 1	5	0.5	YE / RD	480	III	—

X176 Automatic Transmission Wiring Harness - Case to Automatic Transmission Wiring Harness (M5X/MQE) (cont'd)

Pin	Size	Color	Circuit	Terminal Type ID	Option	Function	Pin	Size	Color	Circuit	Terminal Type ID	Option
6	—	—	—	—	—	Not Occupied	6	—	—	—	—	—
7	0.5	WH / BU	4507	II	—	Transmission Clutch H Control	7	0.5	WH / BU	4507	IV	—
8	0.5	GY / GN	1530	II	—	Transmission Line Pressure Control Solenoid Valve Control	8	0.5	GY / GN	1530	IV	—
9	0.5	WH	4508	II	—	Transmission Clutch G Control	9	0.5	WH	4508	IV	—
10	0.5	YE / BN	6210	II	—	Torque Converter Clutch Enable Solenoid Valve B Control	10	0.5	YE / BN	6210	IV	—
11	0.5	WH / BK	3337	II	—	Transmission Internal Mode Switch Mode Control Y	11	0.5	WH / BK	3337	IV	—
12	—	—	—	—	—	Not Occupied	12	—	—	—	—	—
13	0.5	GY	6402	II	—	Clutch Solenoid Valve C Control	13	0.5	GY	6402	IV	—
14	0.5	YE / BN	422	II	—	Torque Converter Clutch Solenoid Valve Control	14	0.5	YE / BN	422	IV	—
15	0.5	BN / WH	585	II	—	Transmission Fluid Temperature Sensor Signal	15	0.5	BK / BN	585	IV	—
16	0.5	BK / BN	586	II	—	Transmission Fluid Temperature Sensor Low Reference	16	0.5	BK / BN	586	IV	—
17	—	—	—	—	—	Not Occupied	17	—	—	—	—	—
18	2.5	GY / BN	6388	I	—	Transmission High Side Driver 2 Control	18	2.5	GY / BN	6388	III	—
19	—	—	—	—	—	Not Occupied	19	—	—	—	—	—
20	0.5	BK / GY	626	II	—	Engine Control Vehicle Sensors Low Reference 1	20	0.5	BK / GY	626	IV	—
21	0.5	BN	6400	II	—	Clutch Solenoid Valve A Control	21	0.5	BN	6400	IV	—
22	0.5	BU	6401	II	—	Clutch Solenoid Valve B Control	22	0.5	BU	6401	IV	—

X176 Automatic Transmission Wiring Harness - Case to Automatic Transmission Wiring Harness (MHS/MQC)

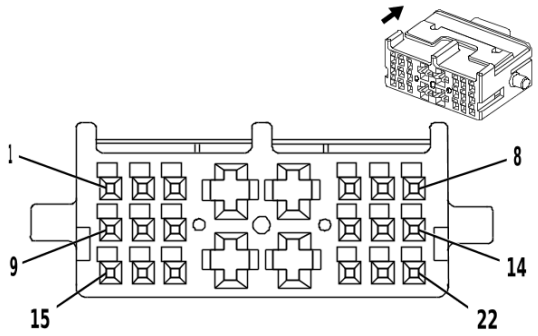

3977748

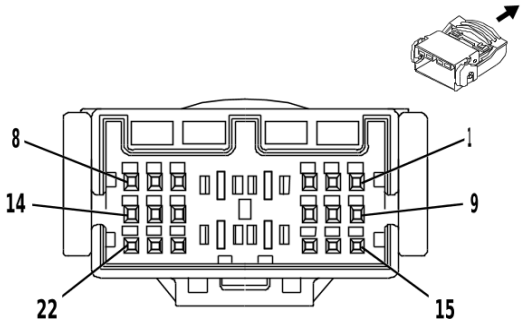

3977770

Connector Part Information

Harness Type: Automatic Transmission Wiring Harness - Case

OEM Connector: 1897543-1

Service Connector: Service by Harness - See Part Catalog

Description: 22-Way F 0.64 Micro-Quadlock, 2.8 Micro-Power Series(NA)

Connector Part Information

Harness Type: Automatic Transmission Wiring Harness - Control

OEM Connector: 1897540-1

Service Connector: Service by Harness - See Part Catalog

Description: 22-Way M 0.64 Micro-Quadlock, 2.8 Micro-Power Series(NA)

Terminal Part Information

Terminal Type ID	Terminated Lead	Diagnostic Test Probe	Terminal Removal Tool
I	Not required	J-35616-35 (VT)	No Tool Required
II	Not required	J-35616-64B (LT BU)	No Tool Required
III	Not required	J-35616-5 (PU)	No Tool Required
IV	Not required	J-35616-65B (LT BU)	No Tool Required

X176 Automatic Transmission Wiring Harness - Case to Automatic Transmission Wiring Harness (MHS/MQC)

Pin	Size	Color	Circuit	Terminal Type ID	Option	Function	Pin	Size	Color	Circuit	Terminal Type ID	Option
1	0.5	VT	7819	II	—	Default Disable Solenoid Control	1	0.5	VT	7819	IV	—
2	0.5	GN / OG	1530	II	—	Transmission Line Pressure Control Solenoid Valve Control	2	0.5	GN / OG	1530	IV	—
3	0.5	GY / BN	422	II	—	Torque Converter Clutch Solenoid Valve Control	3	0.5	GY / BN	422	IV	—
4	0.5	BN	6387	I	—	Transmission High Side Driver 1 Control	4	0.5	BN	6387	III	—
5	—	—	—	—	—	Not Occupied	5	—	—	—	—	—
6	0.5	YE	6317	II	—	Electronic Transmission Range Select	6	0.5	YE	6317	IV	—

X176 Automatic Transmission Wiring Harness - Case to Automatic Transmission Wiring Harness (MHS/MQC) (cont'd)

Pin	Size	Color	Circuit	Terminal Type ID	Option	Function	Pin	Size	Color	Circuit	Terminal Type ID	Option
						Out of Park Switch Signal						
7	0.5	YE / GY	6319	II	—	Electronic Transmission Range Select Out of Park Switch 2 Signal	7	0.5	YE / GY	6319	IV	—
8	0.5	GN	4170	II	—	Transmission Output Shaft Speed Sensor Circuit 9V Reference	8	0.5	GN	4170	IV	—
9	0.5	OG	2159	II	—	Park Inhibit Solenoid Assembly Control	9	0.5	OG	2159	IV	—
10	0.5	BK / GY	3706	II	—	Electronic Transmission Range Select Switch Analog Signal 1	10	0.5	BK / GY	3706	IV	—
11	0.5	BU	4171	II	—	Transmission Input Shaft Speed Sensor Circuit 9V Reference	11	0.5	BU	4171	IV	—
12	—	—	—	—	—	Not Occupied	12	—	—	—	—	—
13	0.5	BU / BN	586	II	—	Transmission Fluid Temperature Sensor Low Reference	13	0.5	BU / BN	586	IV	—
14	0.5	BN / YE	585	II	—	Transmission Fluid Temperature Sensor Signal	14	0.5	BN / YE	585	IV	—
15	0.5	BU / GN	6404	II	—	Clutch Solenoid Valve E Control	15	0.5	BU / GN	6404	IV	—
16	0.5	GN / BN	6403	II	—	Clutch Solenoid Valve D Control	16	0.5	GN / BN	6403	IV	—
17	0.5	GY	6402	II	—	Clutch Solenoid Valve C Control	17	0.5	GY	6402	IV	—
18	0.5	WH	6388	I	—	Transmission High Side Driver 2 Control	18	0.5	WH	6388	III	—
19	—	—	—	—	—	Not Occupied	19	—	—	—	—	—
20	0.5	BN / WH	4509	II	—	Transmission Clutch F Control	20	0.5	BN / WH	4509	IV	—

X176 Automatic Transmission Wiring Harness - Case to Automatic Transmission Wiring Harness (MHS/MQC) (cont'd)

Pin	Size	Color	Circuit	Terminal Type ID	Option	Function	Pin	Size	Color	Circuit	Terminal Type ID	Option
21	0.5	YE / VT	4507	II	—	Transmission Clutch H Control	21	0.5	YE / VT	4507	IV	—
22	0.5	BU / GY	4508	II	—	Transmission Clutch G Control	22	0.5	BU / GY	4508	IV	—

X176 Automatic Transmission Wiring Harness - Case to Automatic Transmission Wiring Harness (MHT/MQB)

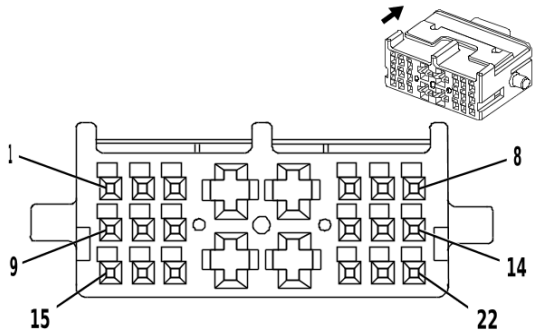

3977748

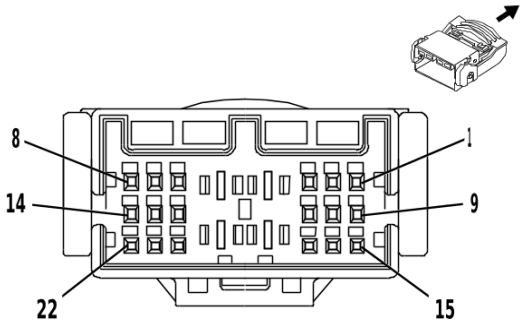

3977770

Connector Part Information

Harness Type: Automatic Transmission Wiring Harness - Case

OEM Connector: 1897543-1

Service Connector: Service by Harness - See Part Catalog

Description: 22-Way F 0.64 Micro-Quadlock, 2.8 Micro-Power Series(NA)

Connector Part Information

Harness Type: Automatic Transmission Wiring Harness - Control

OEM Connector: 1897540-1

Service Connector: Service by Harness - See Part Catalog

Description: 22-Way M 0.64 Micro-Quadlock, 2.8 Micro-Power Series(NA)

Terminal Part Information

Terminal Type ID	Terminated Lead	Diagnostic Test Probe	Terminal Removal Tool
I	Not required	J-35616-35 (VT)	No Tool Required
II	Not required	J-35616-64B (LT BU)	No Tool Required
III	Not required	J-35616-5 (PU)	No Tool Required
IV	Not required	J-35616-65B (LT BU)	No Tool Required

X176 Automatic Transmission Wiring Harness - Case to Automatic Transmission Wiring Harness (MHT/MQB)

Pin	Size	Color	Circuit	Terminal Type ID	Option	Function	Pin	Size	Color	Circuit	Terminal Type ID	Option
1	0.5	VT	7819	II	—	Default Disable Solenoid Control	1	0.5	VT	7819	IV	—
2	0.5	GN / OG	1530	II	—	Transmission Line Pressure Control Solenoid Valve Control	2	0.5	GN / OG	1530	IV	—
3	0.5	GY / BN	422	II	—	Torque Converter Clutch Solenoid Valve Control	3	0.5	GY / BN	422	IV	—
4	0.5	BN	6387	I	—	Transmission High Side Driver 1 Control	4	0.5	BN	6387	III	—
5 - 12	—	—	—	—	—	Not Occupied	5 - 12	—	—	—	—	—
13	0.5	BU / BN	1147	II	—	Transmission Shift Inhibit Signal	13	0.5	BU / BN	1147	IV	—

X176 Automatic Transmission Wiring Harness - Case to Automatic Transmission Wiring Harness (MHT/MQB) (cont'd)

Pin	Size	Color	Circuit	Terminal Type ID	Option	Function	Pin	Size	Color	Circuit	Terminal Type ID	Option
14	0.5	BN / YE	585	II	—	Transmission Fluid Temperature Sensor Signal	14	0.5	BN / YE	585	IV	—
15	0.5	BU / GN	6404	II	—	Clutch Solenoid Valve E Control	15	0.5	BU / GN	6404	IV	—
16	0.5	GN / BN	6403	II	—	Clutch Solenoid Valve D Control	16	0.5	GN / BN	6403	IV	—
17	0.5	GY	6402	II	—	Clutch Solenoid Valve C Control	17	0.5	GY	6402	IV	—
18	0.5	WH	6388	I	—	Transmission High Side Driver 2 Control	18	0.5	WH	6388	III	—
19	—	—	—	—	—	Not Occupied	19	—	—	—	—	—
20	0.5	BN / WH	4509	II	—	Transmission Clutch F Control	20	0.5	BN / WH	4509	IV	—
21	0.5	YE / VT	4507	II	—	Transmission Clutch H Control	21	0.5	YE / VT	4507	IV	—
22	0.5	BU / GY	4508	II	—	Transmission Clutch G Control	22	0.5	BU / GY	4508	IV	—

X177 Automatic Transmission Wiring Harness - Case to Automatic Transmission Output Speed Sensor Wiring Harness (M5X/MQE)

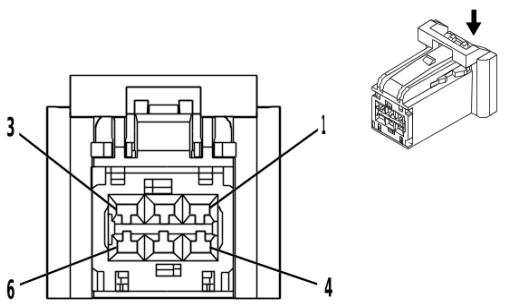

3977938

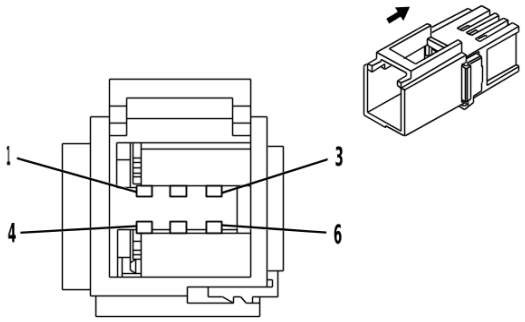

3977959

Connector Part Information

Harness Type: Automatic Transmission Wiring Harness - Case

OEM Connector: 13582377

Service Connector: Service by Harness - See Part Catalog

Description: 6-Way F 1.2 OCS Series(NA)

Connector Part Information

Harness Type: Automatic Transmission Output Speed Sensor Wiring Harness

OEM Connector: 13955963

Service Connector: Service by Harness - See Part Catalog

Description: 6-Way M 0.64 II Series(GY)

Terminal Part Information

Terminal Type ID	Terminated Lead	Diagnostic Test Probe	Terminal Removal Tool
I	Not required	Not Available	No Tool Required
II	Not required	Not Available	No Tool Required

X177 Automatic Transmission Wiring Harness - Case to Automatic Transmission Output Speed Sensor Wiring Harness (M5X/MQE)

Pin	Size	Color	Circuit	Terminal Type ID	Option	Function	Pin	Size	Color	Circuit	Terminal Type ID	Option
1	0.5	GY / BU	6358	I	—	Output Speed Signal	1	0.5	YE	6358	II	—
2	0.5	YE / GN	4170	I	—	Transmission Output Shaft Speed Sensor Circuit 9V Reference	2	0.5	RD	4170	II	—
3	0.5	YE / GN	4170	I	—	Transmission Output Shaft Speed Sensor Circuit 9V Reference	3	0.5	WH	4170	II	—
4	0.5	YE / RD	4171	I	—	Transmission Input Shaft Speed Sensor Circuit 9V Reference	4	0.5	WH	4171	II	—
5	0.5	GN / YE	6253	I	—	Transmission Input Speed Sensor Ground	5	0.5	GN	6253	II	—
6	0.5	GN / VT	4510	I	—	Transmission Intermediate Speed Signal	6	0.5	BK	4510	II	—

X177 Automatic Transmission Wiring Harness - Control to Automatic Transmission Wiring Harness - Control Extension (MHS/MQC)

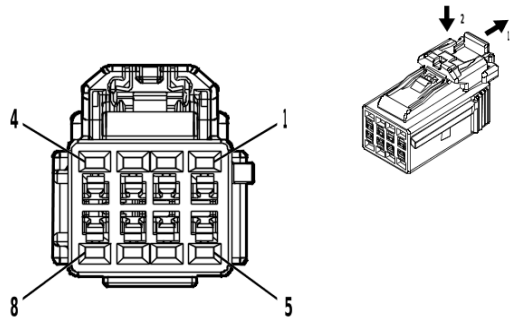

5086387

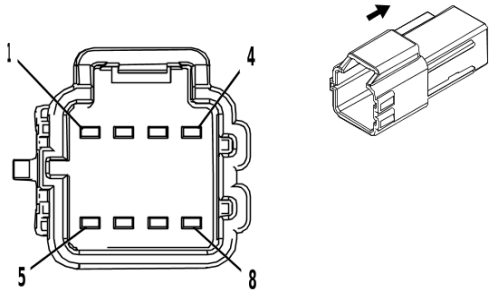

4331672

Connector Part Information

Harness Type: Automatic Transmission Wiring Harness - Control Extension

OEM Connector: 6098-8632

Service Connector: Service by Harness - See Part Catalog

Description: 8-Way F 1.2 Series

Connector Part Information

Harness Type: Automatic Transmission Wiring Harness - Control

OEM Connector: 6098-8630

Service Connector: Service by Harness - See Part Catalog

Description: 8-Way M 1.2 Series

Terminal Part Information

Terminal Type ID	Terminated Lead	Diagnostic Test Probe	Terminal Removal Tool
I	Not required	J-35616-12 (BU)	No Tool Required
II	Not required	J-35616-13 (BU)	No Tool Required

X177 Automatic Transmission Wiring Harness - Control to Automatic Transmission Wiring Harness - Control Extension (MHS/MQC)

Pin	Size	Color	Circuit	Terminal Type ID	Option	Function	Pin	Size	Color	Circuit	Terminal Type ID	Option
1	0.5	BN	6387	I	—	Transmission High Side Driver 1 Control	1	0.5	BN	6387	II	—
2	0.5	GN / OG	1530	I	—	Transmission Line Pressure Control Solenoid Valve Control	2	0.5	GN / OG	1530	II	—
3	0.5	GY / BN	422	I	—	Torque Converter Clutch Solenoid Valve Control	3	0.5	GY / BN	422	II	—
4	0.5	VT	7819	I	—	Default Disable Solenoid Control	4	0.5	VT	7819	II	—
5	0.5	BK / GY	3706	I	—	Electronic Transmission Range Select Switch Analog Signal 1	5	0.5	BK / GY	3706	II	—
6	0.5	BU	4171	I	—	Transmission Input Shaft Speed Sensor Circuit 9V Reference	6	0.5	BU	4171	II	—

X177 Automatic Transmission Wiring Harness - Control to Automatic Transmission Wiring Harness - Control Extension (MHS/MQC) (cont'd)

Pin	Size	Color	Circuit	Terminal Type ID	Option	Function	Pin	Size	Color	Circuit	Terminal Type ID	Option
7	0.5	WH	6388	I	—	Transmission High Side Driver 2 Control	7	0.5	WH	6388	II	—
8	—	—	—	—	—	Not Occupied	8	—	—	—	—	—

X177 Automatic Transmission Wiring Harness - Case to Automatic Transmission Output Speed Sensor Wiring Harness (MHT/MQB)

—

Connector Part Information

Harness Type: Automatic Transmission Wiring Harness - Control Extension
OEM Connector: 6098-8427
Service Connector: Service by Harness - See Part Catalog
Description: 6-Way F SUMITOMO

—

Connector Part Information

Harness Type: Automatic Transmission Wiring Harness - Control
OEM Connector: 6098-8429
Service Connector: Service by Harness - See Part Catalog
Description: 6-Way M SUMITOMO SLV WIR CONN FEM

Terminal Part Information

Terminal Type ID	Terminated Lead	Diagnostic Test Probe	Terminal Removal Tool
I	Not required	J-35616-12 (BU)	No Tool Required
II	Not required	J-35616-13 (BU)	No Tool Required

X177 Automatic Transmission Wiring Harness - Case to Automatic Transmission Output Speed Sensor Wiring Harness (MHT/MQB)

Pin	Size	Color	Circuit	Terminal Type ID	Option	Function	Pin	Size	Color	Circuit	Terminal Type ID	Option
1	0.5	BN	6387	I	—	Transmission High Side Driver 1 Control	1	0.5	BN	6387	II	—
2	0.5	GN / OG	1530	I	—	Transmission Line Pressure Control Solenoid Valve Control	2	0.5	GN / OG	1530	II	—
3	0.5	GY / BN	422	I	—	Torque Converter Clutch Solenoid Valve Control	3	0.5	GY / BN	422	II	—
4	0.5	VT	7819	I	—	Default Disable Solenoid Control	4	0.5	VT	7819	II	—
5	0.5	WH	6388	I	—	Transmission High Side Driver 2 Control	5	0.5	WH	6388	II	—

X210 Instrument Panel Wiring Harness to Body Wiring Harness

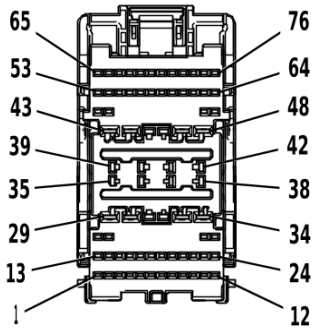

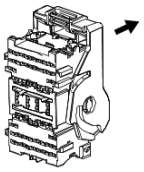

3960183

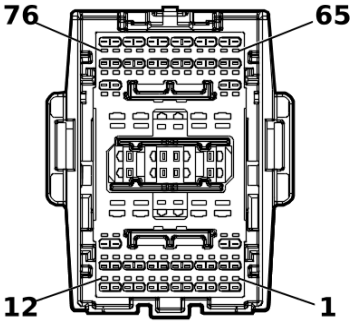

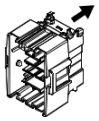

5277492

Connector Part Information

Harness Type: Instrument Panel Wiring Harness
OEM Connector: 35142991
Service Connector: 84581287
Description: 76-Way F 1.2, 1.5, 2.8 YESC Series(BK)

Connector Part Information

Harness Type: Body Wiring Harness
OEM Connector: 35273135
Service Connector: 13526160
Description: 76-Way M 1.2 MCON-CB, 1.5, 2.8 YESC Series(BK)

Terminal Part Information

Terminal Type ID	Terminated Lead	Diagnostic Test Probe	Terminal Removal Tool
I	13575708	J-35616-2A (GY)	J-38125-11A
II	13587516	J-35616-4A (PU)	J-38125-11A
III	84962854	J-35616-12 (BU)	J-38125-215A
IV	84616651	J-35616-13 (BU)	J-38125-215A
V	84888592	J-35616-5 (PU)	J-38125-11A
VI	85119177	J-35616-3 (GY)	J-38125-553

X210 Instrument Panel Wiring Harness to Body Wiring Harness

Pin	Size	Color	Circuit	Terminal Type ID	Option	Function	Pin	Size	Color	Circuit	Terminal Type ID	Option
1	0.5	RD / GN	1540	III	—	Battery Positive Voltage	1	0.5	RD / GN	1540	IV	—
2	0.5	RD / YE	6540	III	—	Battery Positive Voltage	2	0.5	RD / YE	6540	IV	—
3	0.5	BN / OG	3020	III	—	Steering Wheel Air Bag Stage 1 Low Control	3	0.35	BN / OG	3020	IV	—
4	0.5	OG / VT	3021	III	—	Steering Wheel Air Bag Stage 1 High Control	4	0.35	OG / VT	3021	IV	—
5	0.5	WH / OG	3022	III	—	Steering Wheel Air Bag Stage 2 Low Control	5	0.35	WH / OG	3022	IV	—
6	0.5	OG / GN	3023	III	—	Steering Wheel Air Bag Stage 2 High Control	6	0.35	OG / GN	3023	IV	—
7	0.35	BN / WH	28	III	—	Horn Relay Control	7	0.35	BN / WH	28	IV	—

X210 Instrument Panel Wiring Harness to Body Wiring Harness (cont'd)

Pin	Size	Color	Circuit	Terminal Type ID	Option	Function	Pin	Size	Color	Circuit	Terminal Type ID	Option
8	—	—	—	—	—	Body Control Module Accessory Output	8	0.35	YE	900	IV	—
9	—	—	—	—	—	Body Control Module Accessory Output	9	0.35	YE	901	IV	—
10	—	—	—	—	—	Body Control Module Accessory Output	10	0.35	YE	902	IV	—
11 - 12	—	—	—	—	—	Not Occupied	11 - 12	—	—	—	—	—
13	0.35	BN / BK	3552	III	—	Interior Passive Entry Antenna 1 High Signal	13	0.35	BN / BK	3552	IV	—
14	0.35	WH	3553	III	—	Interior Passive Entry Antenna 1 Low Signal	14	0.35	WH	3553	IV	—
15	0.35	WH	4100	III	—	AUTOSAR CAN Bus [-] 4 Serial Data	15	0.5	WH	4100	IV	—
16	0.35	BU / VT	4101	III	—	AUTOSAR CAN Bus [+] 4 Serial Data	16	0.5	BU / VT	4101	IV	—
17	0.35	WH	4976	III	—	AUTOSAR CAN Bus [-] 3 Serial Data	17	0.5	WH	4976	IV	—
18	0.35	BU / BK	4977	III	—	AUTOSAR CAN Bus [+] 3 Serial Data	18	0.5	BU / BK	4977	IV	—
19 - 20	—	—	—	—	—	Not Occupied	19 - 20	—	—	—	—	—
21	0.35	BU / YE	4984	III	—	AUTOSAR CAN Bus [-] 5 Serial Data	21	0.5	BU / YE	4984	IV	—
22	0.35	BU / WH	4985	III	—	AUTOSAR CAN Bus [+] 5 Serial Data	22	0.5	BU / WH	4985	IV	—
23	0.35	WH	4986	III	—	AUTOSAR CAN Bus [-] 1 Serial Data	23	0.5	WH	4986	IV	—
24	0.35	BU	4987	III	—	AUTOSAR CAN Bus [+] 1 Serial Data	24	0.5	BU	4987	IV	—
25	0.35	WH	4986	III	—	AUTOSAR CAN Bus [-] 1 Serial Data	25	0.5	WH	4986	IV	—
26	0.35	BU	4987	III	—	AUTOSAR CAN Bus [+] 1 Serial Data	26	0.5	BU	4987	IV	—
27	0.35	BN / BK	4996	III	—	Immobilizer Antenna Signal [+]	27	0.35	BN / BK	4996	IV	—

X210 Instrument Panel Wiring Harness to Body Wiring Harness (cont'd)

Pin	Size	Color	Circuit	Terminal Type ID	Option	Function	Pin	Size	Color	Circuit	Terminal Type ID	Option
28	0.35	WH / GY	4997	III	—	Immobilizer Antenna Low Signal	28	0.35	WH / GY	4997	IV	—
29	2.5	RD / BN	4142	II	—	Primary Fused Battery Positive Voltage	29	2.5	RD / BN	4142	V	—
30	0.5	GY	1715	II	—	Windshield Wiper Switch High Signal	30	0.35	GY	1715	V	—
31	0.5	GN / YE	2731	I	—	Brake System Control Module LIN Bus 1	31	0.5	GN / YE	2731	VI	—
32 - 34	—	—	—	—	—	Not Occupied	32 - 34	—	—	—	—	—
35	0.75	GN / BK	116	I	—	Left Rear Speaker [-] Control	35	0.75	GN / BK	116	VI	—
36	0.75	GN	199	I	—	Left Rear Speaker [+] Control	36	0.75	GN	199	VI	—
37	0.75	BN / BU	118	I	—	Left Front Speaker [-] Control 1	37	0.75	BN / BU	118	VI	—
38	0.75	BU	201	I	—	Left Front Speaker 1 [+] Control	38	0.75	BU	201	VI	—
39	—	—	—	—	—	Not Occupied	39	—	—	—	—	—
40	0.35	BU / WH	3119	I	—	Roof Rail Air Bag Disable Switch Signal	40	0.35	BU / WH	3119	VI	—
41	0.35	BN / WH	3895	I	—	Roof Rail Air Bag Disable Switch Low Reference	41	0.35	BN / WH	3895	VI	—
42	—	—	—	—	—	Not Occupied	42	—	—	—	—	—
43	0.5	GN / GY	4627	II	—	Image Processing Module LIN Bus 1	43	0.5	GN / GY	4627	V	—
44	—	—	—	—	—	Not Occupied	44	—	—	—	—	—
45	0.35	GN / VT	4786	I	—	Dome/Reading Lamp Enable Signal	45	0.5	GN / VT	4786	VI	—
46	0.35	GN / BN	507	I	—	Wait To Start Indicator Control	46	0.35	GN / BN	507	VI	—
47	—	—	—	—	—	Not Occupied	47	—	—	—	—	—
48	0.5	YE / VT	6191	II	—	Power Rear Window Switch Open Signal	48	0.5	YE / VT	6191	V	—

X210 Instrument Panel Wiring Harness to Body Wiring Harness (cont'd)

Pin	Size	Color	Circuit	Terminal Type ID	Option	Function	Pin	Size	Color	Circuit	Terminal Type ID	Option
49	0.5	WH	6192	III	—	Sliding Rear Window Switch Close Signal	49	0.5	WH	6192	IV	—
50	0.5	YE	6817	III	—	LED Backlight Dimming Control 1	50	0.5	YE	6817	IV	—
51	0.35	WH / GY	7297	III	—	Minor Endgate High Relay Control	51	0.75	WH / GY	7297	IV	—
52	0.5	GN / WH	7530	III	—	Driver Seat Adjuster Memory Module LIN Bus 1	52	0.5	GN / WH	7530	IV	—
53	—	—	—	—	—	Not Occupied	53	—	—	—	—	—
54	0.35	WH / GN	7728	III	—	Major Endgate High Relay Control	54	0.75	WH / GN	7728	IV	—
55	0.35	BU / VT	7729	III	—	Major Endgate Low Relay Control	55	0.75	BU / VT	7729	IV	—
56	0.5	VT	801	III	—	Retained Accessory Power Control	56	0.35	VT	801	IV	—
57	0.5	BN / YE	820	III	—	Center High Mounted Stop Lamp Supply Voltage Center High Mounted Stop Lamp Supply Voltage	57	0.35 0.5	BN / YE BN / YE	820 820	IV IV	UET - UET
58	0.35	GN / BU	2733	III	—	Brake System Control Module LIN Bus 2	58	0.5	GN / BU	2733	IV	—
59	0.5	RD / VT	2640	III	—	Battery Positive Voltage	59	0.5	RD / VT	2640	IV	—
60	0.35	BU / YE	4984	III	—	AUTOSAR CAN Bus [-] 5 Serial Data	60	0.5	BU / YE	4984	IV	—
61	0.35	BU / WH	4985	III	—	AUTOSAR CAN Bus [+] 5 Serial Data	61	0.5	BU / WH	4985	IV	—
62 - 64	—	—	—	—	—	Not Occupied	62 - 64	—	—	—	—	—
65	0.35	GN / GY	817	III	—	Vehicle Speed Signal	65	0.35	GN / GY	817	IV	—
66	0.35	WH / GY	2935	III	—	Task Lamp Switch Signal	66	0.35	WH / GY	2935	IV	—
67	0.5	RD / YE	2340	III	—	Battery Positive Voltage	67	0.5	RD / YE	2340	IV	—

X210 Instrument Panel Wiring Harness to Body Wiring Harness (cont'd)

Pin	Size	Color	Circuit	Terminal Type ID	Option	Function	Pin	Size	Color	Circuit	Terminal Type ID	Option
68	0.5	WH / VT	1430	III	—	Exterior Courtesy Lamp Control	68	0.5	WH / VT	1430	IV	—
69	0.5	GN / WH	2854	III	—	Body Control Module LIN Bus 8	69	0.35	GN / WH	2854	IV	—
70	0.5	BU / BN	6807	III	—	DC/AC Inverter Control	70	0.5	BU / BN	6807	IV	—
71	0.5	VT / RD	4049	III	—	AC Power Outlet Sensor High Reference	71	0.5	VT / RD	4049	IV	—
72 - 73	—	—	—	—	—	Not Occupied	72 - 73	—	—	—	—	—
74	0.35	Bare	10116	III	—	AC Outlet Low Reference	74	0.35	Bare	10116	IV	—
75	0.75	BK	10117	III	—	AC Outlet Phase A Control	75	0.75	BK	10117	IV	—
76	0.75	RD	10118	III	—	AC Outlet Phase B Control	76	0.75	RD	10118	IV	—

X211 Instrument Panel Wiring Harness to Body Wiring Harness

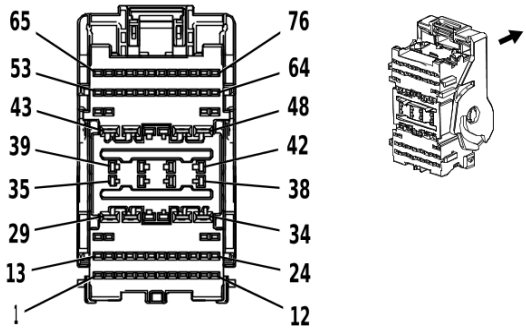

3960183

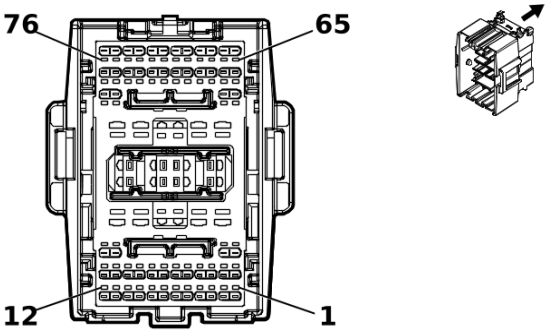

5277492

Connector Part Information

Harness Type: Instrument Panel Wiring Harness
OEM Connector: 35142991
Service Connector: 84581287
Description: 76-Way F 1.2, 1.5, 2.8 YESC Series(BK)

Connector Part Information

Harness Type: Body Wiring Harness
OEM Connector: 35273135
Service Connector: 13526160
Description: 76-Way M 1.2 MCON-CB, 1.5, 2.8 YESC Series(BK)

Terminal Part Information

Terminal Type ID	Terminated Lead	Diagnostic Test Probe	Terminal Removal Tool
I	13575708	J-35616-2A (GY)	J-38125-11A
II	13587516	J-35616-4A (PU)	J-38125-11A
III	84962854	J-35616-12 (BU)	J-38125-215A
IV	84616651	J-35616-13 (BU)	J-38125-215A
V	84888592	J-35616-5 (PU)	J-38125-11A
VI	85119177	J-35616-3 (GY)	J-38125-553

X211 Instrument Panel Wiring Harness to Body Wiring Harness

Pin	Size	Color	Circuit	Terminal Type ID	Option	Function	Pin	Size	Color	Circuit	Terminal Type ID	Option
1	0.5	VT / BK	339	III	—	Run/Crank Ignition 1 Voltage	1	0.5	VT / BK	339	IV	—
2	0.35	BU / VT	807	III	—	Ignition Off/ Accessory Ignition Voltage	2	0.35	BU / VT	807	IV	—
3	—	—	—	—	—	Not Occupied	3	—	—	—	—	—
4	0.5	GN / WH	24	III	—	Backup Lamp Control	4	0.5	GN / WH	24	IV	—
5	0.35	OG / WH	3024	III	—	Passenger Instrument Panel Air Bag Stage 1 Low Control	5	0.35	OG / WH	3024	IV	—
6	0.35	YE / OG	3025	III	—	Passenger Instrument Panel Air Bag Stage 1 High Control	6	0.35	YE / OG	3025	IV	—

X211 Instrument Panel Wiring Harness to Body Wiring Harness (cont'd)

Pin	Size	Color	Circuit	Terminal Type ID	Option	Function	Pin	Size	Color	Circuit	Terminal Type ID	Option
7	0.35	OG / VT	3026	III	—	Passenger Instrument Panel Air Bag Stage 2 Low Control	7	0.35	OG / VT	3026	IV	—
8	0.35	GY / OG	3027	III	—	Passenger Instrument Panel Air Bag Stage 2 High Control	8	0.35	GY / OG	3027	IV	—
9 - 10	—	—	—	—	—	Not Occupied	9 - 10	—	—	—	—	—
11	0.35	BU / VT	4101	III	—	AUTOSAR CAN Bus [+] 4 Serial Data	11	0.5	BU / VT	4101	IV	—
12	0.35	WH	4100	III	—	AUTOSAR CAN Bus [-] 4 Serial Data	12	0.5	WH	4100	IV	—
13 - 15	—	—	—	—	—	Not Occupied	13 - 15	—	—	—	—	—
16	0.35	GN / BN	3005	III	—	Active Noise Cancellation Microphone 1 Signal	16	0.35	GN / BN	3005	IV	—
17	0.35	GN / BK	3008	III	—	Active Noise Cancellation Microphone 1 Feedback Signal	17	0.35	GN / BK	3008	IV	—
18 - 19	—	—	—	—	—	Not Occupied	18 - 19	—	—	—	—	—
20	0.35	WH / GY	4104	III	—	AUTOSAR CAN Bus [-] 8 Serial Data	20	0.5	WH / GY	4104	IV	—
21	0.35	BU / GY	4105	III	—	AUTOSAR CAN Bus [+] 8 Serial Data	21	0.5	BU / GY	4105	IV	—
22	0.5	WH / GY	4104	III	—	AUTOSAR CAN Bus [-] 8 Serial Data	22	0.5	WH / GY	4104	IV	—
23	0.5	BU / GY	4105	III	—	AUTOSAR CAN Bus [+] 8 Serial Data	23	0.5	BU / GY	4105	IV	—
24	—	—	—	—	—	Not Occupied	24	—	—	—	—	—
25	0.35	BU	4987	III	—	AUTOSAR CAN Bus [+] 1 Serial Data	25	0.5	BU	4987	IV	—
26	0.35	WH	4986	III	—	AUTOSAR CAN Bus [-] 1 Serial Data	26	0.5	WH	4986	IV	—
27 - 28	—	—	—	—	—	Not Occupied	27 - 28	—	—	—	—	—
29	1	GN / YE	6840	II	—	Auxiliary Device 2 Switched Voltage	29	1	GN / YE	6840	V	—

X211 Instrument Panel Wiring Harness to Body Wiring Harness (cont'd)

Pin	Size	Color	Circuit	Terminal Type ID	Option	Function	Pin	Size	Color	Circuit	Terminal Type ID	Option
30 - 31	—	—	—	—	—	Not Occupied	30 - 31	—	—	—	—	—
32	0.5	BU / BK	1053	I	—	Center High Mounted Stop Lamp Control 3	32	0.5	BU / BK	1053	VI	—
33	0.75	WH	46	II	—	Right Rear Speaker [+] Control	33	0.75	WH	46	V	—
34	0.75	BU / BK	115	II	—	Right Rear Speaker [-] Control	34	0.75	BU / BK	115	V	—
35	0.75	YE / BK	117	I	—	Right Front Speaker [-] Control 1	35	0.75	YE / BK	117	VI	—
36	0.75	YE	200	I	—	Right Front Speaker 1 [+] Control	36	0.75	YE	200	VI	—
37	0.75	YE / BK	117	I	—	Right Front Speaker [-] Control 1	37	0.75	YE / BK	117	VI	—
38	0.75	YE	200	I	—	Right Front Speaker 1 [+] Control	38	0.75	YE	200	VI	—
39	0.75	YE / BK	117	I	—	Right Front Speaker [-] Control 1	39	0.75	YE / BK	117	VI	—
40	0.75	YE	200	I	—	Right Front Speaker 1 [+] Control	40	0.75	YE	200	VI	—
41	0.75	WH / YE	1853	I	—	Right Front Midrange Speaker [+] Control	41	0.75	WH / YE	1853	VI	—
42	0.75	BN / BK	1953	I	—	Right Front Midrange Speaker [-] Control	42	0.75	BN / BK	1953	VI	—
43	0.75	YE / WH	1860	II	—	Front Center Speaker [+] Control	43	0.75	YE / WH	1860	V	—
44	0.75	BU / YE	1960	II	—	Front Center Speaker [-] Control	44	0.75	BU / YE	1960	V	—
45	0.75	BU / VT	1857	I	—	Left Front Midrange Speaker [+] Control	45	0.75	BU / VT	1857	VI	—
46	0.75	BU / BN	1957	I	—	Left Front Midrange Speaker [-] Control	46	0.75	BU / BN	1957	VI	—
47	2	BU	47	II	—	Trailer Auxiliary Control	47	2	BU	47	V	—
48	2.5	BK / WH	1051	II	—	Signal Ground Signal Ground	48	0.5 2.5	BK / WH BK / WH	1051 1051	V V	D07- IOK- IOS/ D07- UQA- UQS

X211 Instrument Panel Wiring Harness to Body Wiring Harness (cont'd)

Pin	Size	Color	Circuit	Terminal Type ID	Option	Function	Pin	Size	Color	Circuit	Terminal Type ID	Option
												- D07+ IOK+ UQA/ - D07+ IOK+ UQS
49	0.35	BU / YE	4979	III	—	AUTOSAR CAN Bus [+] 2 Serial Data	49	0.5	BU / YE	4979	IV	—
50	0.35	WH	4978	III	—	AUTOSAR CAN Bus [-] 2 Serial Data	50	0.5	WH	4978	IV	—
51	0.35	VT / GY	7117	III	—	Front Axle Differential Lock Indicator Control	51	0.35	VT / GY	7117	IV	—
52	0.35	YE	7115	III	—	Rear Axle Differential Lock Indicator Control	52	0.35	YE	7115	IV	—
53	0.35	YE / GN	7122	III	—	Axle Differential Lock Switch Signal	53	0.35	YE / GN	7122	IV	—
54	0.5	GN / VT	5199	III	—	Run/Crank Relay Coil Control	54	0.5	GN / VT	5199	IV	—
55 - 59	—	—	—	—	—	Not Occupied	55 - 59	—	—	—	—	—
60	0.35	YE / WH	1690	III	—	Mirror Dimming Signal	60	0.35	YE / WH	1690	IV	—
61	0.35	BK / YE	1691	III	—	Automatic Day/Night Mirror Low Reference	61	0.35	BK / YE	1691	IV	—
62 - 76	—	—	—	—	—	Not Occupied	62 - 76	—	—	—	—	—

X213A Auxiliary Fuse Block Wiring Harness to Instrument Panel Wiring Harness (9L7)

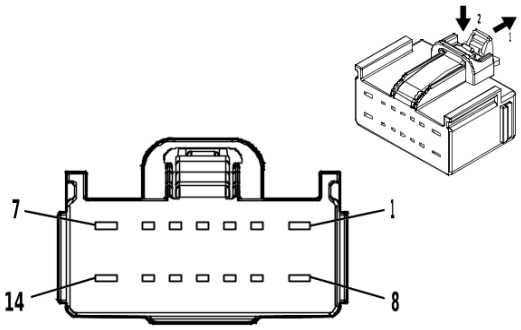

4934172

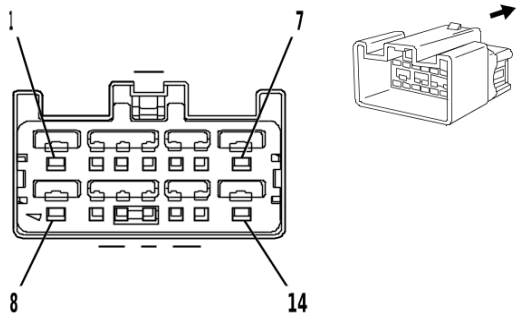

1283905

Connector Part Information

Harness Type: Auxiliary Fuse Block Wiring Harness
OEM Connector: 33366376
Service Connector: Service by Harness - See Part Catalog
Description: 14-Way F 1.5, 2.8 YESC Series(GY)

Connector Part Information

Harness Type: Instrument Panel Wiring Harness
OEM Connector: 10846900
Service Connector: 88956523
Description: 14-Way M 1.5, 2.8 YESC Series(L-GY)

Terminal Part Information

Terminal Type ID	Terminated Lead	Diagnostic Test Probe	Terminal Removal Tool
I	Not required	J-35616-2A (GY)	No Tool Required
II	Not required	J-35616-4A (PU)	No Tool Required
III	13578907	J-35616-3 (GY)	J-38125-215A
IV	13578908	J-35616-5 (PU)	J-38125-11A

X213A Auxiliary Fuse Block Wiring Harness to Instrument Panel Wiring Harness (9L7)

Pin	Size	Color	Circuit	Terminal Type ID	Option	Function	Pin	Size	Color	Circuit	Terminal Type ID	Option
1	0.75	BK / WH	851	II	—	Signal Ground	1	2.5	WH	22	IV	—
2	—	—	—	—	—	Horn Relay Control	2	0.35	BN / WH	28	III	—
3	0.35	YE	6817	I	—	LED Back-light Dim-ming Control 1	3	0.35	YE	6817	III	—
4	—	—	—	—	—	Not Occu-pied	4	—	—	—	—	—
5	0.5	WH / BU	3691	I	—	Trailer Brake Apply Signal	5	0.35	WH / BU	3691	III	—
6	—	—	—	—	—	Not Occu-pied	6	—	—	—	—	—
7	2.5	RD / BN	4142	II	—	Primary Fused Bat-tery Positive Voltage	7	2.5	RD / BN	4142	IV	—
8	2.5	VT / BU	10735	II	—	Upfitter Ac-cessory 5 Supply Volt-age	8	2.5	VT / BU	10735	IV	—

X213A Auxiliary Fuse Block Wiring Harness to Instrument Panel Wiring Harness (9L7) (cont'd)

Pin	Size	Color	Circuit	Terminal Type ID	Option	Function	Pin	Size	Color	Circuit	Terminal Type ID	Option
9	—	—	—	—	—	Not Occupied	9	—	—	—	—	—
10	—	—	—	—	—	Vehicle Speed Signal	10	0.35	GN / GY	817	III	—
11	0.35	WH	6816	I	—	Indicator Dimming Control	11	0.35	WH	6816	III	—
12	—	—	—	—	—	Not Occupied	12	—	—	—	—	—
13	0.5	VT / BK	339	I	—	Run/Crank Ignition 1 Voltage	13	0.5	VT / BK	339	III	—
14	2	BU	47	II	—	Trailer Auxiliary Control	14	2	BU	47	IV	—

X213B Trailer Wiring Harness Extension Harness to Instrument Panel Wiring Harness (Z82-JL1)

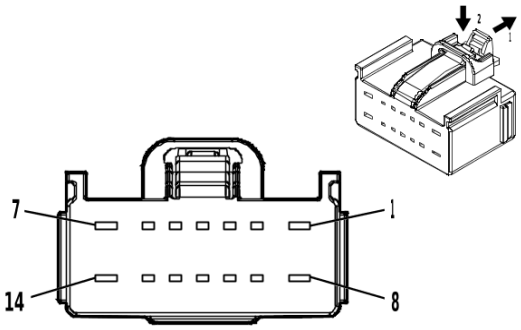

4934172

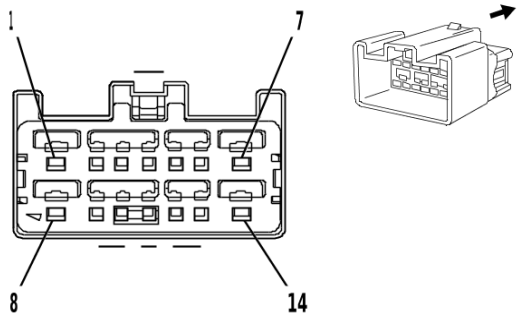

1283905

Connector Part Information

Harness Type: Trailer Wiring Harness Extension Harness
OEM Connector: 33366376
Service Connector: Service by Harness - See Part Catalog
Description: 14-Way F 1.5, 2.8 YESC Series(GY)

Connector Part Information

Harness Type: Instrument Panel Wiring Harness
OEM Connector: 10846900
Service Connector: 88956523
Description: 14-Way M 1.5, 2.8 YESC Series(L-GY)

Terminal Part Information

Terminal Type ID	Terminated Lead	Diagnostic Test Probe	Terminal Removal Tool
I	Not required	J-35616-2A (GY)	No Tool Required
II	Not required	J-35616-4A (PU)	No Tool Required
III	13578907	J-35616-3 (GY)	J-38125-215A
IV	13578908	J-35616-5 (PU)	J-38125-11A

X213B Trailer Wiring Harness Extension Harness to Instrument Panel Wiring Harness (Z82-JL1)

Pin	Size	Color	Circuit	Terminal Type ID	Option	Function	Pin	Size	Color	Circuit	Terminal Type ID	Option
1	2.5	WH	22	II	—	Trailer Ground	1	2.5	WH	22	IV	—
2	—	—	—	—	—	Not Occupied	2	—	—	—	—	—
3	—	—	—	—	—	LED Backlight Dimming Control 1	3	0.35	YE	6817	III	—
4	—	—	—	—	—	Not Occupied	4	—	—	—	—	—
5	0.5	WH / BU	3691	I	—	Trailer Brake Apply Signal	5	0.35	WH / BU	3691	III	—
6	—	—	—	—	—	Not Occupied	6	—	—	—	—	—
7	2.5	RD / BN	4142	II	—	Primary Fused Battery Positive Voltage	7	2.5	RD / BN	4142	IV	—
8	—	—	—	—	—	Upfitter Accessory 5 Supply Voltage	8	2.5	VT / BU	10735	IV	—

X213B Trailer Wiring Harness Extension Harness to Instrument Panel Wiring Harness (Z82-JL1) (cont'd)

Pin	Size	Color	Circuit	Terminal Type ID	Option	Function	Pin	Size	Color	Circuit	Terminal Type ID	Option
9	—	—	—	—	—	Not Occupied	9	—	—	—	—	—
10	—	—	—	—	—	Vehicle Speed Signal	10	0.35	GN / GY	817	III	—
11	—	—	—	—	—	Indicator Dimming Control	11	0.35	WH	6816	III	—
12	—	—	—	—	—	Not Occupied	12	—	—	—	—	—
13	—	—	—	—	—	Run/Crank Ignition 1 Voltage	13	0.5	VT / BK	339	III	—
14	2	BU	47	II	—	Trailer Auxiliary Control	14	2	BU	47	IV	—

X217 Body Wiring Harness to Instrument Panel Wiring Harness

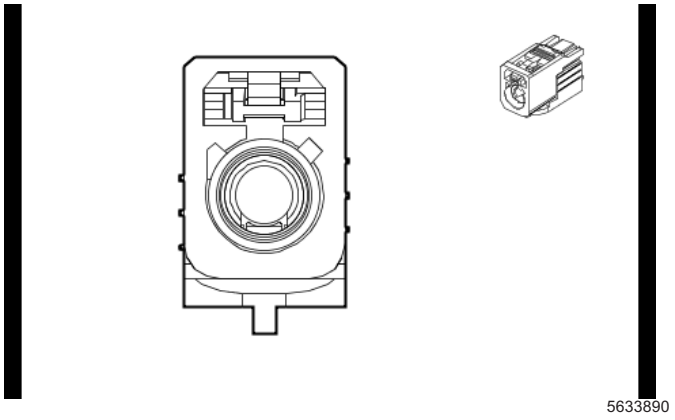

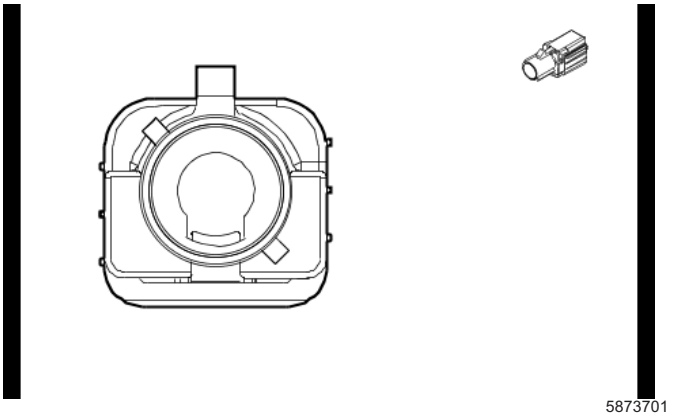

Connector Part Information

Harness Type: Body Wiring Harness COAX

OEM Connector: 33351013

Service Connector: Service by Cable Assembly — See Part Catalog

Description: 1-Way F Coax Type(WH)

Connector Part Information

Harness Type: Instrument Panel Wiring Harness COAX

OEM Connector: 33351038

Service Connector: Service by Cable Assembly — See Part Catalog

Description: 1-Way M Coax Type(BU)

Terminal Part Information

Terminal Type ID	Terminated Lead	Diagnostic Test Probe	Terminal Removal Tool
I	Not required	No Tool Required	No Tool Required

X217 Body Wiring Harness to Instrument Panel Wiring Harness

Pin	Size	Color	Circuit	Terminal Type ID	Option	Function	Pin	Size	Color	Circuit	Terminal Type ID	Option
—	—	Coax Cable	—	I	—	Video Processing Module Coaxial Video Signal	—	—	Coax Cable	—	I	—

X218 Instrument Panel Wiring Harness to Body Wiring Harness

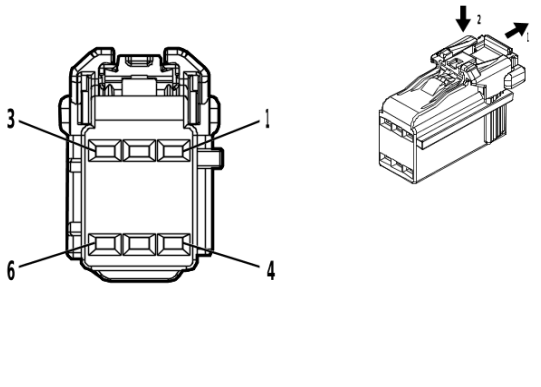

4862126

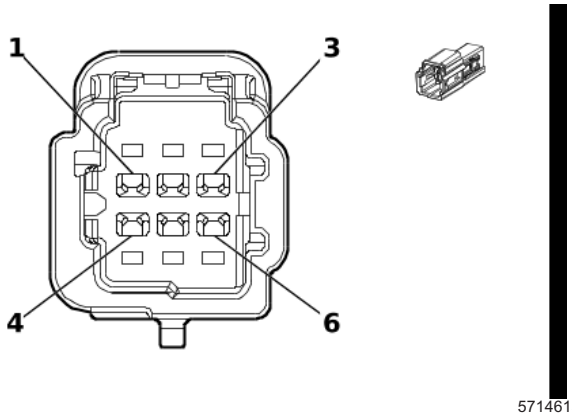

5714613

Connector Part Information

Harness Type: Instrument Panel Wiring Harness
OEM Connector: 35327305
Service Connector: 84613129
Description: 6-Way F 1.2 Series(BK)

Connector Part Information

Harness Type: Body Wiring Harness
OEM Connector: 35446705
Service Connector: 86825467
Description: 6-Way M 1.2 MBS Series(BK)

Terminal Part Information

Terminal Type ID	Terminated Lead	Diagnostic Test Probe	Terminal Removal Tool
I	Not required	J-35616-12 (BU)	No Tool Required
II	Not required	J-35616-13 (BU)	No Tool Required

X218 Instrument Panel Wiring Harness to Body Wiring Harness

Pin	Size	Color	Circuit	Terminal Type ID	Option	Function	Pin	Size	Color	Circuit	Terminal Type ID	Option
1	0.35	GN	7214	I	—	Ethernet Bus 6 [-]	1	0.35	GN	7214	II	—
2	0.35	YE	7215	I	—	Ethernet Bus 6 [+]	2	0.35	YE	7215	II	—
3 - 4	—	—	—	—	—	Not Occu-pied	3 - 4	—	—	—	—	—
5	0.35	BU	7224	I	—	Ethernet Bus 11 [-]	5	0.35	BU	7224	II	—
6	0.35	WH	7225	I	—	Ethernet Bus 11 [+]	6	0.35	WH	7225	II	—

X219 Police Accessory Harness to Instrument Panel Wiring Harness (5W4/9C1)

—

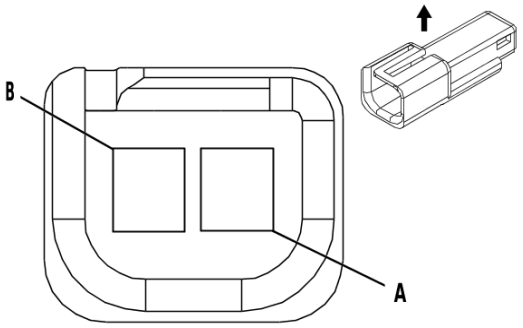

35441

Connector Part Information

Harness Type: Police Accessory Harness
OEM Connector: Not Available
Service Connector: Service by Harness - See Part Catalog
Description: 2-Way F

Connector Part Information

Harness Type: Instrument Panel Wiring Harness
OEM Connector: 12047663
Service Connector: 13584278
Description: 2-Way M 150 Metri-Pack Series(BK)

Terminal Part Information

Terminal Type ID	Terminated Lead	Diagnostic Test Probe	Terminal Removal Tool
I	Not required	J-35616-2A (GY)	No Tool Required
II	Not required	J-35616-3 (GY)	No Tool Required

X219 Police Accessory Harness to Instrument Panel Wiring Harness (5W4/9C1)

Pin	Size	Color	Circuit	Terminal Type ID	Option	Function	Pin	Size	Color	Circuit	Terminal Type ID	Option
A	0.75	BK	1050	I	—	Ground	A	0.75	BK	1050	II	—
B	0.75	RD / GY	10340	I	—	Secondary Fused Battery Positive Voltage 103 Police	B	0.75	RD / GY	10340	II	—

X220 Police Accessory Harness to Instrument Panel Wiring Harness (5W4/9C1)

—

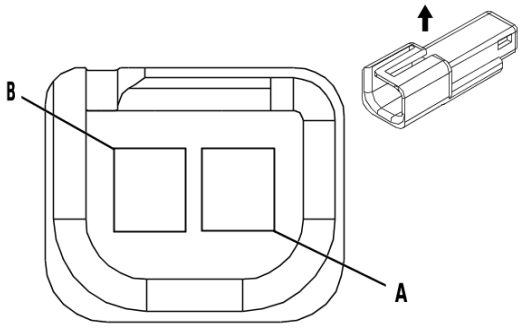

35441

Connector Part Information

Harness Type: Police Accessory Harness
OEM Connector: Not Available
Service Connector: Service by Harness - See Part Catalog
Description: 2-Way F

Connector Part Information

Harness Type: Instrument Panel Wiring Harness
OEM Connector: 12047663
Service Connector: 13584278
Description: 2-Way M 150 Metri-Pack Series(BK)

Terminal Part Information

Terminal Type ID	Terminated Lead	Diagnostic Test Probe	Terminal Removal Tool
I	Not required	J-35616-2A (GY)	No Tool Required
II	Not required	J-35616-3 (GY)	No Tool Required

X220 Police Accessory Harness to Instrument Panel Wiring Harness (5W4/9C1)

Pin	Size	Color	Circuit	Terminal Type ID	Option	Function	Pin	Size	Color	Circuit	Terminal Type ID	Option
A	0.75	BK	1050	I	—	Ground	A	0.75	BK	1050	II	—
B	0.75	RD / GN	10240	I	—	Secondary Fused Battery Positive Voltage 102 Police	B	0.75	RD / GN	10240	II	—

X225 Front Floor Console Wiring Harness to Body Wiring Harness (D07)

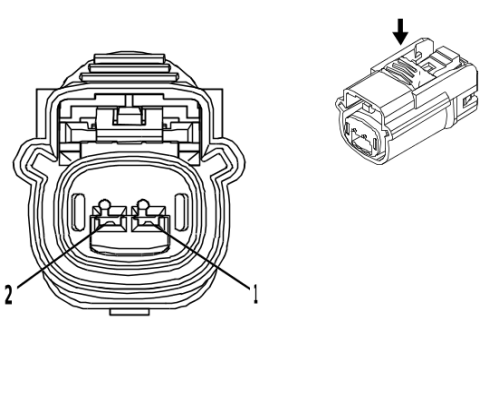

4332222

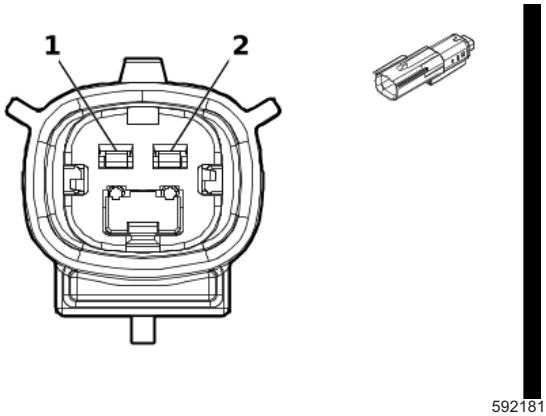

5921817

Connector Part Information

Harness Type: Front Floor Console Wiring Harness
OEM Connector: 15514573
Service Connector: Service by Harness - See Part Catalog
Description: 2-Way F 1.5 OCS Series, Sealed(BK)

Connector Part Information

Harness Type: Body Wiring Harness
OEM Connector: 15514550
Service Connector: 86825463
Description: 2-Way M 1.5 OCS Series, Sealed(BK)

Terminal Part Information

Terminal Type ID	Terminated Lead	Diagnostic Test Probe	Terminal Removal Tool
I	Not required	J-35616-2A (GY)	No Tool Required
II	Not required	J-35616-3 (GY)	No Tool Required

X225 Front Floor Console Wiring Harness to Body Wiring Harness (D07)

Pin	Size	Color	Circuit	Terminal Type ID	Option	Function	Pin	Size	Color	Circuit	Terminal Type ID	Option
1	0.35	BU	7224	I	—	Ethernet Bus 11 [-]	1	0.35	BU	7224	II	—
2	0.35	WH	7225	I	—	Ethernet Bus 11 [+]	2	0.35	WH	7225	II	—

X226 Front Floor Console Wiring Harness to Instrument Panel Wiring Harness (D07)

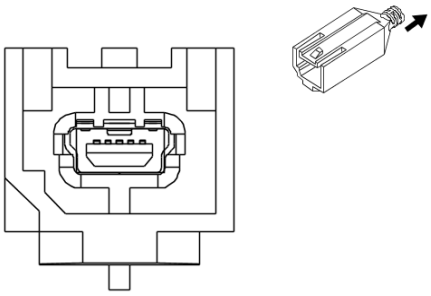

3273655

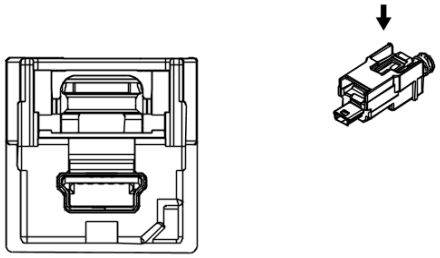

2807425

Connector Part Information

Harness Type: Front Floor Console Wiring Harness USB

OEM Connector: 13699757

Service Connector: Service by Cable Assembly — See Part Catalog

Description: 5-Way F 2.0 Mini-B USB Type(BK)

Connector Part Information

Harness Type: Instrument Panel Wiring Harness USB

OEM Connector: VP000109

Service Connector: Service by Cable Assembly — See Part Catalog

Description: 5-Way M 2.0 Mini-B USB Type(BK)

Terminal Part Information

Terminal Type ID	Terminated Lead	Diagnostic Test Probe	Terminal Removal Tool
I	Not required	No Tool Required	No Tool Required

X226 Front Floor Console Wiring Harness to Instrument Panel Wiring Harness (D07)

Pin	Size	Color	Circuit	Terminal Type ID	Option	Function	Pin	Size	Color	Circuit	Terminal Type ID	Option
—	—	USB	—	I	—	USB Serial Data	—	—	USB	—	I	—

X227 Front Floor Console Wiring Harness to Body Wiring Harness (D07)

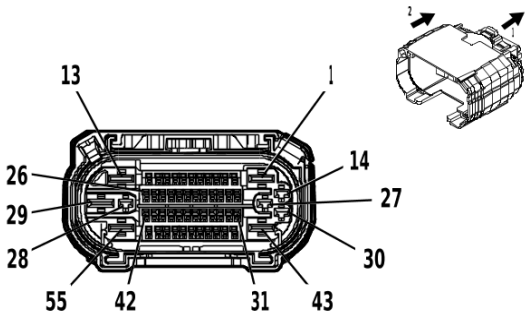

4992168

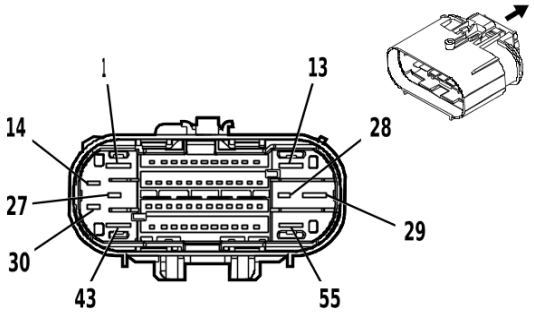

4993301

Connector Part Information

Harness Type: Front Floor Console Wiring Harness

OEM Connector: 35016652

Service Connector: Service by Harness - See Part Catalog

Description: 55-Way F 1.2 OCS, 2.8, 6.3 CTS Series, Sealed(BK)

Connector Part Information

Harness Type: Body Wiring Harness

OEM Connector: 35205173

Service Connector: 84727364

Description: 55-Way M 1.2 OCS, 2.8, 6.3 CTS Series, Sealed(BK)

Terminal Part Information

Terminal Type ID	Terminated Lead	Diagnostic Test Probe	Terminal Removal Tool
I	Not required	J-35616-16 (L-GN)	No Tool Required
II	Not required	J-35616-35 (VT)	No Tool Required
III	Not required	J-35616-43 (RD)	No Tool Required
IV	84847992	J-35616-32 (OG)	J-38125-36
V	84867140	J-35616-13 (BU)	J-38125-215A
VI	84867141	J-35616-13 (BU)	J-38125-215A
VII	84992391	J-35616-5 (PU)	J-38125-215A

X227 Front Floor Console Wiring Harness to Body Wiring Harness (D07)

Pin	Size	Color	Circuit	Terminal Type ID	Option	Function	Pin	Size	Color	Circuit	Terminal Type ID	Option
1 - 2	—	—	—	—	—	Not Occupied	1 - 2	—	—	—	—	—
3	0.35	WH	4986	I	—	AUTOSAR CAN Bus [-] 1 Serial Data	3	0.35	WH	4986	V	—
4	0.35	BU	4987	I	—	AUTOSAR CAN Bus [+] 1 Serial Data	4	0.35	BU	4987	V	—
5	0.35	VT / WH	239	I	—	Run/Crank Ignition 1 Voltage	5	0.5	VT / WH	239	V	—
6	0.35	WH	4986	I	—	AUTOSAR CAN Bus [-] 1 Serial Data	6	0.5	WH	4986	V	—
7	0.35	BU	4987	I	—	AUTOSAR CAN Bus [+] 1 Serial Data	7	0.5	BU	4987	V	—
8	0.35	RD / WH	5440	I	—	Battery Positive Voltage	8	0.5	RD / WH	5440	V	—

X227 Front Floor Console Wiring Harness to Body Wiring Harness (D07) (cont'd)

Pin	Size	Color	Circuit	Terminal Type ID	Option	Function	Pin	Size	Color	Circuit	Terminal Type ID	Option
9	0.5	RD / BU	1240	I	—	Battery Positive Voltage	9	0.5	RD / BU	1240	V	—
10	0.35	BN / BK	3552	I	—	Interior Passive Entry Antenna 1 High Signal	10	0.35	BN / BK	3552	V	—
11	0.35	WH	3553	I	—	Interior Passive Entry Antenna 1 Low Signal	11	0.35	WH	3553	V	—
12 - 13	—	—	—	—	—	Not Occupied	12 - 13	—	—	—	—	—
14	0.75	BK	10117	II	—	AC Outlet Phase A Control	14	0.75	BK	10117	VII	—
15	0.35	RD / WH	4740	I	—	Battery Positive Voltage	15	0.5	RD / WH	4740	V	—
16	0.35	WH	4976	I	—	AUTOSAR CAN Bus [-] 3 Serial Data	16	0.5	WH	4976	V	—
17	0.35	BU / BK	4977	I	—	AUTOSAR CAN Bus [+] 3 Serial Data	17	0.5	BU / BK	4977	V	—
18	0.35	WH	4976	I	—	AUTOSAR CAN Bus [-] 3 Serial Data	18	0.5	WH	4976	V	—
19	0.35	BU / BK	4977	I	—	AUTOSAR CAN Bus [+] 3 Serial Data	19	0.5	BU / BK	4977	V	—
20	0.35	WH	4978	I	—	AUTOSAR CAN Bus [-] 2 Serial Data	20	0.35	WH	4978	V	—
21	0.35	BU / YE	4979	I	—	AUTOSAR CAN Bus [+] 2 Serial Data	21	0.35	BU / YE	4979	V	—
22	0.5	BU / YE	4984	I	—	AUTOSAR CAN Bus [-] 5 Serial Data	22	0.5	BU / YE	4984	V	—
23	0.5	BU / WH	4985	I	—	AUTOSAR CAN Bus [+] 5 Serial Data	23	0.5	BU / WH	4985	V	—
24	0.5	BU / YE	4984	I	—	AUTOSAR CAN Bus [-] 5 Serial Data	24	0.5	BU / YE	4984	V	—
25	0.5	BU / WH	4985	I	—	AUTOSAR CAN Bus [+] 5 Serial Data	25	0.5	BU / WH	4985	V	—
26	0.5	BK	1350	I	—	Ground	26	0.75	BK	1350	VI	—
27	0.5	WH	10116	II	—	AC Outlet Low Reference	27	0.5	WH	10116	VII	—
28	0.35	GN / BU	2733	II	—	Brake System Control Module LIN Bus 2	28	0.5	GN / BU	2733	VII	—
29	0.5	RD / VT	2640	III	—	Battery Positive Voltage	29	0.5	RD / VT	2640	IV	—

X227 Front Floor Console Wiring Harness to Body Wiring Harness (D07) (cont'd)

Pin	Size	Color	Circuit	Terminal Type ID	Option	Function	Pin	Size	Color	Circuit	Terminal Type ID	Option
30	0.75	RD	10118	II	—	AC Outlet Phase B Control	30	0.75	RD	10118	VII	—
31	0.35	VT / GY	8978	I	—	Inertial Sensor Supply Voltage	31	0.35	VT / GY	8978	V	—
32	0.35	BN / BK	4996	I	—	Immobilizer Antenna Signal [+]	32	0.35	BN / BK	4996	V	—
33	0.35	WH / GY	4997	I	—	Immobilizer Antenna Low Signal	33	0.35	WH / GY	4997	V	—
34	0.35	WH / YE	8976	I	—	Private Serial Data Active Safety CAN Bus [-] Serial Data	34	0.5	WH / YE	8976	V	—
35	0.35	BU / YE	8977	I	—	Private Serial Data Active Safety CAN Bus [+] Serial Data	35	0.5	BU / YE	8977	V	—
36	0.5	RD / YE	2340	I	—	Battery Positive Voltage	36	0.5	RD / YE	2340	V	—
37	0.5	GN / VT	2857	I	—	Body Control Module LIN Bus 11	37	0.35	GN / VT	2857	V	—
38	0.5	VT / RD	4049	I	—	AC Power Outlet Sensor High Reference	38	0.5	VT / RD	4049	V	—
39	0.35	VT / GN	4320	I	—	Powertrain Sensor Bus Enable	39	0.5	VT / GN	4320	V	—
40	0.35	WH	4055	I	—	Private Serial Data Powertrain CAN Bus [+] Serial Data	40	0.5	WH	4055	V	—
41	0.35	GN / GY	4627	I	—	Image Processing Module LIN Bus 1	41	0.5	GN / GY	4627	V	—
42	0.5	BU / BN	6807	I	—	DC/AC Inverter Control	42	0.5	BU / BN	6807	V	—
43	0.5	GN / VT	4786	III	—	Dome/Reading Lamp Enable Signal	43	0.5	GN / VT	4786	IV	—
44	0.75	YE	6817	I	—	LED Backlight Dimming Control 1	44	0.75	YE	6817	VI	—
45	0.35	BU / GY	4054	I	—	Private Serial Data Powertrain CAN Bus [-] Serial Data	45	0.5	BU / GY	4054	V	—
46	0.35	WH	4055	I	—	Private Serial Data Powertrain CAN Bus [+] Serial Data	46	0.5	WH	4055	V	—

X227 Front Floor Console Wiring Harness to Body Wiring Harness (D07) (cont'd)

Pin	Size	Color	Circuit	Terminal Type ID	Option	Function	Pin	Size	Color	Circuit	Terminal Type ID	Option
47	0.5	BK	1451	I	—	Signal Ground	47	0.75	BK / WH	1451	VI	—
48	0.35	VT	4701	I	—	Retained Accessory Power Control	48	0.35	VT	4701	V	—
49	0.35	WH / GY	4104	I	—	AUTOSAR CAN Bus [-] 8 Serial Data	49	0.5	WH / GY	4104	V	—
50	0.35	BU / GY	4105	I	—	AUTOSAR CAN Bus [+] 8 Serial Data	50	0.5	BU / GY	4105	V	—
51	0.5	BK / WH	1451	I	—	Signal Ground	51	0.75	BK / WH	1451	VI	—
52	0.5	BK / WH	1051	I	—	Signal Ground	52	0.5	BK / WH	1051	V	—
53	0.35	BU / GY	4054	I	—	Private Serial Data Powertrain CAN Bus [-] Serial Data	53	0.5	BU / GY	4054	V	—
54 - 55	—	—	—	—	—	Not Occupied	54 - 55	—	—	—	—	—

X237 Instrument Panel Wiring Harness to Passenger Instrument Panel Air Bag Jumper Wiring Harness

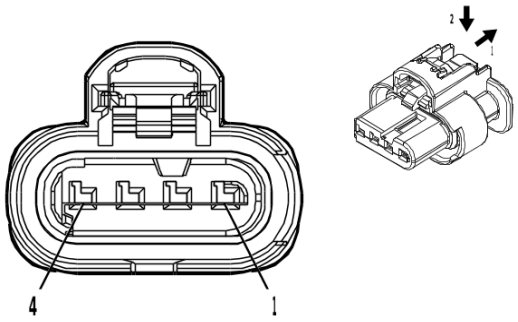

—

4900699

Connector Part Information

Harness Type: Instrument Panel Wiring Harness
OEM Connector: 35053710
Service Connector: 19371193
Description: 4-Way F 1.2 MCON-CB Series, Sealed(YE)

Connector Part Information

Harness Type: Instrument Panel Airbag Wiring Harness
OEM Connector: 13583527
Service Connector: Service by Harness - See Part Catalog
Description: 4-Way M (YE)

Terminal Part Information

Terminal Type ID	Terminated Lead	Diagnostic Test Probe	Terminal Removal Tool
I	Not required	J-35616-16 (L-GN)	No Tool Required
II	Not required	No Tool Required	No Tool Required

X237 Instrument Panel Wiring Harness to Passenger Instrument Panel Air Bag Jumper Wiring Harness

Pin	Size	Color	Circuit	Terminal Type ID	Option	Function	Pin	Size	Color	Circuit	Terminal Type ID	Option
1	0.35	YE / OG	3025	I	—	Passenger Instrument Panel Air Bag Stage 1 High Control	1	0.35	YE / OG	3025	II	—
2	0.35	OG / WH	3024	I	—	Passenger Instrument Panel Air Bag Stage 1 Low Control	2	0.35	OG / WH	3024	II	—
3	0.35	GY / OG	3027	I	—	Passenger Instrument Panel Air Bag Stage 2 High Control	3	0.35	GY / OG	3027	II	—
4	0.35	OG / VT	3026	I	—	Passenger Instrument Panel Air Bag Stage 2 Low Control	4	0.35	OG / VT	3026	II	—

X250 Instrument Panel Wiring Harness to HVAC Wiring Harness

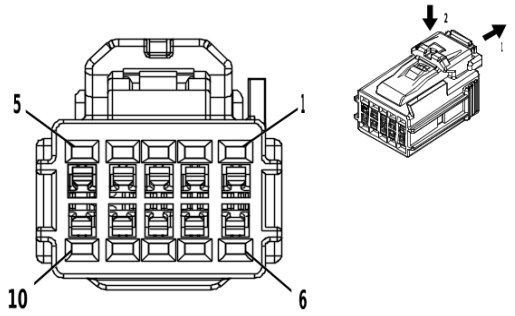

4254030

—

Connector Part Information

Harness Type: Instrument Panel Wiring Harness
OEM Connector: 35327186
Service Connector: 13532428
Description: 10-Way F 1.2 Series(BK)

Connector Part Information

Harness Type: HVAC Wiring Harness
OEM Connector: Not Available
Service Connector: Service by Harness - See Part Catalog
Description: 10-Way M (BK)

Terminal Part Information

Terminal Type ID	Terminated Lead	Diagnostic Test Probe	Terminal Removal Tool
I	84962854	J-35616-12 (BU)	J-38125-215A
II	Not required	J-35616-13 (BU)	No Tool Required

X250 Instrument Panel Wiring Harness to HVAC Wiring Harness

Pin	Size	Color	Circuit	Terminal Type ID	Option	Function	Pin	Size	Color	Circuit	Terminal Type ID	Option
1	—	—	—	—	—	Not Occupied	1	—	—	—	—	—
2	0.5	BK	1050	I	—	Ground	2	0.5	BK	1050	II	—
3 - 4	—	—	—	—	—	Not Occupied	3 - 4	—	—	—	—	—
5	0.35	GY	6137	I	—	A/C Evaporator Temperature Sensor Signal	5	0.35	GY	6137	II	—
6	0.35	GN / VT	2852	I	—	Body Control Module LIN Bus 6	6	0.35	GN / VT	2852	II	—
7	0.35	BK / YE	407	I	—	Sensor Low Reference	7	0.35	BK / YE	407	II	—
8	0.5	VT / BK	339	I	—	Run/Crank Ignition 1 Voltage	8	0.5	VT / BK	339	II	—
9	0.35	WH / YE	4634	I	—	HVAC Remote Enable Signal	9	0.35	WH / YE	4634	II	—
10	—	—	—	—	—	Not Occupied	10	—	—	—	—	—

X251 HVAC Wiring Harness to Body Wiring Harness (C32)

—

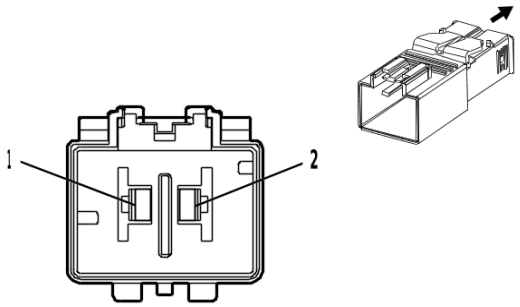

4891120

Connector Part Information

Harness Type: HVAC Wiring Harness
OEM Connector: Not Available
Service Connector: Service by Harness - See Part Catalog
Description: 2-Way F

Connector Part Information

Harness Type: Body Wiring Harness
OEM Connector: 35134697
Service Connector: Service by Harness - See Part Catalog
Description: 2-Way M 9.5 MCON-LL Series(BK)

Terminal Part Information

Terminal Type ID	Terminated Lead	Diagnostic Test Probe	Terminal Removal Tool
I	Not required	J-35616-22 (RD)	No Tool Required
II	Not required	J-35616-21 (RD)	No Tool Required

X251 HVAC Wiring Harness to Body Wiring Harness (C32)

Pin	Size	Color	Circuit	Terminal Type ID	Option	Function	Pin	Size	Color	Circuit	Terminal Type ID	Option
2	10	RD / GY	642	I	—	Battery Positive Voltage	2	10	RD / GY	642	II	—

X309 Body Wiring Harness to Inside Rearview Mirror Wiring Harness (UVN)

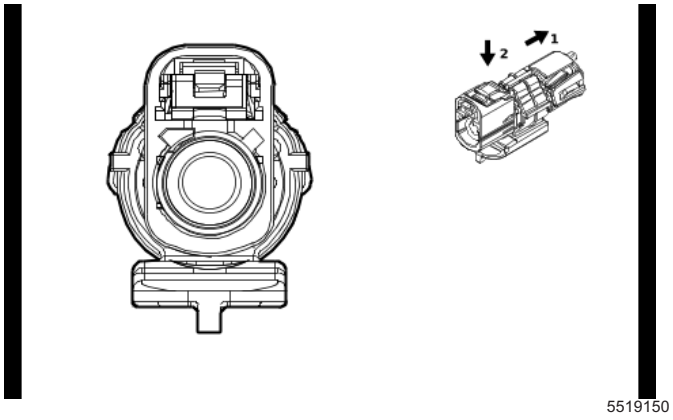

5519150

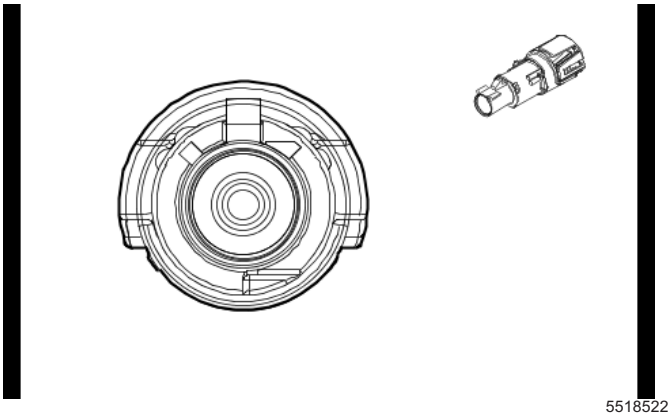
5518522

Connector Part Information

Harness Type: Body Wiring Harness COAX

OEM Connector: 35187047

Service Connector: Service by Cable Assembly — See Part Catalog

Description: 1-Way F Coax Type, Sealed(BK)

Connector Part Information

Harness Type: Inside Rearview Mirror Wiring Harness COAX

OEM Connector: 33355538

Service Connector: Service by Cable Assembly — See Part Catalog

Description: 1-Way M Coax Type(BK)

Terminal Part Information

Terminal Type ID	Terminated Lead	Diagnostic Test Probe	Terminal Removal Tool
I	Not required	No Tool Required	No Tool Required

X309 Body Wiring Harness to Inside Rearview Mirror Wiring Harness (UVN)

Pin	Size	Color	Circuit	Terminal Type ID	Option	Function	Pin	Size	Color	Circuit	Terminal Type ID	Option
—	—	Coax Cable	—	I	—	Cargo Bed Rear Vision Camera Co-axial Video Signal	—	—	Coax Cable	—	I	—

X324 Body Wiring Harness to Body Rear Wiring Harness Extension Harness (KI5)

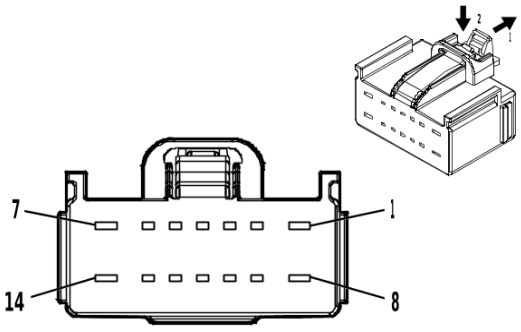

4934172

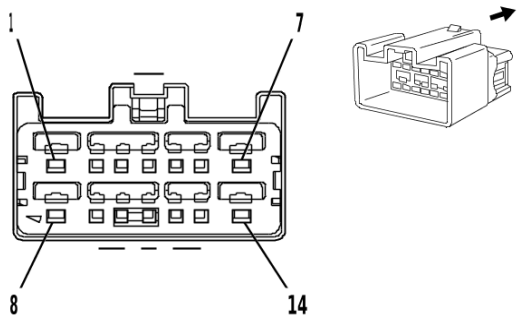

1283905

Connector Part Information

Harness Type: Body Wiring Harness
OEM Connector: 35105595
Service Connector: 13513604
Description: 14-Way F 1.5, 2.8 YESC Series(BK)

Connector Part Information

Harness Type: Body Rear Wiring Harness Extension Harness
OEM Connector: 10846900
Service Connector: Service by Harness - See Part Catalog
Description: 14-Way M 1.5, 2.8 YESC Series(L-GY)

Terminal Part Information

Terminal Type ID	Terminated Lead	Diagnostic Test Probe	Terminal Removal Tool
I	13575850	J-35616-14 (GN)	J-38125-557
II	84962855	J-35616-4A (PU)	J-38125-11A
III	Not required	J-35616-3 (GY)	No Tool Required
IV	Not required	J-35616-5 (PU)	No Tool Required

X324 Body Wiring Harness to Body Rear Wiring Harness Extension Harness (KI5)

Pin	Size	Color	Circuit	Terminal Type ID	Option	Function	Pin	Size	Color	Circuit	Terminal Type ID	Option
1	0.75	BK	10117	II	—	AC Outlet Phase A Control	1	0.75	BK	10117	IV	—
2	0.5	VT / RD	4049	I	—	AC Power Outlet Sensor High Reference	2	0.5	VT / RD	4049	III	—
3	0.35	VT / WH	239	I	—	Run/Crank Ignition 1 Voltage	3	0.35	VT / WH	239	III	—
4	0.5	WH / GN	4628	I	—	DC/AC Inverter Relay Control	4	0.5	WH / GN	4628	III	—
5	0.5	BU / BN	6807	I	—	DC/AC Inverter Control	5	0.5	BU / BN	6807	III	—
6	—	—	—	—	—	Not Occupied	6	—	—	—	—	—
7	0.75	BK / WH	10120	II	—	AC Outlet 2 Phase A Control	7	0.75	BK / WH	10120	IV	—
8	0.75	RD	10118	II	—	AC Outlet Phase B Control	8	0.75	RD	10118	IV	—

X324 Body Wiring Harness to Body Rear Wiring Harness Extension Harness (KI5) (cont'd)

Pin	Size	Color	Circuit	Terminal Type ID	Option	Function	Pin	Size	Color	Circuit	Terminal Type ID	Option
9	0.35	Bare	10116	I	—	AC Outlet Low Reference	9	0.35	Bare	10116	III	—
10	0.35	GN / BU	6133	I	—	Body Control Module LIN Bus 2	10	0.5	GN / BU	6133	III	—
11	—	—	—	—	—	Not Occupied	11	—	—	—	—	—
12	0.5	GN / BN	2266	I	—	DC/AC Inverter Control 2	12	0.5	GN / BN	2266	III	—
13	0.35	Bare	10119	I	—	AC Outlet 2 Low Reference	13	0.35	Bare	10119	III	—
14	0.75	RD / WH	10121	II	—	AC Outlet 2 Phase B Control	14	0.75	RD / WH	10121	IV	—

X331 Front Seat Wiring Harness - Driver to Body Wiring Harness

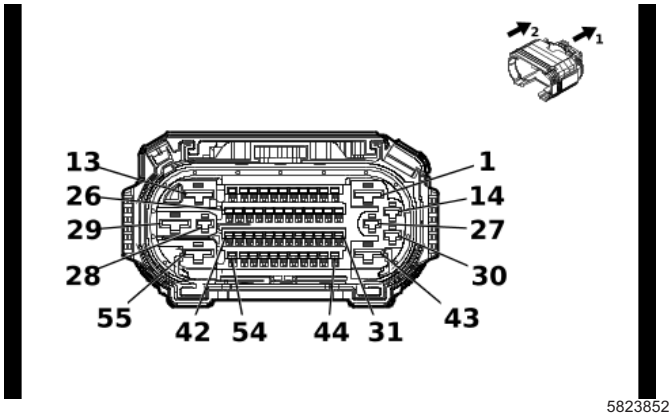

5823852

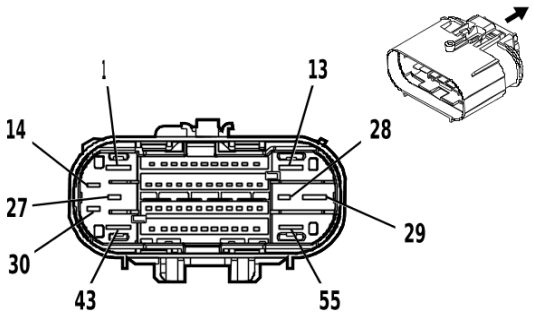

4993301

Connector Part Information

Harness Type: Front Seat Wiring Harness - Driver

OEM Connector: 35572204

Service Connector: Service by Harness - See Part Catalog

Description: 55-Way F 1.2 OCS, 2.8, 6.3 CTS Series, Sealed(BK)

Connector Part Information

Harness Type: Body Wiring Harness

OEM Connector: 35588064

Service Connector: 84727364

Description: 55-Way M 1.2 OCS, 2.8, 6.3 CTS Series, Sealed(BK)

Terminal Part Information

Terminal Type ID	Terminated Lead	Diagnostic Test Probe	Terminal Removal Tool
I	Not required	J-35616-16 (L-GN)	No Tool Required
II	Not required	J-35616-42 (RD)	No Tool Required
III	Not required	No Tool Required	No Tool Required
IV	19301750	J-35616-32 (OG)	J-38125-36
V	84867140	J-35616-13 (BU)	J-38125-215A
VI	84867141	J-35616-13 (BU)	J-38125-215A

X331 Front Seat Wiring Harness - Driver to Body Wiring Harness

Pin	Size	Color	Circuit	Terminal Type ID	Option	Function	Pin	Size	Color	Circuit	Terminal Type ID	Option
1	2.5	BK	1550	II	—	Ground	1	2.5	BK	1550	IV	—
2 - 3	—	—	—	—	—	Not Occupied	2 - 3	—	—	—	—	—
4	0.5 0.75	RD / BN RD / BN	2240 2240	I I	A45 - A45	Battery Positive Voltage Battery Positive Voltage	4	0.5	RD / BN	2240	V	—
5	0.35	GN / WH	7530	I	—	Driver Seat Adjuster Memory Module LIN Bus 1	5	0.5	GN / WH	7530	V	—
6	—	—	—	—	—	Not Occupied	6	—	—	—	—	—
7	0.35	WH	615	I	—	Seat Memory Switch Signal 1	7	0.35	WH	615	V	—
8	0.35	BU / GN	614	I	—	Seat Memory Switch Set Signal	8	0.35	BU / GN	614	V	—

X331 Front Seat Wiring Harness - Driver to Body Wiring Harness (cont'd)

Pin	Size	Color	Circuit	Terminal Type ID	Option	Function	Pin	Size	Color	Circuit	Terminal Type ID	Option
9 - 14	—	—	—	—	—	Not Occupied	9 - 14	—	—	—	—	—
15	0.75	BN / VT	2077	I	—	Driver Seat Heating Element Control	15	0.75	BN / VT	2077	VI	—
16	0.75	BN / BK	2078	I	—	Driver Seat Heating Element Low Reference	16	0.75	BN / BK	2078	VI	—
17	0.5	YE / GY	2079	I	—	Driver Seat Heating Temperature Sensor Signal	17	0.5	YE / GY	2079	V	—
18	0.5	BK / YE	2080	I	—	Driver Heated Seat Thermistor Low Reference	18	0.5	BK / YE	2080	V	—
19	0.5	BU	2425	I	—	Driver Seat Back Heating Temperature Sensor Signal	19	0.5	BU	2425	V	—
20	0.75	BN	2432	I	—	Driver Seat Back Heating Element Control	20	0.75	BN	2432	VI	—
21 - 28	—	—	—	—	—	Not Occupied	21 - 28	—	—	—	—	—
29	2.5	RD / YE	5040	II	—	Battery Positive Voltage	29	2.5	RD / YE	5040	IV	—
30	—	—	—	—	—	Not Occupied	30	—	—	—	—	—
31	0.5	OG / GY	2652	I	—	Driver Seat Belt Sensor Signal	31	0.35	OG / GY	2652	V	—
32	0.5	BK / OG	1363	I	—	Driver Seat Belt Switch Low Reference	32	0.5	BK / OG	1363	V	—
33	—	—	—	—	—	Not Occupied	33	—	—	—	—	—
34	0.5	BK / OG	4963	III	—	Driver Seat Back Air Bag Low Control	34	0.5	BK / OG	4963	V	—
35	0.5	OG / BU	4962	III	—	Driver Seat Back Air Bag High Control	35	0.5	OG / BU	4962	V	—
36 - 40	—	—	—	—	—	Not Occupied	36 - 40	—	—	—	—	—
41	0.35	BU / VT	4101	I	—	AUTOSAR CAN Bus [+] 4 Serial Data	41	0.5	BU / VT	4101	V	—
42	0.35	WH	4100	I	—	AUTOSAR CAN Bus [-] 4 Serial Data	42	0.5	WH	4100	V	—

X331 Front Seat Wiring Harness - Driver to Body Wiring Harness (cont'd)

Pin	Size	Color	Circuit	Terminal Type ID	Option	Function	Pin	Size	Color	Circuit	Terminal Type ID	Option
43 - 49	—	—	—	—	—	Not Occupied	43 - 49	—	—	—	—	—
50	0.35	BU / VT	4101	I	—	AUTOSAR CAN Bus [+] 4 Serial Data	50	0.5	BU / VT	4101	V	—
51	0.35	WH	4100	I	—	AUTOSAR CAN Bus [-] 4 Serial Data	51	0.5	WH	4100	V	—
52	0.5	GN / VT	5906	I	—	Driver Seat Blower Motor Control 1	52	0.5	GN / VT	5906	V	—
53	0.75	VT / WH	1139	I	—	Run/Crank Ignition 1 Voltage	53	0.75	VT / WH	1139	VI	—
54 - 55	—	—	—	—	—	Not Occupied	54 - 55	—	—	—	—	—

X336 Front Seat Wiring Harness - Passenger to Body Wiring Harness

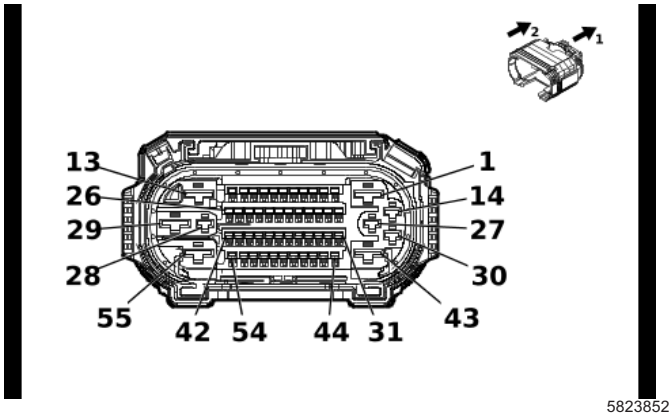

5823852

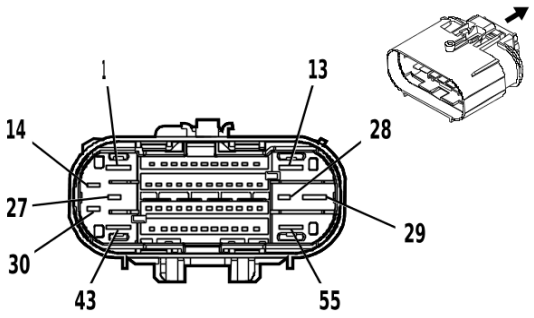

4993301

Connector Part Information

Harness Type: Front Seat Wiring Harness - Passenger
OEM Connector: 35572205
Service Connector: Service by Harness - See Part Catalog
Description: 55-Way F 1.2 OCS, 2.8, 6.3 CTS Series, Sealed(BK)

Connector Part Information

Harness Type: Body Wiring Harness
OEM Connector: 35588064
Service Connector: 84727364
Description: 55-Way M 1.2 OCS, 2.8, 6.3 CTS Series, Sealed(BK)

Terminal Part Information

Terminal Type ID	Terminated Lead	Diagnostic Test Probe	Terminal Removal Tool
I	Not required	J-35616-16 (L-GN)	No Tool Required
II	Not required	J-35616-42 (RD)	No Tool Required
III	Not required	J-35616-43 (RD)	No Tool Required
IV	Not required	No Tool Required	No Tool Required
V	19301750	J-35616-32 (OG)	J-38125-36
VI	84867140	J-35616-13 (BU)	J-38125-215A
VII	84867141	J-35616-13 (BU)	J-38125-215A

X336 Front Seat Wiring Harness - Passenger to Body Wiring Harness

Pin	Size	Color	Circuit	Terminal Type ID	Option	Function	Pin	Size	Color	Circuit	Terminal Type ID	Option
1	2.5 0.75	BK BK	1350 1350	II III	A7K/ AVU/ KA1 AVU+ (AHH/ AKE)	Ground Ground	1	2.5	BK	1350	V	—
2	—	—	—	—	—	Not Occupied	2	—	—	—	—	—
3	0.75	RD / GN	6140	I	—	Battery Positive Voltage	3	0.75	RD / GN	6140	VII	—
4	0.75 0.5	RD / BN RD / BN	2240 2240	I I	AVU+ (AHH/ AKE) AVU-AHH-AKE	Battery Positive Voltage Battery Positive Voltage	4	0.5	RD / BN	2240	VI	—
5	0.75	RD / BN	6640	I	—	Battery Positive Voltage	5	0.75	RD / BN	6640	VII	—
6	—	—	—	—	—	Not Occupied	6	—	—	—	—	—

X336 Front Seat Wiring Harness - Passenger to Body Wiring Harness (cont'd)

Pin	Size	Color	Circuit	Terminal Type ID	Option	Function	Pin	Size	Color	Circuit	Terminal Type ID	Option
7	0.5	BU	4987	I	—	AUTOSAR CAN Bus [+] 1 Serial Data AUTOSAR CAN Bus [+] 1 Serial Data	7	0.35 0.5	BU BU	4987 4987	VI VI	UKL/ UGN - UKL-UGN
8	0.5	WH	4986	I	—	AUTOSAR CAN Bus [-] 1 Serial Data AUTOSAR CAN Bus [-] 1 Serial Data	8	0.35 0.5	WH WH	4986 4986	VI VI	UKL/ UGN - UKL-UGN
9 - 14	—	—	—	—	—	Not Occupied	9 - 14	—	—	—	—	—
15	0.75	BN / VT	2077	I	—	Driver Seat Heating Element Control	15	0.75	BN / VT	2077	VII	—
16	0.75	BN / BK	2078	I	—	Driver Seat Heating Element Low Reference	16	0.75	BN / BK	2078	VII	—
17	0.5	YE / GY	2079	I	—	Driver Seat Heating Temperature Sensor Signal	17	0.5	YE / GY	2079	VI	—
18	0.5	BK / YE	2080	I	—	Driver Heated Seat Thermistor Low Reference	18	0.5	BK / YE	2080	VI	—
19	0.5	BU	2425	I	—	Driver Seat Back Heating Temperature Sensor Signal	19	0.5	BU	2425	VI	—
20	0.75	BN	2432	I	—	Driver Seat Back Heating Element Control	20	0.75	BN	2432	VII	—
21	0.5	GN / VT	2857	I	—	Body Control Module LIN Bus 11	21	0.35	GN / VT	2857	VI	—
22	—	—	—	—	—	Not Occupied	22	—	—	—	—	—
23	0.5	RD / GN	4440	I	—	Battery Positive Voltage	23	0.5	RD / GN	4440	VI	—
24	0.5	GY / OG	3946	I	—	Passenger Automatic Locking Retractor Switch Low Reference	24	0.35	GY / OG	3946	VI	—
25	0.5	OG / BN	3947	I	—	Passenger Automatic Locking Retractor Switch Signal	25	0.35	OG / BN	3947	VI	—
26	0.5	BK / WH	1251	I	—	Signal Ground	26	0.5	BK / WH	1251	VI	—

X336 Front Seat Wiring Harness - Passenger to Body Wiring Harness (cont'd)

Pin	Size	Color	Circuit	Terminal Type ID	Option	Function	Pin	Size	Color	Circuit	Terminal Type ID	Option
27 - 28	—	—	—	—	—	Not Occupied	27 - 28	—	—	—	—	—
29	2.5 2.5	RD / YE RD / GY	7440 7440	II II	— —	Battery Positive Voltage Battery Positive Voltage	29	2.5	RD / YE	7440	V	—
30	—	—	—	—	—	Not Occupied	30	—	—	—	—	—
31	0.5	OG / VT	1362	I	—	Passenger Seat Belt Switch Signal	31	0.35	OG / VT	1362	VI	—
32	0.5	BK / OG	1363	I	—	Driver Seat Belt Switch Low Reference	32	0.5	BK / OG	1363	VI	—
33	—	—	—	—	—	Not Occupied	33	—	—	—	—	—
34	0.5	BU / OG	4957	IV	—	Passenger Seat Back Air Bag Low Control	34	0.5	BU / OG	4957	VI	—
35	0.5	OG / GY	4956	IV	—	Passenger Seat Back Air Bag High Control	35	0.5	OG / GY	4956	VI	—
36	0.5	GN / VT	5906	I	—	Driver Seat Blower Motor Control 1	36	0.5	GN / VT	5906	VI	—
37	0.75	VT / WH	1139	I	—	Run/Crank Ignition 1 Voltage	37	0.75	VT / WH	1139	VII	—
38 - 40	—	—	—	—	—	Not Occupied	38 - 40	—	—	—	—	—
41	0.35	BU / VT	4101	I	—	AUTOSAR CAN Bus [+] 4 Serial Data	41	0.5	BU / VT	4101	VI	—
42	0.35	WH	4100	I	—	AUTOSAR CAN Bus [-] 4 Serial Data	42	0.5	WH	4100	VI	—
43 - 49	—	—	—	—	—	Not Occupied	43 - 49	—	—	—	—	—
50	0.35	BU / VT	4101	I	—	AUTOSAR CAN Bus [+] 4 Serial Data	50	0.5	BU / VT	4101	VI	—
51	0.35	WH	4100	I	—	AUTOSAR CAN Bus [-] 4 Serial Data	51	0.5	WH	4100	VI	—
52	0.5	BU	4987	I	—	AUTOSAR CAN Bus [+] 1 Serial Data	52	0.5	BU	4987	VI	—
53	0.5	WH	4986	I	—	AUTOSAR CAN Bus [-] 1 Serial Data	53	0.5	WH	4986	VI	—
54 - 55	—	—	—	—	—	Not Occupied	54 - 55	—	—	—	—	—

X340 Body Wiring Harness to Rear Seat Heater Control Wiring Harness - 2nd Row (KA6)

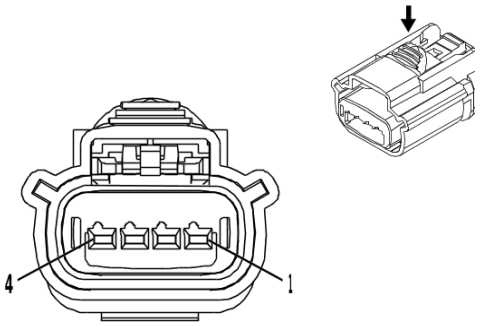

—

4455251

Connector Part Information

Harness Type: Body Wiring Harness
OEM Connector: 15514524
Service Connector: 19355605
Description: 4-Way F 1.5 OCS Series, Sealed(BK)

Connector Part Information

Harness Type: Rear Seat Heater Control Wiring Harness - 2nd Row
OEM Connector: Not Available
Service Connector: Service by Harness - See Part Catalog
Description: 4-Way M (BK)

Terminal Part Information

Terminal Type ID	Terminated Lead	Diagnostic Test Probe	Terminal Removal Tool
I	Not required	J-35616-2A (GY)	No Tool Required
II	Not required	J-35616-3 (GY)	No Tool Required

X340 Body Wiring Harness to Rear Seat Heater Control Wiring Harness - 2nd Row (KA6)

Pin	Size	Color	Circuit	Terminal Type ID	Option	Function	Pin	Size	Color	Circuit	Terminal Type ID	Option
1	0.75	RD / WH	5740	I	—	Battery Positive Voltage	1	0.75	RD / WH	5740	II	—
2	0.75	RD / BU	6740	I	—	Battery Positive Voltage	2	0.75	RD / BU	6740	II	—
3	0.35	GN / VT	2857	I	—	Body Control Module LIN Bus 11	3	0.35	GN / VT	2857	II	—
4	1	BK	1550	I	—	Ground	4	1	BK	1550	II	—

X370 Dome Lamp Wiring Harness to Instrument Panel Wiring Harness (IOK)

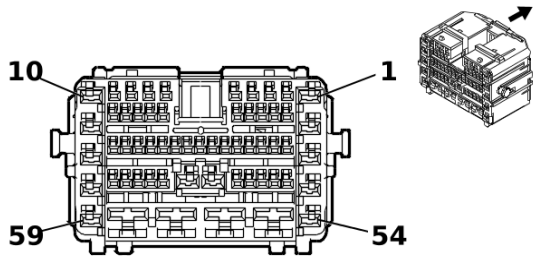

5278767

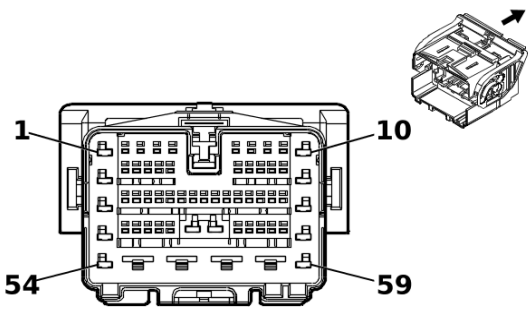

5278741

Connector Part Information

Harness Type: Dome Lamp Wiring Harness
OEM Connector: 33387960
Service Connector: 13528126
Description: 59-Way F 1.2 MCON, 2.8, 6.3 YESC Series(BK)

Connector Part Information

Harness Type: Instrument Panel Wiring Harness
OEM Connector: 33387961
Service Connector: 84766292
Description: 59-Way M 1.2 MCON, 2.8, 6.3 YESC Series(BK)

Terminal Part Information

Terminal Type ID	Terminated Lead	Diagnostic Test Probe	Terminal Removal Tool
I	84962855	J-35616-4A (PU)	J-38125-11A
II	84963773	J-35616-12 (BU)	J-38125-215A
III	13578908	J-35616-5 (PU)	J-38125-11A
IV	19330704	J-35616-13 (BU)	J-38125-215A

X370 Dome Lamp Wiring Harness to Instrument Panel Wiring Harness (IOK)

Pin	Size	Color	Circuit	Terminal Type ID	Option	Function	Pin	Size	Color	Circuit	Terminal Type ID	Option
1	0.5	RD / YE	240	I	—	Battery Positive Voltage	1	0.5	RD / YE	240	III	—
2	0.35 0.5	VT / BK VT / BK	339 339	II II	(ASV/ CE1) - DD8- DRZ- GF2- GF5- GFF- GPZ DD8- GF2- GF5- GFF- GPZ/ DRZ- GF2- GF5- GFF- GPZ	Run/Crank Ignition 1 Voltage Run/Crank Ignition 1 Voltage	2	0.5	VT / BK	339	IV	—
3	—	—	—	—	—	Not Occupied	3	—	—	—	—	—
4	0.35	GN / BN	3005	II	—	Active Noise Cancellation Microphone 1 Signal	4	0.35	GN / BN	3005	IV	—

X370 Dome Lamp Wiring Harness to Instrument Panel Wiring Harness (IOK) (cont'd)

Pin	Size	Color	Circuit	Terminal Type ID	Option	Function	Pin	Size	Color	Circuit	Terminal Type ID	Option
5	0.35	GN / BK	3008	II	—	Active Noise Cancellation Microphone 1 Feedback Signal	5	0.35	GN / BK	3008	IV	—
6	0.35	WH / GY	4104	II	—	AUTOSAR CAN Bus [-] 8 Serial Data	6	0.35	WH / GY	4104	IV	—
7	0.35	BU / GY	4105	II	—	AUTOSAR CAN Bus [+] 8 Serial Data	7	0.35	BU / GY	4105	IV	—
8	0.35	WH / GY	4104	II	—	AUTOSAR CAN Bus [-] 8 Serial Data	8	0.5	WH / GY	4104	IV	—
9	0.35	BU / GY	4105	II	—	AUTOSAR CAN Bus [+] 8 Serial Data	9	0.5	BU / GY	4105	IV	—
10	0.35	YE / WH	1690	I	—	Mirror Dimming Signal	10	0.35	YE / WH	1690	III	—
11	0.35	BK / YE	1691	I	—	Automatic Day/Night Mirror Low Reference	11	0.35	BK / YE	1691	III	—
12	0.35	WH	4978	II	—	AUTOSAR CAN Bus [-] 2 Serial Data	12	0.35	WH	4978	IV	—
13	0.35	BU / YE	4979	II	—	AUTOSAR CAN Bus [+] 2 Serial Data	13	0.35	BU / YE	4979	IV	—
14	0.35	BK / BN	654	II	—	Cellular Telephone Microphone Low Reference	14	0.35	BK / BN	654	IV	—
15	0.35	BU	655	II	—	Cellular Telephone Microphone Signal	15	0.35	BU	655	IV	—
16	0.35	YE / VT	6191	II	—	Power Rear Window Switch Open Signal	16	0.5	YE / VT	6191	IV	—
17	0.35	WH	6192	II	—	Sliding Rear Window Switch Close Signal	17	0.5	WH	6192	IV	—
18	0.5	BU / BK	1053	II	—	Center High Mounted Stop Lamp Control 3	18	0.5	BU / BK	1053	IV	—
19	0.5	WH / VT	1430	II	—	Exterior Courtesy Lamp Control	19	0.5	WH / VT	1430	IV	—
20	0.35	BU / YE	4979	II	—	AUTOSAR CAN Bus [+] 2 Serial Data	20	0.35	BU / YE	4979	IV	—
21	0.35	WH	4978	II	—	AUTOSAR CAN Bus [-] 2 Serial Data	21	0.35	WH	4978	IV	—
22	0.5	GN / WH	24	I	—	Backup Lamp Control	22	0.5	GN / WH	24	III	—

X370 Dome Lamp Wiring Harness to Instrument Panel Wiring Harness (IOK) (cont'd)

Pin	Size	Color	Circuit	Terminal Type ID	Option	Function	Pin	Size	Color	Circuit	Terminal Type ID	Option
23	0.35	GN / WH	2514	I	—	Telematics Switch Signal	23	0.35	GN / WH	2514	III	—
24	0.35	GN / BK	2515	II	—	Telematics Switch Supply Voltage	24	0.35	GN / BK	2515	IV	—
25	0.35	YE / VT	2516	II	—	Telematics Switch Green LED Indicator Control	25	0.35	YE / VT	2516	IV	—
26	0.35	BN / WH	2517	II	—	Telematics Switch Red LED Indicator Control	26	0.35	BN / WH	2517	IV	—
27	0.5	GN / WH	2854	II	—	Body Control Module LIN Bus 8	27	0.5	GN / WH	2854	IV	—
28	0.5	GN / WH	4115	II	—	Body Control Module LIN Bus 5	28	0.35	GN / WH	4115	IV	—
29	0.35	VT / YE	7043	II	—	Microphone [+] Signal	29	0.35	VT / YE	7043	IV	—
30	0.35	BU / BK	7044	II	—	Microphone [-] Signal	30	0.35	BU / BK	7044	IV	—
31	0.35	YE	6817	II	—	LED Backlight Dimming Control 1	31	0.35	YE	6817	IV	—
32	0.5	VT	801	II	—	Retained Accessory Power Control	32	0.5	VT	801	IV	—
33	0.5	BN / YE	820	II	—	Center High Mounted Stop Lamp Supply Voltage	33	0.5	BN / YE	820	IV	—
34 - 35	—	—	—	—	—	Not Occupied	34 - 35	—	—	—	—	—
36	0.35	BK / WH	851	II	—	Signal Ground	36	0.5	BK / WH	851	IV	—
37 - 38	—	—	—	—	—	Not Occupied	37 - 38	—	—	—	—	—
39	2.5	VT / BU	10735	I	—	Upfitter Accessory 5 Supply Voltage	39	2.5	VT / BU	10735	III	—
40	2.5	BK	1050	I	—	Ground	40	2.5	BK	1050	III	—
41 - 52	—	—	—	—	—	Not Occupied	41 - 52	—	—	—	—	—
53	2.5	RD / BU	4540	I	—	Battery Positive Voltage	53	2.5	RD / BU	4540	III	—
54 - 59	—	—	—	—	—	Not Occupied	54 - 59	—	—	—	—	—

X370 Dome Lamp Wiring Harness to Instrument Panel Wiring Harness (IOR)

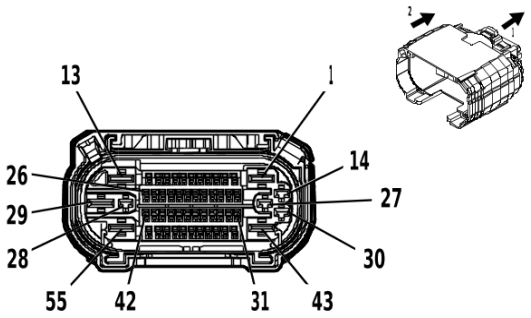

4992168

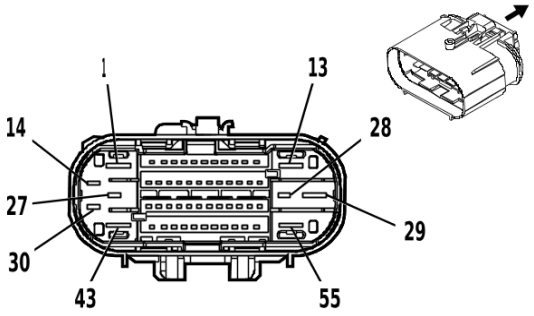

4993301

Connector Part Information

Harness Type: Dome Lamp Wiring Harness

OEM Connector: 35196713

Service Connector: 19371185

Description: 55-Way F 1.2 OCS, 2.8, 6.3 CTS Series, Sealed(BK)

Connector Part Information

Harness Type: Instrument Panel Wiring Harness

OEM Connector: 35205189

Service Connector: 84727364

Description: 55-Way M 1.2 OCS, 2.8, 6.3 CTS Series, Sealed(BK)

Terminal Part Information

Terminal Type ID	Terminated Lead	Diagnostic Test Probe	Terminal Removal Tool
I	19332901	J-35616-35 (VT)	J-38125-212
II	19370818	J-35616-12 (BU)	J-38125-215A
III	84634921	J-35616-42 (RD)	J-38125-212
IV	84847992	J-35616-32 (OG)	J-38125-36
V	84867140	J-35616-13 (BU)	J-38125-215A
VI	84992391	J-35616-5 (PU)	J-38125-215A

X370 Dome Lamp Wiring Harness to Instrument Panel Wiring Harness (IOR)

Pin	Size	Color	Circuit	Terminal Type ID	Option	Function	Pin	Size	Color	Circuit	Terminal Type ID	Option
1	0.5	RD / YE	240	III	—	Battery Positive Voltage	1	0.5	RD / YE	240	IV	—
2 - 3	—	—	—	—	—	Not Occupied	2 - 3	—	—	—	—	—
4	0.35	WH	4978	II	—	AUTOSAR CAN Bus [-] 2 Serial Data	4	0.35	WH	4978	V	—
5	0.35	BU / YE	4979	II	—	AUTOSAR CAN Bus [+] 2 Serial Data	5	0.35	BU / YE	4979	V	—
6	0.35	BK / BN	654	II	—	Cellular Telephone Microphone Low Reference	6	0.35	BK / BN	654	V	—
7	0.35	BU	655	II	—	Cellular Telephone Microphone Signal	7	0.35	BU	655	V	—
8	0.5	BU / BK	1053	II	—	Center High Mounted Stop Lamp Control 3	8	0.5	BU / BK	1053	V	—

X370 Dome Lamp Wiring Harness to Instrument Panel Wiring Harness (IOR) (cont'd)

Pin	Size	Color	Circuit	Terminal Type ID	Option	Function	Pin	Size	Color	Circuit	Terminal Type ID	Option
9	0.5	WH / VT	1430	II	—	Exterior Courtesy Lamp Control	9	0.5	WH / VT	1430	V	—
10	0.5	GN / WH	24	II	—	Backup Lamp Control	10	0.5	GN / WH	24	V	—
11	0.35	GN / WH	2514	II	—	Telematics Switch Signal	11	0.35	GN / WH	2514	V	—
12 - 13	—	—	—	—	—	Not Occupied	12 - 13	—	—	—	—	—
14	0.35	BN / WH	2517	I	—	Telematics Switch Red LED Indicator Control	14	0.35	BN / WH	2517	VI	—
15	0.5	GN / WH	2854	II	—	Body Control Module LIN Bus 8	15	0.5	GN / WH	2854	V	—
16	—	—	—	—	—	Not Occupied	16	—	—	—	—	—
17	0.5	BN / YE	820	II	—	Center High Mounted Stop Lamp Supply Voltage	17	0.5	BN / YE	820	V	—
18	0.35	YE / VT	2516	II	—	Telematics Switch Green LED Indicator Control	18	0.35	YE / VT	2516	V	—
19	—	—	—	—	—	Not Occupied	19	—	—	—	—	—
20	0.35	BK / WH	851	II	—	Signal Ground	20	0.5	BK / WH	851	V	—
21	0.5	VT / BK	339	II	—	Run/Crank Ignition 1 Voltage	21	0.5	VT / BK	339	V	—
22 - 26	—	—	—	—	—	Not Occupied	22 - 26	—	—	—	—	—
27	2.5	BK	1050	I	—	Ground	27	2.5	BK	1050	VI	—
28	2.5	VT / BU	10735	I	—	Upfitter Accessory 5 Supply Voltage	28	2.5	VT / BU	10735	VI	—
29 - 44	—	—	—	—	—	Not Occupied	29 - 44	—	—	—	—	—
45	0.35	GN / BK	2515	II	—	Telematics Switch Supply Voltage	45	0.35	GN / BK	2515	V	—
46	0.35	WH	4978	II	—	AUTOSAR CAN Bus [-] 2 Serial Data	46	0.35	WH	4978	V	—
47	0.35	BU / YE	4979	II	—	AUTOSAR CAN Bus [+] 2 Serial Data	47	0.35	BU / YE	4979	V	—
48 - 55	—	—	—	—	—	Not Occupied	48 - 55	—	—	—	—	—

X371 Inside Rearview Mirror Wiring Harness to Dome Lamp Wiring Harness (Extended Cab/Crew Cab)

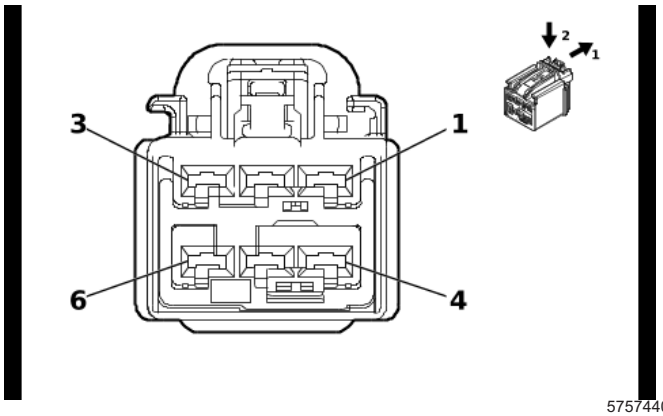

5757440

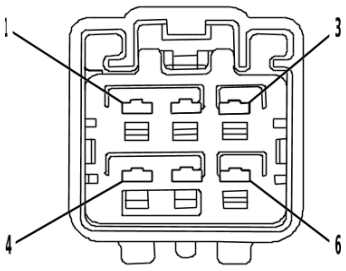

1849802

Connector Part Information

Harness Type: Inside Rearview Mirror Wiring Harness
OEM Connector: 35360831
Service Connector: Service by Harness - See Part Catalog
Description: 6-Way F 2.8 YESC Series(GY)

Connector Part Information

Harness Type: Dome Lamp Wiring Harness
OEM Connector: 10847012
Service Connector: 84727361
Description: 6-Way M YESC Kaizen Series(L-GY)

Terminal Part Information

Terminal Type ID	Terminated Lead	Diagnostic Test Probe	Terminal Removal Tool
I	Not required	J-35616-4A (PU)	No Tool Required
II	Not required	J-35616-5 (PU)	No Tool Required

X371 Inside Rearview Mirror Wiring Harness to Dome Lamp Wiring Harness (Extended Cab/Crew Cab)

Pin	Size	Color	Circuit	Terminal Type ID	Option	Function	Pin	Size	Color	Circuit	Terminal Type ID	Option
1	0.5	WH / VT	1430	I	—	Exterior Courtesy Lamp Control	1	0.5	WH / VT	1430	II	—
2	0.5	BN / YE	820	I	—	Center High Mounted Stop Lamp Supply Voltage	2	0.5	BN / YE	820	II	—
3	0.5	BK	1050	I	—	Ground	3	1	BK	1050	II	—
4	2.5	BK	1050	I	—	Ground	4	2.5	BK	1050	II	—
5	2.5	VT / BU	10735	I	—	Upfitter Accessory 5 Supply Voltage	5	2.5	VT / BU	10735	II	—
6	—	—	—	—	—	Not Occupied	6	—	—	—	—	—

X375 Sunroof Control Module Jumper Wiring Harness to Dome Lamp Wiring Harness (CF5)

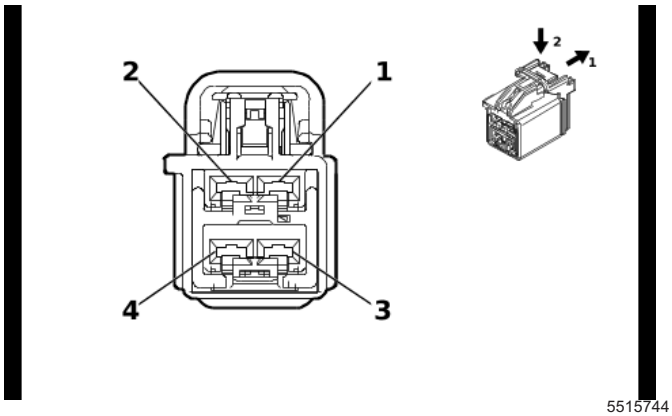

5515744

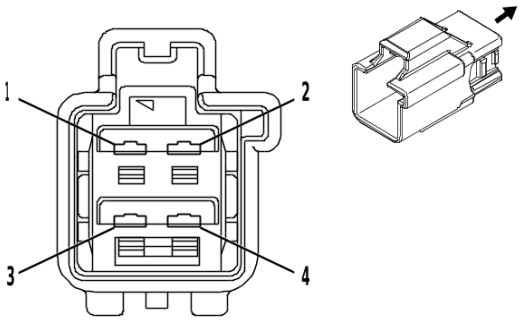

4257143

Connector Part Information

Harness Type: Sunroof Wiring Harness
OEM Connector: 7289-7224-40
Service Connector: Service by Harness - See Part Catalog
Description: 4-Way F 2.8 YESC Series(GY)

Connector Part Information

Harness Type: Dome Lamp Wiring Harness
OEM Connector: 10847009
Service Connector: 89046843
Description: 4-Way M 2.8 YESC Series(GY)

Terminal Part Information

Terminal Type ID	Terminated Lead	Diagnostic Test Probe	Terminal Removal Tool
I	Not required	No Tool Required	No Tool Required
II	Not required	J-35616-5 (PU)	No Tool Required

X375 Sunroof Control Module Jumper Wiring Harness to Dome Lamp Wiring Harness (CF5)

Pin	Size	Color	Circuit	Terminal Type ID	Option	Function	Pin	Size	Color	Circuit	Terminal Type ID	Option
1	1.5	BK	1050	I	—	Ground	1	2.5	BK	1050	II	—
2	0.35	GR / BN	2854	I	—	Body Control Module LIN Bus 8	2	0.5	GN / WH	2854	II	—
3	—	—	—	—	—	Not Occupied	3	—	—	—	—	—
4	1.5	RD / GY	4540	I	—	Battery Positive Voltage	4	2.5	RD / BU	4540	II	—

X381 Rearview Driver Information Camera Rear Closure Coaxial Cable to Radio Antenna Cable Extension Cable (DRZ+EXT/CC)

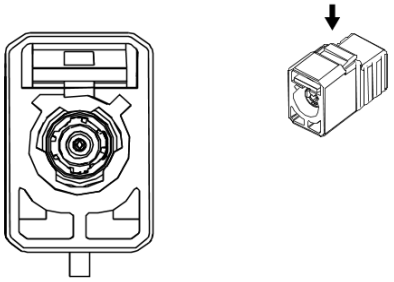

—

2893647

Connector Part Information

Harness Type: Rearview Driver Information Camera Rear Closure Coaxial Cable COAX

OEM Connector: 13581683

Service Connector: Service by Cable Assembly — See Part Catalog

Description: 1-Way F Coax Type(BK)

Connector Part Information

Harness Type: Coax Cable

OEM Connector: Not Available

Service Connector: Service by Cable Assembly — See Part Catalog

Descriptionr: 1-Way F Coax Type(BK)

Terminal Part Information

Terminal Type ID	Terminated Lead	Diagnostic Test Probe	Terminal Removal Tool
I	Not required	No Tool Required	No Tool Required

X381 Rearview Driver Information Camera Rear Closure Coaxial Cable to Radio Antenna Cable Extension Cable (DRZ+EXT/CC)

Pin	Size	Color	Circuit	Terminal Type ID	Option	Function	Pin	Size	Color	Circuit	Terminal Type ID	Option
Coax Cable	—	—	—	—	—	Not Occupied	Coax Cable	—	—	—	—	—

X381 Rearview Driver Information Camera Rear Closure Coaxial Cable to Radio Antenna Cable Extension Cable (DRZ+Regular Cab)

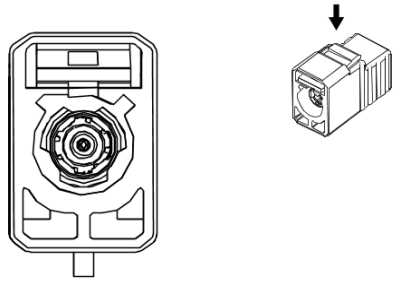

2893647

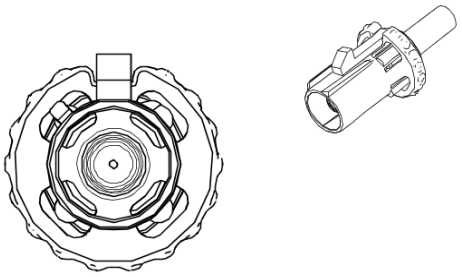

4109605

Connector Part Information

Harness Type: Rearview Driver Information Camera Rear Closure Coaxial Cable COAX

OEM Connector: 13581683

Service Connector: Service by Cable Assembly — See Part Catalog

Description: 1-Way F Coax Type(BK)

Connector Part Information

Harness Type: Radio Antenna Cable Extension Cable COAX

OEM Connector: 13581672

Service Connector: Service by Cable Assembly — See Part Catalog

Description: 1-Way M Coax Type(BK)

Terminal Part Information

Terminal Type ID	Terminated Lead	Diagnostic Test Probe	Terminal Removal Tool
I	Not required	No Tool Required	No Tool Required

X381 Rearview Driver Information Camera Rear Closure Coaxial Cable to Radio Antenna Cable Extension Cable (DRZ+Regular Cab)

Pin	Size	Color	Circuit	Terminal Type ID	Option	Function	Pin	Size	Color	Circuit	Terminal Type ID	Option
—	—	Coax Cable	—	I	—	Full Display Mirror Rear Camera Coaxial Video Signal	—	—	Coax Cable	—	I	—

X382 Inside Rearview Mirror Wiring Harness - Jumper to Dome Lamp Wiring Harness (ASV+CE1)

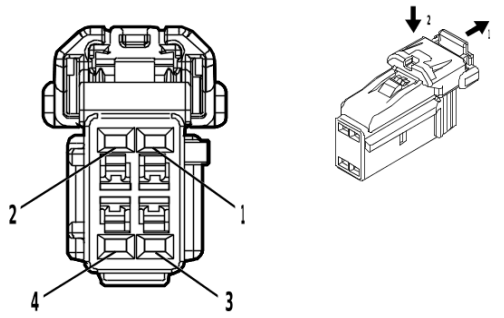

4872683

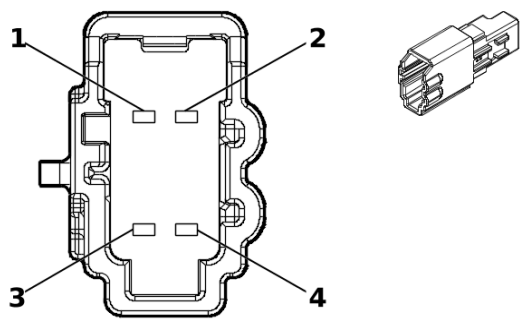

5360963

Connector Part Information

Harness Type: Headlamp Automatic Control Ambient Light Sensor Wiring Harness
OEM Connector: 13533335
Service Connector: Service by Harness - See Part Catalog
Description: 4-Way F 1.2 Series(BK)

Connector Part Information

Harness Type: Dome Lamp Wiring Harness
OEM Connector: 35264699
Service Connector: 84847258
Description: 4-Way M 1.2 MCON Series(BK)

Terminal Part Information

Terminal Type ID	Terminated Lead	Diagnostic Test Probe	Terminal Removal Tool
I	Not required	J-35616-12 (BU)	No Tool Required
II	Not required	J-35616-13 (BU)	No Tool Required
III	Not required	J-35616-17 (L-GN)	No Tool Required

X382 Inside Rearview Mirror Wiring Harness - Jumper to Dome Lamp Wiring Harness (ASV+CE1)

Pin	Size	Color	Circuit	Terminal Type ID	Option	Function	Pin	Size	Color	Circuit	Terminal Type ID	Option
1	0.35	RD / VT	339	I	—	Run/Crank Ignition 1 Voltage	1	0.35	VT / BK	339	II	—
2	0.35	GN / BN	851	I	—	Signal Ground	2	0.5	BK / WH	851	III	—
3	0.35	BK	4115	I	—	Body Control Module LIN Bus 5	3	0.5	GN / WH	4115	III	—
4	—	—	—	—	—	Not Occu-pied	4	—	—	—	—	—

X382 Inside Rearview Mirror Wiring Harness - Jumper to Dome Lamp Wiring Harness (ASV-CE1)

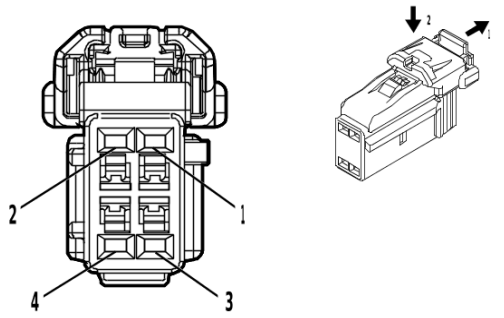

4872683

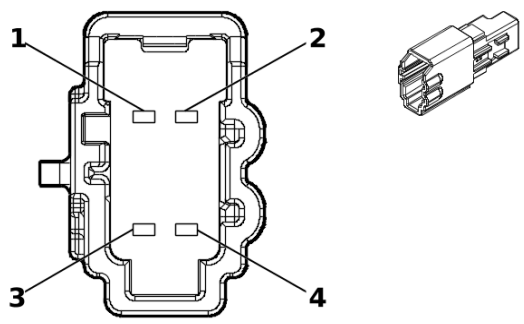

5360963

Connector Part Information

Harness Type: Inside Rearview Mirror Wiring Harness - Jumper
OEM Connector: 13533335
Service Connector: Service by Harness - See Part Catalog
Description: 4-Way F 1.2 Series(BK)

Connector Part Information

Harness Type: Dome Lamp Wiring Harness
OEM Connector: 35264699
Service Connector: 84847258
Description: 4-Way M 1.2 MCON Series(BK)

Terminal Part Information

Terminal Type ID	Terminated Lead	Diagnostic Test Probe	Terminal Removal Tool
I	Not required	J-35616-12 (BU)	No Tool Required
II	Not required	J-35616-13 (BU)	No Tool Required
III	Not required	J-35616-17 (L-GN)	No Tool Required

X382 Inside Rearview Mirror Wiring Harness - Jumper to Dome Lamp Wiring Harness (ASV-CE1)

Pin	Size	Color	Circuit	Terminal Type ID	Option	Function	Pin	Size	Color	Circuit	Terminal Type ID	Option
1	0.35	VT / BK	339	I	—	Run/Crank Ignition 1 Voltage	1	0.35	VT / BK	339	II	—
2	0.35	BK / WH	851	I	—	Signal Ground	2	0.5	BK / WH	851	III	—
3	0.35	GN / WH	4115	I	—	Body Control Module LIN Bus 5	3	0.5	GN / WH	4115	III	—
4	—	—	—	—	—	Not Occu-pied	4	—	—	—	—	—

X400 Body Wiring Harness to Chassis Wiring Harness

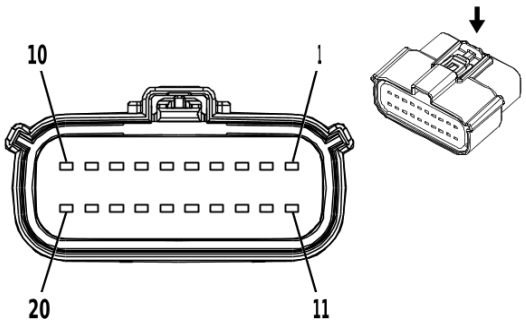

2871898

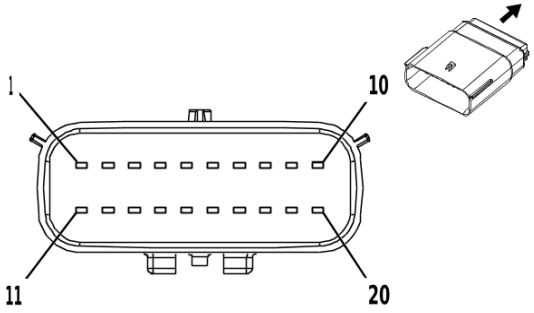

2871861

Connector Part Information

Harness Type: Body Wiring Harness
OEM Connector: 13650143
Service Connector: 19300557
Description: 20-Way F 1.5 Series, Sealed(BK)

Connector Part Information

Harness Type: Chassis Wiring Harness
OEM Connector: 35554983
Service Connector: 19351705
Description: 20-Way M 1.5 MX Series, Sealed(BK)

Terminal Part Information

Terminal Type ID	Terminated Lead	Diagnostic Test Probe	Terminal Removal Tool
I	19368973	J-35616-2A (GY)	J-38125-217
II	19119395	J-35616-3 (GY)	J-38125-217

X400 Body Wiring Harness to Chassis Wiring Harness

Pin	Size	Color	Circuit	Terminal Type ID	Option	Function	Pin	Size	Color	Circuit	Terminal Type ID	Option
1 - 2	—	—	—	—	—	Not Occupied	1 - 2	—	—	—	—	—
3	0.5	WH	4986	I	—	AUTOSAR CAN Bus [-] 1 Serial Data	3	0.5	WH	4986	II	—
						AUTOSAR CAN Bus [-] 1 Serial Data						
4	0.5	BU	4987	I	—	AUTOSAR CAN Bus [+] 1 Serial Data	4	0.5	BU	4987	II	—
						AUTOSAR CAN Bus [+] 1 Serial Data						
5	0.5	GY	830	I	—	Left Front Wheel Speed Sensor Signal	5	0.5	GY	830	II	—
						Left Front Wheel Speed Sensor Signal						
6	0.5	GY / WH	7064	I	—	Left Front Wheel Speed Sensor Control	6	0.5	GY / WH	7064	II	—

X400 Body Wiring Harness to Chassis Wiring Harness (cont'd)

Pin	Size	Color	Circuit	Terminal Type ID	Option	Function	Pin	Size	Color	Circuit	Terminal Type ID	Option
						Left Front Wheel Speed Sensor Control						
7	0.5	YE	872	I	—	Right Front Wheel Speed Sensor Signal Right Front Wheel Speed Sensor Signal	7	0.5	YE	872	II	—
8	0.5	GY / BN	7065	I	—	Right Front Wheel Speed Sensor Control Right Front Wheel Speed Sensor Control	8	0.5	GY / BN	7065	II	—
9	0.5	BN / BU	1602	I	—	Front Brake Pad Wear Sensor Signal Front Brake Pad Wear Sensor Signal	9	0.5	BN / BU	1602	II	—
10	0.35	GY	7292	I	—	Major Endgate Release Switch Signal Exterior Major Endgate Release Switch Signal Exterior	10	0.5	GY	7292	II	—
11	0.35	YE	7294	I	—	Minor Endgate Release Switch Discrete Signal Exterior Minor Endgate Release Switch Discrete Signal Exterior	11	0.5	YE	7294	II	—
12 - 20	—	—	—	—	—	Not Occupied	12 - 20	—	—	—	—	—

X401 Engine Wiring Harness to Chassis Wiring Harness (LM2)

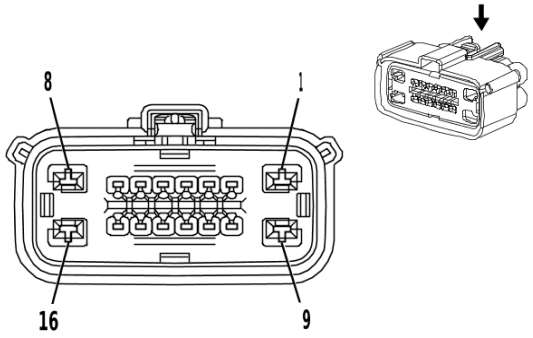

3684497

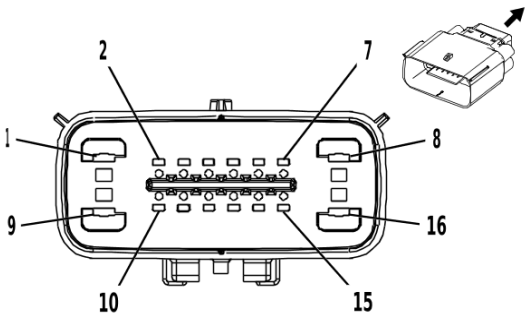

2373686

Connector Part Information

Harness Type: Engine Wiring Harness
OEM Connector: 33218250
Service Connector: 19352906
Description: 16-Way F 1.5, 2.8 MX Series, Sealed(BK)

Connector Part Information

Harness Type: Chassis Wiring Harness
OEM Connector: 33129084
Service Connector: 19331031
Description: 16-Way M 1.5, 2.8 MX Series, Sealed(BK)

Terminal Part Information

Terminal Type ID	Terminated Lead	Diagnostic Test Probe	Terminal Removal Tool
I	85528055	J-35616-2A (GY)	J-38125-217
II	86800300	J-35616-3 (GY)	J-38125-217

X401 Engine Wiring Harness to Chassis Wiring Harness (LM2)

Pin	Size	Color	Circuit	Terminal Type ID	Option	Function	Pin	Size	Color	Circuit	Terminal Type ID	Option
1 - 2	—	—	—	—	—	Not Occupied	1 - 2	—	—	—	—	—
3	0.5	GN / GY	465	I	—	Fuel Pump Primary Relay Control	3	0.5	GN / GY	465	II	—
4	1	BK / WH	1151	I	—	Signal Ground	4	1	BK / WH	1151	II	—
5	1.5	VT / GN	4320	I	—	Powertrain Sensor Bus Enable	5	1.5	VT / GN	4320	II	—
6	0.5	BU / BK	4977	I	—	AUTOSAR CAN Bus [+] 3 Serial Data	6	0.5	BU / BK	4977	II	—
7	0.5	WH	4976	I	—	AUTOSAR CAN Bus [-] 3 Serial Data	7	0.5	WH	4976	II	—
8 - 13	—	—	—	—	—	Not Occupied	8 - 13	—	—	—	—	—
14	0.5	BU / BK	4977	I	—	AUTOSAR CAN Bus [+] 3 Serial Data	14	0.5	BU / BK	4977	II	—
15	0.5	WH	4976	I	—	AUTOSAR CAN Bus [-] 3 Serial Data	15	0.5	WH	4976	II	—
16	—	—	—	—	—	Not Occupied	16	—	—	—	—	—

X402A Body Wiring Harness to Chassis Wiring Harness (UV2)

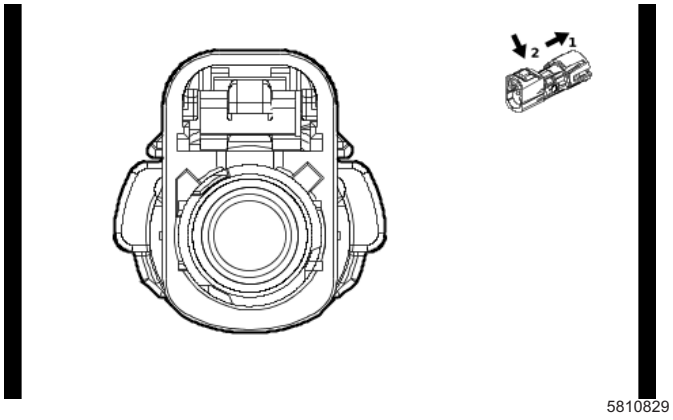

5810829

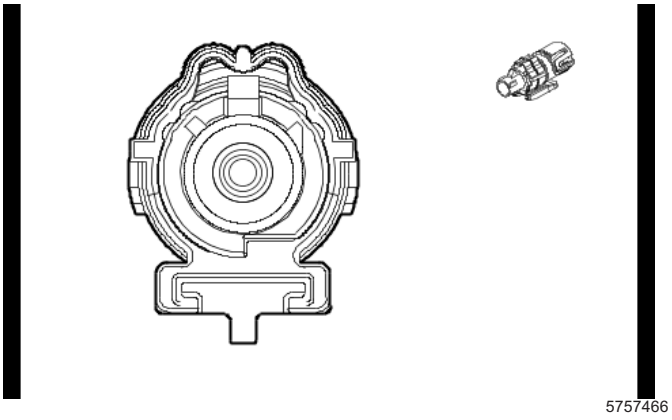
5757466

Connector Part Information

Harness Type: Body Wiring Harness COAX

OEM Connector: 35187033

Service Connector: Service by Cable Assembly — See Part Catalog

Description: 1-Way F Coax Type(WH)

Connector Part Information

Harness Type: Chassis Wiring Harness COAX

OEM Connector: 33338240

Service Connector: Service by Cable Assembly — See Part Catalog

Description: 1-Way M Coax Type, Sealed(WH)

Terminal Part Information

Terminal Type ID	Terminated Lead	Diagnostic Test Probe	Terminal Removal Tool
I	Not required	No Tool Required	No Tool Required

X402A Body Wiring Harness to Chassis Wiring Harness (UV2)

Pin	Size	Color	Circuit	Terminal Type ID	Option	Function	Pin	Size	Color	Circuit	Terminal Type ID	Option
—	—	Coax Cable	—	I	—	Rear Vision Camera Co-axial Video Signal	—	—	Coax Cable	—	I	—

X402B Body Wiring Harness to Chassis Wiring Harness (UV2)

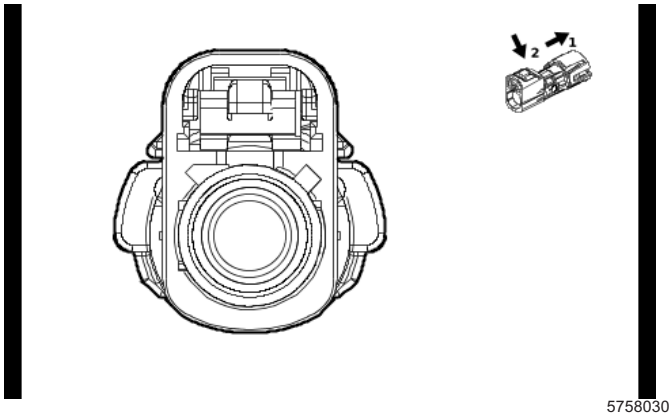

5758030

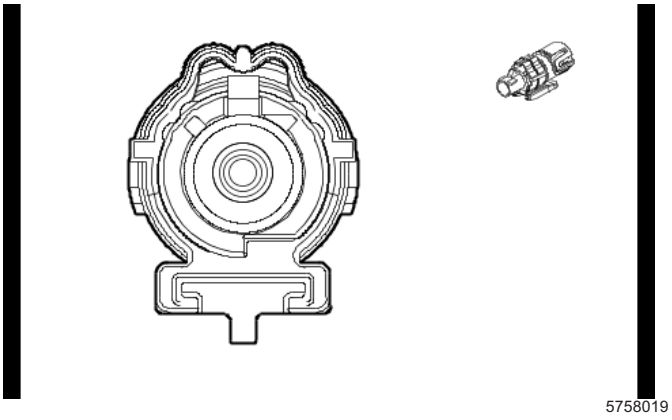
5758019

Connector Part Information

Harness Type: Body Wiring Harness COAX

OEM Connector: 35187032

Service Connector: Service by Cable Assembly — See Part Catalog

Description: 1-Way F Coax Type(BK)

Connector Part Information

Harness Type: Chassis Wiring Harness COAX

OEM Connector: 33338239

Service Connector: Service by Cable Assembly — See Part Catalog

Description: 1-Way M Coax Type, Sealed(BK)

Terminal Part Information

Terminal Type ID	Terminated Lead	Diagnostic Test Probe	Terminal Removal Tool
I	Not required	No Tool Required	No Tool Required

X402B Body Wiring Harness to Chassis Wiring Harness (UV2)

Pin	Size	Color	Circuit	Terminal Type ID	Option	Function	Pin	Size	Color	Circuit	Terminal Type ID	Option
—	—	Coax Cable	—	I	—	Rear Vision Camera Co-axial Video Signal	—	—	Coax Cable	—	I	—

X402C Body Wiring Harness to Chassis Wiring Harness (UV2)

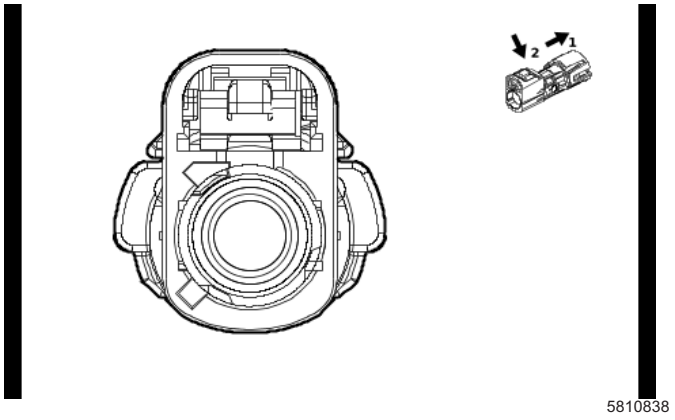

5810838

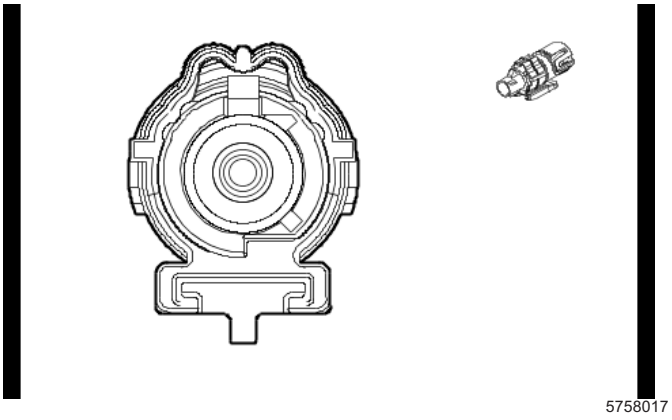
5758017

Connector Part Information

Harness Type: Body Wiring Harness COAX

OEM Connector: 35187037

Service Connector: Service by Cable Assembly — See Part Catalog

Description: 1-Way F Coax Type(BN)

Connector Part Information

Harness Type: Chassis Wiring Harness COAX

OEM Connector: 33338245

Service Connector: Service by Cable Assembly — See Part Catalog

Description: 1-Way M Coax Type, Sealed(BN)

Terminal Part Information

Terminal Type ID	Terminated Lead	Diagnostic Test Probe	Terminal Removal Tool
I	Not required	No Tool Required	No Tool Required

X402C Body Wiring Harness to Chassis Wiring Harness (UV2)

Pin	Size	Color	Circuit	Terminal Type ID	Option	Function	Pin	Size	Color	Circuit	Terminal Type ID	Option
—	—	Coax Cable	—	I	—	Rear Vision Camera Co-axial Video Signal	—	—	Coax Cable	—	I	—

X403 Chassis Wiring Harness to Power Steering Wiring Harness Extension Harness (Extended Cab/Crew Cab)

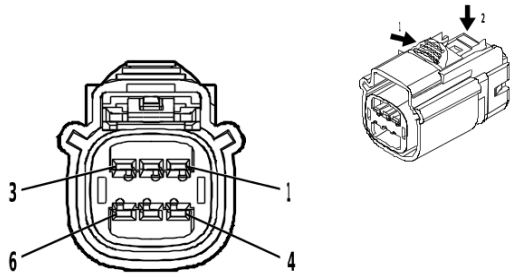

5004419

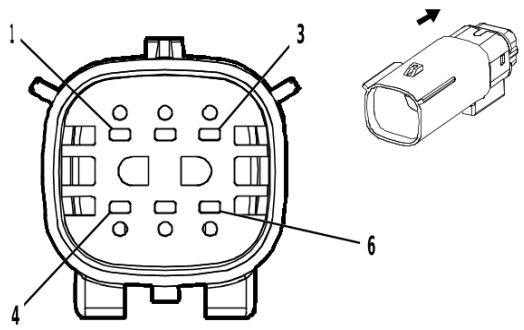

1986159

Connector Part Information

Harness Type: Chassis Wiring Harness
OEM Connector: 35325491
Service Connector: Service by Harness - See Part Catalog
Description: 6-Way F 1.5 OCS Series, Sealed(BK)

Connector Part Information

Harness Type: Power Steering Wiring Harness Extension Harness
OEM Connector: 13520576
Service Connector: Service by Harness - See Part Catalog
Description: 6-Way M 1.5 MX Series, Sealed(BK)

Terminal Part Information

Terminal Type ID	Terminated Lead	Diagnostic Test Probe	Terminal Removal Tool
I	Not required	J-35616-2A (GY)	No Tool Required
II	Not required	J-35616-3 (GY)	No Tool Required

X403 Chassis Wiring Harness to Power Steering Wiring Harness Extension Harness (Extended Cab/Crew Cab)

Pin	Size	Color	Circuit	Terminal Type ID	Option	Function	Pin	Size	Color	Circuit	Terminal Type ID	Option
1	0.5	BU	4987	I	—	AUTOSAR CAN Bus [+] 1 Serial Data	1	0.5	WH / BU	4987	II	—
2 - 5	—	—	—	—	—	Not Occupied	2 - 5	—	—	—	—	—
6	0.5	WH	4986	I	—	AUTOSAR CAN Bus [-] 1 Serial Data	6	0.5	BU / WH	4986	II	—

X403 Chassis Wiring Harness to Power Steering Wiring Harness Extension Harness (Regular Cab)

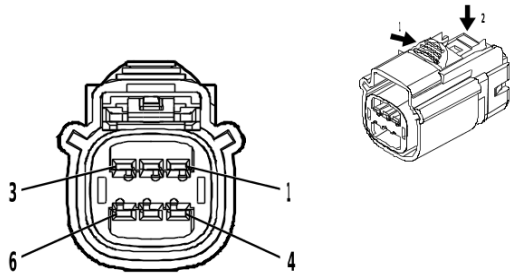

5004419

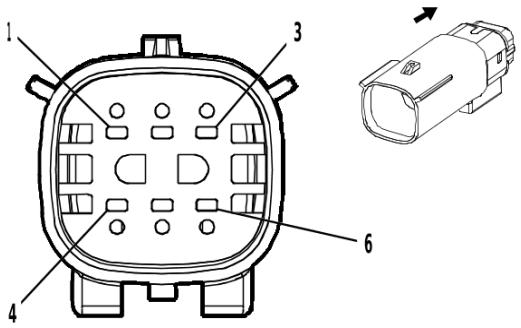

1986159

Connector Part Information

Harness Type: Chassis Wiring Harness
OEM Connector: 15513504
Service Connector: 84999473
Description: 6-Way F 1.5 OCS Series, Sealed(BK)

Connector Part Information

Harness Type: Power Steering Wiring Harness Extension Harness
OEM Connector: 13520576
Service Connector: Service by Harness - See Part Catalog
Description: 6-Way M 1.5 MX Series, Sealed(BK)

Terminal Part Information

Terminal Type ID	Terminated Lead	Diagnostic Test Probe	Terminal Removal Tool
I	Not required	J-35616-2A (GY)	No Tool Required
II	Not required	J-35616-3 (GY)	No Tool Required

X403 Chassis Wiring Harness to Power Steering Wiring Harness Extension Harness (Regular Cab)

Pin	Size	Color	Circuit	Terminal Type ID	Option	Function	Pin	Size	Color	Circuit	Terminal Type ID	Option
1	0.5	BU	4987	I	—	AUTOSAR CAN Bus [+] 1 Serial Data	1	0.5	WH / BU	4987	II	—
2 - 5	—	—	—	—	—	Not Occu-pied	2 - 5	—	—	—	—	—
6	0.5	WH	4986	I	—	AUTOSAR CAN Bus [-] 1 Serial Data	6	0.5	BU / WH	4986	II	—

X404 Reductant Control Module Jumper Wiring Harness to Chassis Wiring Harness (LM2)

—

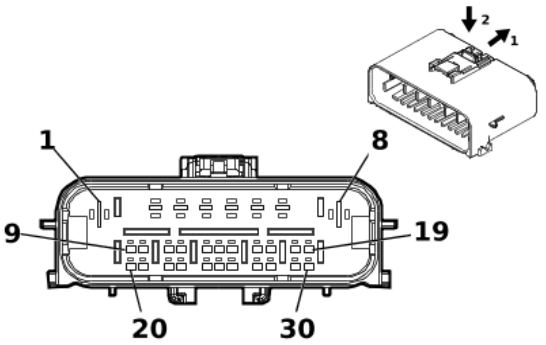

5377298

Connector Part Information

Harness Type: Emission Reduction Fluid Tank Reservoir Wire Harness

OEM Connector: 13533539

Service Connector: Service by Harness - See Part Catalog

Description: 30-Way F 1.2 MCON

Connector Part Information

Harness Type: Chassis Wiring Harness

OEM Connector: 35538391

Service Connector: Service by Harness - See Part Catalog

Description: 30-Way M 1.2 MCON-CB, 2.8 MCP Series, Sealed(GY)

Terminal Part Information

Terminal Type ID	Terminated Lead	Diagnostic Test Probe	Terminal Removal Tool
I	Not required	J-35616-16 (L-GN)	No Tool Required
II	Not required	Not Available	No Tool Required
III	Not required	J-35616-17 (L-GN)	No Tool Required
IV	Not required	J-35616-43 (RD)	No Tool Required
V	Not required	J-35616-5 (PU)	No Tool Required

X404 Reductant Control Module Jumper Wiring Harness to Chassis Wiring Harness (LM2)

Pin	Size	Color	Circuit	Terminal Type ID	Option	Function	Pin	Size	Color	Circuit	Terminal Type ID	Option
1	3	RD / WH	2040	II	—	Battery Positive Voltage	1	2.5	RD / WH	2040	IV	—
2	2	RD / WH	3440	II	—	Battery Positive Voltage	2	1.5	RD / WH	3440	V	—
7	2	BK	1650	II	—	Ground	7	1	BK	1650	V	—
8	3	WH	1650	II	—	Ground	8	2.5	BK	1650	IV	—
11	0.5	BU	4977	I	—	AUTOSAR CAN Bus [+] 3 Serial Data	11	0.5	BU / BK	4977	III	—
12	0.5	BN	4976	I	—	AUTOSAR CAN Bus [-] 3 Serial Data	12	0.5	WH	4976	III	—
22	0.5	BU	4977	I	—	AUTOSAR CAN Bus [+] 3 Serial Data	22	0.5	BU / BK	4977	III	—
23	0.5	BN	4976	I	—	AUTOSAR CAN Bus [-] 3 Serial Data	23	0.5	WH	4976	III	—
25	0.5	BN	639	I	—	Run/Crank Ignition 1 Voltage	25	0.5	VT / WH	639	III	—

X405 Power Steering Control Module Wiring Harness to Power Steering Jumper Wiring Harness

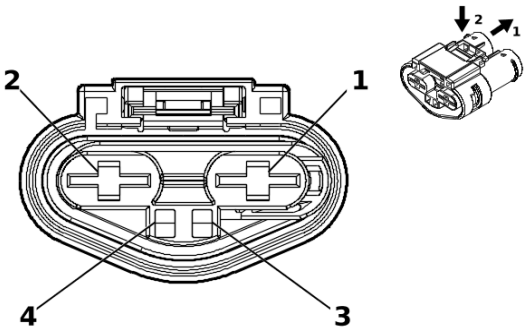

5330342

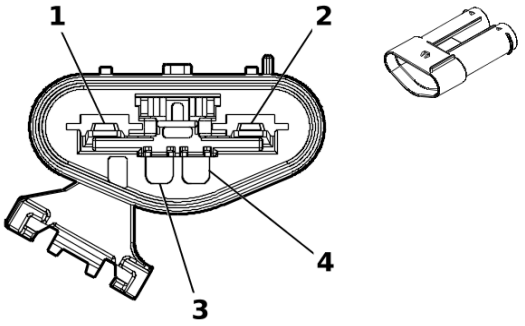

5330353

Connector Part Information

Harness Type: Power Steering Control Module Wiring Harness
OEM Connector: 13508902
Service Connector: Service by Harness - See Part Catalog
Description: 4-Way F 1.2, 2.8 MAK Series, Sealed(BK)

Connector Part Information

Harness Type: Power Steering Jumper Wiring Harness
OEM Connector: 13582138
Service Connector: Service by Harness - See Part Catalog
Description: 4-Way M 1.2, 2.8 MAK Series, Sealed(BK)

Terminal Part Information

Terminal Type ID	Terminated Lead	Diagnostic Test Probe	Terminal Removal Tool
I	Not required	Not Available	No Tool Required
II	Not required	Not Available	No Tool Required

X405 Power Steering Control Module Wiring Harness to Power Steering Jumper Wiring Harness

Pin	Size	Color	Circuit	Terminal Type ID	Option	Function	Pin	Size	Color	Circuit	Terminal Type ID	Option
1	20	BK	350	I	—	Ground	1	20	BK	350	II	—
2	20	RD / VT	3542	I	—	Battery Positive Voltage	2	20	RD / VT	3542	II	—
3 - 4	—	—	—	—	—	Not Occupied	3 - 4	—	—	—	—	—

X410 Chassis Wiring Harness to Body Wiring Harness

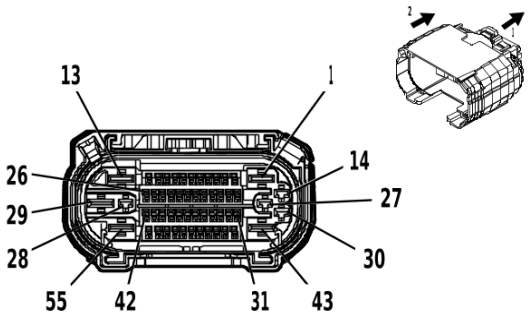

4992168

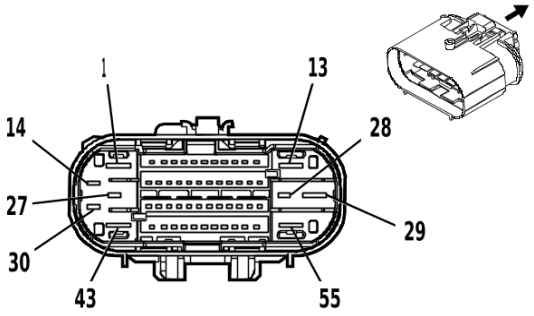

4993301

Connector Part Information

Harness Type: Chassis Wiring Harness

OEM Connector: 35016652

Service Connector: 19371185

Description: 55-Way F 1.2 OCS, 2.8, 6.3 CTS Series, Sealed(BK)

Connector Part Information

Harness Type: Body Wiring Harness

OEM Connector: 35588063

Service Connector: 84727364

Description: 55-Way M 1.2 OCS, 2.8, 6.3 CTS Series, Sealed(BK)

Terminal Part Information

Terminal Type ID	Terminated Lead	Diagnostic Test Probe	Terminal Removal Tool
I	19332901	J-35616-35 (VT)	J-38125-212
II	19370818	J-35616-12 (BU)	J-38125-215A
III	84634921	J-35616-42 (RD)	J-38125-212
IV	19301750	J-35616-32 (OG)	J-38125-36
V	19331019	J-35616-5 (PU)	J-38125-215A
VI	84847992	J-35616-32 (OG)	J-38125-36
VII	84867140	J-35616-13 (BU)	J-38125-215A
VIII	84867141	J-35616-13 (BU)	J-38125-215A

X410 Chassis Wiring Harness to Body Wiring Harness

Pin	Size	Color	Circuit	Terminal Type ID	Option	Function	Pin	Size	Color	Circuit	Terminal Type ID	Option
1	5	GN / VT	1988	III	—	Right Park Brake Motor Apply Control	1	2.5	GN / VT	1988	IV	—
2	0.75	BU / VT	1335	II	—	Right Rear Turn Signal Lamp Control 2	2	0.75	BU / VT	1335	VIII	—
3	0.5	YE / GN	7122	II	—	Axle Differential Lock Switch Signal	3	0.35	YE / GN	7122	VII	—
4	0.5	GN / BU	2733	II	—	Brake System Control Module LIN Bus 2	4	0.5	GN / BU	2733	VII	—
5	0.5	BN / GN	3568	II	—	Rear Closure Passive Entry Antenna High Signal	5	0.35	BN / GN	3568	VII	—

X410 Chassis Wiring Harness to Body Wiring Harness (cont'd)

Pin	Size	Color	Circuit	Terminal Type ID	Option	Function	Pin	Size	Color	Circuit	Terminal Type ID	Option
6	0.5	GN / GY	3569	II	—	Rear Closure Passive Entry Antenna Low Signal	6	0.35	GN / GY	3569	VII	—
7	0.75	BU / WH	1334	II	—	Left Rear Turn Signal Lamp Control 2	7	0.75	BU / WH	1334	VIII	—
8	0.5	WH / VT	1430	II	—	Exterior Courtesy Lamp Control	8	0.5	WH / VT	1430	VII	—
9	0.5	GN / YE	1616	II	—	Rear Brake Pad Wear Sensor Signal	9	0.5	GN / YE	1616	VII	—
10	0.5	WH / BK	2223	II	—	Trailer Brake Apply Signal	10	0.5	WH / BK	2223	VII	—
11	0.5	GN / YE	2862	II	—	Body Control Module LIN Bus 16	11	0.35	GN / YE	2862	VII	—
12	—	—	—	—	—	Not Occupied	12	—	—	—	—	—
13	5	WH	2001	III	—	Left Park Brake Motor Apply Control	13	2.5	WH	2001	IV	—
14	2.5	RD / VT	4442	I	—	Primary Fused Battery Positive Voltage	14	2.5	RD / VT	4442	V	—
15	0.5	BU / YE	4979	II	—	AUTOSAR CAN Bus [+] 2 Serial Data	15	0.5	BU / YE	4979	VII	—
16	0.5	WH	4978	II	—	AUTOSAR CAN Bus [-] 2 Serial Data	16	0.5	WH	4978	VII	—
17	0.5	YE / WH	2377	II	—	Right Rear Middle Parking Assist Sensor Signal	17	0.5	YE / WH	2377	VII	—
18	0.75	BN / BU	6993	II	—	Left Rear Park Lamp Control	18	0.75	BN / BU	6993	VIII	—
19	0.75	WH / BK	7544	II	—	Right Rear Turn Signal Lamp Feedback Signal	19	0.35	WH / BK	7544	VII	—
20	—	—	—	—	—	Not Occupied	20	—	—	—	—	—
21	0.5	VT	882	II	—	Right Rear Wheel Speed Sensor Signal	21	0.5	VT	882	VII	—
22	0.5	GY / YE	7128	II	—	Right Rear Wheel Speed Sensor Control	22	0.5	GY / YE	7128	VII	—

X410 Chassis Wiring Harness to Body Wiring Harness (cont'd)

Pin	Size	Color	Circuit	Terminal Type ID	Option	Function	Pin	Size	Color	Circuit	Terminal Type ID	Option
23	0.5	BU	884	II	—	Left Rear Wheel Speed Sensor Signal	23	0.5	BU	884	VII	—
24	0.5	GY / BK	7127	II	—	Left Rear Wheel Speed Sensor Control	24	0.5	GY / BK	7127	VII	—
25	0.5	YE	7115	II	—	Rear Axle Differential Lock Indicator Control	25	0.35	YE	7115	VII	—
26	0.5	BN / YE	820	II	—	Center High Mounted Stop Lamp Supply Voltage	26	0.5	BN / YE	820	VII	—
27	—	—	—	—	—	Ground	27	2.5	BK	150	V	—
28	2.5	BU	47	I	—	Trailer Auxiliary Control	28	2	BU	47	V	—
29	5	GY / BK	4369	III	—	Left Park Brake Motor Low Reference	29	2.5	GY / BK	4369	IV	—
30	2.5	RD / BN	3640	I	—	Battery Positive Voltage	30	2.5	RD / BN	4142	V	—
31	0.5	VT / RD	4049	II	—	AC Power Outlet Sensor High Reference	31	0.5	VT / RD	4049	VII	—
32	—	—	—	—	—	Not Occupied	32	—	—	—	—	—
33	0.5	GY / BU	7762	II	—	Cargo Lamp Control	33	0.5	GY / BU	7762	VII	—
34	0.5	YE / BK	2224	II	—	Trailer Brake Enable Signal	34	0.5	YE / BK	2224	VII	—
35	0.5	GN / BN	2266	II	—	DC/AC Inverter Control 2	35	0.5	GN / BN	2266	VII	—
36	0.5	BN / WH	2374	II	—	Object Sensor Voltage Reference	36	0.5	BN / WH	2374	VII	—
37	0.5	YE	2375	II	—	Left Rear Outer Parking Assist Sensor Signal	37	0.5	YE	2375	VII	—
38	0.5	YE / BU	2376	II	—	Left Rear Middle Parking Assist Sensor Signal	38	0.5	YE / BU	2376	VII	—
39	0.5	WH	4978	II	—	AUTOSAR CAN Bus [-] 2 Serial Data	39	0.35	WH	4978	VII	—
40	0.5	YE / VT	2378	II	—	Right Rear Outer Parking Assist Sensor Signal	40	0.5	YE / VT	2378	VII	—

X410 Chassis Wiring Harness to Body Wiring Harness (cont'd)

Pin	Size	Color	Circuit	Terminal Type ID	Option	Function	Pin	Size	Color	Circuit	Terminal Type ID	Option
41	0.5	BK / GY	2379	II	—	Object Sensor Low Reference	41	0.5	BK / GY	2379	VII	—
42	0.5	GN / WH	24	II	—	Backup Lamp Control	42	0.5	GN / WH	24	VII	—
43	5	GY	4368	III	—	Right Park Brake Motor Low Reference	43	2.5	GY	4368	IV	—
44	0.75	BK / WH	10120	II	—	AC Outlet 2 Phase A Control	44	0.75	BK / WH	10120	VIII	—
45	0.75	RD / WH	10121	II	—	AC Outlet 2 Phase B Control	45	0.75	RD / WH	10121	VIII	—
46	0.35	BN	10119	II	—	AC Outlet 2 Low Reference	46	0.35	BN	10119	VII	—
47	0.5	VT / GN	4320	II	—	Powertrain Sensor Bus Enable	47	0.5	VT / GN	4320	VII	—
48	0.5	VT / GY	7117	II	—	Front Axle Differential Lock Indicator Control	48	0.35	VT / GY	7117	VII	—
49	0.5	GN / GY	465	II	—	Fuel Pump Primary Relay Control	49	0.5	GN / GY	465	VII	—
50	—	—	—	—	—	Not Occupied	50	—	—	—	—	—
51	0.75	WH / VT	6567	II	—	Rear Turn Signal Lamp Feedback Signal	51	0.35	WH / VT	6567	VII	—
52	0.5	GN / YE	6846	II	—	Rear License Plate Lamp Control	52	0.5	GN / YE	6846	VII	—
53	0.5	BU / YE	4979	II	—	AUTOSAR CAN Bus [+] 2 Serial Data	53	0.35	BU / YE	4979	VII	—
54	0.75	BN / GY	6995	II	—	Right Rear Park Lamp Control	54	0.75	BN / GY	6995	VIII	—
55	—	—	—	—	—	Battery Positive Voltage	55	6	RD / WH	1642	VI	—

X412 Runningboard Jumper Wiring Harness to Chassis Wiring Harness (BRS)

—

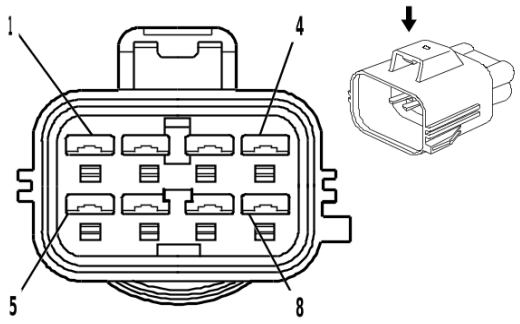

1856785

Connector Part Information

Harness Type: Runningboard Jumper Wiring Harness
OEM Connector: Not Available
Service Connector: Service by Harness - See Part Catalog
Description: 8-Way F

Connector Part Information

Harness Type: Chassis Wiring Harness
OEM Connector: 15419459
Service Connector: 19367561
Description: 8-Way M 2.8 Series, Sealed(D-GY)

Terminal Part Information

Terminal Type ID	Terminated Lead	Diagnostic Test Probe	Terminal Removal Tool
I	Not required	J-35616-4A (PU)	No Tool Required
II	Not required	J-35616-5 (PU)	No Tool Required

X412 Runningboard Jumper Wiring Harness to Chassis Wiring Harness (BRS)

Pin	Size	Color	Circuit	Terminal Type ID	Option	Function	Pin	Size	Color	Circuit	Terminal Type ID	Option
1	2	GY	7472	I	—	Left Running Board Step Motor Control Retract	1	2	GY	7472	II	—
2	0.5	VT / RD	7468	I	—	Left Running Board Step Motor Hall Sensor 5V Reference	2	0.5	VT / RD	7468	II	—
3	0.5	YE	7467	I	—	Left Running Board Step Motor Hall Sensor Signal	3	0.5	YE	7467	II	—
4	0.5	YE / BN	7466	I	—	Left Running Board Step Motor Hall Sensor Low Reference	4	0.5	YE / BN	7466	II	—
5	2	WH / BN	7471	I	—	Left Running Board Step Motor Control Extend	5	2	WH / BN	7471	II	—
7	0.5	BU / GN	4746	I	—	Running Board Step Left Kick Switch Signal	7	0.5	BU / GN	4746	II	—

X412 Runningboard Jumper Wiring Harness to Chassis Wiring Harness (BRS) (cont'd)

Pin	Size	Color	Circuit	Terminal Type ID	Option	Function	Pin	Size	Color	Circuit	Terminal Type ID	Option
8	0.5	BK / WH	1151	I	—	Signal Ground	8	0.5	BK / WH	1151	II	—

X413 Runningboard Jumper Wiring Harness to Chassis Wiring Harness (BRS)

—

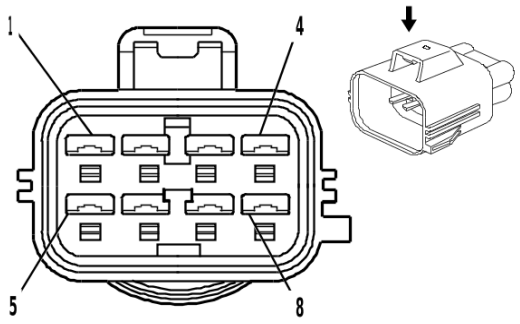

1856785

Connector Part Information

Harness Type: Runningboard Jumper Wiring Harness
OEM Connector: Not Available
Service Connector: Service by Harness - See Part Catalog
Description: 8-Way F

Connector Part Information

Harness Type: Chassis Wiring Harness
OEM Connector: 15419459
Service Connector: 19367561
Description: 8-Way M 2.8 Series, Sealed(D-GY)

Terminal Part Information

Terminal Type ID	Terminated Lead	Diagnostic Test Probe	Terminal Removal Tool
I	Not required	J-35616-4A (PU)	No Tool Required
II	Not required	J-35616-5 (PU)	No Tool Required

X413 Runningboard Jumper Wiring Harness to Chassis Wiring Harness (BRS)

Pin	Size	Color	Circuit	Terminal Type ID	Option	Function	Pin	Size	Color	Circuit	Terminal Type ID	Option
1	2	GN	7469	I	—	Right Left Running Board Step Motor Control Retract	1	2	GN	7469	II	—
2	0.5	GN / RD	7464	I	—	Right Running Board Step Motor Hall Sensor 5V Reference	2	0.5	GN / RD	7464	II	—
3	0.5	VT	7465	I	—	Right Running Board Step Motor Hall Sensor Signal	3	0.5	VT	7465	II	—
4	0.5	YE / BK	7463	I	—	Right Running Board Step Motor Hall Sensor Low Reference	4	0.5	YE / BK	7463	II	—
5	2	BU	7470	I	—	Right Running Board Step Motor Control Extend	5	2	BU	7470	II	—

X413 Runningboard Jumper Wiring Harness to Chassis Wiring Harness (BRS) (cont'd)

Pin	Size	Color	Circuit	Terminal Type ID	Option	Function	Pin	Size	Color	Circuit	Terminal Type ID	Option
7	0.5	WH	4747	I	—	Running Board Step Right Kick Switch Signal	7	0.5	WH	4747	II	—
8	0.5	BK / WH	1151	I	—	Signal Ground	8	0.5	BK / WH	1151	II	—

X414 Chassis Rear Wiring Harness to Chassis Wiring Harness (KC9/KCA)

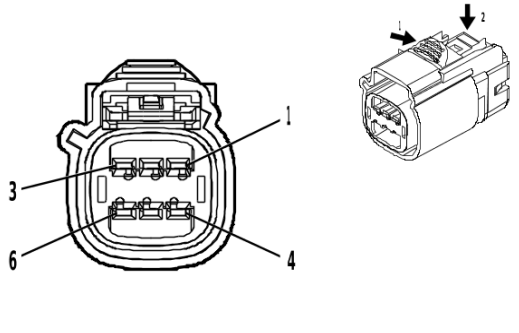

4996962

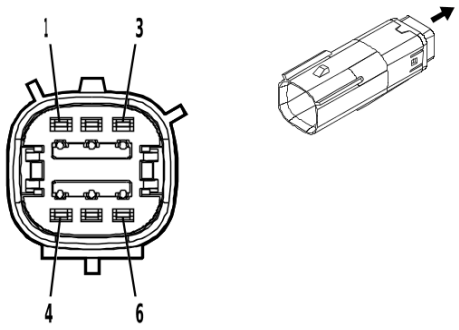

4992963

Connector Part Information

Harness Type: Chassis Rear Wiring Harness
OEM Connector: 15513505
Service Connector: Service by Harness - See Part Catalog
Description: 6-Way F 1.5 OCS Series, Sealed(GY)

Connector Part Information

Harness Type: Chassis Wiring Harness
OEM Connector: 15513475
Service Connector: 19371205
Description: 6-Way M 1.5 OCS Series, Sealed(GY)

Terminal Part Information

Terminal Type ID	Terminated Lead	Diagnostic Test Probe	Terminal Removal Tool
I	Not required	J-35616-2A (GY)	No Tool Required
II	Not required	J-35616-3 (GY)	No Tool Required

X414 Chassis Rear Wiring Harness to Chassis Wiring Harness (KC9/KCA)

Pin	Size	Color	Circuit	Terminal Type ID	Option	Function	Pin	Size	Color	Circuit	Terminal Type ID	Option
1	0.75	BK / WH	10120	I	—	AC Outlet 2 Phase A Control AC Outlet 2 Phase A Control	1	0.75	BK / WH	10120	II	—
2	0.5	BN	10119	I	—	AC Outlet 2 Low Reference	2	0.5	BN	10119	II	—
3	0.5	VT / RD	4049	I	—	AC Power Outlet Sensor High Reference	3	0.5	VT / RD	4049	II	—
4	0.75	RD / WH	10121	I	—	AC Outlet 2 Phase B Control AC Outlet 2 Phase B Control	4	0.75	RD / WH	10121	II	—
5	0.5	GN / BN	2266	I	—	DC/AC Inverter Control 2	5	0.5	GN / BN	2266	II	—
6	0.5	BK	1750	I	—	Ground	6	1.5	BK	1750	II	—

X415 Transfer Case Selector Shift Control Switch Wiring Harness Extension Harness to Engine Wiring Harness (NP0/NQH)

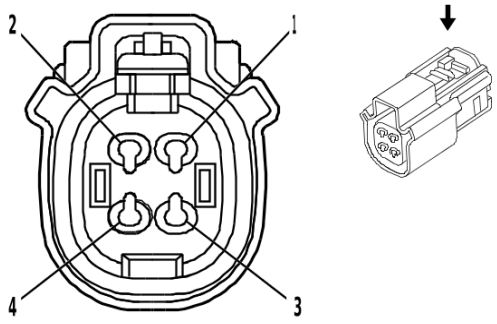

1960031

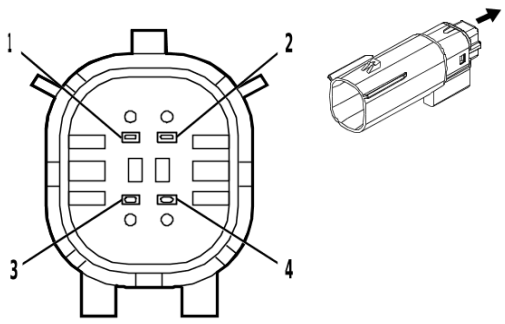

2368875

Connector Part Information

Harness Type: Transfer Case Selector Shift Control Switch Wiring Harness Extension Harness

OEM Connector: 33346391

Service Connector: Service by Harness - See Part Catalog

Description: 4-Way F 1.5 MX Series, Sealed(BK)

Connector Part Information

Harness Type: Engine Wiring Harness

OEM Connector: 33344515

Service Connector: 84838880

Description: 4-Way M 1.5 MX Series, Sealed(BK)

Terminal Part Information

Terminal Type ID	Terminated Lead	Diagnostic Test Probe	Terminal Removal Tool
I	Not required	J-35616-2A (GY)	No Tool Required
II	Not required	J-35616-3 (GY)	No Tool Required

X415 Transfer Case Selector Shift Control Switch Wiring Harness Extension Harness to Engine Wiring Harness (NP0/NQH)

Pin	Size	Color	Circuit	Terminal Type ID	Option	Function	Pin	Size	Color	Circuit	Terminal Type ID	Option
1	0.5	GY / BK	1570	I	—	Front Axle Actuator Control	1	0.5	GY / BK	1570	II	—
						Front Axle Actuator Control						
2	0.5	YE / WH	1695	I	—	4WD Locked Range Indicator Control	2	0.5	YE / WH	1695	II	—
						4WD Locked Range Indicator Control						
3	0.5	GN	8016	I	—	Secondary Axle Motor Control	3	0.5	GN	8016	II	—
						Secondary Axle Motor Control						
4	0.5	BK	450	I	—	Ground	4	1	BK	450	II	(L84/ L87) + (NP0/ NQH)
						Ground		0.75	BK	450	II	(LM2/ L3B) + (NP0/ NQH)

X416A Chassis Wiring Harness to Electronic Suspension Strut Wiring Harness Extension Harness (Z45)

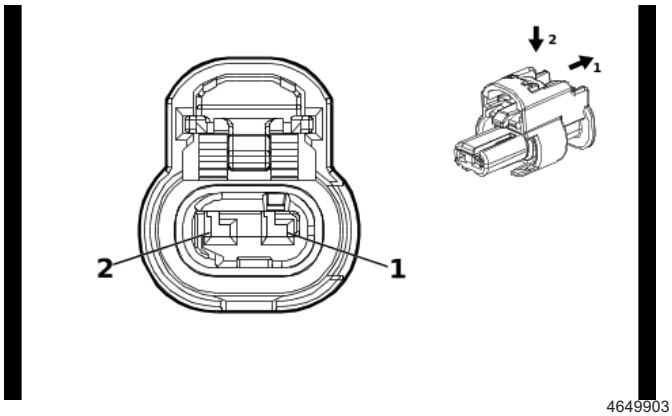

4649903

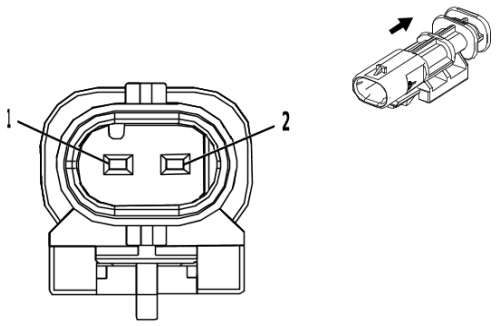

2474755

Connector Part Information

Harness Type: Chassis Wiring Harness
OEM Connector: 33327048
Service Connector: 85519075
Description: 2-Way F 1.2 MCON Series, Sealed(BK)

Connector Part Information

Harness Type: Electronic Suspension Strut Wiring Harness Extension Harness
OEM Connector: 2203314-1
Service Connector: Service by Harness - See Part Catalog
Description: 2-Way M 1.2 MCON Series, Sealed(BK)

Terminal Part Information

Terminal Type ID	Terminated Lead	Diagnostic Test Probe	Terminal Removal Tool
I	Not required	J-35616-16 (L-GN)	No Tool Required
II	Not required	J-35616-17 (L-GN)	No Tool Required

X416A Chassis Wiring Harness to Electronic Suspension Strut Wiring Harness Extension Harness (Z45)

Pin	Size	Color	Circuit	Terminal Type ID	Option	Function	Pin	Size	Color	Circuit	Terminal Type ID	Option
1	0.75	BN / WH	1107	I	—	Left Front Shock Absorber Actuator Control	1	0.75	BU / WH	1107	II	—
2	0.75	GY / BU	1113	I	—	Left Front Shock Absorber Actuator Control	2	0.75	GY	1113	II	—

X416B Chassis Wiring Harness to Electronic Suspension Strut Wiring Harness Extension Harness (Z45)

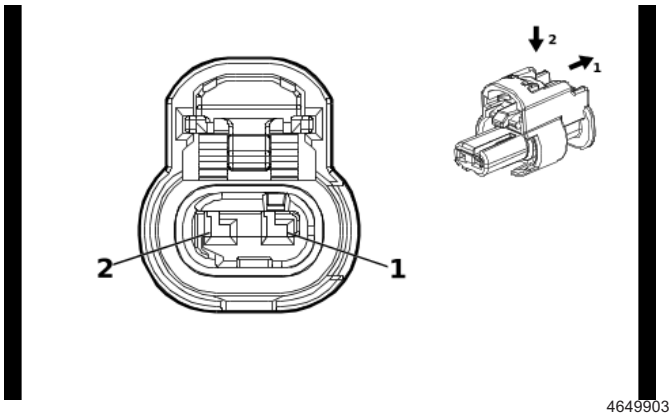

4649903

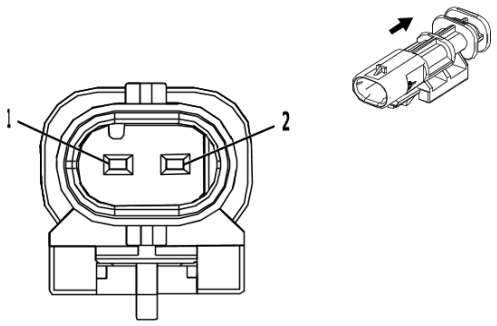

2474755

Connector Part Information

Harness Type: Chassis Wiring Harness
OEM Connector: 33327048
Service Connector: 85519075
Description: 2-Way F 1.2 MCON Series, Sealed(BK)

Connector Part Information

Harness Type: Electronic Suspension Strut Wiring Harness Extension Harness
OEM Connector: 2203314-1
Service Connector: Service by Harness - See Part Catalog
Description: 2-Way M 1.2 MCON Series, Sealed(BK)

Terminal Part Information

Terminal Type ID	Terminated Lead	Diagnostic Test Probe	Terminal Removal Tool
I	Not required	J-35616-16 (L-GN)	No Tool Required
II	Not required	J-35616-17 (L-GN)	No Tool Required

X416B Chassis Wiring Harness to Electronic Suspension Strut Wiring Harness Extension Harness (Z45)

Pin	Size	Color	Circuit	Terminal Type ID	Option	Function	Pin	Size	Color	Circuit	Terminal Type ID	Option
1	0.75	BN / BU	1116	I	—	Right Front Shock Absorber Actuator Control	1	0.75	BU / WH	1116	II	—
2	0.75	GY / WH	1117	I	—	Right Front Shock Absorber Actuator Control	2	0.75	GY	1117	II	—

X416C Transfer Case Selector Shift Control Switch Wiring Harness Extension Harness to Chassis Wiring Harness (G93)

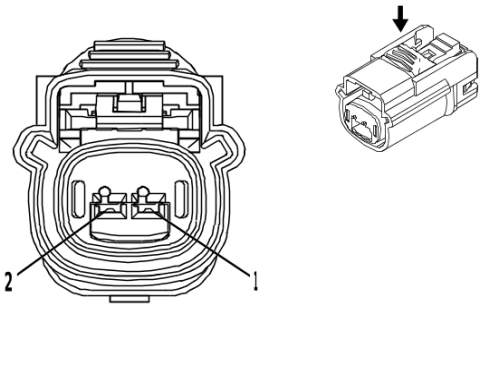

4332222

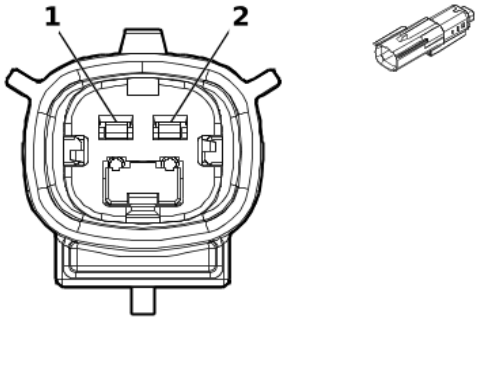

5921817

Connector Part Information

Harness Type: Transfer Case Selector Shift Control Switch Wiring Harness Extension Harness

OEM Connector: 15514573

Service Connector: Service by Harness - See Part Catalog

Description: 2-Way F 1.5 OCS Series, Sealed(BK)

Connector Part Information

Harness Type: Chassis Wiring Harness

OEM Connector: 15514550

Service Connector: 86825463

Description: 2-Way M 1.5 OCS Series, Sealed(BK)

Terminal Part Information

Terminal Type ID	Terminated Lead	Diagnostic Test Probe	Terminal Removal Tool
I	Not required	J-35616-2A (GY)	No Tool Required
II	Not required	J-35616-3 (GY)	No Tool Required

X416C Transfer Case Selector Shift Control Switch Wiring Harness Extension Harness to Chassis Wiring Harness (G93)

Pin	Size	Color	Circuit	Terminal Type ID	Option	Function	Pin	Size	Color	Circuit	Terminal Type ID	Option
1	0.75	WH / BK	7254	I	—	Front Differential Lock Actuator Low Control	1	0.75	WH / BK	7254	II	—
2	0.75	VT / WH	7256	I	—	Front Differential Lock Actuator Control	2	0.75	VT / WH	7256	II	—

X420A Chassis Rear Wiring Harness Extension Harness to Chassis Wiring Harness

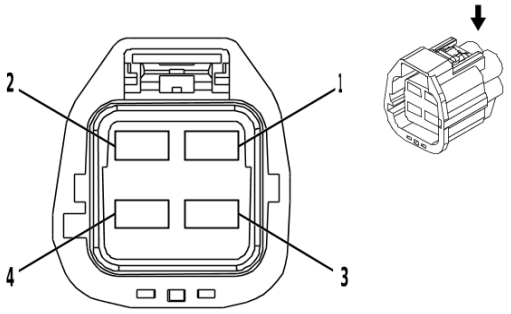

2852121

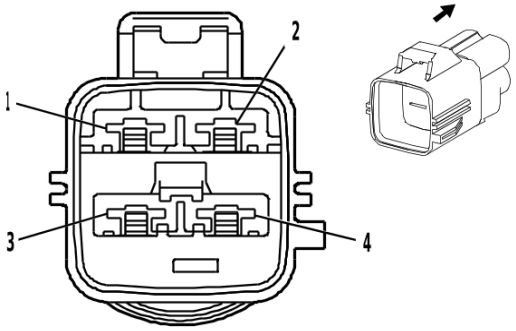

1853524

Connector Part Information

Harness Type: Chassis Rear Wiring Harness Extension Harness
OEM Connector: 7283-3601-10
Service Connector: Service by Harness - See Part Catalog
Description: 4-Way F 6.3 Series, Sealed(GY)

Connector Part Information

Harness Type: Chassis Wiring Harness
OEM Connector: 33360098
Service Connector: 19371198
Description: 4-Way M 6.3 Series, Sealed(GY)

Terminal Part Information

Terminal Type ID	Terminated Lead	Diagnostic Test Probe	Terminal Removal Tool
I	Not required	J-35616-42 (RD)	No Tool Required
II	Not required	J-35616-43 (RD)	No Tool Required

X420A Chassis Rear Wiring Harness Extension Harness to Chassis Wiring Harness

Pin	Size	Color	Circuit	Terminal Type ID	Option	Function	Pin	Size	Color	Circuit	Terminal Type ID	Option
1	2.5	WH	2001	I		Left Park Brake Motor Apply Control	1	5	WH	2001	II	—
2	2.5	GY / BK	4369	I		Left Park Brake Motor Low Reference	2	5	GY / BK	4369	II	—
3	2.5	GN / VT	1988	I		Right Park Brake Motor Apply Control	3	5	GN / VT	1988	II	—
4	2.5	GY	4368	I		Right Park Brake Motor Low Reference	4	5	GY	4368	II	—

X420B Chassis Rear Wiring Harness Extension Harness to Chassis Wiring Harness (-Z45)

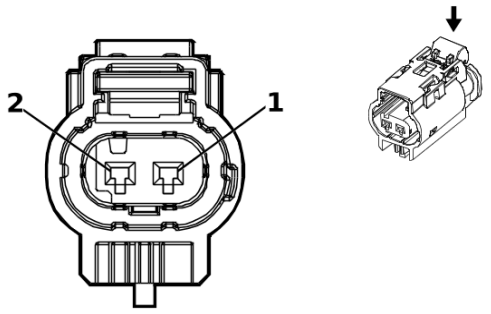

5207726

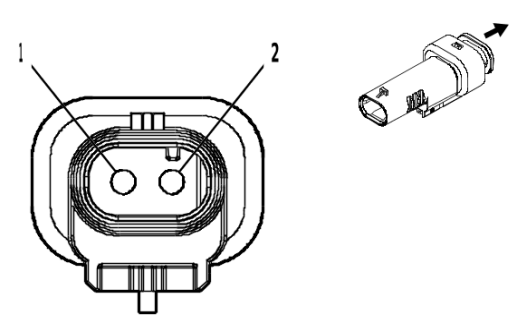

4992757

Connector Part Information

Harness Type: Chassis Rear Wiring Harness Extension Harness

OEM Connector: 10094237

Service Connector: Service by Harness - See Part Catalog

Description: 2-Way F 1.2 Multilock Series, Sealed(GY)

Connector Part Information

Harness Type: Chassis Wiring Harness

OEM Connector: 33356666

Service Connector: 19371200

Description: 2-Way M 1.2 MLK Series, Sealed(GY)

Terminal Part Information

Terminal Type ID	Terminated Lead	Diagnostic Test Probe	Terminal Removal Tool
I	Not required	J-35616-16 (L-GN)	No Tool Required
II	Not required	J-35616-17 (L-GN)	No Tool Required

X420B Chassis Rear Wiring Harness Extension Harness to Chassis Wiring Harness (-Z45)

Pin	Size	Color	Circuit	Terminal Type ID	Option	Function	Pin	Size	Color	Circuit	Terminal Type ID	Option
1	0.75	GN / YE	1616	I		Rear Brake Pad Wear Sensor Signal	1	0.5	GN / YE	1616	II	—
2	0.75	BK / WH	1751	I		Signal Ground	2	0.5	BK / WH	1951	II	—

X420B Chassis Wiring Harness to Chassis Rear Wiring Harness Extension Harness (Z45)

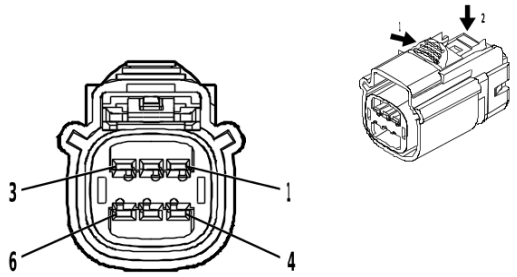

5004419

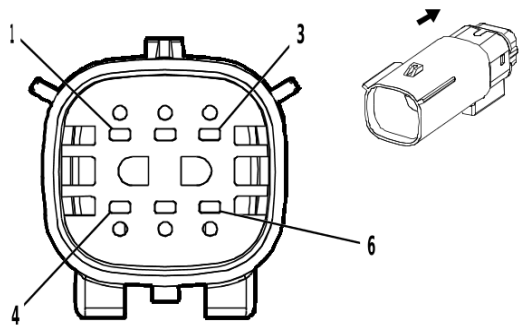

1986159

Connector Part Information

Harness Type: Chassis Wiring Harness
OEM Connector: 15513504
Service Connector: 84999473
Description: 6-Way F 1.5 OCS Series, Sealed(BK)

Connector Part Information

Harness Type: Chassis Rear Wiring Harness Extension Harness
OEM Connector: 33482-3601
Service Connector: Service by Harness - See Part Catalog
Description: 6-Way M 1.5 MX Series, Sealed(BK)

Terminal Part Information

Terminal Type ID	Terminated Lead	Diagnostic Test Probe	Terminal Removal Tool
I	Not required	J-35616-2A (GY)	No Tool Required
II	Not required	J-35616-3 (GY)	No Tool Required

X420B Chassis Wiring Harness to Chassis Rear Wiring Harness Extension Harness (Z45)

Pin	Size	Color	Circuit	Terminal Type ID	Option	Function	Pin	Size	Color	Circuit	Terminal Type ID	Option
1	0.75	BU / GY	1114	I	—	Left Rear Shock Absorber Actuator Control	1	0.75	BU / GY	1114	II	—
2	0.5	GN / YE	1616	I	—	Rear Brake Pad Wear Sensor Signal	2	0.75	GN / YE	1616	II	—
3	0.75 0.75	GY / BK BN / GN	7253 1118	I I	G94 Z45	Rear Differential Lock Actuator Low Control Right Rear Shock Absorber Actuator Control	3	0.75 0.75	GY / BK BN / GN	7253 1118	II II	G94 Z45
4	0.75	GN / VT	1115	I	—	Left Rear Shock Absorber Actuator Control	4	0.75	GN / VT	1115	II	—
5	0.5	BK / WH	1951	I	—	Signal Ground	5	0.75	BK / WH	1751	II	—
6	0.75 0.75	VT / BN GN / GY	7258 1119	I I	G94 Z45	Rear Differential Lock Actuator Control	6	0.75 0.75	VT / BN GN / GY	7258 1119	II II	G94 Z45

X420B Chassis Wiring Harness to Chassis Rear Wiring Harness Extension Harness (Z45) (cont'd)

Pin	Size	Color	Circuit	Terminal Type ID	Option	Function	Pin	Size	Color	Circuit	Terminal Type ID	Option
						Right Rear Shock Absorber Actuator Control						

X424 Body Wiring Harness to Chassis Wiring Harness (FHS)

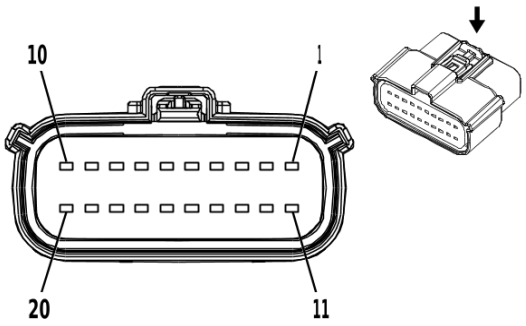

2871898

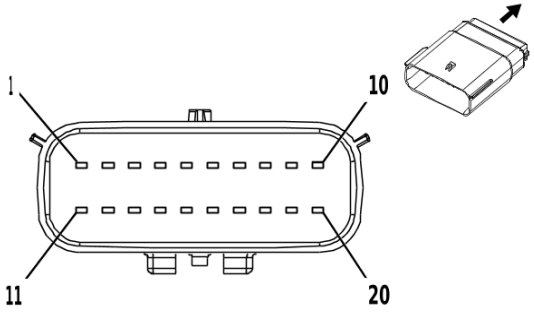

2871861

Connector Part Information

Harness Type: Body Wiring Harness
OEM Connector: 13650143
Service Connector: 19300557
Description: 20-Way F 1.5 Series, Sealed(BK)

Connector Part Information

Harness Type: Chassis Wiring Harness
OEM Connector: 33181044
Service Connector: 19351705
Description: 20-Way M 1.5 MX Series, Sealed(BK)

Terminal Part Information

Terminal Type ID	Terminated Lead	Diagnostic Test Probe	Terminal Removal Tool
I	19368973	J-35616-2A (GY)	J-38125-217
II	86800300	J-35616-3 (GY)	J-38125-217

X424 Body Wiring Harness to Chassis Wiring Harness (FHS)

Pin	Size	Color	Circuit	Terminal Type ID	Option	Function	Pin	Size	Color	Circuit	Terminal Type ID	Option
1	0.5	BU / GY	4054	I	—	Private Serial Data Power-train CAN Bus [-] Serial Data	1	0.5	BU / GY	4054	II	—
2	0.5	WH	4055	I	—	Private Serial Data Power-train CAN Bus [+] Serial Data	2	0.5	WH	4055	II	—
3	0.5	WH	4100	I	—	AUTOSAR CAN Bus [-] 4 Serial Data	3	0.5	WH	4100	II	—
4	0.5	BU / VT	4101	I	—	AUTOSAR CAN Bus [+] 4 Serial Data	4	0.5	BU / VT	4101	II	—
5	0.5	WH / GY	4104	I	—	AUTOSAR CAN Bus [-] 8 Serial Data	5	0.5	WH / GY	4104	II	—
6	0.5	BU / GY	4105	I	—	AUTOSAR CAN Bus [+] 8 Serial Data	6	0.5	BU / GY	4105	II	—
7	0.5	WH / GY	4104	I	—	AUTOSAR CAN Bus [-] 8 Serial Data	7	0.5	WH / GY	4104	II	—
8	0.5	BU / GY	4105	I	—	AUTOSAR CAN Bus [+] 8 Serial Data	8	0.5	BU / GY	4105	II	—

X424 Body Wiring Harness to Chassis Wiring Harness (FHS) (cont'd)

Pin	Size	Color	Circuit	Terminal Type ID	Option	Function	Pin	Size	Color	Circuit	Terminal Type ID	Option
9	0.35	YE	1144	I	—	Endgate Release Switch Discrete Signal Exterior	9	0.5	YE	1144	II	—
10	1	GN	1299	I	—	Major Endgate Motor Control	10	1	GN	1299	II	—
11	0.5	WH	4986	I	—	AUTOSAR CAN Bus [-] 1 Serial Data	11	0.5	WH	4986	II	—
12	0.5	BU	4987	I	—	AUTOSAR CAN Bus [+] 1 Serial Data	12	0.5	BU	4987	II	—
13	0.35	YE / BU	7295	I	—	Left Minor Endgate Ajar Signal	13	0.75	YE / BU	7295	II	—
14	—	—	—	—	—	Not Occupied	14	—	—	—	—	—
15	1	VT	7725	I	—	Minor Endgate Motor Control	15	1	VT	7725	II	—
16	1	YE / BK	7730	I	—	Major Endgate Motor Low Reference	16	1	YE / BK	7730	II	—
17	0.5	WH	4986	I	—	AUTOSAR CAN Bus [-] 1 Serial Data	17	0.5	WH	4986	II	—
18	0.5	BU	4987	I	—	AUTOSAR CAN Bus [+] 1 Serial Data	18	0.5	BU	4987	II	—
19	0.5	WH	4100	I	—	AUTOSAR CAN Bus [-] 4 Serial Data	19	0.5	WH	4100	II	—
20	0.5	BU / VT	4101	I	—	AUTOSAR CAN Bus [+] 4 Serial Data	20	0.5	BU / VT	4101	II	—

X500 Front Side Door Door Wiring Harness - Driver to Body Wiring Harness

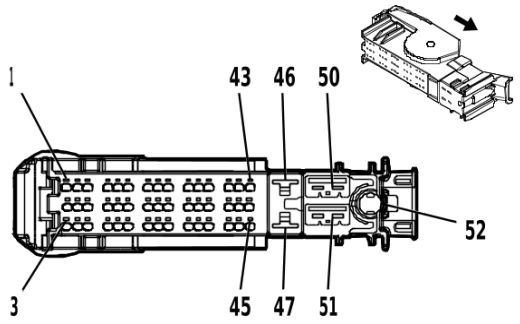

4992530

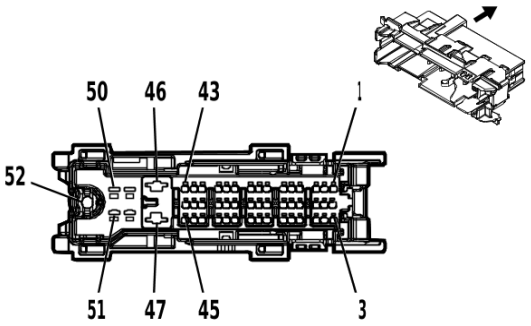

4993484

Connector Part Information

Harness Type: Front Side Door Door Wiring Harness - Driver
OEM Connector: 35077349
Service Connector: Service by Harness - See Part Catalog
Description: 52-Way F 1.2, 2.8, 6.3, Coaxial Series(BK)

Connector Part Information

Harness Type: Body Wiring Harness
OEM Connector: 35190453
Service Connector: 13527236
Description: 52-Way M 1.2, 2.8, 6.3, Coaxial Series(BK)

Terminal Part Information

Terminal Type ID	Terminated Lead	Diagnostic Test Probe	Terminal Removal Tool
I	Not required	J-35616-16 (L-GN)	No Tool Required
II	Not required	J-35616-42 (RD)	No Tool Required
III	Not required	No Tool Required	No Tool Required
IV	19301536	J-35616-43 (RD)	J-38125-11A
V	84616651	J-35616-13 (BU)	J-38125-215A
VI	Service by Cable	No Tool Required	J-35125-12A

X500 Front Side Door Door Wiring Harness - Driver to Body Wiring Harness

Pin	Size	Color	Circuit	Terminal Type ID	Option	Function	Pin	Size	Color	Circuit	Terminal Type ID	Option
1	—	—	—	—	—	Not Occupied	1	—	—	—	—	—
2	0.5	RD / BU	1240	I	—	Battery Positive Voltage	2	0.5	RD / BU	1240	V	—
3 - 5	—	—	—	—	—	Not Occupied	3 - 5	—	—	—	—	—
6	0.5	BK / OG	6628	I	—	Left Front Side Impact Sensor Low Reference	6	0.5	BK / OG	6628	V	—
7	0.75	BN / BU	118	I	—	Left Front Speaker [-] Control 1	7	0.75	BN / BU	118	V	—
8	0.75	BU	201	I	—	Left Front Speaker 1 [+] Control	8	0.75	BU	201	V	—
9	0.5	OG / GN	2132	I	—	Left Front Side Impact Sensor Signal	9	0.5	OG / GN	2132	V	—
10	—	—	—	—	—	Not Occupied	10	—	—	—	—	—

X500 Front Side Door Door Wiring Harness - Driver to Body Wiring Harness (cont'd)

Pin	Size	Color	Circuit	Terminal Type ID	Option	Function	Pin	Size	Color	Circuit	Terminal Type ID	Option
11	0.5	VT	4301	I	—	Passive Entry Left Front Antenna Signal High	11	0.35	VT	4301	V	—
12	0.5	VT / GY	4302	I	—	Passive Entry Left Front Antenna Signal Low	12	0.35	VT / GY	4302	V	—
13	0.5	VT / GY	126	I	—	Left Front Door Open Switch Signal	13	0.35	VT / GY	126	V	—
14	0.5	YE / WH	1690	I	—	Mirror Dimming Signal	14	0.35	YE / WH	1690	V	—
15	0.5	BK / YE	1691	I	—	Automatic Day/Night Mirror Low Reference	15	0.35	BK / YE	1691	V	—
16	0.5	WH / GY	2114	I	—	Left Turn Signal Lamp Control 2	16	0.35	WH / GY	2114	V	—
17	0.5	BU	2675	I	—	Left Front Exterior Door Handle Switch Unlock Signal	17	0.35	BU	2675	V	—
18	0.75	WH	2679	I	—	Lock Actuators Unlock Control 1	18	0.75	WH	2679	V	—
19	0.75	GY	2681	I	—	Left Front Door Lock Actuator Lock Control	19	0.75	GY	2681	V	—
20 - 22	—	—	—	—	—	Not Occupied	20 - 22	—	—	—	—	—
23	0.5	WH / GN	5966	I	—	Approach Lamp Control	23	0.5	WH / GN	5966	V	—
24	—	—	—	—	—	Not Occupied	24	—	—	—	—	—
25	0.5	BU / GN	614	I	—	Seat Memory Switch Set Signal	25	0.35	BU / GN	614	V	—
26	0.5	BU / YE	7761	I	—	Backup Illumination Lamp Control	26	0.35	BU / YE	7761	V	—
27	0.5	YE	6817	I	—	LED Backlight Dimming Control 1	27	0.5	YE	6817	V	—
28	—	—	—	—	—	Not Occupied	28	—	—	—	—	—
29	0.5	GN / YE	6134	I	—	Body Control Module LIN Bus 3	29	0.35	GN / YE	6134	V	—
30	0.5	BN / GN	4246	I	—	Identification Lamp Control	30	0.5	BN / GN	4246	V	—
31	0.5	BK / WH	1551	I	—	Ground Signal Ground	31	0.5 0.5	BK BK / WH	1550 1551	V	— —

X500 Front Side Door Door Wiring Harness - Driver to Body Wiring Harness (cont'd)

Pin	Size	Color	Circuit	Terminal Type ID	Option	Function	Pin	Size	Color	Circuit	Terminal Type ID	Option
32	0.5	YE / GY	2933	I	—	Task Lamp Control Left	32	0.35	YE / GY	2933	V	—
33	0.5	WH	615	I	—	Seat Memory Switch Signal 1	33	0.35	WH	615	V	—
34 - 45	—	—	—	—	—	Not Occupied	34 - 45	—	—	—	—	—
46	2.5	RD / GY	3540	II	—	Battery Positive Voltage	46	2.5	RD / GY	3540	IV	—
47	2.5	BK	1550	II	—	Ground	47	2.5	BK	1550	IV	—
48 - 51	—	—	—	—	—	Not Occupied	48 - 51	—	—	—	—	—
52	0	—	4725	III	—	Left Sideview Camera LVDS (Low Voltage Differential Signaling) Coaxial Signal	52	0	—	4725	VI	—

X505 Front Side Door Door Wiring Harness - Driver to Front Side Door Door Lock Door Wiring Harness - Driver

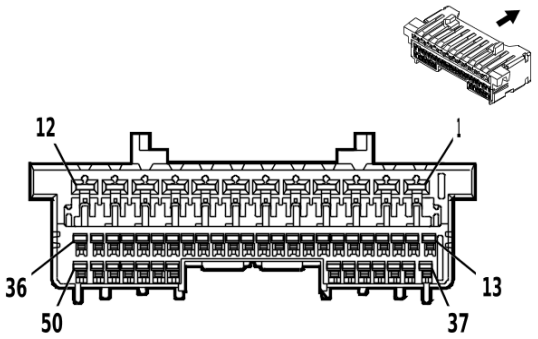

4997556

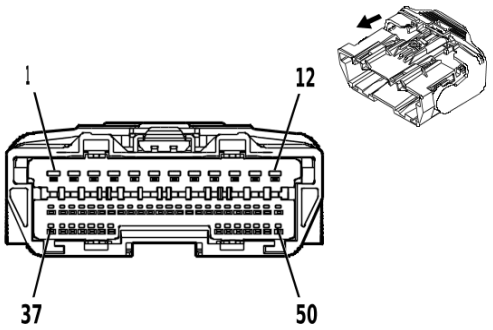

5022037

Connector Part Information

Harness Type: Front Side Door Door Wiring Harness - Driver
OEM Connector: 35283943
Service Connector: Service by Harness - See Part Catalog
Description: 50-Way F 1.2, 2.8 OCS Series(BK)

Connector Part Information

Harness Type: Front Side Door Door Lock Door Wiring Harness - Driver
OEM Connector: 33390111
Service Connector: Service by Harness - See Part Catalog
Description: 50-Way M 1.2, 2.8 OCS Series(BK)

Terminal Part Information

Terminal Type ID	Terminated Lead	Diagnostic Test Probe	Terminal Removal Tool
I	Not required	J-35616-16 (L-GN)	No Tool Required
II	Not required	J-35616-4A (PU)	No Tool Required
III	Not required	J-35616-17 (L-GN)	No Tool Required
IV	Not required	J-35616-5 (PU)	No Tool Required

X505 Front Side Door Door Wiring Harness - Driver to Front Side Door Door Lock Door Wiring Harness - Driver

Pin	Size	Color	Circuit	Terminal Type ID	Option	Function	Pin	Size	Color	Circuit	Terminal Type ID	Option
1	0.5	RD / BU	1240	II	—	Battery Positive Voltage	1	0.5	RD / BU	1240	IV	—
2	0.5	GY / YE	1760	II	—	Left Side Object Detection LED Control	2	0.35	GY / YE	1760	IV	—
3	—	—	—	—	—	Not Occupied	3	—	—	—	—	—
4	0.5	GY / GN	2763	II	—	Window Switch Left Front Up Signal	4	0.5	GY / GN	2763	IV	—
5	—	—	—	—	—	Not Occupied	5	—	—	—	—	—
6	0.5	WH / BN	2764	II	—	Window Switch Left Front Down Signal	6	0.5	WH / BN	2764	IV	—
7	—	—	—	—	—	Not Occupied	7	—	—	—	—	—

X505 Front Side Door Door Wiring Harness - Driver to Front Side Door Door Lock Door Wiring Harness - Driver (cont'd)

Pin	Size	Color	Circuit	Terminal Type ID	Option	Function	Pin	Size	Color	Circuit	Terminal Type ID	Option
8	0.5	GN	2766	II	—	Power Window Switch Left Front Express Signal	8	0.5	GN	2766	IV	—
9 - 11	—	—	—	—	—	Not Occupied	9 - 11	—	—	—	—	—
12	0.5	GY / WH	2785	II	—	Left Front Mirror Motor Fold Out Control	12	0.5	GY / WH	2785	IV	—
13	0.5	WH / GN	2786	I	—	Left Front Mirror Motor Fold In Control	13	0.5	WH / GN	2786	III	—
14	0.5	GY / BN	2787	I	—	Left Front Mirror Position Sensor Up [+] Down [-] Signal	14	0.5	GY / BN	2787	III	—
15	0.5	VT / BU	2788	I	—	Left Front Mirror Motor Up [+] Down [-] Control	15	0.5	VT / BU	2788	III	—
16	0.5	YE / BN	2789	I	—	Left Front Mirror Motor Common Control	16	0.5	YE / BN	2789	III	—
17	0.5	BN / BK	2790	I	—	Left Front Mirror Motor Right [+] Left [-] Control	17	0.5	BN / BK	2790	III	—
18	0.5	VT / RD	2791	I	—	Left Front Mirror Position Sensor High Reference	18	0.5	VT / RD	2791	III	—
19	0.5	WH / YE	2792	I	—	Left Front Mirror Position Sensor Left [-] Right [+] Signal	19	0.5	WH / YE	2792	III	—
20	0.5	WH	606	I	—	Left Outside Rearview Mirror Heater Control	20	0.5	WH	606	III	—
21	0.5	GN / YE	6134	I	—	Body Control Module LIN Bus 3	21	0.5	GN / YE	6134	III	—
22	0.5	BU / GN	614	I	—	Seat Memory Switch Set Signal	22	0.5	BU / GN	614	III	—
23	0.5	WH	615	I	—	Seat Memory Switch Signal 1	23	0.5	WH	615	III	—
24	0.5	BK / BN	673	I	—	Left Outside Rearview Mirror Position Sensor Low Reference	24	0.5	BK / BN	673	III	—

X505 Front Side Door Door Wiring Harness - Driver to Front Side Door Door Lock Door Wiring Harness - Driver (cont'd)

Pin	Size	Color	Circuit	Terminal Type ID	Option	Function	Pin	Size	Color	Circuit	Terminal Type ID	Option
25	0.5	YE	6817	I	—	LED Backlight Dimming Control 1	25	0.5	YE	6817	III	—
26	—	—	—	—	—	Not Occupied	26	—	—	—	—	—
27	0.5	BK	1550	I	—	Ground	27	0.5	BK	1550	III	—
28	0.5	BK / WH	1551	I	—	Signal Ground	28	0.5	BK / WH	1551	III	—
29	0.5	WH / VT	4258	I	—	Left Front Door Lock Status Signal	29	0.5	WH / VT	4258	III	—
30 - 50	—	—	—	—	—	Not Occupied	30 - 50	—	—	—	—	—

X600 Front Side Door Door Wiring Harness - Passenger to Body Wiring Harness

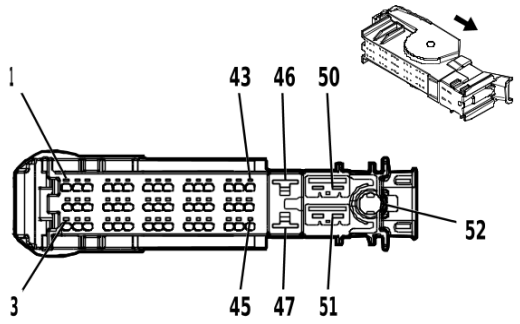

4992530

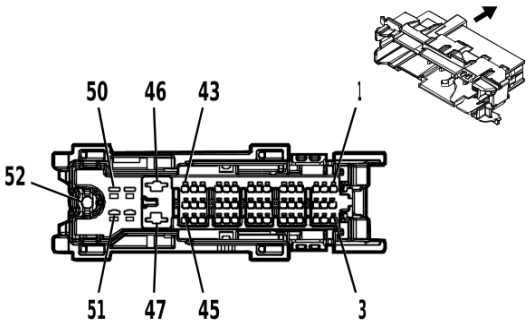

4993484

Connector Part Information

Harness Type: Front Side Door Door Wiring Harness - Passenger
OEM Connector: 35077349
Service Connector: Service by Harness - See Part Catalog
Description: 52-Way F 1.2, 2.8, 6.3, Coaxial Series(BK)

Connector Part Information

Harness Type: Body Wiring Harness
OEM Connector: 35190453
Service Connector: 13527236
Description: 52-Way M 1.2, 2.8, 6.3, Coaxial Series(BK)

Terminal Part Information

Terminal Type ID	Terminated Lead	Diagnostic Test Probe	Terminal Removal Tool
I	Not required	J-35616-16 (L-GN)	No Tool Required
II	Not required	J-35616-42 (RD)	No Tool Required
III	Not required	No Tool Required	No Tool Required
IV	19301536	J-35616-43 (RD)	J-38125-11A
V	84616651	J-35616-13 (BU)	J-38125-215A
VI	Service by Cable	No Tool Required	J-35125-12A

X600 Front Side Door Door Wiring Harness - Passenger to Body Wiring Harness

Pin	Size	Color	Circuit	Terminal Type ID	Option	Function	Pin	Size	Color	Circuit	Terminal Type ID	Option
1 - 4	—	—	—	—	—	Not Occupied	1 - 4	—	—	—	—	—
5	0.75	YE	200	I	—	Right Front Speaker 1 [+] Control	5	0.75	YE	200	V	—
6	0.75	YE / BK	117	I	—	Right Front Speaker [-] Control 1	6	0.75	YE / BK	117	V	—
7	—	—	—	—	—	Not Occupied	7	—	—	—	—	—
8	0.5	BN / OG	2134	I	—	Right Front Side Impact Sensor Signal	8	0.5	BN / OG	2134	V	—
9	0.5	BK / OG	6629	I	—	Right Front Side Impact Sensor Low Reference	9	0.5	BK / OG	6629	V	—

X600 Front Side Door Door Wiring Harness - Passenger to Body Wiring Harness (cont'd)

Pin	Size	Color	Circuit	Terminal Type ID	Option	Function	Pin	Size	Color	Circuit	Terminal Type ID	Option
10	0.5	GN / YE	4303	I	—	Passive Entry Right Front Door Antenna Signal High	10	0.35	GN / YE	4303	V	—
11	0.5	GN / BK	4304	I	—	Passive Entry Right Front Door Antenna Signal Low	11	0.35	GN / BK	4304	V	—
12	—	—	—	—	—	Not Occupied	12	—	—	—	—	—
13	0.5	GN / GY	2115	I	—	Right Turn Signal Lamp Control 2	13	0.35	GN / GY	2115	V	—
14	0.5	GY / VT	2676	I	—	Right Front Door Exterior Switch Unlock Signal	14	0.35	GY / VT	2676	V	—
15	0.75	GY / BK	2680	I	—	Lock Actuators Unlock Control 2	15	0.75	GY / BK	2680	V	—
16	0.75	YE / GN	2682	I	—	Right Front Door Lock Actuator Lock Control	16	0.75	YE / GN	2682	V	—
17 - 19	—	—	—	—	—	Not Occupied	17 - 19	—	—	—	—	—
20	0.5	WH / GN	5966	I	—	Approach Lamp Control	20	0.5	WH / GN	5966	V	—
21	—	—	—	—	—	Not Occupied	21	—	—	—	—	—
22	0.5	BK / GY	626	I	—	Engine Control Vehicle Sensors Low Reference 1	22	0.5	BK / GY	626	V	—
23	0.5	BU / GY	636	I	—	Ambient Air Temperature Sensor Signal	23	0.5	BU / GY	636	V	—
24	0.5	YE	6817	I	—	LED Backlight Dimming Control 1	24	0.5	YE	6817	V	—
25	—	—	—	—	—	Not Occupied	25	—	—	—	—	—
26	0.5	BU / YE	7761	I	—	Backup Illumination Lamp Control	26	0.35	BU / YE	7761	V	—
27	—	—	—	—	—	Not Occupied	27	—	—	—	—	—
28	0.5	BK / WH	1451	I	—	Signal Ground	28	0.75	BK / WH	1451	V	—
29	0.5	GN / YE	6134	I	—	Body Control Module LIN Bus 3	29	0.35	GN / YE	6134	V	—
30	0.5	YE / WH	2934	I	—	Task Lamp Control Right	30	0.35	YE / WH	2934	V	—

X600 Front Side Door Door Wiring Harness - Passenger to Body Wiring Harness (cont'd)

Pin	Size	Color	Circuit	Terminal Type ID	Option	Function	Pin	Size	Color	Circuit	Terminal Type ID	Option
31	0.5	BN / GN	4246	I	—	Identification Lamp Control	31	0.5	BN / GN	4246	V	—
32 - 45	—	—	—	—	—	Not Occupied	32 - 45	—	—	—	—	—
46	2.5	RD / BN	4240	II	—	Battery Positive Voltage	46	2.5	RD / BN	4240	IV	—
47	2.5	BK	1350	II	—	Ground	47	2.5	BK	1350	IV	—
48 - 51	—	—	—	—	—	Not Occupied	48 - 51	—	—	—	—	—
52	0	—	4724	III	—	Right Side-view Camera LVDS (Low Voltage Differential Signaling) Coaxial Signal	52	0	—	4724	VI	—

X605 Front Side Door Door Wiring Harness - Passenger to Front Side Door Door Lock Door Wiring Harness - Passenger

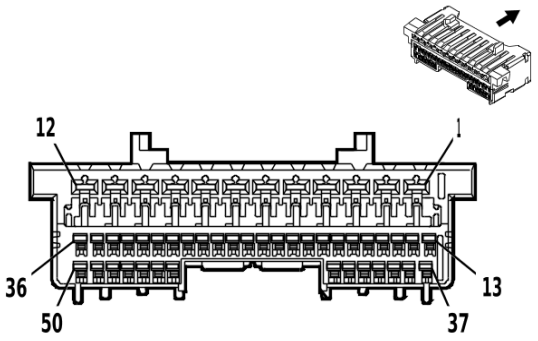

4997556

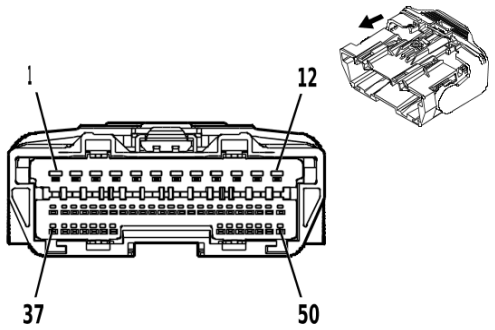

5022037

Connector Part Information

Harness Type: Front Side Door Door Wiring Harness - Passenger

OEM Connector: 35283943

Service Connector: Service by Harness - See Part Catalog

Description: 50-Way F 1.2, 2.8 OCS Series(BK)

Connector Part Information

Harness Type: Front Side Door Door Lock Door Wiring Harness - Passenger

OEM Connector: 33390111

Service Connector: Service by Harness - See Part Catalog

Description: 50-Way M 1.2, 2.8 OCS Series(BK)

Terminal Part Information

Terminal Type ID	Terminated Lead	Diagnostic Test Probe	Terminal Removal Tool
I	Not required	J-35616-16 (L-GN)	No Tool Required
II	Not required	J-35616-4A (PU)	No Tool Required
III	Not required	J-35616-17 (L-GN)	No Tool Required
IV	Not required	J-35616-5 (PU)	No Tool Required

X605 Front Side Door Door Wiring Harness - Passenger to Front Side Door Door Lock Door Wiring Harness - Passenger

Pin	Size	Color	Circuit	Terminal Type ID	Option	Function	Pin	Size	Color	Circuit	Terminal Type ID	Option
1	2.5	RD / BN	4240	II	—	Battery Positive Voltage	1	2.5	RD / BN	4240	IV	—
2	0.5	GN	1184	II	—	Window Switch Right Front Up Signal	2	0.5	GN	1184	IV	—
3	0.5	GY	1761	II	—	Right Side Object Detection LED Control	3	0.35	GY	1761	IV	—
4	—	—	—	—	—	Not Occupied	4	—	—	—	—	—
5	0.5	VT / GY	2765	II	—	Window Switch Right Front Express Signal	5	0.5	VT / GY	2765	IV	—
6 - 7	—	—	—	—	—	Not Occupied	6 - 7	—	—	—	—	—
8	0.5	YE / WH	2793	II	—	Right Front Mirror Motor Fold Out Control	8	0.5	YE / WH	2793	IV	—

X605 Front Side Door Door Wiring Harness - Passenger to Front Side Door Door Lock Door Wiring Harness - Passenger (cont'd)

Pin	Size	Color	Circuit	Terminal Type ID	Option	Function	Pin	Size	Color	Circuit	Terminal Type ID	Option
9	0.5	BU / GY	2794	II	—	Right Front Mirror Motor Fold In Control	9	0.5	BU / GY	2794	IV	—
10	2.5	BK	1350	II	—	Ground	10	2.5	BK	1350	IV	—
11	2	GN / GY	666	II	—	Right Front Window Motor Up Control	11	2.5	GN / GY	666	IV	—
12	2	YE / BU	667	II	—	Right Front Window Motor Down Control	12	2.5	YE / BU	667	IV	—
13	0.5	GN / BK	2798	I	—	Right Front Mirror Motor Right [+] Left [-] Control	13	0.5	GN / BK	2798	III	—
14	0.5	YE / RD	2799	I	—	Right Front Mirror Position Sensor High Reference	14	0.5	YE / RD	2799	III	—
15	0.5	VT / WH	2800	I	—	Right Front Mirror Position Sensor Left [-] Right [+] Signal	15	0.5	VT / WH	2800	III	—
16	0.5	BN	5295	I	—	Window Switch Right Front Down Signal	16	0.5	BN	5295	III	—
17	0.5	BN / VT	607	I	—	Right Outside Rearview Mirror Heater Control	17	0.5	BN / VT	607	III	—
18	0.5	GN / YE	6134	I	—	Body Control Module LIN Bus 3	18	0.5	GN / YE	6134	III	—
19 - 20	—	—	—	—	—	Not Occupied	19 - 20	—	—	—	—	—
21	0.5	BK / GN	675	I	—	Right Outside Rearview Mirror Position Sensor Low Reference	21	0.5	BK / GN	675	III	—
22	0.5	YE	6817	I	—	LED Backlight Dimming Control 1	22	0.5	YE	6817	III	—
23 - 46	—	—	—	—	—	Not Occupied	23 - 46	—	—	—	—	—
47	0.5	GY	746	I	—	Right Front Door Ajar Switch Signal	47	0.5	GY	746	III	—

X605 Front Side Door Door Wiring Harness - Passenger to Front Side Door Door Lock Door Wiring Harness - Passenger (cont'd)

Pin	Size	Color	Circuit	Terminal Type ID	Option	Function	Pin	Size	Color	Circuit	Terminal Type ID	Option
48	0.5	BU / YE	2795	I	—	Right Front Mirror Position Sensor Up [+] Down [-] Signal	48	0.5	BU / YE	2795	III	—
49	0.5	YE / VT	2796	I	—	Right Front Mirror Motor Up [+] Down [-] Control	49	0.5	YE / VT	2796	III	—
50	0.5	WH	2797	I	—	Right Front Mirror Motor Common Control	50	0.5	WH	2797	III	—

X618 Engine Wiring Harness to Active Grille Air Shutter Actuator Wiring Harness (VTI/WMI)

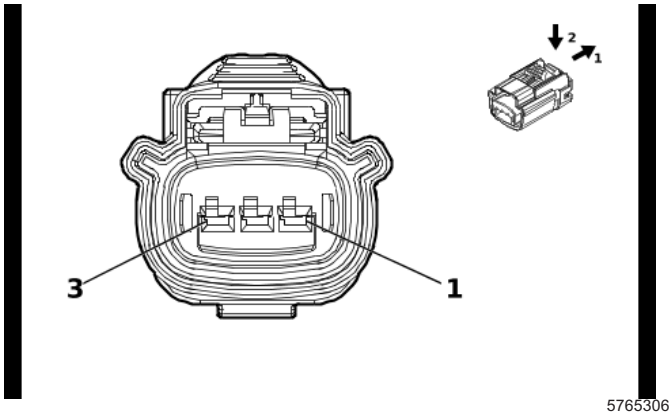

5765306

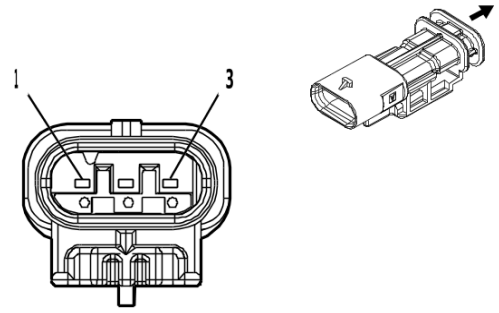

5068799

Connector Part Information

Harness Type: Engine Wiring Harness
OEM Connector: 15514762
Service Connector: 85535179
Description: 3-Way F 1.5 YESC Series, Sealed(BK)

Connector Part Information

Harness Type: Active Grille Air Shutter Actuator Wiring Harness
OEM Connector: Not Available
Service Connector: Service by Harness - See Part Catalog
Description: 3-Way M (BK)

Terminal Part Information

Terminal Type ID	Terminated Lead	Diagnostic Test Probe	Terminal Removal Tool
I	Not required	J-35616-2A (GY)	No Tool Required
II	Not required	J-35616-3 (GY)	No Tool Required

X618 Engine Wiring Harness to Active Grille Air Shutter Actuator Wiring Harness (VTI/WMI)

Pin	Size	Color	Circuit	Terminal Type ID	Option	Function	Pin	Size	Color	Circuit	Terminal Type ID	Option
1	0.5	VT / BU	5705	I	—	Powertrain Main Relay Control	1	0.5	VT / BU	5705	II	—
2	0.5	GN / VT	4621	I	—	Engine Control Module LIN Bus 1	2	0.5	GN / VT	4621	II	—
3	1 0.5 0.5	BK BK BK	450 450 6550	I I I	(L84/ L87) + (VTI/ WMI) L3B+ (VTI/ WMI) LM2	Ground Ground Ground	3	1 0.5 0.5	BK BK BK	450 450 6550	II II II	(L84/ L87) + (VTI/ WMI) L3B+ (VTI/ WMI) LM2

X630 Auxiliary Fuse Block Wiring Harness to Auxiliary Fuse Block Wiring Harness (9L7)

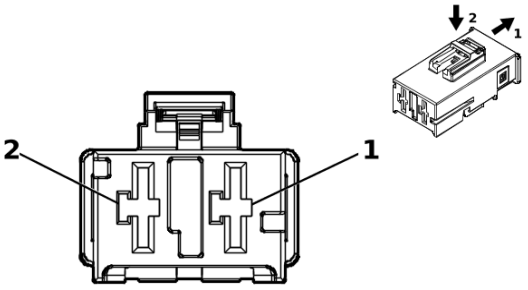

5187955

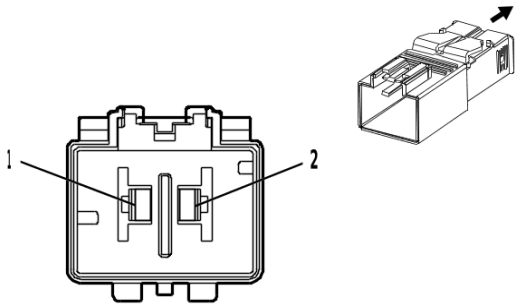

4891120

Connector Part Information

Harness Type: Auxiliary Fuse Block Wiring Harness
OEM Connector: 35134698
Service Connector: Service by Harness - See Part Catalog
Description: 2-Way F 9.5 MCON-LL Series(BK)

Connector Part Information

Harness Type: Auxiliary Fuse Block Wiring Harness
OEM Connector: 35134697
Service Connector: Service by Harness - See Part Catalog
Description: 2-Way M 9.5 MCON-LL Series(BK)

Terminal Part Information

Terminal Type ID	Terminated Lead	Diagnostic Test Probe	Terminal Removal Tool
I	Not required	J-35616-22 (RD)	No Tool Required
II	Not required	J-35616-21 (RD)	No Tool Required

X630 Auxiliary Fuse Block Wiring Harness to Auxiliary Fuse Block Wiring Harness (9L7)

Pin	Size	Color	Circuit	Terminal Type ID	Option	Function	Pin	Size	Color	Circuit	Terminal Type ID	Option
1	10	RD / VT	542	I	—	Battery Positive Voltage	1	10	RD / VT	542	II	—
2	—	—	—	—	—	Not Occupied	2	—	—	—	—	—

X700 Rear Side Door Door Wiring Harness - Left to Body Wiring Harness

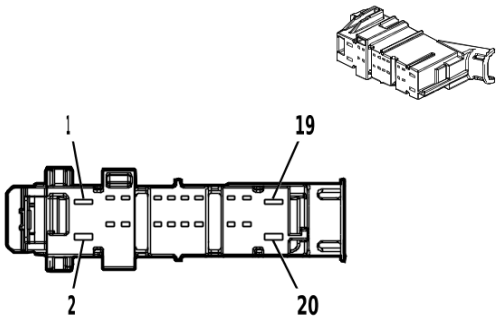

4650257

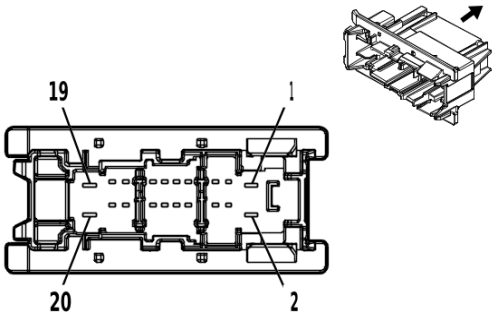

4663657

Connector Part Information

Harness Type: Rear Side Door Door Wiring Harness - Left
OEM Connector: 33303652
Service Connector: Service by Harness - See Part Catalog
Description: 20-Way F 1.2 MCON, 2.8 MCP Series(BK)

Connector Part Information

Harness Type: Body Wiring Harness
OEM Connector: 35215020
Service Connector: 13527239
Description: 20-Way M 1.2 MCON, 2.8 MCP Series(BK)

Terminal Part Information

Terminal Type ID	Terminated Lead	Diagnostic Test Probe	Terminal Removal Tool
I	Not required	J-35616-16 (L-GN)	No Tool Required
II	Not required	J-35616-35 (VT)	No Tool Required
III	13586064	J-35616-5 (PU)	J-38125-36
IV	84616651	J-35616-13 (BU)	J-38125-215A
V	84726946	J-35616-13 (BU)	J-38125-215A

X700 Rear Side Door Door Wiring Harness - Left to Body Wiring Harness

Pin	Size	Color	Circuit	Terminal Type ID	Option	Function	Pin	Size	Color	Circuit	Terminal Type ID	Option
1	2.5	RD / BU	3240	II	—	Battery Positive Voltage	1	2.5	RD / BU	3240	III	—
2 - 5	—	—	—	—	—	Not Occupied	2 - 5	—	—	—	—	—
6	0.75	WH	2679	I	—	Lock Actuators Unlock Control 1	6	0.75	WH	2679	IV	—
7	0.75	BU / YE	1091	I	—	Left Rear Door Lock Actuator Lock Control	7	0.75	BU / YE	1091	IV	—
8	—	—	—	—	—	Not Occupied	8	—	—	—	—	—
9	0.5	BK / OG	6623	I	—	Left Rear Side Impact Sensor Low Reference	9	0.5	BK / OG	6623	IV	—
10	—	—	—	—	—	Not Occupied	10	—	—	—	—	—
11	0.5	OG / BU	6622	I	—	Left Rear Side Impact Sensor Signal	11	0.5	OG / BU	6622	IV	—

X700 Rear Side Door Door Wiring Harness - Left to Body Wiring Harness (cont'd)

Pin	Size	Color	Circuit	Terminal Type ID	Option	Function	Pin	Size	Color	Circuit	Terminal Type ID	Option
12	0.5	GN / GY	6135	I	—	Body Control Module LIN Bus 4	12	0.35	GN / GY	6135	IV	—
13 - 16	—	—	—	—	—	Not Occupied	13 - 16	—	—	—	—	—
17	0.75	GN	199	I	—	Left Rear Speaker [+] Control Left Rear Speaker [+] Control	17	1.5 0.75	GN GN	199 199	V IV	UQS UQA/ UQF
18	0.75	GN / BK	116	I	—	Left Rear Speaker [-] Control Left Rear Speaker [-] Control	18	1.5 0.75	GN / BK GN / BK	116 116	V IV	UQS UQA/ UQF
19	—	—	—	—	—	Not Occupied	19	—	—	—	—	—
20	2.5	BK	1550	II	—	Ground	20	2.5	BK	1550	III	—

X800 Rear Side Door Door Wiring Harness - Right to Body Wiring Harness

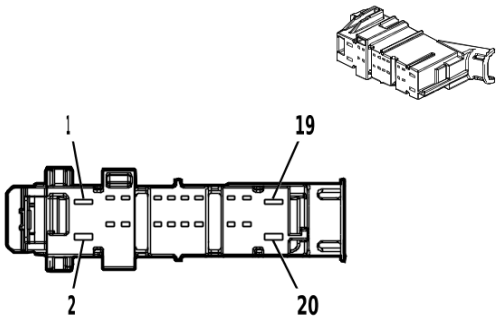

4650257

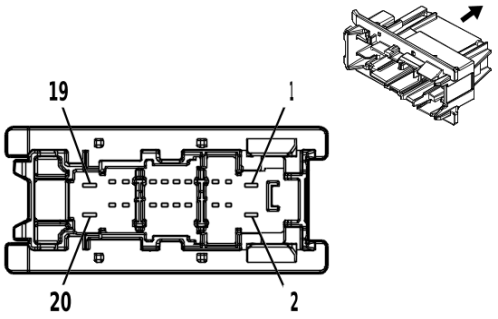

4663657

Connector Part Information

Harness Type: Rear Side Door Door Wiring Harness - Right
OEM Connector: 33303652
Service Connector: Service by Harness - See Part Catalog
Description: 20-Way F 1.2 MCON, 2.8 MCP Series(BK)

Connector Part Information

Harness Type: Body Wiring Harness
OEM Connector: 35215020
Service Connector: 13527239
Description: 20-Way M 1.2 MCON, 2.8 MCP Series(BK)

Terminal Part Information

Terminal Type ID	Terminated Lead	Diagnostic Test Probe	Terminal Removal Tool
I	Not required	J-35616-16 (L-GN)	No Tool Required
II	Not required	J-35616-35 (VT)	No Tool Required
III	13586064	J-35616-5 (PU)	J-38125-36
IV	84616651	J-35616-13 (BU)	J-38125-215A
V	84726946	J-35616-13 (BU)	J-38125-215A

X800 Rear Side Door Door Wiring Harness - Right to Body Wiring Harness

Pin	Size	Color	Circuit	Terminal Type ID	Option	Function	Pin	Size	Color	Circuit	Terminal Type ID	Option
1	2.5	YE / BK	4840	II	—	Battery Positive Voltage	1	2.5	RD / GY	4840	III	—
2 - 5	—	—	—	—	—	Not Occupied	2 - 5	—	—	—	—	—
6	0.75	GY / BK	2680	I	—	Lock Actuators Unlock Control 2	6	0.75	GY / BK	2680	IV	—
7	0.75	VT / WH	1094	I	—	Right Rear Door Lock Actuator Lock Control	7	0.75	VT / WH	1094	IV	—
8	—	—	—	—	—	Not Occupied	8	—	—	—	—	—
9	0.5	BK / OG	6627	I	—	Right Rear Side Impact Sensor Low Reference	9	0.5	BK / OG	6627	IV	—
10	—	—	—	—	—	Not Occupied	10	—	—	—	—	—
11	0.5	OG / WH	6626	I	—	Right Rear Side Impact Sensor Signal	11	0.5	OG / WH	6626	IV	—

X800 Rear Side Door Door Wiring Harness - Right to Body Wiring Harness (cont'd)

Pin	Size	Color	Circuit	Terminal Type ID	Option	Function	Pin	Size	Color	Circuit	Terminal Type ID	Option
12	0.5	GN / GY	6135	I	—	Body Control Module LIN Bus 4	12	0.35	GN / GY	6135	IV	—
13 - 16	—	—	—	—	—	Not Occupied	13 - 16	—	—	—	—	—
17	0.75	WH	46	I	—	Right Rear Speaker [+] Control Right Rear Speaker [+] Control	17	1.5 0.75	WH WH	46 46	V IV	UQS UQA/ UQF
18	0.75	BU / BK	115	I	—	Right Rear Speaker [-] Control Right Rear Speaker [-] Control	18	1.5 0.75	BU / BK BU / BK	115 115	V IV	UQS UQA/ UQF
19	—	—	—	—	—	Not Occupied	19	—	—	—	—	—
20	2.5	BK	1350	II	—	Ground	20	2.5	BK	1350	III	—

X910 Tail Lamp Wiring Harness - Left to Chassis Wiring Harness

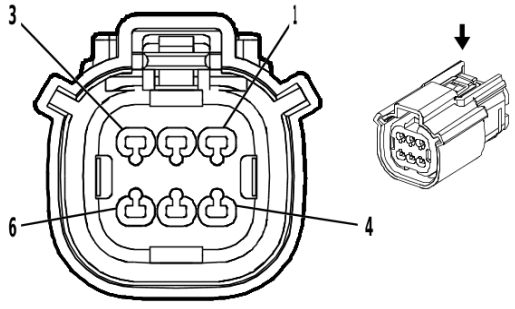

1986157

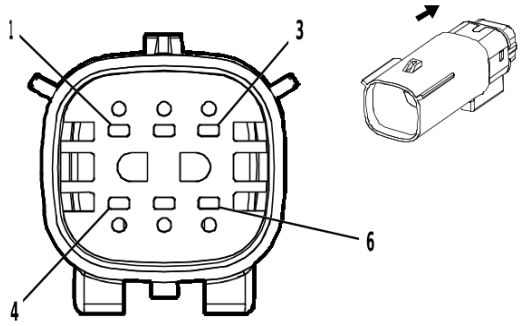

1986159

Connector Part Information

Harness Type: Tail Lamp Wiring Harness
OEM Connector: 33472-0606
Service Connector: Service by Harness - See Part Catalog
Description: 6-Way F 1.5 MX Series, Sealed(BK)

Connector Part Information

Harness Type: Chassis Wiring Harness
OEM Connector: 35014074
Service Connector: 19367742
Description: 6-Way M 1.5 MX Series, Sealed(BK)

Terminal Part Information

Terminal Type ID	Terminated Lead	Diagnostic Test Probe	Terminal Removal Tool
I	Not required	J-35616-2A (GY)	No Tool Required
II	Not required	J-35616-3 (GY)	No Tool Required

X910 Tail Lamp Wiring Harness - Left to Chassis Wiring Harness

Pin	Size	Color	Circuit	Terminal Type ID	Option	Function	Pin	Size	Color	Circuit	Terminal Type ID	Option
1	0.75	BN	6993	I	—	Left Rear Park Lamp Control	1	0.75	BN / BU	6993	II	—
2	0.75	RD	6567	I	GF4/ GF9/ GFC/ GFD/ GRZ	Rear Turn Signal Lamp Feedback Signal	2	0.75	WH / VT	6567	II	GF4/ GF9/ GFC/ GFD/ GRZ
3	0.75	BU	7762	I	UF2	Cargo Lamp Control	3	0.5	GY / BU	7762	II	UF2
4	0.75	GN	24	I	—	Backup Lamp Control	4	0.5	GN / WH	24	II	—
5	0.75	GN	1334	I	—	Left Rear Turn Signal Lamp Control 2	5	0.75	BU / WH	1334	II	—
6	0.75	BK	1951	I	—	Signal Ground	6	0.75	BK / WH	1951	II	—

X918 Endgate Wiring Harness to Chassis Wiring Harness

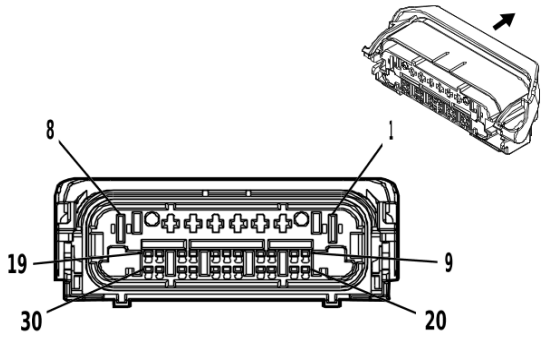

4650150

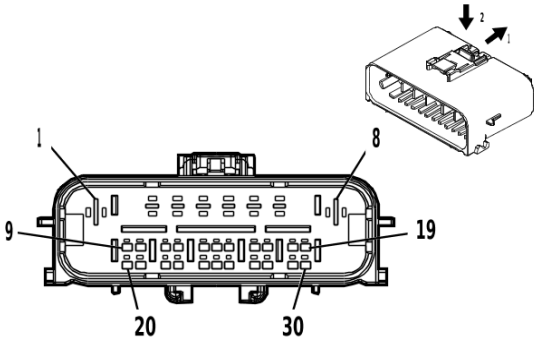

4817393

Connector Part Information

Harness Type: Endgate Wiring Harness

OEM Connector: 35573111

Service Connector: Service by Harness - See Part Catalog

Description: 30-Way F 1.2 MCON, 2.8, 6.3 MCP Series, Sealed(BK)

Connector Part Information

Harness Type: Chassis Wiring Harness

OEM Connector: 35547577

Service Connector: 19371177

Description: 30-Way M 1.2 MCON-CB, 2.8 MCP Series, Sealed(BK)

Terminal Part Information

Terminal Type ID	Terminated Lead	Diagnostic Test Probe	Terminal Removal Tool
I	Not required	J-35616-16 (L-GN)	No Tool Required
II	Not required	J-35616-4A (PU)	No Tool Required
III	13578827	J-35616-5 (PU)	J-38125-36
IV	19330704	J-35616-13 (BU)	J-38125-215A

X918 Endgate Wiring Harness to Chassis Wiring Harness

Pin	Size	Color	Circuit	Terminal Type ID	Option	Function	Pin	Size	Color	Circuit	Terminal Type ID	Option
1	—	—	—	—	—	Not Occupied	1	—	—	—	—	—
2	2.5	RD / VT	4442	II	—	Primary Fused Battery Positive Voltage	2	2.5	RD / VT	4442	III	—
3	2.5	BK	1850	II	—	Ground	3	2.5	BK	1850	III	—
4	1	VT	7725	II	—	Minor Endgate Motor Control	4	1	VT	7725	III	—
5	1	YE / BK	7730	II	—	Major Endgate Motor Low Reference	5	1	YE / BK	7730	III	—
6	1	GN	1299	II	—	Major Endgate Motor Control	6	1	GN	1299	III	—
7 - 8	—	—	—	—	—	Not Occupied	7 - 8	—	—	—	—	—
9	0.5	WH / VT	1430	I	—	Exterior Courtesy Lamp Control	9	0.5	WH / VT	1430	IV	—

X918 Endgate Wiring Harness to Chassis Wiring Harness (cont'd)

Pin	Size	Color	Circuit	Terminal Type ID	Option	Function	Pin	Size	Color	Circuit	Terminal Type ID	Option
10	0.5	YE	7294	I	—	Minor Endgate Release Switch Discrete Signal Exterior	10	0.5	YE	7294	IV	—
11	0.75	YE / BU	7295	I	—	Left Minor Endgate Ajar Signal	11	0.75	YE / BU	7295	IV	—
12 - 17	—	—	—	—	—	Not Occupied	12 - 17	—	—	—	—	—
18	0.5	BU / VT	4101	I	—	AUTOSAR CAN Bus [+] 4 Serial Data	18	0.5	BU / VT	4101	IV	—
19	0.5	WH	4100	I	—	AUTOSAR CAN Bus [-] 4 Serial Data	19	0.5	WH	4100	IV	—
20	0.5	YE	1144	I	—	Endgate Release Switch Discrete Signal Exterior	20	0.5	YE	1144	IV	—
21	0.5	GY	7292	I	—	Major Endgate Release Switch Signal Exterior	21	0.5	GY	7292	IV	—
22 - 28	—	—	—	—	—	Not Occupied	22 - 28	—	—	—	—	—
29	0.5	WH	4100	I	—	AUTOSAR CAN Bus [-] 4 Serial Data	29	0.5	WH	4100	IV	—
30	0.5	BU / VT	4101	I	—	AUTOSAR CAN Bus [+] 4 Serial Data	30	0.5	BU / VT	4101	IV	—

X919 Endgate Wiring Harness to Chassis Wiring Harness

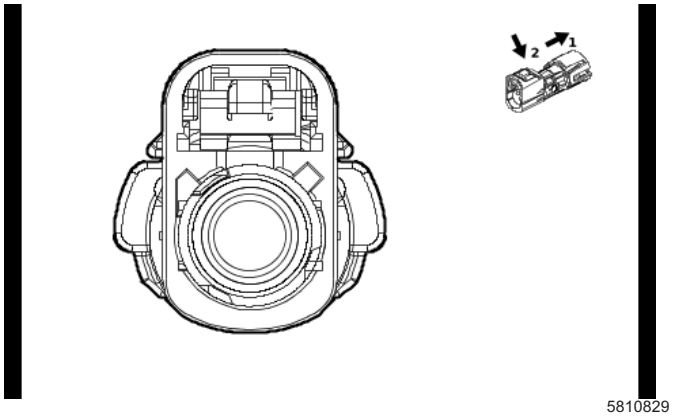

5810829

Connector Part Information

Harness Type: Endgate Wiring Harness COAX

OEM Connector: 35187033

Service Connector: Service by Cable Assembly — See Part Catalog

Description: 1-Way F Coax Type(WH)

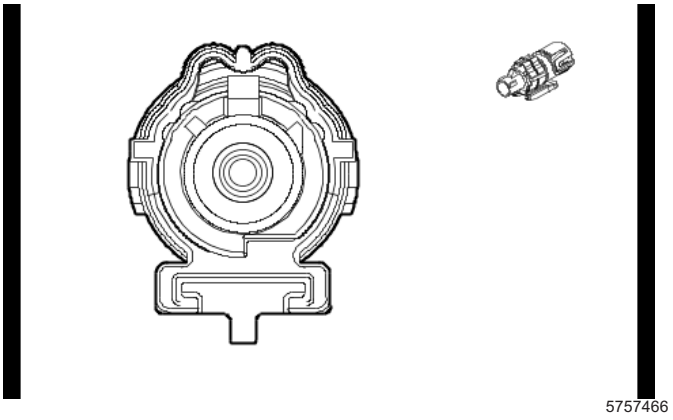
5757466

Connector Part Information

Harness Type: Chassis Wiring Harness COAX

OEM Connector: 33338240

Service Connector: Service by Cable Assembly — See Part Catalog

Description: 1-Way M Coax Type, Sealed(WH)

Terminal Part Information

Terminal Type ID	Terminated Lead	Diagnostic Test Probe	Terminal Removal Tool
I	Not required	No Tool Required	No Tool Required

X919 Endgate Wiring Harness to Chassis Wiring Harness

Pin	Size	Color	Circuit	Terminal Type ID	Option	Function	Pin	Size	Color	Circuit	Terminal Type ID	Option
—	—	Coax Cable	—	I	—	Rear Vision Camera Co-axial Video Signal	—	—	Coax Cable	—	I	—

X920 Tail Lamp Wiring Harness - Right to Chassis Wiring Harness

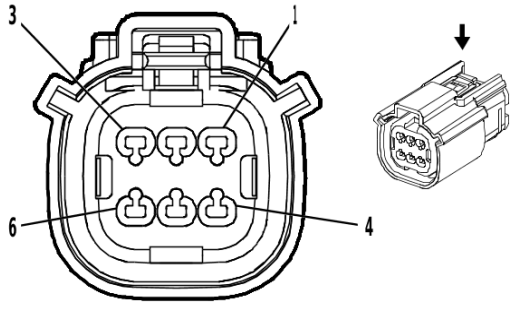

1986157

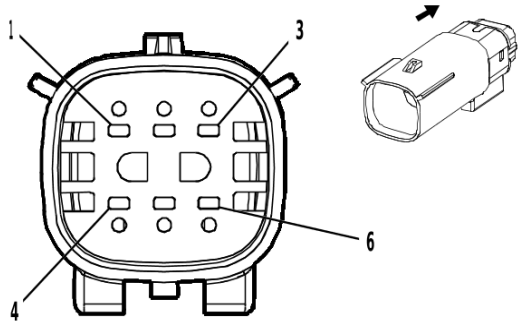

1986159

Connector Part Information

Harness Type: Tail Lamp Wiring Harness
OEM Connector: 33472-0606
Service Connector: Service by Harness - See Part Catalog
Description: 6-Way F 1.5 MX Series, Sealed(BK)

Connector Part Information

Harness Type: Chassis Wiring Harness
OEM Connector: 35014074
Service Connector: 19367742
Description: 6-Way M 1.5 MX Series, Sealed(BK)

Terminal Part Information

Terminal Type ID	Terminated Lead	Diagnostic Test Probe	Terminal Removal Tool
I	Not required	Pending	No Tool Required
I	Not required	Pending	No Tool Required
II	Not required	J-35616-3 (GY)	No Tool Required

X920 Tail Lamp Wiring Harness - Right to Chassis Wiring Harness

Pin	Size	Color	Circuit	Terminal Type ID	Option	Function	Pin	Size	Color	Circuit	Terminal Type ID	Option
1	0.75	BN	6995	I	—	Right Rear Park Lamp Control	1	0.75	BN / GY	6995	II	—
2	0.75	RD	7544	I	GF4/ GF9/ GFC/ GFD/ GRZ	Right Rear Turn Signal Lamp Feed-back Signal	2	0.75	WH / BK	7544	II	GF4/ GF9/ GFC/ GFD/ GRZ
3	0.75	BU	7762	I	UF2	Cargo Lamp Control	3	0.5	GY / BU	7762	II	UF2
4	0.75	GN	24	I	—	Backup Lamp Control	4	0.5	GN / WH	24	II	—
5	0.75	GN	1335	I	—	Right Rear Turn Signal Lamp Control 2	5	0.75	BU / VT	1335	II	—
6	0.75	BK	1850	I	—	Ground	6	0.75	BK	1850	II	—

X944 Engine Wiring Harness to Engine Coolant Temperature Sensor Harness (LM2)

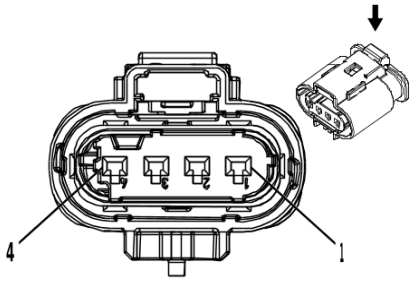

2717079

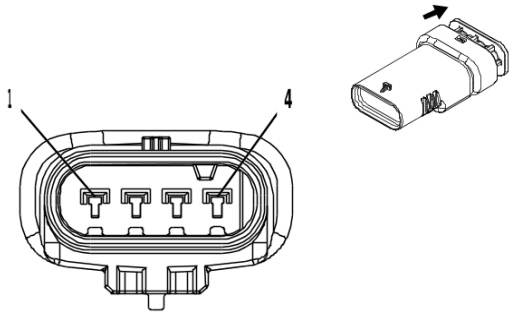

4560843

Connector Part Information

Harness Type: Engine Wiring Harness
OEM Connector: 13815341
Service Connector: 13587299
Description: 4-Way F 1.2 Multilock Series, Sealed(BK)

Connector Part Information

Harness Type: Engine Coolant Temperature Sensor Harness
OEM Connector: 10013906
Service Connector: Service by Harness - See Part Catalog
Description: 4-Way M 1.2 Multilock Series, Sealed(GY)

Terminal Part Information

Terminal Type ID	Terminated Lead	Diagnostic Test Probe	Terminal Removal Tool
I	Not required	J-35616-16 (L-GN)	No Tool Required
II	Not required	J-35616-17 (L-GN)	No Tool Required

X944 Engine Wiring Harness to Engine Coolant Temperature Sensor Harness (LM2)

Pin	Size	Color	Circuit	Terminal Type ID	Option	Function	Pin	Size	Color	Circuit	Terminal Type ID	Option
1	0.5	GY / VT	2404	I	—	Engine Block Coolant Temperature Signal	1	0.5	GY / VT	2404	II	—
2	0.5	BK / YE	548	I	—	Engine Control Sensors Low Reference 1	2	0.5	BK / GN	580	II	—
3	0.5	VT	2988	I	—	Engine Outlet Coolant Temperature Signal	3	0.5	VT	2988	II	—
4	0.5	BK / GY	626	I	—	Engine Control Vehicle Sensors Low Reference 1	4	0.5	BK / GY	626	II	—

X950 Rear Object Alarm Sensor Wiring Harness to Chassis Wiring Harness (-UKL)

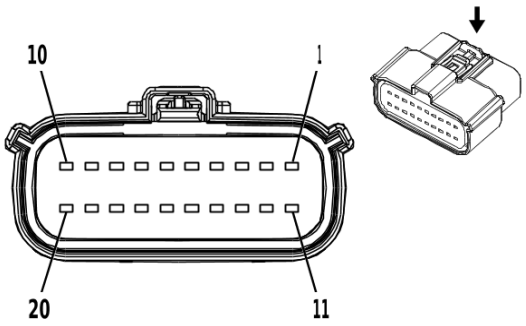

2871898

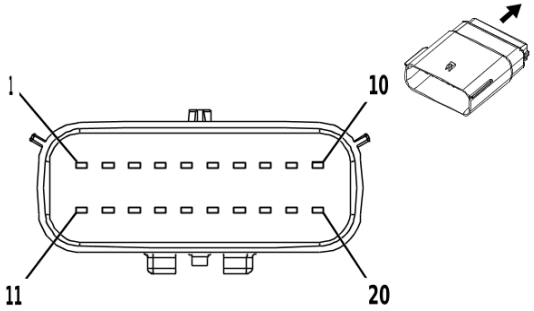

2871861

Connector Part Information

Harness Type: Rear Object Alarm Sensor Wiring Harness
OEM Connector: 13650143
Service Connector: Service by Harness - See Part Catalog
Description: 20-Way F 1.5 Series, Sealed(BK)

Connector Part Information

Harness Type: Chassis Wiring Harness
OEM Connector: 35554993
Service Connector: 19351705
Description: 20-Way M 1.5 MX Series, Sealed(BK)

Terminal Part Information

Terminal Type ID	Terminated Lead	Diagnostic Test Probe	Terminal Removal Tool
I	Not required	J-35616-2A (GY)	No Tool Required
II	19119395	J-35616-3 (GY)	J-38125-217
III	19119842	J-35616-3 (GY)	J-38125-217

X950 Rear Object Alarm Sensor Wiring Harness to Chassis Wiring Harness (-UKL)

Pin	Size	Color	Circuit	Terminal Type ID	Option	Function	Pin	Size	Color	Circuit	Terminal Type ID	Option
1	0.5	RD / GN	6940	I	—	Battery Positive Voltage	1	0.5	RD / GN	6940	II	—
2	—	—	—	—	—	Not Occupied	2	—	—	—	—	—
3	0.5	WH	4100	I	—	AUTOSAR CAN Bus [-] 4 Serial Data	3	0.5	WH	4100	II	—
4	0.5	BU / VT	4101	I	—	AUTOSAR CAN Bus [+] 4 Serial Data	4	0.5	BU / VT	4101	II	—
5 - 8	—	—	—	—	—	Not Occupied	5 - 8	—	—	—	—	—
9	0.5	BN / WH	2374	I	—	Object Sensor Voltage Reference	9	0.5	BN / WH	2374	II	—
10	0.5	YE	2375	I	—	Left Rear Outer Parking Assist Sensor Signal	10	0.5	YE	2375	II	—
11	0.5	YE / BU	2376	I	—	Left Rear Middle Parking Assist Sensor Signal	11	0.5	YE / BU	2376	II	—

X950 Rear Object Alarm Sensor Wiring Harness to Chassis Wiring Harness (-UKL) (cont'd)

Pin	Size	Color	Circuit	Terminal Type ID	Option	Function	Pin	Size	Color	Circuit	Terminal Type ID	Option
12	0.5	YE / WH	2377	I	—	Right Rear Middle Parking Assist Sensor Signal	12	0.5	YE / WH	2377	II	—
13	0.5	YE / VT	2378	I	—	Right Rear Outer Parking Assist Sensor Signal	13	0.5	YE / VT	2378	II	—
14	0.5	BK / GY	2379	I	—	Object Sensor Low Reference	14	0.5	BK / GY	2379	II	—
15	0.5	GN / YE	6846	I	—	Rear License Plate Lamp Control	15	0.5	GN / YE	6846	II	—
16	0.75	BK	1850	I	—	Ground	16	0.75	BK	1850	III	—
17	0.5	BK / WH	1951	I	—	Signal Ground	17	0.5	BK / WH	1951	II	—
18	—	—	—	—	—	Not Occupied	18	—	—	—	—	—
19	0.5	WH	4100	I	—	AUTOSAR CAN Bus [-] 4 Serial Data	19	0.5	WH	4100	II	—
20	0.5	BU / VT	4101	I	—	AUTOSAR CAN Bus [+] 4 Serial Data	20	0.5	BU / VT	4101	II	—

X950 Rear Object Alarm Sensor Wiring Harness to Chassis Wiring Harness (UKL)

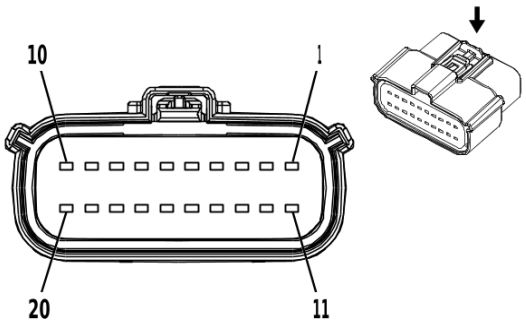

2871898

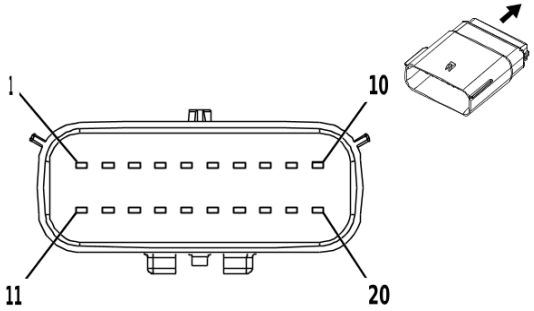

2871861

Connector Part Information

Harness Type: Rear Object Alarm Sensor Wiring Harness
OEM Connector: 13650143
Service Connector: Service by Harness - See Part Catalog
Description: 20-Way F 1.5 Series, Sealed(BK)

Connector Part Information

Harness Type: Chassis Wiring Harness
OEM Connector: 35554993
Service Connector: 19351705
Description: 20-Way M 1.5 MX Series, Sealed(BK)

Terminal Part Information

Terminal Type ID	Terminated Lead	Diagnostic Test Probe	Terminal Removal Tool
I	Not required	J-35616-2A (GY)	No Tool Required
II	19119395	J-35616-3 (GY)	J-38125-217
III	19119842	J-35616-3 (GY)	J-38125-217

X950 Rear Object Alarm Sensor Wiring Harness to Chassis Wiring Harness (UKL)

Pin	Size	Color	Circuit	Terminal Type ID	Option	Function	Pin	Size	Color	Circuit	Terminal Type ID	Option
1	—	—	—	—	—	Battery Positive Voltage	1	0.5	RD / GN	6940	II	—
2	0.5	RD / BU	5240	I	—	Battery Positive Voltage	2	0.5	RD / BU	5240	II	—
3	0.5	WH	4100	I	—	AUTOSAR CAN Bus [-] 4 Serial Data	3	0.5	WH	4100	II	—
4	0.5	BU / VT	4101	I	—	AUTOSAR CAN Bus [+] 4 Serial Data	4	0.5	BU / VT	4101	II	—
5	0.5	WH / GY	4104	I	—	AUTOSAR CAN Bus [-] 8 Serial Data	5	0.5	WH / GY	4104	II	—
6	0.5	BU / GY	4105	I	—	AUTOSAR CAN Bus [+] 8 Serial Data	6	0.5	BU / GY	4105	II	—
7	0.5	WH / GY	4104	I	—	AUTOSAR CAN Bus [-] 8 Serial Data	7	0.5	WH / GY	4104	II	—
8	0.5	BU / GY	4105	I	—	AUTOSAR CAN Bus [+] 8 Serial Data	8	0.5	BU / GY	4105	II	—
9	0.5	BN / WH	2374	I	—	Object Sensor Voltage Reference	9	0.5	BN / WH	2374	II	—

X950 Rear Object Alarm Sensor Wiring Harness to Chassis Wiring Harness (UKL) (cont'd)

Pin	Size	Color	Circuit	Terminal Type ID	Option	Function	Pin	Size	Color	Circuit	Terminal Type ID	Option
10	0.5	YE	2375	I	—	Left Rear Outer Parking Assist Sensor Signal	10	0.5	YE	2375	II	—
11	0.5	YE / BU	2376	I	—	Left Rear Middle Parking Assist Sensor Signal	11	0.5	YE / BU	2376	II	—
12	0.5	YE / WH	2377	I	—	Right Rear Middle Parking Assist Sensor Signal	12	0.5	YE / WH	2377	II	—
13	0.5	YE / VT	2378	I	—	Right Rear Outer Parking Assist Sensor Signal	13	0.5	YE / VT	2378	II	—
14	0.5	BK / GY	2379	I	—	Object Sensor Low Reference	14	0.5	BK / GY	2379	II	—
15	0.5	GN / YE	6846	I	—	Rear License Plate Lamp Control	15	0.5	GN / YE	6846	II	—
16	0.75	BK	1850	I	—	Ground	16	0.75	BK	1850	III	—
17	0.5	BK / WH	1951	I	—	Signal Ground	17	0.5	BK / WH	1951	II	—
18	—	—	—	—	—	Not Occupied	18	—	—	—	—	—
19	0.5	WH	4100	I	—	AUTOSAR CAN Bus [-] 4 Serial Data	19	0.5	WH	4100	II	—
20	0.5	BU / VT	4101	I	—	AUTOSAR CAN Bus [+] 4 Serial Data	20	0.5	BU / VT	4101	II	—

X961 Engine Wiring Harness to Valve Rocker Arm Oil Control Valve Extension Harness (L84/L87)

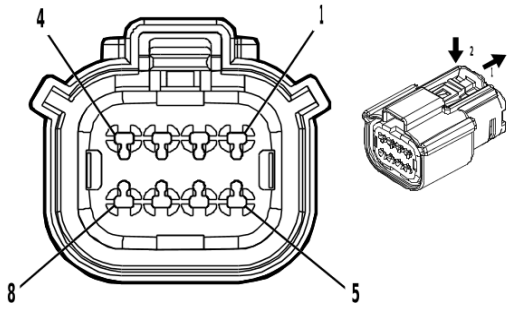

4846407

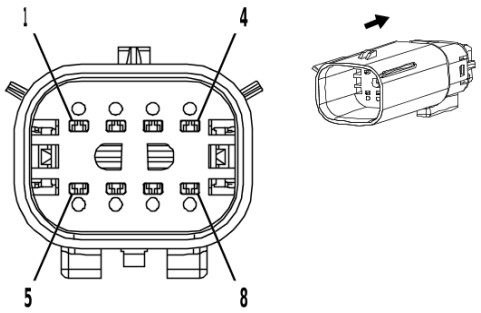

2667653

Connector Part Information

Harness Type: Engine Wiring Harness
OEM Connector: 35037827
Service Connector: 84928314
Description: 8-Way F 1.5 MX Series, Sealed(BK)

Connector Part Information

Harness Type: Valve Rocker Arm Oil Control Valve Extension Harness
OEM Connector: 33482-4801
Service Connector: Service by Harness - See Part Catalog
Description: 8-Way M 1.5 MX Series, Sealed(BK)

Terminal Part Information

Terminal Type ID	Terminated Lead	Diagnostic Test Probe	Terminal Removal Tool
I	Not required	J-35616-14 (GN)	No Tool Required
II	Not required	No Tool Required	No Tool Required

X961 Engine Wiring Harness to Valve Rocker Arm Oil Control Valve Extension Harness (L84/L87)

Pin	Size	Color	Circuit	Terminal Type ID	Option	Function	Pin	Size	Color	Circuit	Terminal Type ID	Option
1	0.5	WH / GN	2492	I	—	Cylinder Shutoff Solenoid Enable Signal 2	1	0.5	WH / GN	2492	II	—
2	0.5	GN	5492	I	—	Cylinder Deactivation Solenoid Valve Control 2	2	0.5	GN	5492	II	—
3	0.5	YE / GY	2493	I	—	Cylinder Shutoff Solenoid Enable Signal 3	3	0.5	YE / GY	2493	II	—
4	0.5	GY	5493	I	—	Cylinder Deactivation Solenoid Valve Control 3	4	0.5	GY	5493	II	—
5	0.5	WH / VT	2495	I	—	Cylinder Shutoff Solenoid Enable Signal 5	5	0.5	WH / VT	2495	II	—

X961 Engine Wiring Harness to Valve Rocker Arm Oil Control Valve Extension Harness (L84/L87) (cont'd)

Pin	Size	Color	Circuit	Terminal Type ID	Option	Function	Pin	Size	Color	Circuit	Terminal Type ID	Option
6	0.5	VT	5495	I	—	Cylinder Deactivation Solenoid Valve Control 5	6	0.5	VT	5495	II	—
7	0.5	WH / YE	2498	I	—	Cylinder Shutoff Solenoid Enable Signal 8	7	0.5	WH / YE	2498	II	—
8	0.5	YE	5498	I	—	Cylinder Deactivation Solenoid Valve Control 8	8	0.5	YE	5498	II	—

X962 Engine Wiring Harness to Valve Rocker Arm Oil Control Valve Extension Harness (L84/L87)

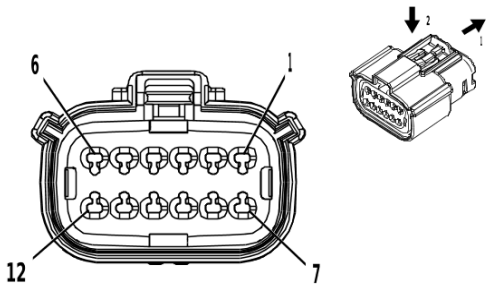

2871860

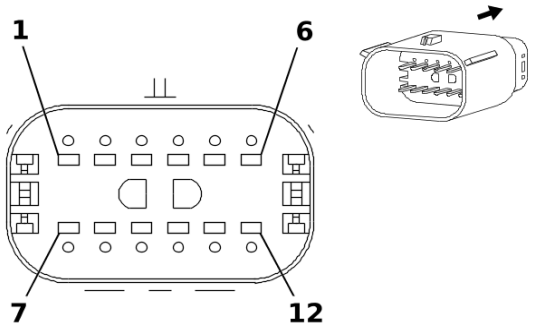

1825167

Connector Part Information

Harness Type: Engine Wiring Harness
OEM Connector: 33362189
Service Connector: 19352907
Description: 12-Way F 1.5 MX Series, Sealed(BK)

Connector Part Information

Harness Type: Valve Rocker Arm Oil Control Valve Extension Harness
OEM Connector: 33482-6260
Service Connector: Service by Harness - See Part Catalog
Description: 12-Way M 1.5 MX Series, Sealed(BK)

Terminal Part Information

Terminal Type ID	Terminated Lead	Diagnostic Test Probe	Terminal Removal Tool
I	19368973	J-35616-2A (GY)	J-38125-217
II	Not required	No Tool Required	No Tool Required

X962 Engine Wiring Harness to Valve Rocker Arm Oil Control Valve Extension Harness (L84/L87)

Pin	Size	Color	Circuit	Terminal Type ID	Option	Function	Pin	Size	Color	Circuit	Terminal Type ID	Option
1	0.5	WH / BU	2491	I	—	Cylinder Shutoff Solenoid Enable Signal 1	1	0.5	WH / BU	2491	II	—
2	0.5	BU	5491	I	—	Cylinder Deactivation Solenoid Valve Control 1	2	0.5	BU	5491	II	—
3	0.5	YE / GN	2494	I	—	Cylinder Shutoff Solenoid Enable Signal 4	3	0.5	YE / GN	2494	II	—
4	0.5	YE / BU	5494	I	—	Cylinder Deactivation Solenoid Valve Control 4	4	0.5	YE / BU	5494	II	—
5	0.5	YE / BN	2496	I	—	Cylinder Shutoff Solenoid Enable Signal 6	5	0.5	YE / BN	2496	II	—

X962 Engine Wiring Harness to Valve Rocker Arm Oil Control Valve Extension Harness (L84/L87) (cont'd)

Pin	Size	Color	Circuit	Terminal Type ID	Option	Function	Pin	Size	Color	Circuit	Terminal Type ID	Option
6	0.5	BN	5496	I	—	Cylinder Deactivation Solenoid Valve Control 6	6	0.5	BN	5496	II	—
7	0.5	GN / GY	2497	I	—	Cylinder Shutoff Solenoid Enable Signal 7	7	0.5	GN / GY	2497	II	—
8	0.5	WH	5497	I	—	Cylinder Deactivation Solenoid Valve Control 7	8	0.5	WH	5497	II	—
9	0.5	BU	410	I	—	Engine Coolant Temperature Sensor Signal	9	0.5	BU	410	II	—
10	0.5	BK / GY	626	I	—	Engine Control Vehicle Sensors Low Reference 1	10	0.5	BK / YE	626	II	—
11 - 12	—	—	—	—	—	Not Occupied	11 - 12	—	—	—	—	—

X963 Valve Rocker Arm Oil Control Valve Extension Harness to Valve Rocker Arm Oil Control Valve Harness (L84/L87)

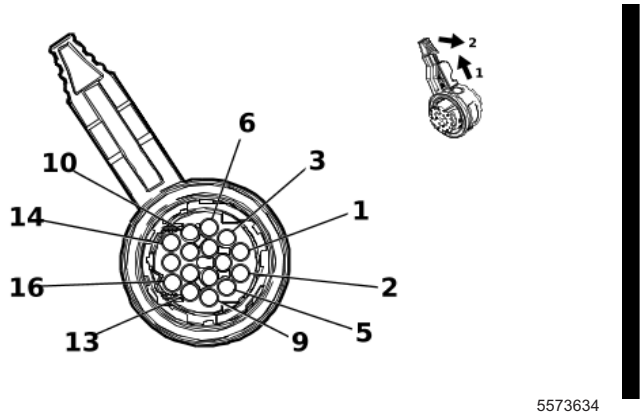

5573634

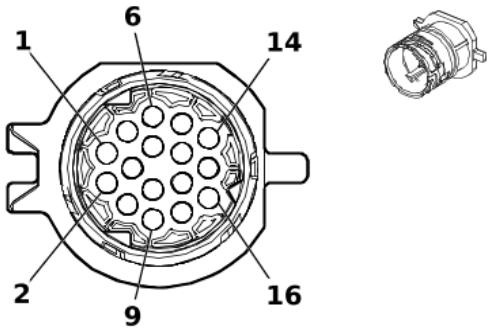

5575849

Connector Part Information

Harness Type: Valve Rocker Arm Oil Control Valve Extension Harness
OEM Connector: 10354998
Service Connector: Service by Harness - See Part Catalog
Description: 16-Way F 1.5 LKS Series, Sealed(BK)

Connector Part Information

Harness Type: Valve Rocker Arm Oil Control Valve Harness
OEM Connector: 10140573
Service Connector: Service by Harness - See Part Catalog
Description: 16-Way M 1.5 LKS Series, Sealed(BK)

Terminal Part Information

Terminal Type ID	Terminated Lead	Diagnostic Test Probe	Terminal Removal Tool
I	Not required	No Tool Required	No Tool Required
II	Not required	Not Available	No Tool Required

X963 Valve Rocker Arm Oil Control Valve Extension Harness to Valve Rocker Arm Oil Control Valve Harness (L84/L87)

Pin	Size	Color	Circuit	Terminal Type ID	Option	Function	Pin	Size	Color	Circuit	Terminal Type ID	Option
1	0.5	WH / GN	2492	I	—	Cylinder Shutoff Solenoid Enable Signal 2	1	0.5	WH / GN	2492	II	—
2	0.5	GN	5492	I	—	Cylinder Deactivation Solenoid Valve Control 2	2	0.5	GN	5492	II	—
3	0.5	YE / GY	2493	I	—	Cylinder Shutoff Solenoid Enable Signal 3	3	0.5	YE / GY	2493	II	—
4	0.5	GY	5493	I	—	Cylinder Deactivation Solenoid Valve Control 3	4	0.5	GY	5493	II	—
5	0.5	WH / VT	2495	I	—	Cylinder Shutoff Solenoid Enable Signal 5	5	0.5	WH / VT	2495	II	—

X963 Valve Rocker Arm Oil Control Valve Extension Harness to Valve Rocker Arm Oil Control Valve Harness (L84/L87) (cont'd)

Pin	Size	Color	Circuit	Terminal Type ID	Option	Function	Pin	Size	Color	Circuit	Terminal Type ID	Option
6	0.5	VT	5495	I	—	Cylinder Deactivation Solenoid Valve Control 5	6	0.5	VT	5495	II	—
7	0.5	WH / YE	2498	I	—	Cylinder Shutoff Solenoid Enable Signal 8	7	0.5	WH / YE	2498	II	—
8	0.5	YE	5498	I	—	Cylinder Deactivation Solenoid Valve Control 8	8	0.5	YE	5498	II	—
9	0.5	WH / BU	2491	I	—	Cylinder Shutoff Solenoid Enable Signal 1	9	0.5	WH / BU	2491	II	—
10	0.5	BU	5491	I	—	Cylinder Deactivation Solenoid Valve Control 1	10	0.5	BU	5491	II	—
11	0.5	YE / GN	2494	I	—	Cylinder Shutoff Solenoid Enable Signal 4	11	0.5	YE / GN	2494	II	—
12	0.5	YE / BU	5494	I	—	Cylinder Deactivation Solenoid Valve Control 4	12	0.5	YE / BU	5494	II	—
13	0.5	YE / BN	2496	I	—	Cylinder Shutoff Solenoid Enable Signal 6	13	0.5	YE / BN	2496	II	—
14	0.5	BN	5496	I	—	Cylinder Deactivation Solenoid Valve Control 6	14	0.5	BN	5496	II	—
15	0.5	GN / GY	2497	I	—	Cylinder Shutoff Solenoid Enable Signal 7	15	0.5	GN / GY	2497	II	—
16	0.5	WH	5497	I	—	Cylinder Deactivation Solenoid Valve Control 7	16	0.5	WH	5497	II	—

X966 Engine Wiring Harness to Engine Coolant Flow Control Valve - Block Jumper Wiring Harness (LM2)

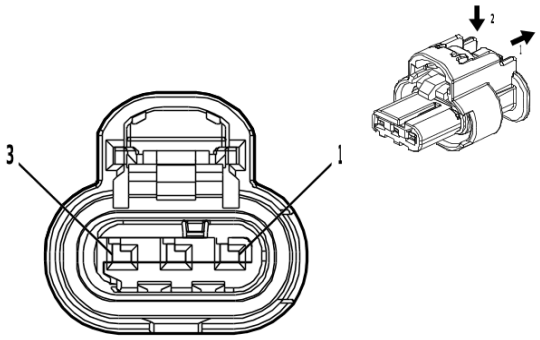

4778903

—

Connector Part Information

Harness Type: Engine Wiring Harness
OEM Connector: 33358808
Service Connector: 86792095
Description: 3-Way F 1.2 MCON-CB Series, Sealed(BK)

Connector Part Information

Harness Type: Engine Wiring Harness - Flow Control Valve Jumper
OEM Connector: 13591344
Service Connector: Service by Harness - See Part Catalog
Description: 3-Way M (BK)

Terminal Part Information

Terminal Type ID	Terminated Lead	Diagnostic Test Probe	Terminal Removal Tool
I	Not required	J-35616-16 (L-GN)	No Tool Required
II	Not required	No Tool Required	No Tool Required

X966 Engine Wiring Harness to Engine Coolant Flow Control Valve - Block Jumper Wiring Harness (LM2)

Pin	Size	Color	Circuit	Terminal Type ID	Option	Function	Pin	Size	Color	Circuit	Terminal Type ID	Option
1	0.5	GN / BN	2732	I	—	Engine Control Module LIN Bus 4	1	0.5	GN / BN	2732	II	—
2	0.5	BK	6550	I	—	Ground	2	0.5	BK	6550	II	—
3	0.5	VT / BU	5294	I	—	Powertrain Main Relay Fused Supply Voltage 5	3	0.5	VT / BU	5294	II	—

X985 Rearview Driver Information Camera Rear Closure Coaxial Cable to Inside Rearview Mirror Wiring Harness (DRZ)

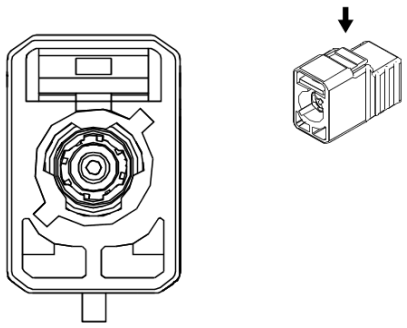

3293625

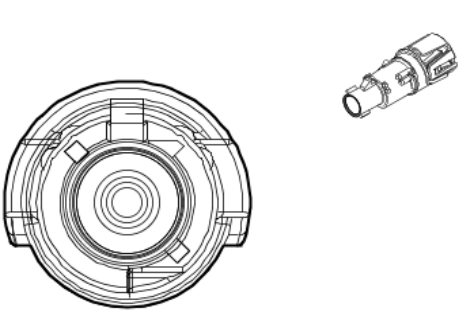

5633901

Connector Part Information

Harness Type: Rearview Driver Information Camera Rear Closure Coaxial Cable COAX

OEM Connector: 13583914

Service Connector: Service by Cable Assembly — See Part Catalog

Description: 1-Way F Coax Type(BU)

Connector Part Information

Harness Type: Inside Rearview Mirror Wiring Harness COAX

OEM Connector: 33355540

Service Connector: Service by Cable Assembly — See Part Catalog

Description: 1-Way M Coax Type, Sealed(BU)

Terminal Part Information

Terminal Type ID	Terminated Lead	Diagnostic Test Probe	Terminal Removal Tool
I	Not required	No Tool Required	No Tool Required

X985 Rearview Driver Information Camera Rear Closure Coaxial Cable to Inside Rearview Mirror Wiring Harness (DRZ)

Pin	Size	Color	Circuit	Terminal Type ID	Option	Function	Pin	Size	Color	Circuit	Terminal Type ID	Option
—	—	Coax Cable	—	I	—	Rear Vision Camera Coaxial Video Signal	—	—	Coax Cable	—	I	—

Power Outlets

Schematic and Routing Diagrams

Cigar Lighter/Power Outlet Schematics (Power (KC5) and Charge (UBI) Receptacles)

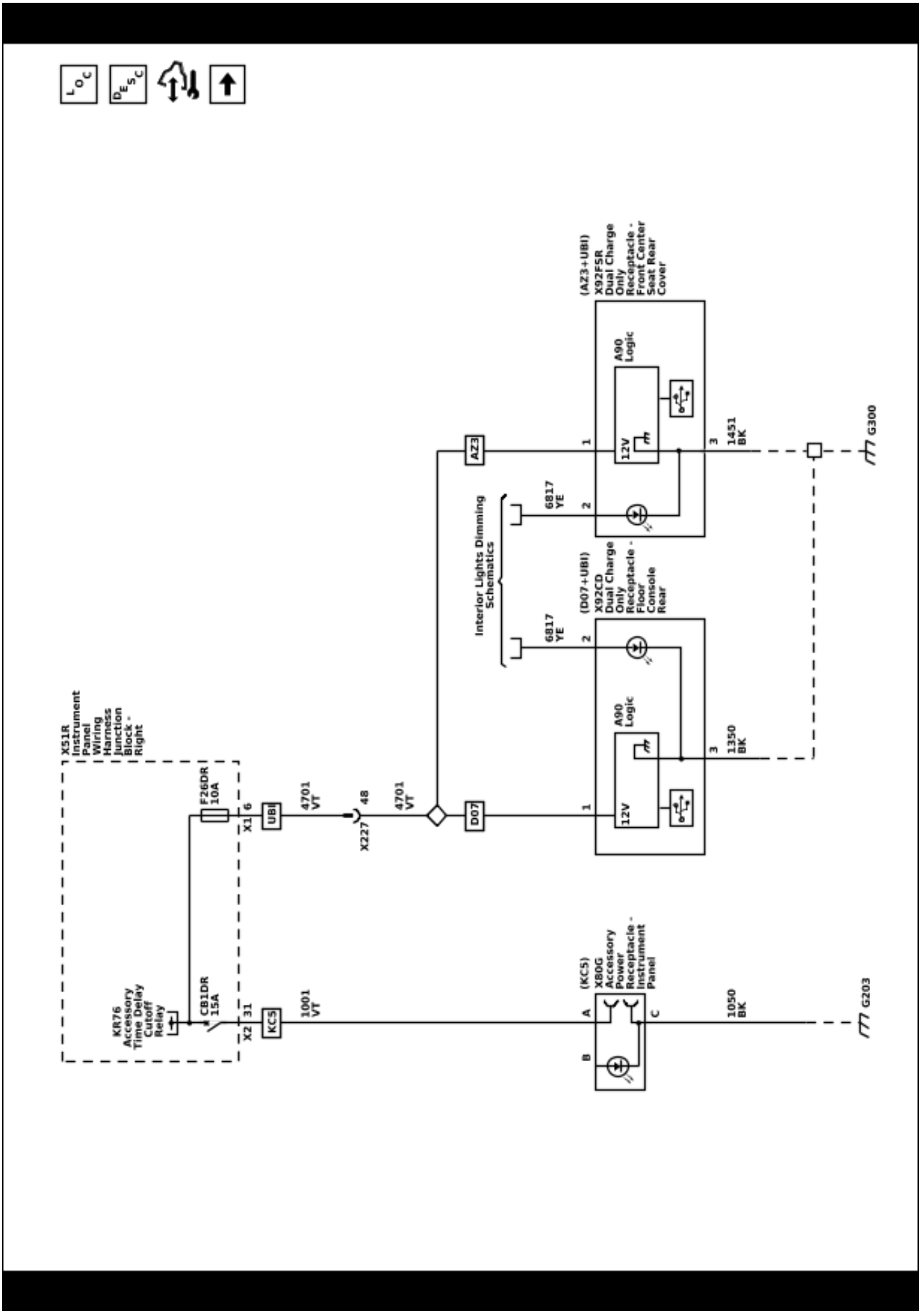

Cigar Lighter/Power Outlet Schematics (Inverter Module Power, Ground, and Serial Data (KI4/KI5/KCA/KC9))

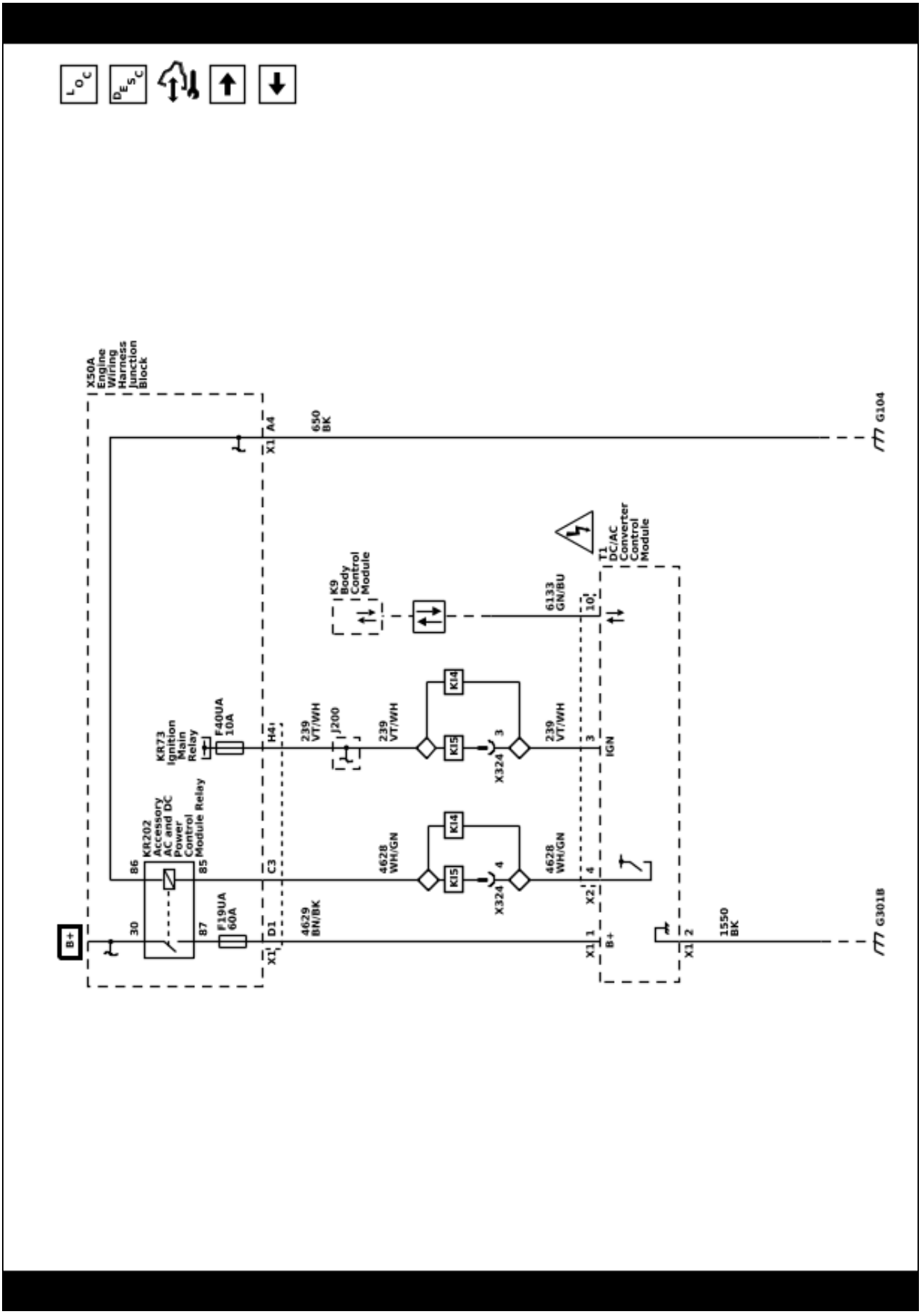

Cigar Lighter/Power Outlet Schematics (110V AC Accessory Power Rear Receptacle - Front Floor Console (KI4+D07))

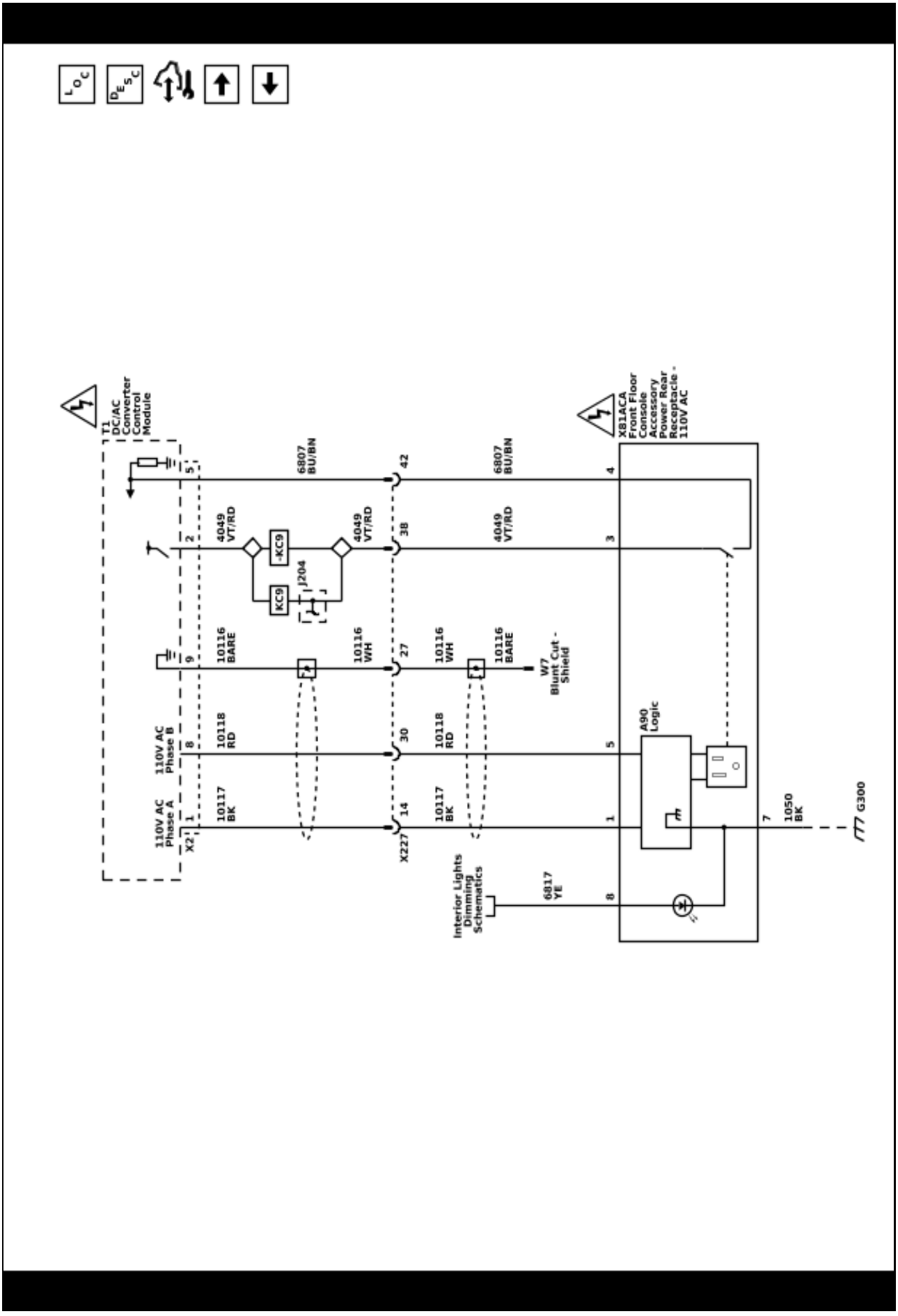

Cigar Lighter/Power Outlet Schematics (220V AC Accessory Power Rear Receptacle - Front Floor Console (KI5+D07))

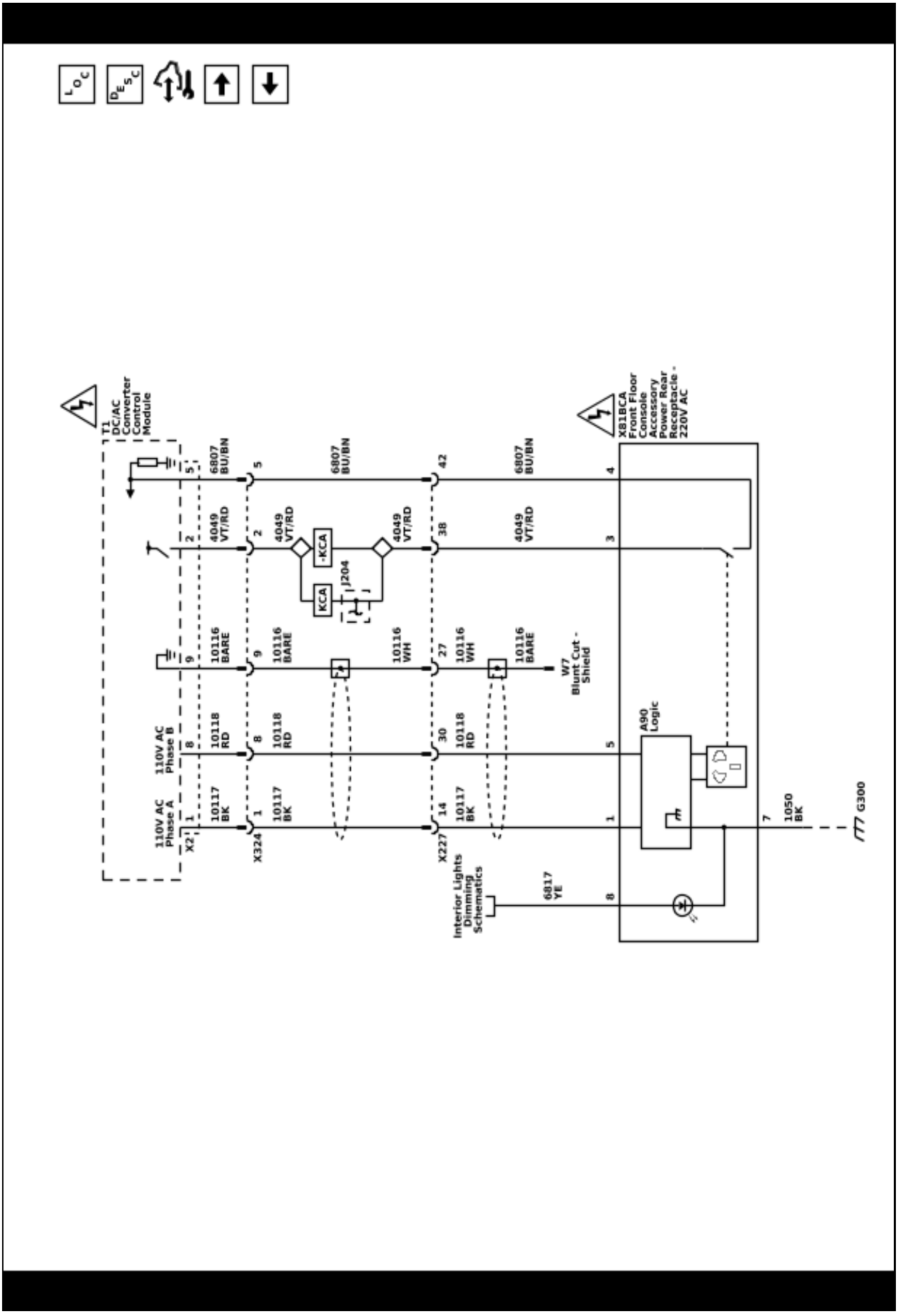

Cigar Lighter/Power Outlet Schematics (110V AC Accessory Power Receptacle - Front Center Seat Rear (KI4+AZ3))

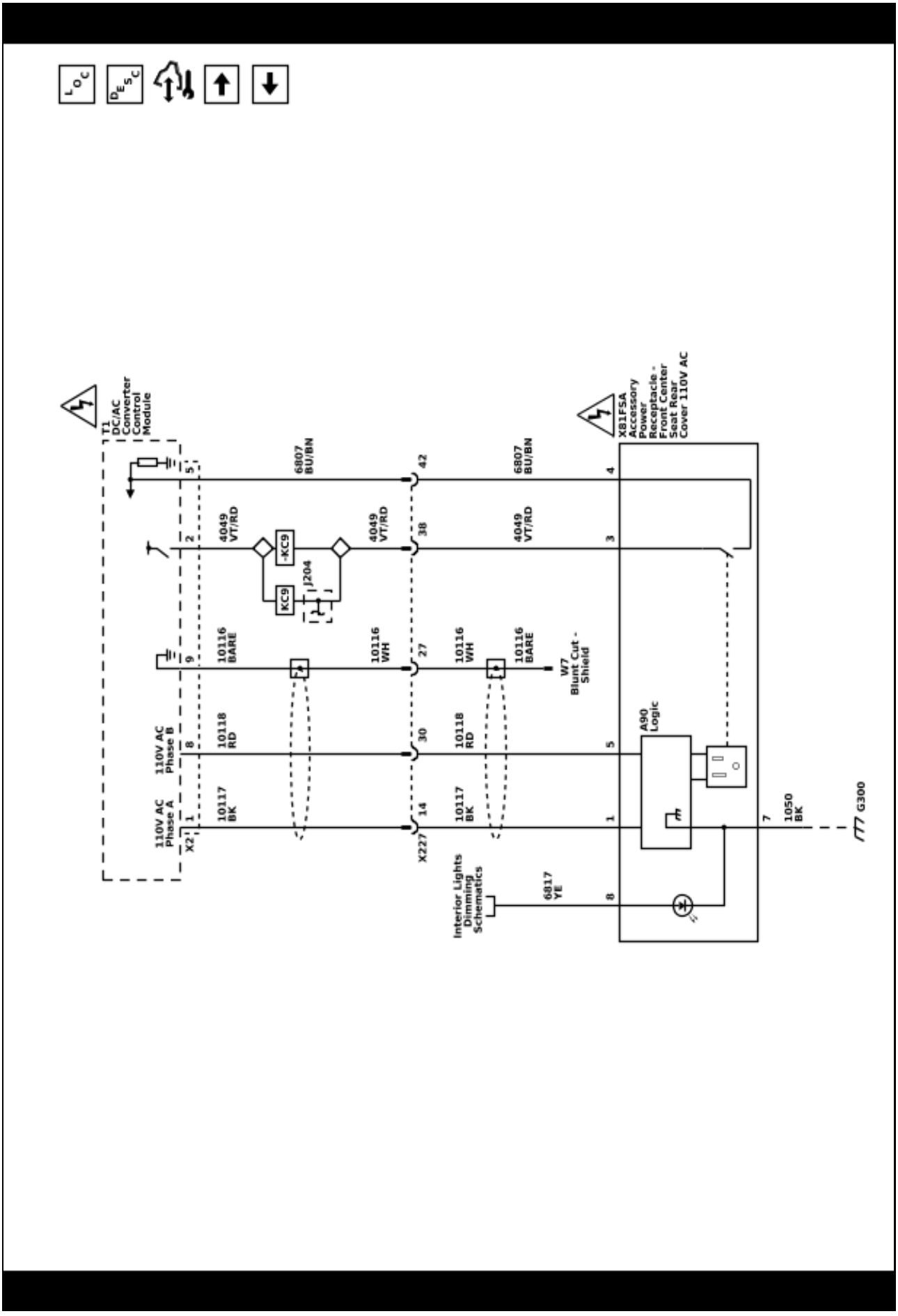

Cigar Lighter/Power Outlet Schematics (220V AC Accessory Power Receptacle - Front Center Seat Rear (KI5+AZ3))

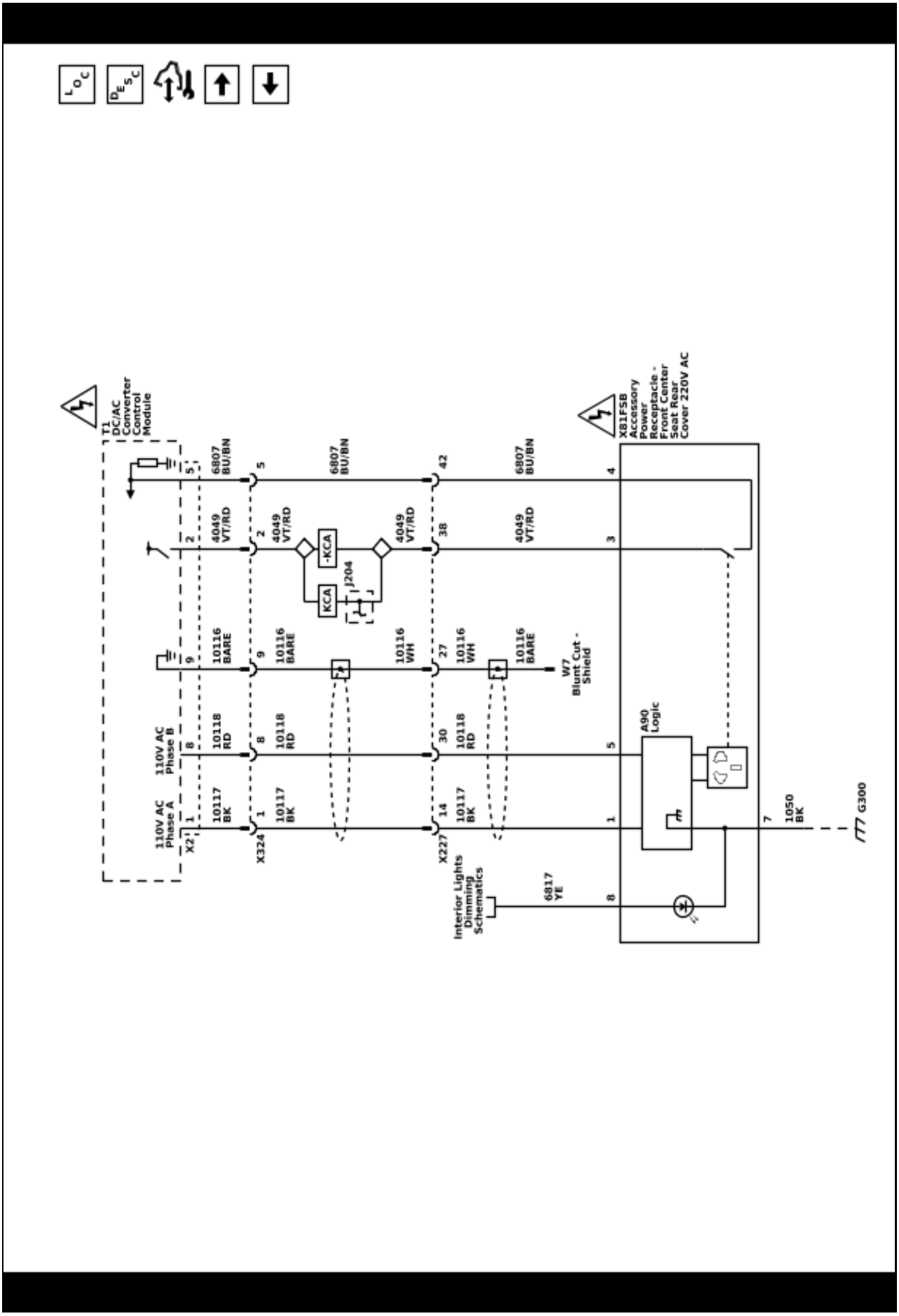

Cigar Lighter/Power Outlet Schematics (220V AC Accessory Power Receptacle - Instrument Panel (KI4-AZ3-D07))

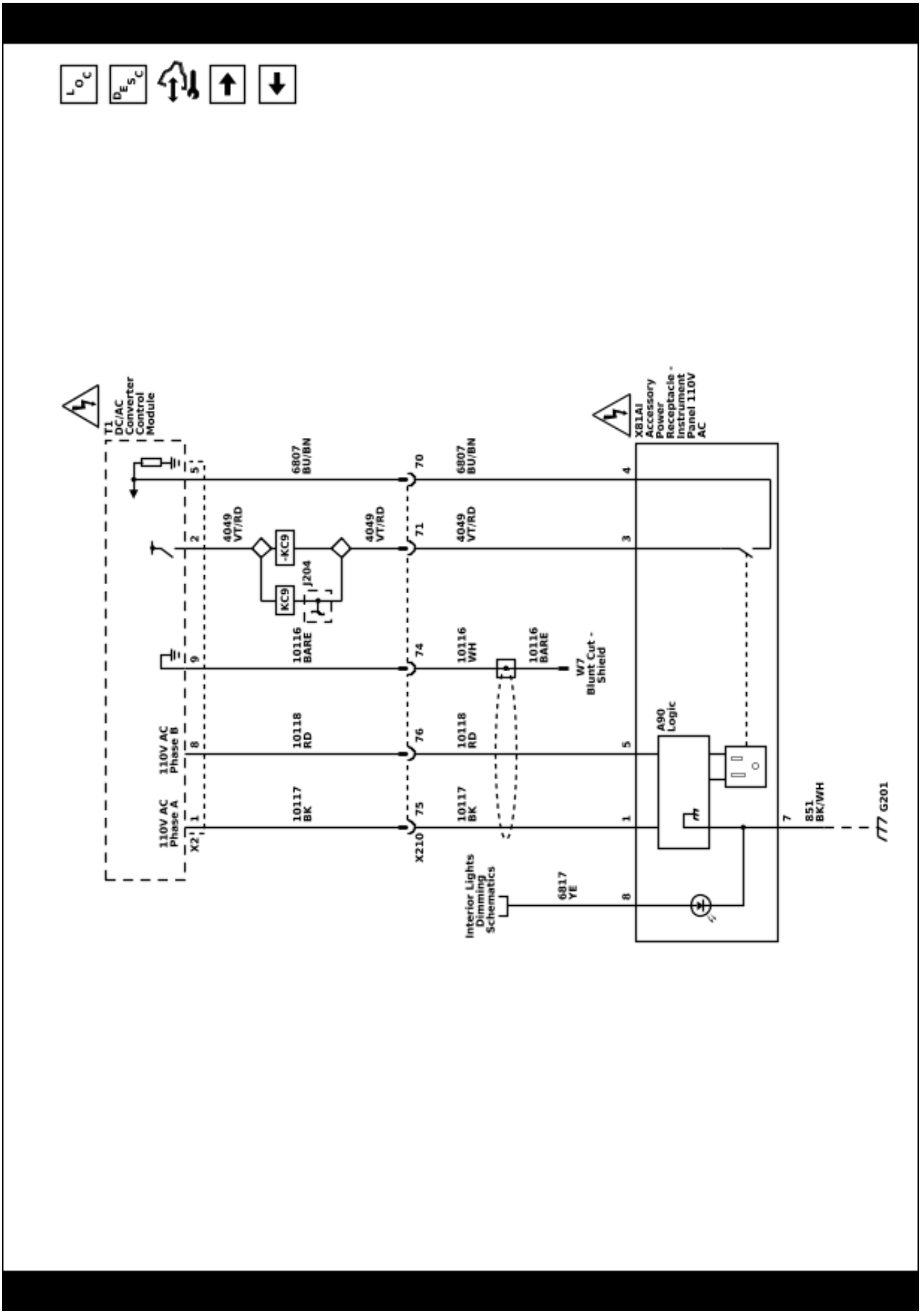

Cigar Lighter/Power Outlet Schematics (220V AC Accessory Power Receptacle - Instrument Panel (KI5-AZ3-D07))

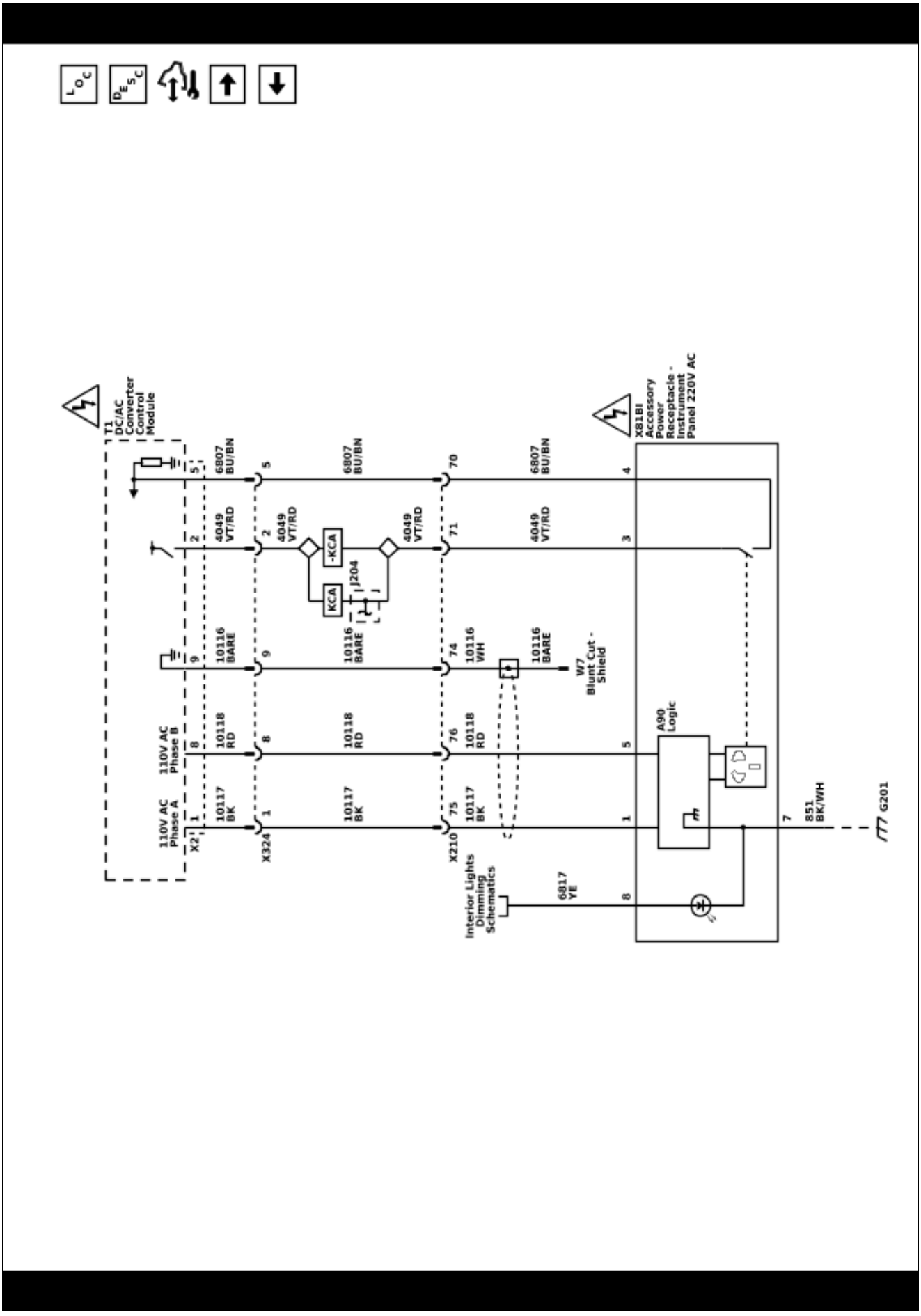

Cigar Lighter/Power Outlet Schematics (110V AC Pickup Box Accessory Power Receptacle (KC9))

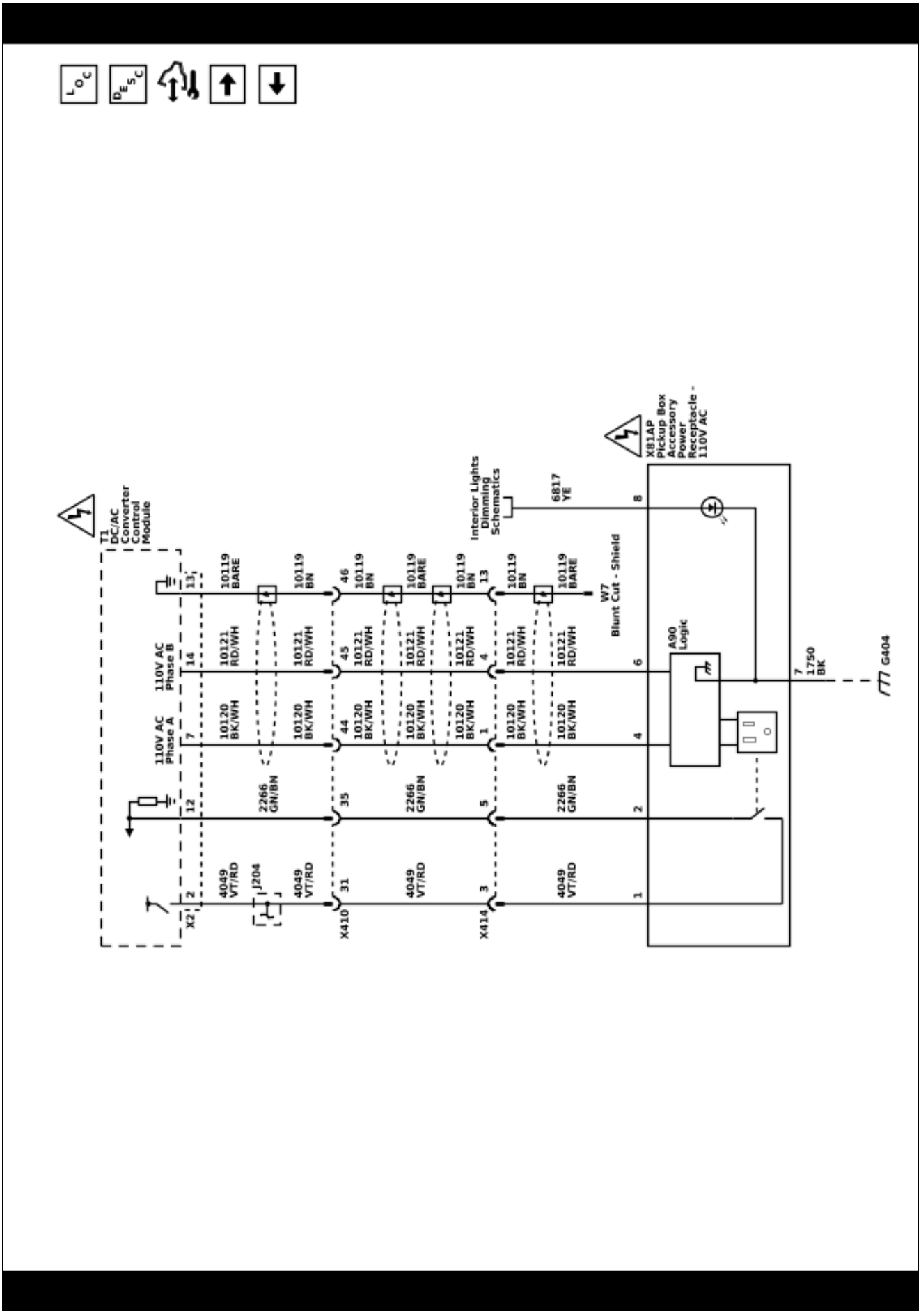

5967516

Cigar Lighter/Power Outlet Schematics (220V AC Pickup Box Accessory Power Receptacle (KCA))

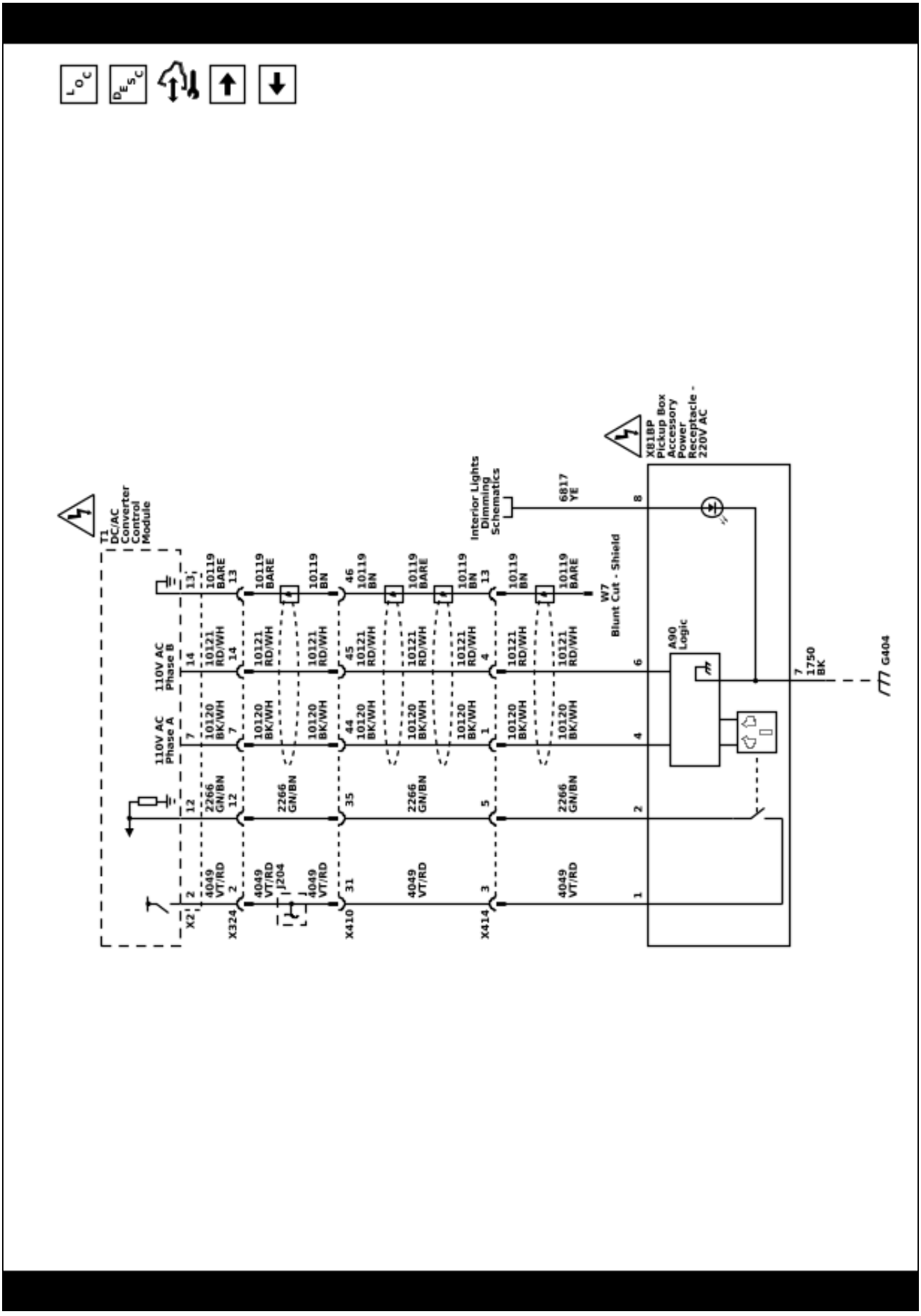

5967517

Cigar Lighter/Power Outlet Schematics (Wireless Charging (K4C))

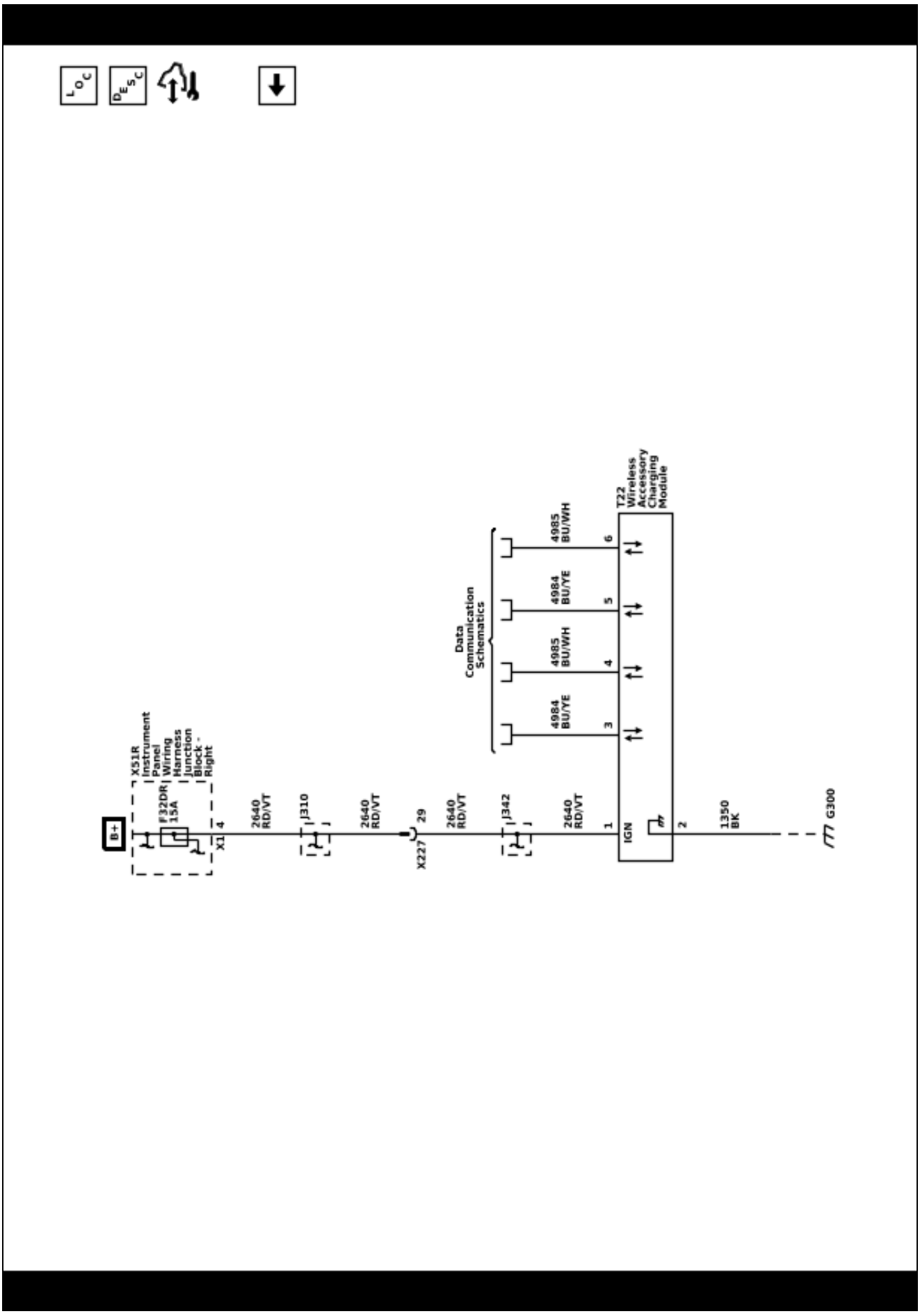

5967518

Description and Operation

Mobile Device Wireless Charger Description and Operation

Mobile Device Wireless Charging System

The Mobile Device Wireless Charging System (WCS) is an system for wirelessly charging mobile devices. It is capable of charging the batteries of compatible mobile devices. A compatible device is one that is compliant with Power Matters Alliance (PMA), Wireless Power Consortium (WPC) Standard, or Alliance for Wireless Power (A4WP), meaning that it is equipped with a PMA, WPC, or A4WP wireless charge “receiver” that will work with the charge “transmitter” installed in the vehicle. The devices may utilize built-in charging circuitry or an adapter (external plug-in device which contains the charging circuitry). To check for phone or other device compatibility, refer to GM Total Connect.

Warning: Remove all objects from the charging pad before charging your mobile device. Objects, such as coins, keys, rings, paper clips, or cards, between the phone and charging pad will become very hot. On the rare occasion that the charging system does not detect an object, and the object gets wedged between the phone and charger, remove the phone and allow the object to cool before removing it from the charging pad, to prevent burns.

Charging

To charge a device, place it on the charging surface in the vehicle. There is a charging coil located in the center of the charging surface. The device has a charging coil typically near the center of the device. These coils must be lined up in order for charging to proceed. When the interruptible retained accessory power (IRAP) relay is closed (this is true typically when vehicle ignition is in Run or Accessory position), the WCS will detect the device, establish communications with the device to confirm it is a compatible device, and then deliver charging power to the device via wireless interface. The WCS will be able to deliver 5W to 15W of power as requested by the compatible device. It shall only enter a charging state if communication is established and a compatible device is identified.

The WCS shall not enter a charging state if there is no communication established with a compatible device. Due to differences in objects, a foreign object detection protocol is employed to detect a non-compliant device and hold power transfer initiation until the non-compliant object has been removed and a compliant object has been detected. The charger monitors its internal temperature and will shut down if the charger temperature exceeds 185F (85C).

Indicator

The body control module will detect the device battery is charging and send a serial data message on the GMLAN bus to the radio display. The radio display will indicate a device is currently charging by displaying a lightning bolt over the phone icon. When the indicator is toggling on and off this indicates a thermal limit has been reached and the device will not charge. For more information refer to the owners manual.

Cooling

The wireless charger is kept cool using the HVAC system. There is a dedicated HVAC duct that connects to the Wireless Charging Module bracket (which holds the module and the mat).

Power Outlets Description and Operation

12 Volt Power Outlet Receptacle Description and Operation

The 12 V accessory power receptacles are supplied with power by the accessory relay.

The vehicle is fitted with a cigarette lighter and/or with a 12 V accessory power receptacle. The cigarette lighter and accessory power outlets are controlled by an ignition operated relay. The accessory power receptacle and cigarette lighter are operational when the ignition is turned to either the On or the Accessories positions. To operate the cigarette lighter, press in the lighter knob. When the element is hot, the lighter automatically pops out and is ready for use.

110 Volt Power Outlet Receptacle System Description

Power Outlets Block Diagram

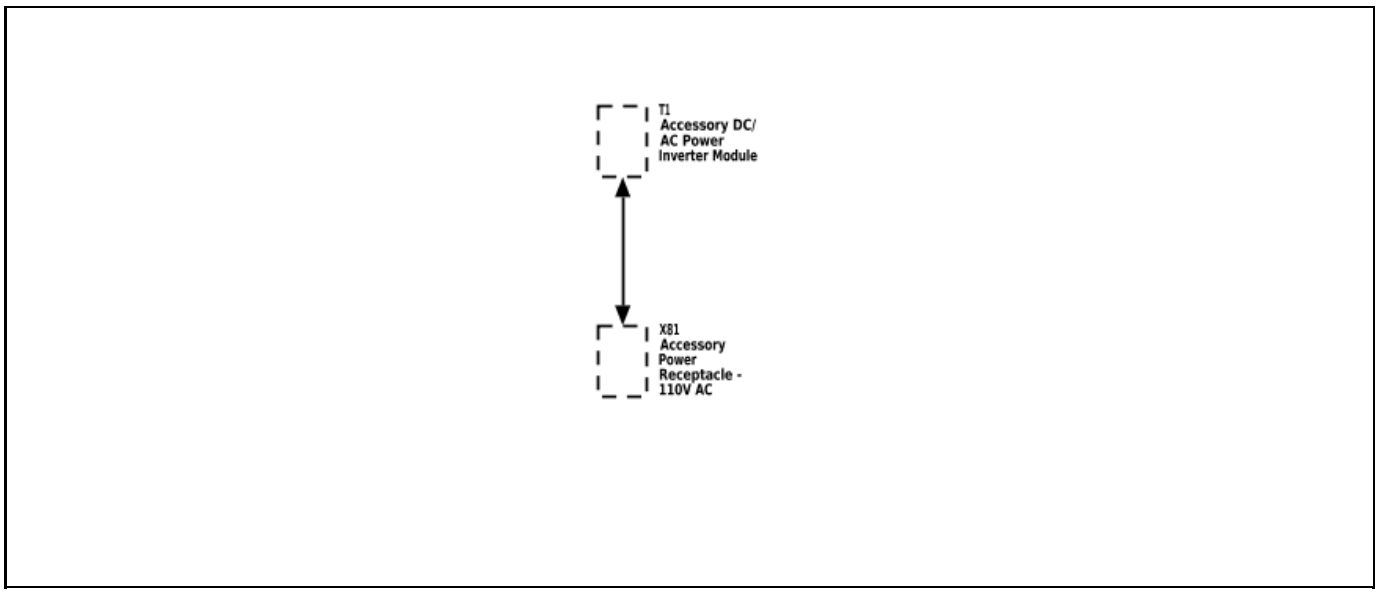

3403851

The alternating current (AC) accessory power outlet system consists of the accessory DC/AC power inverter module and the accessory power receptacle – 110 V AC. The accessory DC/AC power inverter module converts 12 V direct current (DC) battery power to 110 V at 60 Hertz (Hz) AC power to operate AC powered devices. The accessory DC/AC power inverter module provides up to 150 watts of power. The accessory power receptacle – 110 V AC provides the usual connection for AC powered devices.

110 Volt Power Outlet Receptacle System Operation

The accessory DC/AC power inverter module receives fuse protected battery voltage and is connected to the 12 V electrical system ground. The accessory power receptacle – 110 V AC has an internal switch, that detects when an AC powered device is plugged into the outlet. When the ignition is ON, and an AC powered device is plugged into the accessory power receptacle – 110 V AC, the normally open switch in the accessory power receptacle – 110 V AC, closes. When the accessory DC/AC power inverter module detects the voltage from the accessory power receptacle – 110 V AC switch, the inverter module begins to supply 110 V AC to the accessory power receptacle – 110 V AC after a 1.5 s delay. The accessory AC power system is protected against circuit overload and circuit shorts to ground.

110 Volt Power Outlet Receptacle Isolation Fault Protection

The accessory DC/AC power inverter module contains a ground fault circuit interrupter (GFCI). GFCI monitors the 110 V circuit for a short to vehicle chassis ground. If a 110 V AC short to ground is detected, the accessory DC/AC power inverter module will turn OFF. The module remains OFF, until the AC powered device is unplugged from the outlet, and then plugged into the outlet after a 3 s delay.

110 Volt Power Outlet Receptacle Overload Shutdown

The accessory DC/AC power inverter module will turn OFF if the current in the 110 V circuit is greater than 3.8 A for 1 s , or 2.5 A for 10 s . The module will turn ON again, when the AC powered device is unplugged from the outlet, and then plugged into the outlet after a 3 s delay.

110 Volt Power Outlet Receptacle Internal Shutdown

The accessory DC/AC power inverter module will turn OFF if the B+ supply voltage is greater than 16.5 V or less than 11 V. The module will also turn OFF if the device temperature is greater than 85°C (185°F). The module will turn ON again, after the shutdown condition is corrected, and the AC powered device is unplugged from the outlet, and then plugged into the outlet.

230 Volt Power Outlet Receptacle System Description

Power Outlets Block Diagram

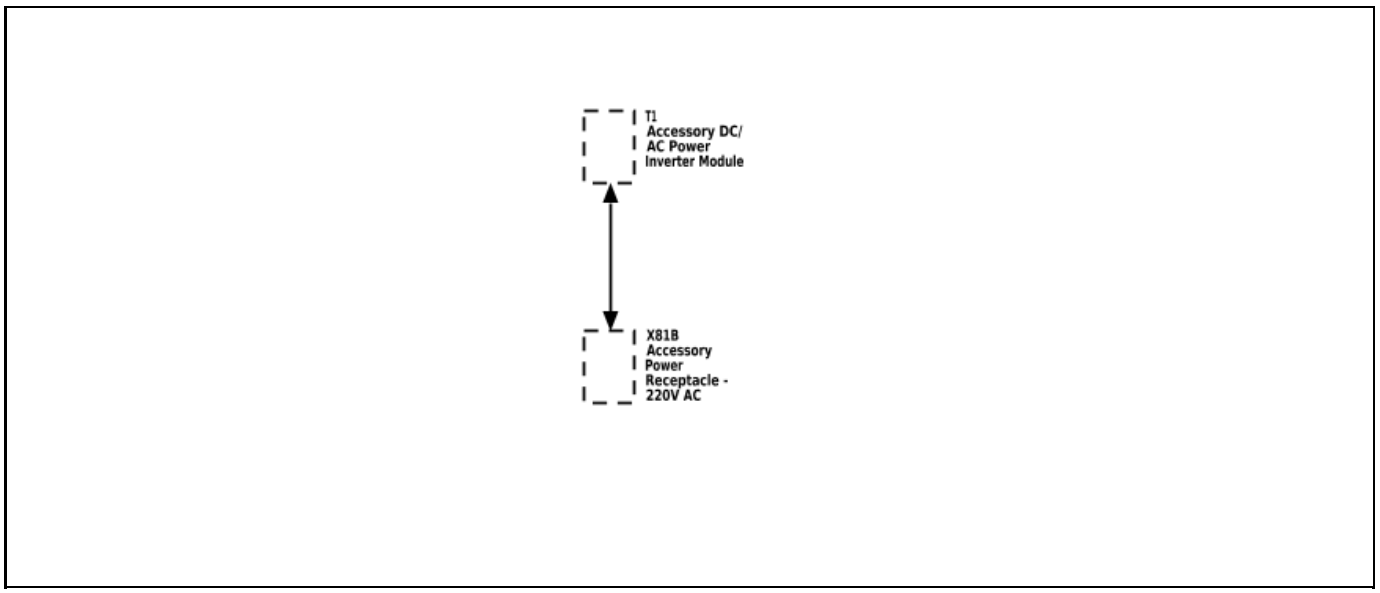

3403853

The alternating current (AC) accessory power outlet system consists of the accessory DC/AC power inverter module and the accessory power receptacle – 220V AC. The accessory DC/AC power inverter module converts 12 V direct current (DC) battery power to 220–230 V at 50 Hertz (Hz) AC power to operate AC powered devices. The accessory DC/AC power inverter module provides up to 150 watts of power. The accessory power receptacle – 220V AC provides the usual connection for AC powered devices.

230 Volt Power Outlet Receptacle System Operation

The accessory DC/AC power inverter module receives fuse protected battery voltage and is connected to the 12 V electrical system ground. The accessory power receptacle – 220V AC has an internal switch, that detects when an AC powered device is plugged into the outlet. When the ignition is ON, and an AC powered device is plugged into the accessory power receptacle – 220V AC, the normally open switch in the accessory power receptacle – 220V AC, closes. When the accessory DC/AC power inverter module detects the voltage from the accessory power receptacle – 220V AC switch, the inverter module begins to supply 220–230 V AC to the accessory power receptacle – 220V AC after a 1.5 second delay. The accessory AC power system is protected against circuit overload and circuit shorts to ground.

230 Volt Power Outlet Receptacle Isolation Fault Protection

The accessory DC/AC power inverter module contains a ground fault circuit interrupter (GFCI). GFCI monitors the 230 V circuit for a short to vehicle chassis ground. If a 230 V AC short to ground is detected, the accessory DC/AC power inverter module will turn OFF. The module remains OFF, until the AC powered device is unplugged from the outlet, and then plugged into the outlet after a 3 s delay.

230 Volt Power Outlet Receptacle Overload Shutdown

The accessory AC/DC power control module will turn OFF if the current in the 230 V circuit is greater than 3.8 A for 1 second, or 2.5 A for 10 seconds. The module will turn ON again, when the AC powered device is unplugged from the outlet, and then plugged into the outlet after a 3 second delay.

230 Volt Power Outlet Receptacle Internal Shutdown

The accessory DC/AC power inverter module will turn OFF if the B+ supply voltage is greater than 16.5 V or less than 11 V. The module will also turn OFF if the device temperature is greater than 85°C (185°F). The module will turn ON again, after the shutdown condition is corrected, and the AC powered device is unplugged from the accessory power receptacle – 220V AC, and then plugged into the accessory power receptacle – 220V AC.

USB Receptacle Description and Operation (USS)

The vehicle is fitted with USB charge port receptacles at the rear of the floor console. These USB receptacles are for charging devices only. The USB receptacles are controlled by an ignition operated relay and are operational when the ignition is turned to either the On or the Accessories positions.

Wiring Systems and Power Management

Schematic and Routing Diagrams

Power Distribution Schematics (Battery Distribution Engine Compartment Fuse Block)

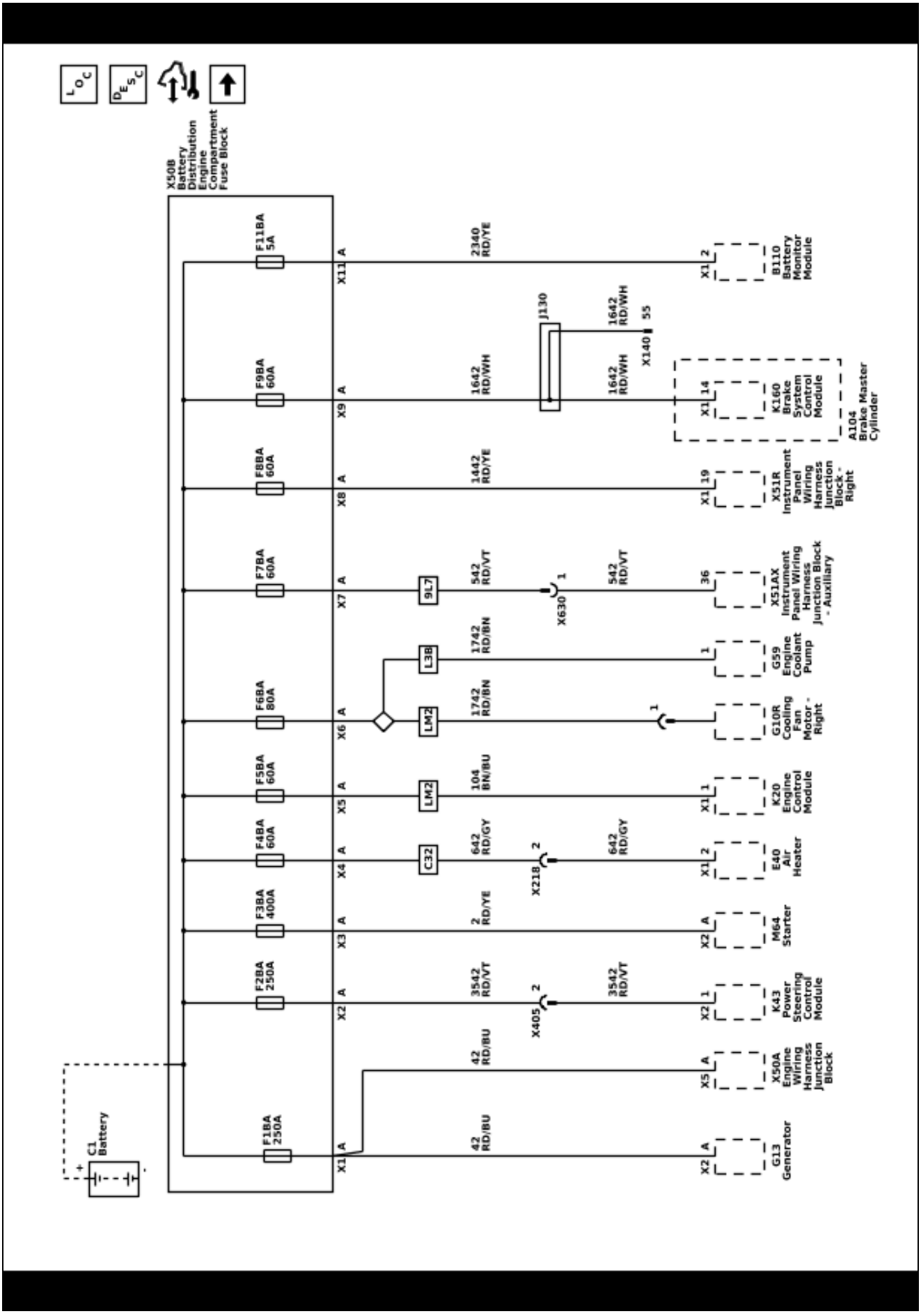

Power Distribution Schematics (Engine Wiring Harness Junction Block - B+ Bus (1 of 2))

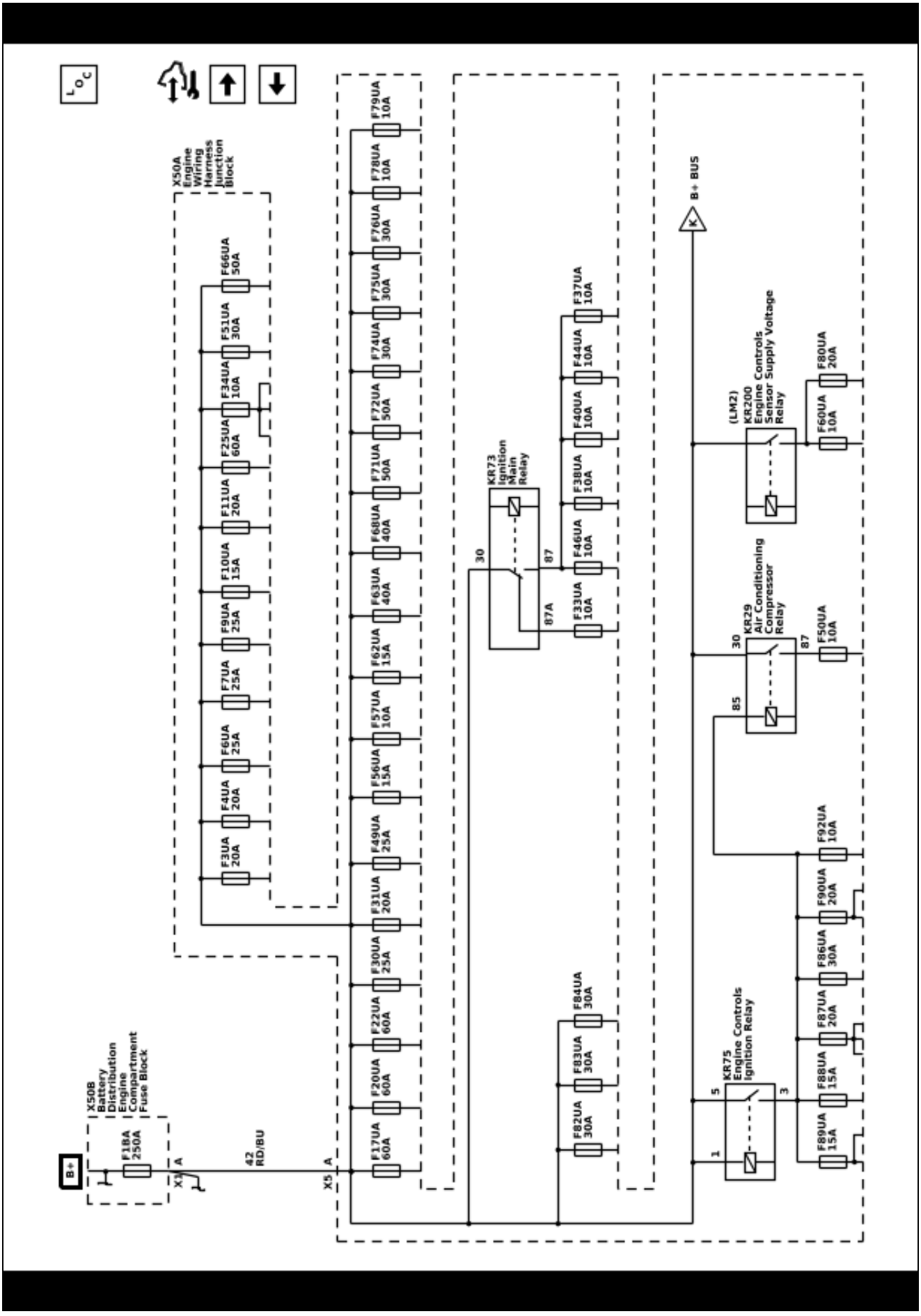

Power Distribution Schematics (Engine Wiring Harness Junction Block - B+ Bus (2 of 2))

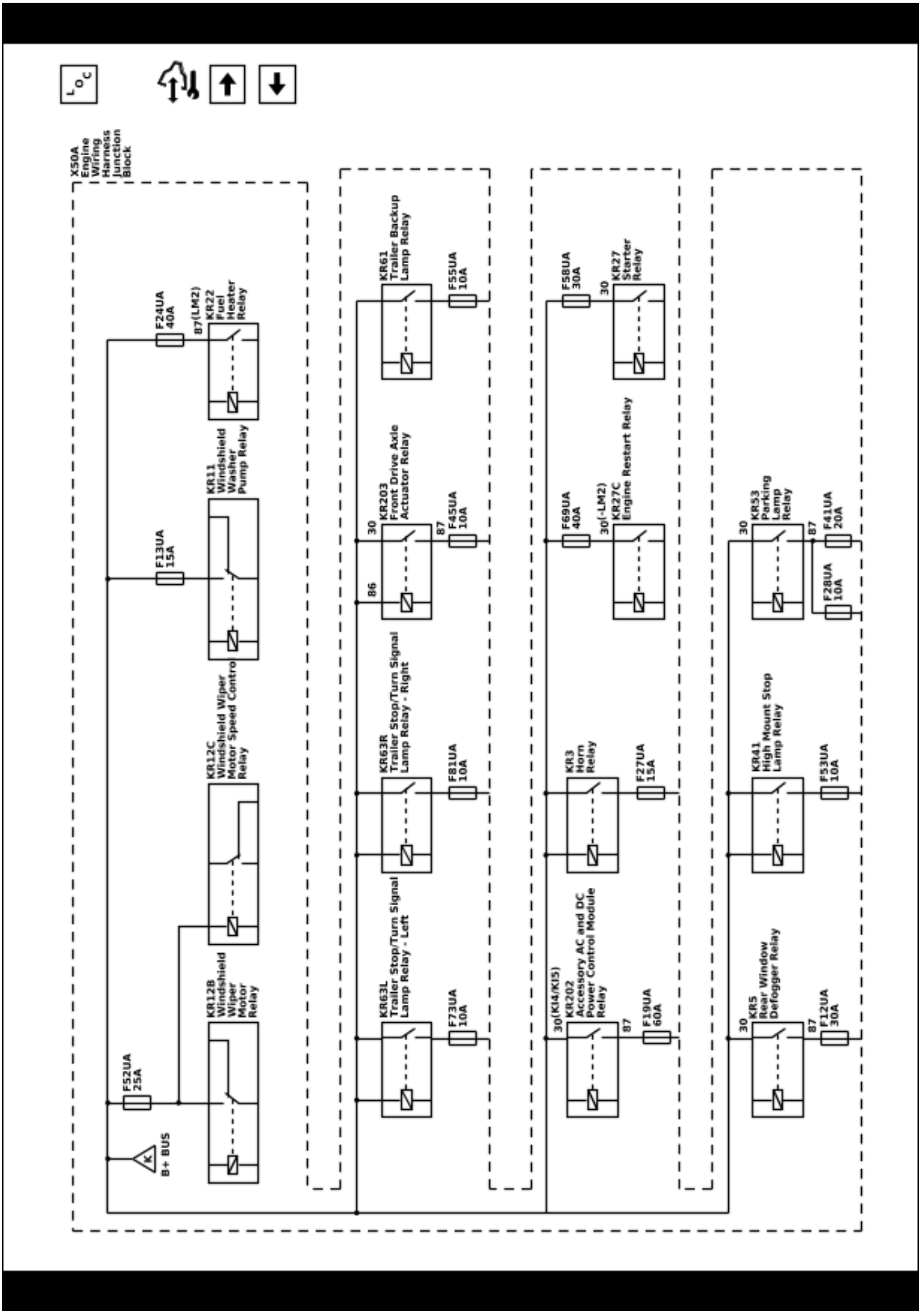

Power Distribution Schematics (F3UA, F4UA, F6UA, F7UA, F9UA, F10UA, F17UA, F20UA, F22UA, F25UA, F30UA, and F31UA Fuses)

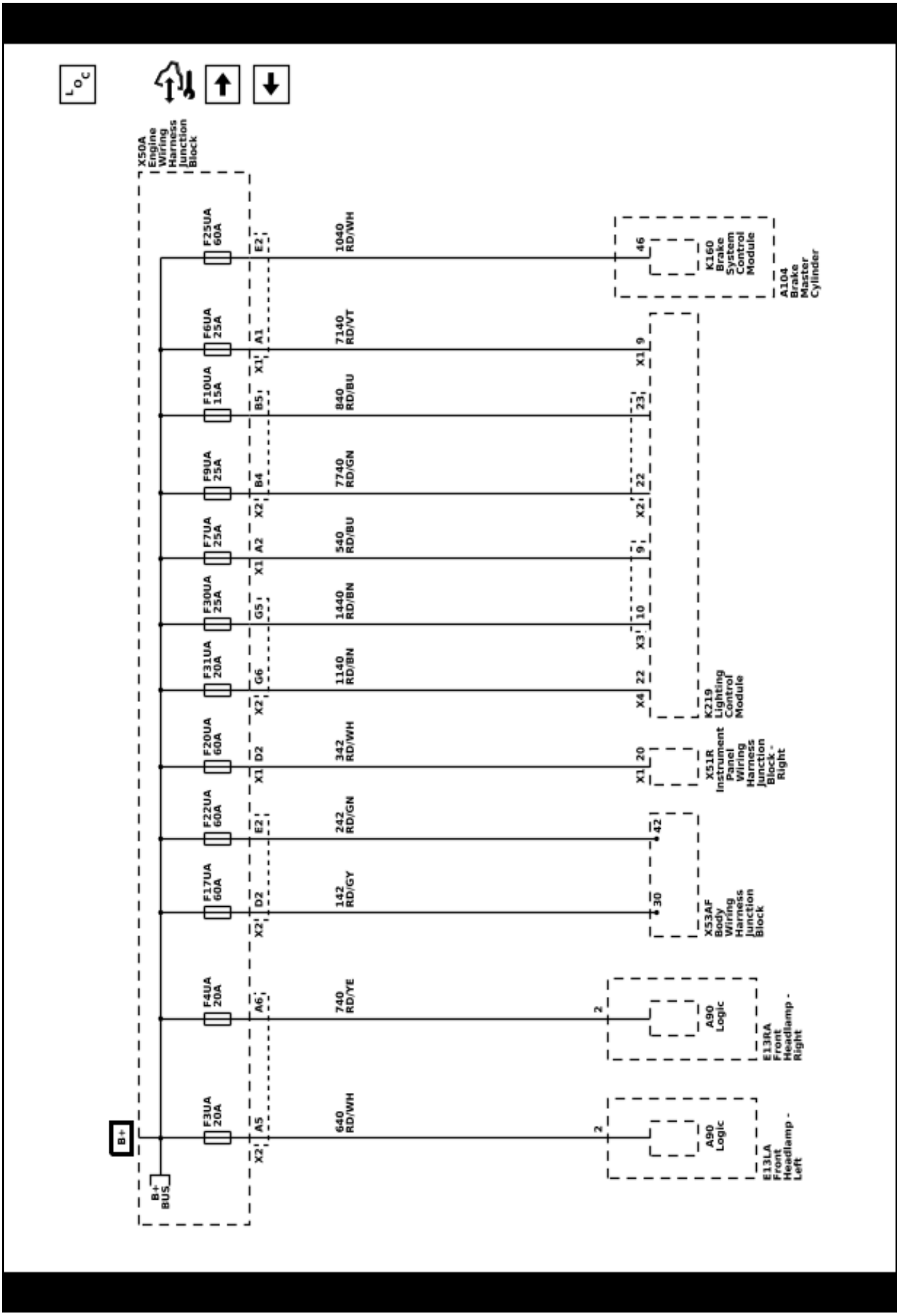

Power Distribution Schematics (F50UA, F55UA, F60UA, and F80UA Fuses)

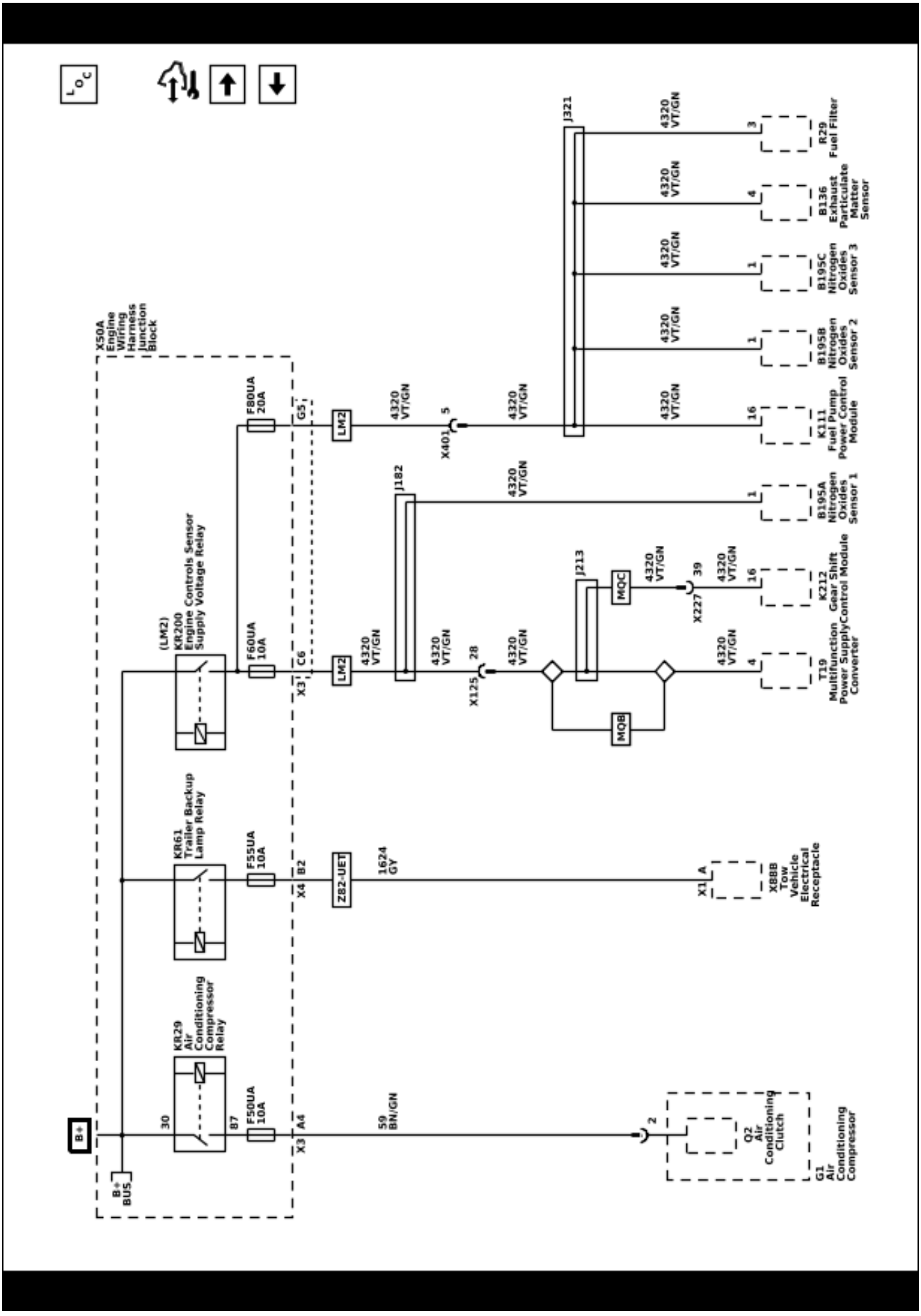

Power Distribution Schematics (F12UA, F27UA, F53UA, F73UA, and F81UA Fuses)

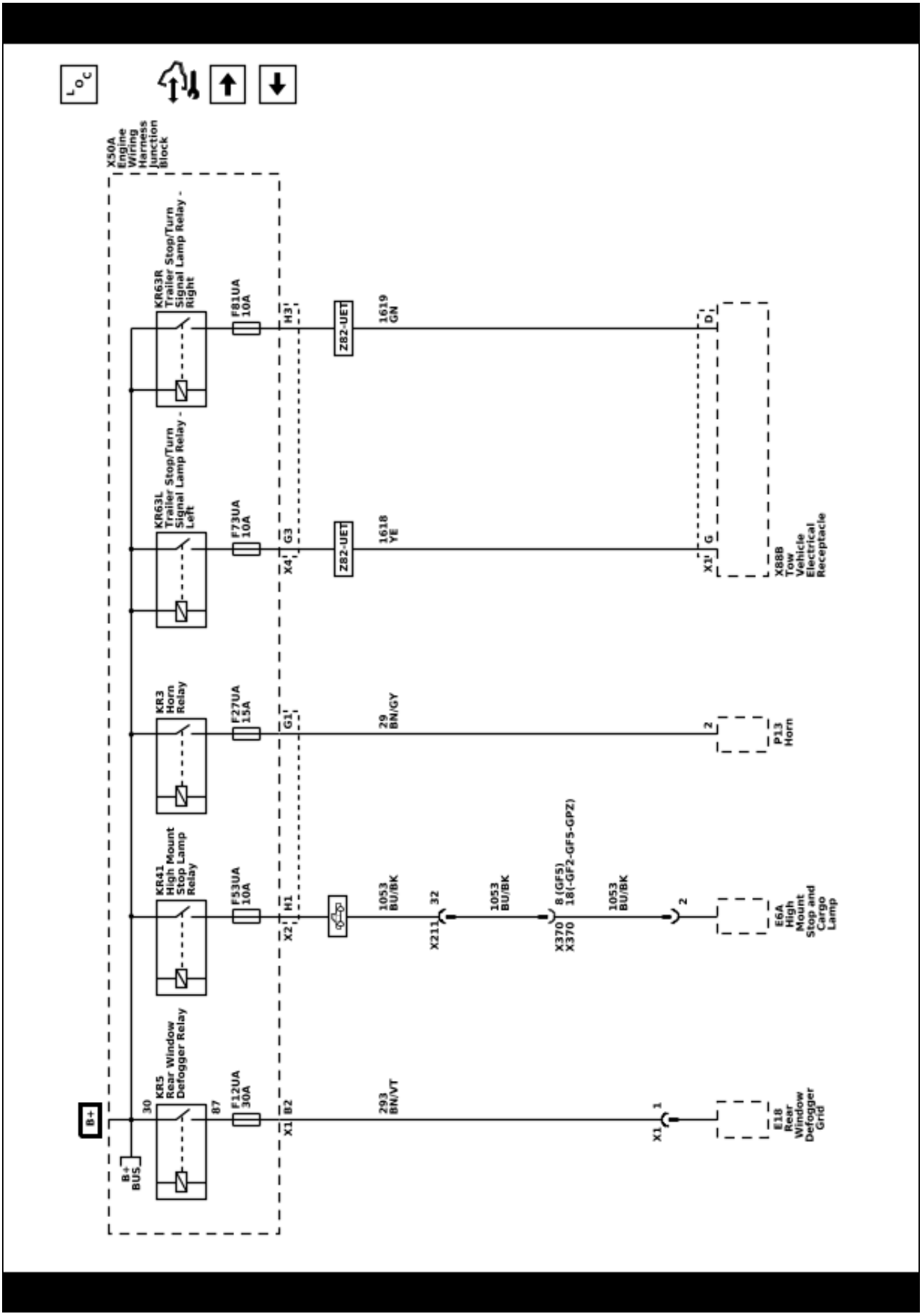

Power Distribution Schematics (F11UA, F19UA, F49UA, F56UA, F62UA, F63UA, F76UA, F82UA, F83UA, and F84UA Fuses)

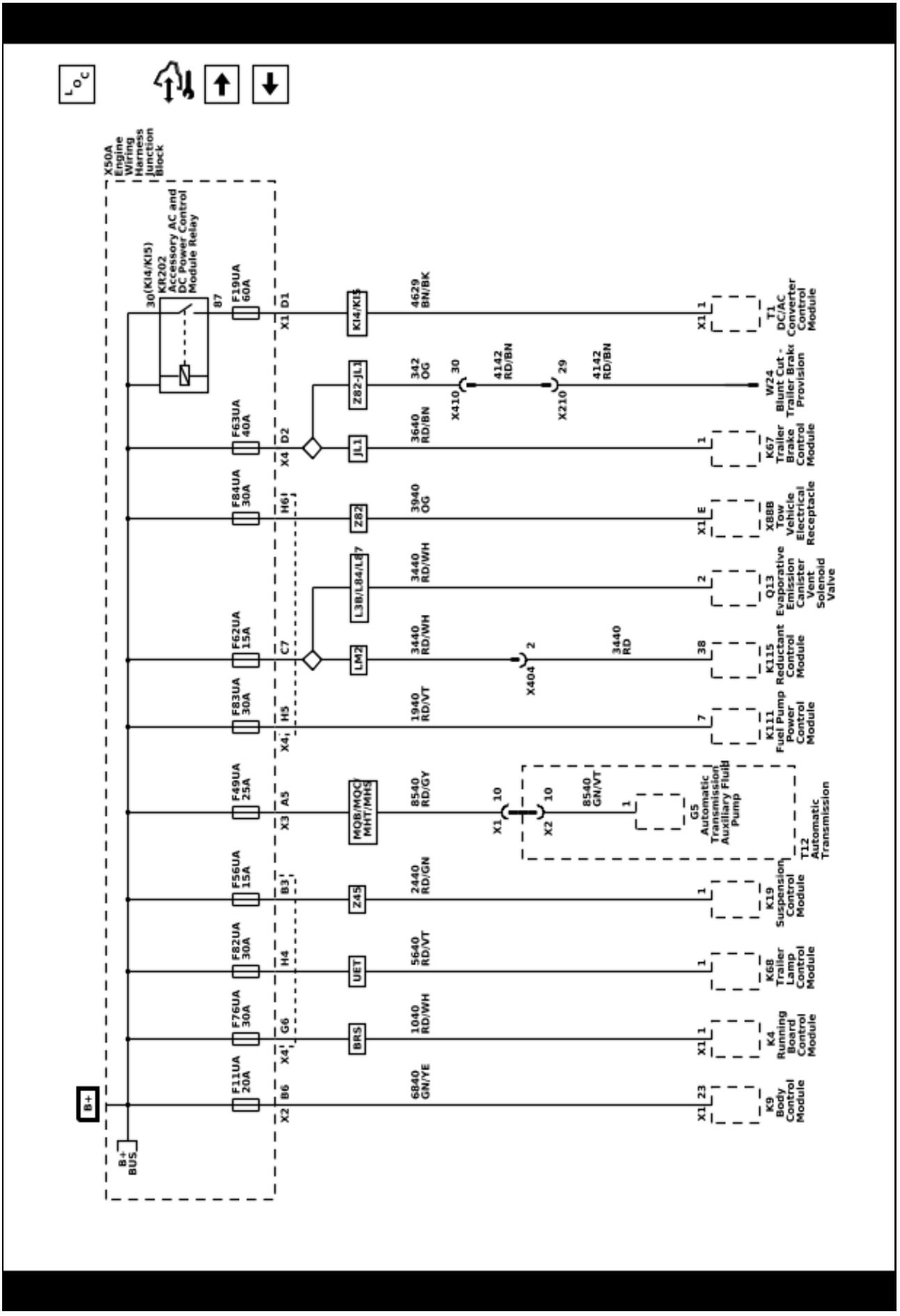

Power Distribution Schematics (F34UA, F51UA, F66UA, F71UA, F72UA, F74UA, F75UA, and F78UA Fuses)

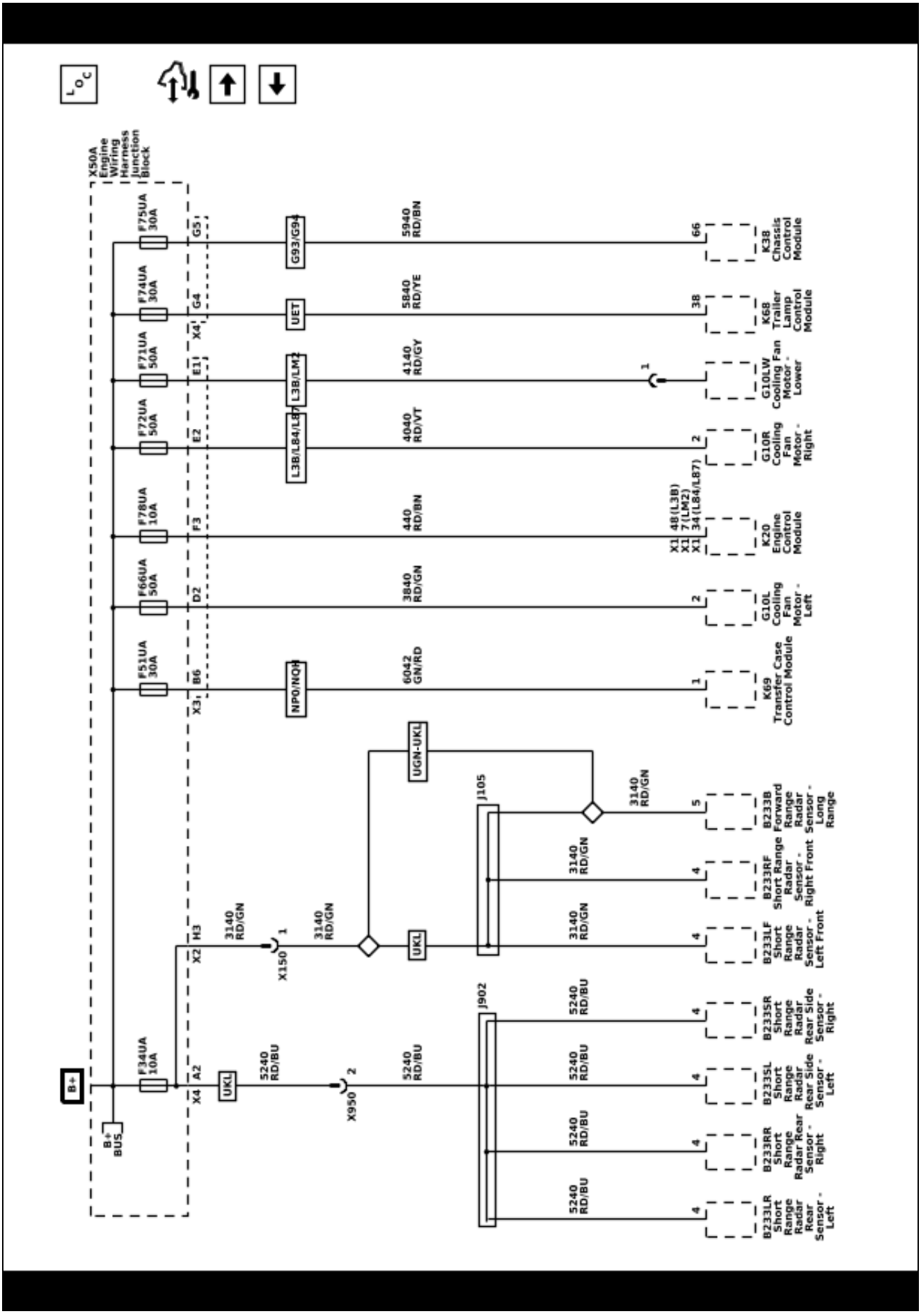

Power Distribution Schematics (F33UA, F38UA, F40UA, and F46UA Fuses)

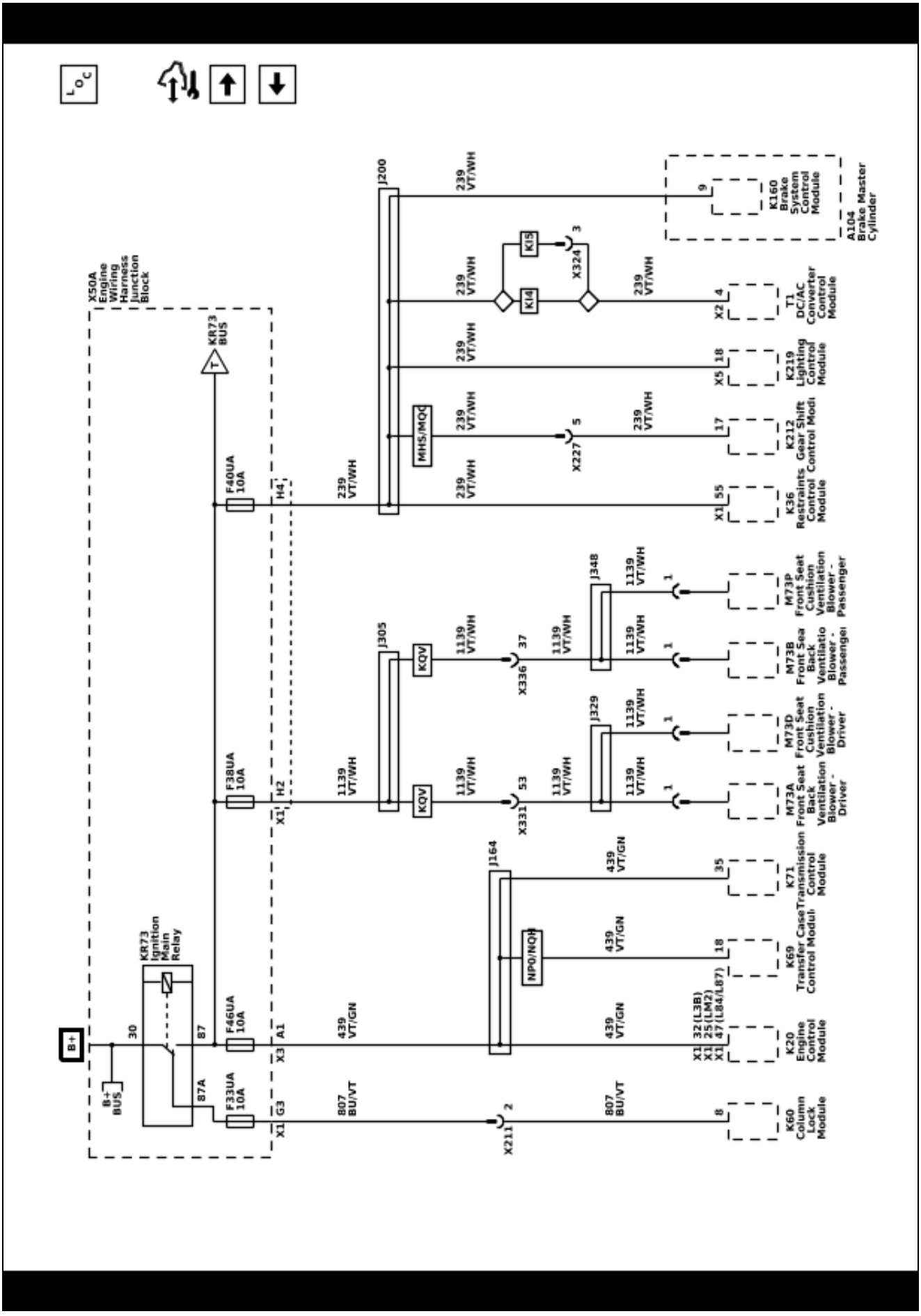

Power Distribution Schematics (F37UA and F44UA Fuses)

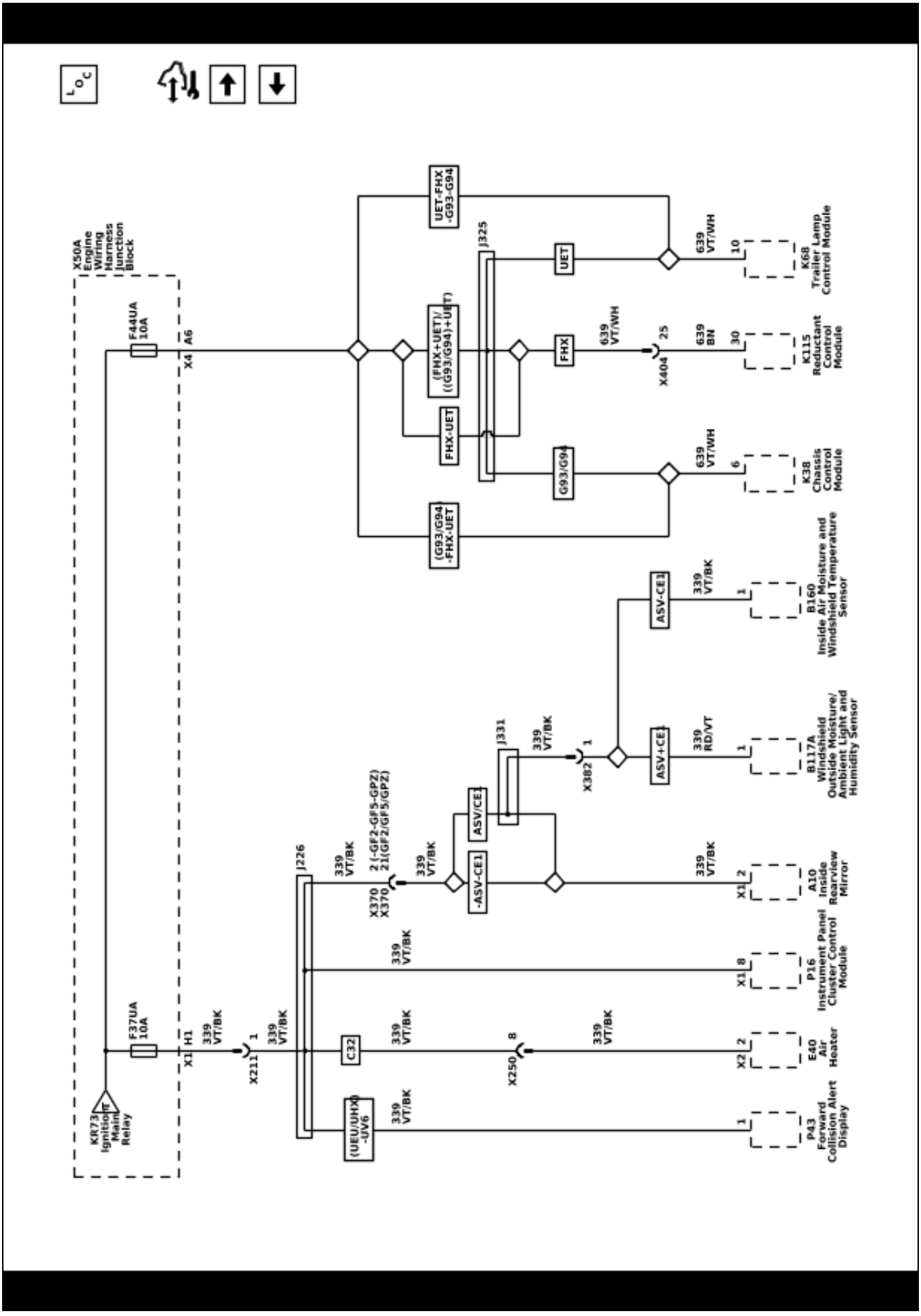

Power Distribution Schematics (F28UA, F41UA, F45UA, F57UA, F68UA, and F79UA Fuses)

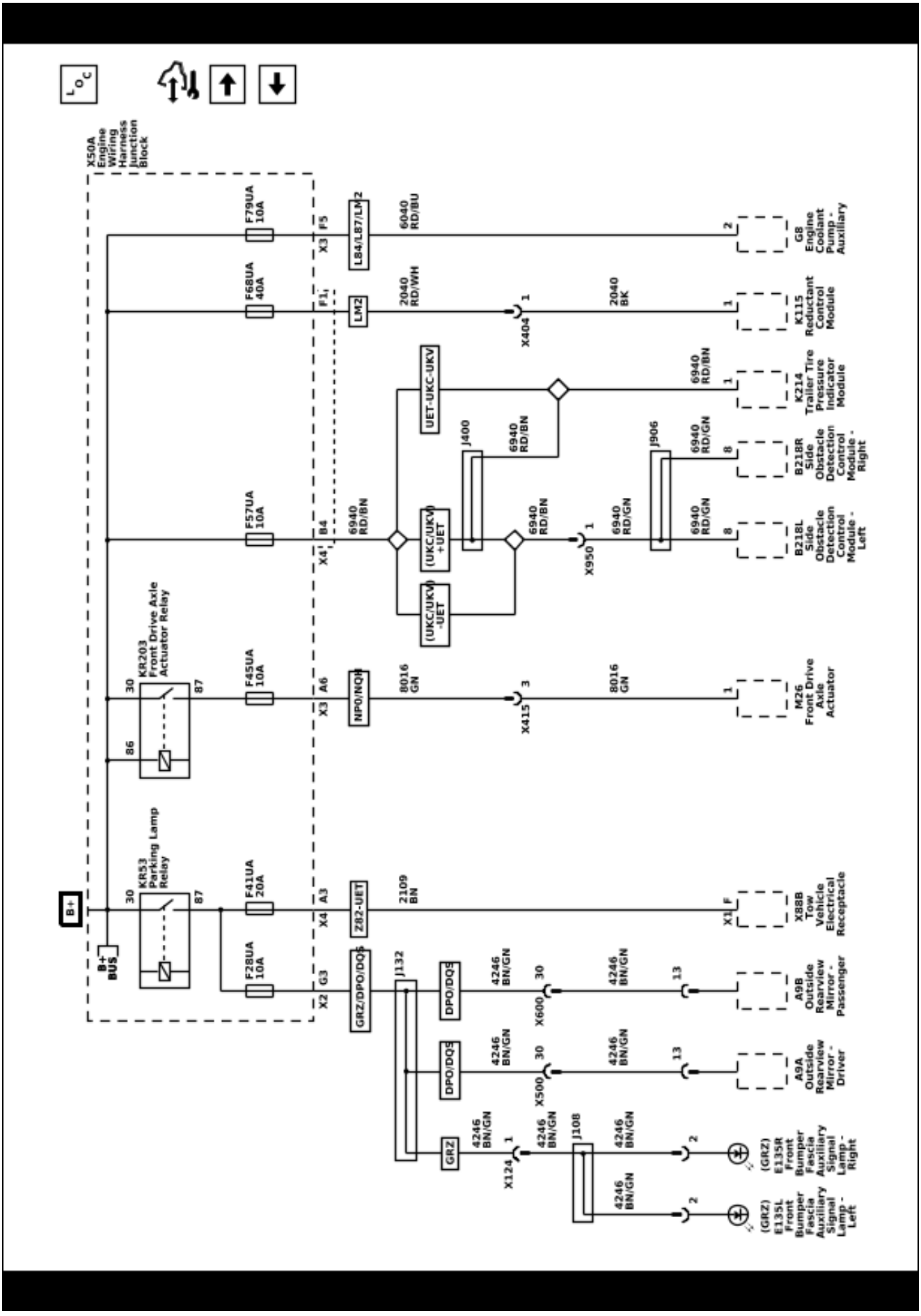

Power Distribution Schematics (F89UA Fuse)

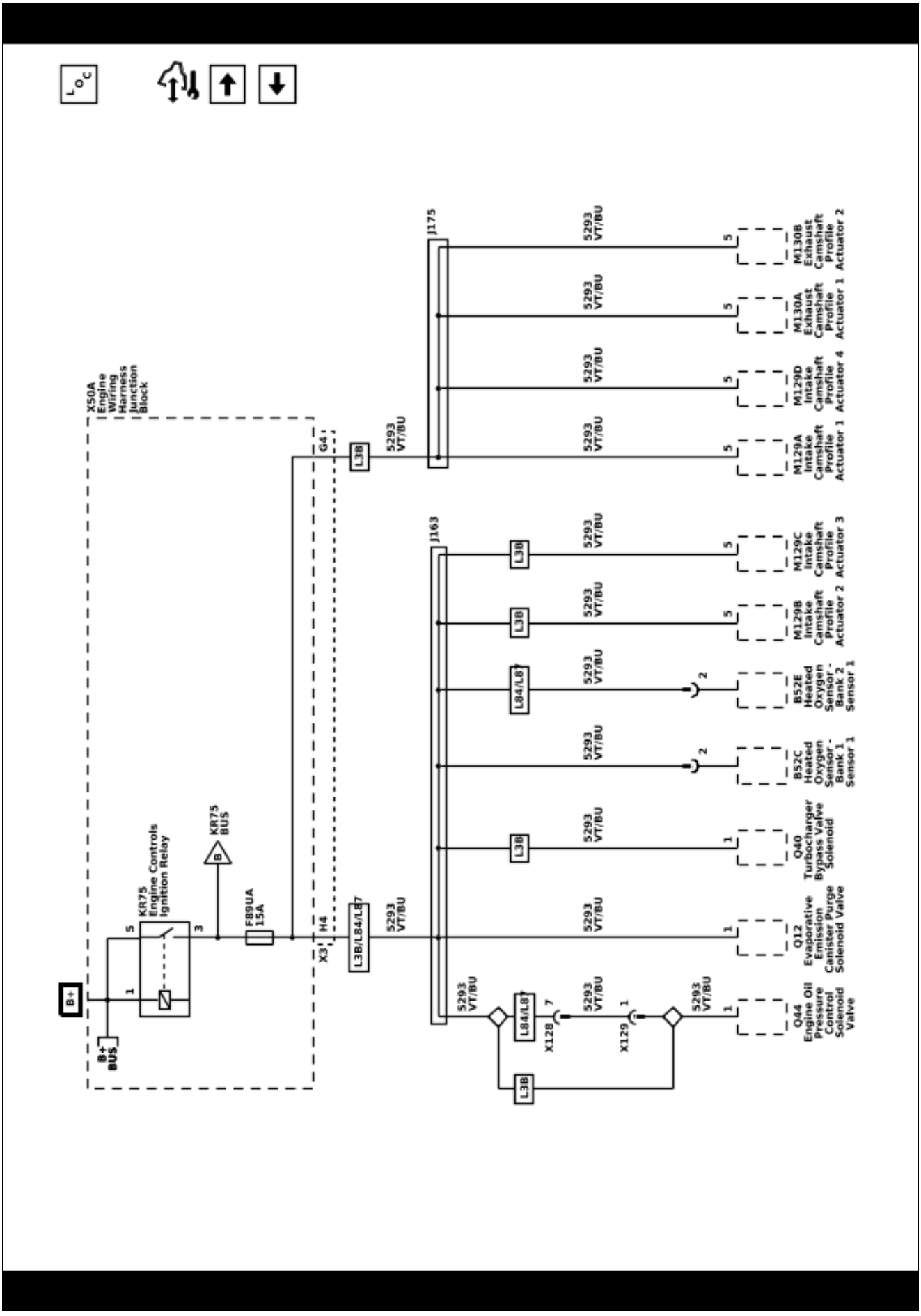

Power Distribution Schematics (F86UA and F88UA Fuses)

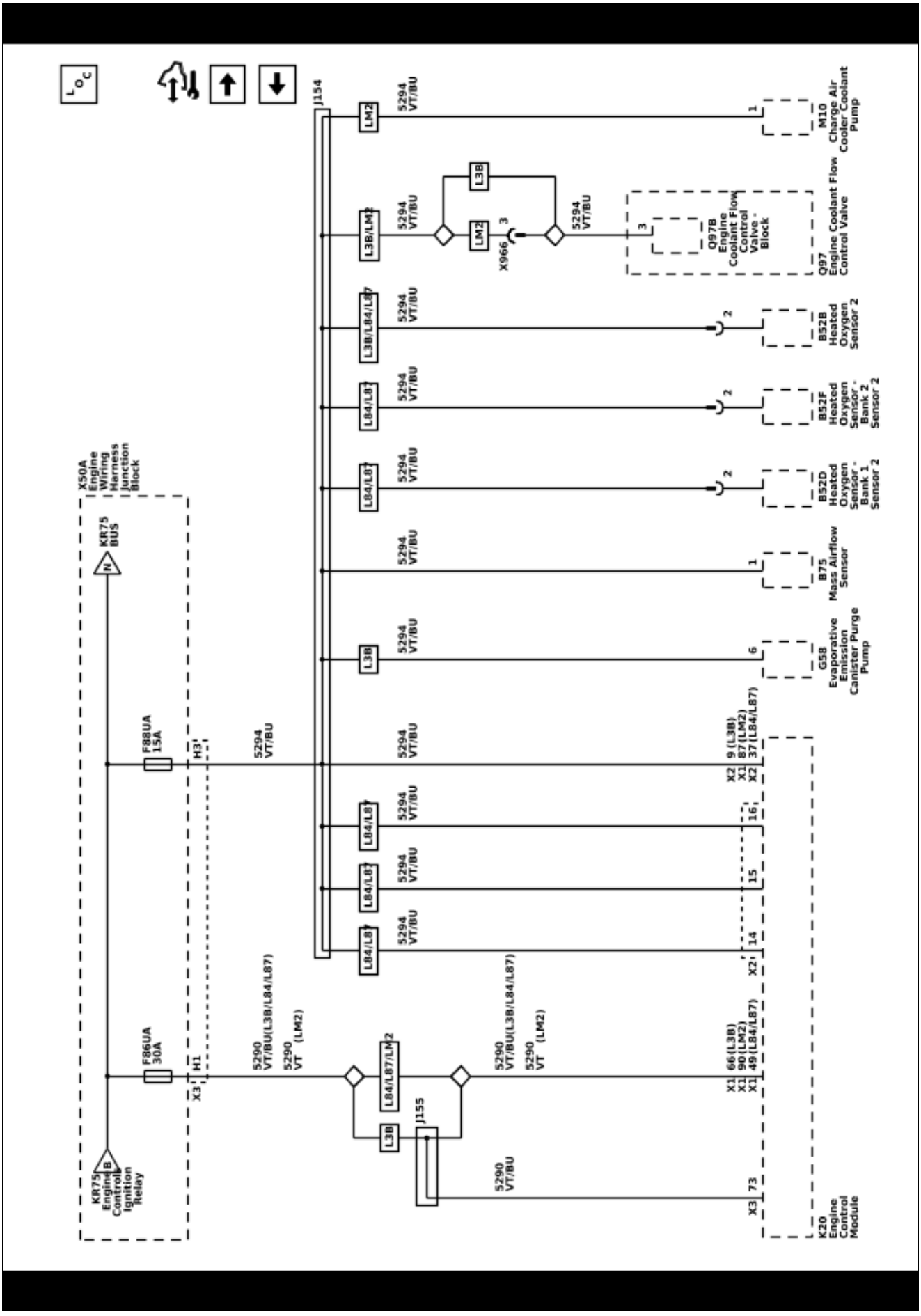

Power Distribution Schematics (F87UA, F90UA, and F92UA Fuses)

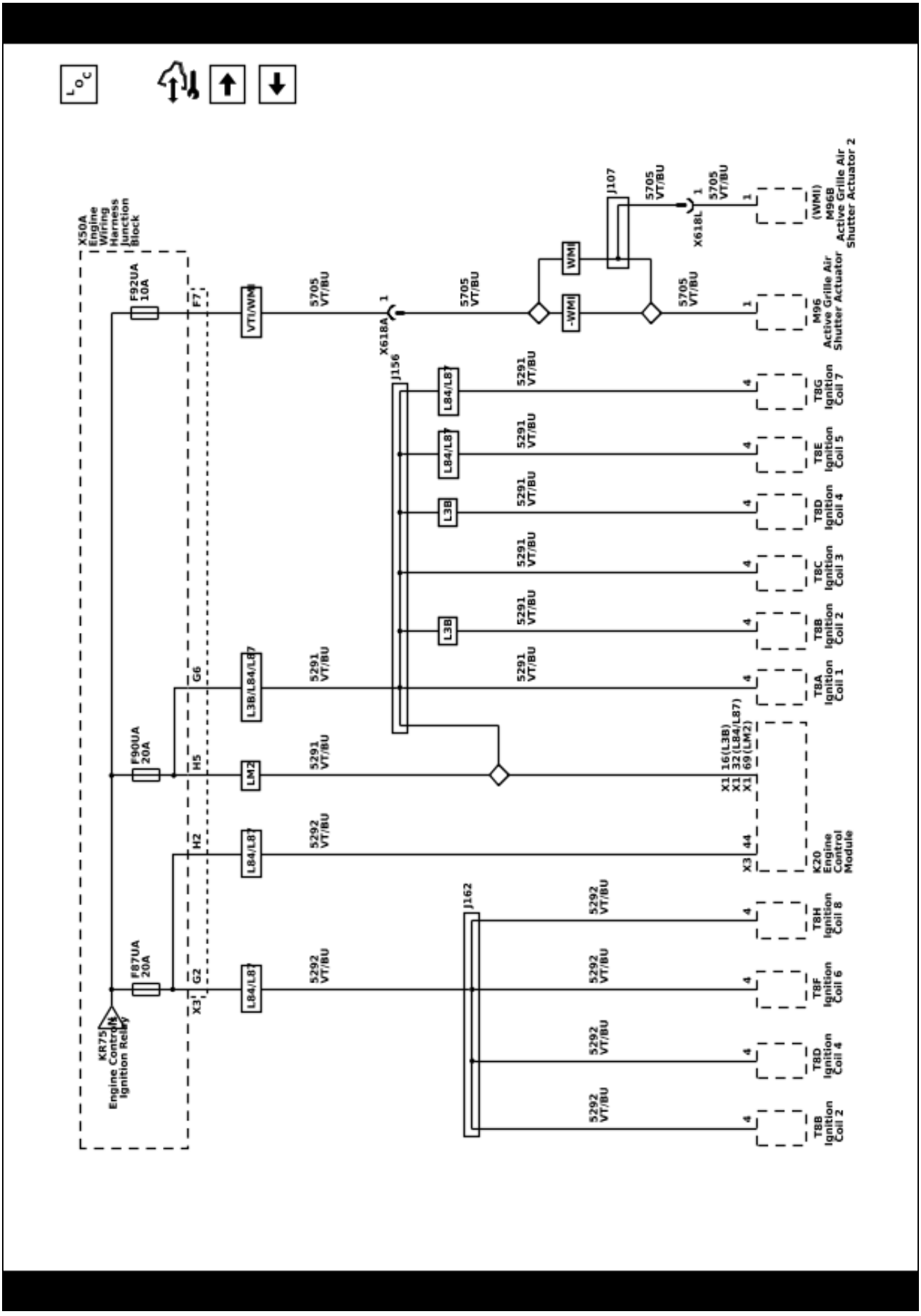

Power Distribution Schematics (F1DL, F6DL, F14DL, F17DL, and F23DL Fuses)

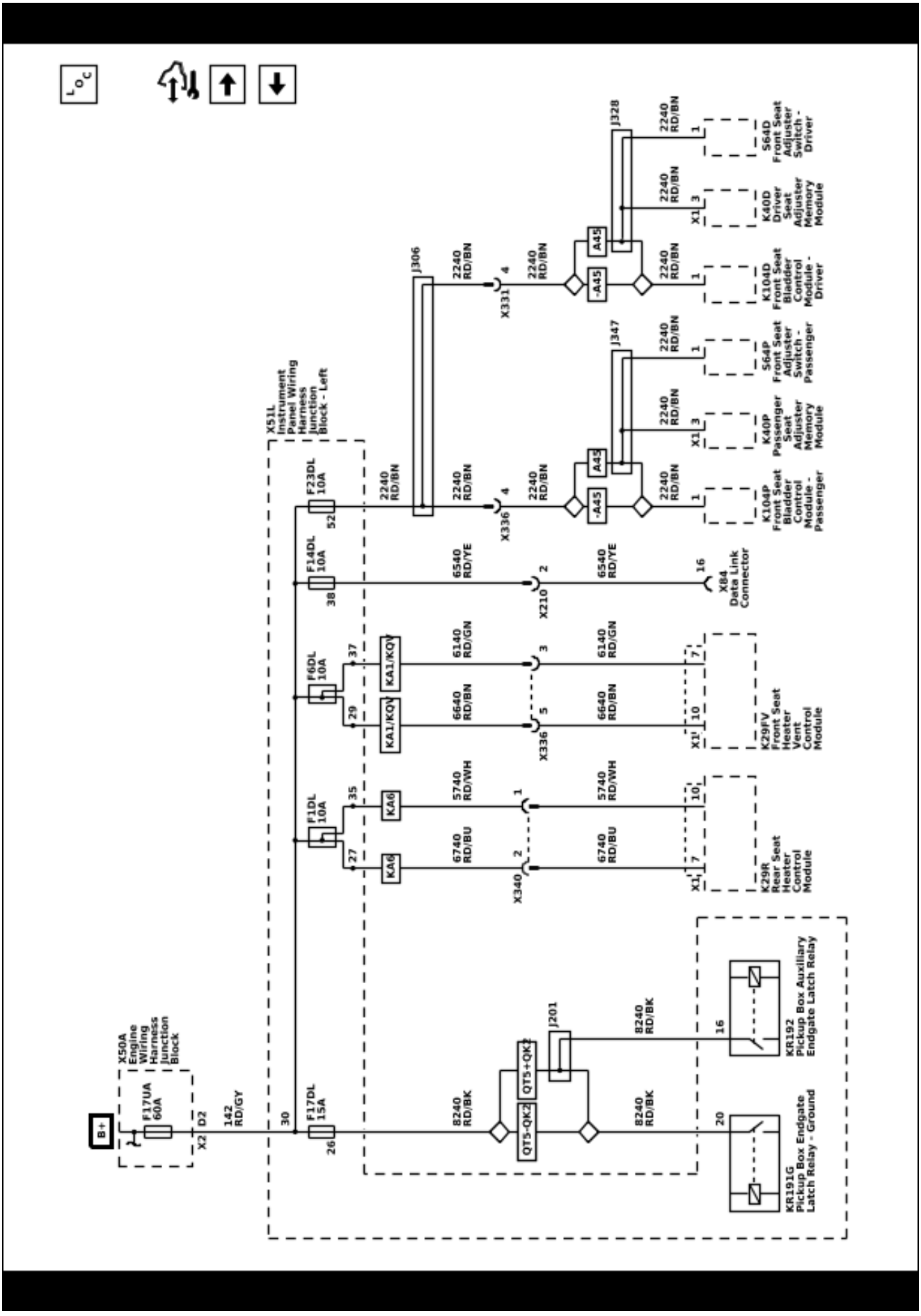

Power Distribution Schematics (F9DL, F12DL, F16DL, F20DL, and F22DL Fuses)

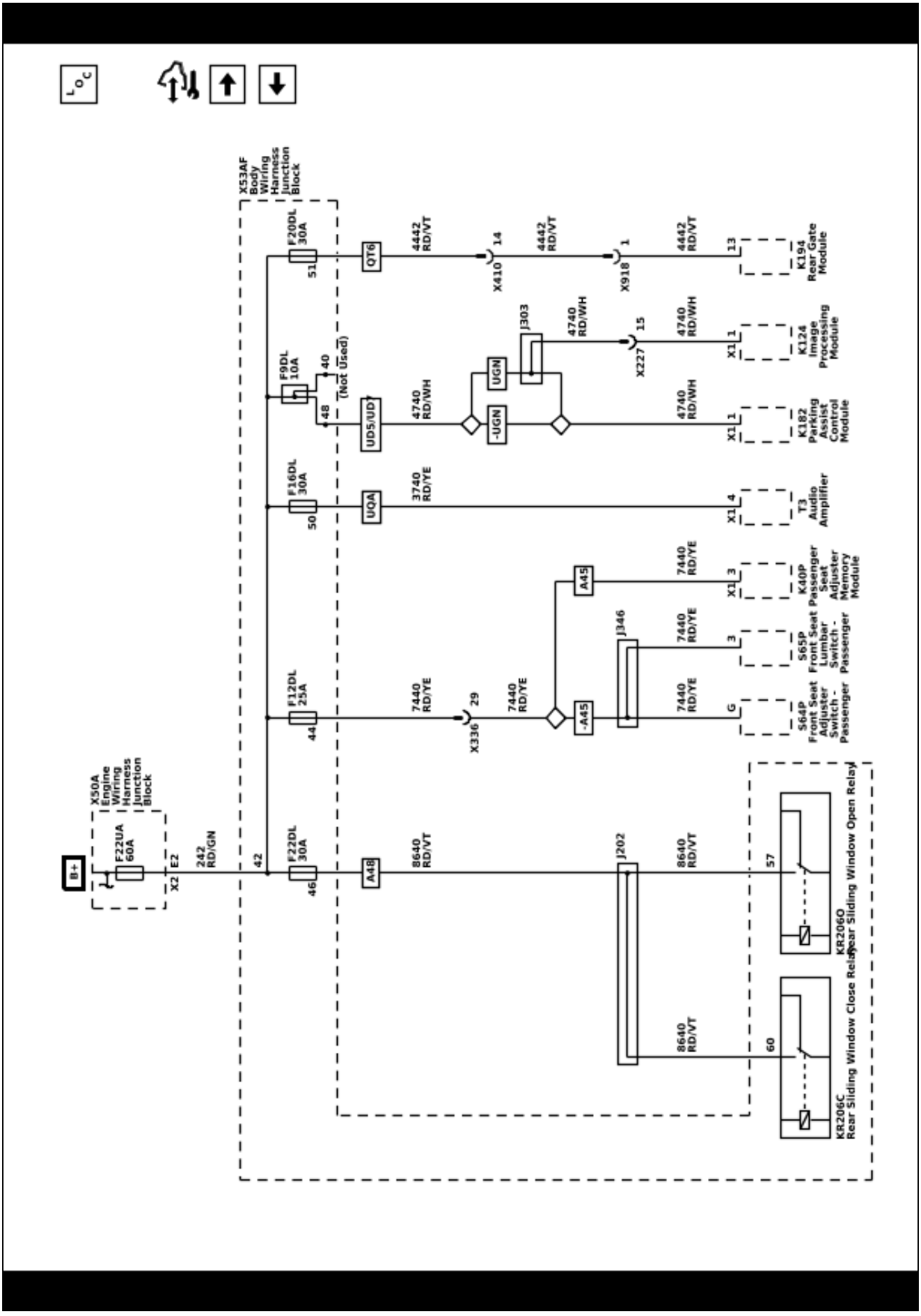

Power Distribution Schematics (Instrument Panel Wiring Harness Junction Block - Auxiliary (9L7))

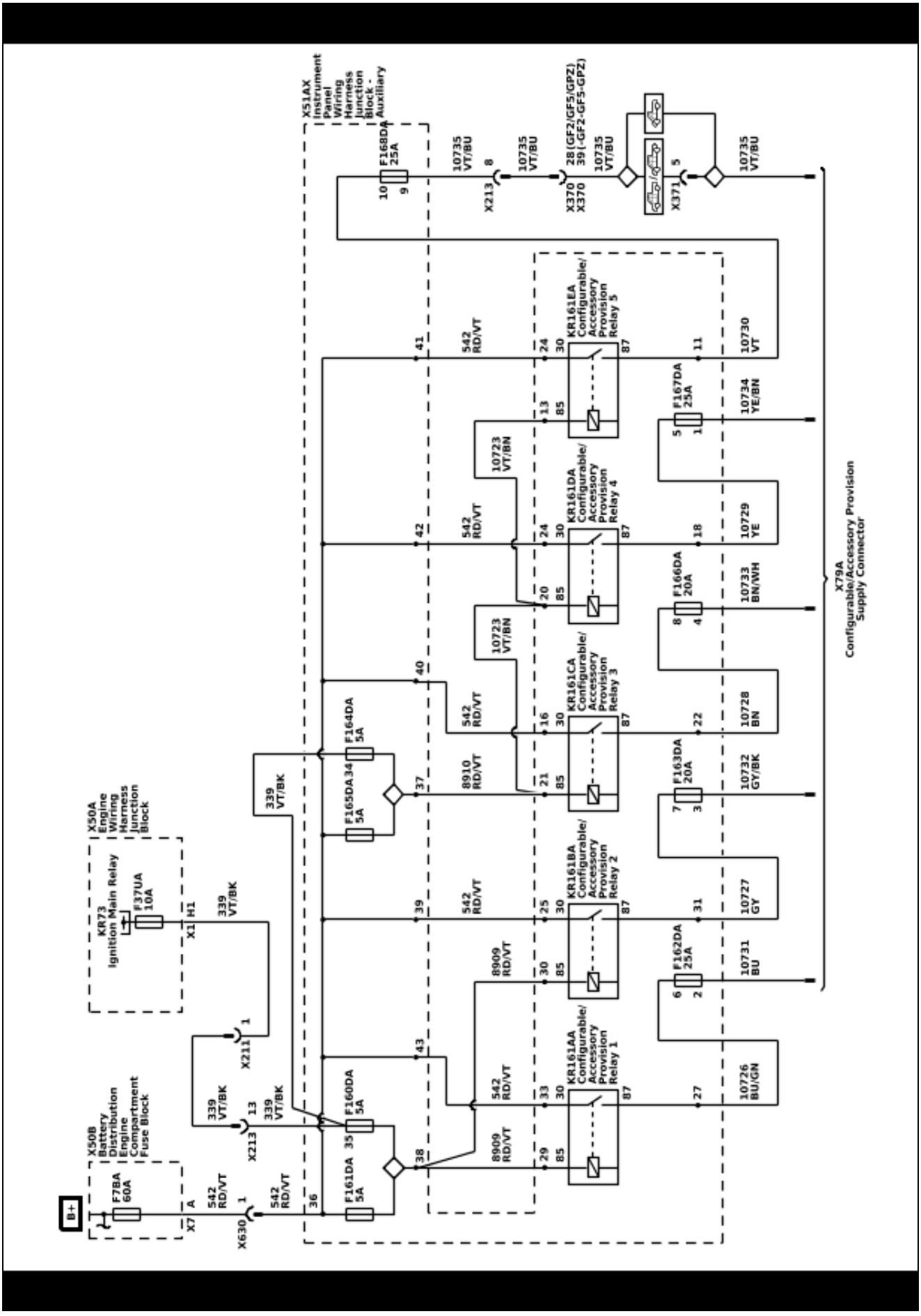

Power Distribution Schematics (Instrument Panel Wiring Harness Junction Block - Right - B+ Bus)

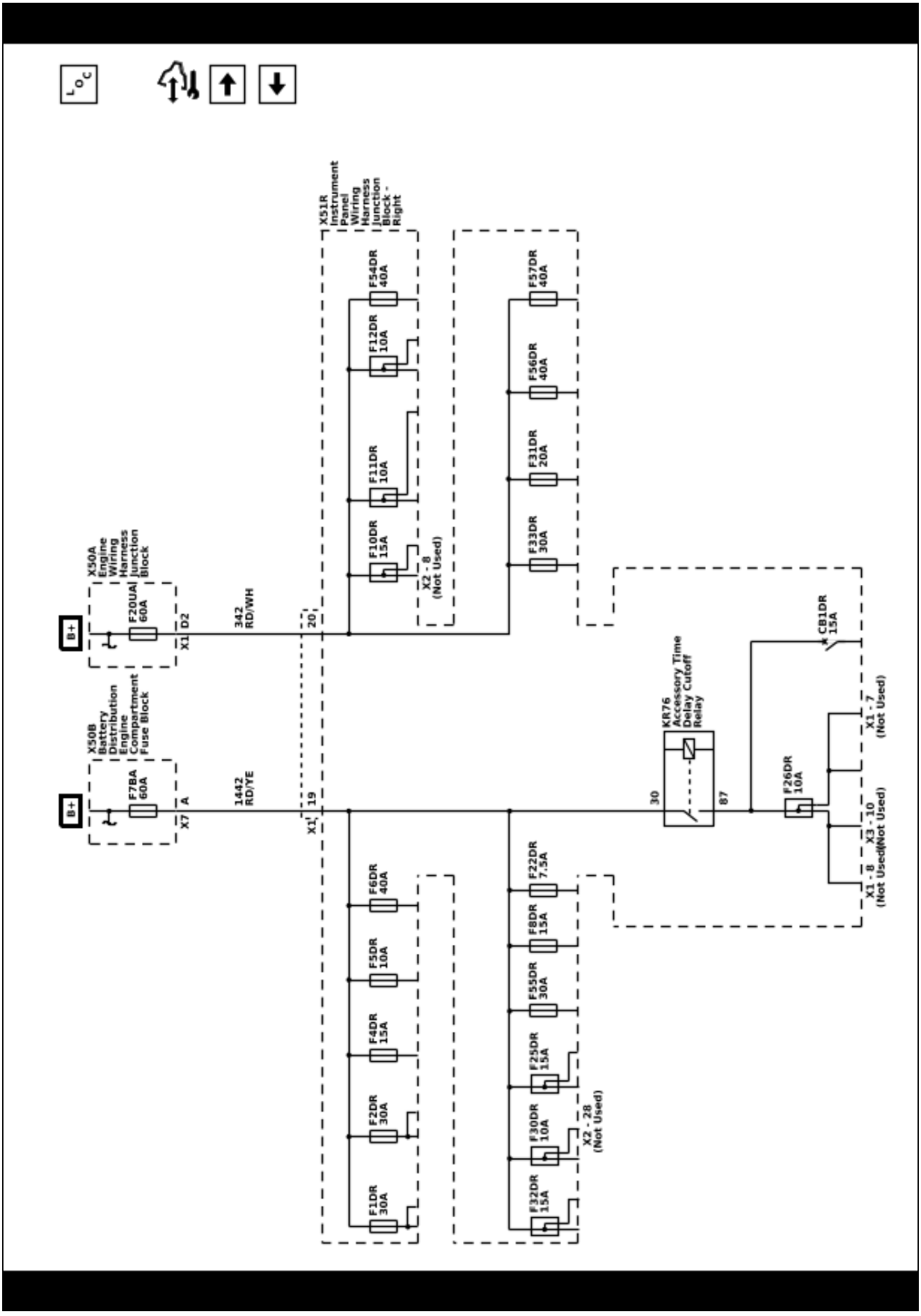

Power Distribution Schematics (CB1DR Circuit Breaker, F26DR, F30DR, and F32DR Fuses)

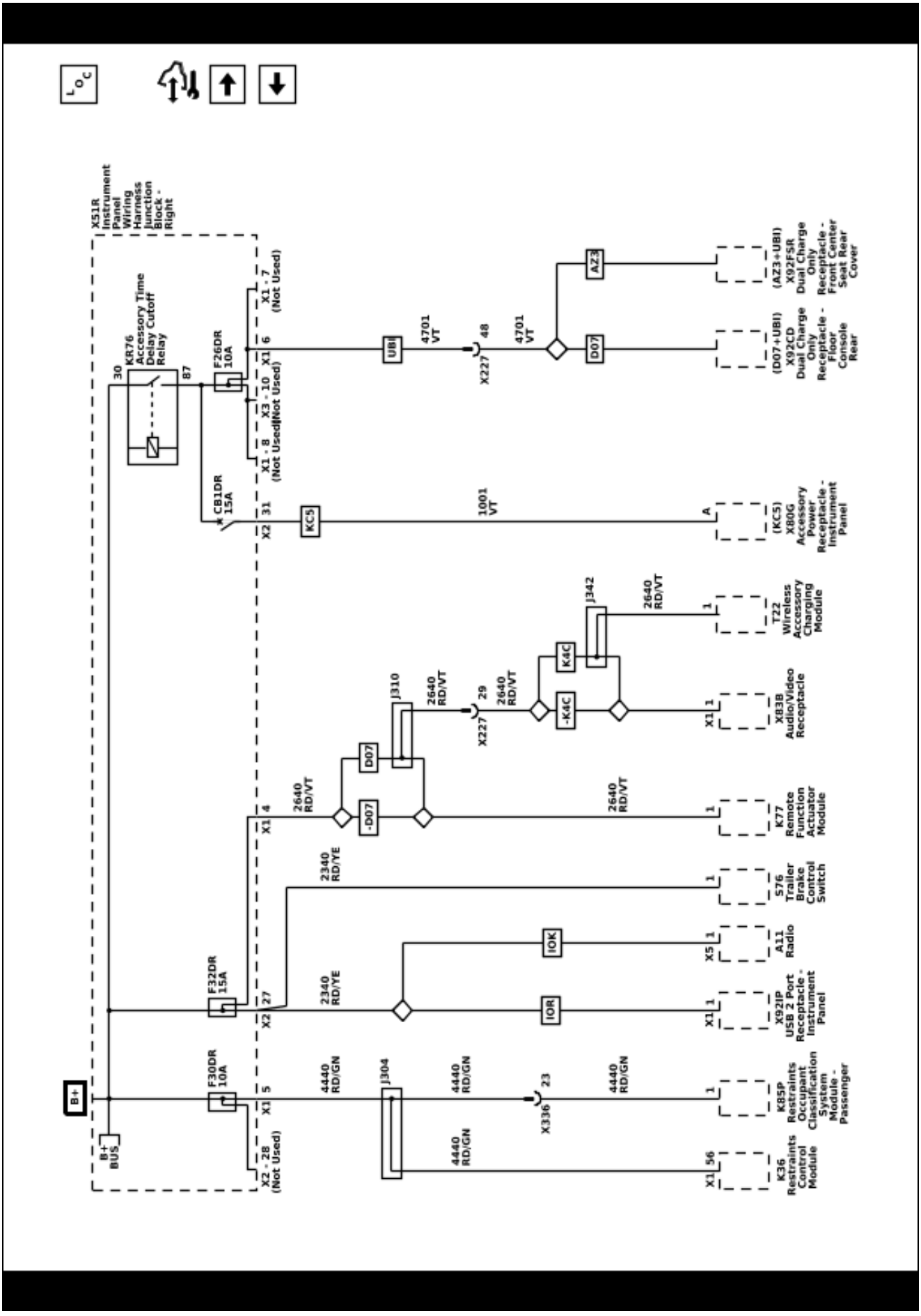

Power Distribution Schematics (F1DR, F2DR, F6DR, F8DR, F25DR, F31DR, and F33DR Fuses)

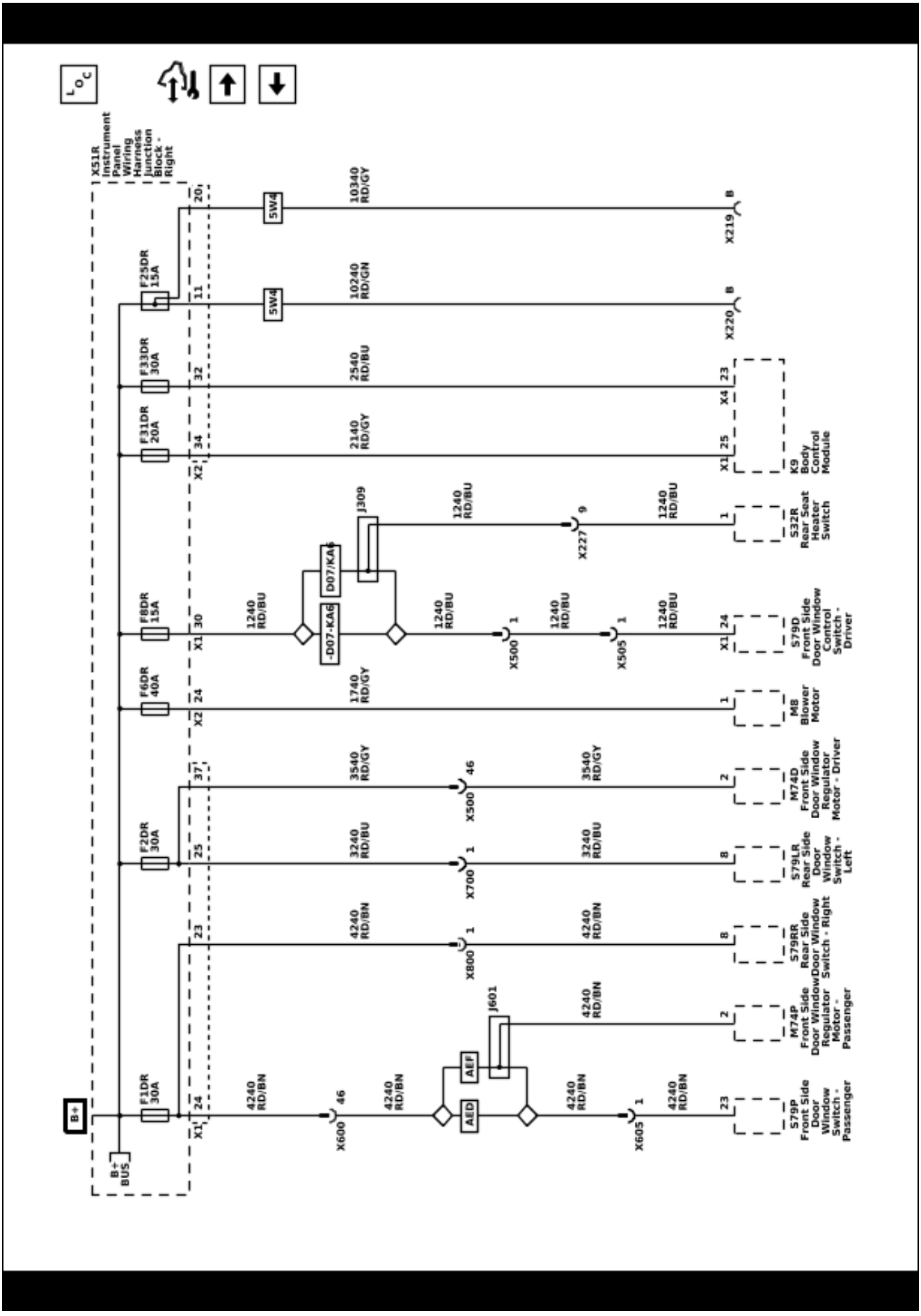

Power Distribution Schematics (F4DR, F5DR, F10DR, F11DR, F12DR, and F54DR Fuses)

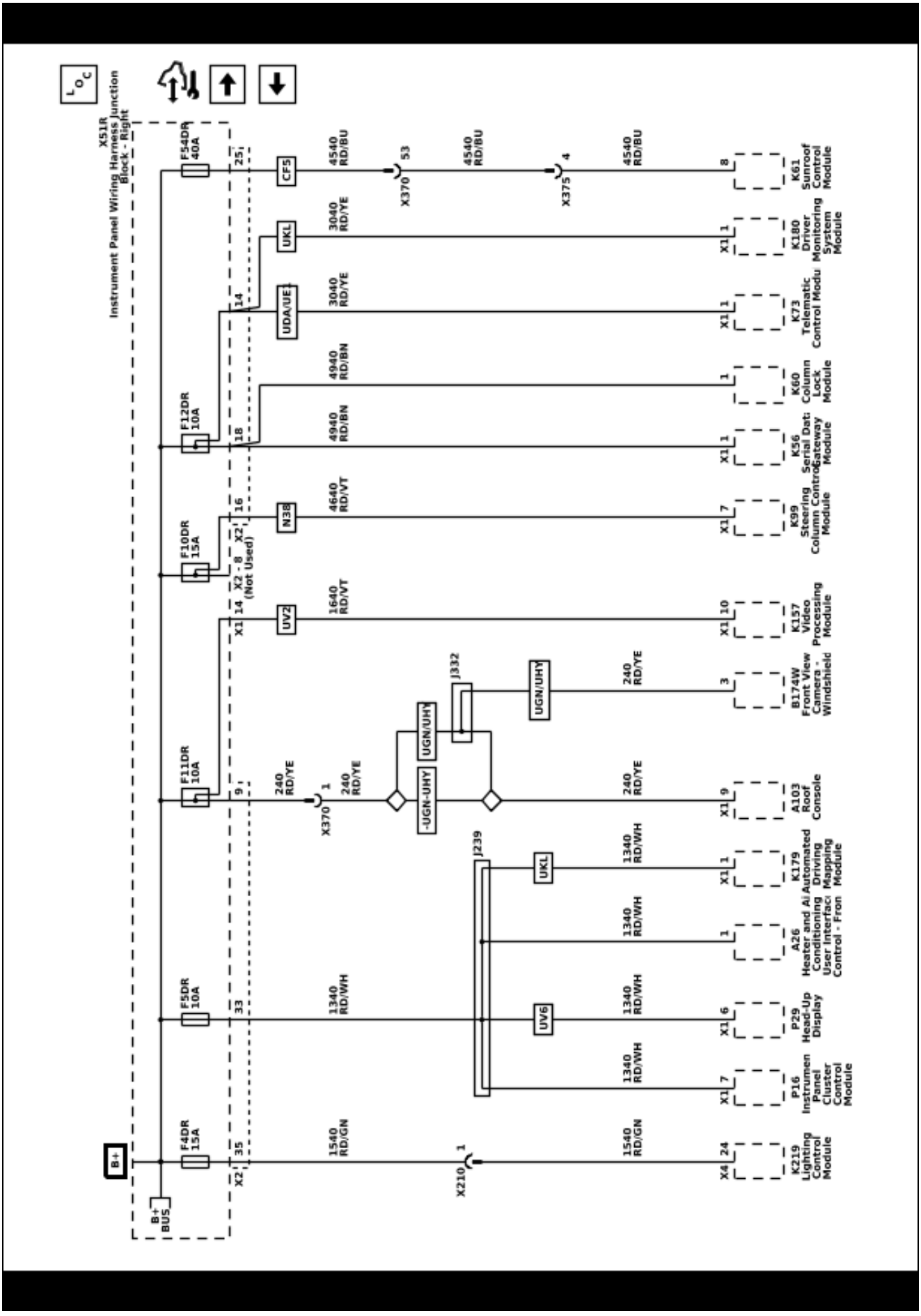

Power Distribution Schematics (F17DR, F22DR, F42DR, F44DR, F45DR, and F56DR Fuses)

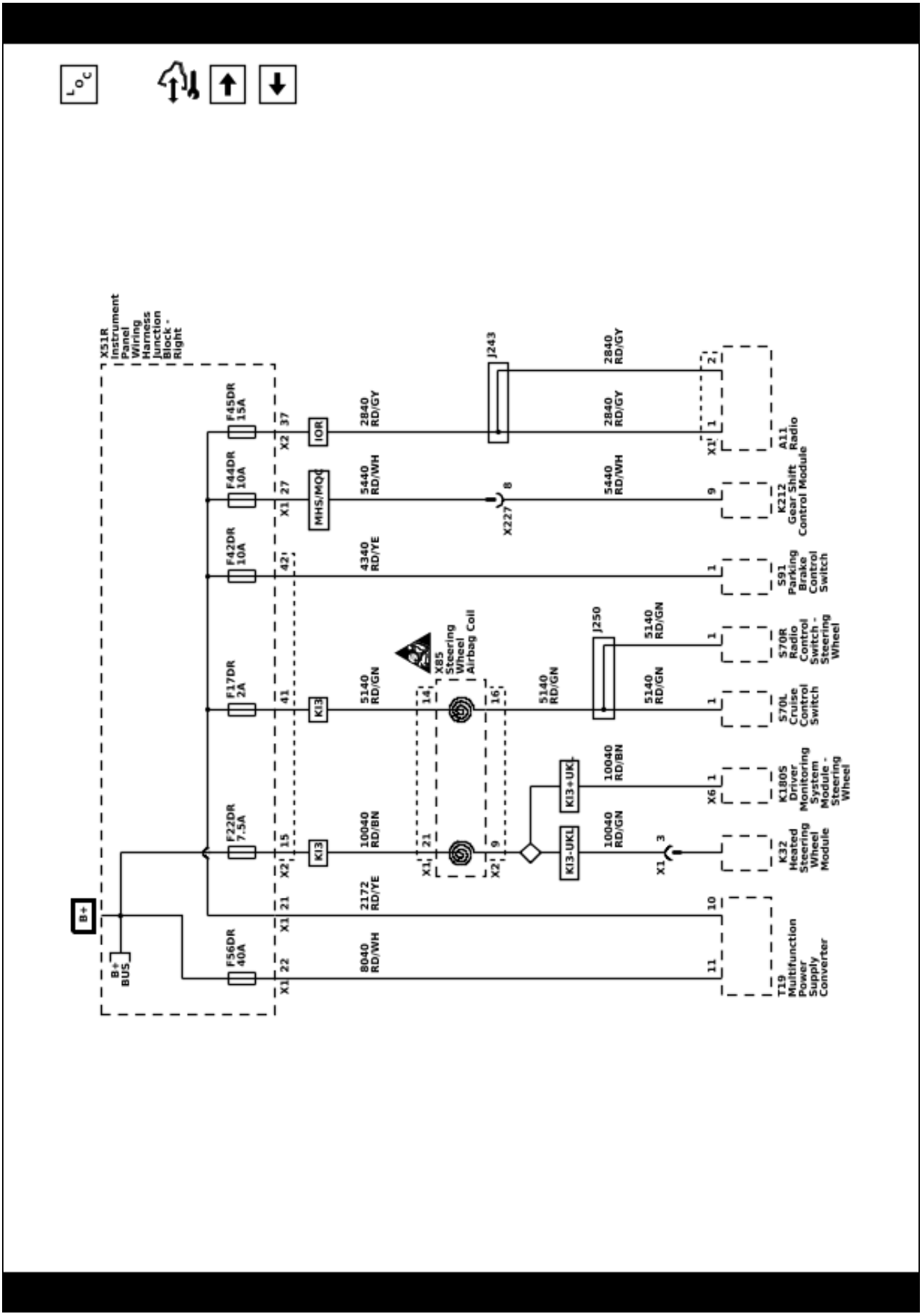

Power Distribution Schematics (F48DR, F49DR, F55DR, and F57DR Fuses)

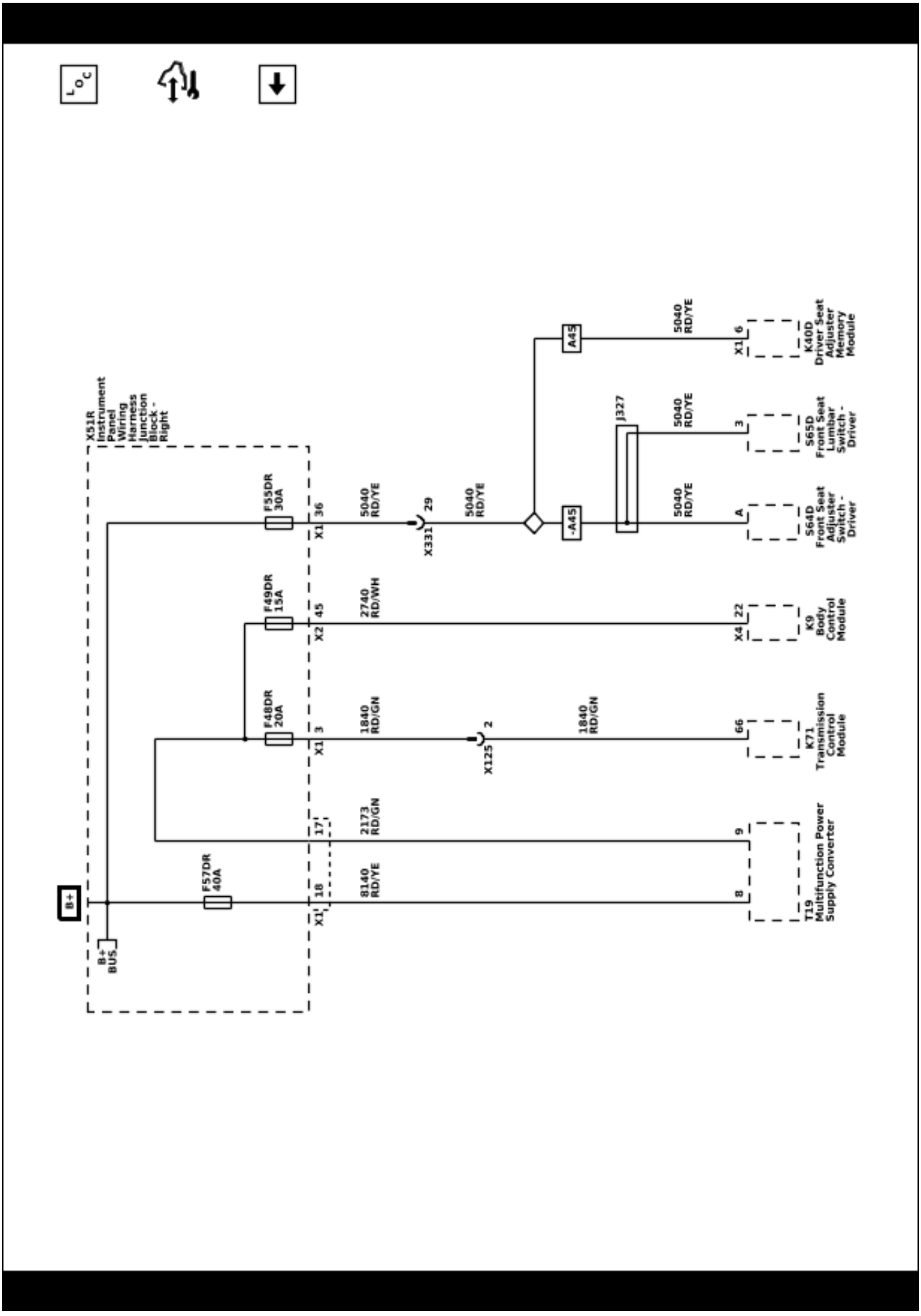

Power Moding Schematics (On/Off Vehicle Switch and Retained Accessory Power)

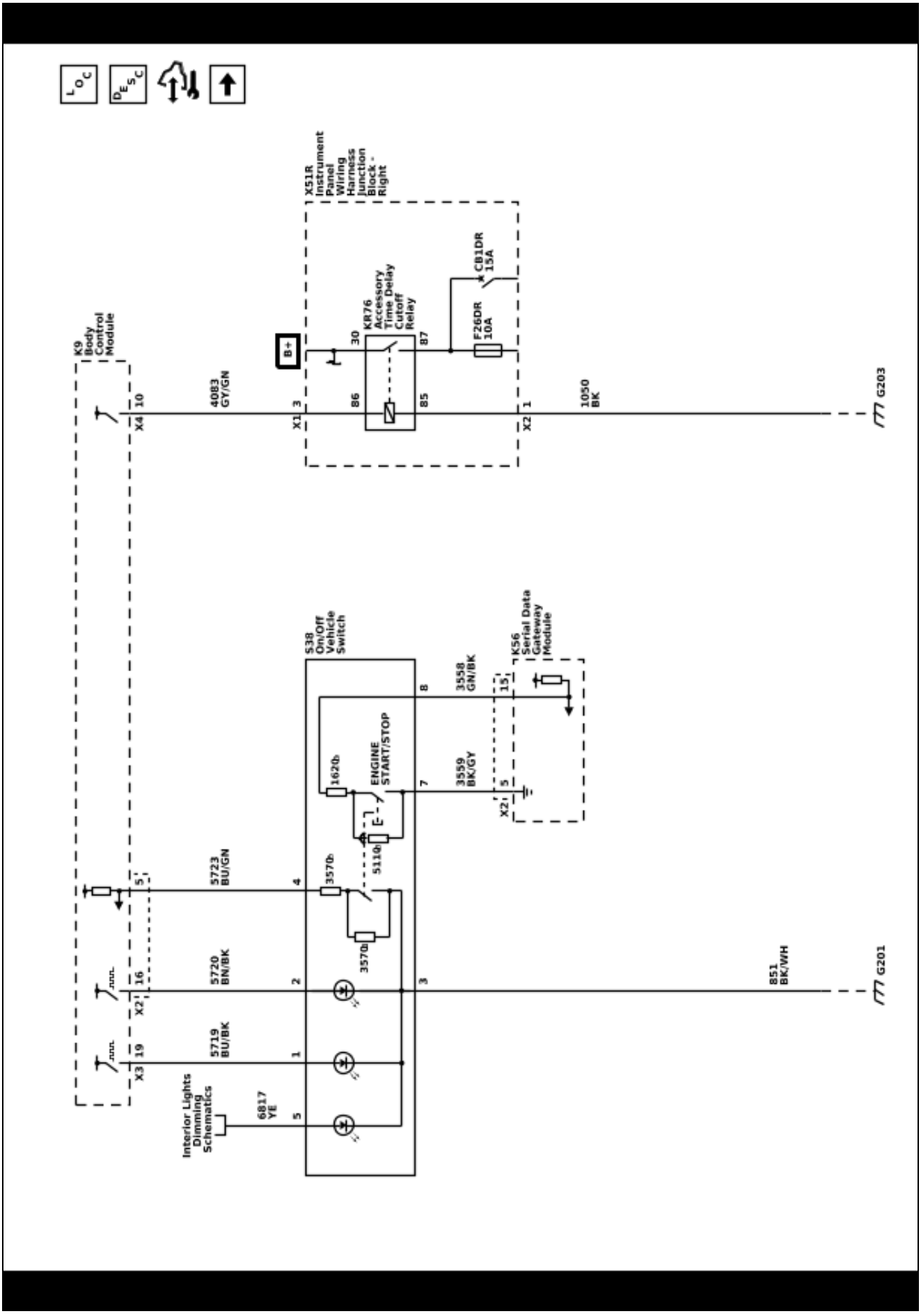

Power Moding Schematics (Ignition Main Relay)

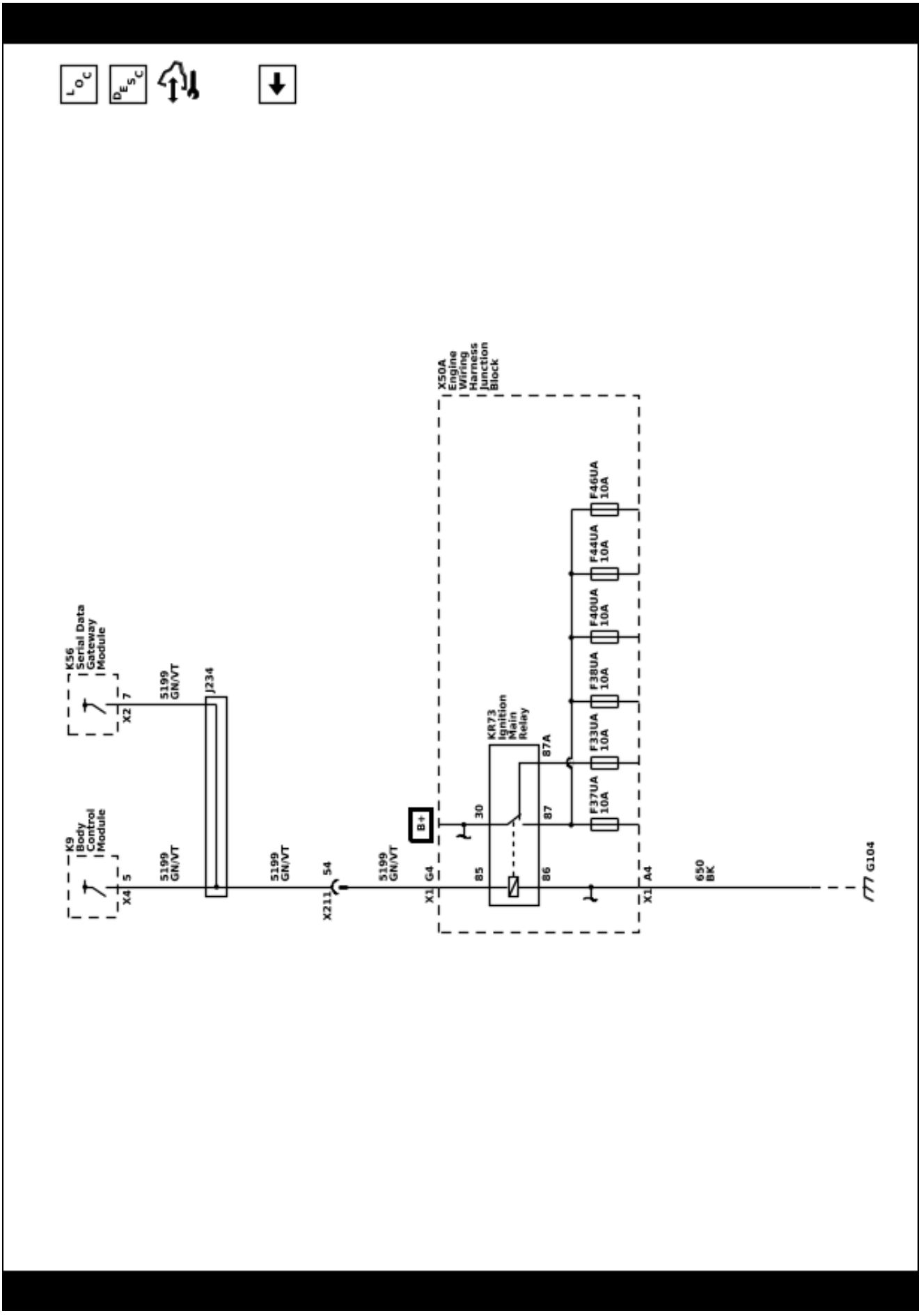

Ground Distribution Schematics (G102A, G131, G132, G133, and G134)

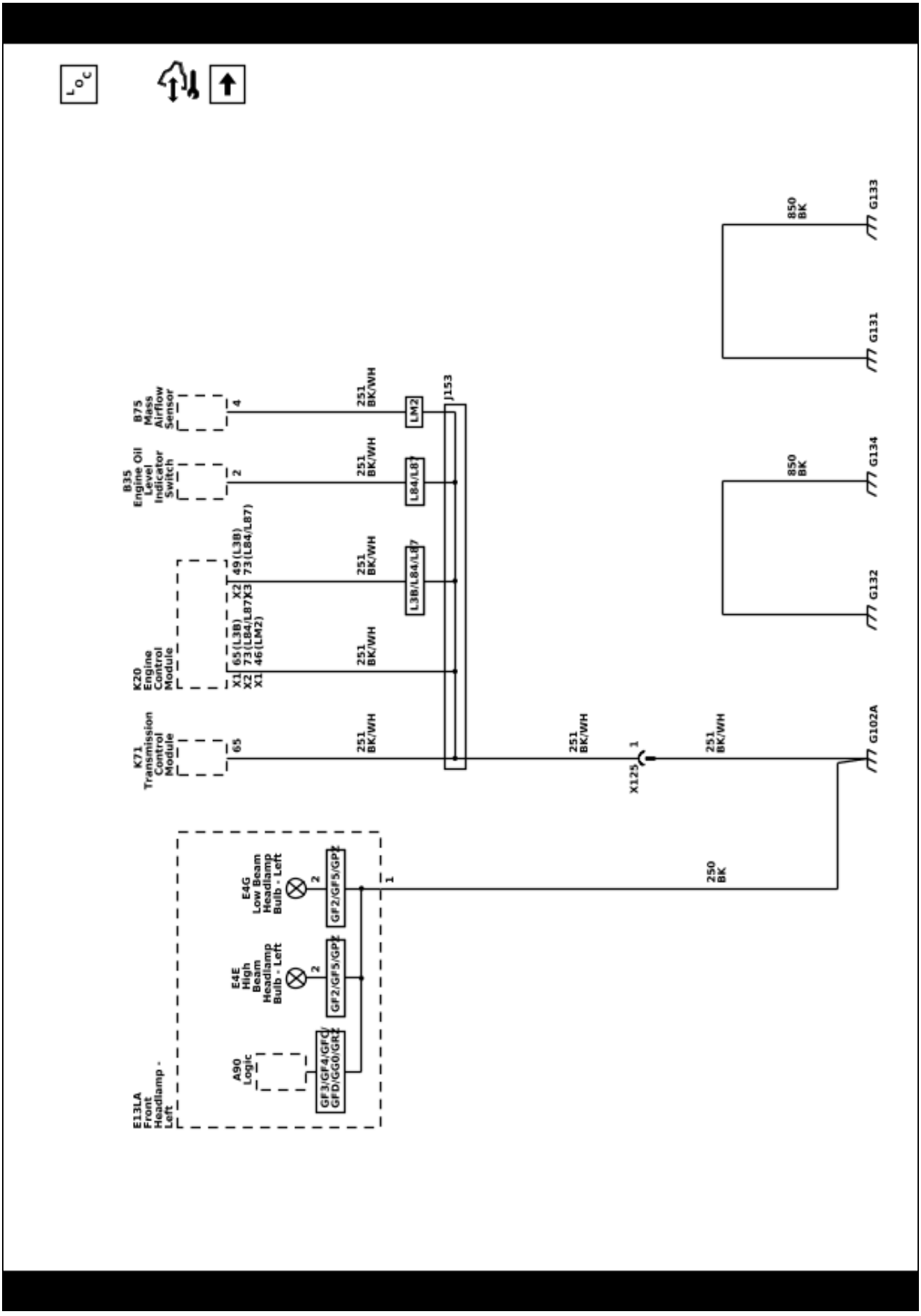

Ground Distribution Schematics (G102B, G103A, G103B, G105, and G106)

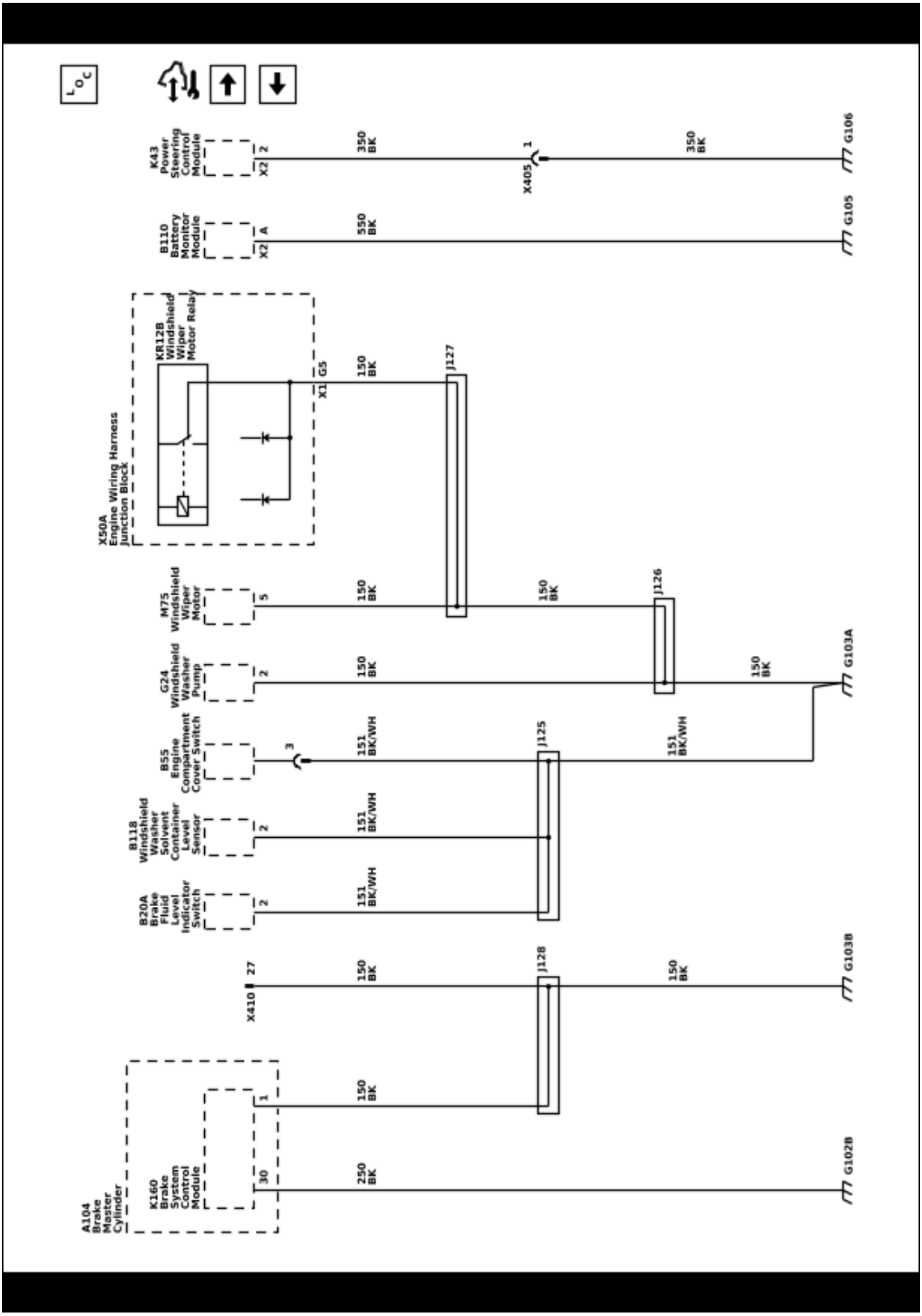

Ground Distribution Schematics (G104 (1 of 2))

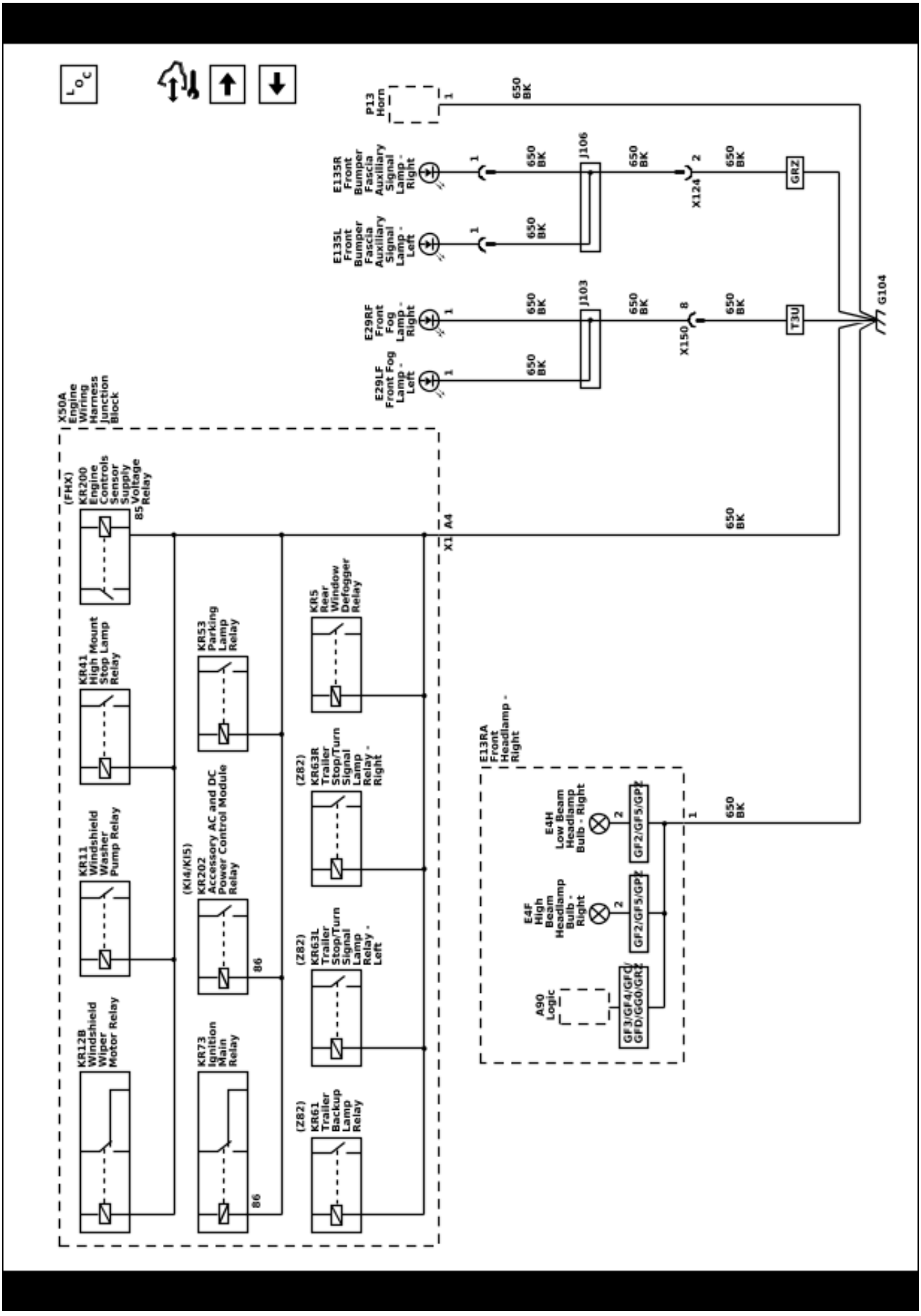

Ground Distribution Schematics (G104 (2 of 2))

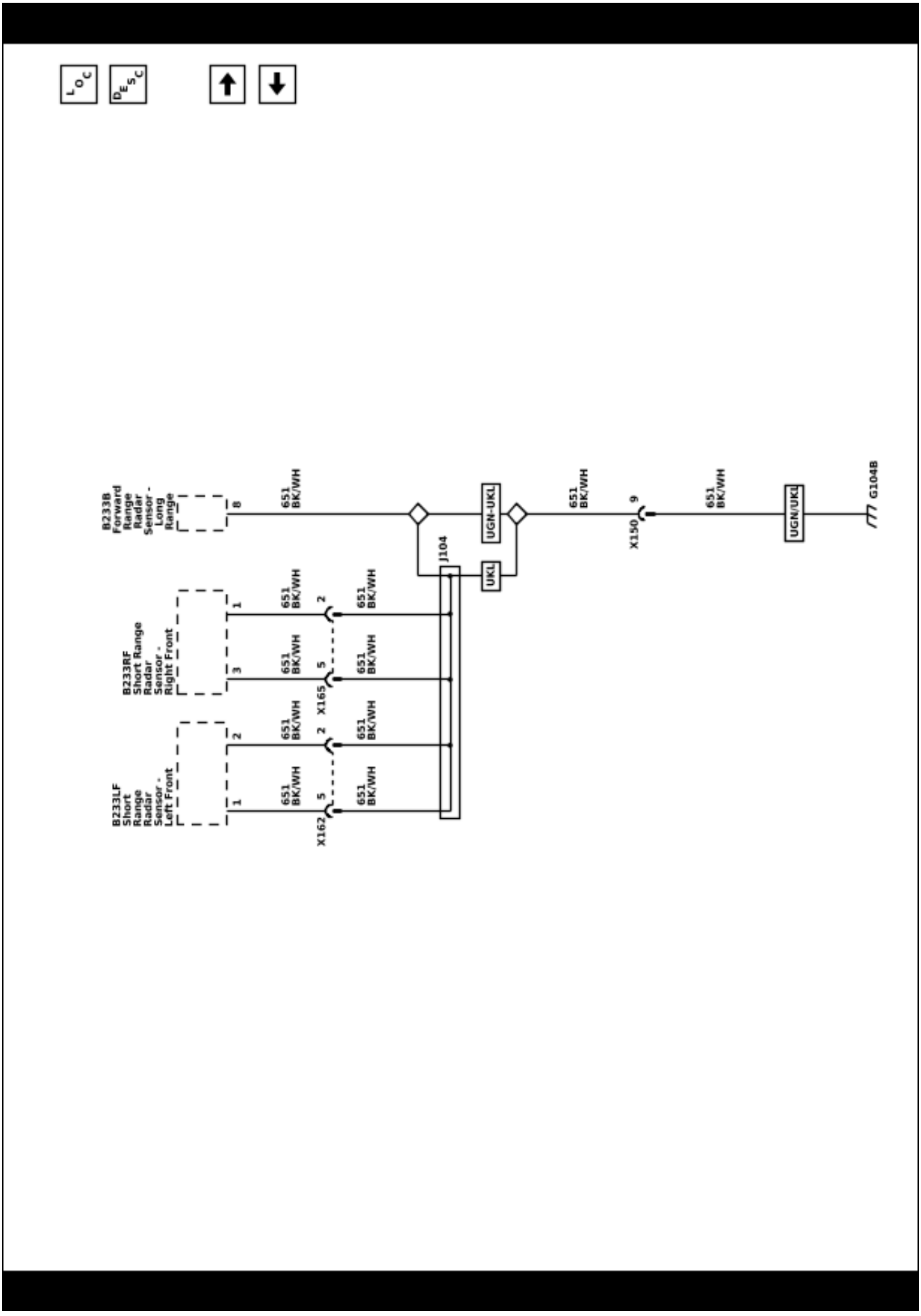

Ground Distribution Schematics (G177A and G177B (L3B))

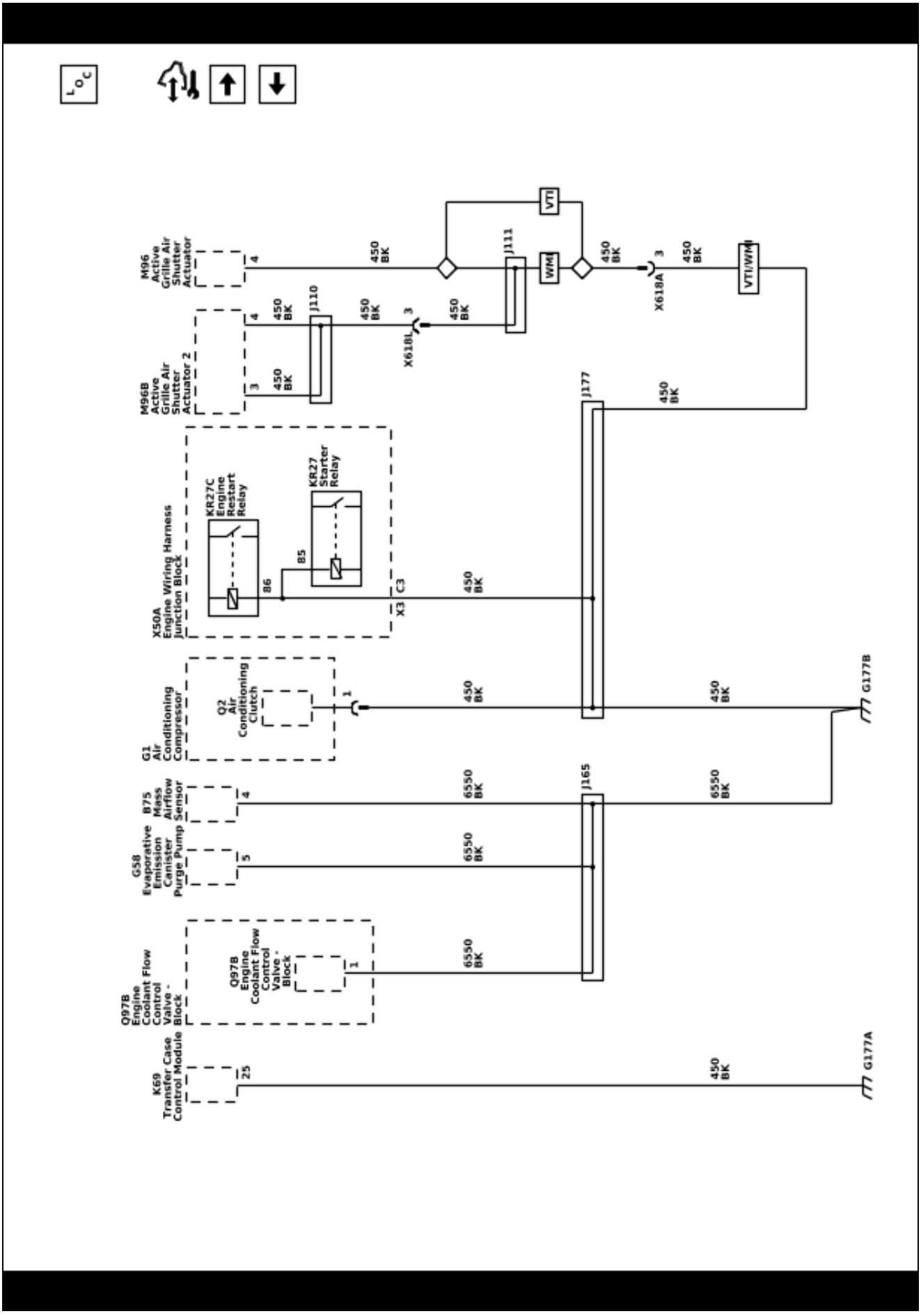

Ground Distribution Schematics (G178A and G178B (L3B))

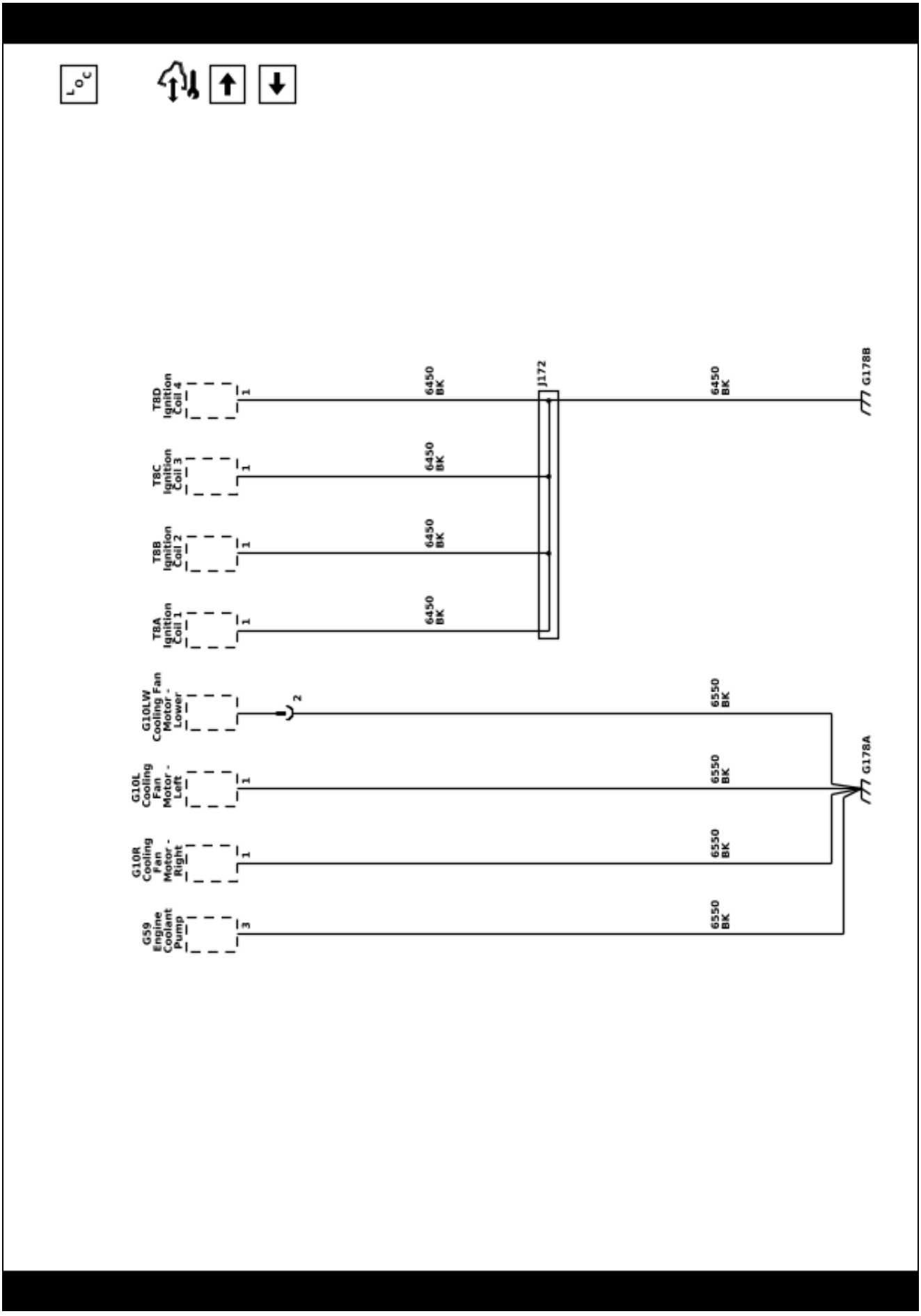

Ground Distribution Schematics (G175, G176B, and G177A (L84/L87))

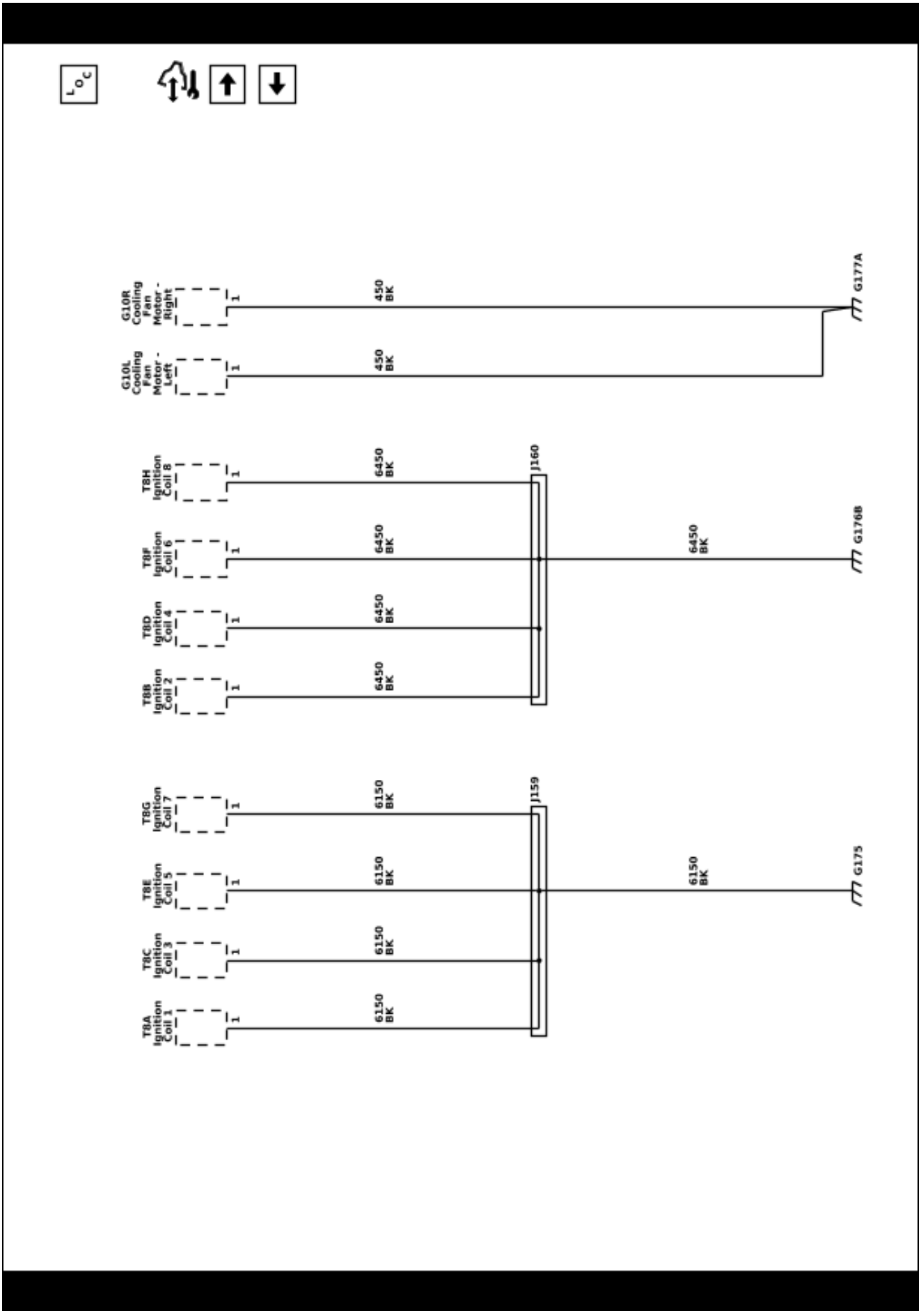

Ground Distribution Schematics (G177B (L84/L87))

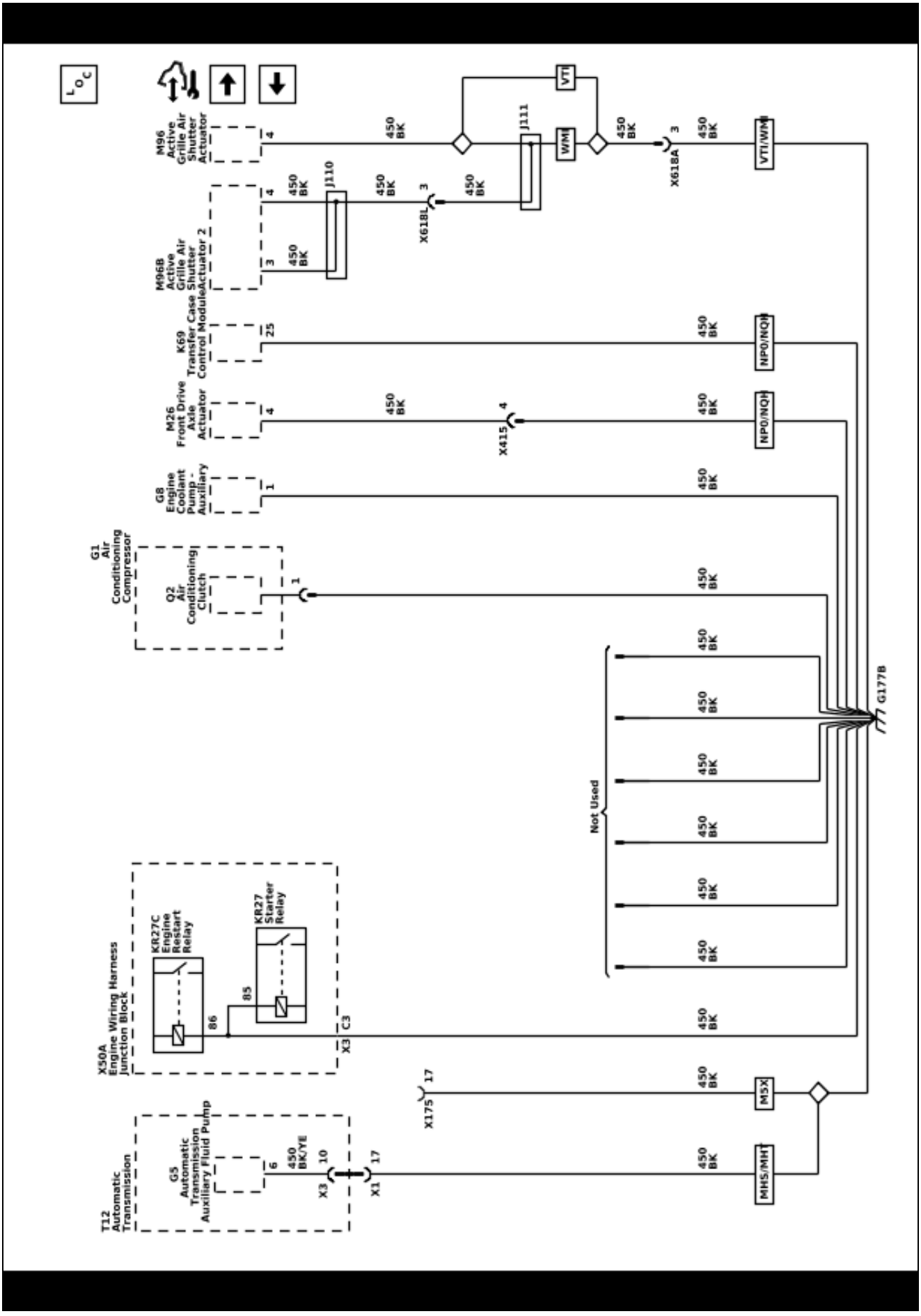

Ground Distribution Schematics (G175 and G176A (LM2))

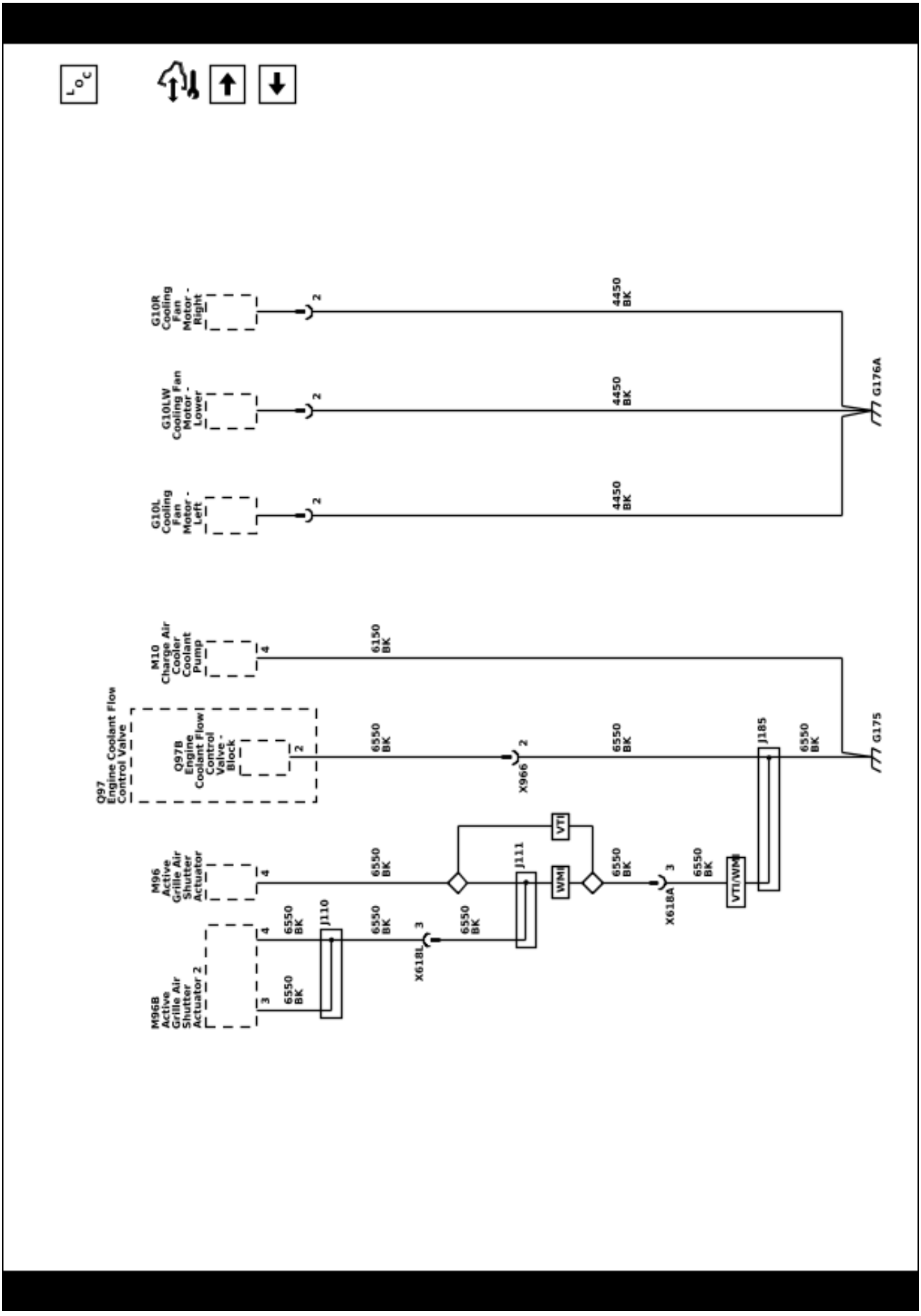

Ground Distribution Schematics (G177B (LM2))

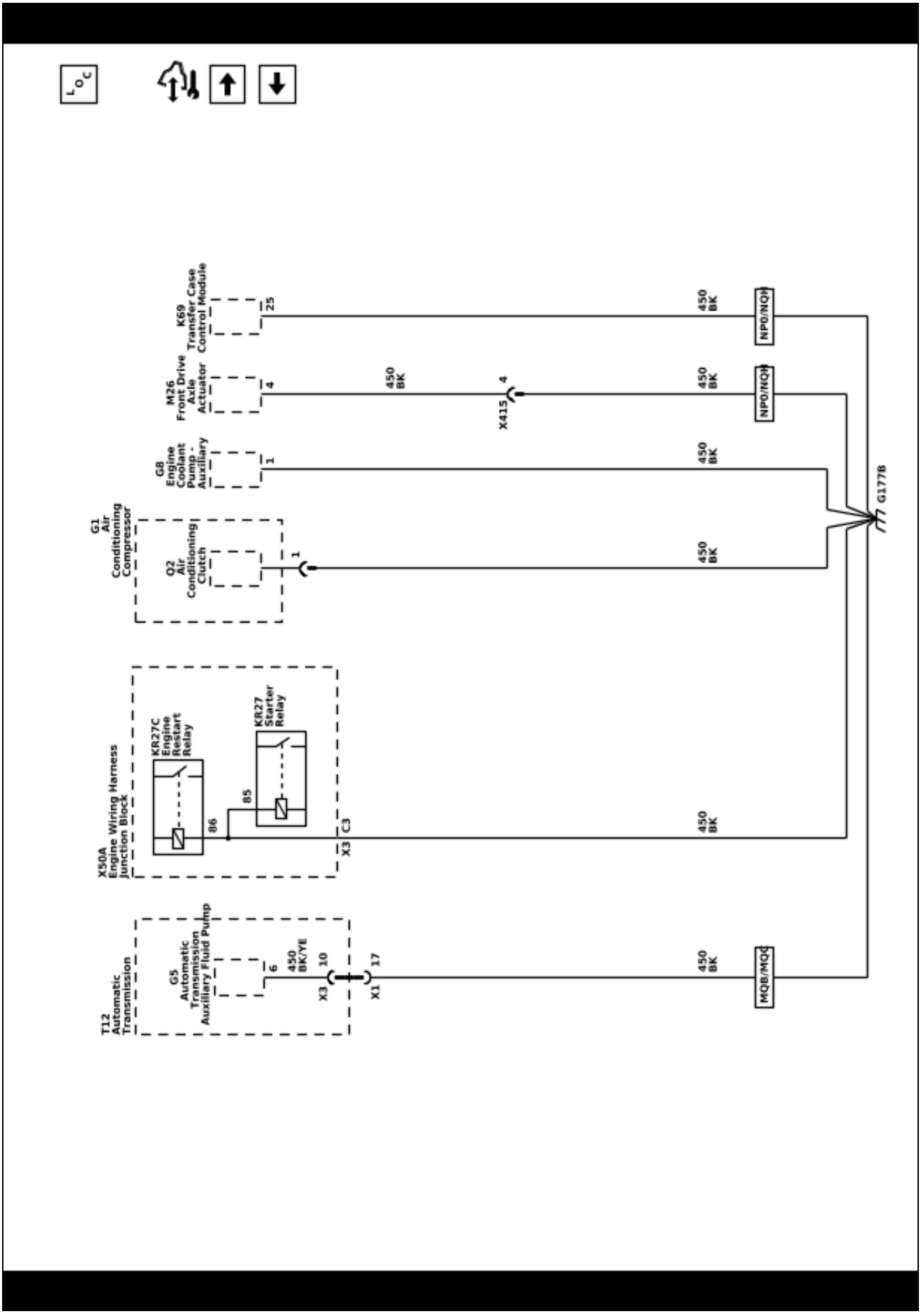

Ground Distribution Schematics (G200)

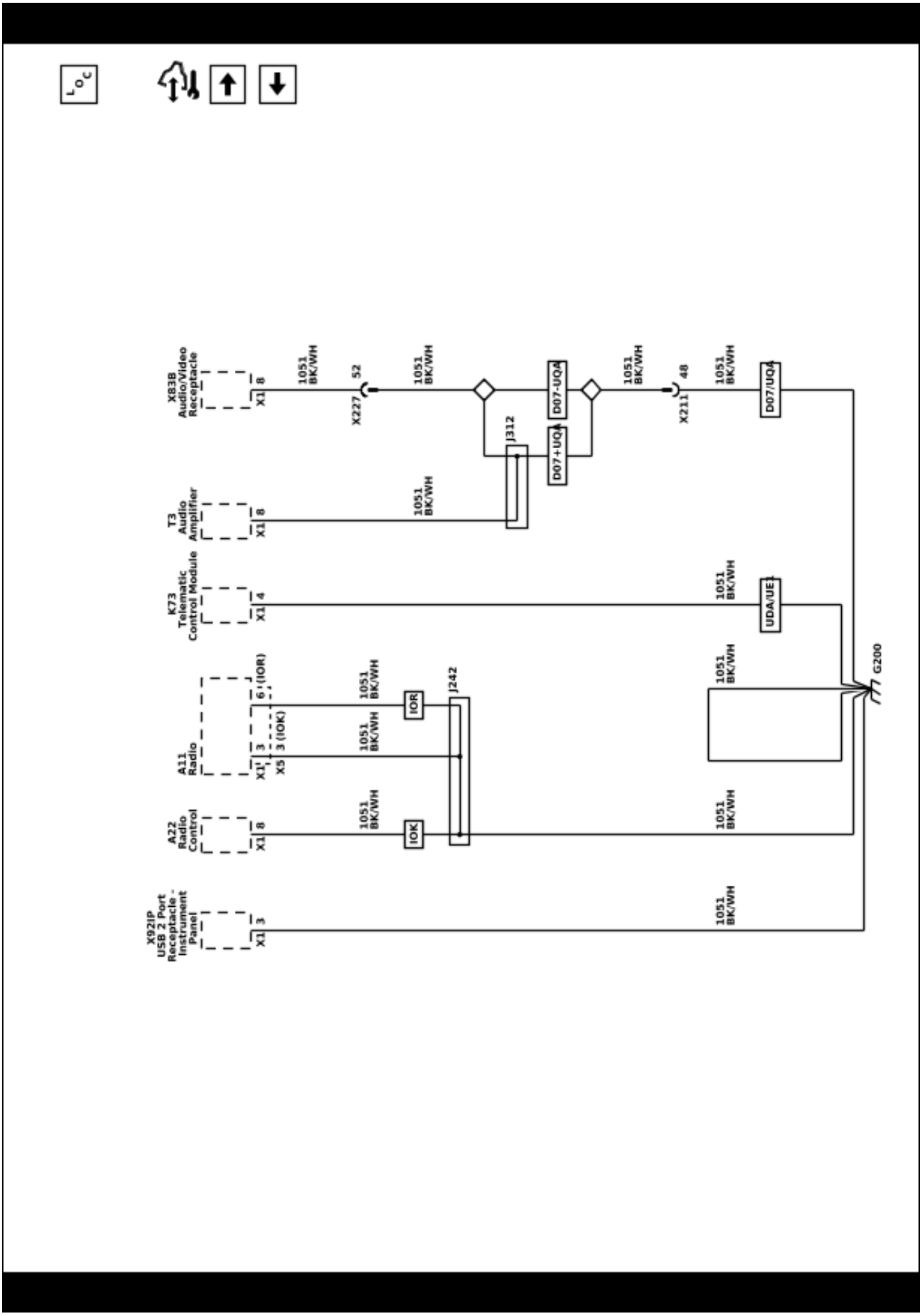

Ground Distribution Schematics (G201 (1 of 2))

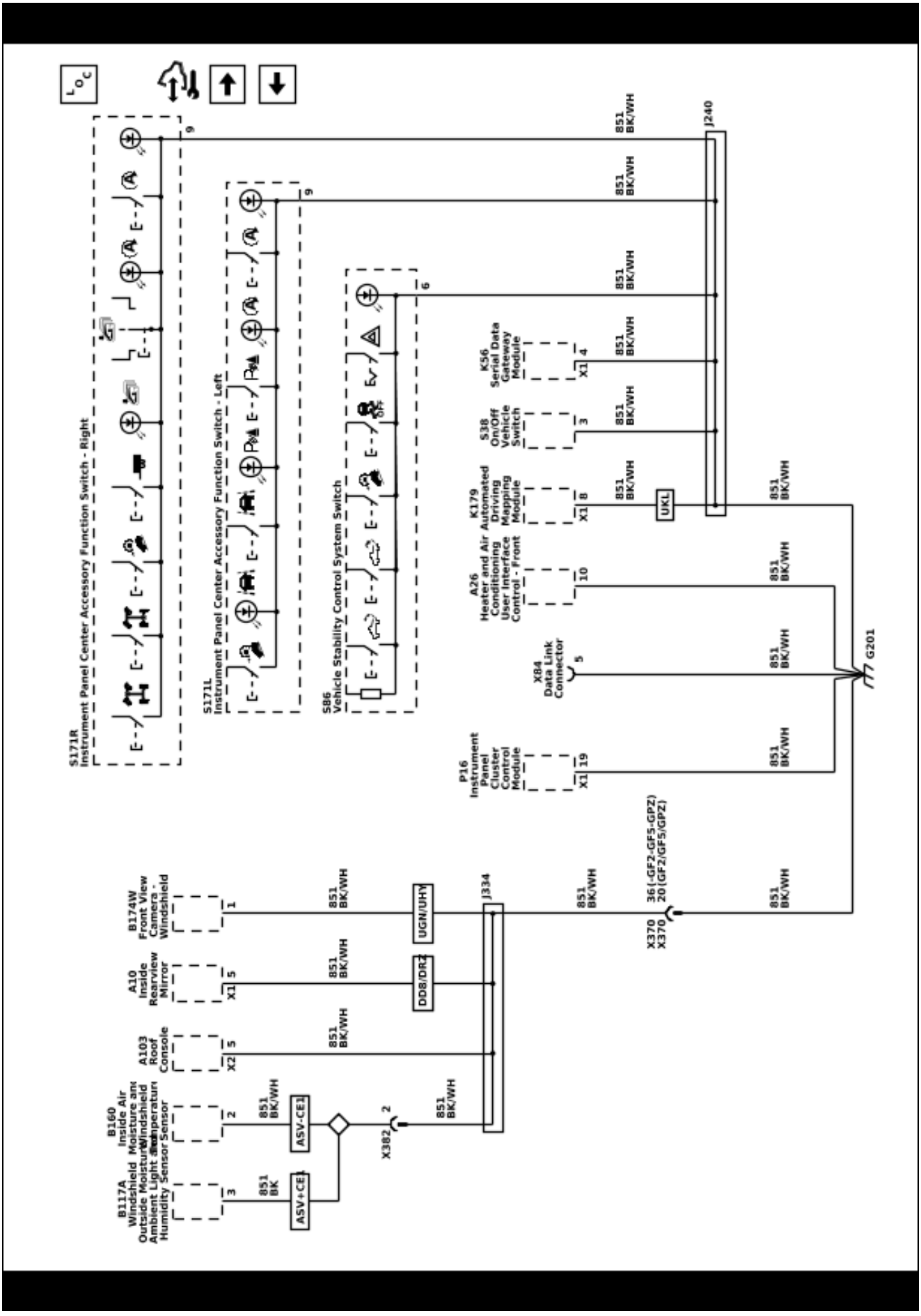

Ground Distribution Schematics (G201 (2 of 2))

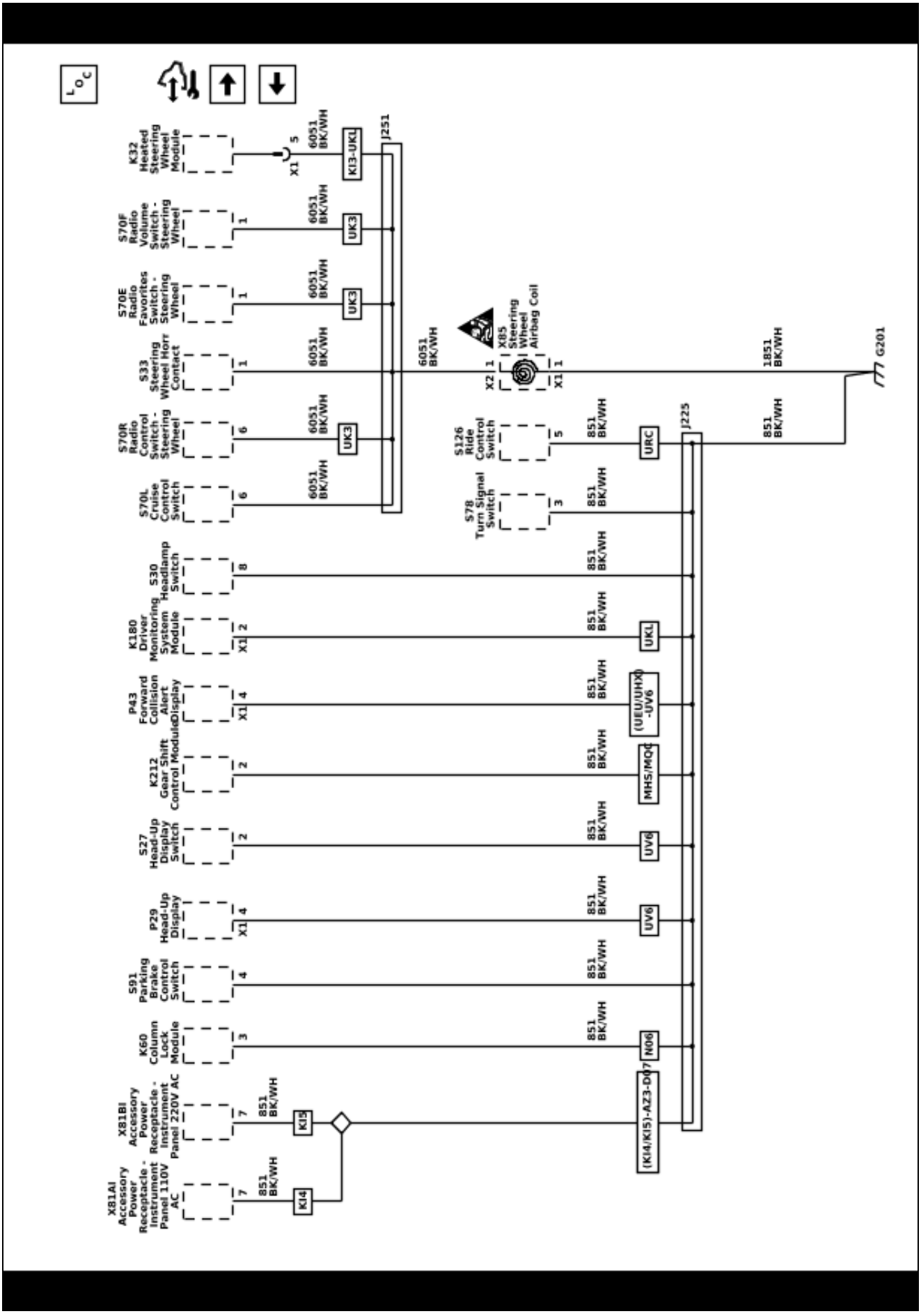

Ground Distribution Schematics (G202 and G303)

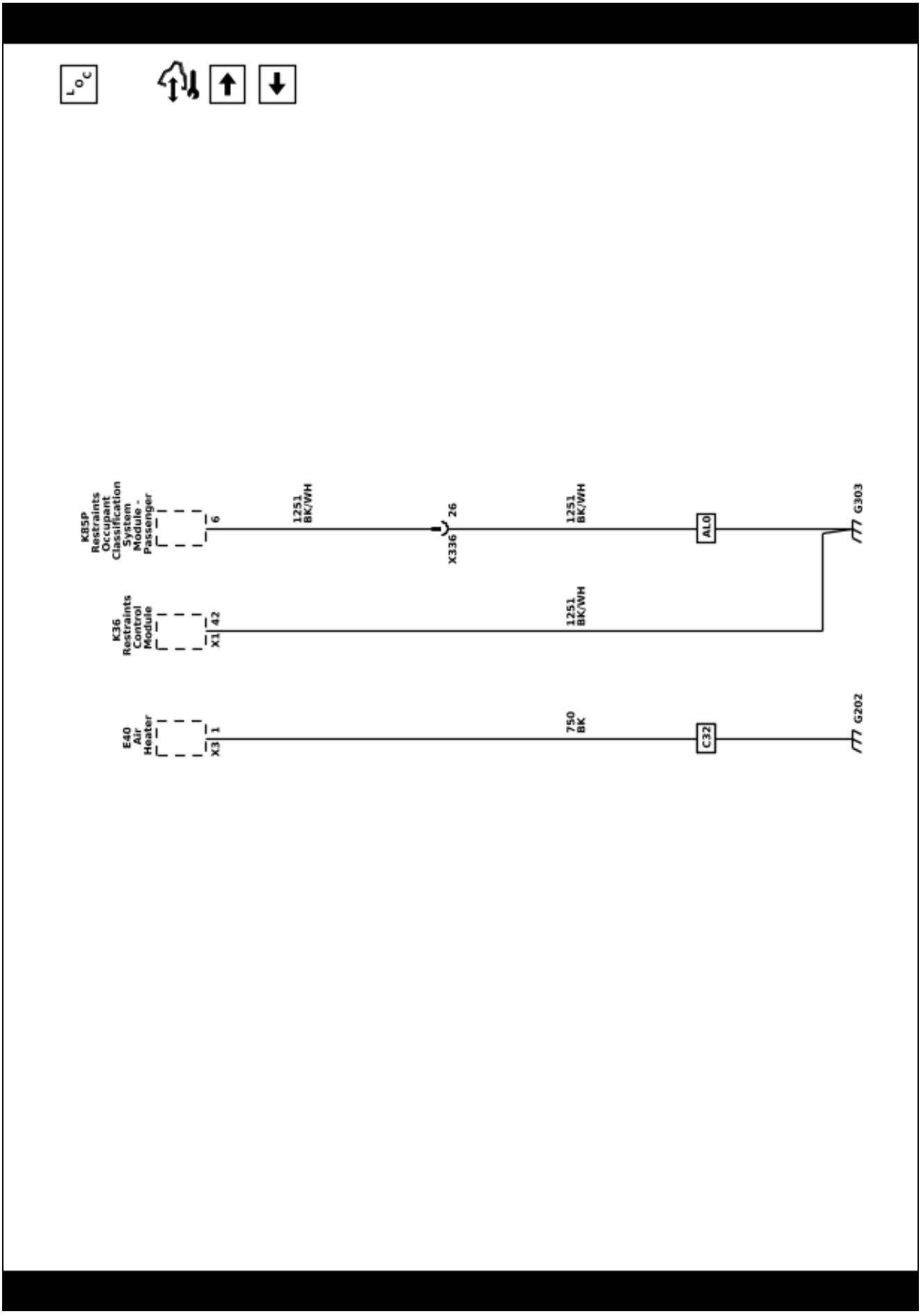

Ground Distribution Schematics (G203 (1 of 2))

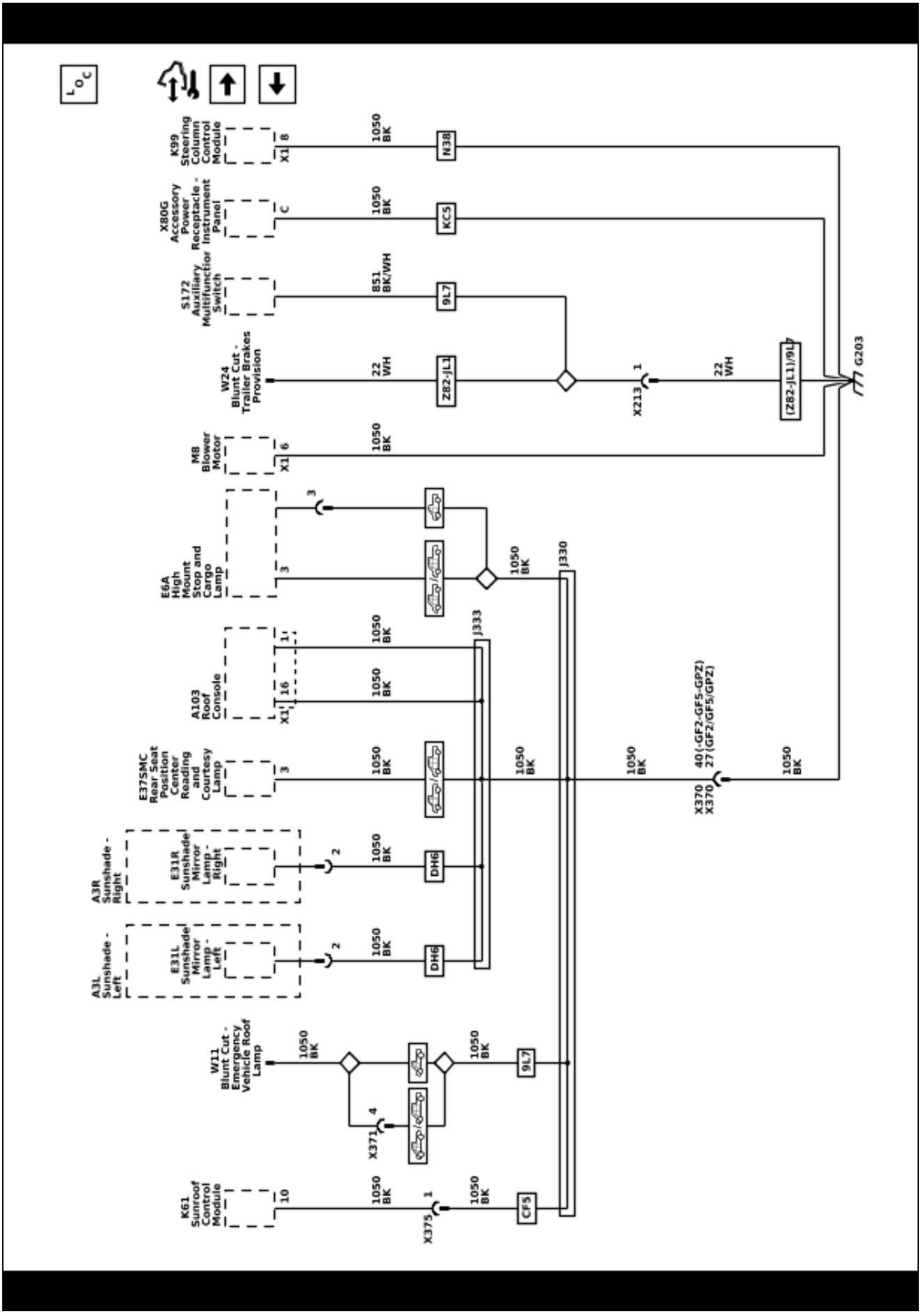

Ground Distribution Schematics (G203 (2 of 2))

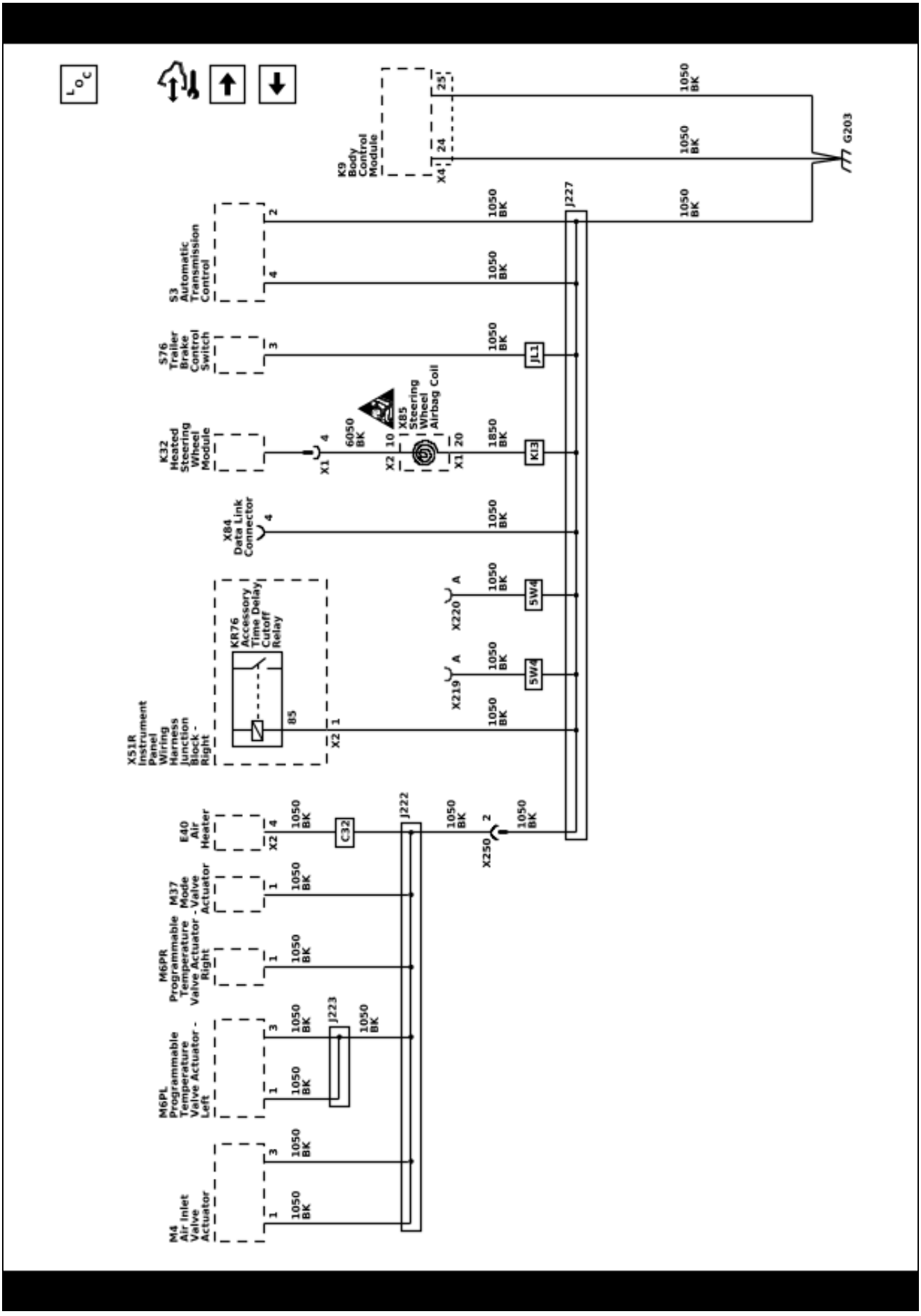

Ground Distribution Schematics (G300)

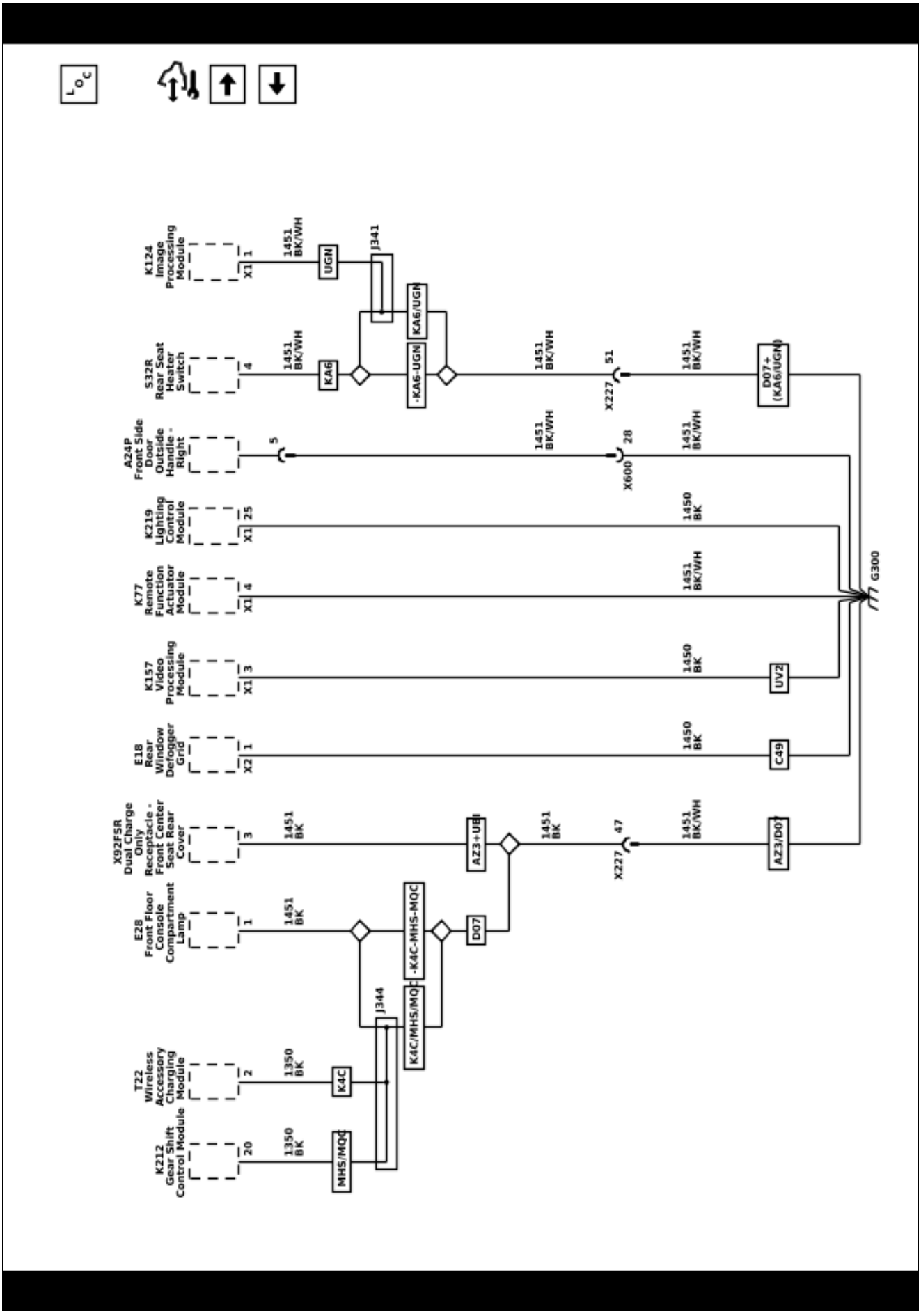

Ground Distribution Schematics (G301A (Regular Cab))

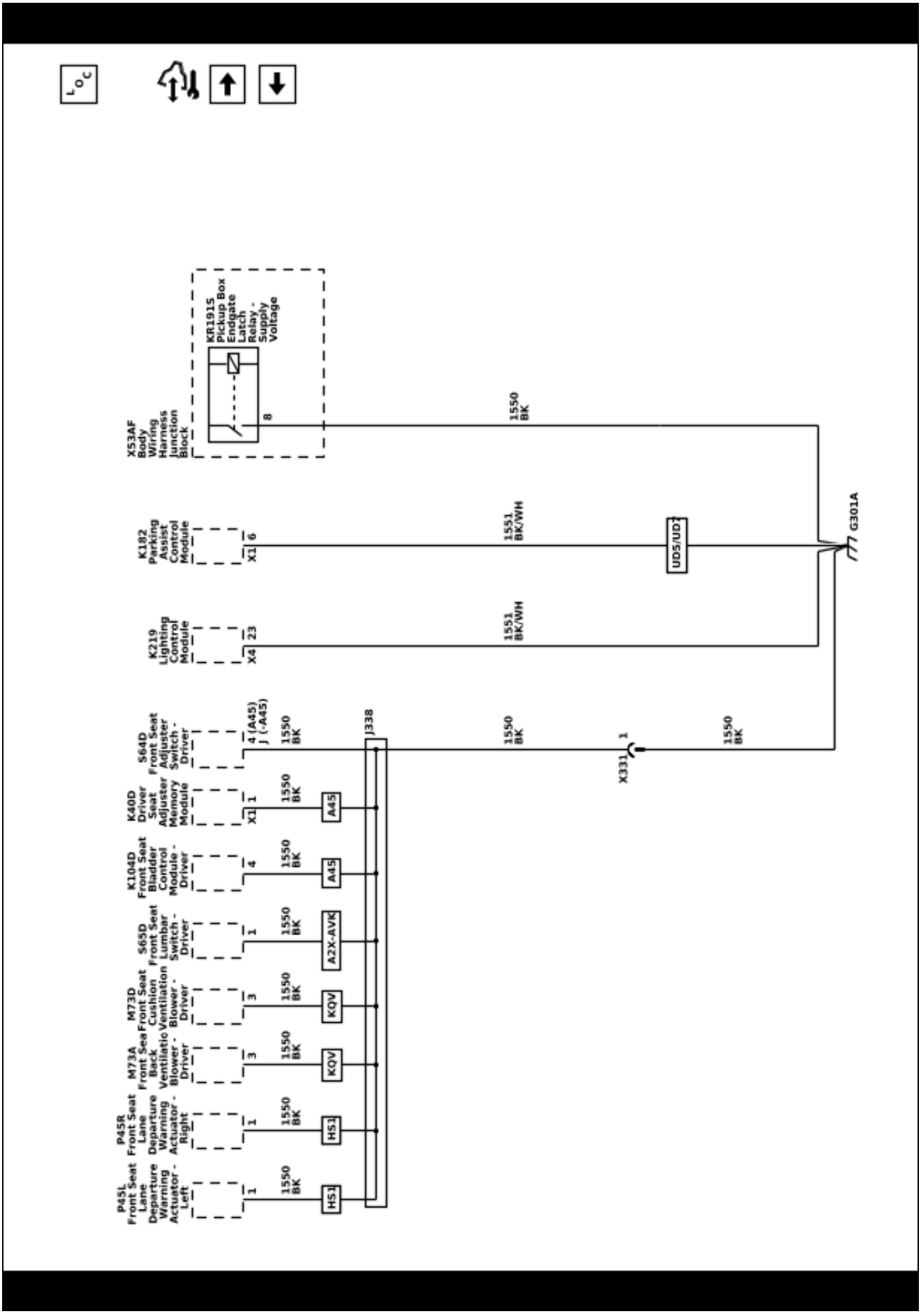

Ground Distribution Schematics (G301A (Extended Cab/Crew Cab))

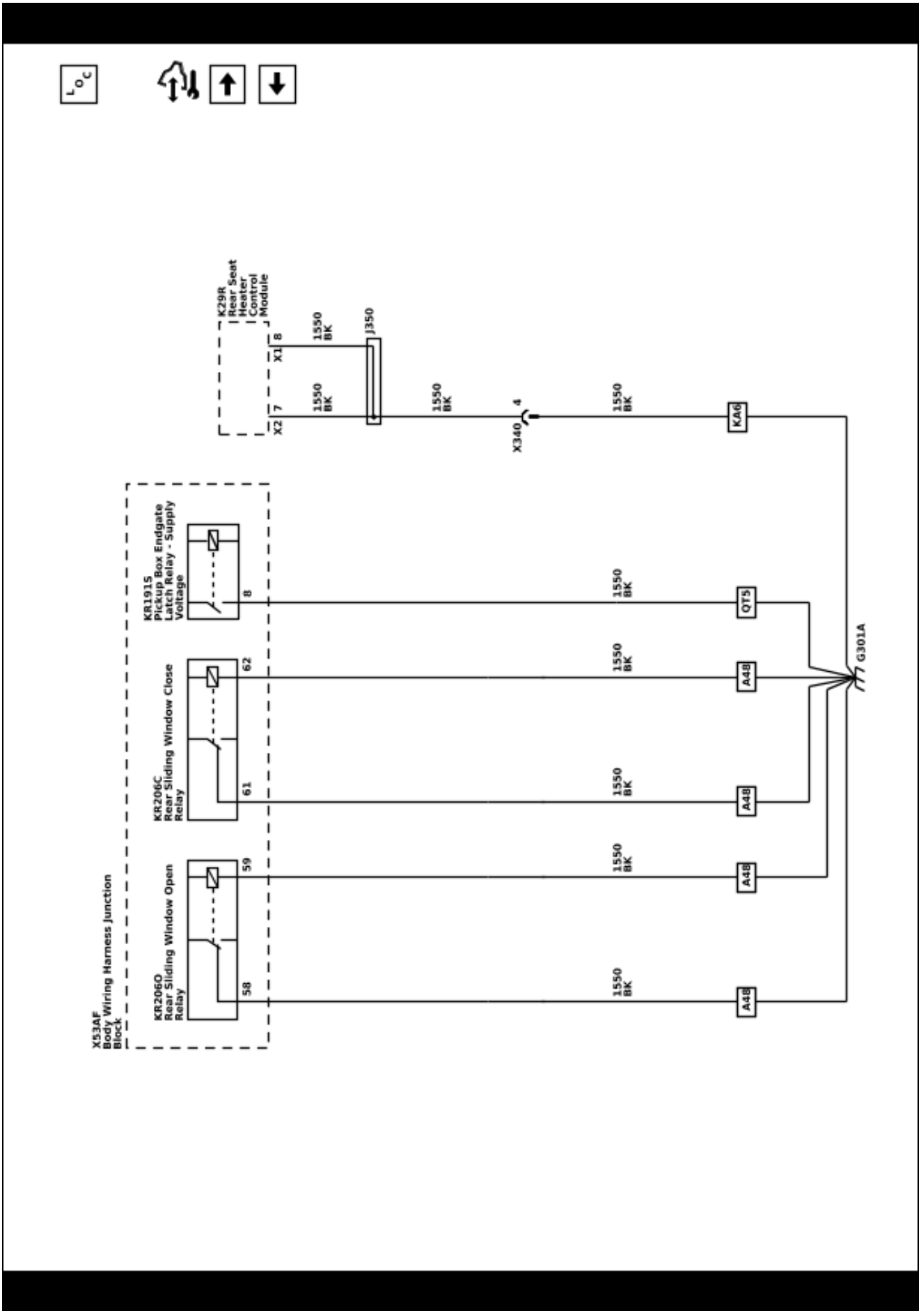

Ground Distribution Schematics (G301B (1 of 2))

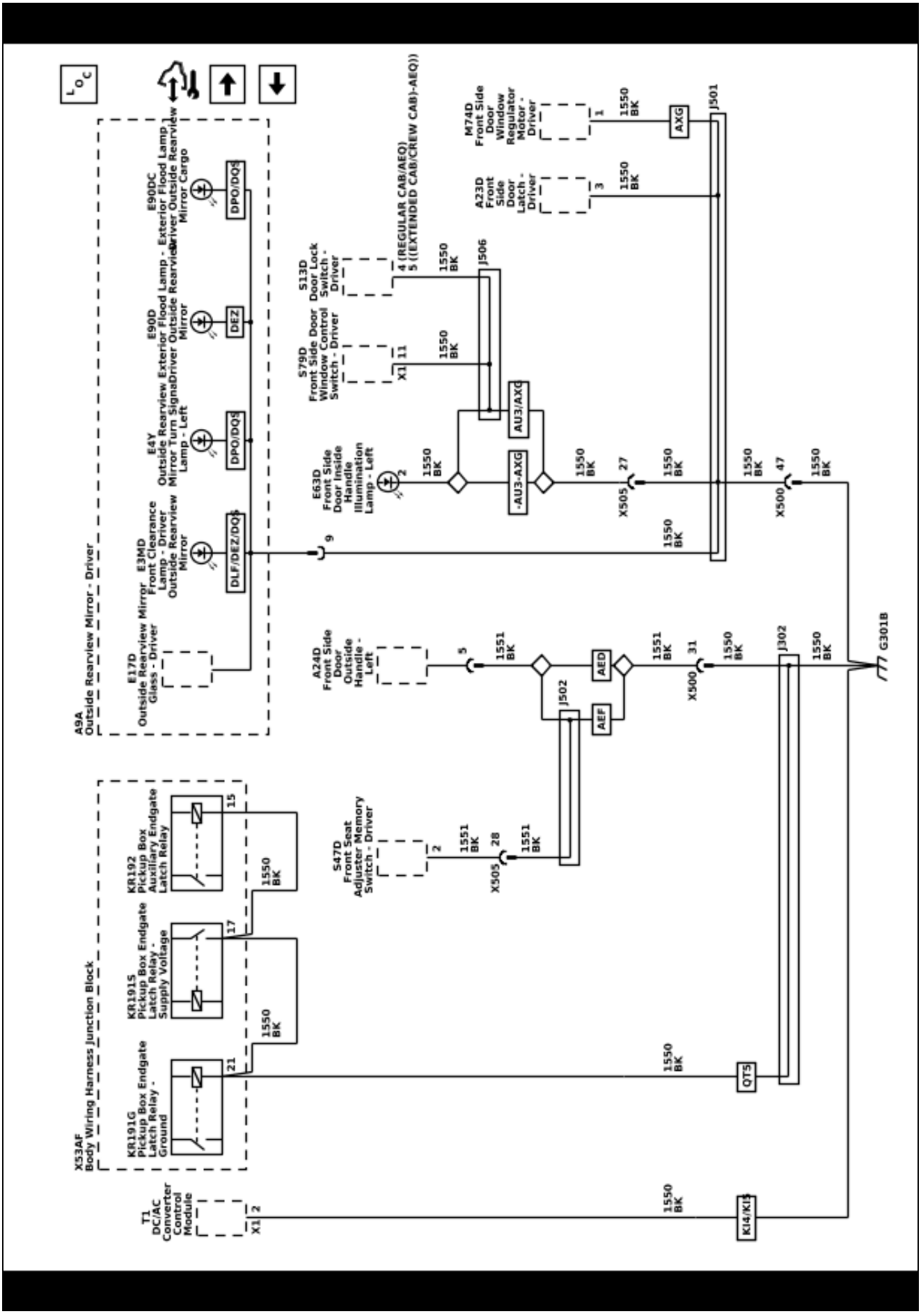

Ground Distribution Schematics (G301B (2 of 2) (Extended Cab/Crew Cab))

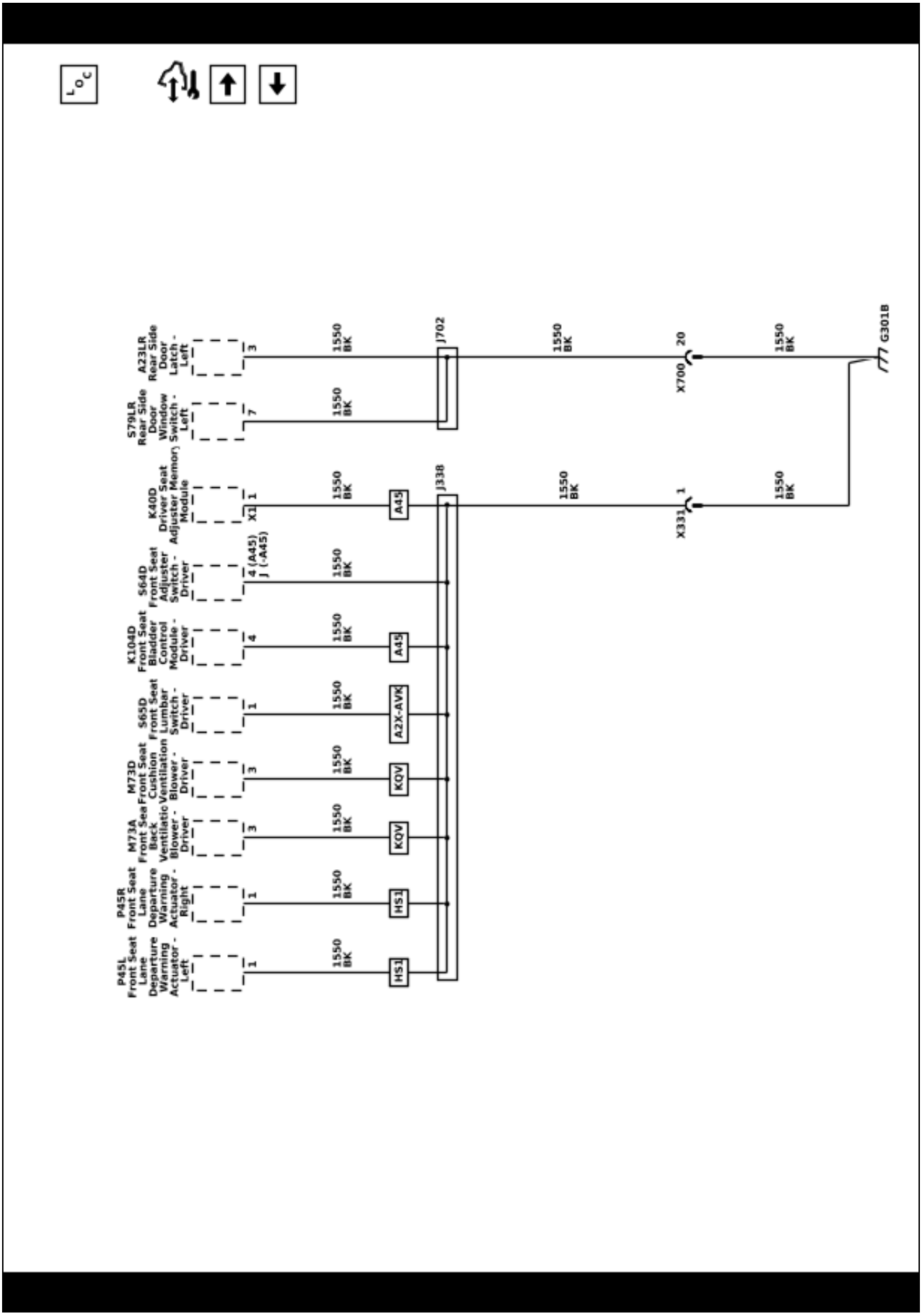

Ground Distribution Schematics (G302)

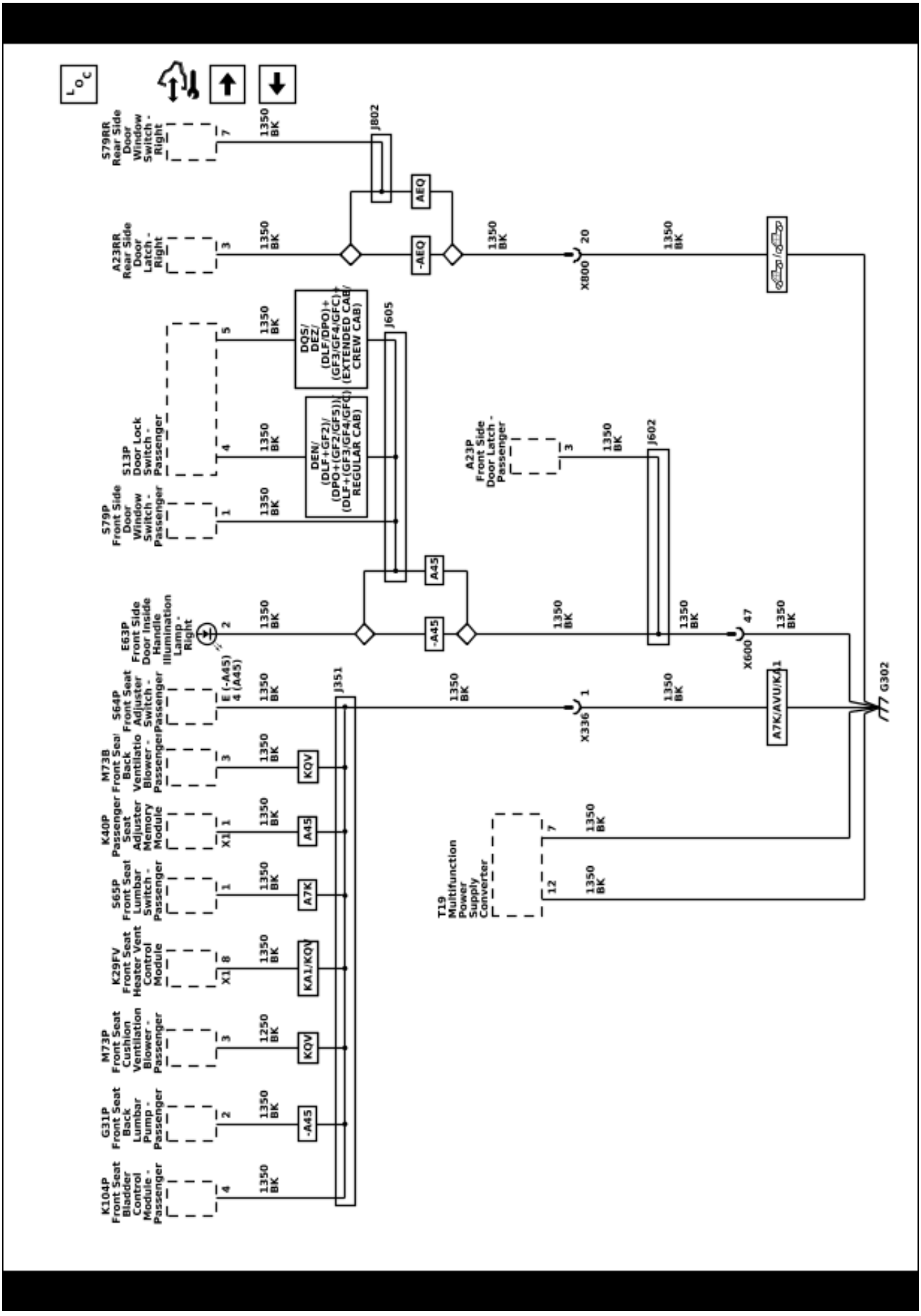

Ground Distribution Schematics (G402 and G404)

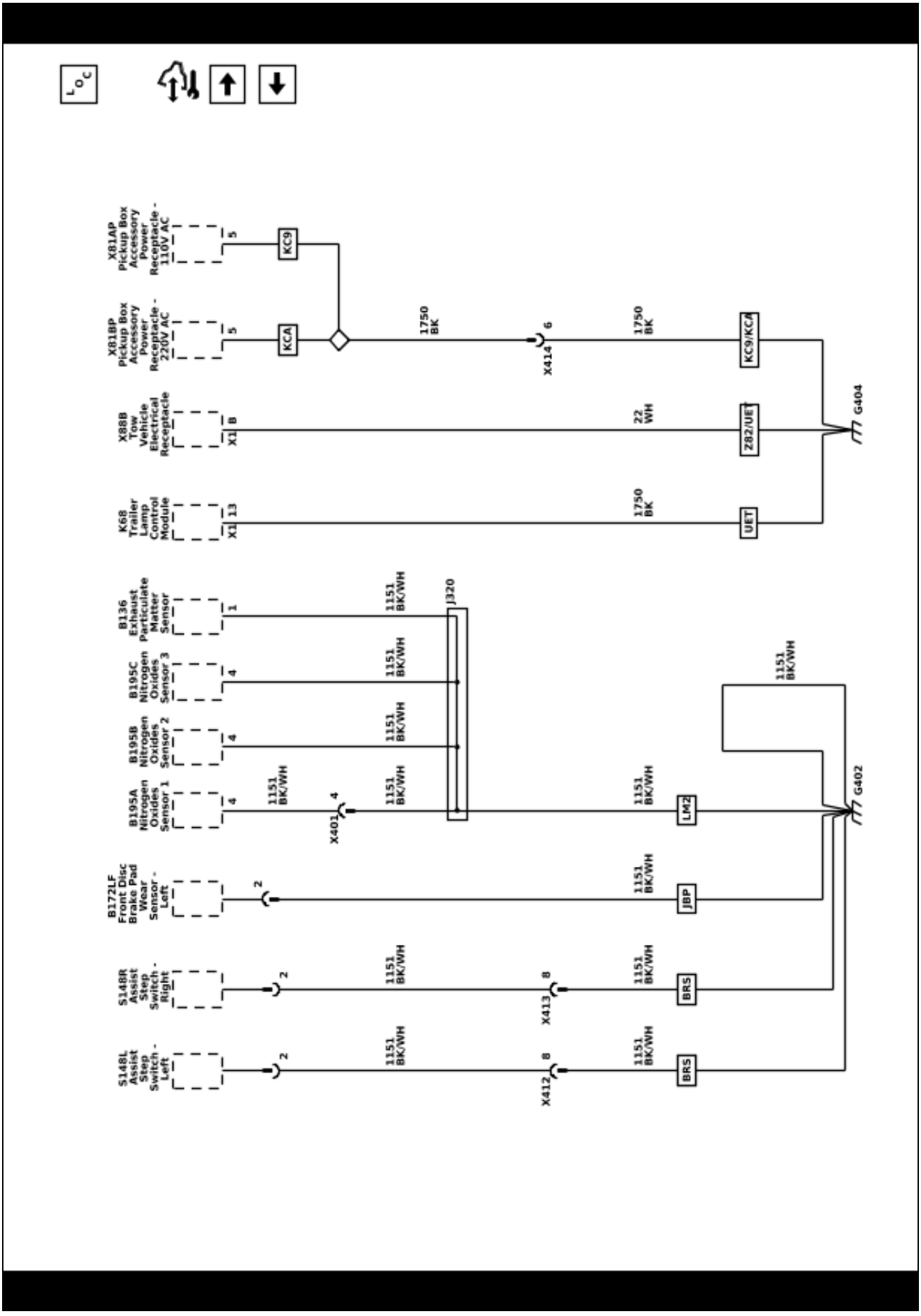

Ground Distribution Schematics (G403)

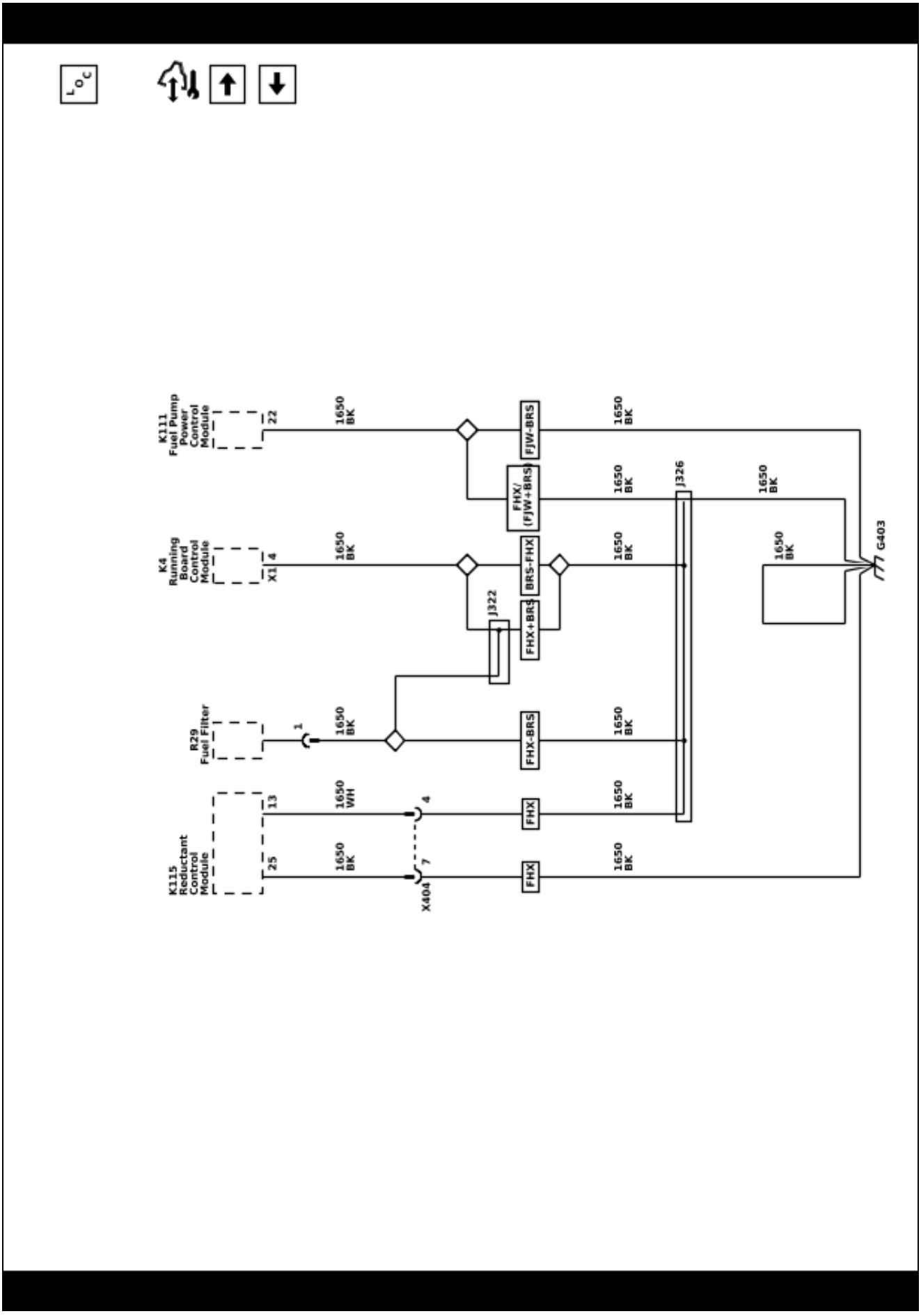

Ground Distribution Schematics (G406)

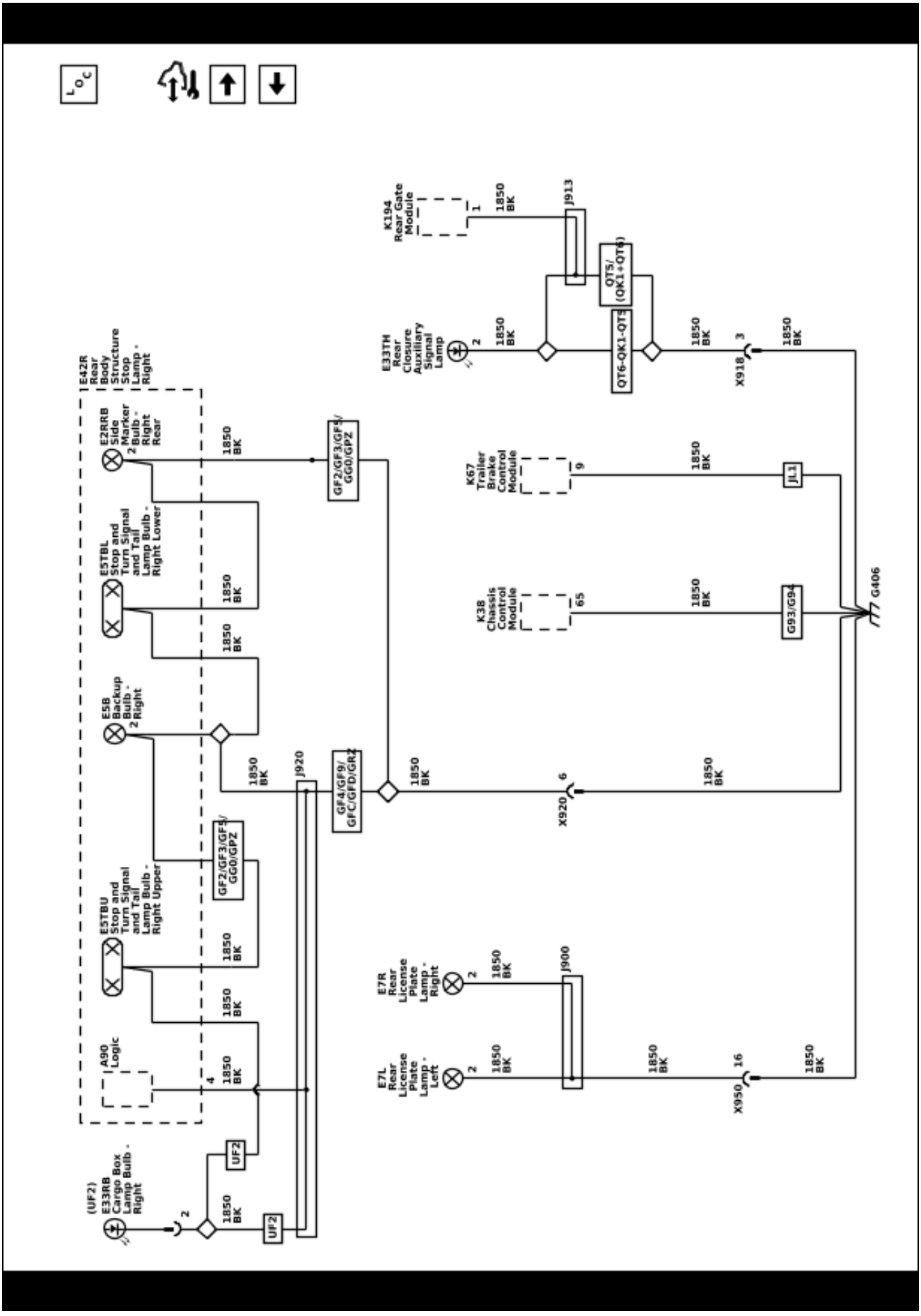

Ground Distribution Schematics (G407)

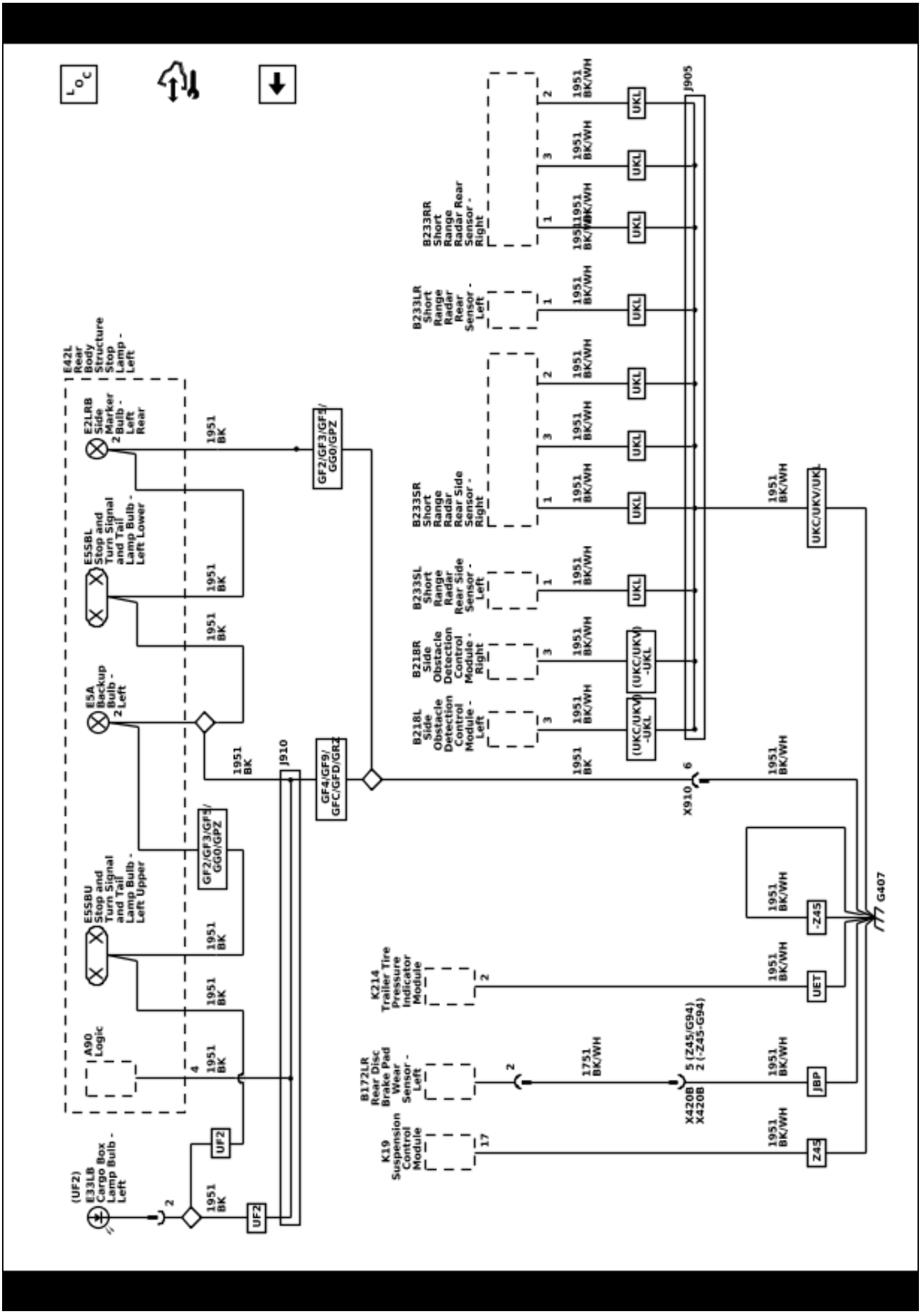

Upfitter Provision Schematics (Vehicle Speed Signal)

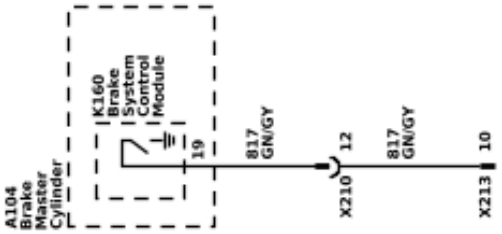

5967567

Upfitter Provision Schematics (Configurable/Accessory Provision (1 of 2) (9L7))

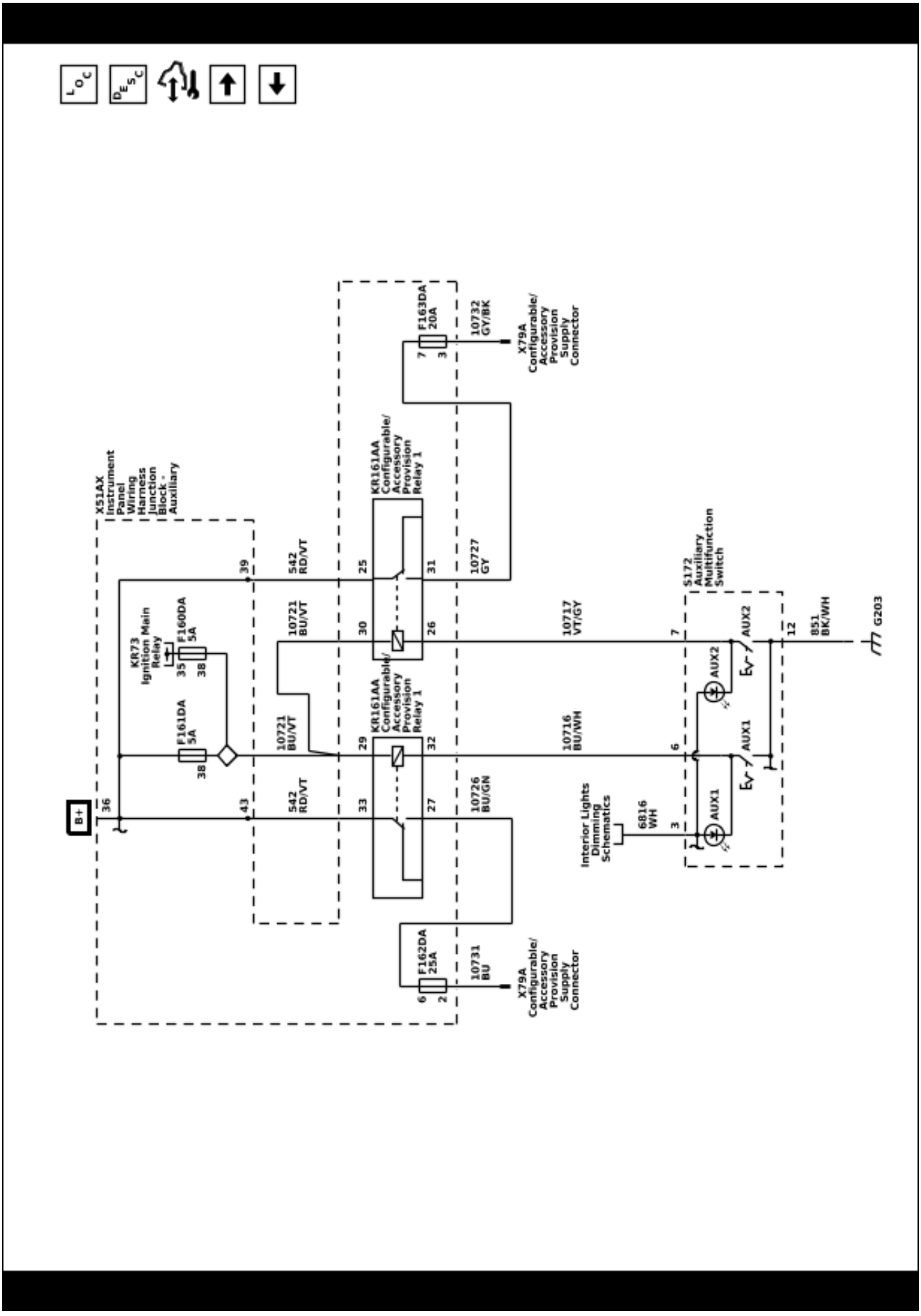

Upfitter Provision Schematics (Configurable/Accessory Provision (2 of 2) (9L7))

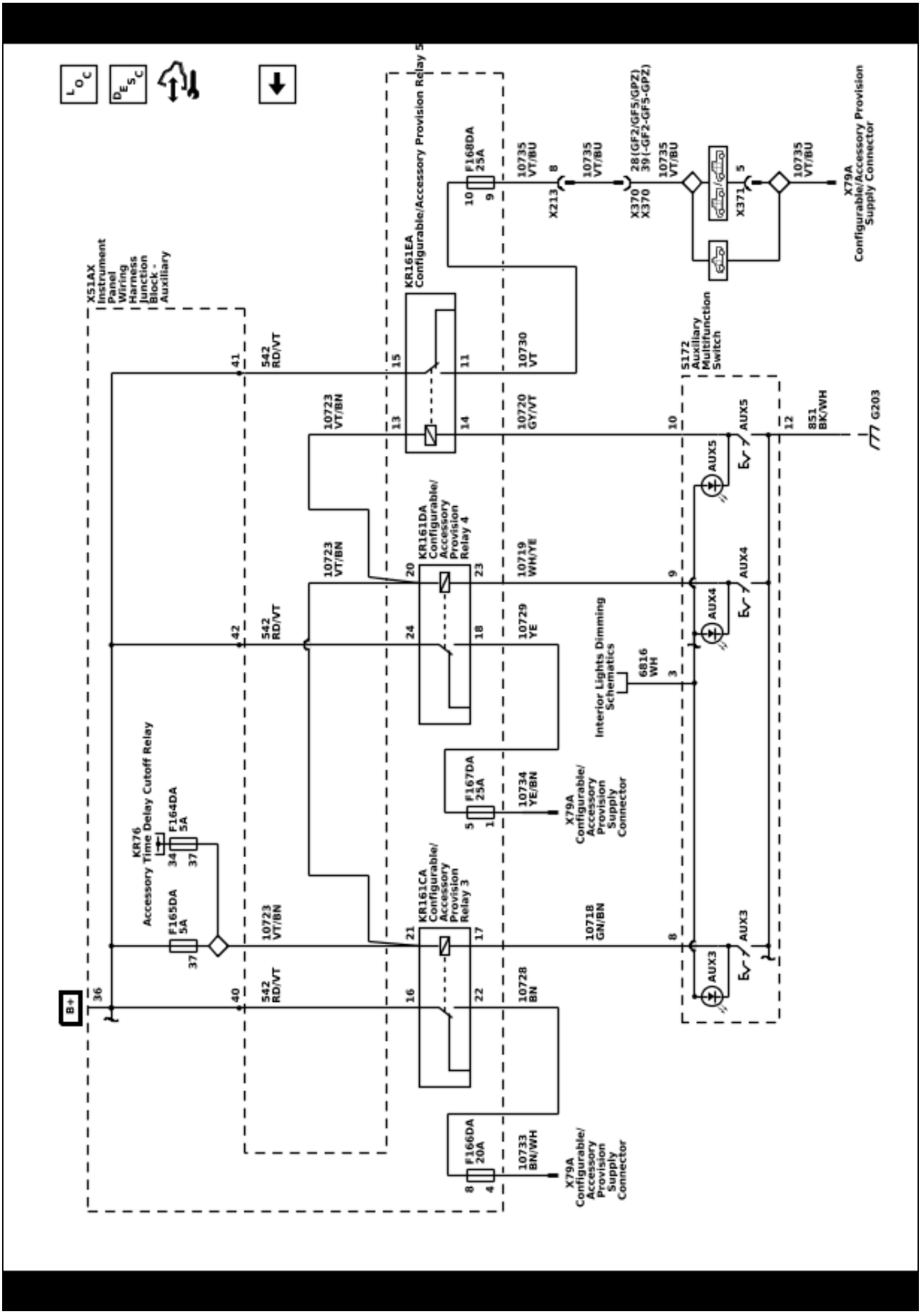

5967569

Upfitter Provision Schematics (Horn Provision (5W4))

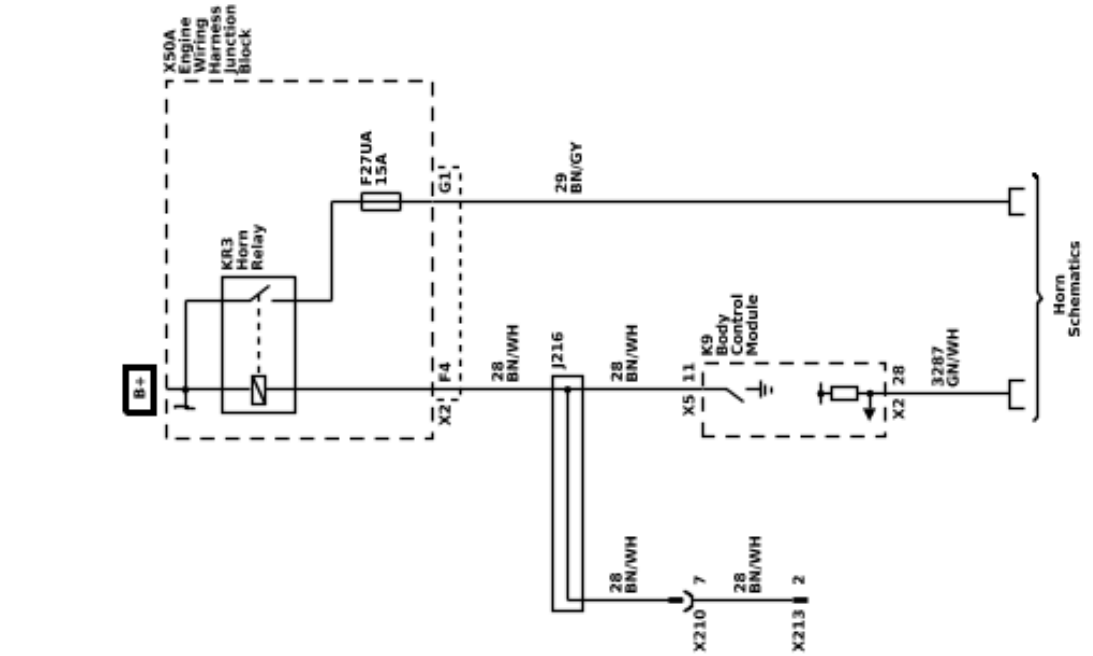

5989418

Upfitter Provision Schematics (Snow Plow Provision (VYU))

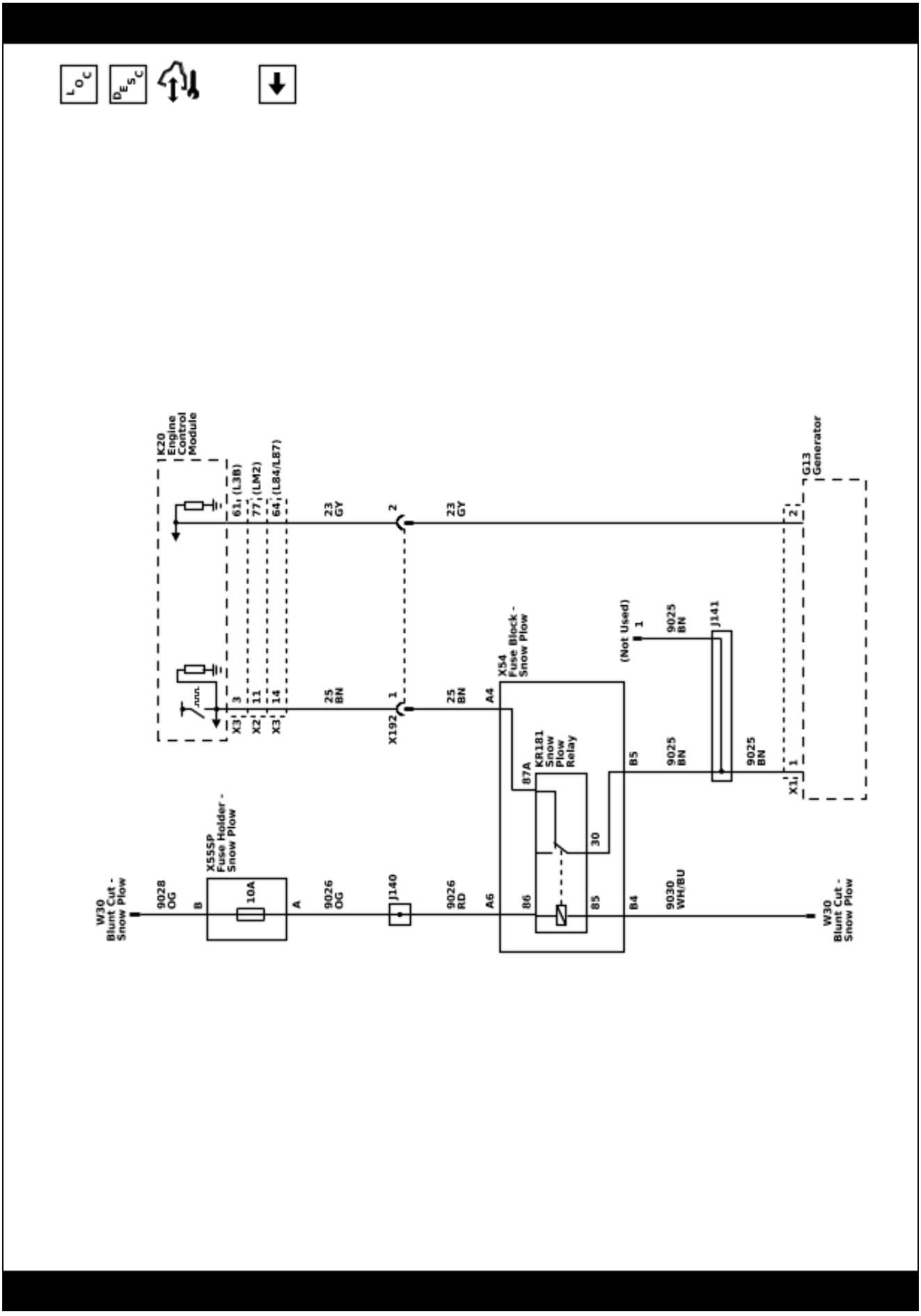

Description and Operation

Power Mode Description and Operation

Serial Data Power Mode Master

The K9 Body Control Module (BCM) is the Power Mode Master and the K56 Serial Data Gateway Module is the Back-Up Power Mode Master.

The Power Mode Master uses various vehicle status conditions and inputs to determine the desired vehicle power mode state. The Power Mode (Off, Accessory, Run, Propulsion, Start) is communicated to other modules via Serial Data and other electrical signals in order to provide the proper feature operation for the appropriate power mode.

If the Power Mode Master cannot control or determine the correct Power Mode, the Backup Power Mode Master will take over and become the vehicle Power Mode Master and place the vehicle into the proper Power Mode by communicating with other modules via Serial Data to provide the proper electrical signals to provide the proper feature operation for the appropriate power mode.

S38 On/Off Vehicle Switch

There are 5 power modes to convey driver intent:

- OFF – A low power mode that allows maximum stand time until next start
- ACCY – Allows use of certain features that require operator authorization (Power windows for example). Propulsion is specifically disallowed.
- RUN – All features enabled except propulsion (motive force)
- PROPULSION – All features enabled
- START - This will transition to PROPULSION, including turning off non-essential loads to provide additional power for starting.

Power Mode States

Customer Action	Expected Vehicle Power Mode	S38 Vehicle On/Off Switch BCM Scan Tool Parameter	S38 Vehicle On/Off Switch Voltages
Vehicle OFF, S38 On/Off Vehicle Switch not pressed, Transmitter in Range	Vehicle Off Mode	Inactive	1.4 – 3.0 V (Switch Pressed) 3.35 – 4.26 V (Switch Released) 4.5 — 5.0 V (Switch Disconnected)
Vehicle OFF, S38 On/Off Vehicle Switch not pressed, Transmitter out of Range/Away from vehicle	Vehicle Off Mode	Inactive	
Vehicle in any Power Mode EXCEPT OFF, then Press the S38 On/Off Vehicle Switch Foot On or Off the Brake Pedal, Transmitter in Vehicle	Vehicle Off Mode	Active (pushed) / Inactive (not pushed)	
Vehicle in Propulsion Mode, momentarily Press and Release the S38 On/Off Vehicle Switch Foot On or Off	Run Mode, With DIC Message No Remote Detected Press Brake to Restart	Active (pushed) Inactive (not pushed)	

Power Mode States (cont'd)

Customer Action	Expected Vehicle Power Mode	S38 Vehicle On/Off Switch BCM Scan Tool Parameter	S38 Vehicle On/Off Switch Voltages
the Brake Pedal, Transmitter out of Range/Away from vehicle			
Vehicle Off Power Mode, then Press the S38 On/Off Vehicle Switch for less than 5 s with foot Off the Brake Pedal; Transmitter in Vehicle	Vehicle Accessory Mode	Active (pushed) / Inactive (not pushed)	
Vehicle Off Power Mode, then S38 On/Off Vehicle Switch with foot On the Brake Pedal; Transmitter in Vehicle	Vehicle Start/ Propulsion Mode (vehicle cranks then engine running (for Internal Combustion Engine) or Propulsion System Active for EV) power mode timeout is enabled	Active (pushed) / Inactive (not pushed)	
Vehicle Off Power Mode, then S38 On/Off Vehicle Switch with foot On the Brake Pedal for 5 to 10 s; Transmitter in Vehicle	Vehicle Start/ Propulsion Mode (vehicle cranks then Propulsion Mode Active) power mode timeout will be disabled.	Active (pushed) / Inactive (not pushed)	
Vehicle OFF Power Mode, then Press and Hold the S38 On/Off Vehicle Switch for 5 s with foot Off the Brake Pedal; Transmitter in Vehicle	Vehicle Run Mode (Ignition ON without the Propulsion system Active)	Active (pushed) / Inactive (not pushed)	
Vehicle OFF Power Mode, then Press and Hold the S38 On/Off Vehicle Switch for 5 s with foot Off the Brake Pedal; Transmitter in Vehicle	Vehicle Start/ Propulsion Mode (vehicle cranks then Propulsion Active) power mode timeout is disabled	Active (pushed) / Inactive (not pushed)	
Vehicle Propulsion Mode with vehicle speed detected above 4 km/h (2.5 MPH) press and hold S38 On/Off Vehicle Switch for 2 s or press and release it 2 times within 5 S.	Vehicle will transition from Propulsion Mode to Run Mode (Ignition On Propulsion system Inactive).	Active (pushed) / Inactive (not pushed)	
NOTE: If the transmitter is not moved for more than 1 hour it will become inactive.			

Service Mode

Service Mode is the Run Power Mode with power mode timeout disabled. This can only be done with the Service Tool.

Automatic Power Mode Timeouts

Note: If the Transmitter/Fob remains stationary and is not moved for one hour, it will go to sleep and may create a fob not in range condition.

This system is designed to prevent batteries from going dead in the event the ignition is left on while unattended, it is also designed to shut the vehicle off if left running unattended. After a Power Mode timeout, the Power Mode Master is responsible for shutting down the or transitioning the vehicle into the low parasitic sleep state “OFF” Power Mode. This Power Mode timeout strategy uses Vehicle Speed, Vehicle Power Mode, Parked Status and other Vehicle Conditions to make the timeout determination.

Accessory Power Mode

The Accessory Power Mode will timeout after approximately 5 minutes. The timer will Start once the system has determined it is in the Accessory Power Mode status. After the timer expires the Power Mode will change to the OFF Power Mode.

Run Power Mode

if the conditions listed below are met the Run Power Mode will timeout after approximately 40 minutes if the transmitter is in range, or 20 minutes if the transmitter is out of range. The timer will Start once the system has determined it is in the Run Power Mode status and all of the following conditions are met. After the timer expires the Power mode will change to OFF Power Mode.

If any of the following conditions are not met and/or if there is a change in the Brake Pedal or Clutch Pedal status, the Run Mode timeout timer will be disabled, and the timer will restart after all of the conditions are met again.

- Vehicle in Run Mode (Vehicle powered up S38 On/Off Vehicle Switch Green indicator on Propulsion Mode Inactive)
- Propulsion is Inactive
- Vehicle in Park.
- Vehicle Speed is 0 KM/MPH.
- Fast Idle is Inactive (If Equipped).
- PTO Remote Start Status is inactive (If Equipped).
- Particulate Filter Cleaning Status is Inactive (if Equipped)

Propulsion Power Mode

If the following conditions listed below are met the Propulsion Power Mode will timeout after approximately 30 minutes if the transmitter is in range, or 15 minutes if the transmitter is out of range. The timer will Start once the system has determined it is in the Propulsion Power Mode status and all of the following conditions are met. After he timer expires the Power mode will change to the OFF Power Mode.

The Propulsion Power Mode Timeout can be disabled by applying and holding the brake pedal and S38 Vehicle On/Off switch for 5 to 10 seconds (varies by model and/or year). A DIC message will be displayed when Power Mode Timeout is disabled.

If any of the following conditions are not met and/or if there is a change in the Brake Pedal or Clutch Pedal status, the Propulsion Mode timeout timer will be disabled, and the timer will restart after all of the conditions are met again.

- Vehicle in Propulsion Mode (Propulsion Active).
- Vehicle in Park.
- Vehicle Speed is 0 KM/MPH.
- Fast Idle is Inactive (If Equipped).
- PTO Remote Start Status is inactive (If Equipped).
- Particulate Filter Cleaning Status is Inactive (if Equipped)

Relay Controlled Power Mode

The BCM uses discrete push button switch inputs, transmitter in range status, current power mode state, and brake pedal position state to distinguish the correct power mode (Off, Accessory Mode, Run Mode, Start/Propulsion Mode). The BCM, after determining the desired power mode, will activate the appropriate relays for that power mode.

The retained accessory power relay remains on for a timed period after the Ignition Mode is OFF. Refer to *Retained Accessory Power Description and Operation on page 5-934* for more information on the retained accessory power function.

Push Button Start

The ignition mode switch has 2 LEDs that indicate the vehicle power mode Amber for Accessory Mode and Green for Run or Start/Propulsion Modes. When the vehicle is in the OFF mode, both LED's will be OFF. Momentarily pressing the S38 On/Off Vehicle Switch button once, brake pedal not applied, the vehicle will enter into the Accessory Mode and the Amber LED will illuminate. The Accessory Mode will timeout after approximately 5 min to help reduce battery drain. With the ignition OFF, brake pedal not pressed, then pressing and holding the S38 On/Off Vehicle Switch for 5 s will place the vehicle in Run Mode (Ignition ON without the Propulsion Mode Active). The vehicle will stay powered up for approximately 40 minutes if the transmitter is in range, or 20 minutes if the transmitter is out of range, and the Green LED will illuminate.

With the ignition OFF brake pedal pressed, then press and release the iS38 On/Off Vehicle Switch, the vehicle will enter Start/Propulsion Mode and the Green LED will illuminate, the engine will crank and the engine will be running for Internal combustion engines (ICE), or Propulsion mode will go Active on Electric Vehicles (EV). The Propulsion Mode will timeout after approximately 30 minutes if the transmitter is in range, or 15 minutes if the transmitter is out of range. The timer will stop when the vehicle is shifted out of PARK or the brake pedal is pressed and released, the timer will reset after the vehicle is placed back in PARK with the Propulsion Mode Active.

Both LED's have the voltage supplied from the body control module (BCM). The ignition mode switch sends the ignition mode switch status to the passive entry passive start module (PEPS) and to the BCM. The PEPS module sends a redundant signal to the BCM with the ignition mode switch status.

Transport Mode

Transport Mode is designed to reduce the parasitic load of some modules during shipping and/or during vehicle storage. Some features may be disabled or have reduced functionality while Transport Mode is ON. Transport Mode is enabled and disabled by either of the following methods:

- With the Scan Tool Diagnostics > Body Control Module > Control Functions > Power Mode.
- Turning the hazard flashers ON, apply and hold the brake pedal, then press and hold the ignition mode switch for greater than 15 s. For vehicles equipped with a DIC a message Transport Mode On when it is enabled and Transport Mode Off

when it is disabled will be displayed for a predetermined amount of time. For vehicles equipped without a DIC, the battery indicator light will constantly flash on the Instrument Cluster when Transport Mode is enabled.

Battery Saver Mode

There are 7 different Battery Saver Modes. Battery Saver Modes 1 to 3 occur in Accessory and Run Power Modes (vehicle on propulsion system Inactive) if the battery voltage drops below approximately 11.5 V. Battery Saver Modes 4 to 7 occur in the Off Power Mode only. Battery Saver Modes 4 to 7 may set DTC's.

- Battery Saver Mode 1: DIC message "Battery Low, Start Vehicle", 4 chimes
- Battery Saver Mode 2: DIC message "Battery Low, Start Vehicle", Load Shed Level 3 is activated
- Battery Saver Mode 3: DIC message "Battery Low, Start Vehicle", Radio/Infotainment shut off, Load Shed Level 3 active
- Battery Saver Mode 4: Battery Saver Mode Ignition Off – Parasitic Current draw of 100 mA or greater
- Battery Saver Mode 5: Battery Saver Mode Ignition Off – Parasitic Current draw of 1 A or greater
- Battery Saver Mode 6: Battery Saver Mode Ignition Off – Battery Voltage less than 12.0 V
- Battery Saver Mode 7: Battery Saver Mode Ignition Off – Battery Voltage less than 11.6 V

Load Shedding

Prior to Load shedding Idle Boost will occur, the idle speeds will be increased by 25 to 300 RPM to help maintain a normal battery voltage. Idle Boost may be noticeable to the driver. If the battery voltage continues to drop below a normal state then load shedding will go active and it will start to reduce electric loads for components that will not impact the safe operation of vehicle. At load shed levels 2 and 3 a DIC message will be displayed "Reducing Features To Save Battery". When load shedding is active the customer may begin to notice features starting to have reduced functions or may become inoperative. Examples of affected loads are radio, HVAC blower(s) front and rear (if equipped), heated/ventilated seats, heated mirrors, rear defogger and other devices with heavy electrical draws. Idle Boost and load shed levels can be observed with the scan tool.

Idle Boost 1

Idle is increased by 25-100 RPM and generally is not noticeable to most drivers.

Idle Boost 2

Idle is increased by 50–200 RPM and generally is not noticeable to most drivers.

Idle Boost 3

Idle is increased by 100–300 RPM and may be noticeable to most drivers.

Load Shed Level 1

Reduces load current by 25%.

Load Shed Level 2

Reduces load current by 50%.

Load Shed Level 3

Electric loads for components that will not impact the safe operation of vehicle will be turned Off.

BCM Awake/Sleep States

The BCM is able to control or perform all of the BCM functions in the awake state. The BCM enters the sleep state when active control or normal monitoring of system functions has stopped and a time limit has passed. The BCM must detect certain wake-up inputs before entering the awake state. The BCM monitors for these inputs during the sleep state.

The BCM will enter the awake state if any of the following wake-up inputs are detected:

- Activity on the serial data line
- Detection of a battery reconnect
- Any door open signal
- Headlamps ON
- Ignition ON
- Park lamps ON
- Keyless entry or remote start message

The BCM will enter a sleep state when all of the following conditions exist:

- Ignition OFF, transmitter is out of range
- No activity exists on the serial data line.
- No outputs are commanded.
- No delay timers are actively counting.
- No wake-up inputs are present.

If all these conditions are met, the BCM will enter a low power or sleep condition.

Retained Accessory Power Description and Operation

Retained Accessory Power

The Retained Accessory Power (RAP) & Interruptible RAP (IRAP) Circuits are controlled by the K9 Body Control Module (BCM). The BCM is the Power Mode Master, it utilizes various Vehicle inputs to determine the Vehicle Power Mode and sends this information via Serial Data and providing associated electrical signals to the entire vehicle for proper feature operation.

The BCM monitors the vehicles power modes, and door ajar/open switch status to determine whether the retained accessory power should be initiated and remain active or be terminated. The RAP output is optional based on the vehicles option contents. When utilized, the RAP Output control can be used to control a RAP Relay, it may provide direct power, or s serial data message to vehicle devices/modules from the BCM.

Retained Accessory Power Relay Coil Control Circuit (If Equipped)

The BCM keeps the device or relay (if equipped) energized during all power modes, except Off-Awake and Crank. The device(s) remain active for

approximately 10 min after the Vehicle is placed into the OFF Power Mode, provided none of the doors are opened.

Retained accessory power will end when one of the following conditions are met:

- The BCM receives an input from any door ajar switch indicating the opening of the door after the OFF Power Mode is achieved.

  Note: If the BCM is receives a door open/ajar active signal when the vehicle is placed into the OFF Power Mode, the retained accessory power will not initiate.

- The BCM internal timer for the retained accessory power expires after approximately 10 min.

Systems powered by the retained accessory power control circuit during the retained accessory power mode are as follows:

Note: The vehicle may not be equipped with all components as listed below.

- 12 V Accessory Power Receptacle
- Cigarette Lighter Receptacle
- Window Switches
- Sunroof Control Module (If Equipped)
- Sunroof Switch (If Equipped)
- Mobile Device Wireless Charger Module
- Mobile Telephone Control Module (If Equipped)
- Traffic Data Receiver (If Equipped)
- Transmission Shift Lever Position Indicator (w/ floor mounted console gear shift)

Serial Data Controlled Retained Accessory Power

Retained accessory power systems controlled by serial data are as follows:

Radio

Radio retained accessory power activation/termination is the same as relay operation with one exception; the only door that will turn the radio off during retained accessory power is the driver door open/ajar switch. The USB Ports will function the same as the radio.

Vehicle Communication Interface Module (VCIM) (Onstar®) (If Equipped)

VCIM RAP activation/termination is the same as radio operation with 1 exception; if there is an active call and the vehicle is placed in the OFF Power Mode, the VCIM will remain in RAP mode, and keep the radio in RAP mode until the call is terminated.

Interruptible Retained Accessory Power

The Power Mode Master (PMM) Controls components as needed If equipped with a RAP relay, the BCM controls the Retained Accessory Power with an exception, Interruptible Retained Accessory Power (IRAP) is deactivated during transmitter authentication. During Transmitter Authentication the PMM will deactivate components including IRAP to prevent Radio Frequency (RF) Interference (RFI) that may cause a “NO REMOTE DETECTED” message to be displayed on the drivers information center.

Note: If transmitter Authentication occurs while in Run or Propulsion Modes, it is normal to for IRAP to be interrupted momentarily (i.e. items connected to auxiliary power ports or chargers may momentarily go off then come back on).

If a remote transmitter was not been previously detected, Transmitter Authentication can occurs under any of the following conditions:

- The drivers side front door is opened.
- The drivers side rear door is opened.
- The S38 Vehicle On/Off Switch is pressed.

BLANK

Section 6

Safety and Security

Driver Assistance Systems 6-3
Schematic and Routing Diagrams 6-3
Driver Assistance Systems Schematics (without UKL) 6-4
Driver Assistance Systems Schematics (UKL) ... 6-9
Description and Operation 6-19
Forward Collision Alert Description and Operation (without UGN) 6-19
Forward Collision Alert Description and Operation (with UGN) 6-21
Lane Keep Assist Description and Operation ... 6-21
Safety Alert Seat Description and Operation ... 6-22
Side Blind Zone Alert Description and Operation 6-23
Immobilizer 6-26
Schematic and Routing Diagrams 6-26
Immobilizer Schematics 6-27
Description and Operation 6-28
Immobilizer Description and Operation 6-28
Parking Assistance Systems 6-30
Schematic and Routing Diagrams 6-30
Parking Assistance Systems Schematics 6-31
Description and Operation 6-34
Parking Assist Description and Operation (UD5) 6-34
Remote Functions 6-36
Schematic and Routing Diagrams 6-36
Remote Function Schematics 6-37
Description and Operation 6-40
Garage Door Opener Description and Operation 6-40
Keyless Entry System Description and Operation 6-40

BLANK

Driver Assistance Systems

Schematic and Routing Diagrams

Driver Assistance Systems Schematics (without UKL) (Lane Keep Assist and Forward Collision Alert - Module Power, Ground, and Serial Data (UEU-UKL))

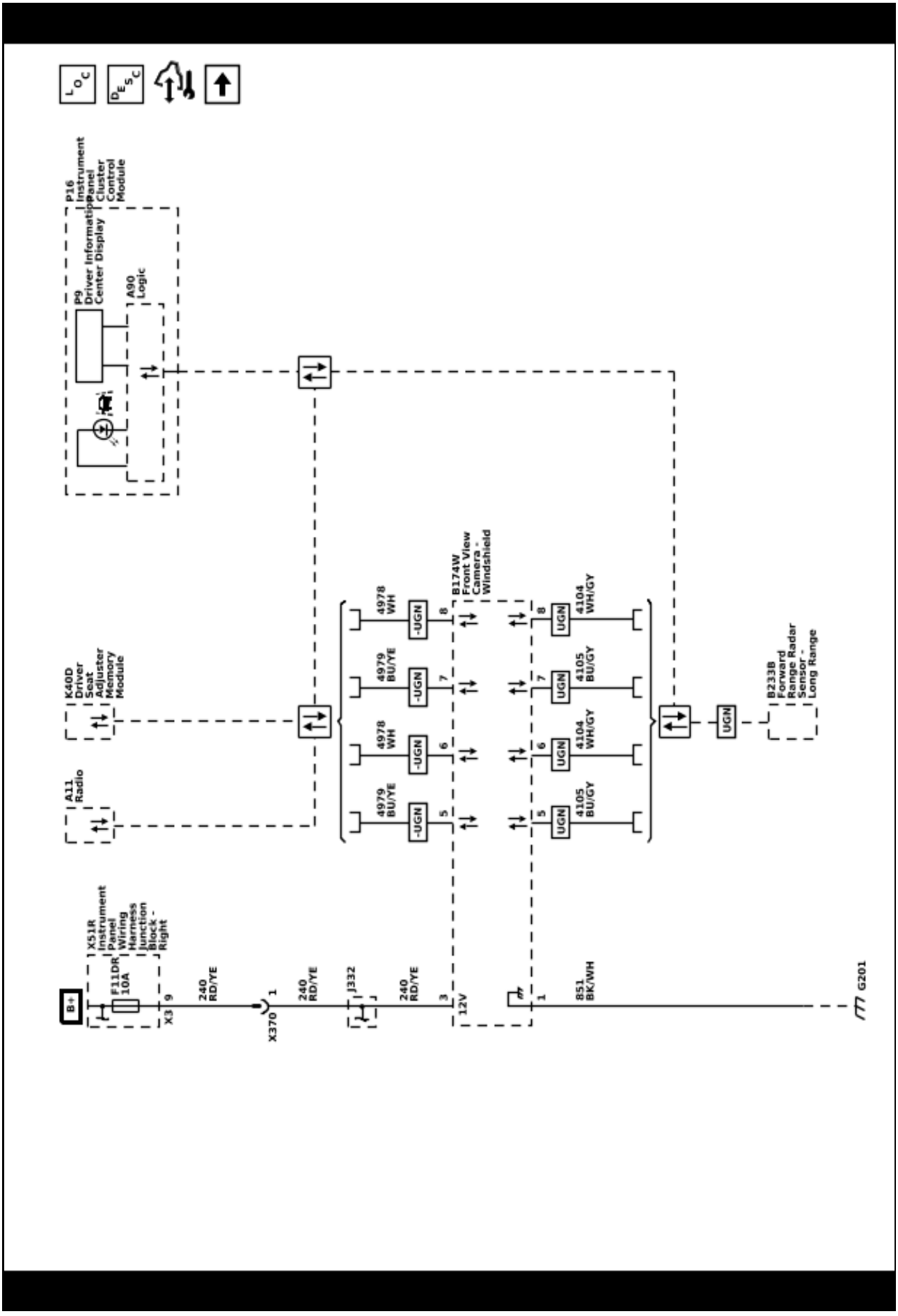

Driver Assistance Systems Schematics (without UKL) (Lane Keep Assist and Forward Collision Alert - Controls (UEU-UKL))

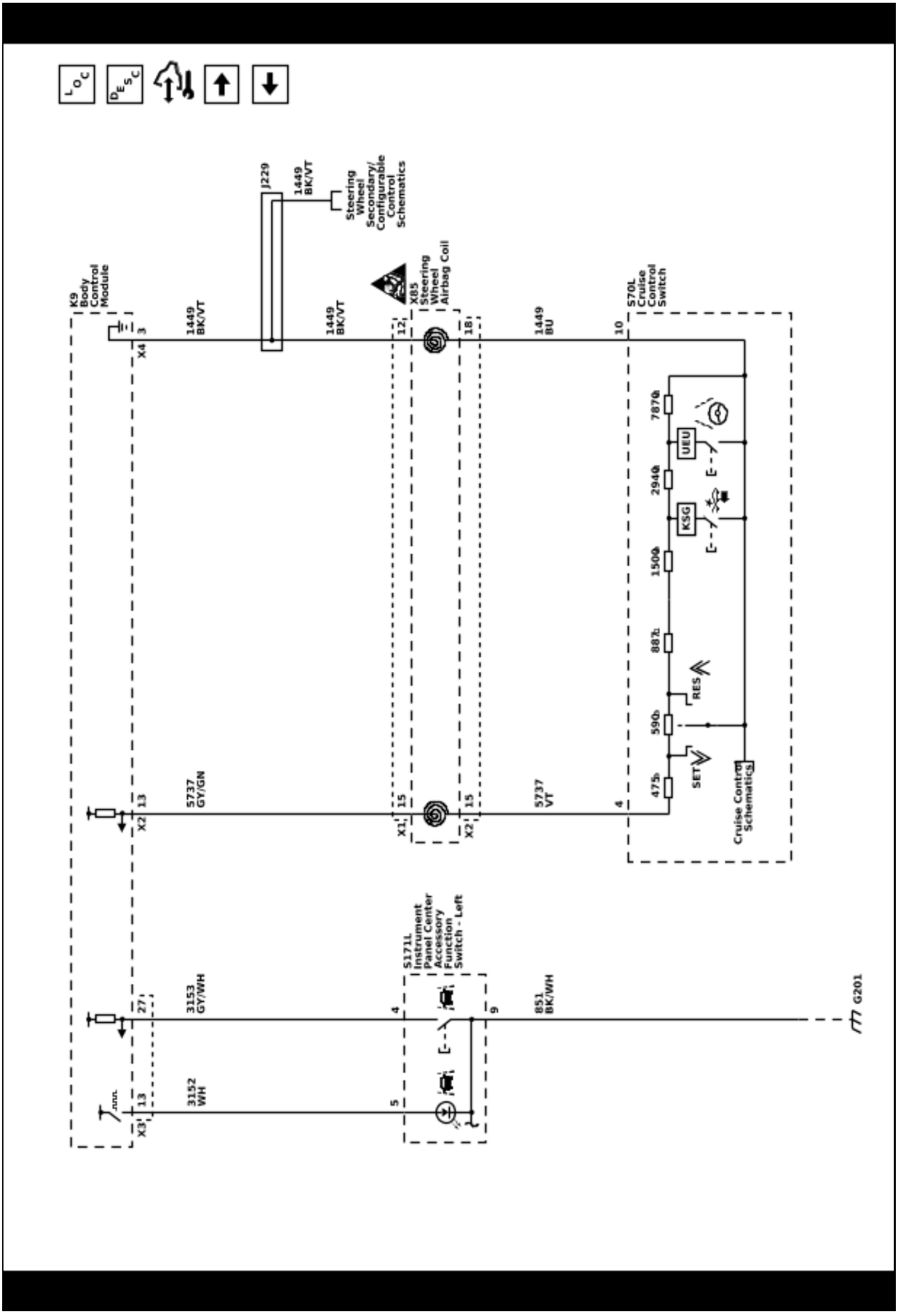

Driver Assistance Systems Schematics (without UKL) (Rear Cross Traffic Alert (UFB) and Side Blind Zone Indicators ((UKC/UKV)-UKL))

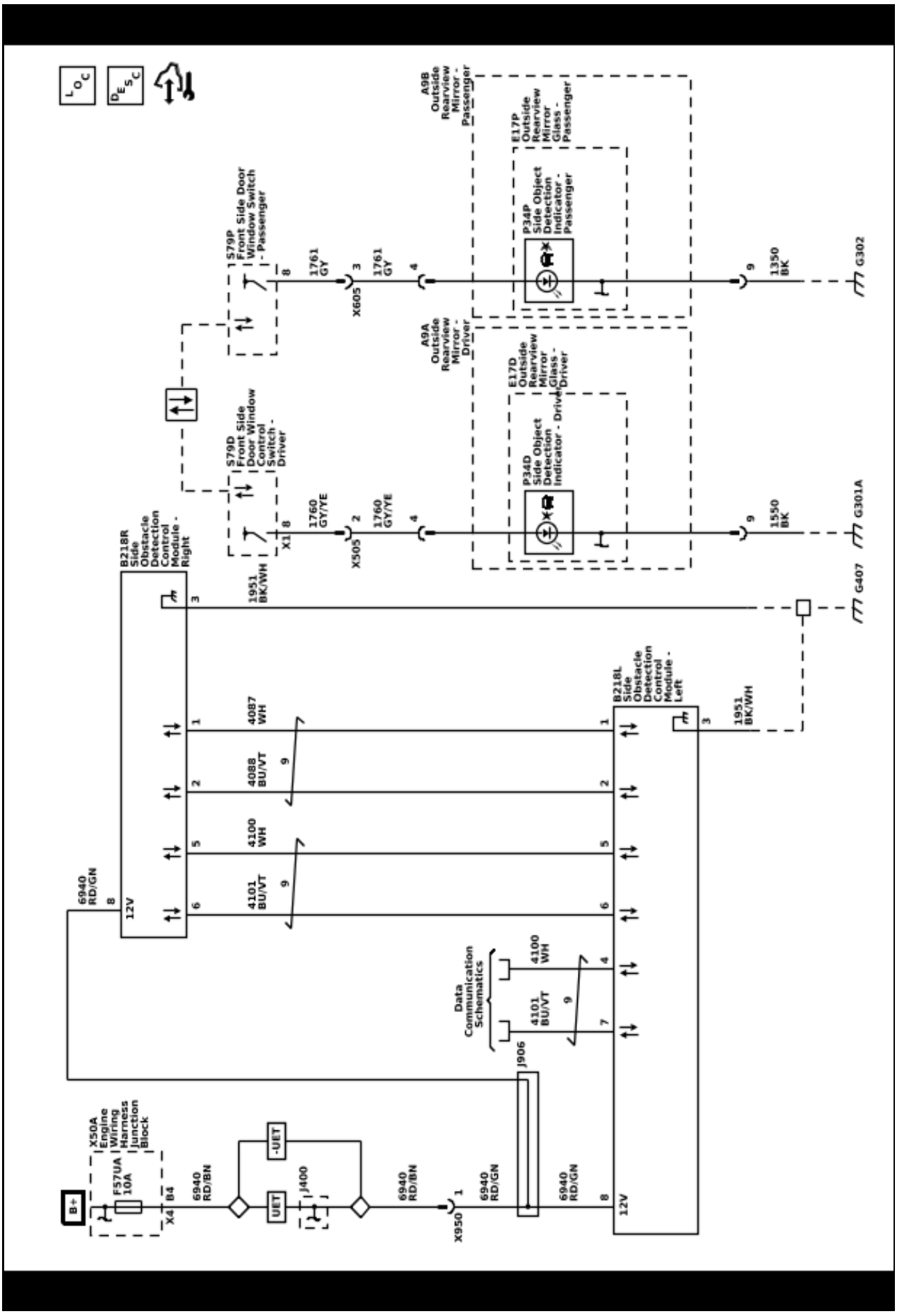

Driver Assistance Systems Schematics (without UKL) (Collision Avoidance - Module and Long Range Radar (UGN-UKL))

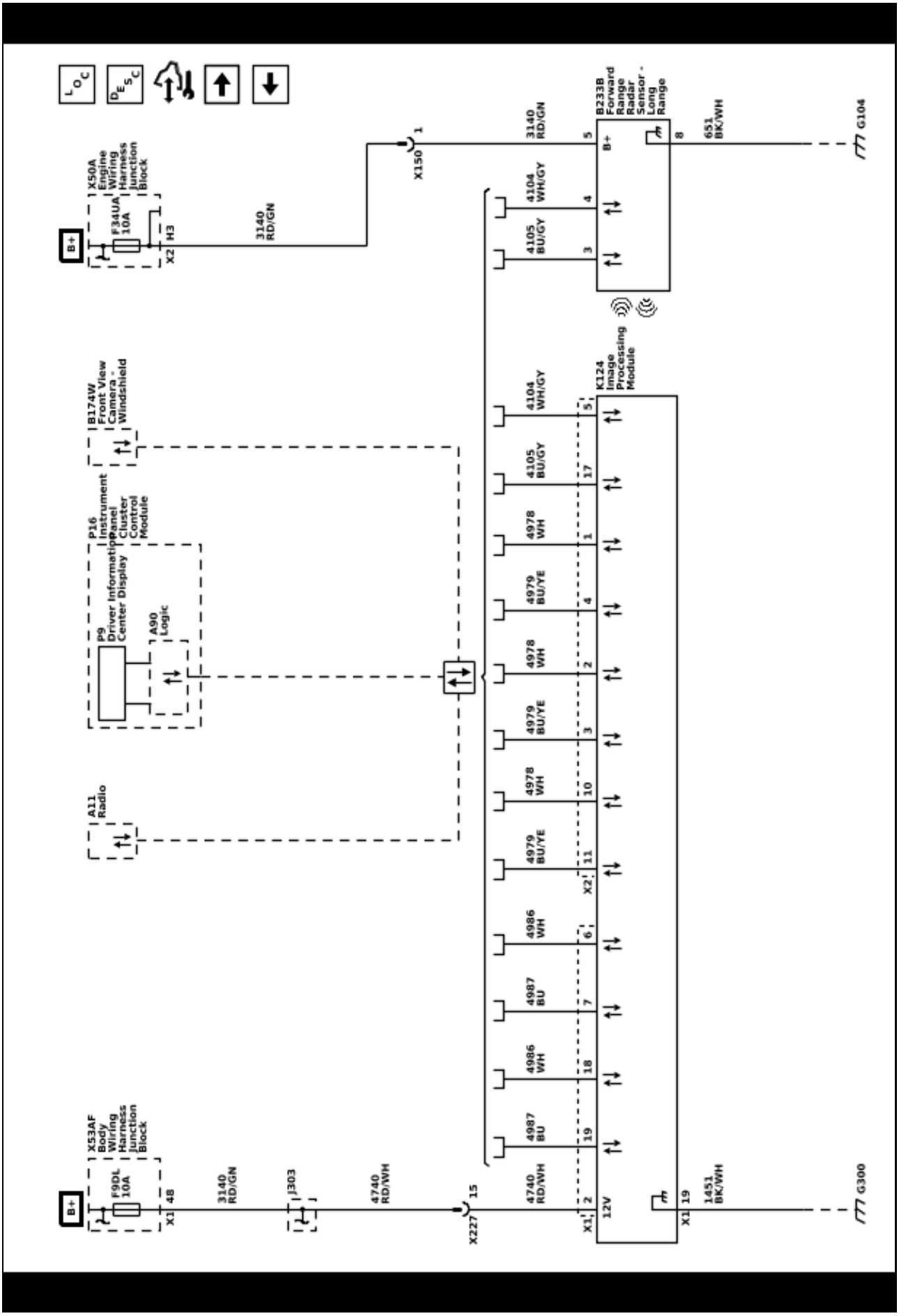

Driver Assistance Systems Schematics (without UKL) (Collision Alert Indicators (-UKL))

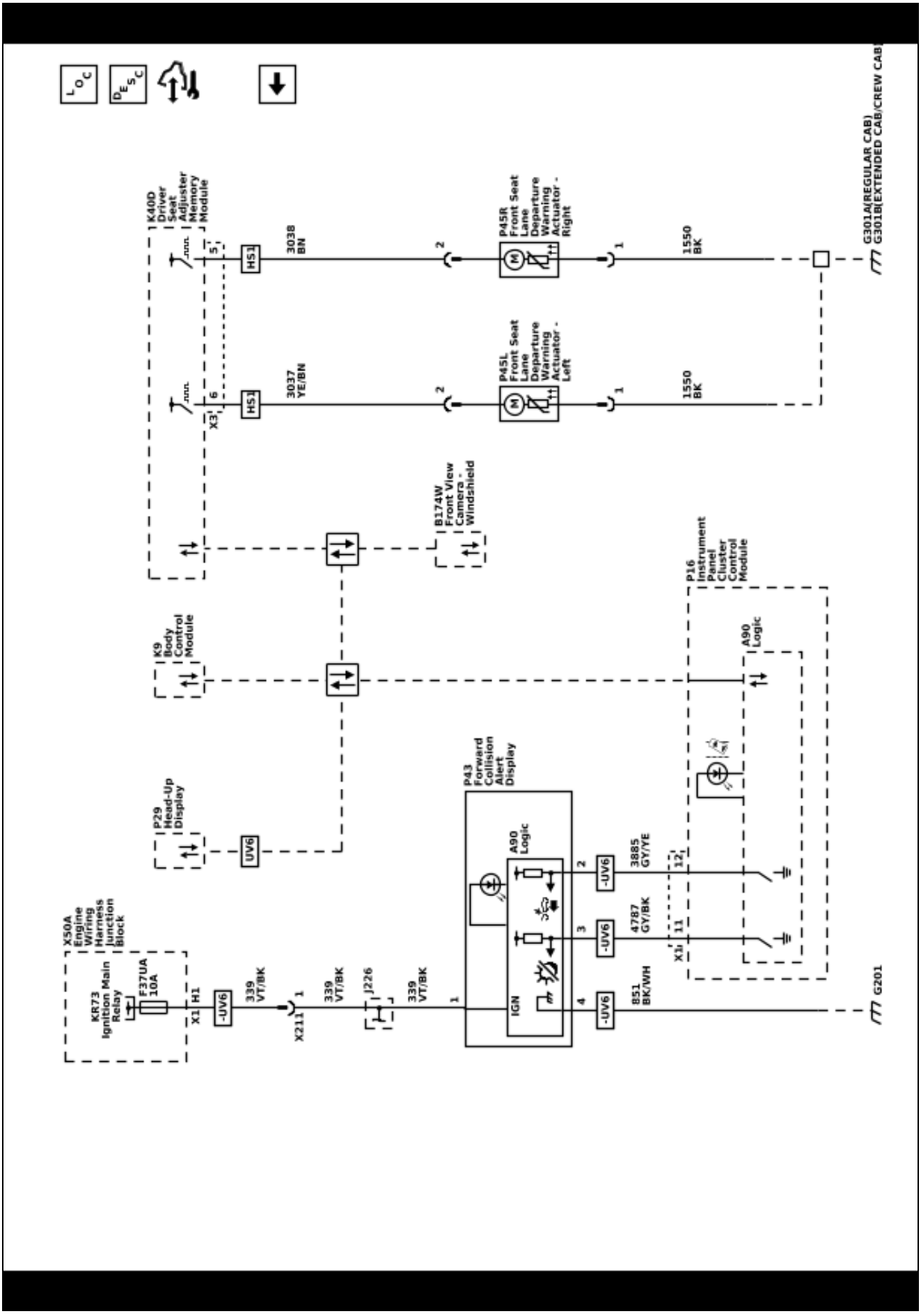

5967575

Driver Assistance Systems Schematics (UKL) (Lane Keep Assist and Forward Collision Alert - Module Power, Ground, and Serial Data (UEU+UKL))

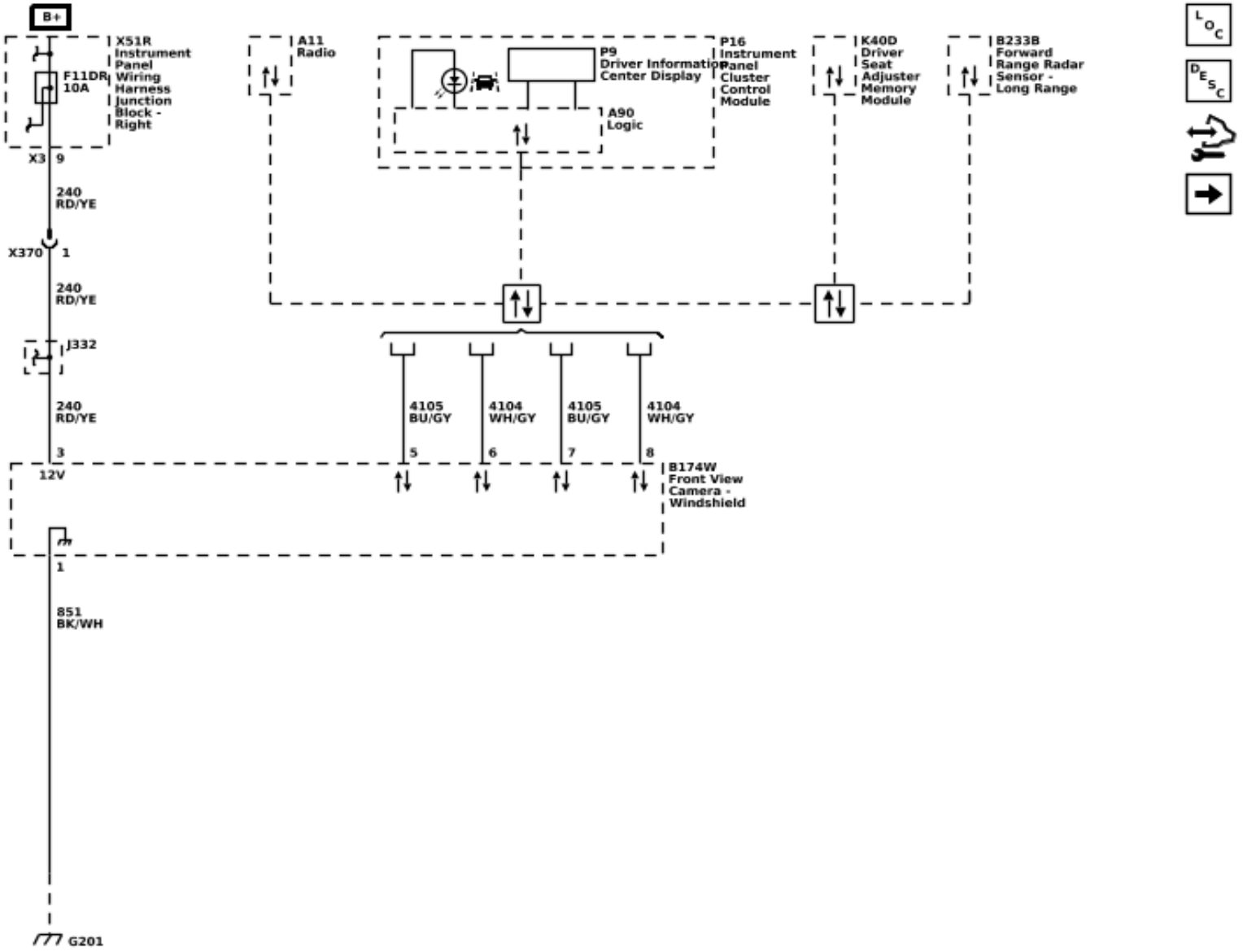

5967576

Driver Assistance Systems Schematics (UKL) (Lane Keep Assist and Forward Collision Alert - Controls (UEU+UKL))

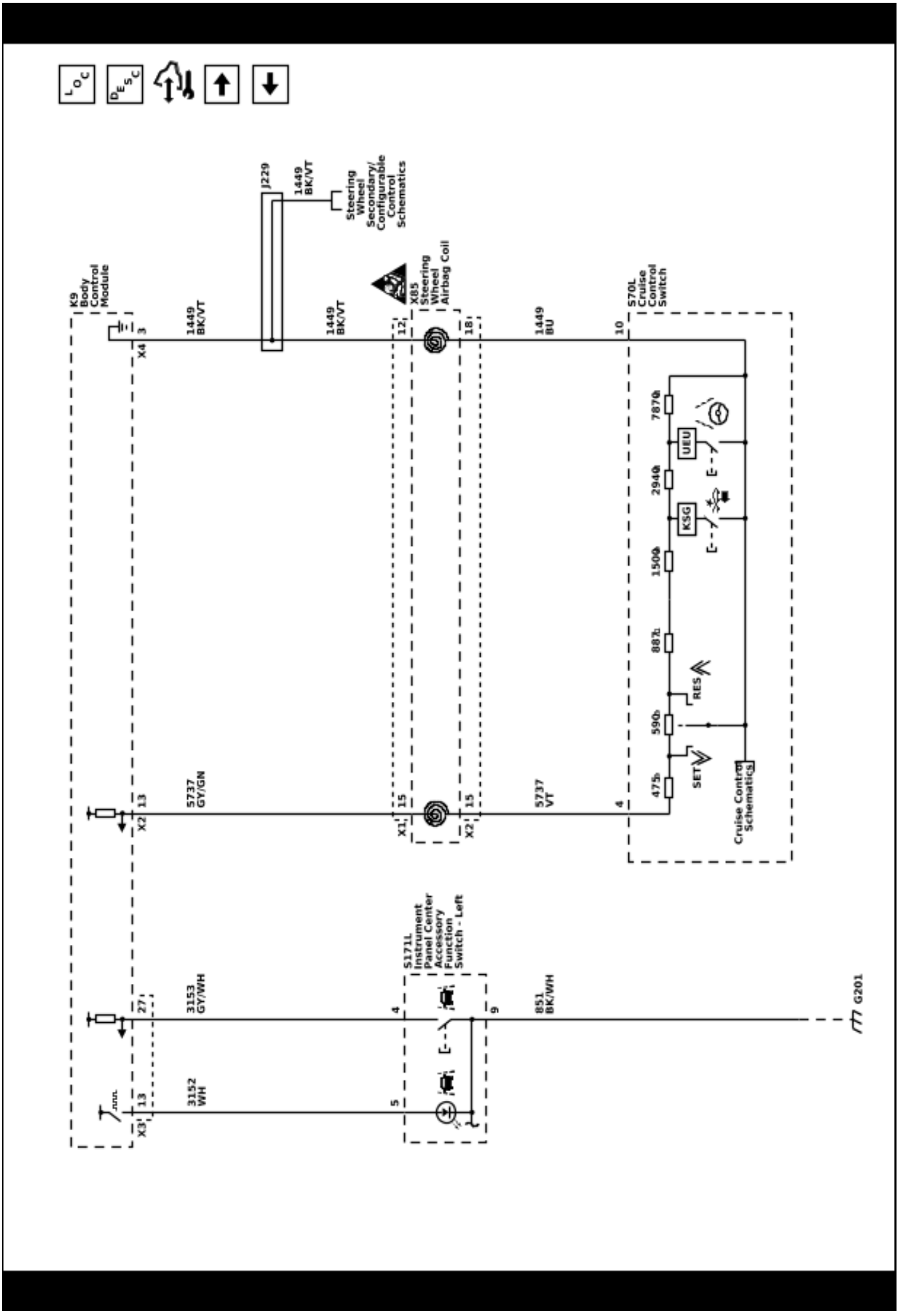

Driver Assistance Systems Schematics (UKL) (Side Blind Zone Indicators ((UKC/UKV)+UKL))

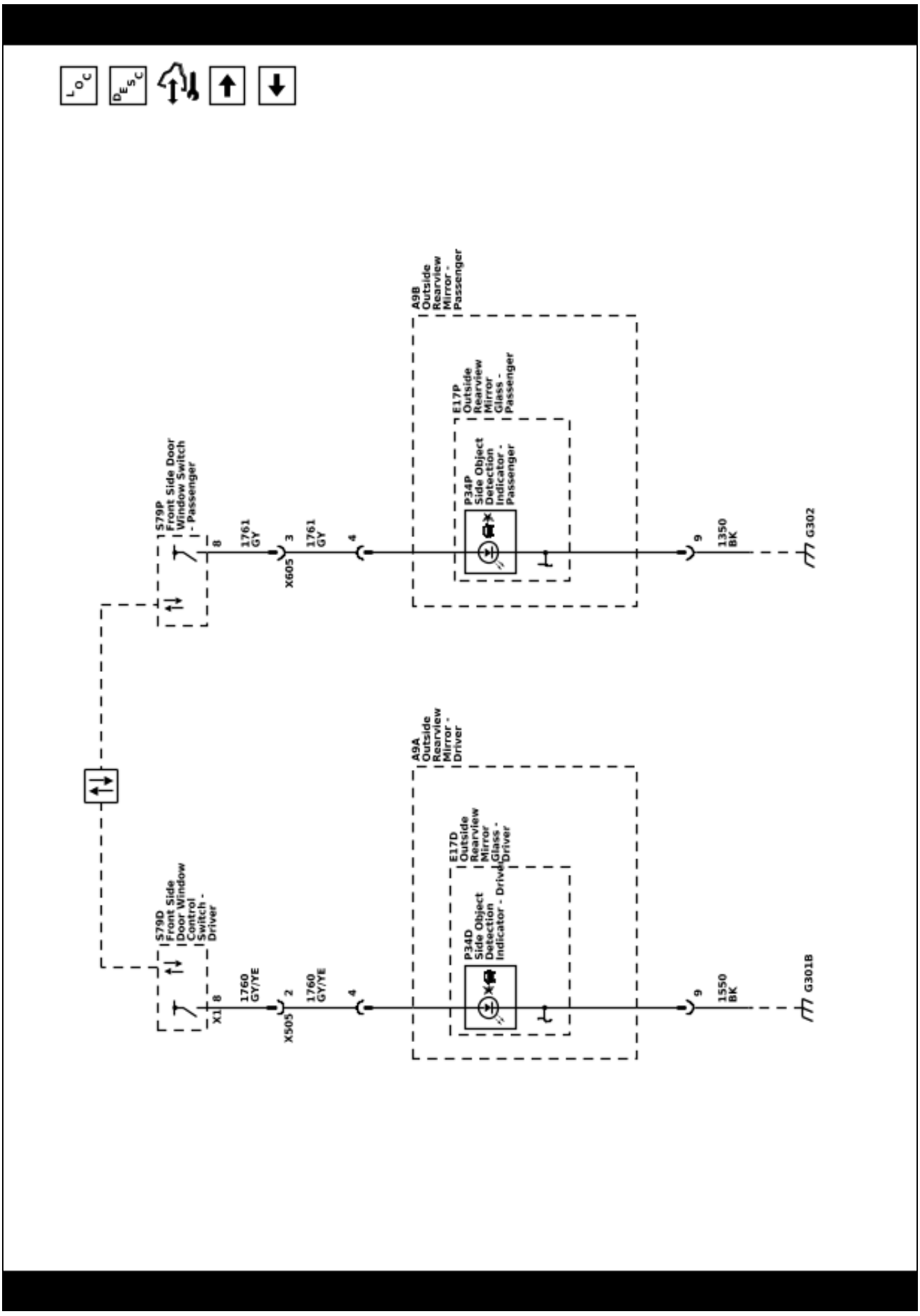

Driver Assistance Systems Schematics (UKL) (Collision Alert Indicators (UKL))

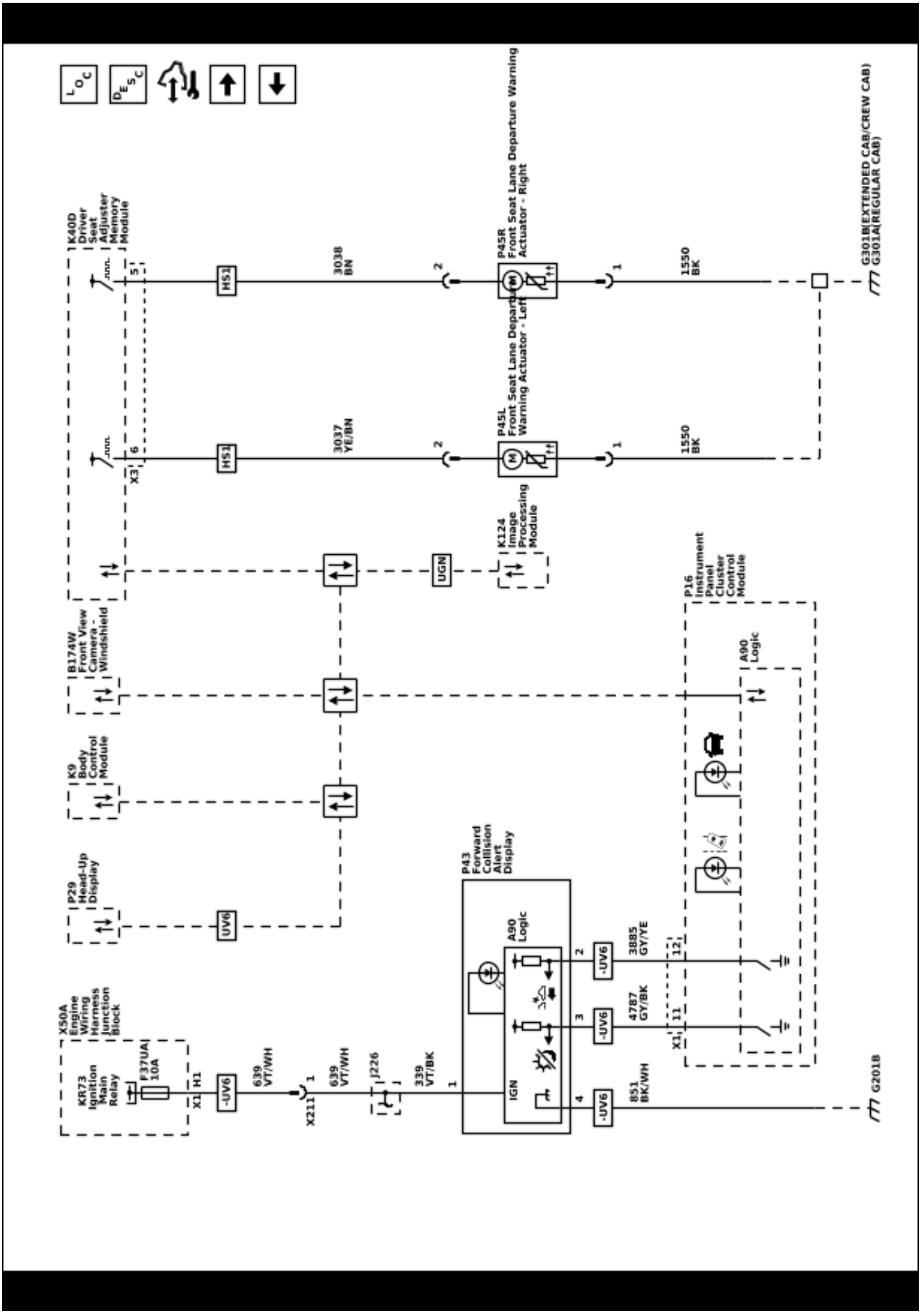

Driver Assistance Systems Schematics (UKL) (Collision Mitigation - Image Processing Module and Vehicle Dynamic Sensor (UKL))

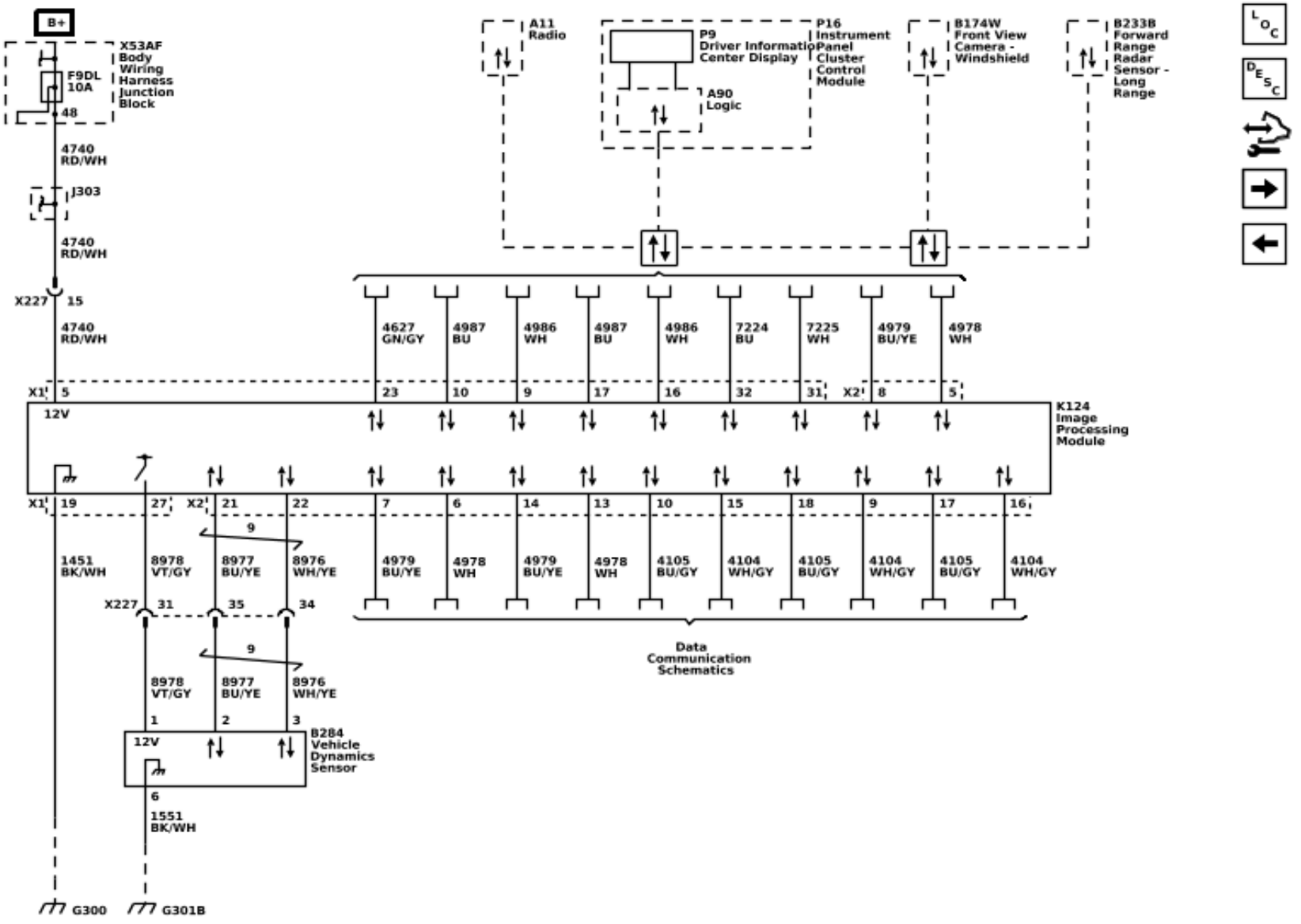

5967580

Driver Assistance Systems Schematics (UKL) (Collision Mitigation - Front Radars (UKL))

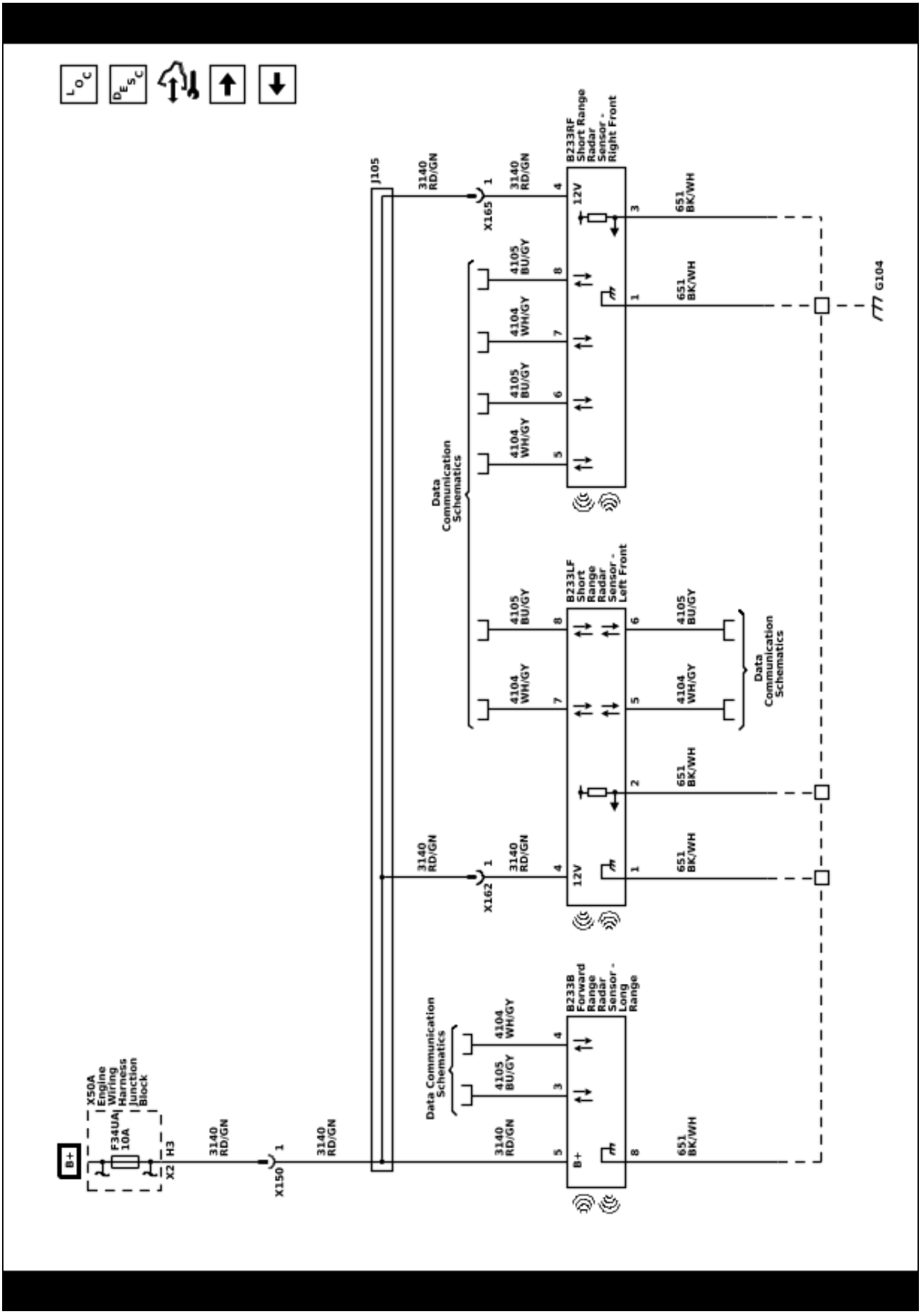

Driver Assistance Systems Schematics (UKL) (Collision Mitigation - Side Radars (UKL))

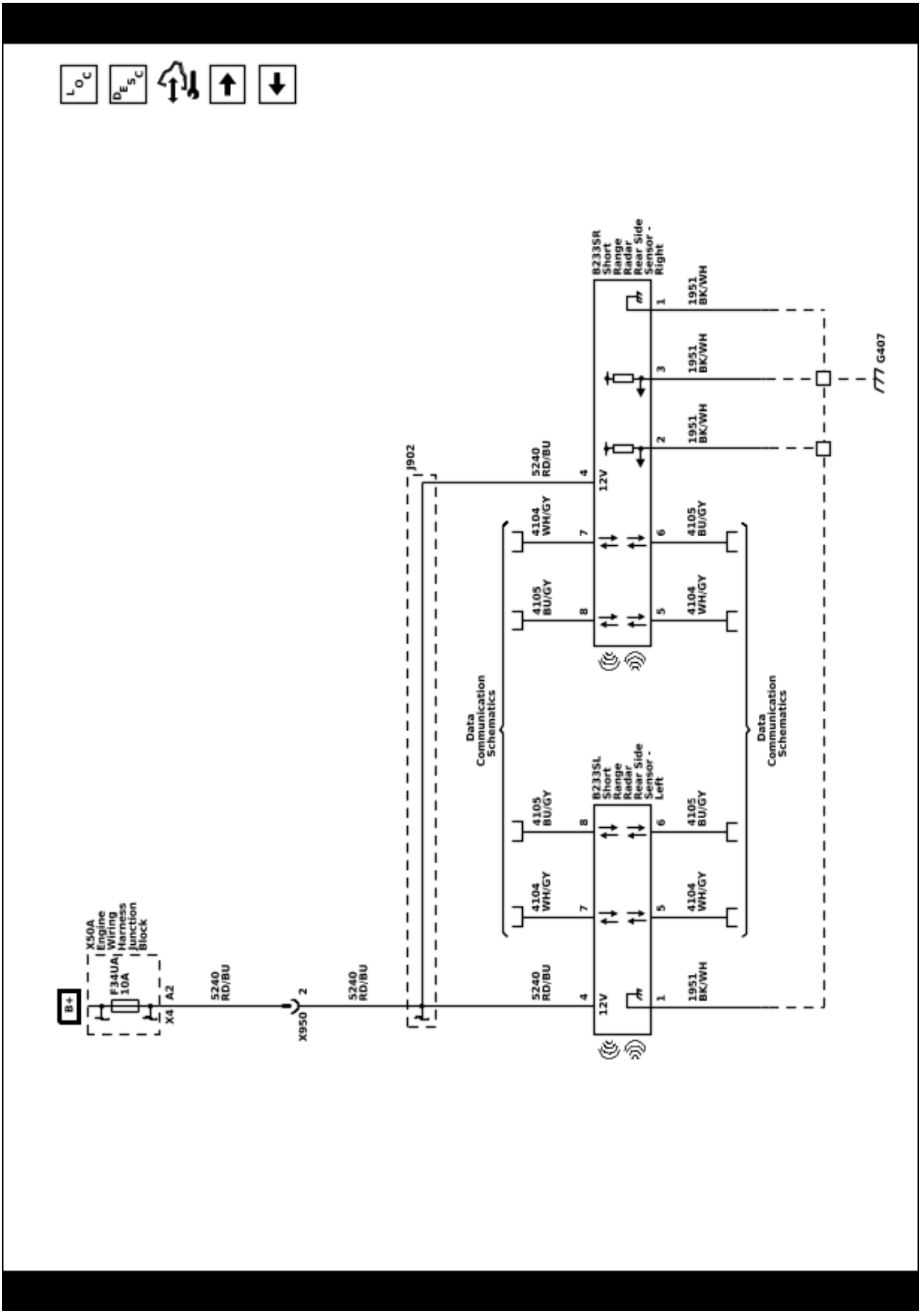

Driver Assistance Systems Schematics (UKL) (Collision Mitigation - Rear Radars (UKL))

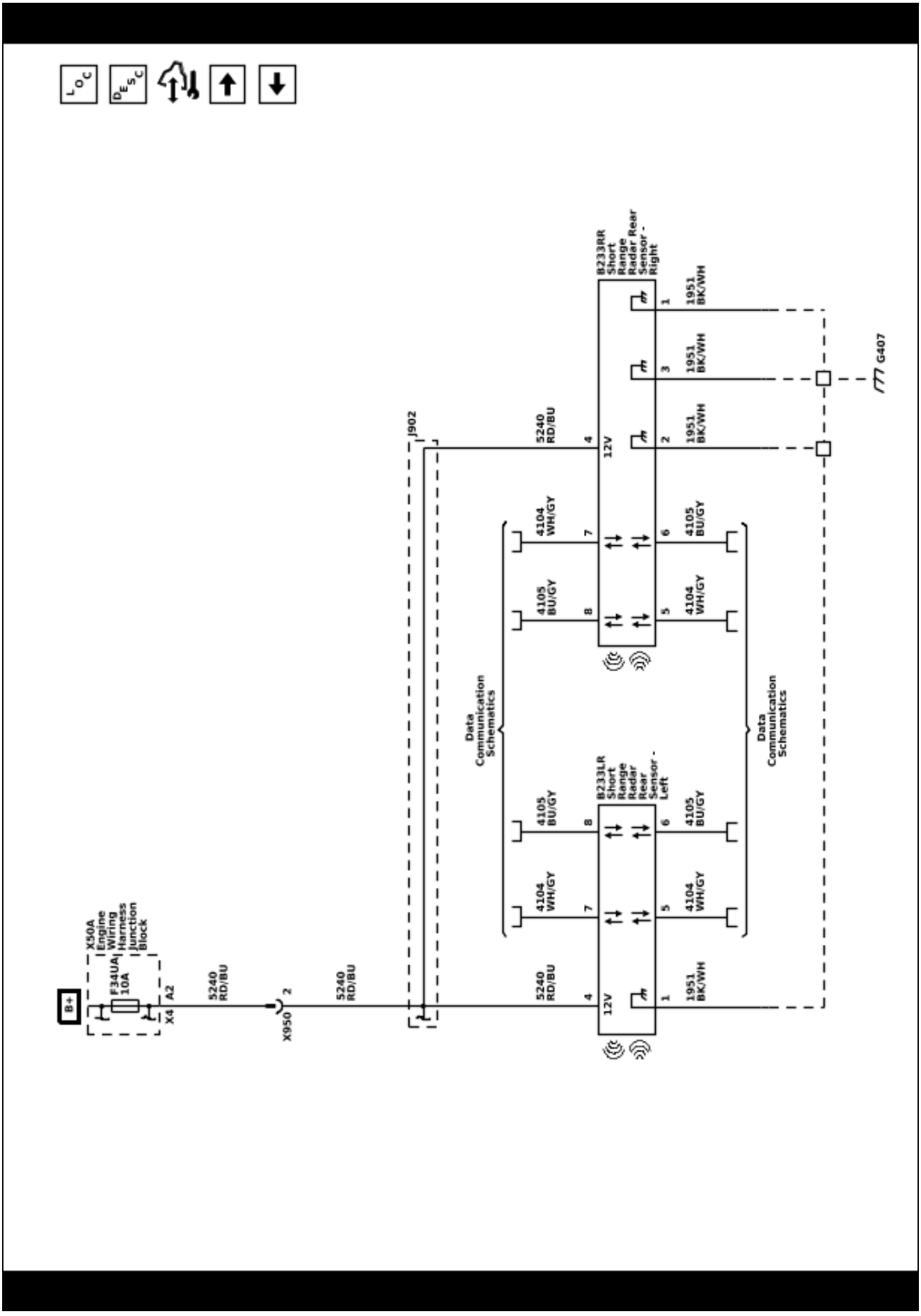

Driver Assistance Systems Schematics (UKL) (Digital Map Control Module (UKL))

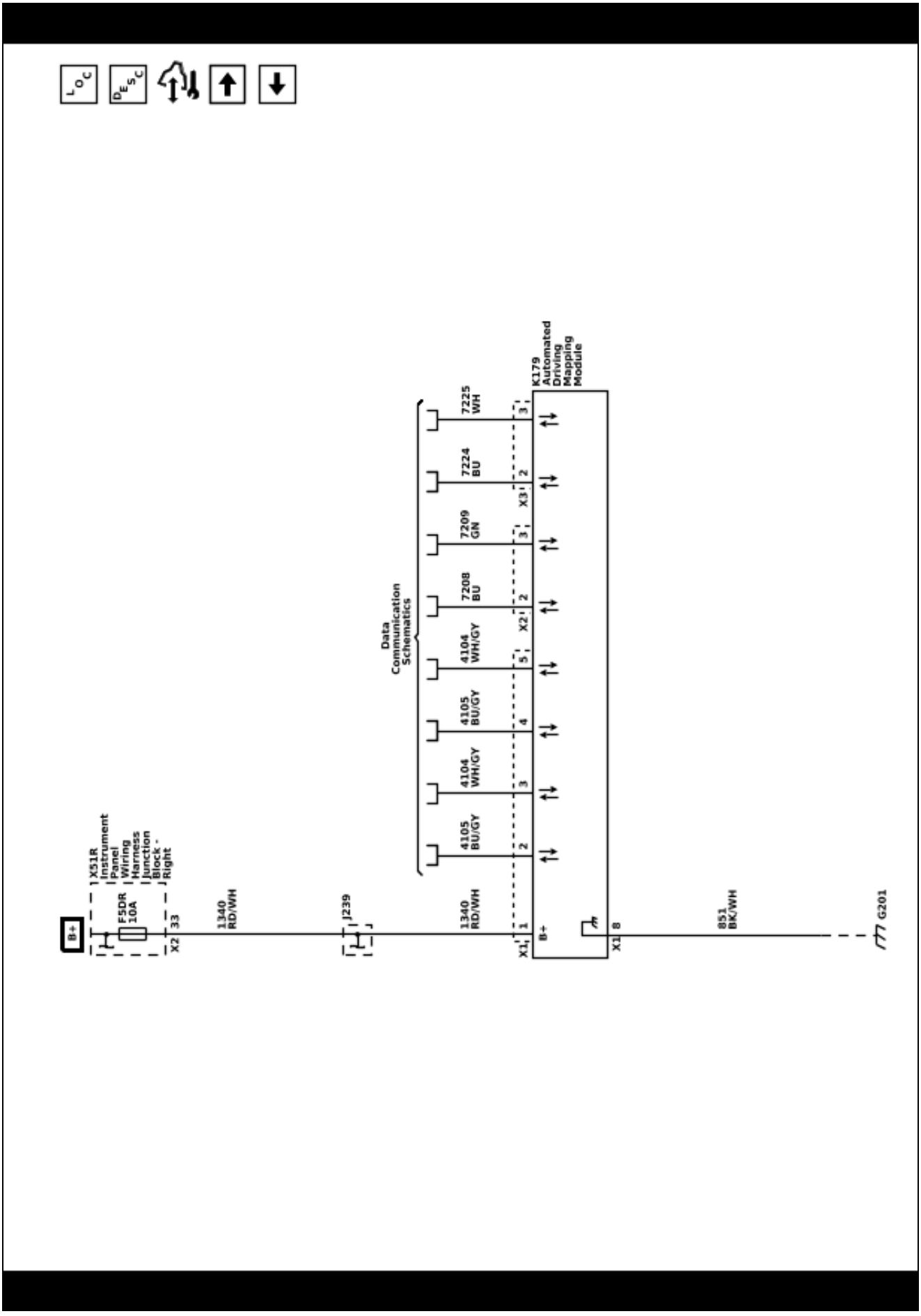

Driver Assistance Systems Schematics (UKL) (Steering Wheel Lightbar and Touch Sensors (UKL))

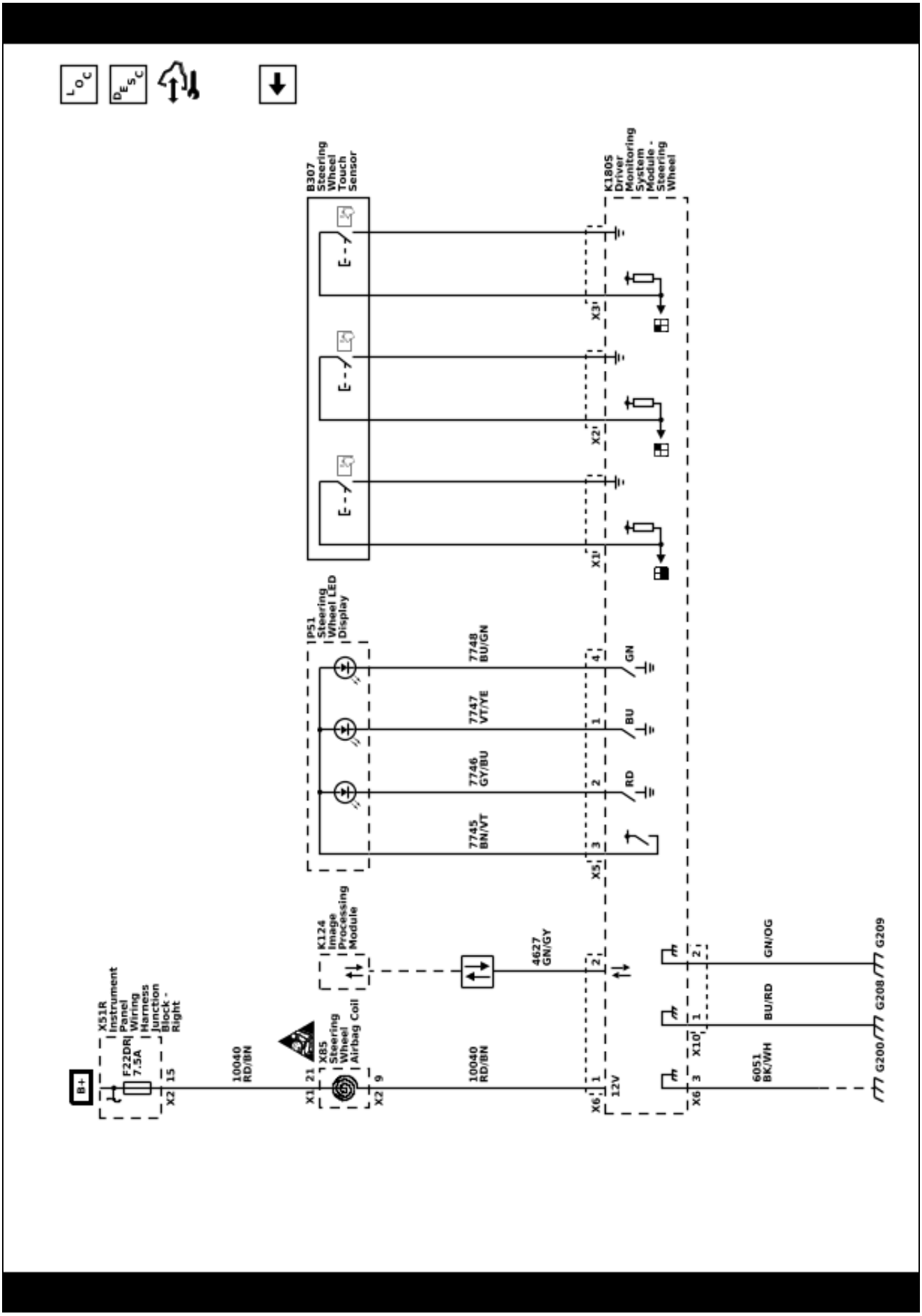

Description and Operation

Forward Collision Alert Description and Operation (without UGN)

Forward Collision Alert (UEU)

The forward collision alert system is a convenience feature of the B174W Front View Camera - Windshield that can warn drivers of a possible front-end collision situation with a vehicle they are following. The B174W Front View Camera - Windshield is located behind the windshield, looking out at the road ahead and detecting vehicles directly ahead. When a vehicle is detected ahead, a green icon is displayed. This indicator will turn amber if the driver is following too closely. If the system detects that the driver is seconds away from a possible front-end collision, it sends an alert. The P43 Forward Collision Alert Display, which includes a series of red collision alert LEDs, will flash. An audible alert sound will simultaneously sound. If the vehicle is equipped with safety alert seat (HS1), both sides of the seat will pulse. The forward collision alert system can be set to "far," "medium," or "near" timing using the forward collision alert switch and can be turned off using this control or through the vehicle personalization.

Forward collision alert does not provide a warning to help avoid a crash unless it detects a vehicle. Forward collision alert may not detect a vehicle ahead if the B174W Front View Camera - Windshield is blocked by dirt, snow, or ice, or if the windshield is damaged. It may also not detect a vehicle on winding or hilly roads, or in conditions that can limit visibility such as fog, rain, or snow, or if the headlamps or windshield are not cleaned or in proper condition. Keep the windshield, headlamps, and B174W Front View Camera - Windshield area clean and in good repair.

Forward collision alert may provide unnecessary alerts for turning vehicles, vehicles in other lanes, objects that are not vehicles, or shadows. These alerts are normal operation and the vehicle does not need service.

Forward Automatic Braking (UHY)

Forward automatic braking detects vehicles ahead in your path that are traveling in the same direction and may help reduce crash severity or avoid the crash altogether by applying the brakes automatically or enhancing the driver's braking in some emergency front-end collision situations . It can provide braking assist, such as brake system pre-fill, or automatically brake the vehicle if an imminent collision is determined. This can help avoid or lessen the severity of crashes when driving in a forward gear. Depending on the situation, the vehicle may automatically brake moderately or hard. Forward automatic braking can only occur if a vehicle is detected. When a vehicle is detected ahead, a green icon is displayed. The forward automatic braking system works when driving in a forward gear between 8 km/h (5 mph) and 60 km/h (37 mph). It can detect vehicles up to approximately 60 m (197 ft) away.

If the system detects that the driver is seconds away from a possible front-end collision with the vehicle it is following, it will first send an alert. If the driver doesn't respond quickly or the situation happens suddenly, forward automatic braking enhances the driver's braking or automatically applies the brakes. Drivers can override automatic braking at any time by pressing the accelerator or by braking. If the system slows a vehicle to a complete stop, the electronic parking brake will apply. The electronic parking brake can be release in typical fashion by pressing the electronic parking brake switch.

Through vehicle personalization, the forward automatic braking can be been set to the ALERT setting or turned completely off. This setting disables most automatic braking functions. The driver information center will display FORWARD COLLISION SYSTEM REDUCED or AUTOMATIC COLLISION PREP REDUCED. This is normal operation when the forward automatic braking or forward collision alert system is set to OFF or ALERT. This message is not present when the forward automatic braking or forward collision alert system are set to ALERT and BRAKE.

Forward Collision Alert/Forward Automatic Braking Components

- B174W Front View Camera - Windshield
- P16 Instrument Panel Cluster Control Module
- P43 Forward Collision Alert Display (without UV6)
- P29 Head-Up Display (with UV6)
- Forward Collision Alert Switch
- Infotainment System
- Safety Alert Seat (with HS1)

B174W Front View Camera - Windshield

The B174W Front View Camera - Windshield detects vehicles in front of the vehicle. The B174W Front View Camera - Windshield communicates with the P16 Instrument Cluster via serial data to illuminate the appropriate amber or green vehicle ahead indicator or P43 Forward Collision Alert Display. The B174W Front View Camera - Windshield also communicates via serial data with the infotainment system to request audible alerts.

P16 Instrument Panel Cluster Control Module

The P16 Instrument Panel Cluster Control Module communicates via serial data with the B174W Front View Camera - Windshield and will illuminate the amber or green vehicle ahead indicator as requested by the B174W Front View Camera - Windshield. The P16 Instrument Panel Cluster Control Module also controls the P43 Forward Collision Alert Display.

P43 Forward Collision Alert Display (without UV6)

The P43 Forward Collision Alert Display are a series of red LEDs that will flash when approaching another vehicle too rapidly. The P43 Forward Collision Alert Display are located in the upper instrument panel area and reflect off the windshield when illuminated.

The P43 Forward Collision Alert Display receive power and ground and are discretely controlled by the P16 Instrument Cluster through a pair of low control circuits. When requested by the B174W Front View Camera - Windshield, the P16 Instrument Cluster will pulse the low control circuits, flashing the LEDs as a visual alert that another vehicle is being approached too rapidly.

P29 Head-Up Display (with UV6)

The P16 Instrument Cluster controls the P29 Head-Up Display via serial data. The P16 Instrument Cluster will command the P29 Head-Up Display to flash the collision alert indicator as a visual alert when approaching another vehicle too rapidly as requested by the B174W Front View Camera - Windshield.

Forward Collision Alert Switch

The forward collision alert switch provides an input to the B174W Front View Camera - Windshield to select the alert timing sensitivity when approaching another vehicle too rapidly. The forward collision alert switch is part of the S70L Cruise Control Switch and provides inputs to the K9 Body Control Module, which then communicates with the B174W Front View Camera - Windshield via serial data.

The K9 Body Control Module applies voltage and monitors a low signal voltage from the normally open switch. When the switch is pressed, the signal circuit is pulled low through a specific series of resistors, indicating that the system has been requested to change the alert timing sensitivity. The first button press will show the current alert timing setting on the driver information center. With every subsequent button press, the alert timing sensitivity is changed.

Infotainment System

The infotainment system controls the audible alerts for the forward collision alert system. If the vehicle is approaching another vehicle too rapidly, the B174W Front View Camera - Windshield will command the infotainment system issue an audible alert to the driver.

Safety Alert Seat (with HS1)

The K9 Body Control Module (without A45) or K40D Driver Seat Adjuster Memory Module (with A45) controls the haptic alert provided by the seats. If the vehicle is approaching another vehicle too quickly, the B174W Front View Camera - Windshield will command the control module to pulse both sides of the seat.

Forward Collision Alert and Forward Automatic Braking Operational Checks

If the forward collision alert system is off, inoperative, or not functioning, check the following:

- Verify there are no active driver information center messages and that no DTCs are set.
- Verify that the system is enabled through vehicle personalization. Vehicle personalization allows the system to be set to “Off,” “Beeps,” ”Alert,” “Safety Alert Seat,” or “Alert & Brake”.
- Attempt to replicate the customer concern. While driving, if the vehicle-ahead telltale display illuminates green when following a vehicle above 8 km/h (5 mph) , forward collision alert is operating properly.

If the driver is receiving false forward collision alerts, check the following:

- Verify the B174W Front View Camera - Windshield is not blocked by dirt, snow, or ice, and the windshield is not damaged.
- The system may be identifying vehicles farther ahead than the customer is expecting. Forward collision alert detects vehicles within a distance of approximately 60 m (197 ft) and operates at speeds above 8 km/h (5 mph).
- Forward collision alert may provide unnecessary alerts to turning vehicles, vehicles in other lanes, objects that are not vehicles, or shadows. These alerts are normal operation and the vehicle does not need service.

If forward collision alert beeps, but the seat does not vibrate, check the following:

- Verify the vehicle is equipped with safety alert seat (RPO HS1).
- Verify there are no active driver information center messages and that no DTCs are set.
- Verify that the system is enabled through vehicle personalization: It may be set to “Beeps” or “Alert Only” instead of “Safety Alert Seat” or “Alert & Brake”.

If FORWARD COLLISION SYSTEM REDUCED or AUTOMATIC COLLISION PRE REDUCED is displayed on the driver information center, check the following:

- Verify that the system is enabled through vehicle personalization: It may be set to “Alert Only” instead of ”Off” or Alert & Brake”.

If SERVICE FRONT CAMERA is displayed on the driver information center, check the following:

- Verify there are no active driver information center messages and that no DTCs are set.
- If the message is only displayed upon startup, check the following:
  – Verify the B174W Front View Camera - Windshield is not blocked by dirt, snow, or ice, and the windshield is not damaged.
  – Verify the vehicle is not parked closed to a wall or the B174W Front View Camera - Windshield is not in an over-temperature condition, such as sitting for long periods in high ambient temperatures and direct sun.
- If the message is displayed beyond startup, check the following:
  – Verify there are no active driver information center messages and that no DTCs are set.

If FRONT CAMERA IS BLOCKED is displayed on the driver information center, check the following:

- Check for any other driver information center service messages.
- Verify the B174W Front View Camera - Windshield is not blocked by dirt, snow, or ice, and the windshield is not damaged.

If SERVICE DRIVER ASSIST is displayed on the driver information center, check the following:

- Check for any other driver information center service messages.
- Verify there are no active driver information center messages and that no DTCs are set.

Forward Collision Alert Description and Operation (with UGN)

On vehicles equipped with RPO UGN, forward collision alert is an integrated of the active safety system. Refer to Active Safety System Description and Operation.

Lane Keep Assist Description and Operation

The lane keep assist system is a convenience feature that utilizes the B174W Front View Camera - Windshield maintain the vehicle location between identified lane markings. The B174W Front View Camera - Windshield is located behind the windshield, looking out at the road ahead and detecting any lane markings. If the vehicle begins to approach an identified lane marking, automatic correction will be applied by the electric power steering to move the vehicle back toward the center the lane. An integrated function of lane keep assist is lane departure warning. When the vehicle unintentionally leaves a detected lane, visual and audible or haptic (if equipped) alerts are given to the driver. The visual alert cannot be changed, but the driver can select between audible or haptic alerts in the vehicle personalization menus.

Lane Keep Assist System Components

The lane keep assist system is made up of the following components:

- B174W Front View Camera - Windshield
- P16 Instrument Panel Cluster Control Module
- Multi-axis acceleration sensor (part of the K36 Restraints Control Module)
- Steering wheel angle sensor (part of the K43 Power Steering Control Module)
- K43 Power Steering Control Module
- Lane keep assist switch
- Infotainment system
- Safety alert seat (with HS1)

B174W Front View Camera - Windshield

The B174W Front View Camera - Windshield detects visual queues such as lane markings. When it is determined that the vehicle is approach an identified lane marking, automatic correction will be applied by the electric power steering to move the vehicle back toward the center the lane. Using the multi-axis acceleration sensor and steering wheel angle sensor, the B174W Front View Camera - Windshield determines the vehicles path and compares this to it's own intended path based on lane markings. The B174W Front View Camera - Windshield will then request the K43 Power Steering Control Module to perform the appropriate steering correction. The B174W Front View Camera - Windshield receives an input from the lane keep assist switch and controls the lane keep assist switch indicator output.

P16 Instrument Panel Cluster Control Module

The P16 Instrument Panel Cluster Control Module contains green and amber lane keep assist indicators. These indicate to the driver the current status of the lane keep assist system and are controlled via serial data by the B174W Front View Camera - Windshield. When the vehicle speed is above 56 km/h (35 MPH) and the system has detected the required lane markings and is ready to assist, the green indicator will be illuminated on the P16 Instrument Panel Cluster Control Module. If the vehicle has unintentionally left the lane, the amber indicator will flash.

Multi-axis Acceleration Sensor

The steering intervention is based on the forward looking sensor outputs, such as lateral offset of the vehicle, relative yaw angle and time to line crossing. Over that, other vehicle dynamics signals are needed, e.g. velocity, steering angle, yaw rate for the purpose of a driver suppression. The multi-axis acceleration sensor measures vehicle dynamics signals such as velocity and yaw rate for the purpose of determining the vehicles path. The multi-axis acceleration sensor is an integrated part of the K36 Restraints Control Module.

Steering Wheel Angle Sensor

The steering intervention is based on the forward looking sensor outputs, such as lateral offset of the vehicle, relative yaw angle and time to line crossing. Over that, other vehicle dynamics signals are needed, e.g. velocity, steering angle, yaw rate for the purpose of a driver suppression. The steering wheel angle sensor measures vehicle dynamics signals such as steering angle for the purpose of determining the vehicles path. The steering wheel angle sensor is an integrated part of the steering gear and K43 Power Steering Control Module.

K43 Power Steering Control Module

The K43 Power Steering Control Module uses a torque sensor to detect driver inputs and relays that information to the B174W Front View Camera - Windshield. The electric power steering is used to maintain lane centering.

Lane Keep Assist Switch

The lane keep assist switch provides an input to the B174W Front View Camera - Windshield to turn the lane keep assist system on and off. The B174W Front View Camera - Windshield provides a signal voltage to the normally open momentary switch. When the switch is pressed, the signal circuit is pulled to ground, indicating to the B174W Front View Camera - Windshield that the system has been requested to turn ON or OFF. The lane keep assist switch also contains the lane keep assist switch indicator, which is controlled by the B174W Front View Camera - Windshield to indicate the ON and OFF status of the lane keep assist system. When the system has been enabled by the lane keep assist switch, the B174W Front View Camera - Windshield applies ground to the switch indicator and illuminates the LED. The location of the lane keep assist switch can vary with different vehicles. For the exact location please refer to the vehicle owner's manual.

Infotainment system

The radio controls the audible alert for the lane keep assist. If the vehicle has unintentionally left the lane, the radio will command three beeps as an audible alert to the driver.

Safety Alert Seat (with HS1)

The K9 Body Control Module (without A45) or K40D Driver Seat Adjuster Memory Module (with A45) controls the haptic alert provided by the seats. If the vehicle has unintentionally left the lane and the K43 Power Steering Control Module determines the corrective action requires an above threshold amount of effort, three pulses to the left or right side of the seat will be commanded, depending on the lane departure direction.

Lane Keep Assist Operation

Lane keep assist with lane departure warning provides gentle steering wheel input and alerts to help prevent drivers from unintentionally drifting out of their intended lane.

There is two stages of warning/intervention for the driver: The first stage is the steering push back, if the lane keep assist system detects that the vehicle will cross the lane marking despite it is intervening, a second stage warning shall be issued. The second stage warning is a chime or a haptic alert through the safety alert seat (if equipped). If a haptic seat vibration is used as stage 2 warning, the vibration will occur on the side of the seat, where the lane departure occurred.

System operation can be described by the following modes:

- Off State: The system has been turned off by the driver using the lane keep assist switch. The lane keep assist indicator will not be illuminated.
- Not Ready To Assist: The system is enabled and the lane keep assist indicator is illuminated, but not ready to assist when any of the following conditions is true:
  - Vehicle speed is less than 50 MPH (80 km/h) . The system is designed to function at speeds greater than 50 MPH (80 km/h).
  - The system cannot detect lane markings. This may be because there are no lane markings, as on a country road or that the lane markings cannot be determined due to snow, rain, or other driving conditions.
  - The windshield area in front of the camera or the camera lens is blocked by fog, dirt, damage to the windshield or other elements that may prevent the camera from detecting lane markings.
- Ready To Assist: The system is enabled and ready to warn of the unintentional lane crossing. The system is ready to assist when the green lane keep assist indicator is illuminated on the P16 Instrument Cluster.

Lane Crossing Alerts

- When one of the following conditions are met, the system will not give alerts:
  - The correct turn signal is activated. An activated turn signal is interpreted as an intentional lane crossing.
  - The operator makes an intentional steering maneuver.
  - The operator makes an intentional accelerating maneuver.
  - The operator makes an intentional braking maneuver.
- Lane crossing alert consists of the following:
  - The amber lane keep assist indicator will flash.
  - “push-back” steering torque input (or nudge) from electric power steering to help prevent a lane departure
  - Three chimes are activated through the radio or three pulses to the left or right side of the active safety seat (if equipped).

Safety Alert Seat Description and Operation

The safety alert seat uses pulsing driver seat vibrations to intuitively communicate the direction of a possible crash threat. Two P45 Front Seat Lane Departure Warning Actuators are utilized to create the vibration and are located on the left and right sides of the seat cushion. Utilizing two motors allows the vibration to be localized to the left or right side of the seat, depending on the side of the vehicle generating the alert, or to vibrate both simultaneously.

Note: The following systems may not be available on all vehicles.

The following systems utilize the safety alert seat:

- Lane Departure Warning and Lane Keep Assist – Utilizes left or right-side pulses to alert drivers if they unintentionally drift out of their lane
- Rear Cross Traffic Alert – Utilizes left or right-side pulses to the direction of an approaching vehicle
- Forward Collision Alert – Simultaneously pulses on both sides to warn drivers of a possible collision with the vehicle that they’re following
- Front Pedestrian Braking – Simultaneously pulses on both sides to warn drivers of a possible collision with a pedestrian
- Front Parking Assist, Rear Parking Assist, and Backing Warning (part of the Rear Automatic Braking system) – Simultaneously pulses on both sides to warn drivers of a possible low-speed collision

Safety Alert Seat Components

The active safety seat utilizes the following components:

- K9 Body Control Module (without A45)
- K40D Driver Seat Adjuster Memory Module (with A45)

- P45LR Front Seat Lane Departure Warning Actuator - Left Rear
- P45RR Front Seat Lane Departure Warning Actuator - Right Rear

K9 Body Control Module (without A45)

The K9 Body Control Module receives serial data messages from other modules and provides voltage to control the P45 Front Seat Lane Departure Warning Actuators. The K9 Body Control Module will pulse the left, right, or both P45 Front Seat Lane Departure Warning Actuators with the number of pulses requested over serial data. The K9 Body Control Module monitors the control circuits for open, short to ground, and short to voltage conditions and will set DTCs if a circuit fault is detected.

K40D Driver Seat Adjuster Memory Module (with A45)

The K40D Driver Seat Adjuster Memory Module receives serial data messages from other modules and provides voltage to control the P45 Front Seat Lane Departure Warning Actuators. The K40D Driver Seat Adjuster Memory Module will pulse the left, right, or both P45 Front Seat Lane Departure Warning Actuators with the number of pulses requested over serial data. The K40D Driver Seat Adjuster Memory Module monitors the control circuits for open, short to ground, and short to voltage conditions and will set DTCs if a circuit fault is detected.

P45 Front Seat Lane Departure Warning Actuator

The P45 Front Seat Lane Departure Warning Actuator is DC motor located in the driver's seat bottom cushion. Two P45 Front Seat Lane Departure Warning Actuators are used in the seat bottom cushion, positioned on the left and right side. An offset weight is attached to the motor. When activated, the spinning offset weight creates a vibration felt by the driver through the seat cushion.

Each P45 Front Seat Lane Departure Warning Actuator receives a constant chassis ground. The motor is controlled by the K9 Body Control Module (without A45) or K40D Driver Seat Adjuster Memory Module (with A45) by providing voltage through a dedicated control circuit. When an alert is required, the control module will apply voltage, activating the P45 Front Seat Lane Departure Warning Actuator

Side Blind Zone Alert Description and Operation

The side blind zone alert system detects and reports "objects of interest" on either side of the vehicle, within a specified "blind spot" zone. The system is designed to alert the driver, with a visual display placed on the side view mirror, to the presence of objects of interest that may not be visible in the inside rearview mirror and outside rear view mirrors. Although this system is intended to help drivers avoid lane change collisions, it does not replace driver vision and therefore should be considered a lane change aid. Even with the side blind zone alert system, the driver must check carefully for objects outside of the reporting zone (e.g., a fast approaching vehicle) before changing lanes. In the event that the system senses a malfunction through its diagnostic routines, the system will be disabled and the driver will be visually notified.

When the system detects a vehicle in the side blind zone while driving forward, an amber warning symbol will light up in the appropriate outside mirror. This indicates that it may be unsafe to change lanes. If the driver then activates the turn signal, the amber warning symbol starts flashing as an extra warning not to change lanes.

Side blind zone alert is active when the vehicle is out of park, or the parking brake is off on manual transmission vehicles, and at speeds up to approximately 140 km/h (87 MPH). If a vehicle is detected in the blind zone, the warning symbols will illuminate on the appropriate side. When the vehicle is started, both outside mirror indicators will briefly illuminate to indicate that the system is operating. The warning symbols will vary brightness based on the ambient light conditions.

Side Blind Zone Alert Components

- B218L Side Obstacle Detection Control Module - Left
- B218R Side Obstacle Detection Control Module - Right
- K9 Body Control Module
- S79D Front Side Door Window Control Switch - Driver
- S79P Front Side Door Window Switch - Passenger
- A9A Outside Rearview Mirror – Driver
- A9B Outside Rearview Mirror – Passenger
- Safety Alert Seat (HS1)

B218 Side Obstacle Detection Control Module

The B218L Side Obstacle Detection Control Module - Left and B218R Side Obstacle Detection Control Module - Right are located on each side of the vehicle behind the rear fascia and are not directly visible from outside the vehicle. The B218 Side Obstacle Detection Control Modules use radar to determine the presence of objects nearby. Both B218 Side Obstacle Detection Control Modules communicates with the vehicle via serial data. The B218L Side Obstacle Detection Control Module - Left and B218R Side Obstacle Detection Control Module - Right also communicate with one another on a private CAN serial data bus. When an object is detected in the side blind zone, the B218L Side Obstacle Detection Control Module - Left and B218R Side Obstacle Detection Control Module - Right will send a CAN message to the K9 Body Control Module to illuminate the appropriate side blind zone alert indicator.

K9 Body Control Module

The B218L Side Obstacle Detection Control Module - Left and the B218R Side Obstacle Detection Control Module - Right will send a CAN message to the K9 Body Control Module when requesting the driver or passenger indicator be illuminated. The K9 Body Control Module then sends a LIN message to the S79D Front Side Door Window Control Switch - Driver or S79P Front Side Door Window Switch - Passenger with the indicator request.

S79 Front Side Door Window Control Switch

The B218L Side Obstacle Detection Control Module – Left and the B218R Side Obstacle Detection Control Module – Right will send a CAN message to the K9 Body Control Module when requesting the driver or passenger indicator be illuminated. The K9 Body Control Module then sends a LIN message to the S79D Front Side Door Window Control Switch - Driver or S79P Front Side Door Window Switch - Passenger with the indicator request. The S79D Front Side Door Window Control Switch - Driver or S79P Front Side Door Window Switch - Passenger will apply voltage to the indicator control circuit to illuminate the appropriate indicator.

A9 Outside Rearview Mirror

The A9A Outside Rearview Mirror – Driver and A9B Outside Rearview Mirror – Passenger each contain an icon that is backlit with high intensity, amber-colored LED's located on the mirror surface. The display brightness adapts to day/night conditions. The P43D Side Object Detection Indicator – Driver and P43P Side Object Detection Indicator – Passenger in the appropriate A9 Outside Rearview Mirror is illuminated if the specific B218 Side Obstacle Detection Control Module detects a vehicle in the side blind zone to inform the driver that there is a vehicle driving in the blind spot zone.

Safety Alert Seat (HS1)

The K40 Seat Memory Control Module (with A45) or K9 Body Control Module (without A45) controls the P45 Front Seat Lane Departure Warning Actuators. The P45 Front Seat Lane Departure Warning Actuators provide haptic alert to the driver. If an object is detected, the system will command pulses to the P45LR Seat Haptic Movement Motor – Driver Left Rear or P45RR Seat Haptic Movement Motor – Driver Right Rear, depending on the location of the object, as an alert to the driver.

Side Blind Zone Alert Operation

When the vehicle is started, both A9 Outside Rearview Mirror indicators will briefly illuminate to indicate that the system is operating. The system is designed to detect objects of interest as small as a 125cc motorcycle with rider. The detection zone starts at the outside rearview mirror and extends out to 3.5 m (11 ft) at the back corner of the vehicle and 3 m (10 ft) behind the vehicle at a height of 0.5 m (1.5 ft) and 2.0 m (6 ft) above the ground. The system may illuminate an indicator due to guardrails, signs, trees, shrubs, and other non-moving objects. This is normal system operation; the vehicle does not need service.

When the system detects a vehicle in the side blind zone or lane change alert area while driving forward, independent if passing a vehicle or being passed, an amber warning symbol will illuminate in the appropriate A9 Outside Rearview Mirror. This indicates that it may be unsafe to change lanes. If the driver then activates the turn signal, the amber warning symbol starts flashing as an extra warning not to change lanes.

Foul weather may affect the operation of the side blind zone and lane change alert systems. Occasional missed alerts can occur under normal circumstances and will increase in wet conditions. The number of missed alerts will increase with increased rainfall or road spray. Heavy rainfall, as well as mud, dirt, snow, ice, or slush build-up on the rear fascia, can completely disable the system.

If the vehicle is towing a trailer or has an object such as a bicycle rack attached to the rear of the vehicle, the side blind zone and lane change alert systems may not function properly and the indicators may illuminate intermittently or remain illuminated all the time.

Lane Change Alert Operation

An integrated function of the side blind zone alert system is lane change alert. Lane change alert supplements the side blind zone alert system by detecting approaching vehicles on either side of the vehicle that may not yet be in the side blind zone alert area. The detection zone for lane change alert starts at the outside rearview mirror and extends out to 3.5 m (11 ft) at the back corner of the vehicle and up to 70 m (230 ft) behind the vehicle at a height between 0.5 m (1.5 ft) and 2.0 m (6 ft) above the ground. The system determines when the indicator will illuminate based on the rate of closure, or approach speed, of an approaching vehicle. As the rate of closure become faster, the indicator will illuminate sooner.

Rear Cross Traffic Alert Operation

Rear cross traffic alert displays a red warning triangle with a left or right pointing arrow on the infotainment display to warn of traffic coming from the left or right. This system detects objects coming from up to 20 m (65 ft) from the left or right side of the vehicle. When an object is detected, either three beeps sound from the left or right or three safety alert seat pulses occur on the left or right side, depending on the direction of the detected vehicle.

Driver Information Center Messages

SIDE BLIND ZONE ALERT OFF or LANE CHANGE ALERT OFF

This message indicates that the system has been disabled through the driver information center. Refer to the vehicle owner's manual for instructions on how to set personalization options on the driver information center.

SERVICE SIDE DETECTION SYSTEM

This message indicates that the system requires service. When the message is displayed, the indicators will remain illuminated at all times, notifying the driver that the side blind zone system should not be relied upon when changing lanes. Since the sensors are also used for rear cross traffic alert, this feature will also be inoperative.

SIDE DETECTION SYSTEM UNAVAILABLE

This message indicates that the system has been temporarily disabled because the sensor is blocked or can otherwise not accurately detect vehicles or objects. Such instances may be mud, dirt, snow, ice, or slush build-up on the rear fascia, heavy rainfall, excessive road spray, fascia damage or stickers. An over or under-voltage condition or over-temperaure will also cause the message to display.

The rear cross traffic alert system will read the GPS latitude and longitude on the serial data bus and calculate if the vehicle is within a Radio Astronomy zone. These zones are located in Europe and Japan and require the sensors to be turned off. The “Side Detection System Unavailable” message will be displayed to the driver when this occurs.

The system is continuously fine tuning the radar alignment. If the B218 Side Obstacle Detection Control Module is removed or significantly disturbed, such as removing the rear fascia or sensor bracket, an initial alignment is automatically performed by the system to enable system operation. However, the SIDE DETECTION SYSTEM UNAVAILABLE may remain for several hours of driving as the system fine tunes the radar alignment to ensure satisfactory alert performance.

Immobilizer

Schematic and Routing Diagrams

Immobilizer Schematics (Immobilizer)

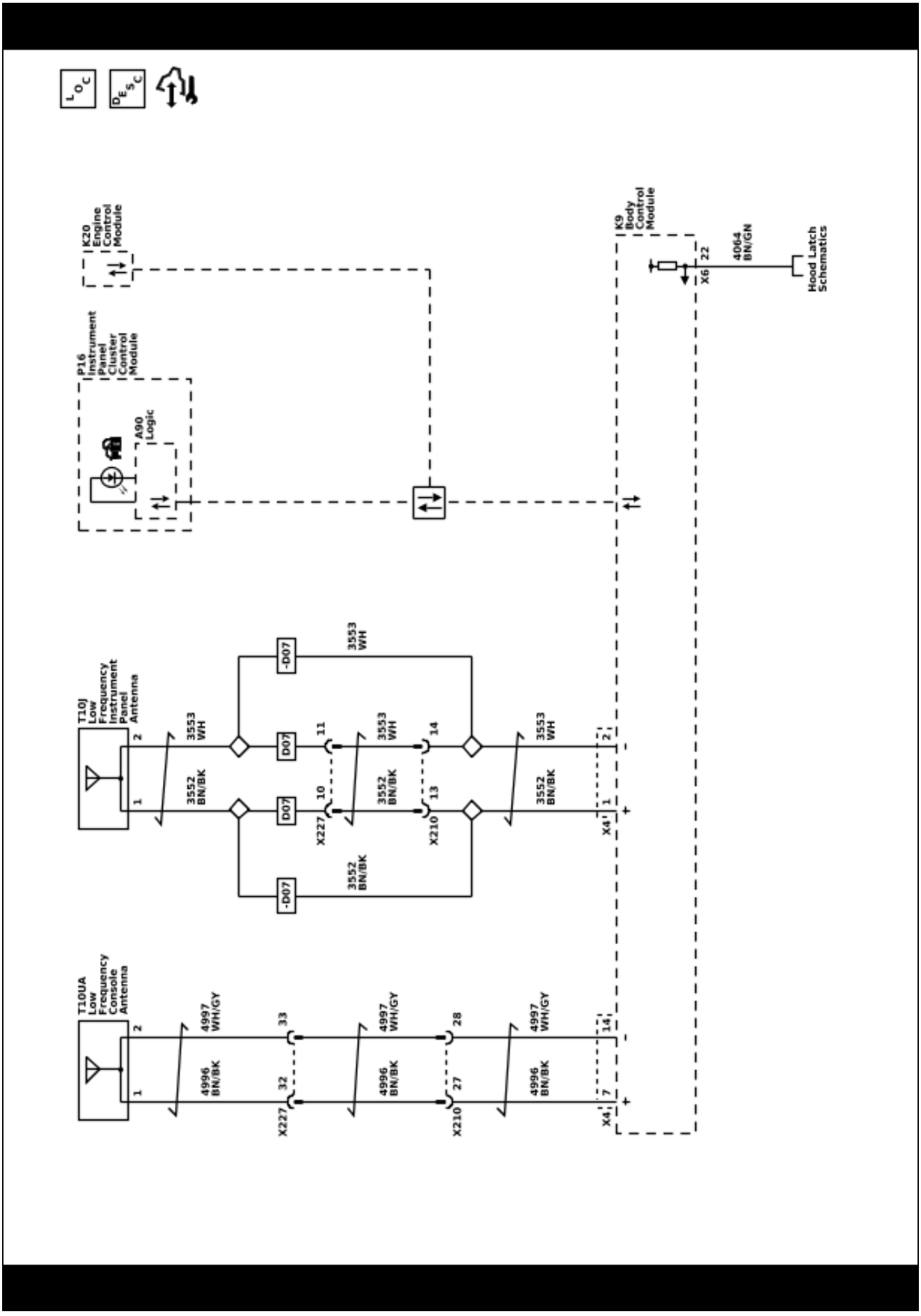

Description and Operation

Immobilizer Description and Operation

The immobilizer system functions are provided by the Steering Column Lock Module, the Body Control Module (BCM), and the Engine Control Module (ECM), as well as any control modules which store and report the environment identifier. The Body Control Module uses low frequency antennas in different locations on the vehicle to determine the location of the transmitter. Multiple transmitting antennas are used to ensure complete coverage of the vehicle interior and rear compartment. These antennas transmit to the keyless entry transmitter.

When the vehicle Stop/Start switch is pressed, the low frequency antennas emit a challenge to the keyless entry transmitter. The transmitter receives this challenge and emits it's response as an RF message. The BCM then compares this value to a value stored in memory. The BCM also monitors various control modules to determine if the stored environment identifiers match.

If the correct transponder is detected, the electric steering column is unlocked, and there is no start disable from OnStar the BCM will send the prerelease allowed message via serial data to the ECM. The vehicle will be allowed up to 3 seconds run time. If the theft check is incorrect, the environment identifier check fails, the incorrect transponder is detected, the electric steering column is locked, or there is a start disable from OnStar, the BCM will send a negative response and the ECM will not start the vehicle or will immediately shut off the vehicle if prerelease allowed the vehicle to start.

If RF communication is interrupted, a "No Remote Detected" message will be displayed on the DIC. In these cases, the transmitter can be placed in the transmitter pocket. The immobilizer coil antenna is located in the immediate vicinity of the transmitter pocket. Placing the transmitter in the pocket/slot will create a low powered coupling between the transmitter and immobilizer coil antenna, allowing communications to occur and enabling vehicle starting.

The components of the immobilizer system are as follows:

- BCM
- ECM
- Steering column lock control module
- Immobilizer coil antenna
- Low frequency antenna
- Ignition key/Keyless entry transmitter
- Security indicator
- Various control modules which store and report the environment identifier

Body Control Module (BCM)

The immobilizer system is an integral part of the BCM and is controlled internally within the BCM. The BCM can learn up to 8 keys (transponder values). The BCM uses low frequency antennas in three different locations on the vehicle to determine the location of the transmitter. Multiple antennas are used to ensure complete coverage of the vehicle interior and rear compartment. The BCM monitors the ignition mode switch. When the ignition mode is changed, the BCM will command, or “ping”, the low frequency antenna.

The BCM uses the following inputs:

- Environment identifier exchange with various modules
- Encrypted code from the vehicle key, received by the immobilizer coil antenna if the keyless entry transmitter signal isn’t detected as indicated by the “No Remote Detected” message
- Encrypted code from the vehicle key

The BCM uses the following outputs:

- Prerelease Allowed signal communication with ECM
- Challenge/Response with ECM

When a transponder value is received by the BCM, the BCM will compare this value to the learned key code stored in memory. The BCM then performs one of the following functions:

- If the encrypted code value matches the values stored in the BCM memory, the BCM will send the Prerelease Allowed signal to the ECM via serial data.
- If the encrypted code unique value does not match the value stored in the BCM, the BCM will send the start disable message to the ECM via serial data.
- If the BCM is unable to receive the vehicle key encrypted code value, the BCM will not send any messages to the ECM.

Engine Control Module (ECM)

The ECM receives the BCM Prerelease Allowed signal and simultaneously the ECM sends a challenge to the BCM via the serial data circuit upon seeing the vehicle transition from OFF to any other power mode. Both the ECM and BCM perform a calculation on this challenge. If the calculated response from the BCM equals the calculation performed by the ECM, the ECM will allow vehicle starting.

Low Frequency Antenna

When commanded, or “pinged”, the low frequency antenna broadcast a challenge to the keyless entry transmitter. Because of the low power of the antenna, this challenge is only broadcast in an approximate three meter range of the antenna. Multiple antenna are used to ensure complete coverage of the vehicle interior and rear compartment.

Steering Column Lock Control Module

On vehicles with electronic steering column lock that use a steering column lock control module the immobilizer system will prevent vehicle starting if there is a fault or no communication with the steering column lock control module.

Keyless Entry Transmitter

Each keyless entry transmitter contains a transponder with a unique encrypted value. The transponder's encrypted value is fixed and unable to be changed. The

immobilizer system uses the keyless entry transmitter transponder value to determine if a valid keyless entry transmitter is being used to start the vehicle.

Security Indicator

The BCM will command the Instrument Cluster to illuminate the security indicator when the vehicle is ON to indicate a fault has occurred within the immobilizer system.

Parking Assistance Systems

Schematic and Routing Diagrams

Parking Assistance Systems Schematics (Park Assist - Power, Ground, and Serial Data (UD5/UD7))

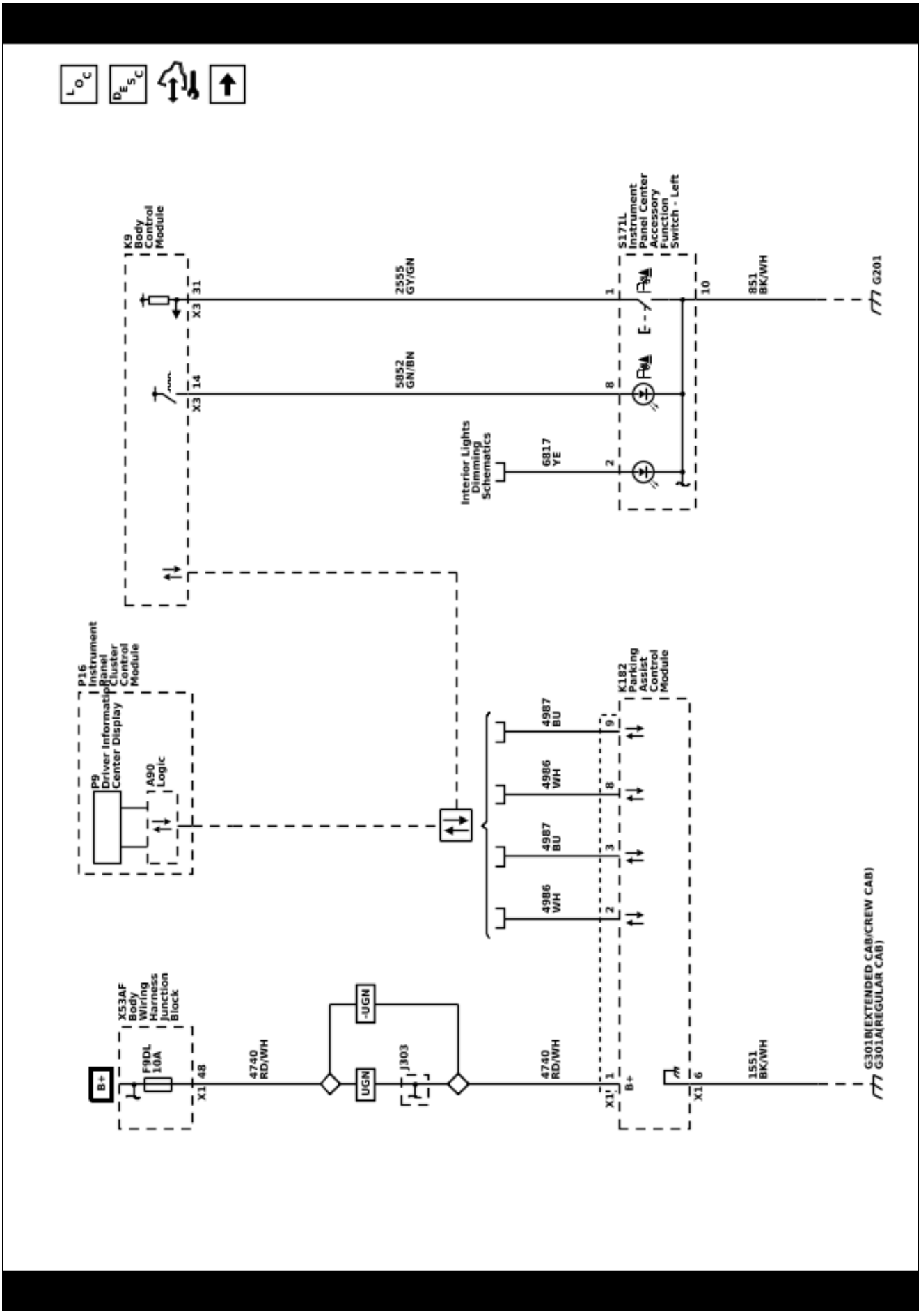

Parking Assistance Systems Schematics (Park Assist - Rear Sensors (UD5/UD7))

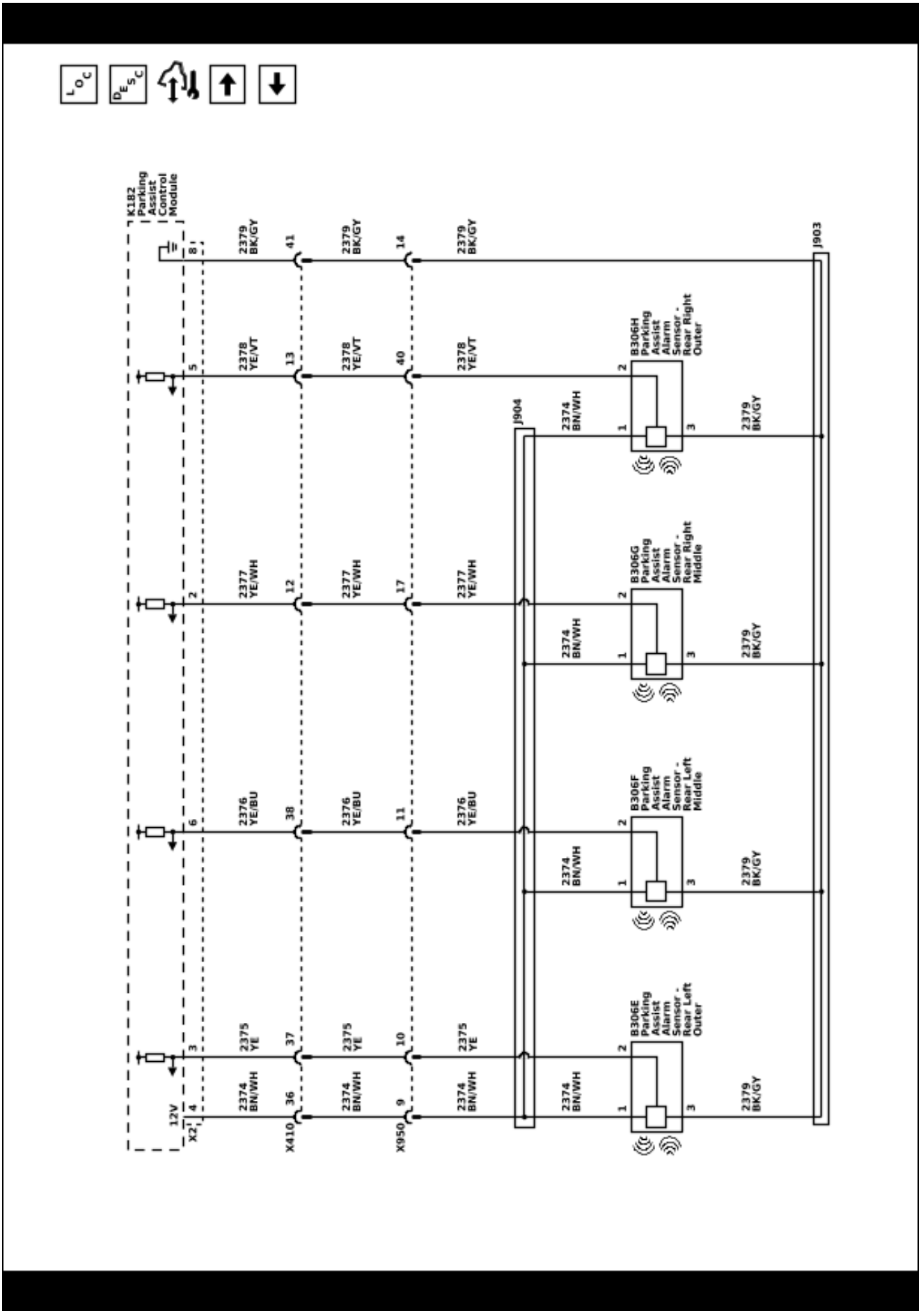

Parking Assistance Systems Schematics (Park Assist - Front Sensors (UD5))

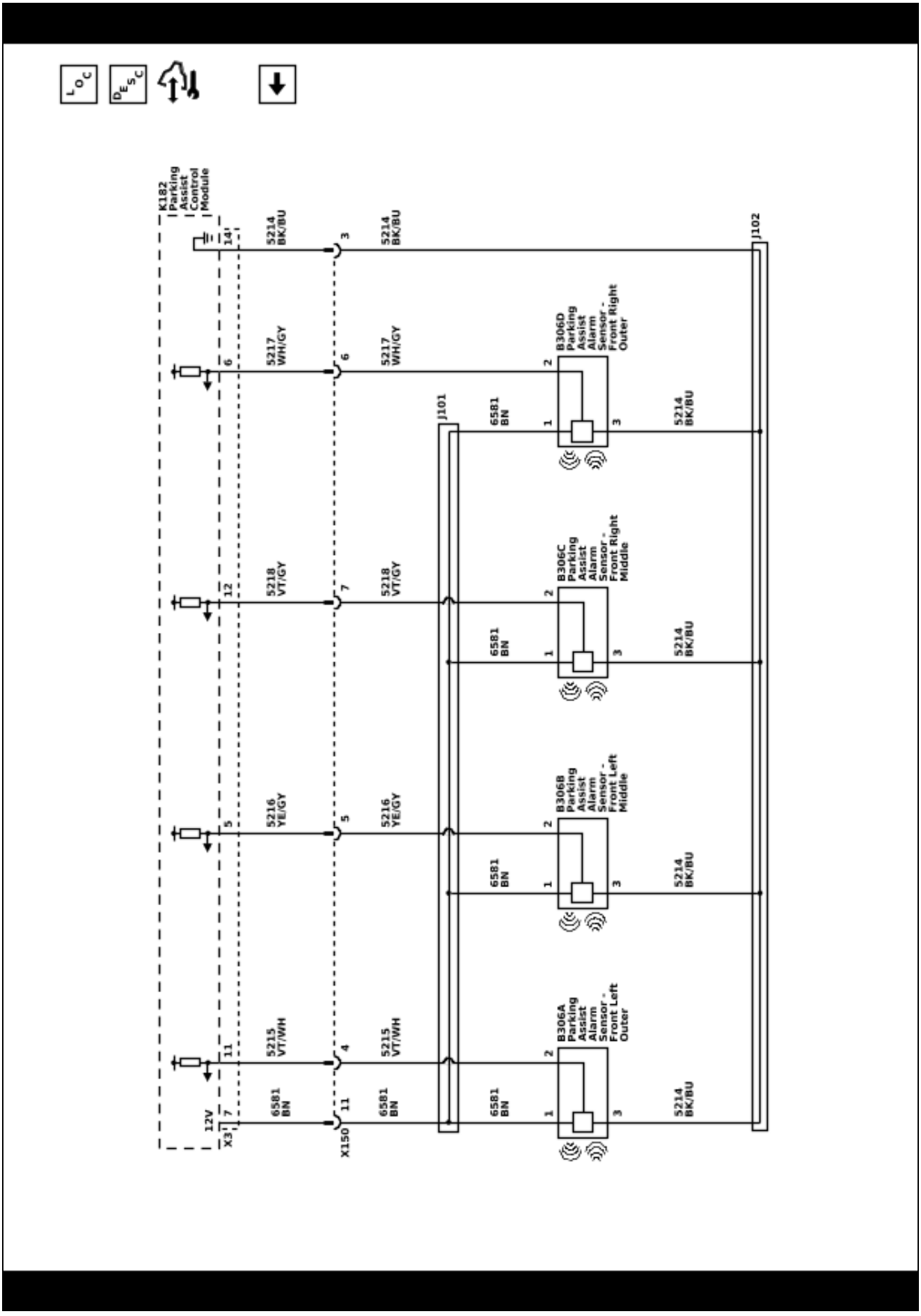

Description and Operation

Parking Assist Description and Operation (UD5)

The parking assist system can help drivers avoid certain objects in their path during low-speed parking. The distance and location of the object is determined by four object sensors located in the rear fascia. The parking assist system may not detect all children, pedestrians, bicyclists, animals or objects below the bumper. Drivers should remember to always check the area around the vehicle before shifting into REVERSE. The parking assist system will not stop or slow down a vehicle. It does not engage a vehicle's throttle or braking. No safety system can take the place of an alert and engaged driver.

The parking assist system is made up of the following components:

- K182 Parking Assist Control Module
- B306 Parking Assist Alarm Sensors
- Infotainment system

K182 Parking Assist Control Module

The K182 Parking Assist Control Module provides a reference voltage and a low reference to the B306 Parking Assist Alarm Sensors. The K182 Parking Assist Control Module receives individual signals from each of the four B306 Parking Assist Alarm Sensors and determines the location and distance of an object based on these inputs. When an object is detected, the K182 Parking Assist Control Module will send a serial data message to the infotainment system requesting an audible alert.

B306 Parking Assist Alarm Sensors

The B306 Parking Assist Alarm Sensors are located in the rear fascia of the vehicle. The sensors are used to determine the distance between an object and the bumper. Each sensor emits an ultrasonic frequency which is reflected off any object located behind the vehicle. These reflections are received by the sensors. The time difference between the emission of the frequency and when the reflection is received is known as sensor echo time; it is used to determine the distance to the object. The sensors report this information to the K182 Parking Assist Control Module.

Infotainment System

The infotainment system controls the audible alert for the parking assist system. If the an object is detected the infotainment system will command beeps as an audible alert to the driver.

Rear Parking Assist Operation

The rear parking assist system uses four B306 Parking Assist Alarm Sensors located on the rear fascia and functions when the transmission is in REVERSE. When a driver is backing up at a low speed, up to about 11 km/h (7 mph), the B306 Parking Assist Alarm Sensors may detect objects up to 1.8 m (6 ft) behind the vehicle. When an object is within the measuring range of the B306 Parking Assist Alarm Sensors, the ultrasonic pulse is reflected and is received by the sending or a neighboring sensor. The sensor converts this signal into a voltage signal and sends this signal to the K182 Parking Assist Control Module. The K182 Parking Assist Control Module evaluates the received sensor signals.

When an object is within 0.6 m (2 ft) of the rear bumper, 5 repeating low-pitched beeps are played from the rear speakers, followed by a continuous tone. If the vehicle is equipped with the Safety Alert Seat (HS1), it will pulse 5 times on both sides.

Some vehicles may have a park assist display on the P16 Instrument Panel Cluster Module with bars that show "distance to object," driving direction, and object location information for the parking assist system. As the vehicle gets closer to the detected object, distance-to-object information and caution triangles may be displayed that changes from yellow to amber to red.

The parking assist system can be turned on and off using the parking assist switch.

The K182 Parking Assist Control Module carries out a self test and monitors the sensors for electrical and mechanical faults. Monitored is the power supply of each sensor and the sensor signals. Mud, ice and snow may cause obstruction of the function of the sensors. The K182 Parking Assist Control Module also determines if the correct type of sensor is installed. If any of these tests fails, a DTC with corresponding symptom is set and the parking assist system is deactivated.

Parking Assist System Messages

SERVICE PARKING ASSIST or SERVICE DRIVER ASSIST

The driver information center displays SERVICE PARKING ASSIST or SERVICE DRIVER ASSIST when the K182 Parking Assist Control Module detects a malfunction in the parking assist system and the system is disabled.

PARK ASSIST OFF

The PARK ASSIST OFF message is displayed in the driver information center when the parking assist system is disabled due to conditions that disable or inhibit the system. The K182 Parking Assist Control Module requests the driver information center display PARK ASSIST OFF when it detects such a condition.

Parking Assist System Operational Checks

The scan tool Parking Assist Disable History 1–8 data can be used to diagnose a malfunction within the parking assist system or an intermittent concern. The following is a brief description of potential causes which may aid in diagnosis. For each potential issue, perform an appropriate inspect of the component or system and refer to the specific service information subsection related to that system for further diagnosis:

- Disable by Switch – The parking assist system has been disabled through the parking assist switch.
- Disabled by Customization Menu – The parking assist system has been disabled through the vehicle personalization menu.

- Vehicle Speed Too High – The vehicle is travelling too fast in reverse at speeds of greater than 8 km/h (5 mph).
- Vehicle Speed Invalid – The vehicle is unable to determine the vehicle speed.
- Steering Angle Signal Invalid – The vehicle is unable to determine the steering angle.
- Front Attached Object Detected – An object has been determined to be attached to the front of the vehicle. Common items such as a brush guards, light bars, and license plates may cause this concern. Additionally, damage to the front of the vehicle or a misaligned sensor may cause this concern. If the vehicle is damaged in a manner that causes the sensor to detect the bumper itself, the parking assist control module will interpret this as an attached object and disable the system. Carefully inspect the bumper, bumper mounting surface, and sensor retainers before continuing with normal diagnosis. After the detected cause has been addressed the vehicle must be driven at speed greater than 40 km/h (25 MPH).
- Rear Attached Object Detected – An object has been determined to be attached to the rear of the vehicle. Common items such as a hitch receiver, trailer, or a bicycle rack may cause this concern. Additionally, damage to the rear of the vehicle or a misaligned sensor may cause this concern. If the vehicle is damaged in a manner that causes the sensor to detect the bumper itself, the parking assist control module will interpret this as an attached object and disable the system. Carefully inspect the bumper, bumper mounting surface, and sensor retainers before continuing with normal diagnosis. After the detected cause has been addressed the vehicle must be driven at speed greater than 40 km/h (25 MPH).
- Front And Rear Attached Object Detected – An object has been determined to be attached to the front and rear of vehicle.
- Parking Assist Alarm Sensor Blocked – One of the following conditions may be present:
  - One or more of the sensors may be blocked by snow, mud, ice, or other debris. This might happen after going through a car wash in cold weather.
  - Silicone insulator surrounding sensor maybe missing, cut, or twisted.
  - Improperly installed sensor, sensor maybe be crooked due to a tight wire harness.
  - One or more of the sensors may be scratched or the paint maybe chipped.
  - Excessive paint thickness on a sensor may cause an excessive sensor ring time. When replacing or refinishing a sensor, do not apply an excessive amount of paint or clear coat.
- Haptic Seat Malfunction – A fault exists with the safety alert seat. Check for DTCs.
- Chime Malfunction – A fault exists with the vehicle chime. Check for DTCs.
- Parking Assist Switch Malfunction – A fault exists with the parking assist switch. Check for DTCs.
- Invalid Gear – The vehicle has determine a plausibility fault exists with the transmission range.
- Incorrect Power Mode – The vehicle is in an incorrect power mode for parking assist operation.

Remote Functions

Schematic and Routing Diagrams

Remote Function Schematics (Keyless Entry - Active)

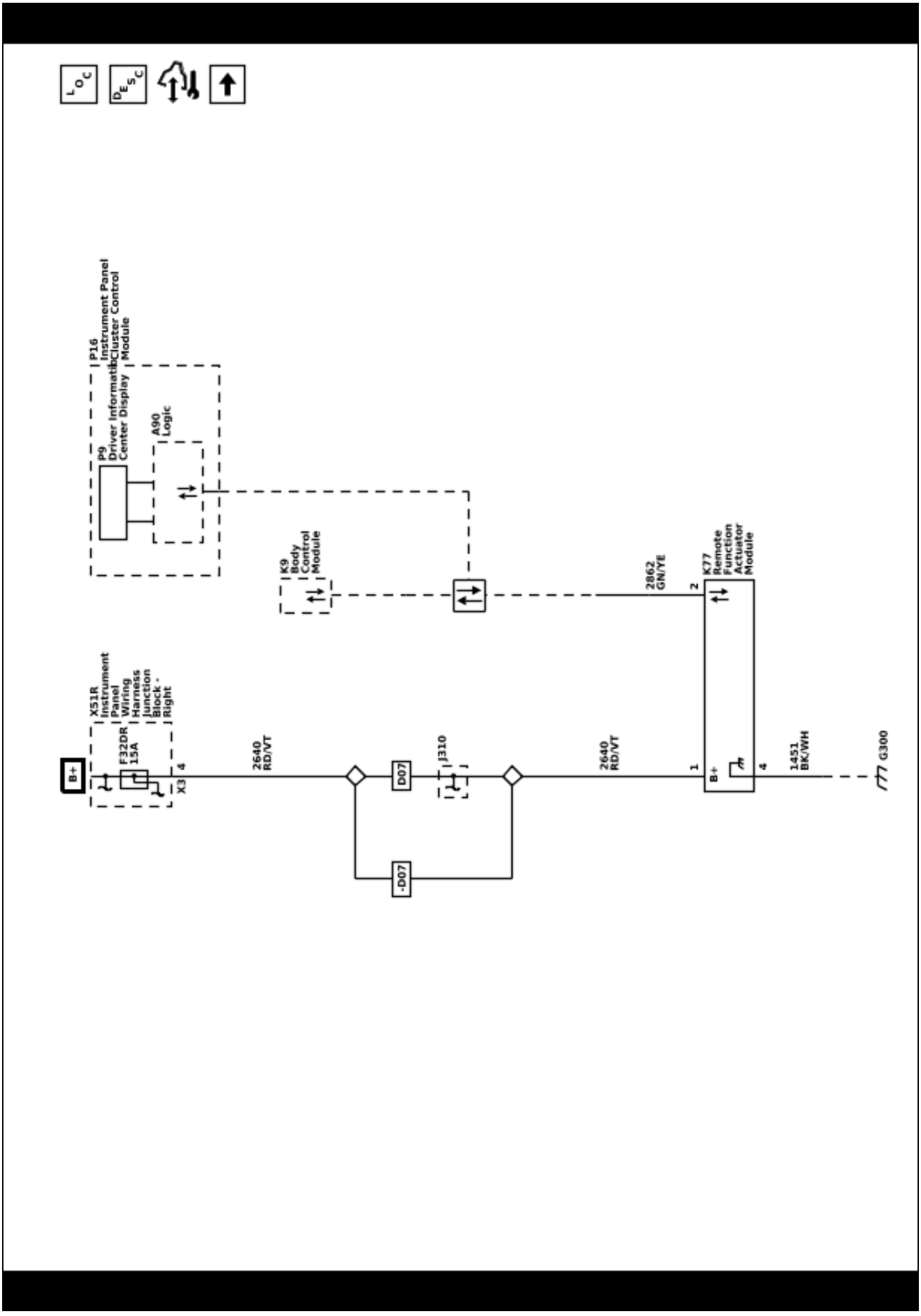

Remote Function Schematics (Keyless Entry - Passive and Keyless Start)

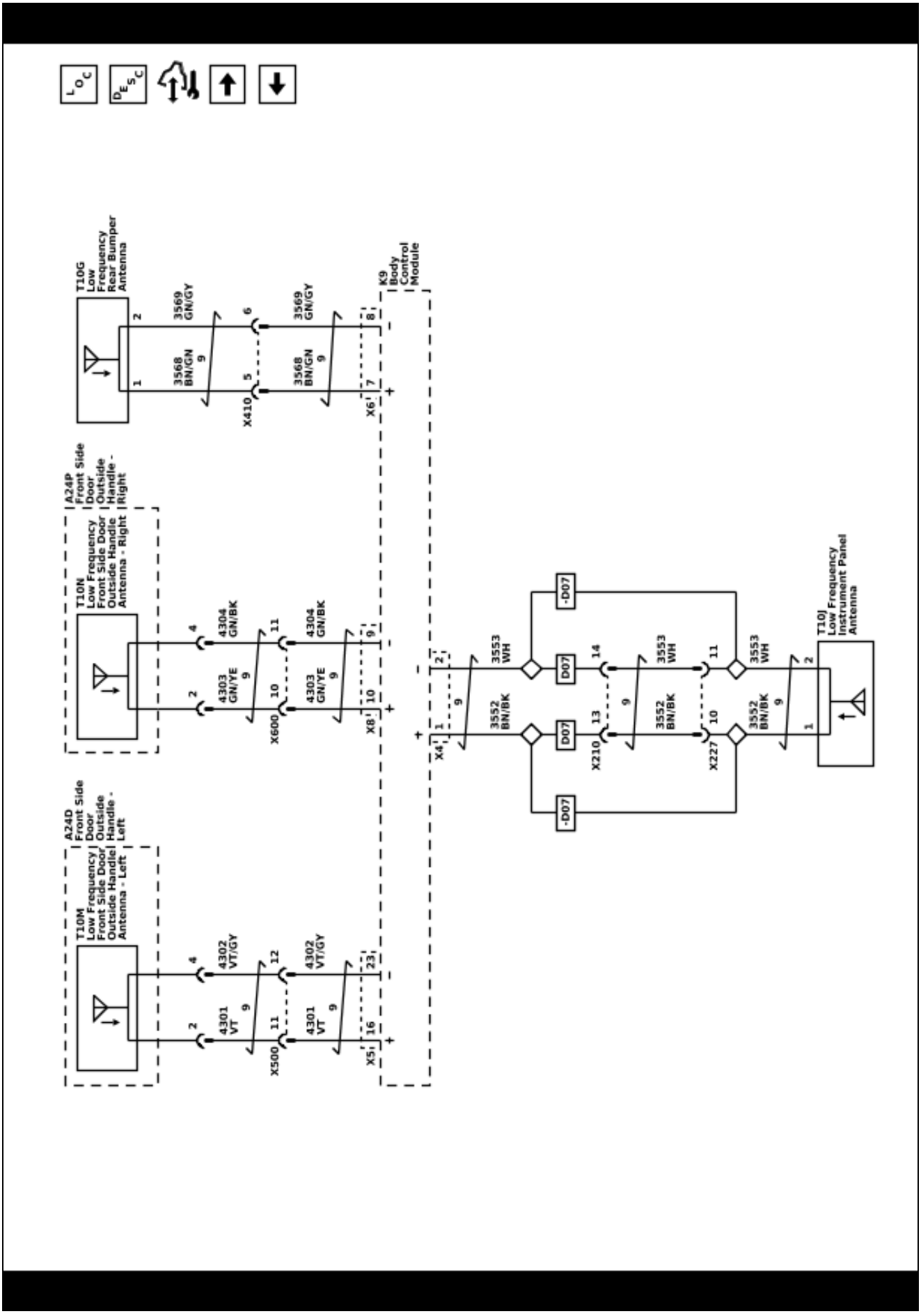

Remote Function Schematics (Garage Door Opener (UG1))

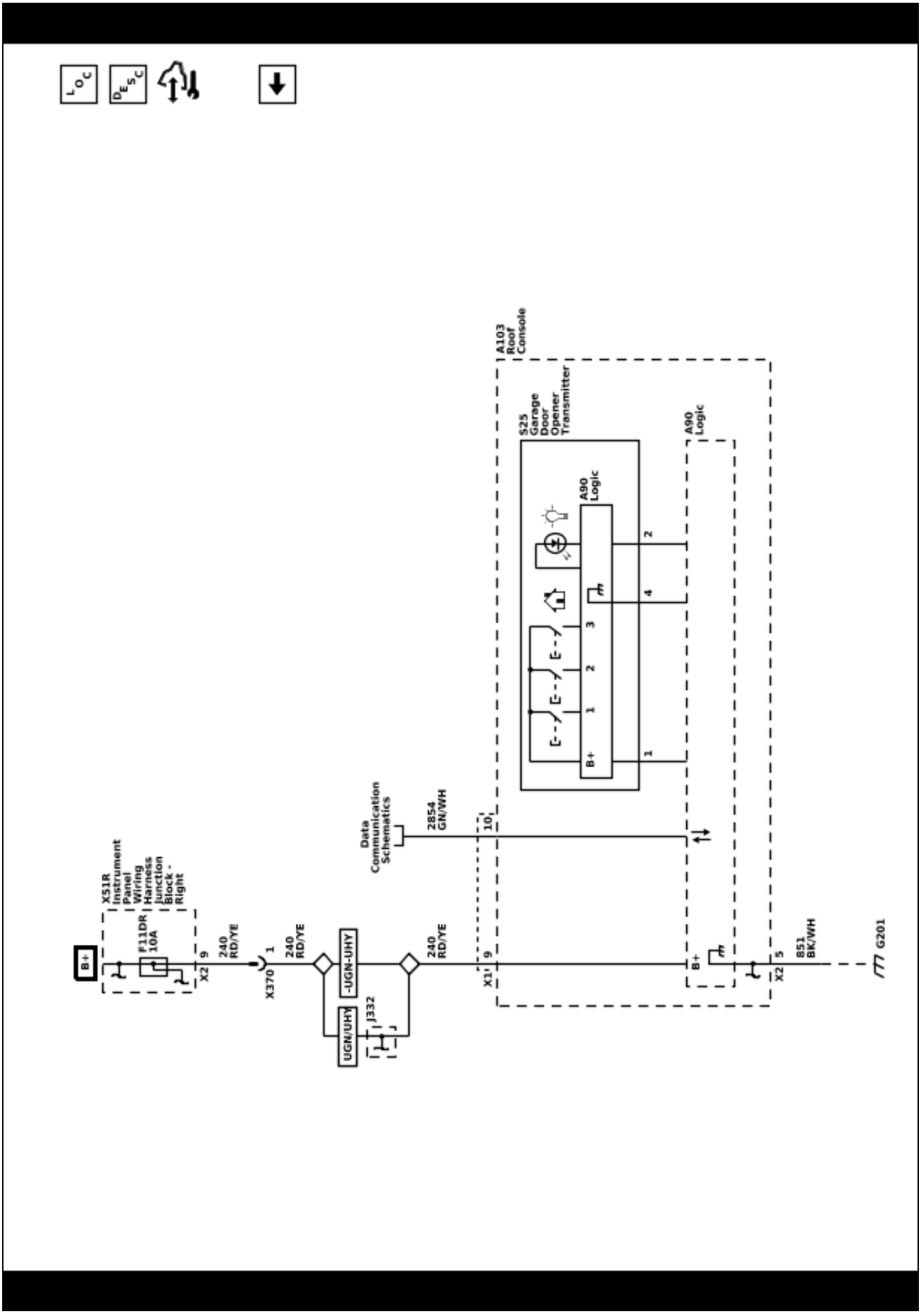

Description and Operation

Garage Door Opener Description and Operation

The garage door opener is fixed and rolling code capable. Rolling code is a system that allows the code that the customers receiver receives from the garage door opener to change every time the garage door opener is used within operating range of the receiver. Rolling code programming requires the customer to push a learn/program button on the garage door opener receiver at their home. This button is usually located on the receiver unit under a cover (light cover) on one end of the unit. The customer must follow the garage door opener manufacturers instructions to program/learn the receiver to accept the Universal Home Remote System as an authorized opener for their unit . When the receiver and the garage door opener are initially programmed together, a code is established and a new code is created for every new transmission. The software in the receiver recognizes the garage door opener and accepts the new code.

The garage door opener is compatible with most, but not all types and brands of transmitters.

The garage door opener is a transmitter operating between 288–434 MHz. The power and range of the transmitter is limited to comply with laws governing the generation of radio frequency interference. The transmitter is programmed by the user to accept the signal generated by the user's transmitters.

The garage door opener has 3 buttons that may be programmed for individual transmitter/receiver combinations to control up to 3 garage door openers, security gates, lighting systems, etc. Each button represents a transmitter code section of the transmitter, which operates separately from any other button, and may be considered a separate transmitter. Operation consists of simply pressing a button to activate the corresponding transmitter.

The garage door opener does not need any programming after it is replaced. However, for the opener function it must be programmed to the customer’s garage door or other devices such as a gate. The programming can only be performed at the device being programmed, it cannot be programmed at a service facility. Instructions for programming are listed in the Garage Door Opener Malfunction document in a Diagnostic Aid.

Note: Do not use the garage door opener (GDO) with any garage door opener that does not have the stop and reverse safety feature. This includes any garage door opener model manufactured before April 1, 1982.

Keyless Entry System Description and Operation

Keyless Entry System Description and Operation – Active

The keyless entry system is a vehicle entry device. The keyless entry system is used in conjunction with the door locks to unlock the vehicle. Keyless entry will lock/unlock a door or open the rear compartment lid when a corresponding button on the keyless entry transmitter is pressed. This is accomplished by the transmitter sending a radio frequency to the remote control door lock receiver that has a direct link to the body control module (BCM). The BCM interprets the signal and activates the requested function or requests the appropriate ECU to activate the function via a serial data message. A low transmitter battery or radio frequency interference from aftermarket devices, such as 2-way radios, power inverters, computers, etc., may cause a system malfunction. High radio frequency traffic areas, such as gas stations that use pay-at-the-pump radio frequency transponders, may also cause interference that could lead to a malfunction. Keyless entry allows you to operate the following features:

- Door lock/unlock
- Rear compartment lid release
- Illuminated entry lamps
- Panic alarm/vehicle locator
- Remote vehicle start
- Passive keyless entry able/disable
- Automatic window express down, if equipped
- Automatic window express up, if equipped
- Automatic power mirror folding/unfolding, if equipped

Keyless Entry System Description and Operation – Passive

Passive keyless entry allows entry to a locked vehicle without pressing any buttons on the keyless entry transmitter. The passive entry system uses low frequency antennas in several different areas on the vehicle to determine the location of the transmitter. When passively opening a locked door or the rear compartment, you must have a programmed transmitter with you in your pocket, purse, or briefcase within a one meter range.

When an exterior door handle button is pressed or the rear compartment touch pad is pressed, the body control module activates the low frequency antenna which sends out a challenge to the keyless entry transmitter. Because of the low frequency, communication range is limited. The antenna will emit the challenge in a one meter range. The transmitter must be within this range to receive the challenge. The transmitter receives this challenge and emits it's response as an RF message, which is received by the remote control door lock receiver. If the response is correct, entry into the vehicle will be allowed.

As a customer convenience feature, the keyless entry system will notify the driver if the transmitter has been left in the vehicle after exiting by chirping the vehicle horn three times and displaying a message on the DIC. This may be turned off using vehicle personalization. Also, if the transmitter is left in the vehicle after the central door lock switch has been used to lock the vehicle, the driver door will remain unlocked after exiting the vehicle. This is intended to prevent locking the transmitter in the vehicle and being unable to access it.

Keyless Entry System Description and Operation – Keyless Start

The keyless start portion of the keyless entry system allows vehicle starting, having only the transmitter as your key. The keyless start system uses low frequency antennas in three different locations on the vehicle to determine the location of the transmitter. Multiple antenna are used to ensure complete coverage of the vehicle interior and rear compartment. When using the keyless start system, a programmed transmitter must be in the vehicle's interior, in the driver's pocket, purse, or briefcase.

When the ignition mode switch is pressed, the low frequency antennas emit a challenge to the keyless entry transmitter. The transmitter receives this challenge and emits it's response as an RF message, which is received by the remote control door lock receiver. If the response is correct, vehicle starting will be allowed. If RF communication is interrupted, a “No Remote Detected” message will be displayed on the DIC. In these cases, the transmitter can be placed in the transmitter pocket located in the center console. The immobilizer antenna coil is located directly beneath the transmitter pocket. Placing the transmitter in the pocket will create a low powered coupling between the transmitter and immobilizer antenna, allowing communications to occur and enabling vehicle starting. If the key has been idle the DIC may display “Key In Sleep Mode, Move Key, Then Start”. In this case move the vehicle key to start the vehicle.

The keyless entry system has the following components:

- Keyless entry integrated key/transmitter
- Driver and passenger side antennas
- Driver and passenger door handle switches (part of the door handle assembly)
- Rear fascia antenna
- Immobilizer antenna coil (front console antenna function)
- Rear console antenna
- Trunk antenna (rear compartment)
- Body control module (BCM)
- Remote control door lock receiver

Keyless Entry Transmitters

By operating any of the exterior door handle buttons or the start/stop switch, a nearby transmitter is challenged by a keyless entry antenna. The transmitter will send an RF response to the remote control door lock receiver, which communicates with the BCM. The BCM will interpret this communication and either allow or deny vehicle entry or starting.

Side Antennas

The keyless entry side antennas are used to transmit low frequency communications to the keyless entry transmitters.

The keyless entry side antennas are located in the driver and passenger body sides. The antennas are controlled by the body control module. When the exterior door handle button is pressed, the respective antenna will send out a challenge to the keyless entry transmitter, which begins the passive entry communications.

Rear Fascia Antenna

The rear fascia antenna is used to transmit low frequency communication to the keyless entry transmitters for entry to rear compartment.

The rear fascia antenna is located behind the rear fascia. The antenna is controlled by the body control module. When the rear compartment touch pad is pressed, the antenna sends out a challenge to the keyless entry transmitter, which begins the passive entry communications.

Immobilizer Coil Antenna

This antenna is located in the front of the center console.

The Immobilizer antenna coil is used for vehicle starting functions and for learning vehicle keys. When the ignition mode switch is pressed, the antenna is energized or "pinged". This emits a low frequency challenge signal that is received by the keyless entry transmitter. The transmitter will then reply to this challenge with a response and, if correct, vehicle starting will occur. If the transmitter battery is dead, weak, or the RF signal is being interrupted, the transmitter may be placed in the pocket to create a low powered coupling between the transmitter and immobilizer coil antenna, allowing communications to occur and enabling vehicle starting.

Rear Console Antenna

This antenna is located in the rear of the center console.

The rear console antenna is used for vehicle starting functions. When the ignition mode switch is pressed, the antenna is energized or "pinged". This emits a low frequency challenge signal that is received by the keyless entry transmitter. The transmitter will then reply to this challenge with a response and, if correct, vehicle starting will occur.

Rear Compartment Antenna

This antenna is located near the center of the rear compartment area.

The rear compartment antenna is used for vehicle starting functions. When the ignition mode switch is pressed, the antenna is energized or "pinged". This emits a low frequency challenge signal that is received by the keyless entry transmitter. The transmitter will then reply to this challenge with a response and, if correct, vehicle starting will occur.

OnStar® Remote Link

A vehicle operator may have the ability to perform some of the keyless entry functions using applications on personal devices such as smart phones. Refer to *OnStar Description and Operation on page 3-18*.

Body Control Module (BCM)

The BCM is a multi-function module that performs the following functions:

- Receive and authenticate active transmitter and keyless start/entry signals from the remote control door lock receiver
- Determines the function requested by the transmitter signal
- Performs the function requested by the transmitter signal
- Activating vehicle antennas for passive keyless entry functions
- Activating vehicle antennas for keyless start functions
- Backup control for the ECM accessory wakeup and the run/crank relay
- If equipped, controls the electronic steering column lock
- Receiver of the exterior door handle switch inputs and door open switch (not the door ajar switch)
- Ignition mode switch monitoring

Unlock Driver Door Only – Active

Momentarily press the transmitter UNLOCK button in order to perform the following functions:

- Unlock only the driver door or all doors, if enabled through personalization
- Illuminate the interior lamps for a determined length of time, or until the ignition is turned ON
- Flash the exterior lights, if enabled through personalization
- Disarm the Content Theft Deterrent (CTD) system
- Deactivate the CTD system when in the alarm mode

Unlock All Doors – Second Operation – Active

Momentarily press the transmitter UNLOCK button a second time, within 5 seconds of the first press, to perform the following function:

Unlock the remaining doors

Unlock Driver Door Only – Passive

If enabled through personalization, approach the driver door with a valid keyless entry transmitter and press the door handle button to perform the following functions:

- Unlock and open only the driver door
- Disarm the CTD system, if equipped
- Deactivate the CTD system when in the alarm mode

Unlock All Doors – Passive

Approach any non driver door (front or rear) or, if enabled through personalization, the driver door with a valid keyless entry transmitter and press the door handle button to perform the following functions:

- Unlock all vehicle doors
- Disarm the CTD system, if equipped
- Deactivate the CTD system when in the alarm mode

Lock All Doors – Active

Press the transmitter LOCK button to perform the following functions:

- Lock all vehicle doors
- Immediately turn off the interior lamps
- Flash the exterior lights, if enabled through personalization
- Chirp the horn, if enabled through personalization
- Arm the CTD system

Lock All Doors – Passive

Exit the vehicle (with ignition off) with the keyless entry transmitter to automatically perform the following functions, if equipped.

- Lock all vehicle doors after a delay
- Flash the exterior lights, if enabled through personalization
- Chirp horn, if enabled through personalization
- Arm the CTD system

When all doors are closed, they can also be locked from the exterior by operating a front door handle button or touch pad while having a valid transmitter within range. Vehicles equipped with a rear door button can also lock all doors from the rear doors.

Rear Compartment Lid Release – Active

If the vehicle transaxle is in PARK or NEUTRAL, a double press of the transmitter rear compartment release button will open the rear compartment lid.

Rear Compartment Lid Release – Passive

Approach the rear of a locked vehicle with a valid keyless entry transmitter. Press the rear compartment lid release touch pad. The rear compartment lid will open.

Vehicle Locator/Panic Alarm/Active

A single press of the panic button performs the following functions. Some functions may be dependent on personalization settings:

- Pulses the horn three times
- Flashes the exterior lamps three times

A press and hold of the panic button performs the following functions:

- Pulses the horn and flashes the parking lamps for 30 second or until the following conditions occur:
  - The panic button is pressed
  - The ignition switch is turned to the RUN position with a valid key

Remote Vehicle Start/Active

The remote vehicle start function allows engine starting while not in the vehicle. It also allows the vehicle HVAC system and other vehicle systems to enable, providing a comfortable vehicle upon entry. The remote vehicle start sequence begins by pressing and releasing the remote vehicle start button on the keyless entry transmitter twice. The turn signal lamps will illuminate to indicate the vehicle has received the remote start request. Each time a remote vehicle start is performed,

the vehicle doors are locked, however they may then be unlocked/locked with the transmitter at any time. Once activated, the engine is allowed to run for 15 minutes. The remote start operation can be repeated as many times as desired up to a total run time of 30 minutes. The remote vehicle start event may be cancelled at any time by pressing only the remote vehicle start button on the transmitter or by entering the vehicle and turning ON the hazard lamps.

Hood Ajar Switch/Active

The hood switch provides status of the hood to the BCM for remote vehicle start purposes. The switch is integrated into the hood latch assembly. The hood ajar switch provides 2 separate inputs to the BCM. These separate inputs allow the BCM to actively monitor for a hood ajar switch fault.

Remote Vehicle Start Circuit Description/Active

The BCM receives a signal from the keyless entry transmitter indicating a remote vehicle start request. The BCM and ECM use the following inputs to verify the system is ready to enable a remote vehicle start event:

- Vehicle is not in valet mode
- Vehicle is in park
- Keyless entry transmitter is not in the vehicle
- The hood is closed
- The hazard switch is OFF
- Vehicle power mode is OFF
- The malfunction indicator lamp (MIL) is not commanded ON by the ECM
- Remote start timer does not equal 0 (the 30 minute maximum time has not been used)

When the BCM determines all conditions meet those required for a remote vehicle start event, a message is sent via serial data to the ECM. While the ECM is in remote vehicle start mode it will cut fuel to the engine if any of the following monitored conditions occur:

- Vehicle speed is greater than 0
- Transmission is not in P
- Excessive engine coolant temperature
- Low oil pressure
- Engine crank time is greater than 30 seconds
- Excessive engine speed
- Accelerator pedal position too high
- Immobilizer system indicates a theft attempt

If any conditions prevent a remote start or cause a remote start operation to be cancelled there is a record of the cause in the scan tool.

Keyless Entry Personalization

Vehicle lock/unlock functions and remote vehicle start settings may be personalized for the vehicle. This includes the capability of turning the passive entry system completely off. For functional descriptions and programming instructions, refer to the vehicle owners manual.

BLANK

Section 7

Transmission

Shift Lock Control 7-3
Schematic and Routing Diagrams 7-3
Shift Lock Control Schematics (M5X/MHT/MQB/MQE) 7-4
Description and Operation 7-5
Automatic Transmission Shift Lock Control Description and Operation 7-5

BLANK

Shift Lock Control

Schematic and Routing Diagrams

Shift Lock Control Schematics (M5X/MHT/MQB/MQE) (Shift Lock Control (M5X/MHT/MQB/MQE))

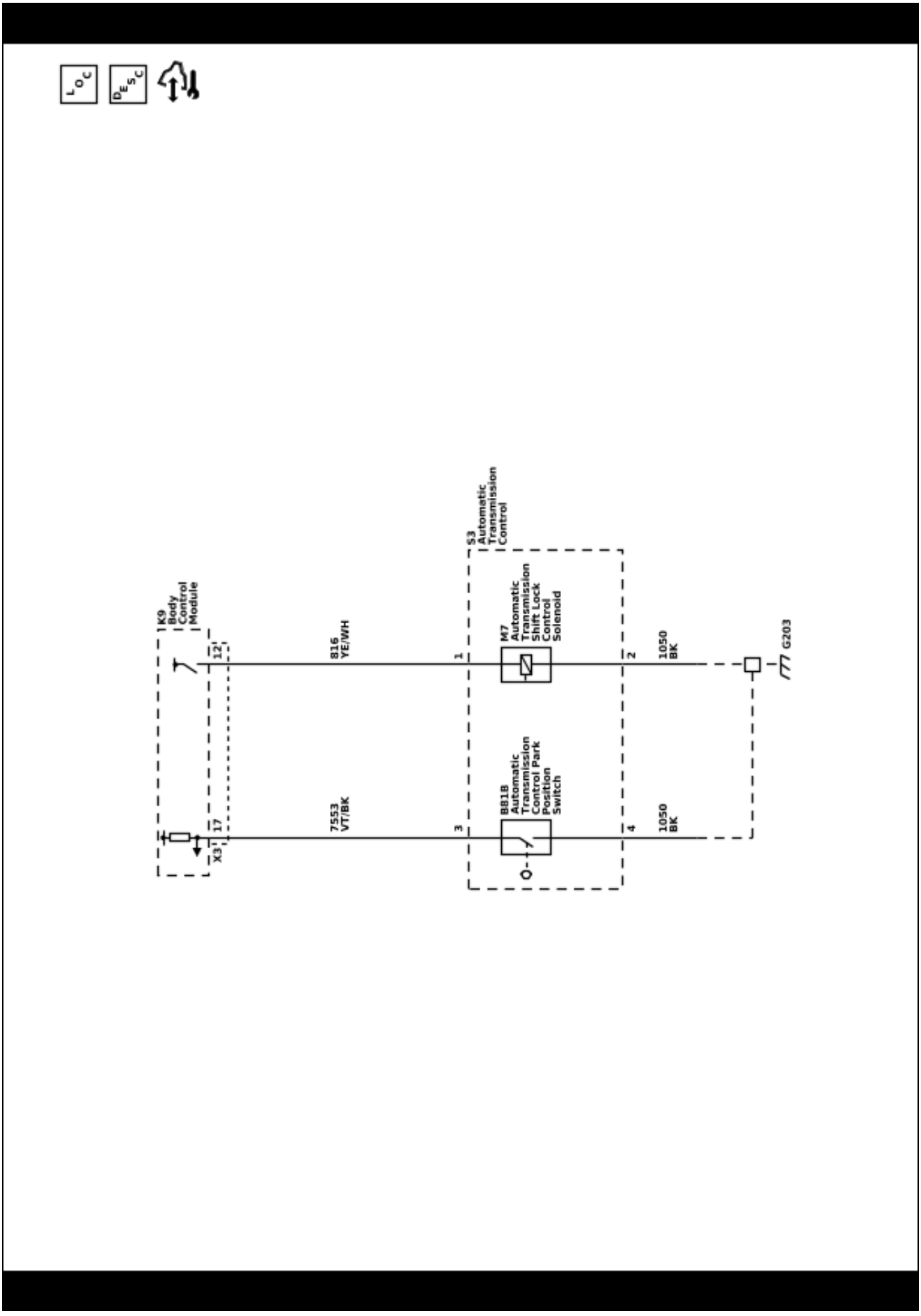

Description and Operation

Automatic Transmission Shift Lock Control Description and Operation

The Automatic Transmission Shift Lock Control System is a safety device that prevents an inadvertent shift out of PARK when the engine is running. The driver must press the brake pedal before moving the shift lever out of the PARK position. The system consists of the following components:

- The Automatic Transmission Shift Lock Solenoid (serviced as the Automatic Transmission Shift Lock Actuator)
- The Body Control Module (BCM)
- The Engine Control Module (ECM)

The BCM controls the voltage to the shift lock control solenoid though the shift lock control solenoid controlled voltage circuit. The following conditions must be met before the BCM will supply voltage to the shift lock control solenoid:

- The ignition is in the ON position.
- The ECM sends an input via GMLAN serial data to the BCM when the Transmission Control Module (TCM) indicates the transmission is in the PARK position.
- The BCM receives a brake applied input from the stop lamp switch.

Since the shift lock control solenoid is permanently grounded, the BCM supplies voltage to the automatic transmission shift lock control solenoid, releasing the mechanical lock on the shift lever as the solenoid energizes. The energized solenoid allows the driver to move the shift lever out of the PARK position. When the brake pedal is not applied, the BCM turns the control voltage output of the shift lock control solenoid OFF, de-energizing the shift lock control solenoid. When the transmission is in the PARK position, the de-energized shift lock control solenoid will prevent shifting as the lever is mechanically locked in the PARK position.

During remote start operation the BCM will de-energize the automatic transmission shift lock control circuit, locking the shift lever in the PARK position

BLANK

A

Automatic Day-Night Mirror
Description and Operation 2-50

C

Component Connector End Views 5-60

D

Data Link Communications
Description and Operation 5-3
Door Ajar Indicator
Description and Operation 2-78

E

Electrical Center Identification Views 5-6
Electrical Power Management Description and Operation 4-9
Endgate
Description and Operation 2-78, 2-79
Exterior Lighting Systems
Description and Operation 2-40

F

Forward Collision Alert
Description and Operation 6-19, 6-21

G

Garage Door Opener
Description and Operation 6-40

H

Hood Ajar Indicator
Description and Operation 2-80
Horn
System Description and Operation 2-14

I

Immobilizer
Description and Operation 6-28
Inline Harness Connector End Views 5-701
Interior Lighting System
Description and Operation 2-43

K

Keyless Entry
System Description and Operation 6-40

L

Lane Keep Assist
Description and Operation 6-21

M

Mobile Device Wireless Charger
Description and Operation 5-871

O

Outside Mirror
Description and Operation 2-51

P

Parking Assist
Description and Operation 6-34
Power Door Locks
Description and Operation 2-80
Power Mode Description and Operation 5-931
Power Outlets
Description and Operation 5-871
Power Windows
Description and Operation 2-11

R

Rear Vision Camera
Description and Operation 3-7
Rear Window Defogger
Description and Operation 2-11
Rearview Camera
Camera Full Display Mirror Description and Operation 3-7
Retained Accessory Power
Description and Operation 5-934
RPO Code List 1-7

S

Safety Alert Seat
Description and Operation 6-22
Schematics
Cigar Lighter/Power Outlet 5-860
Defogger 2-10
Door Lock/Indicator 2-67
Driver Assistance Systems 6-4, 6-9
Endgate 2-74
Exterior Lamps 2-21
Fog Lamps 2-20
Ground Distribution 5-900
Headlamps/Daytime Running Lamps 2-16
Horns 2-13
Image Display Cameras 3-4
Immobilizer 6-27
Inside Rearview Mirror 2-46
Interior Lamps 2-34
Interior Lamps Dimming 2-36
Moveable Window 2-4
Outside Rearview Mirror 2-47
Parking Assistance Systems 6-31
Power Distribution 5-875
Power Moding 5-898
Release Systems 2-73
Remote Function 6-37
Shift Lock Control 7-4
Starting and Charging 4-4
Trailering Systems 2-54
Upfitter Provision 5-926

Shift Lock Control
Description and Operation 7-5
Side Blind Zone Alert
Description and Operation 6-23
Starting System
Description and Operation 4-11
Stop/Start System
Description and Operation 4-12
Surround Vision Camera
Description and Operation 3-7

T

Trailering Description and Operation 2-59
Trailering Systems Schematics 2-54

V

Vehicle Certification, Tire Placard, and Anti-Theft Label 1-5
Vehicle, Engine and Transmission ID and VIN Location, Derivative and Usage 1-3