Table of Contents

General Information 1-1
General Information 1-3

Body Systems 2-1
Fixed and Moveable Windows 2-3
Horns and Pedestrian Alerts 2-11
Lighting 2-16
Mirrors 2-35
Vehicle Access 2-43
Wipers and Washers 2-54

Driver Information and Entertainment 3-1
Image Display Cameras 3-3

Engine/Propulsion 4-1
12 V Starting and Charging 4-3

HVAC 5-1
Heating, Ventilation, and Air Conditioning 5-3
HVAC - Automatic 5-605

Power and Signal Distribution 6-1
Data Communications 6-3
Electrical Component and Inline Harness Connector End Views 6-34
Electrical Component Locator and Harness Routing Views 6-532
Power Outlets 6-624
Wiring Systems and Power Management 6-628

Safety and Security 7-1
Immobilizer 7-3
Remote Functions 7-8
Seat Belts 7-16
Supplemental Restraints 7-20

INDEX INDEX-1

BLANK

Section 1

General Information

General Information 1-3
Introduction 1-3
Vehicle, Engine and Transmission ID and VIN Location, Derivative and Usage 1-3
Vehicle Certification, Tire Placard, and Anti-Theft Label 1-4
RPO Code List 1-6

BLANK

General Information

Introduction

Vehicle, Engine and Transmission ID and VIN Location, Derivative and Usage

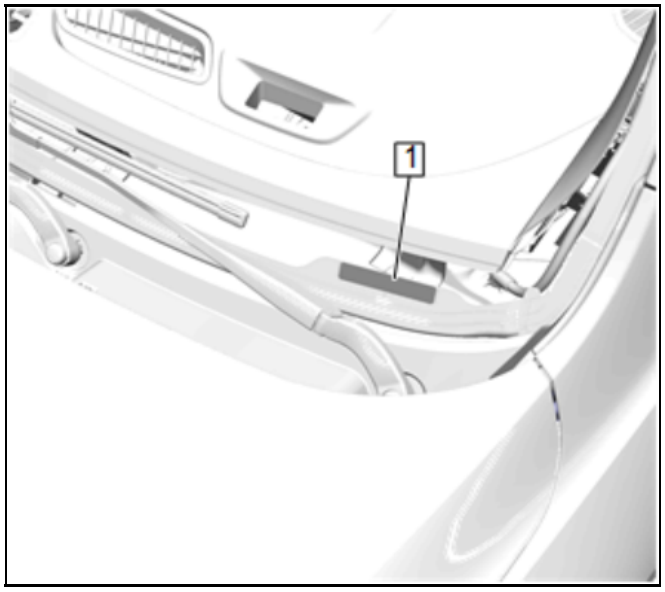

5275815

The vehicle identification number (VIN) plate is the legal identifier of the vehicle. The VIN plate (1) is located on the upper left corner of the instrument panel (I/P) and can be seen through the windshield from the outside of the vehicle:

ERROR - table Title is missing for titlesource=author-entry

Position	Definition	Character	Description
1–3	WORLD MAKE/ MANUFACTURER IDENTIFIER (WMI)	1	United States
		G	General Motors
		1	Chevrolet Passenger Car
4–5	VEHICLE LINE/SERIES	FY	Chevrolet Bolt EUV, LT
		FZ	Chevrolet Bolt EUV, Premier
		F6	Chevrolet Bolt EUV, (Non-US, Non-Canada)
6	BODY STYLE	6	48 - Sedan, 4 - Door, 4 Window, H/Back
7	RESTRAINT SYSTEM	S	AYF - Active Manual Belts, Airbags - Driver & Passenger Front (1st row), Front Seat Side (1st row) & Rear Seat Side (2nd row), Roof Side (all seating rows), Knee(s) (1st row)
8	ENGINE TYPE	0	EN0 - ENGINE NONE
9	CHECK DIGIT	0~9,X	Calculated by POMS
10	MODEL YEAR	P	2023
11	PLANT LOCATION	4	Orion
12 to 17	SEQUENCE NUMBER	Positions 12 through 17 represent the number sequentially assigned by the manufacturer in the production process.	

1ET25 (MMF) Automatic Transmission ID and VIN Derivative Location

Transmission Identification Information

Vehicle Certification, Tire Placard, and Anti-Theft Label

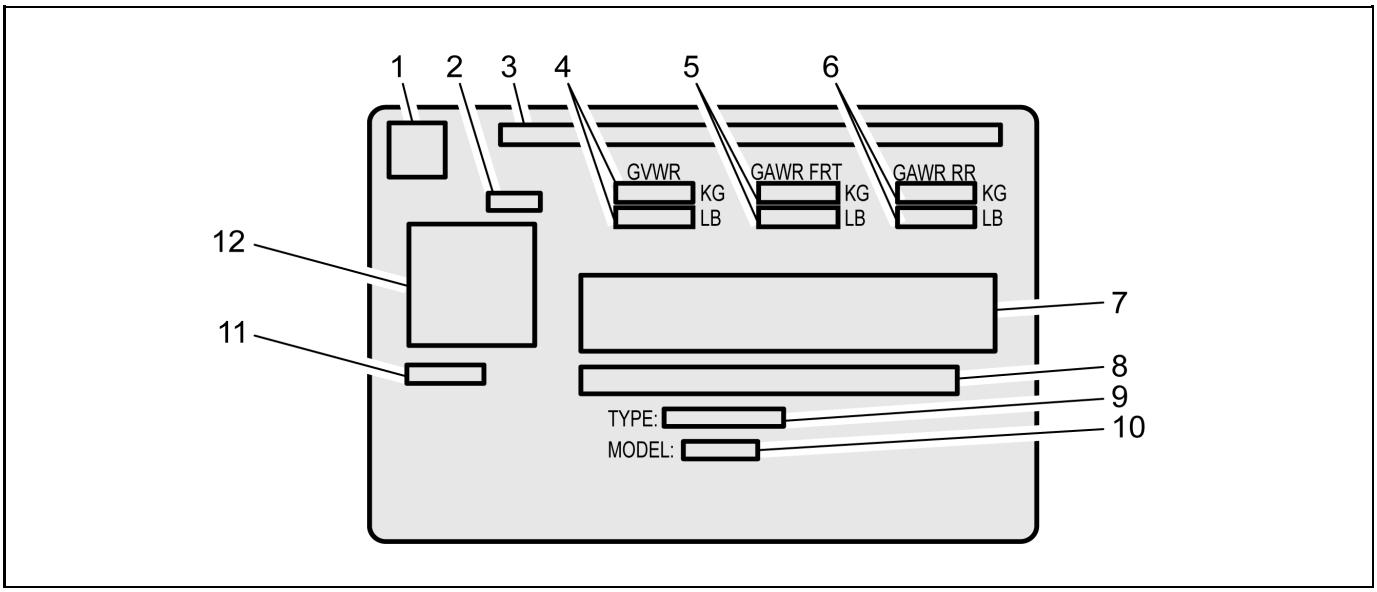

4967191

Vehicle Certification Label

Callout	Description
A vehicle-specific Certification label is attached to the vehicle's center pillar (B-pillar) and displays the following assessments:	
1	Logo
2	Final Date of Manufacture (Month and Year MM/YY) Date of manufacture is to reflect the date that the vehicle is counted as built. In those cases where a replacement label is needed, the replacement label should reflect the actual build date not the date of replacement.
3	Name of Manufacturer
4	Maximum Gross Vehicle Weight Rating (GVWR)
5	Maximum Gross Axle Weight Rating (GAWR) - Front
6	Maximum Gross Axle Weight Rating (GAWR) - Rear
7	Certification Statement
8	Vehicle Identification Number (VIN)
9	Vehicle Class Type (Pass Car, etc.)
10	Engineering Model Number
11	Paint Code
12	QR Code Once the QR code is scanned, the information will appear in this order on your smartphone or laptop: VIN, Model Year, Model, Build Month, Year, Engineering Book, Vehicle Order Number, 3 Digit RPO Codes sorted alphanumerically and the Paint Code (same code appears the lower left of the QR code)

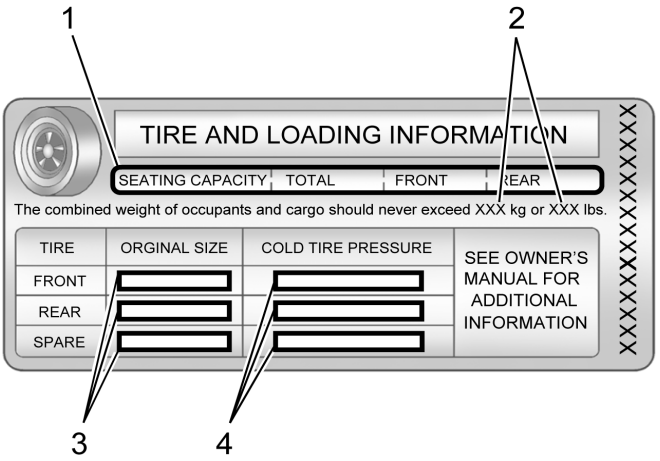

4962282

Tire Placard

Callout	Description
A vehicle-specific Tire and Loading Information label is attached to the vehicle's center pillar (B-pillar) and displays the following assessments:	
1	Specified Occupant Seating Positions
2	Maximum Vehicle Capacity Weight
3	Original Equipment Tire Size
4	Tire Pressure, Front, Rear, and Spare (Cold)

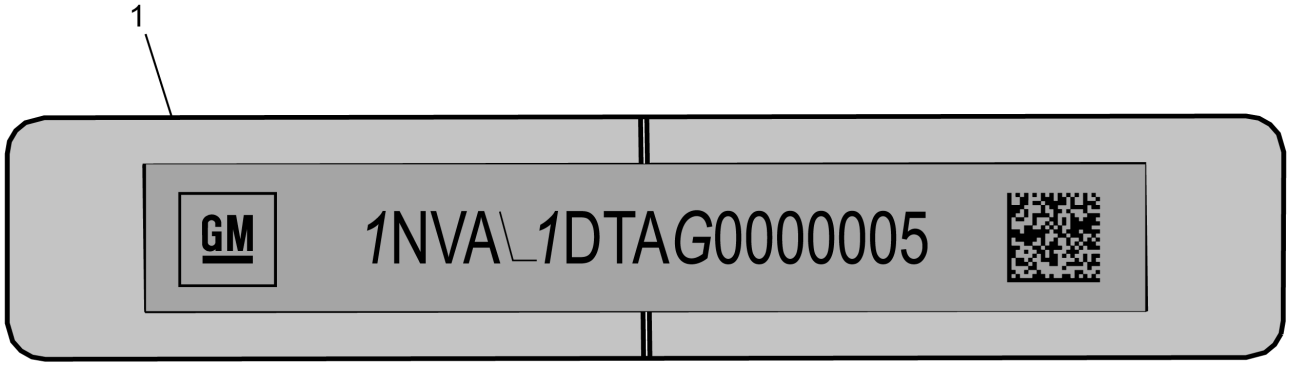

4962289

Anti-Theft Label

Callout	Description
This legal identifier is in the front corner of the instrument panel, on the driver side of the vehicle. It can be seen through the windshield from outside. The Vehicle Identification Number (VIN) also appears on the Vehicle Certification and certificates of title and registration.	
1	Vehicle Identification Number (VIN)

RPO Code List

The following table provides the description of the Regular Production Option (RPO) codes that are available on the vehicle. The vehicle's RPO list is printed on the Service Parts Identification Label.

RPO	Description
00G	IDENTIFICATION-NOT EQUIPPED WITH HEATED STEERING WHEEL (DNU AFTER MY23)
00R	IDENTIFICATION-NOT EQUIPPED WITH REAR HEAT SEATS (DNU AFTER MY23)
00V	IDENTIFICATION-NOT EQUIPPED WITH FRONT HEAT/VENT SEATS (DNU AFTER MY23)
00Y	IDENTIFICATION-NOT EQUIPPED WITH REAR PARK ASSIST (DNU AFTER MY23)
2LT	PACKAGE-LT OPTION 2
2LZ	PACKAGE-LZ OPTION 2
4AA	INTERIOR TRIM-JET BLACK
4AK	INTERIOR TRIM-JET BLACK/ CAPTAIN BLUE
4BE	INTERIOR TRIM-DK ASH GRAY / SKY COOL GRAY
5A7	WHEEL SPARE-NONE
5AL	ACCESSORY-WHEEL INSERTS - DESIGN 1
5J3	CALIBRATION-SURVEILLANCE MODE INTERIOR LIGHTING (SEO)
5W4	SALES PACKAGE-SPECIAL SERVICE, MUNICIPAL
62G	ACCESSORY-ACCENT LIGHTING - FRONT EXTERIOR
65C	LABEL, WARNING-CALIFORNIA, PROP 65 COMPLIANT
9L3	TIRE SPARE-NONE
A2V	ADJUSTER DRIVER SEAT-6WAY, DISCONT MAN RECLINE, MAN FORE/AFT, MAN HEIGHT
A2X	ADJUSTER DRIVER SEAT-8WAY, PWR RECLINE, PWR FORE/AFT, PWR HEIGHT, PWR TILT
A64	SEAT RR-SPLIT, FOLDING, 40/60
A69	RESTRAINT-SEAT BELT TENSIONER, FRT, VAR. 2
A70	RESTRAINT-SEAT BELT TENSIONER, FRT
A7H	ADJUSTER PASS ST-6WAY, DISCONT MAN RECLINE, MAN FORE/AFT, MAN HEIGHT
AAL	RESTRAINT-KNEE, BOLSTER, LH/RH

RPO	Description
ACO	IDENTIFICATION-ACCESSORY CATALOG OFFERING
AEF	WINDOW REG PASS DR-POWER OPERATED, EXPRESS UP/DOWN (DO NOT USE NEXT NEW MAJOR)
AEQ	WINDOW REG REAR DR-POWER OPERATED, EXPRESS DOWN (DO NOT USE NEXT NEW MAJOR)
AGJ	WINDOW SIDE FRT-TEMPERED, SOLAR GLAZING
AKP	WINDOW TYPE-SOLAR ABSORBING
AKX	WINDSHIELD TYPE-SOLAR ABSORBING
AL0	SENSOR INDICATOR-INFLATABLE RESTRAINT, FRT PASS/CHILD PRESENCE DETECTOR
AMF	LOCK CONTROL-ADDITIONAL, PROGRAMMABLE, REMOTE ENTRY, MULTIPLE UNITS
AQP	RESTRAINT-HEAD, RR SEAT, CENTER
AR7	SEAT-FRT BKT, STANDARD
ARS	WINDOW SIDE RR-TEMPERED, SOLAR GLAZING
ASV	EQUIPMENT-SENSOR AIR MOISTURE & W/S TEMP
AU3	LOCK CONTROL-SIDE DR, ELEC
AVJ	LOCK CONTROL, ENTRY-REMOTE ENTRY, EXTENDED RANGE, PASSIVE ENTRY, FRONT DOORS
AXG	WINDOW REG DRVR DR-POWER OPERATED, EXPRESS UP/DOWN (DO NOT USE NEXT NEW MAJOR)
AXJ	VEHICLE TYPE-PASSENGER CAR
AYF	RESTRAINT SYSTEM-SEAT, INFLATABLE, DRIVER & PASS FRT, FRT SEAT SIDE & RR SEAT SIDE, ROOF SIDE, KNEE
B32	COVERING FRT-FLOOR MATS, AUX (DNU NEXT NEW MAJOR)
B33	COVERING REAR-FLOOR MATS, AUX (DNU NEXT NEW MAJOR)
B9U	LOCK CONTROL RR CMPT-L/GATE REM CONT, ELEC OPEN/CLOSE
BAG	PARTS PKG-EXPORT
BAH	EQUIPMENT-SECURITY SYSTEM, IMMOBILIZATION, STEP TWO
BMK	MOLDING B/S-CHROME
BTM	SWITCH-START, KEYLESS
BTT	ALARM-REMOTE PANIC
BTV	REMOTE START-VEHICLE

RPO	Description
C23	WIPER SYS WINDSHIELD-PULSE, NON-VARIABLE DELAY
C25	WIPER SYS RR WINDOW-INTERMITTENT
C35	HEATER-DUCT, RR PASS
C49	DEFOGGER-RR WINDOW, ELECTRIC
C68	HVAC SYSTEM-AIR CONDITIONER FRT, AUTO, ELECTRONIC CONTROLS
C74	LAMP-INTR, ROOF, DUAL READING
C97	LAMP-INTR, ILLUMINATED ENTRY
C9B	LAMP-INTR, AMBIENT, DOOR
C9J	LAMP-INTR, AMBIENT, I/P
CAJ	ROOF-SUN, DUAL GLASS, OTR SLIDING, ELEC SUNSHADE
CBT	PROVISIONS-FAST CHARGING ACCOMMODATIONS
CE1	WIPER SYS WINDSHIELD-PULSE, MOISTURE SENSITIVE
CWM	SALES PACKAGE-TECHNOLOGY
D06	CONSOLE-FRT COMPT, FLOOR, ARM REST
D31	MIRROR I/S R/V-TILT
D75	HANDLE O/S DOOR-BODY COLOR
D7A	HANDLE O/S DOOR-BODY COLOR, CHROME STRIP
D8M	HANDLE, REAR CLOSURE-O/S, L/GATE, R/CMPT, BRIGHT BLACK
DA5	ARM REST-RR SEAT, CENTER
DBT	MIRROR O/S-LH & RH, ELECTRIC ADJUST, HEAT, POWERFOLD, TURN SIG IND, FLAT/DRVR, CNVX/PASS
DD8	MIRROR I/S R/V-LT SENSITIVE
DMR	MIRROR I/S FRT VAN-DRIVER, MIRROR, COVER, SLIDING, PASS, MIRROR, COVER, SLIDING
DMS	MIRROR I/S FRT VAN-SUNSHADE, DRVR, W/MIR, W/CVR, ILLUM, SLIDE, PASS, W/ MIR, W/CVR, ILLUM,SLIDE (DNU NEXT MAJOR, USE DEG
DRZ	MIRROR I/S R/V-LT SENSITIVE, FULL VIDEO DISPLAY
DWK	MIRROR O/S-LH & RH, RC, ELEC, HEAT, FLAT/DRVR, MANFOLD, CNVX/PASS, TURN SIG IND
DXD	MIRROR O/S-LH & RH, RC, ELEC, HEAT, CNVX/DRVR, PWRFOLD, CNVX/PASS, TURN SIG IND
E21	HANDLE-I/S, DR, CHROME
E22	HANDLE-ASSIST, RR
E27	HANDLE-ASSIST, PASS
E91	POCKET-FRONT SEAT BACK, PASS
EFZ	PROP ENGY STOR PACK-PROPULSION BATTERY, LI, 5-MOD, LONG RANGE, UNDERBODY

RPO	Description
EJM	EQUIPMENT-CHARGE SET MODE2 CHARGING, CEE16(CARA) TO TYPE 2 VEHICLE CONNECTOR (DNU NEXT NEW MAJOR)
EKM	EQUIPMENT-CHARGE SET MODE2 CHARGING, TYPE N (20A) TO TYPE 2 (DNU NEXT NEW MAJOR)
EKT	EQUIPMENT-CHARGE SET MODE2 CHARGING, NEMA 5 TO TYPE 1 DUAL (DNU NEXT NEW MAJOR)
EN0	ENGINE-NONE
ENR	EQUIPMENT-CHARGE SET MODE2 CHARGING, GB/S 1363 TO TYPE 2 VEHICLE CONNECTOR (DNU NEXT NEW MAJOR)
EPH	TRANS RANGE SEL SYS-ELECTRONIC
FE5	SUSPENSION SYSTEM-RIDE, HANDLING, PERFORMANCE
FE9	CERTIFICATION-EMISSION, FEDERAL
FJP	VEHICLE FUEL-(NONE)
FJQ	RATIO-7.05
FX3	RIDE AND HANDLING-AUTOMATIC ELECTRONIC CONTROLLED
G7X	PRIMARY COLOR-EXTERIOR, NIMBUS MET-1 (621G)
GAZ	PRIMARY COLOR-EXTERIOR, SUMMIT WHITE (G) 8624
GB8	PRIMARY COLOR-EXTERIOR, BLACK MEET KETTLE MET (384A)
GK8	COMPARTMENT-STOWAGE, REAR, DOUBLE FLOOR
GLT	PRIMARY COLOR-EXTERIOR, POW ZINGA MET-1 (327E)
GNT	PRIMARY COLOR-EXTERIOR, RADIANT RED TINT MET-1 (170H)
GRC	PRIMARY COLOR-EXTERIOR, GRAY GHOST MET-1 (247F)
GSJ	PRIMARY COLOR-EXTERIOR, FLARE MET-1 (251F)
H0Y	INTERIOR TRIM CONFIG-LEATHER, LEVEL 1, JET BLACK
H1N	INTERIOR TRIM CONFIG-CLOTH, LEVEL 1, JET BLACK , VAR 1
H1Y	INTERIOR TRIM CONFIG-LEATHER, LEVEL 2, JET BLACK
H69	INTERIOR TRIM CONFIG-LEATHER, LEVEL 1, JET BLACK , VAR 1
HCP	INTERIOR TRIM CONFIG-LEATHER, LEVEL 2, JET BLACK / CAPTAIN BLUE
HPB	ELECTRIFIED PROPULS-ELECTRIC, BEV, GEN 2, FWD
HPG	INTERIOR TRIM CONFIG-LEATHER, LEVEL 2, DK ASH GRAY / SKY COOL GRAY
IOS	RADIO-INFOTAINMENT SYSTEM - 3.X MID/ HIGH HMI, ENHANCED CONNECTIVITY, VOICE RECOGNITION, MID SD NAV CAPABLE

RPO	Description
IOU	RADIO-INFOTAINMENT SYSTEM - 3.X MID/ HIGH HMI, ENHANCED CONNECTIVITY, VOICE RECOGNITION, MID SD NAV
J23	ENGINEERING YEAR-2023
J67	BRAKE SYSTEM-POWER, FRT & RR DISC, ABS, 15" (DNU NEXT NEW MAJOR)
J71	BRAKE PARKING-POWER OPERATED (DNU NEXT NEW MAJOR CONTACT BFO FOR NEW STRATEGY)
JBJ	BOOSTER-BRAKE - NONE
K12	FILTER-AIR, POLLUTANT
K23	HIGH VOLTAGE CHARGER-7.2KW, 1-PHASE
K28	HIGH VOLTAGE CHARGER-11KW, 1-PHASE
K34	CRUISE CONTROL-AUTOMATIC, ELECTRONIC
K4C	CHARGER-INDUCTIVE PORTABLE WIRELESS DEVICE (DNU SEE BFO)
K5W	BATTERY-LN1, AGM, 12V, 50AH, 520ENCCA
KA1	HEATER SEAT FRT-DRVR & PASS (DNU NEXT NEW MAJOR)
KA6	HEATER SEAT-REAR (DNU NEXT NEW MAJOR)
KEM	EQUIPMENT-INTR, AIR CLEANER, IONIZING (DO NOT USE NEXT NEW MAJOR)
KI3	STEERING WHEEL HEAT-AUTOMATIC
KRV	REFRIGERANT-LOW GWP
KSG	CRUISE CONTROL-AUTOMATIC, ADAPTIVE, WITH STOP/GO
KTF	KEY-PRIMARY FOLDABLE, ADDITIONAL FOLDABLE
KTI	KIT, TIRE-INFLATOR
KU1	VENTILATED SEAT DRVR-FRONT
KU3	VENTILATED SEAT PASS-FRONT
KWP	GENERATOR-NONE
LHD	VEHICLE DRIVE-LEFTHAND DRIVE
MCR	RECEPTACLE-MEMORY CARD (DO NOT USE NEXT NEW MAJOR)
MDC	MOLDING B/S UPPER-BRIGHT (DO NOT USE NEXT NEW MAJOR)
MMF	TRANSMISSION-AUTO, ELECTRIC, GM, GEM, GEN 2, DRIVE UNIT, X68F
MUQ	CONTROL-SHIFT, AUTO TRANS, STRG COL MTD
N34	STEERING WHEEL-LEATHER, 3 SPOKES (DNU NEXT NEW MAJOR)
N37	STEERING COLUMN-TILT, TELESCOPING
N52	STEERING WHEEL-3 SPOKES, DELUXE (DNU NEXT NEW MAJOR)
NC9	EMISSION SYSTEM-CALIFORNIA, ZEV (DO NOT USE NEXT NEW MAJOR)

RPO	Description
NCH	LOCK-MANUAL CHILD LOCK SYSTEM (REAR DOOR LATCH)
NE1	CERTIFICATION-EMISSION, GEOGRAPHICALLY RESTRICTED REGISTRATION
NF6	EMISSION SYSTEM-ZERO EMISSION VEHICLE (ZEV)
NJ1	STEERING-POWER, NON-VARIABLE RATIO, ELECTRIC
NT7	EMISSION SYSTEM-FEDERAL, TIER 2
ORN	PLANT CODE-ORION, MI, USA
P3H	ORNAMENTATION-EXTR, BOWTIE
PJE	WHEEL-17 X 7.0, J, ALUMINUM, DESIGN 10
PPW	PHONE PROJECTION-PHONE PROJECTION WIRELESS
PWW	WHEEL-17 X 7.0, J, ALUMINUM, DESIGN 5
QBM	TIRE ALL-215/50R17 SL 91H BW ALS-S VAR 1
QBW	TIRE ALL-215/50R17 SL 91H BW HW1-S VAR 1
RIA	ACCESSORY-FLOOR LINER - CONTOURED
RSB	WHEEL-17 X 7.0, J, ALUMINUM, DESIGN 1
RSR	OCCUPANT DETECT SYS-REAR SEAT, DOOR ACTIVATED
RTN	WHEEL-17 X 7.0, J, ALUMINUM, DESIGN 2
RWS	ACCESSORY-FLOOR MATS - CARPET
RZZ	ACCESSORY-CHARGE CORD SET - 110/ 240V - DUAL
S08	ACCESSORY-HIGHWAY SAFETY KIT
SBK	RESTRAINT-SEAT BELT PRETENSIONER, RR
SD4	ACCESSORY-TIRE INFLATOR
SFE	ACCESSORY-WHEEL LOCKS
SFJ	ACCESSORY-WINDOW SHADES - REFLECTIVE
SGI	ACCESSORY-SILL PLATES - ALUMINIUM
SO7	SALES PACKAGE-LTZ PREMIUM
STO	REMOTE STOP-CHARGING
T44	ALARM-OVERSPEED WARNING, ACOUSTICAL
T4L	HEADLAMPS-LED
T7E	LAMP SYSTEM-DAYTIME RUNNING, LED (DO NOT USE NEXT NEW MAJOR)
T83	CONTROL, HEADLAMPS-AUTOMATIC ON-OFF
TCU	LICENSE PLATE-FRT & RR MOUNTING, ECE
TD1	REFLECTOR-SAFETY TRIANGLE
TDM	MODE TEEN DRIVER-SETTINGS, INFOTAINMENT
TQ5	HEADLAMP HIGH BEAM-AUTO CONTROL

RPO	Description
TT9	LAMP-STOP, HIGH LEVEL, LED TYPE
TUI	LAMP-FRT TURN SIGNAL, AMBER
TW5	LAMP-TAIL & STOP, SAE, LED (DO NOT USE, SEE BFO)
U05	HORN-DUAL
U18	SPEEDOMETER-INST, KILO
U25	LAMP-INTR, RR COMPT, COURTESY
U2K	DIGITAL AUDIO SYSTEM-S-BAND
U2Q	DIGITAL AUDIO SYSTEM-INTEGRATED TYPE DAB/DAB+/DMB-R
UC1	SPEEDOMETER-INST, MILES
UC3	CONTROL-STEERING WHEEL, RADIO & PHONE, REDUNDANT CONTROLS
UD7	PARK ASSIST-REAR
UDV	DISPLAY INSTRUMENT-DRIVER INFO ENHANCED, FULL CLUSTER (MULTI COLOR GRAPHIC)
UE1	COMMUNICATION SYSTEM-VEHICLE, ONSTAR
UE4	SENSOR INDICATOR-FOLLOWING DISTANCE
UER	COMM SYS REGULATORY-VEHICLE, EMERGENCY CALL
UEU	SENSOR INDICATOR-FORWARD COLLISION ALERT
UEV	COMMUNICATION EQUIP-AUTOMATIC TOLL COLLECTION
UFA	DISPLAY-OUTSIDE TEMPERATURE
UFG	REAR CROSS TRAFFIC-ALERT
UGM	SENSOR EQUIPMENT-OUTSIDE AIR TEMPERATURE SENSOR
UGN	COLL IMMINENT BRK-ALL SPEED, VEH FWD MOVEMENT, BRAKE PREFILL, INTEGRATED BRAKE ASSIST
UHG	INDICATOR-SEAT BELT WARNING , DRIVER
UHH	INDICATOR-SEAT BELT WARNING , PASSENGER
UHX	LANE ACTIVE SAFETY-KEEP ASSIST
UHY	COLL IMMINENT BRK-LOW SPEED, VEH FWD MOVEMENT, BRAKE PREFILL, INTEGRATED BRAKE ASSIST
UJM	TIRE PRESS INDICATOR-MANUAL LEARN
UKC	SIDE ACTIVE SAFETY-OBSTACLE DETECTION ENHANCED
UKJ	PED DETECTION FRT-BASIC, PEDESTRIANS
UKL	LANE ACTIVE SAFETY-KEEP ASSIST, HANDS FREE LANE FOLLOWING(ENTIRE SPEED RANGE)
UL8	FREQUENCIES-SAUDI ARABIAN
UQ3	SPEAKER SYSTEM-ENHANCED AUDIO
UQA	SPEAKER SYSTEM-PREMIUM AUDIO, BRANDED AMPLIFIER

RPO	Description
UQL	RESTRAINT PROVISIONS-CHILD, ISOFIX 2 POINT ONLY, POINT/LAT CH(INC 3 TOP TETHER POINTS)
USS	RECEPTACLE-USB CHARGE PORT (DO NOT USE NEXT NEW MAJOR, SEE BFO)
UTJ	THEFT DETERENT-ELECTRICAL, UNAUTHORIZED ENTRY
UUQ	ANTENNA-ROOF, RADIO, SHARK FIN
UUT	ALARM, HORN-TIRE FILL ALERT
UV2	VISION-360 VIEW, MONO, HD DIGITAL
UVB	VISION-REAR VIEW, MONO, HD DIGITAL
V2P	LUGGAGE CARRIER-RF RAIL
V87	VEHICLE STATEMENT-VEHICLE LABEL CONTENT - GULF STATES ORGANIZATION
V8B	VEHICLE STATEMENT-VEHICLE LABEL CONTENT - BRAZIL
V8C	VEHICLE STATEMENT-VEHICLE LABEL CONTENT - NO CERT STATEMENT (SPANISH TEXT)
V8D	VEHICLE STATEMENT-VEHICLE LABEL CONTENT - U.S. FMVSS
V8E	VEHICLE STATEMENT-VEHICLE LABEL CONTENT - CANADA CMVSS
V8Y	VEHICLE STATEMENT-VEHICLE LABEL CONTENT - KOREA - FTA (U.S. BUILT VEHICLES ONLY)
VAV	ACCESSORY-FLOOR MATS - ALL WEATHER
VBX	LANGUAGE LABEL-ARABIC
VEE	BUMPER FRT-BODY COLOR, FRT & RR
VEX	KIT-SAFETY
VGC	PROTECTOR-FILM, PAINT ETCH PREVENTIVE
VIX	PLATE-VEHICLE IDENTIFICATION - VISUAL (GMDAT)
VIY	PLATE-VEHICLE IDENTIFICATION - ASTERISK (*) MARK (GMDAT)
VJQ	HOOK-TOW, FRT
VJR	HOOK-TOW, RR
VK3	LICENSE PLATE FRONT-FRT MOUNTING PKG
VKD	LICENSE PLATE-FRT & RR MOUNTING, SAE
VLI	ACCESSORY-MAT - TRUNK / CARGO AREA
VNU	VIN FORMAT-U.S. TYPE
VNV	VIN FORMAT-KOREA TYPE
VPH	VEHICLE PREPARATION-OVERSEAS DELIVERY
VRK	VAA/COMPONENT REL-ROOF TRIM
VV4	COMMUNICATION EQUIP-MOBILE INTERNET CONNECTIVITY
VYW	ACCESSORY-FLOOR MATS - PREMIUM CARPET - DESIGN 1

RPO	Description
W2D	ACCESSORY-CARGO NET
WBV	ORNAMENTATION-NAME PLATE "BOLT EUV"
WGQ	SALES PACKAGE-REDLINE
WK7	SALES PACKAGE-SUPERCRUISE
WMX	VIN MODEL YEAR-2023
WPA	SALES PACKAGE-DRIVER CONFIDENCE
WPB	SALES PACKAGE-SUN AND SOUND
WPT	SALES PACKAGE-LS DLX
WPU	SALES PACKAGE-LT DLX
WTV	APPEARANCE PACKAGE-EXTR, DECAL PACKAGE 1
WU5	SWITCH-I/P LP DIMR
XL8	FREQUENCIES RATING-433 MHZ
YF5	CERTIFICATION-EMISSION, CALIFORNIA
YM8	IDENTIFICATION-LIMITED PERSONALIZATION OPTION (LPO)
Z5X	MIRROR PROVISIONS-ARABIC LANGUAGE
ZPN	WARRANTY-36,000 MILE, 3 YEARS
ZY9	WARRANTY-100,000 KM, 3 YEARS

Section 2

Body Systems

Fixed and Moveable Windows 2-3
Schematic and Routing Diagrams 2-3
Moveable Window Schematics 2-4
Defogger Schematics 2-7
Description and Operation 2-8
Full-Cut Method Description 2-8
Power Windows Description and Operation 2-8
Rear Window Defogger Description and Operation 2-9
Stationary Window Description 2-10
Urethane Adhesive Description 2-10

Horns and Pedestrian Alerts 2-11
Schematic and Routing Diagrams 2-11
Horn Schematics 2-12
Description and Operation 2-14
Horns System Description and Operation 2-14
Pedestrian Alert Description and Operation 2-15

Lighting 2-16
Schematic and Routing Diagrams 2-16
Headlights/Daytime Running Lights (DRL) Schematics 2-17
Fog Lights Schematics 2-19
Exterior Lights Schematics 2-20
Interior Lights Schematics 2-25
Interior Lights Dimming Schematics 2-28
Description and Operation 2-31
Exterior Lighting Systems Description and Operation 2-31
Interior Lighting Systems Description and Operation 2-33

Mirrors 2-35
Schematic and Routing Diagrams 2-35
Inside Rearview Mirror Schematics 2-36
Outside Rearview Mirror Schematics 2-37
Description and Operation 2-40
Automatic Day-Night Mirror Description and Operation 2-40
Outside Mirror Description and Operation 2-41

Vehicle Access 2-43
Schematic and Routing Diagrams 2-43
Door Lock/Indicator Schematics 2-44
Release Systems Schematics 2-47
Hood Latch Schematics 2-48
Description and Operation 2-49
Charge Port Door Description and Operation . . . 2-49
Door Ajar Indicator Description and Operation 2-49
Hood Ajar Indicator Description and Operation 2-50
Liftgate Ajar Indicator Description and Operation 2-50
Power Door Locks Description and Operation 2-51
Rear Hatch/Gate Description and Operation . . . 2-52

Wipers and Washers 2-54
Schematic and Routing Diagrams 2-54
Wiper/Washer Schematics 2-55
Description and Operation 2-58
Wiper/Washer System Description and Operation 2-58

BLANK

Fixed and Moveable Windows

Schematic and Routing Diagrams

Moveable Window Schematics (Driver Door)

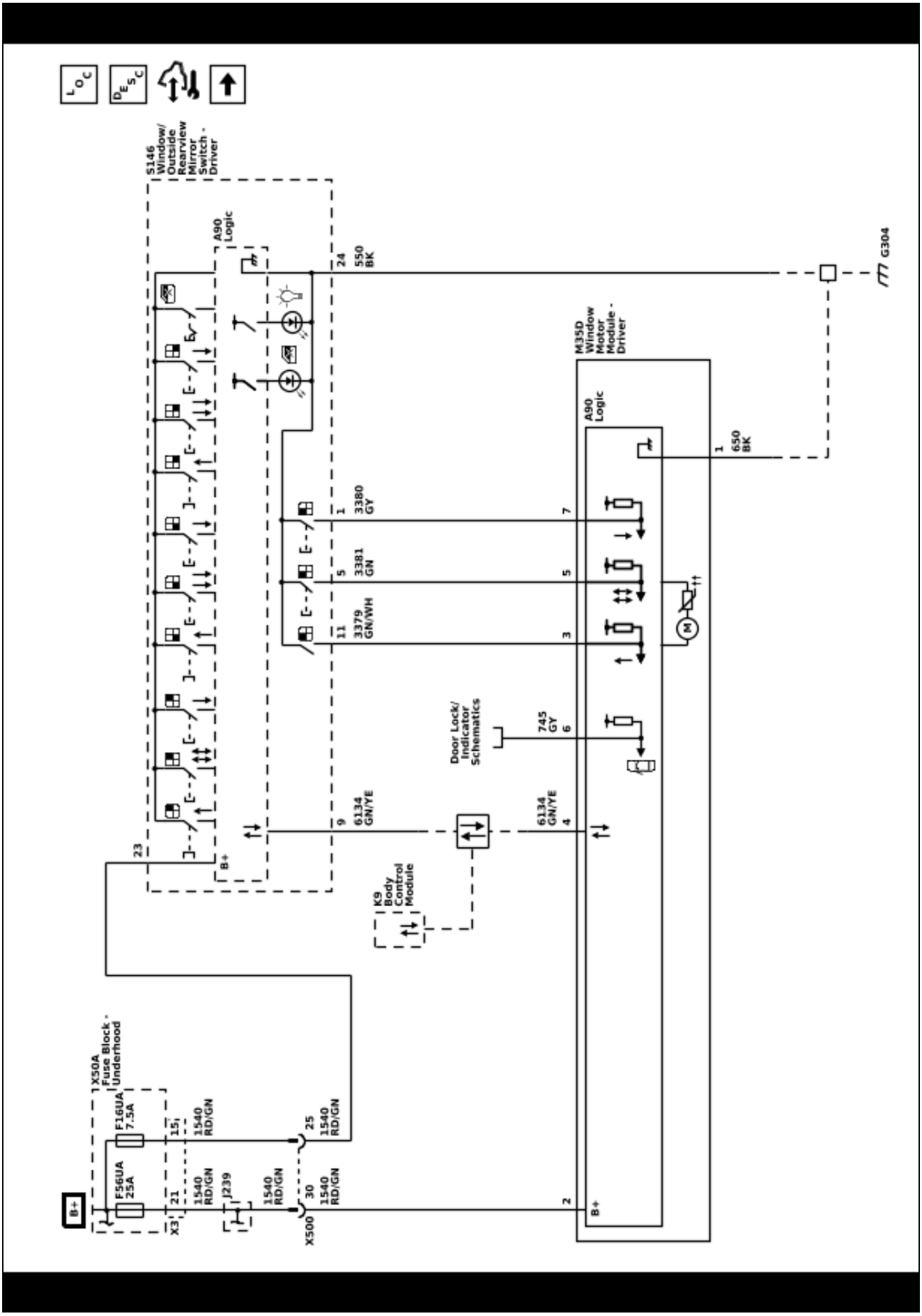

5910135

Moveable Window Schematics (Passenger Door)

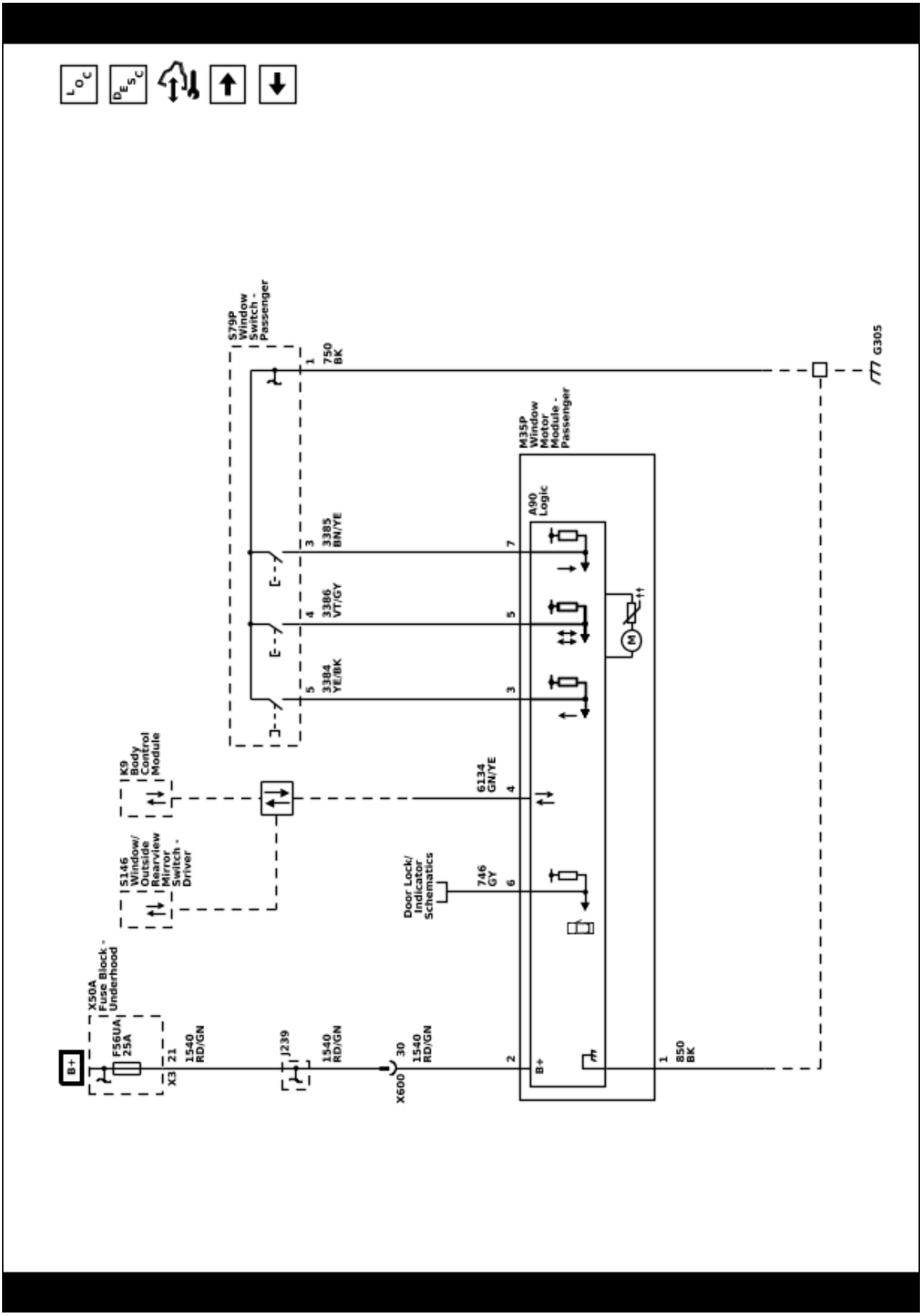

Moveable Window Schematics (Rear Doors)

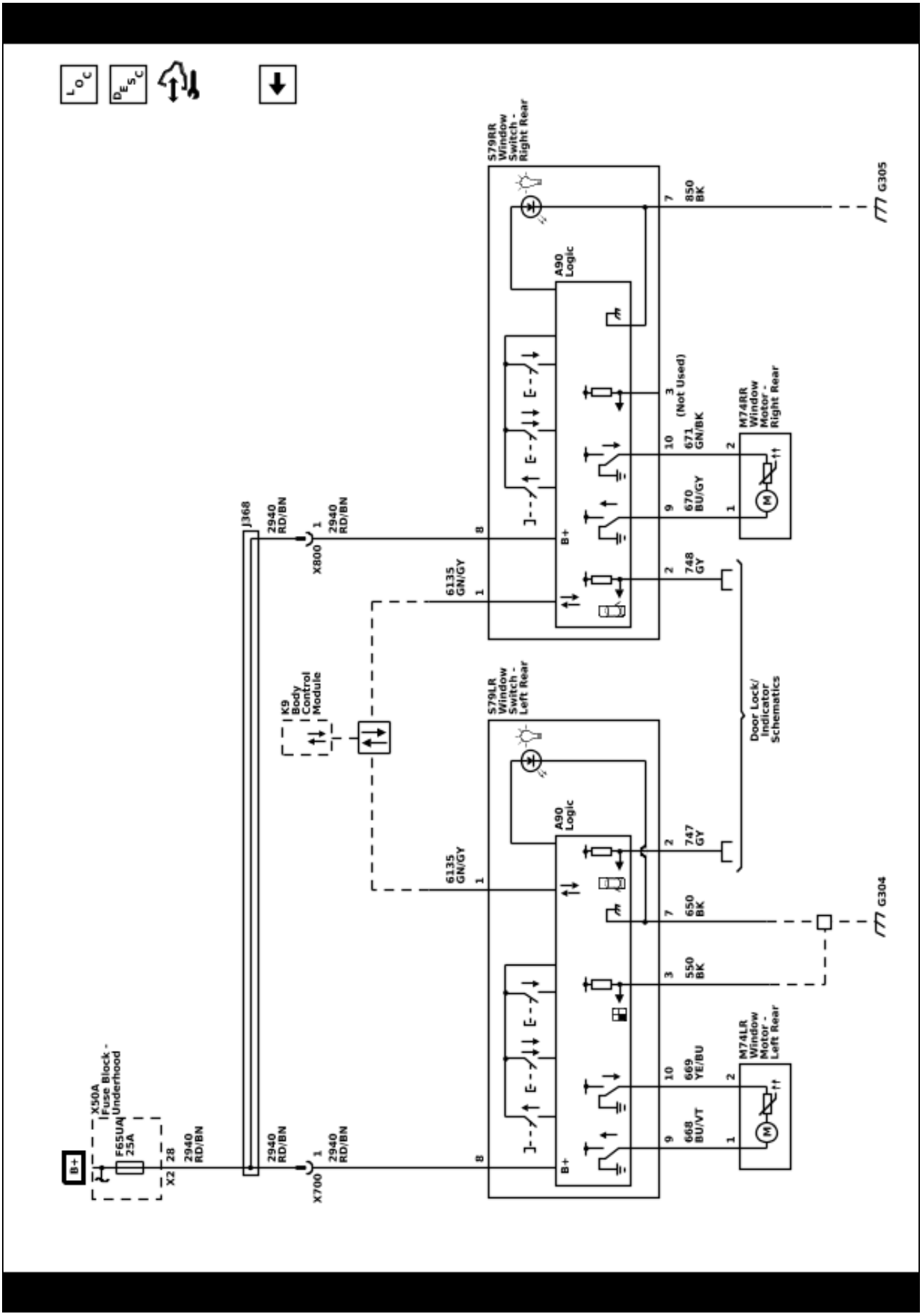

5910137

Defogger Schematics (Rear Window Defogger)

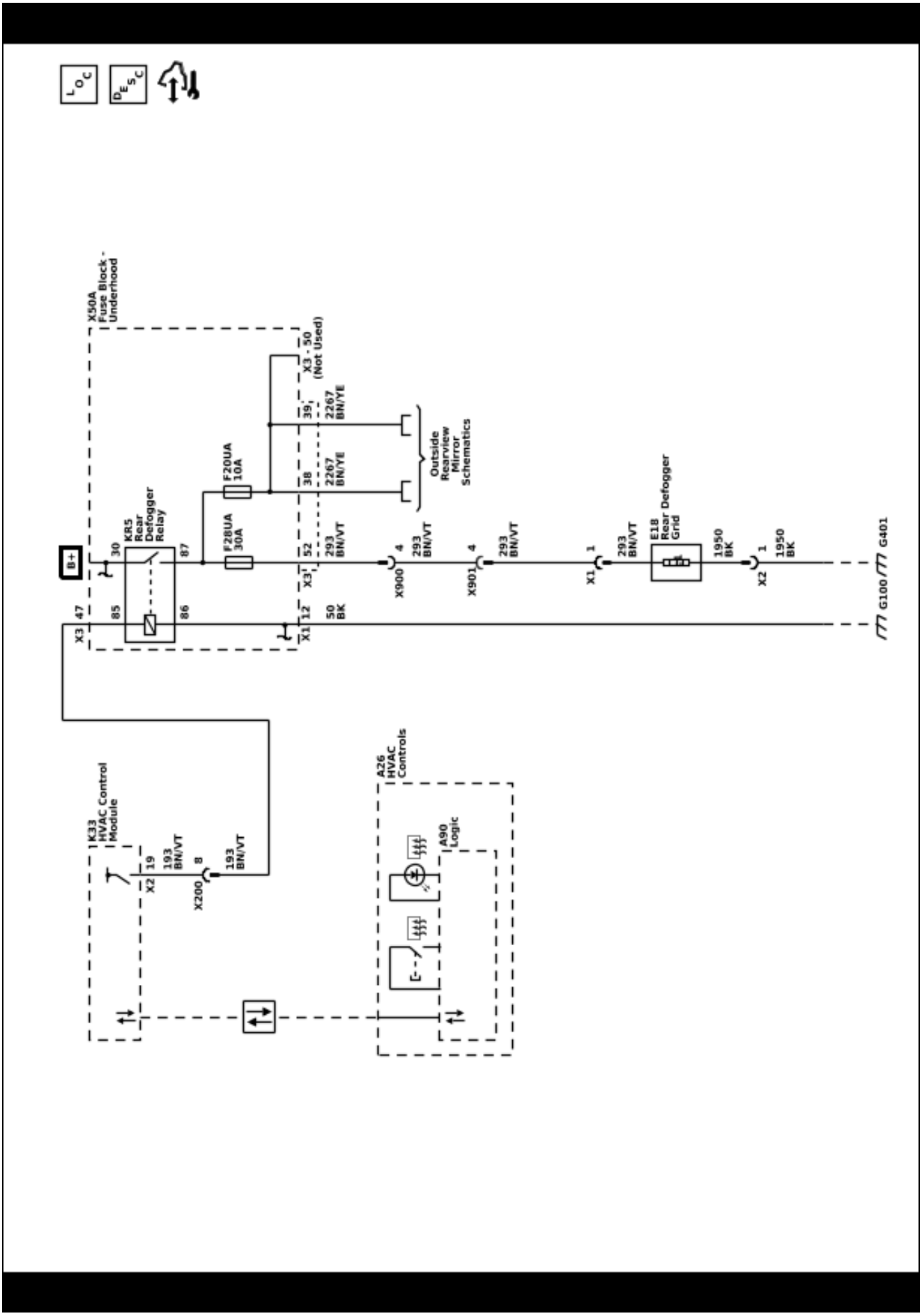

Description and Operation

Full-Cut Method Description

Note:

- If corrosion of the pinch-weld flange is present, or if sheet metal repairs or replacements are required, refinish the pinch-weld flange in order to present a clean, primer-only surface.
- If paint repairs are required, mask the flange bonding area, prior to applying the color coat, in order to provide a clean, primer-only surface.
- Appropriate materials for these primer applications are typically 2 component catalyzed products. Use materials such as BASF DE15®, DuPont 2610®, Sherwin-Williams PSE 4600 and NP70® and Martin-Semour 5120 ,5130® , PPG DP90LF SPIES/HECKER 3688/8590 – 3688/5150 – 4070/5090 STANDOX 11158/13320 – 14653/14980 products are approved for this application. Follow the manufacturer's directions for the mix, the application, and the drying times.
- After repairing the opening as indicated, use adhesive systems which meet GM Specification GM 3651G.

Use only the full cut method, also known in the field as full strip method, when installing windows.

This method includes the following:

- The replacement of a majority of the adhesive bead. Remove all but approximately 2 mm (3/64 in) of the existing bead of adhesive from the pinch-weld flange.
- Apply pinch-weld primer to any exposed painted areas on the pinch-weld flange.

No mounds or loose pieces of adhesive should remain on the pinch-weld flange. Do not remove all traces of adhesive.

Power Windows Description and Operation

Power Windows System Components

The power window system consists of the following components:

- Driver window/outside rearview mirror switch
- Passenger window switch
- Left rear window switch
- Right rear window switch
- Window motors in each of the doors
- 30A Fuse
- Body control module (BCM)

Driver and Passenger Express Up and Express Down Power Window Motors

The driver and passenger doors contains a window motor is smart motor that will detect excessive resistance while performing the express up function and automatically reverse direction to prevent injury to any occupants that may become trapped between the closing window and the door frame. The automatic reverse safety feature can be overridden by pulling and holding the window switch.

The logic circuit within the window motor monitors the up, down and express signal circuits which are normally equal to B+ voltage. When a switch is used on the window switch, the contacts close causing a voltage drop within the appropriate signal circuit. The window motor will detect the voltage drop and will command the window to move in the direction requested.

The driver window/outside rearview mirror switch communicates to the BCM by a serial data circuit. When the driver wishes to control the passenger window, the driver will use the appropriate switch on the driver window/outside rearview mirror switch. When this switch is used, a serial data message is sent to the BCM requesting the passenger window motor command, the BCM will then send a serial data message to the passenger window motor which will then move in the direction requested.

Left Rear and Right Rear Express Down Only Window Motors

For the right rear and left rear doors, when their window switch is pressed in the down position, battery positive voltage is applied to their respective window motor control circuit and ground to the other window motor control circuit causing that window to open. When the individual window switch is pulled in the up position, voltage and ground is applied to the window motor in the opposite direction causing that window to close. The return path to ground is supplied through the inactive control circuit being normally grounded through the window switch.

Each rear window switch communicates to the BCM by a serial data circuit. When the driver wishes to control the left rear or right rear window, the driver will use the appropriate switch on the driver window/outside rearview mirror switch. When this switch is used, a serial data message is sent to the BCM requesting a window motor command, the BCM will then send a serial data message to the appropriate door window switch which will then command that window to move in the direction requested.

Lockout Switch Feature

The driver window/outside rearview mirror switch contains a window lockout switch, when the driver presses the window lockout switch, a serial data message is sent to the BCM which will send a disable command to the rear window switches, deactivating them. The rear windows will still function normally from the switches on the driver window/outside rearview mirror switch.

Rear Window Defogger Description and Operation

Rear Window Defogger System Components

The rear window defogger system consists of the following components:

- HVAC Control Module
- HVAC Controls Switch Assembly
- Rear Defogger Relay
- Rear Defogger Grid
- Driver Outside Rearview Mirror
- Passenger Outside Rearview Mirror
- 40A Fuse

S34-K33-X50A Defogger Block Diagram

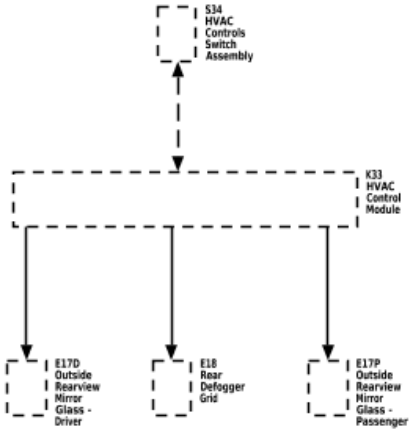

3511670

Rear Window Defogger Operation

The rear defog control system utilizes a single zone backlight design, driven with a single relay configuration. Additionally, up to two outside rear view mirrors can be heated if required. A switch for the customer to control the system is provided within the HVAC controls switch assembly. Also included in the HVAC controls switch assembly is an indicator to inform the customer with the current state of the system. The system is only operational when the vehicle is ON/RUN.

Pressing the heated rear window switch causes the HVAC controls switch assembly to send a serial data message to the HVAC control module requesting rear window defog operation. The HVAC control module upon receipt of the serial data message will provide voltage to the coil side of the rear defogger relay, this will energize the relay causing the relay switch contacts to close allowing B+ voltage to flow through the rear defogger grid control circuit to the rear defogger grid.

When the rear heated rear window switch is pressed and the vehicle is ON/RUN, the rear window defogger grid will activate and will turn off automatically depending upon the vehicle speed (refer to owner's manual for rear window defogger operation cycles)

Heated Mirrors

The heated mirrors are also controlled through the rear defogger relay. Whenever the rear window defogger is turned on battery voltage is supplied to the mirror heater elements through the left and right mirror heater element control circuits.

Stationary Window Description

Most stationary windows, specifically windshields, are retained to the body with urethane adhesive which adheres the window to the body, increasing structural integrity. The reinstallation of the windows with urethane adhesive requires complete replacement of the urethane adhesive bead, and is known as the full cut method.

Urethane Adhesive Description

For replacement of any adhesive-installed window, use the full cut method only.

Use an adhesive that is approved by GM, Specification GMW-15672.

Use these materials based on specific manufacturer. Do NOT intermix primers or adhesives from one manufacturer to another.

Always follow the system manufacturers instructions for application, handling, and curing.

Horns and Pedestrian Alerts

Schematic and Routing Diagrams

Horn Schematics (Horn)

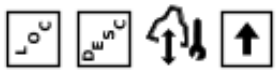

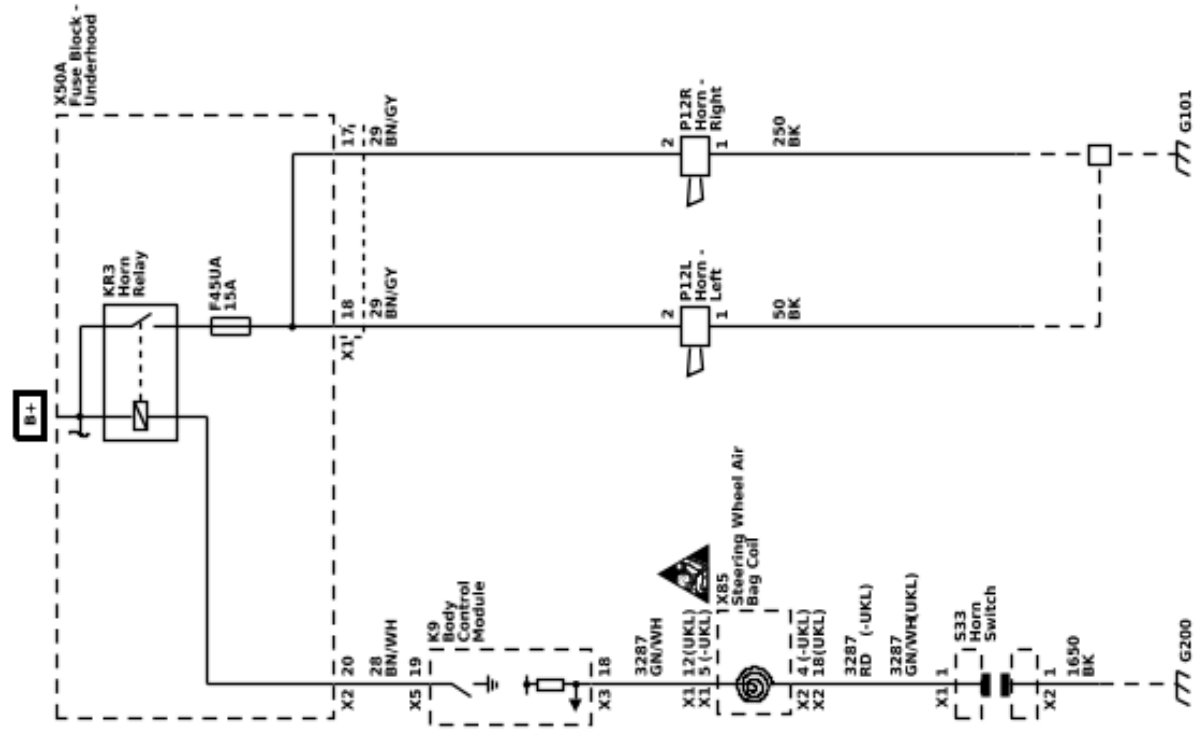

5910167

Horn Schematics (Pedestrian Alert)

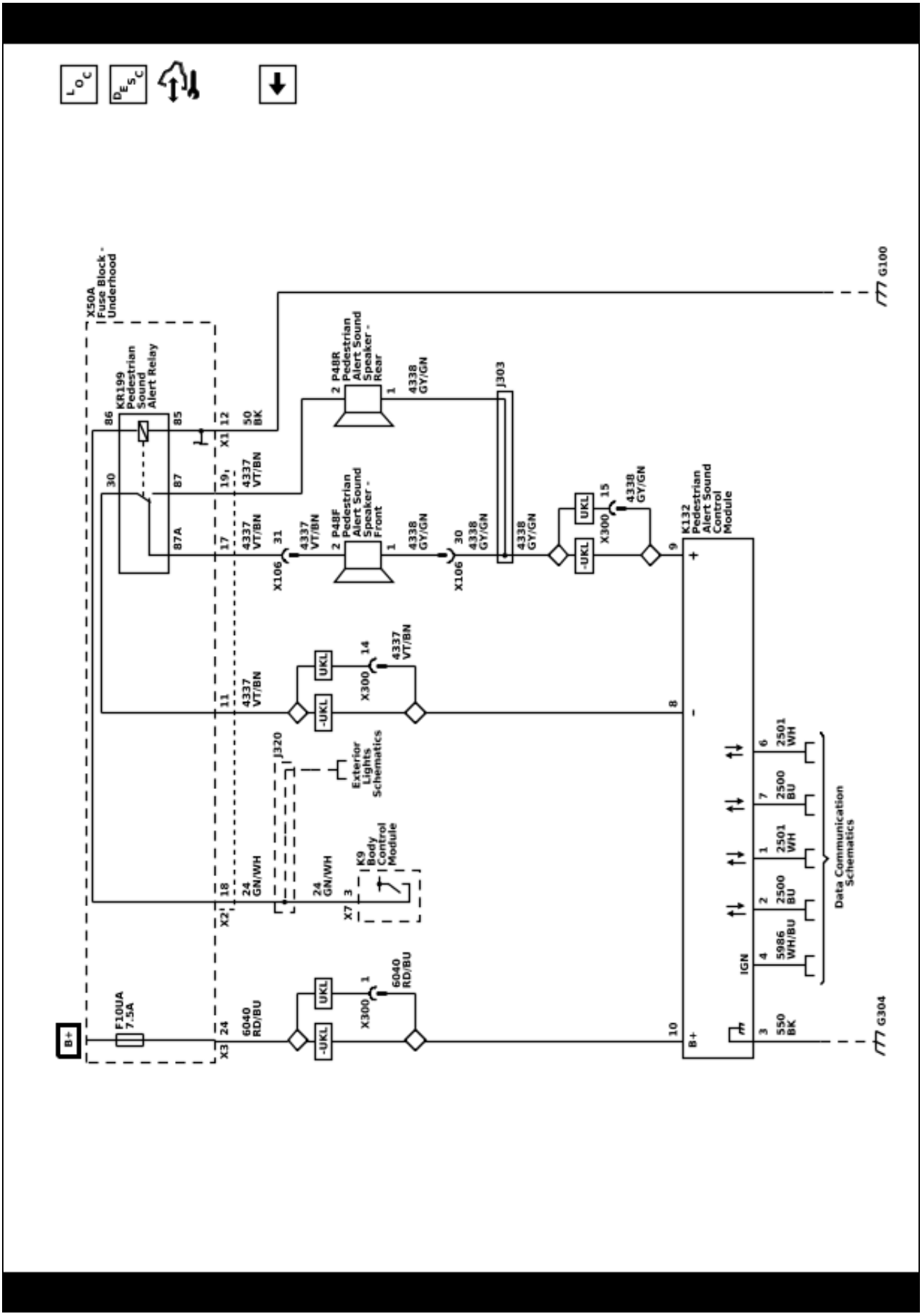

5910168

Description and Operation

Horns System Description and Operation

System Description

The horn system consists of the following components:

- HORN fuse
- Underhood fuse block (contains PCB horn relay)
- Horn switch
- Horn-low note
- Horn-high note
- Body control module (BCM)

Horn Block Diagram

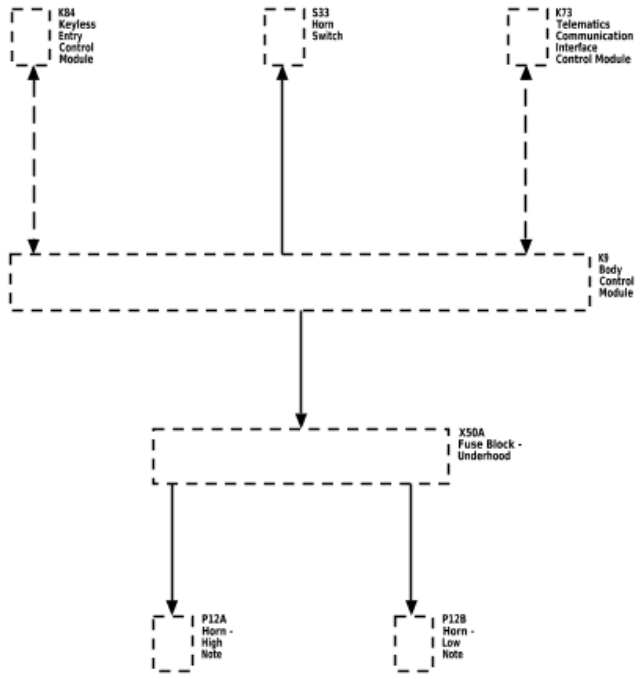

3461340

System Operation

The vehicle horn system is activated under the following conditions:

- When the horn switch is depressed
- The BCM commands the horns ON under any of the following conditions:
  - When the content theft deterrent system detects a vehicle intrusion.
  - When the panic button is depressed on the remote control door lock transmitter—For further information refer to *Keyless Entry System Description and Operation on page 7-11*.
  - When the keyless entry system is used to lock the vehicle, a horn chirp may sound to notify the driver that the vehicle has been locked. The notification feature may be enabled or disabled through personalization. For further information refer to *Keyless Entry System Description and Operation on page 7-11*.
  - When the OnStar® system is used to sound the horns if equipped.

Circuit Operation

Battery positive voltage is applied at all times to the horn relay coil and the horn relay switch. Pressing either of the horn switches applies ground to the horn relay control circuit. The BCM may also apply ground to the horn relay control circuit as described above. When the horn relay control circuit is grounded, the horn relay is energized and battery positive voltage is applied to the horns through the horn control circuit. The horns sound as long as ground is applied to the horn relay control circuit.

Pedestrian Alert Description and Operation

Electric vehicles present a situation for visually impaired pedestrians who cannot hear an approaching electric vehicle, the pedestrian alert module creates sounds from a dedicated speaker to alert a visually impaired pedestrian, in a non-startling manner.

Operation of the Pedestrian Alert

- {With Z49/EF7} Emit sound from 0 to 18 MPH (30 KM/H)
- {Without Z49/EF7} Emit sound from 0 to 12 MPH (20 KM/H)
- Fade in and out control for the sound ON and OFF
- Change the pitch of the sound dependent of vehicle speed

Lighting

Schematic and Routing Diagrams

Headlights/Daytime Running Lights (DRL) Schematics (Controls and Indicators)

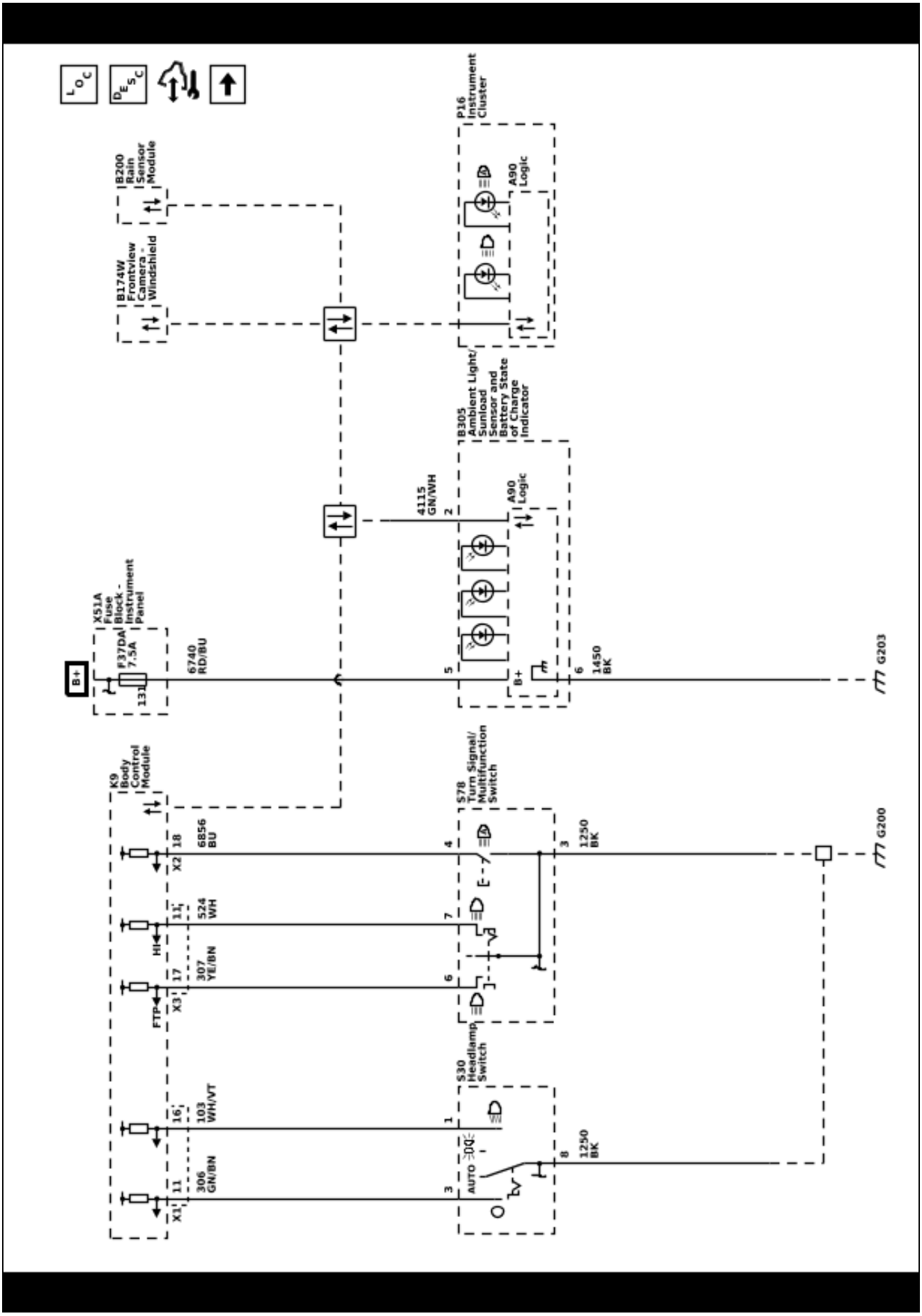

Headlights/Daytime Running Lights (DRL) Schematics (Headlamps and Daytime Running Lamps)

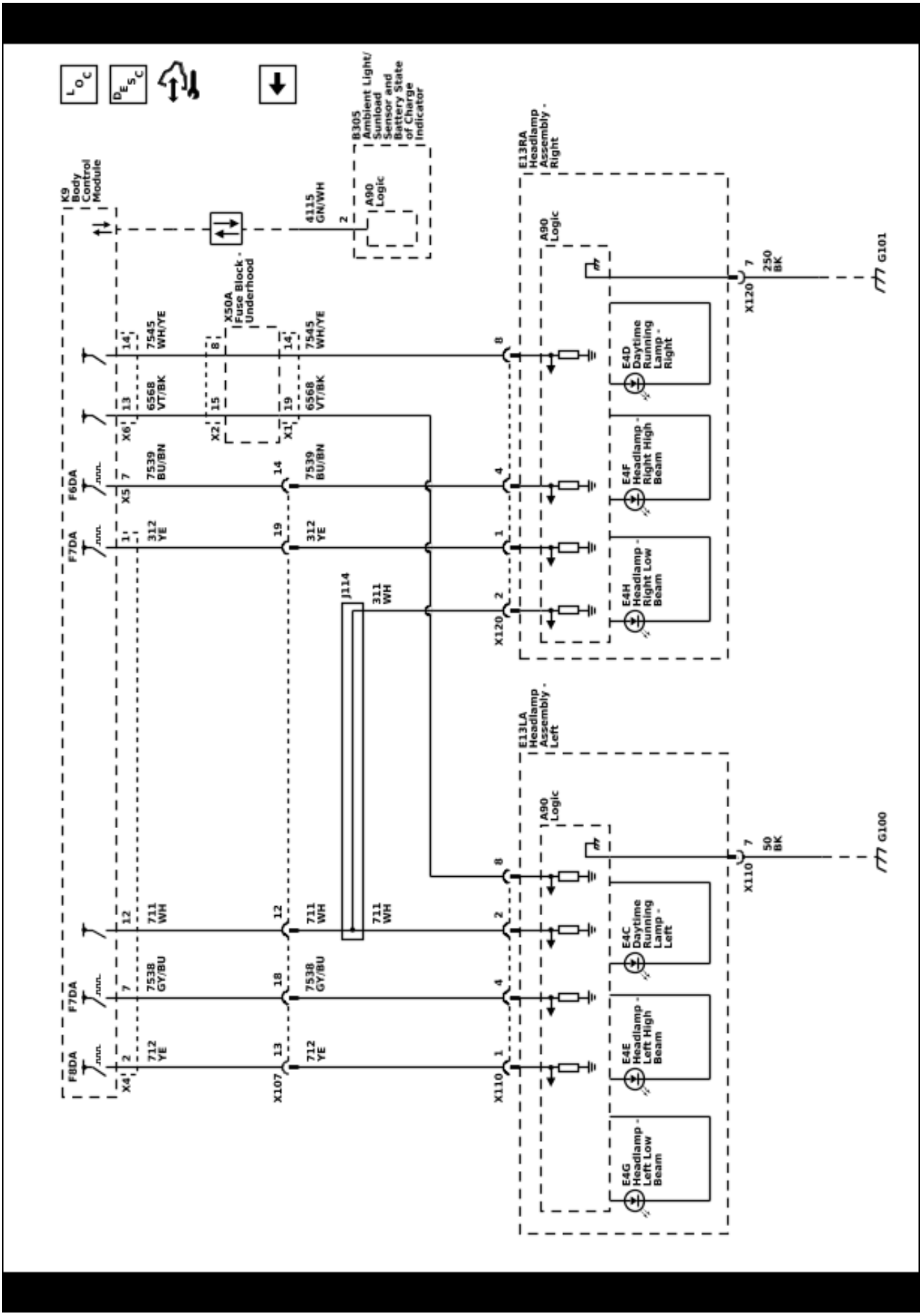

5910113

5910114

Fog Lights Schematics (Rear Fog Lamp)

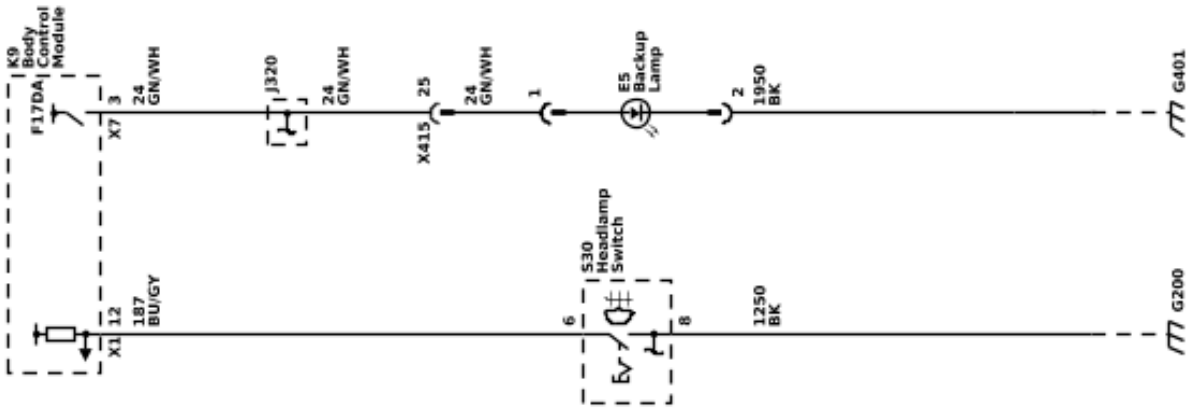

Exterior Lights Schematics (Controls and Indicators)

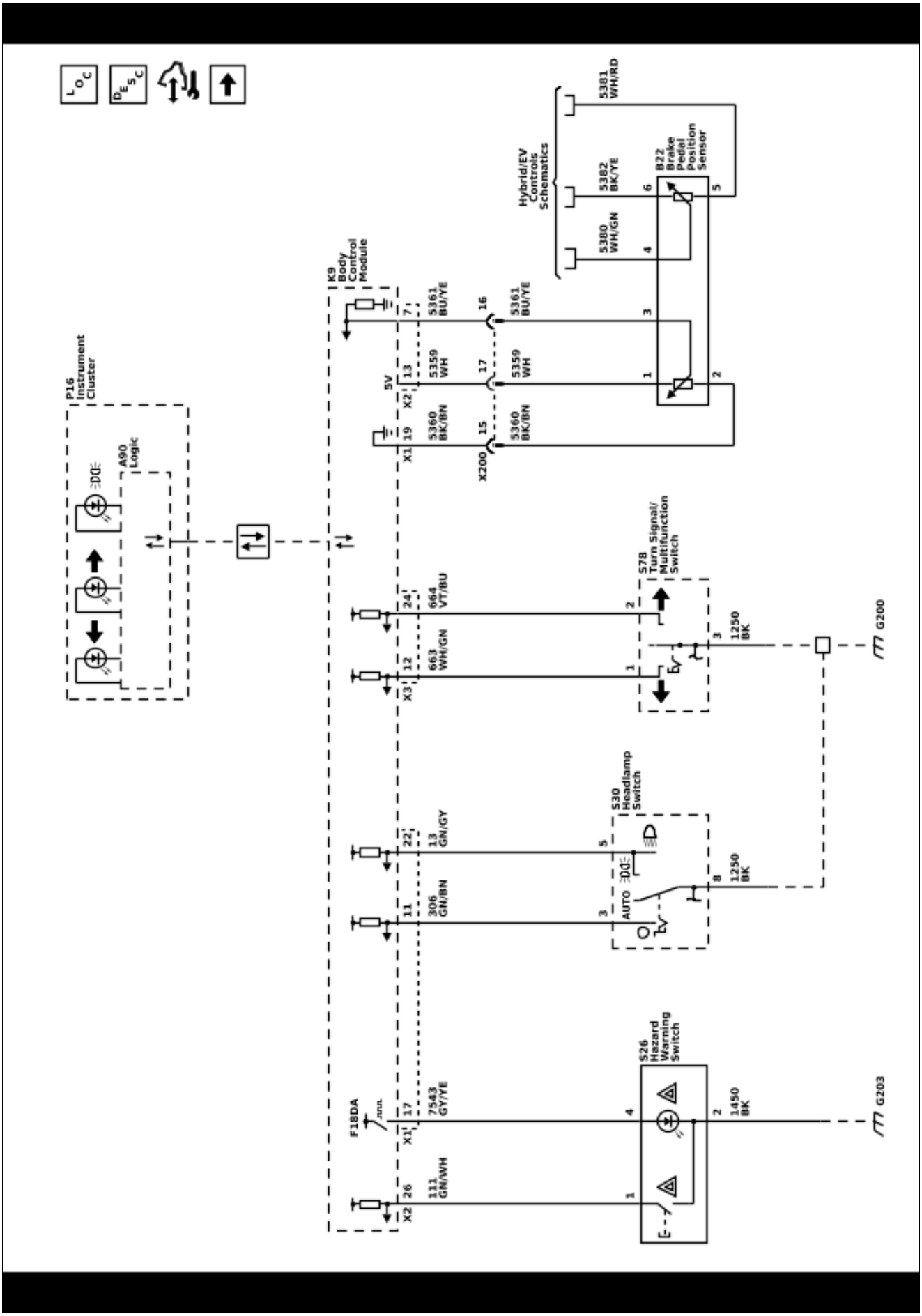

5910115

Exterior Lights Schematics (Park/Position Lamps)

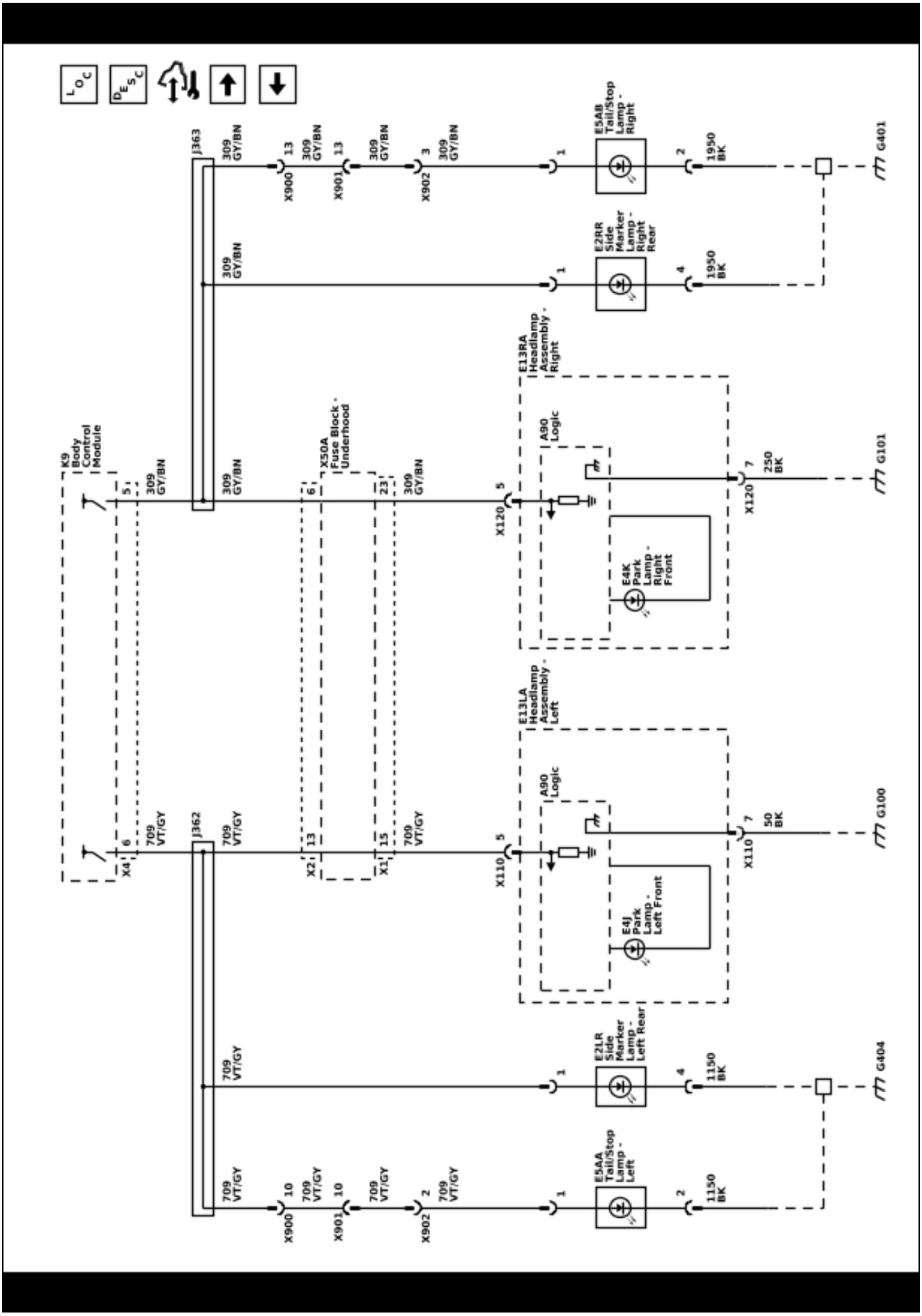

5910116

Exterior Lights Schematics (Front Turn Signal and Repeater Lamps)

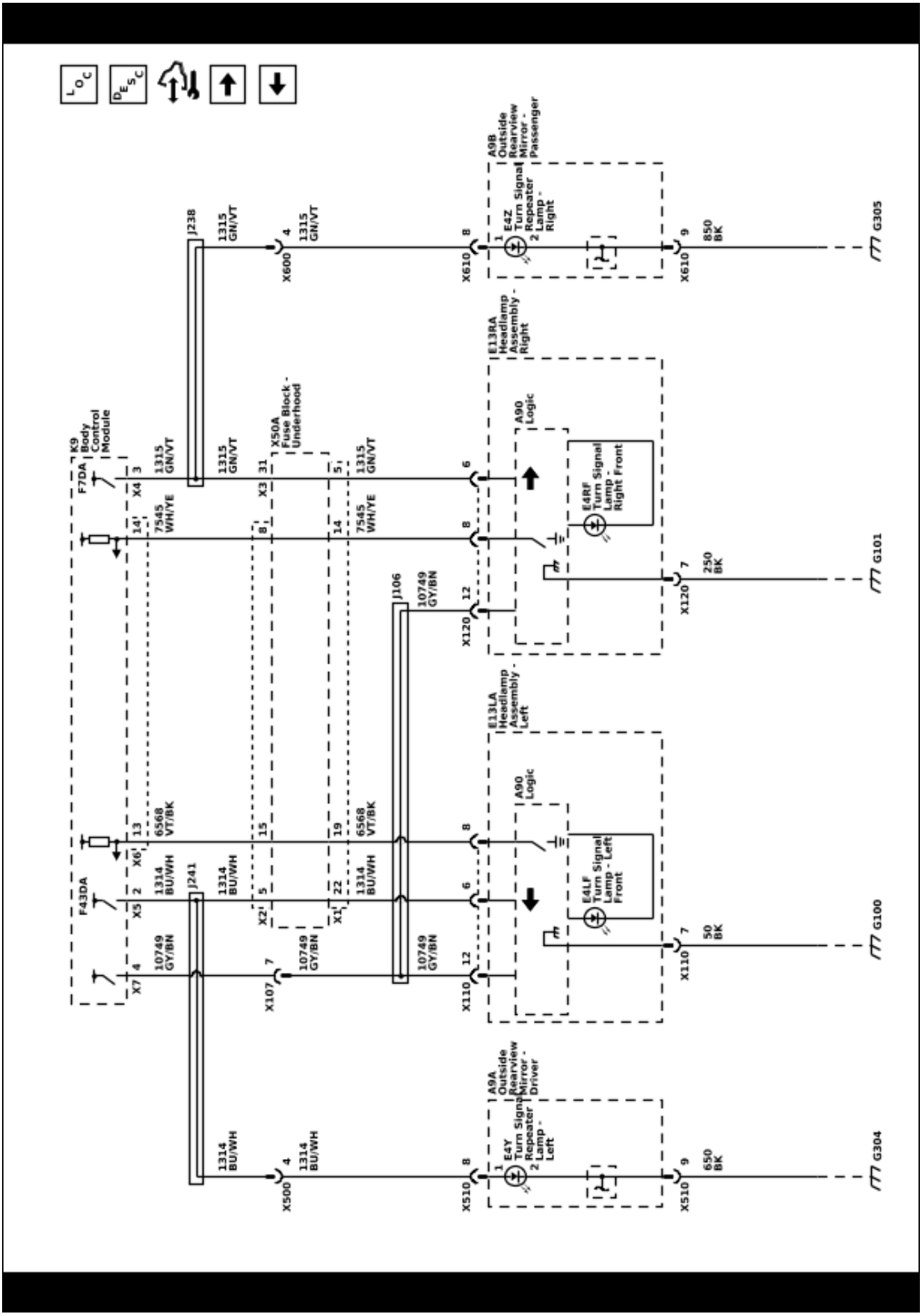

5910118

Exterior Lights Schematics (Stop and Turn Signal Lamps)

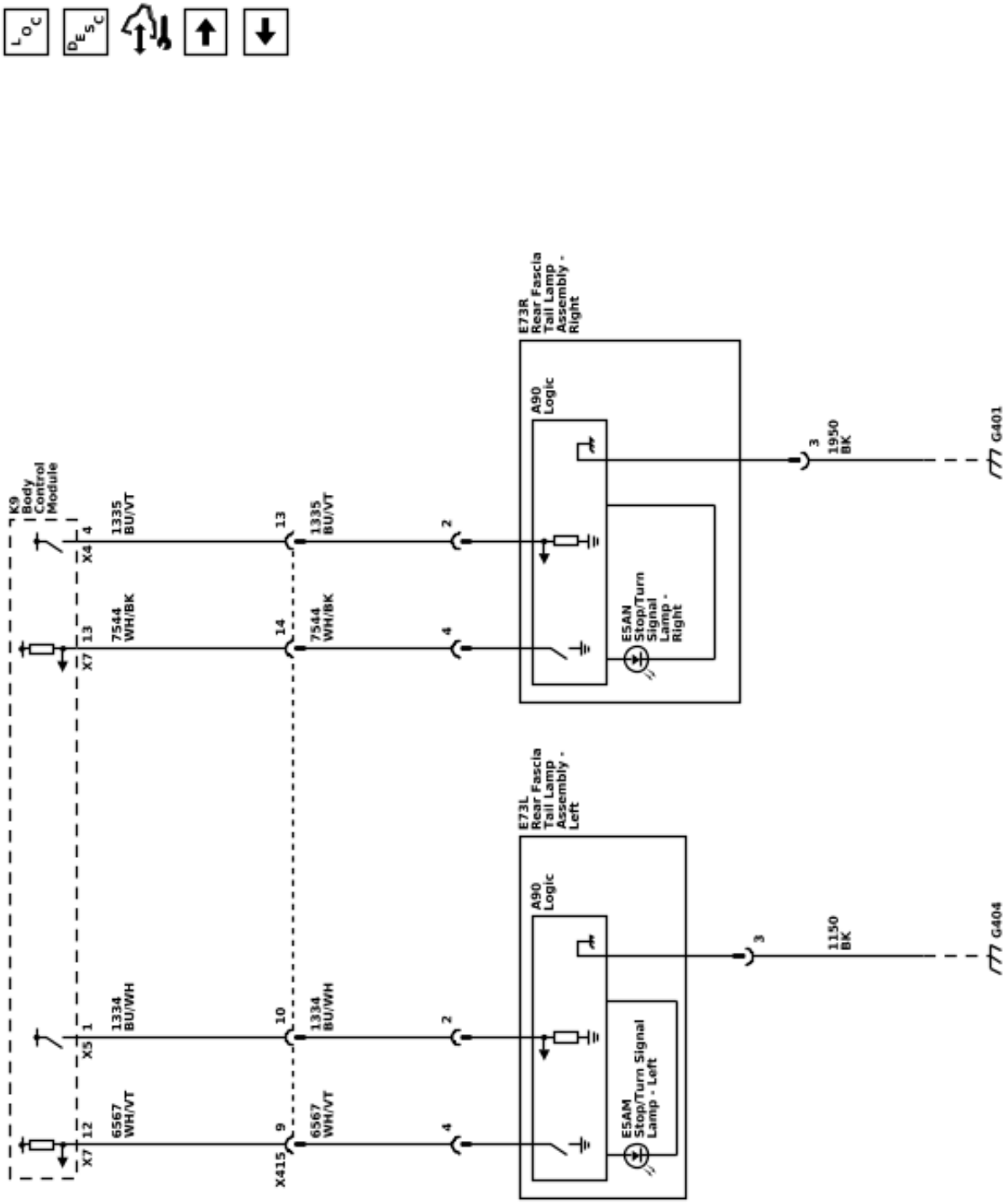

Exterior Lights Schematics (Backup, Center Stop, and License Lamps)

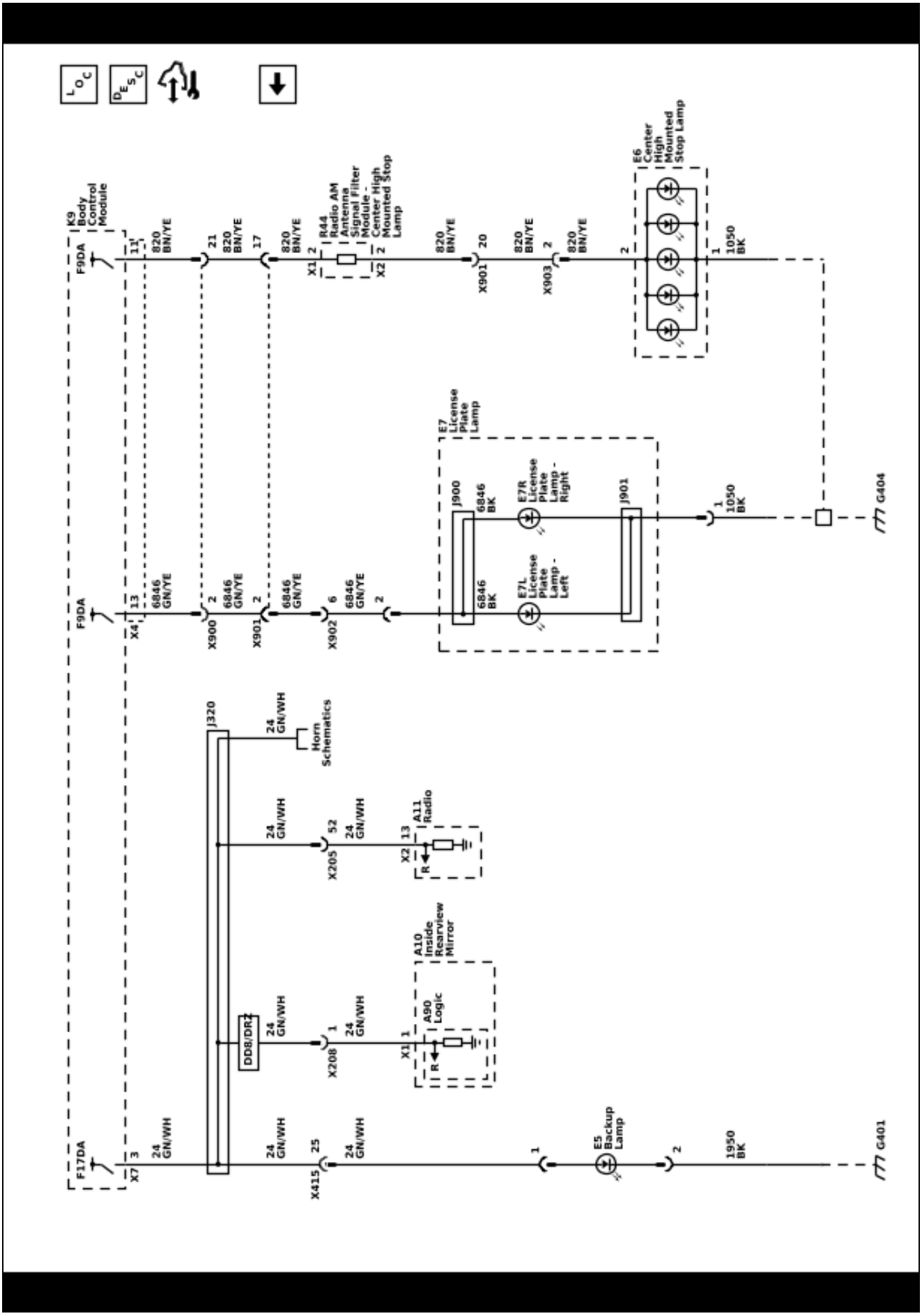

Interior Lights Schematics (Controls)

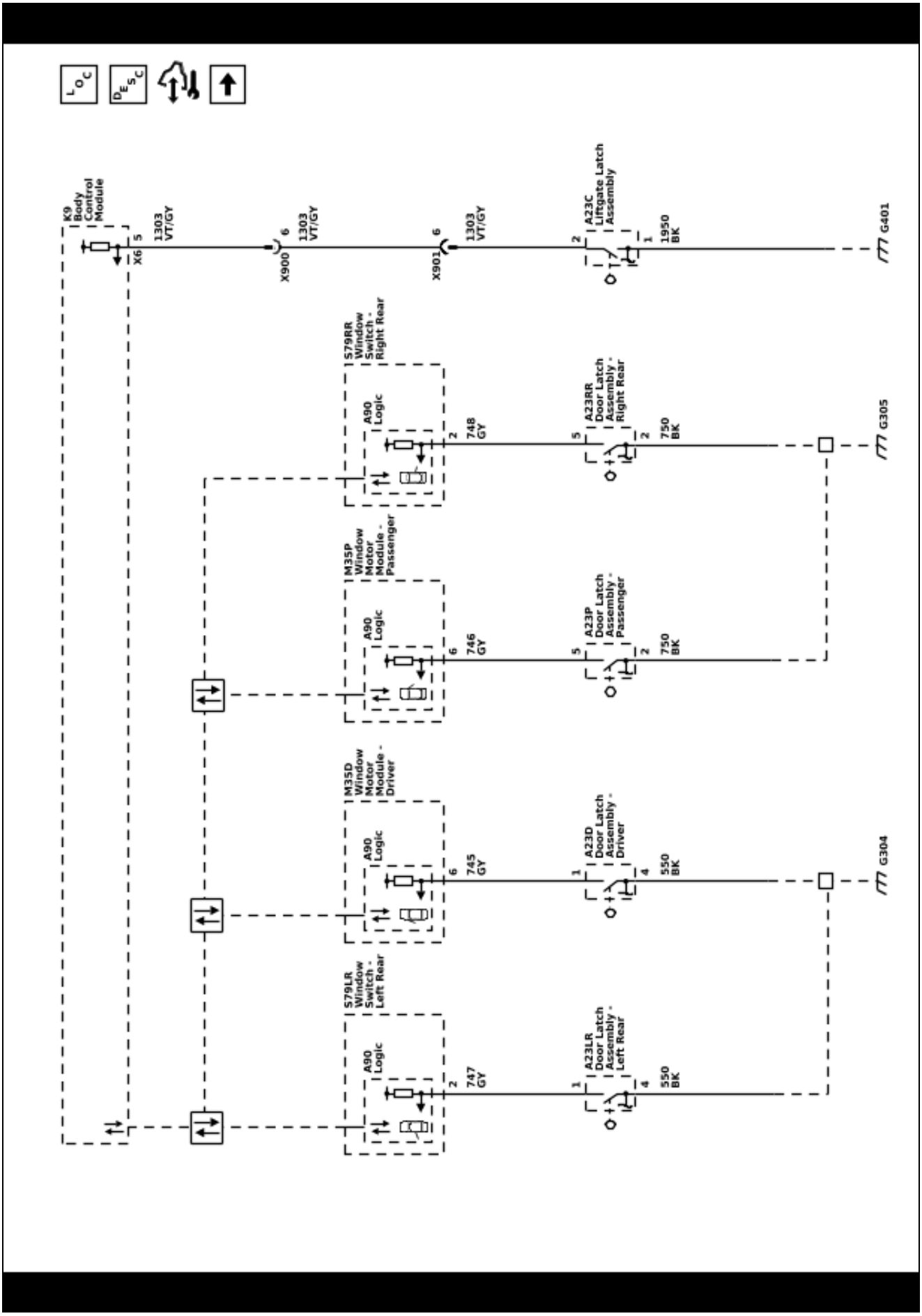

5910121

Interior Lights Schematics (Dome and Courtesy Lamps)

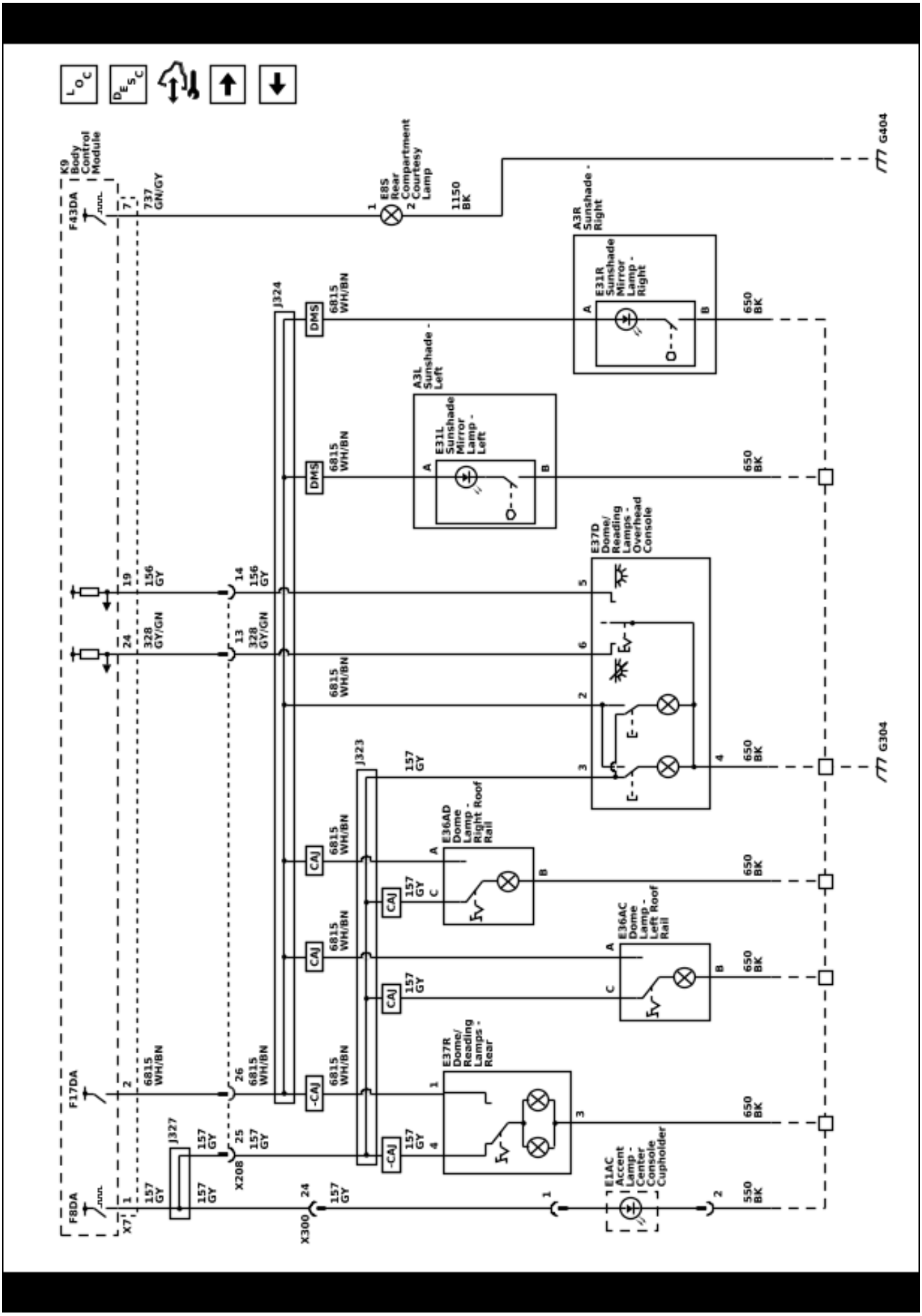

5910122

5910123

Interior Lights Schematics (Accent Lamps - Instrument Panel)

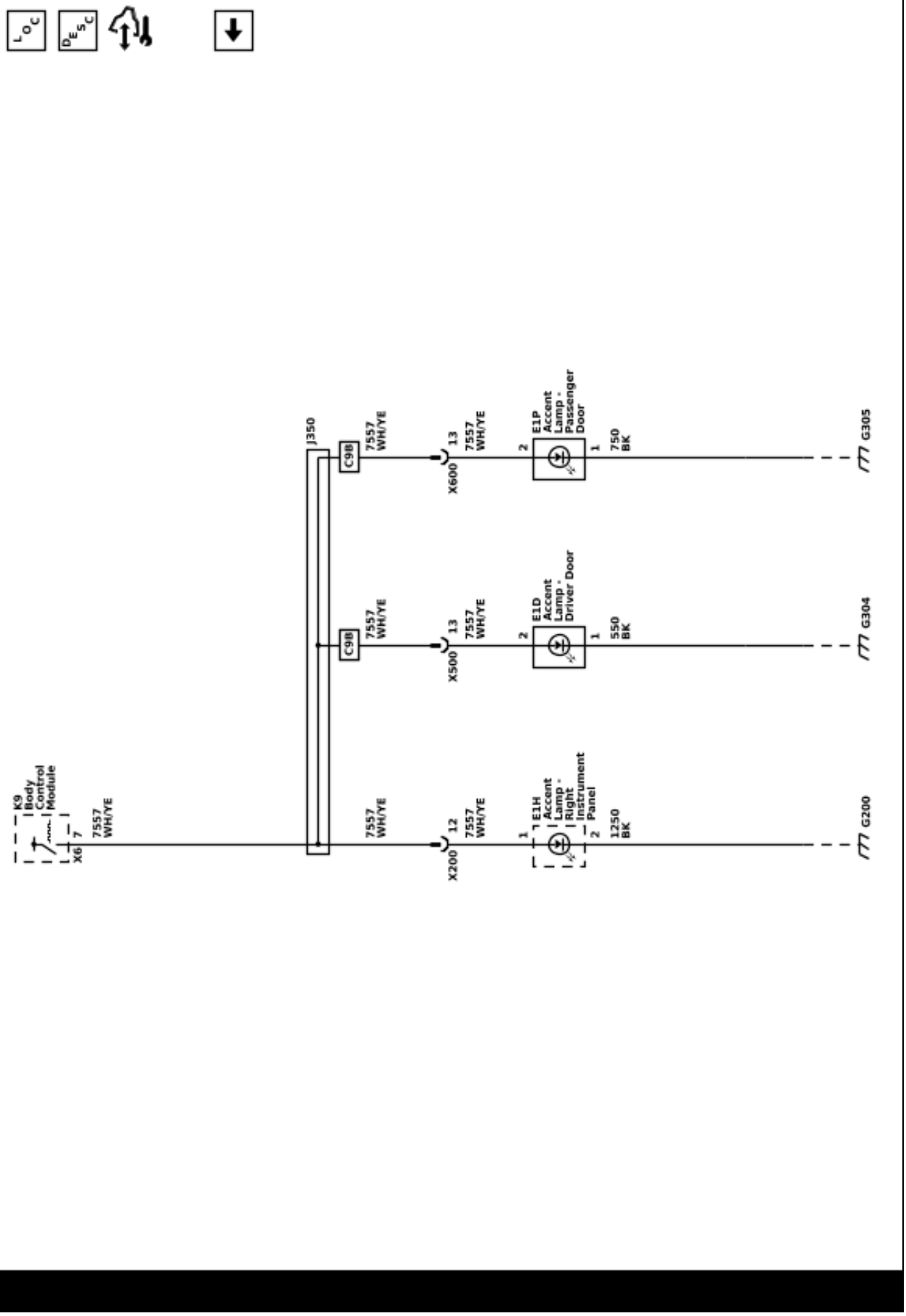

Interior Lights Dimming Schematics (Controls and Instrument Panel Lamps)

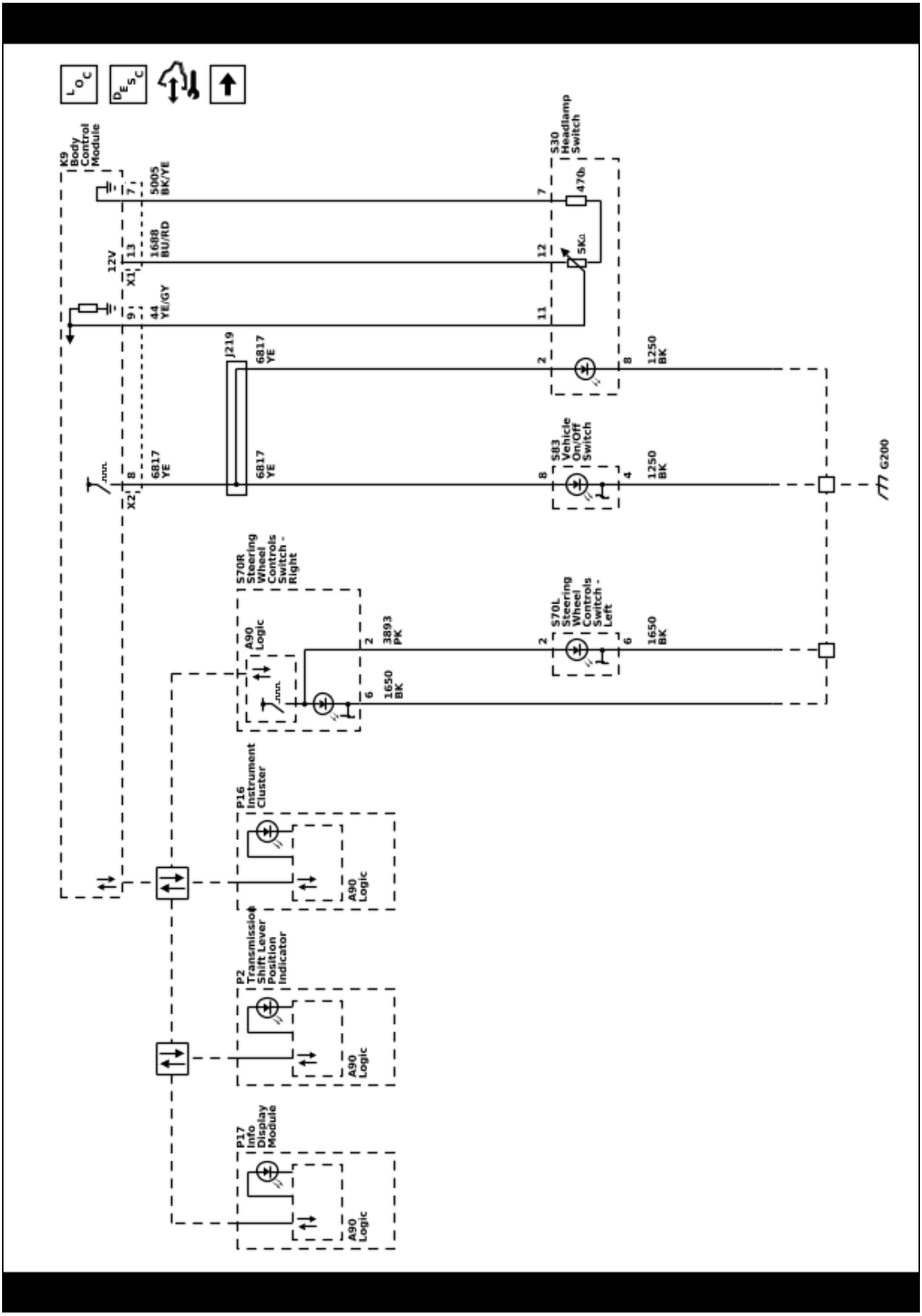

5910124

Interior Lights Dimming Schematics (Doors, Seats, Center Console and Roof Console)

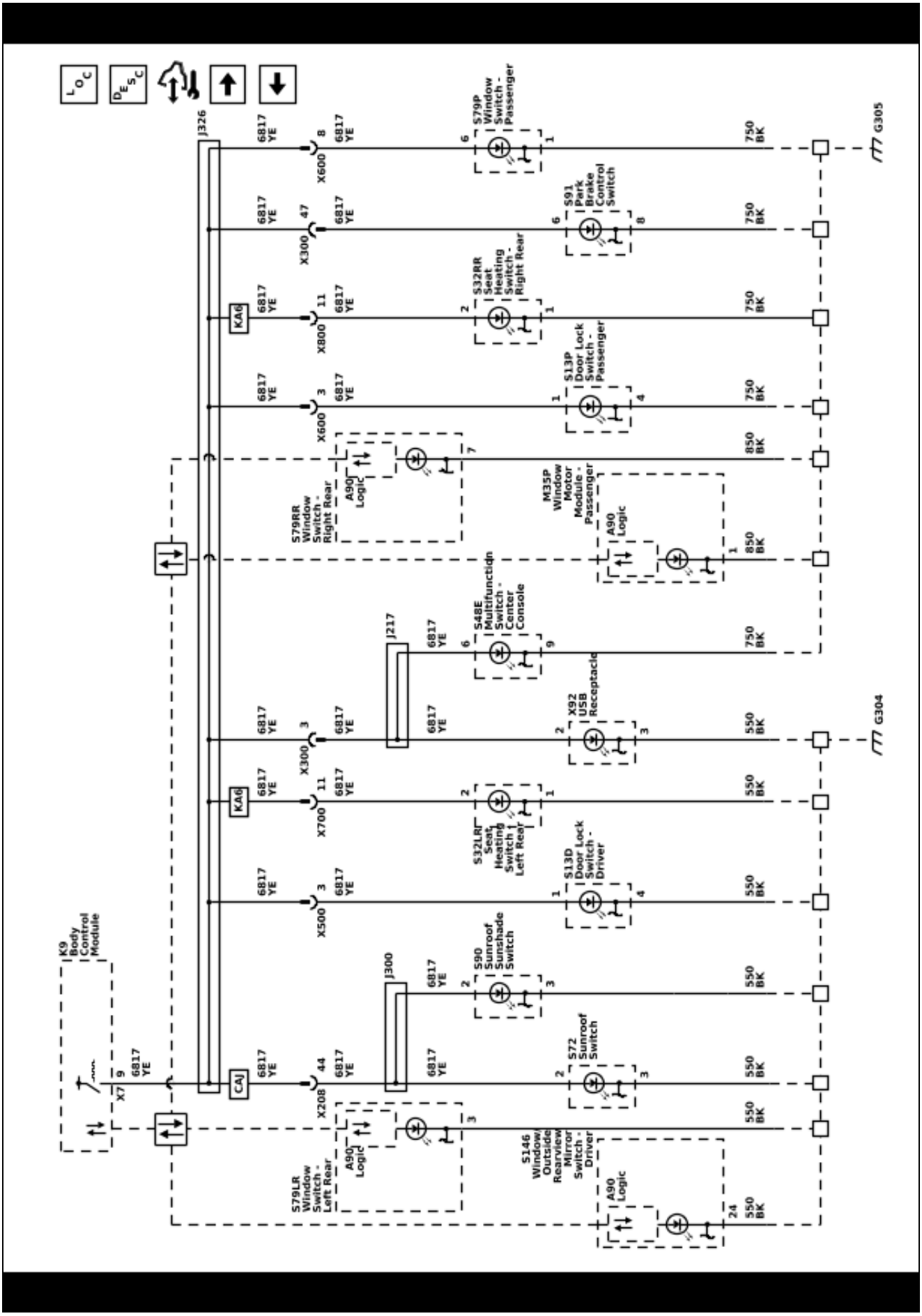

5910125

Interior Lights Dimming Schematics (Indicator Lamps)

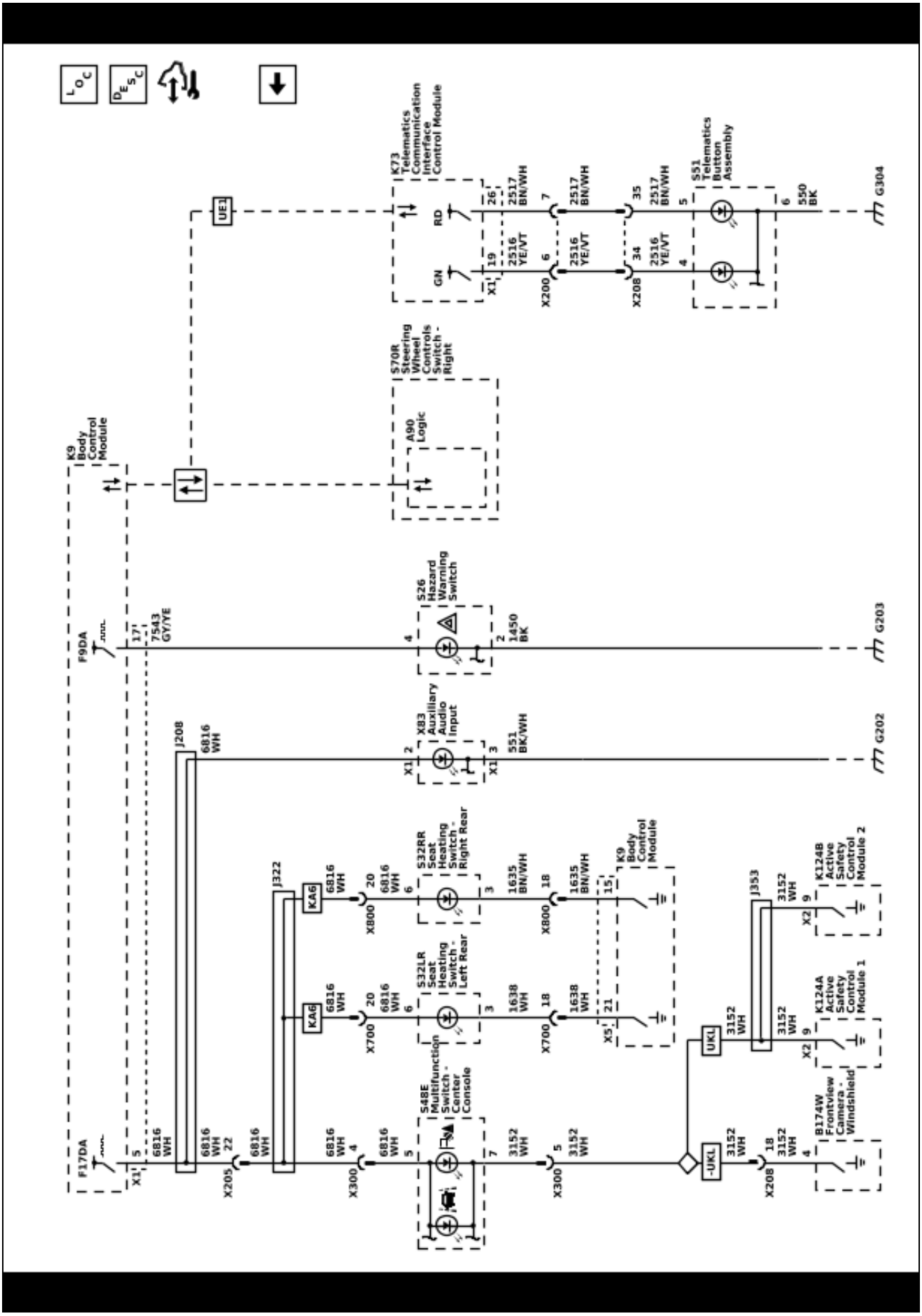

5910126

Description and Operation

Exterior Lighting Systems Description and Operation

Exterior Lamps

The exterior lighting system consist of the following lamps if equipped:

- Automatic high beam assist
- Backup lamps
- Daytime running lamps
- Hazard warning lamps
- Headlamps
- Manual headlamp leveling
- Park, tail, license, and side marker lamps
- Stop lamps
- Turn signal lamps

Low Beam Headlamps

The headlamps may be turned ON in 3 different ways:

- When the headlamp switch is placed in the ON position, for normal operation
- When the headlamp switch is placed in the AUTO position, for automatic lamp control
- When the headlamp switch is placed in the AUTO position, with the windshield wipers ON in daylight conditions, after a 6 s delay

The BCM will also command the low beam headlamps ON during daylight conditions when the following conditions are met:

- Headlamp switch in the AUTO position
- Windshield wipers ON
- Vehicle in any gear but PARK

The body control module (BCM) monitors the signal circuits from the headlamp switch. When the headlamp switch is in the AUTO position, the signal circuits are open. When placed in the AUTO position, the BCM monitors inputs from the ambient light sensor to determine if headlamps are required or if daytime running lamps will be activated based on outside lighting conditions. When the headlamp switch is placed in the OFF position, the headlamp switch headlamps OFF signal circuit is grounded, indicating to the BCM that the exterior lamps should be turned OFF. With the headlamp switch in the PARK position, the headlamp switch park lamps ON signal circuit is grounded, indicating that the park lamps have been requested. When the headlamp switch is placed in the HEADLAMP position, both the headlamp switch park lamps ON signal circuit and the headlamp switch headlamps ON signal circuit are grounded. The BCM responds to the inputs by illuminating the park lamps and headlamps. When the low beam headlamps are requested, the BCM responds by applying a pulse width modulated signal to each headlamp assembly, allowing battery voltage to flow through the left and right low beam headlamp circuits.

When the BCM commands the low beam headlamps ON, the operator will notice the interior backlighting for the instrument cluster and the various other switches dim to the level of brightness selected by the instrument panel dimmer switch.

High Beam Headlamps

When the low beam headlamps are ON and the turn signal/multifunction switch is placed in the high beam position, ground is applied to the BCM through the high beam signal circuit. The BCM responds to the high beam request by applying ground to the high beam relay control circuit which energizes the high beam relay. With the high beam relay energized, the switch contacts close allowing battery voltage to flow through the left and right high beam fuses to the high beam control circuits and onto the left and right high beam solenoid actuators within the headlamp assemblies. Once the high beam solenoid actuators are active, the solenoid shutters open in each headlamp assembly exposing the remaining portion of the headlamp that was covered by the shutters illuminating the high beams at full intensity.

Automatic High Beam Assist

The automatic high beam assist system operates the high beam headlamps ON and OFF automatically when the system is activated and certain conditions are met. The automatic high beam assist system consists of a front camera module that detects light and is able to identify approaching vehicles on an even, straight road at a distance of greater than 0.4 km (0.25 mi). The front camera module analyzes light color, intensity, and movement. The automatic high beam assist system will turn OFF the high beam headlamps when approaching vehicle headlamps or preceding vehicle taillights are detected by the front camera module. Automatic high beam assist can be deactivated when the headlamp dimmer switch is moved from the neutral position to the high beam or flash to pass positions. Automatic high beam assist can be reactivated by operating the high beam select switch from the neutral position to the high beam position twice within 2 s.

Automatic High Beam Assist System Activation

- Vehicle ON
- Turn signal/multifunction switch placed in the AUTO position
- Turn signal/multifunction switch high beam dimmer switch must be in the neutral position
- Press the Auto High Beam ON/OFF switch located on the turn signal/multifunction switch
- Outside lighting conditions must be dark
- Vehicle speed greater than 25 MPH (40 km/h)

Automatic High Beam Assist System Operation

The following are conditions that the automatic high beam assist system will turn the high beam headlamps off during operation:

- The system detects approaching traffic headlamps
- The system detects preceding traffic tail lamps
- Ambient light level too high due to towns or twilight situations

- The vehicle's speed drops below 13 MPH (22 km/h)
- Delay

Note: Automatic high beam assist may not operate properly if any of the following conditions exist:

- Approaching and preceding vehicles lamps are undetectable due to dirt, snow, road spray, smoke, fog, or any other airborne conditions.
- The front camera module is covered with ice, dirt, snow, haze, or is obstructed.
- The vehicle is being driven on winding or hilly road conditions which would make any on coming vehicle headlamps undetectable by the automatic high beam assist system.

Automatic High Beam Assist System Deactivation

- Manually operating the turn signal/multifunction switch high beam dimmer switch from neutral to high beam position
- Press the Auto High Beam ON/OFF switch located on the turn signal/multifunction switch

Automatic High Beam Assist System Indicator

The status of the automatic high beam assist system is shown by a green indicator located on the instrument panel cluster. When automatic high beam assist is active, the indicator will be illuminated continuously. If the operator deactivates the automatic high beam assist system, the indicator will turn off.

Manual Headlamp Leveling

Each headlamp assembly contains a headlamp leveling actuator that is controlled by the headlamp leveling switch. The headlamp leveling switch is supplied with ignition voltage and contains a resistor ladder with 4 positions for adjusting the headlamps up or down. When the headlamp leveling switch is activated to the desired position, voltage from the B+ ignition circuit is pulled down through the resistor ladder and the voltage is applied to the left and right headlamp leveling actuators via the headlamp leveling control module. The headlamp leveling actuators are supplied with B+ and ground. When the headlamp leveling switch is activated, the left and right headlamp leveling actuators respond by moving the headlamps to the desired position.

Daytime Running Lamps

The daytime running lamps will illuminate continuously when the following conditions are met:

- The vehicle mode switch is in the RUN or CRANK position
- The shift lever is out of the PARK position for vehicles equipped with automatic transmissions or the parking brake is released for vehicles with manual transmissions
- The low and high beam headlamps are OFF

The ambient light sensor (T83) or rain sensor module (CE1) is used to monitor outside lighting conditions. The BCM monitors the ambient light sensor or rain sensor module via serial data to determine if outside lighting conditions are correct for either daytime running lights or automatic lamp control when the headlamp switch is in the AUTO position. In daylight conditions the BCM will command the designated daytime running lights ON. During low light conditions the BCM will command the low beam headlamps ON. Any function or condition that turns on the headlamps will cancel daytime running lights operation.

Flash to Pass

When the low beam headlamps are on and the turn signal/multi-function switch is momentarily placed in the flash to pass position, ground is applied to the turn signal/multi-function switch. The turn signal/multifunction switch applies ground to the BCM through the flash to pass switch signal circuit. The BCM then applies ground to the high beam relay control circuit. This energizes the high beam relay, closing the switch side contacts of the high beam relay, applying battery voltage to the left and right high beam fuses. Battery voltage is applied from the high beam fuses through the high beam voltage supply circuit to the high beam headlamp assemblies. This causes the high beam headlamps to illuminate at full brightness momentarily or until the flash to pass switch is released.

Hazard Lamps

The hazard flashers may be activated in any power mode. The hazard switch signal circuit is momentarily grounded when the hazard switch is pressed. The body control module (BCM) responds to the hazard switch signal input by supplying battery voltage to all four turn signal lamps in an ON and OFF duty cycle. When the hazard switch is activated, the BCM sends a serial data message to the instrument panel cluster requesting both turn signal indicators to be cycled ON and OFF.

The instrument panel dimmer switch controls the brightness of the interior backlighting components. When the instrument panel dimmer switch is placed in a desired brightness position, the body control module (BCM) receives a signal from the instrument panel dimmer switch and responds by applying a pulse width modulated (PWM) voltage to the hazard switch light emitting diode (LED) backlighting control circuit illuminating the LED to the desired level of brightness.

Park, Tail, License, and Side Marker Lamps

The park lamps, tail lamps, license plate lamps, and side marker lamps are turned ON when the headlamp switch is placed in the PARK LIGHT or LOW BEAM position or anytime the headlights are requested. When the BCM receives a request from the headlamp switch to turn ON the park lamps the BCM will apply battery voltage to the left and right park lamp, side marker lamp, and license plate lamp control circuits illuminating the left and right park lamps, side marker lamps, and license plate lamps.

Stop Lamps

The brake pedal position (BPP) sensor is used to sense the action of the driver application of the brake pedal. The BPP sensor provides an analog voltage signal that will increase as the brake pedal is applied. The body control module (BCM) provides a low reference signal and a 5-volt reference voltage to the BPP sensor. When the variable signal reaches a voltage threshold indicating the brakes have been applied, the BCM will

apply battery voltage to the center high mounted stop lamp control circuit illuminating the center high mounted stop lamp.

Regen on Demand allows increased deceleration by pressing and holding the steering wheel paddle. It works in D (Drive) and L (Low). The accelerator pedal can be used to manage deceleration while using Regen on Demand. Cruise control will turn off and the brake lamps may come on when this feature is activated.

Turn Signal Lamps

Ground is applied at all times to the turn signal/ multifunction switch. The turn signal lamps may only be activated with the vehicle ON/OFF switch in the Service Mode or ON position. When the turn signal/ multi-function switch is placed in either the TURN RIGHT or TURN LEFT position, ground is applied to the BCM through either the right turn or left turn signal switch signal circuit. The BCM then applies a pulsating voltage to the front and rear turn signal lamps through their respective voltage supply circuits. When a turn signal request is received by the BCM, a serial data message is sent to the instrument cluster requesting the respective turn signal indicator be pulsed ON and OFF.

Backup Lamps

With the vehicle ON and the transmission in the REVERSE position, the transmission control module (TCM) sends a serial data message to the body control module (BCM). The message indicates that the gear selector is in the REVERSE position. The BCM applies battery voltage to the backup lamps control circuit illuminating the backup lamps. Once the driver moves the gear selector out of the REVERSE position, a message is sent by the TCM via serial data requesting the BCM to remove battery voltage from the backup lamps control circuit. The vehicle must be ON for the backup lamps to operate.

Battery Run Down Protection/ Inadvertent Power

To provide battery run down protection, the exterior lamps will be deactivated automatically under certain conditions. The BCM monitors the state of the headlamp switch. If the park or headlamp switch is ON when the vehicle mode switch is placed in either the CRANK or RUN position and then placed in the OFF position, the BCM initiates a 10 min timer. At the end of the 10 min, the BCM will turn off the control power output to the park lamp controls as well as the headlamp relay coils, deactivating the exterior lamps. This feature will be cancelled if any power mode other than OFF becomes active. The BCM will disable battery run down protection if any of the following conditions exist. The park or headlamp switch is placed in the ON to OFF position, and back to the ON position during battery run down protection. The BCM determined that the park or headlamp switch was not active when the vehicle mode switch was turned OFF.

Interior Lighting Systems Description and Operation

Interior Lamps

The interior lamps consist of 2 groups. The first group includes lamps that may not be dimmed.

- Courtesy lamps
- Dome lamps
- Reading lamps
- Rear compartment courtesy lamp
- Sunshade mirror lamps

Courtesy/Illuminated Entry Lamps

The following lamps may be manually turned ON by placing the interior lamp switch in the ON position, or by opening a door while the switch is in the AUTOMATIC LIGHT position.

- The dome lamp
- The liftgate lamps
- Courtesy lamps

The courtesy lamp supply voltage circuit of the body control module (BCM) supplies battery positive voltage to the dome lamp, the liftgate lamps and courtesy lamps. When any door is opened, the door jamb switch contacts close providing a door open input to the BCM. The BCM then provides a B+ to the interior lamps with the switch in the AUTO position. The interior lamps receive a ground when the switch is in the ON position.

Note: If the liftgate is opened after all the modules go to sleep, the dome light will not come on. The liftgate ajar switch input to the BCM will not wake up the BCM once it has gone to sleep, so the dome light will not come on. Once the BCM gets an input to wake it up, from remote keyless entry or a door handle, the dome light will turn on when the liftgate is opened.

If the driver inadvertently leaves any interior lamp ON, the BCM will turn it OFF after a 20 min time-out.

The courtesy lamps will turn OFF immediately if the vehicle ON/OFF switch is turned to the ON position or approximately 20 s after all doors are closed.

Dome Lamps

The dome lamp switch has 3 positions: DOOR, OFF, and ON. The ON position provides a ground for continuous operation and the dome lamps will remain illuminated until the switch is placed in either the DOOR or OFF position. When in the DOOR position, the dome lamps operation is controlled by the body control module (BCM). When any door is opened, the door ajar switch contacts close and the BCM receives a door-open input. The BCM illuminates the dome lamps when any door is opened or a door lock/unlock request is activated with the key fob. After all doors have been closed, the dome lamps will remain illuminated approximately 3 seconds after the last door closes. When the driver places the dome lamp switch in the OFF position, the dome lamps will be disabled. In the event that the dome lamps were to remain illuminated for more than 10 minutes with the ignition switch in the OFF position and no doors opened, the BCM will deactivate the dome lamps control circuit to prevent

total battery discharge. The dome lamps will turn OFF using the theater dimming feature when controlled by the BCM.

Reading Lamps

The inadvertent power supply voltage circuit from the BCM provides battery positive voltage to each reading lamp. When a reading lamp switch is activated, the switch contacts close providing a path to ground and the reading lamp illuminates. If the operator inadvertently leaves a reading lamp ON, the BCM will turn all interior lamps OFF after 10 min has passed since any switch activation has been detected by the BCM.

Rear Compartment Courtesy Lamp

When the rear compartment is opened, the rear compartment lid latch opens providing a rear compartment open input signal to the BCM. The BCM responds by applying battery voltage to the rear compartment courtesy lamp control circuit illuminating the rear compartment courtesy lamp.

Sunshade Mirror Lamps

The inadvertent power supply voltage circuit from the BCM provides battery voltage to each set of sunshade mirror lamps. When the sunshade mirror cover is opened, a switch closes providing ground and the sunshade lamps illuminate. If the operator inadvertently leaves a sunshade mirror cover open with the lamps ON, the BCM will turn all interior lamps OFF after 10 minutes has passed since any switch activation has been detected by the BCM.

Keyless Entry Interior Illumination

When the operator uses the keyless entry transmitter in order to unlock the doors, the BCM receives a door-unlock signal. The BCM must receive inputs from various systems that indicate that the ignition switch is OFF, the courtesy lamp switch is OFF, and all doors are closed before the BCM will activate the interior lamps. After all doors have been closed, the courtesy lamps will turn OFF immediately if the ignition switch is turned to the ON position, the door locks are LOCKED, or approximately 20 seconds after the last door closes. The BCM will turn off the courtesy lamps through the theater dimming feature. The BCM keeps the courtesy lamps on for 40 seconds after an alarm event is completed.

Interior Lamps Dimming

The second group includes lamps which may dim. This group may use a combination of vacuum fluorescent illumination, LEDs and incandescent lamps.

- Dome/reading lamps – front
- Dome/reading lamps – rear
- Door lock switch – driver
- Door lock switch – passenger
- Garage door opener switch
- Headlamp switch
- HVAC control head assembly
- Multifunction switch – instrument panel
- Outside rearview mirror switch
- Park brake switch
- Radio
- Roof beacon switch
- Seat memory switch – driver
- Sliding rear window switch
- Steering wheel control switch – left
- Steering wheel control switch – right
- Sun roof switch
- Sun roof tilt switch
- Window switch – driver
- Window switch – passenger

With the headlamp switch in the PARK or HEAD position, the park lamp switch signal circuit provides an input to the body control module (BCM). The BCM responds by applying voltage to the park lamps as well as the backlight dimming control circuits illuminating all components with interior backlighting. All interior backlighting turns ON at the dimming level indicated by the instrument panel dimmer switch. The instrument panel dimmer switch is a momentary type switch and utilizes a resistor ladder to increase and decrease the brightness of the interior backlighting components. The instrument panel dimmer switch provides a voltage signal to the BCM that will increase as the brightness of the lights are increased and decrease as the brightness of the lights are decreased. The BCM provides a low reference signal and a B+ circuit to the switch. When the instrument panel dimmer switch is held in the desired position, the dimmed voltage setting is applied from the instrument panel dimmer switch through the instrument panel dimmer switch signal circuit to the BCM. The BCM interprets the signal and applies a pulse width modulated (PWM) voltage through the backlighting control circuits illuminating the interior backlighting to the requested level of brightness.

Backlighting for some components may be controlled by the BCM via serial data. When the instrument panel dimmer switch is operated to the desired backlighting setting, the BCM sends a serial data message to the corresponding component requesting the backlighting be adjusted to the desired level.

Battery Rundown Protection/ Inadvertent Power

The BCM inadvertent power supply voltage circuit provides battery voltage to all of the interior courtesy lamps. In the event that any of these lamps were to remain illuminated for a period of more than 10 minutes with the ignition switch in the OFF position, the BCM will deactivate the inadvertent power supply voltage circuit to prevent total battery discharge. If the ignition switch is turned to any position other than OFF, or if a lamp switch is activated during this 10 minute period, the timer resets for another 10 minutes.

Mirrors

Schematic and Routing Diagrams

Inside Rearview Mirror Schematics (Inside Rearview Mirror)

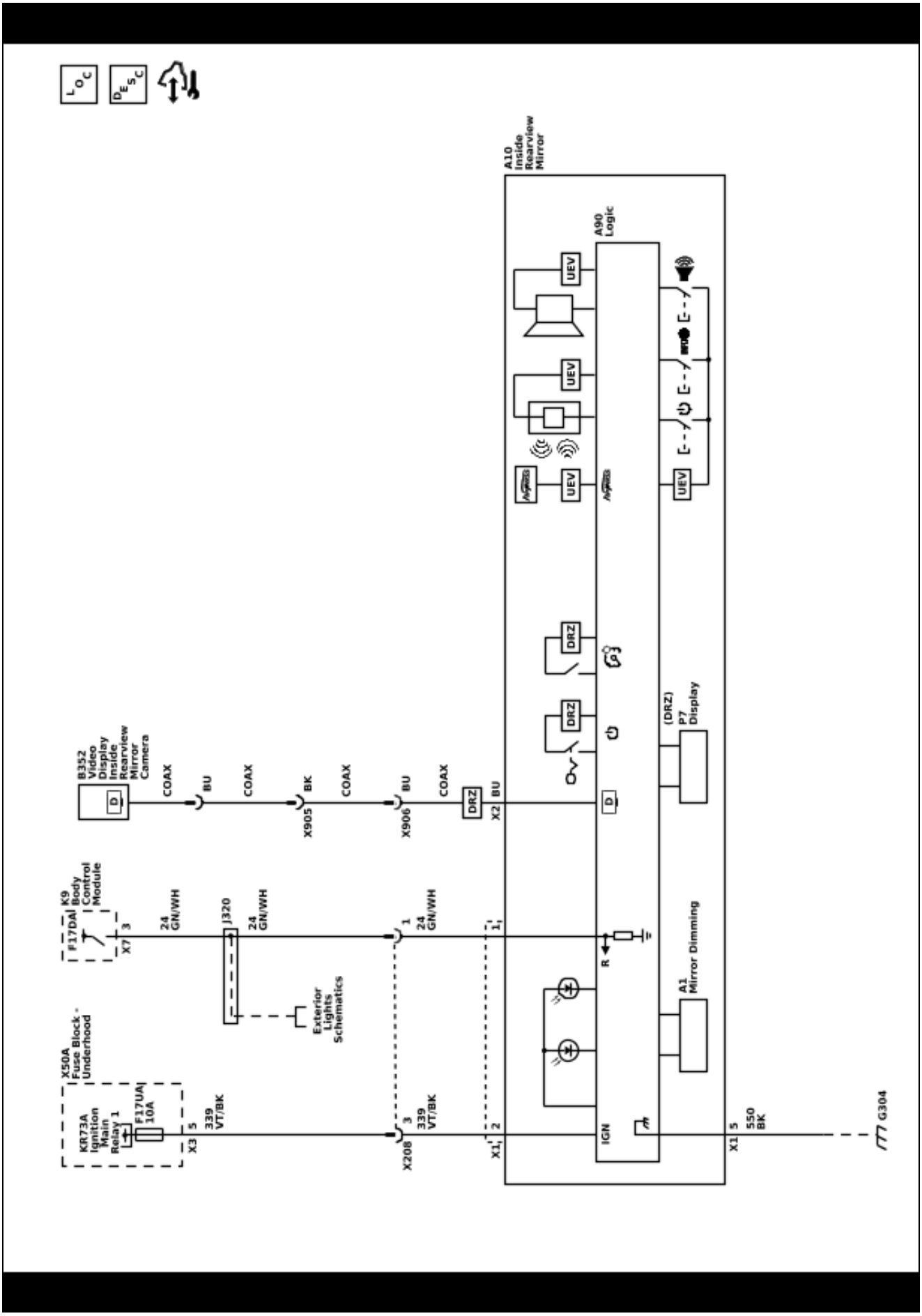

5910127

5910128

Outside Rearview Mirror Schematics (Outside Rearview Mirrors)

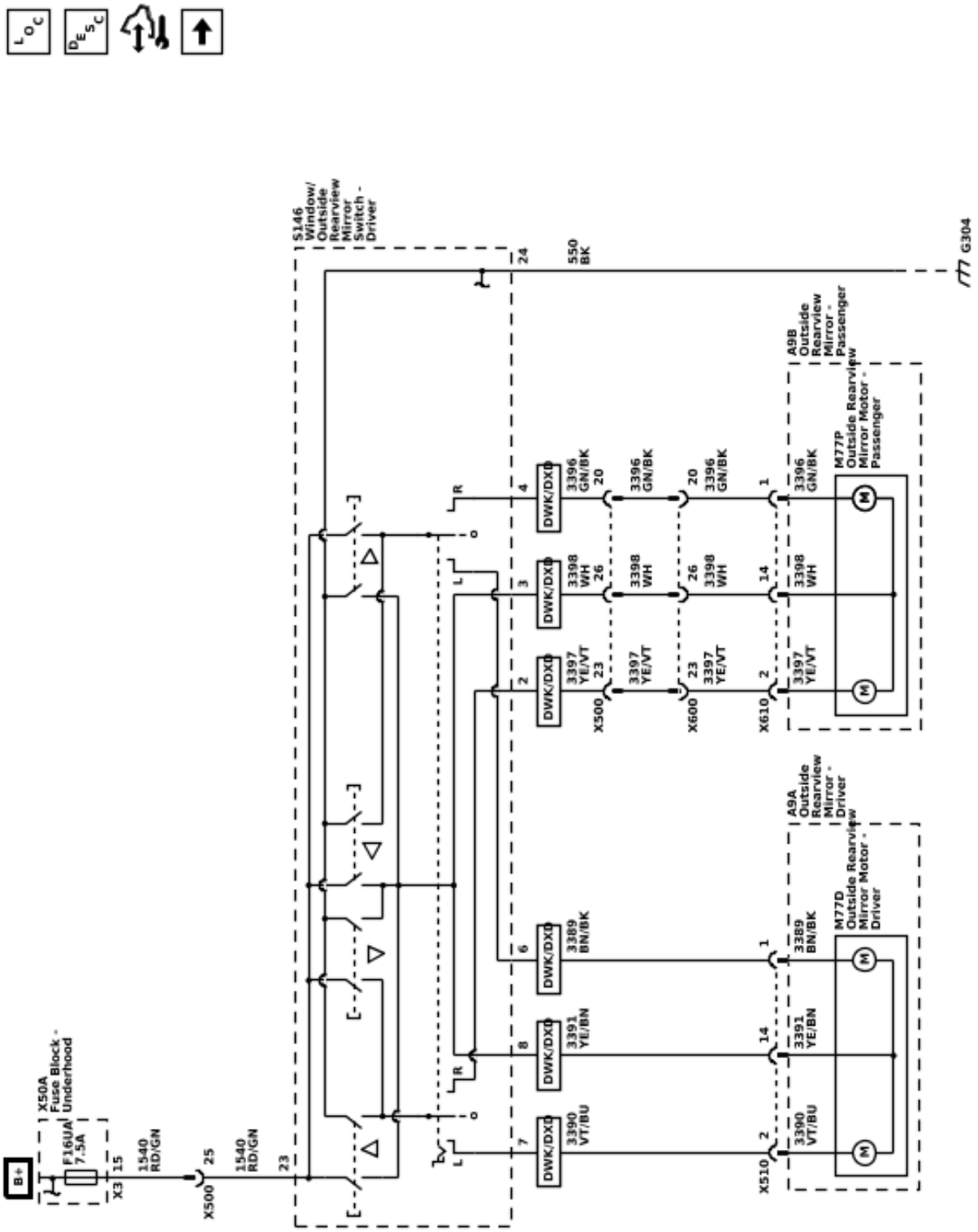

Outside Rearview Mirror Schematics (Folding (DXD))

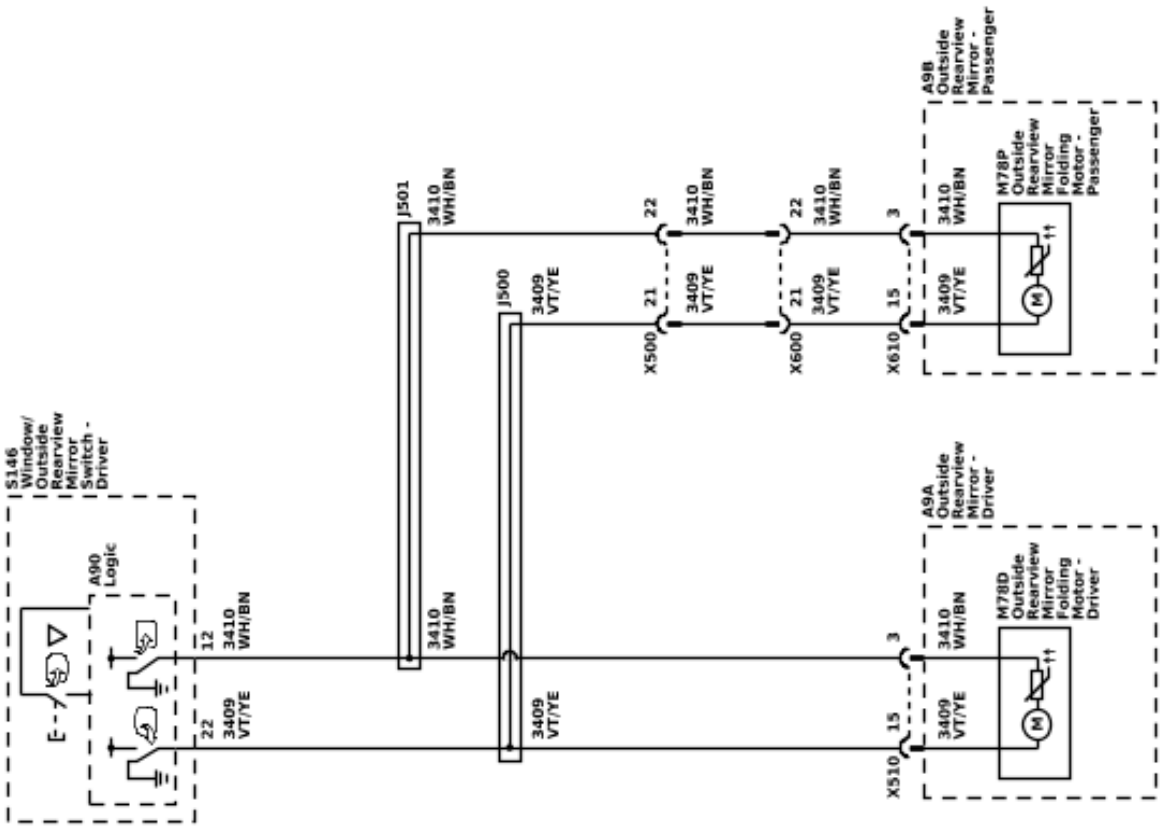

5910129

5910130

Outside Rearview Mirror Schematics (Heating)

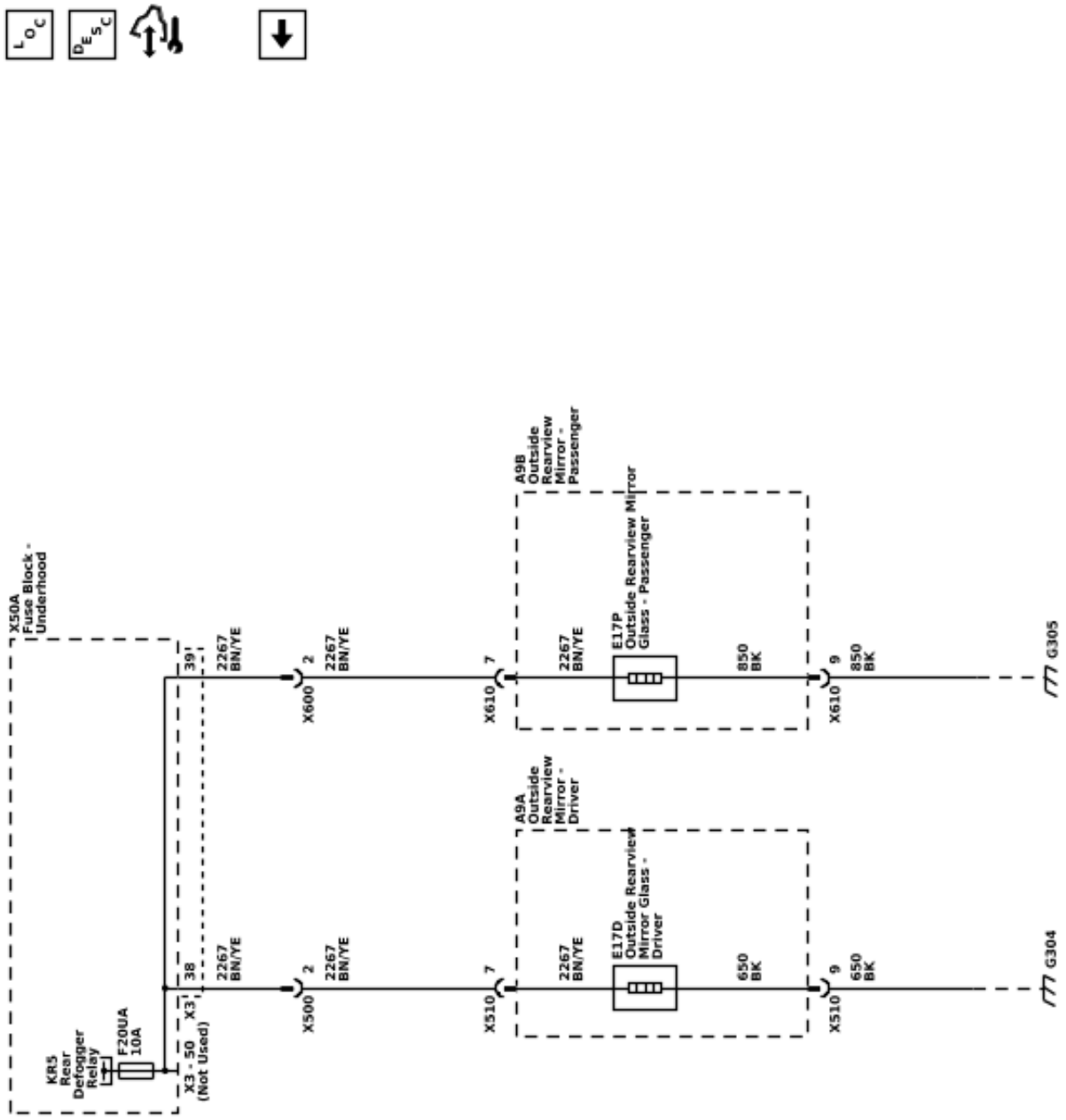

Description and Operation

Automatic Day-Night Mirror Description and Operation

Inside Rearview Mirror with the Automatic Day-Night Feature System Operation

The inside rearview mirror uses 2 photocell sensors. One sensor is the headlight sensor, located on the face side of the mirror. The headlight sensor is used to determine light conditions present at the mirror face. The other sensor is the ambient light sensor, located on the rear of the mirror or windshield side. The ambient light sensor is used to determine the exterior light conditions. With a low exterior light condition detected, and a high light condition from behind the car, at the headlight sensor, the inside rearview mirror will automatically darken the face of the mirror.

In the daytime, the mirror is in a normal state because of the high exterior light condition that is indicated by the ambient light sensor. With the gear selector lever in the REVERSE position and the Ignition ON/Vehicle in Service Mode, backup lamp supply voltage is supplied as an input to the inside rearview mirror. The mirror monitors this input to disable the automatic day-night feature. This allows the driver to see objects in the mirror clearly when backing up, even during the night.

Driver Outside Rearview Mirror with Automatic Day-Night System Operation (If Equipped)

The automatic day-night feature of the driver outside rearview mirror is controlled by the inside rearview mirror. The inside rearview mirror supplies control and low reference to the driver outside rearview mirror. At night, with the automatic day-night feature enabled, the driver outside rearview mirror will automatically darken with the inside rearview mirror to reduce glare from headlamps behind the vehicle.

Inside Rearview Camera Full Display Mirror System Operation

The inside rearview camera full display mirror is connected to the outside rearview camera via a shielded coaxial cable. When the tab under the inside rearview mirror is pulled rearward, a view of the area behind the vehicle displays on the mirror. Adjust the rearview mirror for a clear view of the area behind the vehicle before turning on full display mirror. Use the button on the back of the mirror to adjust the brightness of the display. Make sure the light sensor is not covered when adjusting the brightness.

The inside rearview camera full display mirror may not work properly or display a clear image if:.

- It is dark.
- The sun or the beam of headlamps are shining directly into the camera lens.
- Ice, snow, mud, or anything else builds up on the camera lens. Clean the lens, rinse it with water, and wipe it with a soft cloth.

When the mirror detects that the camera is not sending a valid video signal, it “blue screens” with a “no video” decal for 3 seconds, then reverts back to the mirror. Meanwhile, if a blue screen keeps on displaying instead of the camera view, take the vehicle to your dealer for service.

Rearview Camera Full Display Mirror Block Diagram

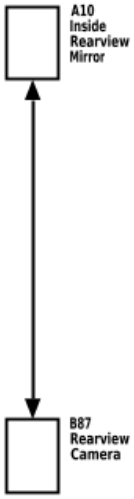

4433072

Outside Mirror Description and Operation

Power Mirror System Components

The power mirror system consists of the following components:

- Outside rearview mirror switch
- Mirror selector switch
- Driver outside rearview mirror
- Passenger outside rearview mirror

Each of the outside rearview mirror contains two motors. The vertical motor operates the mirror in the up and down directions, and the horizontal motor operates the mirror in the left and right directions.

Power Mirrors Without A45 Block Diagram

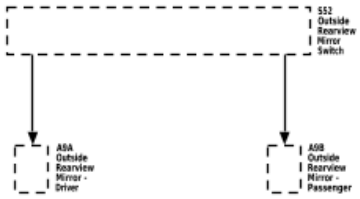

3270441

Power Mirror System Controls

The outside rearview mirror switch is a four position directional switch: Up, Down, Left and Right.

The mirror select switch is a three position switch: left, neutral/fold, and right.

Power Mirror System Operation

The outside rearview mirror switch receives battery voltage from the underhood fuse block The power mirror switch also receives a constant ground.

The four positions of the direction switch have dual switch contacts. Each of the contacts are connected to opposing sides of the appropriate power mirror motors through the selector switch. The selector switch completes these circuits depending on the position of the selector switch, L or R.

If the selector switch is placed in the L position and the up switch is pressed, battery voltage will be supplied to the left outside rearview mirror vertical motor through the left mirror motor vertical control circuit and ground through the left mirror motor common control circuit. If the down switch is pressed, battery voltage will be supplied to the left outside rearview mirror vertical motor through the left mirror motor common control circuit and ground through the left mirror motor vertical control circuit.

The remainder of the mirror functions operate in the same manner as described above. Placing the power mirror switch in opposing positions, left/right or up/down, will reverse the polarity to the mirror motor, reversing the direction of movement.

Heated Mirrors (If Equipped)

The heated mirrors are controlled through the rear defog relay. Whenever the rear window defogger is turned on battery voltage is supplied to the mirror heater elements through the left and right mirror heater element control circuits.

Vehicle Access

Schematic and Routing Diagrams

Door Lock/Indicator Schematics (Ajar Switches and Lock Indicators)

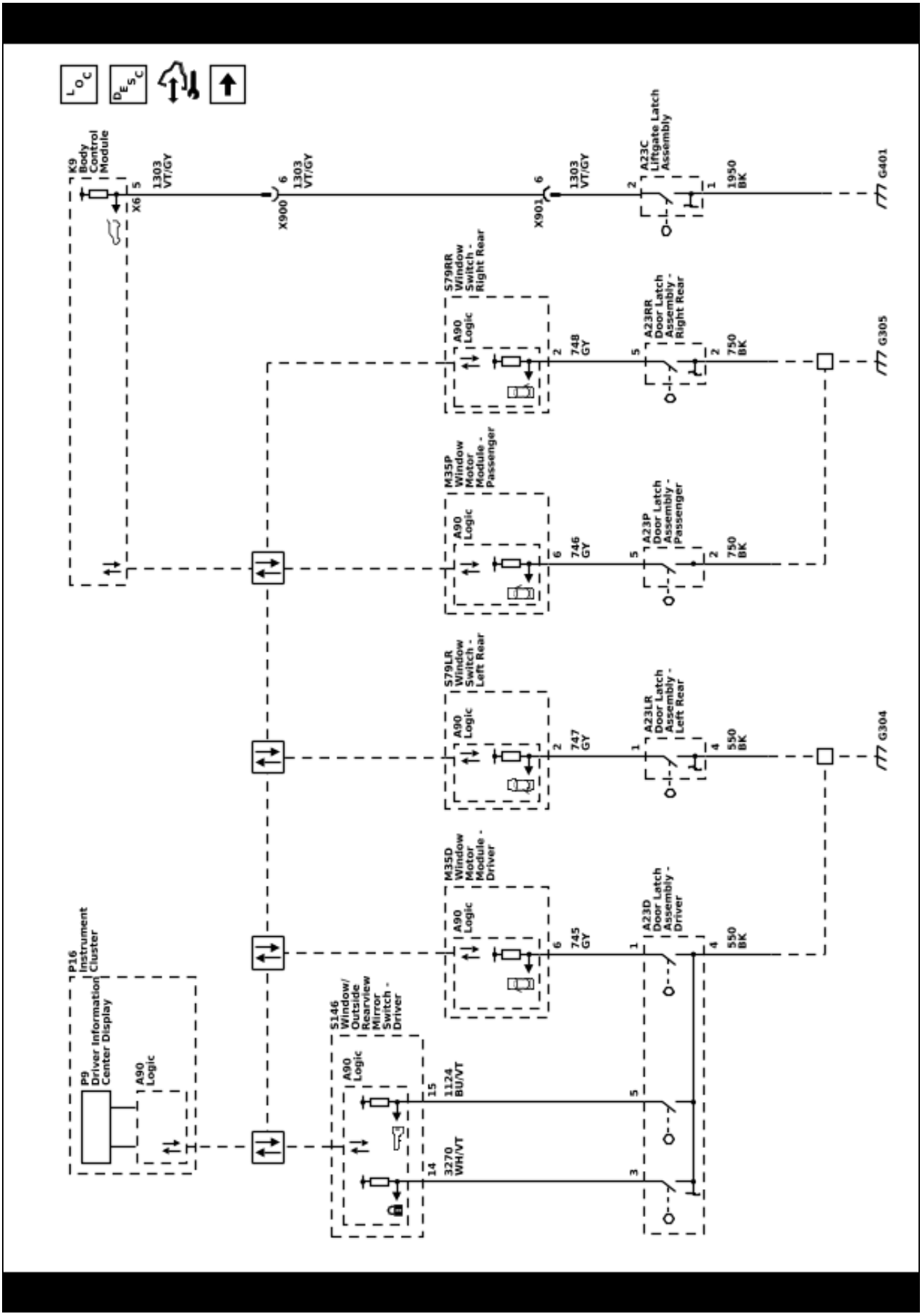

5910131

Door Lock/Indicator Schematics (Door Handle and Lock Switches)

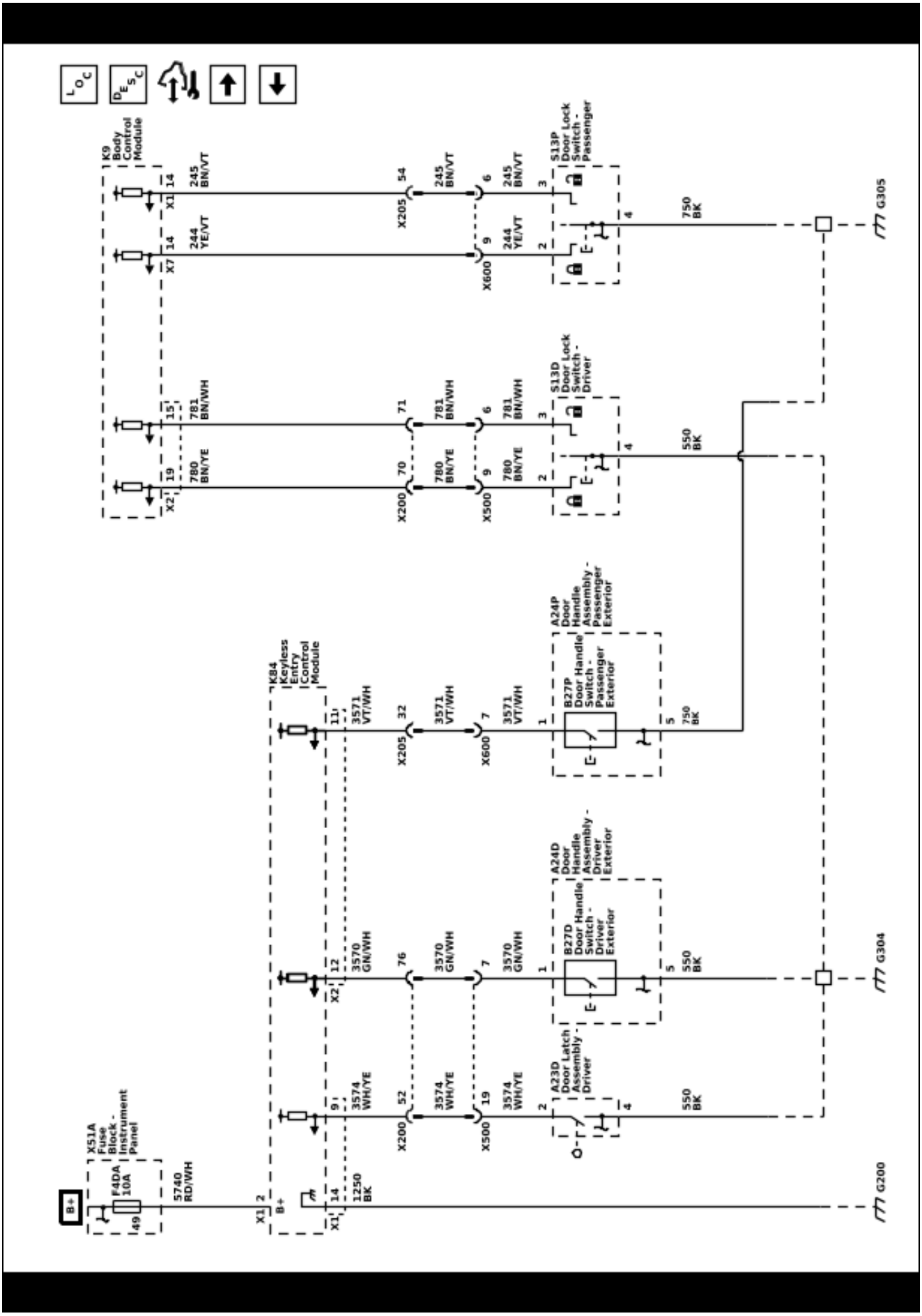

Door Lock/Indicator Schematics (Door Lock Actuators)

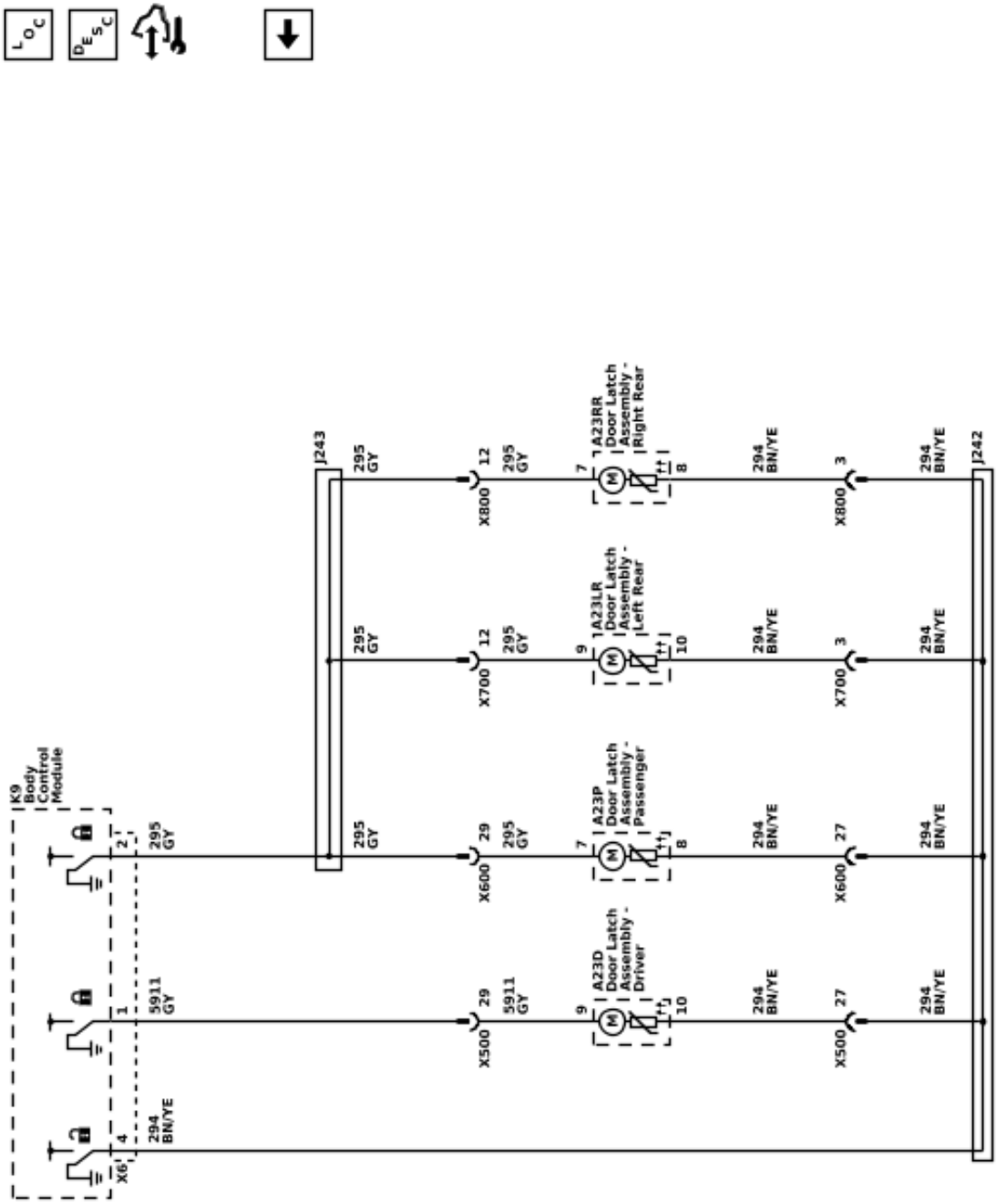

5910133

Release Systems Schematics (Liftgate Release)

5910169

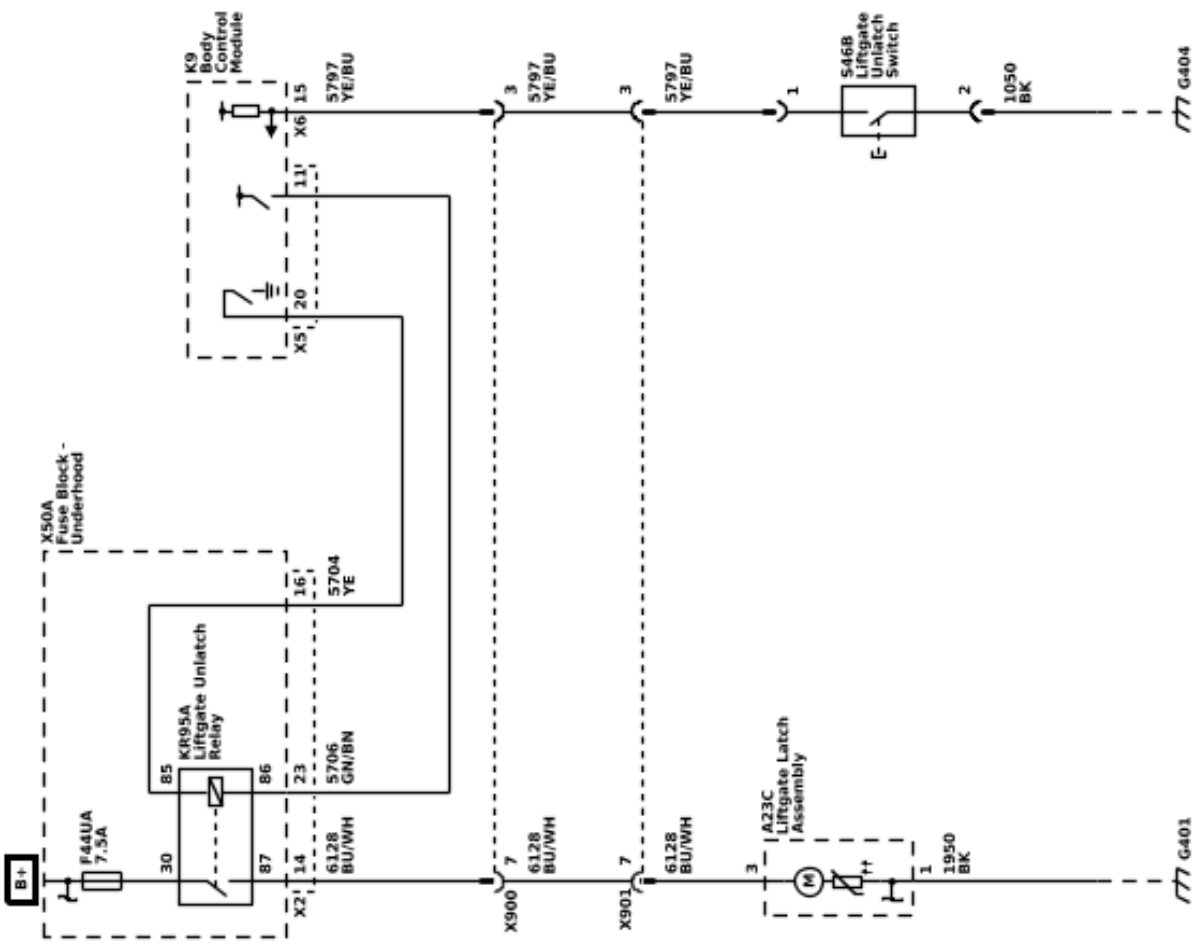

Hood Latch Schematics (Engine Hood Switch)

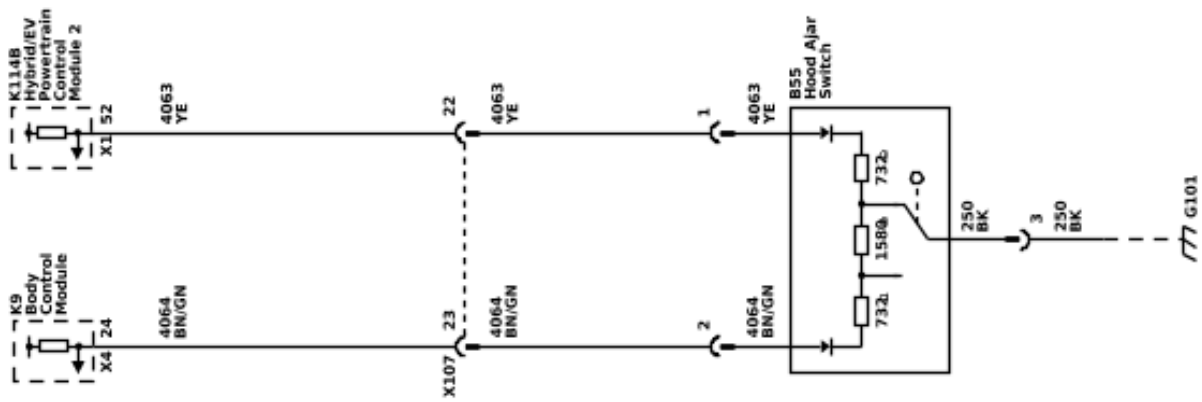

5910170

Description and Operation

Charge Port Door Description and Operation

Charge Port System Components

The charge port system consists of the following components:

- Charge port door position sensor
- Hybrid/EV powertrain control module 2

Charge Port Ajar Message

When the vehicle is in the Service Mode or ON, the hybrid/EV powertrain control module 2 supplies a 5V signal to the charge port door position switch through the charge port door sensor signal circuit. The charge port door position switch contains a resistor ladder interface for switch position between two resistors for sensing used by the hybrid/EV powertrain control module 2 to determine if the charge port door is in the open position or the closed position. The hybrid/EV powertrain control module 2 sends a serial data message to the driver information center in the instrument panel cluster to display the Charge Door Open message.

Door Ajar Indicator Description and Operation

Door Ajar Indicator System Components

The door ajar indicator system consists of the following components:

- Body control module (BCM)
- Instrument cluster
- Driver door latch
- Passenger door latch
- Left rear door latch
- Right rear door latch
- Driver window motor
- Passenger window motor
- Left rear window switch
- Right rear window switch

Door Ajar Indicator Block Diagram

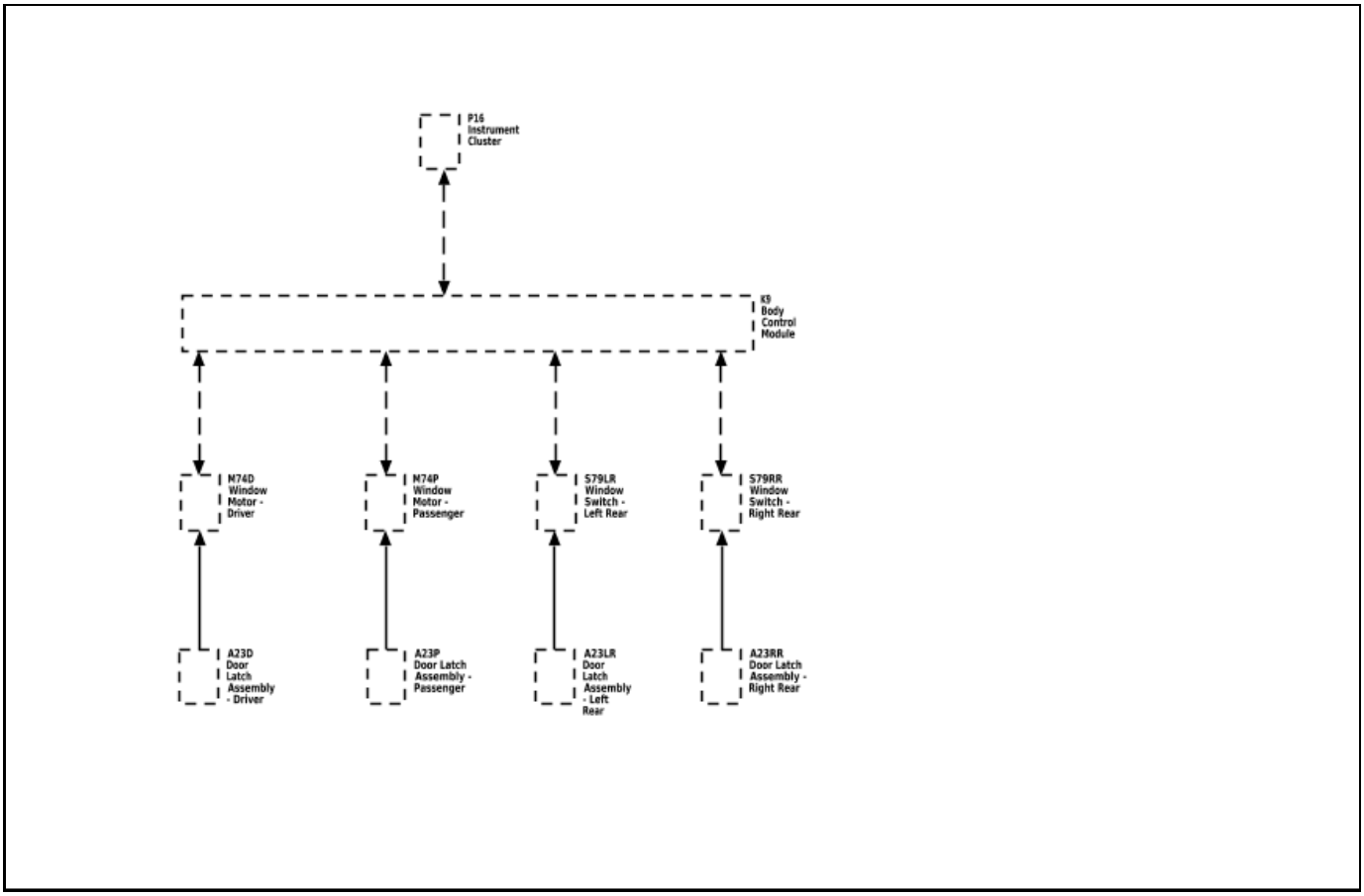

3512726

Driver and Passenger Door Ajar

The window motor supplies a 12 V signal to the door ajar switch within the door latch, when a door is open the door ajar switch closes pulling the 12 V signal low. When the window motor detects the drop in the 12 V signal circuit, it will then communicate this status to the BCM via local interconnect network (LIN) bus. The BCM communicates with the instrument cluster via serial data message. The instrument cluster, upon receipt of this serial data message, will illuminate the door ajar indicator and also send a serial data message to the radio to activate the door ajar audible warning when the vehicle speed is greater then 8 km/h (5 mph).

Rear Doors Ajar

The rear window switches each provide a 12 V signal to their respective door ajar switch signal circuits. The rear door ajar switches are integral to each rear door latch assembly. When a rear door is opened, the normally open door ajar switch closes. With the door ajar switch closed, ground is provided to the door ajar switch signal circuit and the voltage within the signal circuit drops. The rear window switch will detect the voltage drop and will send a serial data message to the body control module which will then send a message to the instrument cluster to command the door ajar message

Hood Ajar Indicator Description and Operation

Hood Ajar Switch

The body control module (BCM) applies B+ to the hood ajar signal circuit and monitors the voltage to determine the position of the hood. When the hood is closed, the switch is open and voltage remains high. When the hood is open, the switch is closed and the voltage is pulled low.

The BCM uses the hood ajar switch as a content theft deterrent alarm trigger.

Liftgate Ajar Indicator Description and Operation

Hatch Open Indicator

The body control module (BCM) monitors the voltage level of the rear hatch ajar signal circuit which is normally at the system voltage when the hatch is closed. When the hatch is ajar or open, a switch within the rear hatch latch closes providing a path to ground for the hatch ajar signal circuit. The voltage within the signal circuit will then drop to 0 volts, the BCM will then detect the voltage drop and will send a serial data message to the instrument panel cluster (IPC). The IPC will then display an icon of the vehicle with the hatch open.

Power Door Locks Description and Operation

Door Lock System Components

The power door lock system consists of the following components:

- Driver door lock switch
- Passenger door lock switch
- Key cylinder switch
- Body control module (BCM)
- Driver door latch
- Passenger door latch
- Left rear door latch
- Right rear door latch
- Exterior door handle switches
- Keyless entry control module

Power Door Locks Block Diagram

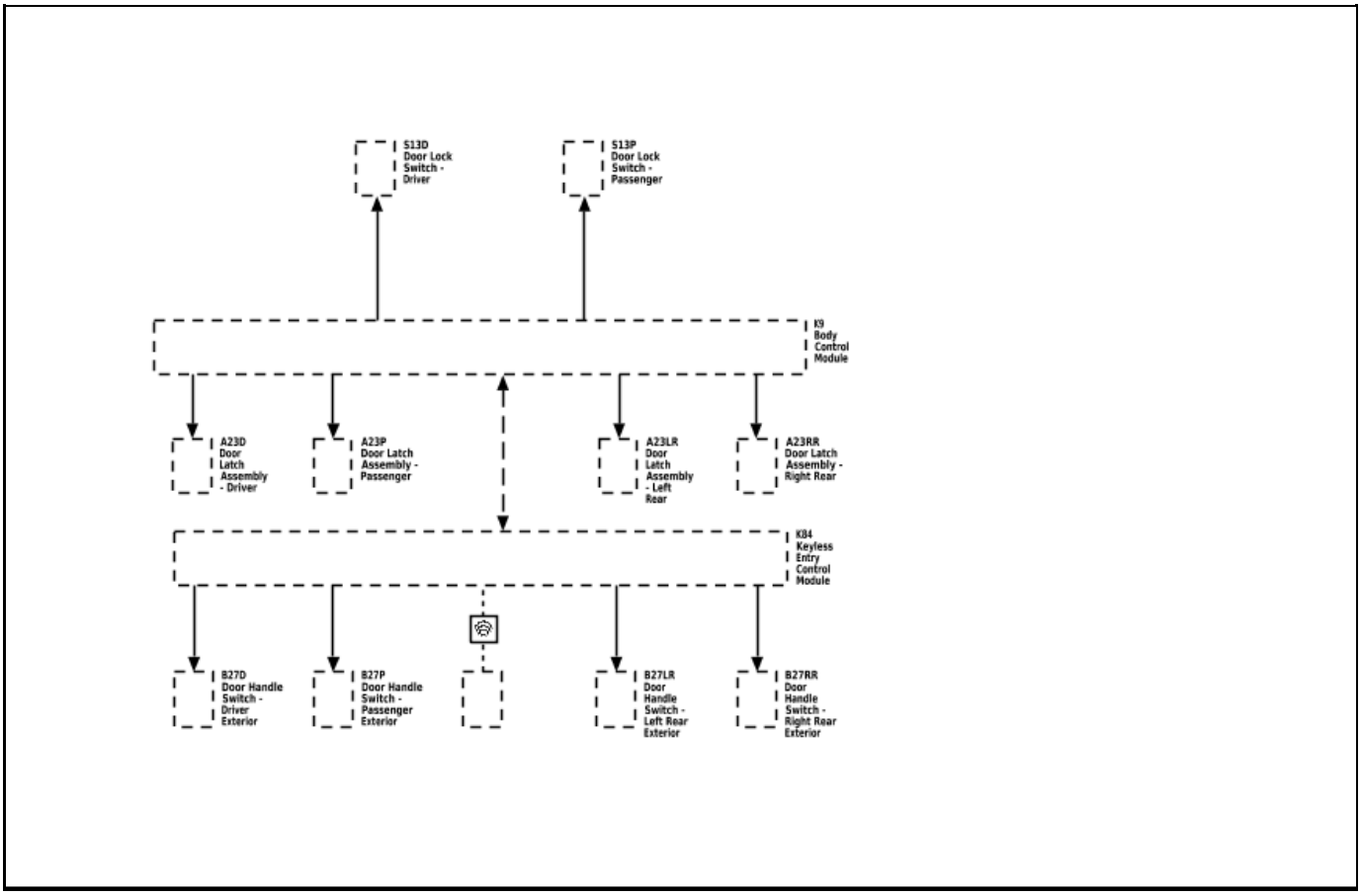

3270435

Door Lock and Unlock Operation

When the driver or passenger door lock switch is activated in the lock or unlock position, the BCM will receive a ground signal on either the door lock switch lock or unlock signal circuits.

The BCM, upon receipt of a lock switch lock or unlock signal, will supply battery voltage to the door lock actuator lock or unlock control circuits. Since the opposite side of the lock actuator is connected to ground through the other lock actuator control circuit, the doors will then lock or unlock as commanded.

The following three circuits are used to operate the lock:

- Driver door unlock
- Passenger door unlock
- All door lock

The driver door lock actuator is isolated so it can be unlocked by itself using the keyless entry transmitter.

Key Cylinder Switch

The driver window switch monitors the voltage level of the driver door lock motor status signal circuit. When the key is inserted into the driver door key cylinder and turned to the Lock position, a switch within the driver door latch closes causing the voltage to drop within the driver door lock motor status signal circuit. The driver window switch will detect the drop in voltage and will send a serial data message to the BCM commanding all the doors to Lock.

The driver key cylinder switch is used by the customer for programming the keyless entry transmitters, The driver window/outside rearview mirror switch monitors the voltage level of the key switch unlock signal circuit and when it detects a reprogramming request, it will send a serial data message to the body control module.

Passive Door Lock/Unlock Operation

The exterior door handle switch signal circuits provide inputs to the keyless entry control module when the exterior door handle switches are activated. These inputs allow the keyless entry control module to detect a door lock or a door unlock request. The keyless entry control module provides a 12 V signal to each exterior door handle switch via the door handle switch signal circuits. When a door handle switch is pressed, the switch closes and the voltage signal within the signal circuit is pulled to ground. The keyless entry control module will detect the voltage drop and a low frequency antenna will transmit a challenge to the keyless entry transmitter. If the challenge is met, the keyless entry transmitter will respond and the keyless entry control module will send a serial data message to the body control module to command the door(s) to be locked or unlocked

Rear Hatch/Gate Description and Operation

Liftgate Release System Components

- Body control module (BCM)
- Liftgate unlatch switch
- Liftgate latch assembly
- Liftgate unlatch relay

Liftgate Release Block Diagram

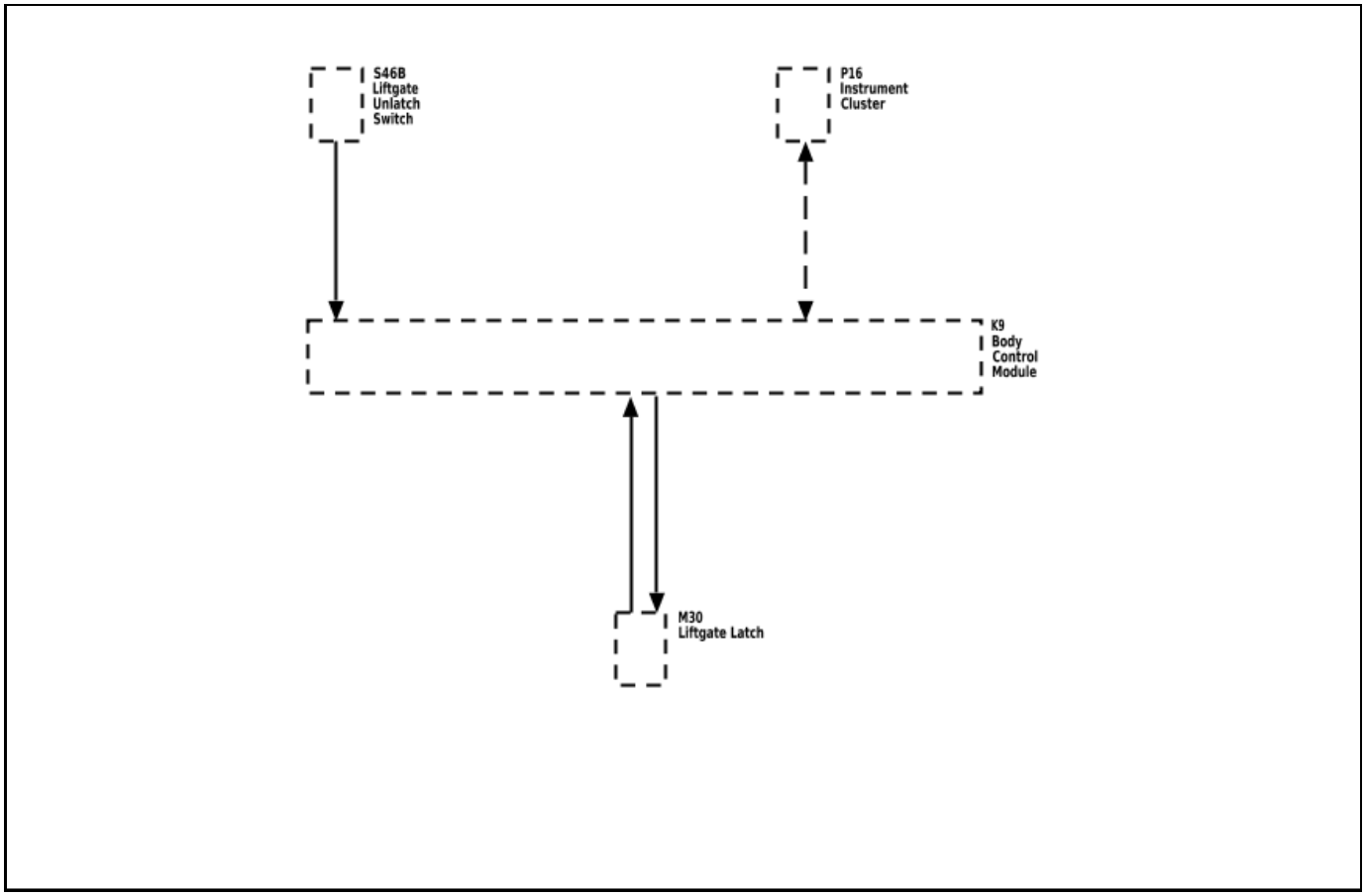

3635551

Liftgate Release Operation

Liftgate Unlatch Switch

The BCM monitors supplies a 12 V signal to the liftgate unlatch switch so that when the switch is pressed, the voltage within the signal circuit is pulled low and in response, the BCM will detect the voltage drop and check the status of the door lock system. If the doors are locked, the BCM will ignore the request, if the All Doors Unlock has been commanded, the BCM will recognize the request and will provide voltage to the release relay.

Liftgate Latch Assembly

When BCM receives a liftgate release command from the liftgate unlatch switch, the BCM applies brief pulse of voltage to the liftgate unlatch relay control circuit, which energizes the coil side of the relay. The switch side of the liftgate unlatch relay then momentarily closes, supplying a brief pulse of battery positive voltage to the liftgate latch assembly. The liftgate latch assembly is continuously grounded and when it receives the voltage pulse, it will become energized and the latch will activate releasing the liftgate so that it may be manually raised to an open position.

Keyless Entry Transmitter

All doors of the vehicle must first be commanded to UNLOCK prior to pressing the liftgate unlatch switch. The BCM monitors the status of the vehicle door latches. If the passenger doors are locked, the BCM will ignore the signal from the liftgate unlatch switch. Pressing the appropriate button on the keyless entry transmitter will send a request to the remote control door lock receiver which will in turn send a serial data message to unlock all doors.

Wipers and Washers

Schematic and Routing Diagrams

Wiper/Washer Schematics (Front Wiper/Washer Control)

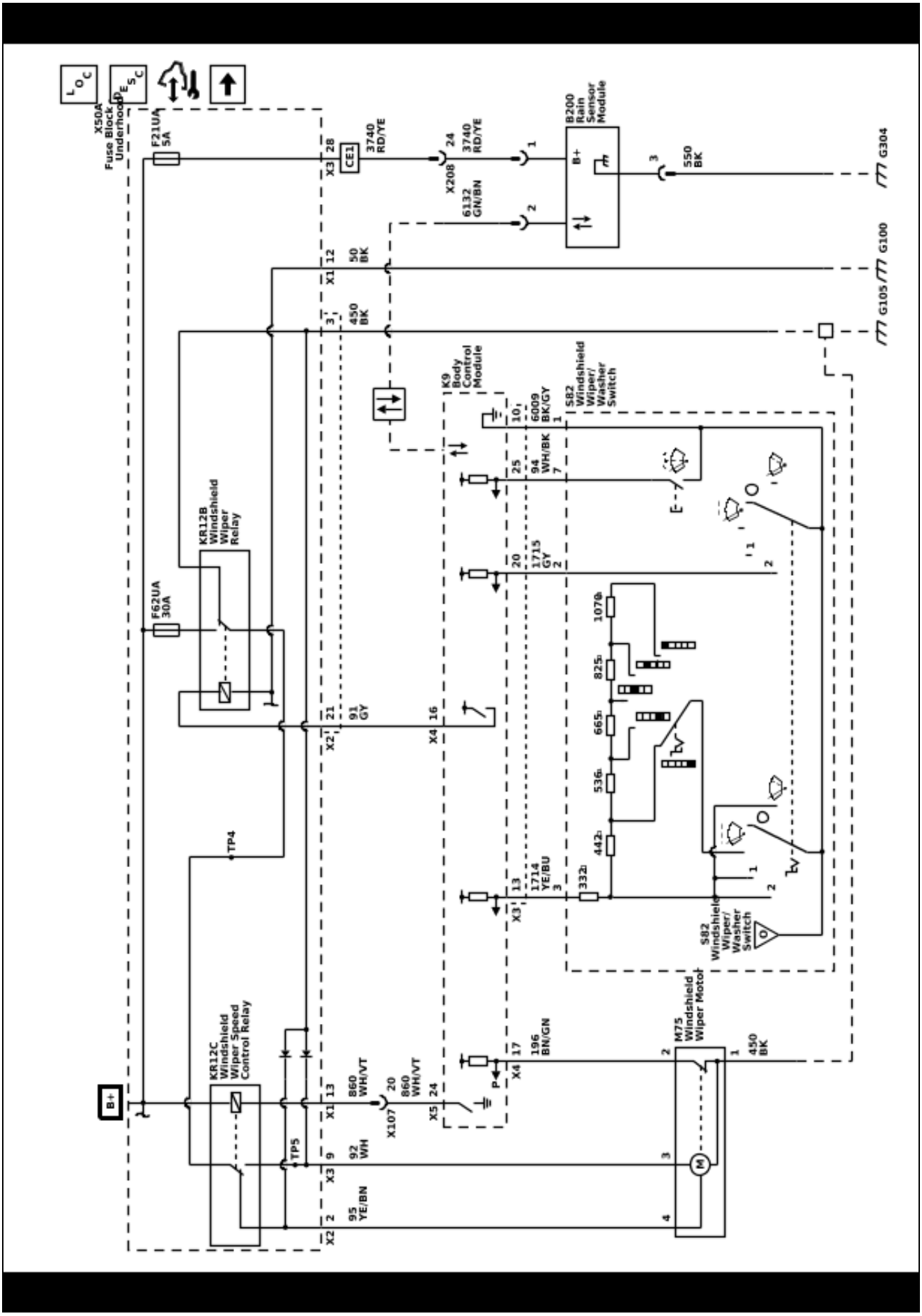

5910162

Wiper/Washer Schematics (Rear Wiper/Washer Control)

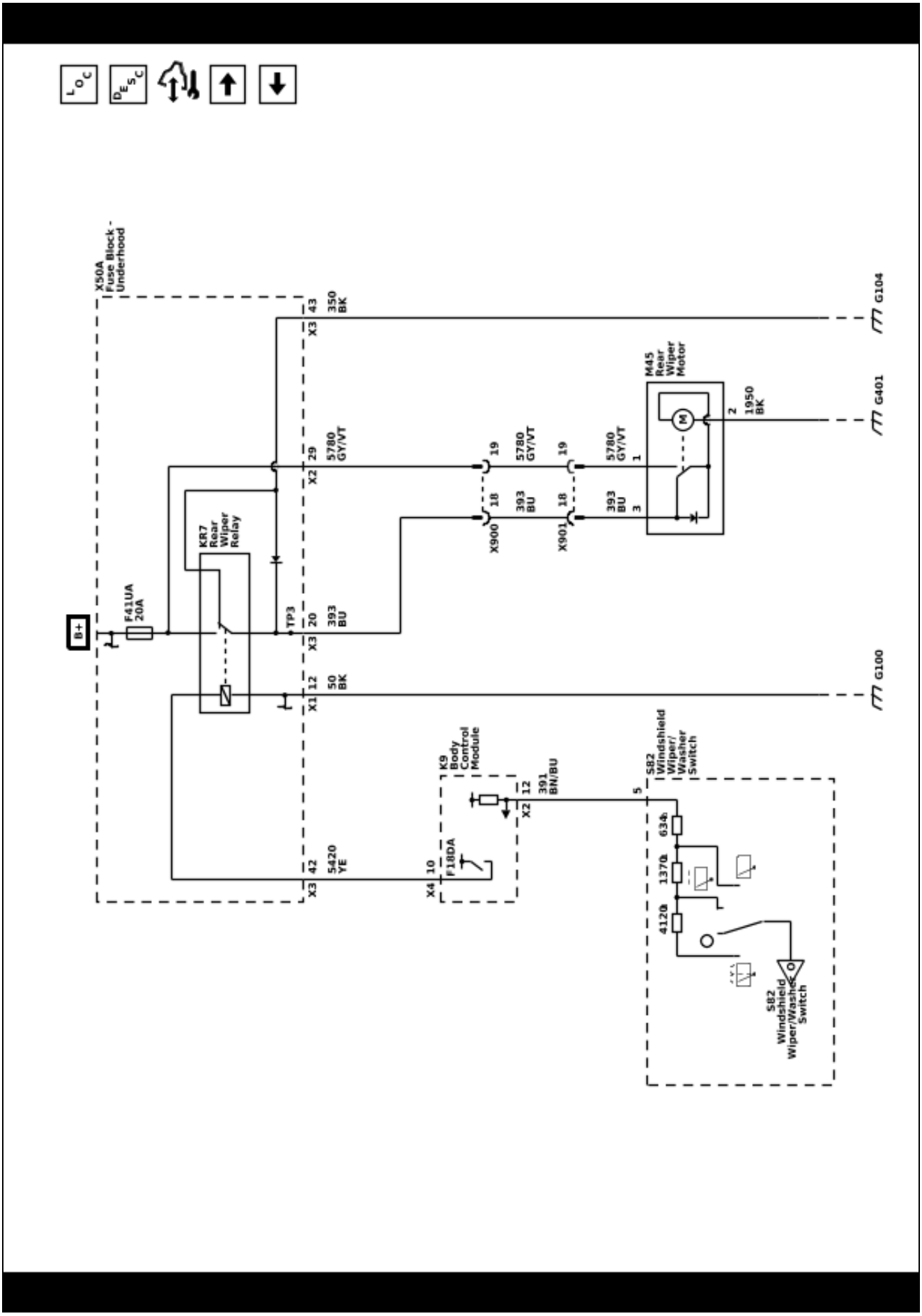

Wiper/Washer Schematics (Washer)

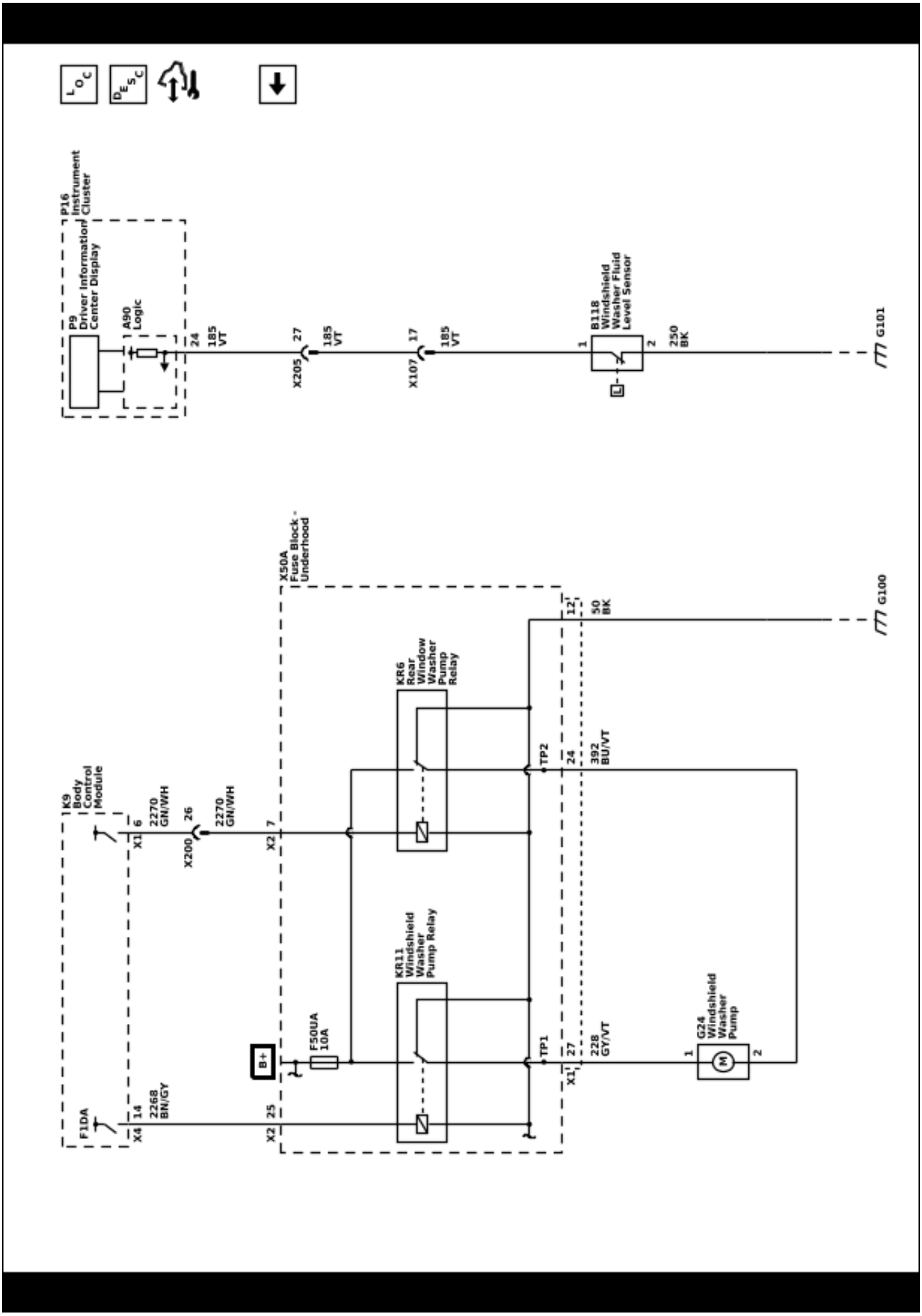

Description and Operation

Wiper/Washer System Description and Operation

Wiper/Washer System Components

The wiper/washer system consists of the following electrical components:

- Windshield Washer Pump Relay
- Windshield Washer Pump
- Windshield Wiper Motor Module Right
- Windshield Wiper Motor Module Left
- Windshield Wiper/Washer Switch
- Body Control Module (BCM)
- Windshield Washer Fluid Level Switch
- Underhood Fuse Block (Contains Windshield Washer Pump PCB Relay)
- Rain Sensor
- Instrument Cluster
- Instrument Panel Right

Windshield Wiper System

The body control module (BCM) controls the wiper motor based on an input from the wiper switch, and when wiper operation is requested, the BCM will send serial data messages to the windshield wiper motor module. The front wiper systems consists of the driver's side (Windshield Wiper Motor Module Left), and the passenger's side Wiper Arm (Windshield Wiper Motor Module Right) which are connected by a mechanical linkage driven by both windshield wiper motor modules. The windshield wiper motor module contains the necessary electronics, motor, and position sensors to execute front wiper commands from the BCM. These internal electronics are integrated into the cover of the wiper motor gear housing and are not considered a serviceable item. The windshield wiper motor module wipes the front windshield by controlling the up and down wiper arm movement by the use of a reversing motor and an internal position sensor. The sensor keeps track of the gear wheel position and when the Controller determines that the wiper arms are at a position to reverse direction, it reverses the motor supply voltage by use of its internal motor control circuitry. The BCM also provides a hardwired redundant output that switches Battery power to the Wiper Motor upon activation of its low assertion High Speed Wiper Switch input.

The BCM utilizes resistive multiplexing through the wiper switch to discern the requested action from the driver. The BCM will respond by commanding the specific wiper function to operate as follows:

1. Using intermittent wipes, the wipers pause briefly on the windshield. If the wiper level is moved to OFF or if additional wipes are not required, the wipers may move to the base of the windshield.
2. If the ignition is put in OFF while the wipers are on LO, HI, or INT, they will immediately stop.
3. If the ignition is put in OFF while the wipers are performing wipes due to windshield washing, the wipers continue to run until they reach the base of the windshield.
4. Perform one immediate wipe by issuing a serial data signal set to low wipes. The windshield wiper motor shall initiate low speed wiper operation and send a serial data signal back set to low wiping.
5. Upon the wipers leaving their PARKED position, the windshield wiper motor shall send a serial data signal indicating the wipers are no longer in park.
6. Upon receipt of the Wiper out of Park serial data signal, the BCM shall transition the windshield wiper motor command serial data signal to Park. While the wiper system smart is in the process of moving the wipers to their parked position, it shall set the value of its wiper front status serial data signal to Parking.

The wipe delay interval is a function of the INTERMITTENT Delay Interval Switch setting. When enabled, the Intermittent with Speed feature affects each of the 5 normal Intermittent Delay Intervals as a function of vehicle Speed. The Delay Intervals shall be biased to a shorter delay period with faster vehicle speeds and to a longer delay period with a slower vehicle speed.

The windshield wiper system MIST operation is identical to LOW speed operation, except that the MIST switch is a press and release type switch. When the wiper switch is moved to the MIST position (1X) and released, low speed wiper motor operation is started and will continue until 1 cycle is complete. If the wiper switch is moved to the MIST position and held, the wiper motor will operate in the LOW speed mode until the switch is released.

To initiate high speed wiping operation, the BCM provides continuous high speed wiper operation through setting the serial data signal to high speed Wipe. When the wiper switch lever is moved to the high position (HI) and released, high speed wiper motor operation is started and high speed wiping operation is performed.

Front Wiper Block Diagram

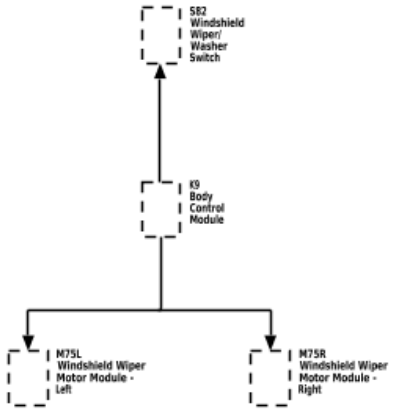

3512334

Windshield Washer System

The windshield washer pump is controlled by the body control module (BCM) via a printed circuit board (PCB) relay. When the washer switch is depressed, the BCM's internally pulled high resistor is pulled low by the washer request circuit. The BCM then applies voltage through a control circuit to the PCB windshield washer pump relay. With the relay energized, fused battery voltage is applied through the switch contacts of the relay and the control circuit to activate the windshield washer fluid pump.

Front Washer Block Diagram

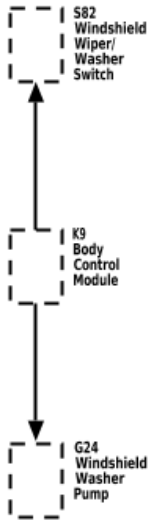

3511661

Rain Sense Mode and Rain Sense Indicator

B+ voltage is supplied to the rain sensor. Whenever the ignition switch is in the on, or accessory positions, the body control module (BCM), sends the windshield wiper/washer switch status by using serial data. When a wipe cycle is needed, the rain sensor sends a data communication message to the BCM, requesting the wiper operation. The BCM commands the Windshield Wiper Motor wipe cycles. If at anytime a fault occurs between the rain sensor and BCM, the BCM will use the inputs from the windshield wiper/washer switch in the delay positions to operate the windshield wiper motor at continuous variable delay intervals.

Rain Sensor Block Diagram

3471765

BLANK

Section 3

Driver Information and Entertainment

Image Display Cameras 3-3
Schematic and Routing Diagrams 3-3
Image Display Camera Schematics 3-4
Description and Operation 3-7
Rearview Camera Full Display Mirror Description and Operation 3-7
Rear Vision Camera Description and Operation 3-7
Surround Vision Camera Description and Operation 3-7

BLANK

Image Display Cameras

Schematic and Routing Diagrams

Image Display Camera Schematics (360 Degree Vision (UV2))

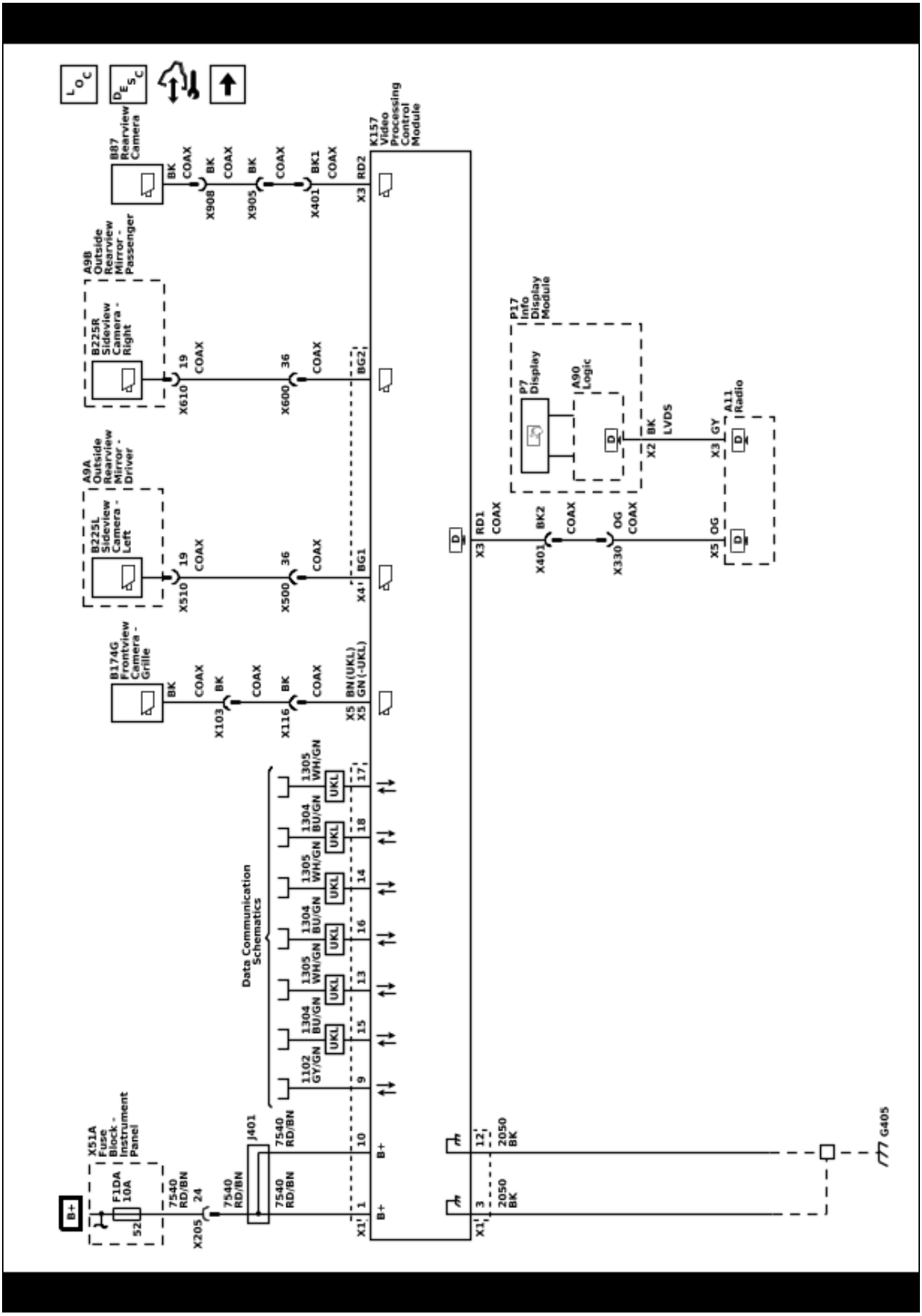

5910181

Image Display Camera Schematics (Rear Vision (UVB))

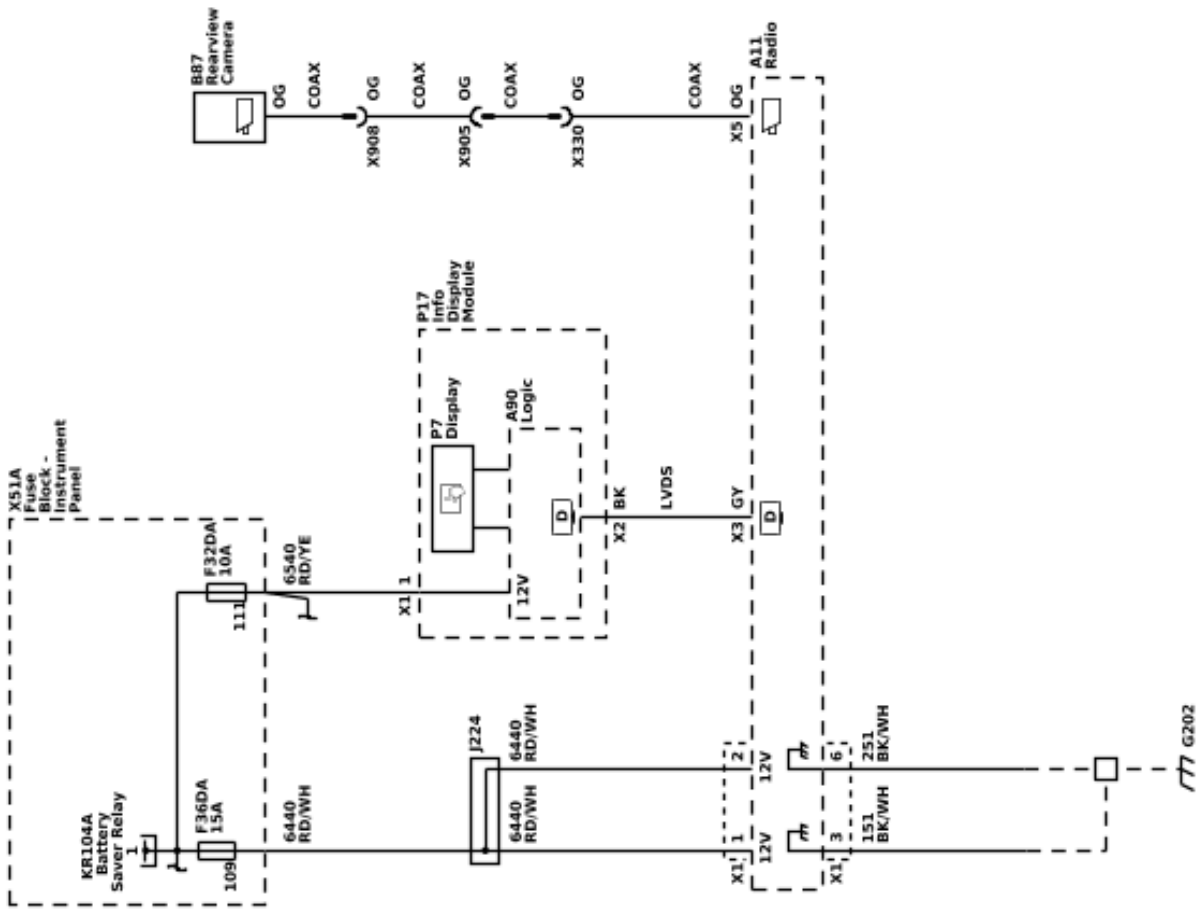

Image Display Camera Schematics (Rearview Camera Full Display Mirror (DRZ))

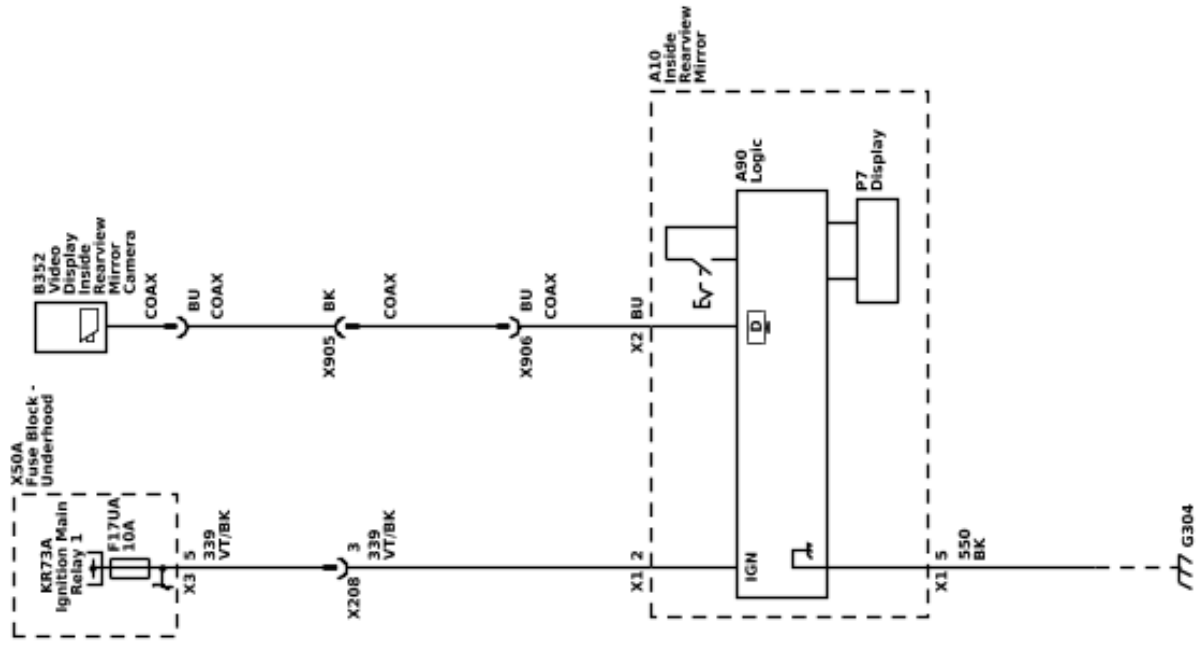

5910182

Description and Operation

Rearview Camera Full Display Mirror Description and Operation

If equipped, full display mirror provides a wider field of view than normally seen from the inside rearview mirror to assist when driving and changing lanes. When the tab under the inside rearview mirror is pulled rearward, a view of the area behind the vehicle displays on the mirror. The inside rearview camera full display mirror is connected to the outside rearview camera via a shielded coaxial cable.

When the tab under the inside rearview mirror is pulled rearward, a view of the area behind the vehicle displays on the mirror.

Adjust the rearview mirror for a clear view of the area behind the vehicle before turning on full display mirror. Use the three buttons on the bottom of the mirror to adjust the brightness, zoom, and tilt of the display. Make sure the light sensor is not covered when adjusting the brightness.

The inside rearview camera full display mirror may not work properly or display a clear image if:.

- It is dark.
- The sun or the beam of headlamps are shining directly into the camera lens.
- Ice, snow, mud, or anything else builds up on the camera lens. Clean the lens, rinse it with water, and wipe it with a soft cloth.

When the mirror detects that the camera is not sending a valid video signal, it “blue screens” with a “no video” decal for 3 seconds, then reverts back to the mirror.

Rear Vision Camera Description and Operation

Rear Vision Camera System Operation

The rear vision camera system consists of a video camera/module located at the rear of the vehicle and the radio.

The rear vision camera receives ignition voltage and a constant ground to power the camera. Video signal + and video signal – circuits carry the video image from the rear vision camera to the infotainment display. Additionally, the video signal circuits are shielded to prevent any interference which may lead to a loss of video signal resolution and a degraded video image. The shield is provided a ground path by the rear vision camera. When the transmission is placed into REVERSE, the Radio displays the video image.

The following conditions may cause a degraded rear vision camera image:

- Ice, snow, or mud has built up on the rear vision camera
- Dark conditions
- Extreme light conditions, such as glare from the sun or the headlights of another vehicle
- Damage to the rear of the vehicle
- Extreme high temperatures or extreme temperature changes

If a malfunction is detected in the system, Service Rear Vision Camera may be displayed on the infotainment display as an indicator to the customer that a problem exists that requires service.

Starting the vehicle and immediately placing the shifter in Reverse can also cause the Rear Vision Camera guidelines to not be present during that Reverse cycle due to the system not being given enough time to fully initialize. If safely coming to a stop, placing the transmission in Park for a moment, and then shifting to Reverse again restores the Rear Vision Camera guidelines, this scenario is normal and no repair attempts should be made.

Surround Vision Camera Description and Operation

Warning: The Surround Vision cameras have blind spots and will not display all objects near the corners of the vehicle. Folding outside mirrors that are out of position may not display surround view correctly. Always check around the vehicle when parking or backing.

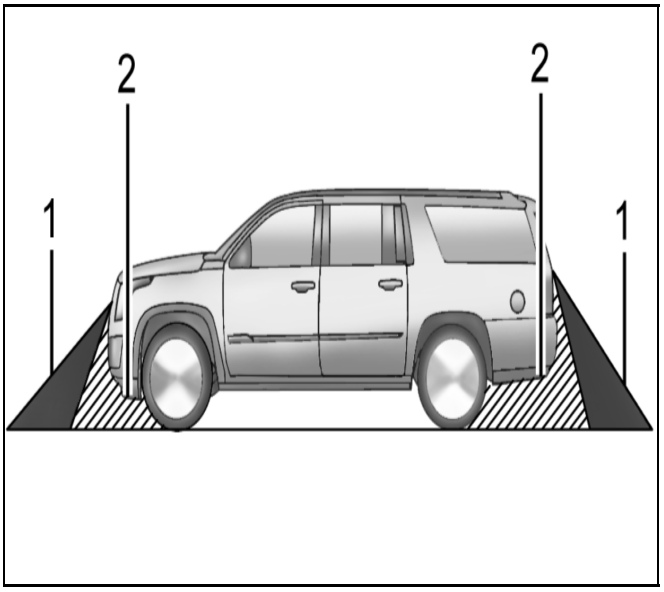

4291164

1. View Displayed by the Surround Vision Camera
2. Area Not Shown

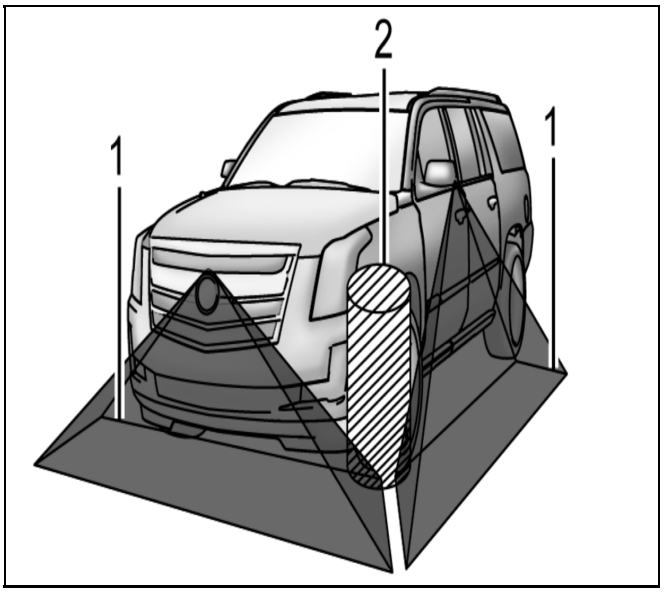

4291749

1. View Displayed by the Surround Vision Camera
2. Area Not Shown

The surround vision camera system consists of the following components:

- B87 Rearview Camera
- B174G Frontview Camera – Grille
- K157 Video Processing Control Module
- A11 Radio **OR** K74 Human Machine Interface Module
- B225L Sideview Camera – Left
- B225R Sideview Camera – Right
- X20 Memory Card Receptacle (with XVR)

When the vehicle is traveling at speeds slower than 6 mph (10kph) the video processing control module will power up the cameras and send a video signal to the radio or human machine interface module.

The following conditions may cause a degraded surround vision camera image:

- Ice, snow, or mud has built up on the rear vision camera
- Dark conditions
- Extreme light conditions, such as glare from the sun or the headlights of another vehicle
- Damage to the rear of the vehicle
- Extreme high temperatures or extreme temperature changes

Surround Vision displays an overhead view of the area surrounding the vehicle, along with the front or rear camera views in the center stack. The front camera is in the grille or near the front emblem, the side cameras are on the bottom of the outside rearview mirrors, and the rear vision camera is above the license plate.

Note: Images from the Sideview Cameras are only displayed when both front doors are properly closed.

Features of the Surround Vision System

- Rear camera (B87 Rearview Camera) view alongside overhead view is displayed in reverse
- Front camera (B174G Frontview Camera – Grille) view alongside overhead view is displayed after shifting out of reverse to Neutral or Drive
- Will display front view when front park assist object is within trigger range calibration value (30 cm (12 in) in a forward gear
- Image is removed from display when vehicle speed exceeds speed calibration (10kph/6 mph) or button press / screen touch

System Operation

The video processing control module is connected to each camera via a shielded coaxial cable. The coaxial cable provides power for the camera and also carries the video image from the cameras to the video processing control module for processing. The video processing control module will then send the processed image output to infotainment system via another coaxial cable.

The video processing module receives various vehicle information (such as steering wheel angle, object detection, etc) from other sources such as parking assist modules and the Body Control Module via serial data. This information is used to produce the enhanced surround vision system images that include a warning triangle that may display if an object is detected nearby. This triangle changes from amber to red and increases in size as the object gets closer to the vehicle. Also, dynamic guidelines are displayed in Reverse to show the projected path of the vehicle based on steering wheel angle. Due to this use of vehicle information, any faults or DTCs in these related systems can prohibit proper surround vision operation.

If equipped, the video processing control module system may have a memory card receptacle (with XVR) located in the trunk. The memory card receptacle interfaces with the video processing control module via a USB cable. The memory card receptacle also receives fused battery voltage and ground from the video processing control module. The video processing control module uses the memory card as a mass storage device, similar to a USB storage device.

Section 4

Engine/Propulsion

12 V Starting and Charging 4-3
Schematic and Routing Diagrams 4-3
Starting and Charging Schematics 4-4
Description and Operation 4-5
Battery Description and Operation 4-5
Charging System Description and Operation 4-5
Electrical Power Management Description and Operation 4-8

BLANK

12 V Starting and Charging

Schematic and Routing Diagrams

Starting and Charging Schematics (12V Battery Management)

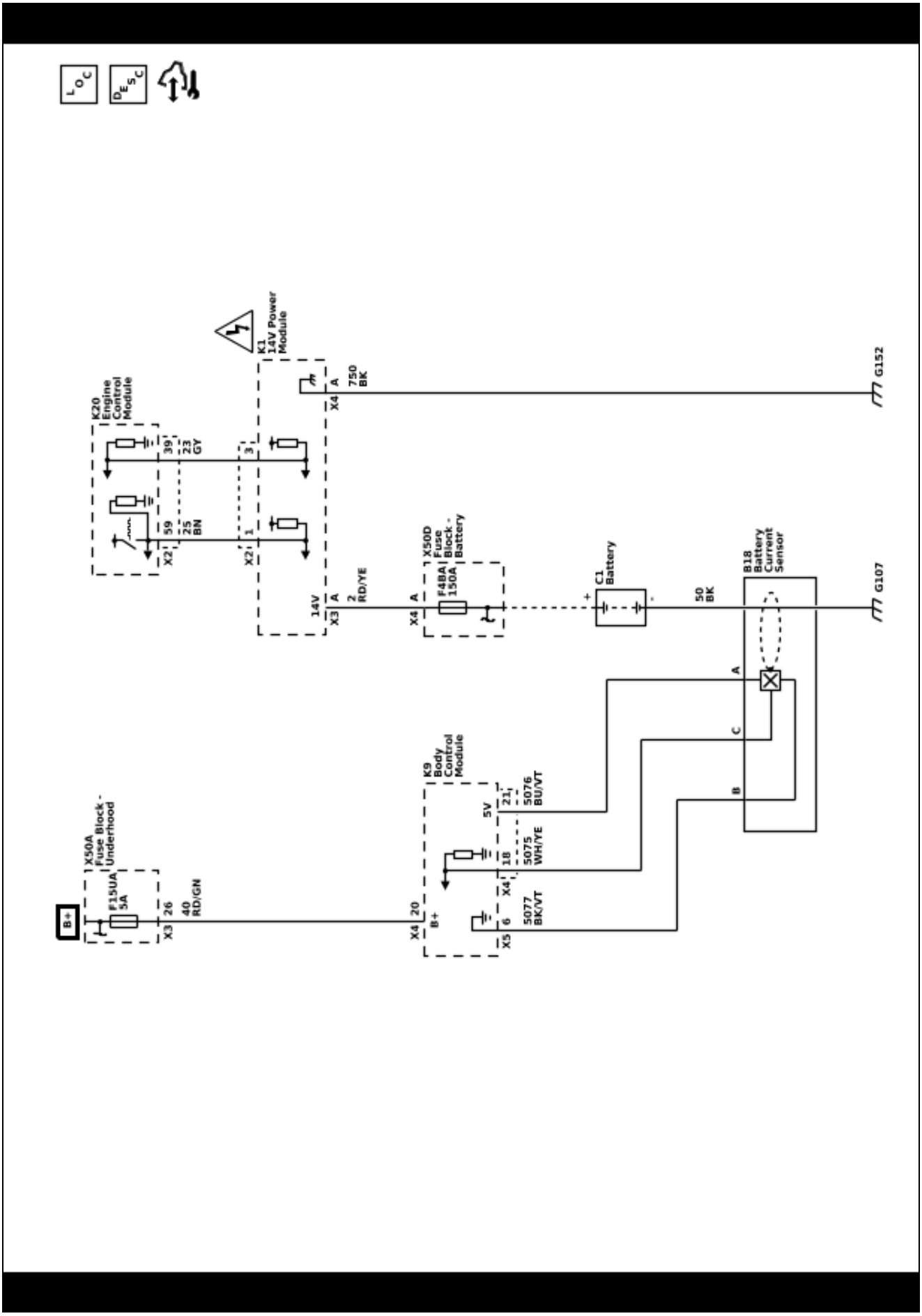

5910049

Description and Operation

Battery Description and Operation

300 V Battery

For information about the 355 V hybrid drive motor battery, refer to Drive Motor Battery System Description.

Absorbent Glass Mat Battery

This vehicle is equipped with an absorbent glass mat battery. This is similar to current vehicle lead acid flood batteries, except they use glass mats that absorb electrolytes that are pressed between the plates instead of immersing the plates in electrolytes. This allows a smaller, lighter battery with the same amount of power and is less susceptible to heat.

The maximum permissible voltage allowed for the absorbent glass mat battery is 14.8 V (at room temperature).

12 V Battery

Warning: Batteries produce explosive gases, contain corrosive acid, and supply levels of electrical current high enough to cause burns. Therefore, to reduce the risk of personal injury when working near a battery:

- ***Always shield your eyes and avoid leaning over the battery whenever possible.***
- ***Do not expose the battery to open flames or sparks.***
- ***Do not allow the battery electrolyte to contact the eyes or the skin. Flush immediately and thoroughly any contacted areas with water and get medical help.***
- ***Follow each step of the jump starting procedure in order.***
- ***Treat both the booster and the discharged batteries carefully when using the jumper cables.***

Note: Because of the materials used in the manufacture of automotive lead-acid batteries, dealers and service shops that handle them are subject to various regulations issued by OSHA, EPA, DOT, and various state or local agencies. Other regulations may also apply in other locations. Always know and follow these regulations when handling batteries.

Batteries that are no longer wanted must be disposed of by an approved battery recycler and must never be thrown in the trash or sent to a landfill.

Batteries that are not part of the vehicle itself, not the battery under the hood, must only be transported on public streets for business purposes via approved hazardous material transportation procedures.

Battery storage, charging and testing facilities in repair shops must meet various requirements for ventilation, safety equipment, material segregation, etc.

The maintenance free battery is standard. There are no vent plugs in the cover. The battery is completely sealed except for 2 small vent holes in the side. These vent holes allow the small amount of gas that is produced in the battery to escape.

Battery Ratings

A battery has 2 ratings:

- Cold cranking amperage
- Amp hours

When a battery is replaced use a battery with similar ratings. Refer to the battery specification label on the original battery.

Amp Hours

The amp hour rating tells you how much amperage is available when discharged evenly over a 20 hour period. The amp hour rating is cumulative, so in order to know how many constant amps the battery will output for 20 hours, you have to divide the amp hour rating by 20. Example: If a battery has an amp hour rating of 74, dividing by 20 = 3.75. Such a battery can carry a 3.75 A load for 20 hours before dropping to 10.5 V. (10.5 V is the fully discharged level, at which point the battery needs to be recharged.) A battery with an amp hour rating of 55 will carry a 2.75 A load for 20 hours before dropping to 10.5 V.

Cold Cranking Amperage

The cold cranking amperage is an indication of the ability of the battery to crank the engine at cold temperatures. The cold cranking amperage rating is the minimum amperage the battery must maintain for 30 seconds at –18°C (0°F) while maintaining at least 7.2 V. Refer to the battery specification label on the original battery for the cold cranking amperage rating for this vehicle.

Charging System Description and Operation

12 V Battery

The following information is for the 12 V battery only.

For information about charging the high voltage drive motor batteries, refer to Drive Motor Battery System Description.

Charging System Operation

The purpose of the charging system is to maintain the battery charge and vehicle loads. The main difference between a conventional generator charging system and this system is that the generator has been replaced by the 14V Power Module. The 14V Power Module provides the power to charge the battery from the high voltage system. There are 7 modes of operation and they include:

- Battery Sulfation Mode
- Normal Mode
- Fuel Economy Mode
- Headlamp Mode
- Voltage Reduction Mode
- Battery Maintenance Mode
- Plant Assembly Mode

Charging Block Diagram

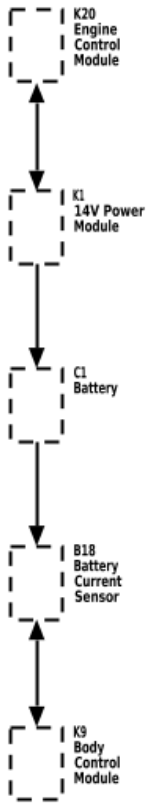

3603729

Charging System Components

14 V Power Module

The 14V Power Module provides the power to charge the battery from the high voltage system. The ECM provides a pulse width charge request signal (L Terminal) to the 14V Power Module. The 14V Power Module returns a PWM feedback signal (F Terminal) to the ECM. The 14V Power Module reports status and fault modes as a function of duty cycle. The 14V Power Module charges the battery based on the ECM signal.

Drive Motor/Generators

The drive motor/generators are serviceable components located within the transmission housing. When the rotors are spun, an alternating current (AC) is induced into the stator windings. This AC voltage is then sent to the drive motor generator power inverter module (PIM) where it is converted to high voltage direct current (DC) power. The output of the PIM is converted into low voltage electrical power by the accessory DC power converter module 14V Power Module for use by the vehicle's electrical system to maintain electrical loads and battery charge.

Body Control Module (BCM)

The body control module (BCM) is a GMLAN device. It communicates with the engine control module (ECM) and the instrument panel cluster for electrical power management operation. The BCM determines the desired voltage set point and sends the information to the engine control module (ECM) which sends this information to the 14V Power Module. The BCM monitors a battery current sensor, the battery positive voltage circuit, and estimated battery temperature to determine battery state of charge.

Battery Current Sensor

The battery current sensor is a serviceable component that is connected to the negative battery cable at the battery. The battery current sensor is a 3-wire hall effect current sensor. The battery current sensor monitors the battery current. It directly inputs to the BCM. It creates a 5 V pulse width modulation (PWM) signal of 128 Hz with a duty cycle of 0–100 percent. Normal duty cycle is between 5–95 percent. Between 0–5 percent and 95–100 percent are for diagnostic purposes.

Engine Control Module (ECM)

The ECM receives control decisions based on messages from the BCM as well as the HPCM2

Instrument Panel Cluster

The instrument panel cluster provides a means of customer notification in case of a failure and a voltmeter. There are 2 means of notification, a charge indicator and a driver information center message of SERVICE BATTERY CHARGING SYSTEM.

Hybrid/EV Powertrain Control Module 2 (HPCM2)

The Hybrid/EV Powertrain control module (HPCM2) is a GMLAN device. It communicates with the engine control module (ECM) to control the voltage set point sent to the 14V Power Module during the battery maintenance mode.

Battery Sulfation Mode

Battery sulfation mode is used to help maintain the battery life. The charging system will enter a battery sulfation mode which tries to increase the vehicle charging when the charging system voltage is less than 13.2 V for about 30 minutes. Once in this mode, the BCM will set a targeted output voltage between 13.9–15.5 V for about 5 minutes. Following this 5 minutes, the BCM will then determine which mode to enter depending on the system voltage requirements.

Normal Mode

The BCM will enter Normal Mode whenever one of the following conditions are met.

- The wipers are ON for more than 3 seconds.
- GMLAN Climate Control Voltage Boost Mode Request is true, as sensed by the HVAC control head. High speed cooling fan, rear defogger and HVAC high speed blower operation can cause the BCM to enter the Charge Mode.
- The estimated battery temperature is less than 0°C (32°F).
- Vehicle Speed is greater than 145 km/h (90 mph)
- Current Sensor Fault Exists
- System Voltage was determined to be below 12.56 V
- Tow/Haul Mode is enabled

When any one of these conditions is met, the system will set targeted generator output voltage to a charging voltage between 13.9–15.5 V, depending on the battery state of charge and estimated battery temperature.

Fuel Economy Mode

The BCM will enter Fuel Economy Mode when the ambient air temperature is at least 0°C (32°F) but less than or equal to 80°C (176°F), the calculated battery current is greater than −8 A but less than 5 A, and the battery state of charge is greater than or equal to 85 percent. Its targeted 14V Power Module set-point voltage is the open circuit voltage of the battery and can be between 12.6–13.2 V. The BCM will exit this mode and enter Normal Mode when any of the conditions described above are present.

Headlamp Mode

The BCM will enter Headlamp Mode whenever the high or low beam headlamps are ON. Voltage will be regulated between 13.9–14.5 V.

Voltage Reduction Mode

The BCM will enter Voltage Reduction Mode when the calculated battery temperature is above 0°C (32°F) and the calculated battery current is greater than −7 A but less than 1 A. Its targeted 14V Power Module set-point voltage is 12.9–13.2 V. The BCM will exit this mode once the criteria are met for Normal Mode.

Battery Maintenance Mode

That battery maintenance mode is designed to ensure the 12V battery has a good state of charge.
It accomplishes this by checking the voltage of the 12V battery and providing a charge if needed.

When the vehicle cord is plugged in

- The Hybrid/EV Powertrain control module (HPCM2) will check the 12V battery every 6 hours if the ignition is off. If the voltage is below a temperature dependent threshold ranging from 12.1 (cold) to 12.4 (warm)V, the Hybrid/EV Powertrain control module (HPCM2) will send the voltage set point to the engine control module (ECM). The engine control module (ECM) will send this to the 14V Power Module. Battery maintenance mode will charge the battery for 2-3 hours. If the Ignition is ON, the APM will cycle on as needed to maintain the 12V SOC.

When the vehicle cord is not plugged in

- The Hybrid/EV Powertrain control module (HPCM2) will check the 12V battery every 4 days (2.5 to 3 days) and if the voltage is below a threshold of 12.0 may activate battery maintenance. If the high voltage battery state of charge is greater than 40% and the propulsion system is not active, Hybrid/EV Powertrain control module (HPCM2) will send the voltage set point to the engine control module (ECM). The engine control module (ECM) will send this to the 14V Power Module. Battery maintenance mode will charge the battery for 45-90 minutes..

Plant Assembly Mode

The BCM will increase charging voltage for the first 500 miles of operation in an effort to ensure that the 12 V battery is fully charged when the vehicle is delivered to the customer.

Electrical Power Management Overview

The electrical power management system is designed to monitor and control the charging system and send diagnostic messages to alert the driver of possible problems. This electrical power management system primarily utilizes existing on-board computer capability to maximize the effectiveness of the charging system, manage the load, improve battery state of charge and life, and minimize the system's impact on fuel economy. The electrical power management system performs 3 functions:

- It monitors the battery voltage and estimates the battery condition.
- It takes corrective actions by adjusting the regulated voltage.
- It performs diagnostics and driver notification.

The battery condition is estimated during Vehicle OFF and during Vehicle in Service Mode. During Vehicle OFF the state of charge of the battery is determined by measuring the open-circuit voltage. The state of charge is a function of the acid concentration and the internal resistance of the battery, and is estimated by reading the battery open circuit voltage when the battery has been at rest for several hours.

The state of charge can be used as a diagnostic tool to tell the customer or the dealer the condition of the battery. During Vehicle ON mode, the algorithm continuously estimates state of charge based on adjusted net amp hours, battery capacity, initial state of charge, and temperature.

While running, the battery degree of discharge is primarily determined by a battery current sensor, which is integrated to obtain net amp hours.

In addition, the electrical power management function is designed to perform regulated voltage control to improve battery state of charge, battery life, and fuel economy. This is accomplished by using knowledge of the battery state of charge and temperature to set the charging voltage to an optimum battery voltage level for recharging without detriment to battery life.

Instrument Panel Cluster Operation

Charge Indicator Operation

The instrument panel cluster illuminates the charge indicator and displays a charging system warning message in the driver information center when the one or more of the following occurs:

- The engine control module (ECM) detects system voltage less than 11 V or greater than 16 V. The instrument panel cluster receives a GMLAN message from the ECM requesting illumination.
- The BCM determines that the system voltage is less than 11 V or greater than 16 V.
- The instrument panel cluster receives a GMLAN message from the BCM indicating there is a system voltage range concern.
- The instrument panel cluster performs the displays test at the start of each Vehicle ON cycle. The indicator illuminates for approximately 3 seconds.
- Vehicle ON, with the engine OFF.

Battery Voltage Gauge Operation

The instrument panel cluster displays the system voltage as received from the BCM over the GMLAN serial data circuit. If there is no communication with the BCM then the gauge will indicate minimum.

This vehicle is equipped with a regulated voltage control system. This will cause the voltmeter to fluctuate between 12–14 V, as opposed to non-regulated systems which usually maintain a more consistent reading of 14 V. This fluctuation with the regulated voltage control system is normal system operation and NO repairs should be attempted.

SERVICE BATTERY CHARGING SYSTEM

The BCM and the ECM will send a GMLAN message to the driver information center for the SERVICE BATTERY CHARGING SYSTEM message to be displayed. It is displayed whenever the charge indicator is commanded ON due to a failure.

Electrical Power Management Description and Operation

Electrical Power Management

The electrical power management is used to monitor and control the charging system and alert the driver of possible problems within the charging system. The electrical power management system makes the most efficient use of the Battery output and helps extend the 12 V battery life, by managing electrical system loads.

The load shed operation is a means of reducing electrical loads during a low voltage or low battery state-of-charge condition.

The load shed operation is a means of reducing electrical loads during a low voltage or low battery state-of-charge condition to preserve the battery.

Load shed, is activated in incremental steps. The criteria used by the K9 Body Control Module (BCM) to regulate electrical power management are outlined below:

Note: Load Shed levels will be easier to enter at lower State Of Charge (SOC)

Load Shed Modes with SOC >70%

Function	Calculation	Action Taken
Load Shed 1 Start	Battery has a net loss of 4 Ah to 11 Ah	Rear Defrost, Heated Mirrors, Heated Seats, HVAC cycled OFF for 20% of their cycle
Load Shed 1 End	Battery has a net loss of less than 2 Ah	Clear Load Shed 1
Load Shed 2 Start	Battery has a net loss greater than 12 Ah	Rear Defrost, Heated Mirrors, Heated Seats, HVAC cycled OFF for 50% of their cycle. The BATTERY SAVER ACTIVE message will be displayed on the DIC
Load Shed 2 End	Battery has a net loss of less than 8 Ah	Clear Load Shed 2
Load Shed 3 Start	Battery has a net loss greater than 20 Ah or voltage < 11.9V	Rear Defrost, Heated Mirrors, Heated Seats, HVAC cycled OFF for 100% of their cycle. The BATTERY SAVER ACTIVE message will be displayed on the DIC
Load Shed 3 End	Battery has a net loss of less than 13 Ah	Clear Load Shed 3

Battery Saver Active Message

Load Shed is controlled by the Body Control Module and will go active if the vehicle begins discharging the 12 V battery past Ah thresholds. The lower State of Charge, the easier it will be to enter Load Shed.

The following conditions may cause the State of Charge to drop low:

- Fuel Economy Mode will drain the battery purposely during drive cycles and decrease the State of Charge (SOC). The vehicle is plugged in everyday to charges the HV battery and 12V battery. If the BCM hasn't been allowed to sit for a minimum of 8.5 hrs to sense the battery's voltage and update the SOC, The BCM will not update to reflect the new SOC. The BCM will continue to use the existing SOC which will continue to decrease everyday making it easier to enter Load Shed, even though the battery is charged every day when the vehicle is plugged in.
- A Parasitic draw on the vehicle causing the battery to drop below 50%, will allow for easy entry to Load Shed when Fuel Economy Mode goes active
- If the 12 V Battery is disconnected and reconnected it will cause the BCM to use a 65% default SOC. After 4 Ignitions the BCM will exit the default SOC behavior and begin integration the SOC from that point. If the vehicle was not allowed to sit over 8.5 hours without being disturbed or woke up to reset the monitored State of Charge in the BCM, the SOC will not be updated to reflect new value.
- APM failure and the battery is used to run the electrical loads. The 12 V battery will continue to discharge until a stall event occurs. Load Shed will go active to try and preserve the battery to allow the customer to reach their destination.
- Allow vehicle to sit for 8.5 hours or greater without being interrupted to allow the BCM to relearn the actual State of Charge of the battery.

The following items may interrupt the sleep mode:

- Plug in charging events.
- Battery Maintenance Mode.
- Approach Detection is activated.
- The Key Fob is left in the car or left in close proximity of the vehicle (Fob is detected).
- Pressing buttons on the keyless entry transmitter.
- Attempting to open the doors or hatch (Vehicle Locked or Unlocked).
- Any features that wakes up the BCM in OFF Mode.

Customer information

To help reduce the occurrence of this issue, inform the customer to allow the vehicle to sit uninterrupted for a minimum of 8.5 hours on a weekly basis.

Also inform the customer, if the Body Control Module detects the 12 V Battery has a low State of Charge review the following:

- If the State of Charge is not low and no battery issues are found, this is a false monitored State of Charge since it has not been refreshed, allow the vehicle to sit over 8.5 hours without being woke up.
- If the State of Charge is low, charge and test the Battery, verify no abnormal parasitic draws, and allow the vehicle to sit over 8.5 hours without being disturbed or woke up.
- If the 12 V battery is disconnected and reconnected for any reason, the BCM will default the State of Charge value to 65%, the message will go away, but it can reappear if Fuel Economy mode goes active again and continue to drain the battery, allow the vehicle to sit over 8.5 hours without being woke up.

Section 5

HVAC

Heating, Ventilation, and Air Conditioning 5-3
Specifications 5-3
Fastener Specifications 5-3
Approximate Fluid Capacities 5-22
Adhesives, Fluids, Lubricants, and Sealers 5-23
Visual Identification 5-23
Refrigerant Label Symbols 5-23
Diagnostic Information and Procedures 5-24
Handling of Refrigerant Lines and Fittings 5-24
Leak Testing 5-24
Air Conditioning (A/C) System Performance Test 5-25
A/C Diagnostics Chart 5-27
Heating Performance Diagnostic 5-28
Defrosting Insufficient 5-29
Noise Diagnosis - Blower Motor 5-30
Air Conditioning Compressor Oil Diagnosis 5-31
Noise Diagnosis - HVAC Module 5-32
Odor Diagnosis 5-32
Cabin Heater Coolant Heater System Loss of Coolant 5-34
Cabin Heater Coolant Heater System Pressure Cap Testing 5-35
Cabin Heater Coolant Heater System Leak Testing 5-35
Repair Instructions 5-36
Odor Correction 5-36
Refrigerant Recovery and Recharging 5-36
Flushing 5-38
Heater Coolant Heater Draining and Filling 5-39
Air Conditioning and Drive Motor Battery Cooling Compressor Replacement 5-59
Air Conditioning Compressor Pressure Relief Valve Replacement 5-86
Air Conditioning System Seal Replacement 5-94
Air Conditioning O-Ring Seal Replacement 5-95
Air Conditioning Compressor Hose Replacement 5-96
Air Conditioning Condenser Hose Replacement 5-108
Air Conditioning Evaporator Hose Replacement 5-125
Air Conditioning Receiver and Dehydrator Replacement 5-135
Air Conditioning Evaporator Thermal Expansion Valve Replacement 5-158
Air Conditioning Refrigerant Pressure Sensor Replacement - Low Pressure 5-162
Air Conditioning Refrigerant Pressure Sensor Replacement - High Pressure 5-170
Air Conditioning Condenser Replacement 5-178
Heater and Air Conditioning Evaporator and Blower Module Removal and Installation 5-199
Heater and Air Conditioning Evaporator Case Replacement 5-284
Blower Lower Case Replacement 5-289
Blower Upper Case Replacement 5-301
Air Conditioning Evaporator Replacement 5-312
Air Conditioning Evaporator and Blower Module Drain Hose Replacement 5-316
Heater Inlet Hose Replacement 5-320
Auxiliary Heater Inlet Hose Replacement 5-328
Auxiliary Heater Outlet Hose Replacement 5-348
Heater Outlet Hose Replacement 5-370
Heater Coolant Pump Replacement 5-374
Air Inlet Deflector Water Deflector Replacement 5-395
Passenger Compartment Air Filter Replacement 5-406
Air Inlet Housing Replacement 5-407
Blower Motor Control Replacement 5-414
Blower Motor Replacement 5-420
Side Window Defogger Outlet Grille Replacement - Left Side 5-428
Side Window Defogger Outlet Grille Replacement - Right Side 5-455
Instrument Panel Outer Air Outlet Replacement - Left Side 5-466
Instrument Panel Center Air Outlet Replacement 5-467
Instrument Panel Outer Air Outlet Replacement - Right Side 5-494
Floor Front Air Outlet Duct Replacement - Right Side 5-496
Floor Front Air Outlet Duct Replacement - Left Side 5-500
Floor Front Air Outlet Center Duct Replacement 5-501
Floor Rear Air Outlet Duct Adapter Replacement 5-506

Instrument Panel Outer Air Outlet Duct Replacement 5-510
Windshield Defroster Outlet Duct Replacement 5-516
Side Window Defogger Outlet Duct Replacement - Left Side 5-530
Side Window Defogger Outlet Duct Replacement - Right Side 5-538
Floor Rear Air Outlet Duct Replacement 5-545
Heater Core Replacement 5-571
Heater Coolant Heater Replacement 5-573
Heater Case Replacement 5-600
Description and Operation 5-602
Heating and Air Conditioning System Description and Operation 5-602
Special Tools and Equipment 5-603

HVAC - Automatic 5-605
Schematic and Routing Diagrams 5-605
HVAC Schematics 5-606
Description and Operation 5-612
Automatic HVAC Description and Operation 5-612

Heating, Ventilation, and Air Conditioning

Specifications

Fastener Specifications

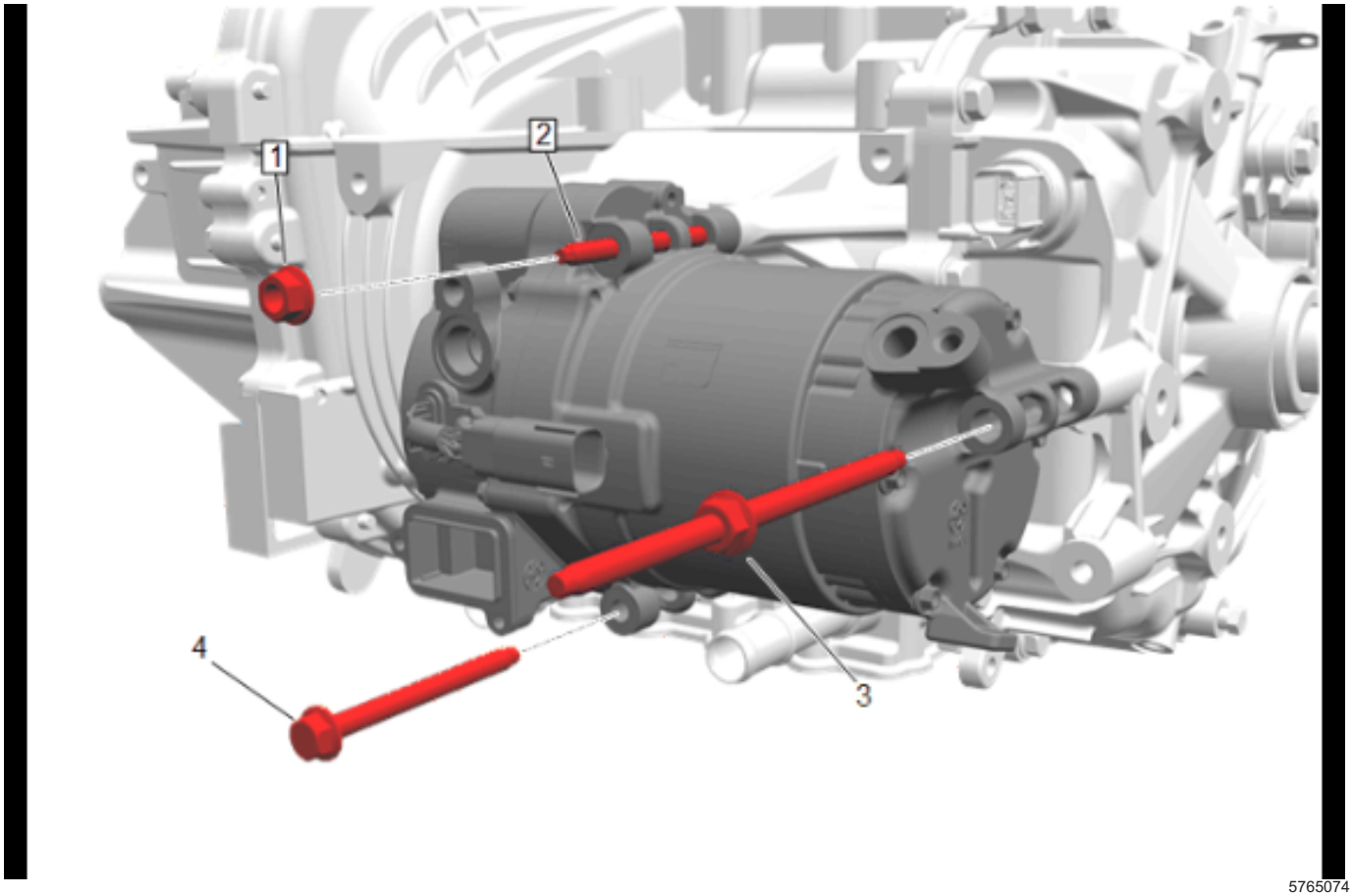

5765074

Air Conditioning and Drive Motor Battery Cooling Compressor

Callout	Component Name [Component Quantity]	Single Use Fastener/ Component	Thread Locking Adhesive Required	Specification Metric (English)	Procedure
1	Air Conditioning and Drive Motor Battery Cooling Compressor Nut	—	—	22 N•m (16 lb ft)	Air Conditioning and Drive Motor Battery Cooling Compressor Replacement on page 5-59
2	Air Conditioning and Drive Motor Battery Cooling Compressor Stud	—	—	**10 N•m(89 lb in)**	Air Conditioning and Drive Motor Battery Cooling Compressor Replacement on page 5-59
3	Air Conditioning and Drive Motor Battery Cooling Compressor Stud	—	—	**10 N•m(89 lb in)**	Air Conditioning and Drive Motor Battery Cooling Compressor Replacement on page 5-59
4	Air Conditioning and Drive Motor Battery Cooling Compressor Bolt	—	—	22 N•m (16 lb ft)	Air Conditioning and Drive Motor Battery Cooling Compressor Replacement on page 5-59

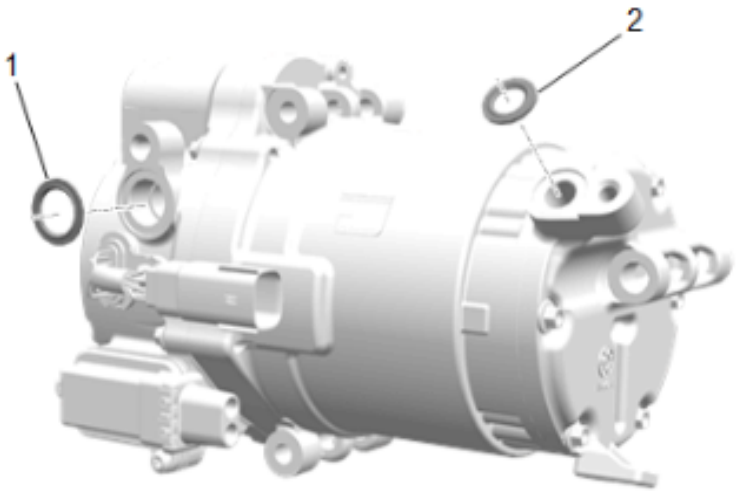

5765075

Air Conditioning and Drive Motor Battery Cooling Compressor Seals

Callout	Component Name [Component Quantity]	Single Use Fastener/ Component	Thread Locking Adhesive Required	Specification	Procedure
				Metric (English)	
1	Air Conditioning Compressor Hose Seal	Yes	—	—	Air Conditioning and Drive Motor Battery Cooling Compressor Replacement on page 5-59
2	Air Conditioning Condenser Hose Seal	Yes	—	—	Air Conditioning and Drive Motor Battery Cooling Compressor Replacement on page 5-59

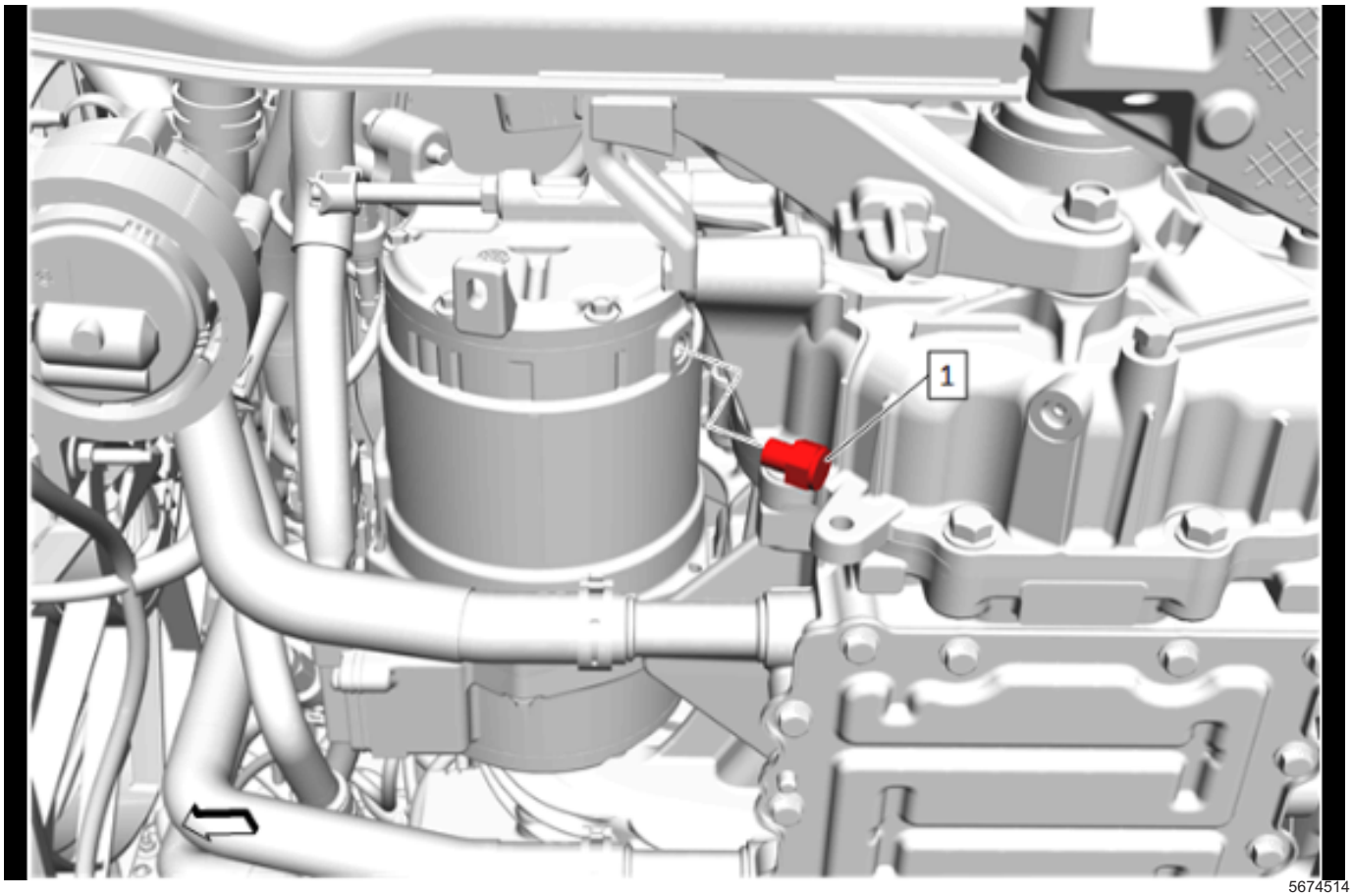

5674514

Air Conditioning Compressor Pressure Relief Valve

Callout	Component Name [Component Quantity]	Single Use Fastener/ Component	Thread Locking Adhesive Required	Specification Metric (English)	Procedure
1	Air Conditioning Compressor Pressure Relief Valve	—	—	**7 N•m(62 lb in)**	*Air Conditioning Compressor Pressure Relief Valve Replacement on page 5-86*

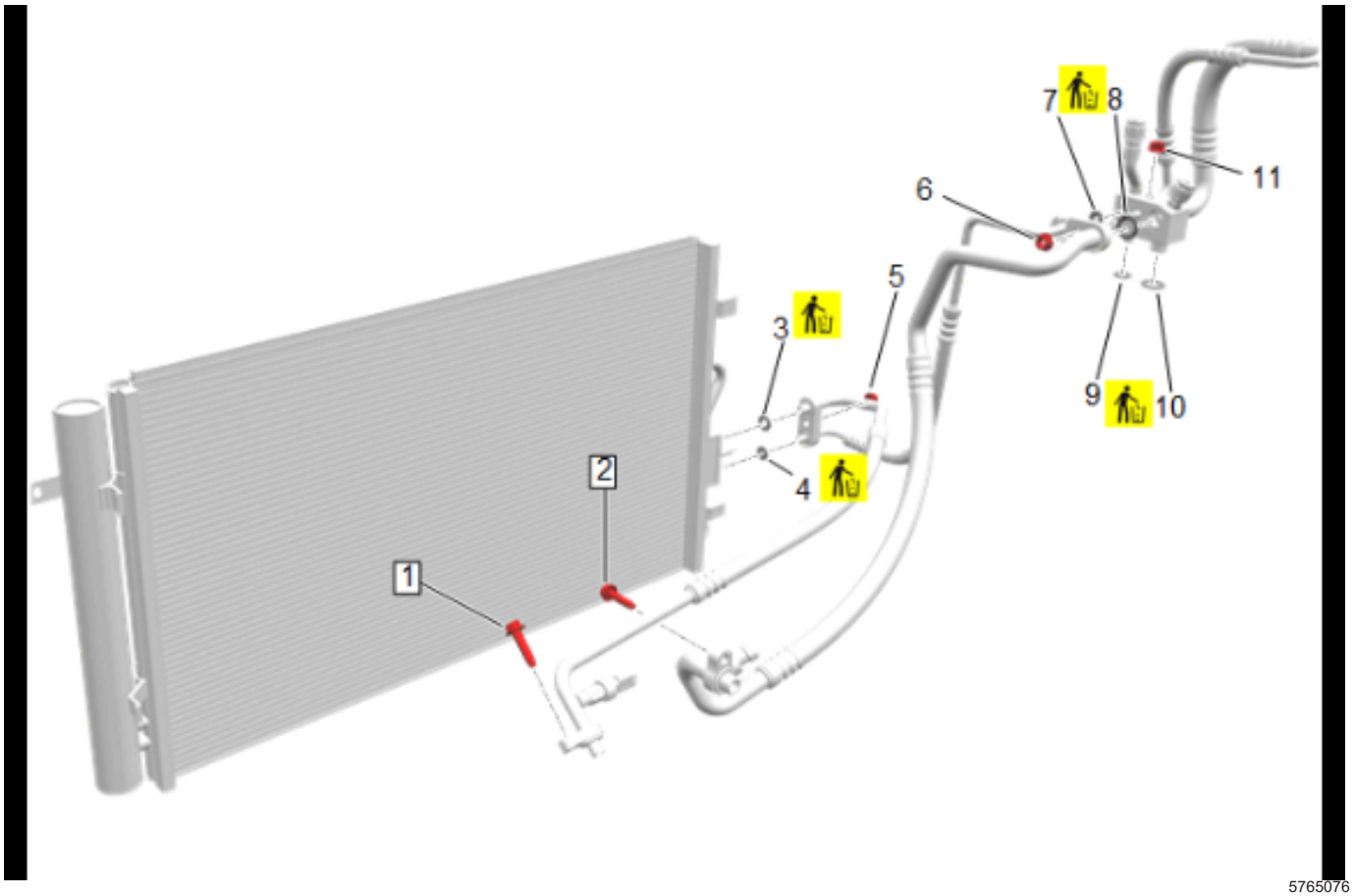

5765076

Air Conditioning Condenser

Callout	Component Name [Component Quantity]	Single Use Fastener/ Component	Thread Locking Adhesive Required	Specification Metric (English)	Procedure
1	Air Conditioning Condenser Hose Bolt	—	—	**22 N•m(16 lb ft)**	*Air Conditioning Condenser Hose Replacement on page 5-108*
2	Air Conditioning Compressor Hose Bolt	—	—	**22 N•m(16 lb ft)**	*Air Conditioning Compressor Hose Replacement on page 5-96*
3	Air Conditioning Condenser Hose Seal - Low Pressure	Yes	—	—	*Air Conditioning Condenser Hose Replacement on page 5-108*
4	Air Conditioning Condenser Hose Seal - High Pressure	Yes	—	—	*Air Conditioning Condenser Hose Replacement on page 5-108*
5	Air Conditioning Condenser Hose Nut	—	—	**22 N•m(16 lb ft)**	*Air Conditioning Condenser Hose Replacement on page 5-108*
6	Air Conditioning Compressor Hose Nut	—	—	**22 N•m(16 lb ft)**	*Air Conditioning Compressor Hose Replacement on page 5-96*

Air Conditioning Condenser (cont'd)

Callout	Component Name [Component Quantity]	Single Use Fastener/ Component	Thread Locking Adhesive Required	Specification Metric (English)	Procedure
7	Air Conditioning Condenser Hose Seal	Yes	—	—	Air Conditioning Condenser Hose Replacement on page 5-108
8	Air Conditioning Compressor Hose Seal	Yes	—	—	Air Conditioning Compressor Hose Replacement on page 5-96
9	Air Conditioning Evaporator Hose Seal - Large	Yes	—	—	Air Conditioning Evaporator Hose Replacement on page 5-125
10	Air Conditioning Evaporator Hose Seal - Small	Yes	—	—	Air Conditioning Evaporator Hose Replacement on page 5-125
11	Air Conditioning Evaporator Hose Nut	—	—	**22 N•m(16 lb ft)**	Air Conditioning Evaporator Hose Replacement on page 5-125

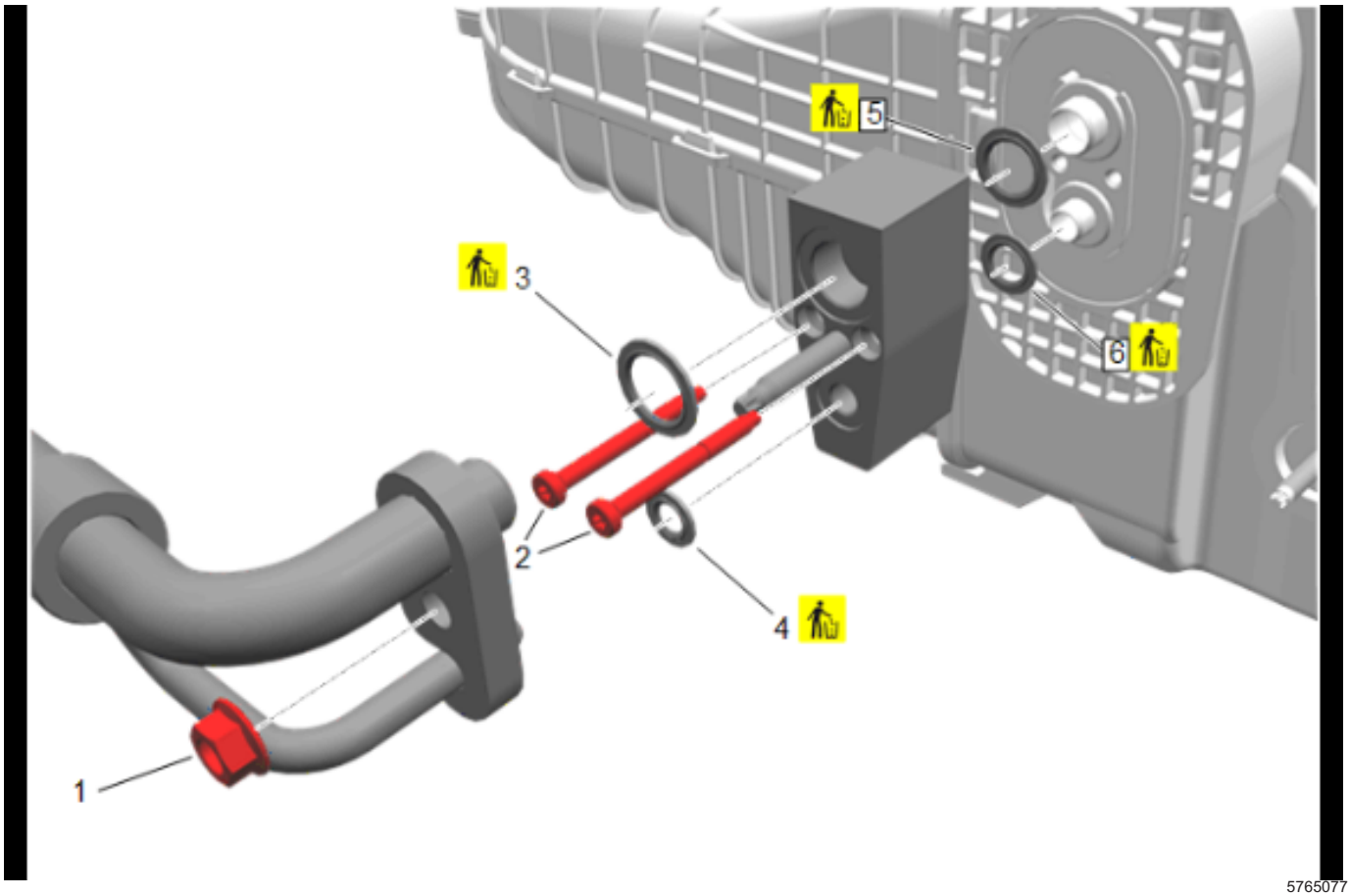

5765077

Air Conditioning Evaporator Thermal Expansion Valve

Callout	Component Name [Component Quantity]	Single Use Fastener/ Component	Thread Locking Adhesive Required	Specification Metric (English)	Procedure
1	Air Conditioning Evaporator Hose Nut	—	—	22 N•m (16 lb ft)	Air Conditioning Evaporator Hose Replacement on page 5-125
2	Air Conditioning Evaporator Thermal Expansion Valve Bolt [2x]	—	—	**7 N•m(62 lb in)**	Air Conditioning Evaporator Thermal Expansion Valve Replacement on page 5-158
3	Air Conditioning Evaporator Hose Seal - Large	Yes	—	—	Air Conditioning Evaporator Hose Replacement on page 5-125
4	Air Conditioning Evaporator Hose Seal - Small	Yes	—	—	Air Conditioning Evaporator Hose Replacement on page 5-125
5	Air Conditioning Evaporator Thermal Expansion Valve Seal - Large	Yes	—	—	Air Conditioning Evaporator Thermal Expansion Valve Replacement on page 5-158
6	Air Conditioning Evaporator Thermal Expansion Valve Seal - Small	Yes	—	—	Air Conditioning Evaporator Thermal Expansion Valve Replacement on page 5-158

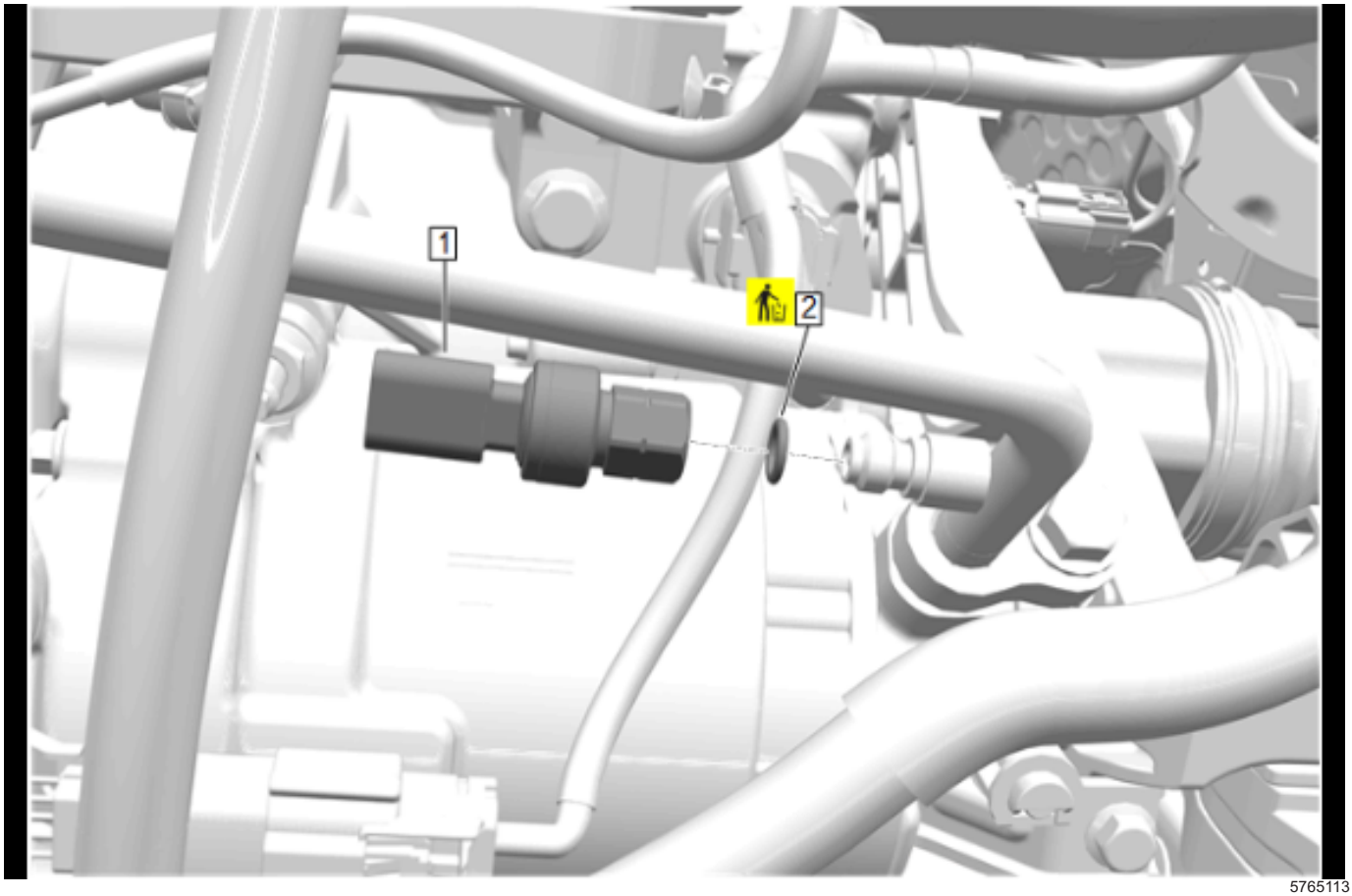

5765113

Air Conditioning Refrigerant Pressure Sensor - High Pressure

Callout	Component Name [Component Quantity]	Single Use Fastener/ Component	Thread Locking Adhesive Required	Specification Metric (English)	Procedure
1	Air Conditioning Refrigerant Pressure Sensor	—	—	**7.5 N•m(66 lb in)**	Air Conditioning Refrigerant Pressure Sensor Replacement - High Pressure on page 5-170
2	Air Conditioning Refrigerant Pressure Sensor Seal	Yes	—	—	Air Conditioning Refrigerant Pressure Sensor Replacement - High Pressure on page 5-170

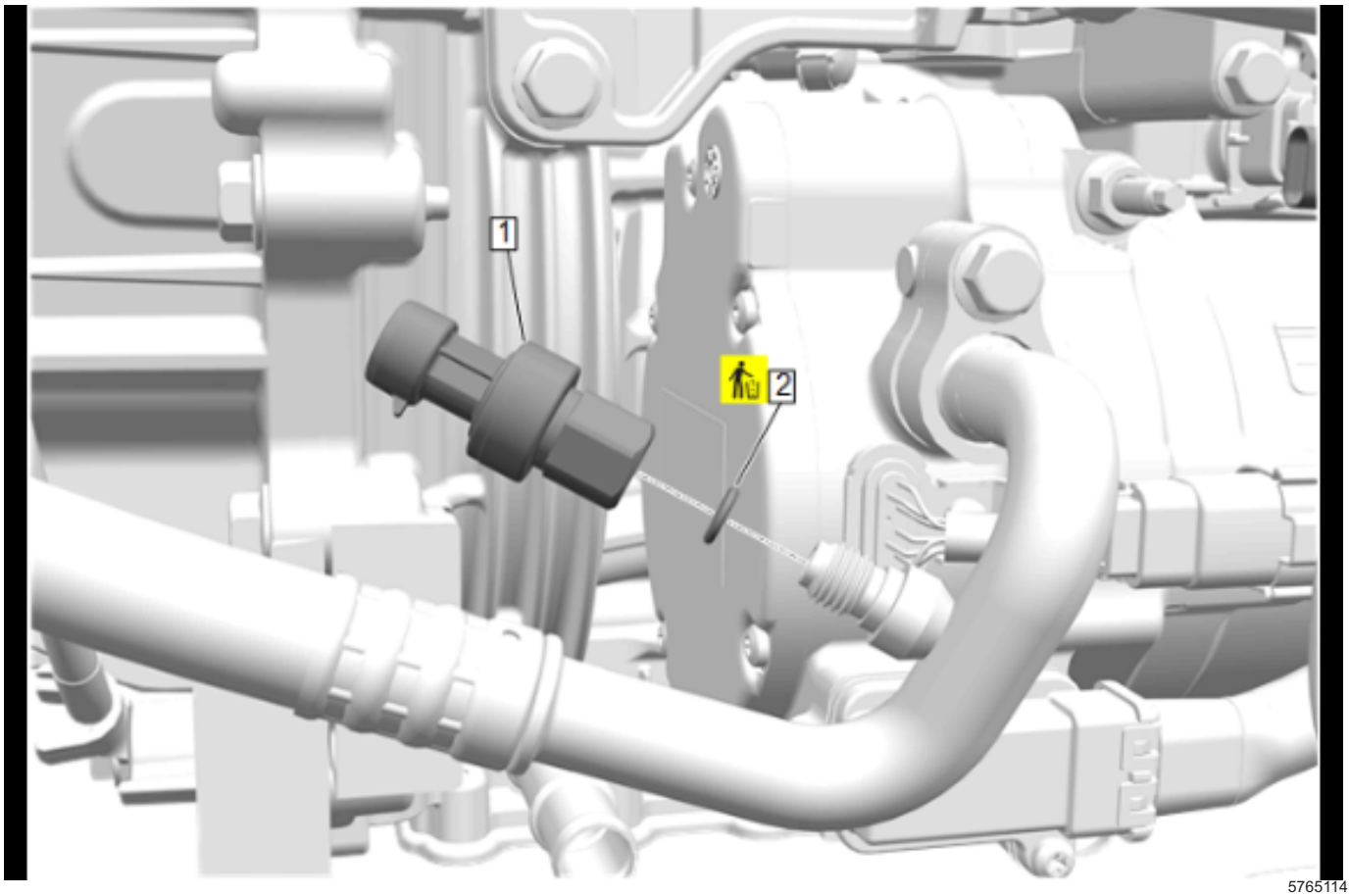

5765114

Air Conditioning Refrigerant Pressure Sensor - Low Pressure

Callout	Component Name [Component Quantity]	Single Use Fastener/ Component	Thread Locking Adhesive Required	Specification Metric (English)	Procedure
1	Air Conditioning Refrigerant Pressure Sensor	—	—	**7.5 N•m(66 lb in)**	Air Conditioning Refrigerant Pressure Sensor Replacement - High Pressure on page 5-170
2	Air Conditioning Refrigerant Pressure Sensor Seal	Yes	—	—	Air Conditioning Refrigerant Pressure Sensor Replacement - High Pressure on page 5-170

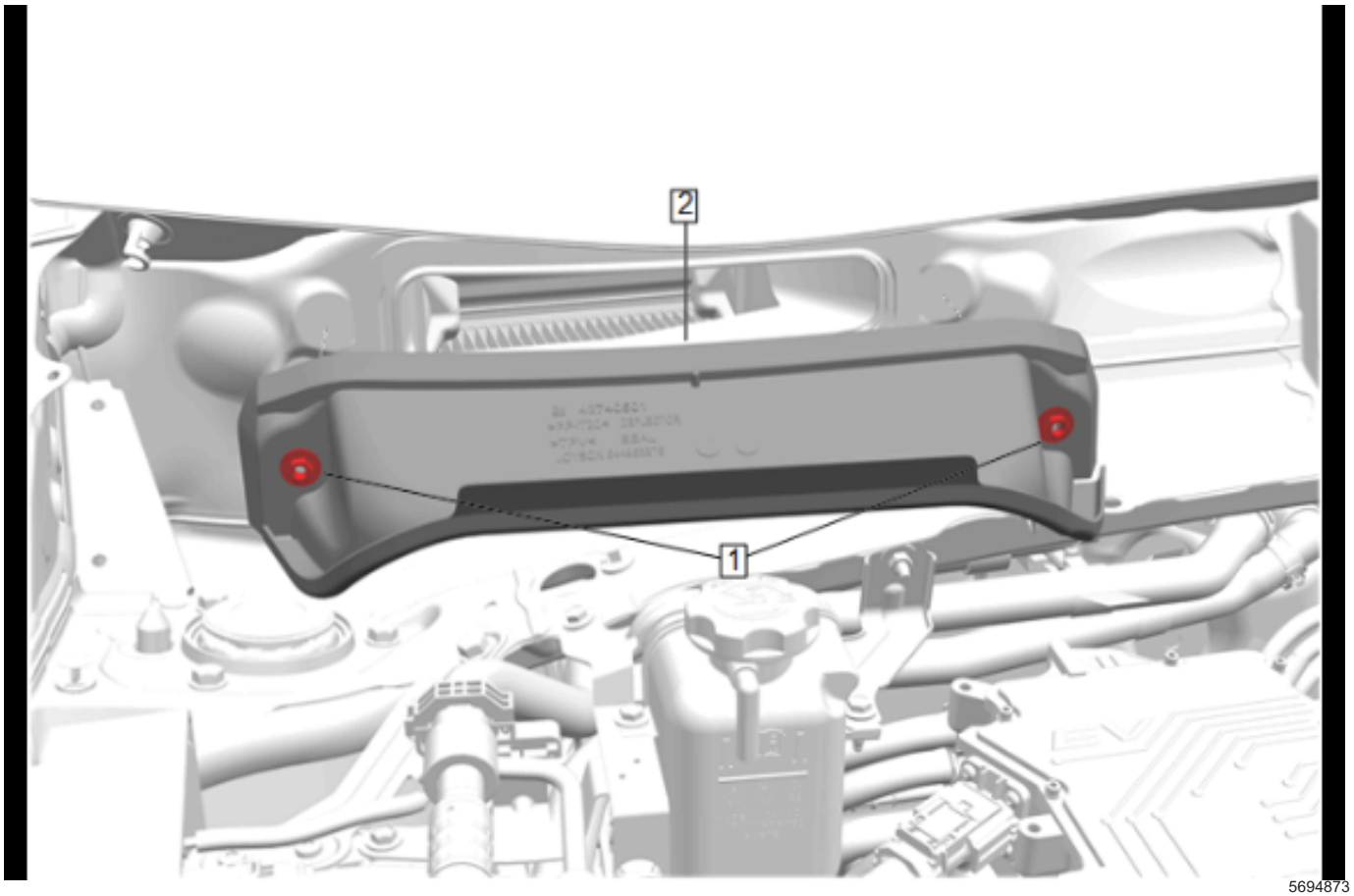

5694873

Air Inlet Deflector Water Deflector

Callout	Component Name [Component Quantity]	Single Use Fastener/ Component	Thread Locking Adhesive Required	Specification Metric (English)	Procedure
1	Air Inlet Deflector Water Deflector Retainer Nut	—	—	**6 N•m(53 lb in)**	*Air Inlet Deflector Water Deflector Replacement on page 5-395*

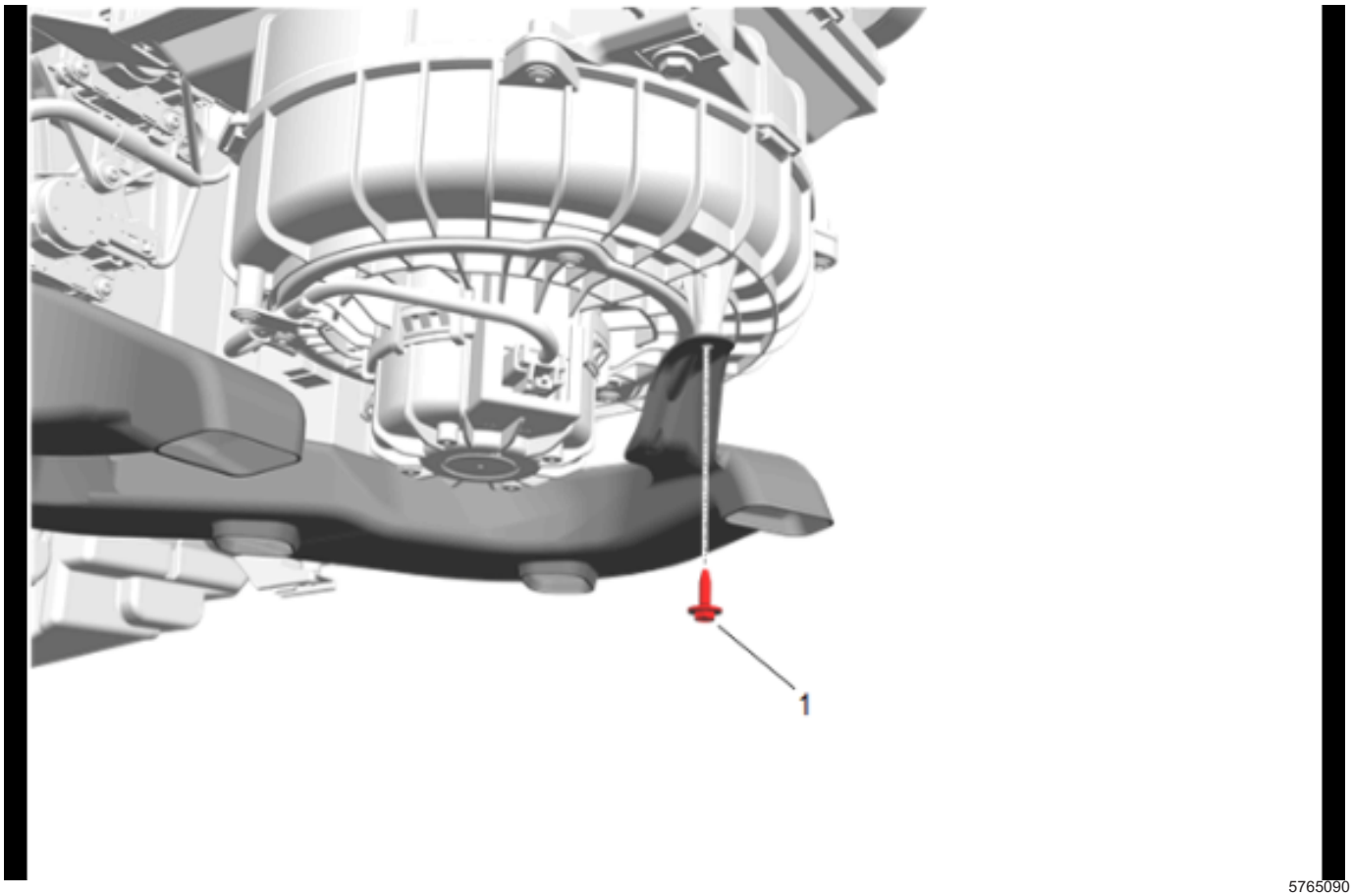

5765090

Floor Front Air Outlet Duct - Right Side

Callout	Component Name [Component Quantity]	Single Use Fastener/ Component	Thread Locking Adhesive Required	Specification Metric (English)	Procedure
1	Floor Front Air Outlet Duct Bolt	—	—	**2.5** N•m**(22 lb in)**	*Floor Front Air Outlet Duct Replacement - Right Side on page 5-496*

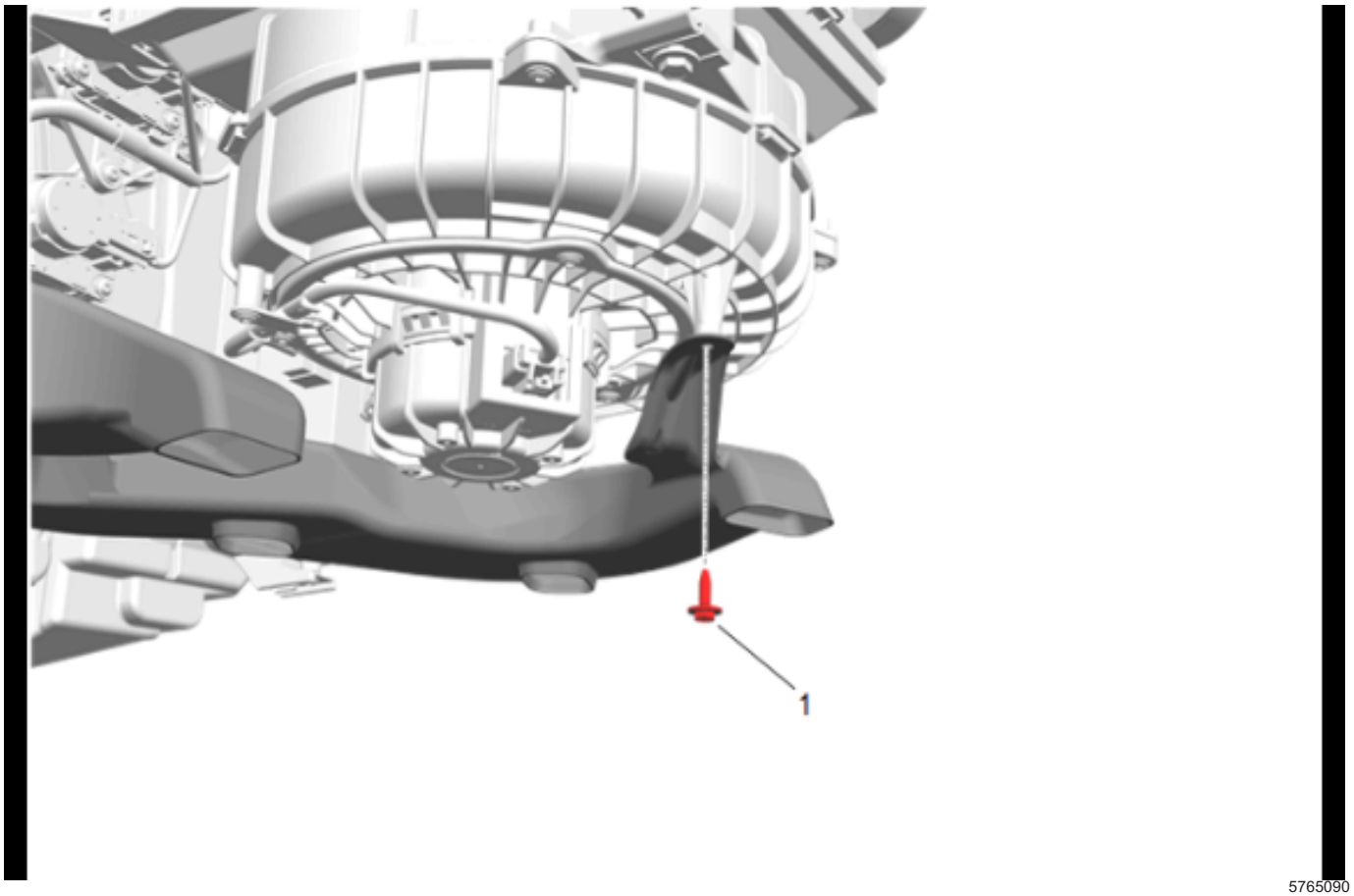

5765090

Floor Rear Air Outlet Duct

Callout	Component Name [Component Quantity]	Single Use Fastener/ Component	Thread Locking Adhesive Required	Specification Metric (English)	Procedure
1	Floor Rear Air Outlet Duct Nut [2x]	—	—	**3 N•m(27 lb in)**	*Floor Rear Air Outlet Duct Replacement on page 5-545*

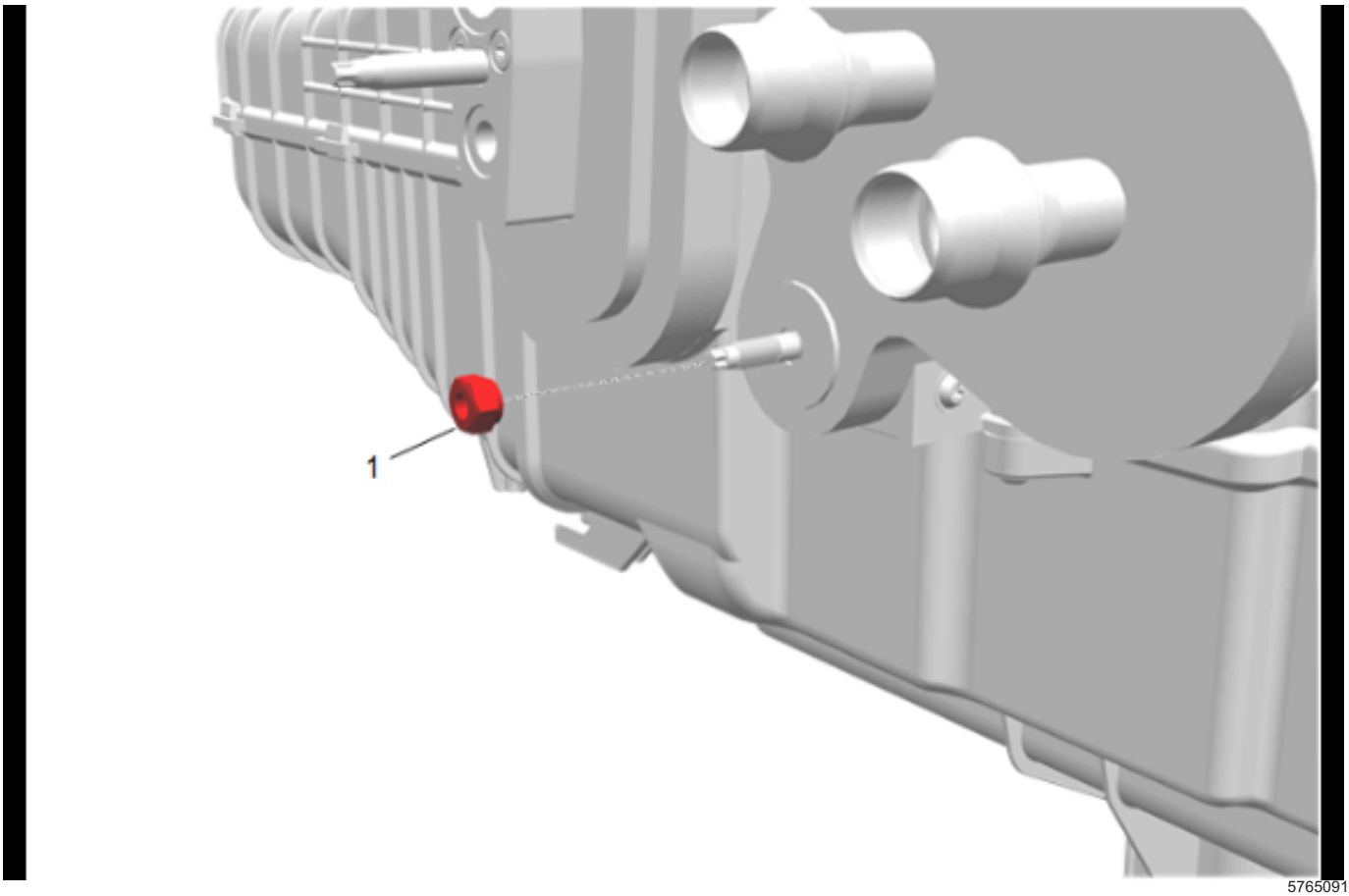

5765091

Heater and Air Conditioning Evaporator and Blower Module

Callout	Component Name [Component Quantity]	Single Use Fastener/ Component	Thread Locking Adhesive Required	Specification Metric (English)	Procedure
1	Heater and Air Conditioning Evaporator and Blower Module Nut	—	—	**9 N•m(80 lb in)**	*Heater and Air Conditioning Evaporator and Blower Module Removal and Installation on page 5-199*

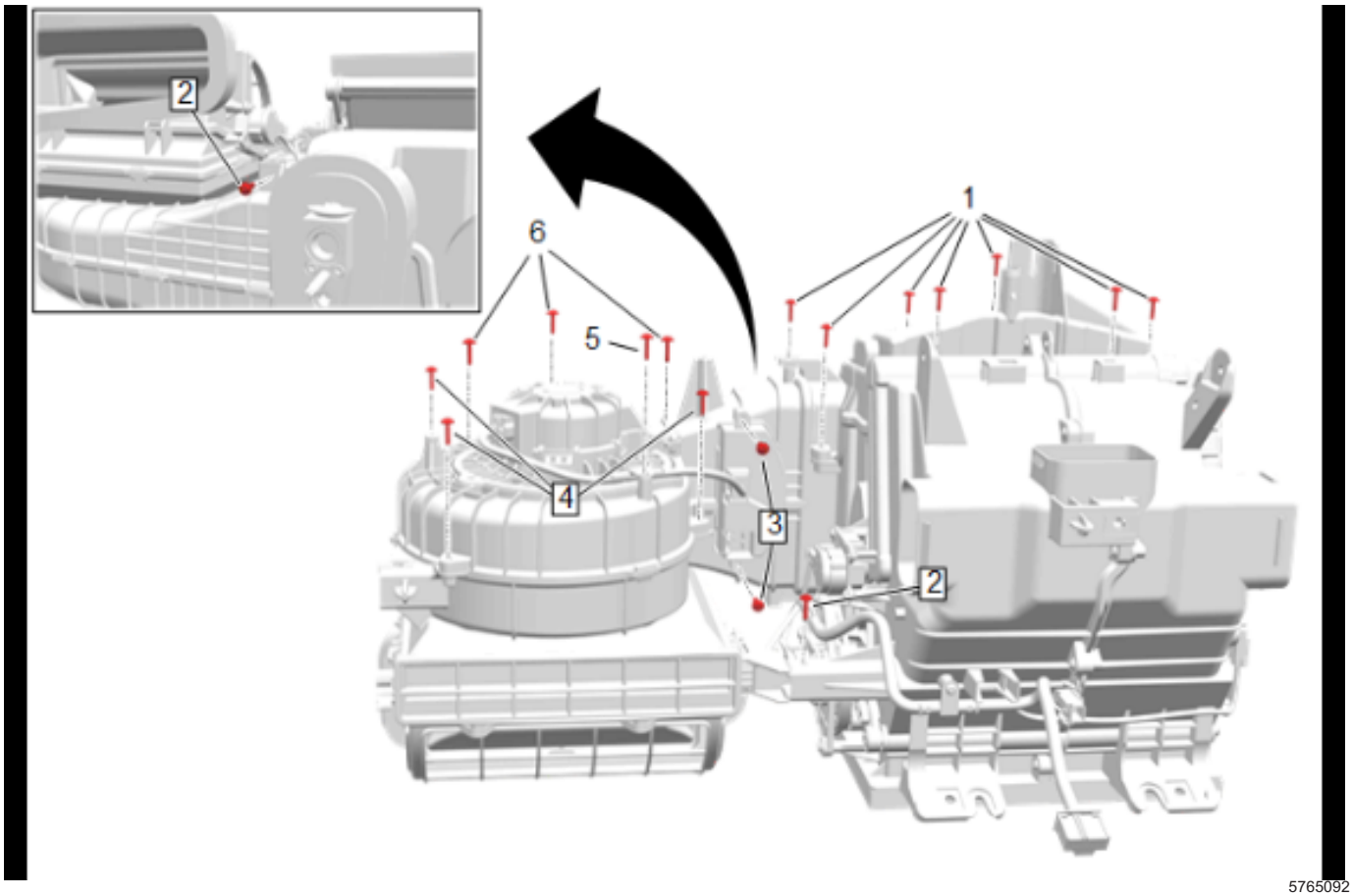

Heater and Air Conditioning Evaporator and Blower Module Fastener

Callout	Component Name [Component Quantity]	Single Use Fastener/ Component	Thread Locking Adhesive Required	Specification Metric (English)	Procedure
1	Heater Case Screw [7x]	—	—	**2.5** N•m**(22 lb in)**	Heater Case Replacement on page 5-600
2	Heater and Air Conditioning Evaporator Case Bolt	—	—	**2.5** N•m**(22 lb in)**	Heater and Air Conditioning Evaporator Case Replacement on page 5-284
3	Blow Motor Control Bolt [2x]	—	—	**2.5** N•m**(22 lb in)**	Blower Motor Control Replacement on page 5-414
4	Blower Upper Case Screw [3x]	—	—	**2.5** N•m**(22 lb in)**	Blower Upper Case Replacement on page 5-301
5	Blower Motor Control Wiring Harness Screw	—	—	**2.5** N•m**(22 lb in)**	Blower Motor Replacement on page 5-420
6	Blower Lower Case Screw [3x]	—	—	**2.5** N•m**(22 lb in)**	Blower Lower Case Replacement on page 5-289

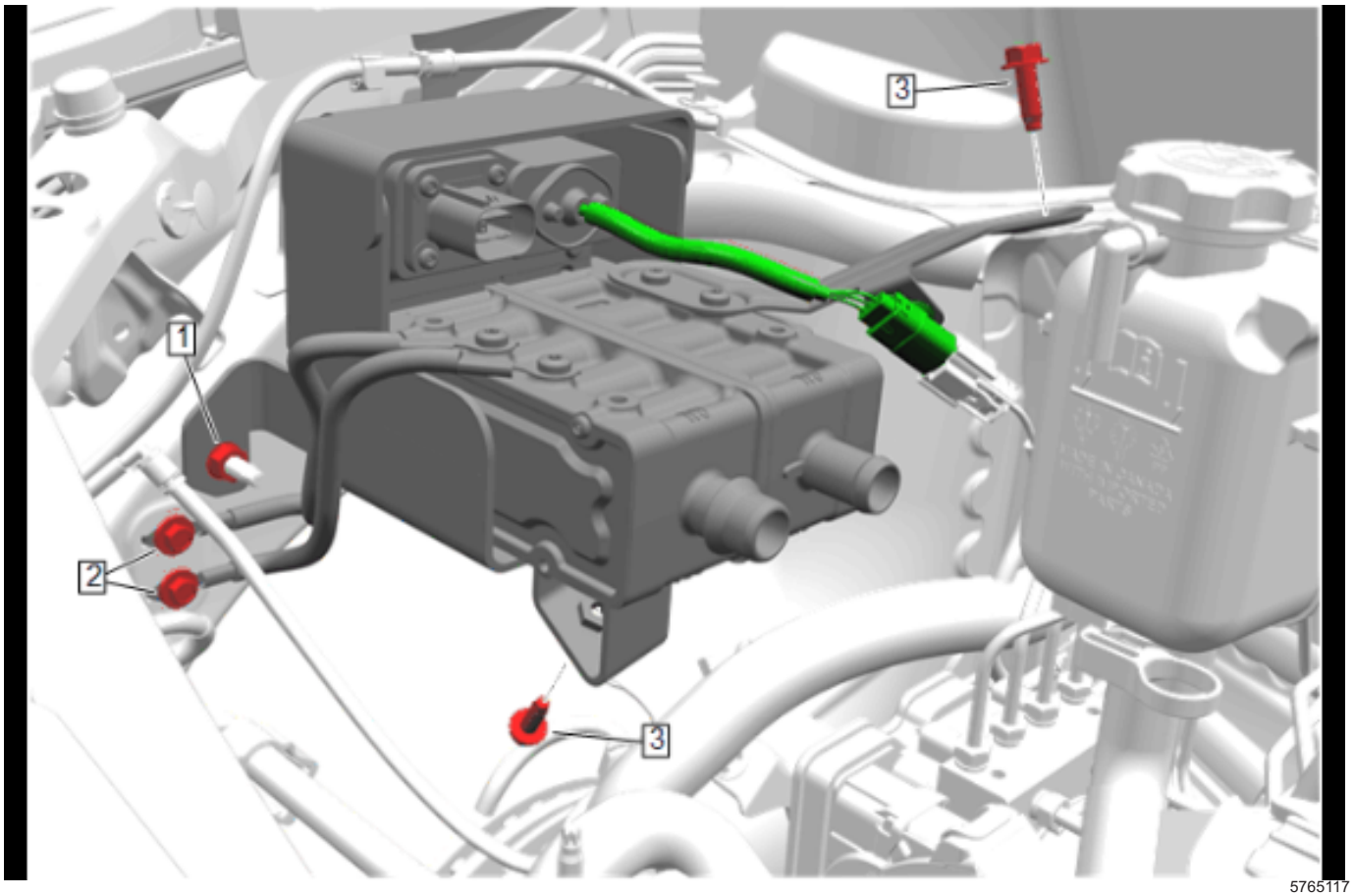

5765117

Heater Coolant Heater

Callout	Component Name [Component Quantity]	Single Use Fastener/ Component	Thread Locking Adhesive Required	Specification Metric (English)	Procedure
1	Heater Coolant Heater Nut	—	—	**9 N•m(80 lb in)**	*Heater Coolant Heater Replacement on page 5-573*
2	Heater Coolant Heater Wiring Harness Bolt [2x]	—	—	**9 N•m(80 lb in)**	*Heater Coolant Heater Replacement on page 5-573*
3	Heater Coolant Heater Bracket Bolt [2x]	—	—	**9 N•m(80 lb in)**	*Heater Coolant Heater Replacement on page 5-573*

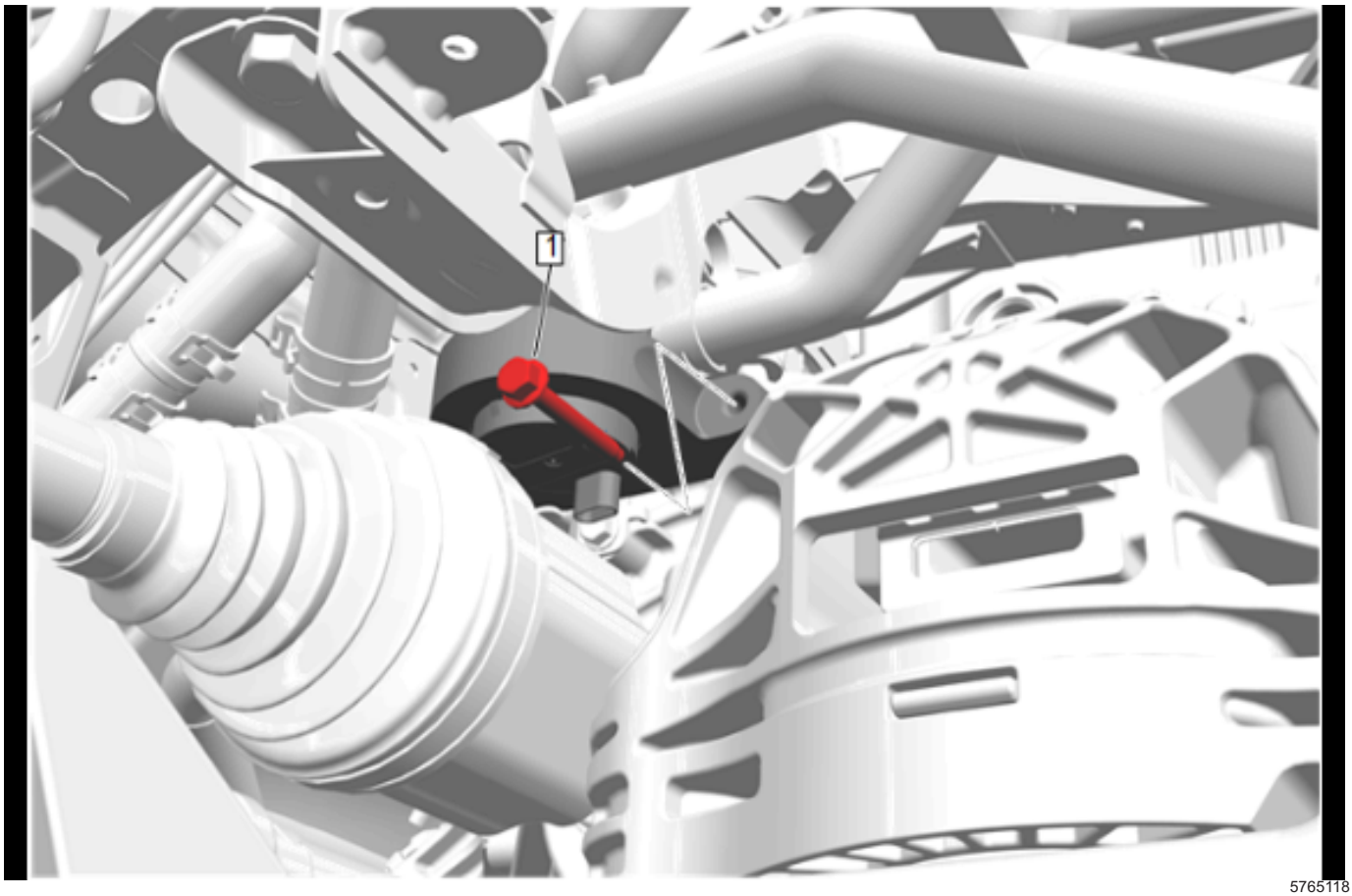

5765118

Heater Coolant Pump

Callout	Component Name [Component Quantity]	Single Use Fastener/ Component	Thread Locking Adhesive Required	Specification Metric (English)	Procedure
1	Heater Coolant Pump Bolt	—	—	**9 N•m(80 lb in)**	*Heater Coolant Pump Replacement on page 5-374*

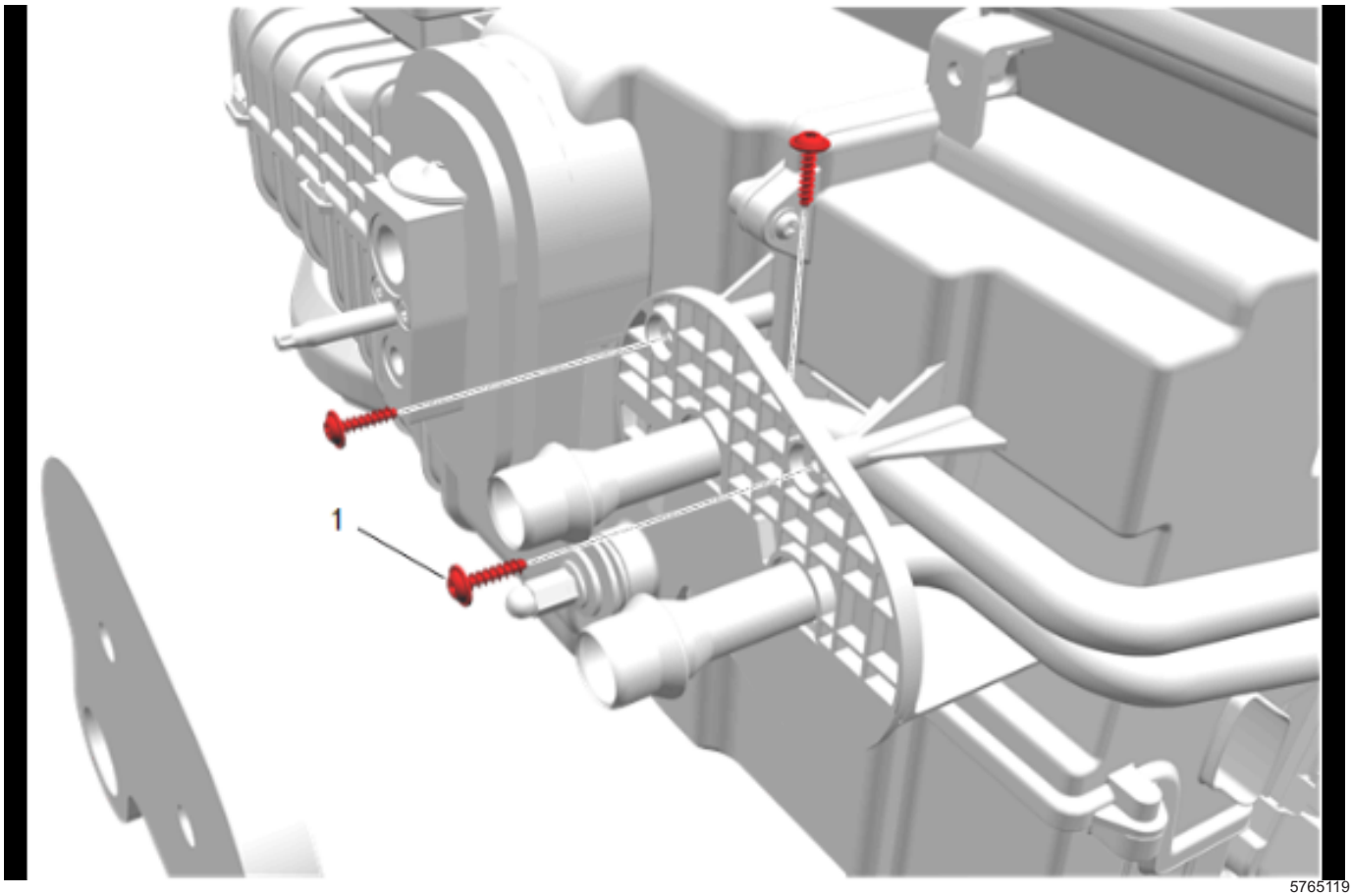

5765119

Heater Coolant Pump

Callout	Component Name [Component Quantity]	Single Use Fastener/ Component	Thread Locking Adhesive Required	Specification Metric (English)	Procedure
1	Heater Core Tube Bracket Bolt	—	—	**2.5** N•m**(22 lb in)**	*Heater Core Replacement on page 5-571*

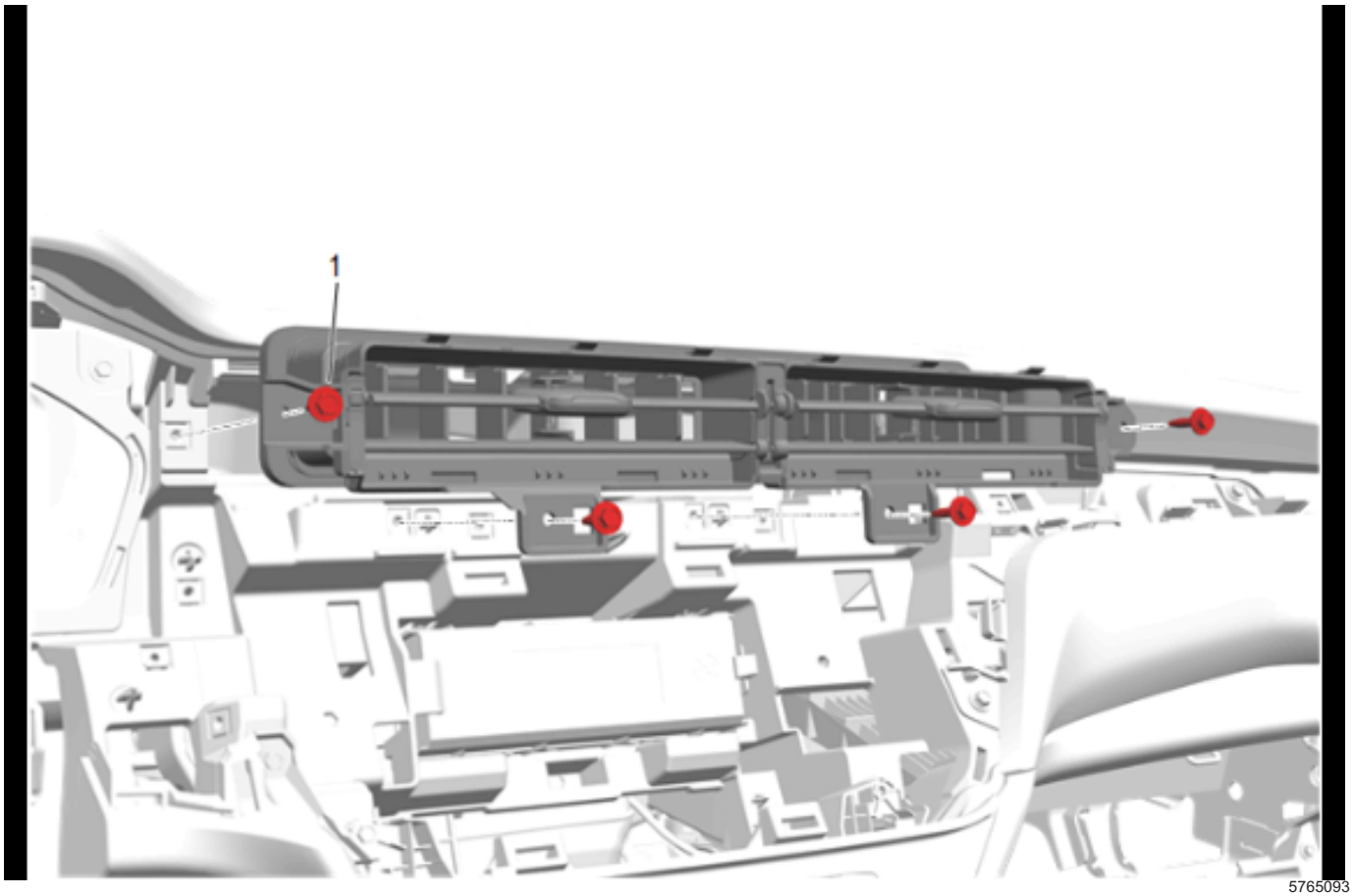

5765093

Instrument Panel Center Air Outlet

Callout	Component Name [Component Quantity]	Single Use Fastener/ Component	Thread Locking Adhesive Required	Specification Metric (English)	Procedure
1	Instrument Panel Center Air Outlet Bolt [4x]	—	—	**2.5 N•m(22 lb in)**	*Instrument Panel Center Air Outlet Replacement on page 5-467*

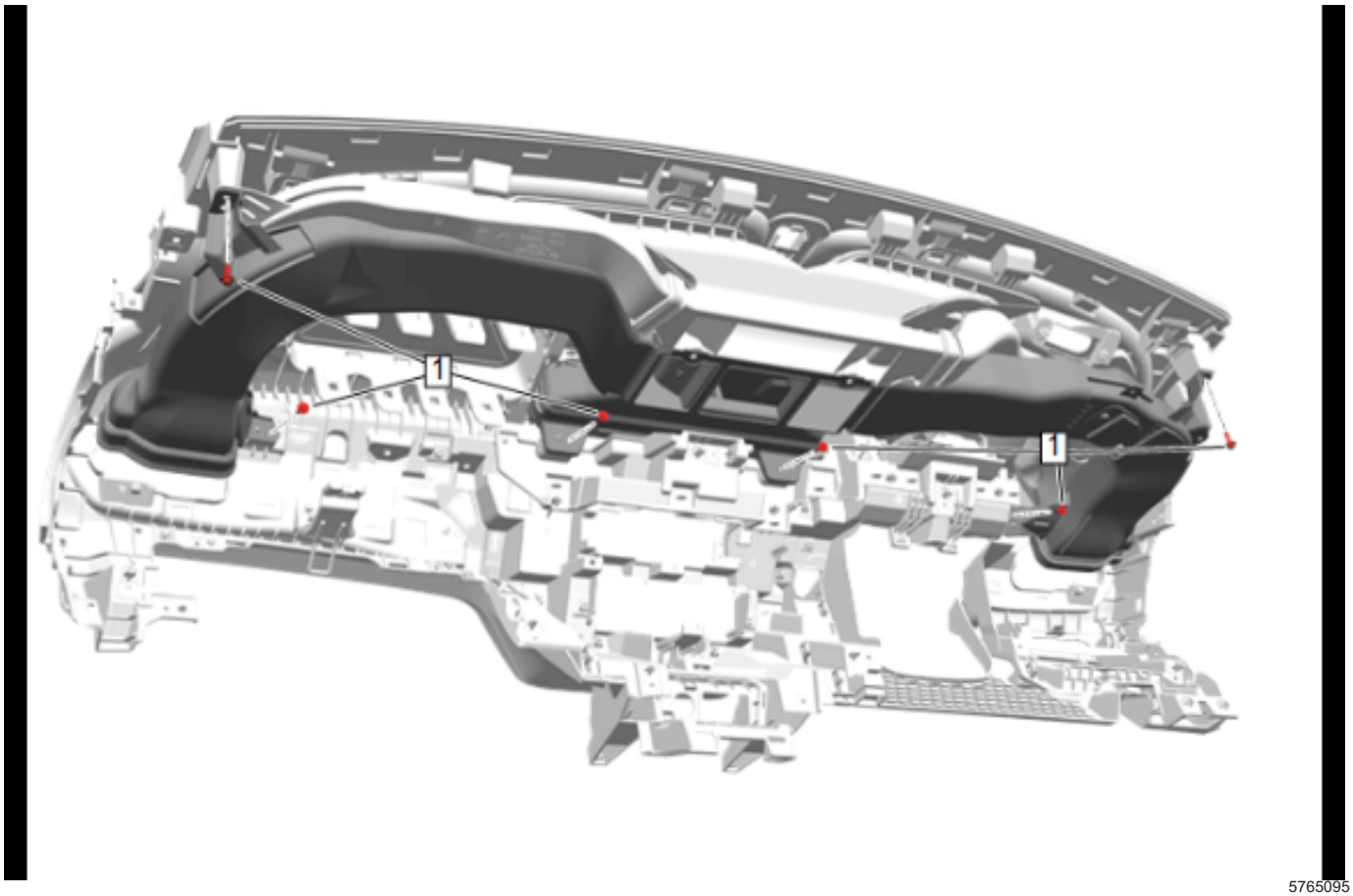

5765095

Instrument Panel Outer Air Outlet Duct

Callout	Component Name [Component Quantity]	Single Use Fastener/ Component	Thread Locking Adhesive Required	Specification Metric (English)	Procedure
1	Instrument Panel Outer Air Outlet Duct Bolt [6x]	—	—	**2.5** N•m**(22 lb in)**	*Instrument Panel Outer Air Outlet Duct Replacement on page 5-510*

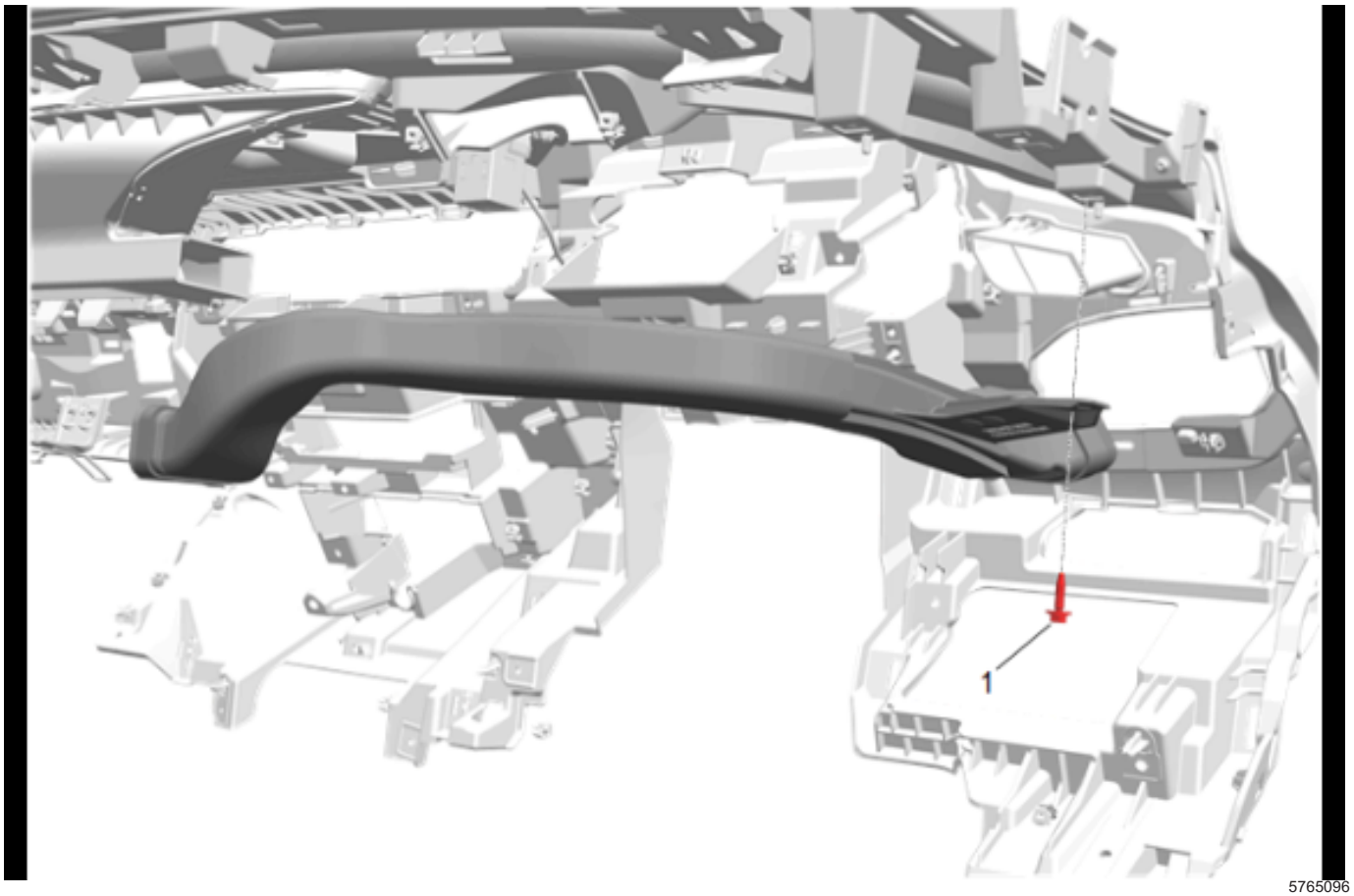

5765096

Side Window Defogger Outlet Duct - Left Side

Callout	Component Name [Component Quantity]	Single Use Fastener/ Component	Thread Locking Adhesive Required	Specification	Procedure
				Metric (English)	
1	Side Window Defogger Outlet Duct Bolt	—	—	**2.5** N•m**(22 lb in)**	*Side Window Defogger Outlet Duct Replacement - Left Side on page 5-530*

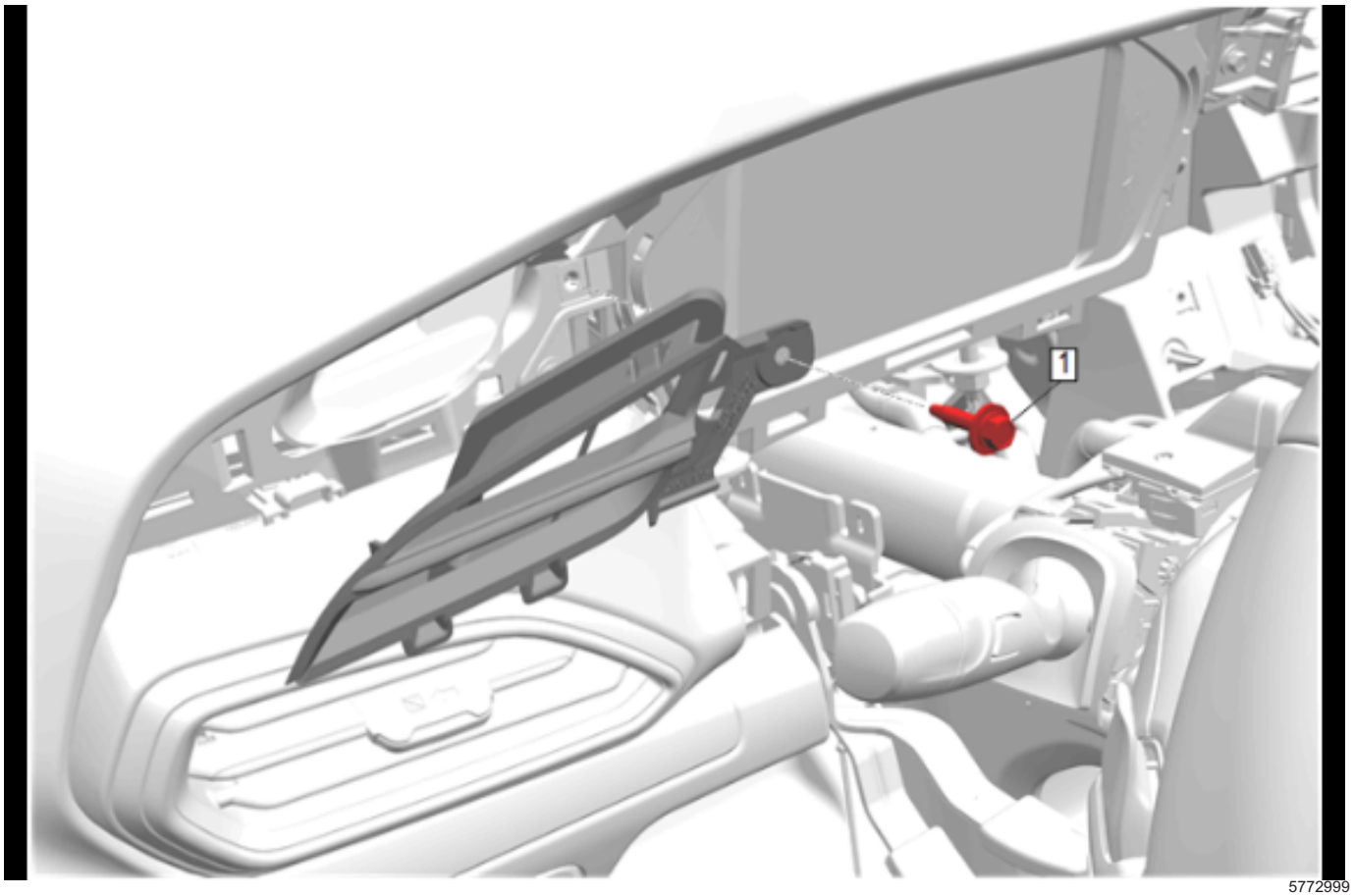

5772999

Side Window Defogger Outlet Grille - Left Side

Callout	Component Name [Component Quantity]	Single Use Fastener/ Component	Thread Locking Adhesive Required	Specification Metric (English)	Procedure
1	Side Window Defogger Outlet Grill Bolt	—	—	**2.5 N•m(22 lb in)**	*Side Window Defogger Outlet Grille Replacement - Left Side on page 5-428*

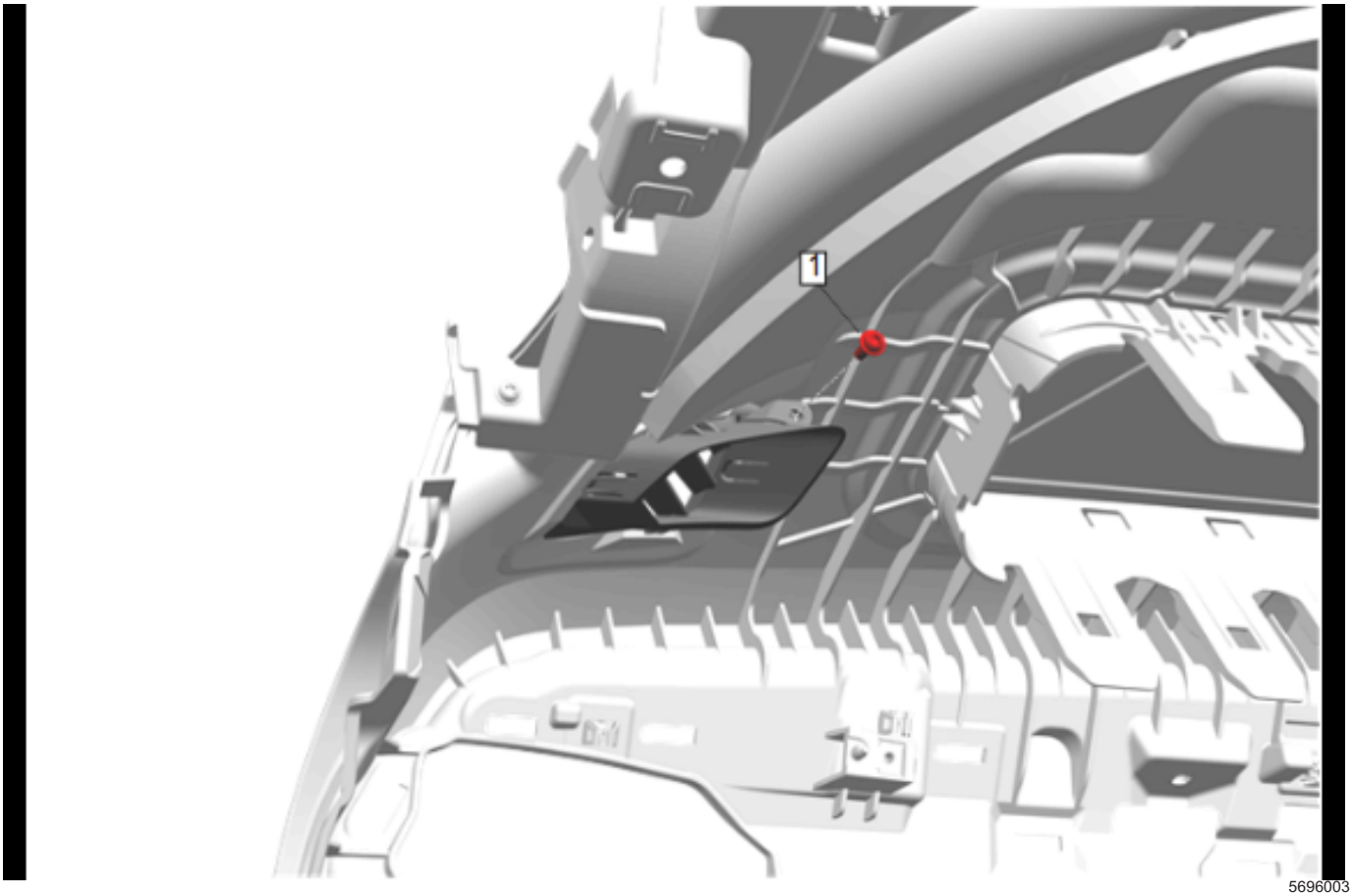

5696003

Side Window Defogger Outlet Grille - Right Side

Callout	Component Name [Component Quantity]	Single Use Fastener/ Component	Thread Locking Adhesive Required	Specification Metric (English)	Procedure
1	Side Window Defogger Outlet Grill Screw	—	—	**2.5** N•m**(22 lb in)**	*Side Window Defogger Outlet Grille Replacement - Right Side on page 5-455*

Approximate Fluid Capacities

Application	Specification	
	Metric	English
Cooling system (Heater cooling)	2.0 liters	2.12 quarts
Refrigerant Charge, R-1234yf[4]	0.725 kg	1.6 lbs
Total System POE Oil Capacity	120 ml	4.1 oz
Compressor[2]	80 ml[1]	2.7 oz[1]
Condenser	36 ml[1]	1.2 oz[1]
Desiccant Cartridge	6 ml[1]	0.2 oz[1]
Evaporator	30 ml[1]	1.0 oz[1]
Drive Motor Battery Cooler	12 ml[1]	0.4 oz[1]
Any Line Set (Hose/Tube or Assembly) Replacement	12 ml[1]	0.4 oz[1]
Abrupt Refrigerant Loss	36 ml[3]	1.2 oz[3]

[1]If more than the specified amount of POE oil was drained from a component, add the equal amount of oil drained.
[2]The service compressor contains 80 ml (2.7 oz) of POE oil.

Approximate Fluid Capacities (cont'd)

Application	Specification	
	Metric	English
[3]Abrupt refrigerant loss due to large leak, hose rupture, collision, or pressure relief valve opening. Conditions that allow the refrigerant to seep or bleed off over time do not cause this oil loss. Upon replacement of a component that caused a large refrigerant loss, also add the required amount of oil for the particular component. [4]This vehicle has a refrigerant charge operational tolerance of -70g to +30g. If refrigerant charge falls outside of this range, please refer to Air Conditioning (A/C) System Performance Test.		

Adhesives, Fluids, Lubricants, and Sealers

Application	Type of Material	GM Part Number		
		United States	Korea	China
Cooling Coil Coating Applicator Kit	Coating	Refer to Electronic Parts Catalog	Refer to Electronic Parts Catalog	Refer to Electronic Parts Catalog
Cooling Coil Coating Applicator Kit – Refill Kit	Coating	Refer to Electronic Parts Catalog	Refer to Electronic Parts Catalog	Refer to Electronic Parts Catalog
POE Oil	Lubricant	88862657	19417569 / 88862657	Refer to Electronic Parts Catalog.

Visual Identification

Refrigerant Label Symbols

Air Conditioning Service Fittings

Service fittings meeting SAE J639 are used on this vehicle for R-1234yf refrigerant. GM has chosen gray caps to designate systems with R-1234yf.

Refrigerant Charge Label Symbols

Symbols	Description
2777417	Caution
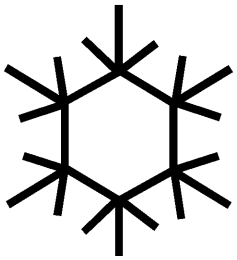 2777423	Air Conditioning System-Mobile Air Conditioning

Refrigerant Charge Label Symbols (cont'd)

Symbols	Description
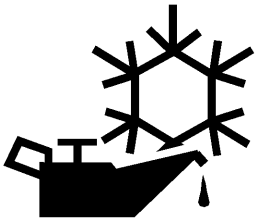 2777430	MAC System Lubricant Type
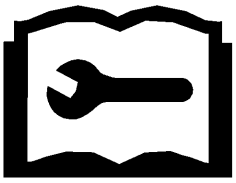 2777449	See Vehicle Service Manual for MAC Service Information
2777476	Requires Registered Technician to Service MAC System

Refrigerant Charge Label Symbols (cont'd)

Symbols	Description
2777547	Flammable Refrigerant
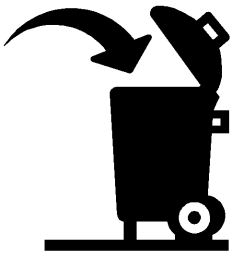 2777559	For Safety System Components Shall Be Replaced-Shall Not Be Repaired or Salvaged for Reuse

Diagnostic Information and Procedures

Handling of Refrigerant Lines and Fittings

Caution: To avoid system damage use only R-1234yf and R-134a dedicated tools when servicing the A/C system.

- Keep all metal tubing lines free of dents or kinks. Any line restrictions will cause the loss of system capacity.
- Never bend a flexible hose line to a radius of less than four times the diameter of the hose.
- Never allow a flexible hose line to come within 65 mm (2–1/2 in) of the exhaust manifold.
- Inspect flexible hose lines regularly for leaks or brittleness.
- Replace flexible hose lines with new lines if you find signs of deterioration or leaking.
- Discharge the refrigeration system of all refrigerant before disconnecting any fitting in the refrigeration system.
- Proceed very cautiously regardless of the gauge readings.

Warning: For personal protection, goggles and lint-free gloves must be worn and a clean cloth wrapped around fittings, valves, and connections when doing work that includes opening the refrigerant system. If refrigerant comes in contact with any part of the body severe frostbite and personal injury can result. The exposed area should be flushed immediately with cold water and prompt medical help should be obtained.

- Open the fittings very slowly.
- If you notice pressure when you loosen a fitting, allow the pressure to bleed off as described Discharging, Adding Oil, Evacuating, and Charging Procedures for A/C System .
- Cap or tape any refrigerant line immediately after it is opened. This will prevent the entrance of moisture and dirt, which can cause internal compressor wear or plugged lines in the condenser, the evaporator core, the expansion valve, or the compressor inlet screens.

  Note: Use two proper wrenches to connect the fittings.

- Back up the opposing fitting to prevent distortion of the connecting lines or the components.
- Keep the sealing surfaces in perfect condition. A burr or a piece of dirt may cause a refrigerant leak.

Caution: New Air Conditioning sealing washers should never be exposed to any type of oil or lubricant, the rubber material may absorb the oil causing failures during installation or the life of the vehicle.

- When seal washers are used, always install the seal washer without lubrication.

Leak Testing

Special Tools

- *GE-42220* Universal 12V Leak Detection Lamp
- *GE-43872* Fluorescent Dye Cleaner
- *GE-50078* Electronic Leak Detector
- *GE-50745* R-1234yf POE Oil Injection Hose

Equivalent regional tools: *Special Tools on page 5-603*

Refrigerant Leak Testing

Technicians repairing or servicing motor vehicle air conditioning (MVAC) systems must be trained and certified by an Environmental Protection Agency (EPA) approved organization. Certification is obtained by passing an EPA approved examination. (http://www.epa.gov/ozone/title6/609/technicians/609certs.html)

Warning: Technicians must only use a SAE J2913 certified electronic leak detector when checking for leaks in an R-1234yf A/C refrigerant system. Other, non–certified, leak detection devices could serve as ignition sources in the presence of hydrocarbons or other flammable refrigerants. Failure to follow these precautions may cause personal injury and/or damage to the vehicle or its components.

Warning: R1234-yf is considered a mildly flammable refrigerant and proper refrigerant leak testing should be completed to ensure safe and proper operation. Failure to follow these precautions may cause personal injury and/or damage to the vehicle or its components.

Caution: Leak detection shall only be done with the refrigerant that is specified for the system. Do not attempt to increase pressure of the A/C refrigerant system with shop air or another type of refrigerant. Failure to follow the above guidelines could result in damage to the vehicle or its components.

Note: General Motors vehicles are manufactured with fluorescent dye installed in the Air Conditioning (A/C) refrigerant system.

The fluorescent dye mixes and flows with the A/C compressor oil throughout the refrigerant system.

Note: The only time adding additional fluorescent dye is required is after flushing the A/C system.

Verifying some passive leaks may require using *GE-50078* Electronic Leak Detector or a SAE J2913 certified electronic leak detector, even though the refrigerant system contains fluorescent dye.

Fluorescent Leak Detection

Fluorescent dye will assist in locating any leaks in the A/C system.

- Condensation on the evaporator core or the refrigerant lines may wash the compressor oil and fluorescent dye away from the actual leak. Condensation may also carry dye through the Heating Ventilation and Air Conditioning (HVAC) module drain.
- Leaks in the A/C system will be indicated in a light green or yellow color when using the leak detection lamp.

  Use the leak detection lamp in the following areas:
  - All fittings or connections that use seal washers or O-rings
  - All of the A/C components
  - The A/C compressor shaft seal
  - The A/C hoses and pressure switches
  - The HVAC module drain tube, if the evaporator core is suspected of leaking
  - The service port sealing caps
  - The sealing cap is the primary seal for the service ports
- Follow the instructions supplied with *GE-42220* Universal 12V Leak Detection Lamp.
- To prevent false diagnosis in the future, thoroughly clean the residual dye from any area where leaks were found. Use a rag and the approved *GE-43872* Fluorescent Dye Cleaner.

Fluorescent Dye Addition

Note: The only time adding additional fluorescent dye is required is after flushing the A/C system.

Note: The air conditioning refrigerant desiccant is manufactured with a POE fluorescent leak detection dye wafer inside.

- To add fluorescent dye, replace the air conditioning receiver and dehydrator. *Air Conditioning Receiver and Dehydrator Replacement on page 5-135*

Electronic Leak Detector – SAE J2913 Certified

Ensure that the vehicle has at least 15 percent of the specified refrigerant charge in the A/C refrigeration system in order to perform a leak test. Refer to *Refrigerant Recovery and Recharging on page 5-36*.

Note: Follow a continuous path in order to ensure that you will not miss any possible leaks. Test all areas of the system for leaks.

Follow the manufacturer instructions supplied with *GE-50078* Electronic Leak Detector or a SAE J2913 certified electronic leak detector.

Air Conditioning (A/C) System Performance Test

This test measures the operating efficiency of the A/C system under the following conditions:

- The current ambient air temperature
- The current relative humidity
- The high side pressure of the A/C system
- The low side pressure of the A/C system
- The temperature of the air being discharged into the passenger compartment

Test Description

The numbers below refer to the step numbers on the diagnostic table.

1. This step determines if the A/C system has at least the minimum refrigerant charge required to operate the system without damage.
2. This step measures the performance of the A/C system.
3. This step is to allow for vehicle variations as well as high ambient temperatures.

Air Conditioning (A/C) System Performance Test

Step	Action	Values	Yes	No
Note: • The ambient air temperature must be at least 16°C (60°F) . • Do not induce additional air flow across the front of the vehicle during the test. • If you were sent here from a DTC diagnostic table, clear the DTC upon completion of this test.				

Air Conditioning (A/C) System Performance Test (cont'd)

Step	Action	Values	Yes	No
1	1. Park the vehicle inside or in the shade. 2. Open the windows in order to ventilate the interior of the vehicle. 3. If the A/C system was operating, allow the A/C system to equalize for about 2 minutes. 4. Turn OFF the ignition. 5. Install the *GE–48800* CoolTech A/C Recharge Machine. 6. Record the ambient air temperature and humidity. 7. Record the low and high side STATIC pressure readings. Are both the low side and high side pressures within the specified value?	More than 16°C (60°F) – 345 kPa (50 psi) More than 24°C (75°F) – 483 kPa (70 psi) More than 33°C (90°F) – 690 kPa (100 psi)	Go to *Step 2*	Go to *Leak Testing on page 5-24*
2	**Note:** Record the relative humidity and the ambient air temperature at the time of the test. 1. Close the vehicle doors and windows. 2. Open the drivers door window 12.7–15.2 cm (5–6 in). 3. Select the following HVAC control settings: • The A/C is ON. • The coldest temperature setting • The maximum blower speed • Recirculation mode • The instrument panel (I/P) outlet mode • All I/P outlets are OPEN. 4. Install thermometers in the left and right center panel air outlets. 5. Apply the parking brake. 6. Place the transaxle/transmission in one of the following positions: • PARK (Automatic) • NEUTRAL (Manual) 7. Turn vehicle On 8. Operate the A/C system for 5 minutes. 9. Inspect A/C components for the following conditions: • Abnormal frost areas • Unusual noises 10. Record the following information: • The panel outlet air temperatures • The low-side pressure • The high-side pressure 11. Compare the low and high side pressures and the panel output temperatures to the A/C Performance Table below. Does all the data recorded fall within the specified ranges of the A/C Performance Table below?	—	Go to *Step 5*	Go to *Step 3*
3	If the pressures and temperatures recorded do not fall within the specified ranges: 1. Continue to operate the A/C system for an additional 5 minutes. 2. Record the pressures and temperatures again. 3. Compare the low and high side pressures and the panel output temperature to the A/C Performance Table below. Does all the data recorded fall within the specified ranges of the A/C Performance Table below?	—	Go to *Step 5*	Go to *Step 4*
4	Perform the necessary repairs. Refer to *A/C Diagnostics Chart on page 5-27*. Is the action complete?	—	Go to *Step 5*	—

Air Conditioning (A/C) System Performance Test (cont'd)

Step	Action	Values	Yes	No
5	Operate the system in order to verify the test results. Did you find the same results?	—	System OK	Go to Symptoms - HVAC Systems - Automatic

A/C Performance Table

Ambient Temperature	Relative Humidity	Low Side Service Port Pressure	High Side Service Port Pressure	Maximum Left Center Discharge Air Temperature
13–18°C (55–65°F)	0–100%	206–241 kPa (30–35 psi)	868–1247 kPa (126–181 psi)	7°C (43°F)
19–24°C (66–75°F)	Less than 40%	192–227 kPa (28–33 psi)	1012–1412 kPa (147–205 psi)	5°C (41°F)
	Greater than 40%	199–227 kPa (29–33 psi)	1081–1481 kPa (157–215 psi)	7°C (43°F)
25–29°C (76–85°F)	Less than 35%	186–213 kPa (27–31 psi)	1281–1612 kPa (186–234 psi)	5°C (41°F)
	35–50%	186–213 kPa (27–31 psi)	1322–1632 kPa (192–237 psi)	5°C (41°F)
	Greater than 50%	186–213 kPa (27–31 psi)	1350–1667 kPa (196–242 psi)	5°C (41°F)
30–35°C (86–95°F)	Less than 30%	179–206 kPa (26–30 psi)	1502–1853 kPa (218–269 psi)	5°C (41°F)
	30–50%	179–199 kPa (26–29 psi)	1522–1867 kPa (221–271 psi)	5°C (41°F)
	Greater than 50%	172–192 kPa (25–28 psi)	1550-1901 kPa (225–276 psi)	5°C (41°F)
36–41°C (96–105°F)	Less than 20%	172–199 kPa (25–29 psi)	1750–2087 kPa (254–303 psi)	7°C (43°F)
	20–40%	165–192 kPa (24–28 psi)	1756–2108 kPa (255–306 psi)	5°C (41°F)
	Greater than 40%	165–186 kPa (24–27 psi)	1777–2122 kPa (258–308 psi)	5°C (41°F)
42–46°C (106–115°F)	Less than 20%	165–192 kPa (24–28 psi)	1998–2301 kPa (290–334 psi)	7°C (43°F)
	Greater than 20%	158–179 kPa (23–26 psi)	2011–2308 kPa (292–335 psi)	5°C (41°F)
47–49°C (116–120°F)	Below 30%	151–179 kPa (22–26 psi)	2218–2521 kPa (322–366 psi)	5°C (41°F)

A/C Diagnostics Chart

A/C System Concern	Potential Causes
Compressor Inoperative	Electrical Wiring Issue
	No or Low Refrigerant Charge (Greater than -70g)
	Compressor Internal Malfunction
	Compressor Clutch Malfunction
	A/C Pressure Sensor Malfunction
	Evaporator Air Temperature (EAT) Malfunction
	HVAC Controls Malfunction

A/C Diagnostics Chart (cont'd)

A/C System Concern		Potential Causes
Low Side Gauge Reading	**High Side Gauge Reading**	**Potential Causes**
Same as High Side	Same as Low Side	No or Low Refrigerant Charge (Greater than -70g)
		Compressor Malfunction
		A/C Pressure Sensor Malfunction
		EAT Malfunction
		HVAC Controls Malfunction
Normal	Normal	Temperature Actuator Malfunction
		Temperature Door Malfunction
Low	Low	Low Refrigerant Charge (Greater than -70g)
		Restriction between the Compressor Outlet and Low Side Port
	Low/Normal	Evaporator Freezing/EAT Malfunction
	High	Compressor Stuck at Maximum Displacement/EAT Malfunction
Normal/High	Normal/High	PAG or POE Oil Overcharge
High	Low	Restriction between the Low Side Port and Compressor Inlet
		Expansion Device Stuck Open
		Compressor has Low Displacement or Internal Malfunction
	High	Malfunctioning Cooling Fans
		Refrigerant Overcharge (Greater than +30g)
		Restricted Condenser Air Flow
		Air in A/C System

Note: Restrictions can occur in any part of an A/C system and may result in various gauge pressure values, depending on the system design and service port locations. The use of a non-contact, infrared thermometer can help diagnose a restricted A/C system with the ability to quickly observe significant, unexpected temperature changes in components and plumbing due to debris, contamination, pinched/damaged hoses, etc.

Note: This vehicle has a refrigerant charge operational tolerance of -70g to +30g. If refrigerant charge falls outside of this range, please refer to Air Conditioning (A/C) System Performance Test.

Heating Performance Diagnostic

Step	Action	Yes	No
DEFINITION: Heating system performance.			
1	Were you sent here from Symptoms or another diagnostic table?	Go to *Step 2*	Go to Symptoms - HVAC Systems - Automatic
2	1. Turn ignition to on. 2. Select vent mode. 3. Select the warmest temperature setting. 4. Select Maximum blower speed. 5. Feel the temperature of the heater core inlet hose. Does the heater core inlet hose feel warm to hot?	Go to *Step 3*	Go to *Step 9*
3	1. Select the minimum blower speed. 2. Feel the temperature of the heater core inlet and outlet hoses. Does the heater core inlet hose feel warmer than the heater core outlet hose?	Go to *Step 7*	Go to *Step 4*

Heating Performance Diagnostic (cont'd)

Step	Action	Yes	No
4	1. Install a thermometer into the center I/P panel air outlet. 2. Secure a thermometer to the heater core outlet hose. 3. Select the maximum blower speed. 4. Record the temperature at the following location. 5. Record the temperature at the following locations: • The center I/P panel air outlet • The heater core outlet hose 6. Compare the recorded temperatures. Are the two temperature readings about equal?	Go to *Step 5*	Go to *Step 6*
5	1. Inspect and repair the following areas of the vehicle for cold air leaks: • The cowl • The recirculation door • The HVAC module case 2. Perform the necessary repairs. Are the repairs complete?	Go to *Step 11*	—
6	1. Inspect the temperature door operation. 2. Perform any necessary repairs. Are the repairs complete?	Go to *Step 11*	—
7	1. Turn the ignition to off. 2. Backflush the heater core. 3. Turn the ignition to on. 4. Select the vent mode. 5. Select the minimum blower speed. 6. Select the warmest temperature setting. 7. Feel the temperature of the heater core inlet and outlet hoses. Does the heater core inlet hose feel warmer than the heater core outlet hose?	Go to *Step 8*	Go to *Step 11*
8	Replace the heater core. *Heater Core Replacement on page 5-571* Is the repair complete?	Go to *Step 11*	—
9	Inspect and repair the following areas: • Kinked hose • Heater valve inlet filter • Air in the coolant circuit • Inoperable heater valve Did you find and correct the condition?	Go to *Step 11*	Go to *Step 10*
10	Inspect the coolant heater control module. Is the repair complete?	Go to *Step 11*	—
11	Operate the system in order to verify the repair. Did you find and correct the condition?	System OK	Go to *Step 2*

Defrosting Insufficient

Step	Action	Yes	No
DEFINITION: Time required to defrost the windshield is longer than normal.			
1	Were you sent here from Symptoms or another diagnostic table?	Go to *Step 2*	Go to Symptoms - HVAC Systems - Automatic
2	1. Turn ignition to ON.. 2. Select the DEFROST mode. 3. Select the maximum blower speed. Does sufficient air flow from the defroster outlets?	Go to *Step 3*	Go to *Step 6*

Defrosting Insufficient (cont'd)

Step	Action	Yes	No
3	1. Select the minimum blower speed. 2. Select the maximum temperature setting. 3. Feel the temperature of the inlet and outlet hoses at the heater core. Does the inlet hose feel warmer than the outlet hose?	Go to *Step 7*	Go to *Step 4*
4	Perform the A/C system performance test. *Air Conditioning (A/C) System Performance Test on page 5-25* Is the A/C system operating within the specifications?	Go to *Step 5*	Go to *Step 8*
5	Inspect for correct operation of the air inlet door. Is the air inlet door operating correctly?	Go to *Step 10*	Go to *Step 9*
6	Repair the air delivery concern. Is the repair complete?	Go to *Step 10*	—
7	Repair the heating concern. *Heating Performance Diagnostic on page 5-28* Is the repair complete?	Go to *Step 10*	—
8	Repair the A/C performance concern. *Air Conditioning (A/C) System Performance Test on page 5-25* Is the repair complete?	Go to *Step 10*	—
9	Repair the air inlet door concern. *Air Inlet Housing Replacement on page 5-407* Is the repair complete?	Go to *Step 10*	—
10	Operate the system in order to verify the repair. Did you find and correct the problem?	System OK	Go to *Step 2*

Noise Diagnosis - Blower Motor

Step	Action	Yes	No
DEFINITION: Noise originating from the blower motor.			
1	Were you sent here from Symptoms or another diagnostic table?	Go to *Step 2*	Go to Symptoms - HVAC Systems - Automatic
2	Inspect the air inlet grille for debris. Is debris present?	Go to *Step 8*	Go to *Step 3*
3	1. Sit inside the vehicle. 2. Close the vehicle doors and windows. 3. Turn the ignition to the accessory position. 4. Cycle the blower motor through all of the speeds and modes in order to determine where and when the noise occurs. Is a noise evident during the blower operation?	Go to *Step 4*	Go to *Step 11*
4	Inspect for excessive vibration at each blower motor speed by feeling the blower case. Is excess vibration present?	Go to *Step 6*	Go to *Step 5*
5	Listen to the blower motor at each speed. Is the blower motor making a squeaking or chirping noise?	Go to *Step 9*	Go to *Step 11*
6	1. Remove the blower motor. Refer to *Blower Motor Replacement on page 5-420*. 2. Inspect the blower motor impeller for deposits of foreign material. 3. Inspect the blower motor for deposits of foreign material. Did you find any foreign material on the blower motor or blower motor impeller?	Go to *Step 8*	Go to *Step 7*

Noise Diagnosis - Blower Motor (cont'd)

Step	Action	Yes	No
7	Inspect the blower motor for the following conditions: • Cracked blades • A loose impeller retainer • Improper impeller alignment Did you find any of these conditions?	Go to *Step 9*	Go to *Step 10*
8	Remove the foreign material. Is the action complete?	Go to *Step 10*	—
9	Replace the blower motor. Refer to *Blower Motor Replacement on page 5-420*. Is the repair complete?	Go to *Step 11*	—
10	Install the blower motor. Refer to *Blower Motor Replacement on page 5-420*. Is the action complete?	Go to *Step 11*	—
11	Operate the system in order to verify the repair. Did you find and correct the condition?	System OK	Go to *Step 2*

Air Conditioning Compressor Oil Diagnosis

Note: To avoid repeat compressor failure, always inspect the condition of the refrigerant oil and take the appropriate corrective action before installing the replacement compressor.

Air Conditioning Compressor Oil Diagnosis

Condition	Corrective Action
Clean Oil no debris present	No corrective action necessary.
Clean Oil with debris present	• Inspect the suction port of the replacement compressor for presence of a suction screen. If the replacement compressor does NOT contain a suction screen, install suction screen in the line. • Replace desiccant or component containing the desiccant. • Replace desiccant filter if applicable. • Remove and inspect high pressure side filter (if applicable). • Remove, inspect, clean, or replace orifice tube. • If the system has a front orifice tube and is equipped with a filter in the rear auxiliary line, remove, inspect, clean, or replace the filter. • If the system has a front orifice tube and is not equipped with a filter in the rear auxiliary line, remove the filter in the auxiliary TXV and Install a universal inline A/C Filter P/N 89016656 (AC Delco P/N 15-10413) as close to the rear TXV as possible.
Dark brown/black and/or pungent/unusual odor with no debris present	• Replace desiccant or component containing the desiccant. • Replace desiccant filter if applicable. • Flush refrigerant system. Refer to *Flushing on page 5-38*.
Dark brown/black and/or pungent/unusual odor with debris present	• Replace desiccant or component containing the desiccant. • Replace desiccant filter if applicable. • Flush refrigerant system. Refer to *Flushing on page 5-38*. • Inspect the suction port of the replacement compressor for presence of a suction screen. If the replacement compressor does NOT contain a suction screen, install suction screen. • Remove and inspect high pressure side filter (if applicable). • Remove, inspect, clean, or replace orifice tube. • If the system has a front orifice tube and is equipped with a filter in the rear auxiliary line, remove, inspect, clean, or replace the filter. • If the system has a front orifice tube and is not equipped with a filter in the rear auxiliary line, remove the filter in the auxiliary TXV and install a universal inline A/C Filter P/N 89016656 (AC Delco P/N 15-10413) as close to the rear TXV as possible.
Oil Overcharge	Flush refrigerant system. Refer to *Flushing on page 5-38*.

Air Conditioning Compressor Oil Diagnosis (cont'd)

Condition	Corrective Action
Refrigerant Contamination	Flush refrigerant system. Refer to *Flushing on page 5-38*.
Hybrid Polyolester Refrigerant Oil (POE) Contamination	• Flush refrigerant system. Refer to *Flushing on page 5-38*. • Replace desiccant or component containing the desiccant. • Replace desiccant filter if applicable.

Noise Diagnosis - HVAC Module

Step	Action	Yes	No
DEFINITION: Noise originating from the HVAC module.			
1	Were you sent here from Symptoms or another diagnostic table?	Go to *Step 2*	Go to Symptoms - HVAC Systems - Automatic
2	1. Start the engine. 2. Cycle through all of the following: • Blower motor speeds • HVAC modes • Temperature control settings 3. Determine the type of noise: • Scrape, pop • Tick/click, chirp or groaning • Air rush/whistle Is a scrape or pop noise evident when selecting modes or temperature settings?	Go to *Step 6*	Go to *Step 3*
3	Is a tick/click, chirping, groaning or scraping noise present, but decreases as blower motor speed is decreased?	Go to *Step 6*	Go to *Step 4*
4	Is an air rush/whistle noise evident in all modes but not all temperature settings?	Go to *Step 6*	Go to *Step 5*
5	Is an air rush/whistle noise evident only in defrost or floor mode?	Go to *Step 6*	Go to *Step 6*
6	Remove the IP carrier. Is the action complete?	Go to *Step 7*	—
7	1. Inspect the air flow doors for proper operation. 2. Inspect the ducts for obstructions or foreign materials. Were any of these conditions found?	Go to *Step 10*	Go to *Step 8*
8	Inspect the mode and temperature doors and seals for warping or cracking. Are the doors in normal condition?	Go to *Step 11*	Go to *Step 9*
9	Replace the appropriate door and/or seals. Is the repair complete?	Go to *Step 11*	—
10	Remove any obstructions or foreign material found. Is the action complete?	Go to *Step 11*	—
11	Install the IP Assembly. Is the action complete?	Go to *Step 12*	—
12	Operate the system to verify the repair. Did you find and correct the condition?	System OK	Go to *Step 2*

Odor Diagnosis

Step	Action	Yes	No
DEFINITION: Odor originating or noticed through the HVAC system.			
1	Were you sent here from Symptoms or another diagnostic table?	Go to *Step 2*	Go to Symptoms - HVAC Systems - Automatic

Odor Diagnosis (cont'd)

Step	Action	Yes	No
2	1. Sit inside the vehicle. 2. Close all of the doors and windows. 3. Start Turn ignition to on. 4. Select the maximum blower speed. 5. Select the PANEL air outlet mode. 6. Select the coldest temperature setting. 7. Cycle through all of the blower speeds, modes and temperatures to define what type of odor is present. • Musty smell • Coolant smell • Oil smell Does the odor have a musty smell?	Go to *Step 3*	Go to *Step 8*
3	Inspect the HVAC filter and the air inlet grille for debris. Is debris present?	Go to *Step 4*	Go to *Step 5*
4	Remove any debris. Is the action complete?	Go to *Step 15*	—
5	Inspect for wet carpeting. Is the carpet wet?	Go to *Step 6*	Go to *Step 8*
6	Inspect for the following conditions: 1. Water leaks around the windshield 2. Blockage of the HVAC module drain 3. Leaks around the door seals Is a leak present?	Go to *Step 7*	Go to *Step 15*
7	Repair the leak as necessary. Is the repair complete?	Go to *Step 15*	—
8	Does the odor have a coolant smell?	Go to *Step 9*	Go to *Step 12*
9	Inspect the cooling system for leaks. *Cabin Heater Coolant Heater System Loss of Coolant on page 5-34* Is a leak present?	Go to *Step 10*	Go to *Step 12*
10	Inspect for coolant leaking inside the vehicle or for a film build-up on the windshield. Is the condition present?	Go to *Step 11*	Go to *Step 15*
11	Replace the heater core. *Heater Core Replacement on page 5-571* Is the repair complete?	Go to *Step 15*	—
12	Does the odor have an oily smell?	Go to *Step 13*	Go to *Step 15*
13	1. Inspect the engine compartment for any leaks. Refer to the following procedures: • Oil Leak Diagnosis • Fluid Leak Diagnosis 2. Repair any oil leaks. Is the repair complete?	Go to *Step 15*	—
14	A musty odor can be caused by mold or mildew build-up on the evaporator or the heater core or inside of the HVAC module. *Odor Correction on page 5-36* Is the action complete?	Go to *Step 15*	—
15	Operate the system in order to verify the repair. Did you find and correct the condition?	System OK	Go to *Step 2*

Cabin Heater Coolant Heater System Loss of Coolant

Step	Action	Yes	No
DEFINITION: The heater coolant heater cooling system is losing coolant either internally or externally.			
1	Inspect the coolant level. Is the coolant at the proper level?	Go to *Step 13*	Go to *Step 2*
2	Fill the cooling system to the proper level. *Heater Coolant Heater Draining and Filling on page 5-39* Is the action complete?	Go to *Step 3*	—
3	Overheating can cause a loss of coolant. Is the Heater Coolant Heater Cooling system overheating?	Go to *Step 11*	Go to *Step 4*
4	Visually inspect the hoses, pipes and hose clamps. Are any of the hoses, clamps or pipes leaking?	Go to *Step 12*	Go to *Step 5*
5	Visually inspect the following components: • Coolant surge tank • Coolant pressure cap • Air separator • Radiators • Coolant pumps • Coolant valves • Heater Coolant Heater Are any of the listed components leaking?	Go to *Step 12*	Go to *Step 6*
6	1. Pressure test the heater coolant heater cooling system. *Cabin Heater Coolant Heater System Leak Testing on page 5-35* 2. With the heater coolant heater cooling system pressurized, visually inspect the components listed in step 5. Are any leaks present?	Go to *Step 12*	Go to *Step 7*
7	Pressure test the coolant pressure cap. *Cabin Heater Coolant Heater System Pressure Cap Testing on page 5-35* Does the coolant pressure cap hold pressure?	Go to *Step 9*	Go to *Step 8*
8	Replace the coolant pressure cap. Is the repair complete?	Go to *Step 13*	—
9	1. Pressure test the heater coolant heater cooling system. *Cabin Heater Coolant Heater System Leak Testing on page 5-35* 2. With the cooling system pressurized, remove the heater coolant heater cooling system pressure cap. Does the heater coolant heater cooling system hold pressure?	—	Go to *Step 10*
10	Replace the surge tank. Is the repair complete?	Go to *Step 13*	—
11	Repair the heater coolant heater cooling system overheating condition. Is the repair complete?	Go to *Step 13*	—
12	Repair or replace the leaking component. Refer to the appropriate repair. Is the repair complete?	Go to *Step 13*	—
13	Operate the system in order to verify the repair. **Note:** Do not use stop leak or any other chemicals. Only use premix Dexcool (50/50 mixture of Dexcool and deionized) Did you find and correct the condition?	System OK	Go to *Step 2*

Cabin Heater Coolant Heater System Pressure Cap Testing

Special Tools

- *GE-46143* Radiator Cap and Surge Tank Test Adapter
- *EN-24460-A* Cooling System Pressure Tester

For equivalent regional tools, Refer to *Special Tools on page 5-603*.

Pressure Cap Testing

Warning: To avoid being burned, do not remove the radiator cap or surge tank cap while the engine is hot. The cooling system will release scalding fluid and steam under pressure if radiator cap or surge tank cap is removed while the engine and radiator are still hot.

1. Remove the pressure cap.
2. Wash the pressure cap sealing surface with water.

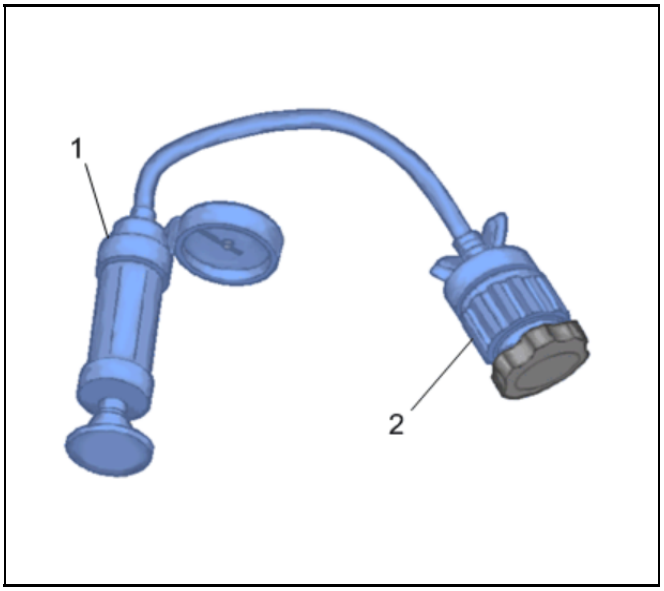

850101

Note: Lubricate *GE-46143* Radiator Cap and Surge Tank Test Adapter and pressure cap O-rings with coolant and press cap to seat O-ring on *GE-46143* Radiator Cap and Surge Tank Test Adapter before turning to engage threads.

3. Use the *EN-24460-A* Cooling System Pressure Tester (1) with *GE-46143–1* Radiator Cap and Surge Tank Test Adapter (2) in order to test the pressure cap.
4. Test the pressure cap for the following conditions:
   - Pressure release when the *EN-24460-A* Cooling System Pressure Tester exceeds the pressure rating of the pressure cap.
   - Maintain the rated pressure for at least 10 seconds.
   Note the rate of pressure loss.
5. Replace the pressure cap under the following conditions:
   - The pressure cap does not release pressure which exceeds the rated pressure of the cap.
   - The pressure cap does not hold the rated pressure.

Cabin Heater Coolant Heater System Leak Testing

Special Tools

- *EN-24460-A* Cooling System Pressure Tester
- *GE-46143* Radiator Cap and Surge Tank Test Adapter

For equivalent regional tools, Refer to *Special Tools on page 5-603*.

Warning: Under pressure, the temperature of the solution in the radiator can be considerably higher, without boiling. Removing the radiator cap while the engine is hot (pressure is high), will cause the solution to boil instantaneously, with explosive force. The solution will spew out over the engine, fenders, and the person removing the cap. Serious bodily injury may result. Flammable antifreeze, such as alcohol, is not recommended for use at any time. Flammable antifreeze could cause a serious fire.

Warning: In order to help avoid being burned, do not remove the radiator cap while the engine and the radiator are hot. Scalding fluid and steam can be blown out under pressure if the cap is removed too soon.

1. Remove the pressure cap.
2. Test the operation of the pressure cap. *Cabin Heater Coolant Heater System Pressure Cap Testing on page 5-35*
3. Wash the pressure cap mating surface with water.

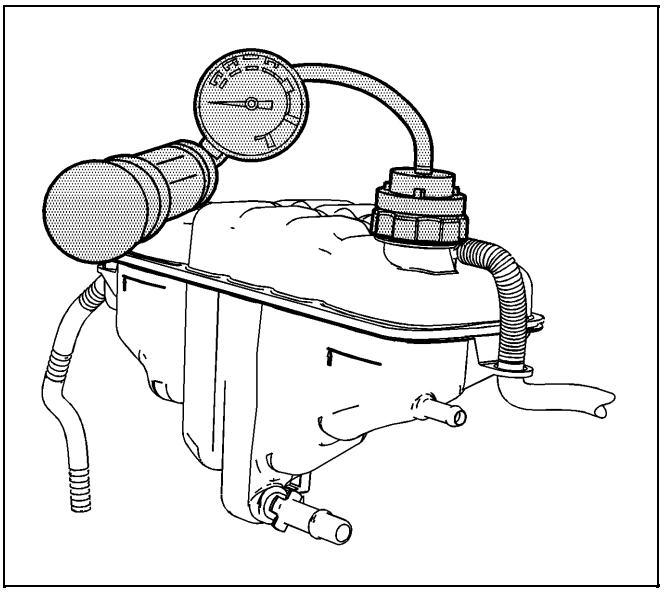

1992535

4. Use the *EN-24460-A* Cooling System Pressure Tester with the *GE-46143–2* Adapter in order to apply pressure to the cooling system.

   Do not exceed the pressure cap rating.
5. The cooling system should hold the rated pressure for at least 2 minutes.

   Observe the gauge for any pressure loss.

   Note: Do not use stop leak or any other chemicals. Only use premix Dexcool (50/50 mixture of Dexcool and deionized)
6. Repair any leaks as required.

Repair Instructions

Odor Correction

Eliminating Air Conditioning (A/C) Odor

Odors may be emitted from the air conditioning system primarily at start up in hot, humid climates. The following conditions may cause the odor:

- Debris is present in the HVAC module
- Microbial growth on the evaporator core

When the blower motor fan is turned on, the microbial growth may release an unpleasant musty odor into the passenger compartment. To remove odors of this type, the microbial growth must be eliminated. Perform the following procedure:

Deodorize the evaporator core using Deodorizing Aerosol Kit.

Perform the following steps in order to deodorize the A/C system:

1. Ensure that the plenum which draws outside air into the HVAC module is clear of debris.
2. Disable the air conditioning (A/C) compressor clutch operation by disconnecting the clutch coil electrical connector.
3. Dry the evaporator core by performing the following steps:

   3.1. Turn the ignition to run mode.

   3.2. Select the warmest temperature setting.

   3.3. Select the recirculation mode.

   3.4. Run the blower motor on high for 10 minutes.
4. Locate an area in the air conditioning duct between the blower motor and the evaporator core downstream of the blower motor.
5. Drill a 3.175 mm (0.125 in) hole where the hole will not interfere with or damage the following components:
   - The blower motor
   - The evaporator core
   - Any other operating part the of system
6. Wear safety goggles and latex gloves in order to perform the following actions:

   6.1. Select the maximum blower speed.

   6.2. Insert the deodorizer extension tube into the hole to the mark on the extension tube.

   6.3. Use short spray bursts and vary the direction of spray for a 2–3 minute period of time.
7. Shut the engine OFF. Allow the vehicle to sit for 3–5 minutes.
8. Seal the 3.175 mm (0.125 in) hole with body sealer or RTV gasket compound.
9. Turn the ignition to run mode.
10. Operate the blower motor on high for 15–20 minutes to dry.
11. Reconnect the A/C compressor clutch coil electrical connector.
12. Verify proper A/C clutch operation.

Refrigerant Recovery and Recharging

Special Tools

- *GE-45037* A/C Oil Injector
- *GE-50078* Electronic Leak Detector
- *GE-50300-A* R-1234yf Air Conditioning Refrigerant Recovery/Recharge Cart
- *GE-50957* Machine R-1234yf Contaminated Refrigerant
- *GE-50745* R-1234yf Air Conditioning POE Oil Injector Hose

For equivalent regional tools, refer to *Special Tools on page 5-603*.

General Information

R-1234yf (HFO-1234yf) - 2,3,3,3 - Tetrafluoroprop-1-ene (CF3CFCH2), is an olefin containing hydrogen, fluorine and carbon with thermodynamic properties similar to R-134a. This refrigerant is a mildly flammable gas. It has a boiling point of −29.2°C, a vapor pressure of 583 kPa absolute at 20°C, no ozone depletion potential, and a global warming potential (GWP) of 4.

R-1234yf supply tank is white with red band to denote flammability.

Note: In certain regions, technicians repairing or servicing motor vehicle air conditioning (MVAC) systems must be trained and certified by the appropriate regional or national regulatory agency.

- In the USA, refer to the EPA website for MVAC training requirements. http://www.epa.gov/ozone/title6/609/technicians/609certs.html
- In Canada, refer to the Environment Canada website for MVAC training requirements. http://www.ec.gc.ca/ozone/default.asp?lang=En&n=943E1CAB-1#ws4E6F6835
- In Europe, refer to Commission Regulation (EC) No 307/2008 for MVAC training requirements. http://eur-lex.europa.eu/LexUriServ/LexUriServ.do?uri=OJ:L:2008:092:0025:0027:EN:PDF

Vehicles equipped with R-1234yf refrigerant systems have unique low and high side service fittings.

The proper handling procedures should be followed for all refrigerants as designated by the refrigerant manufacturer's Material Safety Data Sheet (MSDS).

Refrigerant Recovery and Recharging

To remove, recycle and install R-1234yf from/to a vehicles refrigerant system only use *GE-50300-A* R-1234yf Air Conditioning Refrigerant Recovery/

Recharge Cart or refrigerant recovery recharge equipment certified to meet the requirements of SAE J2843.

To remove contaminated refrigerant from a vehicles refrigerant system use *GE-50957* Machine R-1234yf Contaminated Refrigerant or only service equipment designed for contaminated refrigerant removal and certified to meet the requirements of SAE J2851. Refrigerant recovered by this equipment cannot be reused or recycled on site and must be sent to an approved reclamation facility for reprocessing or disposal.

To prevent accidental release of refrigerant and minimize safety concerns, the installation of any refrigerant service equipment to the vehicle shall only be done with the engine off and after the refrigerant high side pressure has been reduced (approximately 2–3 minutes).

Open the windows and/or doors before charging the vehicle to prevent an accumulation of refrigerant in case of a major refrigerant leak.

Warning: R-1234yf is heavier than air and may accumulate in low or pit areas – make sure these areas are properly ventilated. Failure to follow this precaution may cause personal injury.

Refrigerant service equipment is required to ensure adequate refrigerant recovery to reduce emissions and provide for accurate recharging of mobile air conditioning systems. Venting refrigerant to the atmosphere is illegal in the USA and EU and may have restrictions in other regions.

Warning: To prevent personal injury, avoid breathing any refrigerant vapor and lubricant mist. Servicing of R-1234yf systems shall only be done in well ventilated work areas. To remove R-1234yf refrigerant from the A/C refrigerant system, recover using SAE J2843 certified equipment. Un-controlled release of R-1234yf refrigerant in the work area may result in high concentrations of R-1234yf that can be flammable. If an accidental system discharge occurs, ventilate the work area before continuing service. Failure to follow these precautions may cause personal injury and/or damage to the vehicle or its components.

Warning: For personal protection, goggles and lint-free gloves must be worn and a clean cloth wrapped around fittings, valves, and connections when doing work that includes opening the refrigerant system. If refrigerant comes in contact with any part of the body severe frostbite and personal injury can result. The exposed area should be flushed immediately with cold water and prompt medical help should be obtained.

Warning: Evaporators in vehicles equipped with R-1234yf refrigerant systems must never be repaired or replaced with an evaporator removed from another or salvage vehicle. Use only new SAE J2842 certified and labeled evaporator(s) as replacement parts. Failure to follow this guideline could pose a health and/or safety risk to the vehicle occupant(s).

Caution: Air Conditioning (A/C) desiccant must be replaced if the A/C refrigerant system has been open to atmosphere for more than four hours, or if the A/C refrigerant oil has been contaminated. Failure to replace the A/C desiccant will result in damage to the A/C refrigerant system.

Caution: Use only the refrigerant and the charge amount specified in “Refrigerant System Specifications” found in HVAC Service Manual or the vehicles under hood refrigerant label. Use of incorrect refrigerant or charge amounts may result in poor system performance and premature system failure.

Caution: Use only the lubricant specified for this vehicles refrigerant system. Do not mix refrigerant oils which may result in system contamination and unknown reaction by-products which may cause HVAC System failure.

To protect the refrigerant supply *GE-50300-A* R-1234yf Air Conditioning Refrigerant Recovery/Recharge Cart or SAE J2843 equipment requires the refrigerant to be analyzed for purity prior to its recovery or transfer. The equipment is required to receive an acceptable reading from the integrated refrigerant identifier prior to recovery or transfer.

If an unacceptable reading is received (and the presence of foreign gases detected) the refrigerant is considered contaminated and the equipment will not allow its recovery or transfer to an onboard storage vessel. If refrigerant is contaminated use *GE-50957* Machine R-1234yf Contaminated Refrigerant or SAE J2851 compliant equipment to recover for reclamation and/or disposal at an EPA approved facility (http://www.epa.gov/ozone/title6/608/reclamation/reclist.html) or regional approved facility.

As a safety precaution *GE-50300-A* R-1234yf Air Conditioning Refrigerant Recovery/Recharge Cart or SAE J2843 compliant equipment requires the MAC system to pass a pre-charge leak test (to detect the possibility of a gross system leak prior to charging, >0.3 g/s) prior to allowing the MAC system to be charged. The pressurized portion of this test will require the technician set the vehicles HVAC blower motor on high, A/C switch off and air distribution mode set to floor. The technician shall insert a *GE-50078* Electronic Leak Detector or J2913-compliant electronic leak detector, set to low sensitivity (14 grams/year leak rate) into the center of a floor duct outlet, as far as possible. When the technician confirms that the vehicle is set up for the pressurized leak check the *GE-50300-A* R-1234yf Air Conditioning Refrigerant Recovery/Recharge Cart will install 15% of the programmed charge into the vehicles refrigerant system. The technician monitors the electronic leak detector for 5 minutes or until the detector alarms.

The equipments display will then ask the following:

1. Was this test performed? If the technician replies Yes, the display next shall ask,
2. Was a leak found? If technician replies Yes, the machine shall only allow recovery and evacuation to allow repair. If the technician replies No, the display shall continue with,
3. Is there an auxiliary evaporator? If the technician replies No the machine shall permit completion of the recharge process. If the technician replies Yes,

the display shall instruct the technician to perform a leak check with *GE-50078* Electronic Leak Detector or a J2913-compliant detector at a rear evaporator outlet, then ask,

4. Was an auxiliary evaporator leak check performed? If the technician replies Yes, the display will continue with Was a leak found? and if the answer is Yes, the machine shall only allow recovery and evacuation to allow repair. If the technician replies No, the machine shall permit completion of the recharge process.

A/C Refrigerant System Oil Charge Replenishing

If oil was removed from the A/C system during the recovery process or due to component replacement, the oil must be replenished. Oil can be injected into a charged system using *GE-45037* injector with *GE-50745* R-1234yf Air Conditioning POE Oil Injector Hose. For the proper quantities of oil to add to the A/C refrigerant system, refer to *Approximate Fluid Capacities on page 5-22*.

Flushing

Special Tools

- *GE-45268* A/C Flushing Adapter Kit
- *GE-50078* Enhanced Leak Detector
- *GE-48800* CoolTech A/C Recharge Machine

Equivalent regional tools.*Special Tools on page 5-603*.

Note: The high voltage (HV) electric air conditioning (A/C) compressor uses a polyolester (POE) refrigerant oil instead of a polyalkylene glycol (PAG) synthetic refrigerant oil. This is due to the better electrical resistance of the POE oil and its ability to provide HV isolation.

Flush Procedure

Note: Flushing is not intended to remove metal from the air conditioning system.

Flushing is intended to remove the following:

- Contaminated Air Conditioning Compressor oil
- Desiccant, following a desiccant bag failure
- Overcharge of Air Conditioning Compressor oil
- Refrigerant contamination

Note: Warmer engine or ambient temperatures decreases the refrigerant recovery time during the air conditioning flush procedure.

1. Recover the refrigerant. *Refrigerant Recovery and Recharging on page 5-36*
2. Remove the air conditioning condenser. *Air Conditioning Condenser Replacement on page 5-178*
3. Remove the air conditioning receiver and dehydrator. *Air Conditioning Receiver and Dehydrator Replacement on page 5-135*
4. Install the air conditioning receiver and dehydrator plug without the air conditioning refrigerant desiccant. *Air Conditioning Receiver and Dehydrator Replacement on page 5-135*
5. Install the air conditioning condenser. *Air Conditioning Condenser Replacement on page 5-178*
6. Remove the air conditioning evaporator thermal expansion valve. *Air Conditioning Evaporator Thermal Expansion Valve Replacement on page 5-158*
7. Remove the air conditioning evaporator thermal expansion valve stud from the air conditioning evaporator thermal expansion valve.
8. Install the air conditioning evaporator thermal expansion valve stud onto the GE-45268-115 adapter.
9. Install GE-45268-115 in place of the air conditioning evaporator thermal expansion valve.
10. Remove the drive motor battery coolant cooler thermal expansion valve.
11. Remove the drive motor battery coolant cooler thermal expansion valve stud from the drive motor battery coolant cooler thermal expansion valve.
12. Install the drive motor battery coolant cooler thermal expansion valve stud onto the GE-45268-115 adapter.
13. Install GE-45268-115 in place of the drive motor battery coolant cooler thermal expansion valve.
14. Remove the air conditioning and drive motor battery cooling compressor. *Air Conditioning and Drive Motor Battery Cooling Compressor Replacement on page 5-59*
15. If equipped, remove the screen in the end of the air conditioning condenser hose.
16. Install GE-45268-4 to the air conditioning compressor hose.
17. Install GE-45268-5 to the air conditioning condenser hose.
18. Forward flow refrigerant flushing is recommended for contaminated refrigerant or POE oil.

    Note: The filter inside GE-45268-1 is serviceable. Remove and discard the check valve from the filter.

    18.1. Service the filter before each flush.

    18.2. Connect the GE-45268-1 flush filter to the suction port of the GE-45268-4 flush adapter.

    18.3. Connect the blue hose from the GE-48800 Air Conditioning Service Center to the J 45268-1 flush filter adapter.

    18.4. Connect the red hose from the GE-48800 Air Conditioning Service Center to the GE-45268-5 flush adapter.
19. Reverse flow refrigerant flushing is recommended for desiccant cartridge failure.

    Note: The filter inside GE-45268-1 is serviceable. Remove and discard the check valve from the filter.

    19.1. Service the filter before each flush.

    19.2. Connect the J 45268-1 flush filter to the discharge port of the GE-45268-5 flush adapter.

19.3. Connect the blue hose from the GE-48800 Air Conditioning Service Center to the J 45268-1 flush filter adapter.

19.4. Connect the red hose from the GE-48800 Air Conditioning Service Center to the suction port of the GE-45268-4 flush adapter.

20. Install the GE-45268-10 to the air conditioning compressor to condenser hose assembly.
21. Install fitting GE-45268-128 to the filter cylinder end of GE-45268-1.
22. Connect GE-45268-1 filter to GE-45268-7 adapter.

    Note: Close the valve on the external refrigerant tank, before starting the flush process.

23. Flush the air conditioning system. Follow the instructions supplied with the *GE-48800* Air Conditioning Service Center.
24. Remove the GE-45268-4 from the air conditioning compressor hose.
25. Remove the GE-45268-5 from the air conditioning condenser hose.

    Note: Flushing will remove all the POE oil from the air conditioning system.

    The air conditioning system must be replenished with the correct amount of POE oil.

26. If you will reinstall the removed air conditioning and drive motor battery cooling compressor, perform the following procedure:

    26.1. Remove the air conditioning and drive motor battery cooling compressor drain plug.

    26.2. Drain the POE oil from the air conditioning and drive motor battery cooling compressor.

    26.3. Install the air conditioning and drive motor battery cooling compressor drain plug and tighten to **30** N•m **(22 lb ft)**.

    26.4. Add the total system capacity of POE oil to the air conditioning and drive motor battery cooling compressor. *Approximate Fluid Capacities on page 5-22*

27. If you are replacing the air conditioning and drive motor battery cooling compressor after flushing the system, perform the following procedure:

    27.1. Do not drain the POE oil from the air conditioning and drive motor battery cooling compressor.

    27.2. Deduct the amount of POE oil shipped with the air conditioning and drive motor battery cooling compressor from the amount of POE oil listed in the approximate fluid capacities table. *Approximate Fluid Capacities on page 5-22*

    27.3. Add the calculated amount to the compressor, as needed.

    Note: Flushing will remove fluorescent leak detection dye from air conditioning system.

28. Remove the air conditioning condenser. *Air Conditioning Condenser Replacement on page 5-178*

    Note: The air conditioning refrigerant desiccant is manufactured with a POE fluorescent leak detection dye wafer inside.

29. Replace the air conditioning receiver and dehydrator. *Air Conditioning Receiver and Dehydrator Replacement on page 5-135*
30. Install the air conditioning condenser. *Air Conditioning Condenser Replacement on page 5-178*
31. Remove the GE-45268-115 in place of the air conditioning evaporator thermal expansion valve.
32. Remove the GE-45268-115 in place of the drive motor battery coolant cooler thermal expansion valve.
33. Inspect the air conditioning evaporator thermal expansion valve for debris. Clean or replace as needed. *Air Conditioning Evaporator Thermal Expansion Valve Replacement on page 5-158*
34. Inspect the drive motor battery coolant cooler thermal expansion valve for debris. Clean or replace as needed.
35. If equipped, Clean and install the screen in the end of the air conditioning condenser hose.
36. Install the air conditioning and drive motor battery cooling compressor . *Air Conditioning and Drive Motor Battery Cooling Compressor Replacement on page 5-59*
37. Evacuate and recharge the air conditioning system. *Refrigerant Recovery and Recharging on page 5-36*
38. Leak test the fittings using *GE-50078* Enhanced Leak Detector.

Heater Coolant Heater Draining and Filling

Special Tools

- *GE-26568* Coolant and Battery Tester
- *GE-46143* Cooling System Adapter
- *GE-47716* Vac-N-Fill Coolant Refill Tool

Draining Procedure

Danger: Before conducting any repair to this high voltage cooling system, it is necessary to determine/verify whether no high-voltage system faults exist. If high-voltage faults exist, follow published DTC diagnostics/repair procedures prior to performing any cooling system repairs. Failure to correct High Voltage Faults before working on the high voltage cooling system could result in personal injury or death.

Danger: Do not use a service jack in locations other than those specified to lift this vehicle. Lifting the vehicle with a jack in those other locations could cause the vehicle to slip off the jack and roll; this could cause injury or death.

Warning: To avoid being burned, do not remove the radiator cap or surge tank cap while the engine is hot. The cooling system will release scalding fluid and steam under pressure if radiator cap or surge tank cap is removed while the engine and radiator are still hot.

Note: Draining of the cooling system or replacement of any cabin heater coolant heater system parts requires the actuation of the Heater Coolant Pump Bleed Procedure for 5 minutes in the GDS tool.

1. Turn the vehicle power OFF, remove all keyless entry transmitters from the vehicle, and secure the transmitters outside of the vehicle.
2. Remove the heater coolant surge tank cap.
3. Raise and support the vehicle.
4. Place a drain pan under the vehicle.

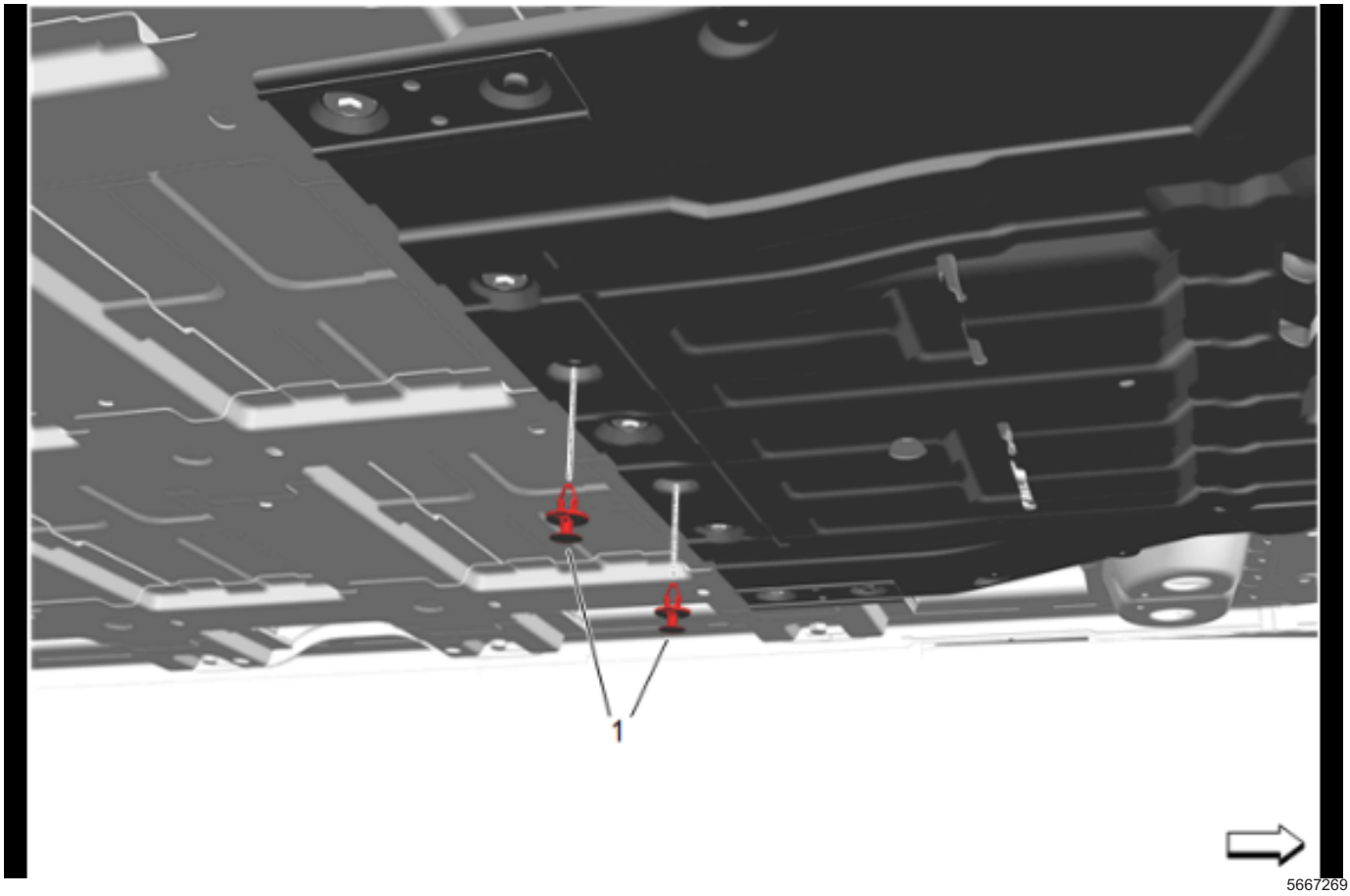

5667269

5. Front Compartment Air Deflector Retainer (1) » Remove [2x]

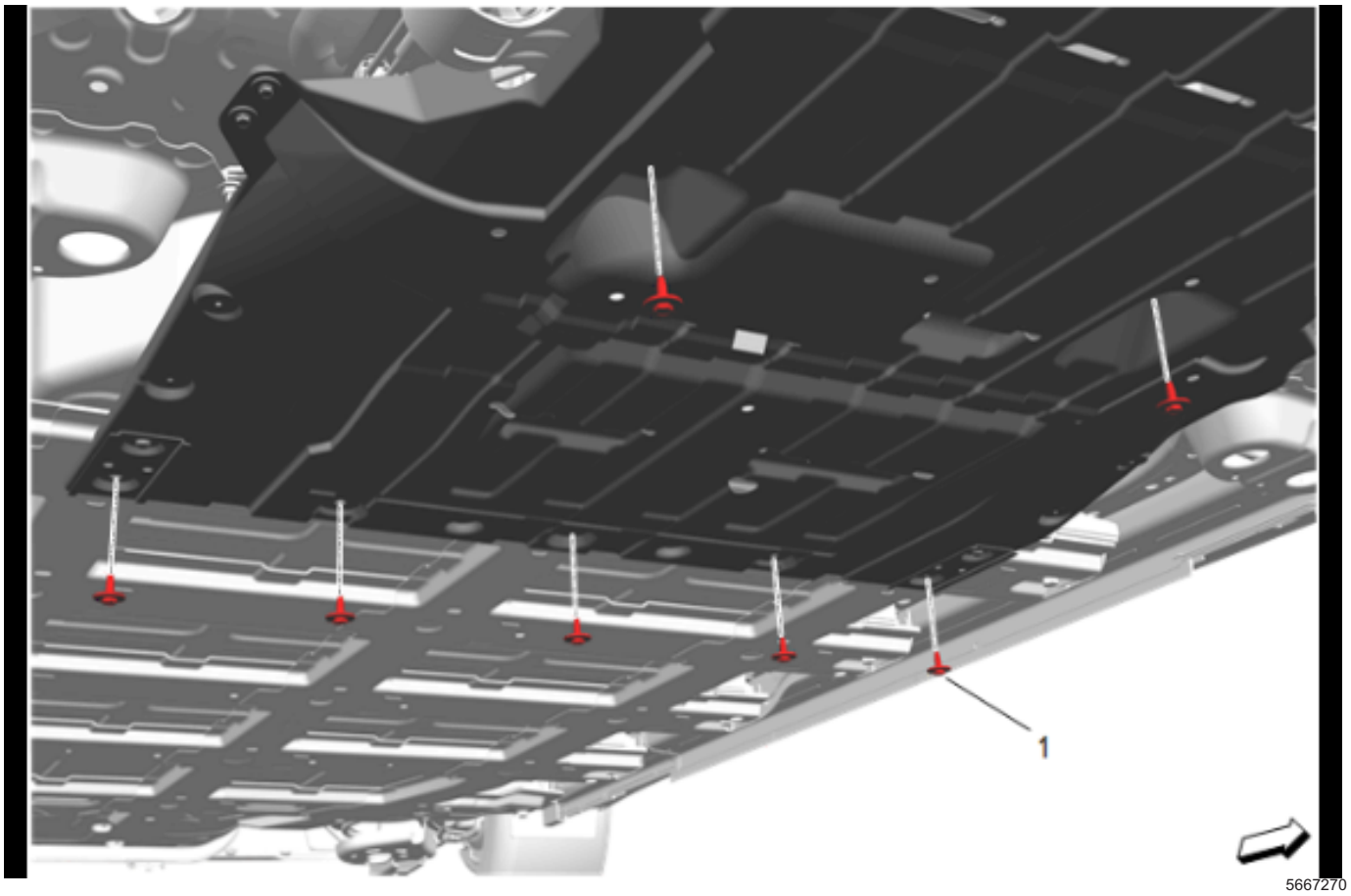

6. Front Compartment Air Deflector Bolt (1) » Remove [7x]

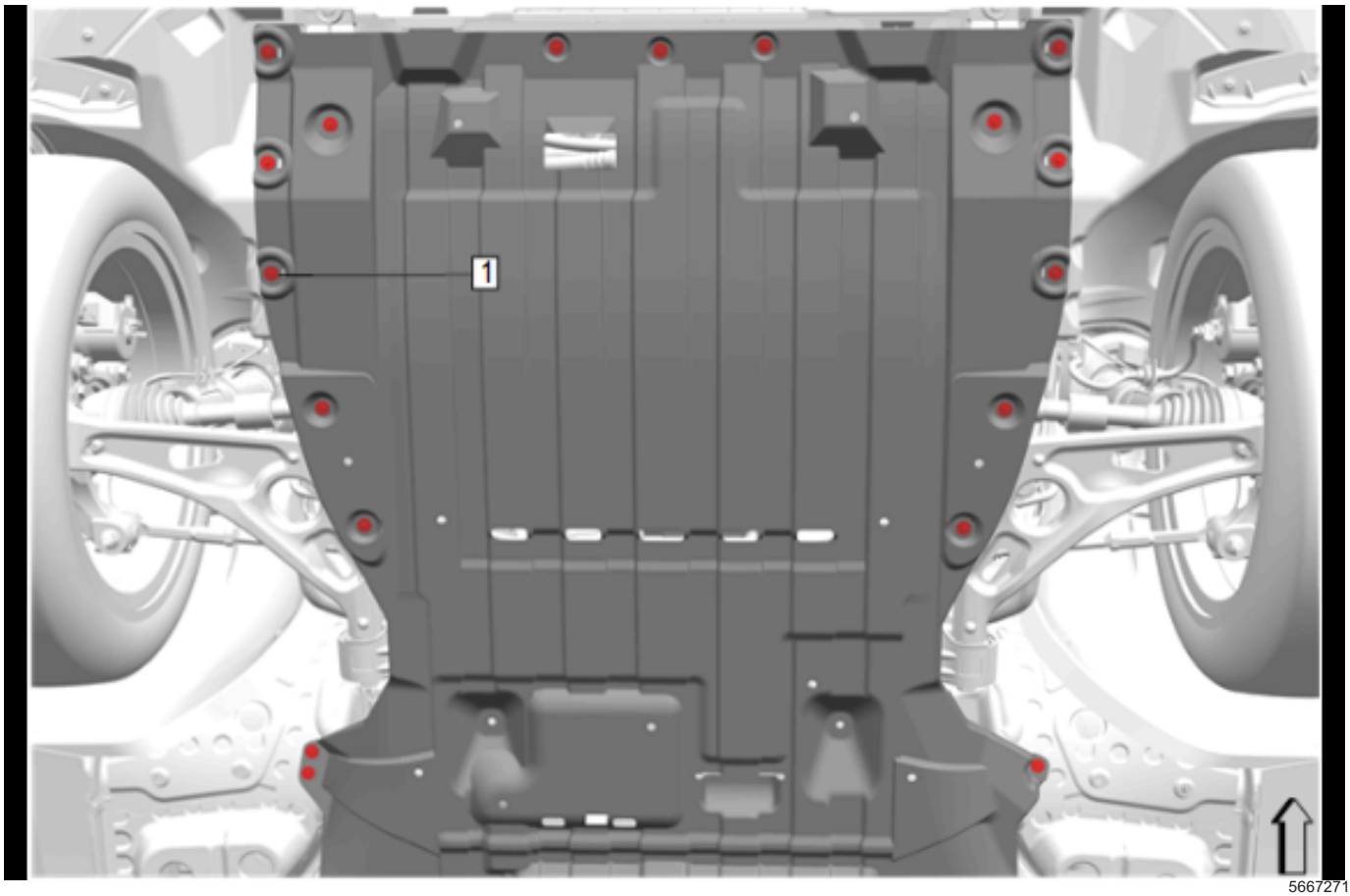

5667271

7. Front Compartment Air Deflector Bolt (1) »
   Remove [18x]

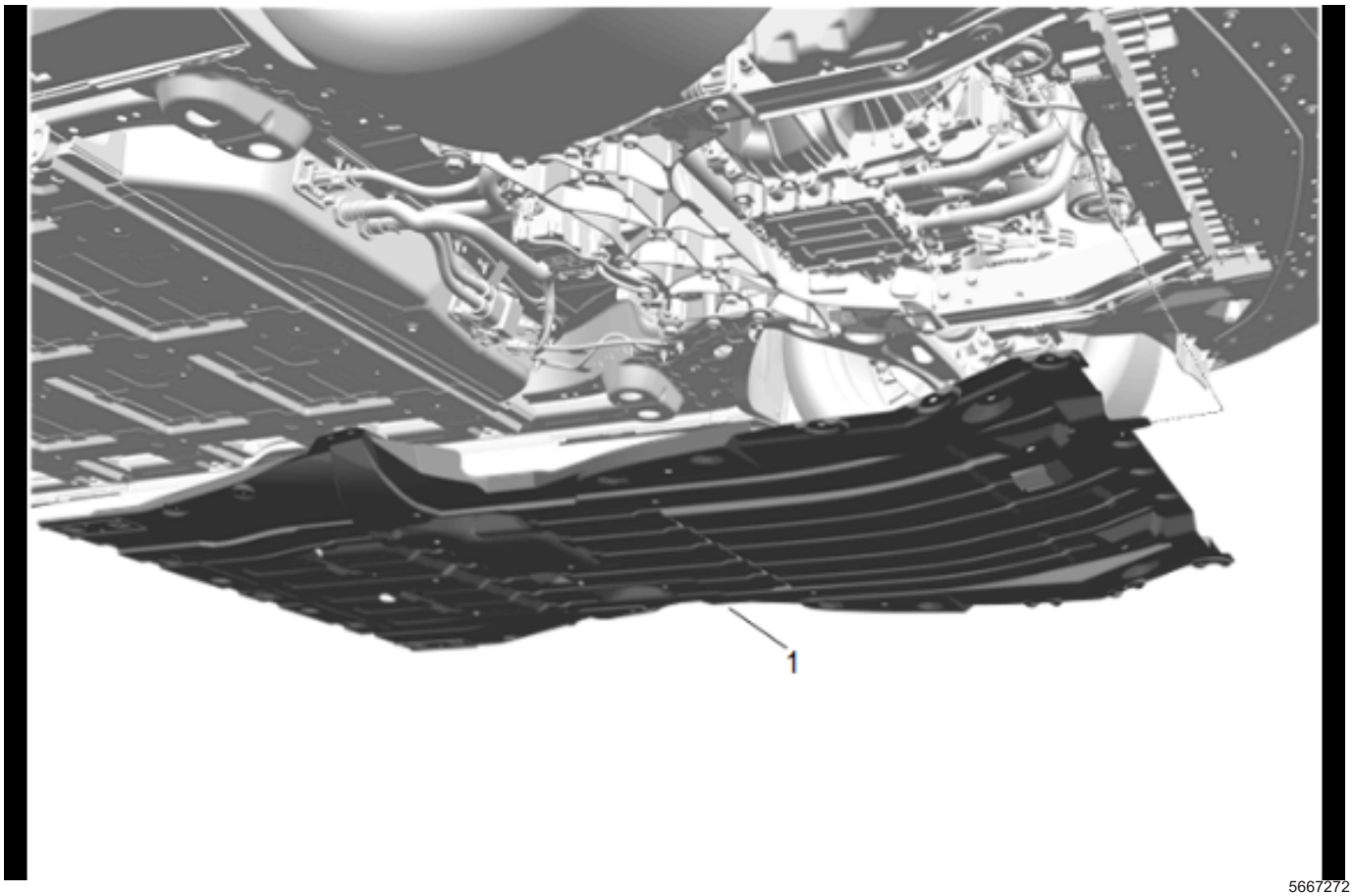

5667272

8. Front Compartment Air Deflector (1) » Remove
9. Remove the right front tire and wheel assembly.

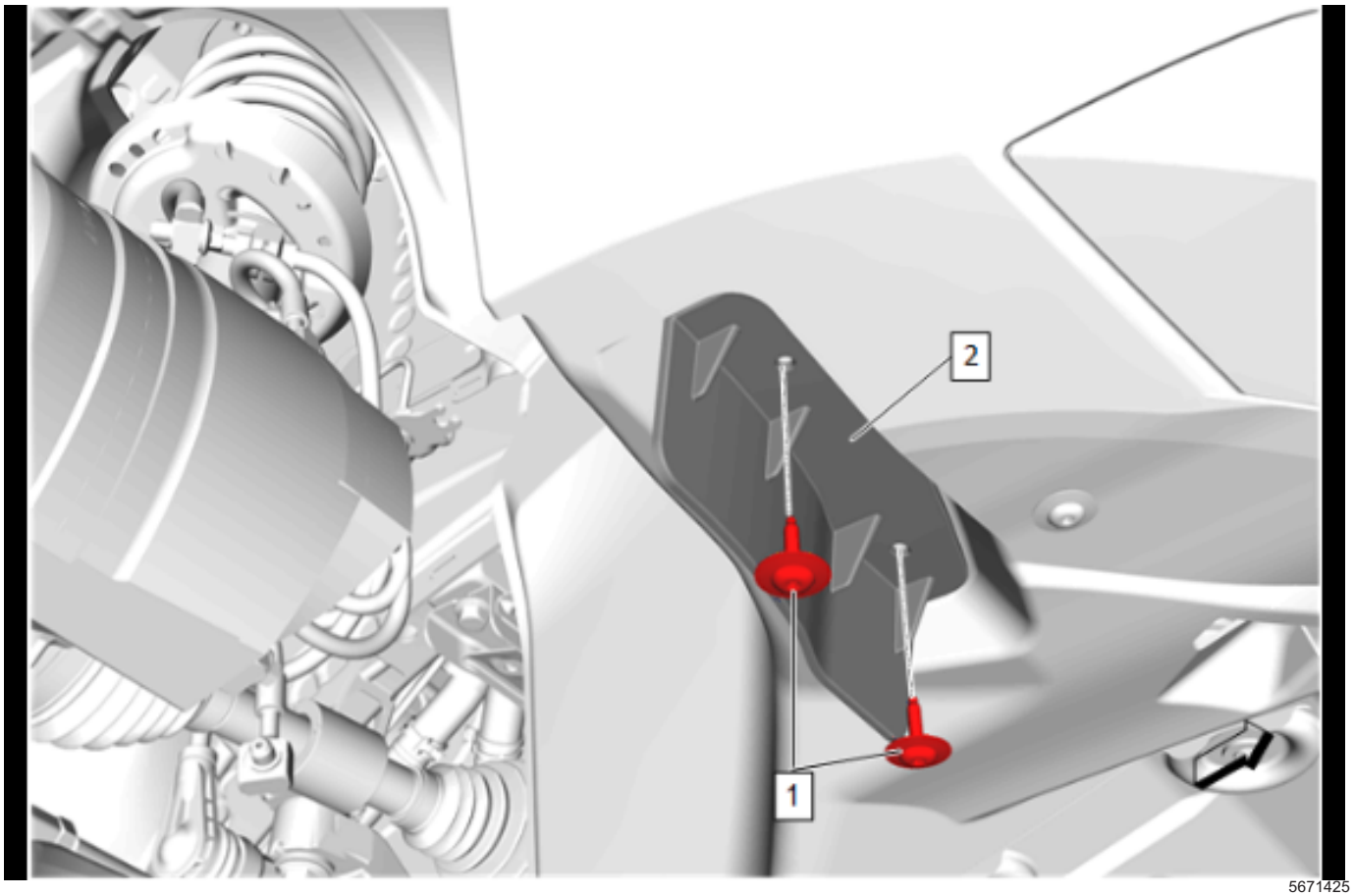

5671425

10. Front Tire Front Air Deflector Bolt (1) » Remove [2x]
11. Front Tire Front Air Deflector (2) » Remove

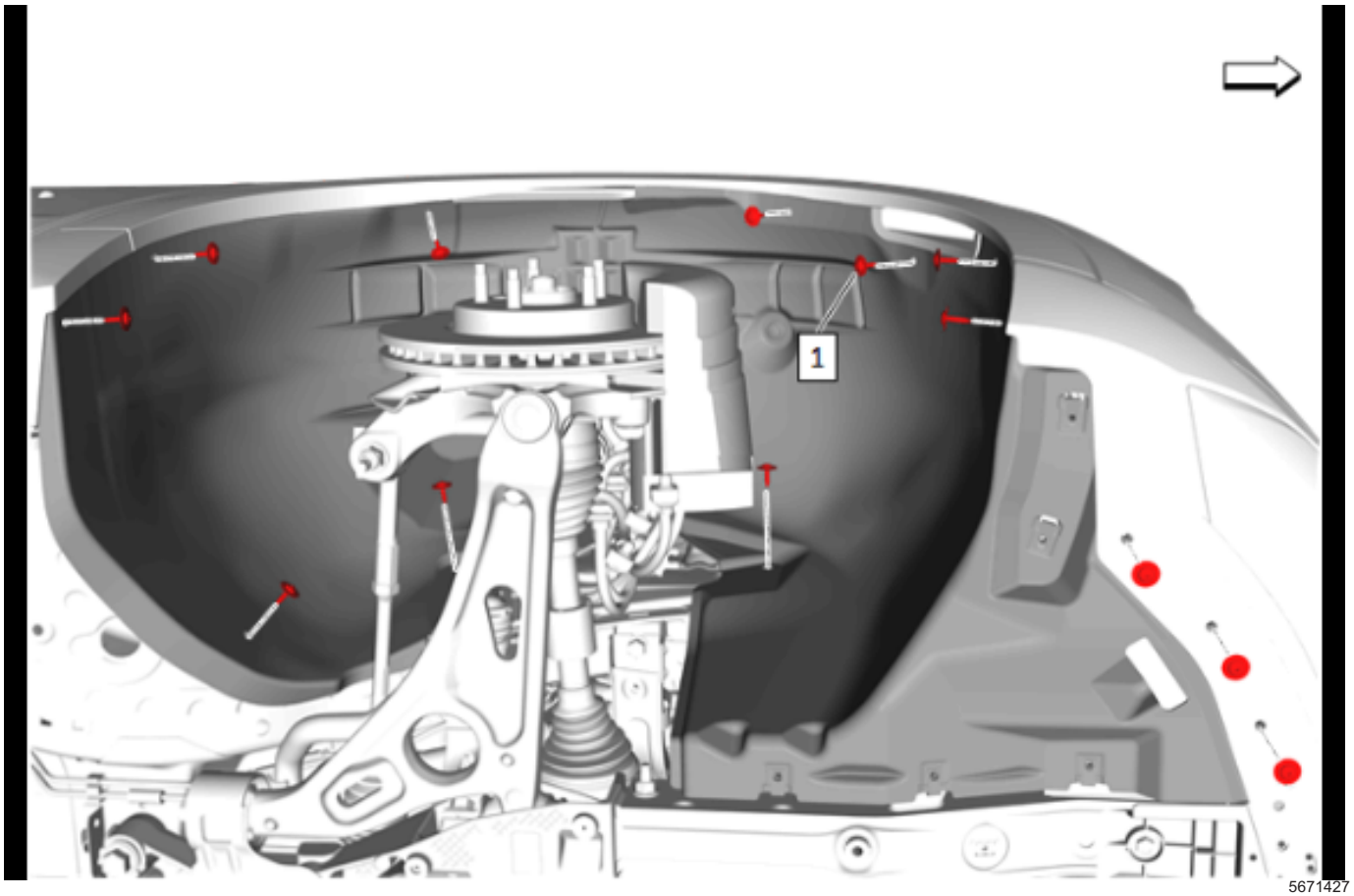

5671427

12. Front Wheelhouse Liner Bolt (1) » Remove [13x]

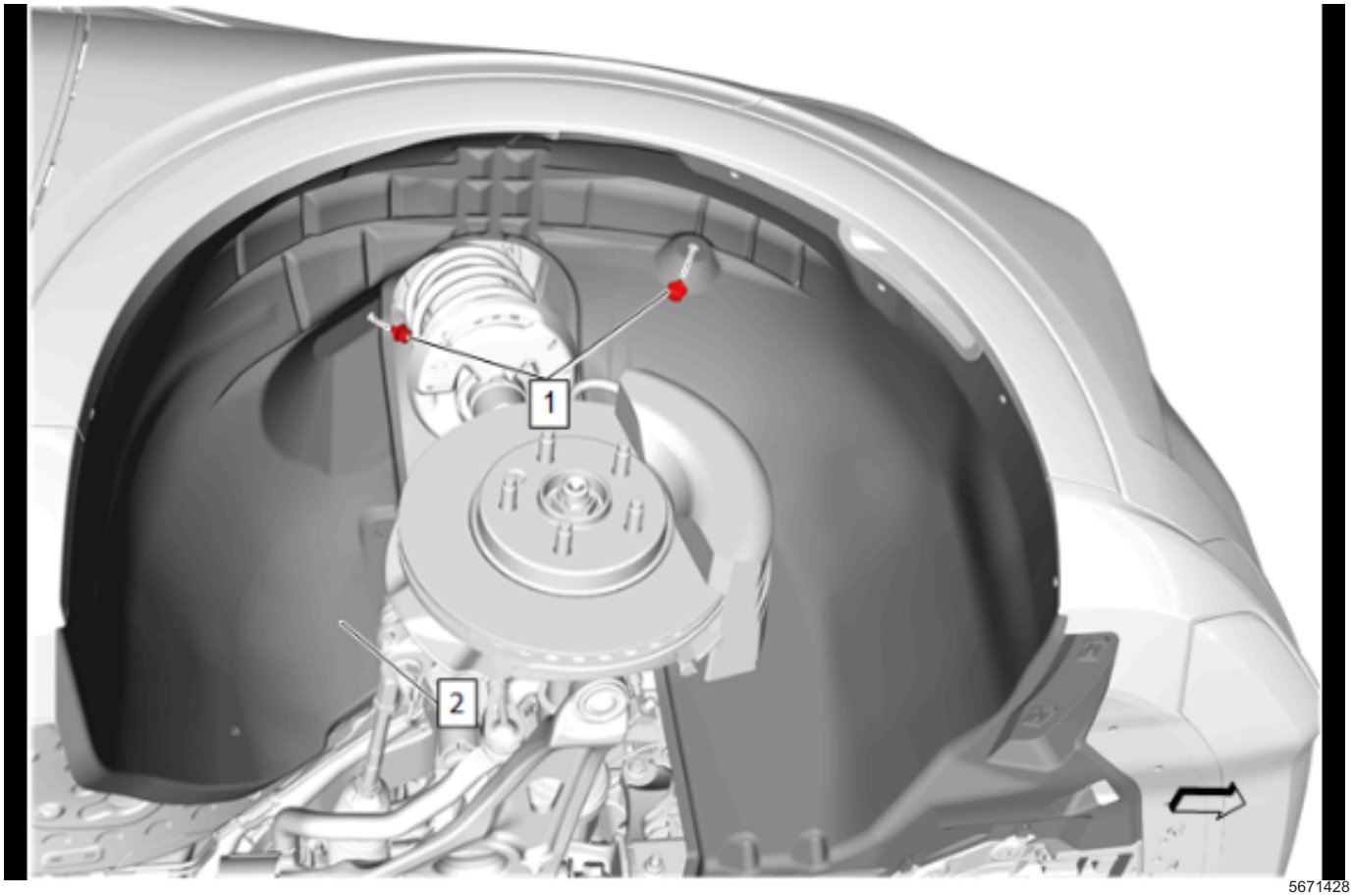

5671428

13. Front Wheelhouse Liner Retainer (1) » Remove [2x]
14. Front Wheelhouse Liner - Right Side (2) » Remove

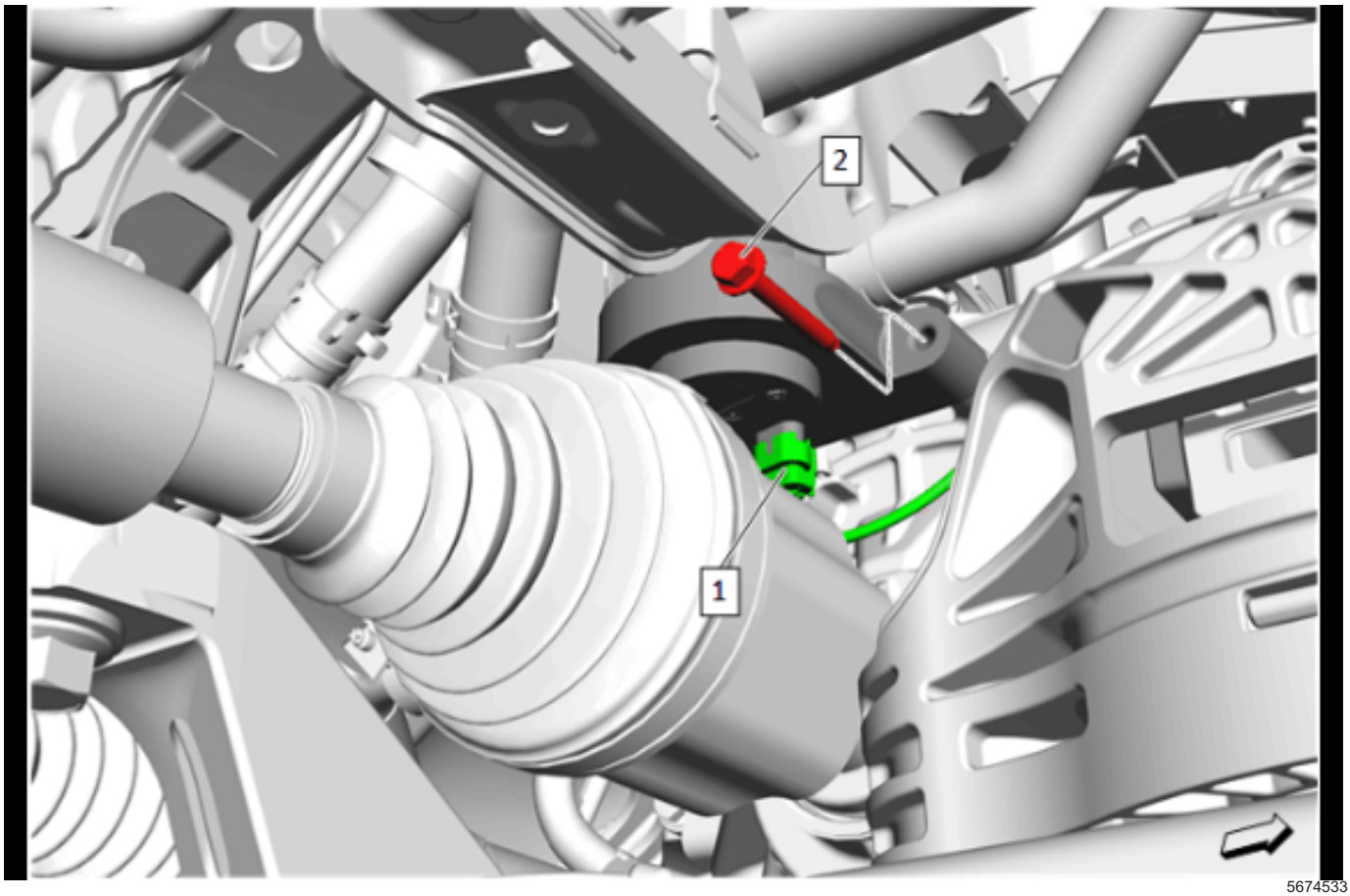

5674533

15. Electrical Connector (1) » Disconnect
16. Heater Coolant Pump Bolt (2) » Remove
17. Reposition the heater coolant pump on the rubber mount to access the clamp.

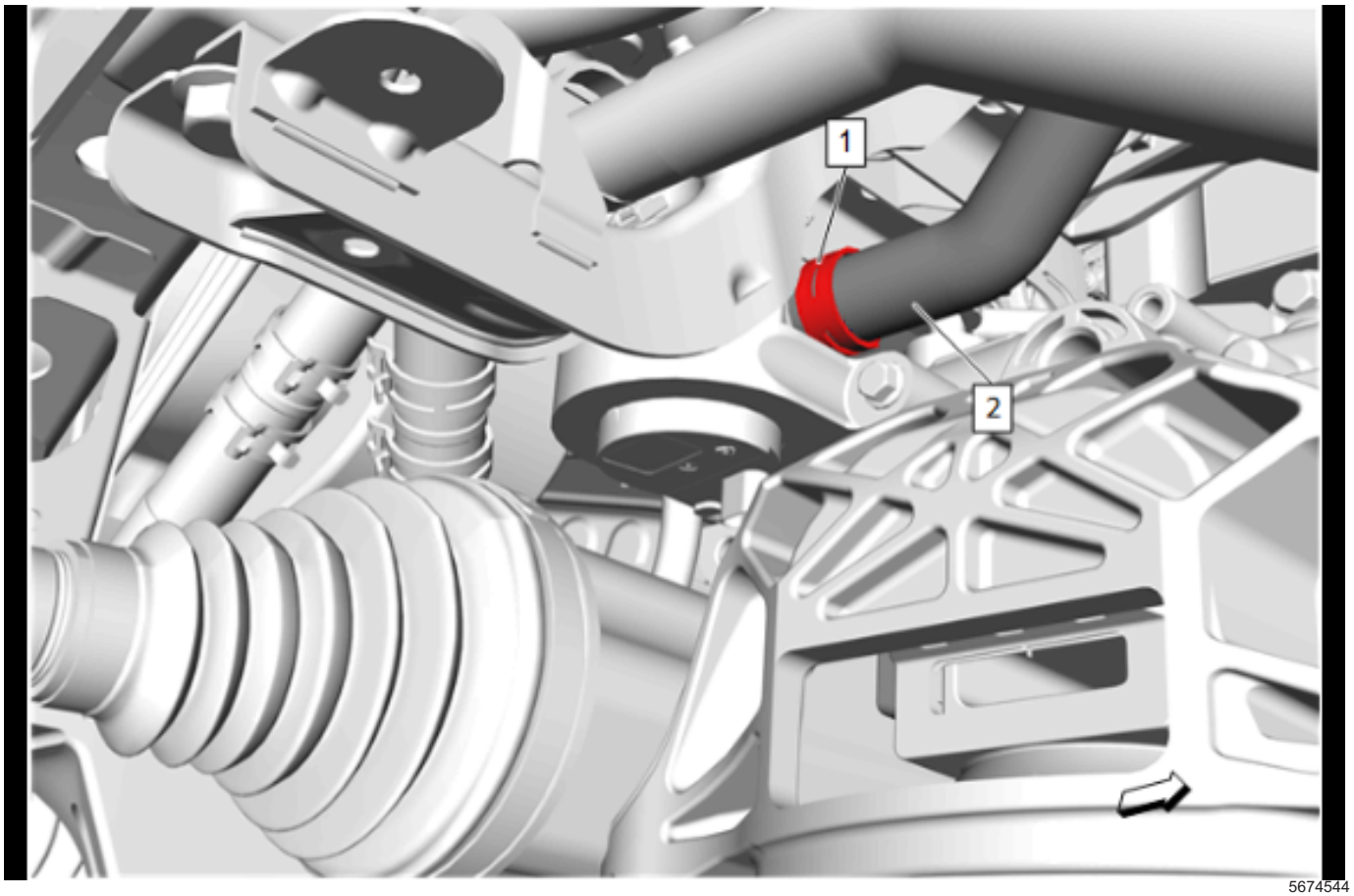

5674544

18. Clamp (1) » Disengage — Hose Clamp Replacement Guidelines - Spring Type
19. Auxiliary Heater Outlet Hose (2) @ Heater Coolant Pump » Remove
20. Drain the coolant.
21. Inspect the coolant.

Vac-N-Fill Procedure

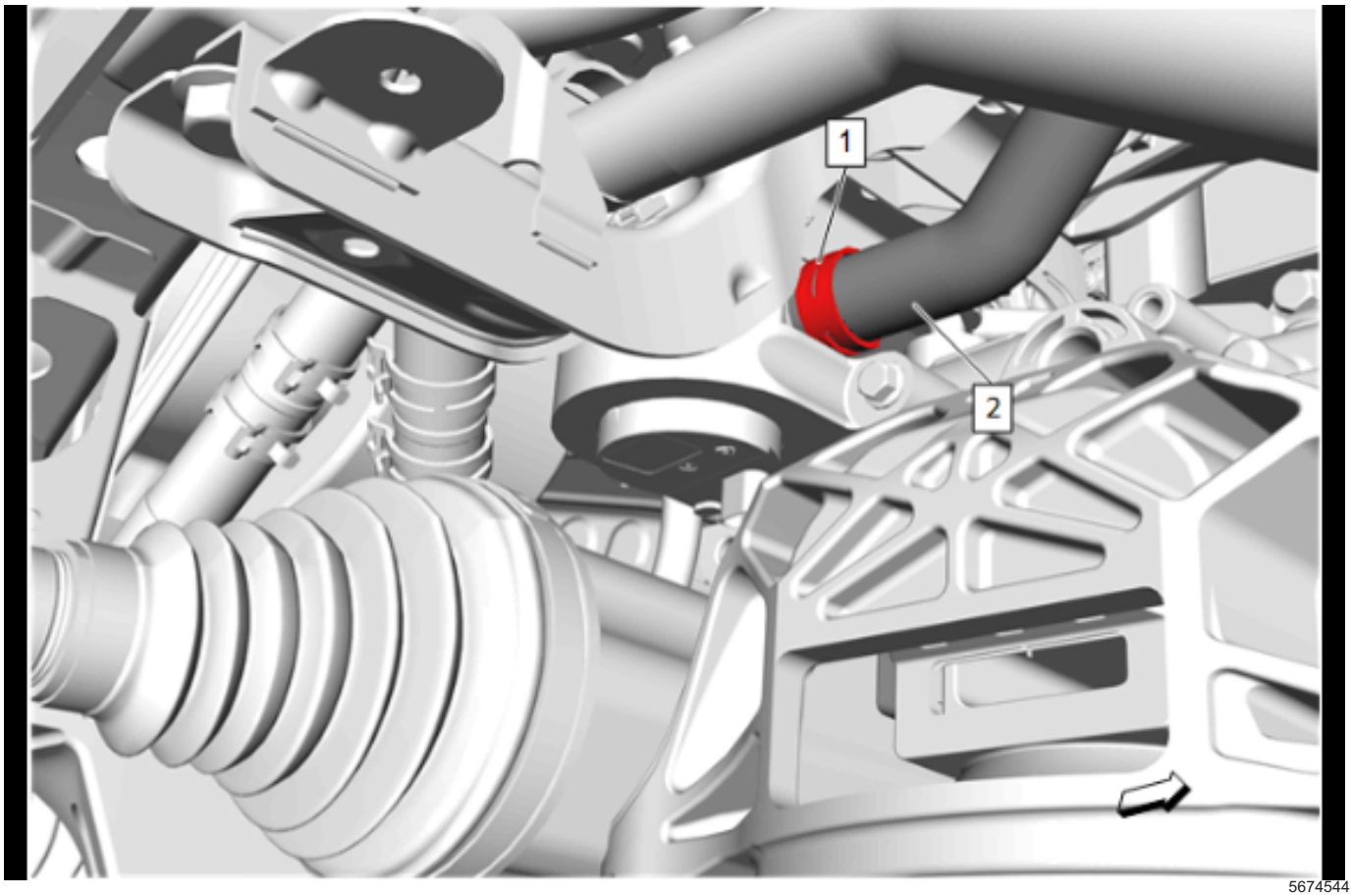

5674544

1. Auxiliary Heater Outlet Hose (2) @ Heater Coolant Pump » Install
2. Clamp (1) » Engage — Hose Clamp Replacement Guidelines - Spring Type

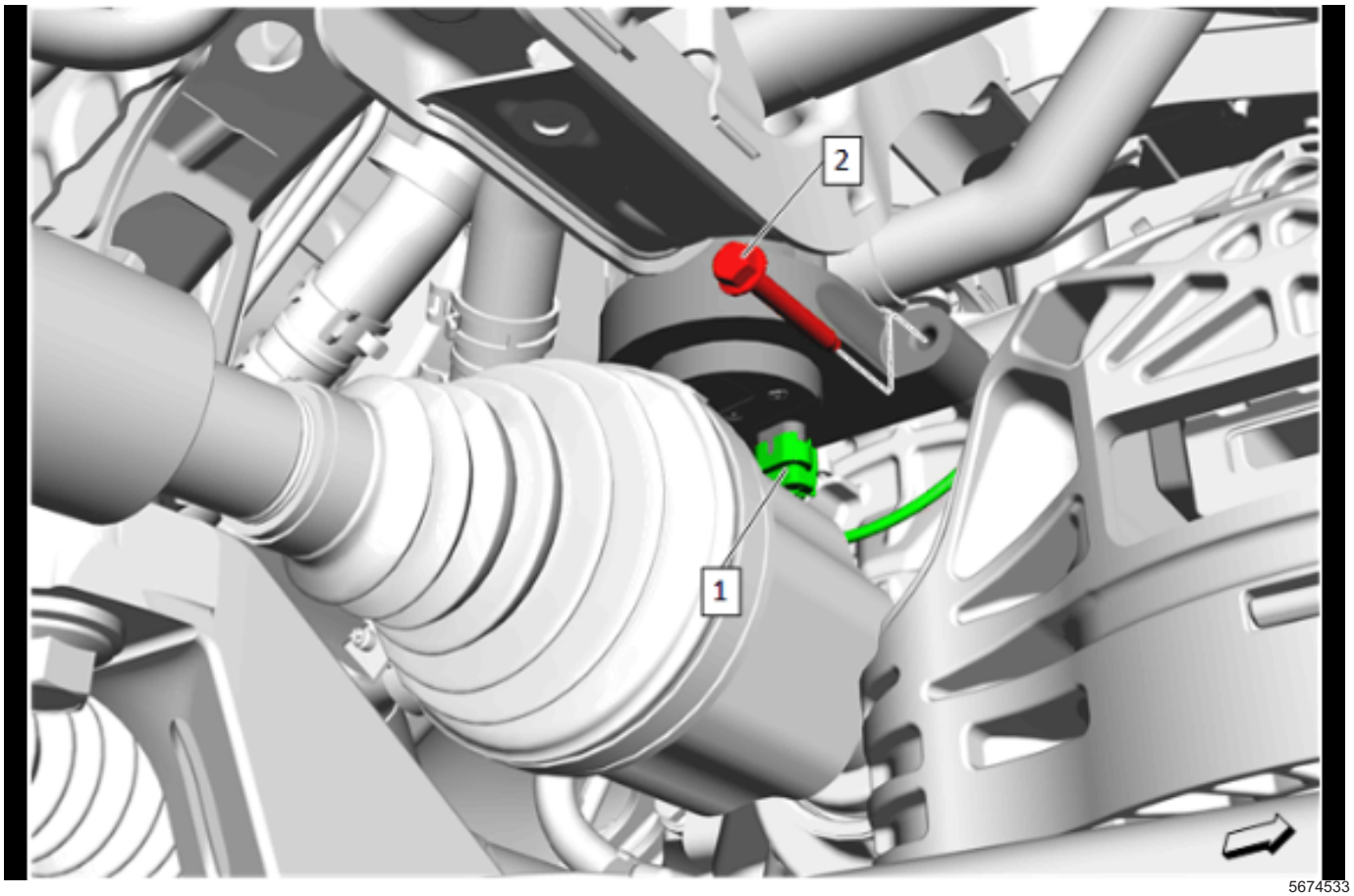

5674533

3. Heater Coolant Pump Bolt (2) » Install and tighten — *Fastener Specifications on page 5-3*
4. Electrical Connector (1) » Connect

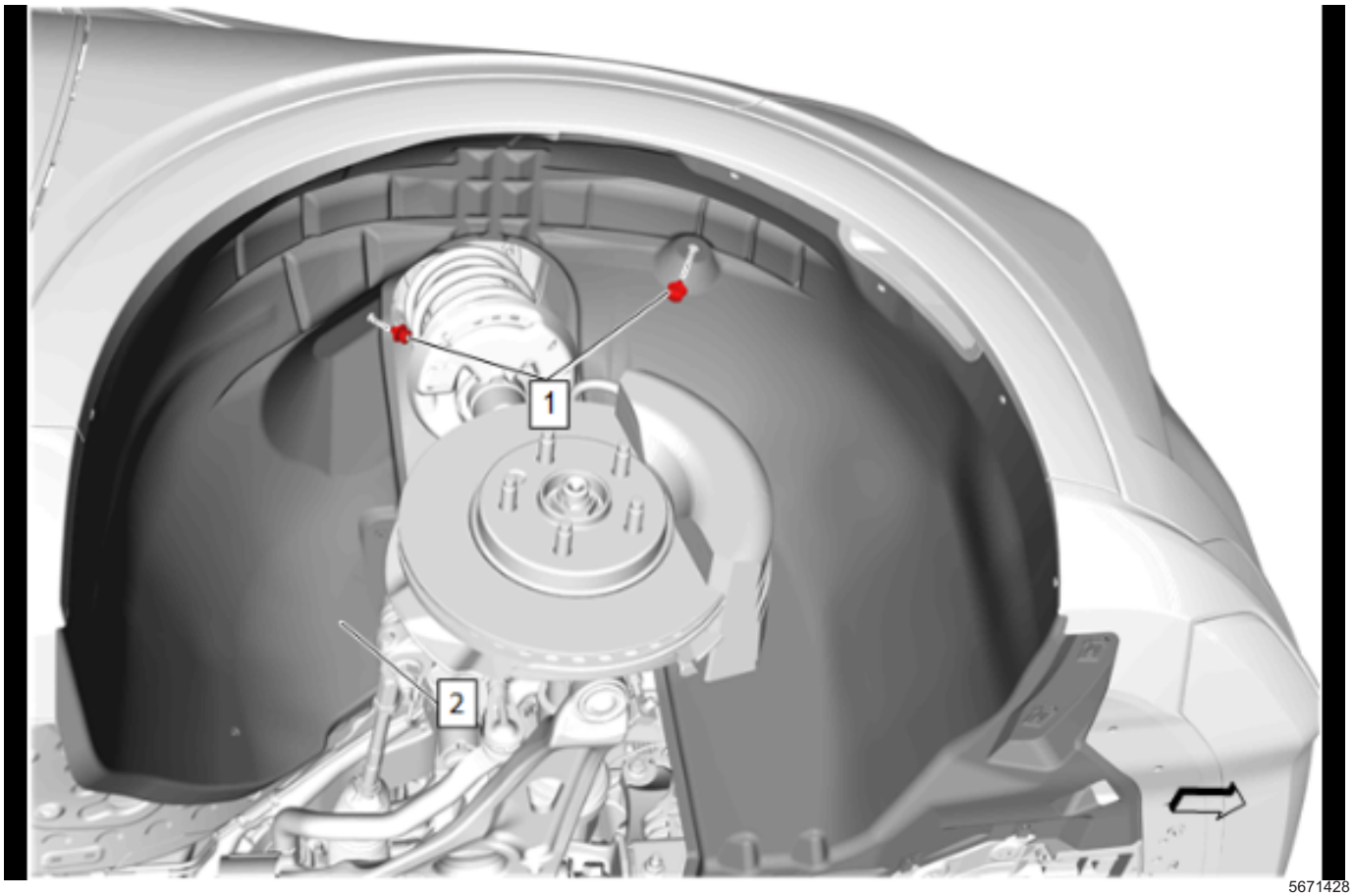

5671428

5. Front Wheelhouse Liner - Right Side (2) » Install
6. Front Wheelhouse Liner Retainer (1) » Install [2x]

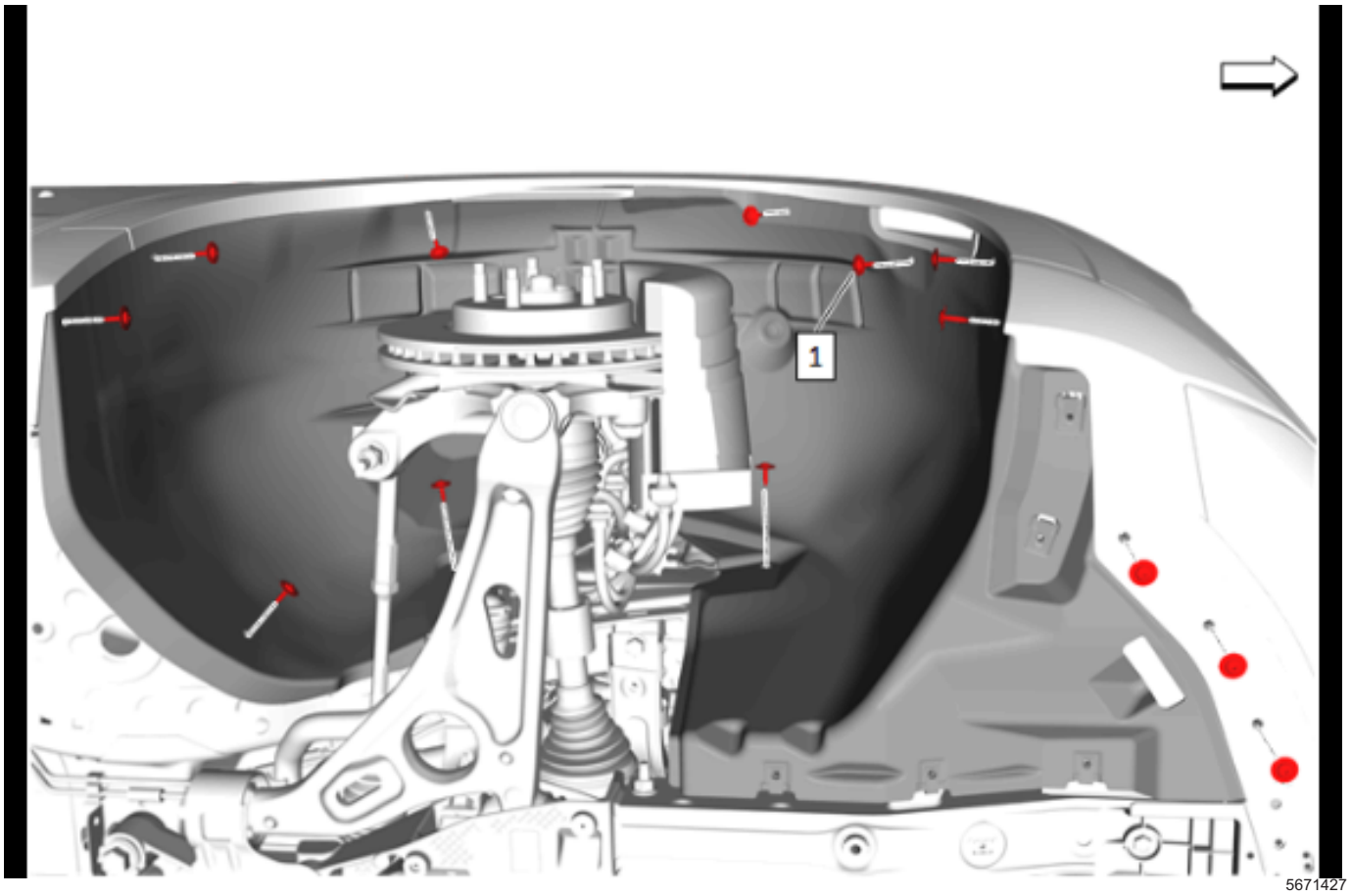

7. Front Wheelhouse Liner Bolt (1) » Install and tighten [13x] — Fastener Specifications

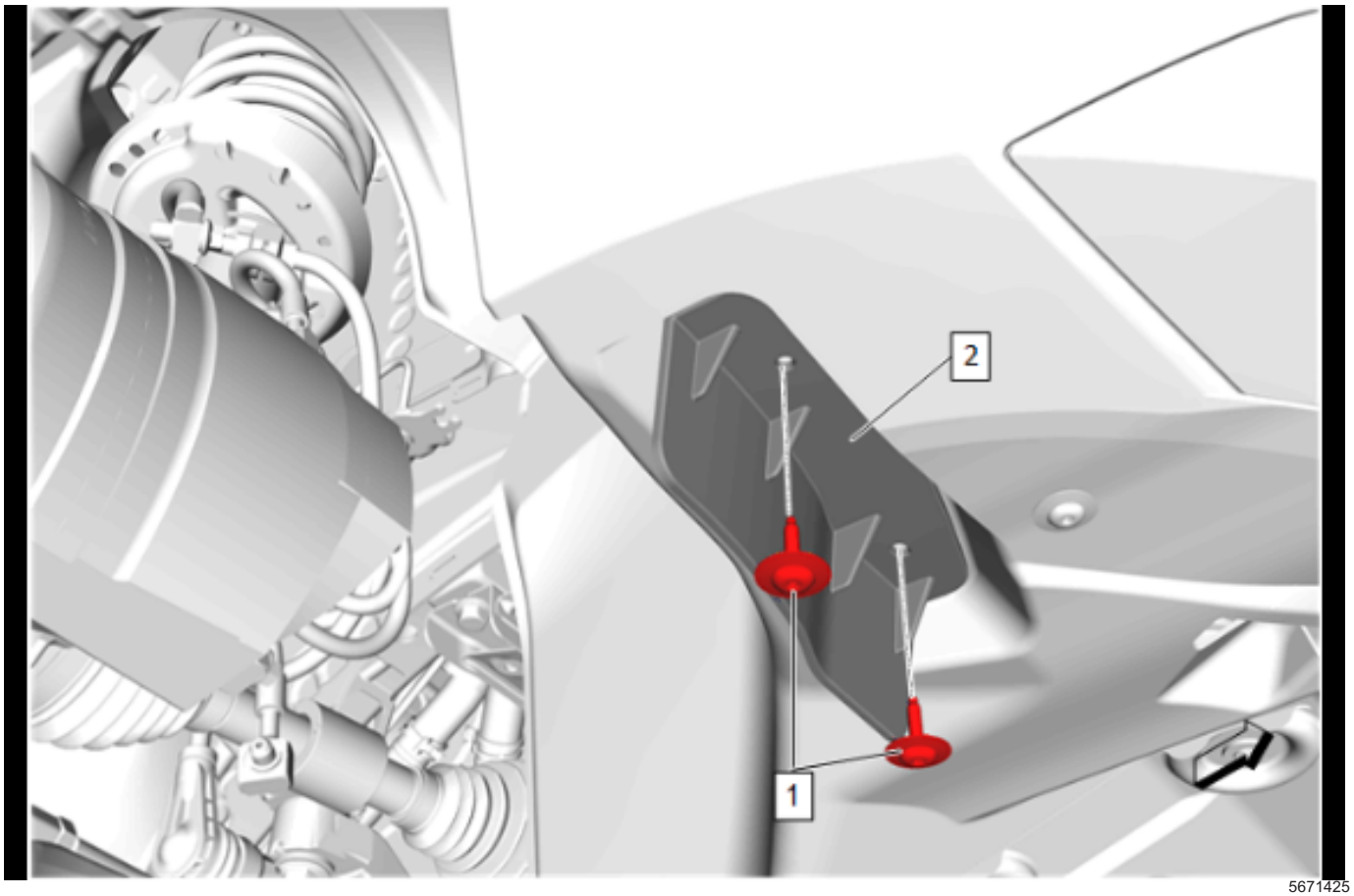

5671425

8. Front Tire Front Air Deflector (2) » Install
9. Front Tire Front Air Deflector Bolt (1) » Install and tighten [2x] — Fastener Specifications
10. Install the right front tire and wheel assembly.

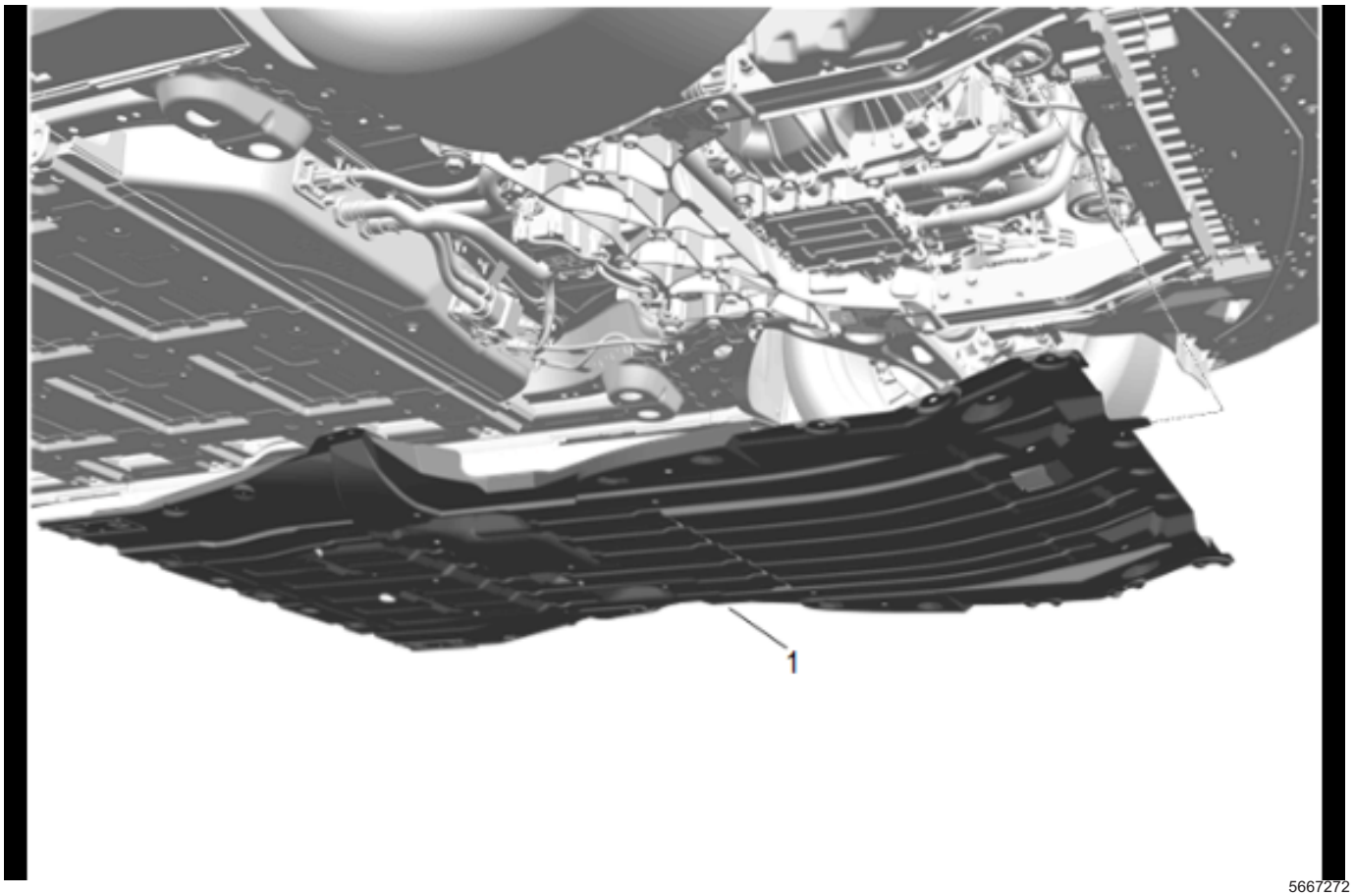

5667272

11. Front Compartment Air Deflector (1) » Install

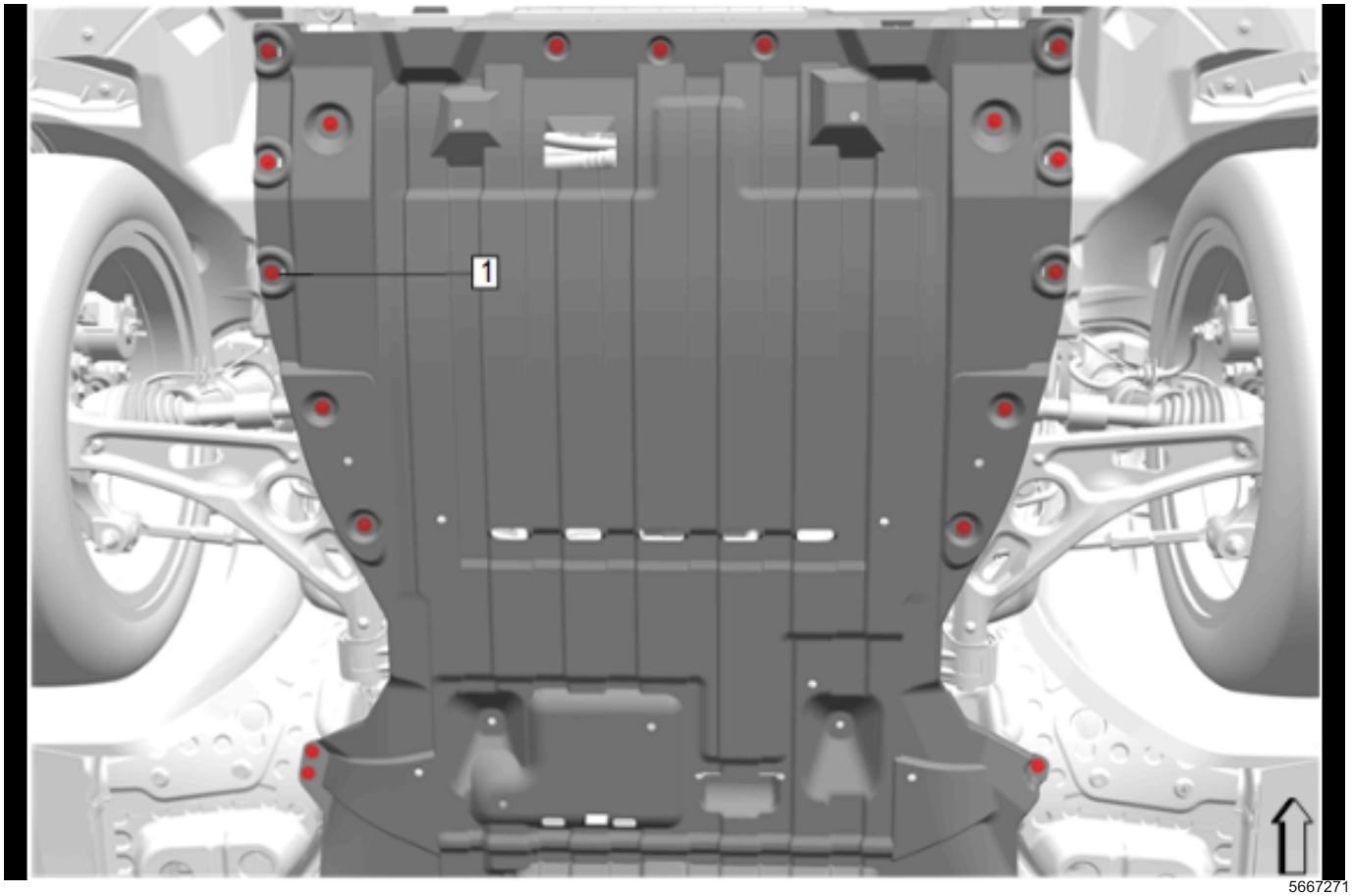

5667271

12. Front Compartment Air Deflector Bolt (1) » Install and tighten [18x] — Fastener Specifications

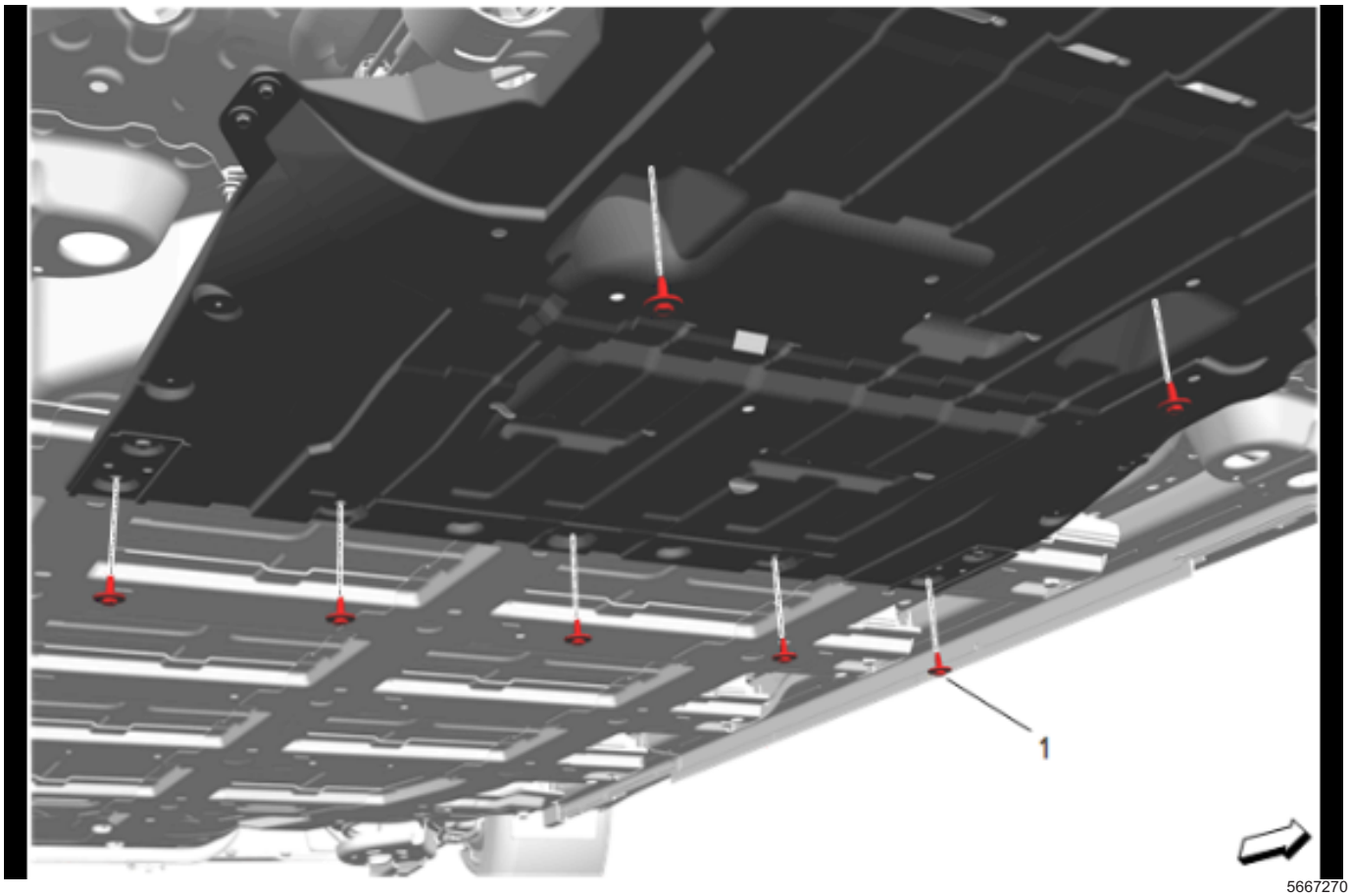

5667270

13. Front Compartment Air Deflector Bolt (1) » Install and tighten [7x] — Fastener Specifications

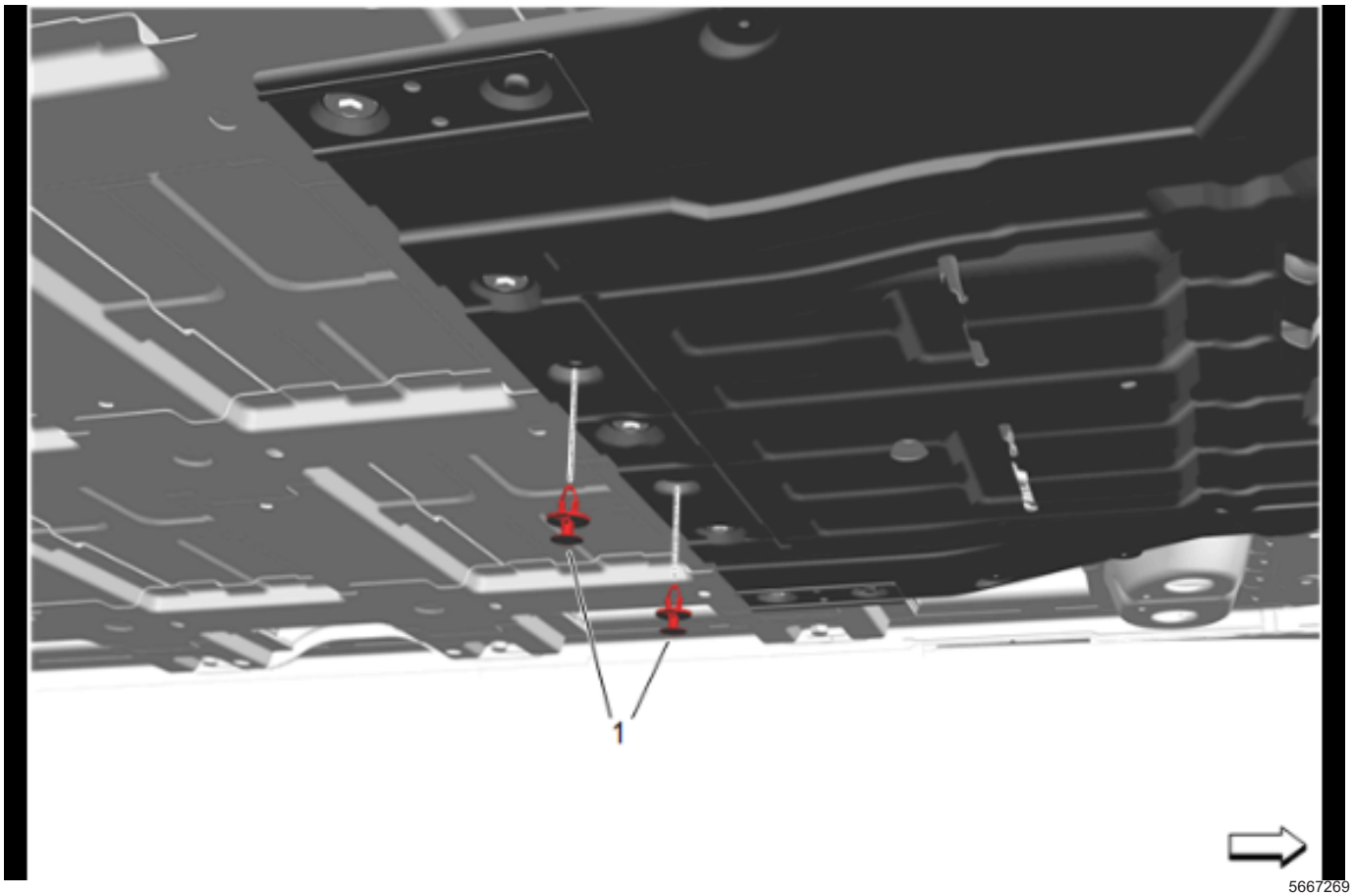

5667269

14. Front Compartment Air Deflector Retainer (1) » Install [2x]
15. Lower the vehicle.
16. Turn the vehicle power OFF, remove all keyless entry transmitters from the vehicle, and secure the transmitters outside of the vehicle.

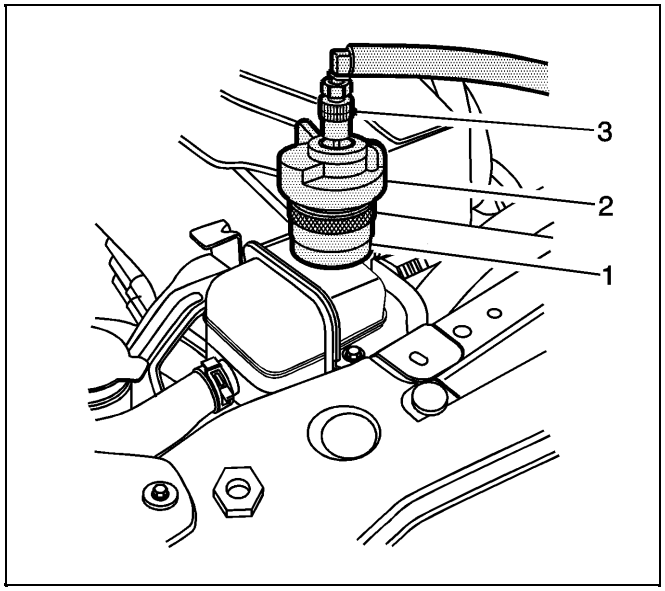

3242381

Note:

- The *GE-46143-2* adapter will NOT operate properly if the coolant is boiling.
- To prevent boiling of the coolant/water mixture in the vehicles cooling system, do NOT apply vacuum to a cooling system above **49°C (120°F)**.

17. Install the *GE-46143-2* adapter (1).
18. Attach the Vac-N-Fill cap (2) to the *GE-46143-2* adapter (1).
19. Attach the vacuum gauge assembly (3) to the Vac-N-Fill cap (2).

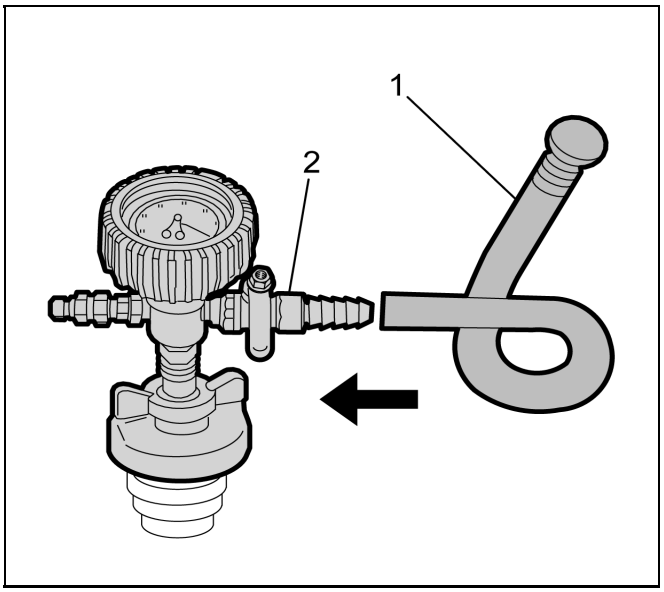

2846166

20. Ensure the valve on the vacuum gauge assembly is closed and attach the fill hose (1) to the barbed fitting (2).

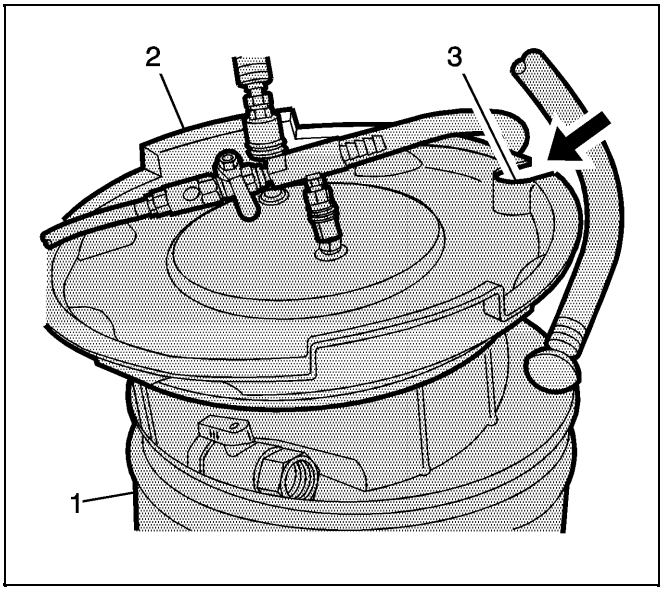

2846170

Note:

- Use Pre-mixed DEXCOOL® (50/50 mixture of DEXCOOL® and deionized water).
- Always use more coolant than necessary to eliminate air from being drawn into the cooling system.

21. Pour the coolant mixture into the graduated reservoir (1).
22. Place the fill hose in the graduated reservoir (1).

    Note: Prior to installing the vacuum tank to the graduated reservoir, ensure that the drain valve located on the bottom of the tank is closed.

23. Install the vacuum tank (2) to the graduated reservoir with the fill hose routed through the cut-out area (3) in the vacuum tank.

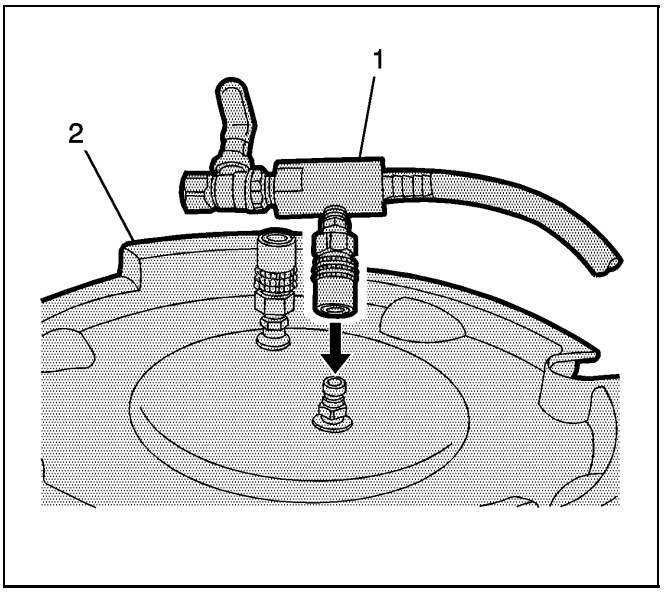

2846171

24. Attach the venturi assembly (1) to the vacuum tank (2).

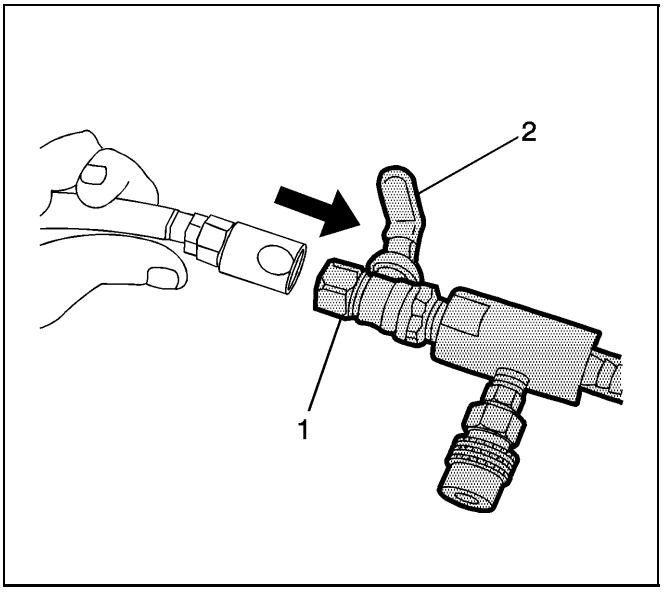

2846172

25. Ensure the valve (2) on the venturi assembly (1) is closed.
26. Attach a shop air hose to the venturi assembly (1).

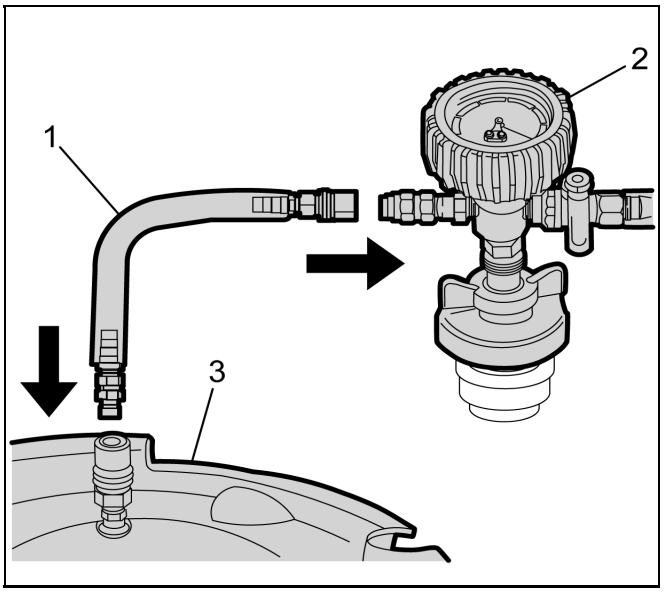

2846173

27. Attach the vacuum hose (1) to the vacuum gauge assembly (2) and the vacuum tank (3).

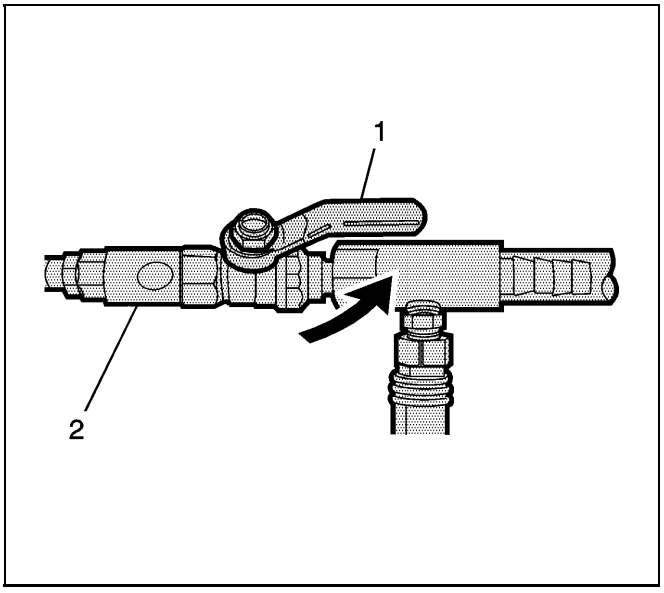

2846175

28. Open the valve (1) on the venturi assembly (2). The vacuum gauge will begin to rise and a hissing noise will be present.

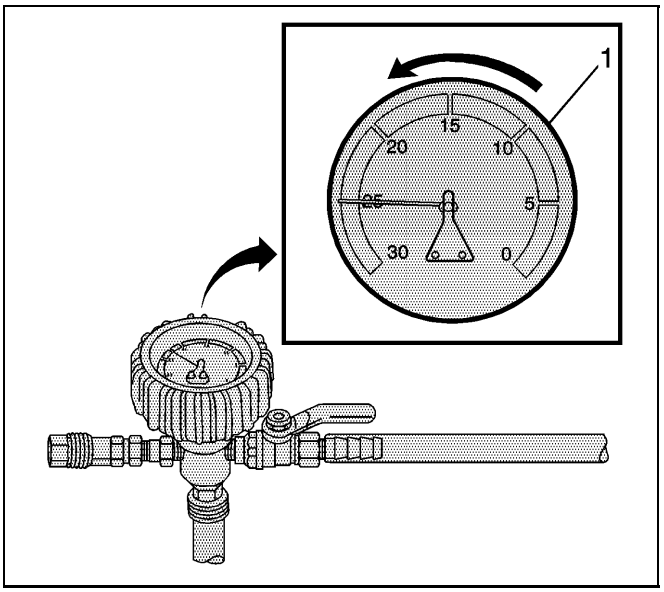

2846177

Note: Normal behavior includes cooling hoses collapsing due to the vacuum draw.

29. Continue to draw vacuum until the needle stops rising (1) at **610–660 mm Hg (24–26 in Hg)**.
30. To aid in the fill process, position the graduated reservoir above the coolant fill port.

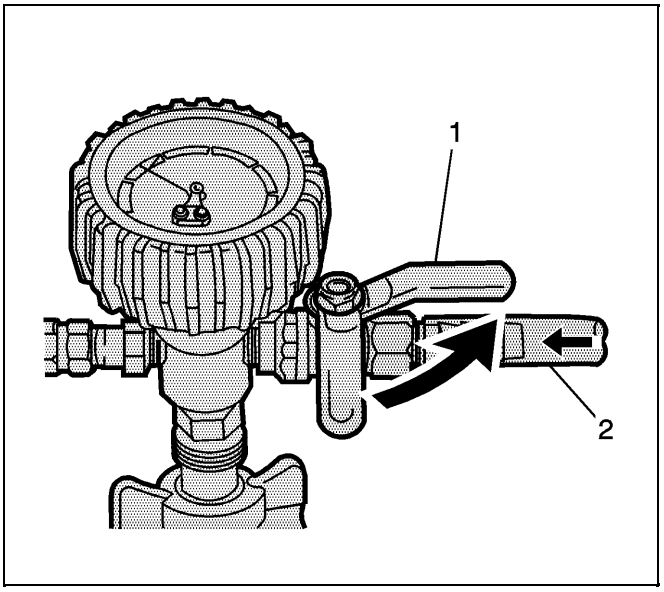

2846183

31. To eliminate air from the fill hose, slowly open the valve (1) on the vacuum gauge assembly (2) until the coolant reaches the top of the fill hose, then close the valve.
32. Close the valve on the venturi assembly.
33. If there is a suspected leak in the cooling system, allow the system to stabilize under vacuum and monitor for vacuum loss.

    If vacuum loss is observed: *Cabin Heater Coolant Heater System Loss of Coolant on page 5-34*

    Note: The vacuum gauge will drop as coolant is drawn into the system.

34. Open the valve on the vacuum gauge assembly.

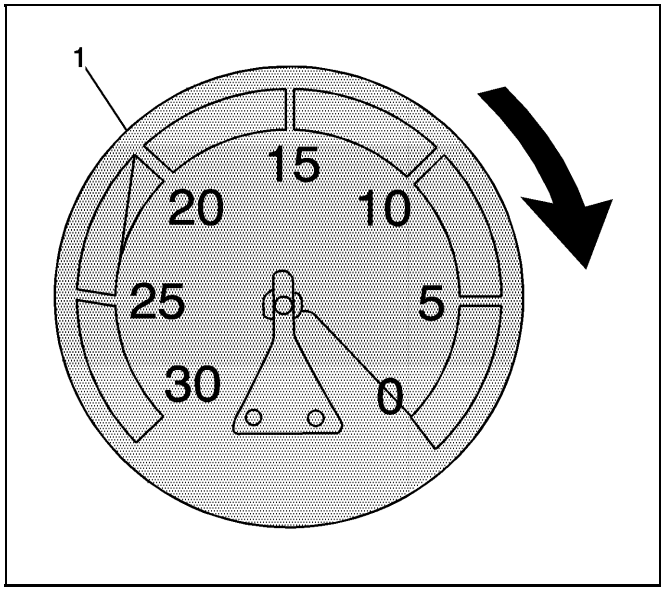

3242386

35. Once the vacuum gauge (1) reaches zero, close the valve on the vacuum gauge assembly and repeat steps 20–25.
36. Ensure the vehicle is in service mode. *Power Mode Description and Operation on page 6-692*
37. Detach the Vac-N-Fill cap from the *GE-46143-2* adapter.
38. Remove the *GE-46143-2* adapter.

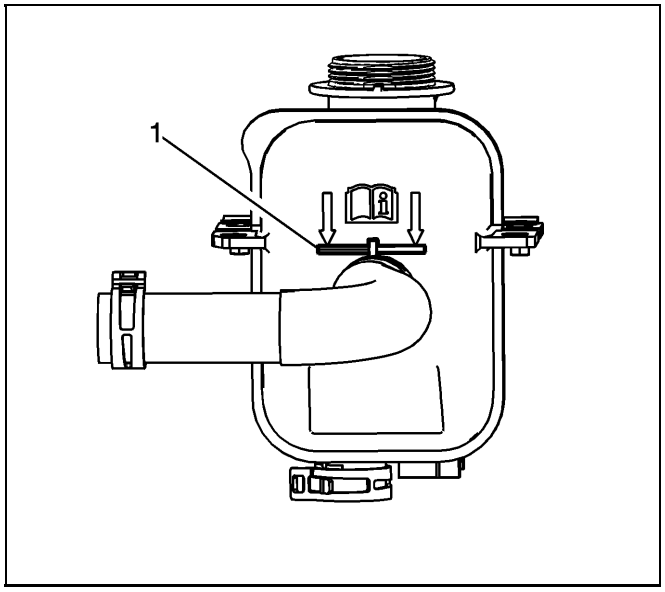

3242379

39. Adjust the heater coolant surge tank coolant level to a position just above the seam (1).
40. Use the *GE-26568* tester to check the concentration of the coolant mixture.
41. Install the heater coolant surge tank cap.

REMOVING EXCESS COOLANT FROM SYSTEM

Note: After filling the cooling system, the extraction hose can be used to remove excess coolant to achieve the proper coolant level.

1. Detach the vacuum hose from the vacuum gauge assembly.

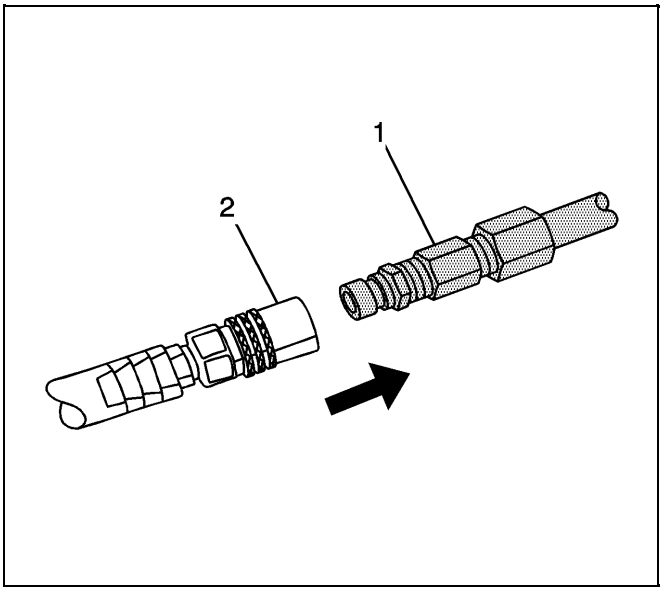

2857825

2. Attach the extraction hose (1) to the vacuum hose (2).

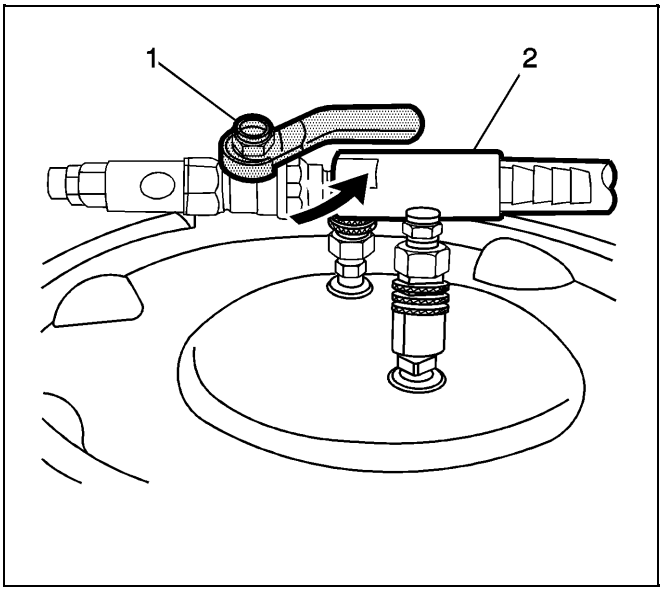

2857827

3. Open the valve (1) on the venturi assembly (2) to start a vacuum draw.

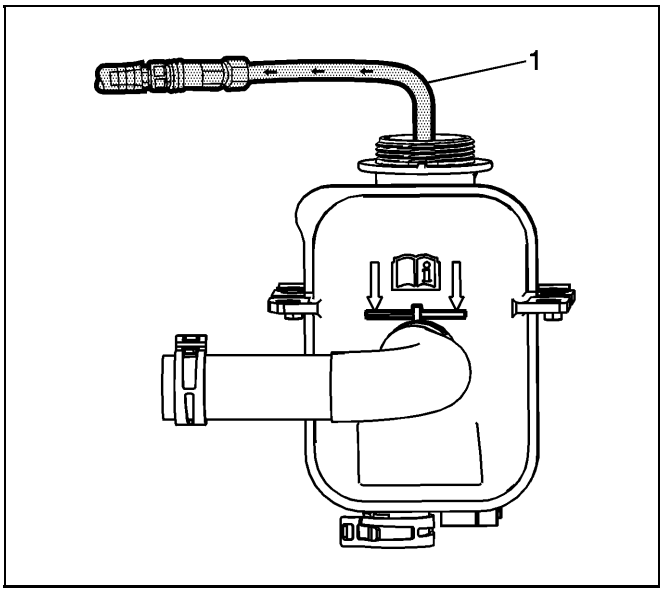

3242387

4. Assemble the extraction hose (1) and insert the hose into the heater coolant surge tank.

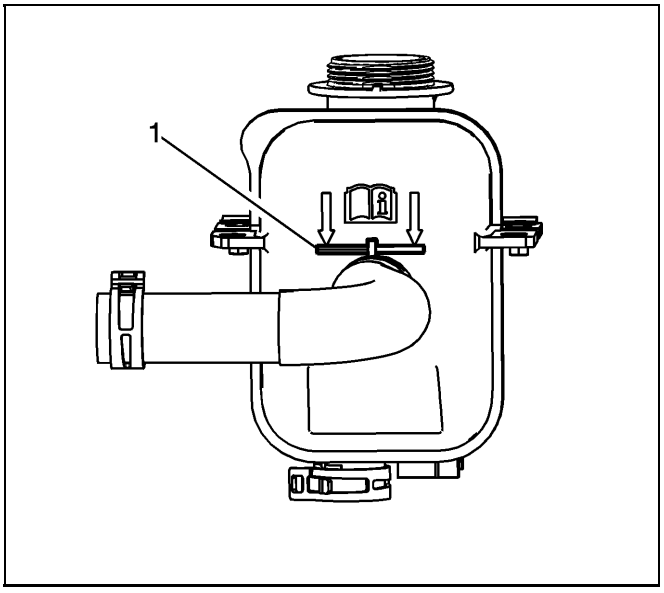

3242379

5. Adjust the heater coolant surge tank coolant level to a position just above the seam (1).
6. Open the drain valve on the bottom of the vacuum tank and drain the coolant into a suitable container for disposal.

Air Conditioning and Drive Motor Battery Cooling Compressor Replacement

Single Use Fasteners and Components

- Air Conditioning Condenser Hose Seal - Large
- Air Conditioning Compressor Hose Seal - Large

Removal Procedure

Danger: Always perform the High Voltage Disabling procedure prior to servicing any High Voltage component or connection. Personal Protection Equipment (PPE) and proper procedures must be followed.

The High Voltage Disabling procedure will perform the following tasks:

- ***Identify how to disable high voltage.***
- ***Identify how to test for the presence of high voltage.***
- ***Identify condition under which high voltage is always present and personal protection equipment (PPE) and proper procedures must be followed.***

Failure to follow the procedures exactly as written may result in serious injury or death.

Danger: Do not use a service jack in locations other than those specified to lift this vehicle. Lifting the vehicle with a jack in those other locations could cause the vehicle to slip off the jack and roll; this could cause injury or death.

Caution: This A/C system's high voltage A/C Compressor uses Polyolester (POE) refrigerant oil instead of Polyalkylene Glycol (PAG) refrigerant oil. Use only approved GM POE oil no more than two hours after removal from its sealed moisture proof packaging (reference GM POE label for proper usage) in refrigerant systems equipped with a High Voltage A/C compressor. GM POE oil is intended to be used with the GE-45037-A A/C oil injector and the GE-48997 A/C POE oil injector hose. Use of any refrigerant oil other than the approved GM POE, handled and installed per GM's requirements may result in compressor failure and/or loss of HV isolation with associated DTC's set.

1. Disable the high voltage system.
2. Recover the refrigerant. *Refrigerant Recovery and Recharging on page 5-36*
3. Raise and support the vehicle.

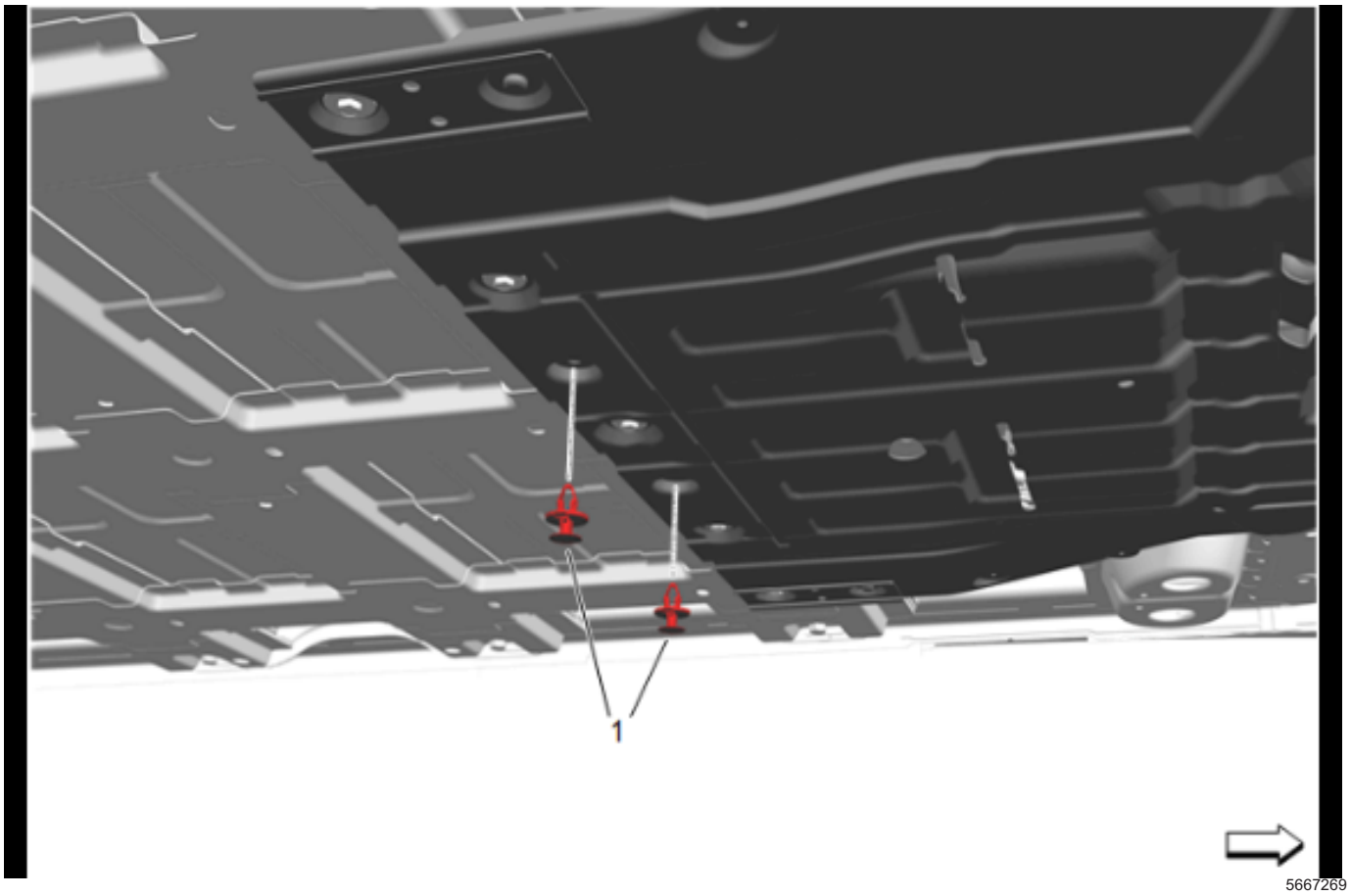

4. Front Compartment Air Deflector Retainer (1) »
   Remove [2x]

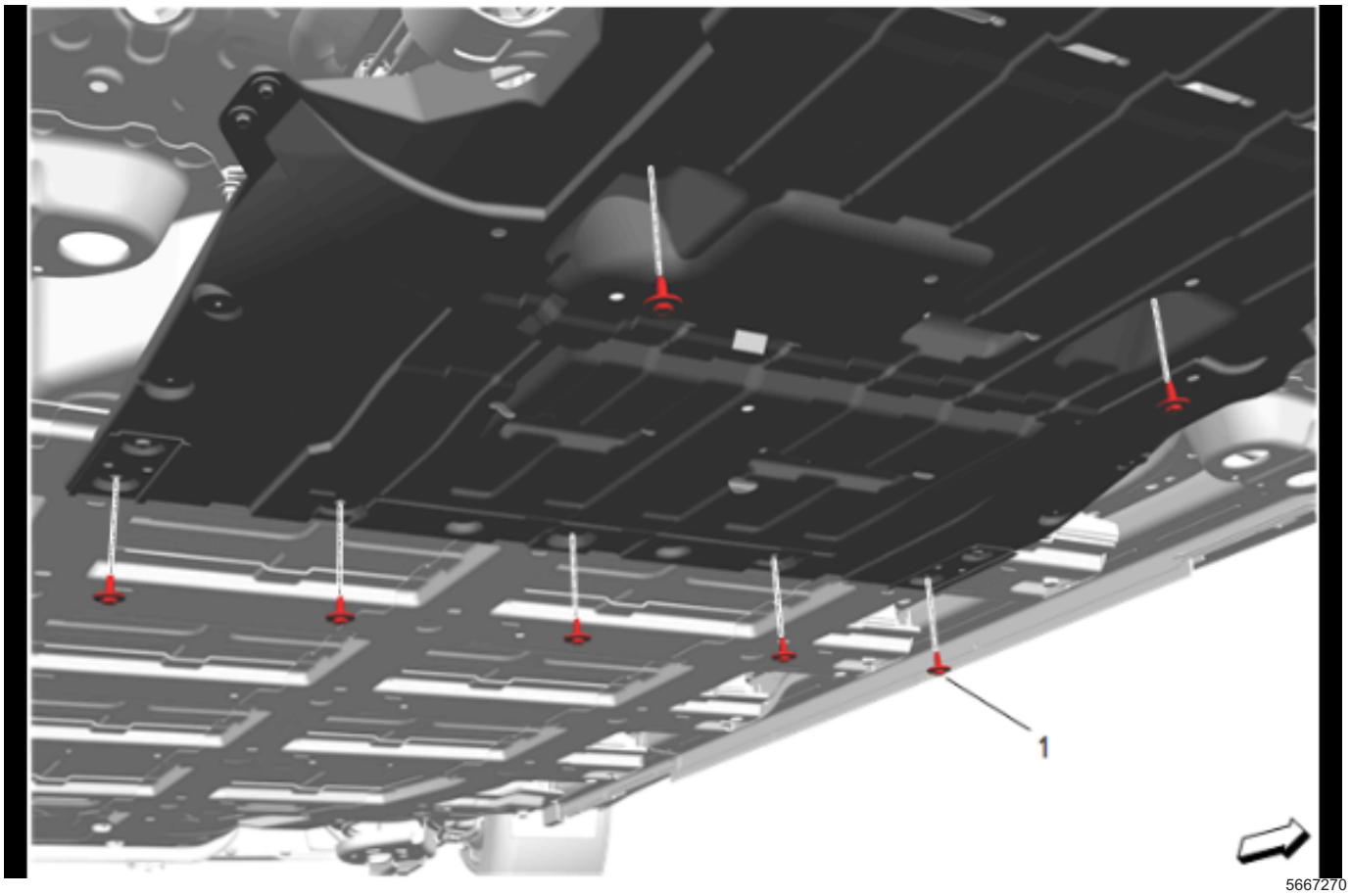

5. Front Compartment Air Deflector Bolt (1) » Remove [7x]

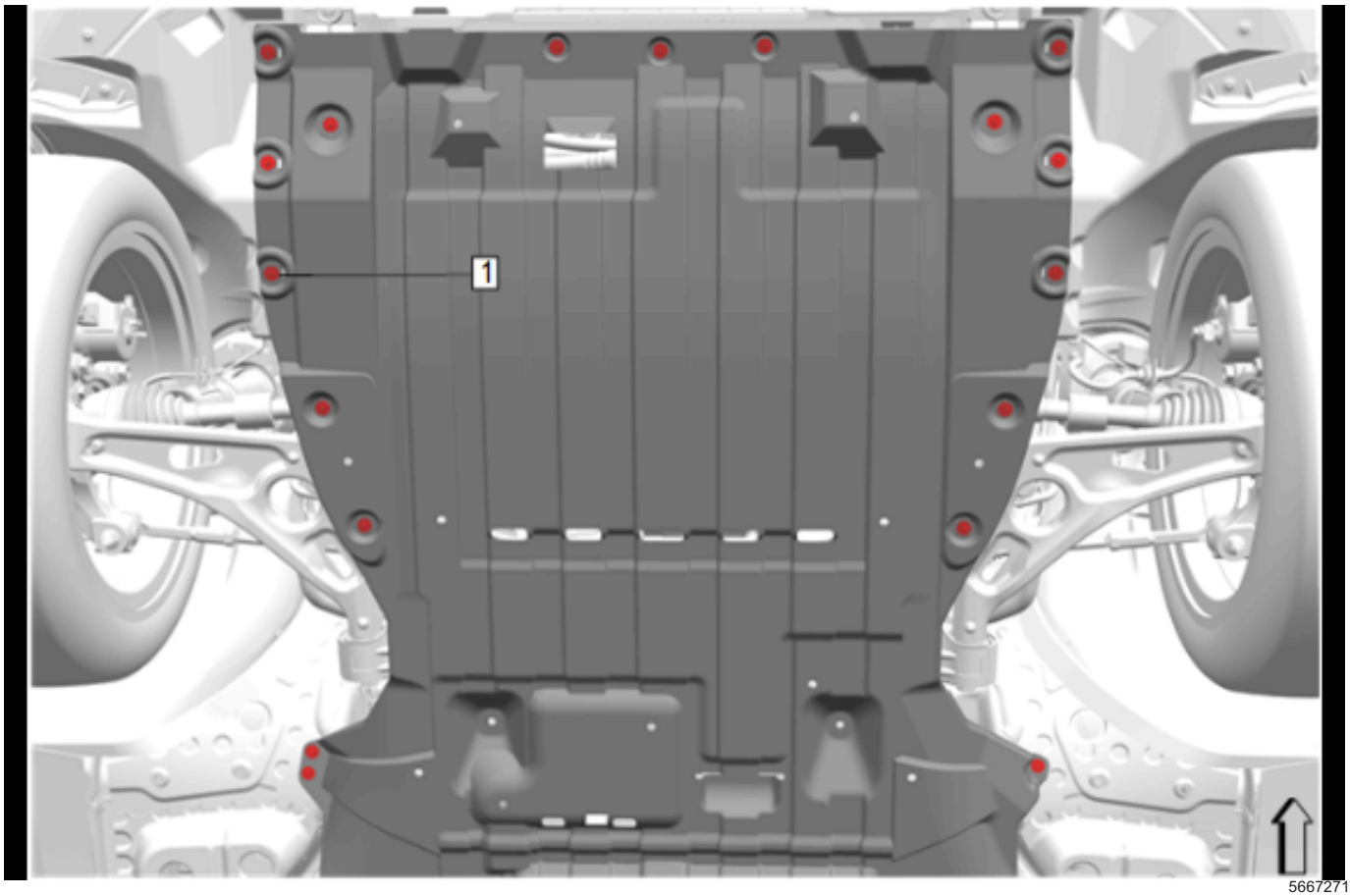

5667271

6. Front Compartment Air Deflector Bolt (1) »
   Remove [18x]

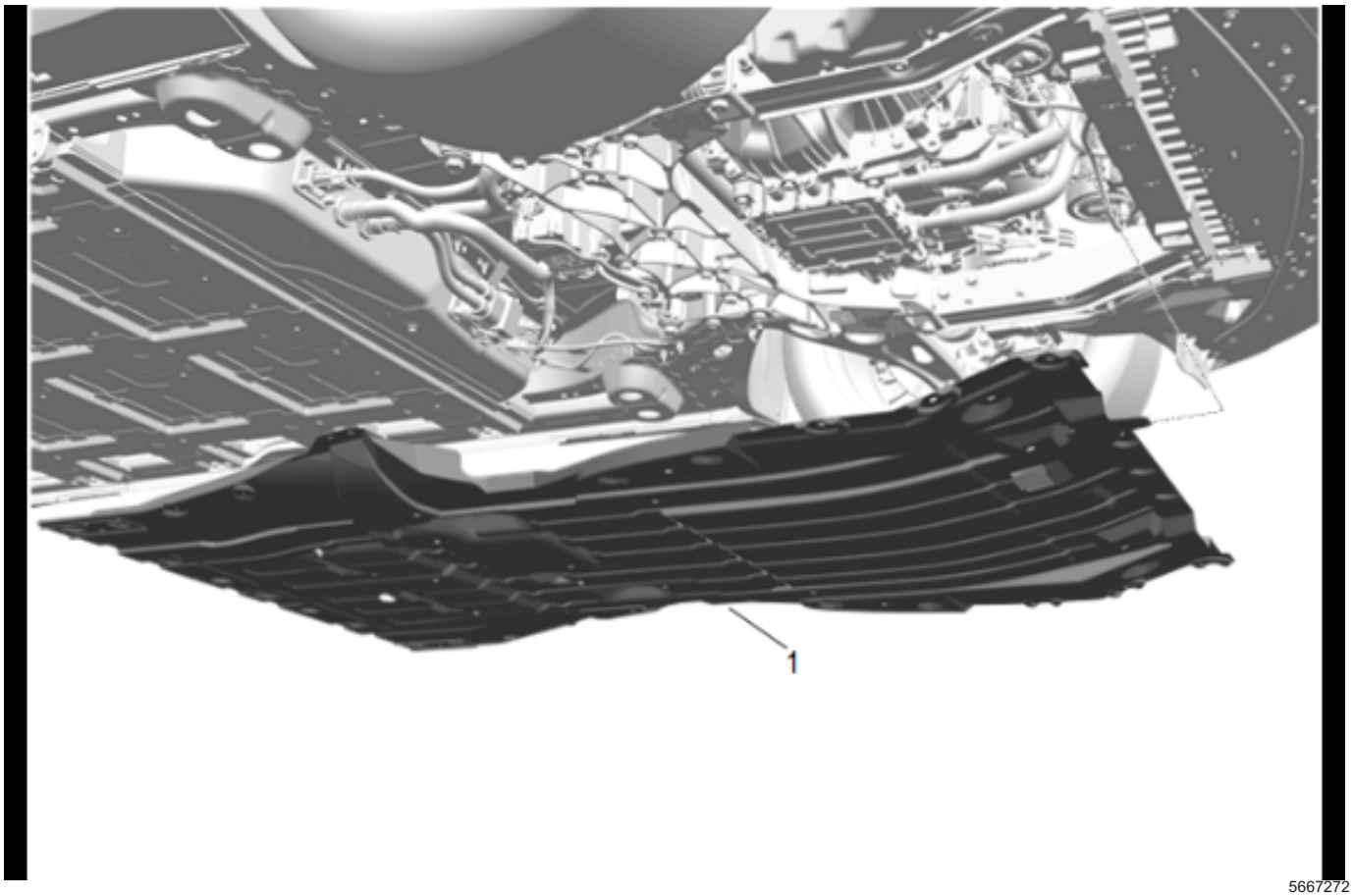

5667272

7. Front Compartment Air Deflector (1) » Remove
8. Remove the left front tire and wheel assembly.

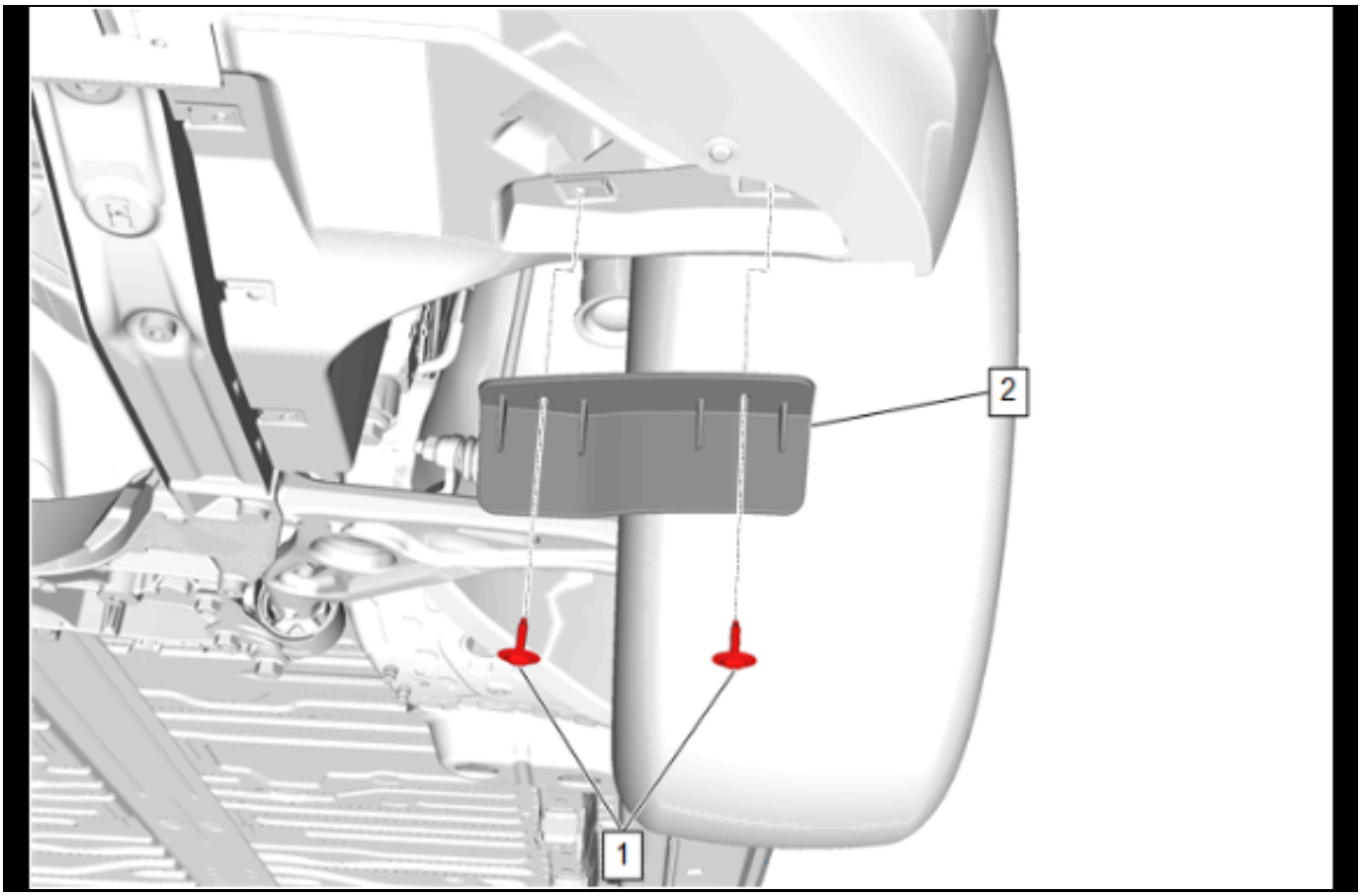

5493680

9. Front Tire Front Air Deflector Bolt (1) » Remove [2x]
10. Front Tire Front Air Deflector (2) » Remove

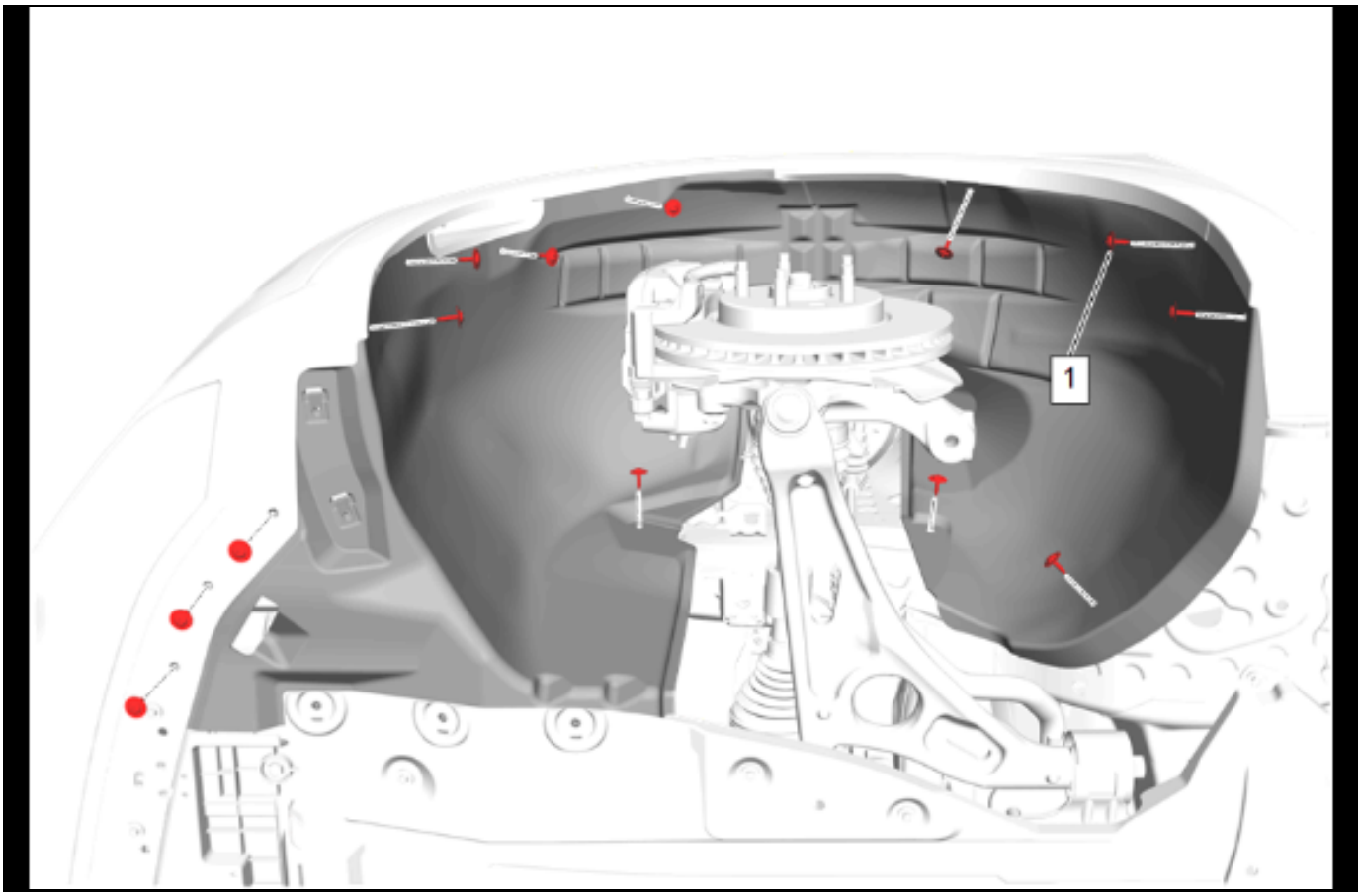

5661891

11. Front Wheelhouse Liner Bolt (1) » Remove [13x]

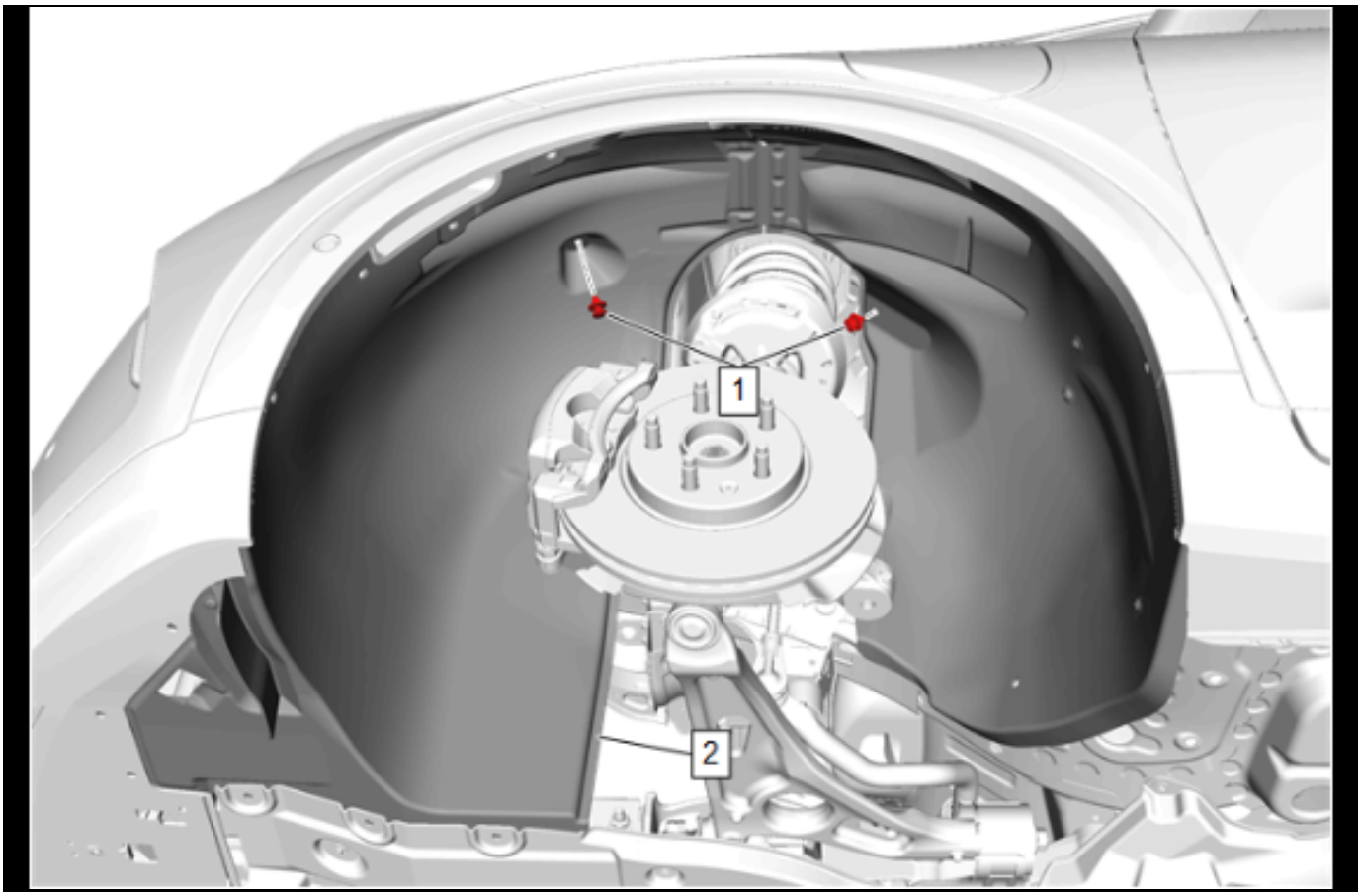

5491620

12. Front Wheelhouse Liner Retainer (1) » Remove [2x]
13. Front Wheelhouse Liner - Left Side (2) » Remove

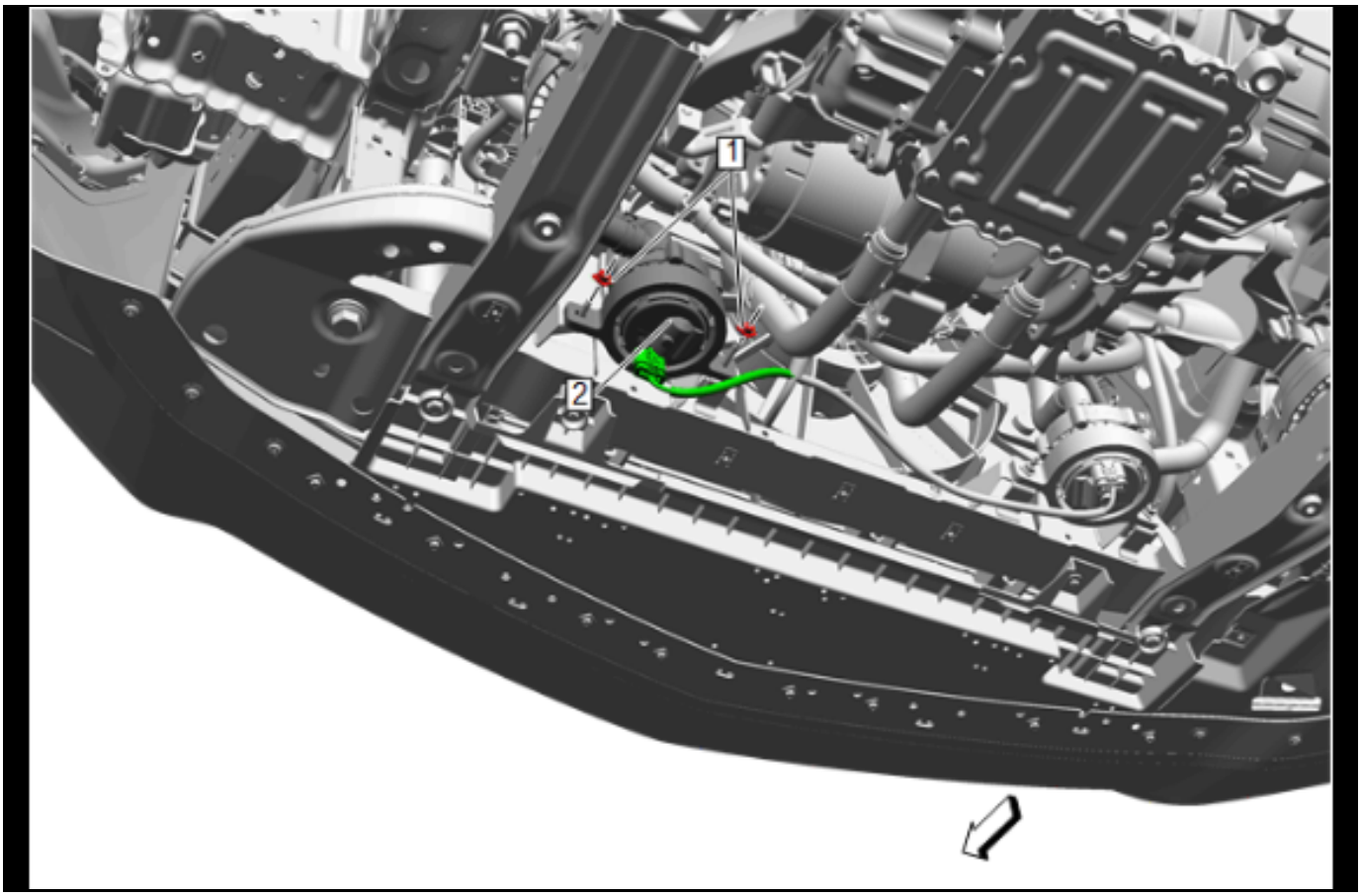

5620413

14. Drive Motor Battery Coolant Pump Bracket Nut (1)
    » Remove [2x]
15. Reposition the drive motor battery coolant pump (2) away to remove the air conditioning and drive motor cooling compressor.

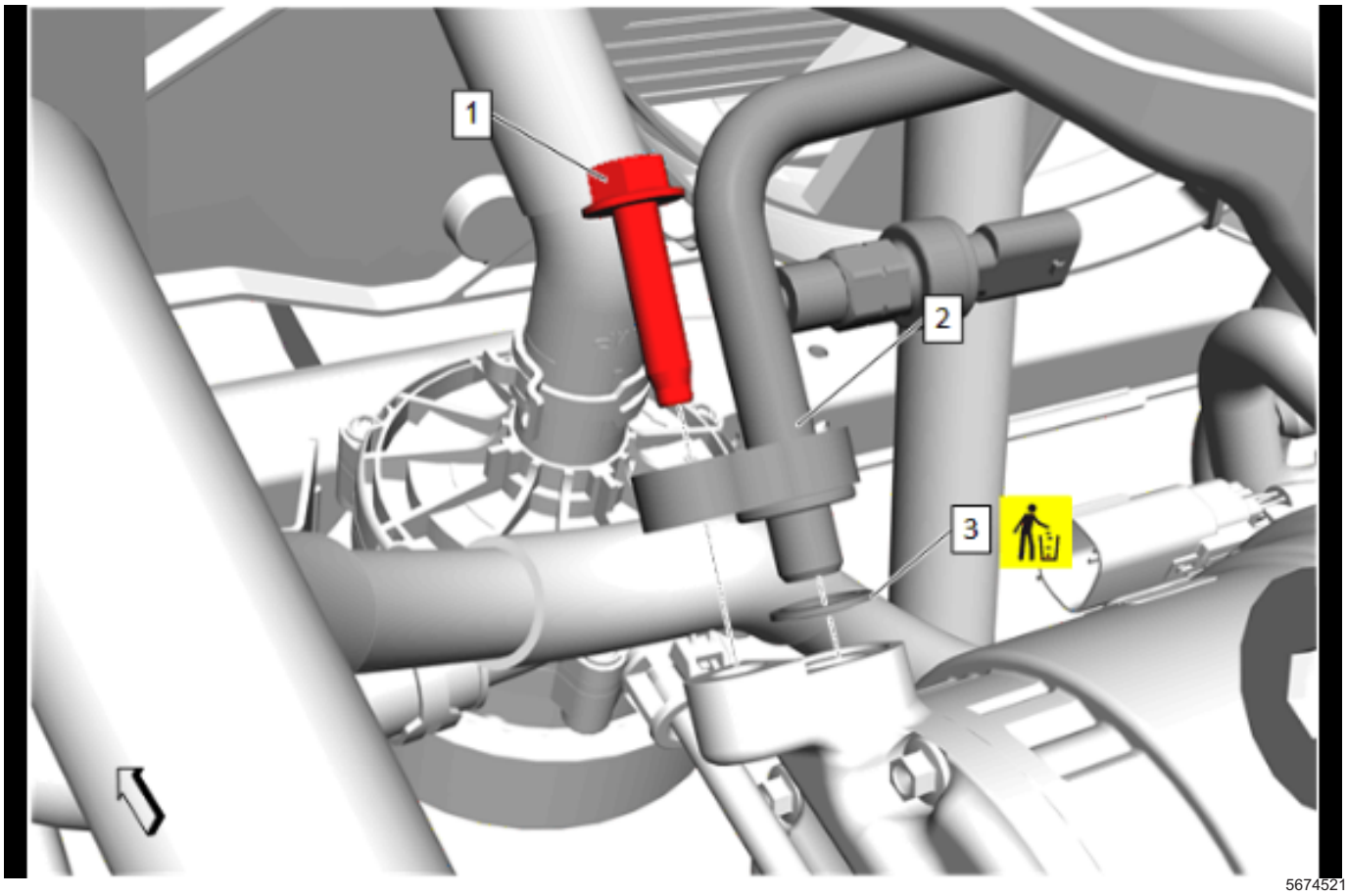

16. Air Conditioning Condenser Hose Bolt (1) » Remove
17. Air Conditioning Condenser Hose (2) @ Air Conditioning and Drive Motor Battery Cooling Compressor » Remove
18. Air Conditioning Condenser Hose Seal - Large (3) » Remove and DISCARD

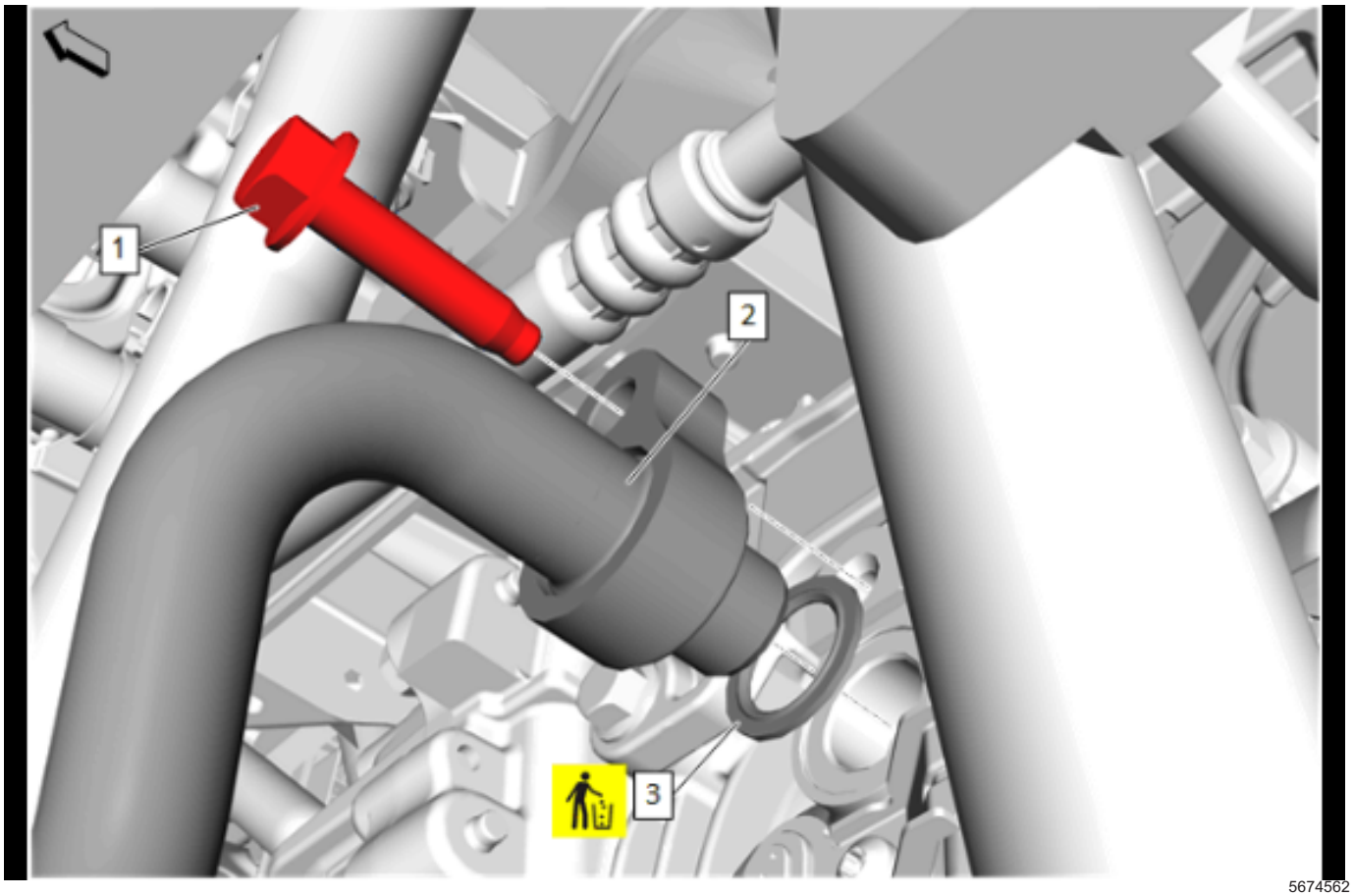

5674562

19. Air Conditioning Compressor Hose Bolt (1) » Remove
20. Air Conditioning Compressor Hose (2) @ Air Conditioning and Drive Motor Battery Cooling Compressor » Remove
21. Air Conditioning Compressor Hose Seal - Large (3) » Remove and DISCARD

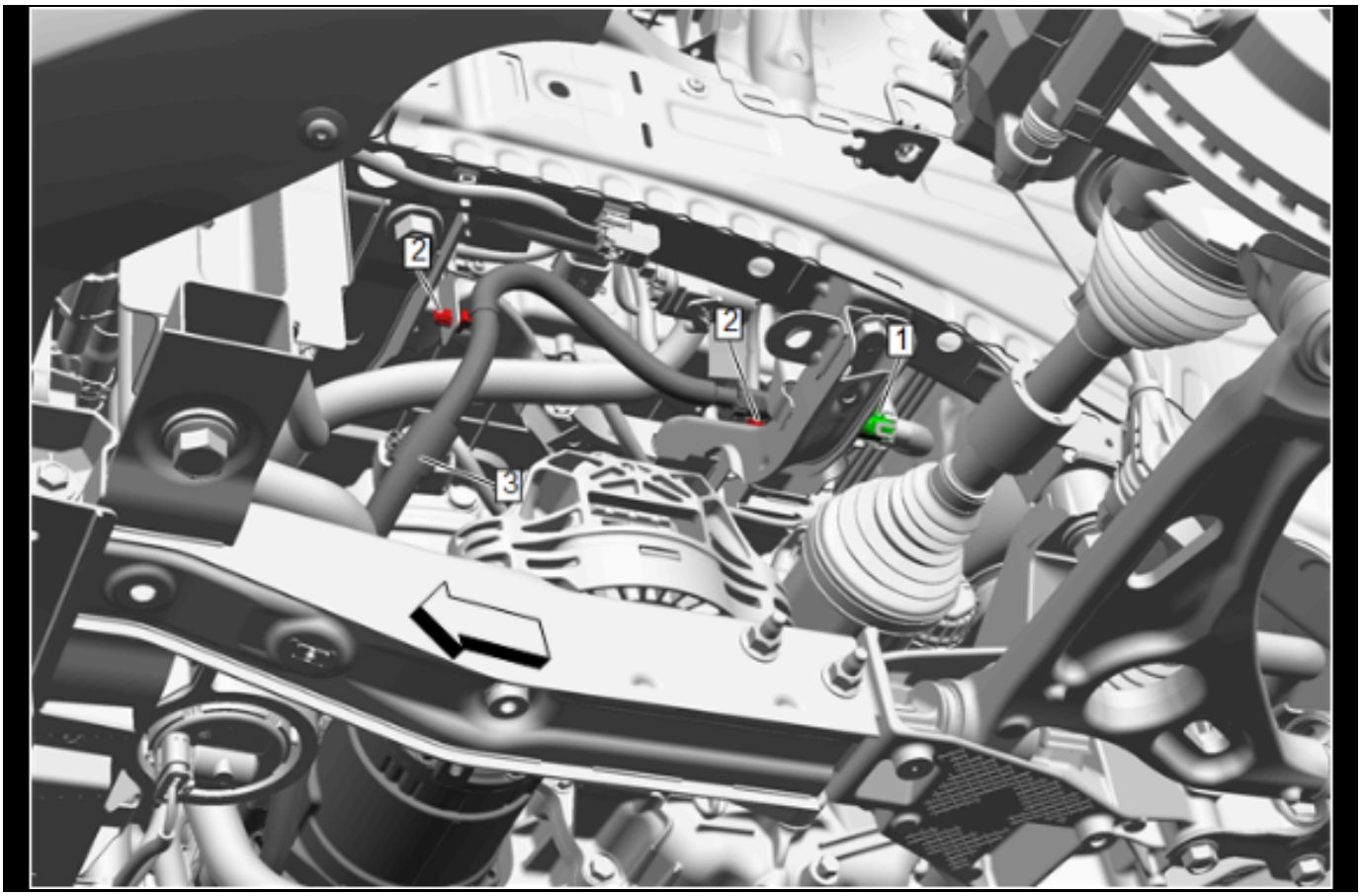

5541545

22. Electrical Connector (1) » Disconnect
23. Wiring Harness Clip (2) » Remove [2x]
24. The compressor and compressor wiring harness (3) must be removed as an assembly.

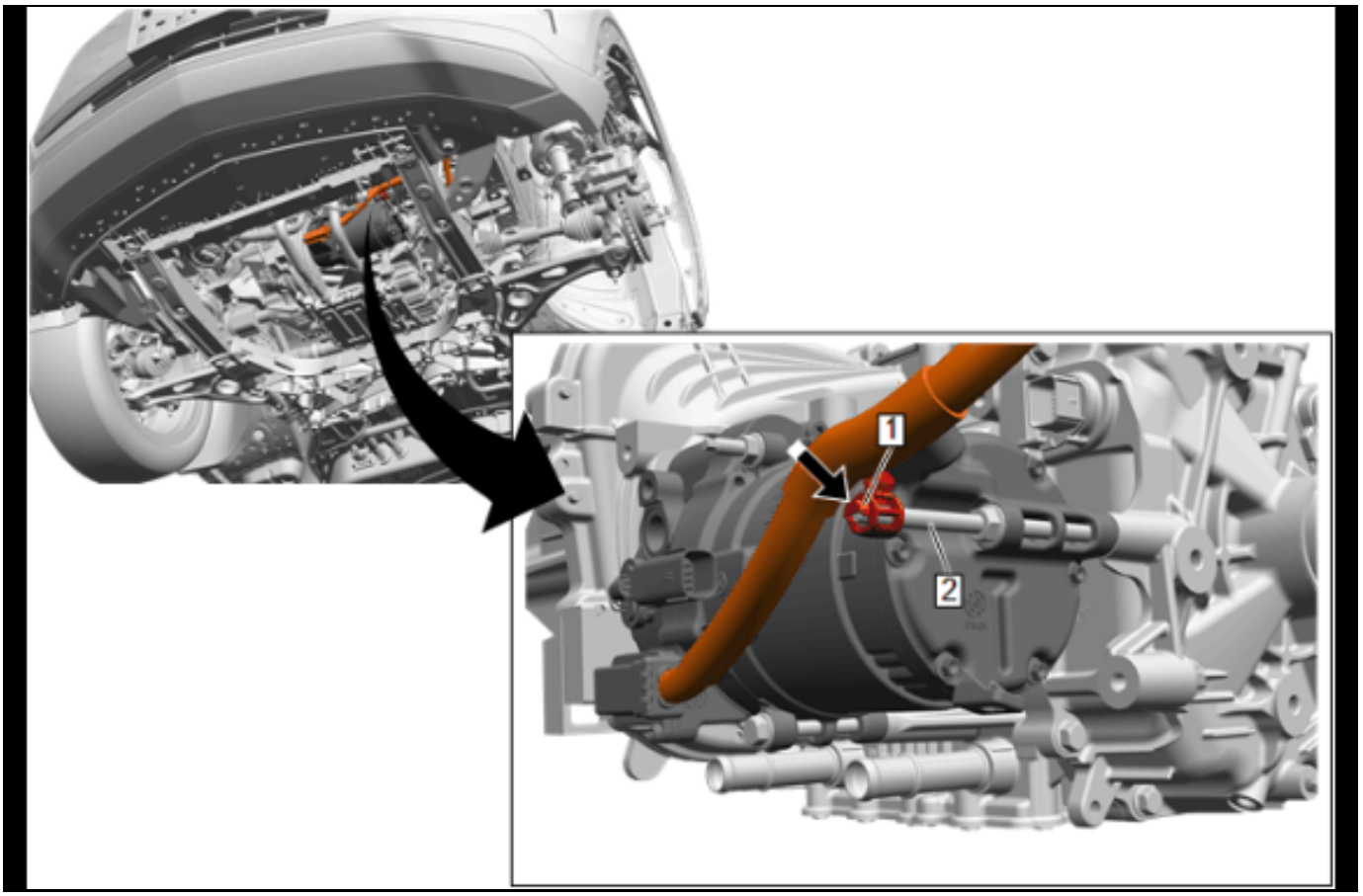

5620412

25. Cut or damage the cover portion (arrow) of the wiring harness retainer (1) to access the air conditioning and drive motor battery cooling compressor stud (2).

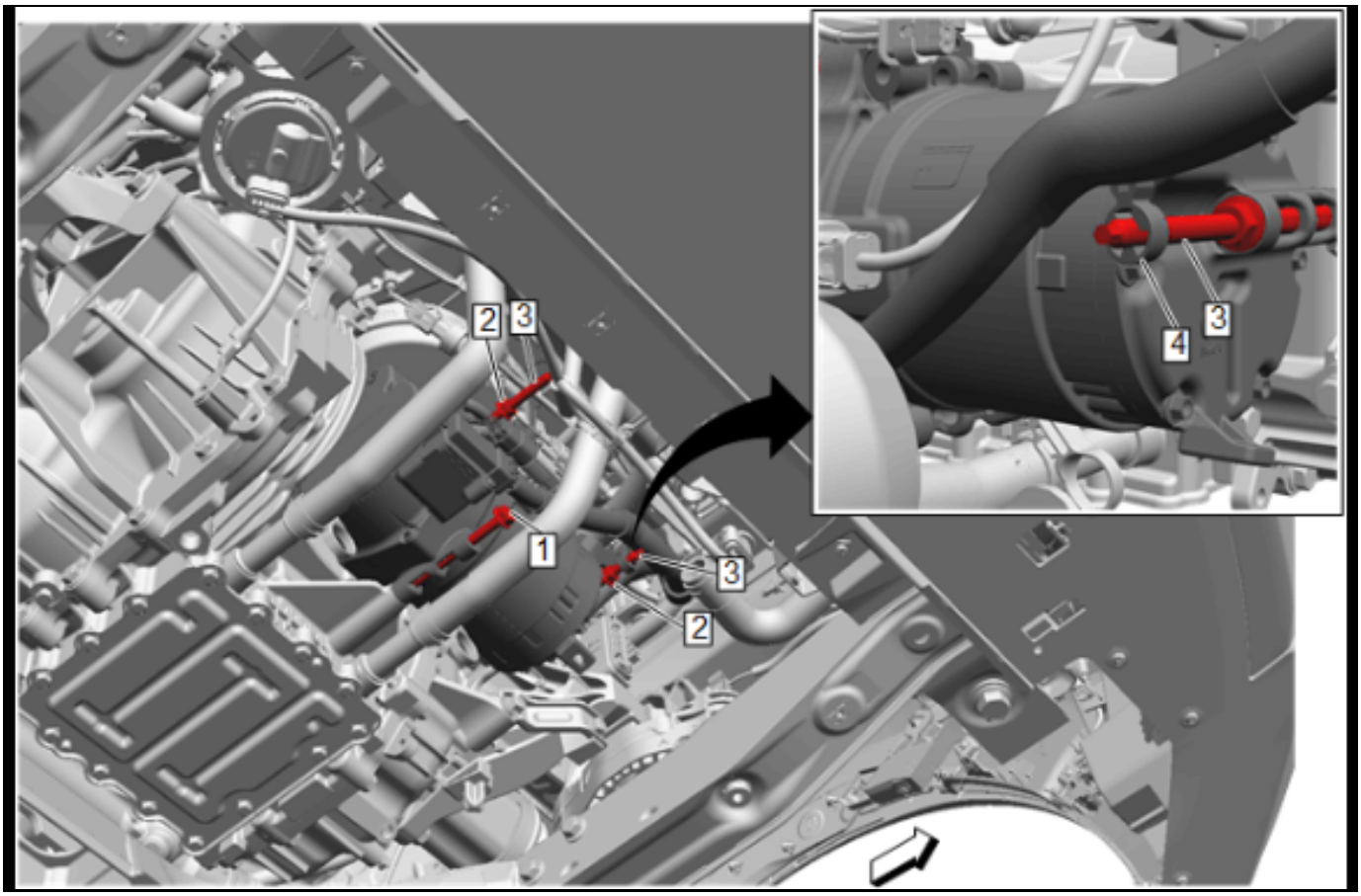

5541541

26. Disconnect the electrical connector.
27. Air Conditioning and Drive Motor Battery Cooling Compressor Bolt (1) » Remove
28. Air Conditioning and Drive Motor Battery Cooling Compressor Nut (2) » Remove [2x]
29. Air Conditioning and Drive Motor Battery Cooling Compressor Stud (3) » Remove [2x]
30. Remove the air conditioning and drive motor battery cooling compressor stud (3) and the wiring harness retainer (4) together.

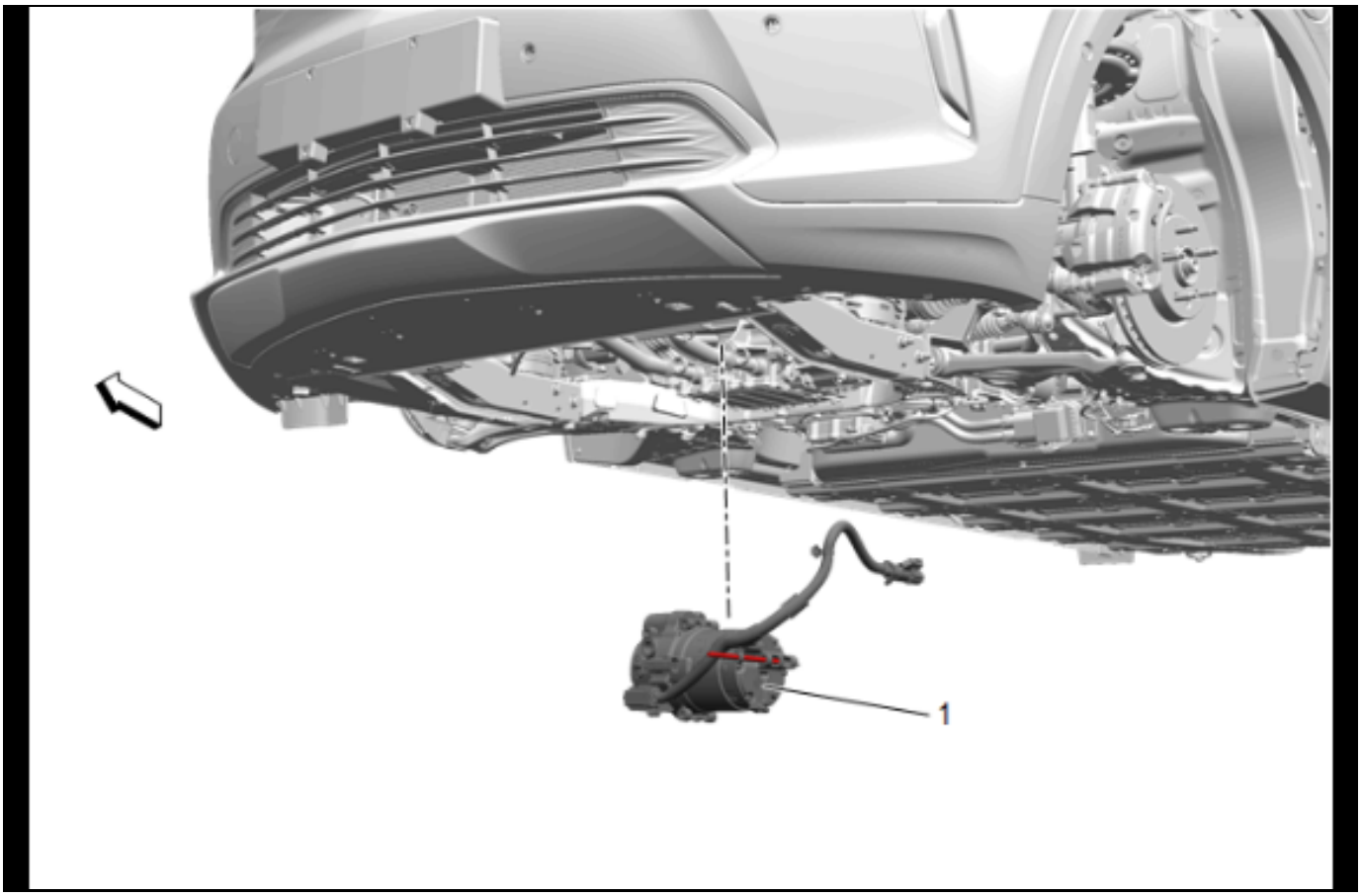

5541540

31. Air Conditioning and Drive Motor Battery Cooling Compressor (1) » Remove

Installation Procedure

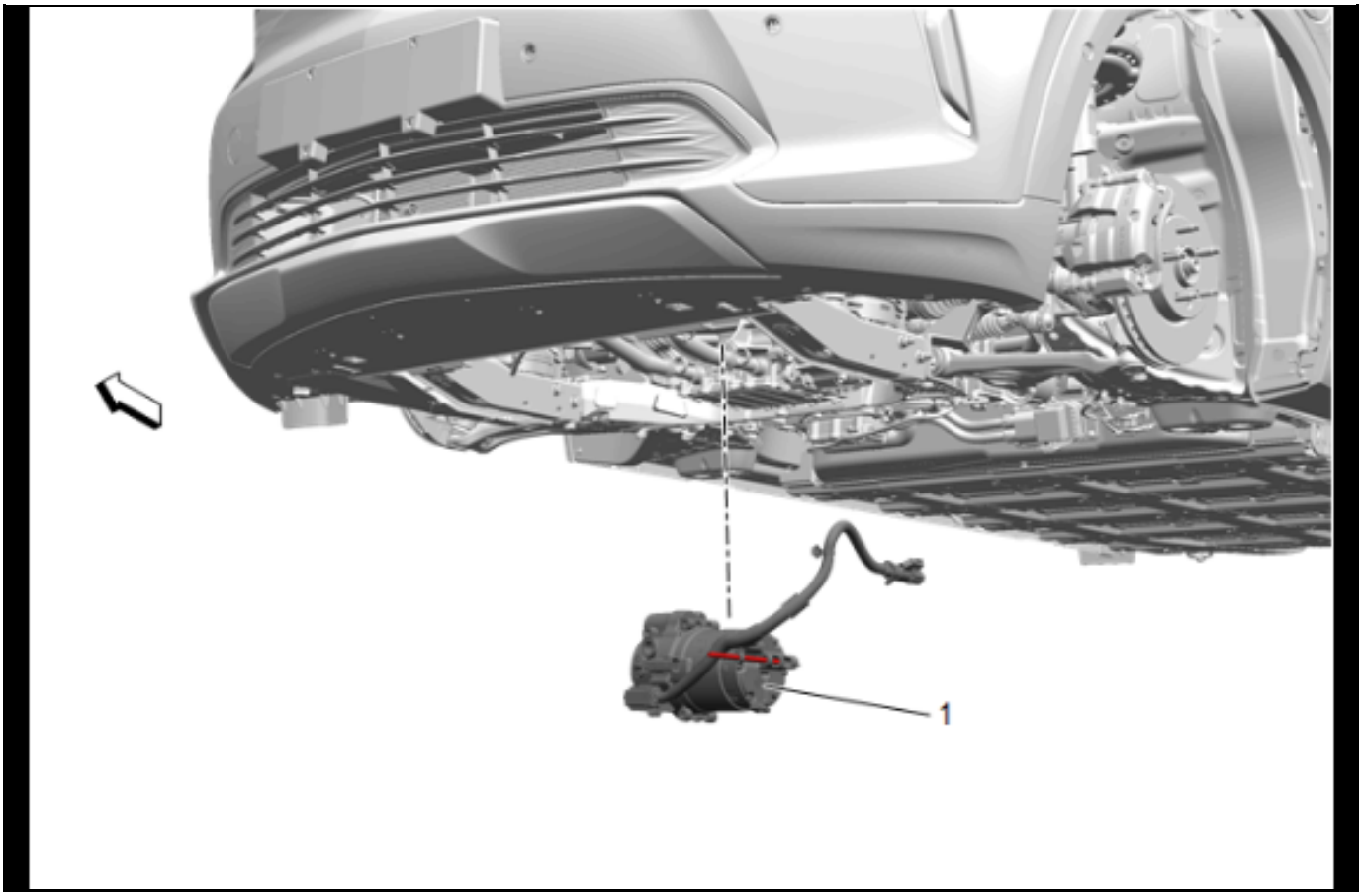

5541540

1. Air Conditioning and Drive Motor Battery Cooling Compressor (1) » Install

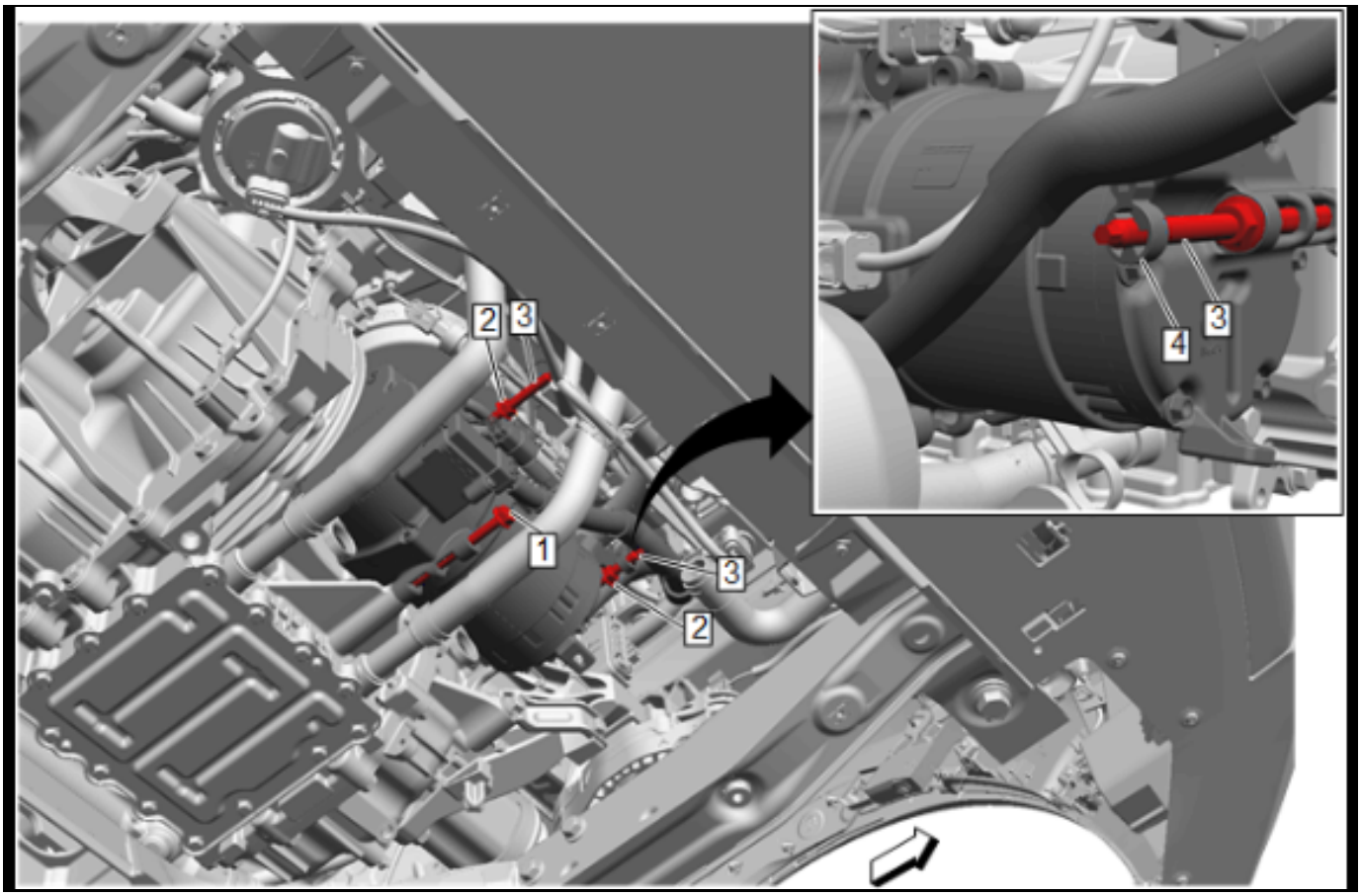

5541541

2. Air Conditioning and Drive Motor Battery Cooling Compressor Stud (3) » Install and tighten [2x] — *Fastener Specifications on page 5-3*
3. Air Conditioning and Drive Motor Battery Cooling Compressor Nut (2) » Install and tighten [2x] — *Fastener Specifications on page 5-3*
4. Air Conditioning and Drive Motor Battery Cooling Compressor Bolt (1) » Install and tighten — *Fastener Specifications on page 5-3*
5. Connect the electrical connector.

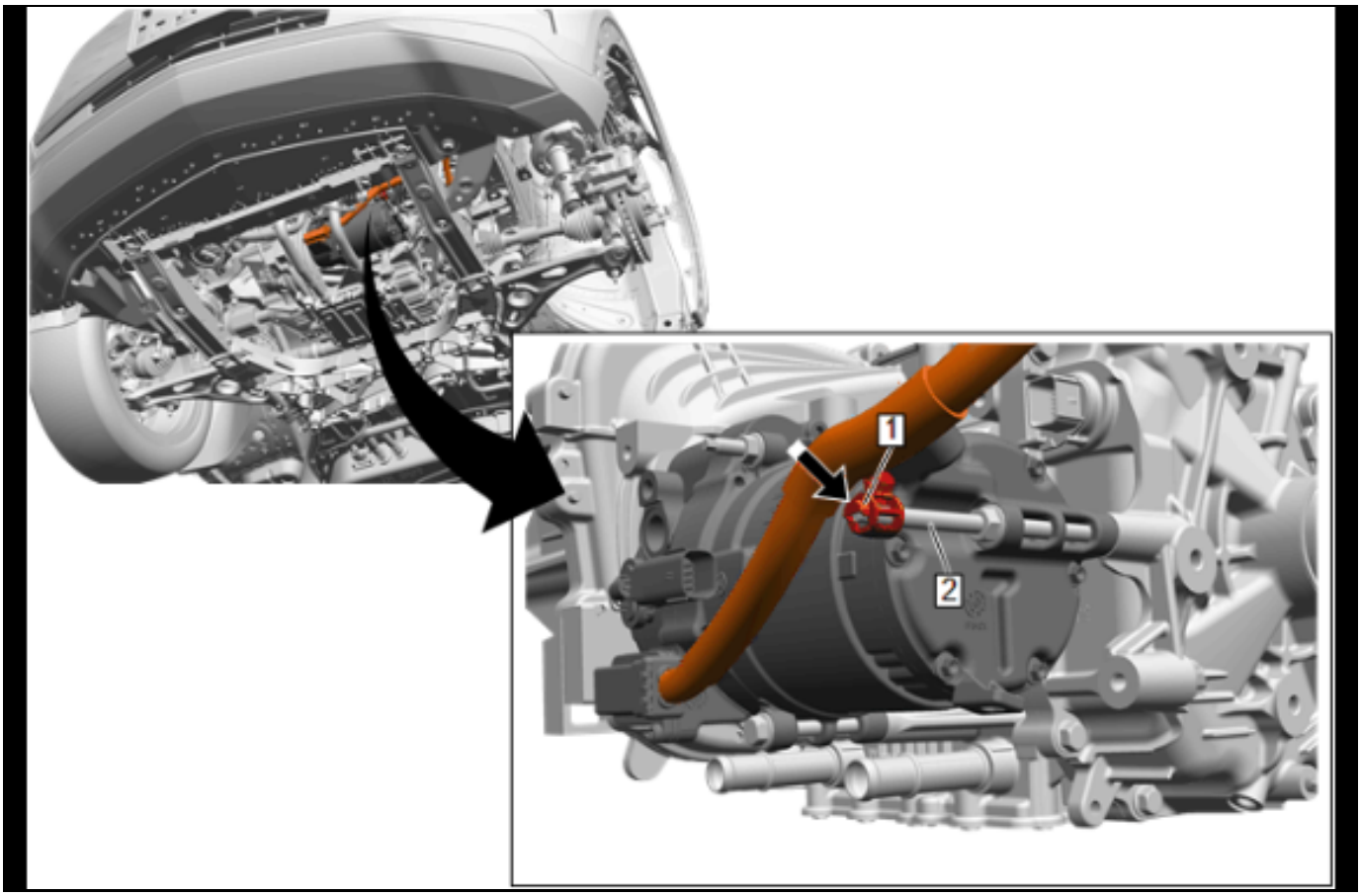

5620412

6. If a NEW compressor has been installed into the vehicle, Install the wiring harness retainer (1) to the stud (2)

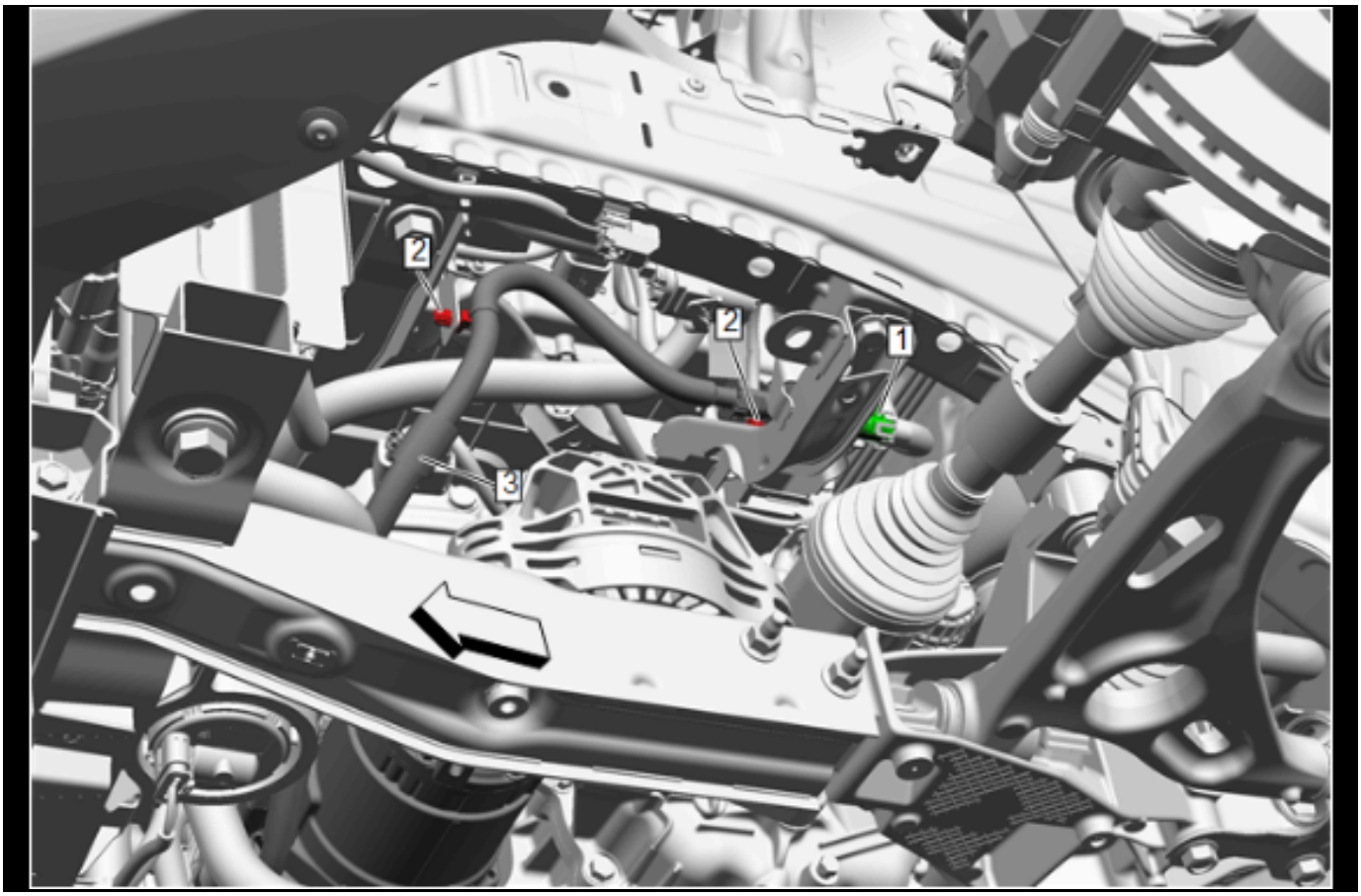

5541545

7. The compressor and compressor wiring harness (3) must be installed as an assembly.
8. Wiring Harness Clip (2) » Install [2x]
9. Electrical Connector (1) » Connect

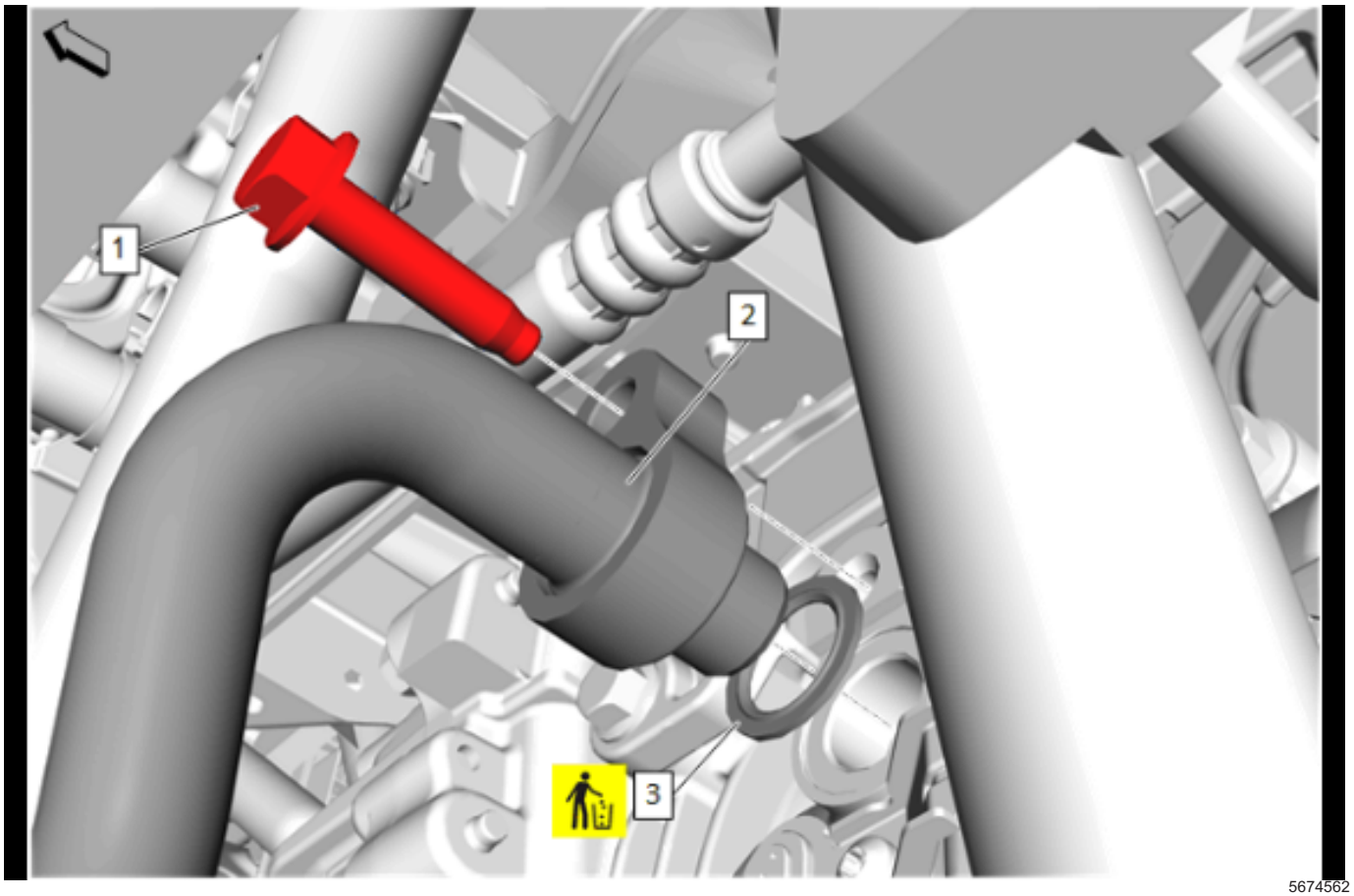

5674562

10. Air Conditioning Compressor Hose Seal - Large (3) » Install NEW
11. Air Conditioning Compressor Hose (2) @ Air Conditioning and Drive Motor Battery Cooling Compressor » Install
12. Air Conditioning Compressor Hose Bolt (1) » Install and tighten — *Fastener Specifications on page 5-3*

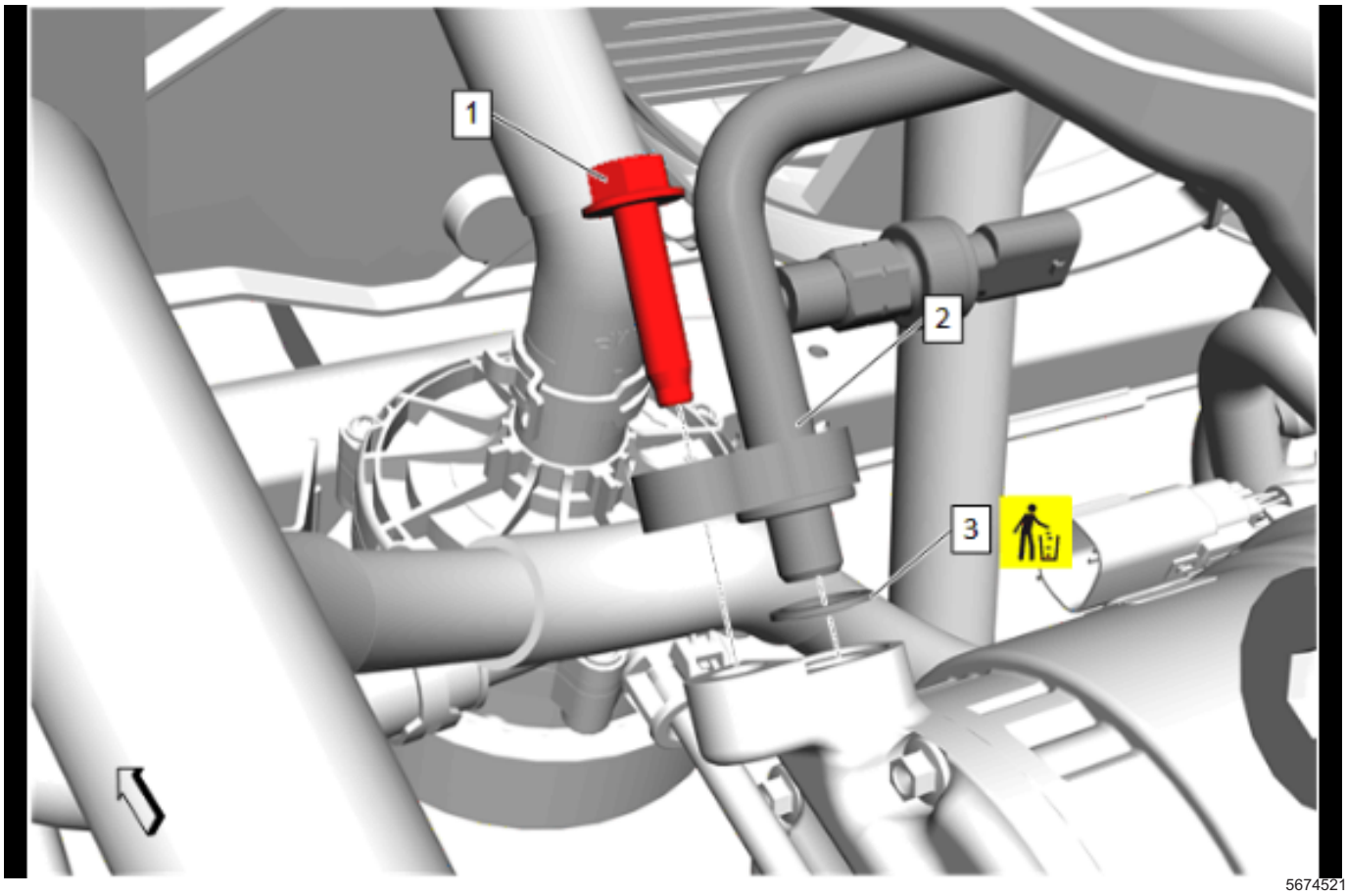

13. Air Conditioning Condenser Hose Seal - Large (3) » Install NEW
14. Air Conditioning Condenser Hose (2) @ Air Conditioning and Drive Motor Battery Cooling Compressor » Install
15. Air Conditioning Condenser Hose Bolt (1) » Install and tighten — *Fastener Specifications on page 5-3*

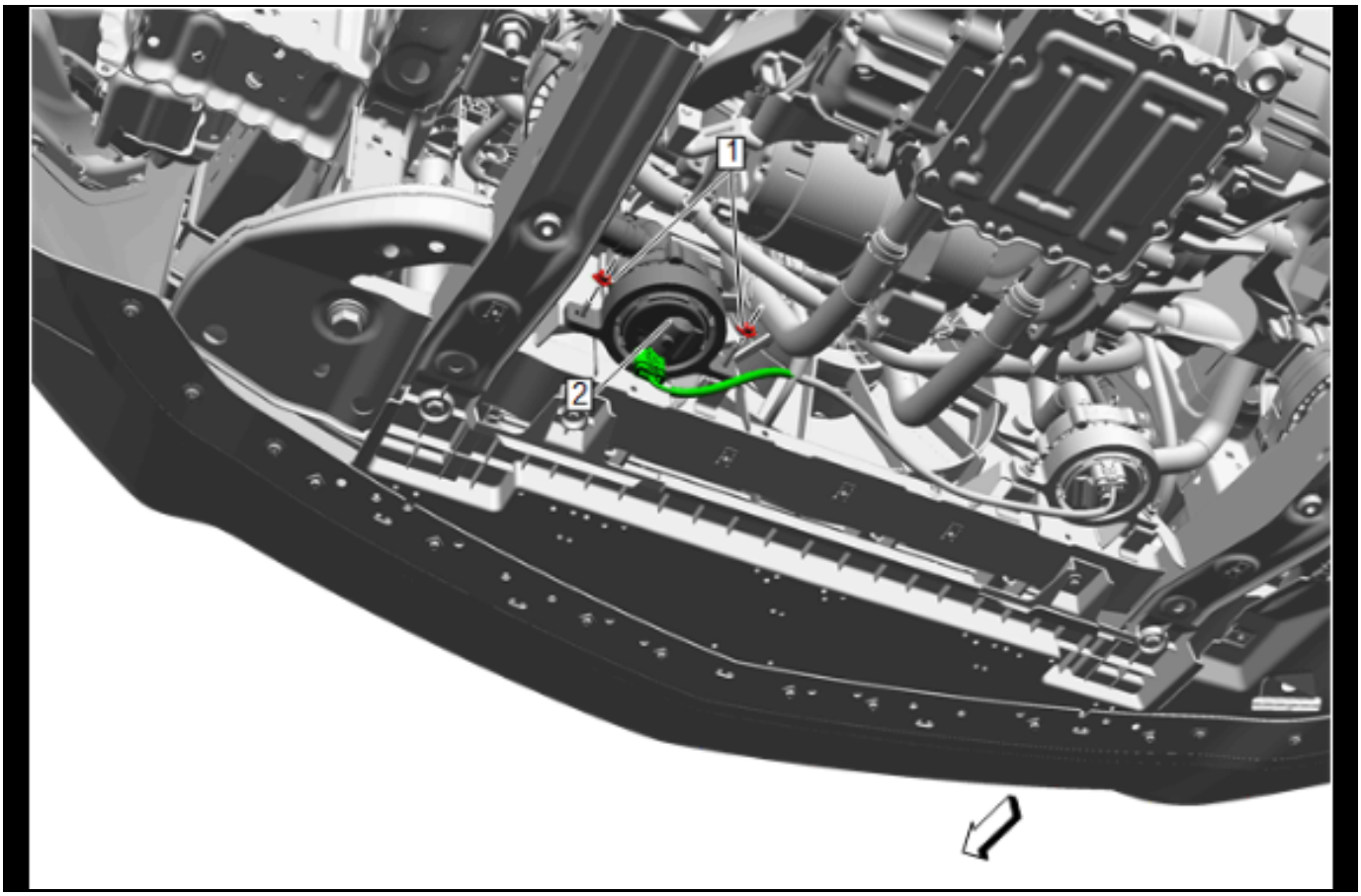

5620413

16. Position the drive motor battery coolant pump (2).
17. Drive Motor Battery Coolant Pump Bracket Nut (1)
    » Install and tighten [2x] — Fastener Specifications

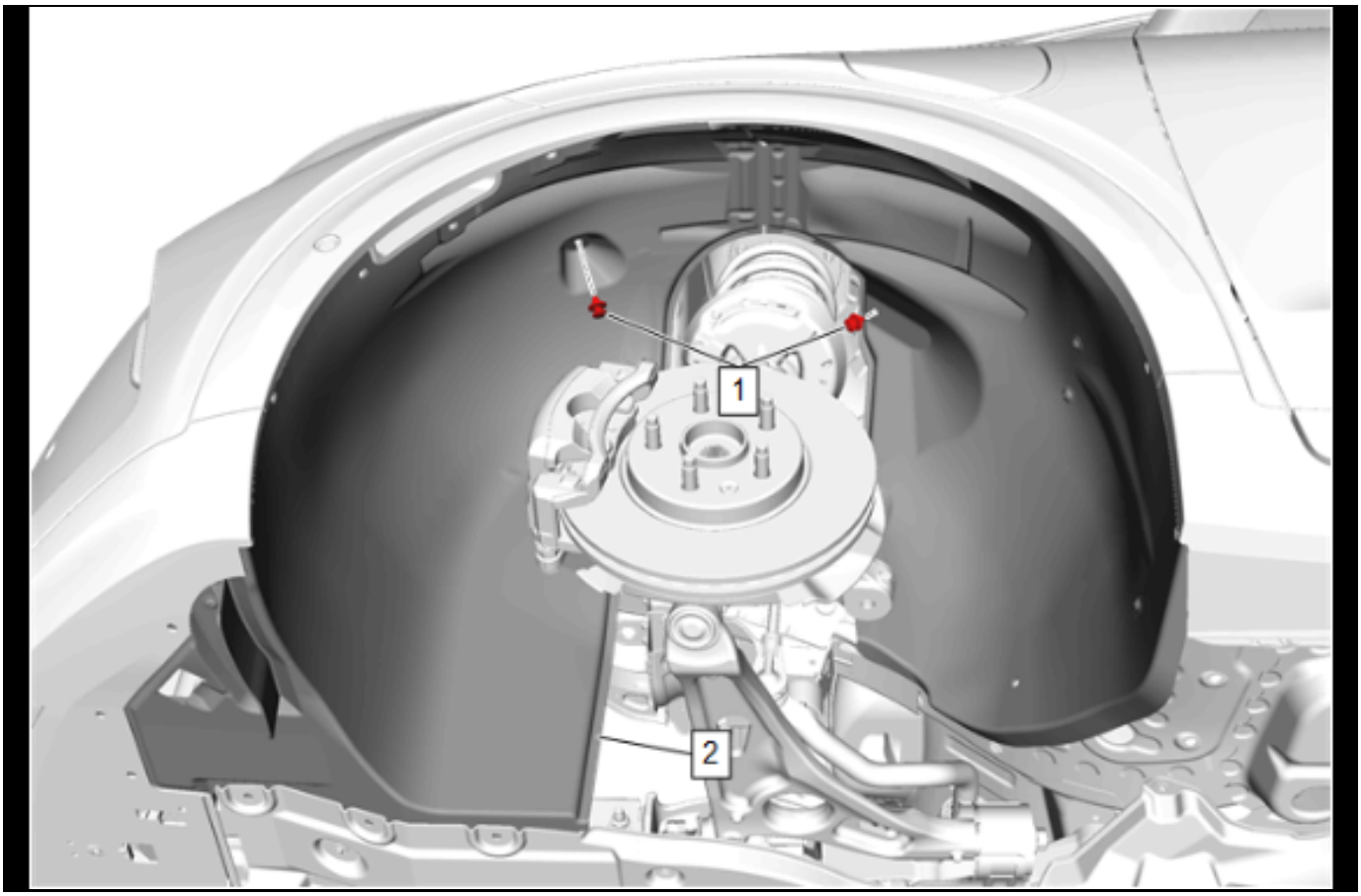

5491620

18. Front Wheelhouse Liner - Left Side (2) » Install
19. Front Wheelhouse Liner Retainer (1) » Install [2x]

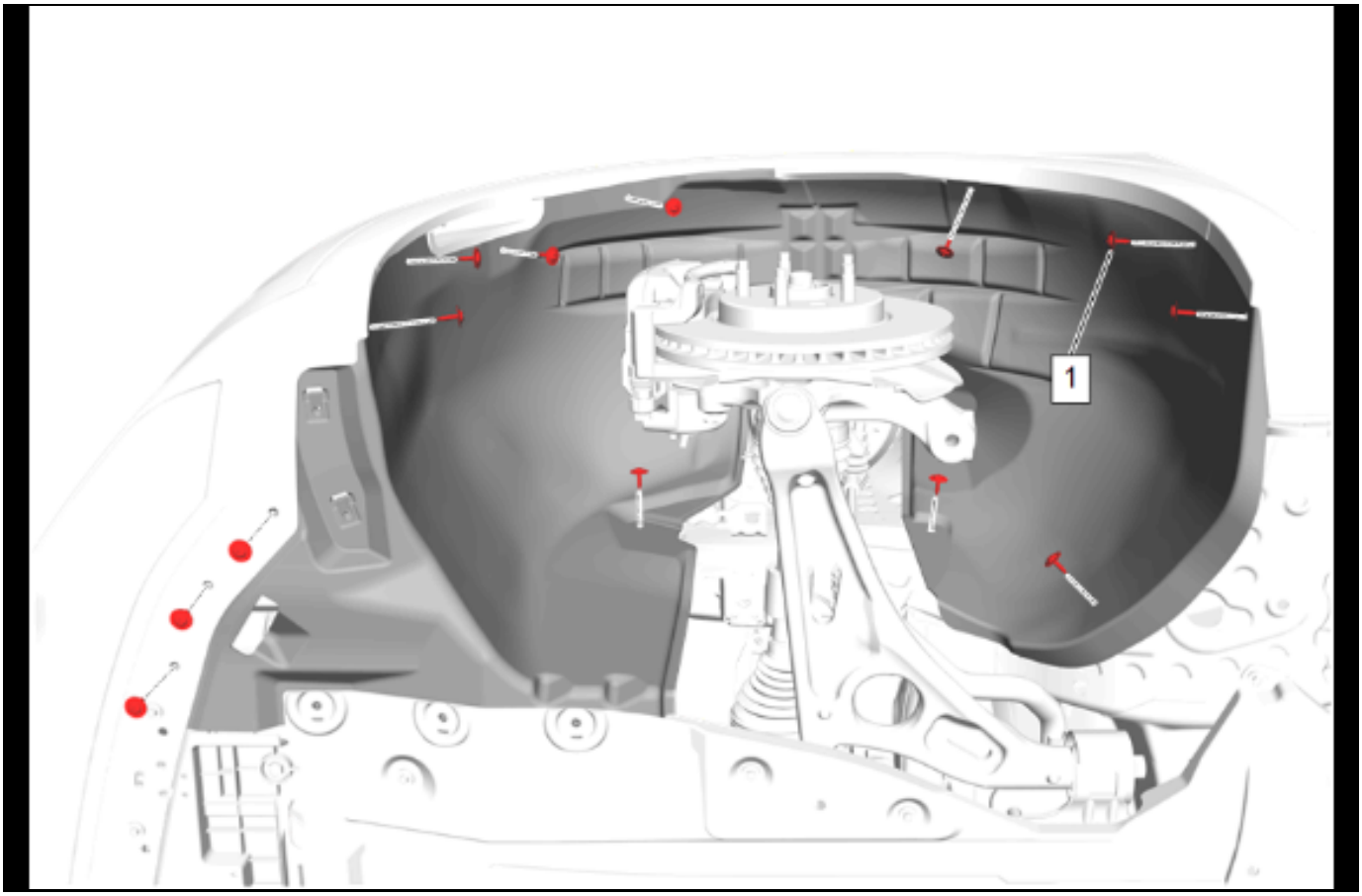

5661891

20. Front Wheelhouse Liner Bolt (1) » Install and tighten [13x] — Fastener Specifications

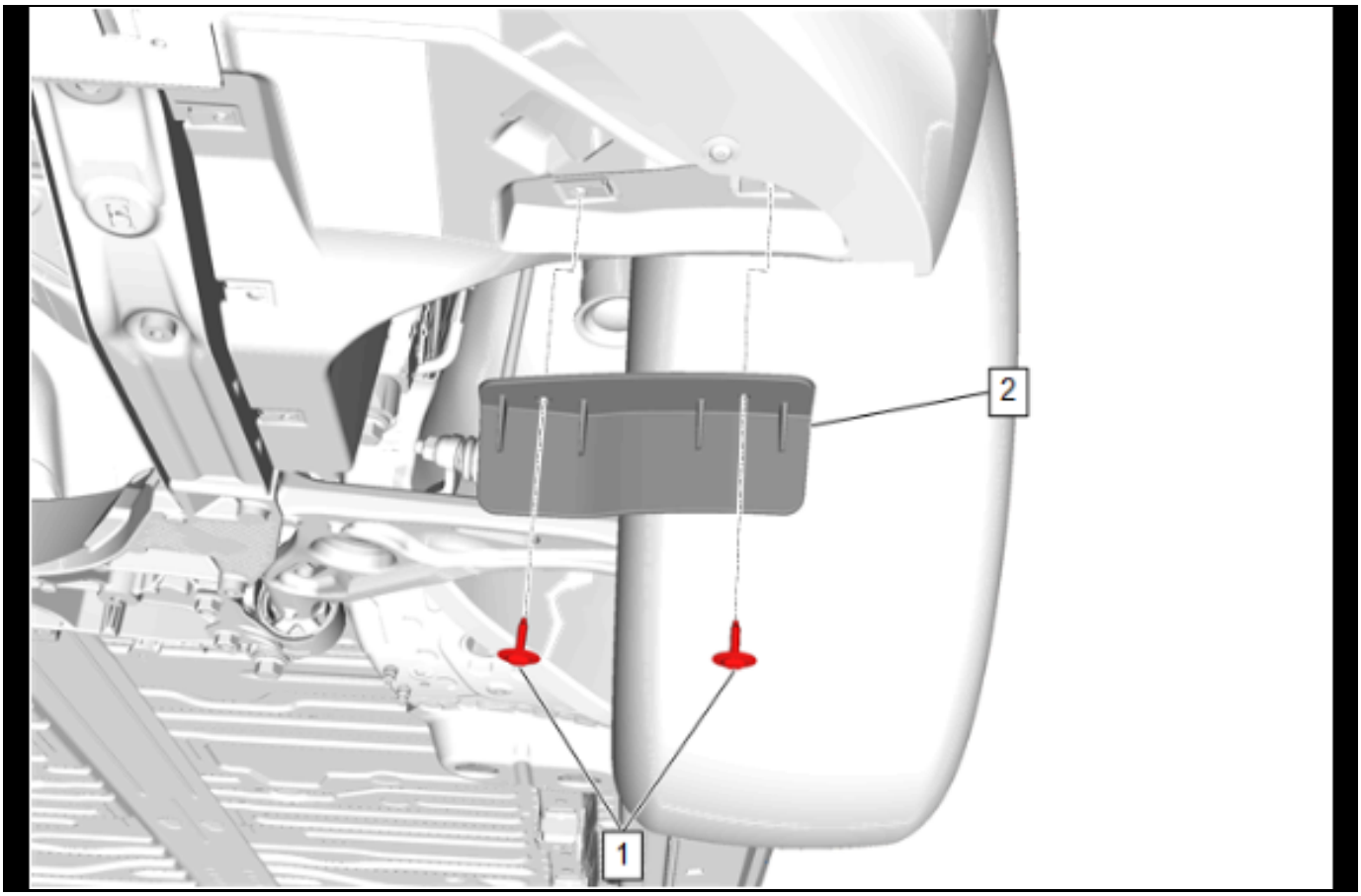

5493680

21. Front Tire Front Air Deflector (2) » Install
22. Front Tire Front Air Deflector Bolt (1) » Install and tighten [2x] —
23. Install the left front tire and wheel assembly.

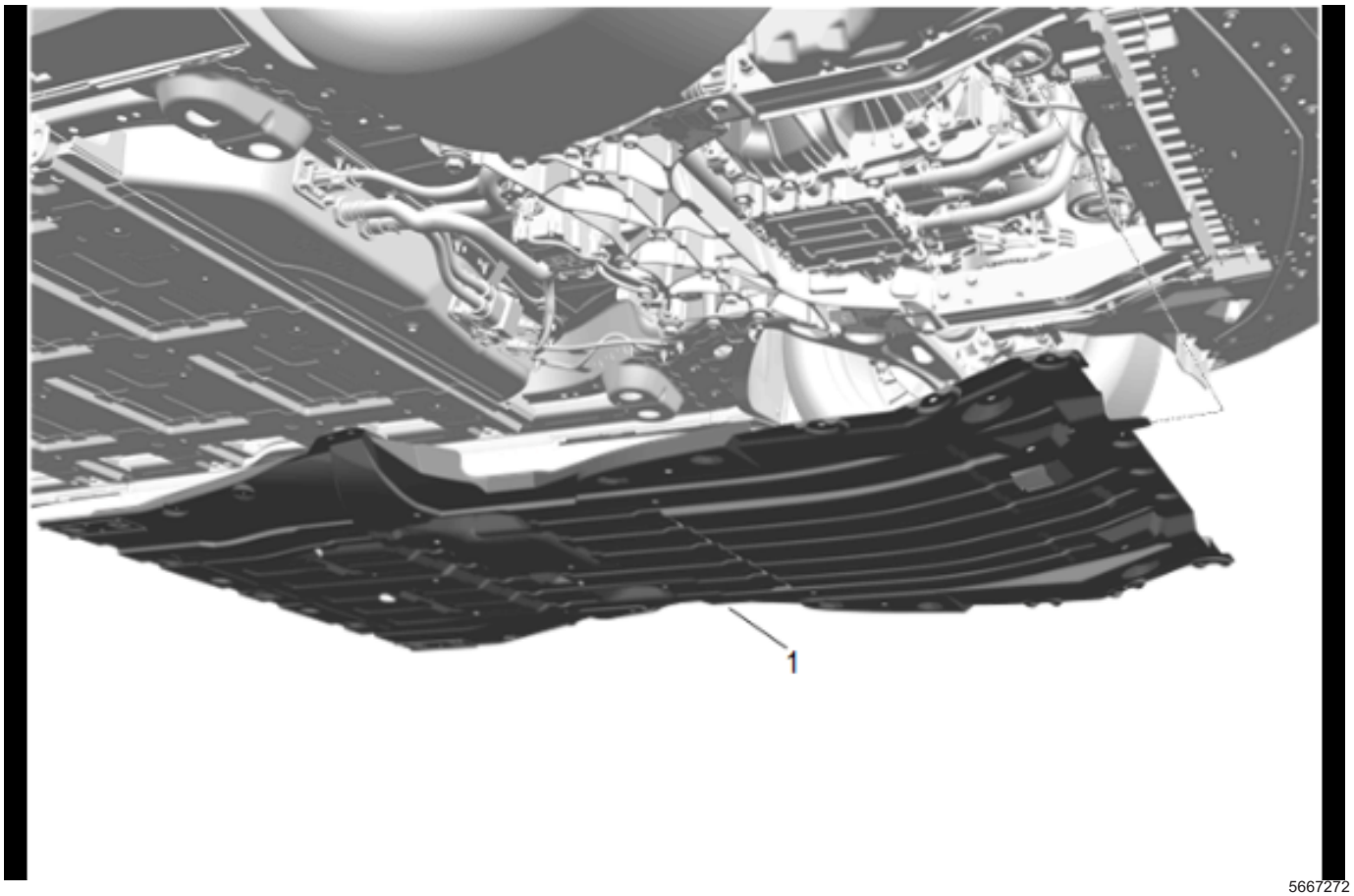

5667272

24. Front Compartment Air Deflector (1) » Install

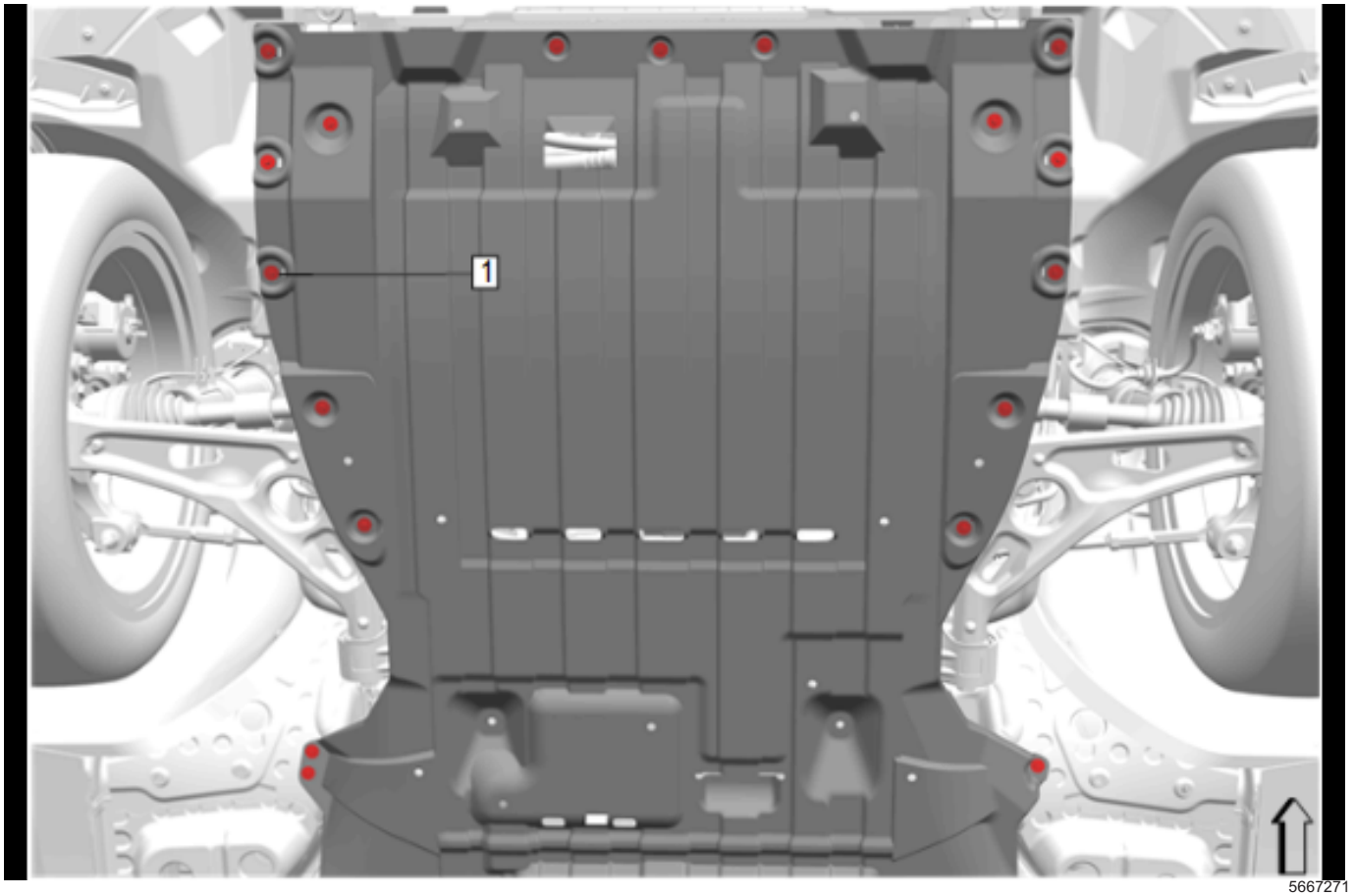

5667271

25. Front Compartment Air Deflector Bolt (1) » Install and tighten [18x] — Fastener Specifications

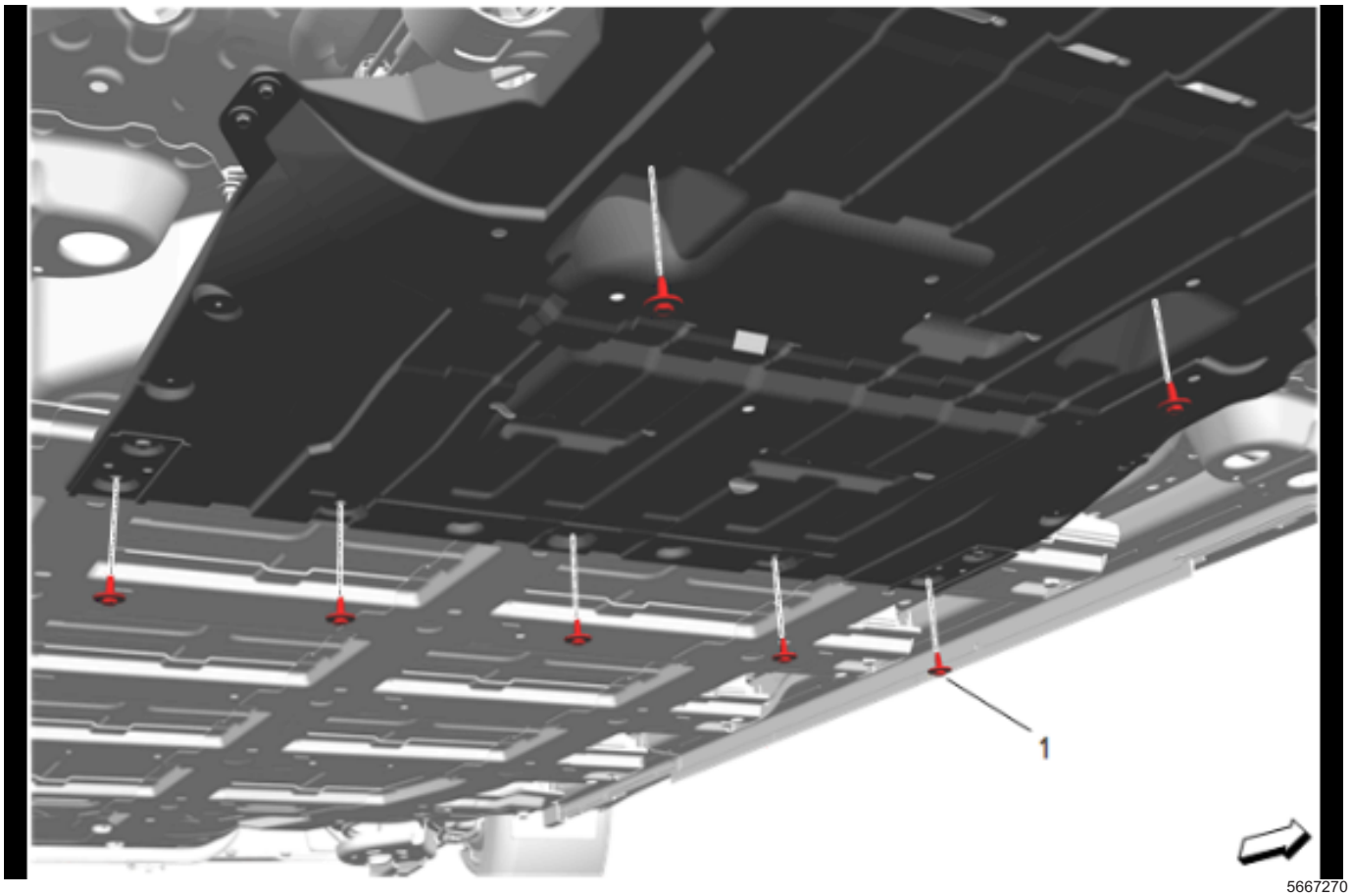

26. Front Compartment Air Deflector Bolt (1) » Install and tighten [7x] — Fastener Specifications

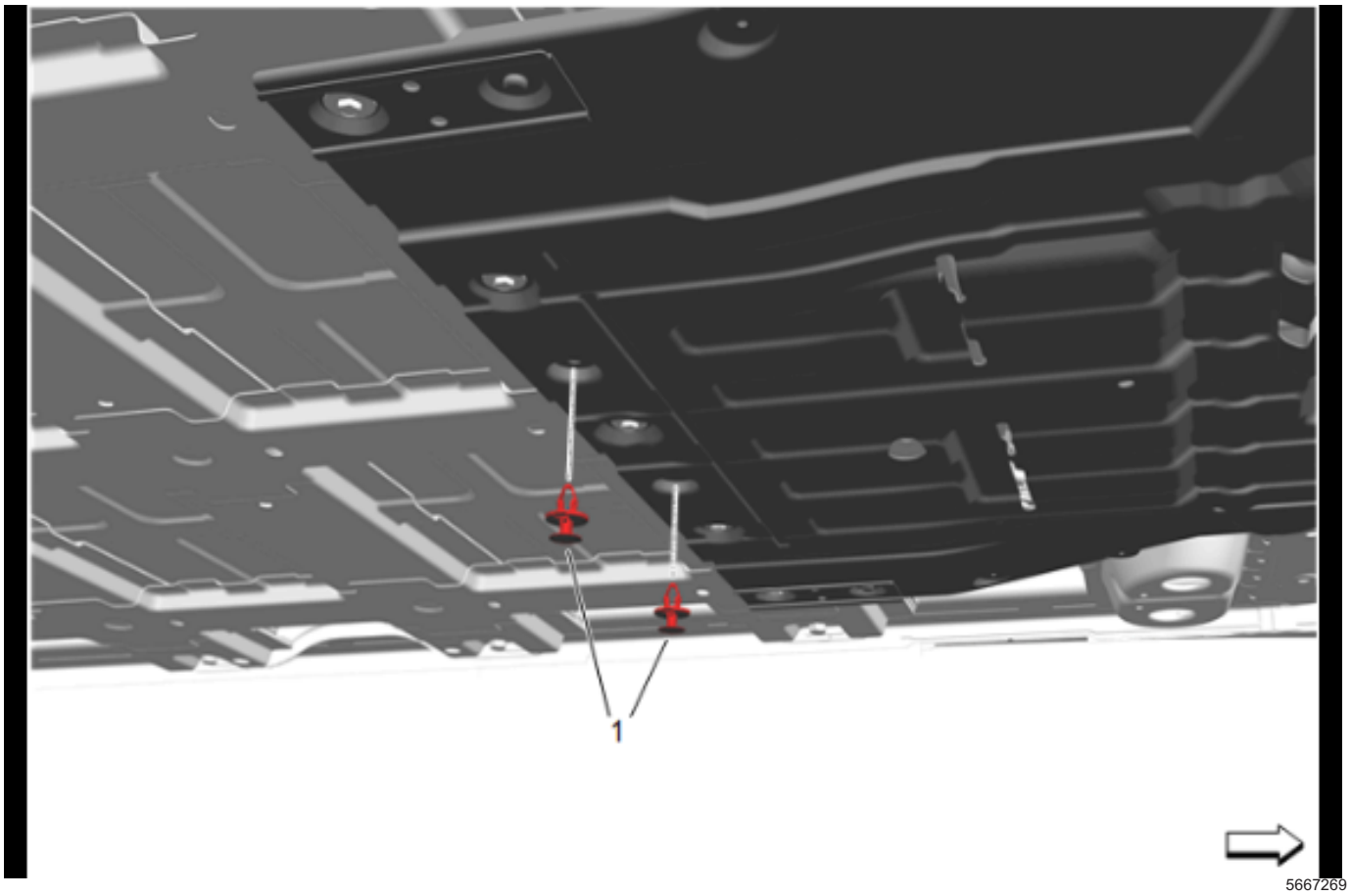

27. Front Compartment Air Deflector Retainer (1) » Install [2x]
28. Lower the vehicle.
29. Recharge the refrigerant. *Refrigerant Recovery and Recharging on page 5-36*
30. If replacing the A/C compressor, it is necessary to program the replacement A/C compressor.
31. Enable the high voltage system.

Air Conditioning Compressor Pressure Relief Valve Replacement

Removal Procedure

1. Recover the refrigerant. *Refrigerant Recovery and Recharging on page 5-36*
2. Raise and support the vehicle.

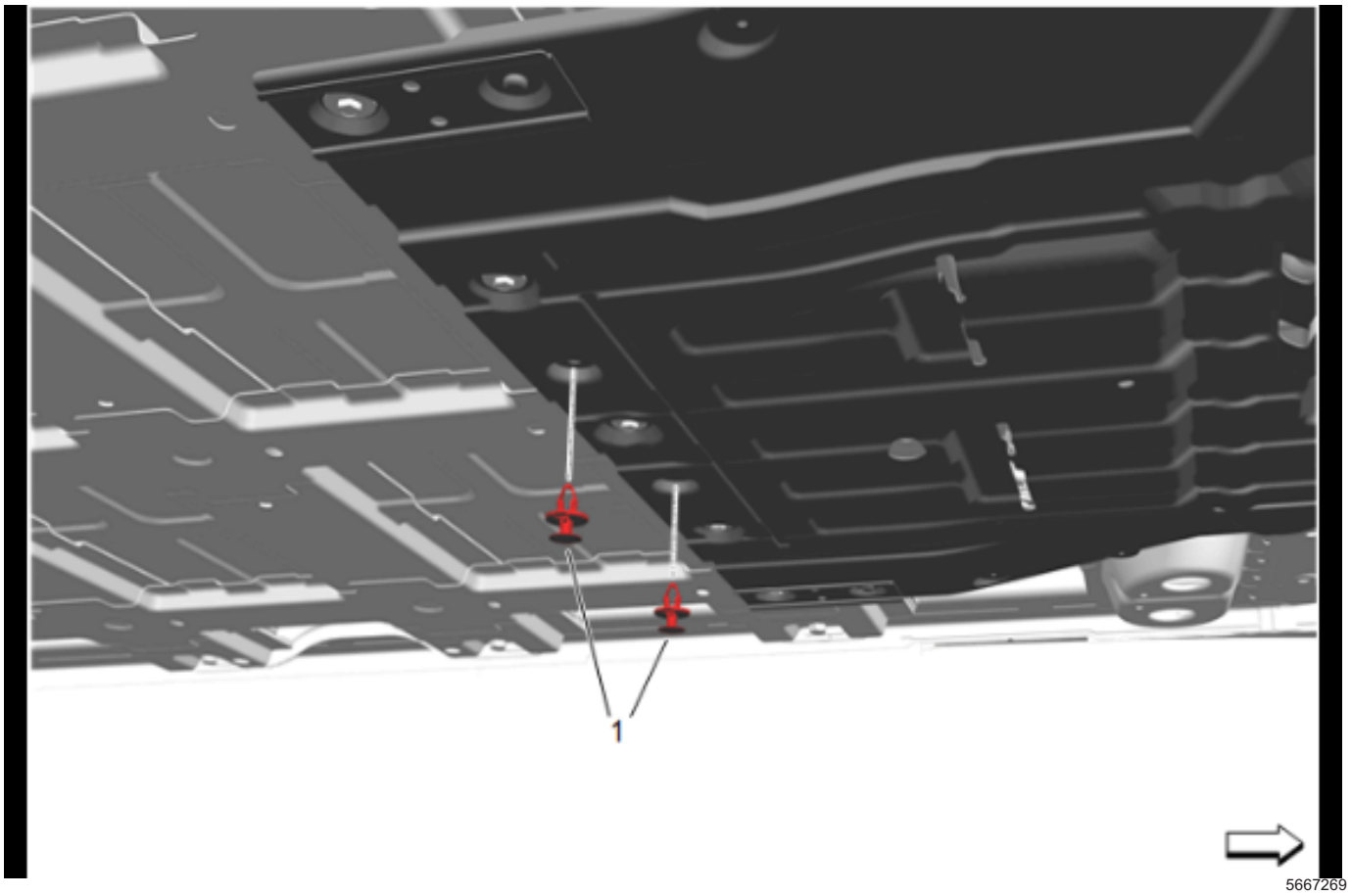

3. Front Compartment Air Deflector Retainer (1) »
   Remove [2x]

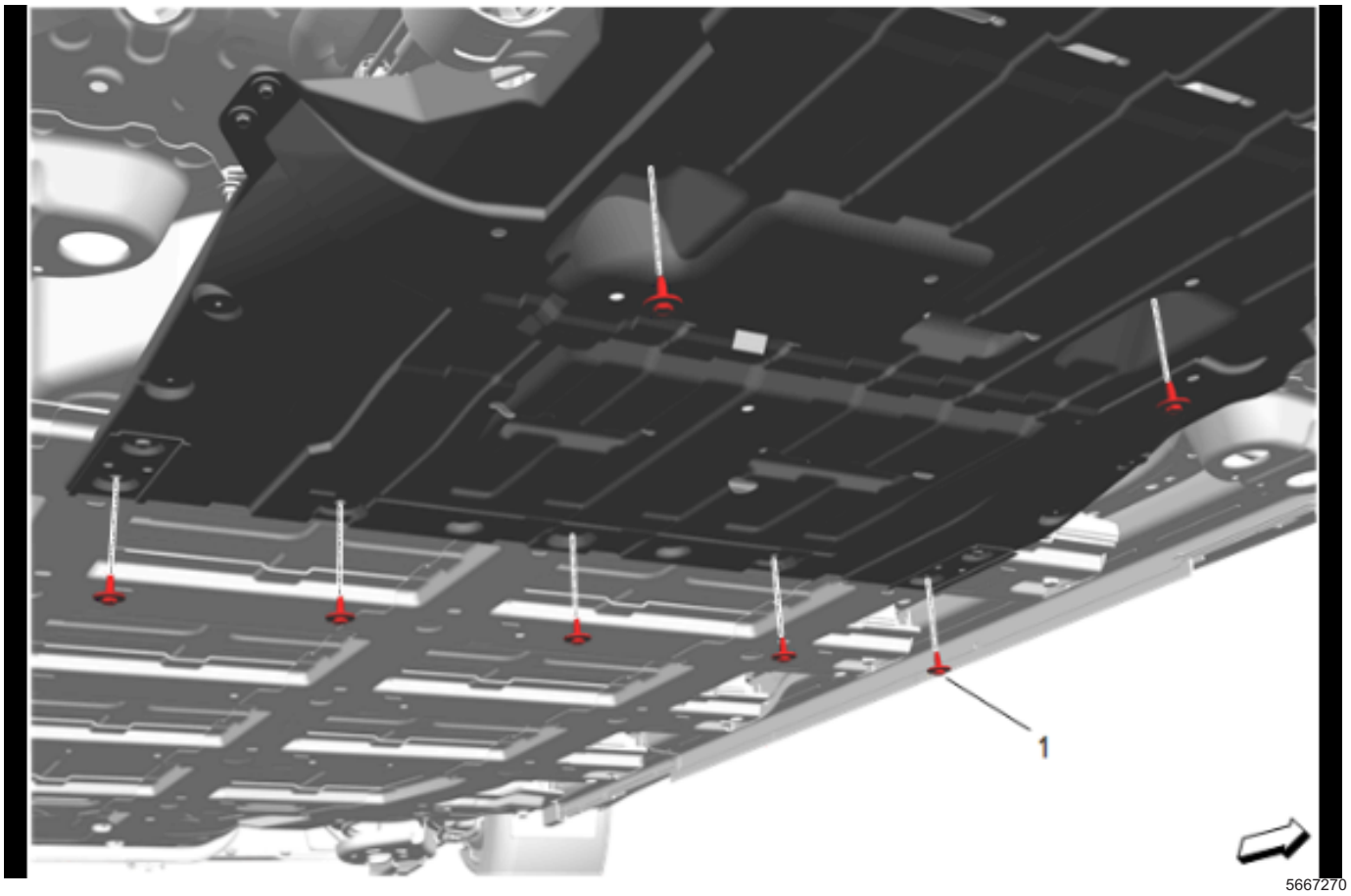

4. Front Compartment Air Deflector Bolt (1) »
   Remove [7x]

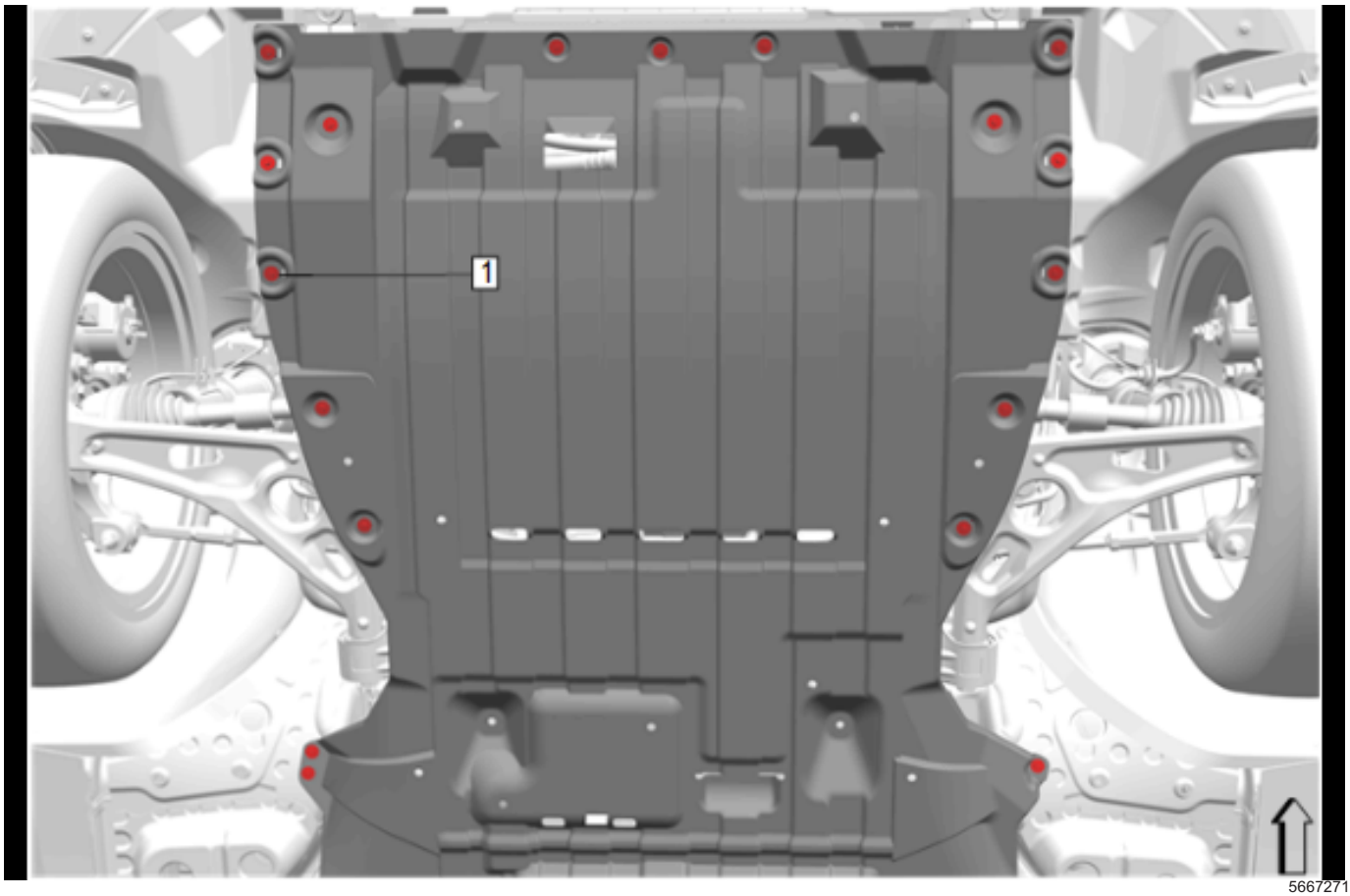

5667271

5. Front Compartment Air Deflector Bolt (1) »
   Remove [18x]

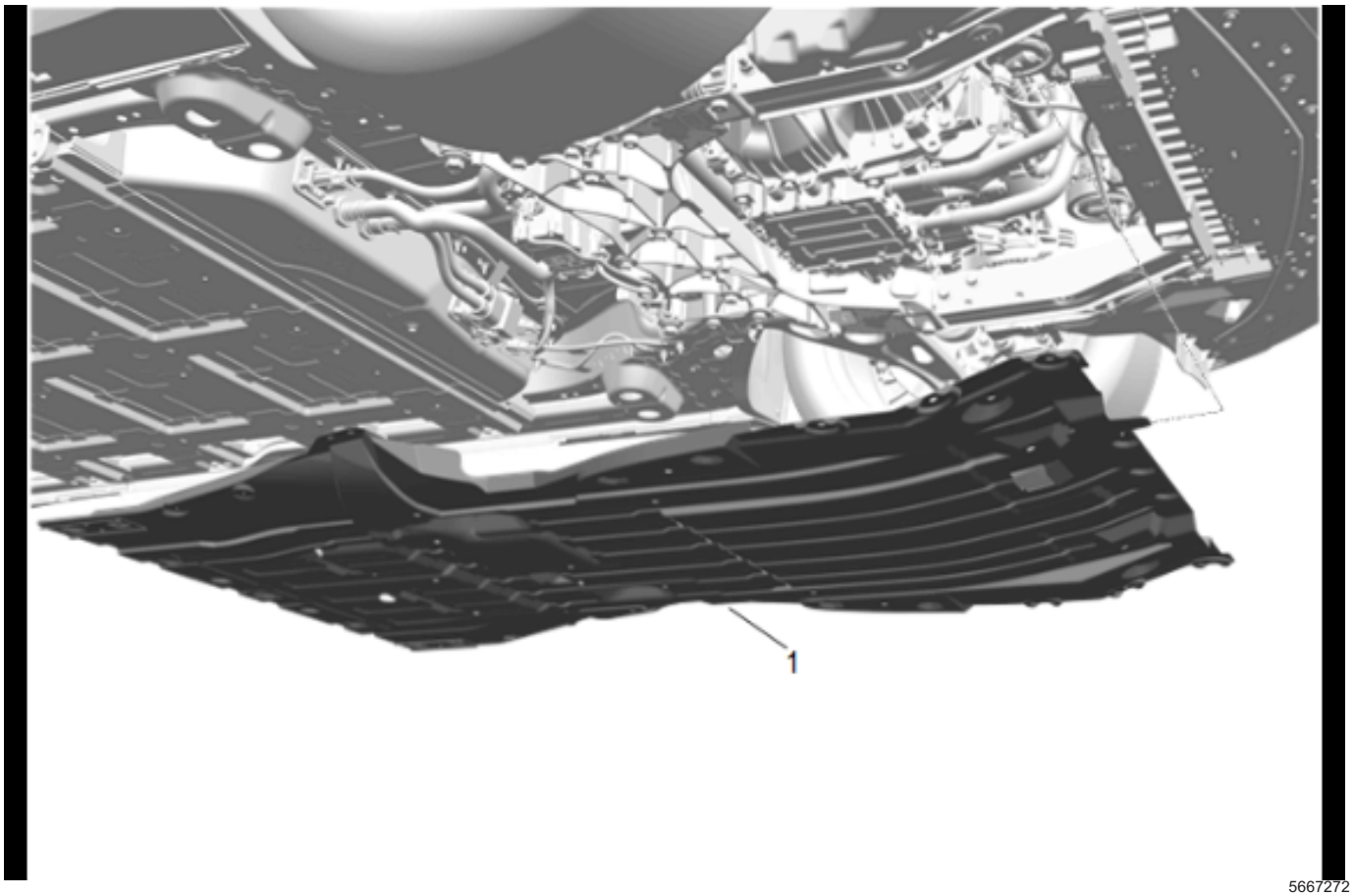

5667272

6. Front Compartment Air Deflector (1) » Remove

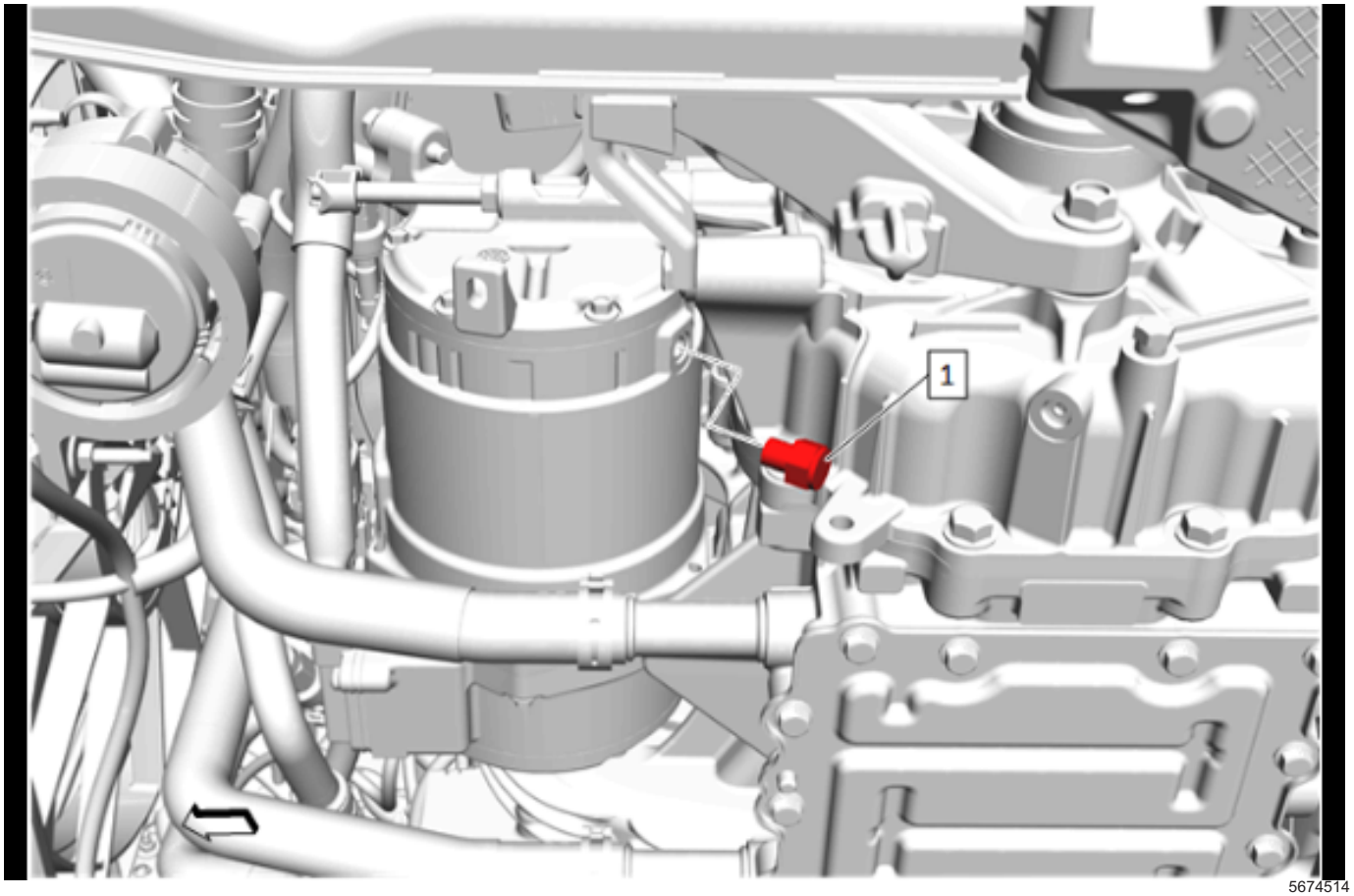

5674514

7. Air Conditioning Compressor Pressure Relief Valve
   (1) » Remove

Installation Procedure

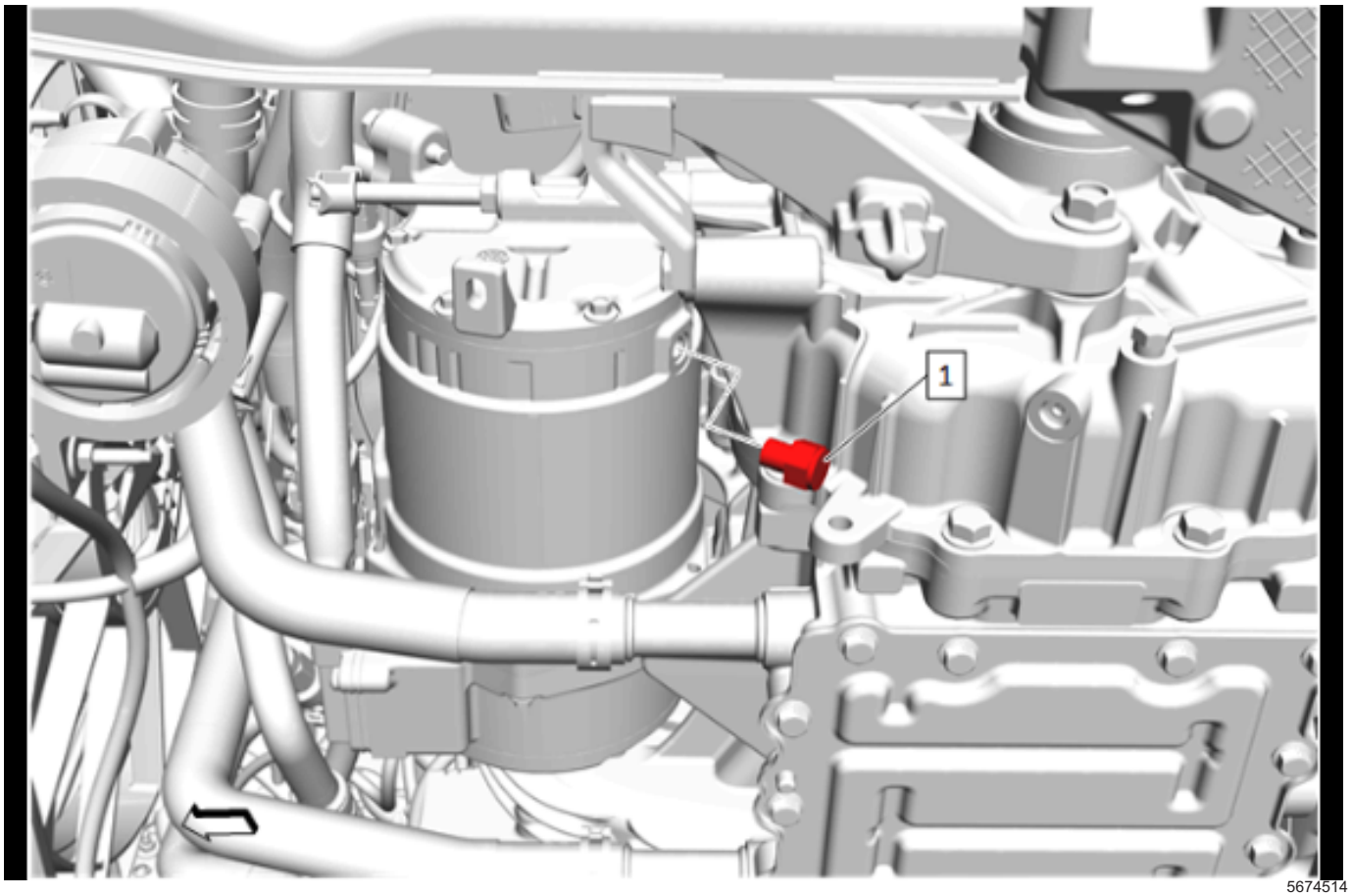

5674514

1. Air Conditioning Compressor Pressure Relief Valve
   (1) » Install and tighten — *Fastener Specifications on page 5-3*

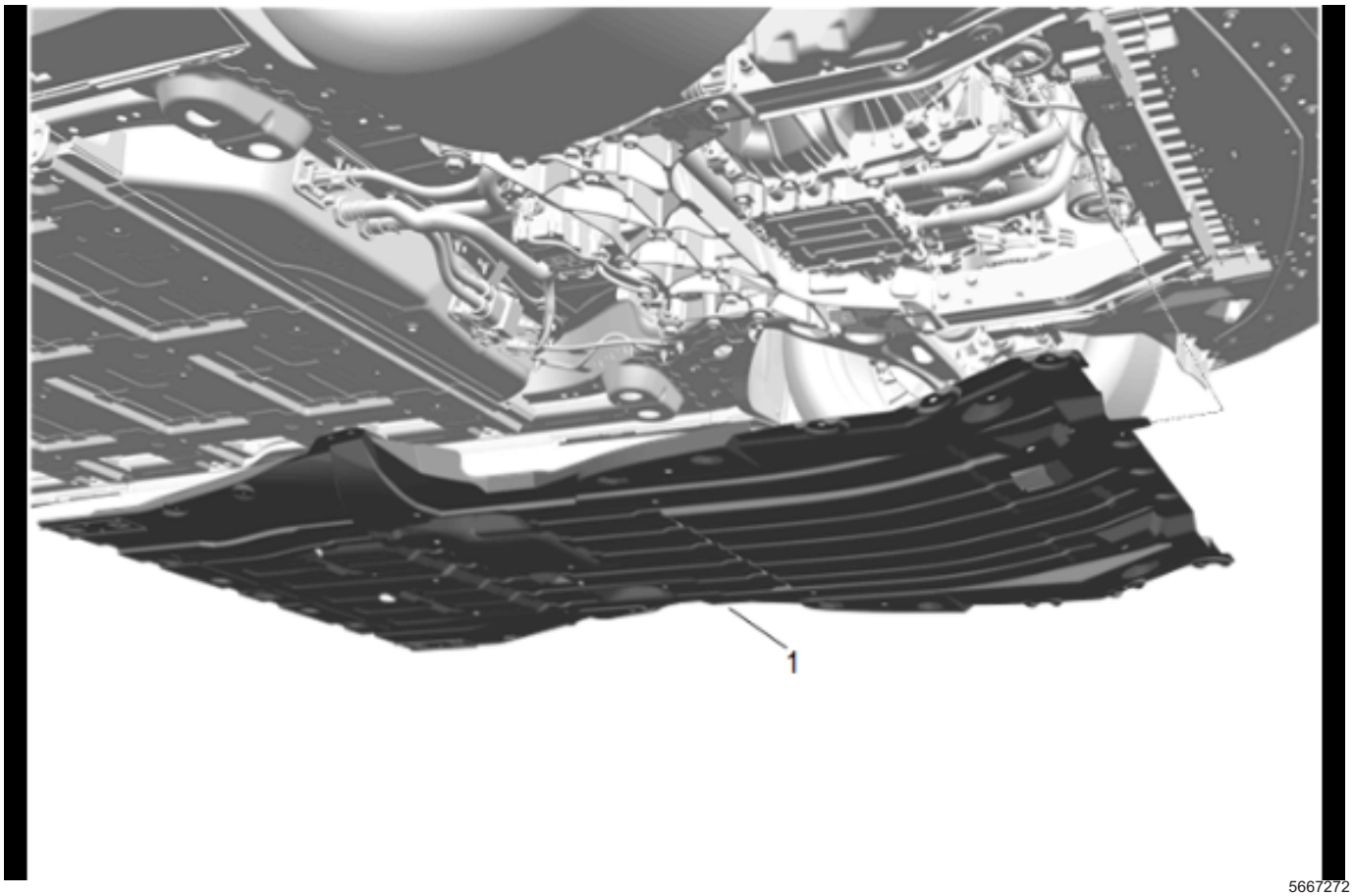

5667272

2. Front Compartment Air Deflector (1) » Install

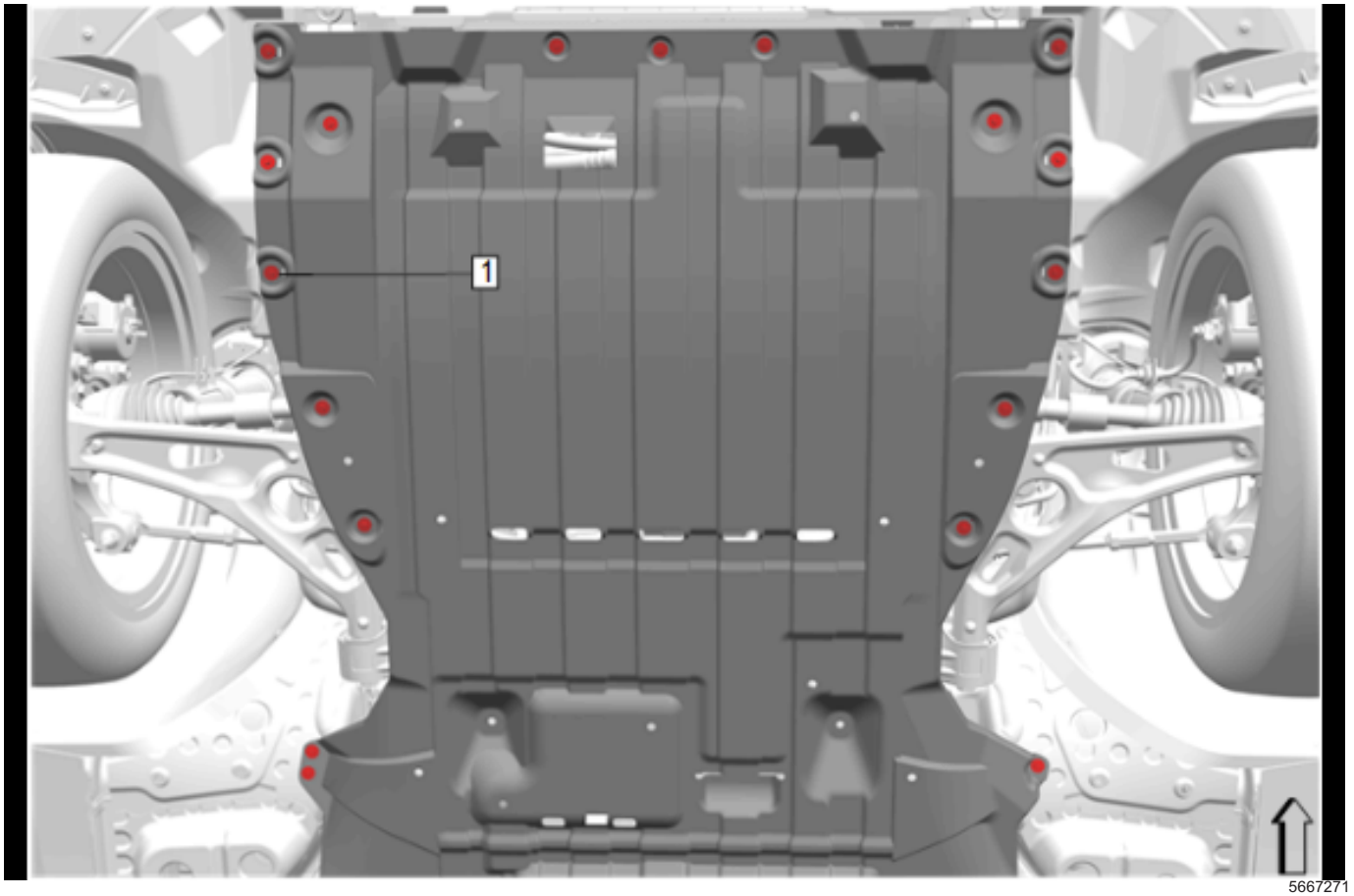

5667271

3. Front Compartment Air Deflector Bolt (1) » Install and tighten [18x] — Fastener Specifications

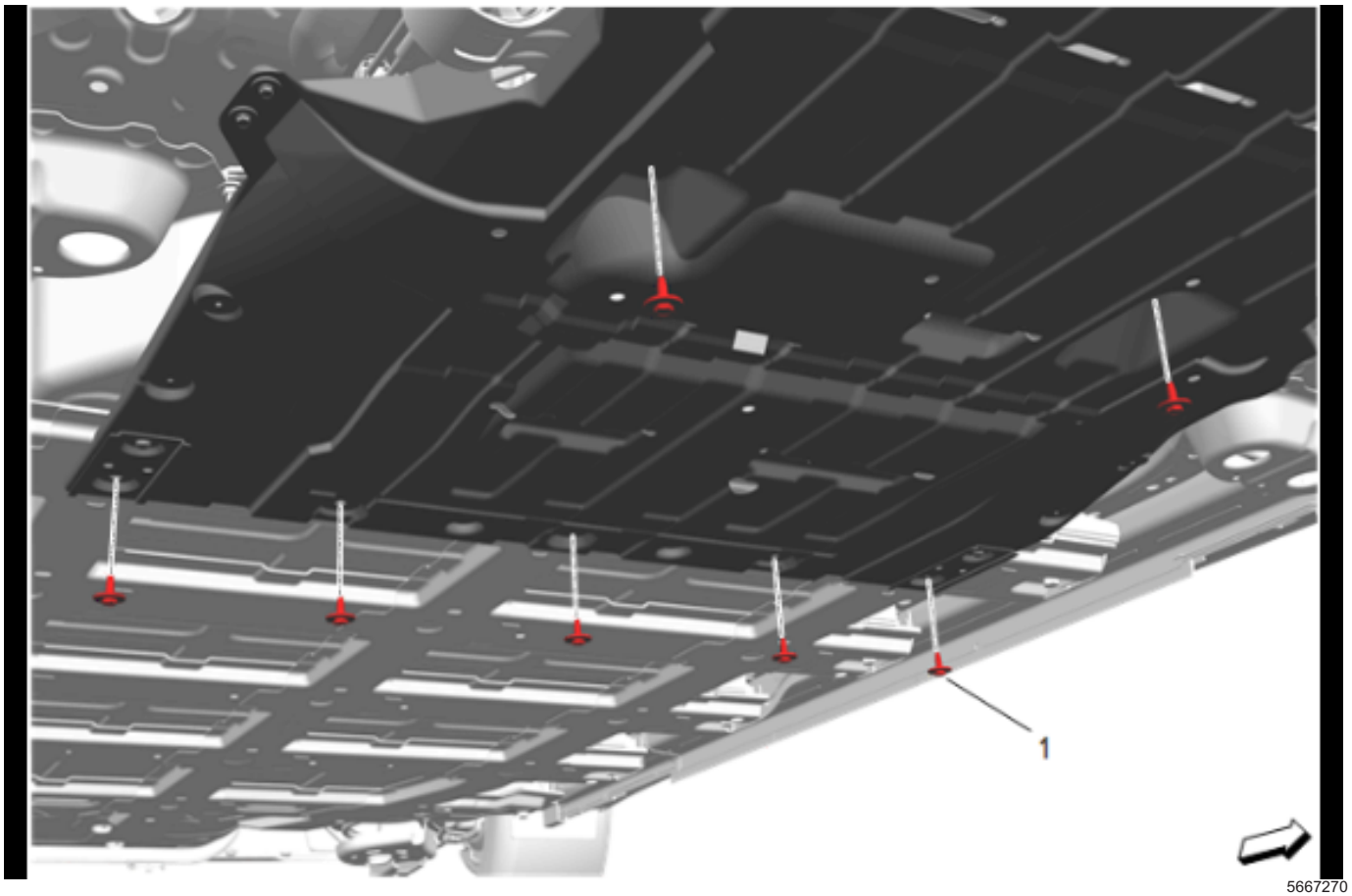

4. Front Compartment Air Deflector Bolt (1) » Install and tighten [7x] — Fastener Specifications

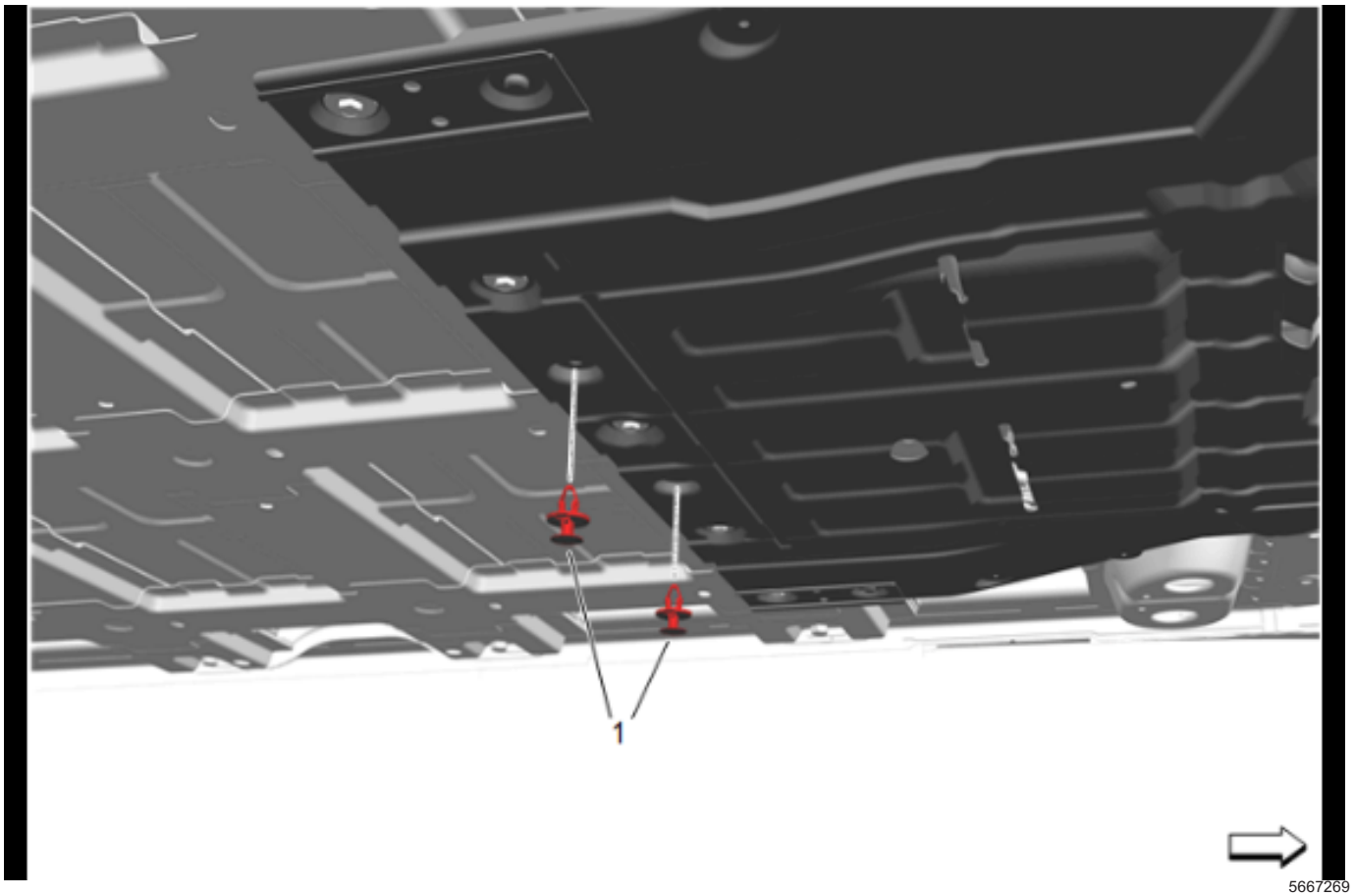

5667269

5. Front Compartment Air Deflector Retainer (1) » Install [2x]
6. Lower the vehicle.
7. Recharge the refrigerant. *Refrigerant Recovery and Recharging on page 5-36*

Air Conditioning System Seal Replacement

Removal Procedure

1. Disassemble the A/C refrigerant components. Refer to the appropriate repair procedure.

   Note: Cap or tape the open A/C refrigerant components immediately to prevent system contamination.

2. Cap or tape the A/C refrigerant components.

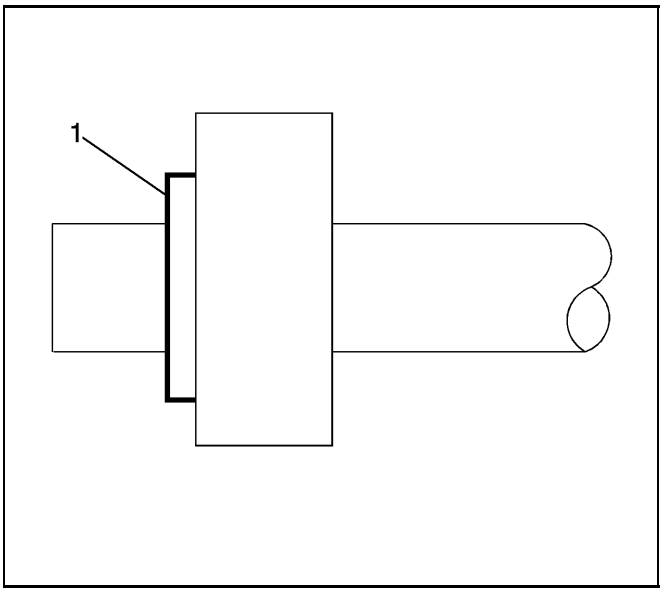

2611419

3. Remove the sealing washer (1) from the A/C refrigerant component.
4. Inspect the seal washer for signs of damage to help determine the root cause of the failure.
5. Inspect the A/C refrigerant components for damage or burrs. Repair if necessary.

   Note: DO NOT reuse sealing washer.

6. DISCARD the sealing washer.

Installation Procedure

Caution: New Air Conditioning sealing washers should never be exposed to any type of oil or lubricant, the rubber material may absorb the oil causing failures during installation or the life of the vehicle.

1. Inspect the new sealing washer for any signs of cracks, cuts, or damage.

   Do not use a damaged sealing washer.
2. Remove the cap or tape from the A/C refrigerant components.

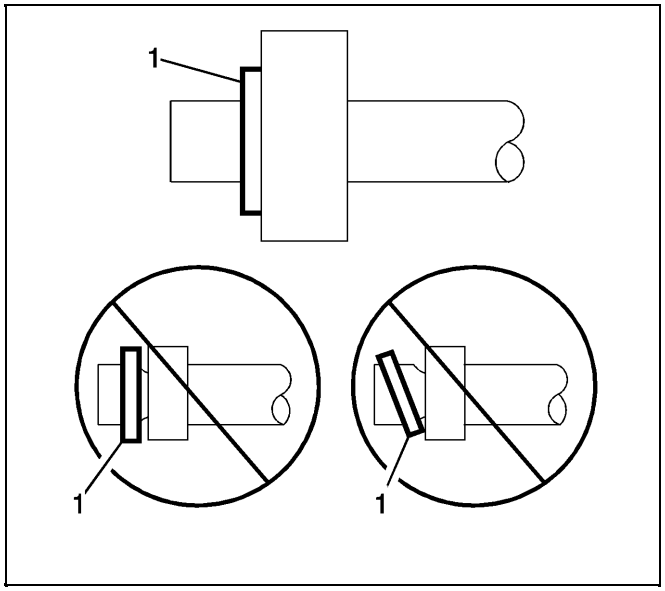

662315

3. Using a lint-free clean, dry cloth, clean the sealing surfaces of the A/C refrigerant components.
4. Carefully install the NEW sealing washer (1) onto the A/C refrigerant component.

   The sealing washer (1) must completely bottom against the surface of the fitting.

   Note: After tightening the A/C components, there should be a slight sealing gap of approximately 1.2 mm (3/64 in) between the A/C line and the A/C component.
5. Assemble the remaining A/C refrigerant components. Refer to the appropriate repair procedure.

Air Conditioning O-Ring Seal Replacement

Removal Procedure

1. Disassemble the air conditioning refrigerant components.
2. Cap or tape the open air conditioning refrigerant components immediately to prevent system contamination.

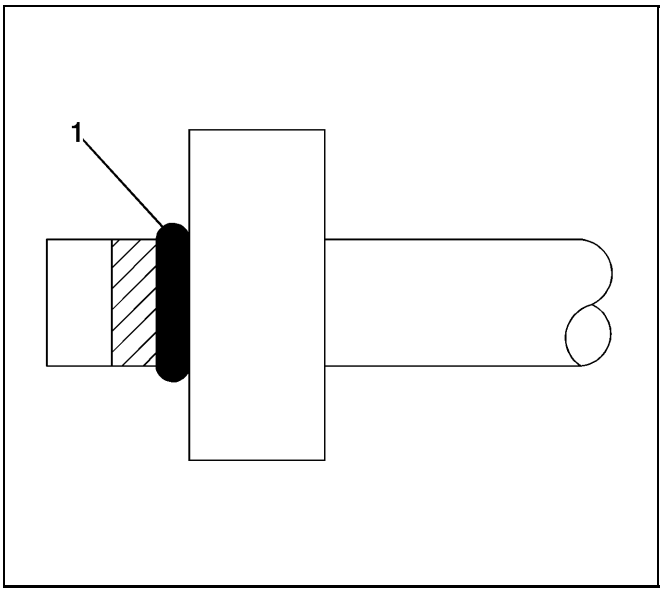

2611417

3. Remove the O-ring seal (1) from the air conditioning refrigerant component.
4. Inspect the O-ring seal for signs of damage to help determine the root cause of the failure.
5. Inspect the air conditioning refrigerant components for damage or burrs. Repair if necessary.
6. DISCARD the O-ring seal.

Installation Procedure

Caution: New Air Conditioning sealing washers should never be exposed to any type of oil or lubricant, the rubber material may absorb the oil causing failures during installation or the life of the vehicle.

1. Inspect the new O-ring seal for any sign of cracks, cuts, or damage.
2. Remove the cap or tape from the air conditioning refrigerant components.
3. Using a lint-free clean, dry cloth, carefully clean the sealing surfaces of the air conditioning refrigerant components.

   Note: DO NOT reuse O-ring seals.
4. Carefully slide the NEW O-ring seal (1) onto the air conditioning refrigerant component.

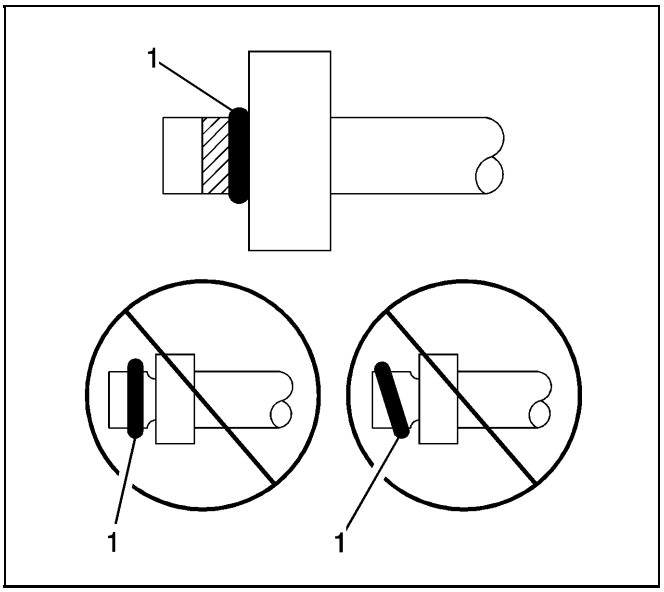

818438

5. The O-ring seal (1) must be fully seated.
6. Assemble the air conditioning components.

Air Conditioning Compressor Hose Replacement

Single Use Fasteners and Components

- Air Conditioning Compressor Hose Seal - Large [2x]
- Air Conditioning Refrigerant Pressure Sensor O-ring

Removal Procedure

Danger: Before conducting any repair to this high voltage cooling system, it is necessary to determine/verify whether no high-voltage system faults exist. If high-voltage faults exist, follow published DTC diagnostics/repair procedures prior to performing any cooling system repairs. Failure to correct High Voltage Faults before working on the high voltage cooling system could result in personal injury or death.

1. Turn vehicle power OFF and remove all keyless entry transmitters from the vehicle and secure in a place outside the vehicle.
2. Disconnect the battery negative cable.
3. Recover the refrigerant. *Refrigerant Recovery and Recharging on page 5-36*

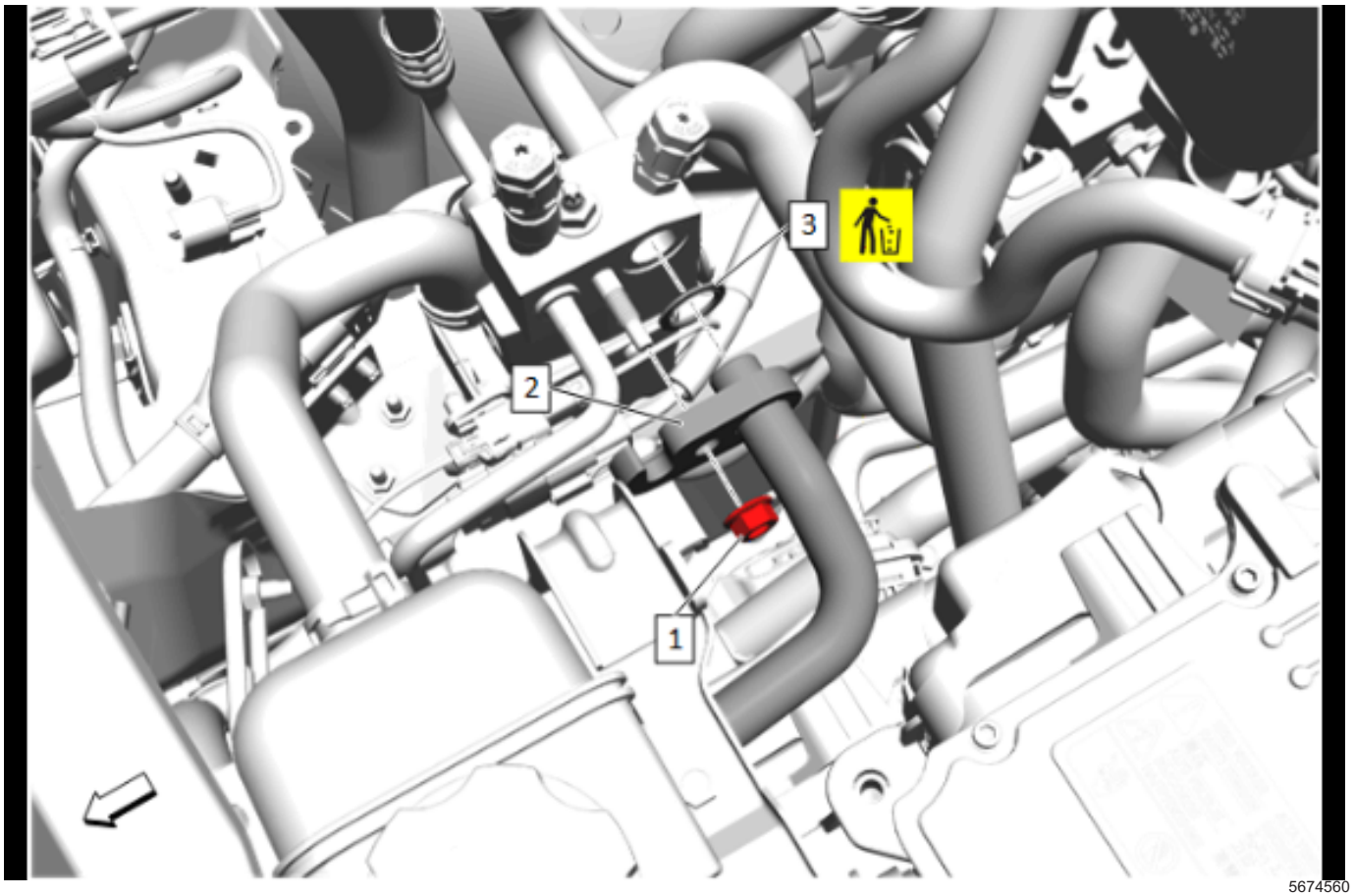

5674560

4. Air Conditioning Compressor Hose Nut (1) » Remove
5. Air Conditioning Compressor Hose (2) @ Air Conditioning Evaporator Hose » Remove
6. Air Conditioning Compressor Hose Seal - Large (3) » Remove and DISCARD
7. Raise and support the vehicle.

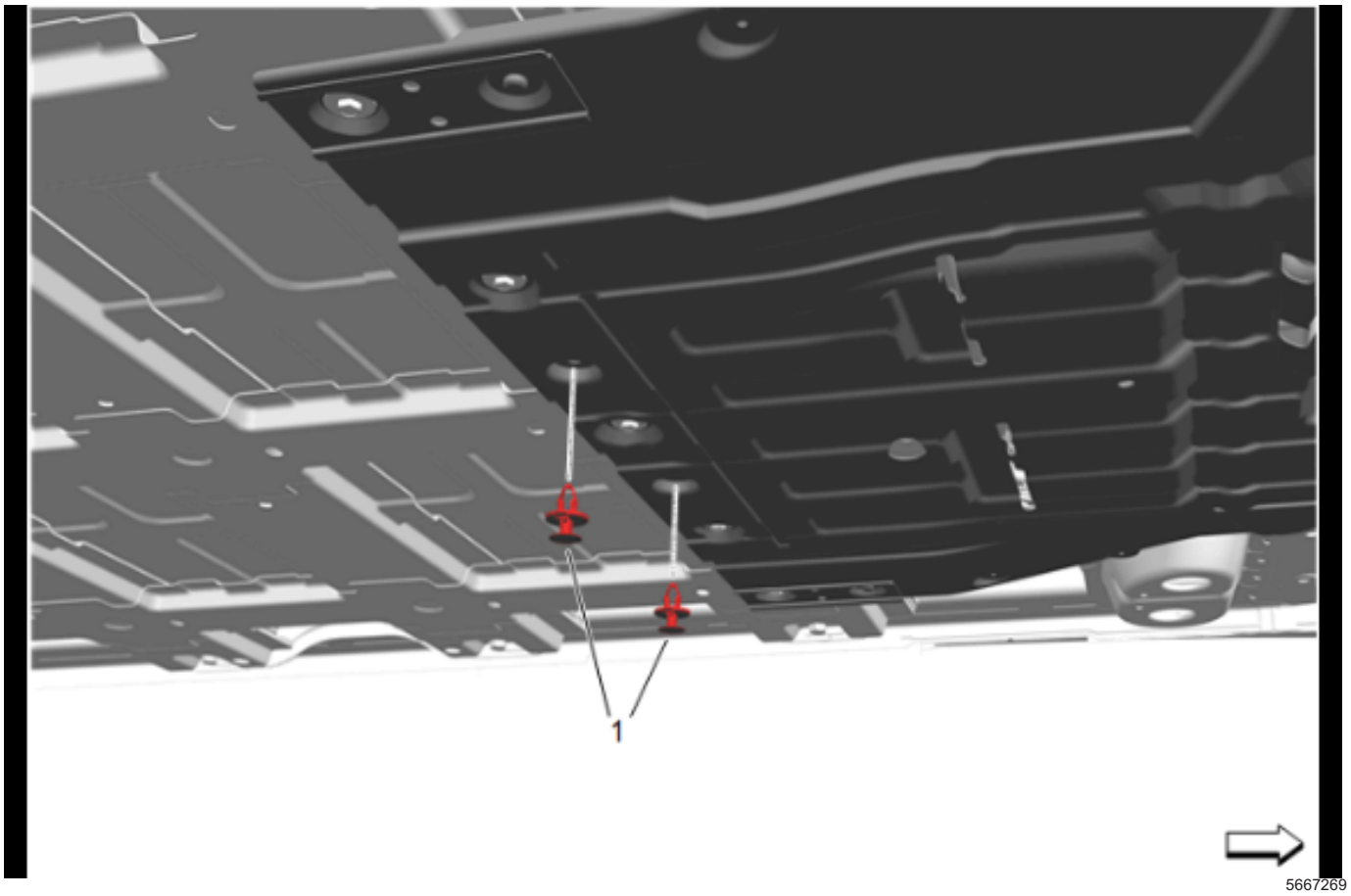

8. Front Compartment Air Deflector Retainer (1) »
   Remove [2x]

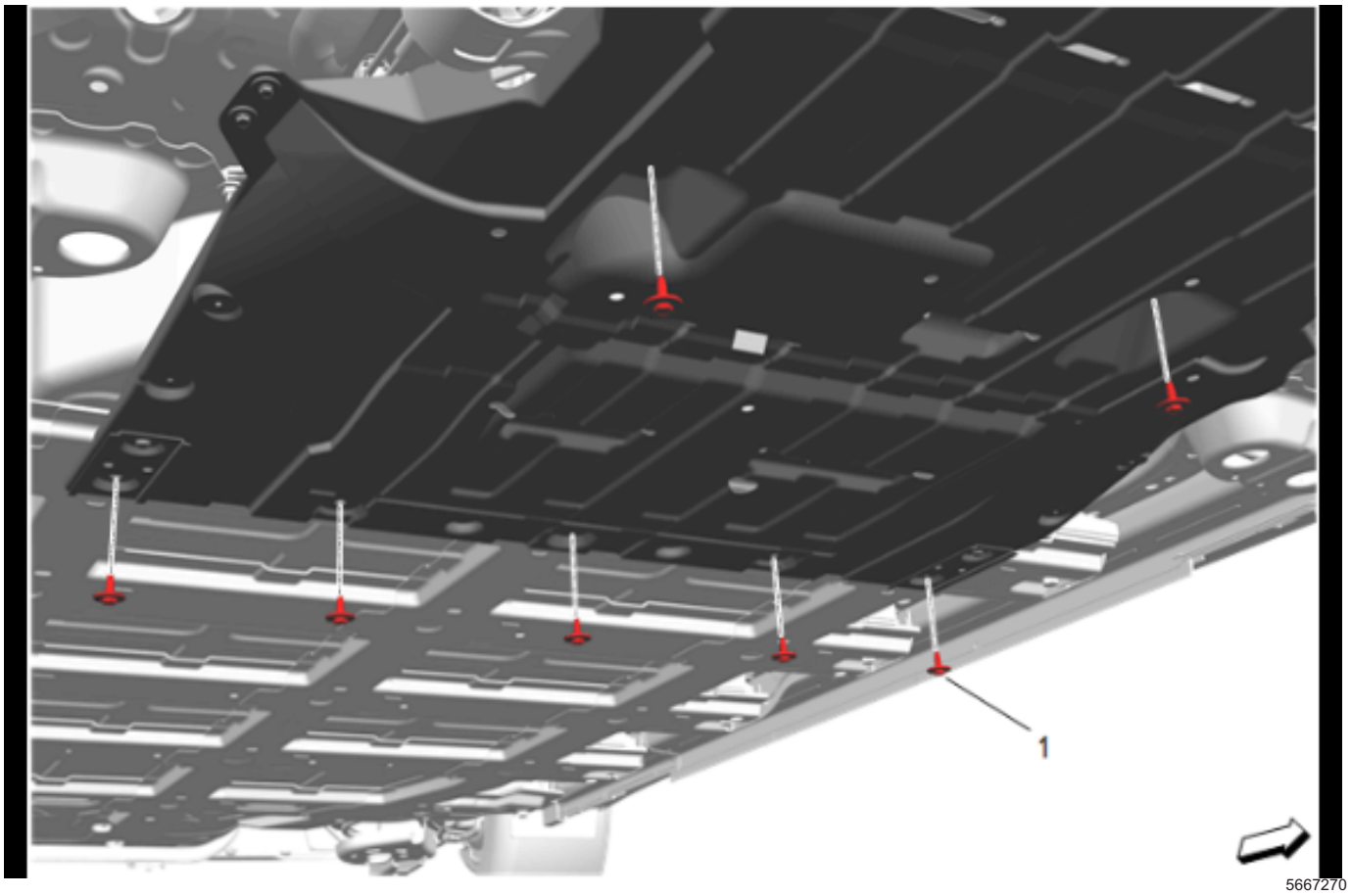

9. Front Compartment Air Deflector Bolt (1) » Remove [7x]

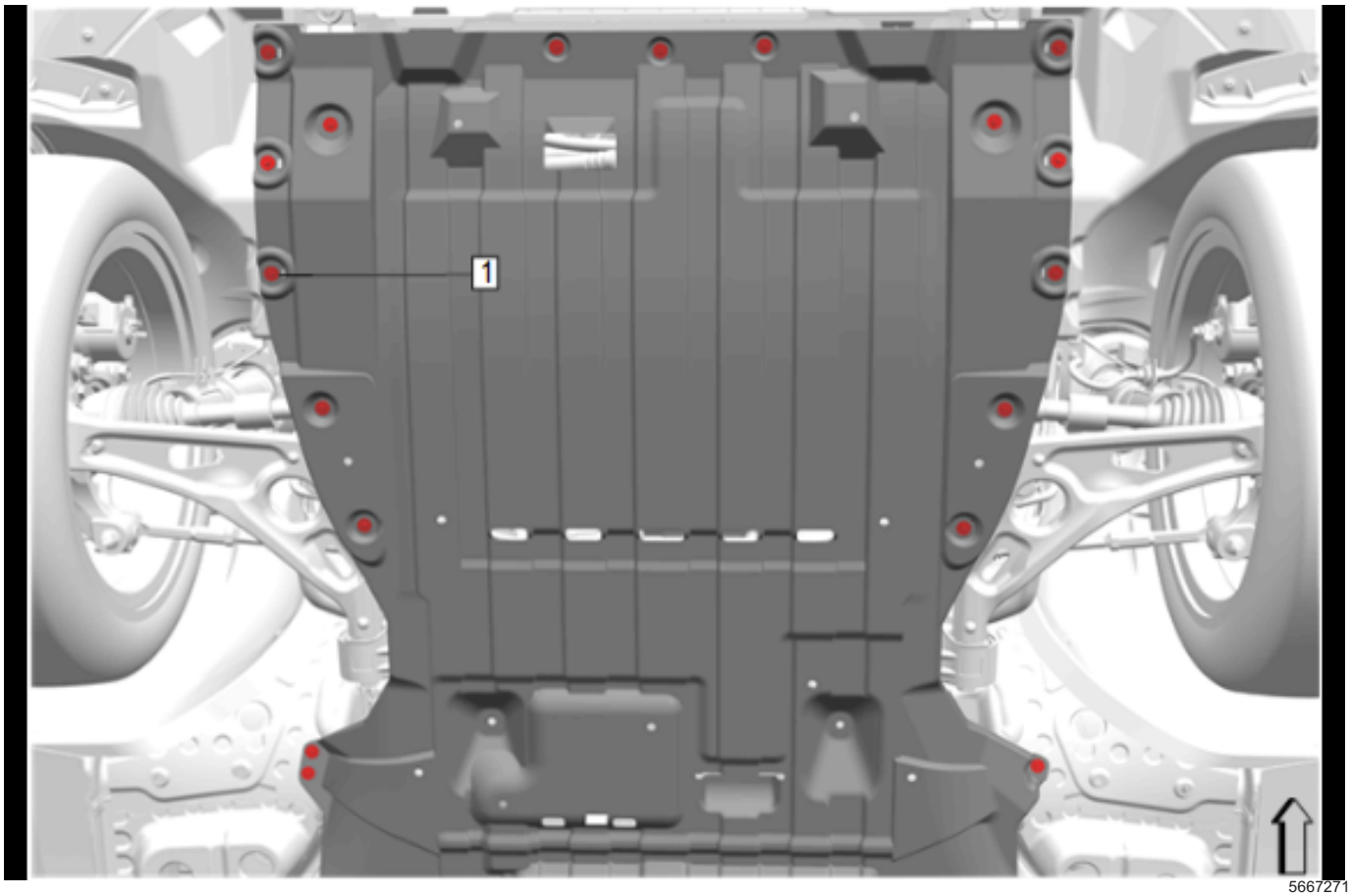

5667271

10. Front Compartment Air Deflector Bolt (1) »
    Remove [18x]

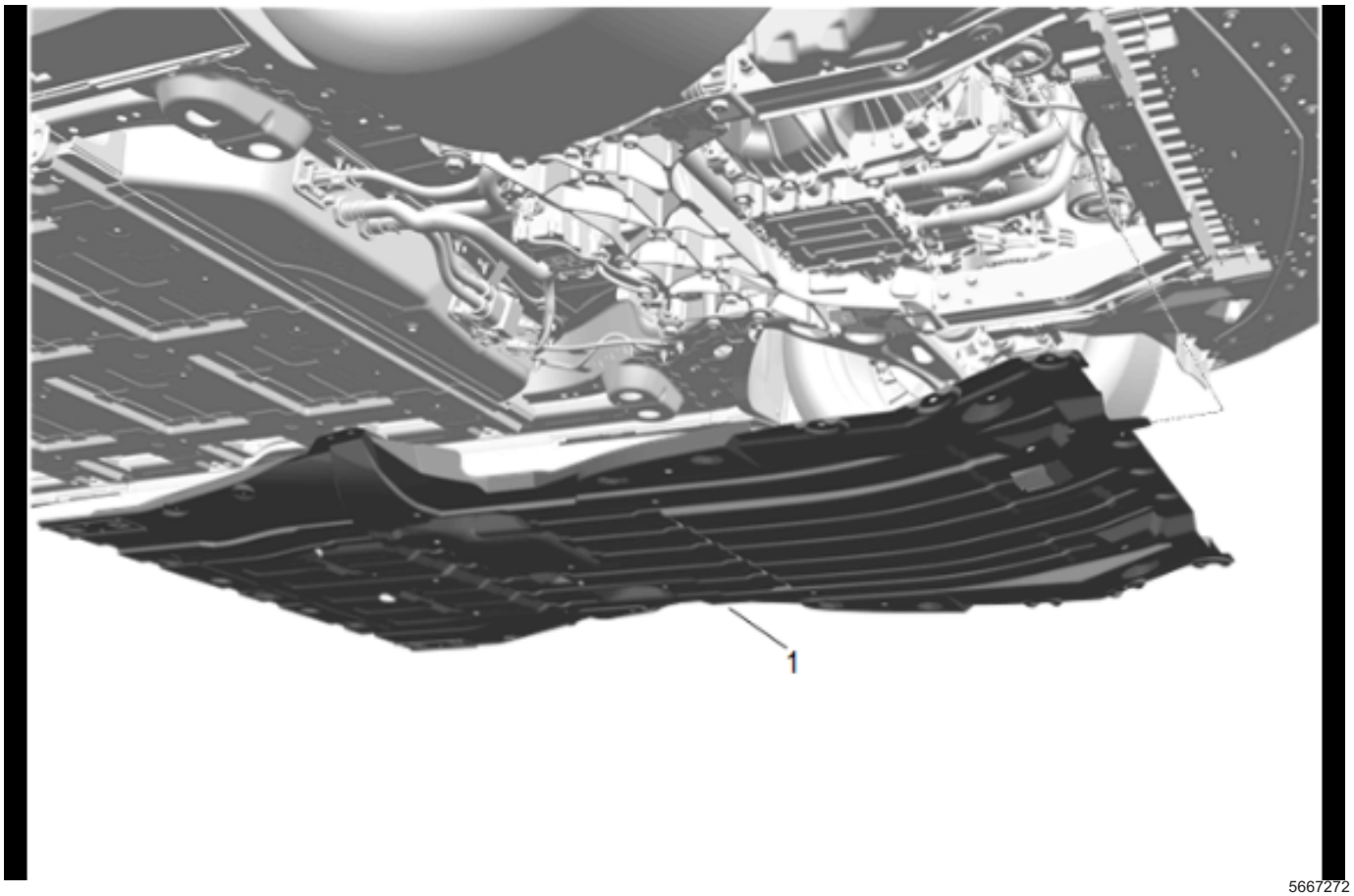

5667272

11. Front Compartment Air Deflector (1) » Remove

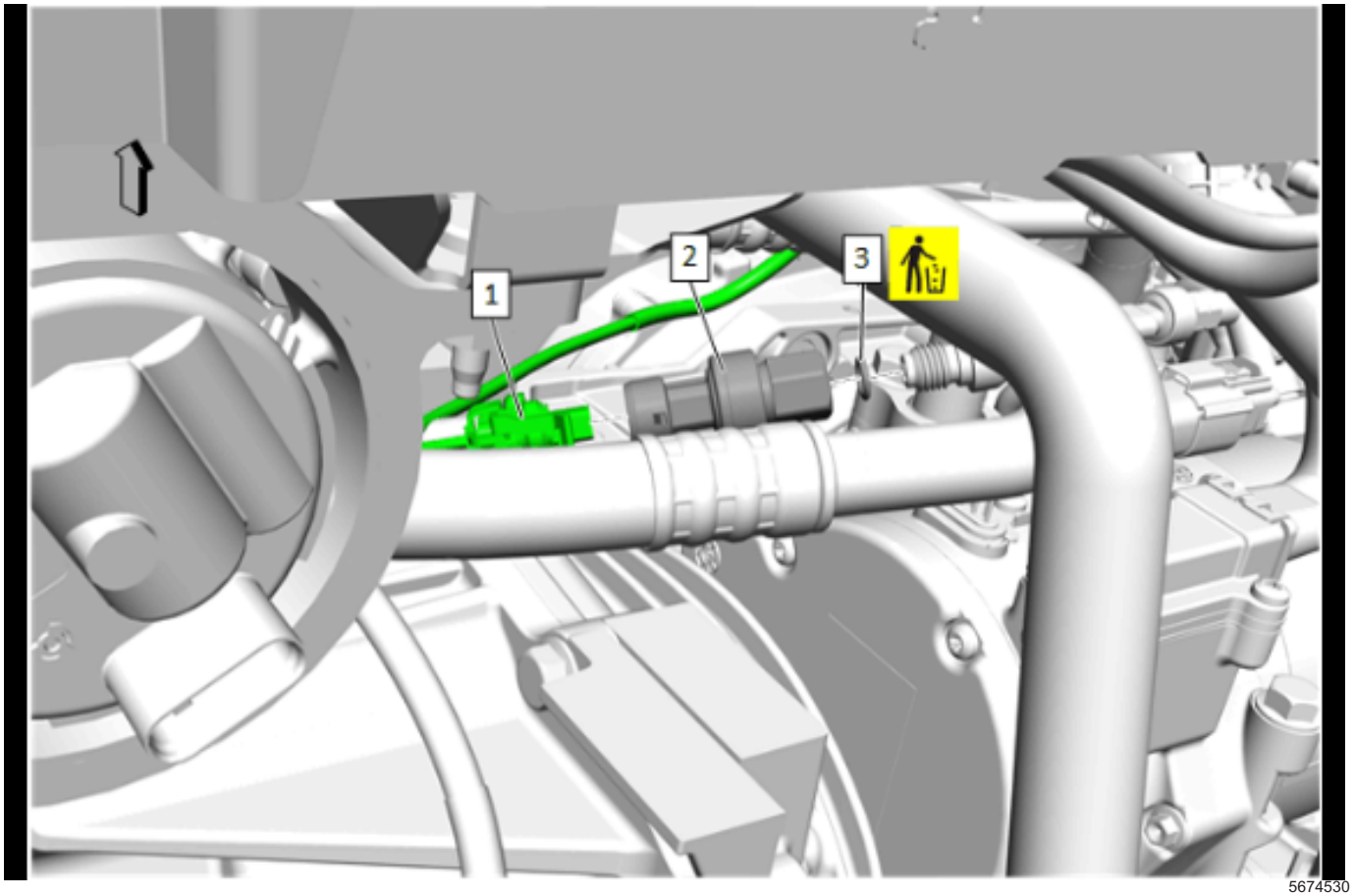

5674530

12. Electrical Connector (1) » Disconnect
13. Air Conditioning Refrigerant Pressure Sensor - Low Pressure (2) » Remove
14. Air Conditioning Refrigerant Pressure Sensor O-ring (3) » Remove and DISCARD

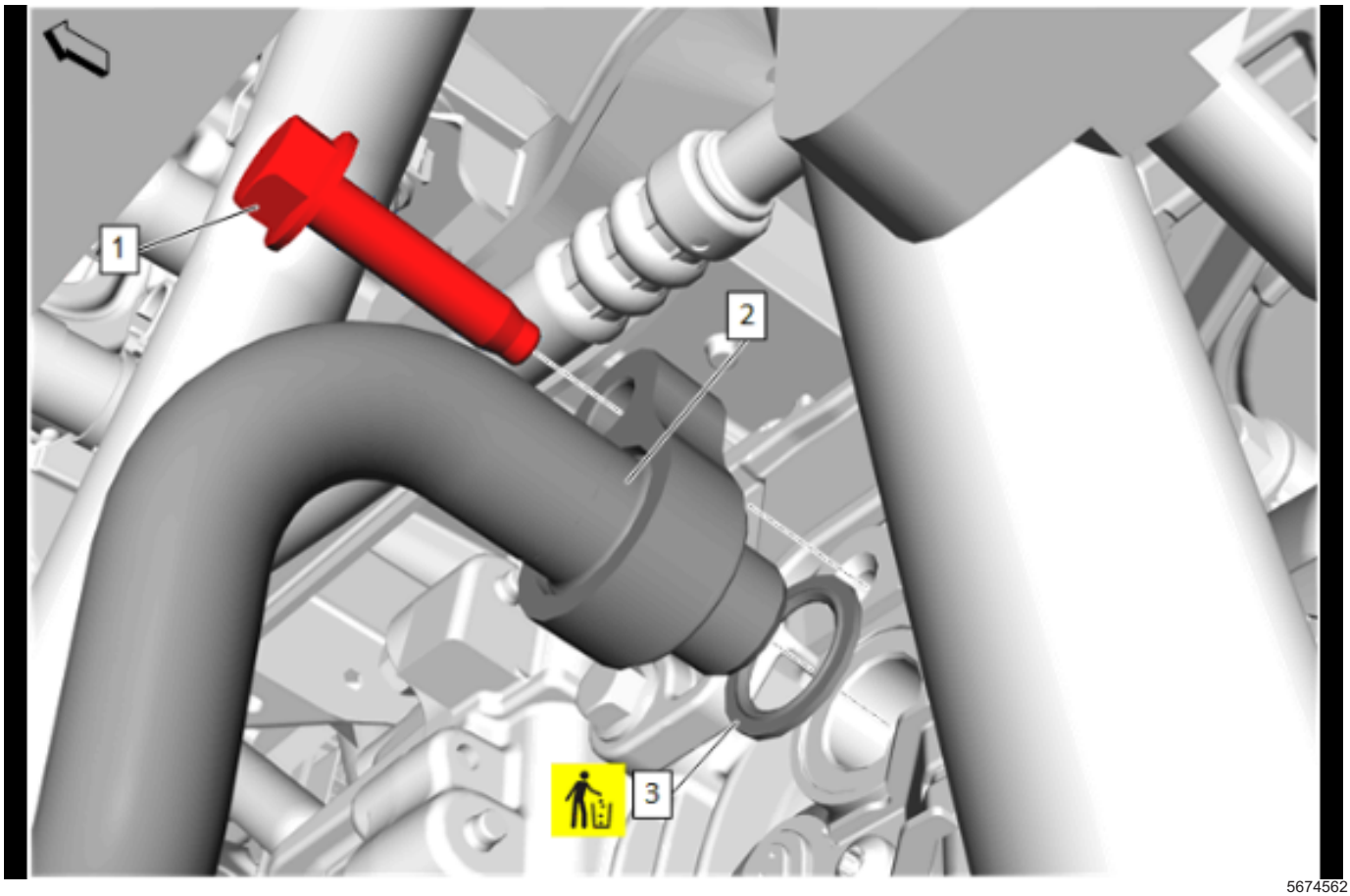

5674562

15. Air Conditioning Compressor Hose Bolt (1) » Remove
16. Air Conditioning Compressor Hose (2) @ Air Conditioning Compressor » Remove
17. Air Conditioning Compressor Hose Seal - Large (3) » Remove and DISCARD
18. Air Conditioning Compressor Hose (2) @ Vehicle » Remove

Installation Procedure

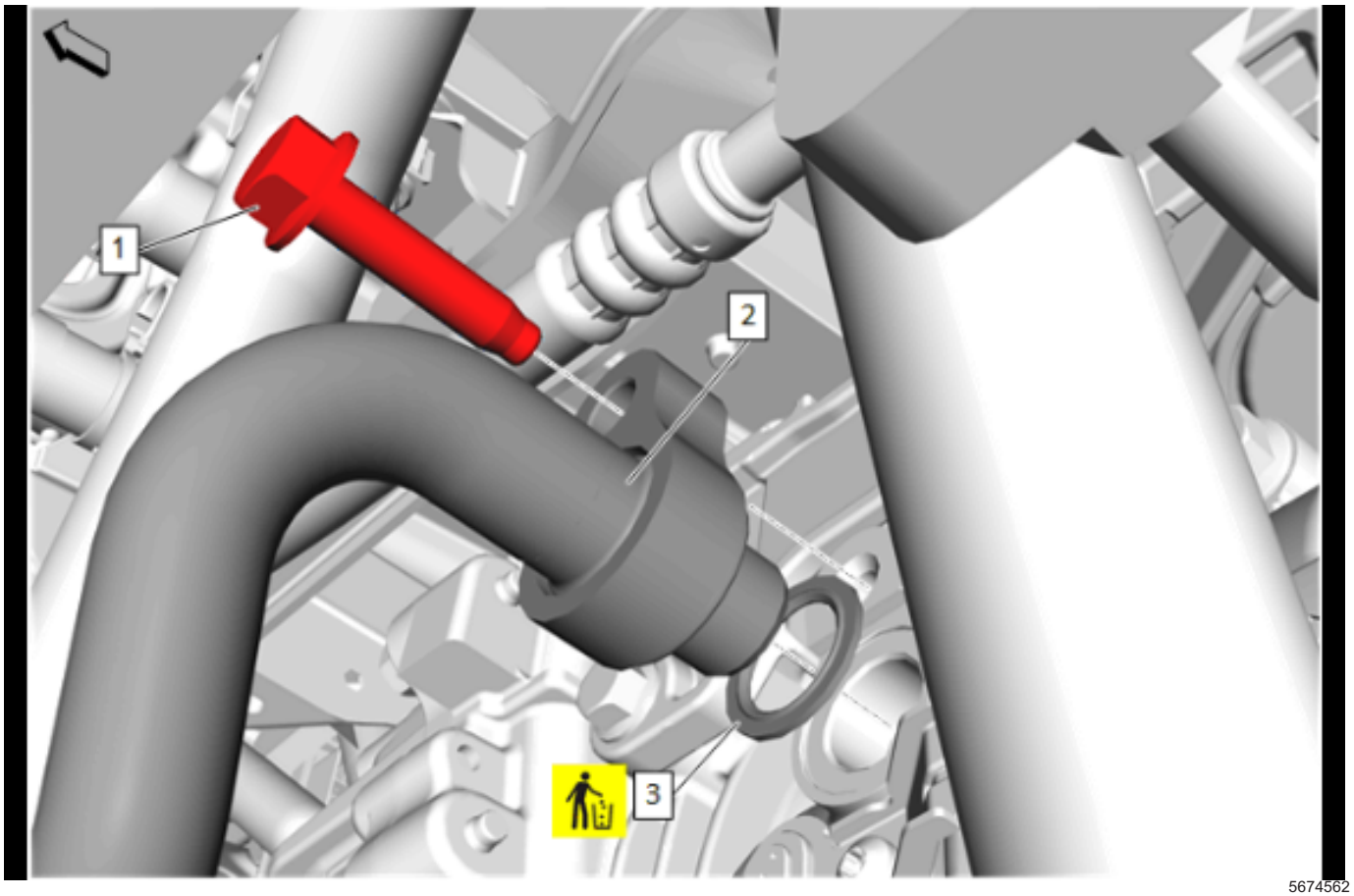

5674562

1. Air Conditioning Compressor Hose (2) @ Vehicle » Install
2. Air Conditioning Compressor Hose Seal - Large (3) » Install NEW
3. Air Conditioning Compressor Hose (2) @ Air Conditioning Compressor » Install
4. Air Conditioning Compressor Hose Bolt (1) » Install and tighten — *Fastener Specifications on page 5-3*

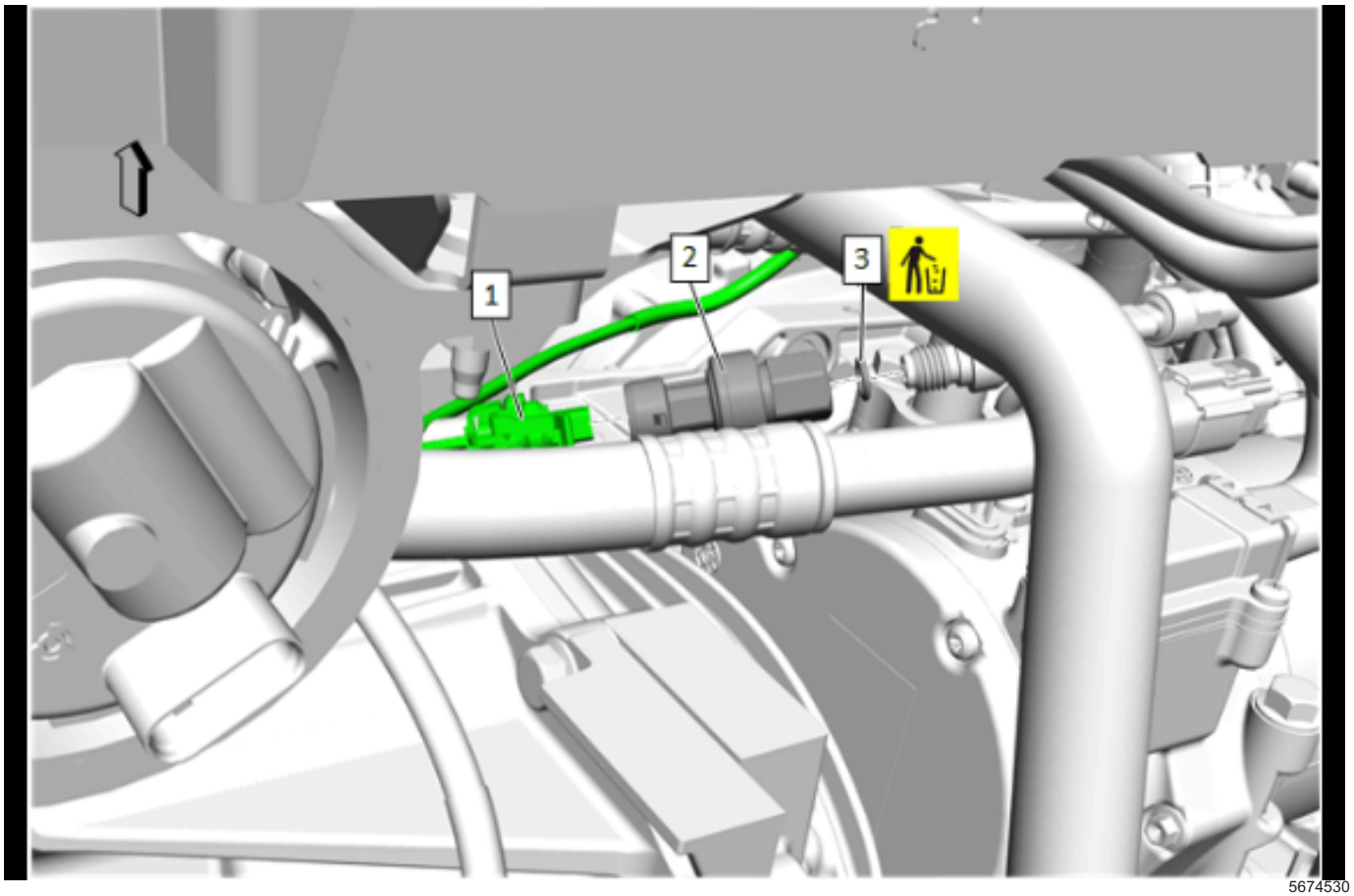

5674530

5. Air Conditioning Refrigerant Pressure Sensor O-ring (3) » Install NEW
6. Air Conditioning Refrigerant Pressure Sensor - Low Pressure (2) » Install and tighten — *Fastener Specifications on page 5-3*
7. Electrical Connector (1) » Connect

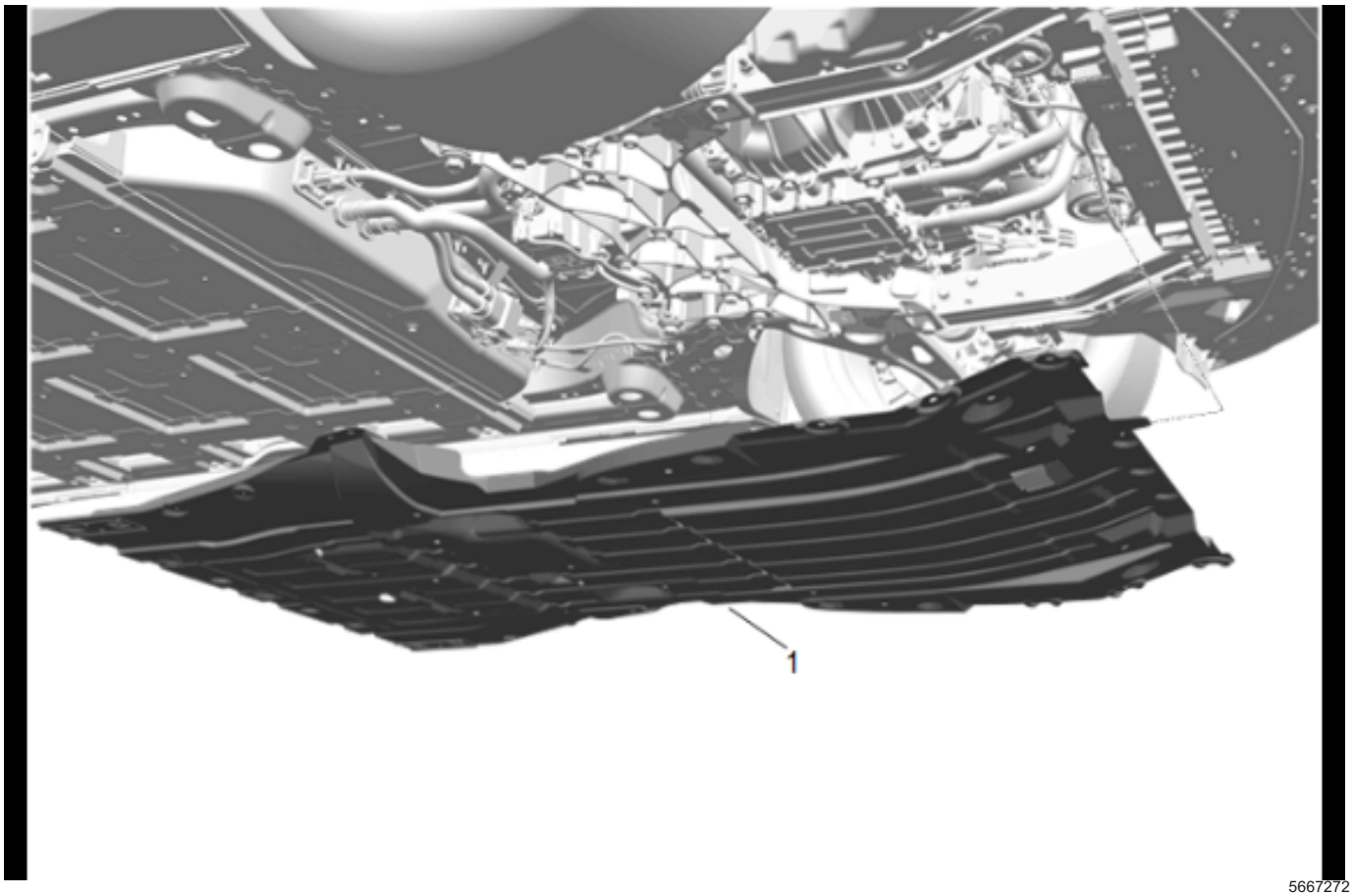

5667272

8. Front Compartment Air Deflector (1) » Install

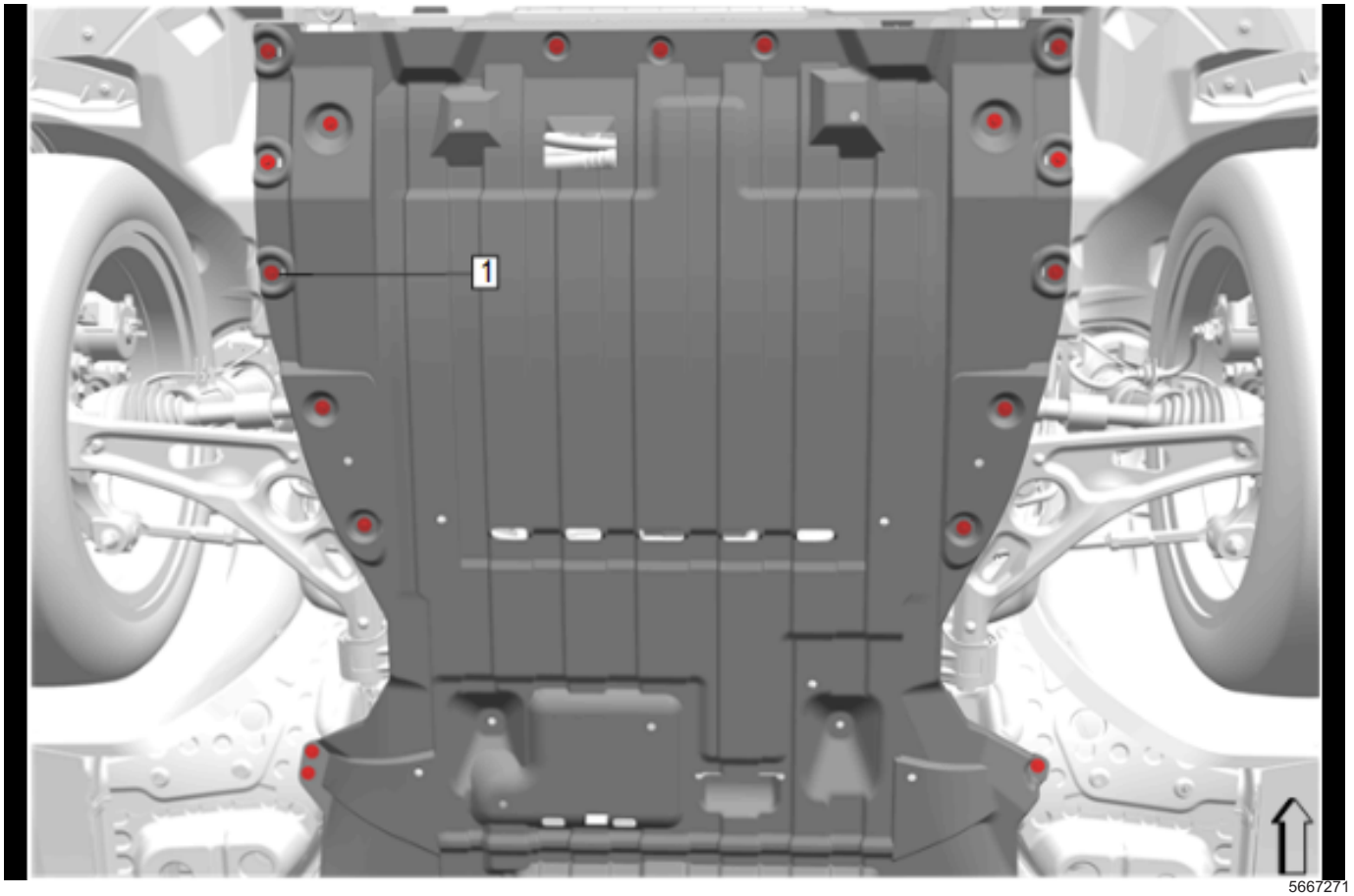

5667271

9. Front Compartment Air Deflector Bolt (1) » Install and tighten [18x] — Fastener Specifications

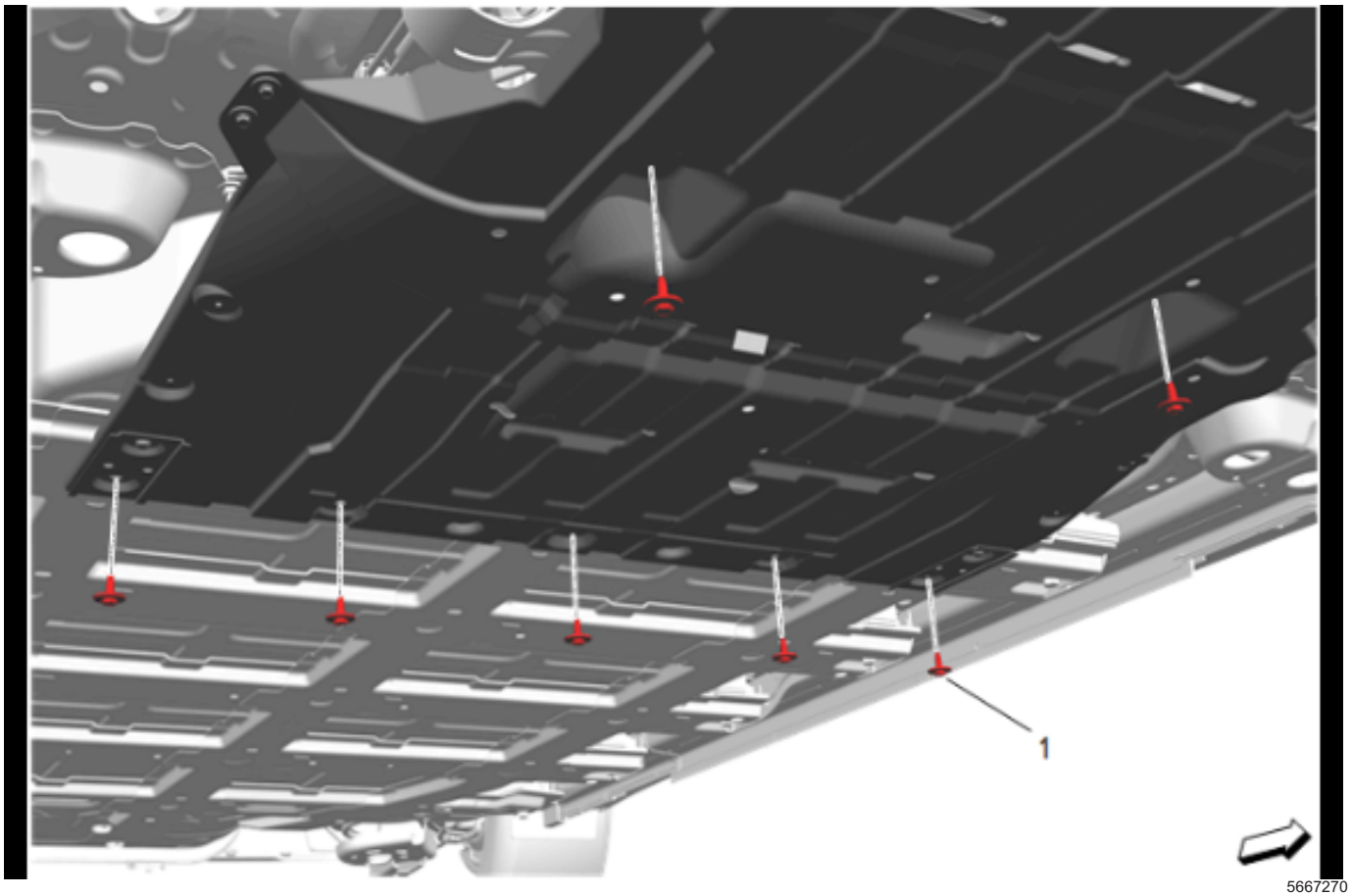

5667270

10. Front Compartment Air Deflector Bolt (1) » Install and tighten [7x] — Fastener Specifications

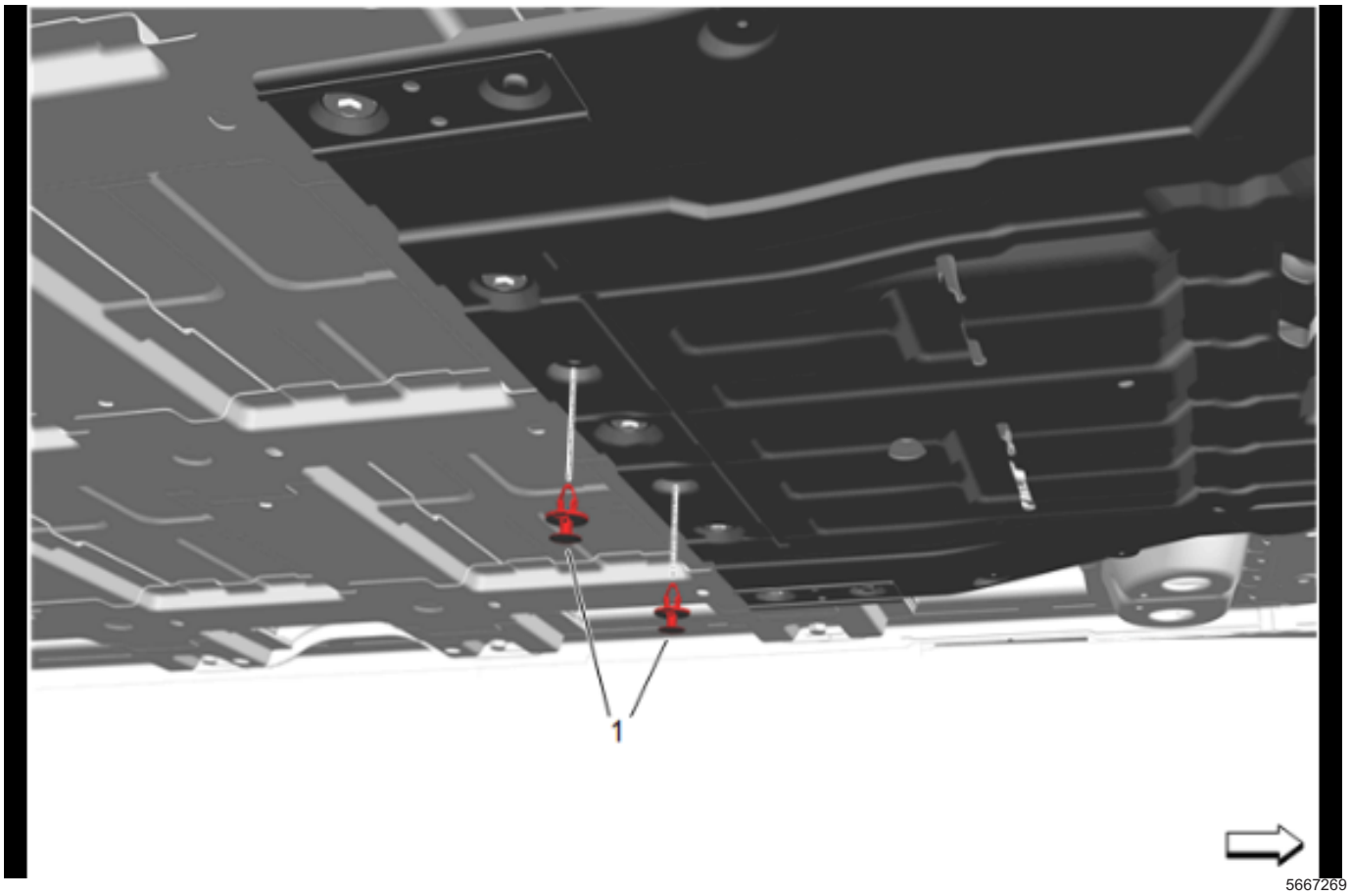

11. Front Compartment Air Deflector Retainer (1) »
    Install [2x]
12. Lower the vehicle.

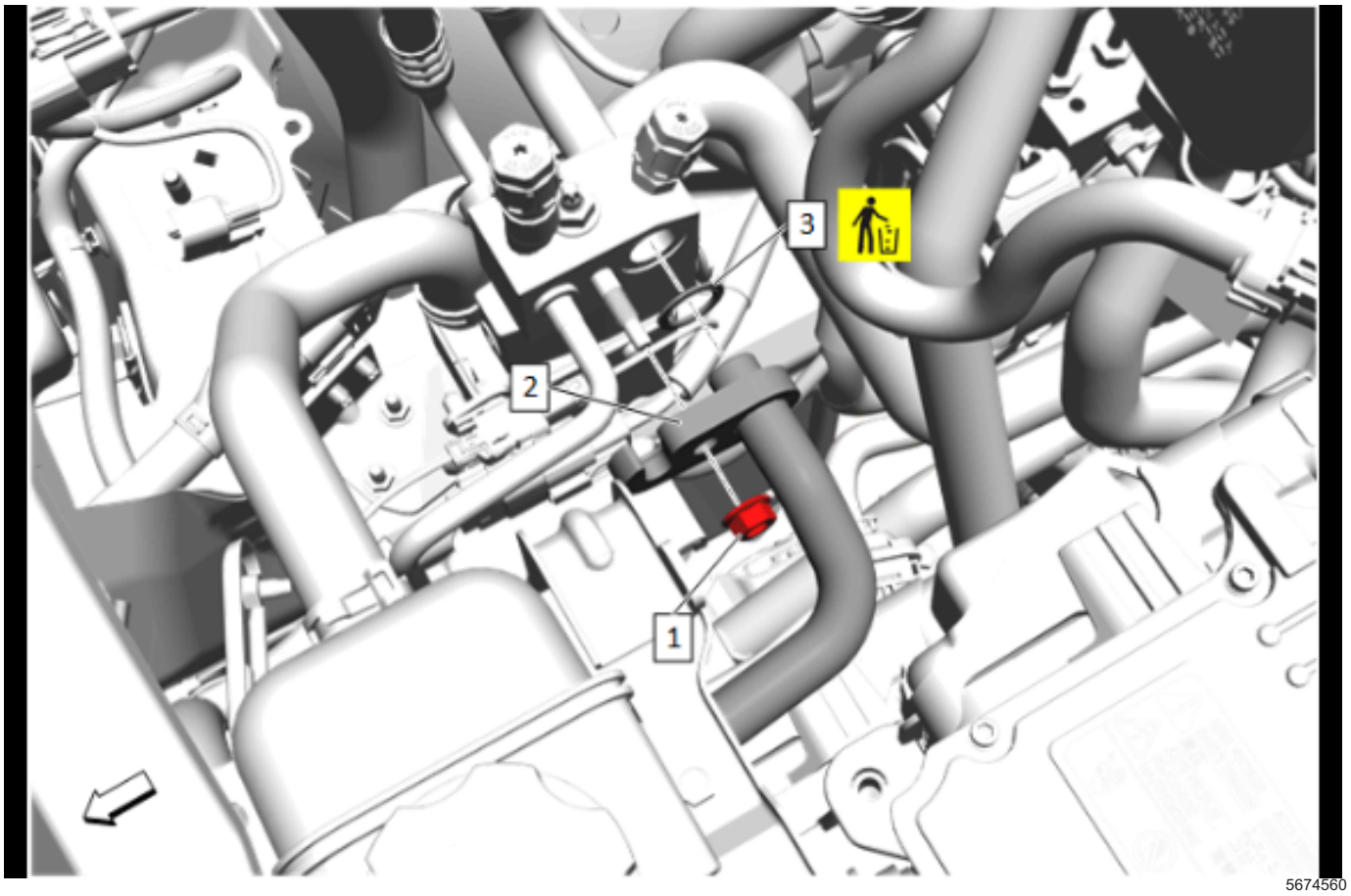

13. Air Conditioning Compressor Hose Seal - Large (3) » Install NEW
14. Air Conditioning Compressor Hose (2) @ Air Conditioning Evaporator Hose » Install
15. Air Conditioning Compressor Hose Nut (1) » Install and tighten — *Fastener Specifications on page 5-3*
16. Recharge the refrigerant. *Refrigerant Recovery and Recharging on page 5-36*
17. Connect the battery negative cable.

Air Conditioning Condenser Hose Replacement

Single Use Fasteners and Components

- Air Conditioning Compressor Hose Seal - Large
- Air Conditioning Condenser Hose Seal - Large [2x]
- Air Conditioning Condenser Hose Seal - Small [2x]
- Air Conditioning Refrigerant Pressure Sensor O-ring

Removal Procedure

Danger: Before conducting any repair to this high voltage cooling system, it is necessary to determine/verify whether no high-voltage system faults exist. If high-voltage faults exist, follow published DTC diagnostics/repair procedures prior to performing any cooling system repairs. Failure to correct High Voltage Faults before working on the high voltage cooling system could result in personal injury or death.

1. Turn vehicle power OFF and remove all keyless entry transmitters from the vehicle and secure in a place outside the vehicle.
2. Disconnect the battery negative cable.
3. Recover the refrigerant. *Refrigerant Recovery and Recharging on page 5-36*

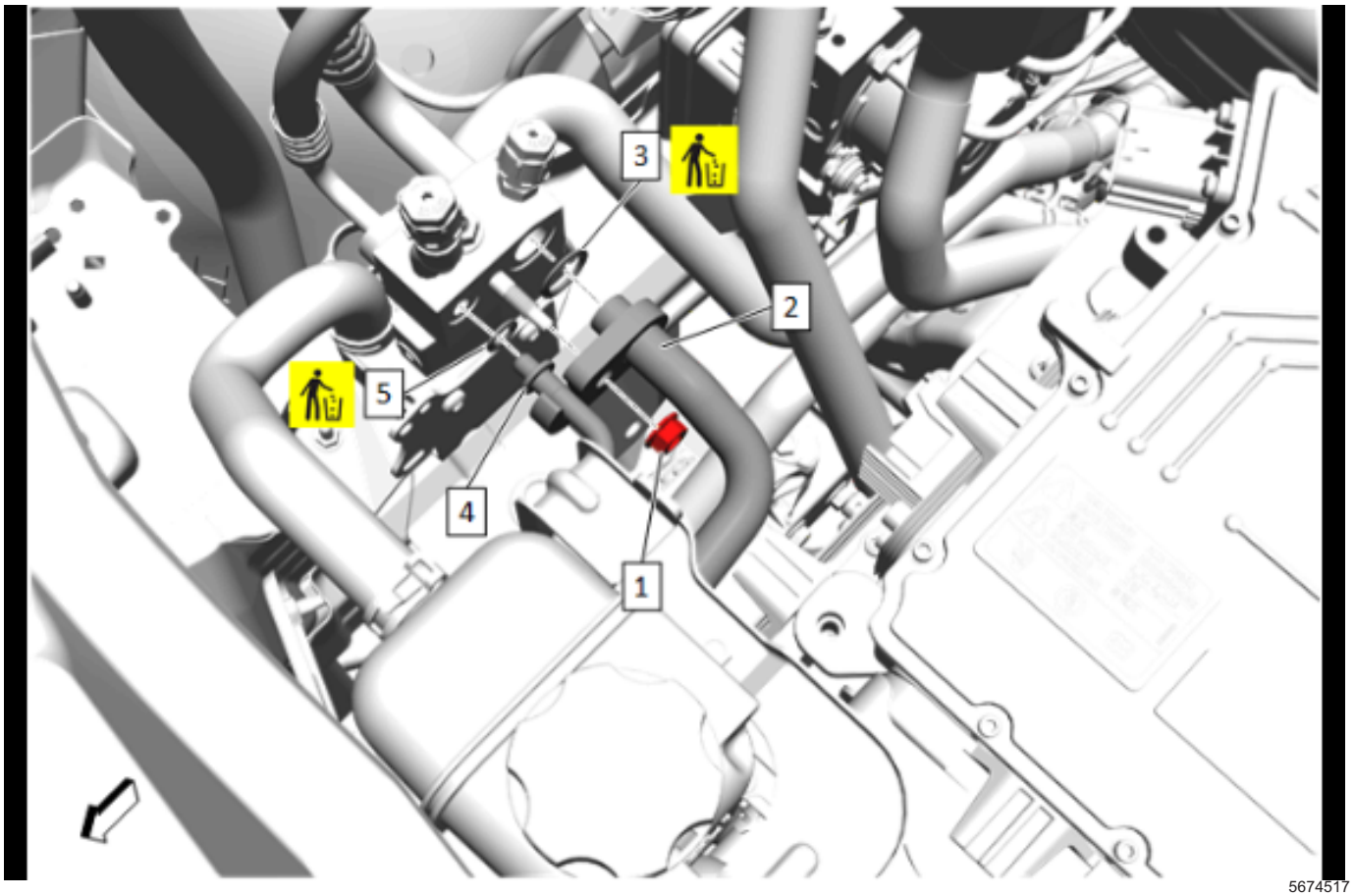

5674517

4. Air Conditioning Compressor Hose Nut (1) » Remove
5. Air Conditioning Compressor Hose (2) @ Air Conditioning Evaporator Hose » Remove
6. Air Conditioning Compressor Hose Seal - Large (3) » Remove and DISCARD
7. Air Conditioning Condenser Hose (4) @ Air Conditioning Evaporator Hose » Remove
8. Air Conditioning Condenser Hose Seal - Small (5) » Remove and DISCARD
9. Raise and support the vehicle.

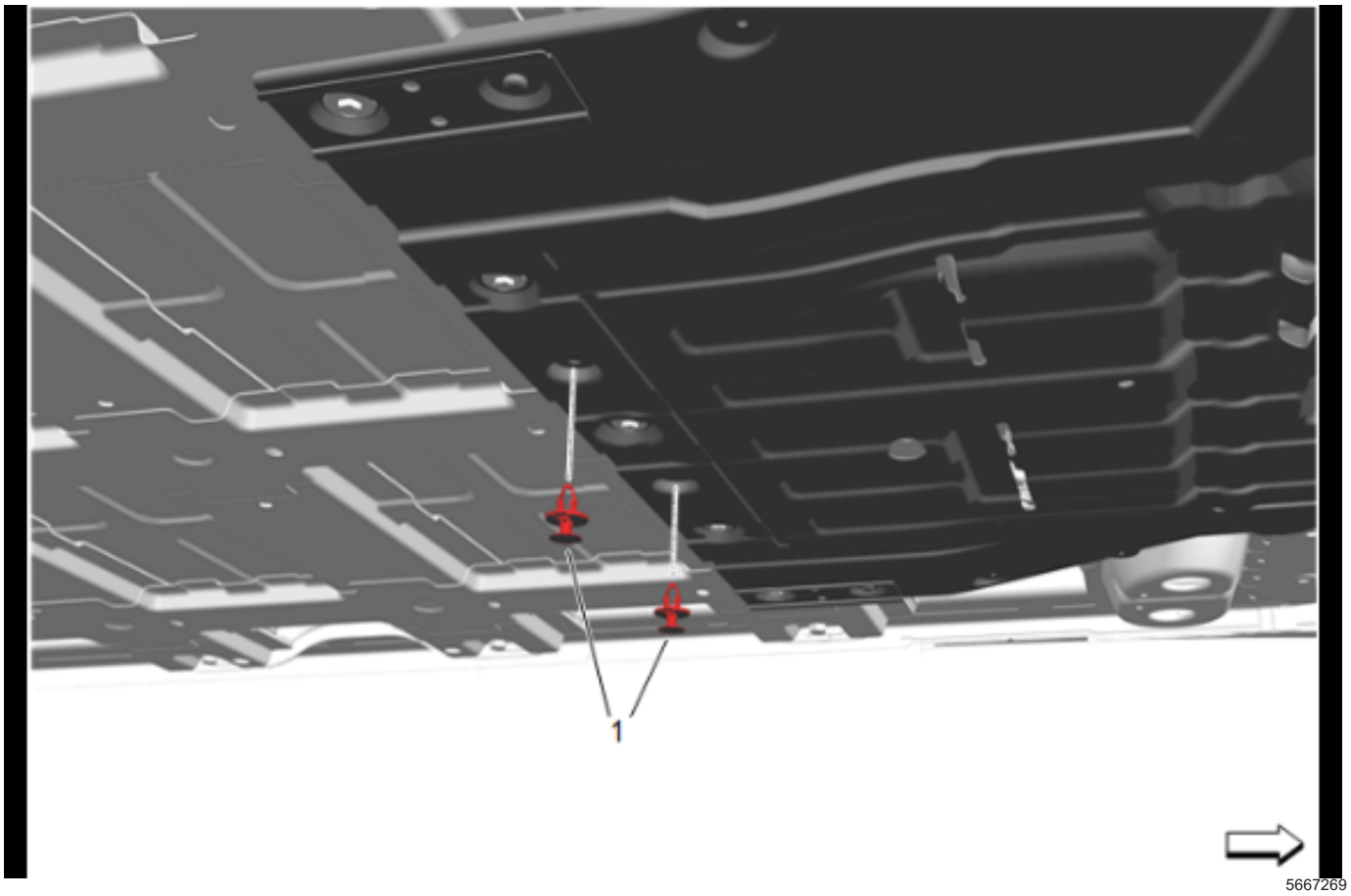

10. Front Compartment Air Deflector Retainer (1) »
    Remove [2x]

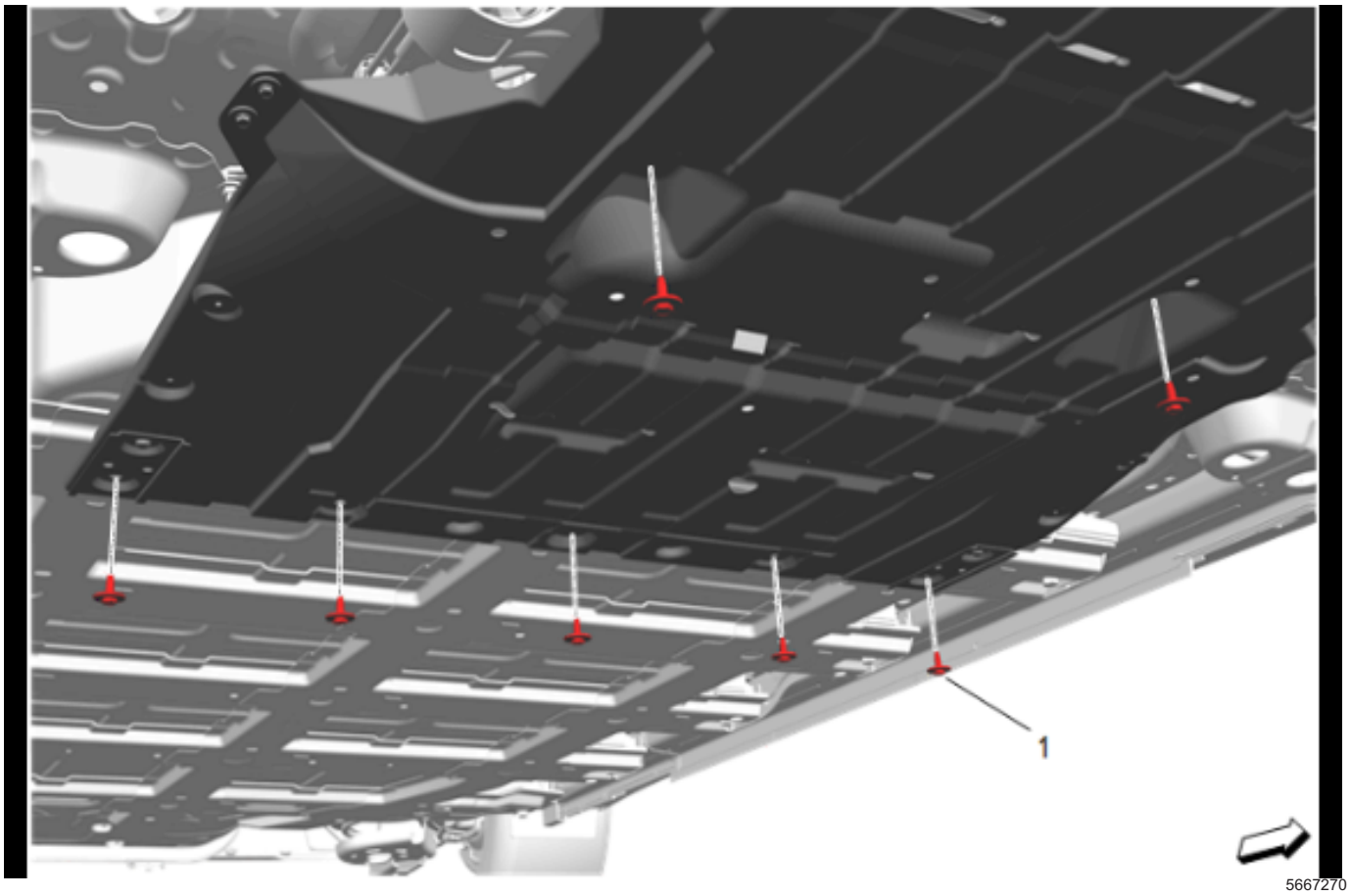

11. Front Compartment Air Deflector Bolt (1) » Remove [7x]

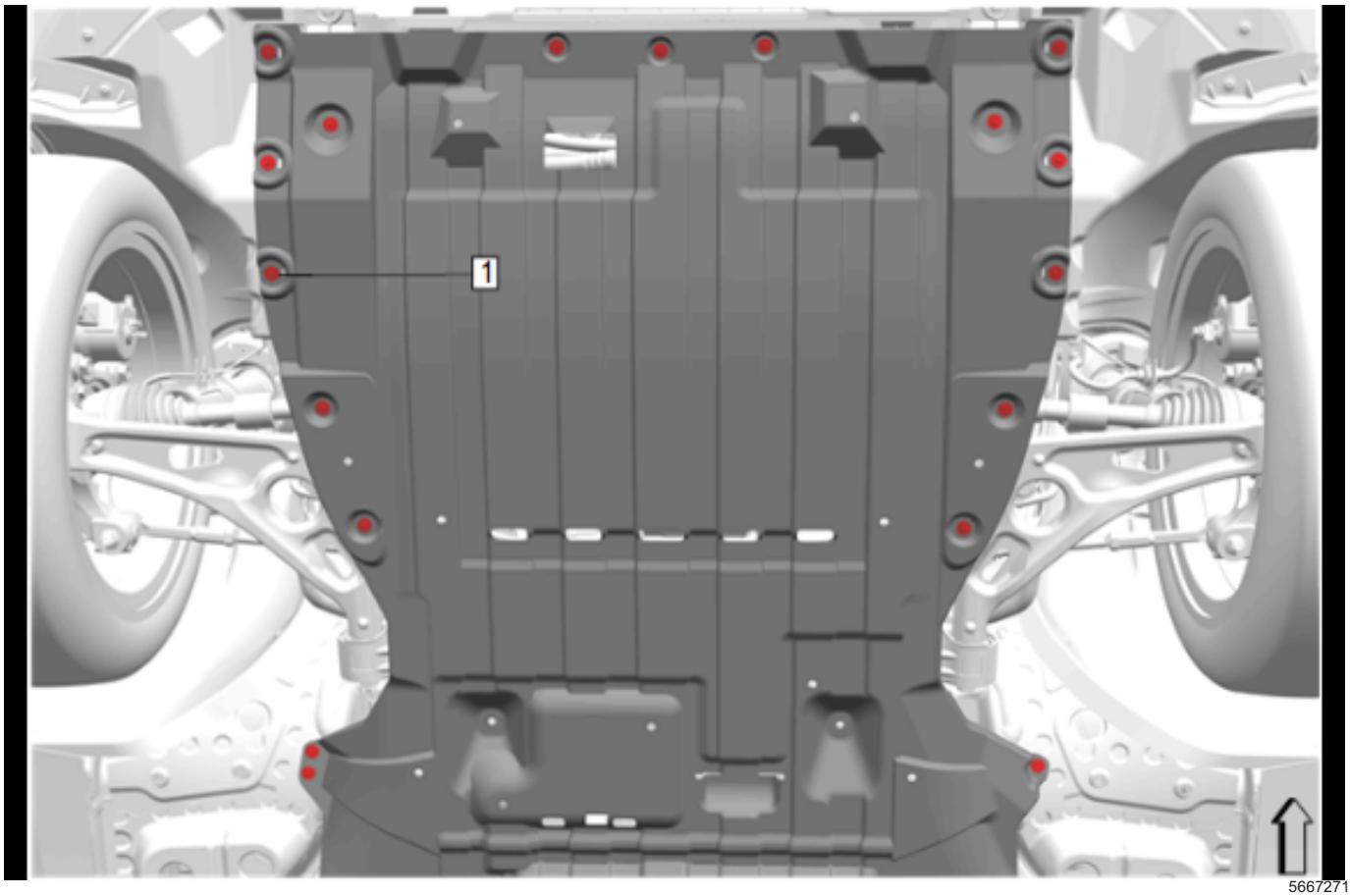

5667271

12. Front Compartment Air Deflector Bolt (1) »
    Remove [18x]

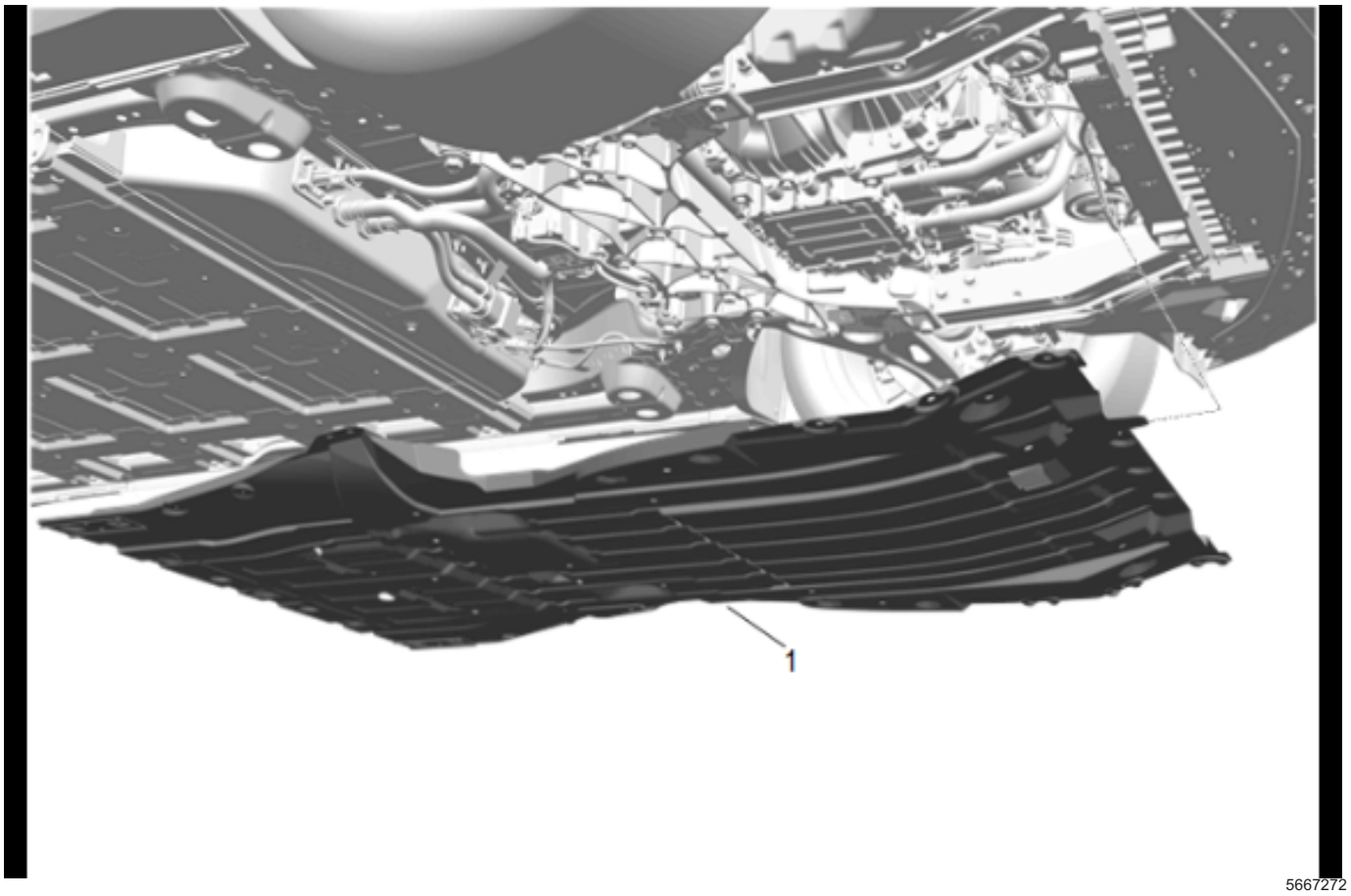

13. Front Compartment Air Deflector (1) » Remove

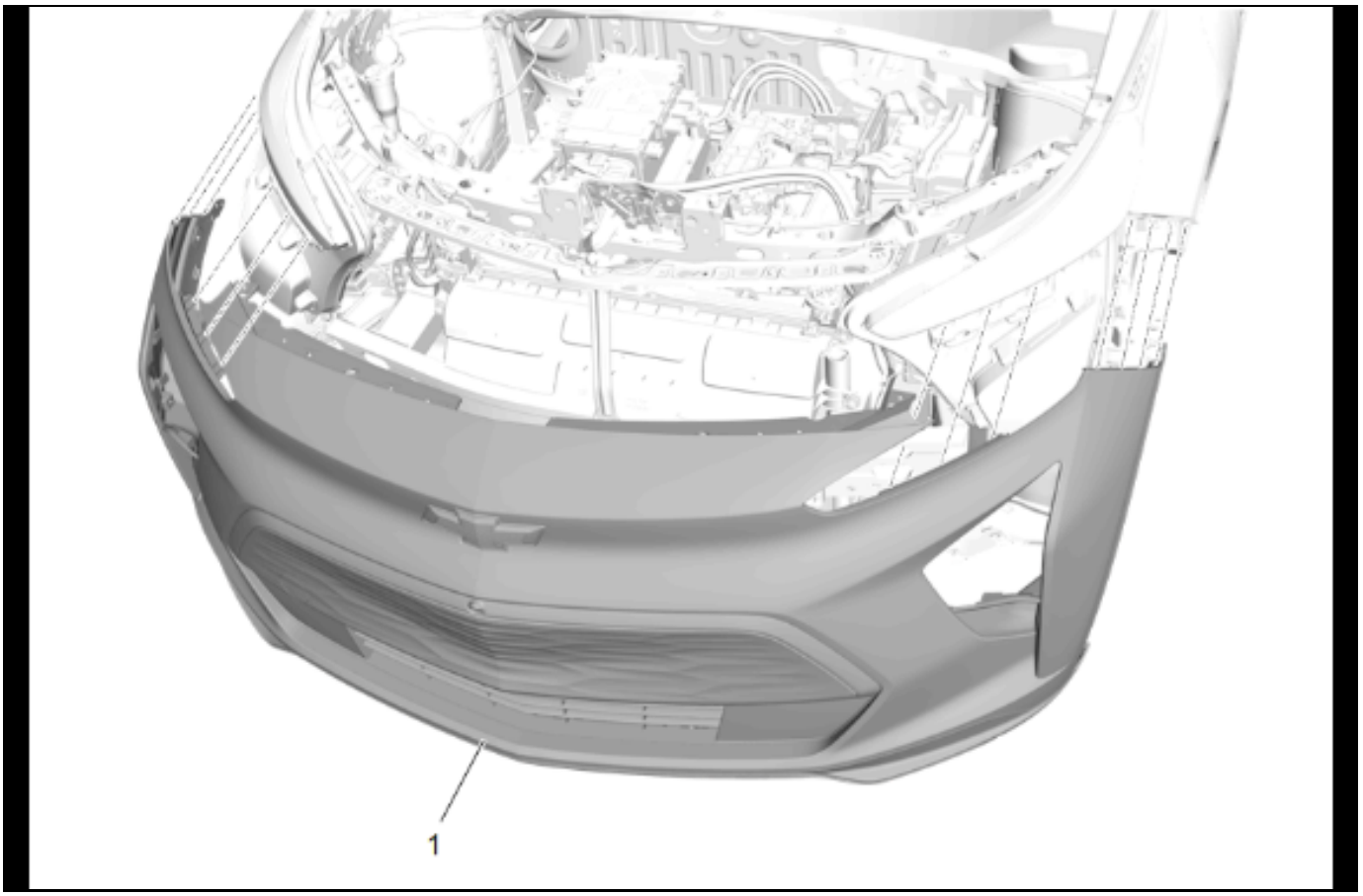

5662711

14. Front Bumper Fascia (1) » Remove — Front Bumper Fascia Removal and Installation

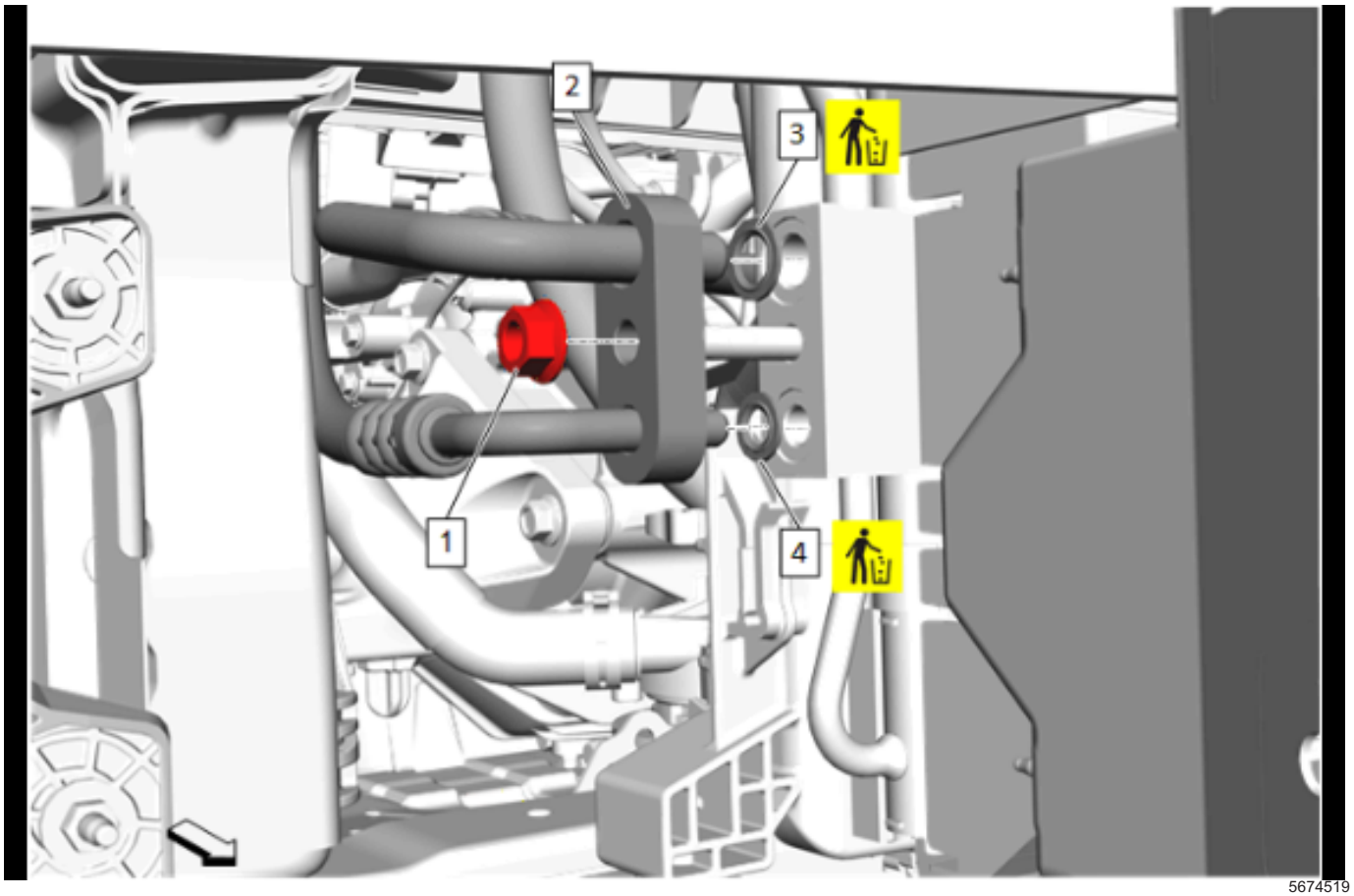

5674519

15. Air Conditioning Condenser Hose Nut (1) » Remove
16. Air Conditioning Condenser Hose (2) @ Air Conditioning Condenser » Remove
17. Air Conditioning Condenser Hose Seal - Large (3) » Remove and DISCARD
18. Air Conditioning Condenser Hose Seal - Small (4) » Remove and DISCARD

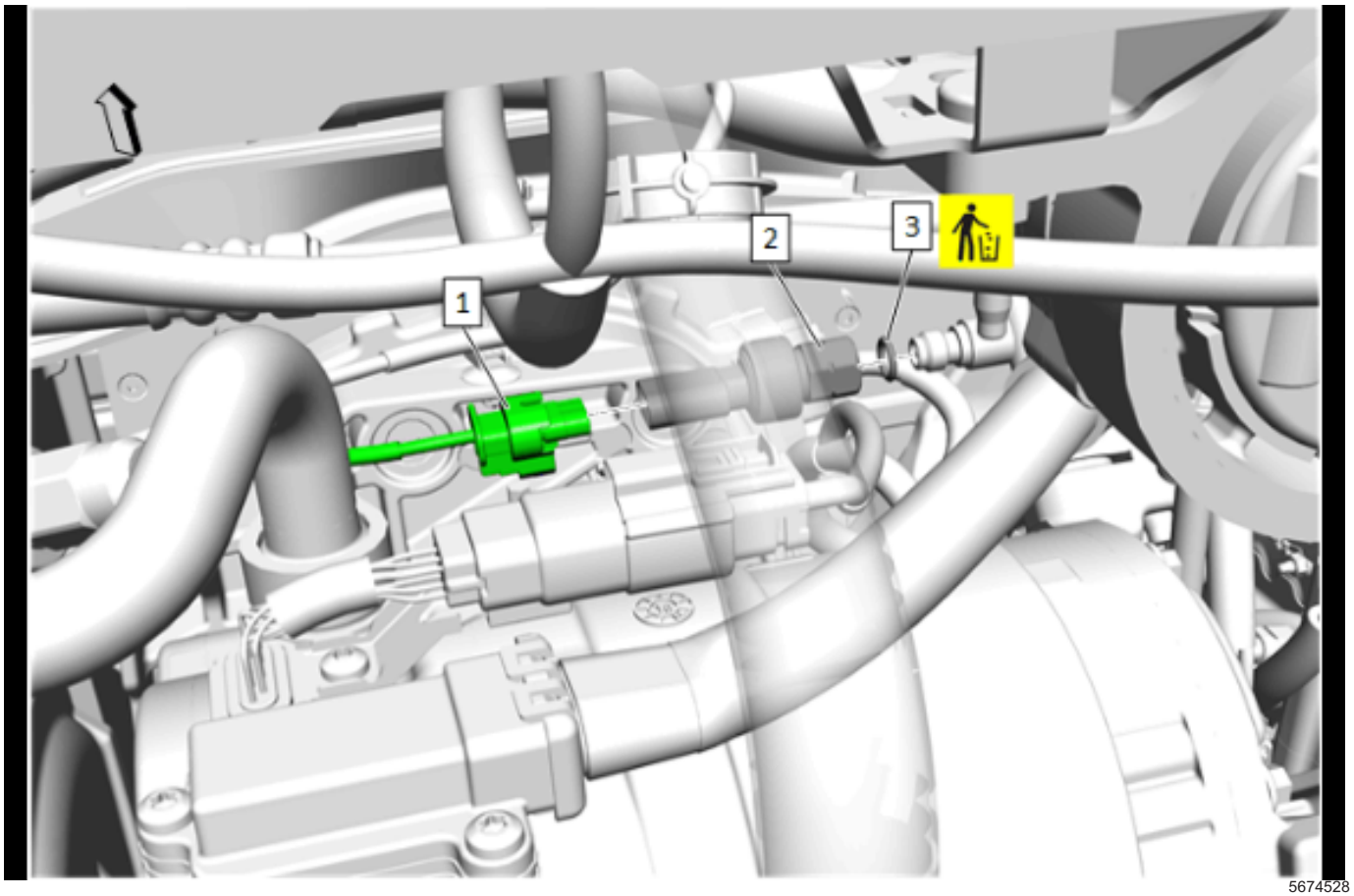

5674528

19. Electrical Connector (1) » Disconnect
20. Air Conditioning Refrigerant Pressure Sensor - High Pressure (2) » Remove
21. Air Conditioning Refrigerant Pressure Sensor O-ring (3) » Remove and DISCARD

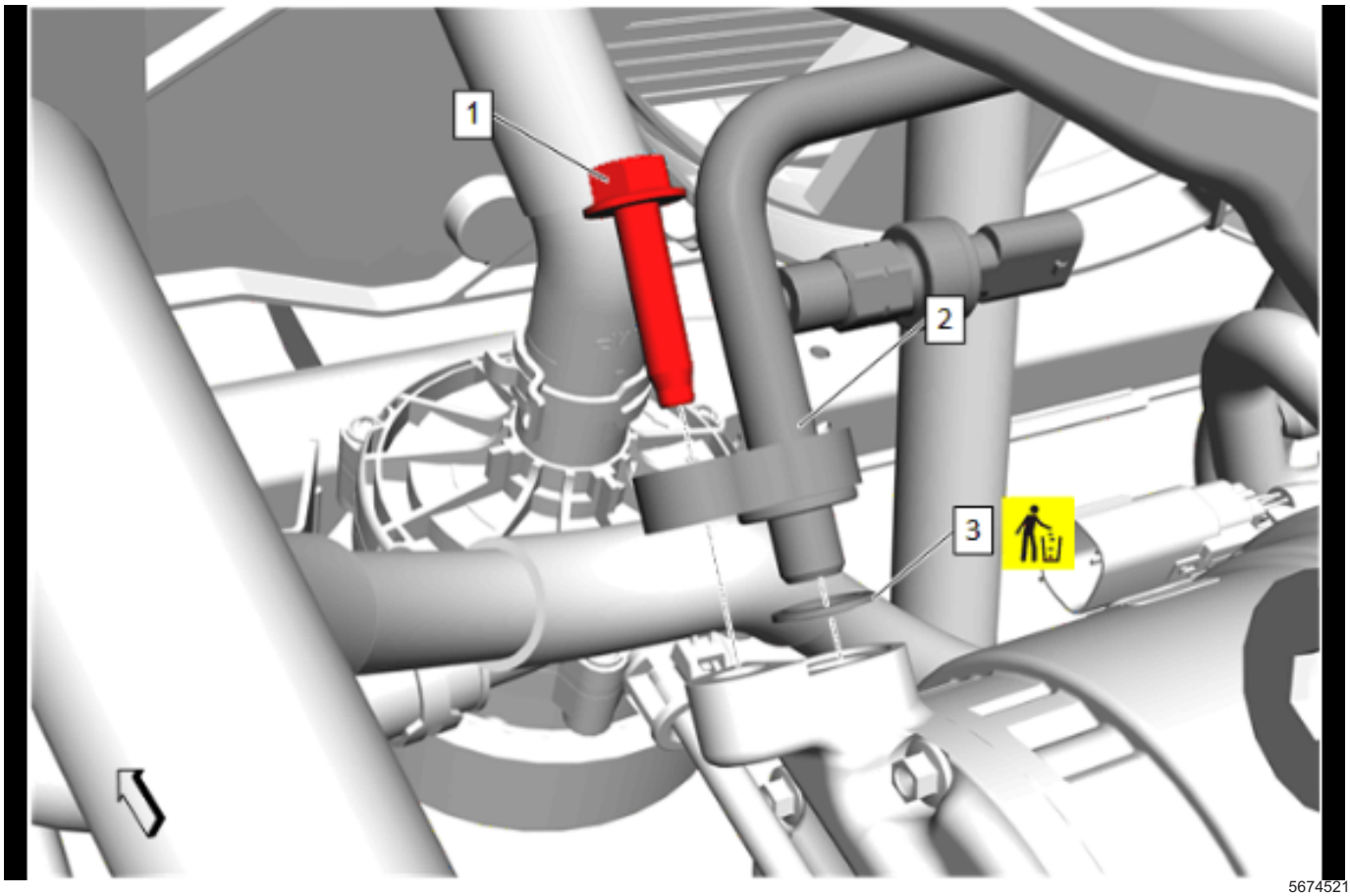

5674521

22. Air Conditioning Condenser Hose Bolt (1) » Remove
23. Air Conditioning Condenser Hose (2) @ Air Conditioning Compressor » Remove
24. Air Conditioning Condenser Hose Seal - Large (3) » Remove and DISCARD
25. Air Conditioning Condenser Hose (2) @ Vehicle » Remove

Installation Procedure

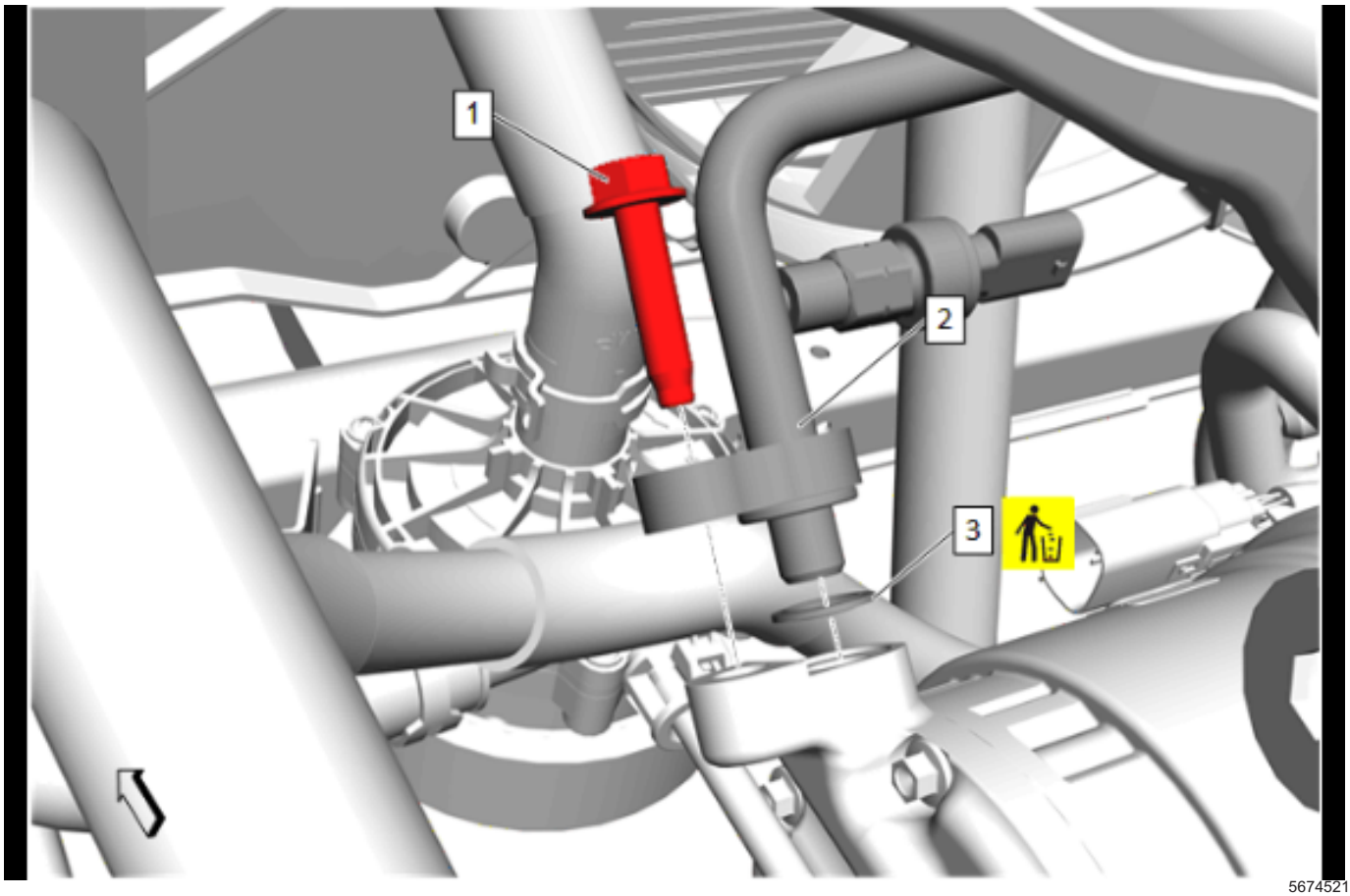

5674521

1. Air Conditioning Condenser Hose (2) @ Vehicle » Install
2. Air Conditioning Condenser Hose Seal - Large (3) » Install NEW
3. Air Conditioning Condenser Hose (2) @ Air Conditioning Compressor » Install
4. Air Conditioning Condenser Hose Bolt (1) » Install and tighten — *Fastener Specifications on page 5-3*

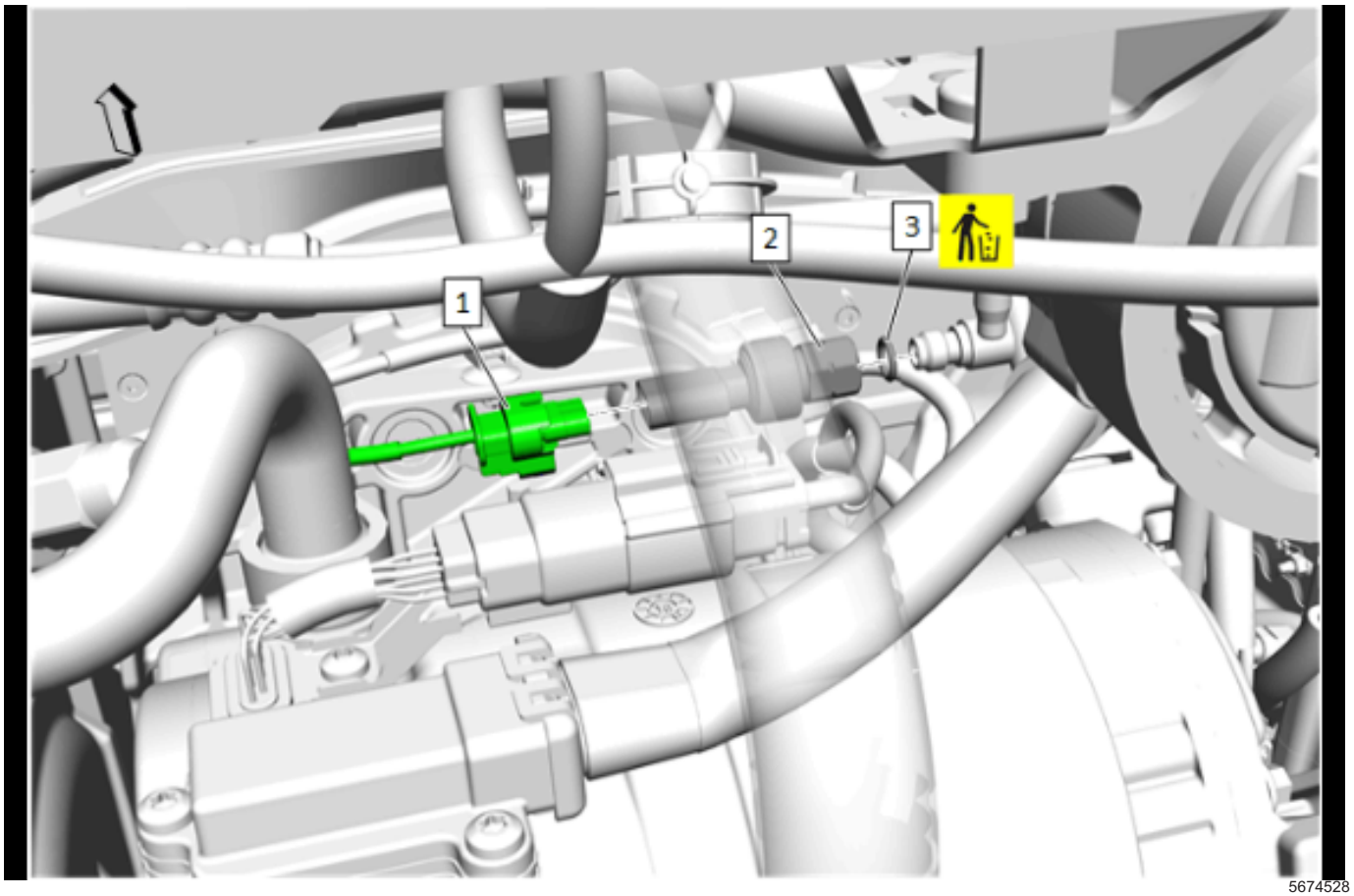

5674528

5. Air Conditioning Refrigerant Pressure Sensor O-ring (3) » Install NEW
6. Air Conditioning Refrigerant Pressure Sensor - High Pressure (2) » Install and tighten — *Fastener Specifications on page 5-3*
7. Electrical Connector (1) » Connect

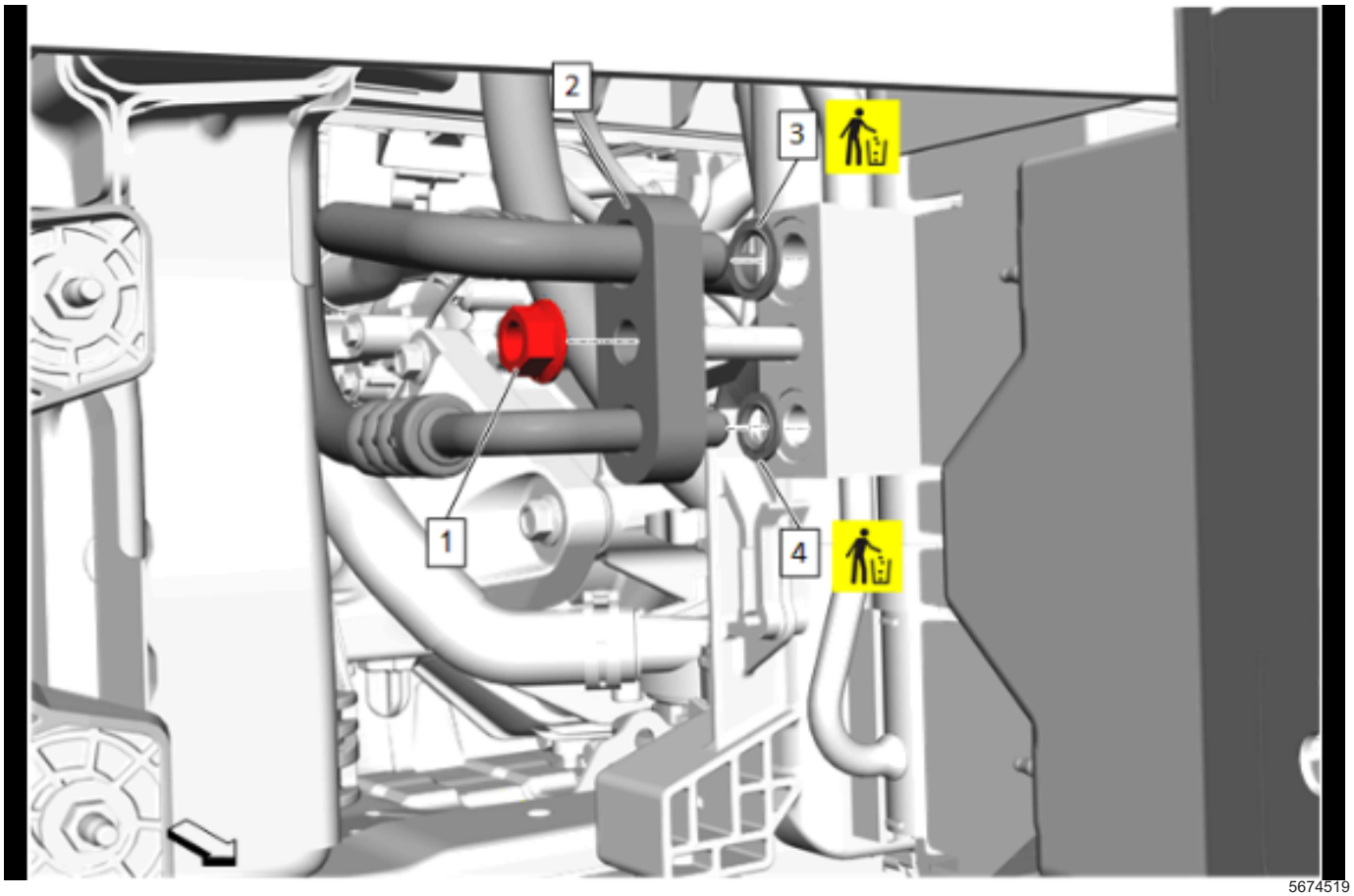

5674519

8. Air Conditioning Condenser Hose Seal - Small (4) » Install NEW
9. Air Conditioning Condenser Hose Seal - Large (3) » Install NEW
10. Air Conditioning Condenser Hose (2) @ Air Conditioning Condenser » Install
11. Air Conditioning Condenser Hose Nut (1) » Install and tighten — *Fastener Specifications on page 5-3*

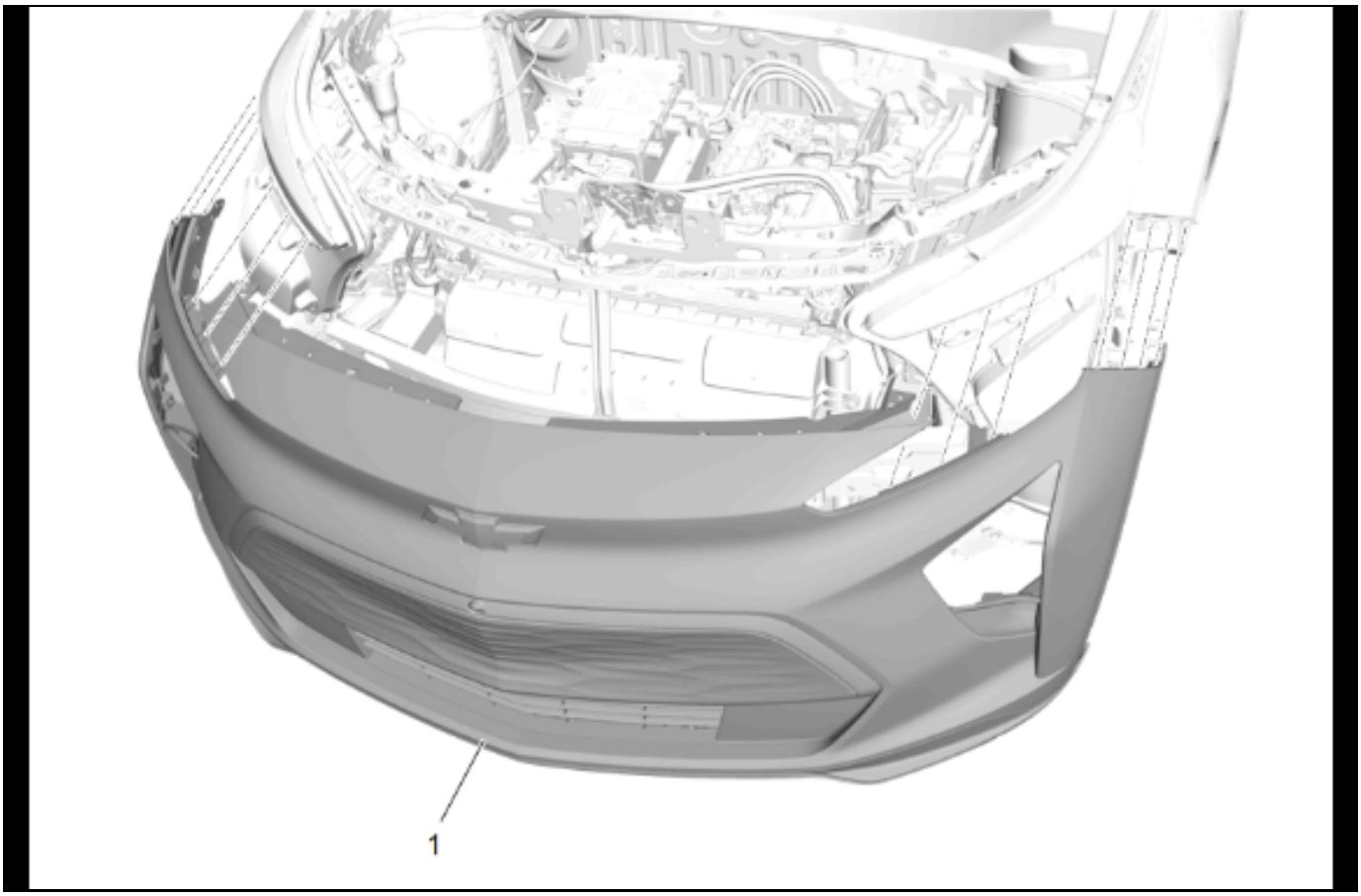

5662711

12. Front Bumper Fascia (1) » Install — Front Bumper Fascia Removal and Installation

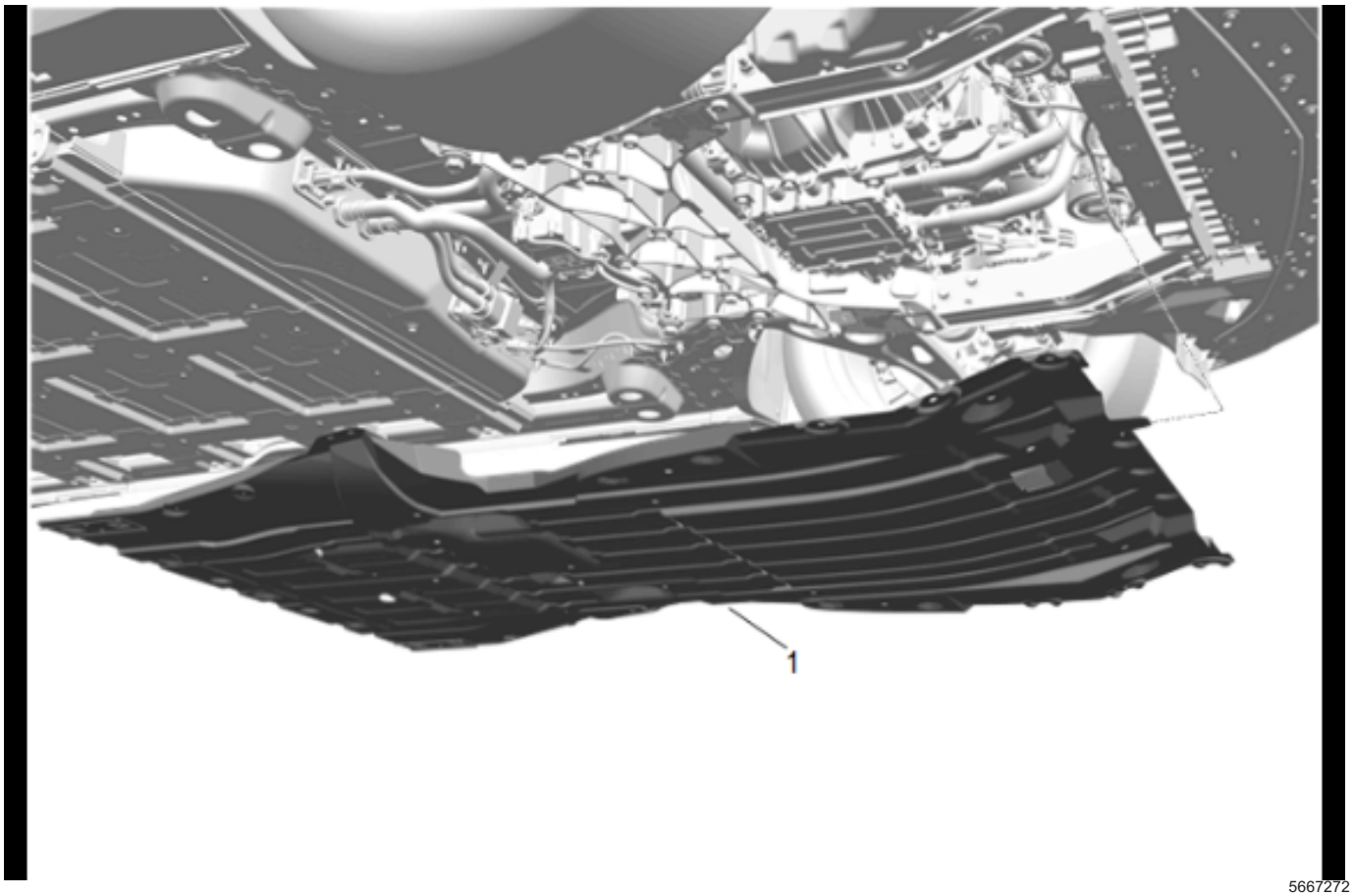

5667272

13. Front Compartment Air Deflector (1) » Install

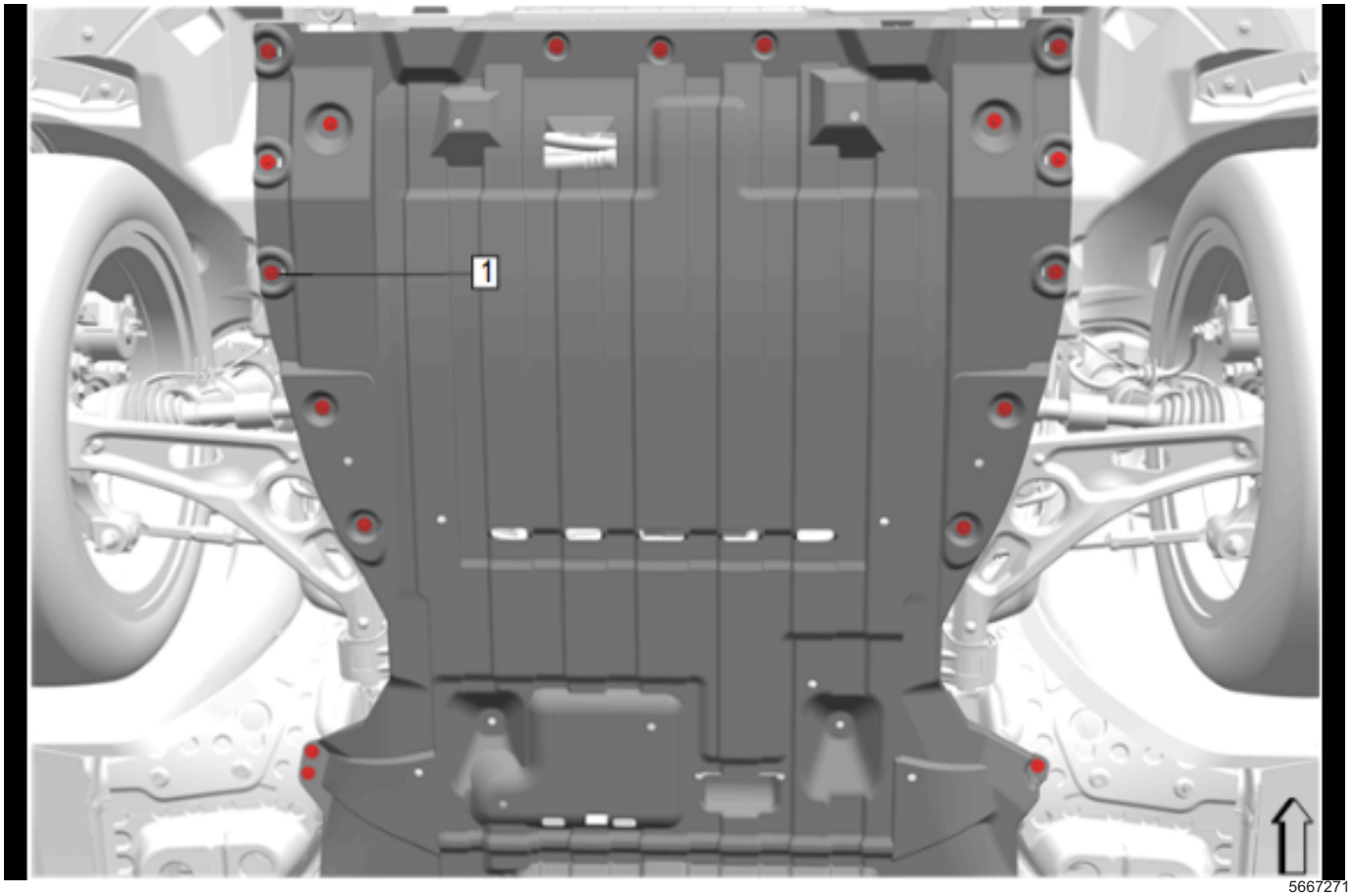

5667271

14. Front Compartment Air Deflector Bolt (1) » Install and tighten [18x] — Fastener Specifications

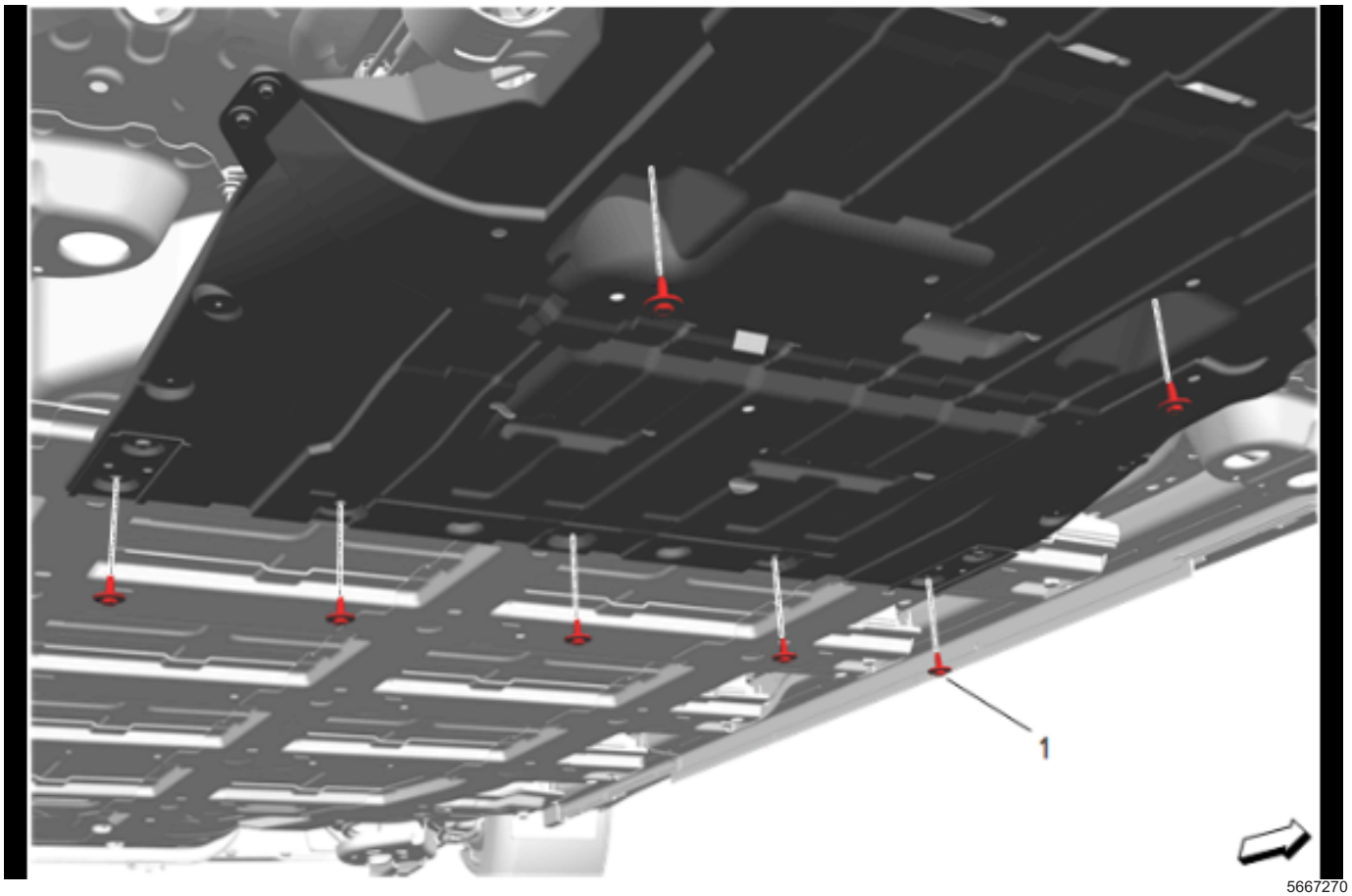

15. Front Compartment Air Deflector Bolt (1) » Install and tighten [7x] — Fastener Specifications

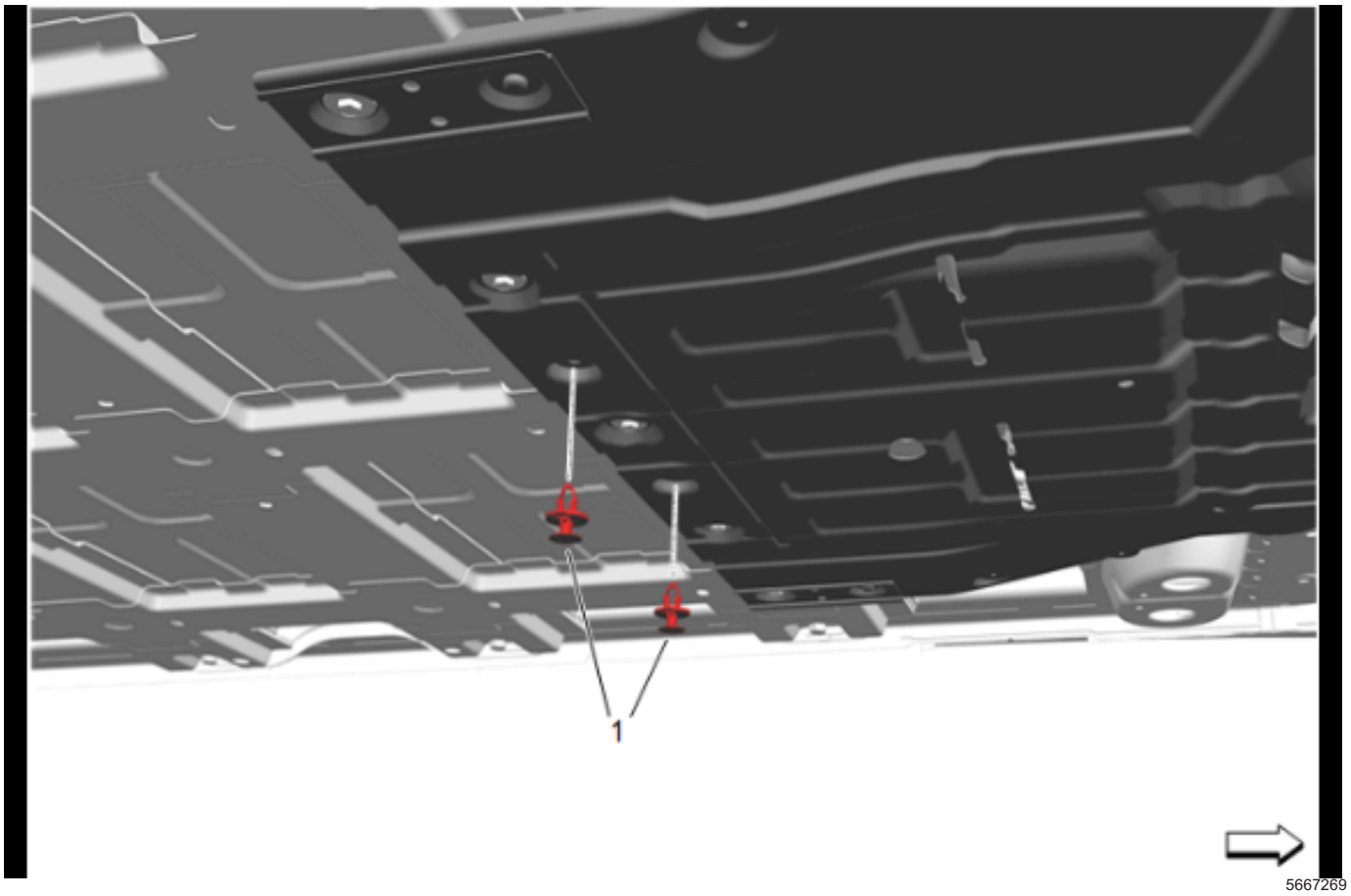

16. Front Compartment Air Deflector Retainer (1) »
    Install [2x]
17. Lower the vehicle.

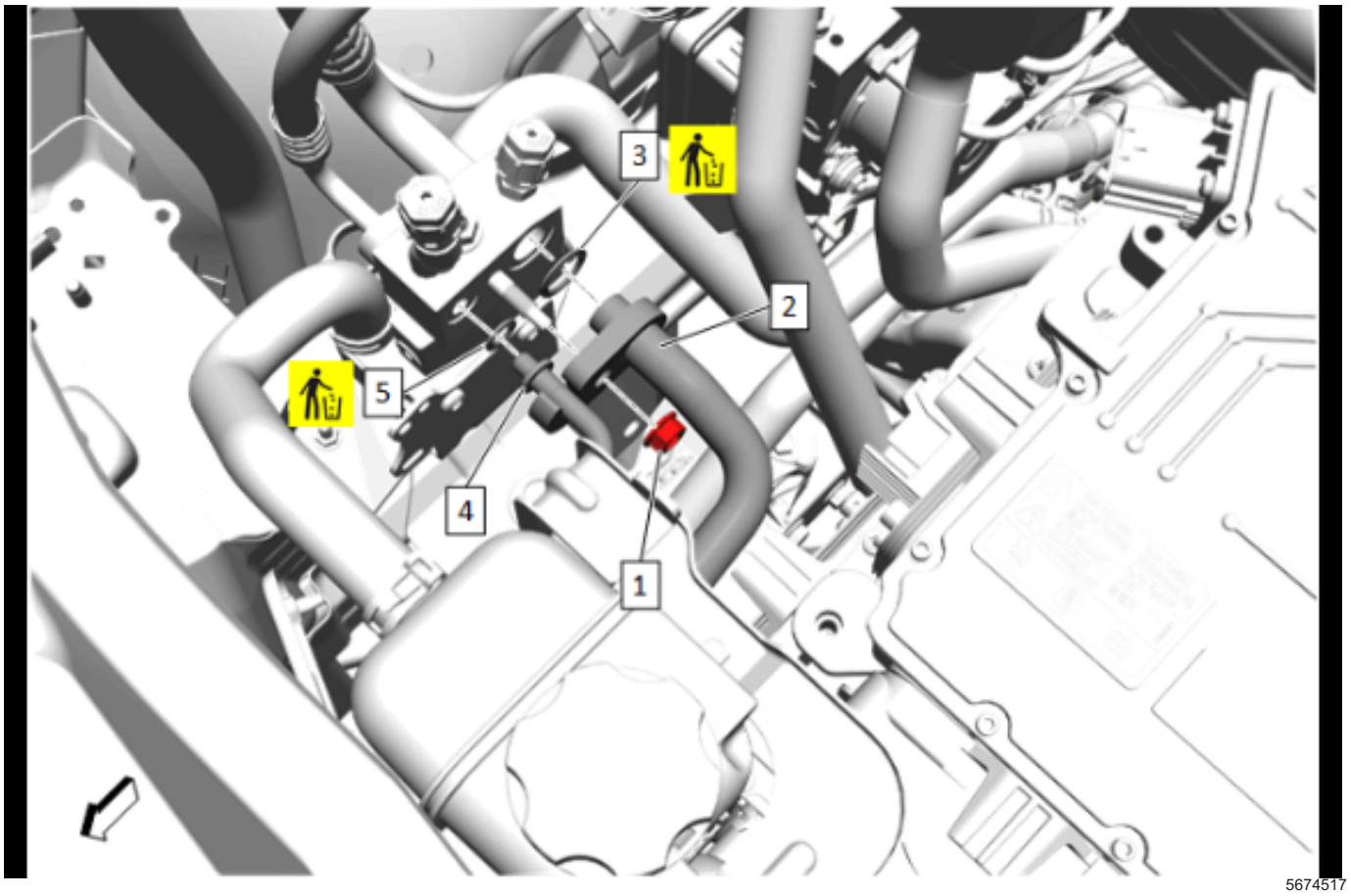

18. Air Conditioning Condenser Hose Seal - Small (5) » Install NEW
19. Air Conditioning Condenser Hose (4) @ Air Conditioning Evaporator Hose » Install
20. Air Conditioning Compressor Hose Seal - Large (3) » Install NEW
21. Air Conditioning Compressor Hose (2) @ Air Conditioning Evaporator Hose » Install
22. Air Conditioning Compressor Hose Nut (1) » Install and tighten — *Fastener Specifications on page 5-3*
23. Recharge the refrigerant. *Refrigerant Recovery and Recharging on page 5-36*
24. Connect the battery negative cable.

Air Conditioning Evaporator Hose Replacement

Single Use Fasteners and Components

- Air Conditioning Compressor Hose Seal - Large
- Air Conditioning Condenser Hose Seal - Small
- Air Conditioning Evaporator Hose Seal - Large [2x]
- Air Conditioning Evaporator Hose Seal - Small [2x]

Removal Procedure

Danger: Before conducting any repair to this high voltage cooling system, it is necessary to determine/verify whether no high-voltage system faults exist. If high-voltage faults exist, follow published DTC diagnostics/repair procedures prior to performing any cooling system repairs. Failure to correct High Voltage Faults before working on the high voltage cooling system could result in personal injury or death.

1. Turn vehicle power OFF and remove all keyless entry transmitters from the vehicle and secure in a place outside the vehicle.
2. Recover the refrigerant. *Refrigerant Recovery and Recharging on page 5-36*

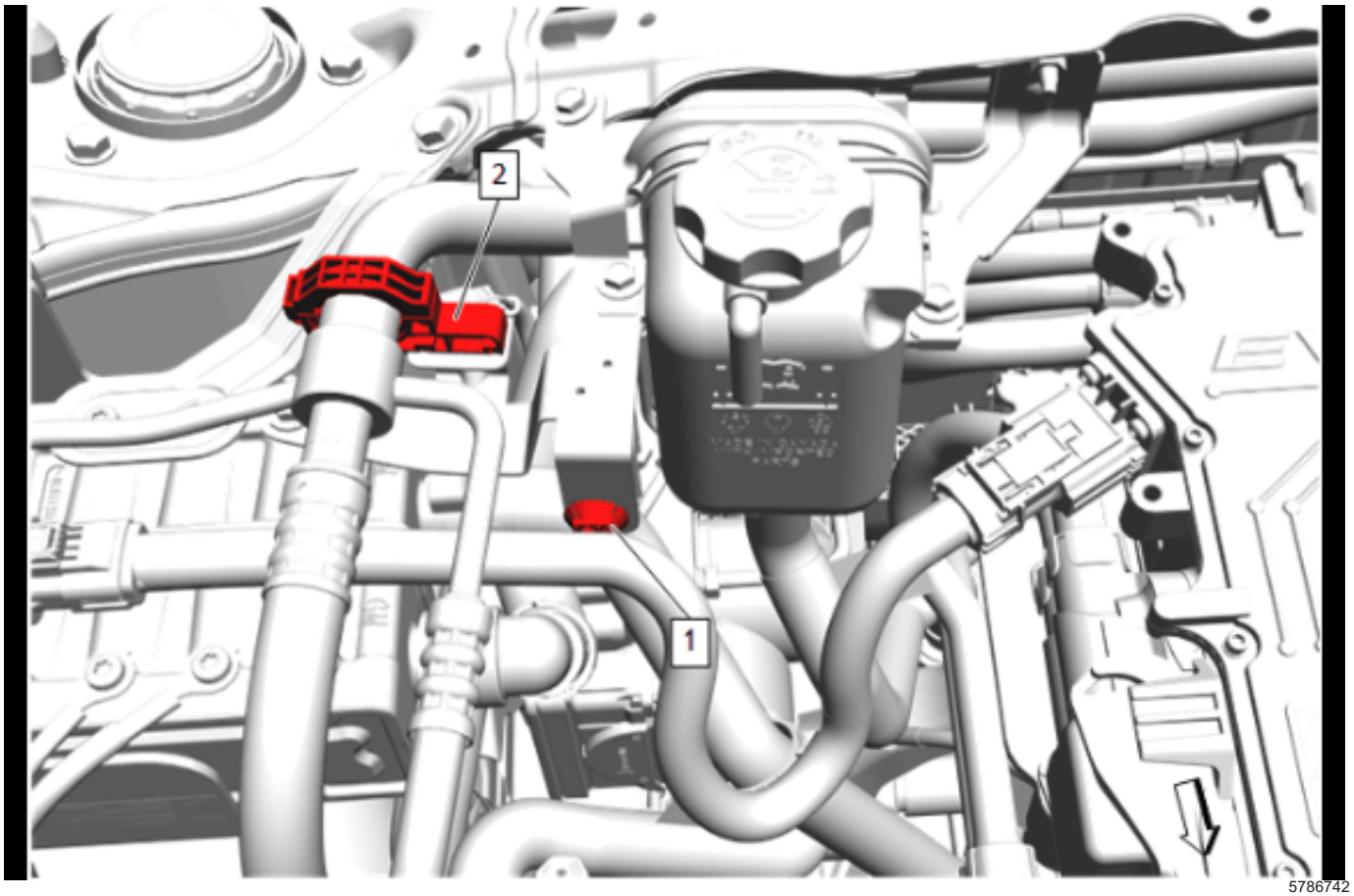

5786742

3. Retainer (1) » Remove
4. Air Conditioning Evaporator Hose Clip (2) » Remove

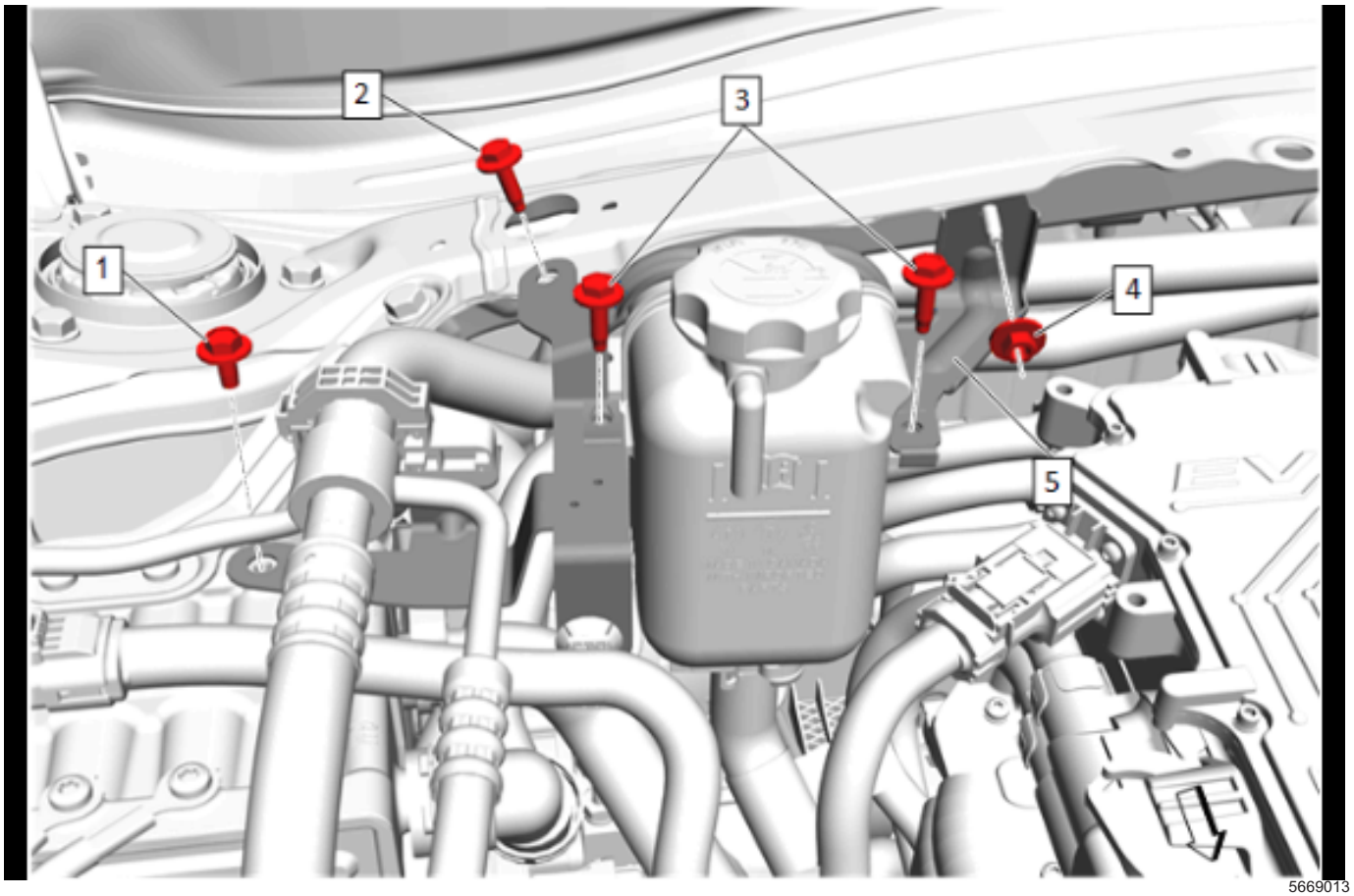

5669013

5. Heater Water Flow Control Valve Bolt (1) » Remove
6. Radiator Surge Tank Bracket Bolt (2) » Remove
7. Radiator Surge Tank Bolt (3) » Remove [2x]
8. Radiator Surge Tank Bracket Nut (4) » Remove
9. Radiator Surge Tank Bracket (5) » Remove

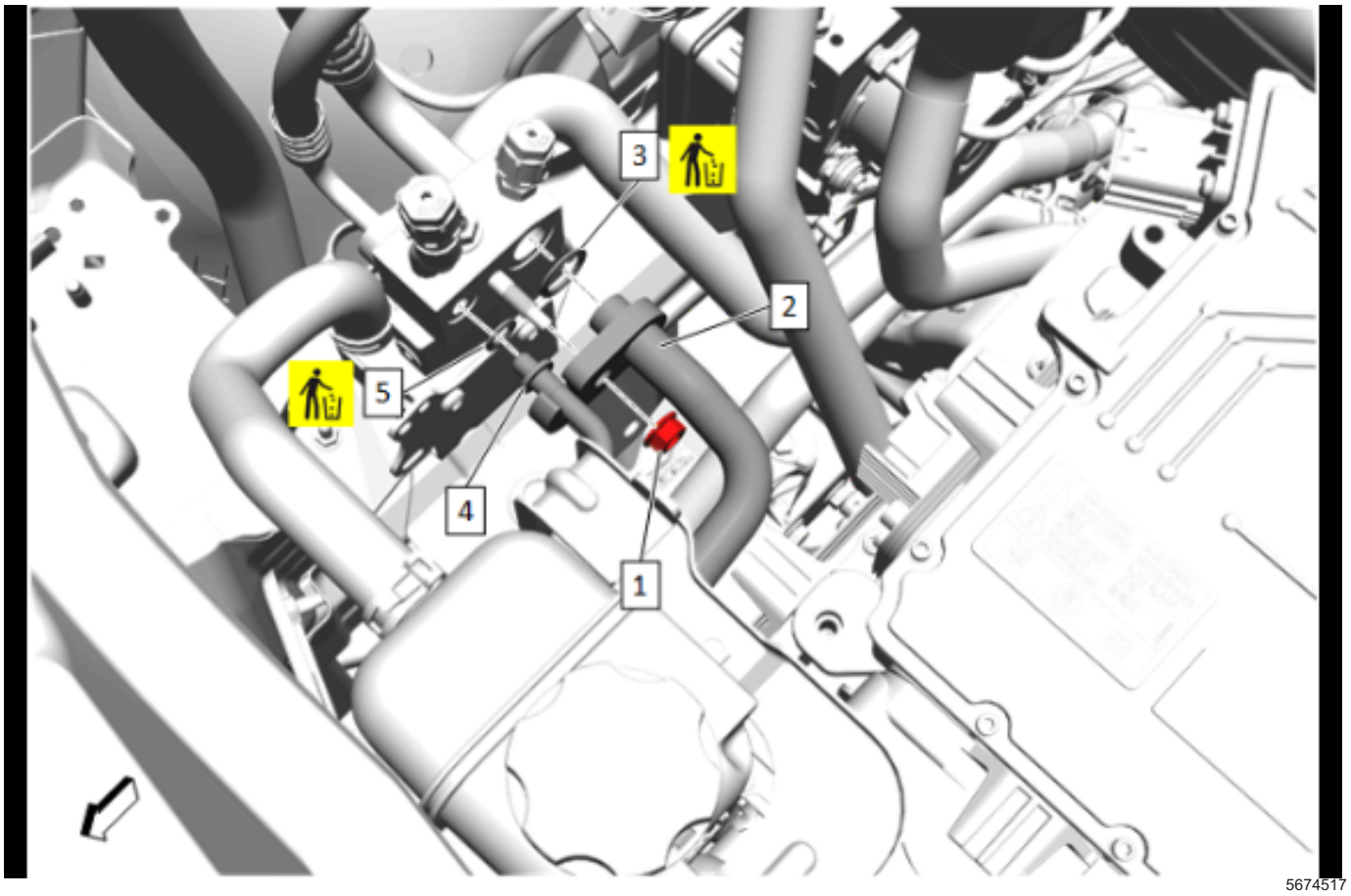

10. Air Conditioning Compressor Hose Nut (1) » Remove
11. Air Conditioning Compressor Hose (2) @ Air Conditioning Evaporator Hose » Remove
12. Air Conditioning Compressor Hose Seal - Large (3) » Remove and DISCARD
13. Air Conditioning Condenser Hose (4) @ Air Conditioning Evaporator Hose » Remove
14. Air Conditioning Condenser Hose Seal - Small (5) » Remove and DISCARD

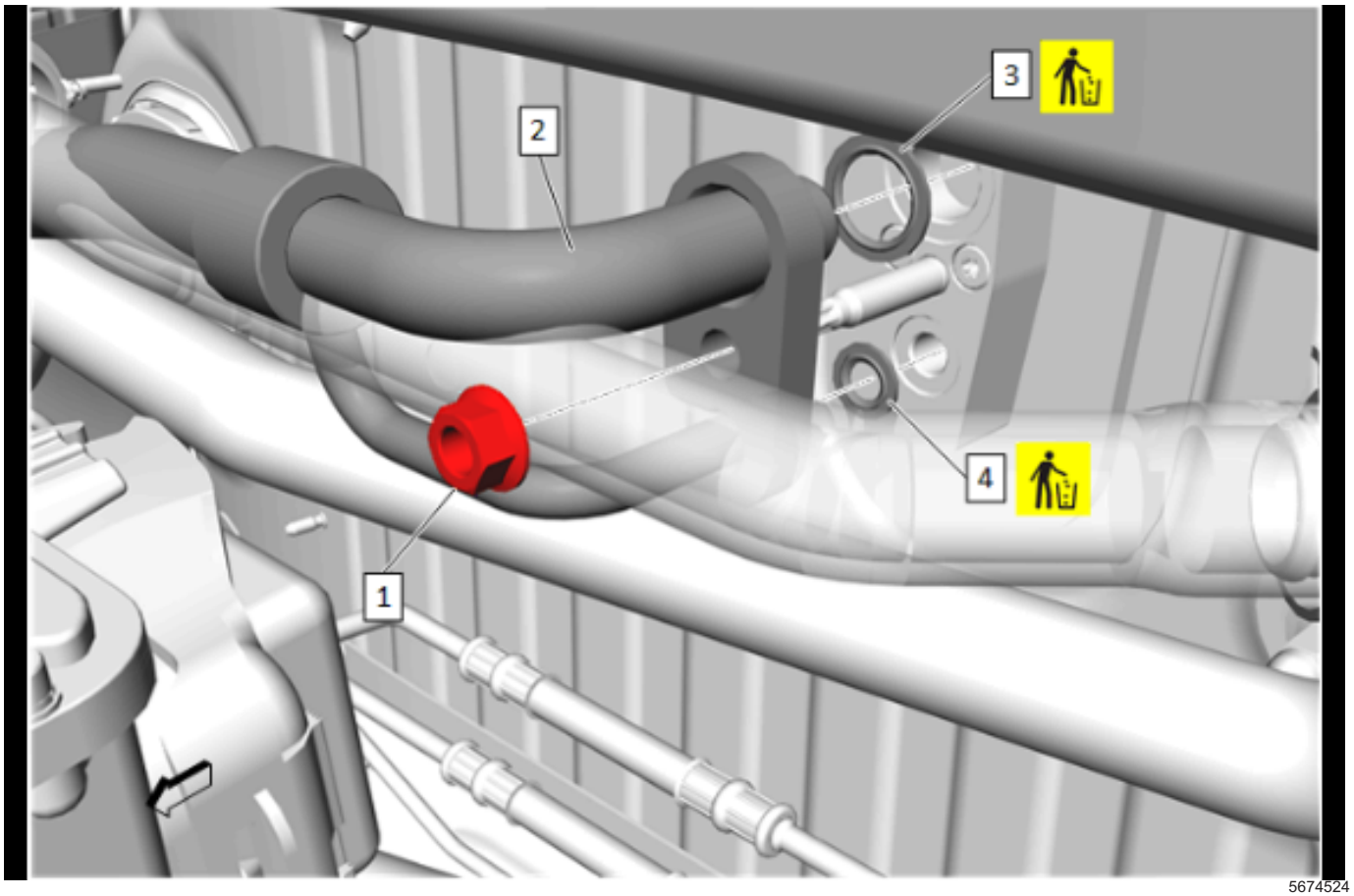

5674524

15. Air Conditioning Evaporator Hose Nut (1) » Remove
16. Air Conditioning Evaporator Hose (2) @ Air Conditioning Evaporator Thermal Expansion Valve » Remove
17. Air Conditioning Evaporator Hose Seal - Large (3) » Remove and DISCARD
18. Air Conditioning Evaporator Hose Seal - Small (4) » Remove and DISCARD

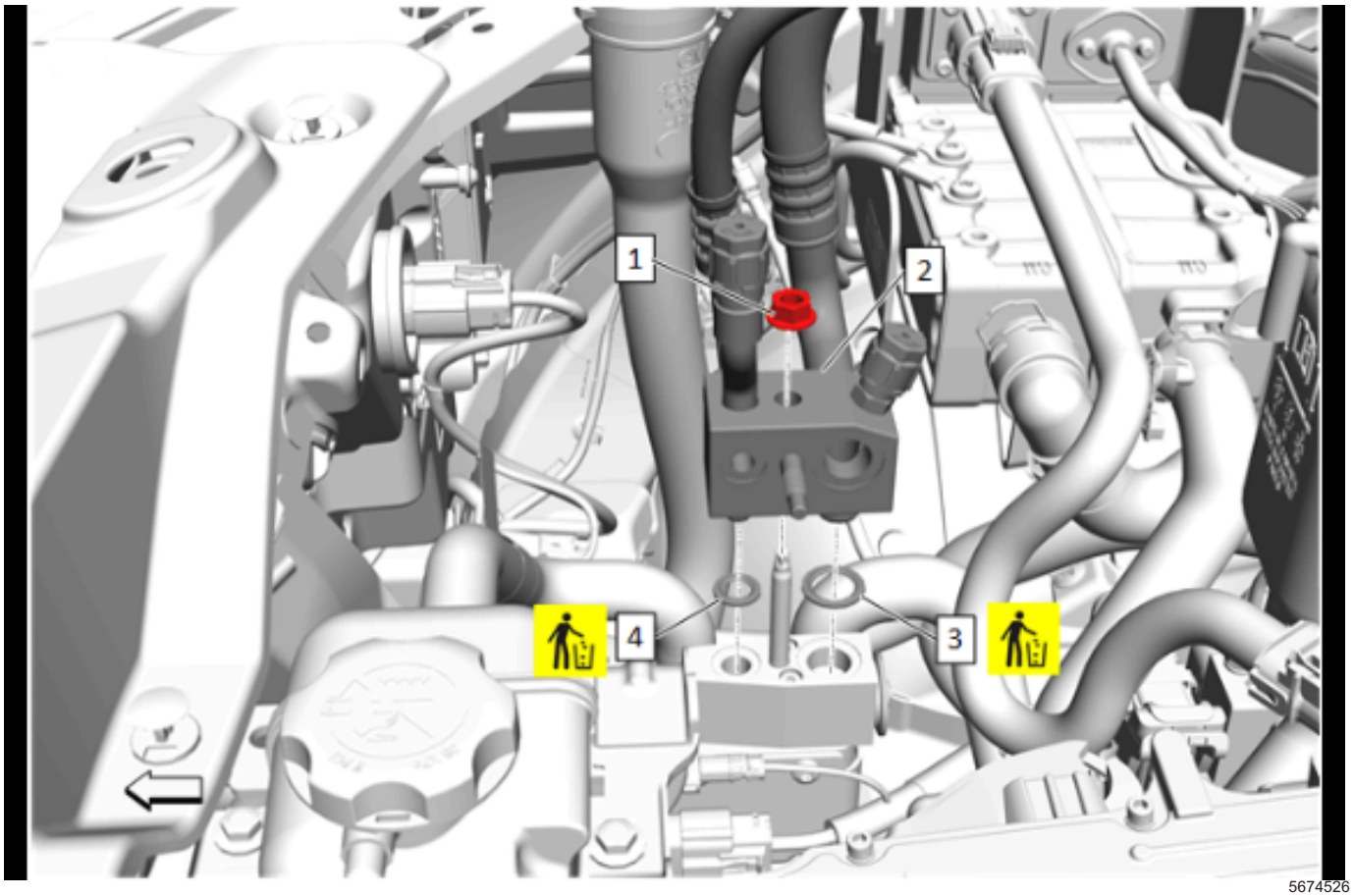

5674526

19. Air Conditioning Evaporator Hose Nut (1) » Remove
20. Air Conditioning Evaporator Hose (2) @ Air Conditioning Evaporator Thermal Expansion Valve » Remove
21. Air Conditioning Evaporator Hose Seal - Large (3) » Remove and DISCARD
22. Air Conditioning Evaporator Hose Seal - Small (4) » Remove and DISCARD
23. Air Conditioning Evaporator Hose (2) @ Vehicle » Remove

Installation Procedure

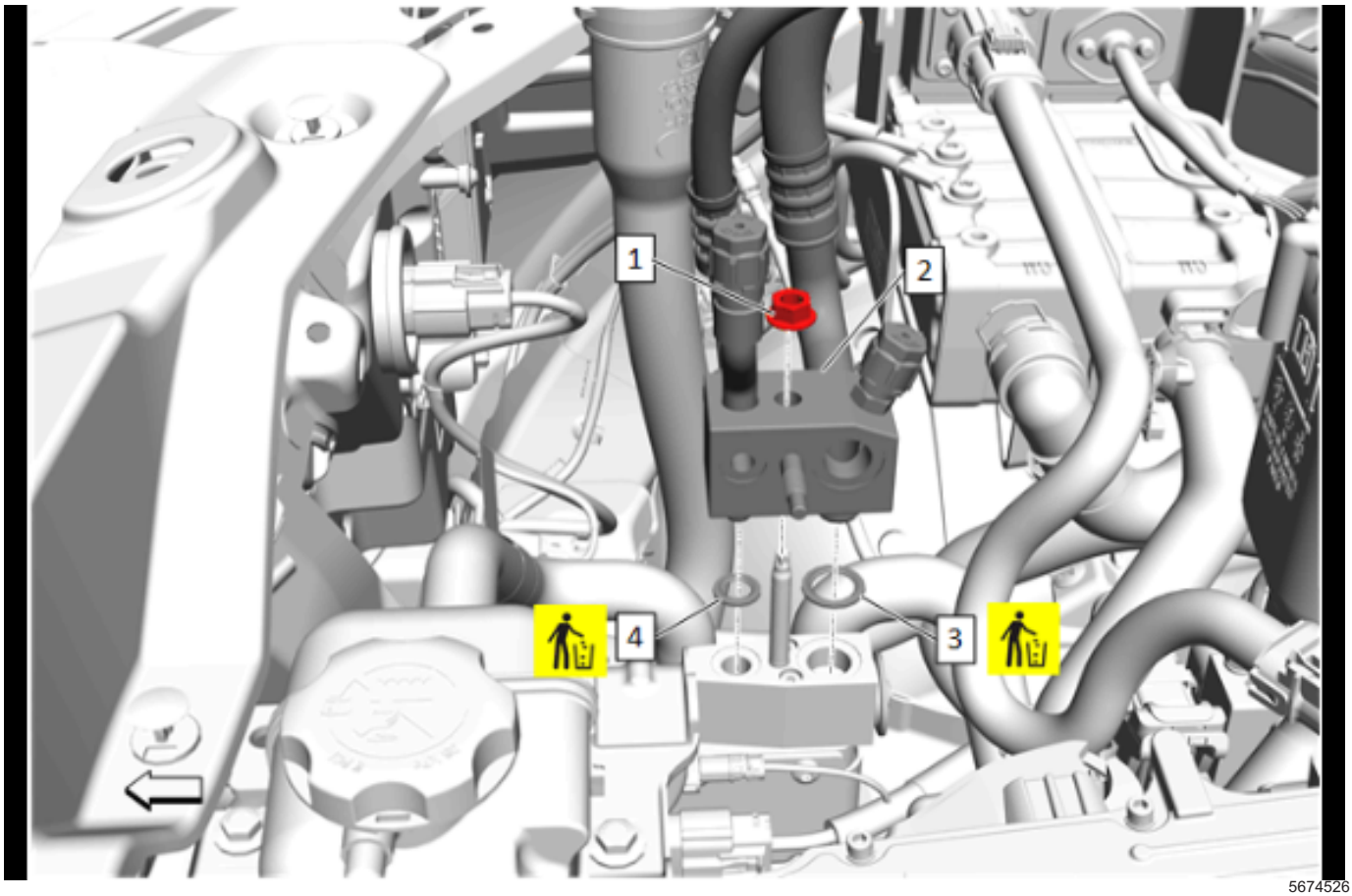

5674526

1. Air Conditioning Evaporator Hose (2) @ Vehicle
   » Install
2. Air Conditioning Evaporator Hose Seal - Small (4)
   » Install NEW
3. Air Conditioning Evaporator Hose Seal - Large (3)
   » Install NEW
4. Air Conditioning Evaporator Hose (2) @ Air Conditioning Evaporator Thermal Expansion Valve
   » Install
5. Air Conditioning Evaporator Hose Nut (1) » Install and tighten — *Fastener Specifications on page 5-3*

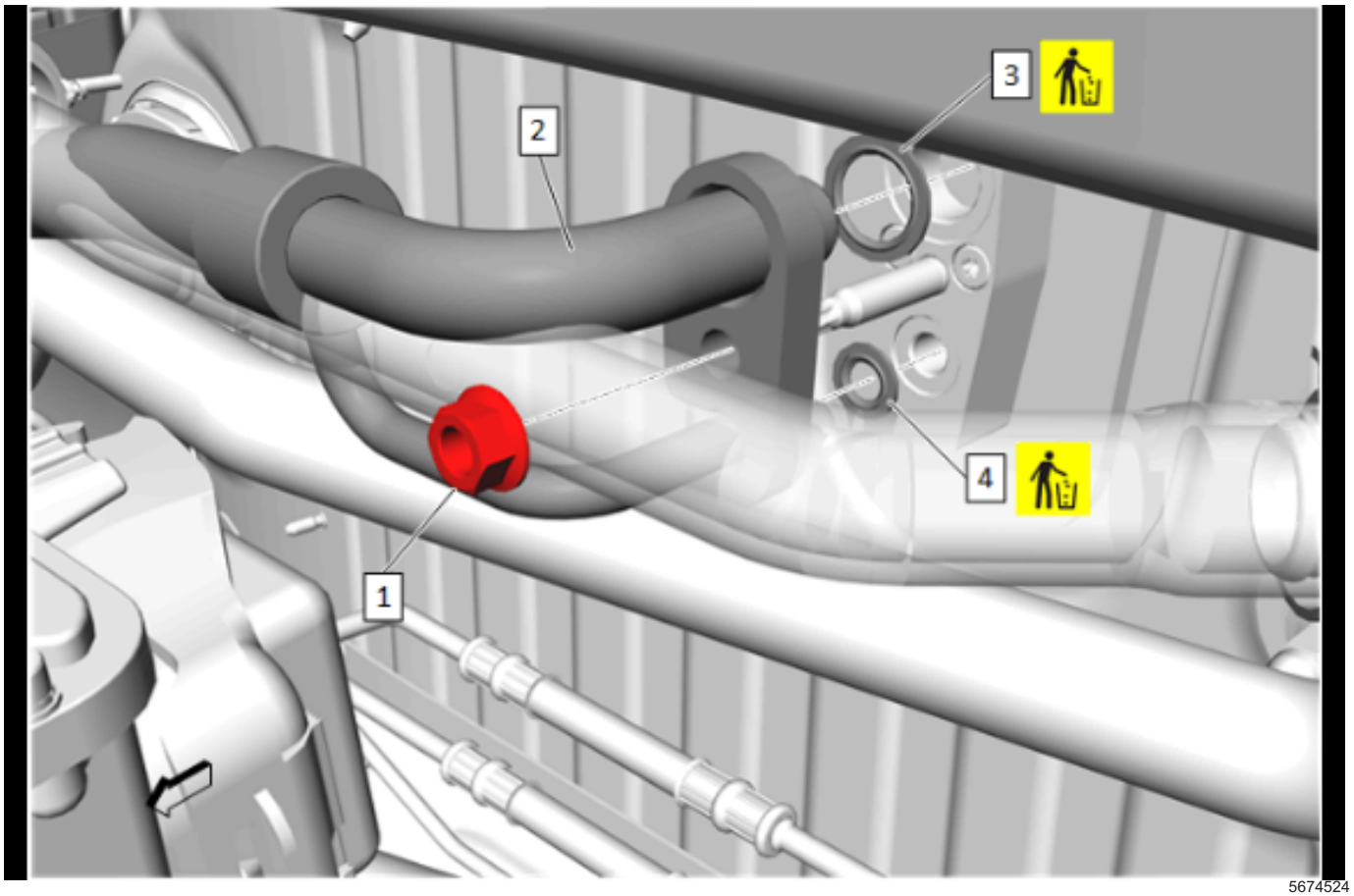

5674524

6. Air Conditioning Evaporator Hose Seal - Small (4)
   » Install NEW
7. Air Conditioning Evaporator Hose Seal - Large (3)
   » Install NEW
8. Air Conditioning Evaporator Hose (2) @ Air Conditioning Evaporator Thermal Expansion Valve
   » Install
9. Air Conditioning Evaporator Hose Nut (1) » Install and tighten — *Fastener Specifications on page 5-3*

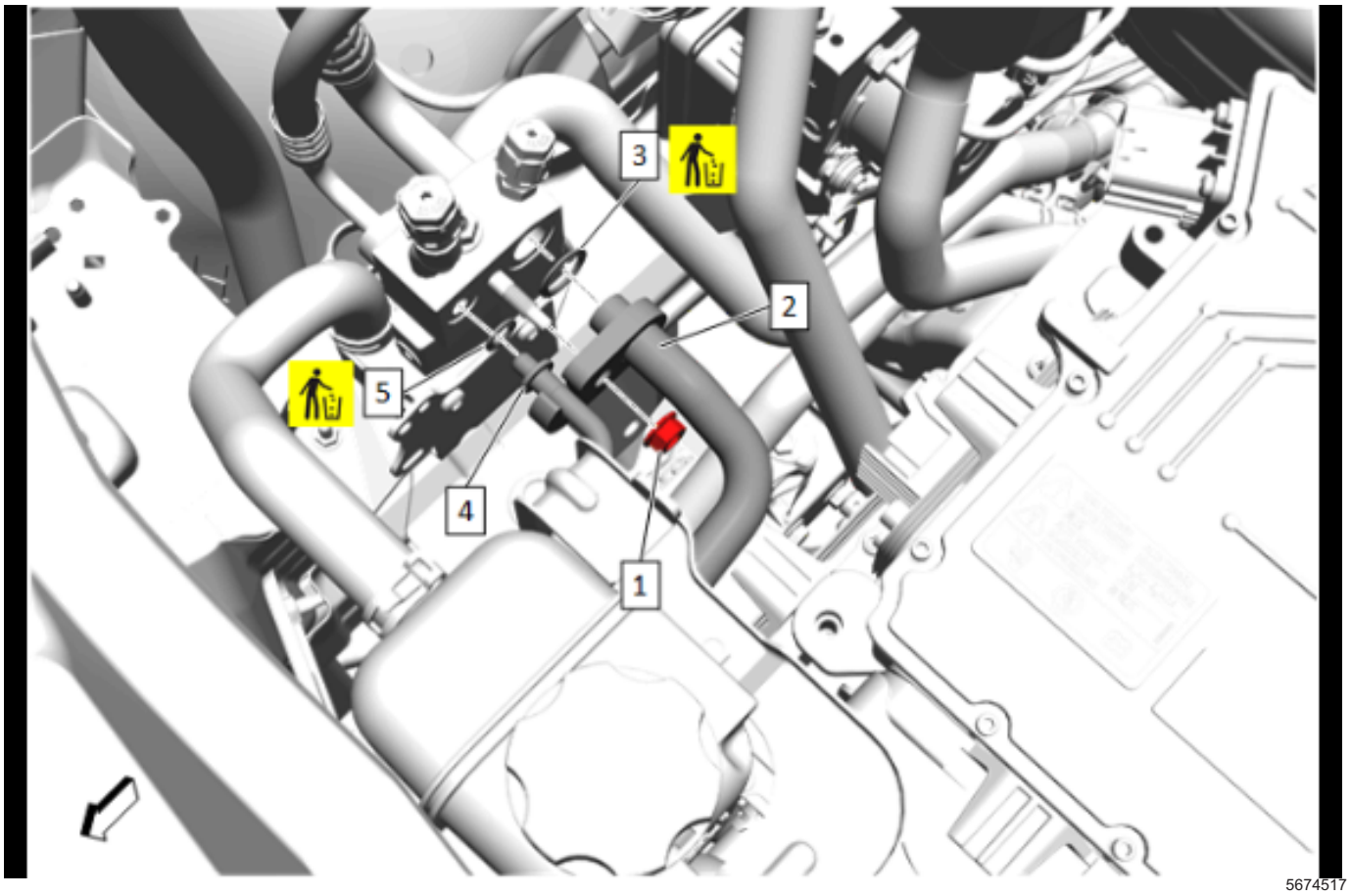

10. Air Conditioning Condenser Hose Seal - Small (5) » Install NEW
11. Air Conditioning Condenser Hose (4) @ Air Conditioning Evaporator Hose » Install
12. Air Conditioning Compressor Hose Seal - Large (3) » Install NEW
13. Air Conditioning Compressor Hose (2) @ Air Conditioning Evaporator Hose » Install
14. Air Conditioning Compressor Hose Nut (1) » Install and tighten — *Fastener Specifications on page 5-3*

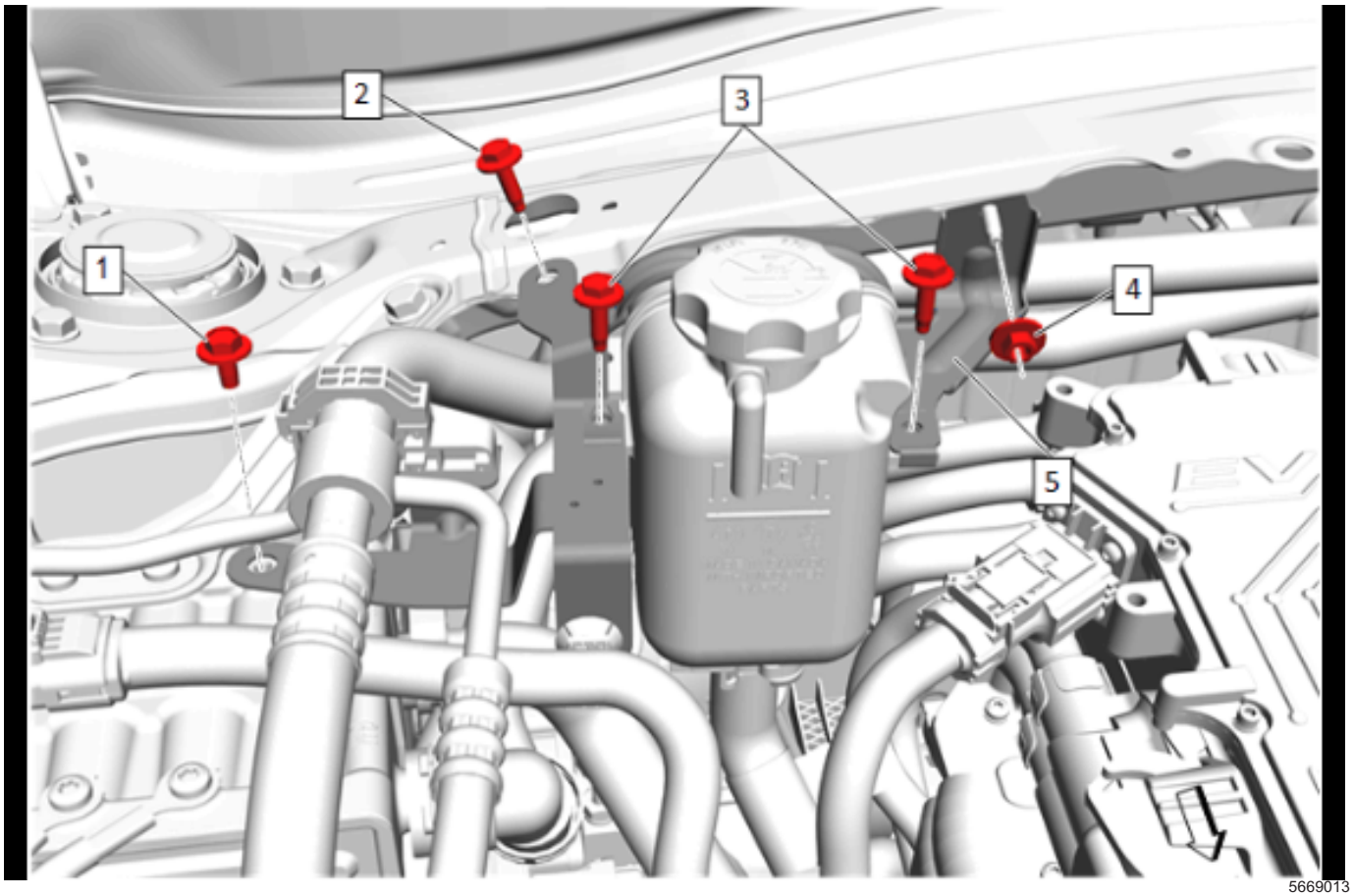

5669013

15. Radiator Surge Tank Bracket (5) » Install
16. Radiator Surge Tank Bracket Nut (4) » Install and tighten — Fastener Specifications
17. Radiator Surge Tank Bolt (3) » Install and tighten [2x] — Fastener Specifications
18. Radiator Surge Tank Bracket Bolt (2) » Install and tighten — Fastener Specifications
19. Heater Water Flow Control Valve Bolt (1) » Install and tighten — Fastener Specifications

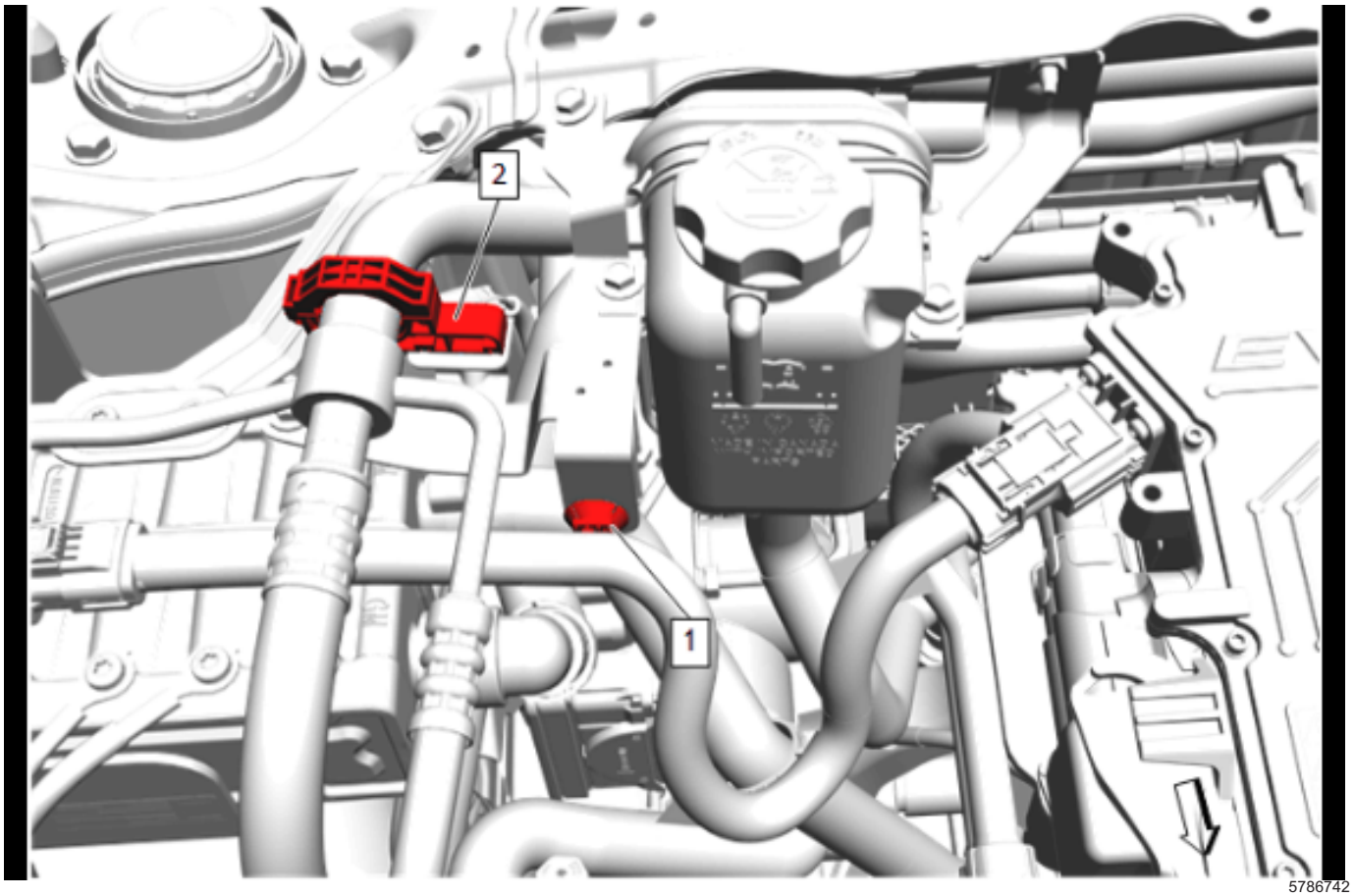

5786742

20. Air Conditioning Evaporator Hose Clip (2) » Install
21. Retainer (1) » Install
22. Recharge the refrigerant. *Refrigerant Recovery and Recharging on page 5-36*

Air Conditioning Receiver and Dehydrator Replacement

Single Use Fasteners and Components

- Air Conditioning Condenser Hose Seal - Large
- Air Conditioning Condenser Hose Seal - Small

Removal Procedure

1. Recover the refrigerant. *Refrigerant Recovery and Recharging on page 5-36*

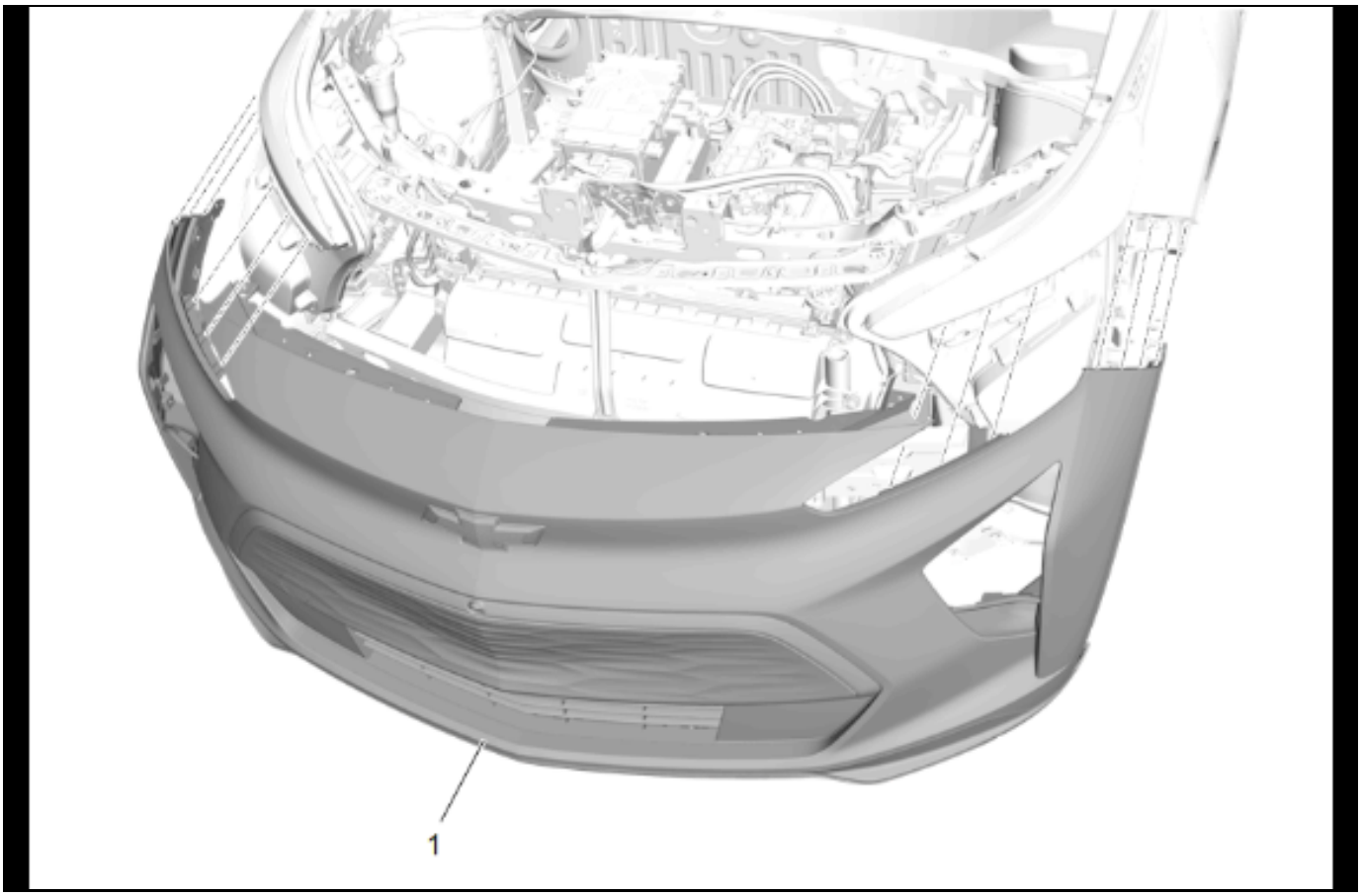

5662711

2. Front Bumper Fascia (1) » Remove — Front Bumper Fascia Removal and Installation

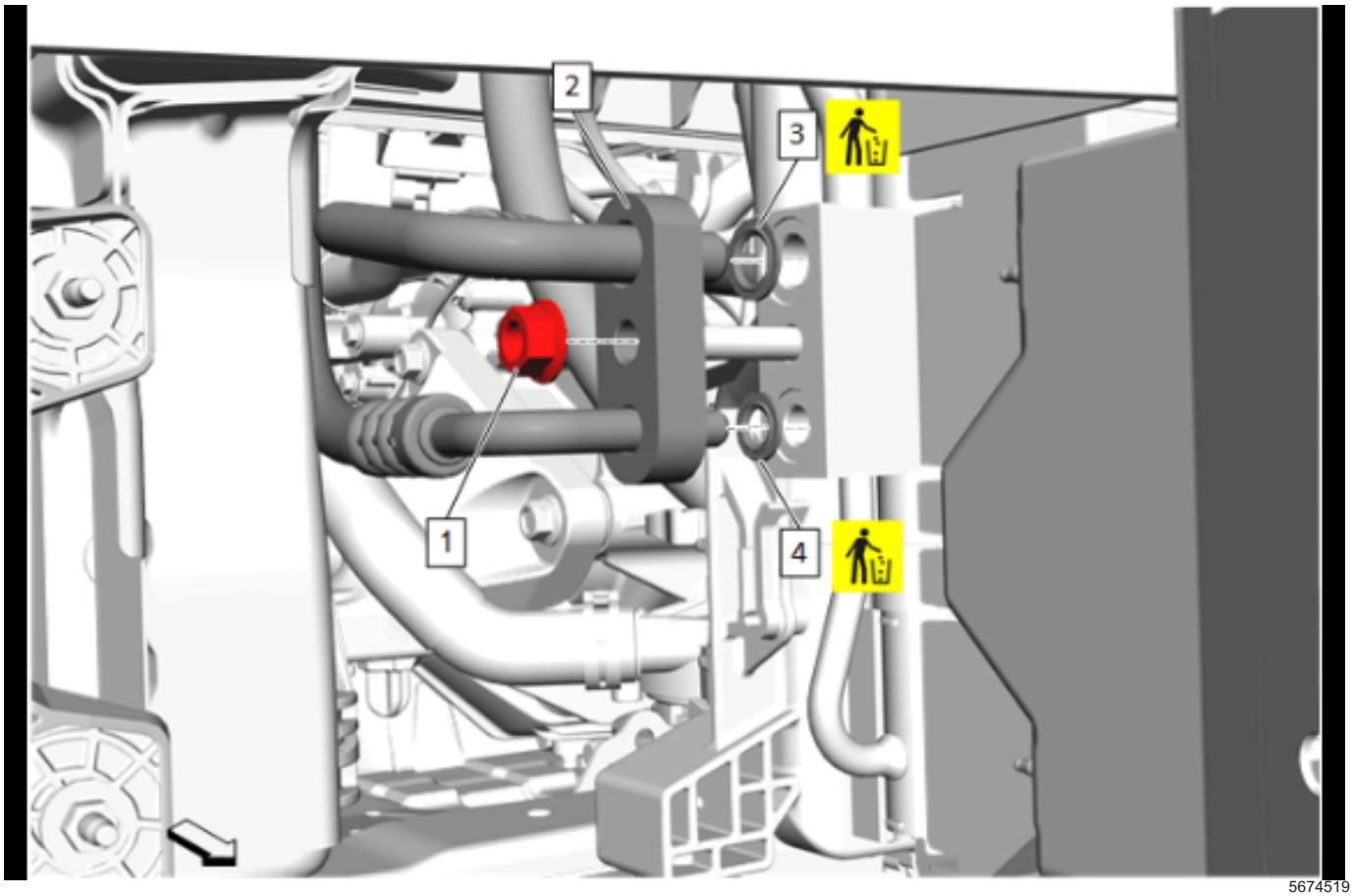

5674519

3. Air Conditioning Condenser Hose Nut (1) » Remove
4. Air Conditioning Condenser Hose (2) @ Air Conditioning Condenser » Remove
5. Air Conditioning Condenser Hose Seal - Large (3) » Remove and DISCARD
6. Air Conditioning Condenser Hose Seal - Small (4) » Remove and DISCARD

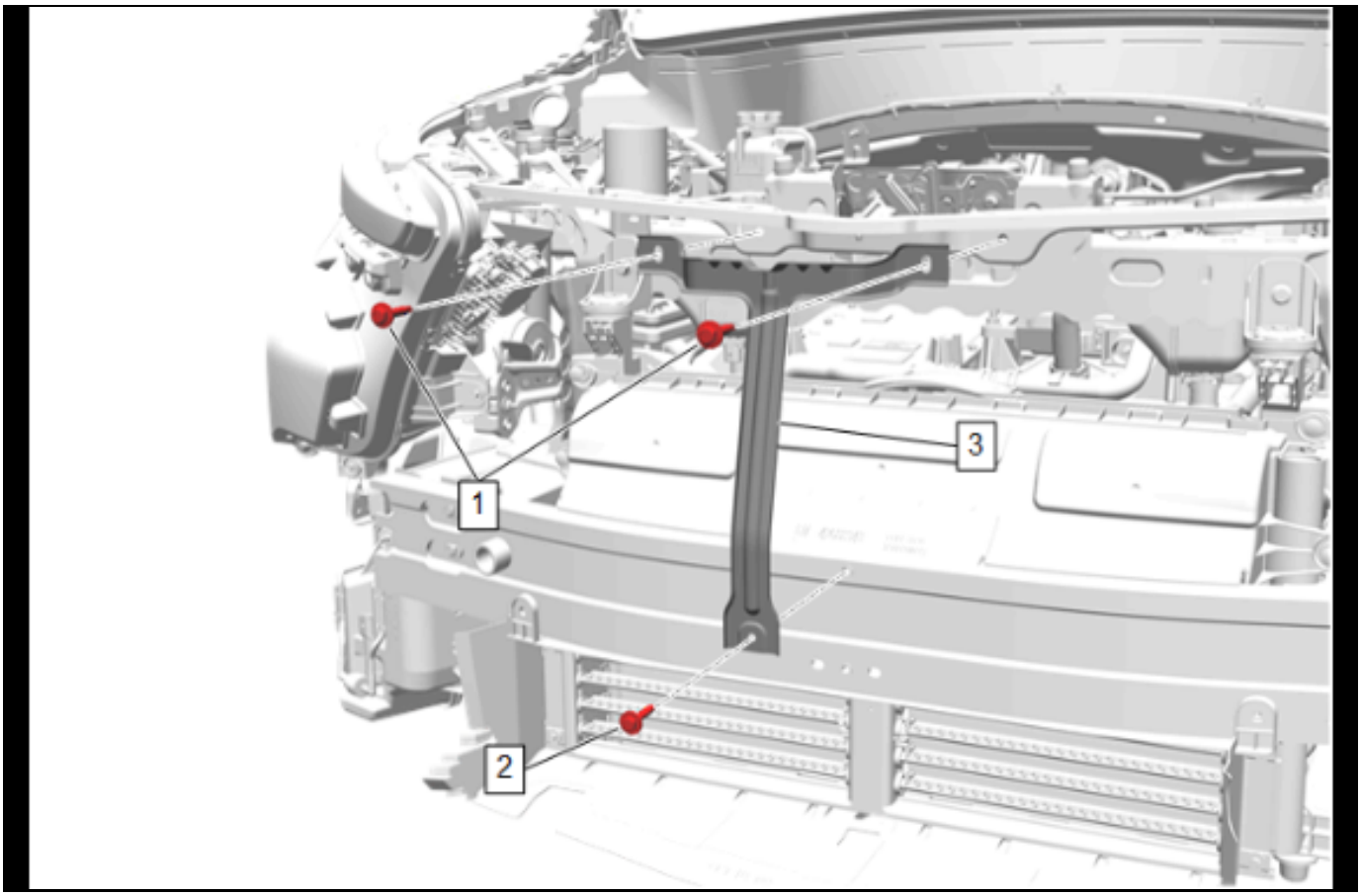

5675536

7. Front Bumper Fascia Center Support Bolt (1) » Remove [2x]
8. Front Bumper Fascia Support Brace Bolt (2) » Remove
9. Hood Front Bumper Bracket Support (3) » Remove

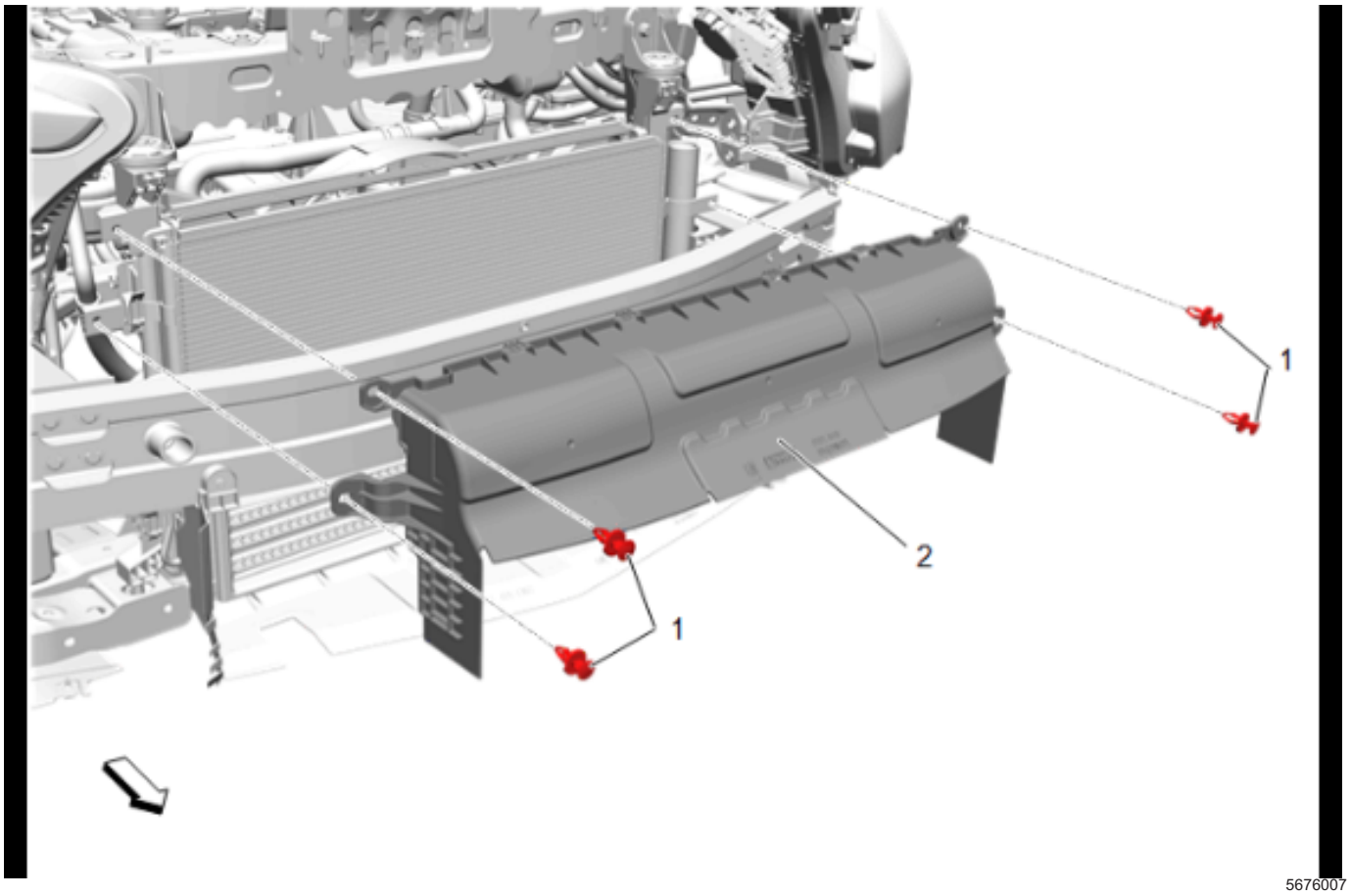

10. Radiator Air Upper Baffle Retainer (1) » Remove [4x]
11. Radiator Air Upper Baffle and Deflector (2) » Remove

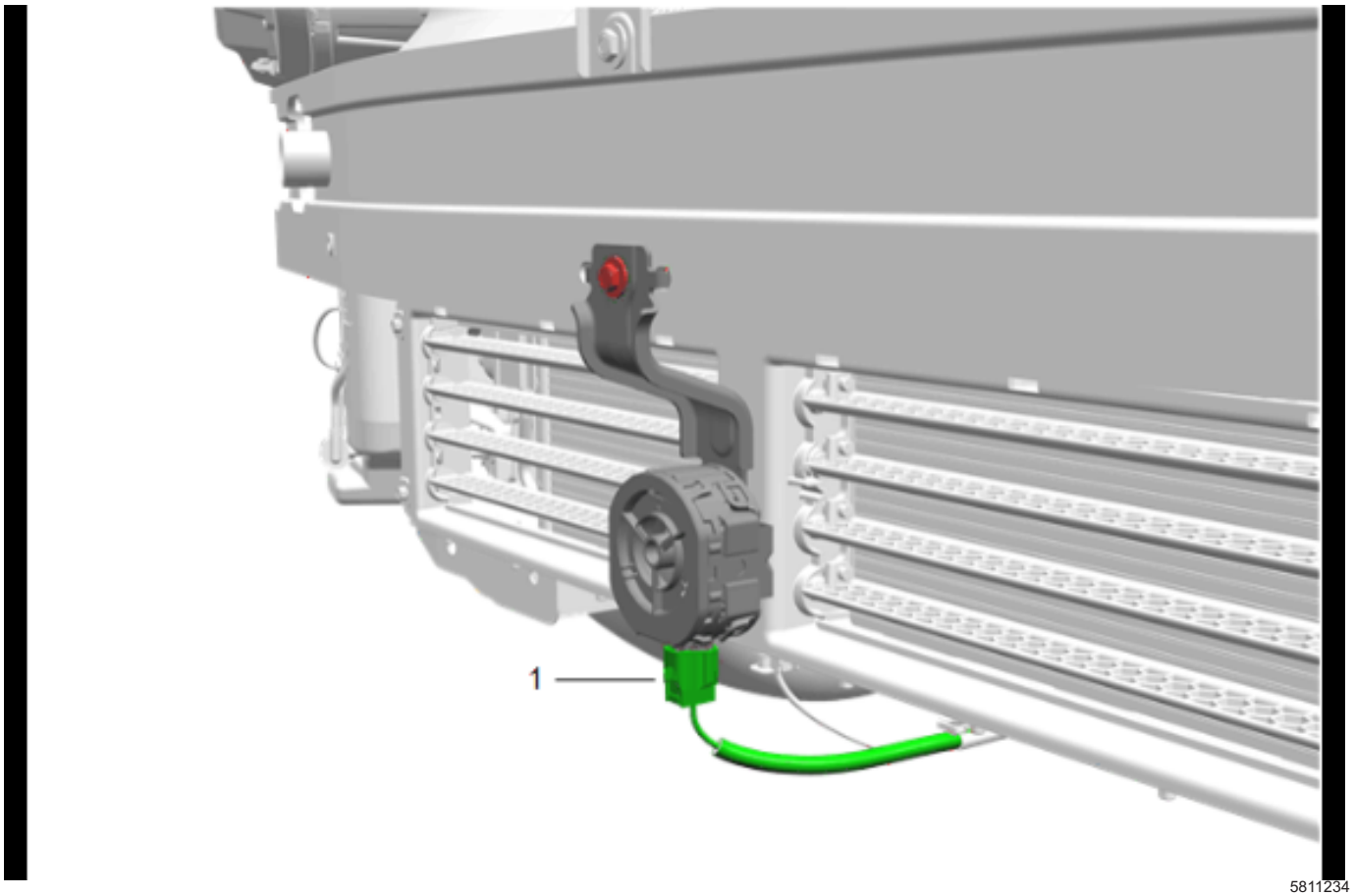

5811234

12. Electrical Connector (1) » Disconnect

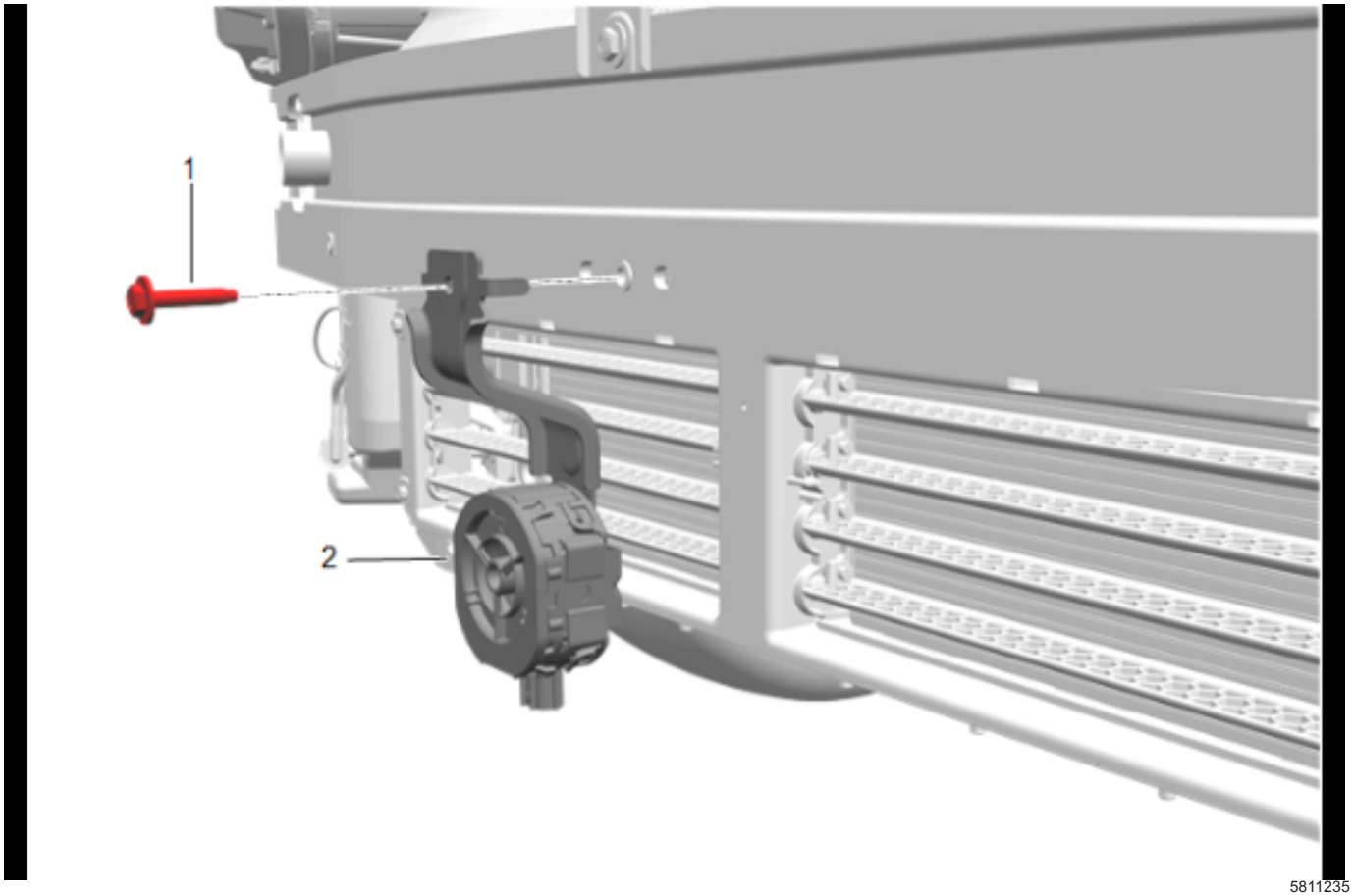

5811235

13. Pedestrian Sound Alert Speaker Bracket Bolt (1)
    » Remove

    Note: The pedestrian sound alert speaker and bracket are serviced as an assembly.

14. Pedestrian Sound Alert Speaker (2) » Remove

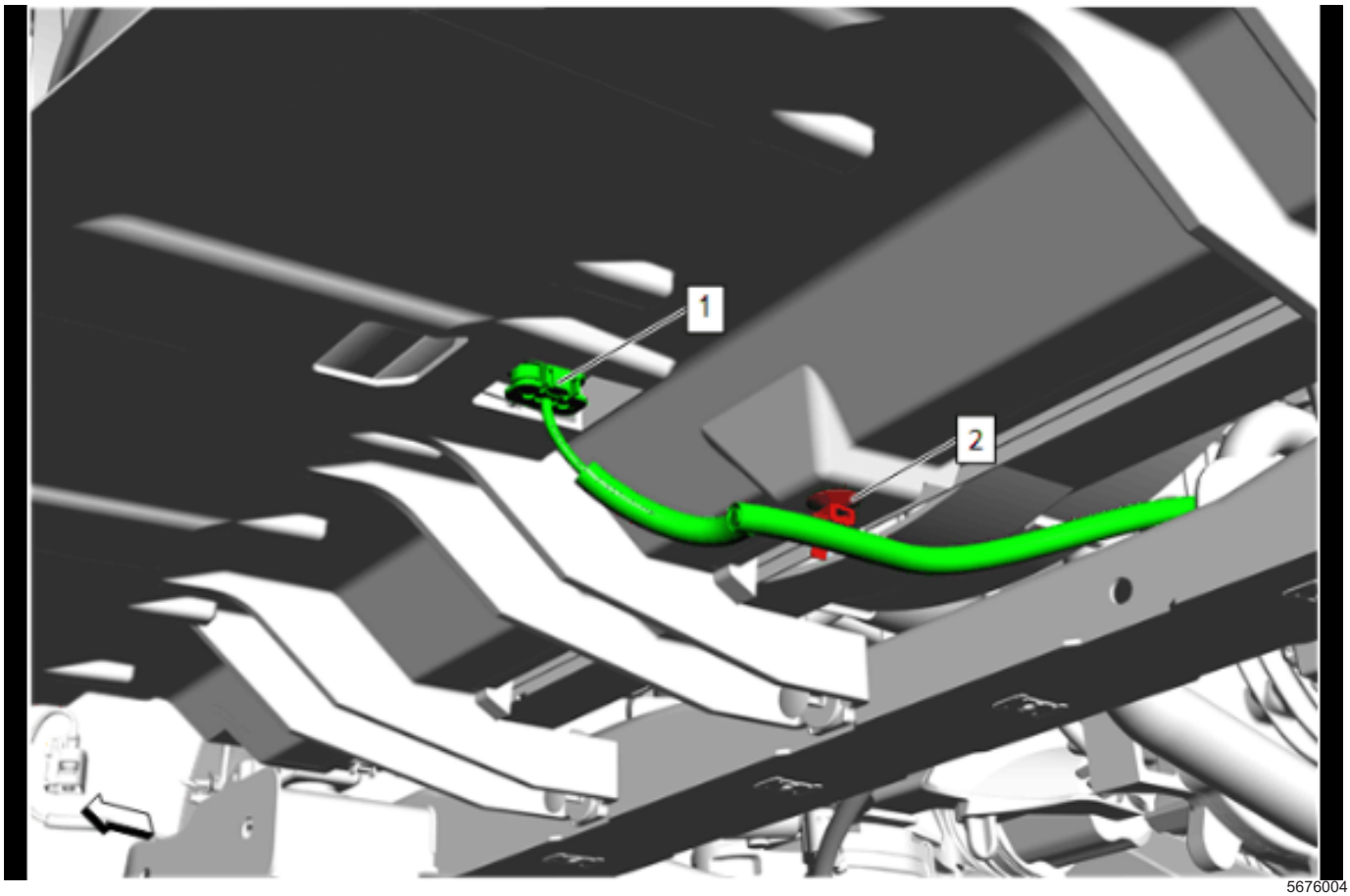

5676004

15. Electrical Connector (1) » Disconnect
16. Retainer (2) » Remove

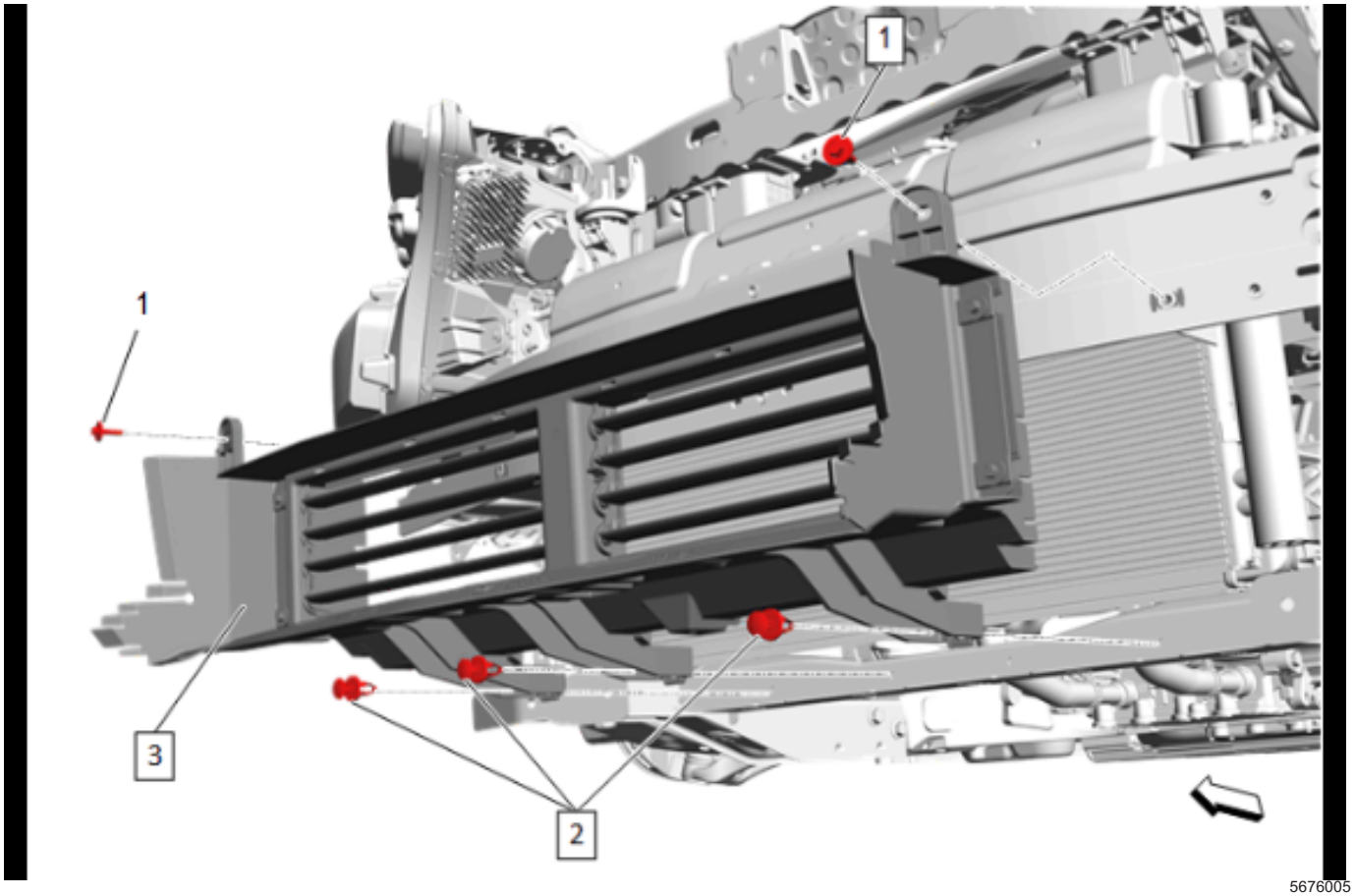

5676005

17. Radiator Air Lower Baffle Bolt (1) » Remove [2x]
18. Radiator Air Lower Baffle Retainer (2) » Remove [3x]
19. Remove the radiator air lower baffle and deflector (3) with the front bumper shutter

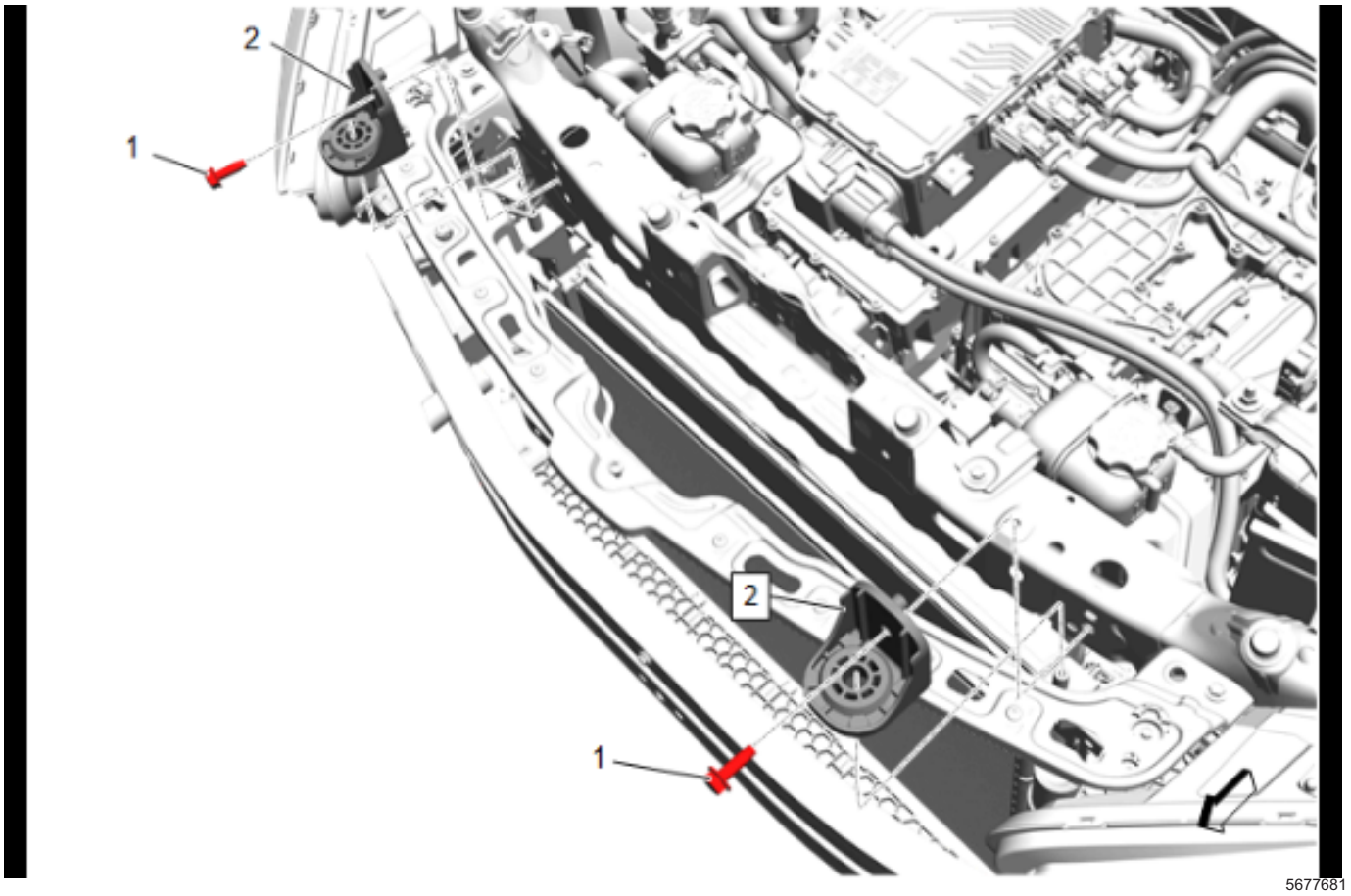

20. Radiator Upper Bracket Bolt (1) » Remove [2x]
21. Radiator Upper Bracket (2) » Remove [2x]

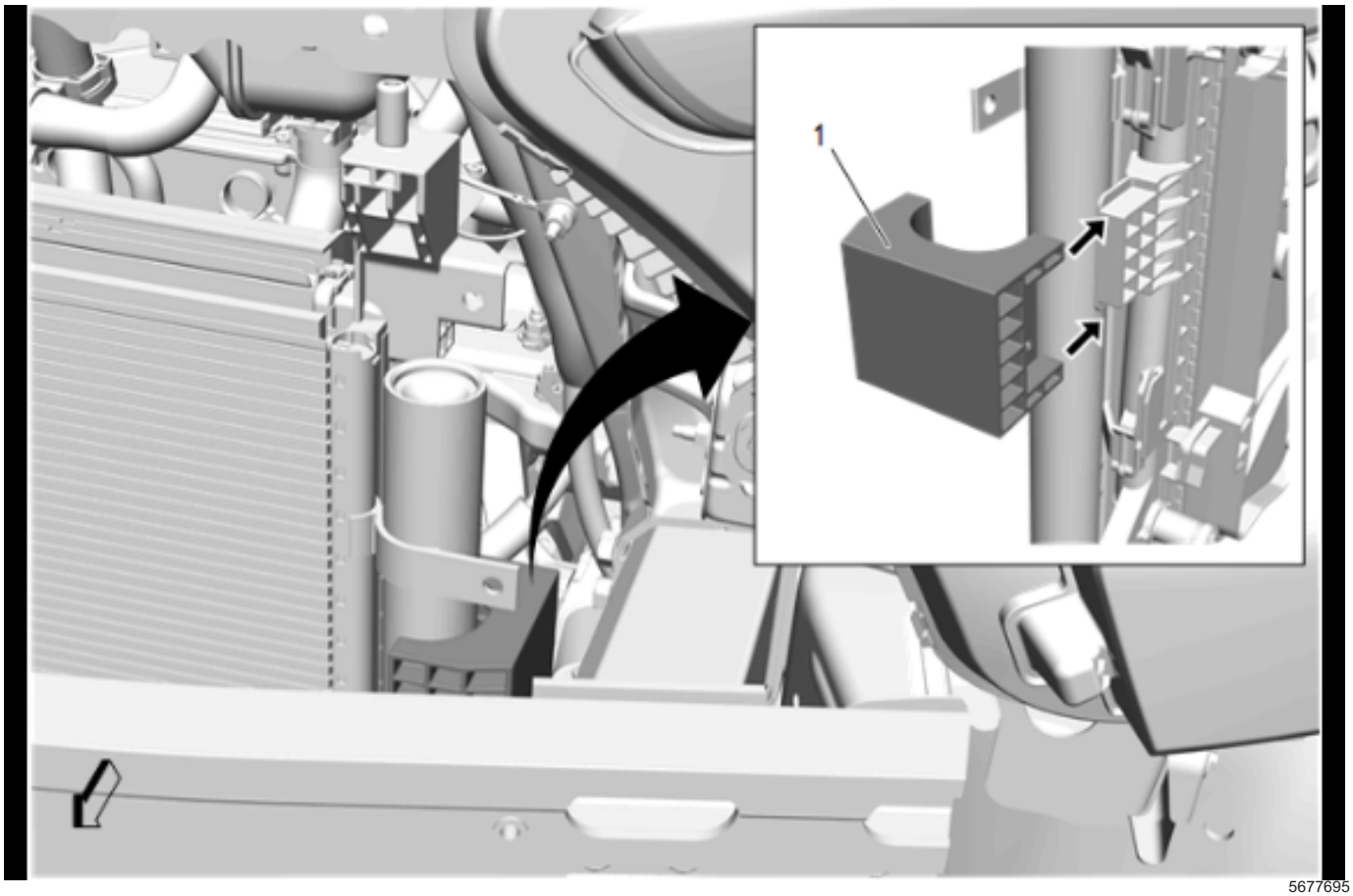

5677695

22. Lift radiator assembly slightly to remove the radiator protector.
23. Using a flat bladed tool, remove the radiator protector (1).

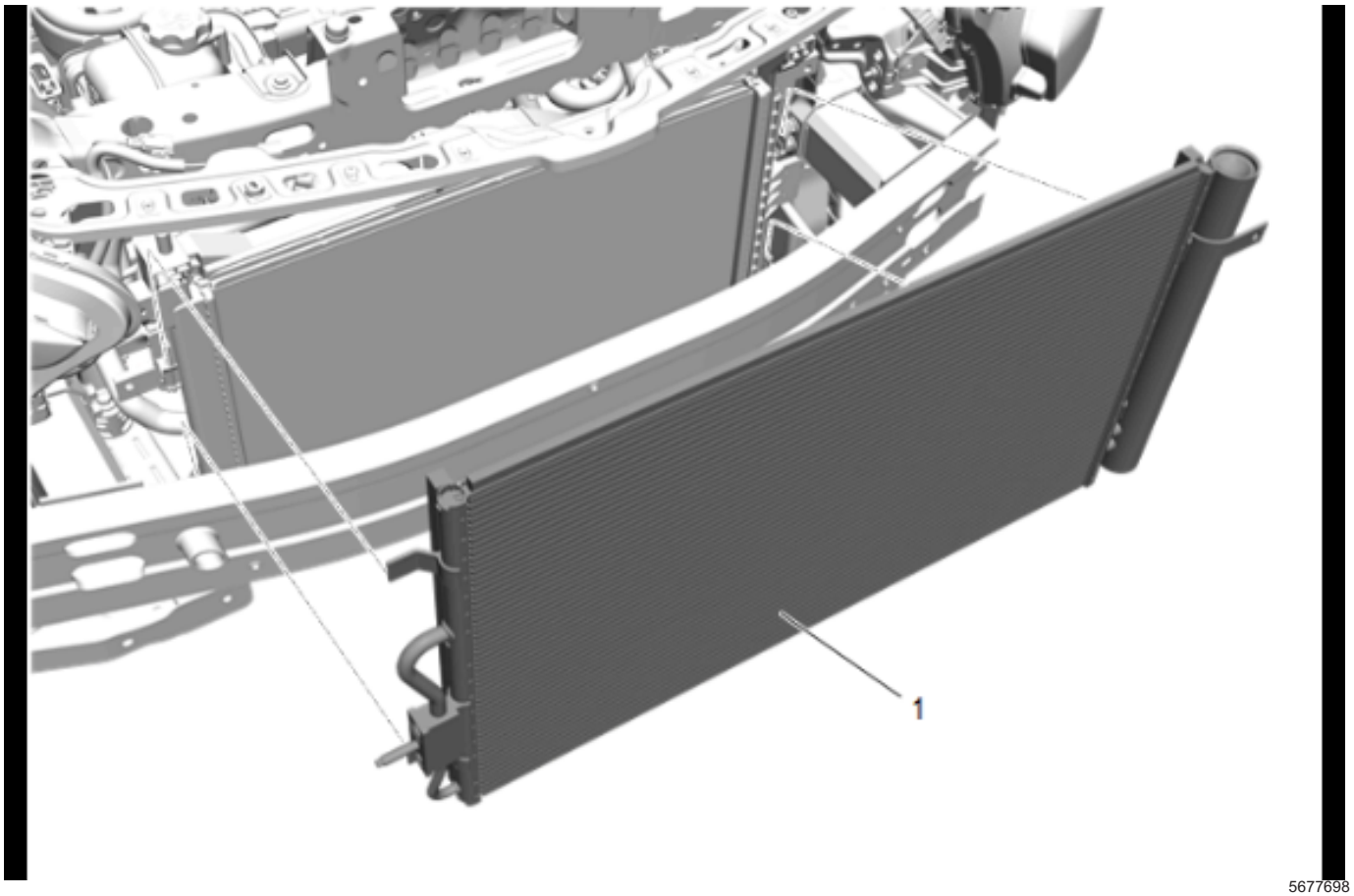

5677698

24. Air Conditioning Condenser (1) @ Radiator Assembly » Remove

5680943

25. Air Conditioning Receiver and Dehydrator Plug (1)
    » Remove and DISCARD
26. Air Conditioning Refrigerant Desiccant (2) »
    Remove and DISCARD

Installation Procedure

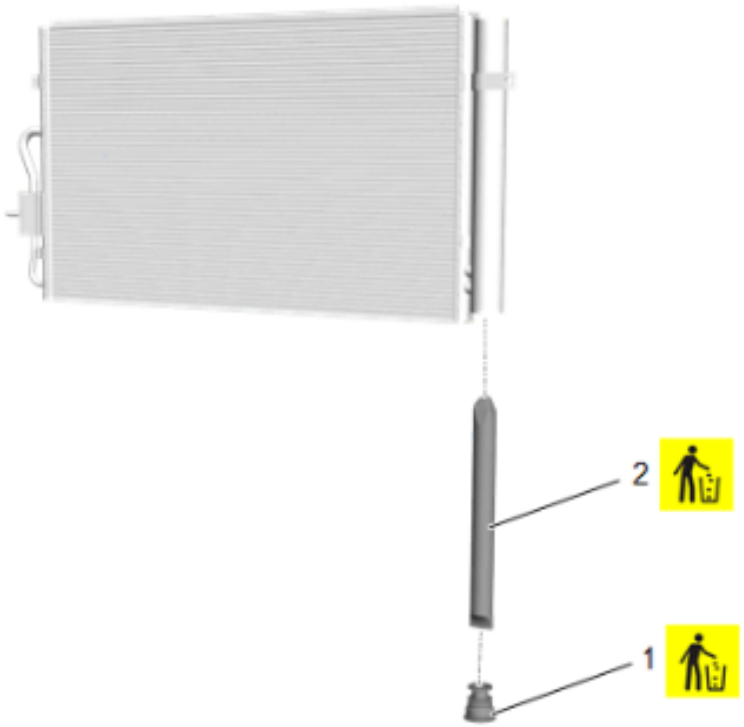

5680943

1. Air Conditioning Refrigerant Desiccant (2) » Install NEW
2. Air Conditioning Receiver and Dehydrator Plug (1) » Install NEW

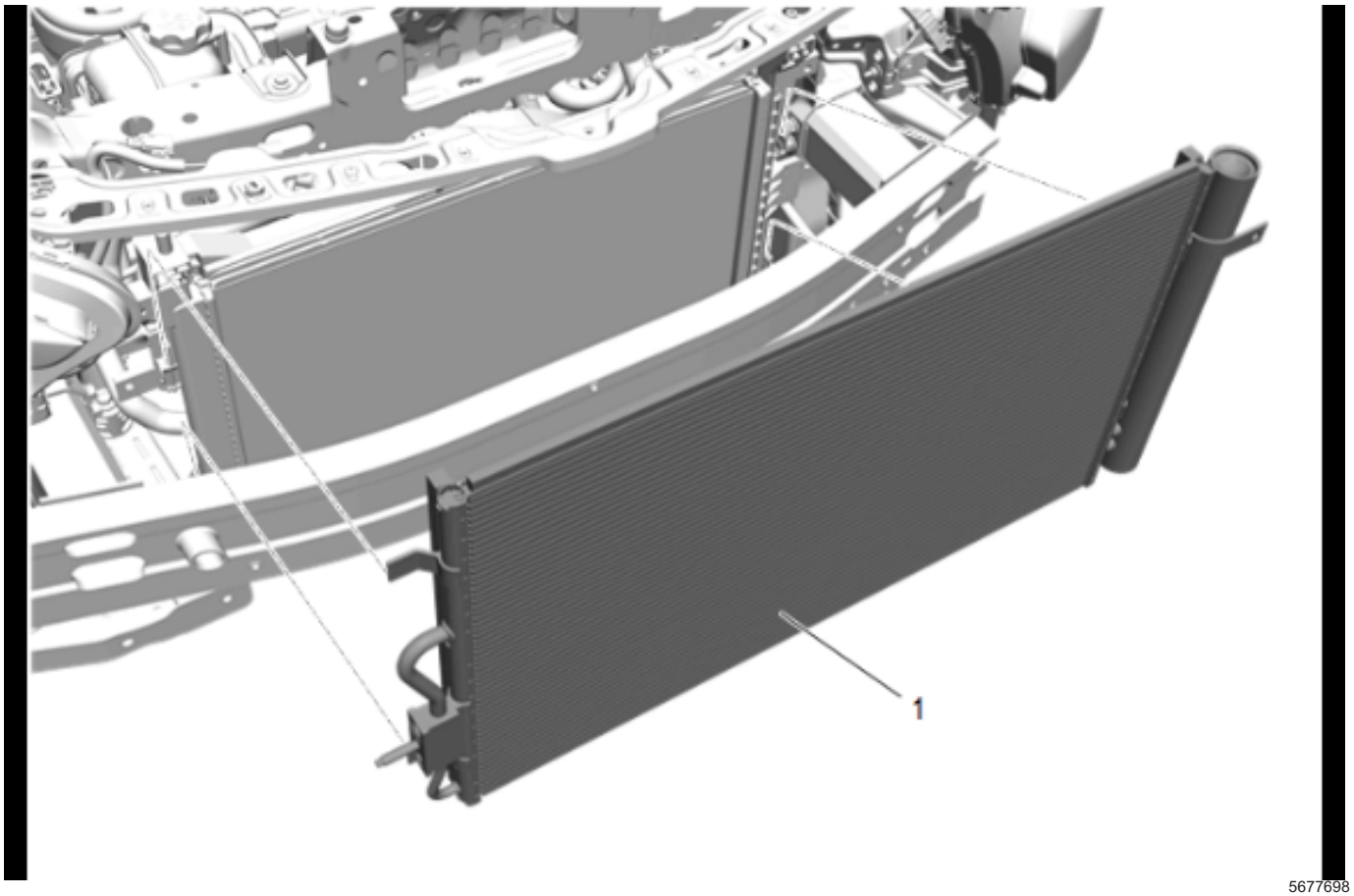

5677698

3. Air Conditioning Condenser (1) @ Radiator Assembly » Install

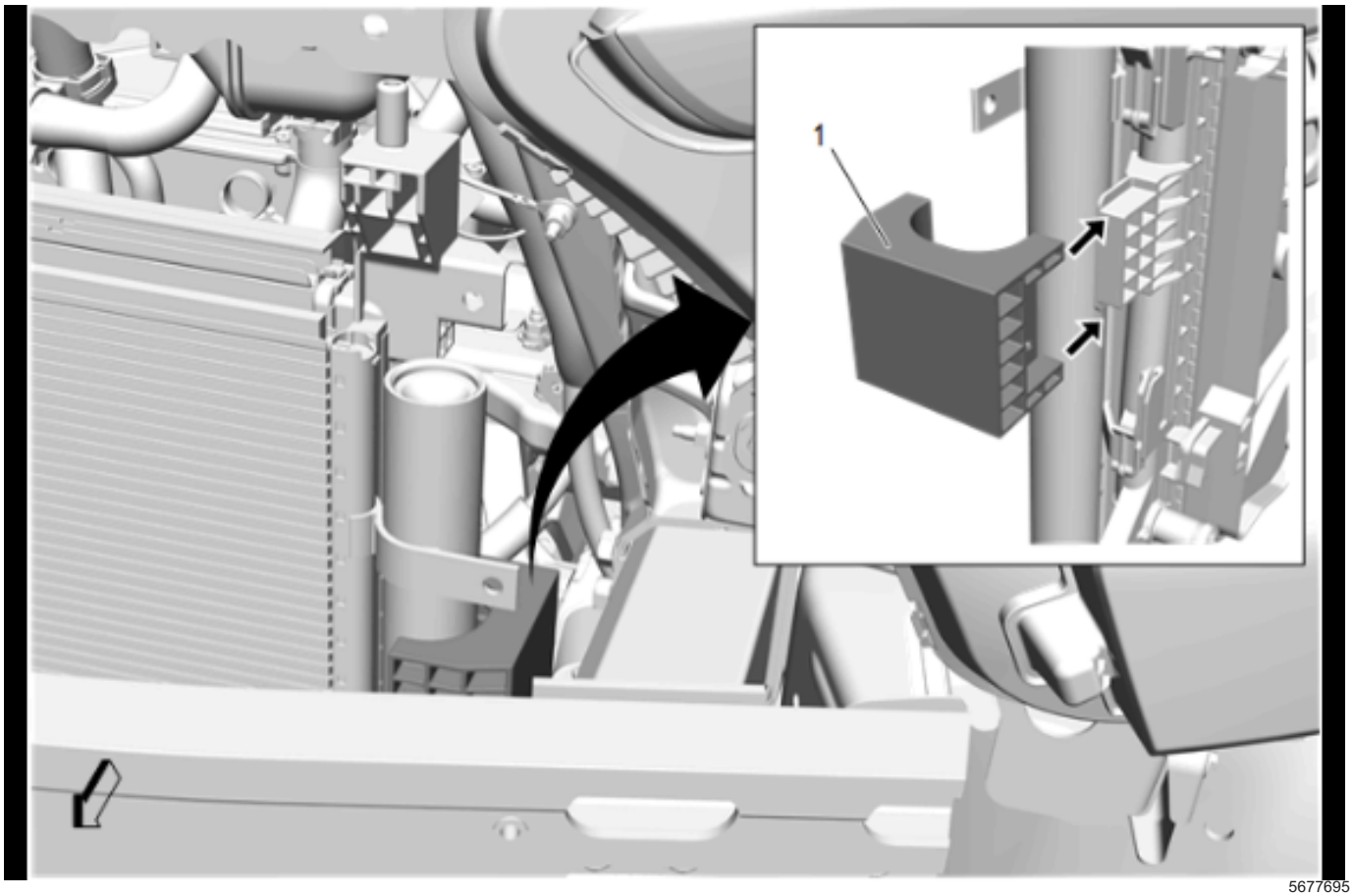

5677695

4. Radiator Protector (1) » Install

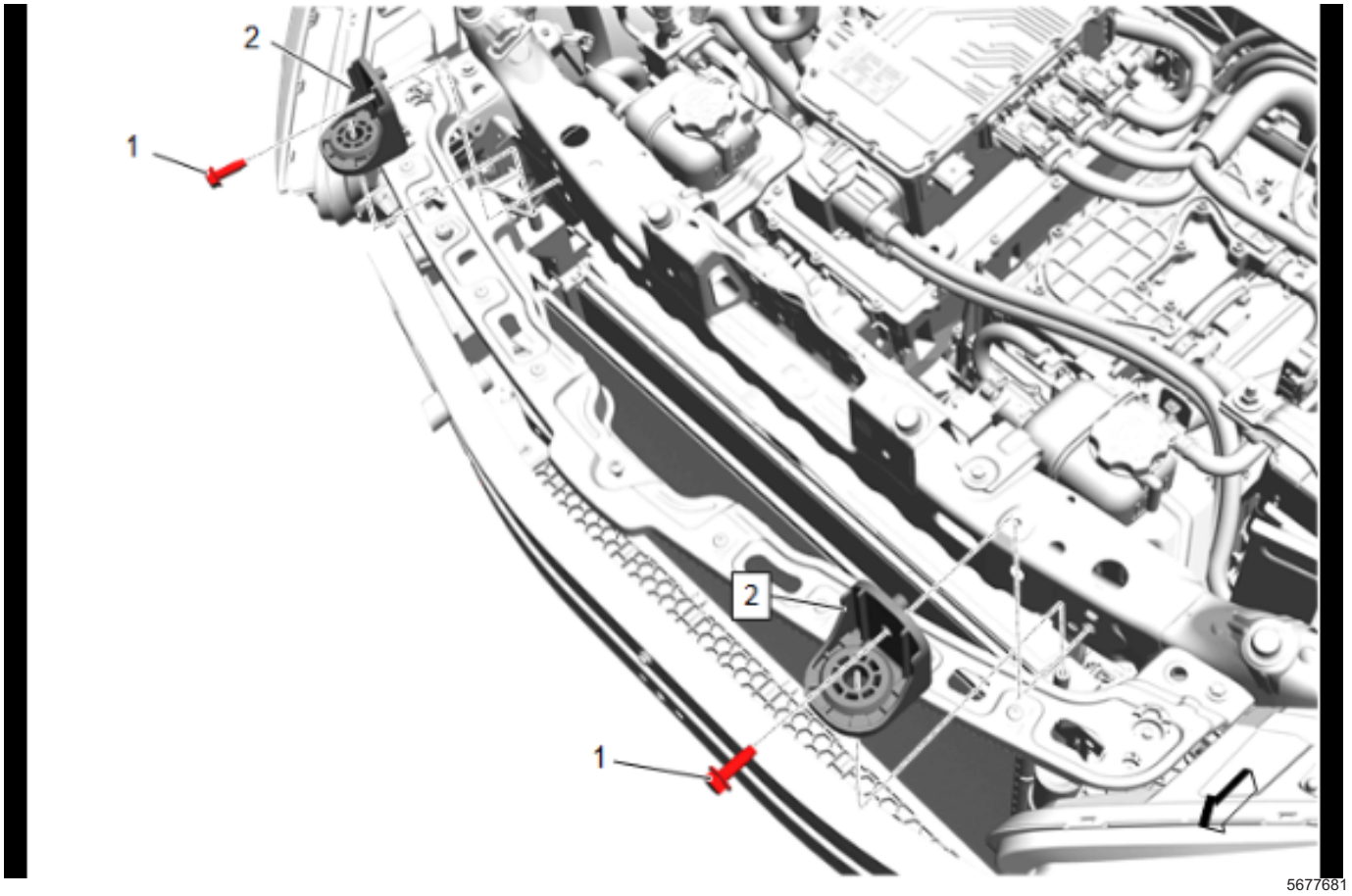

5. Radiator Upper Bracket (2) » Install [2x]
6. Radiator Upper Bracket Bolt (1) » Install and tighten [2x] — Fastener Specifications

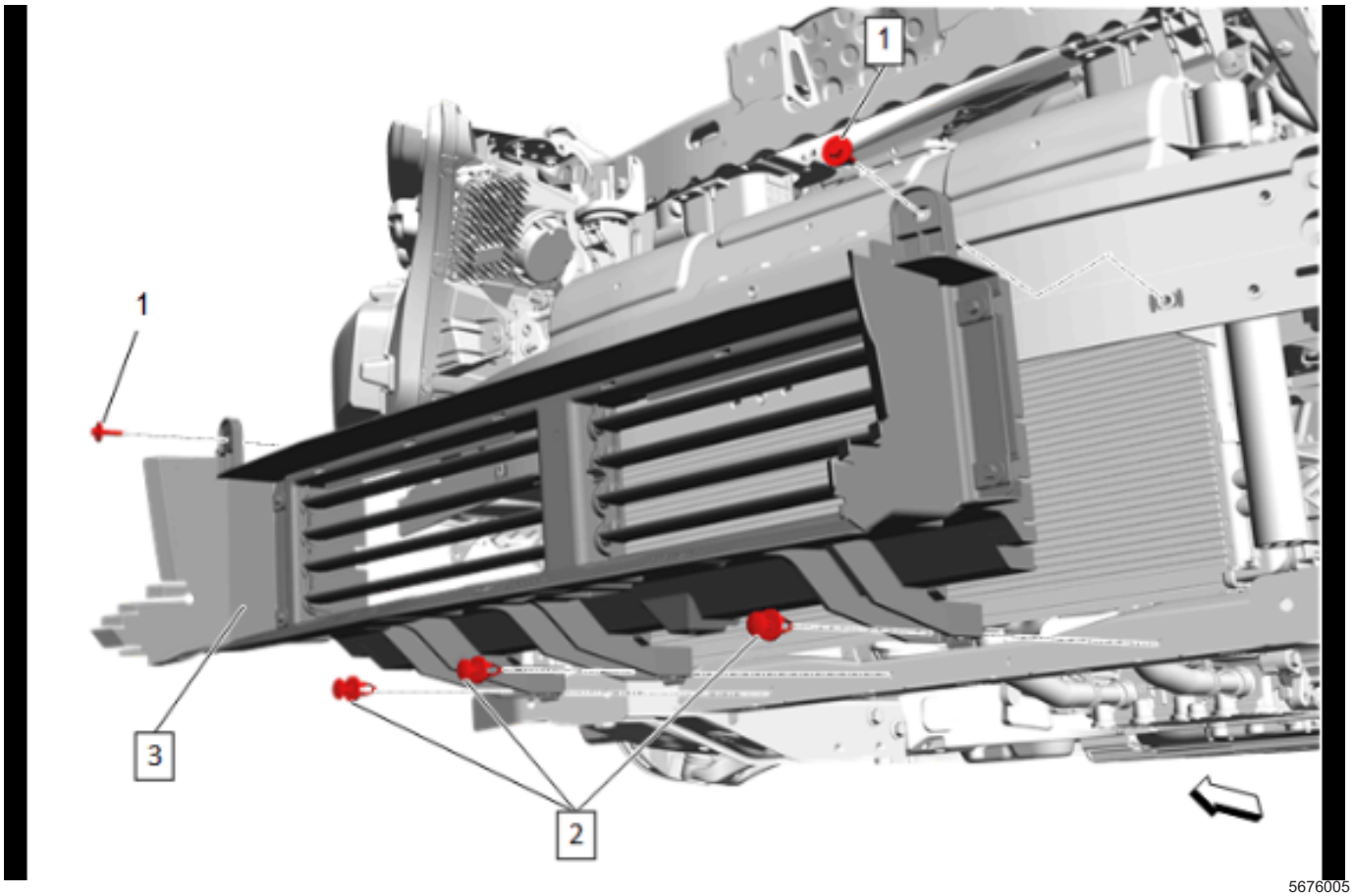

5676005

7. Install the radiator air lower baffle and deflector (3) with the front bumper shutter
8. Radiator Air Lower Baffle Retainer (2) » Install [3x]
9. Radiator Air Lower Baffle Bolt (1) » Install and tighten [2x] — Fastener Specifications

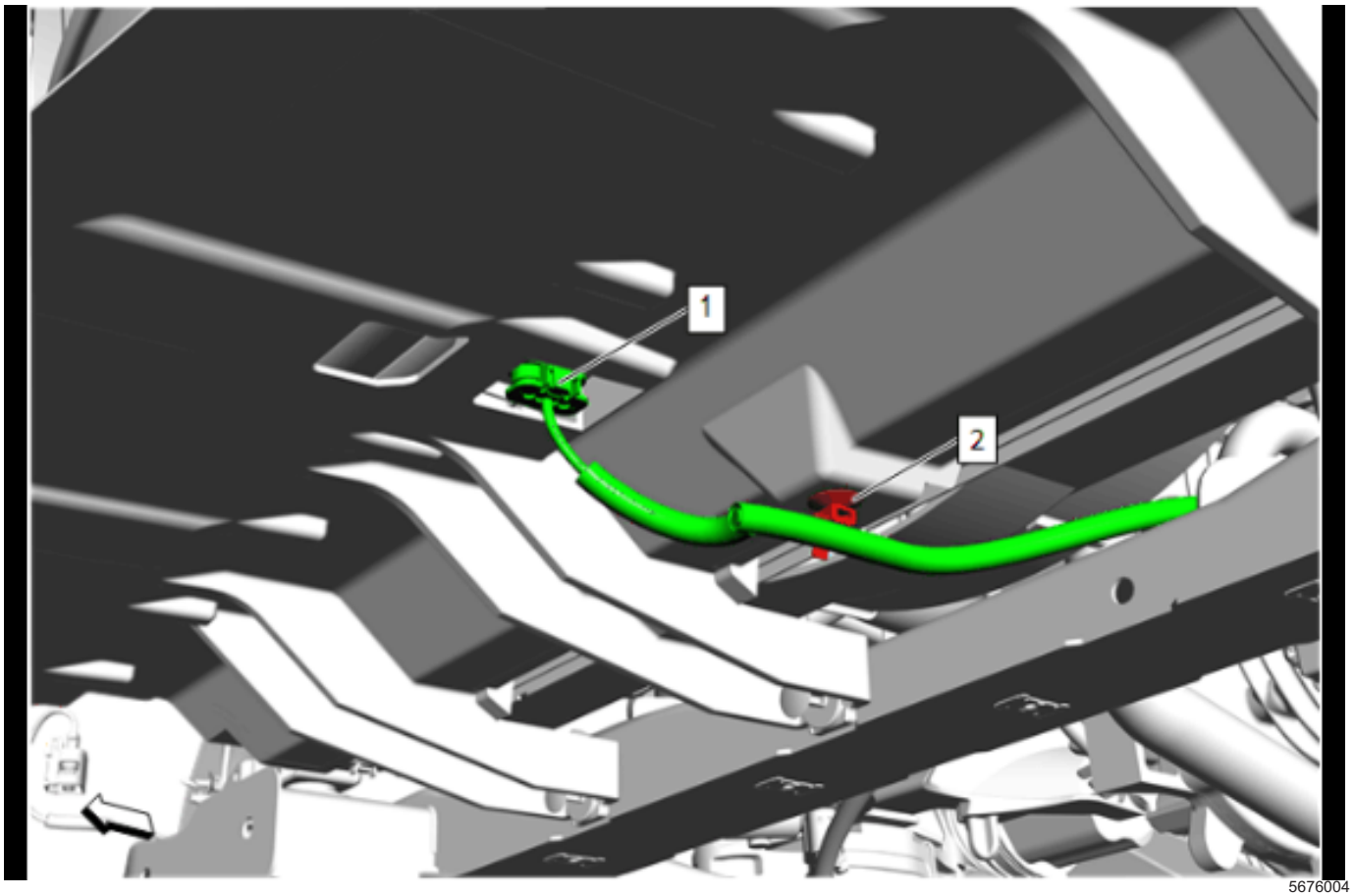

5676004

10. Retainer (2) » Install
11. Electrical Connector (1) » Connect

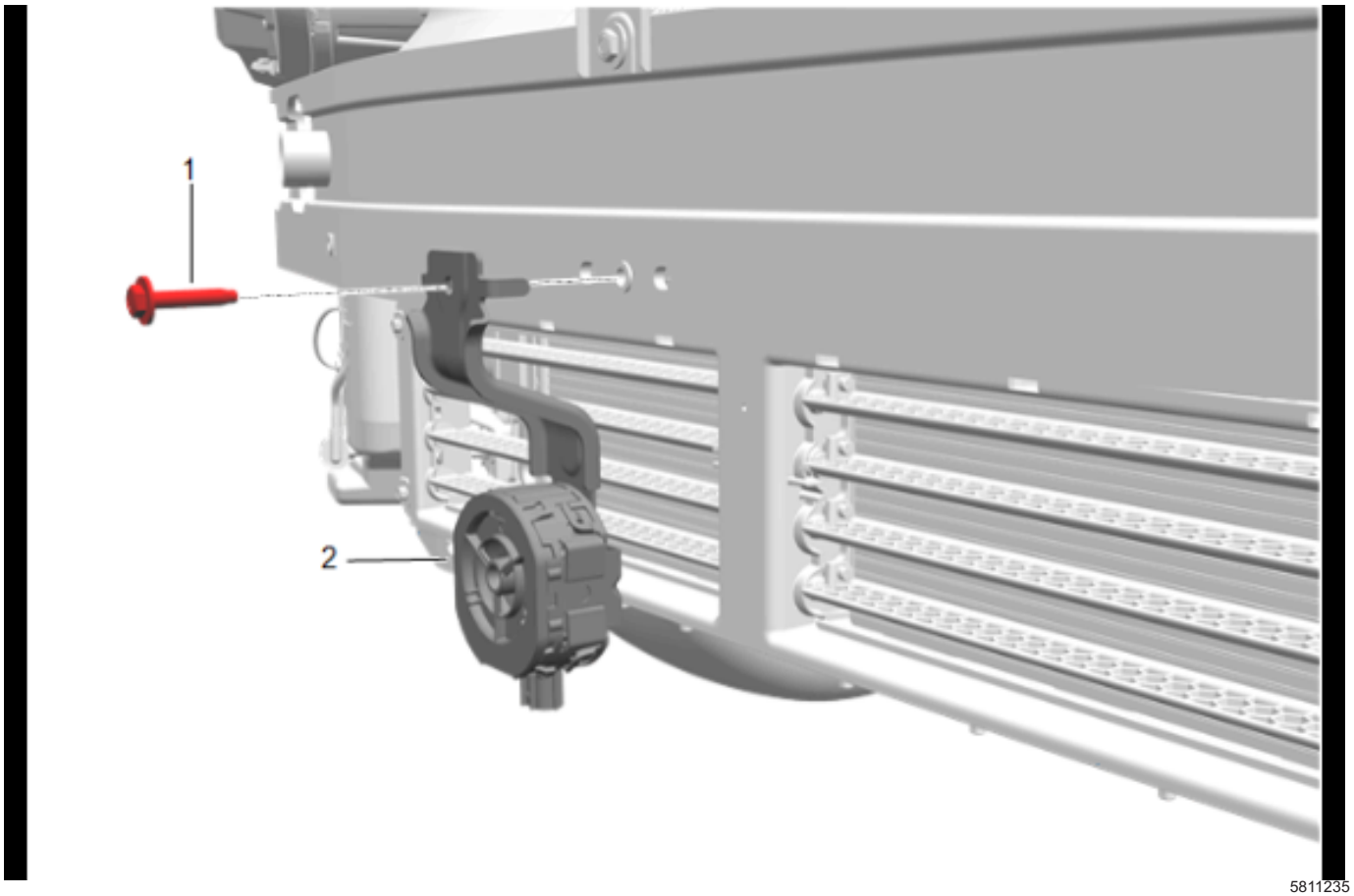

5811235

12. Pedestrian Sound Alert Speaker (2) » Install
13. Pedestrian Sound Alert Speaker Bracket Bolt (1)
    » Install and tighten — Fastener Specifications

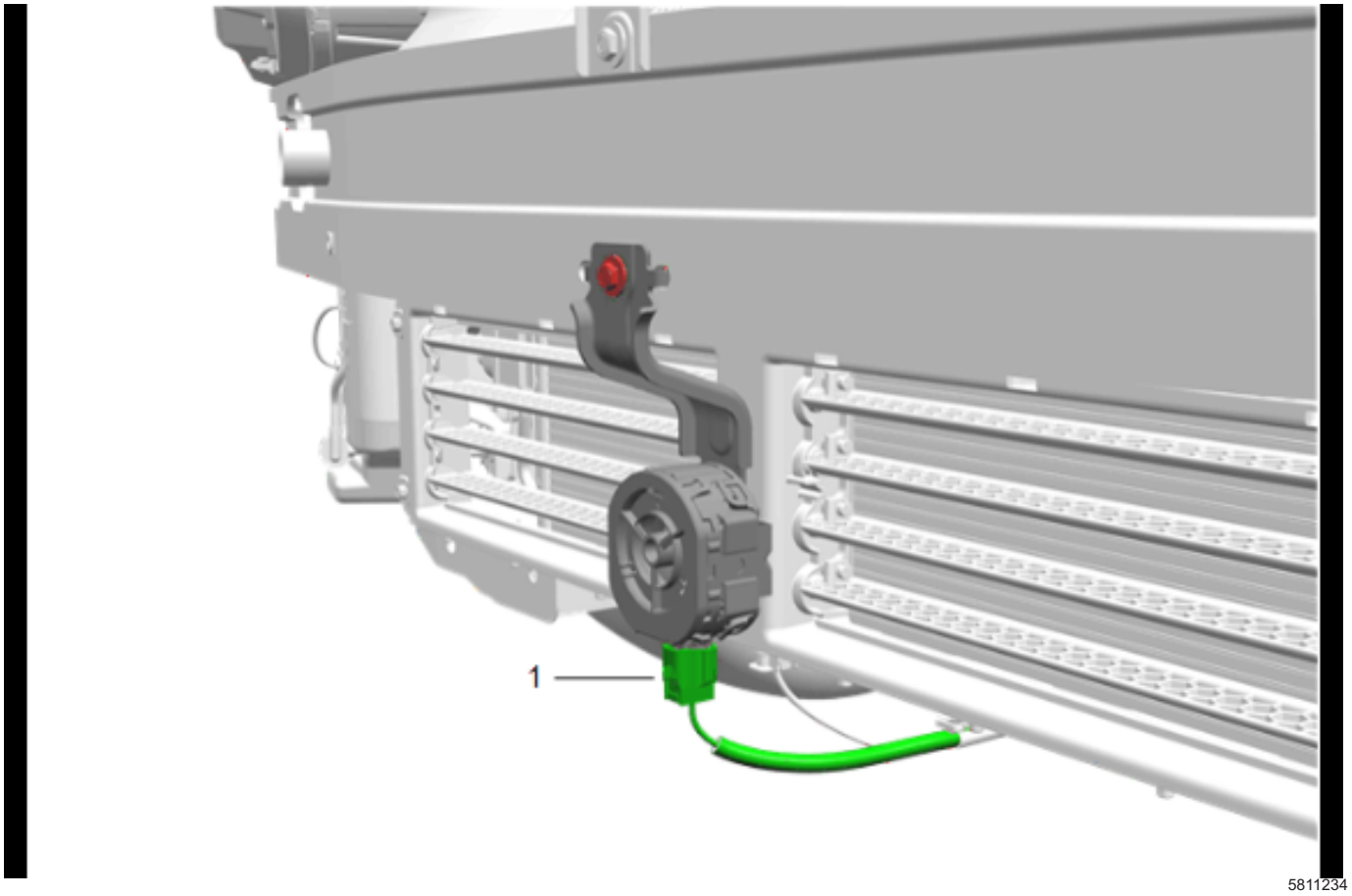

14. Electrical Connector (1) » Connect

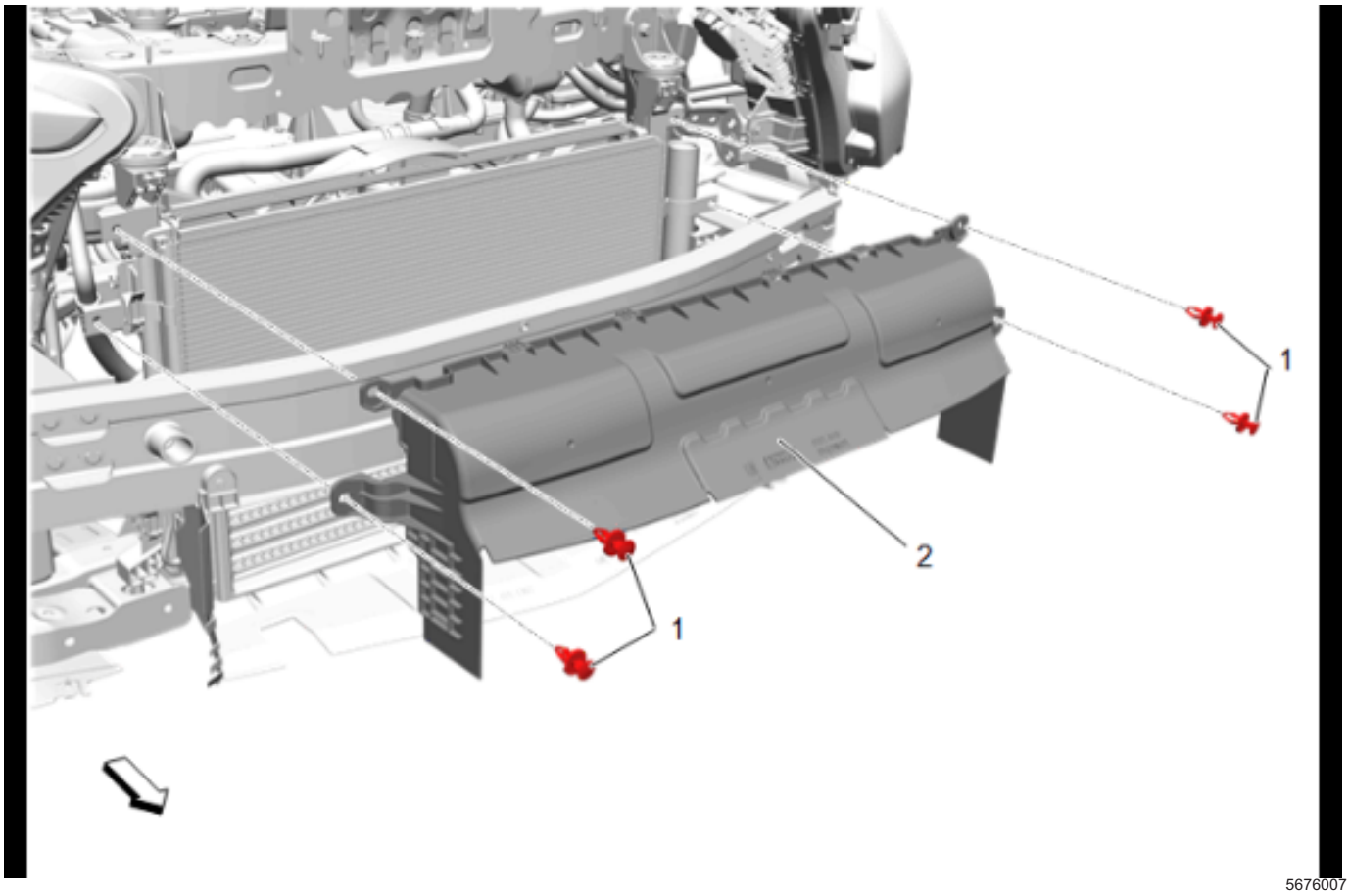

15. Radiator Air Upper Baffle and Deflector (2) » Install
16. Radiator Air Upper Baffle Retainer (1) » Install [4x]

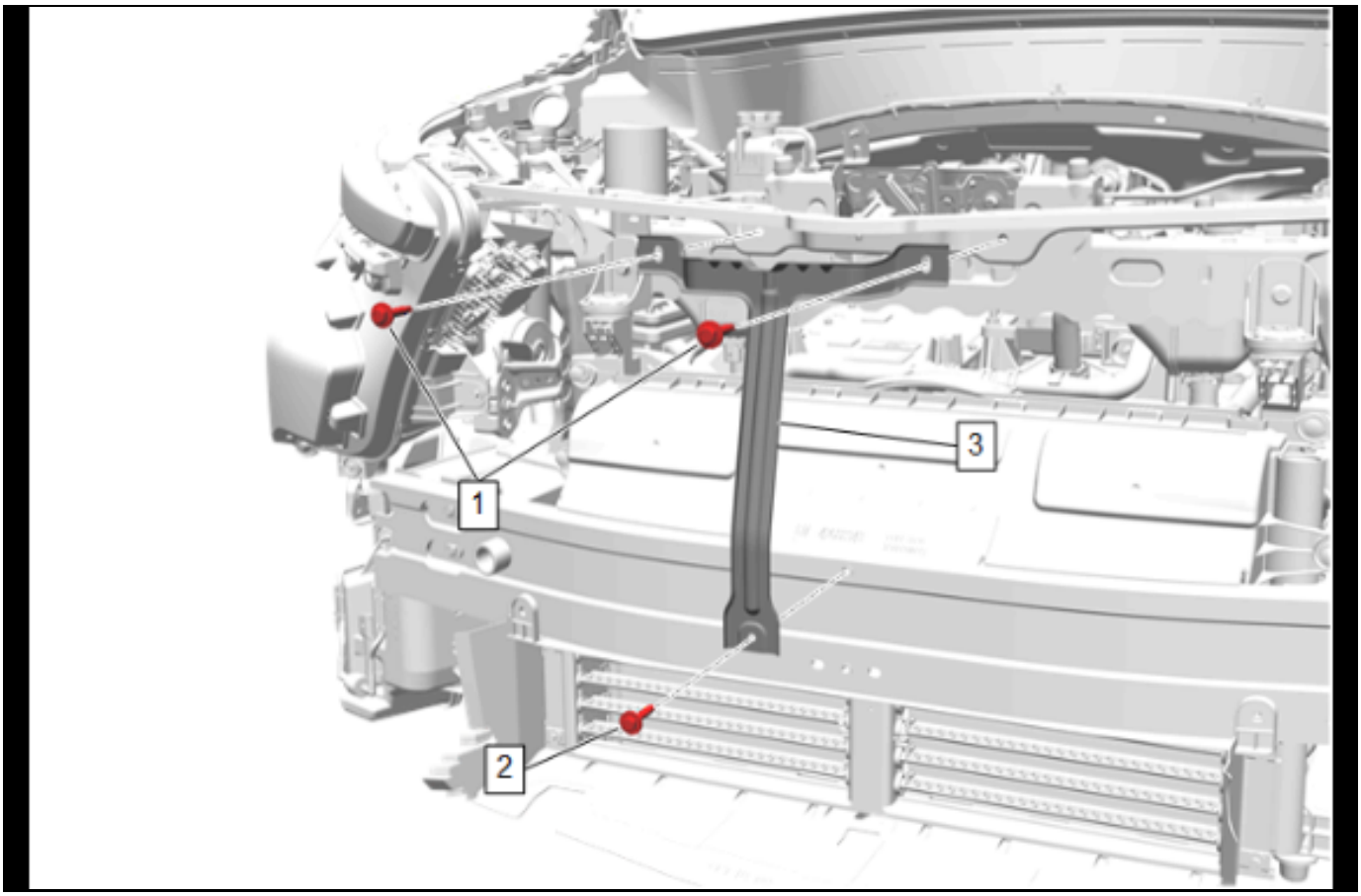

5675536

17. Hood Front Bumper Bracket Support (3) » Install
18. Front Bumper Fascia Support Brace Bolt (2) » Install and tighten
19. Front Bumper Fascia Center Support Bolt (1) » Install and tighten [2x]

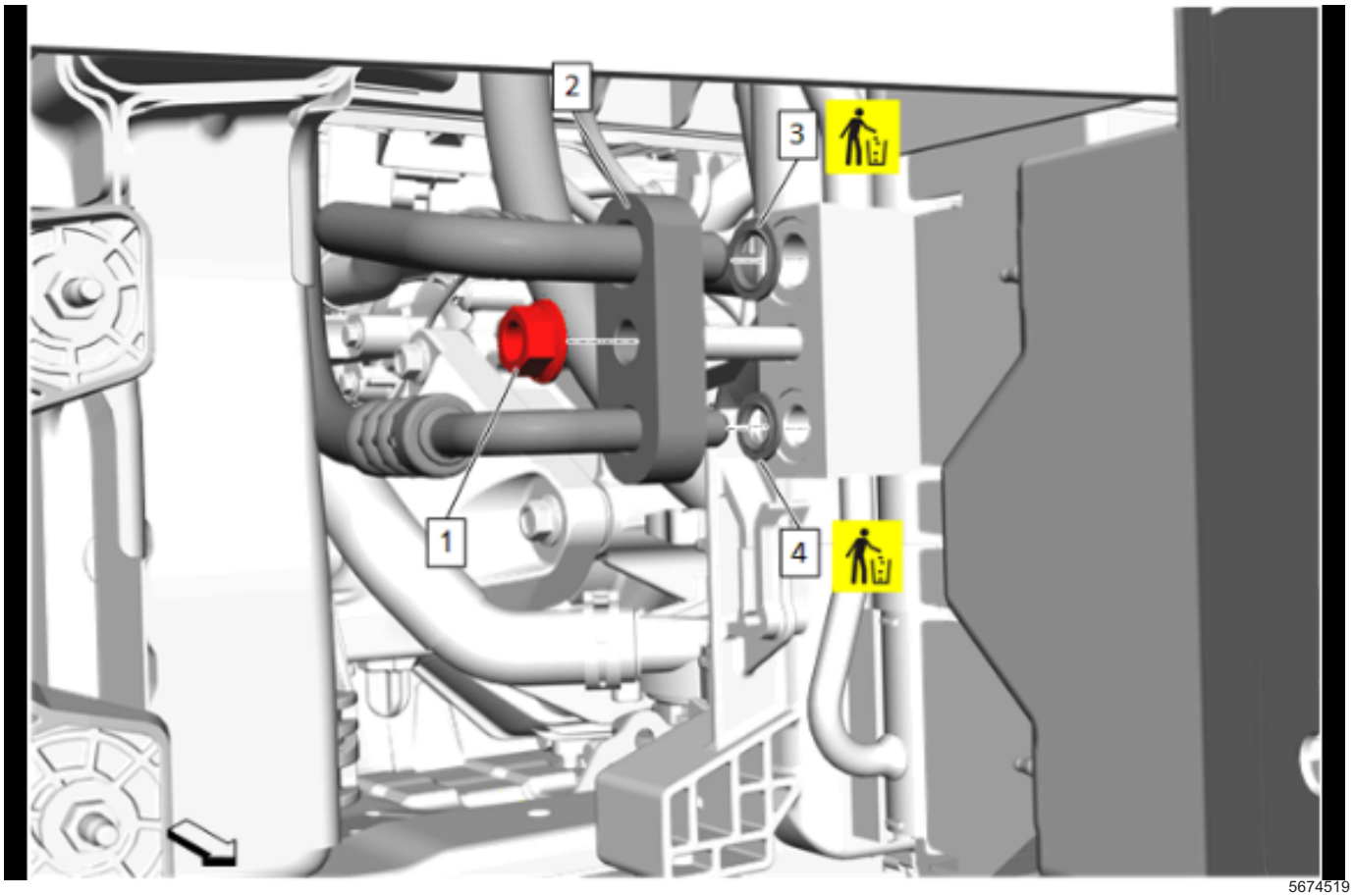

5674519

20. Air Conditioning Condenser Hose Seal - Small (4) » Install NEW
21. Air Conditioning Condenser Hose Seal - Large (3) » Install NEW
22. Air Conditioning Condenser Hose (2) @ Air Conditioning Condenser » Install
23. Air Conditioning Condenser Hose Nut (1) » Install and tighten — *Fastener Specifications on page 5-3*

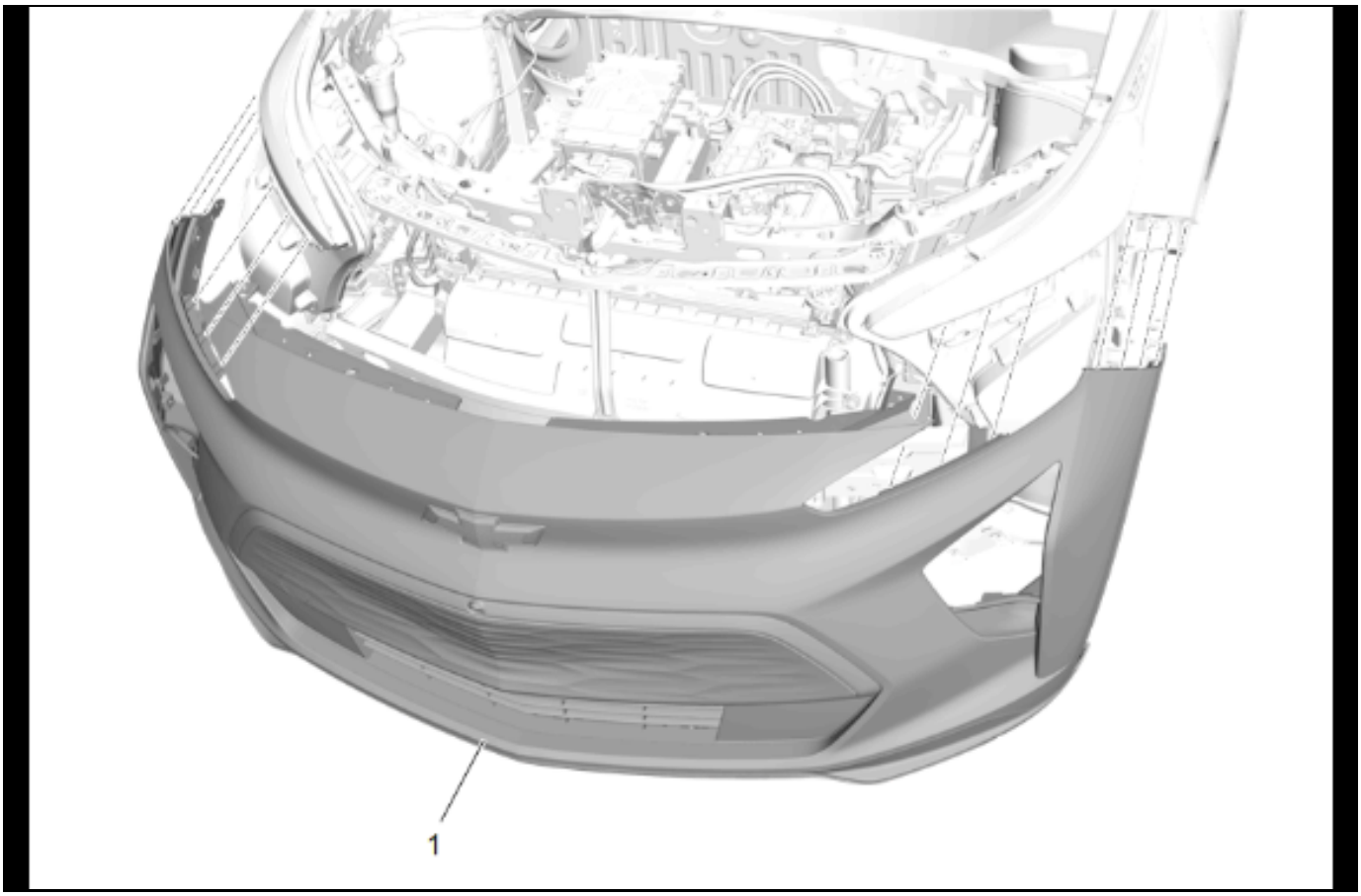

5662711

24. Front Bumper Fascia (1) » Install — Front Bumper Fascia Removal and Installation
25. Recharge the refrigerant. *Refrigerant Recovery and Recharging on page 5-36*

Air Conditioning Evaporator Thermal Expansion Valve Replacement

Single Use Fasteners and Components

- Air Conditioning Evaporator Hose Seal - Large
- Air Conditioning Evaporator Hose Seal - Small
- Air Conditioning Evaporator Thermal Expansion Valve Seal - Large
- Air Conditioning Evaporator Thermal Expansion Valve Seal - Small

Removal Procedure

Danger: Before conducting any repair to this high voltage cooling system, it is necessary to determine/verify whether no high-voltage system faults exist. If high-voltage faults exist, follow published DTC diagnostics/repair procedures prior to performing any cooling system repairs. Failure to correct High Voltage Faults before working on the high voltage cooling system could result in personal injury or death.

1. Turn vehicle power OFF and remove all keyless entry transmitters from the vehicle and secure in a place outside the vehicle.
2. Recover the refrigerant. *Refrigerant Recovery and Recharging on page 5-36*

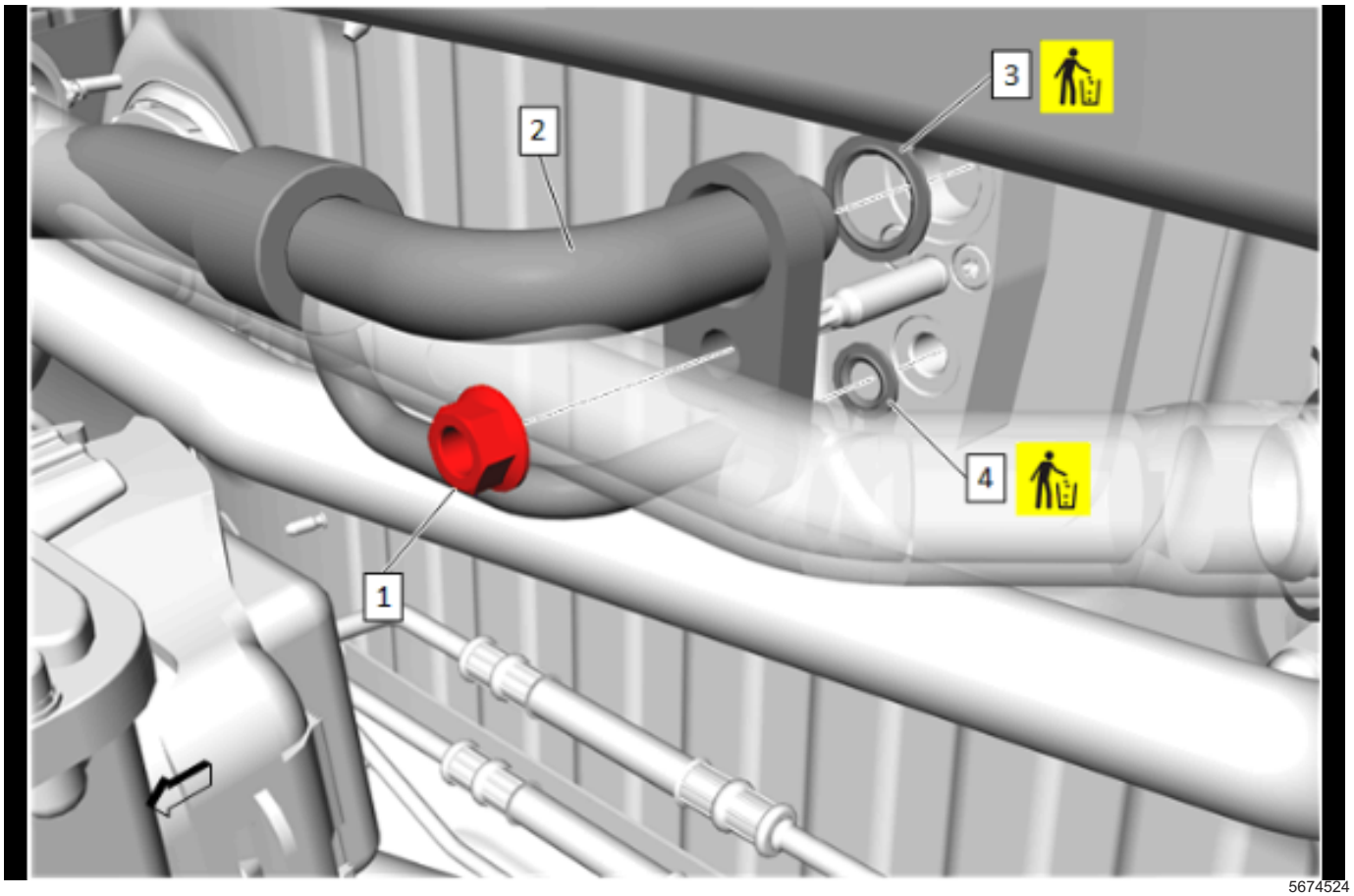

5674524

3. Air Conditioning Evaporator Hose Nut (1) » Remove
4. Air Conditioning Evaporator Hose (2) @ Air Conditioning Evaporator Thermal Expansion Valve » Remove
5. Air Conditioning Evaporator Hose Seal - Large (3) » Remove and DISCARD
6. Air Conditioning Evaporator Hose Seal - Small (4) » Remove and DISCARD

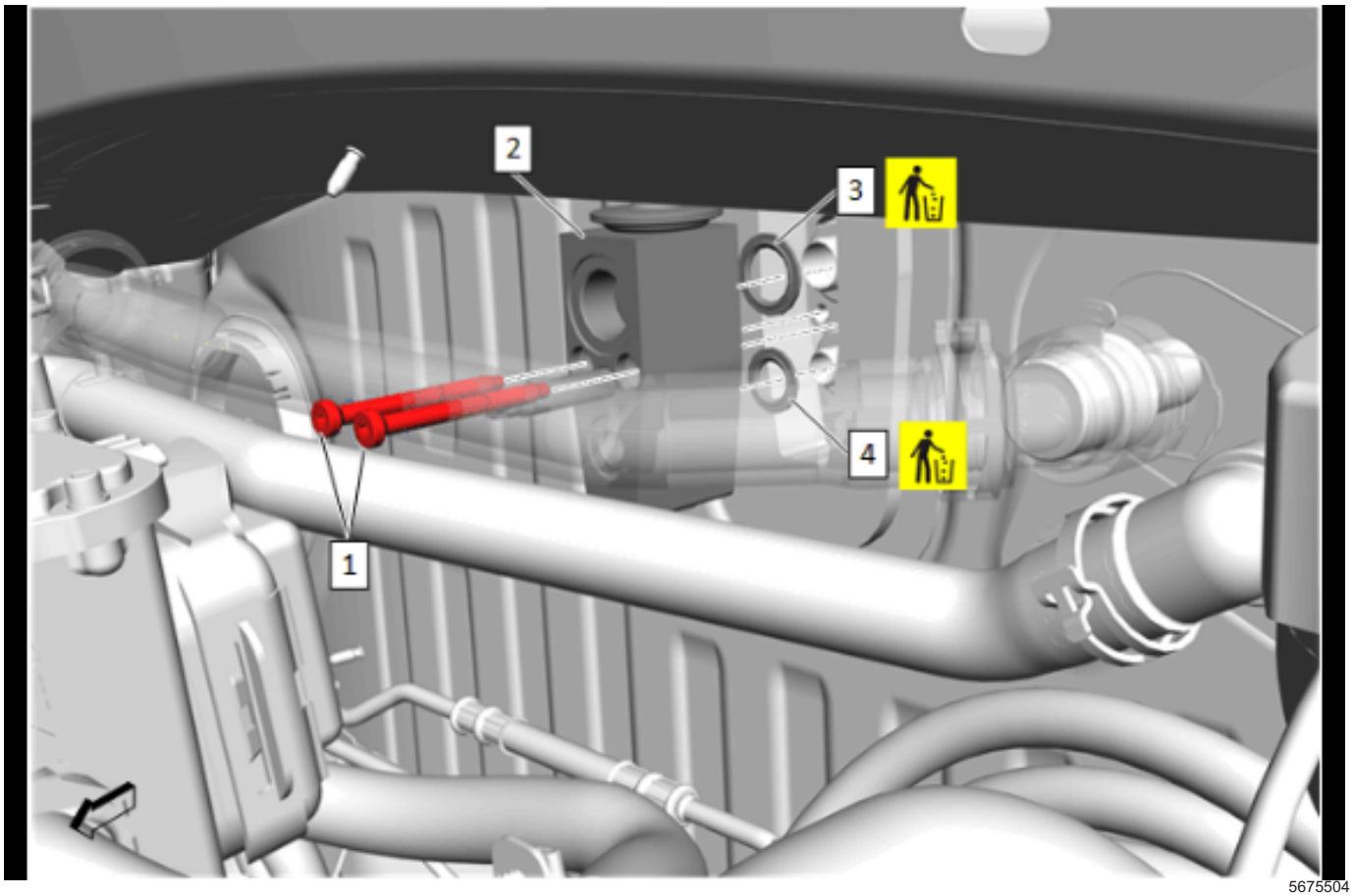

5675504

7. Air Conditioning Evaporator Thermal Expansion Valve Bolt (1) » Remove
8. Air Conditioning Evaporator Thermal Expansion Valve (2) » Remove
9. Air Conditioning Evaporator Thermal Expansion Valve Seal - Large (3) » Remove and DISCARD
10. Air Conditioning Evaporator Thermal Expansion Valve Seal - Small (4) » Remove and DISCARD

Installation Procedure

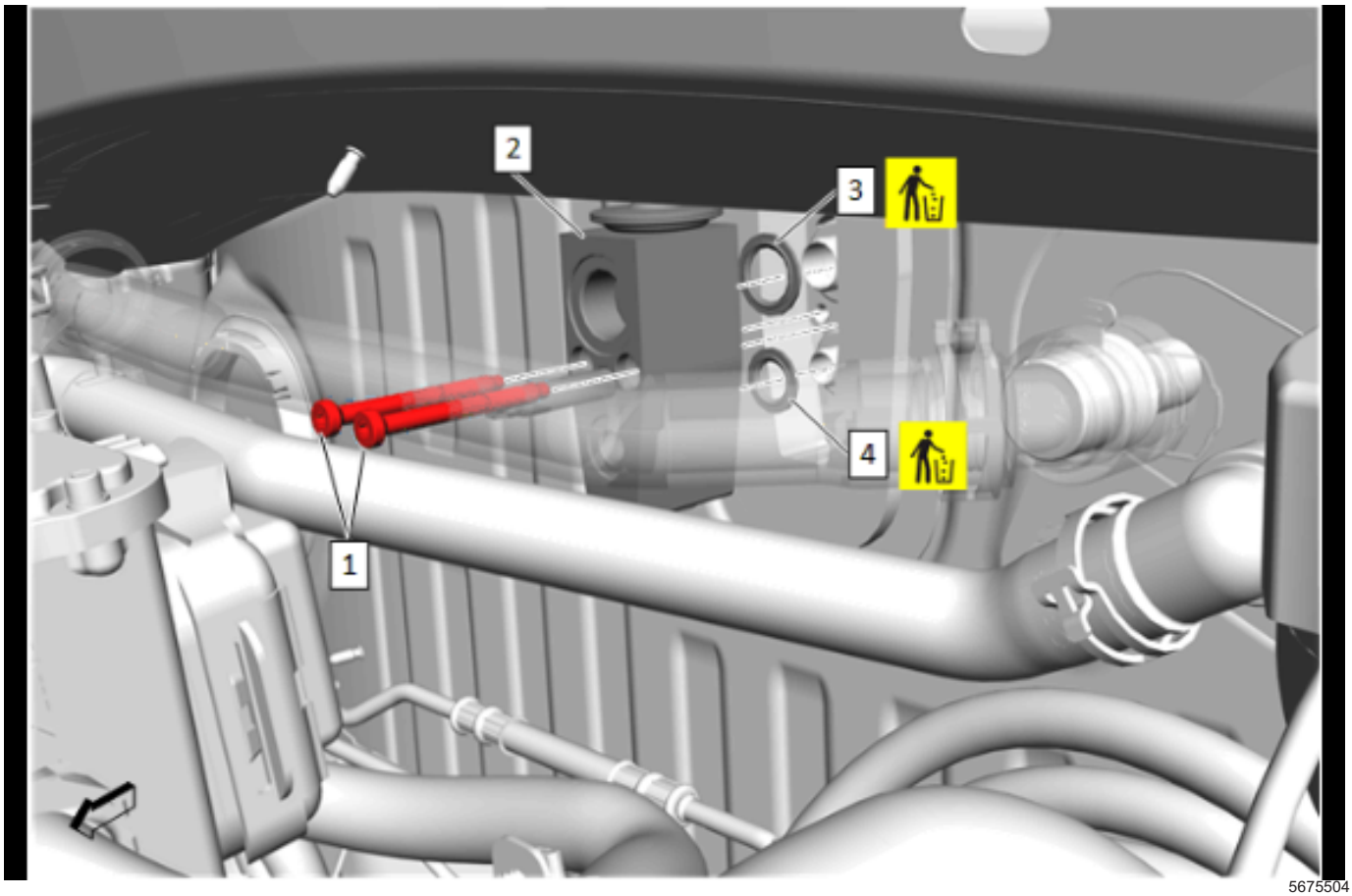

5675504

1. Air Conditioning Evaporator Thermal Expansion Valve Seal - Small (4) » Install NEW
2. Air Conditioning Evaporator Thermal Expansion Valve Seal - Large (3) » Install NEW
3. Air Conditioning Evaporator Thermal Expansion Valve (2) » Install
4. Air Conditioning Evaporator Thermal Expansion Valve Bolt (1) » Install and tighten — *Fastener Specifications on page 5-3*

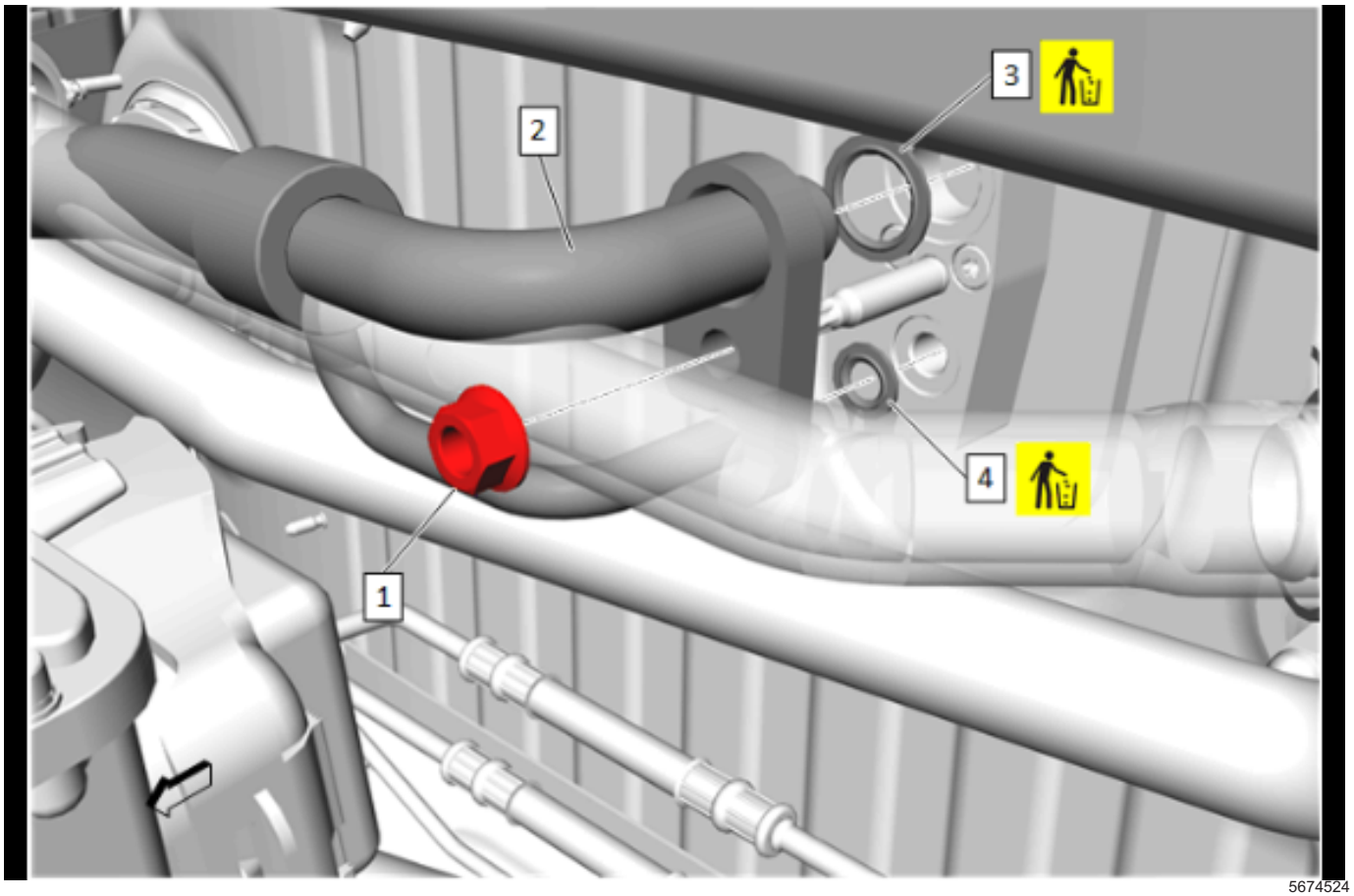

5674524

5. Air Conditioning Evaporator Hose Seal - Small (4) » Install NEW
6. Air Conditioning Evaporator Hose Seal - Large (3) » Install NEW
7. Air Conditioning Evaporator Hose (2) @ Air Conditioning Evaporator Thermal Expansion Valve » Install
8. Air Conditioning Evaporator Hose Nut (1) » Install and tighten — *Fastener Specifications on page 5-3*
9. Recharge the refrigerant. *Refrigerant Recovery and Recharging on page 5-36*

Air Conditioning Refrigerant Pressure Sensor Replacement - Low Pressure

Single Use Fasteners and Components

- Air Conditioning Refrigerant Pressure Sensor O-ring

Removal Procedure

Danger: Before conducting any repair to this high voltage cooling system, it is necessary to determine/verify whether no high-voltage system faults exist. If high-voltage faults exist, follow published DTC diagnostics/repair procedures prior to performing any cooling system repairs. Failure to correct High Voltage Faults before working on the high voltage cooling system could result in personal injury or death.

1. Turn vehicle power OFF and remove all keyless entry transmitters from the vehicle and secure in a place outside the vehicle.
2. Disconnect the battery negative cable.
3. Recover the refrigerant. *Refrigerant Recovery and Recharging on page 5-36*
4. Raise and support the vehicle.

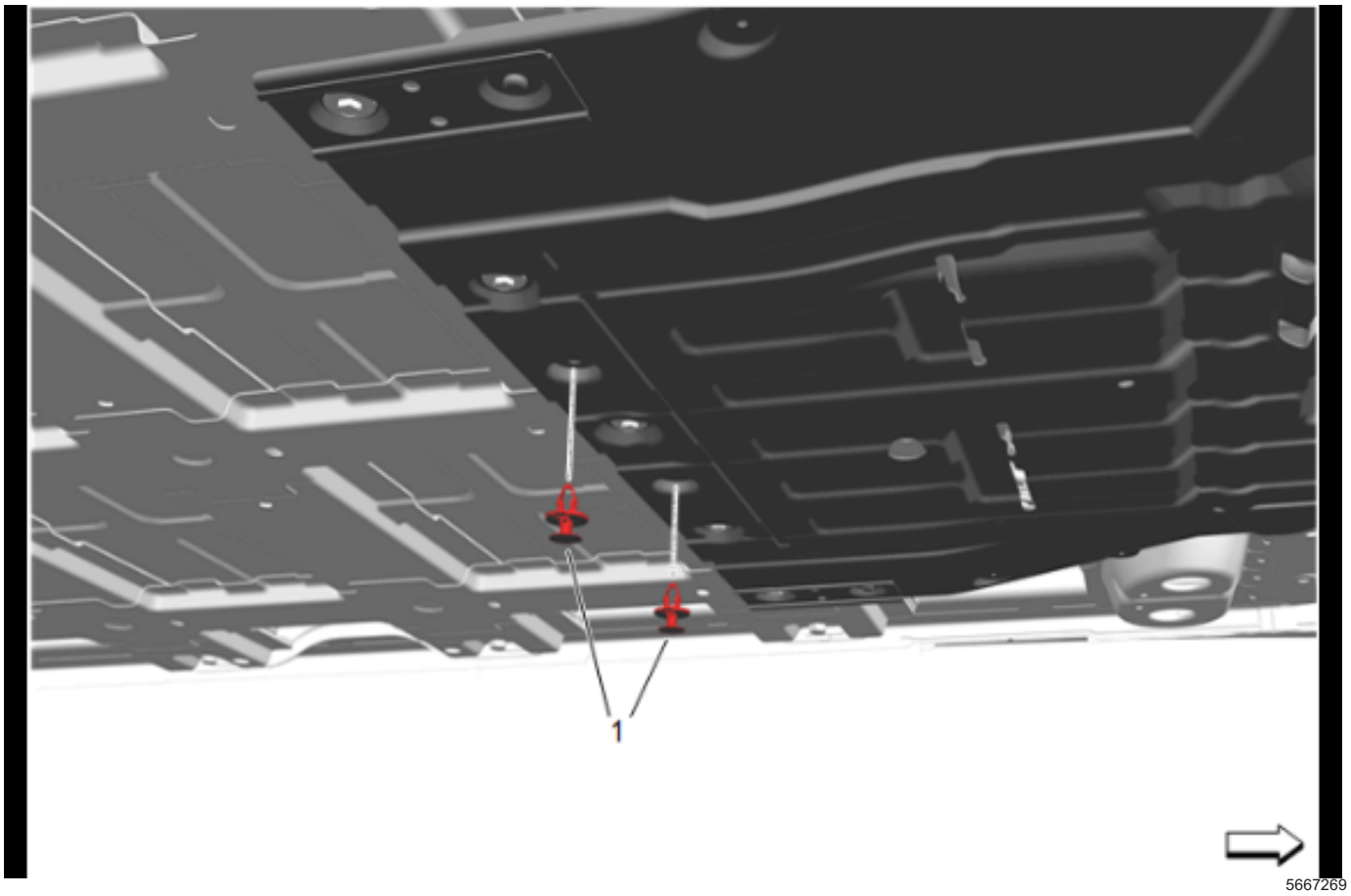

5. Front Compartment Air Deflector Retainer (1) » Remove [2x]

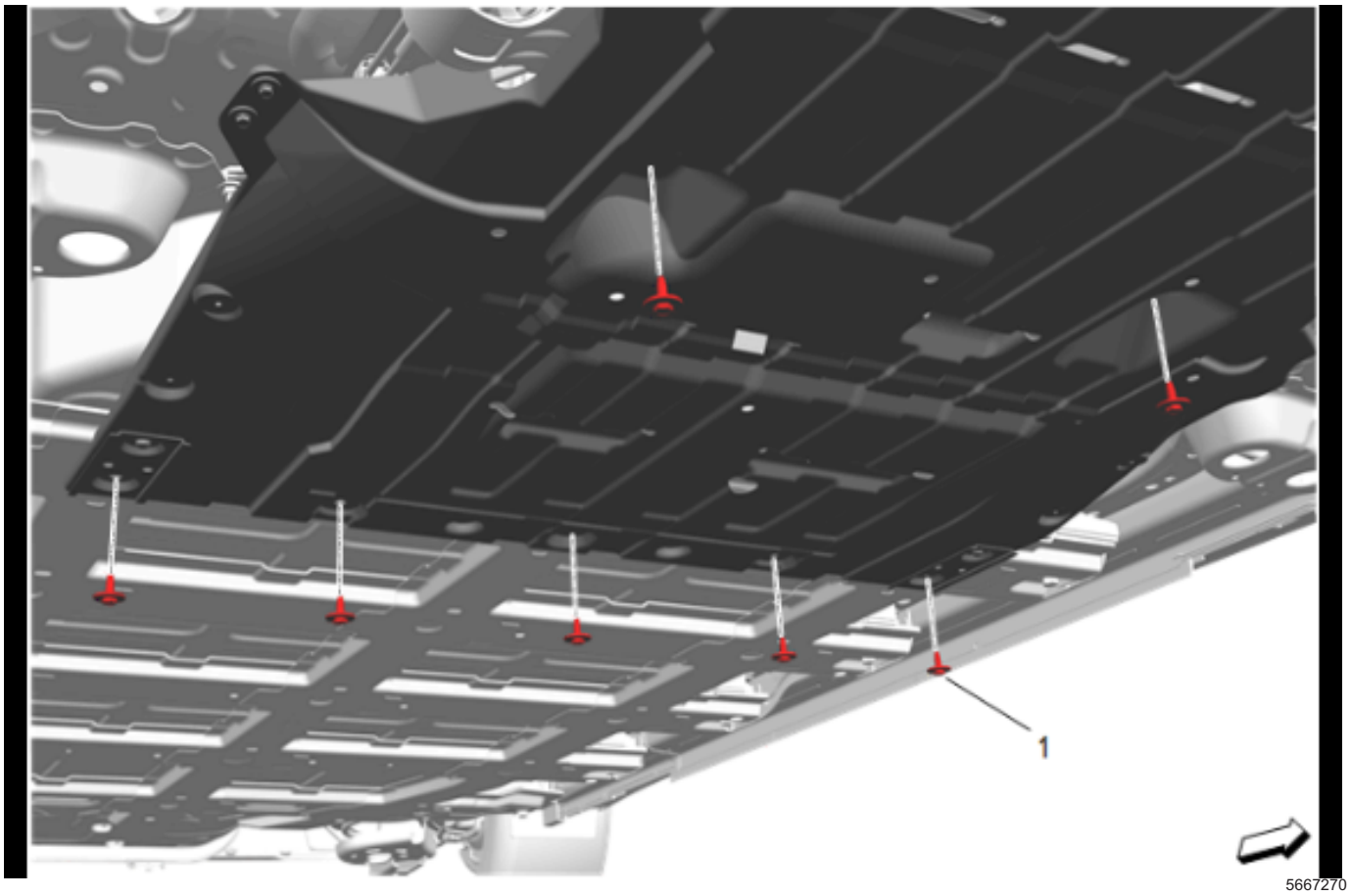

6. Front Compartment Air Deflector Bolt (1) »
   Remove [7x]

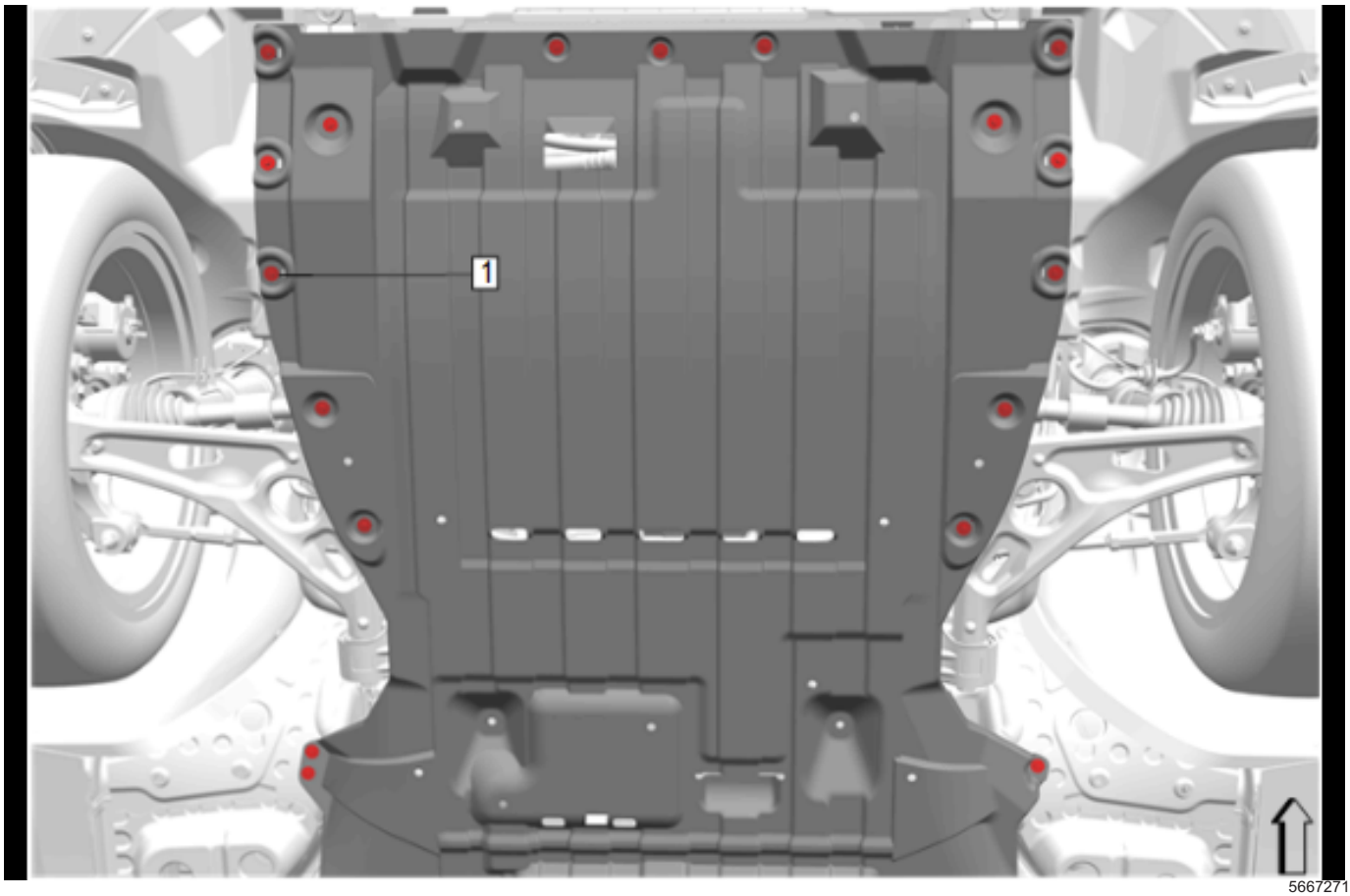

5667271

7. Front Compartment Air Deflector Bolt (1) »
   Remove [18x]

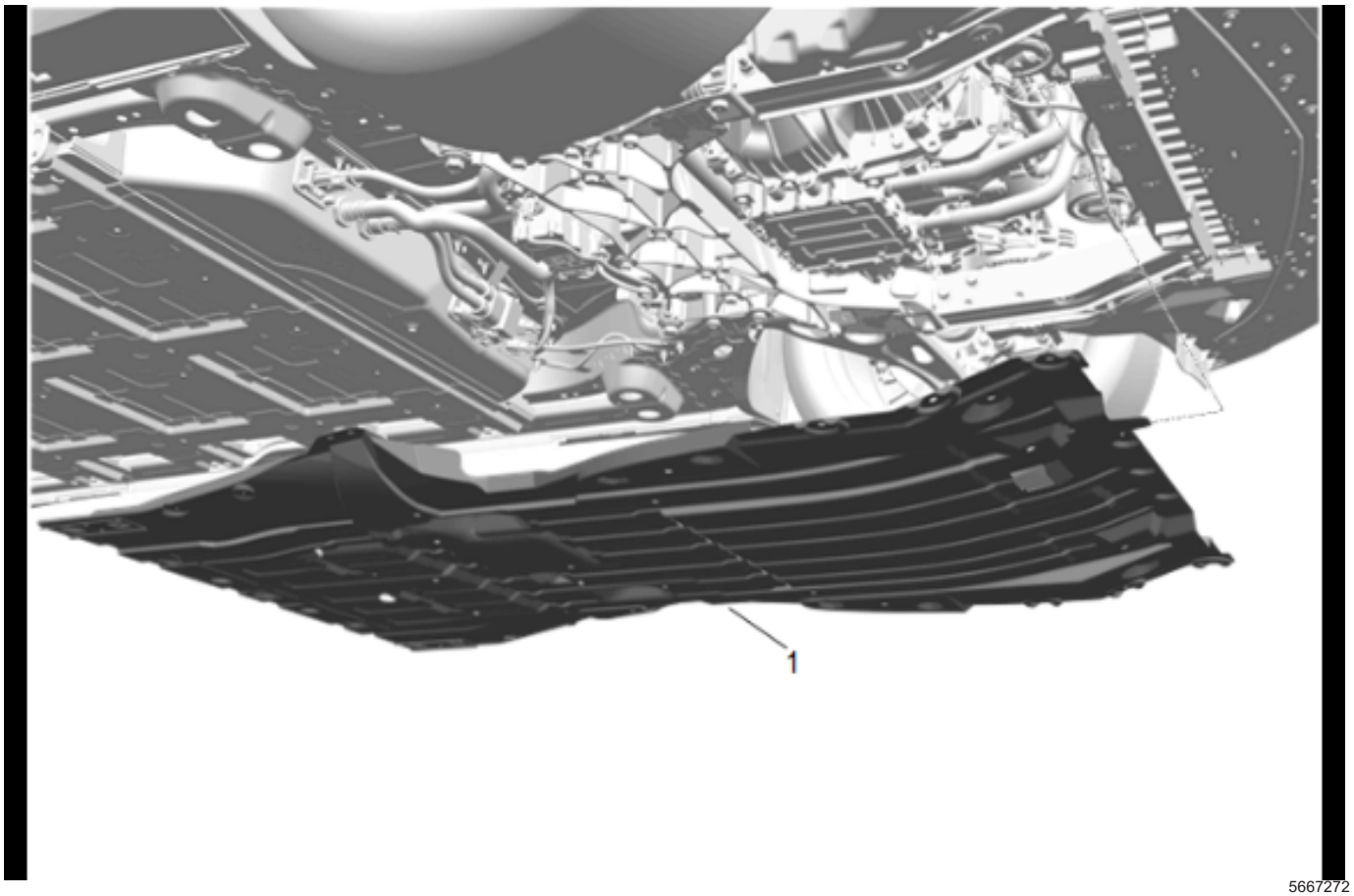

5667272

8. Front Compartment Air Deflector (1) » Remove

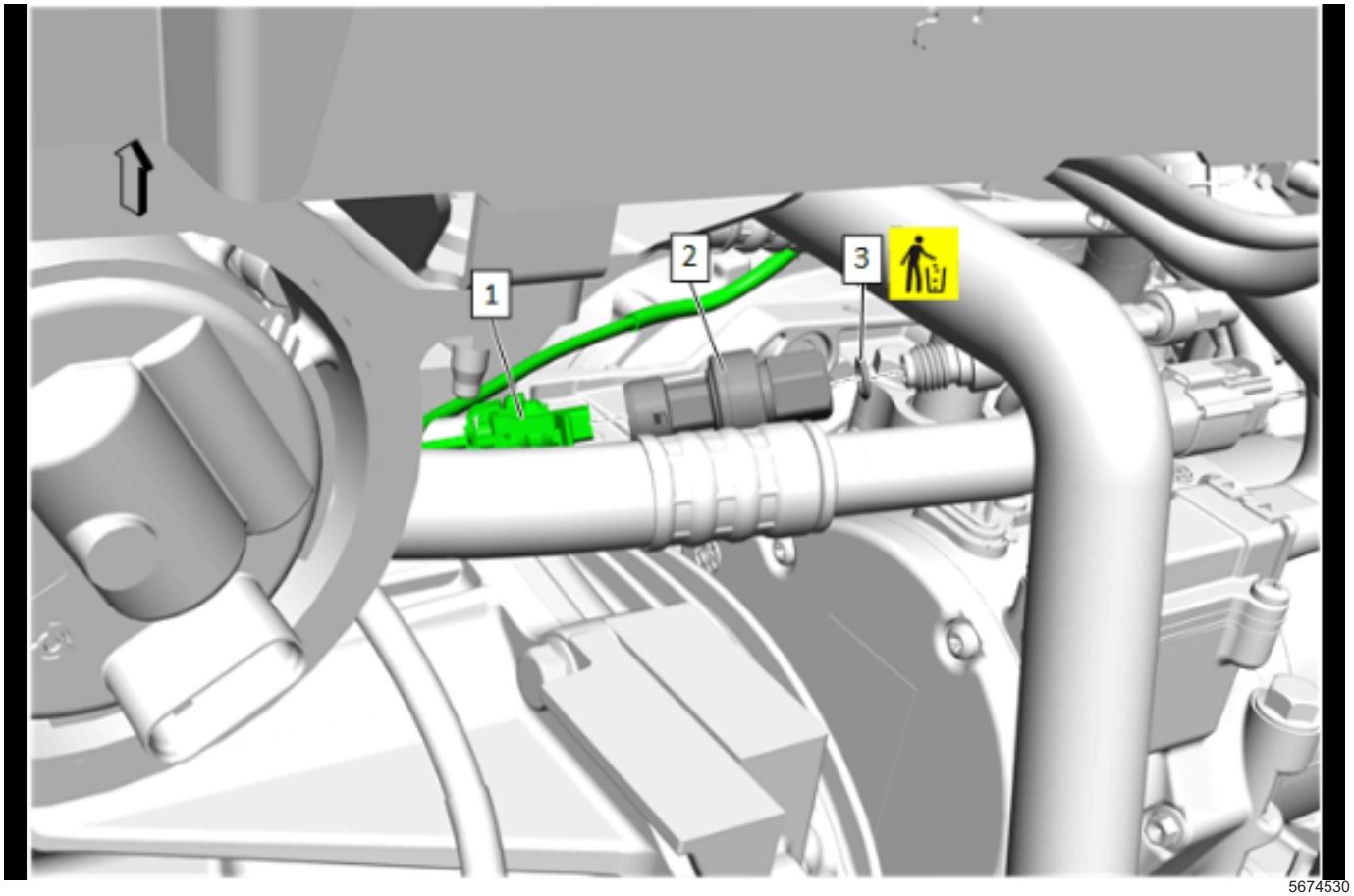

5674530

9. Electrical Connector (1) » Disconnect
10. Air Conditioning Refrigerant Pressure Sensor - Low Pressure (2) » Remove
11. Air Conditioning Refrigerant Pressure Sensor O-ring (3) » Remove and DISCARD

Installation Procedure

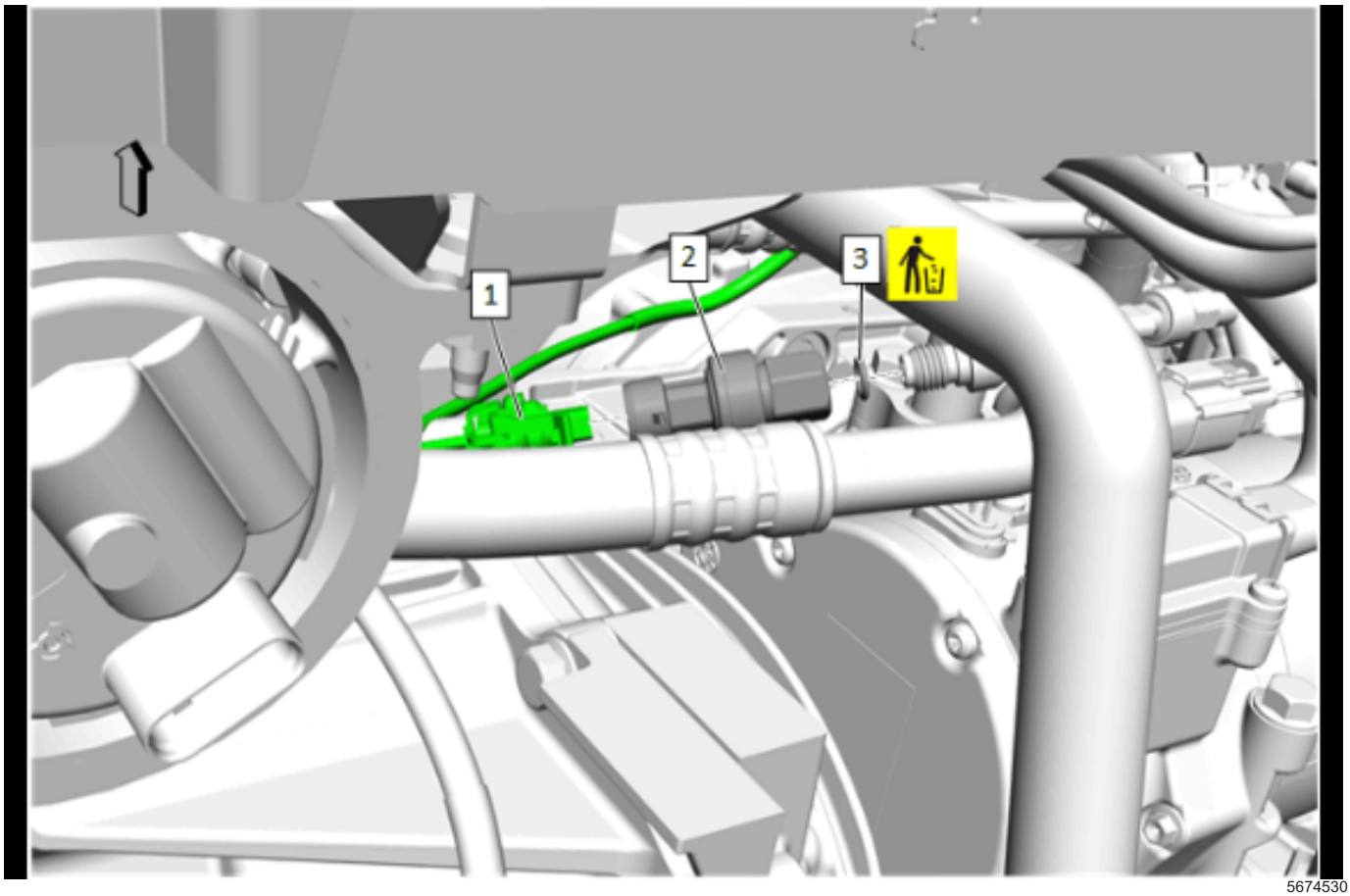

5674530

1. Air Conditioning Refrigerant Pressure Sensor O-ring (3) » Install NEW
2. Air Conditioning Refrigerant Pressure Sensor - Low Pressure (2) » Install and tighten — *Fastener Specifications on page 5-3*
3. Electrical Connector (1) » Connect

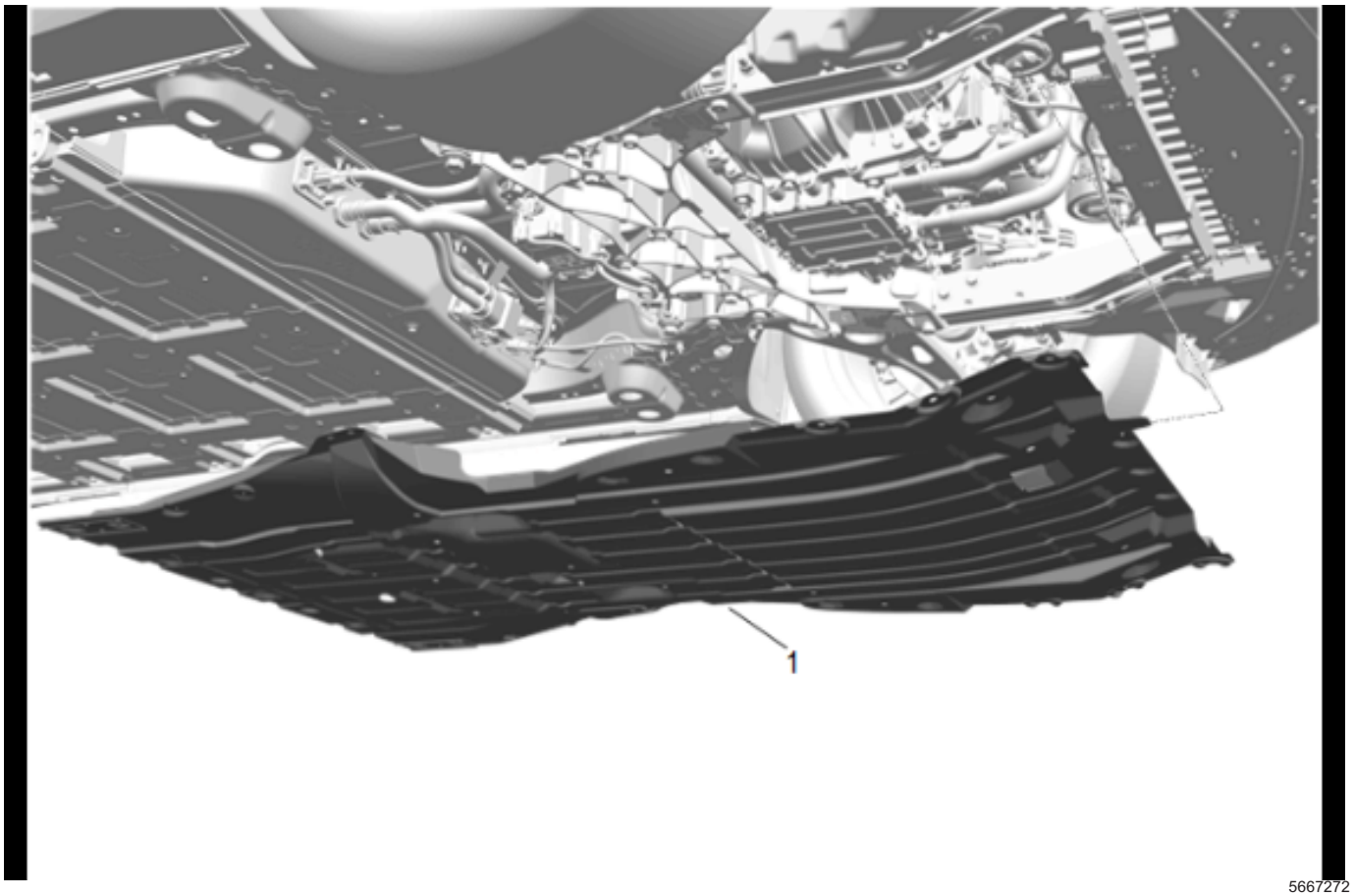

5667272

4. Front Compartment Air Deflector (1) » Install

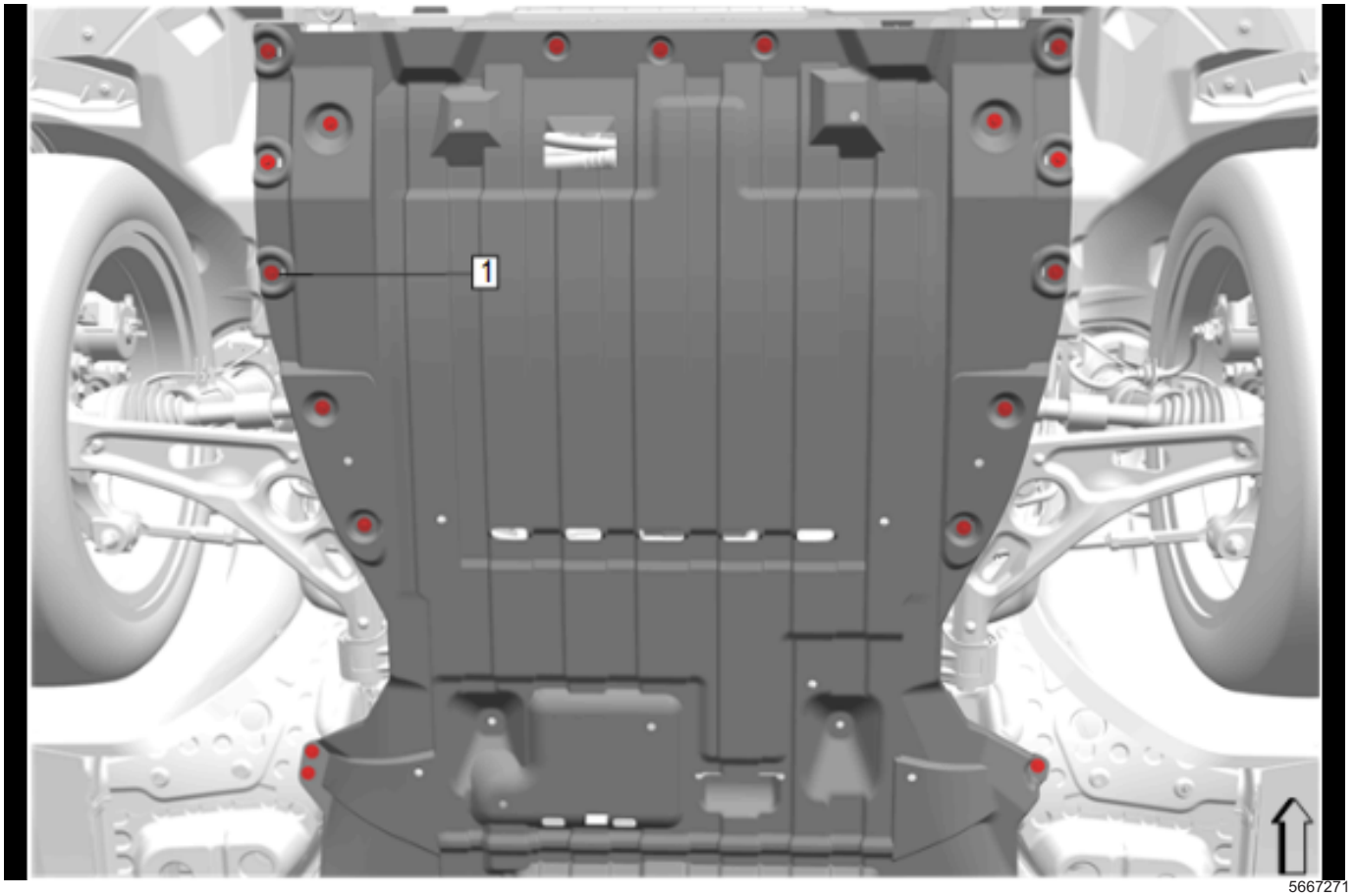

5667271

5. Front Compartment Air Deflector Bolt (1) » Install and tighten [18x]

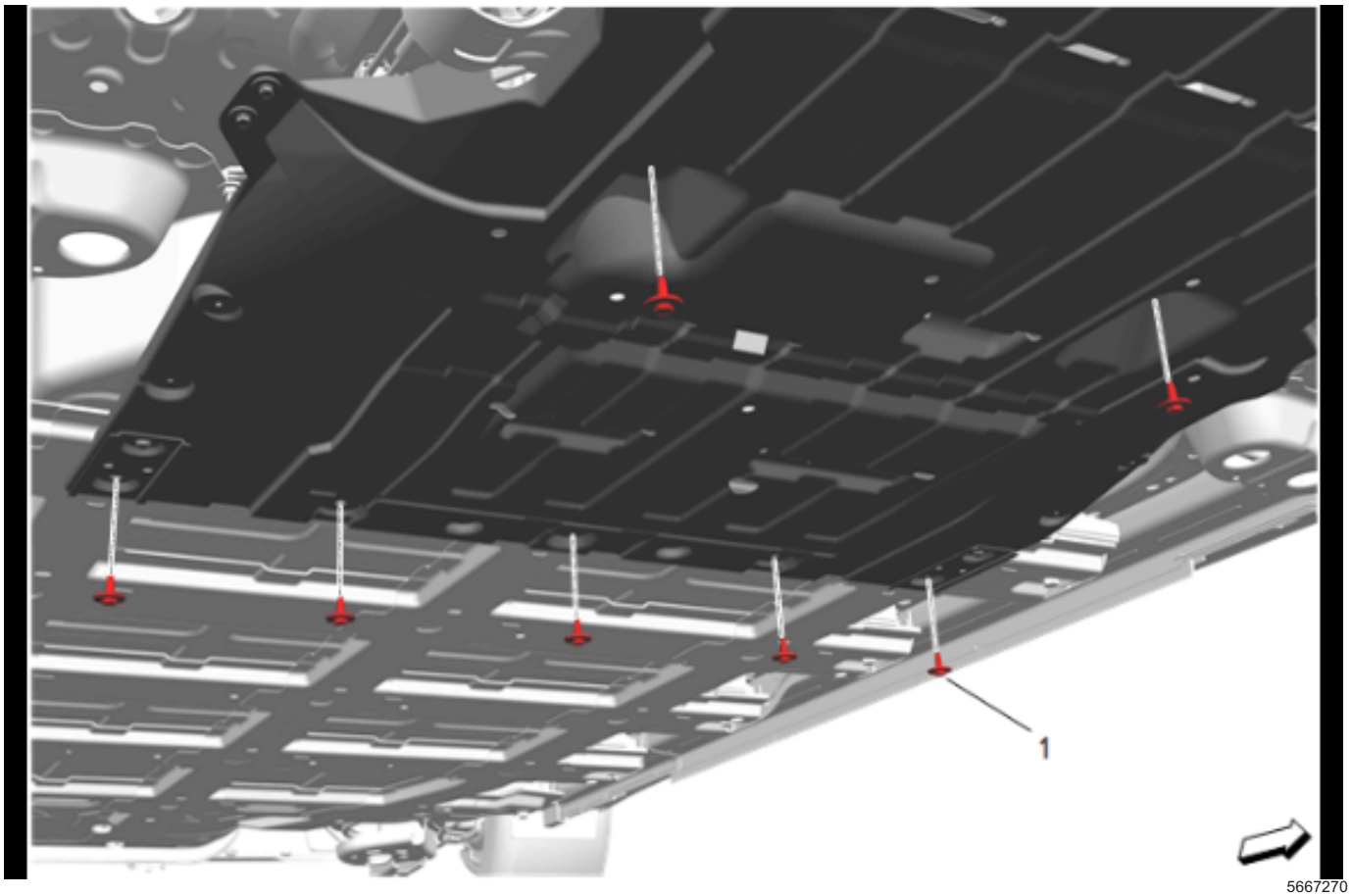

5667270

6. Front Compartment Air Deflector Bolt (1) » Install and tighten [7x]

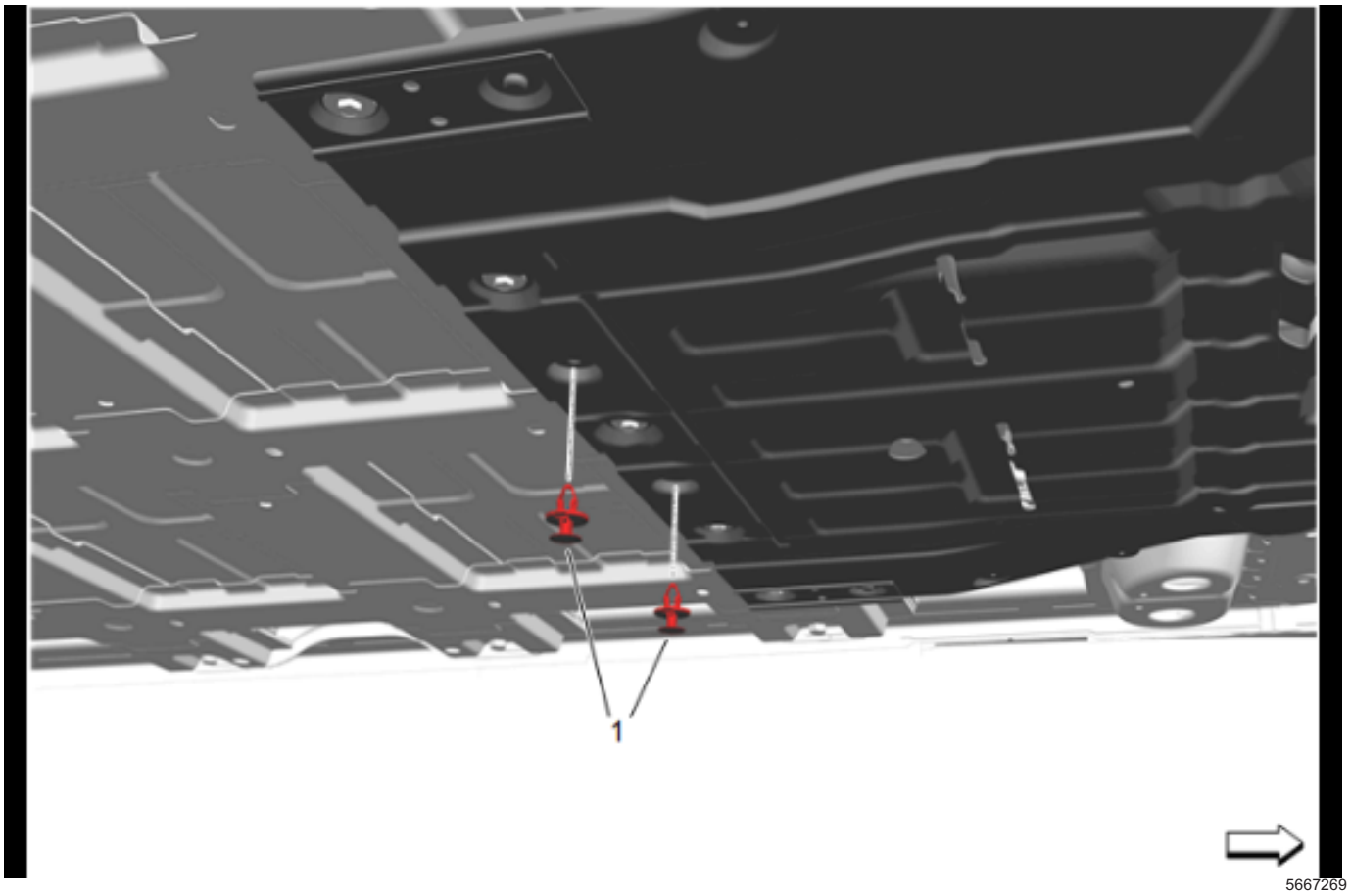

7. Front Compartment Air Deflector Retainer (1) » Install [2x]
8. Lower the vehicle.
9. Recharge the refrigerant. *Refrigerant Recovery and Recharging on page 5-36*
10. Connect the battery negative cable.

Air Conditioning Refrigerant Pressure Sensor Replacement - High Pressure

Single Use Fasteners and Components

- Air Conditioning Refrigerant Pressure Sensor O-ring

Removal Procedure

Danger: Before conducting any repair to this high voltage cooling system, it is necessary to determine/verify whether no high-voltage system faults exist. If high-voltage faults exist, follow published DTC diagnostics/repair procedures prior to performing any cooling system repairs. Failure to correct High Voltage Faults before working on the high voltage cooling system could result in personal injury or death.

1. Turn vehicle power OFF and remove all keyless entry transmitters from the vehicle and secure in a place outside the vehicle.
2. Disconnect the battery negative cable.
3. Recover the refrigerant. *Refrigerant Recovery and Recharging on page 5-36*
4. Raise and support the vehicle.

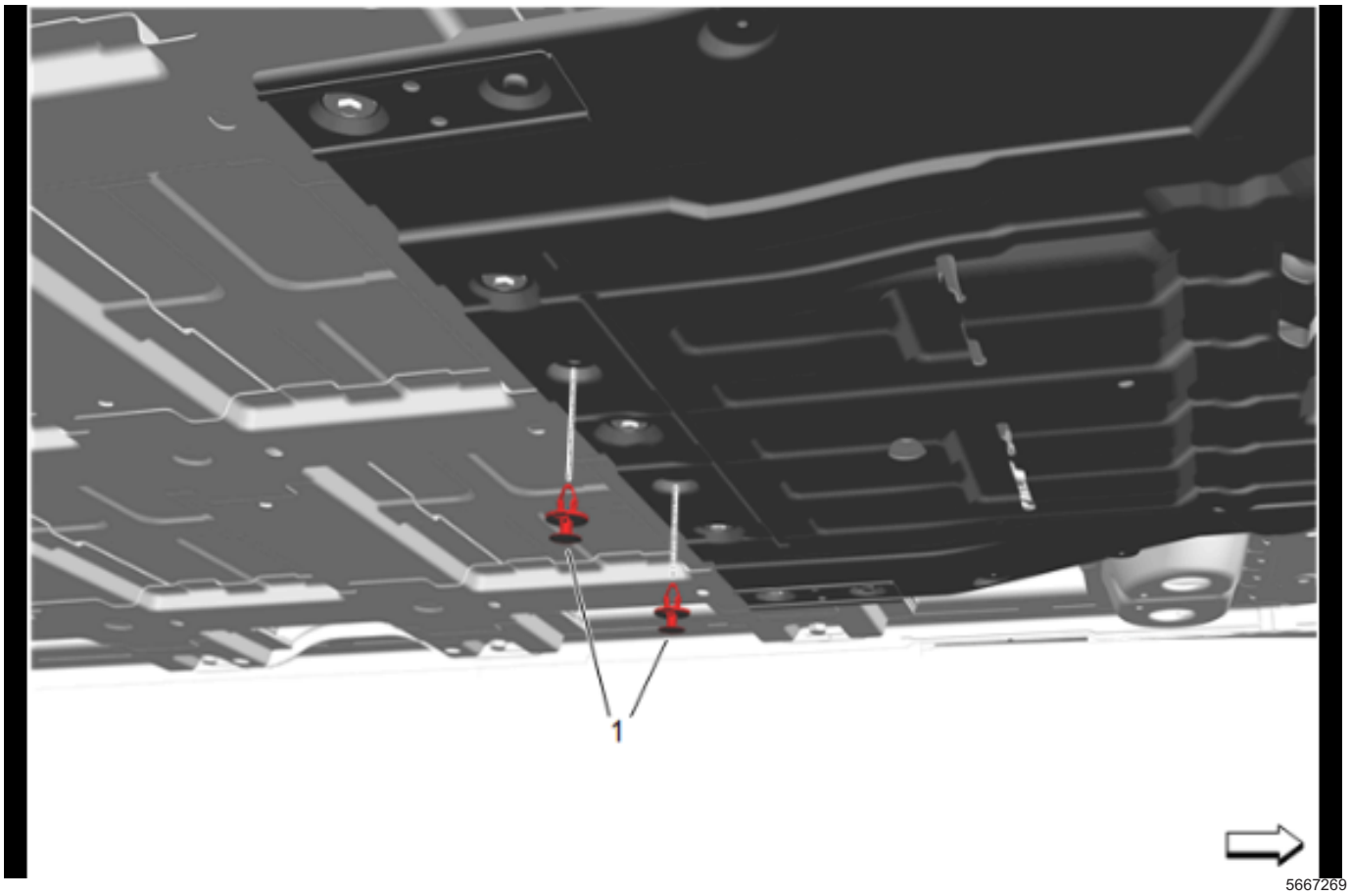

5. Front Compartment Air Deflector Retainer (1) » Remove [2x]

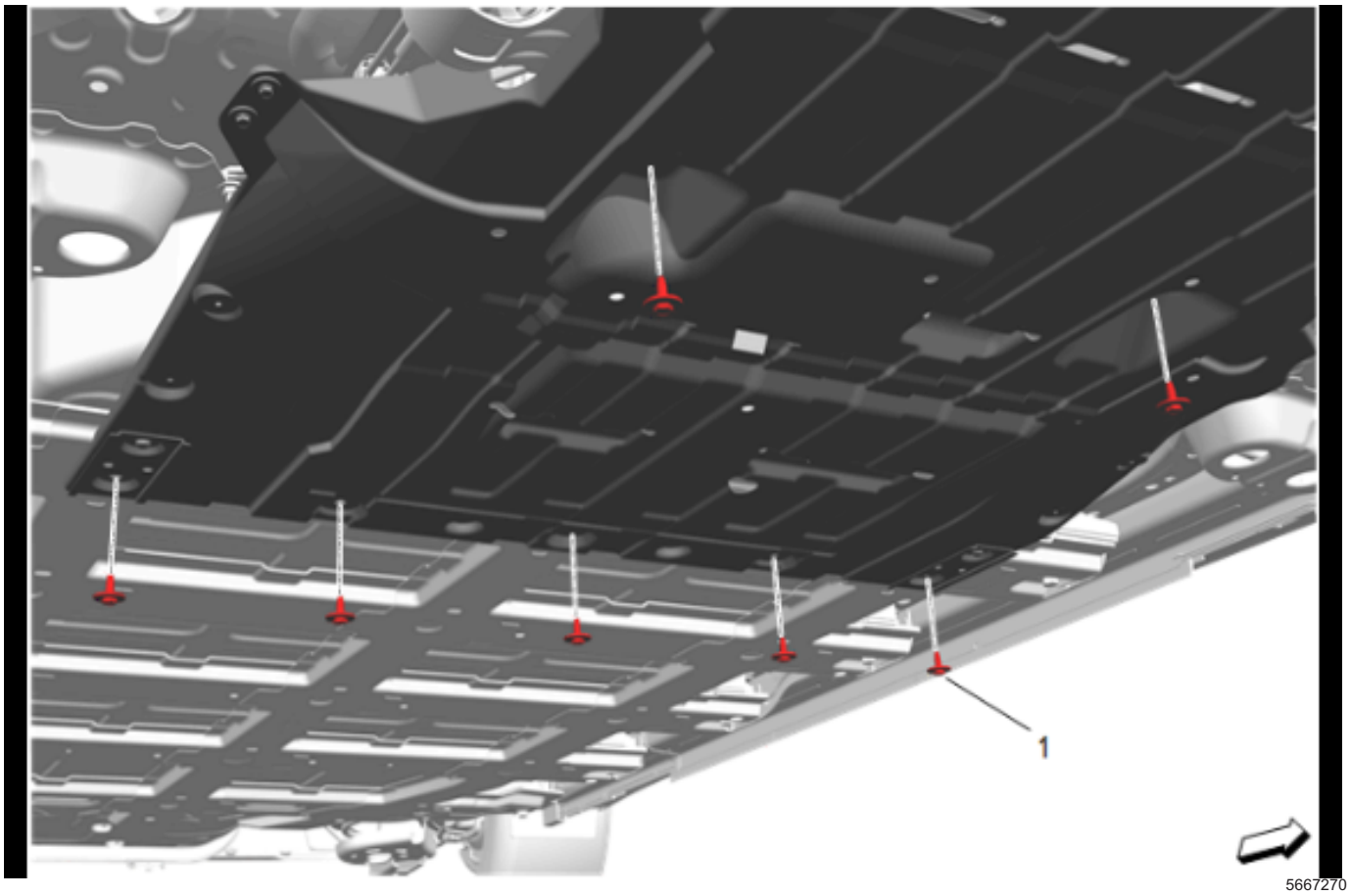

6. Front Compartment Air Deflector Bolt (1) »
   Remove [7x]

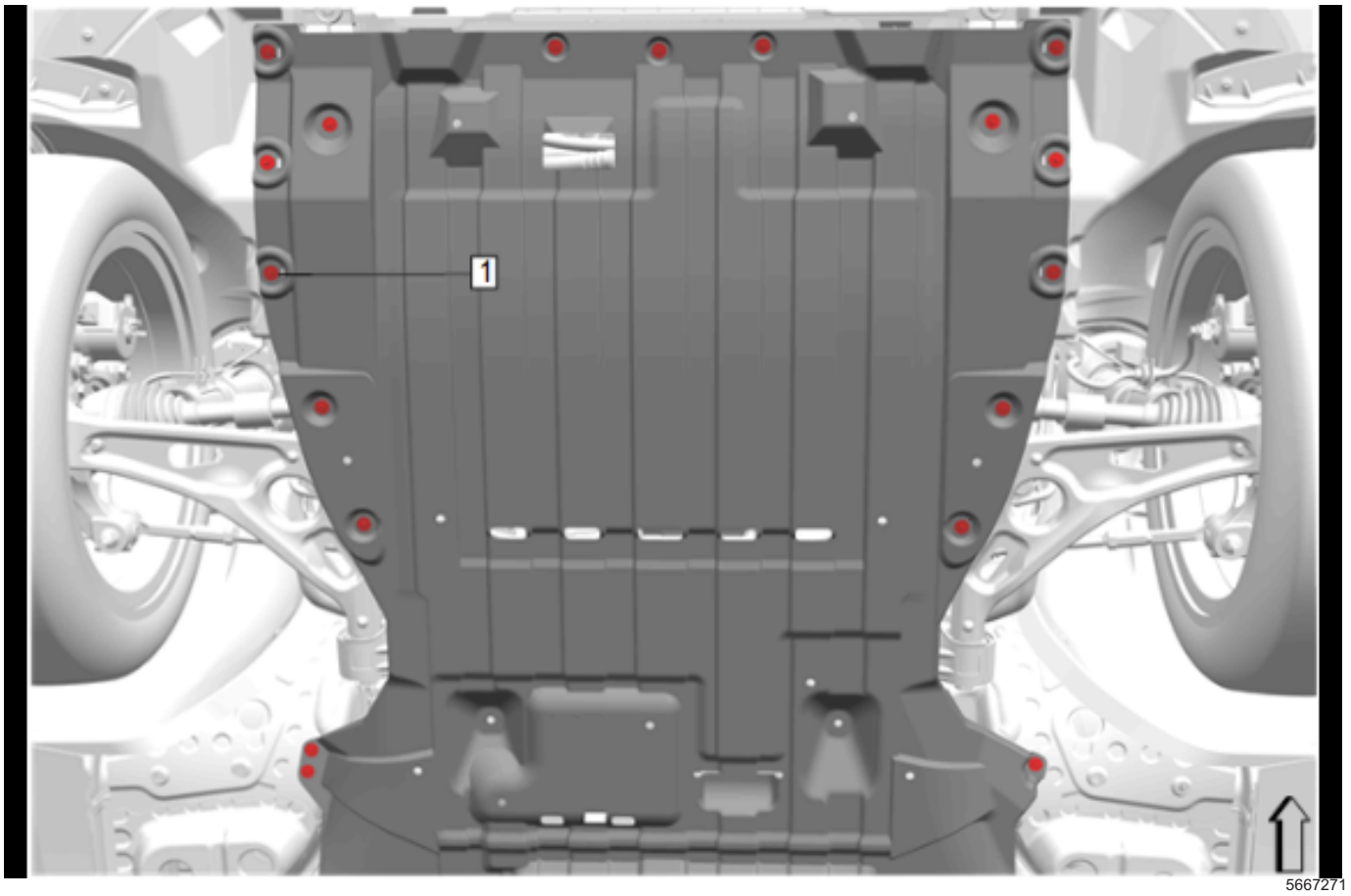

7. Front Compartment Air Deflector Bolt (1) »
   Remove [18x]

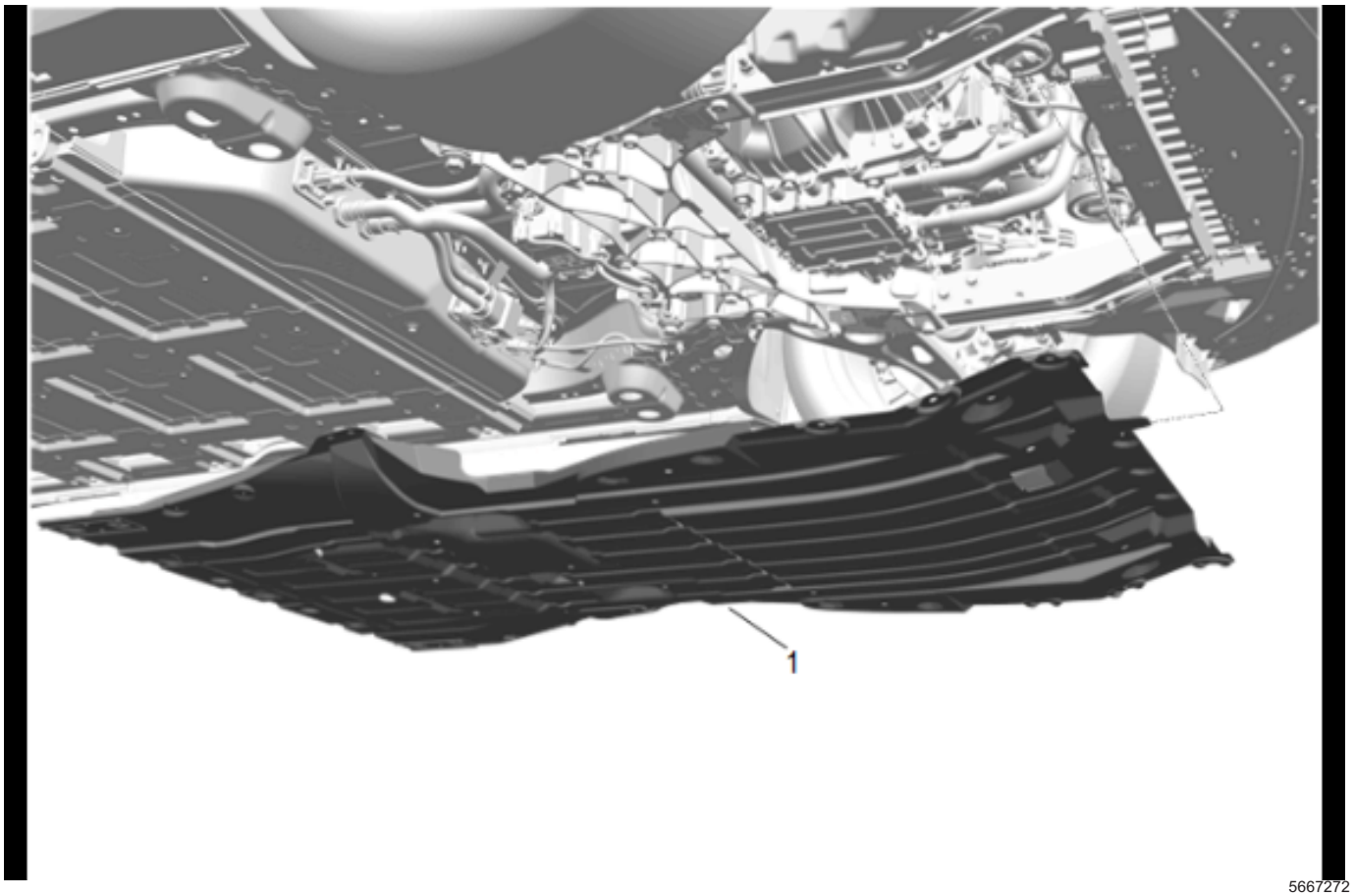

5667272

8. Front Compartment Air Deflector (1) » Remove

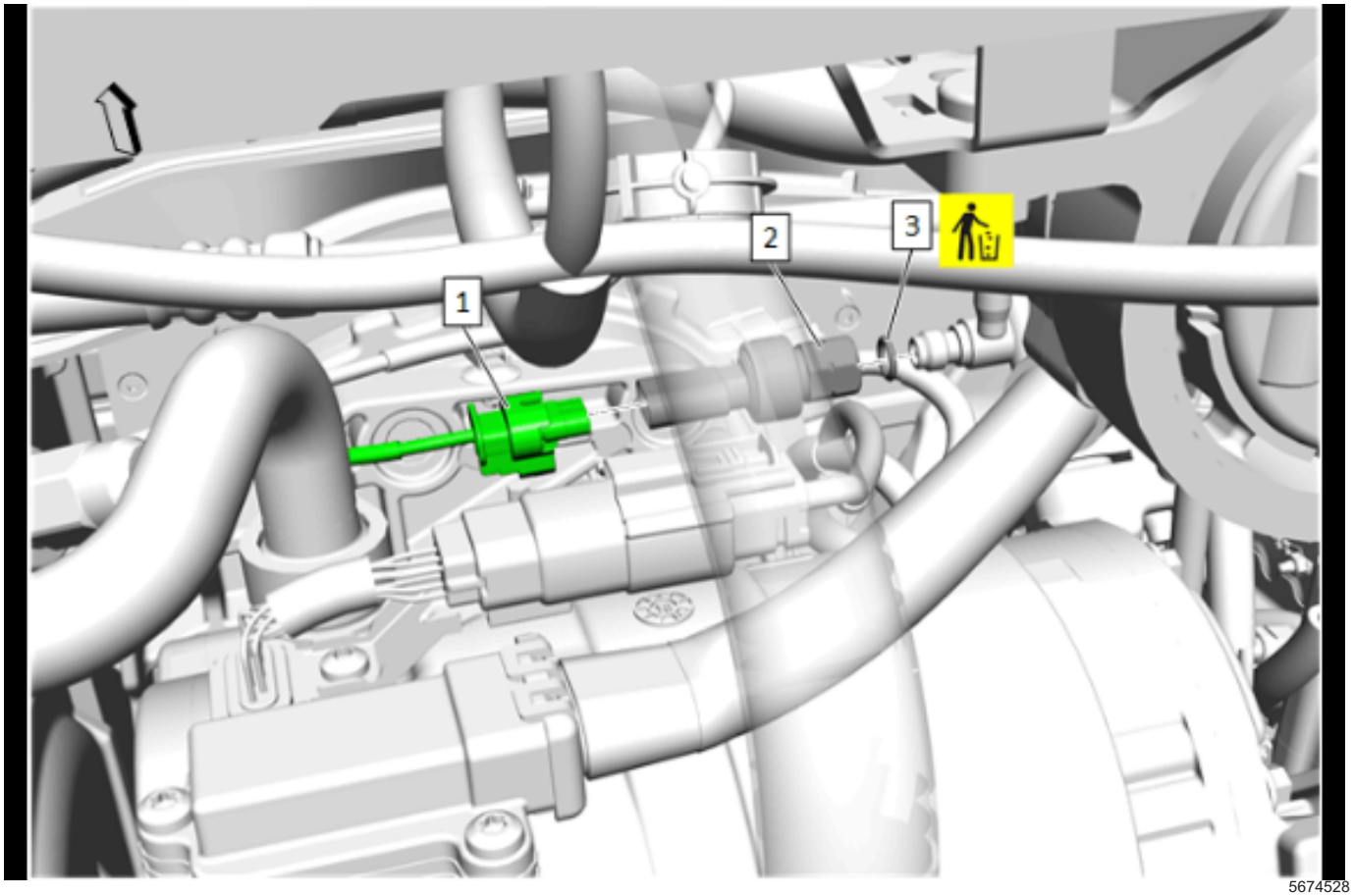

5674528

9. Electrical Connector (1) » Disconnect
10. Air Conditioning Refrigerant Pressure Sensor - High Pressure (2) » Remove
11. Air Conditioning Refrigerant Pressure Sensor O-ring (3) » Remove and DISCARD

Installation Procedure

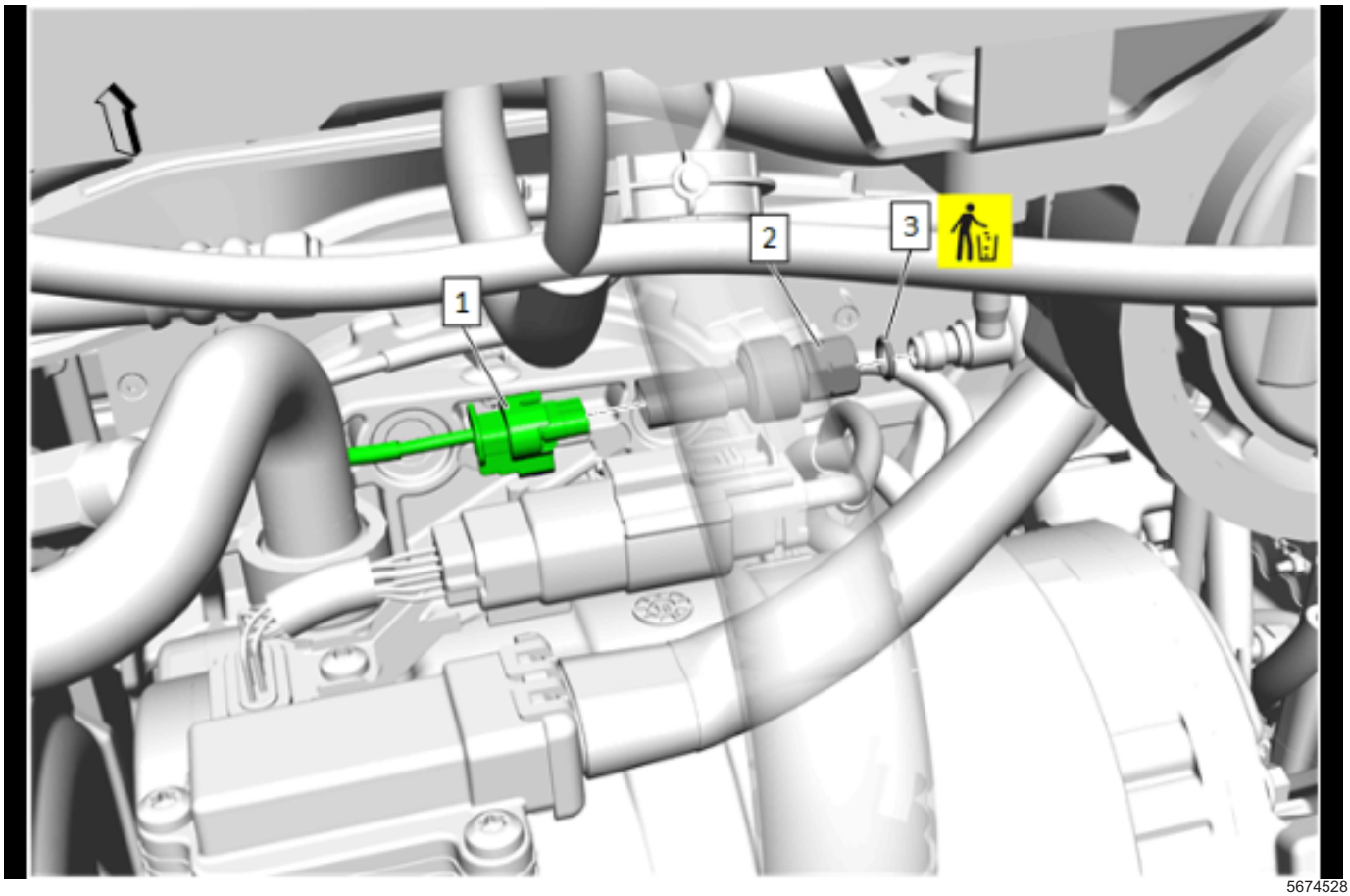

5674528

1. Air Conditioning Refrigerant Pressure Sensor O-ring (3) » Install NEW
2. Air Conditioning Refrigerant Pressure Sensor - High Pressure (2) » Install and tighten — *Fastener Specifications on page 5-3*
3. Electrical Connector (1) » Connect

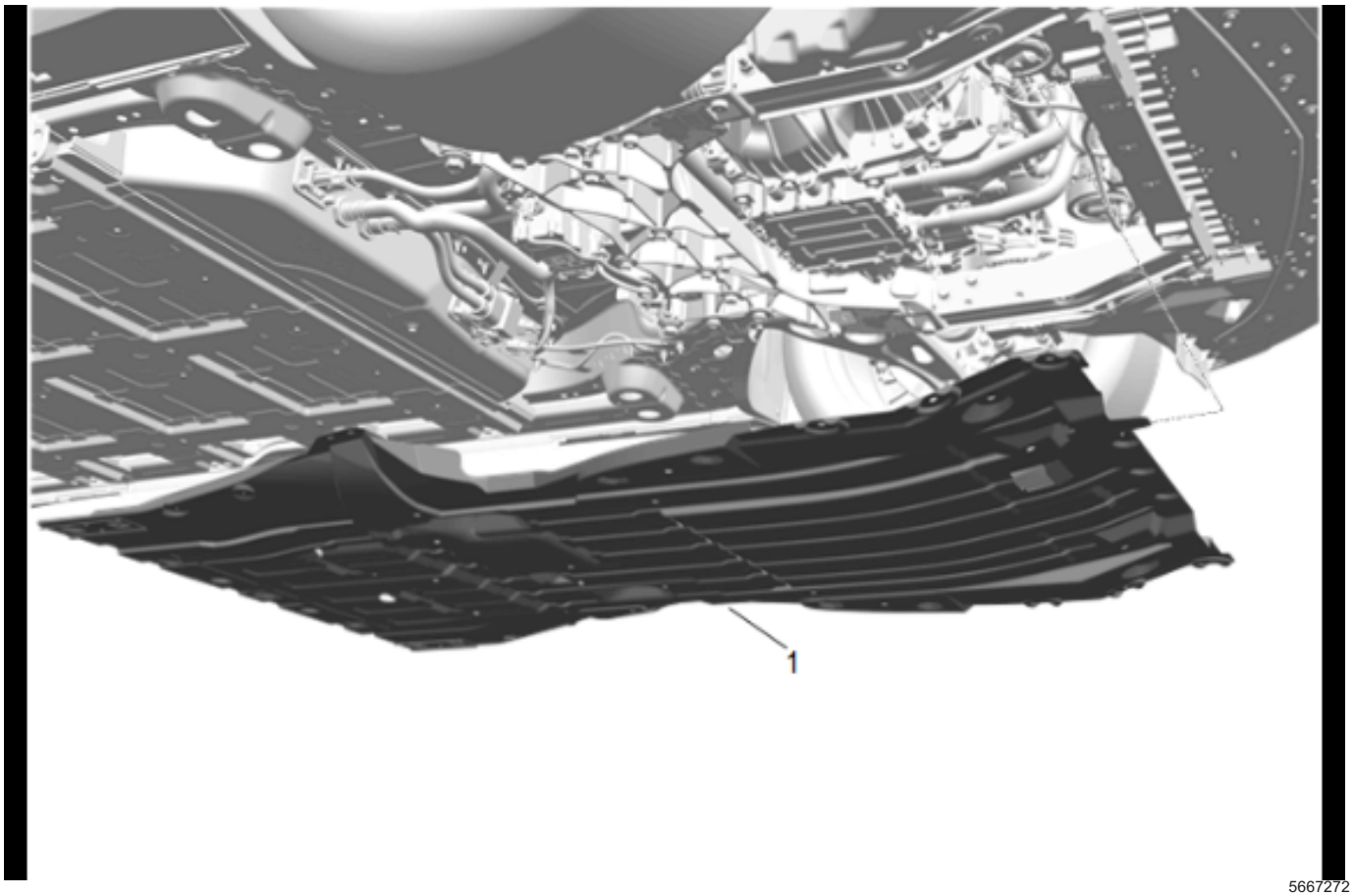

5667272

4. Front Compartment Air Deflector (1) » Install

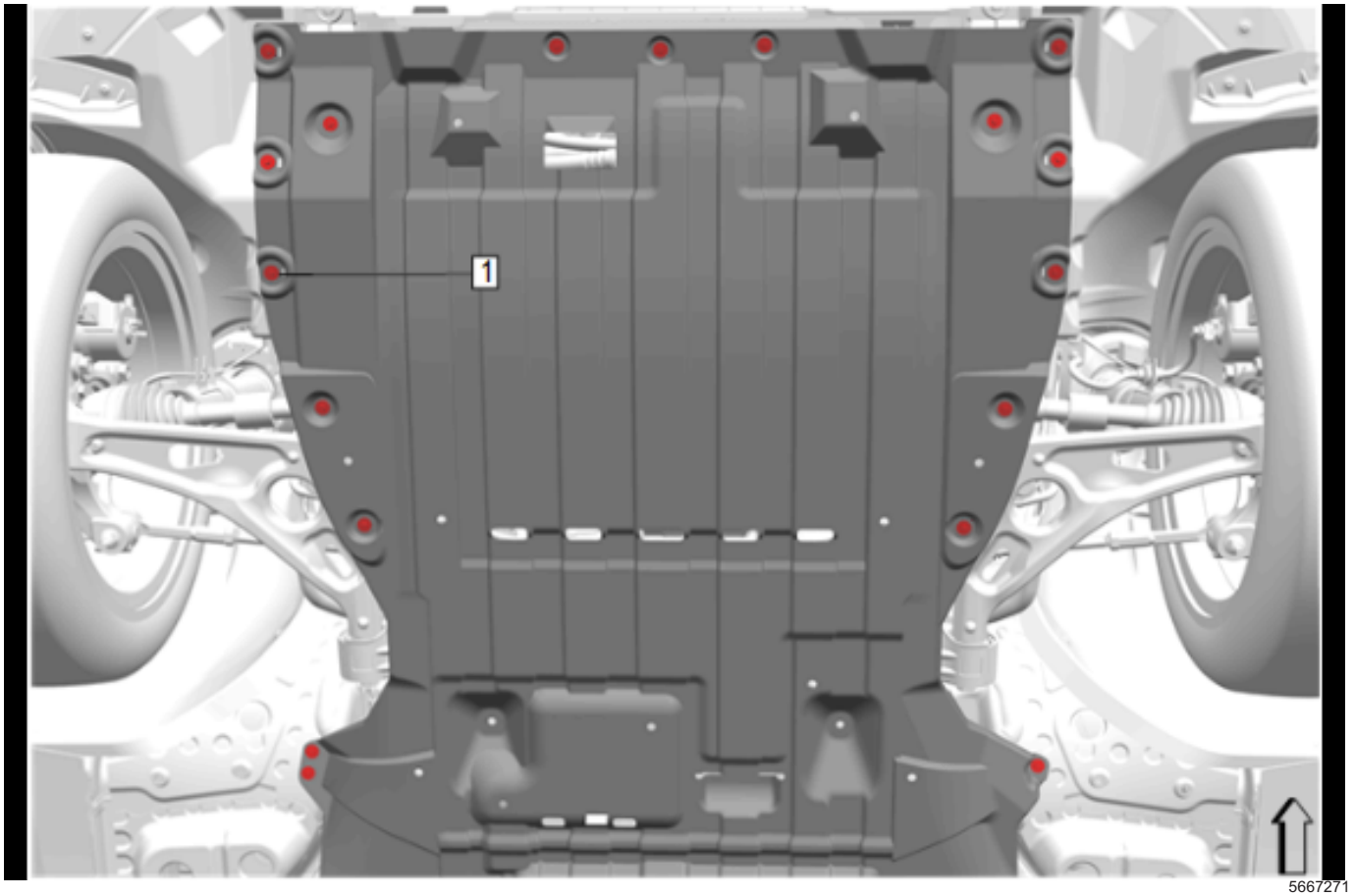

5667271

5. Front Compartment Air Deflector Bolt (1) » Install and tighten [18x]

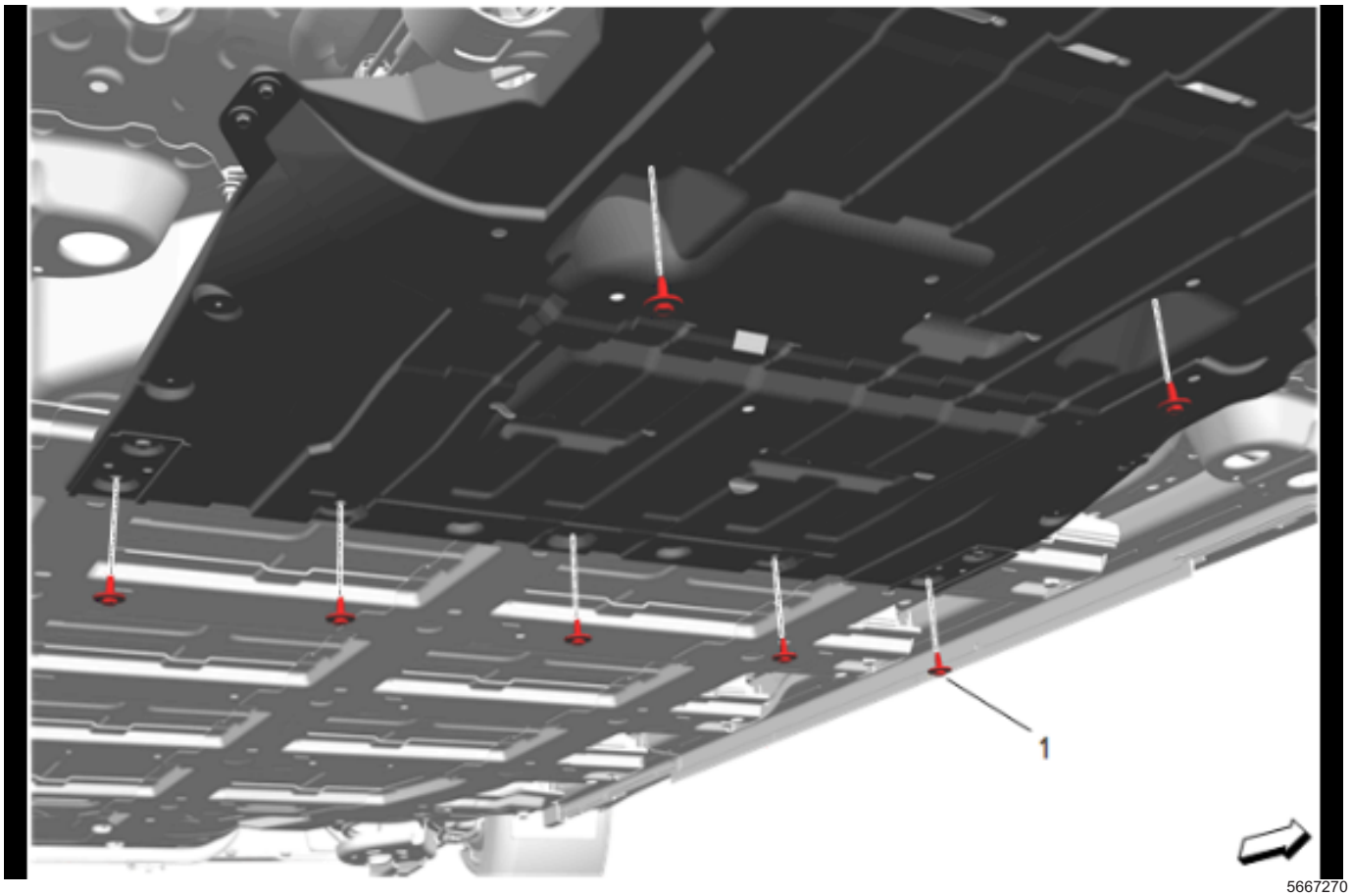

5667270

6. Front Compartment Air Deflector Bolt (1) » Install and tighten [7x]

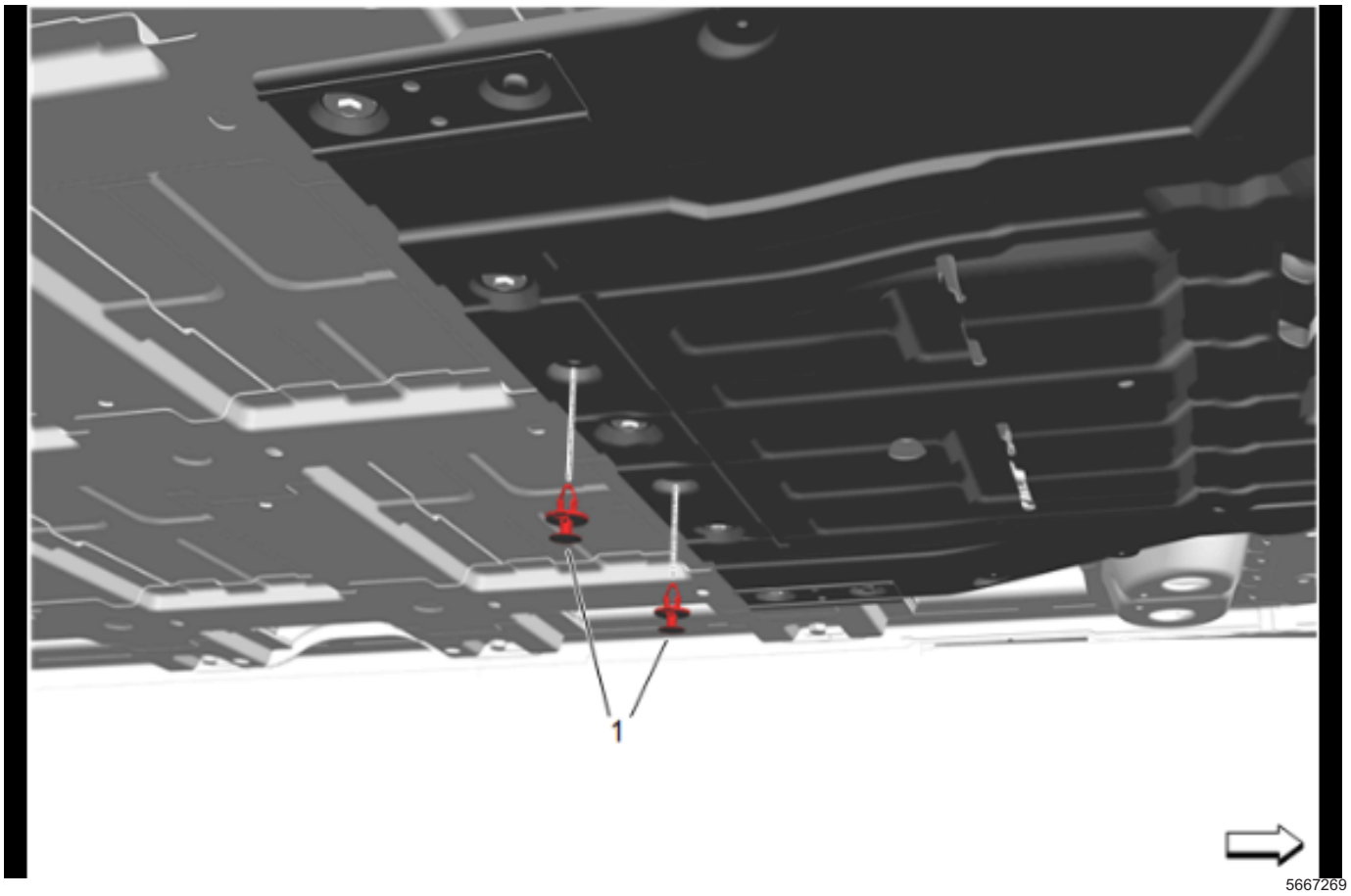

7. Front Compartment Air Deflector Retainer (1) » Install [2x]
8. Lower the vehicle.
9. Recharge the refrigerant. *Refrigerant Recovery and Recharging on page 5-36*
10. Connect the battery negative cable.

Air Conditioning Condenser Replacement

Single Use Fasteners and Components

- Air Conditioning Condenser Hose Seal - Large
- Air Conditioning Condenser Hose Seal - Small

Removal Procedure

1. Recover the refrigerant. *Refrigerant Recovery and Recharging on page 5-36*

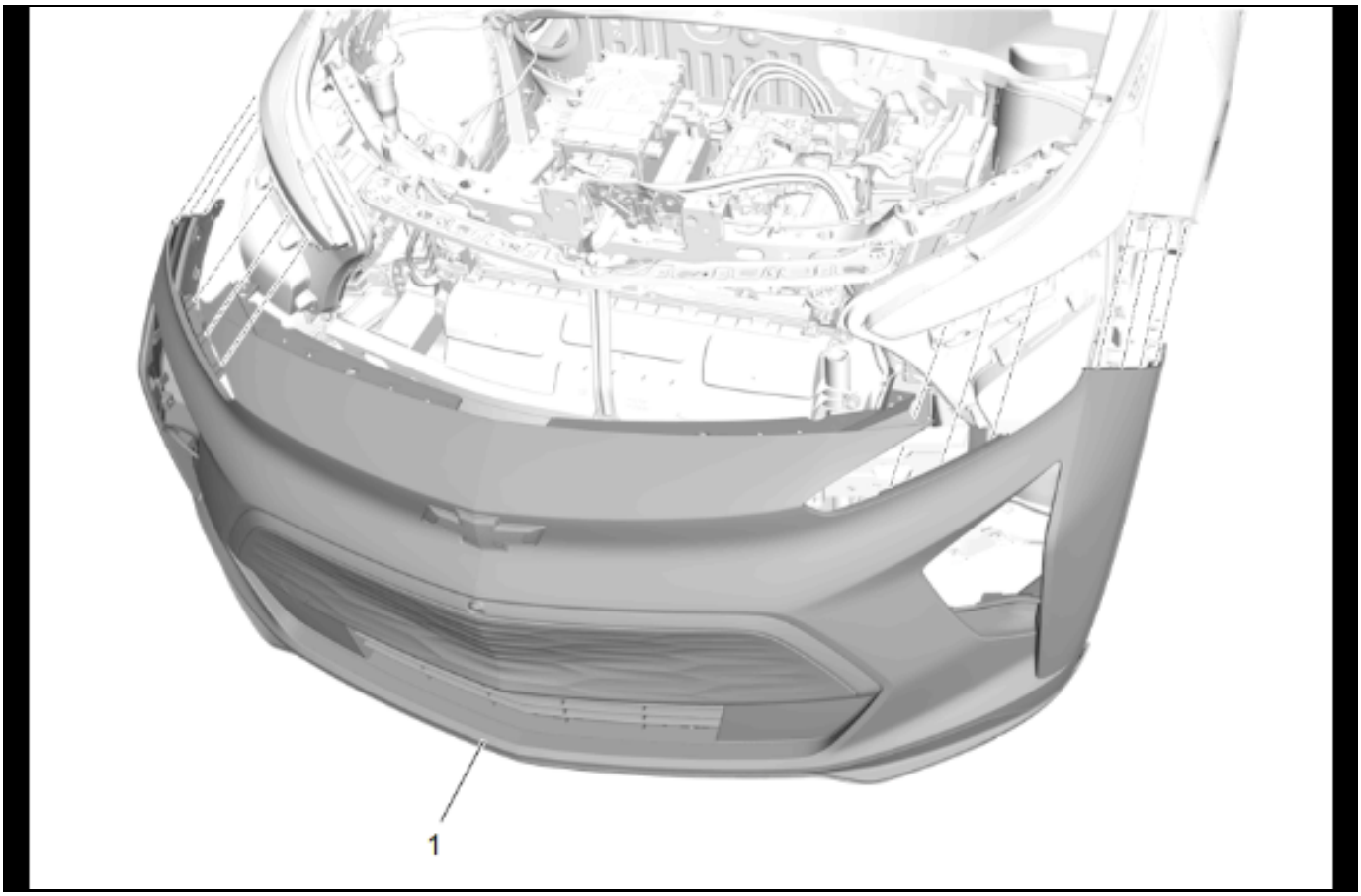

5662711

2. Front Bumper Fascia (1) » Remove — Front Bumper Fascia Removal and Installation

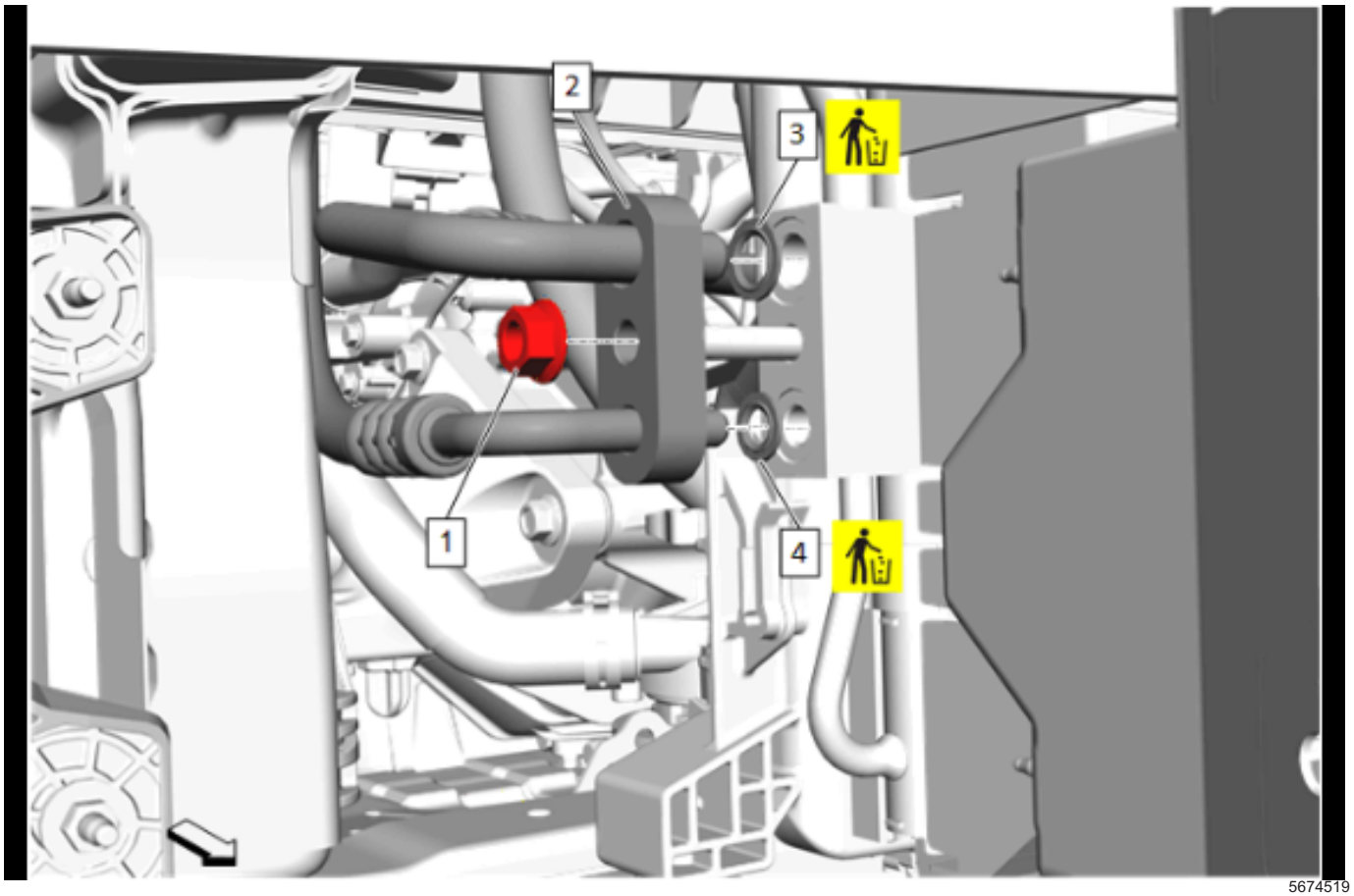

5674519

3. Air Conditioning Condenser Hose Nut (1) » Remove
4. Air Conditioning Condenser Hose (2) @ Air Conditioning Condenser » Remove
5. Air Conditioning Condenser Hose Seal - Large (3) » Remove and DISCARD
6. Air Conditioning Condenser Hose Seal - Small (4) » Remove and DISCARD

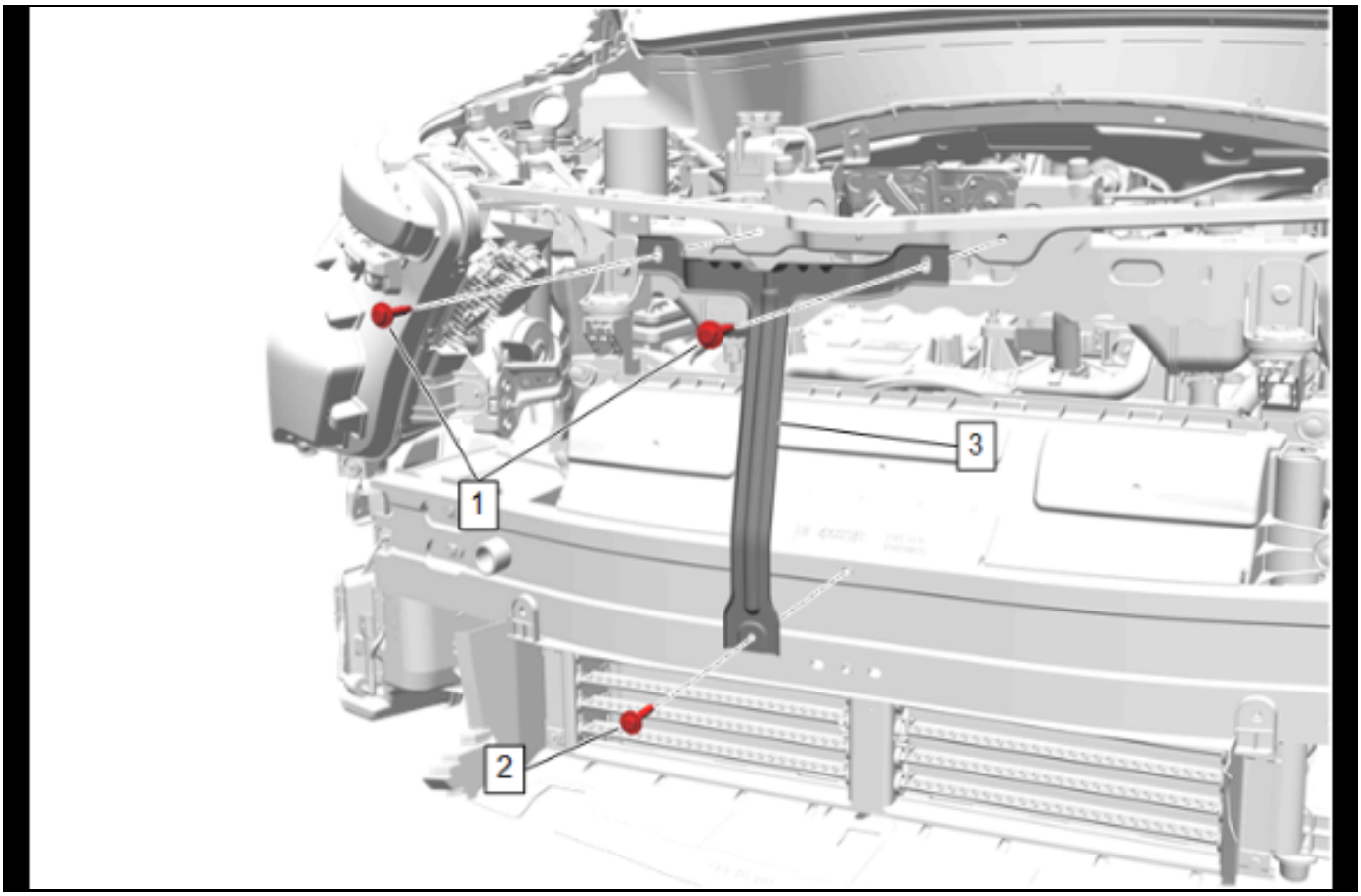

5675536

7. Front Bumper Fascia Center Support Bolt (1) » Remove [2x]
8. Front Bumper Fascia Support Brace Bolt (2) » Remove
9. Hood Front Bumper Bracket Support (3) » Remove

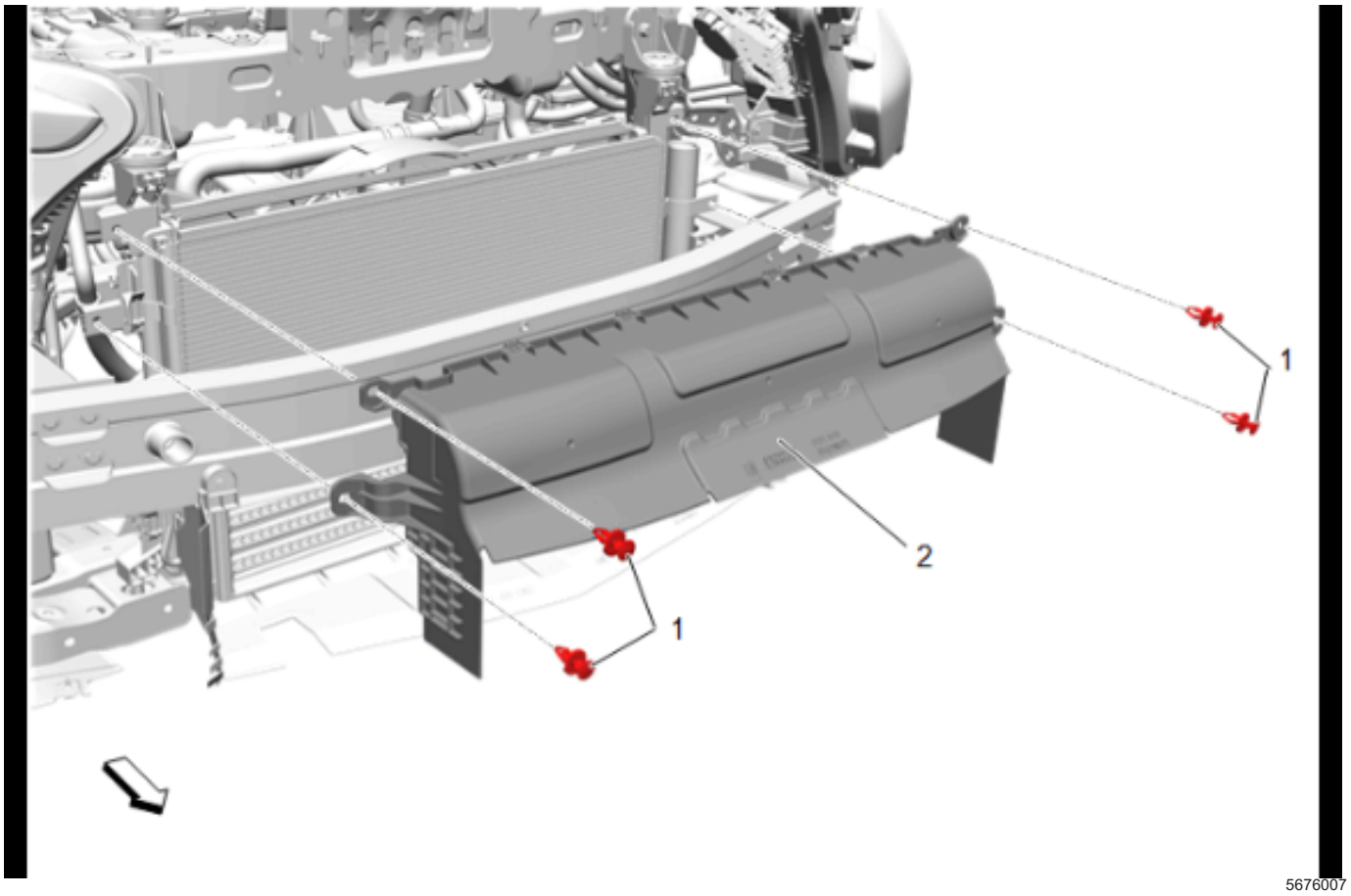

10. Radiator Air Upper Baffle Retainer (1) » Remove [4x]
11. Radiator Air Upper Baffle and Deflector (2) » Remove

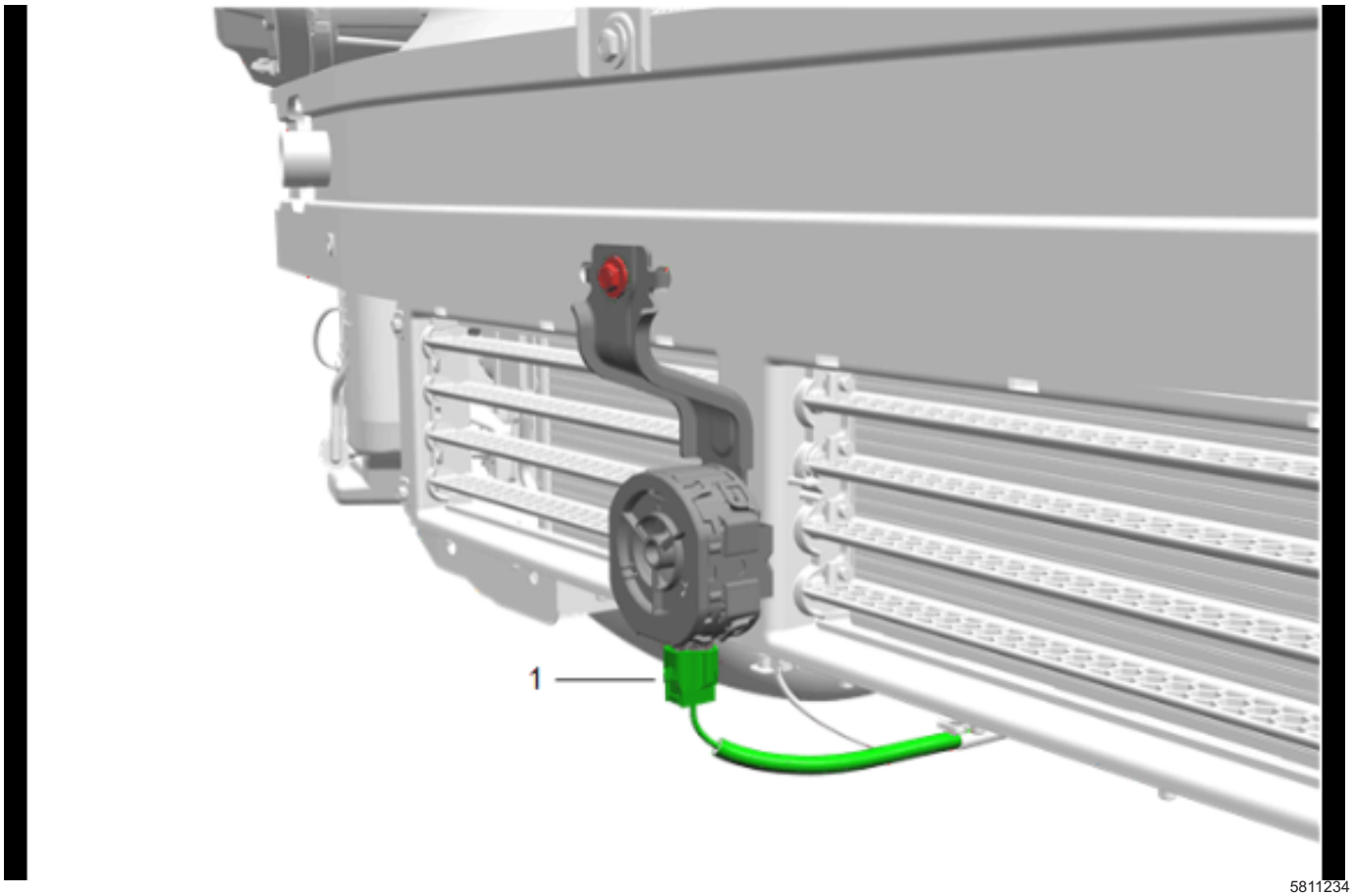

5811234

12. Electrical Connector (1) » Disconnect

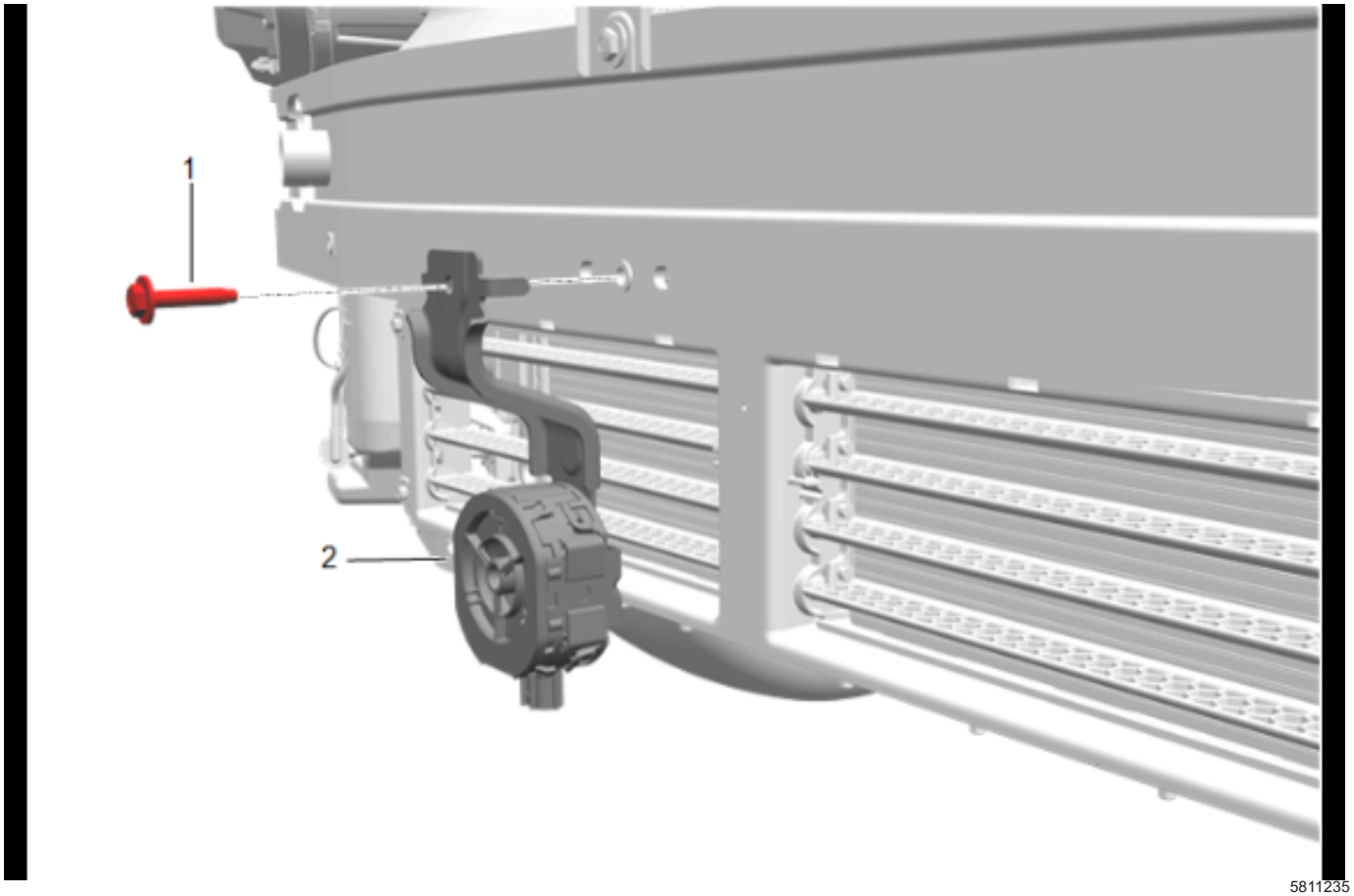

5811235

13. Pedestrian Sound Alert Speaker Bracket Bolt (1)
    » Remove

    Note: The pedestrian sound alert speaker and bracket are serviced as an assembly.

14. Pedestrian Sound Alert Speaker (2) » Remove

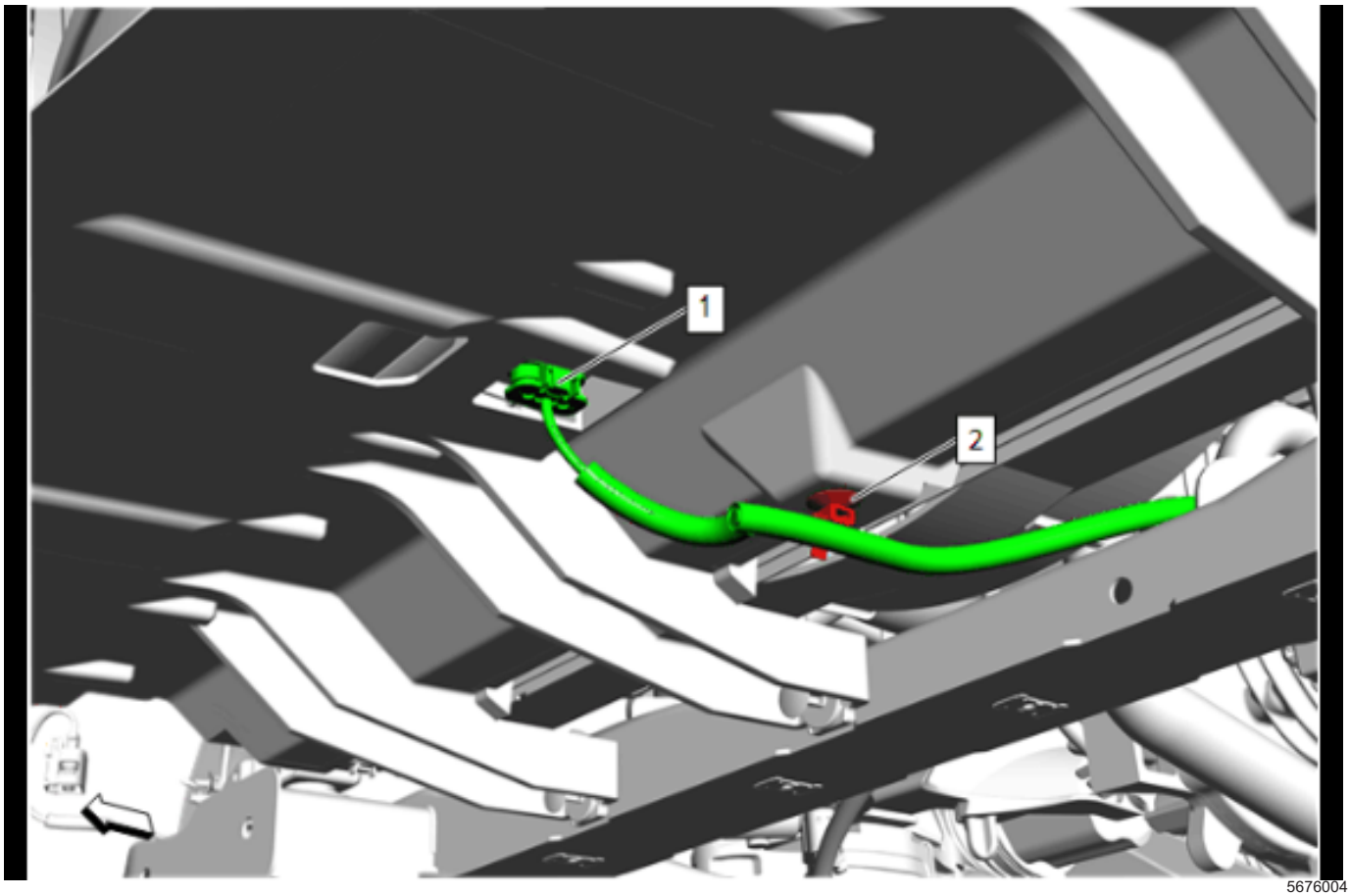

5676004

15. Electrical Connector (1) » Disconnect
16. Retainer (2) » Remove

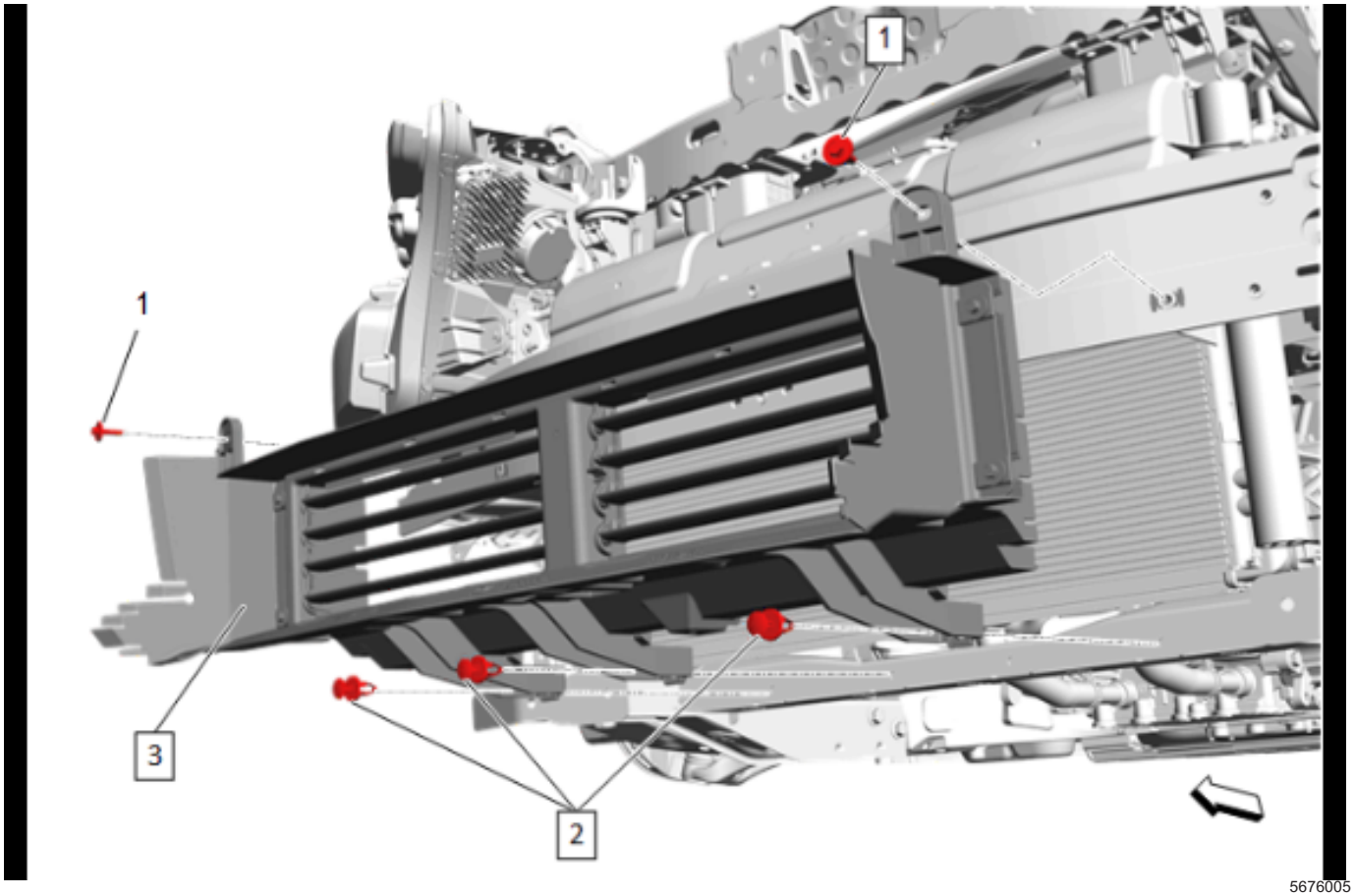

5676005

17. Radiator Air Lower Baffle Bolt (1) » Remove [2x]
18. Radiator Air Lower Baffle Retainer (2) » Remove [3x]
19. Remove the radiator air lower baffle and deflector (3) with the front bumper shutter

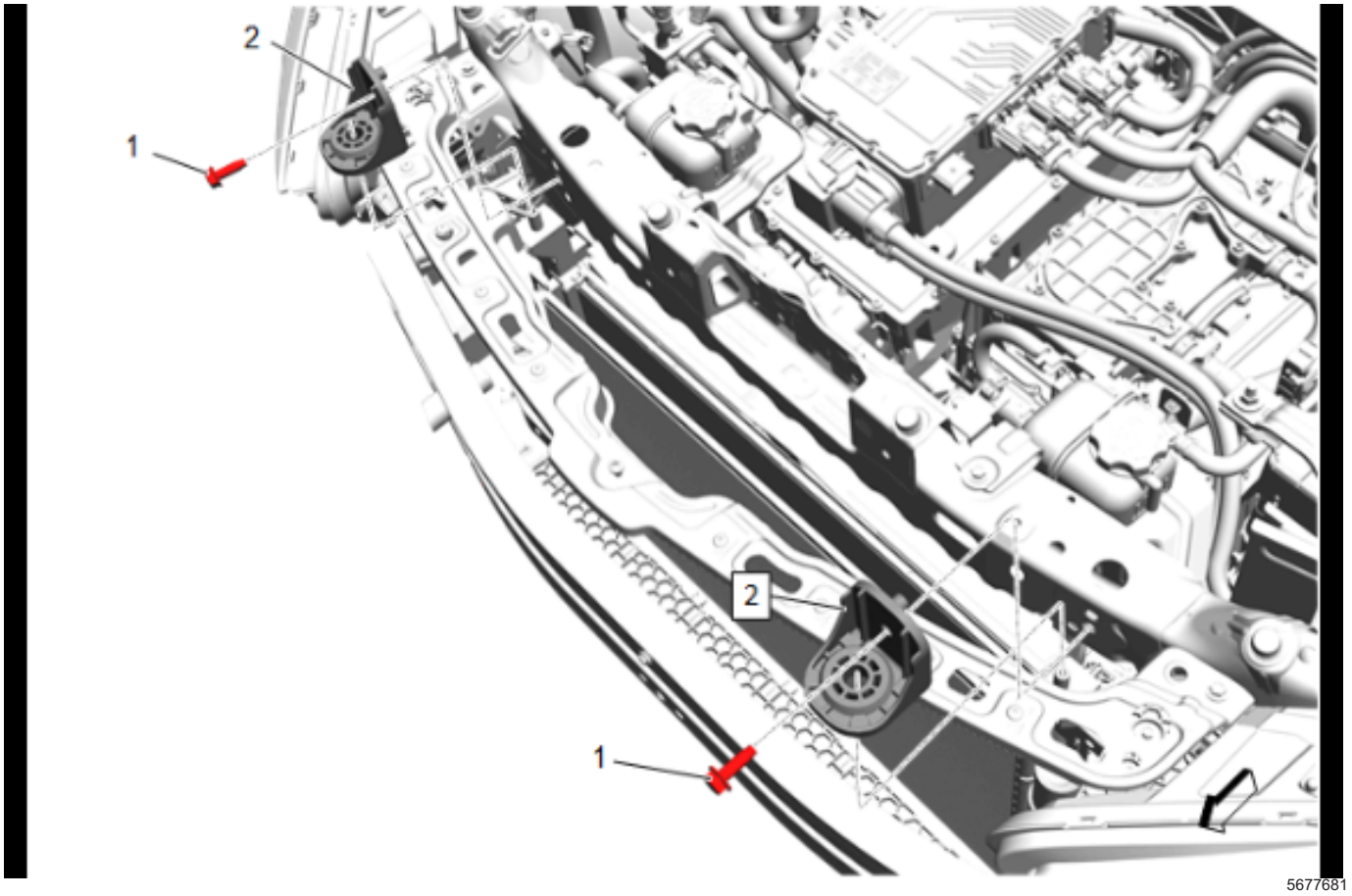

20. Radiator Upper Bracket Bolt (1) » Remove [2x]
21. Radiator Upper Bracket (2) » Remove [2x]

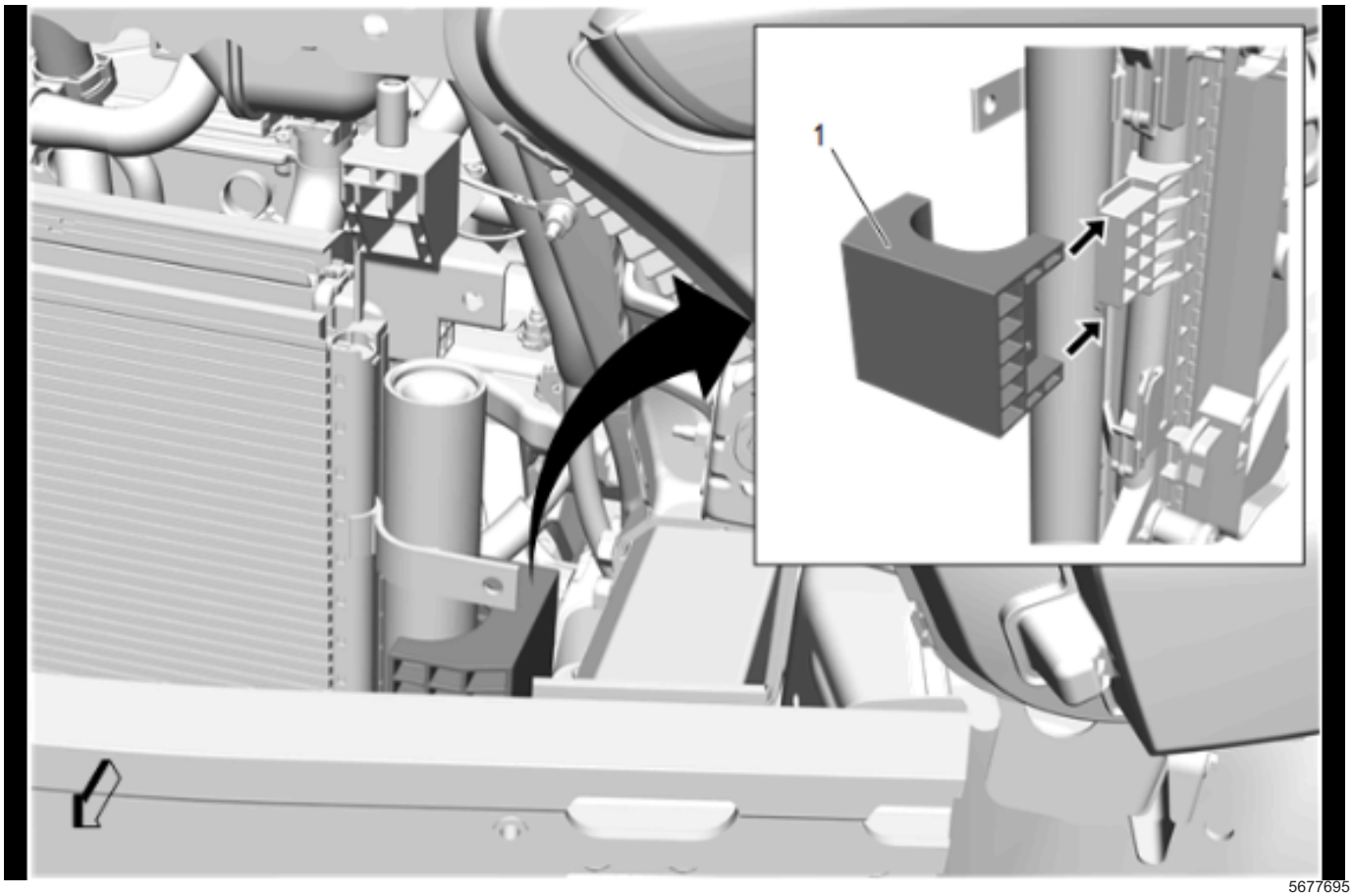

5677695

22. Lift radiator assembly slightly to remove the radiator protector.
23. Using a flat bladed tool, remove the radiator protector (1).

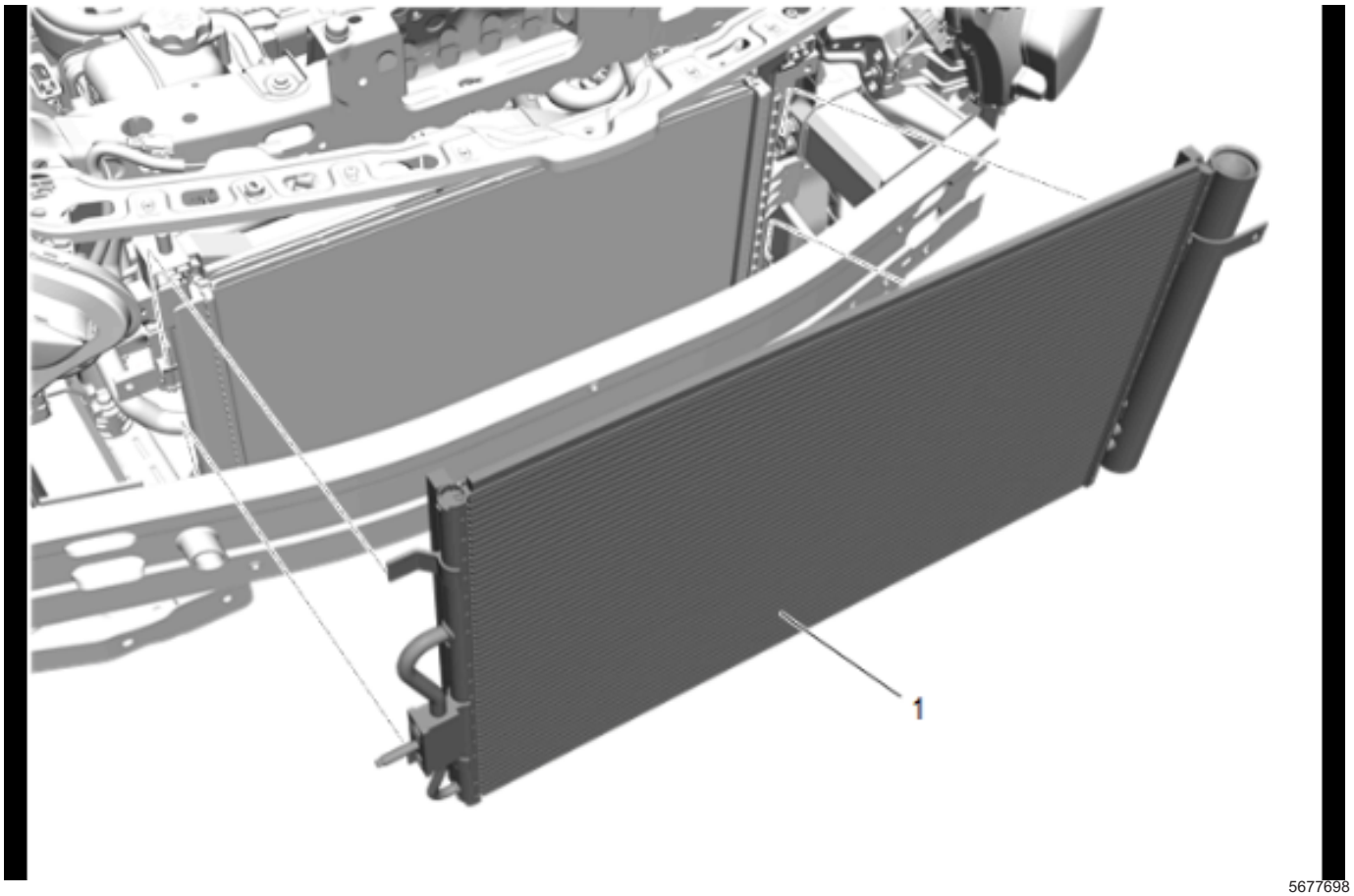

5677698

24. Air Conditioning Condenser (1) @ Radiator Assembly » Remove

Installation Procedure

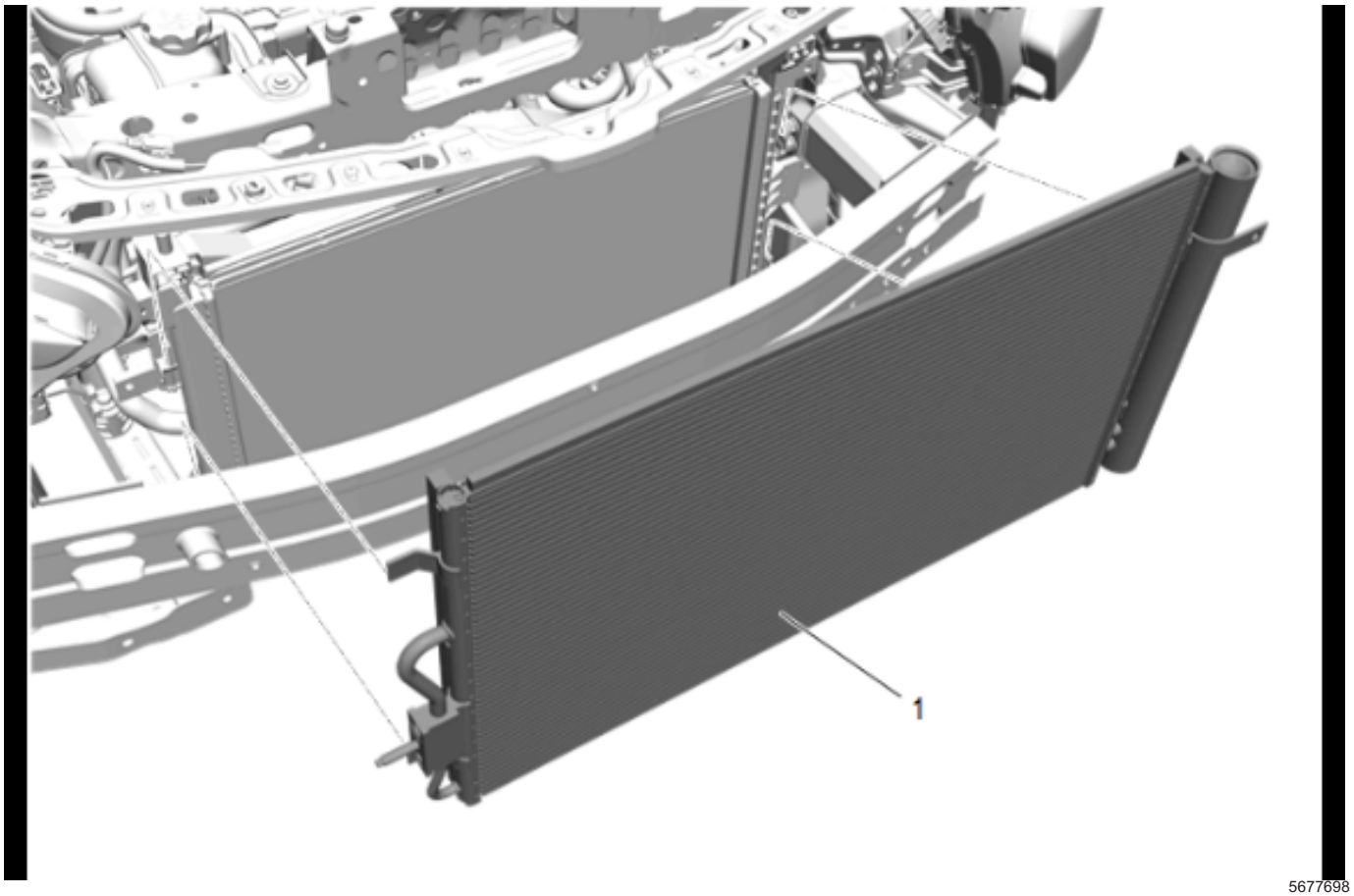

5677698

1. Air Conditioning Condenser (1) @ Radiator Assembly » Install

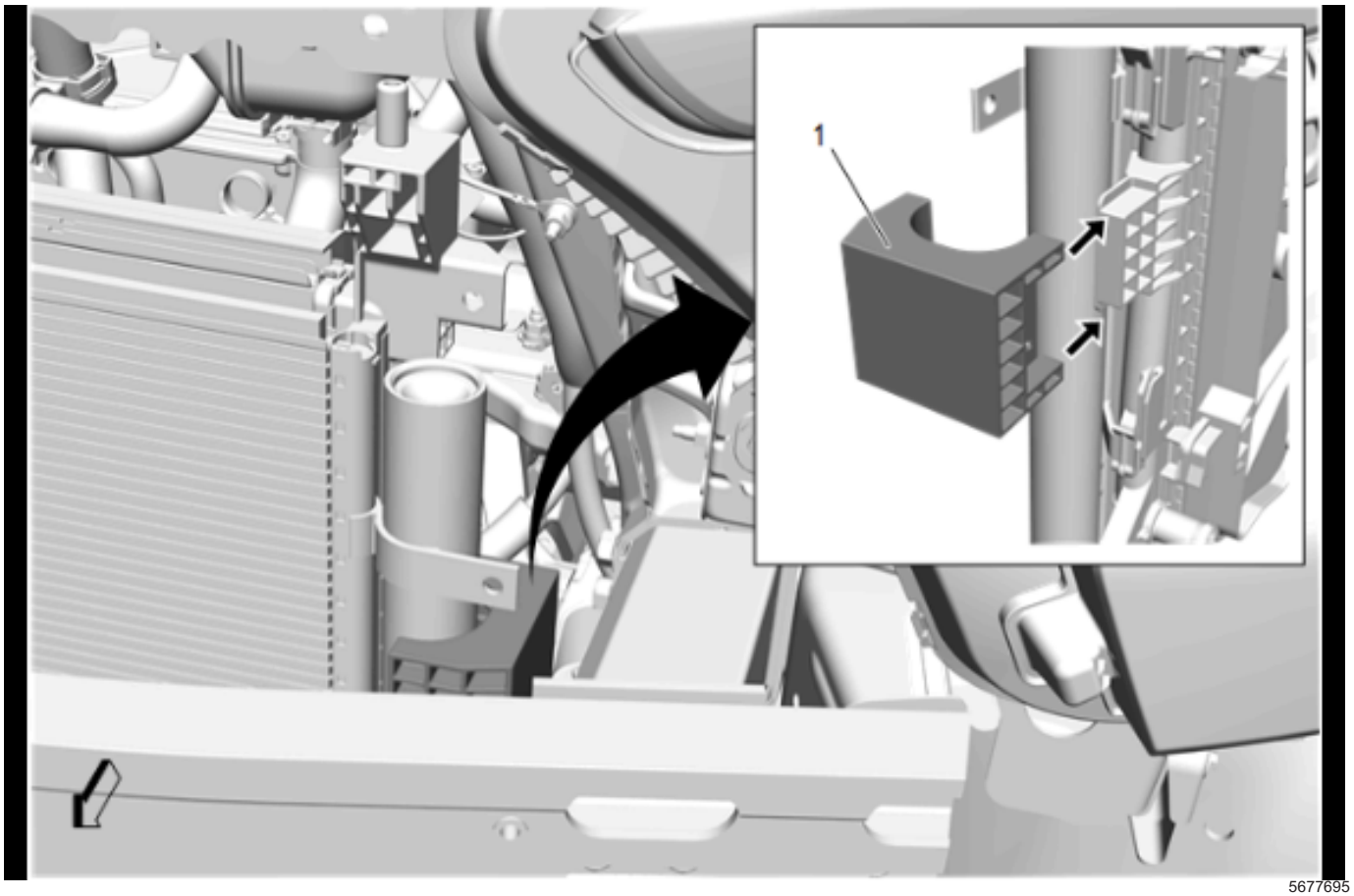

5677695

2. Radiator Protector (1) » Install

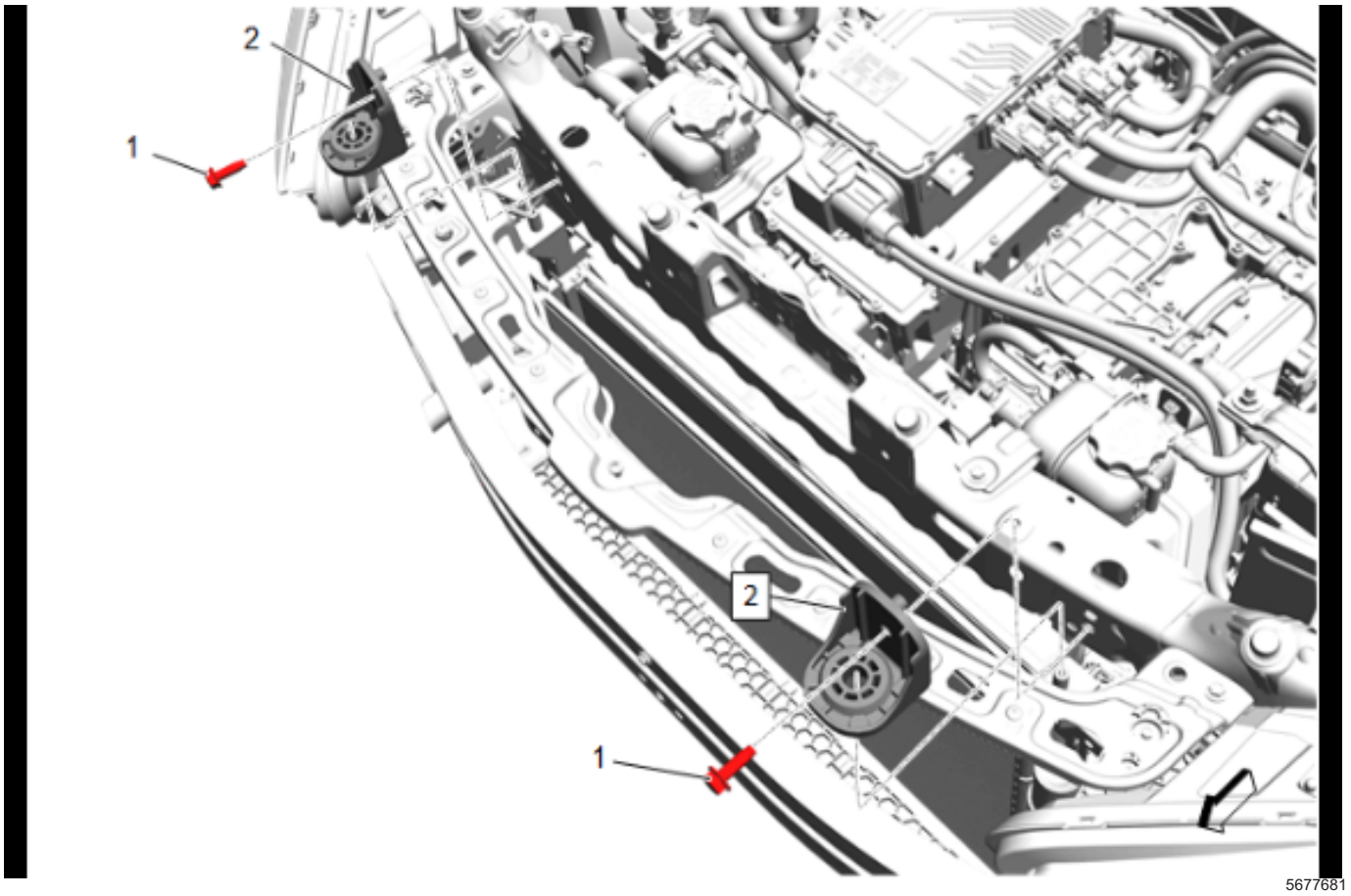

3. Radiator Upper Bracket (2) » Install [2x]
4. Radiator Upper Bracket Bolt (1) » Install and tighten [2x]

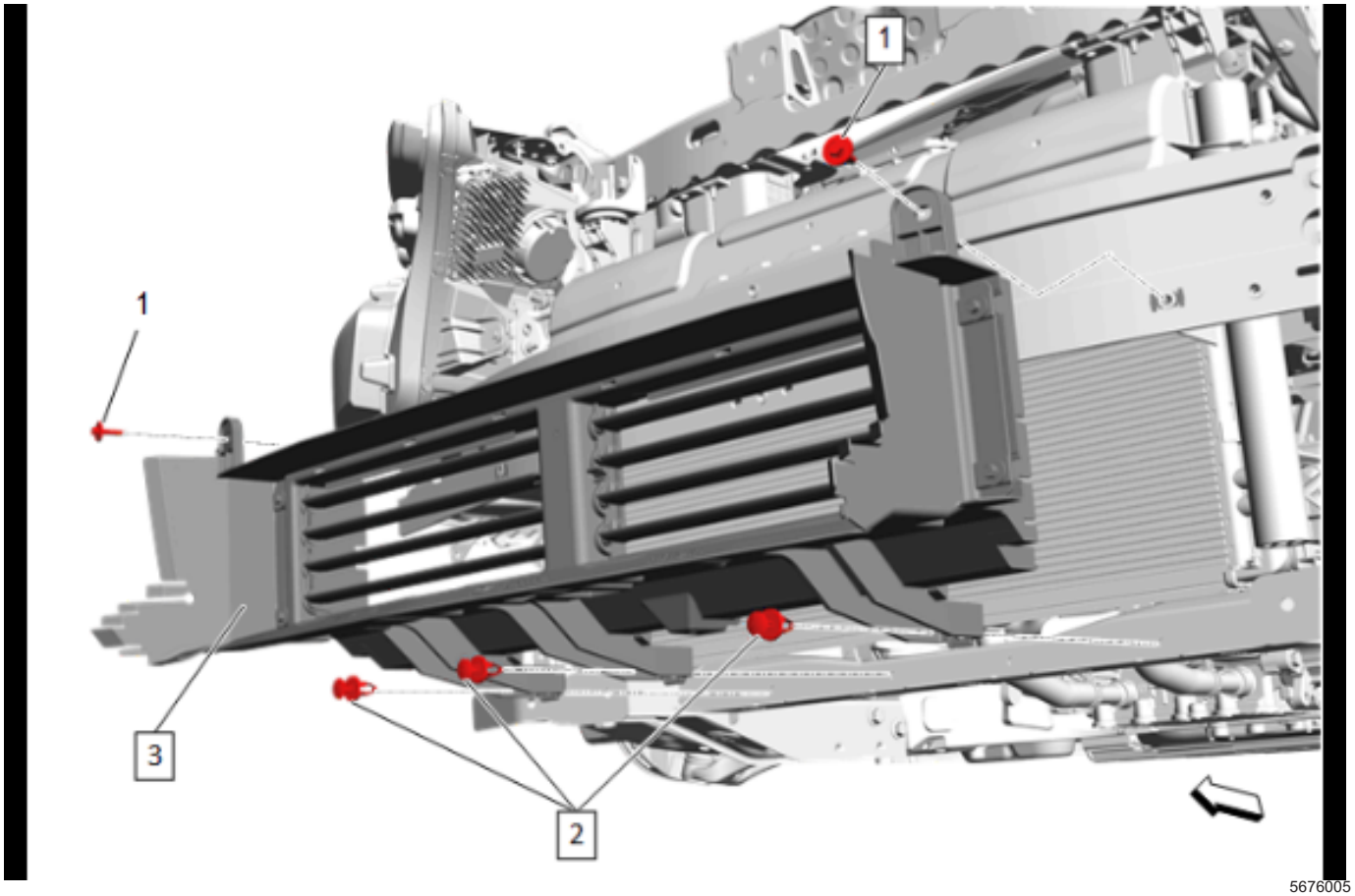

5676005

5. Install the radiator air lower baffle and deflector (3) with the front bumper shutter
6. Radiator Air Lower Baffle Retainer (2) » Install [3x]
7. Radiator Air Lower Baffle Bolt (1) » Install and tighten [2x]

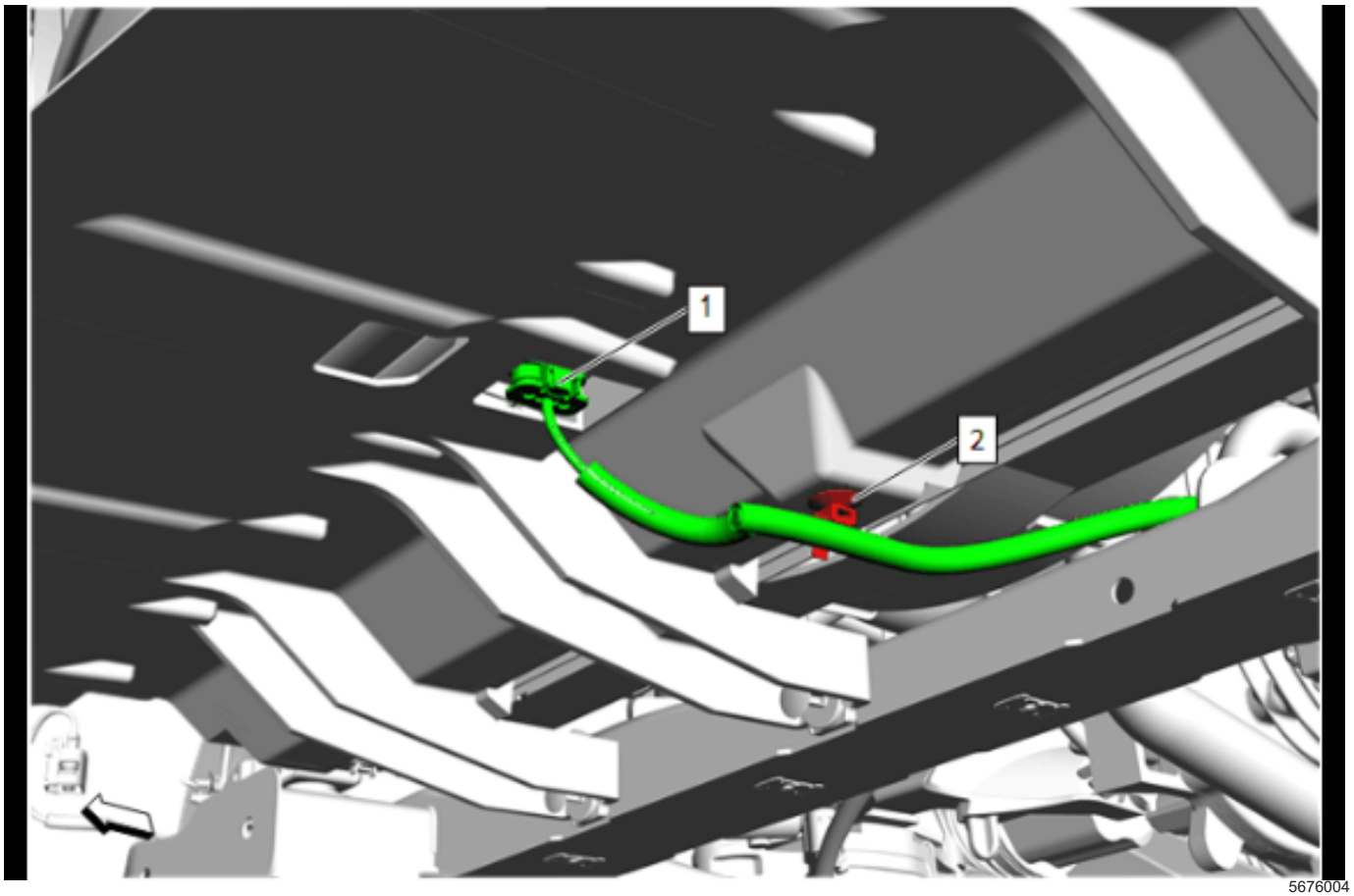

5676004

8. Retainer (2) » Install
9. Electrical Connector (1) » Connect

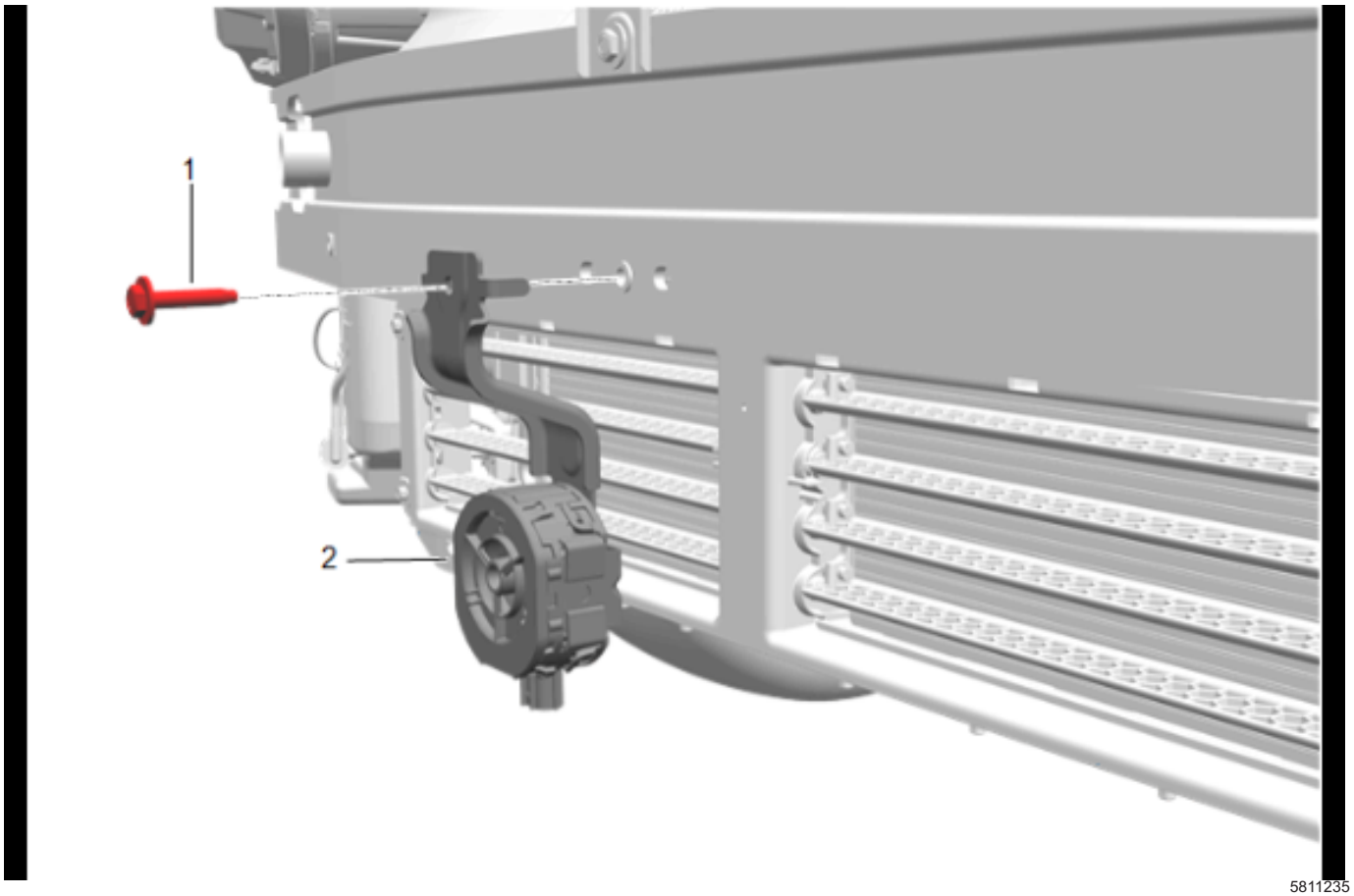

5811235

10. Pedestrian Sound Alert Speaker (2) » Install
11. Pedestrian Sound Alert Speaker Bracket Bolt (1)
    » Install and tighten

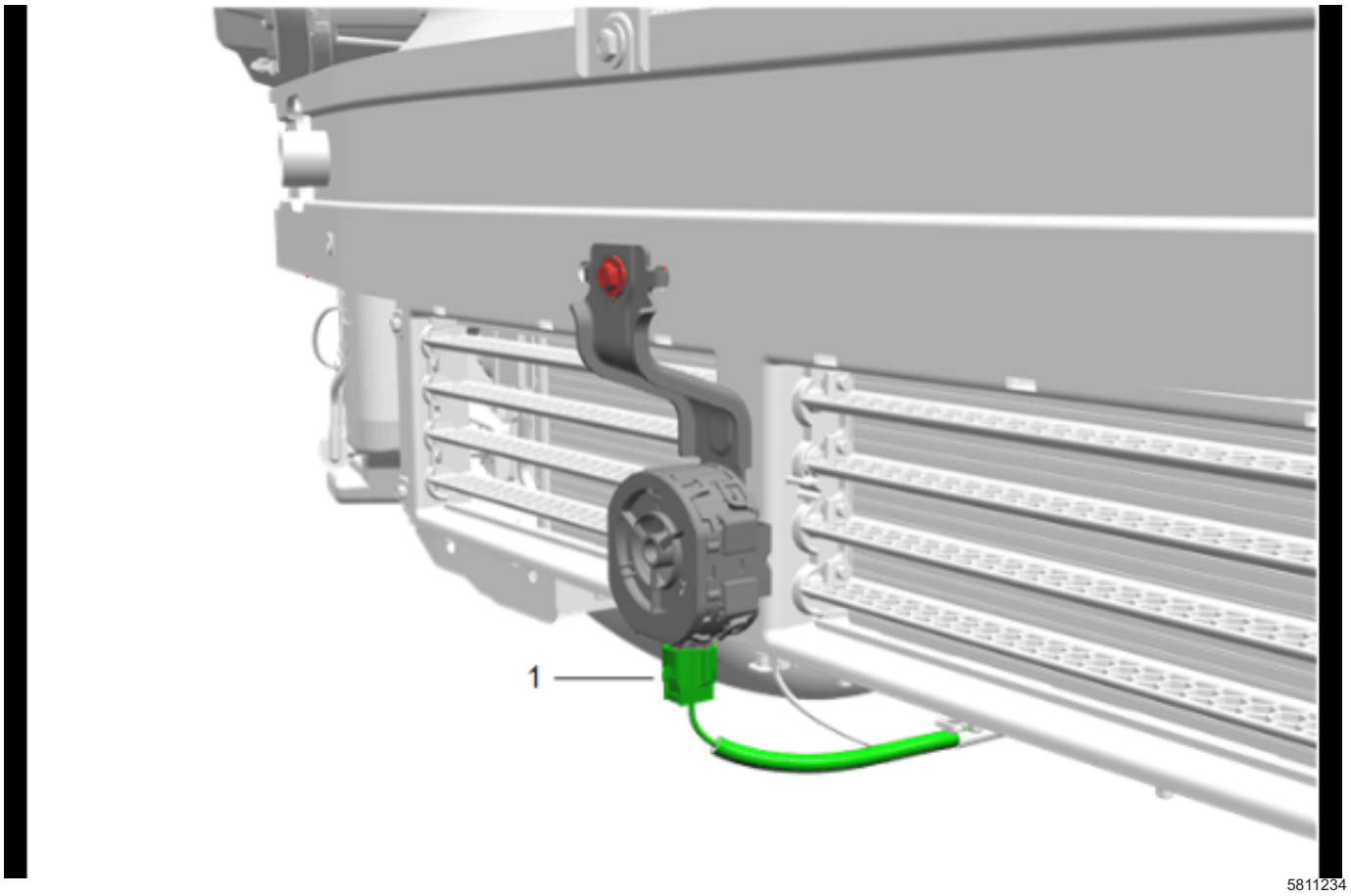

12. Electrical Connector (1) » Connect

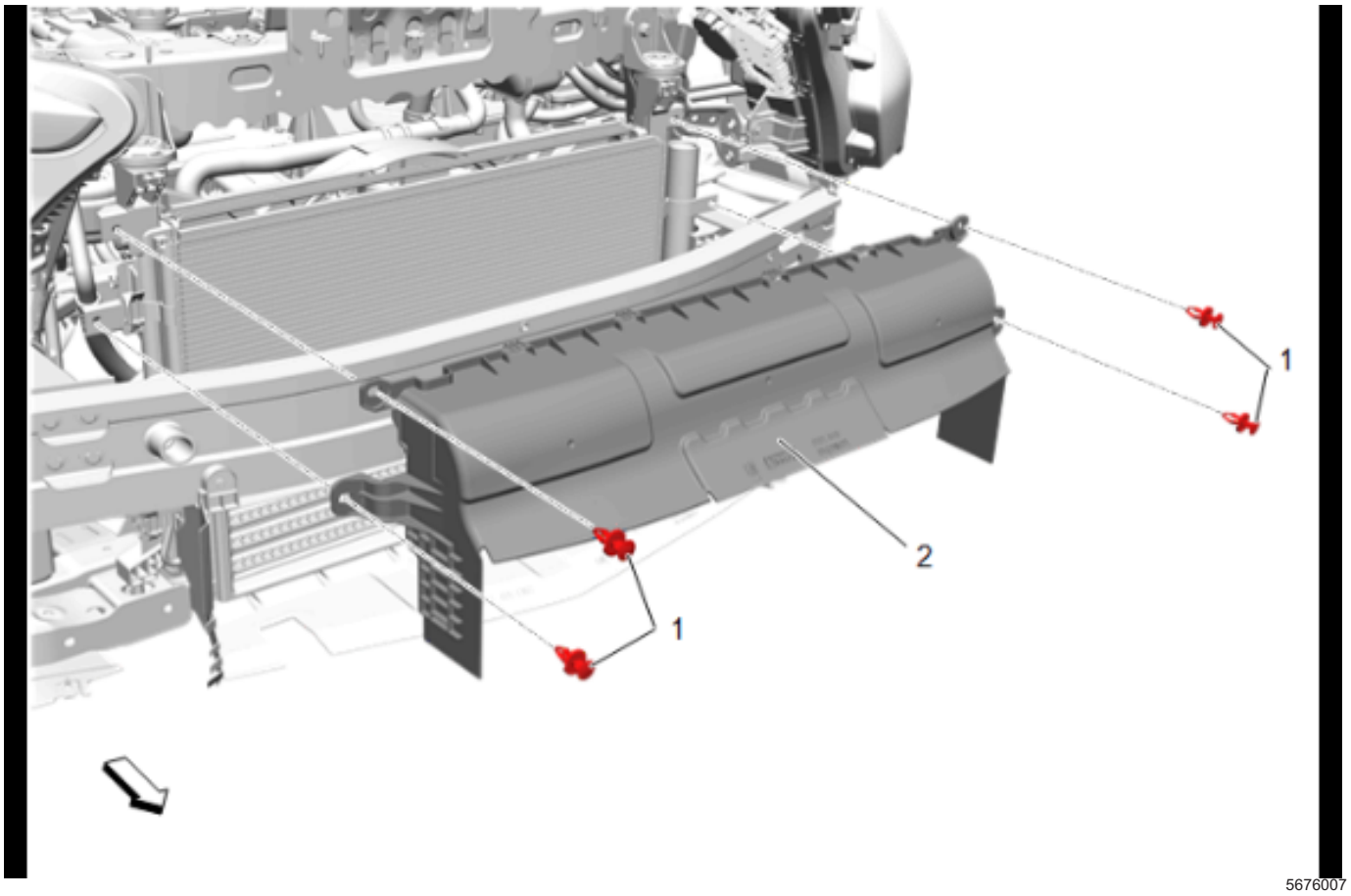

13. Radiator Air Upper Baffle and Deflector (2) » Install
14. Radiator Air Upper Baffle Retainer (1) » Install [4x]

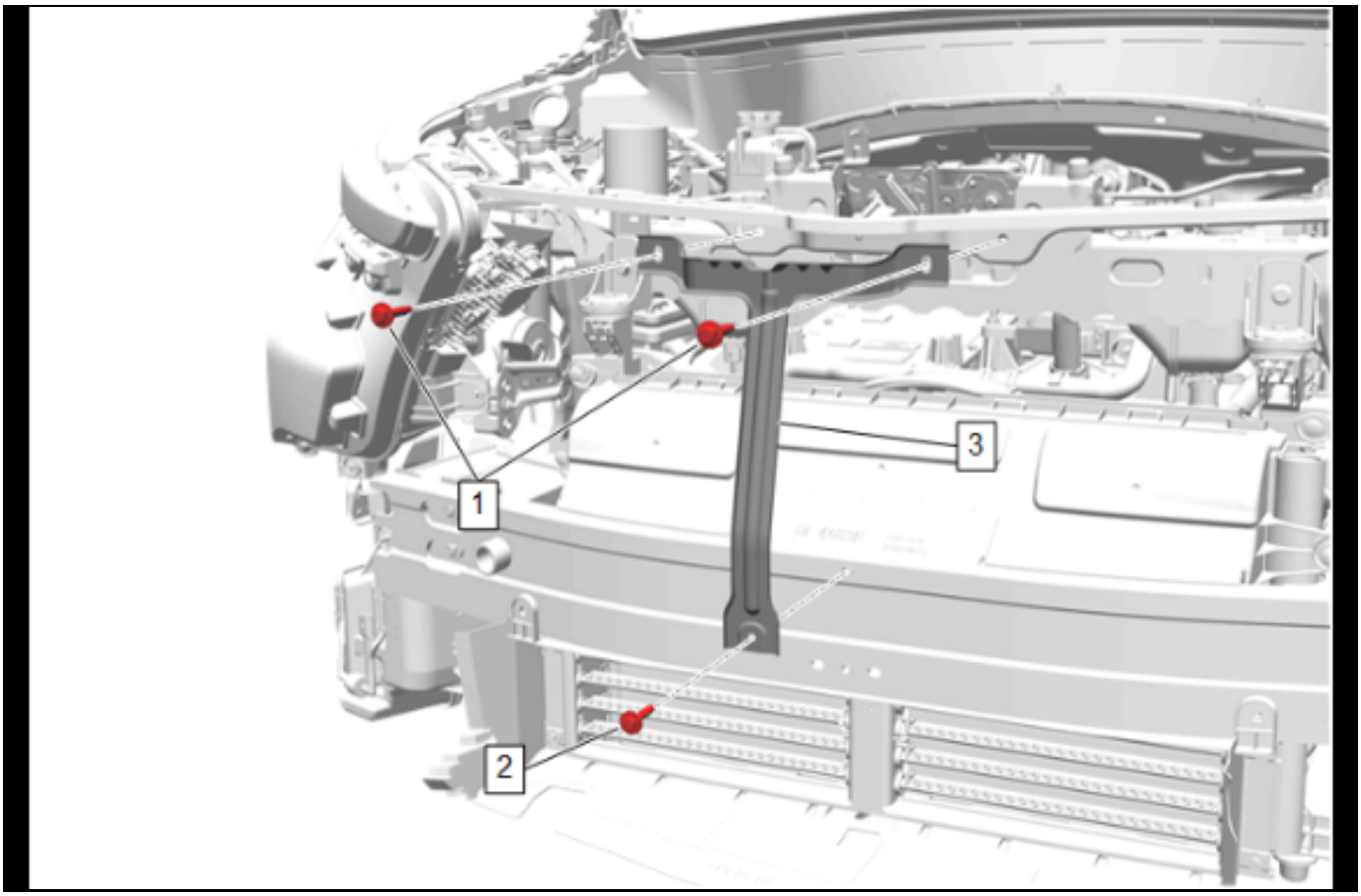

5675536

15. Hood Front Bumper Bracket Support (3) » Install
16. Front Bumper Fascia Support Brace Bolt (2) » Install and tighten
17. Front Bumper Fascia Center Support Bolt (1) » Install and tighten [2x] — Fastener Specifications

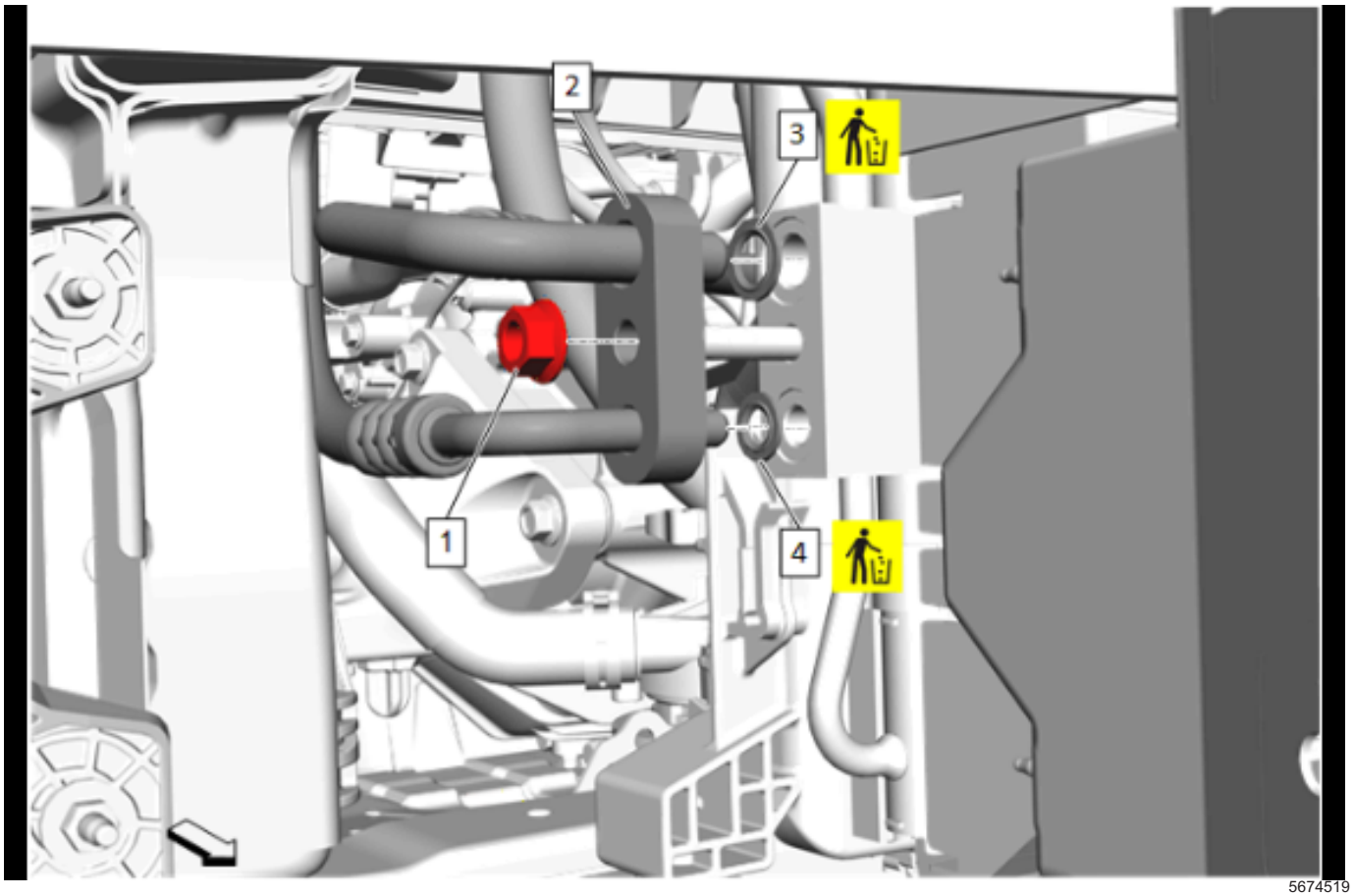

5674519

18. Air Conditioning Condenser Hose Seal - Small (4) » Install NEW
19. Air Conditioning Condenser Hose Seal - Large (3) » Install NEW
20. Air Conditioning Condenser Hose (2) @ Air Conditioning Condenser » Install
21. Air Conditioning Condenser Hose Nut (1) » Install and tighten — *Fastener Specifications on page 5-3*

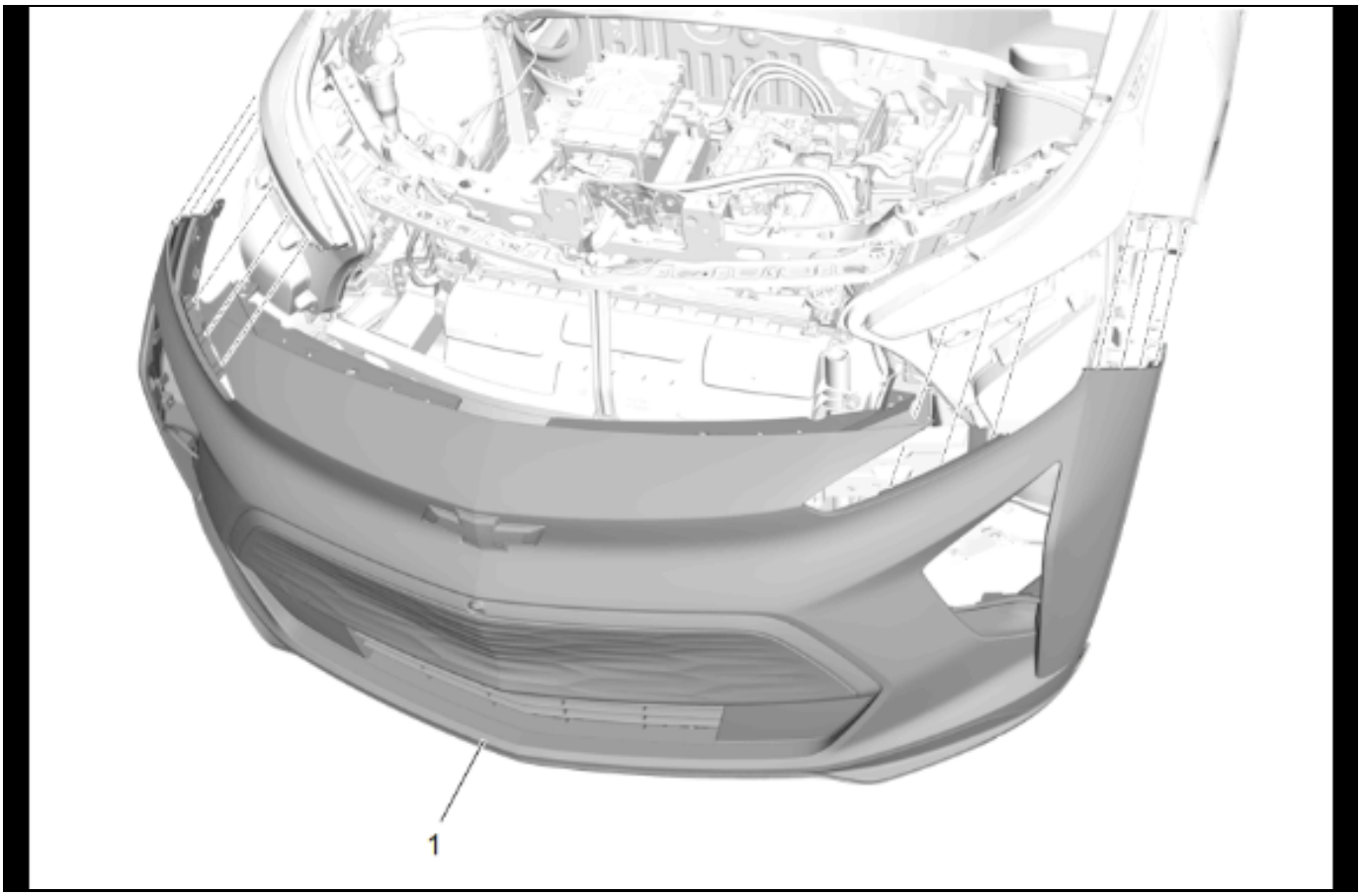

5662711

22. Front Bumper Fascia (1) » Install — Front Bumper Fascia Removal and Installation
23. Recharge the refrigerant. *Refrigerant Recovery and Recharging on page 5-36*

Heater and Air Conditioning Evaporator and Blower Module Removal and Installation

Single Use Fasteners and Components

Front Seat Belt Anchor Plate Tensioner Bolt

Special Tools

BO–49385 Wiper Arm Puller

Equivalent regional tools: Special Tools

Caution: Use care when working around the head curtain inflator module. Sharp tools may puncture the curtain airbag. If the head curtain inflator module is damaged in any way, it must be replaced.

Removal Procedure

1. Disable the SIR system.
2. Disconnect the battery negative cable.
3. Recover the refrigerant. *Refrigerant Recovery and Recharging on page 5-36*
4. Drain the cooling system. *Heater Coolant Heater Draining and Filling on page 5-39*

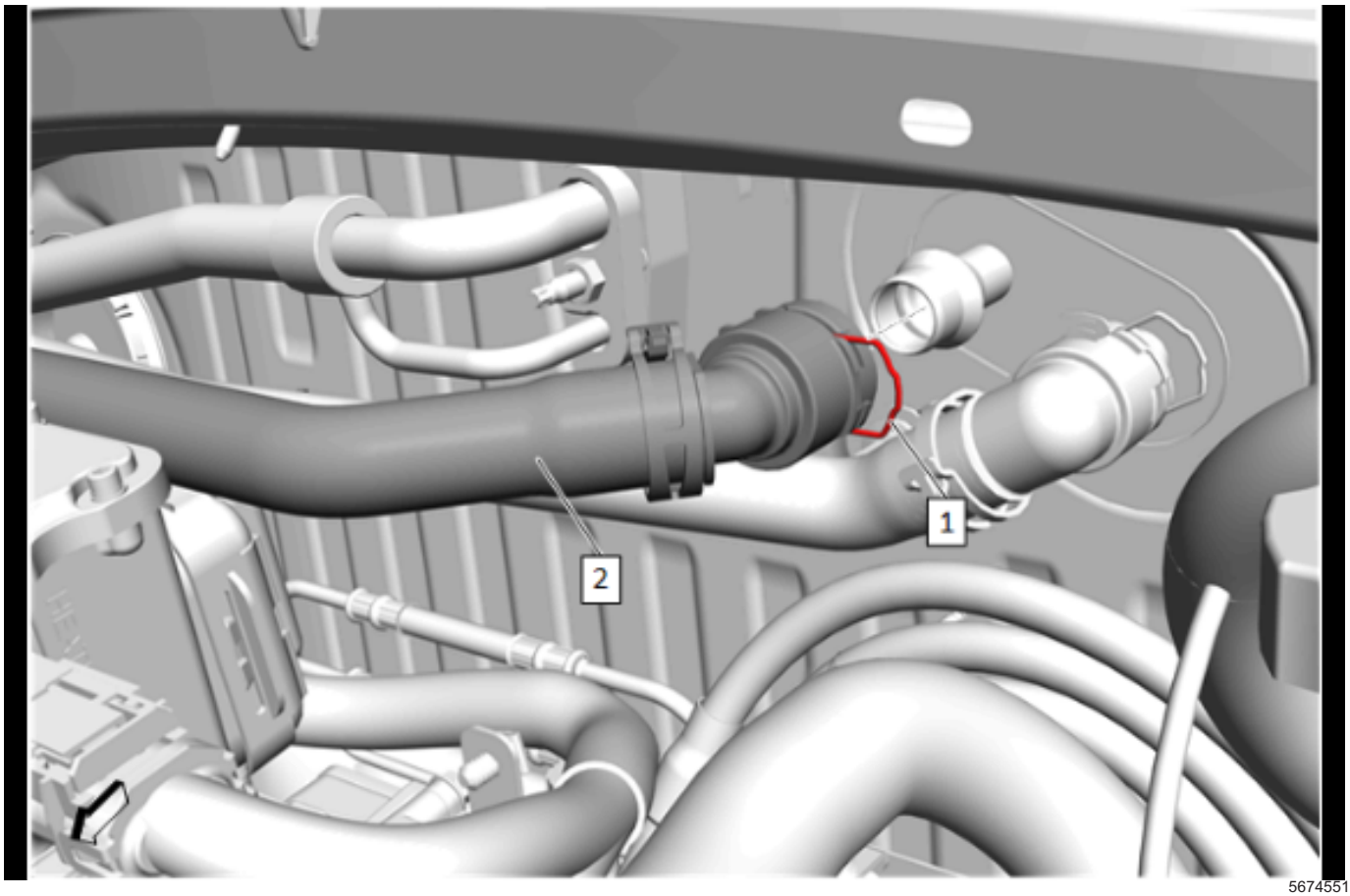

5674551

5. Heater Inlet Hose Connector Retainer (1) » Disengage
6. Heater Inlet Hose (2) @ Heater Core Inlet Tube » Remove

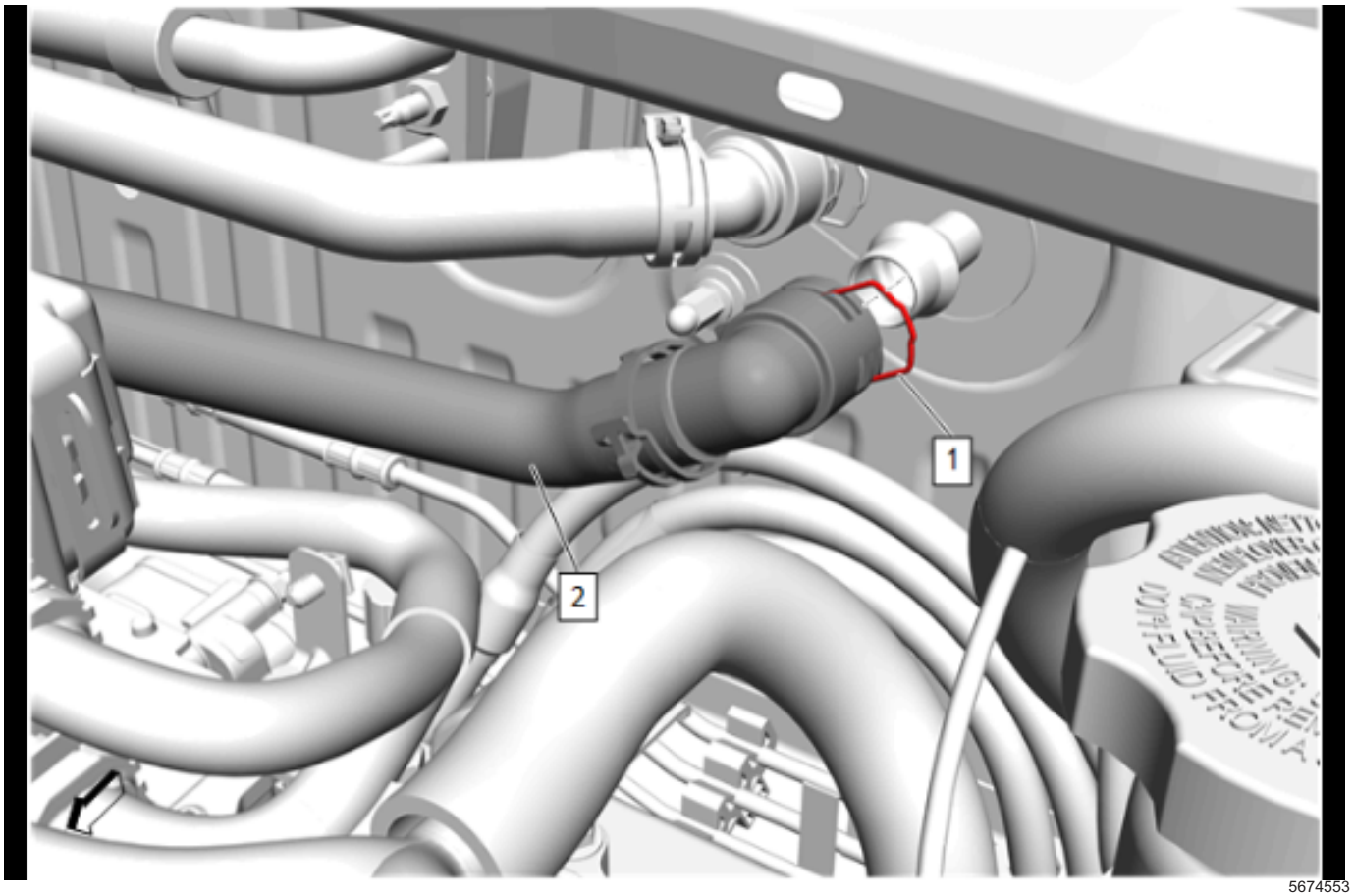

5674553

7. Heater Outlet Hose Connector Retainer (1) » Disengage
8. Heater Outlet Hose (2) @ Heater Core Outlet Tube » Remove

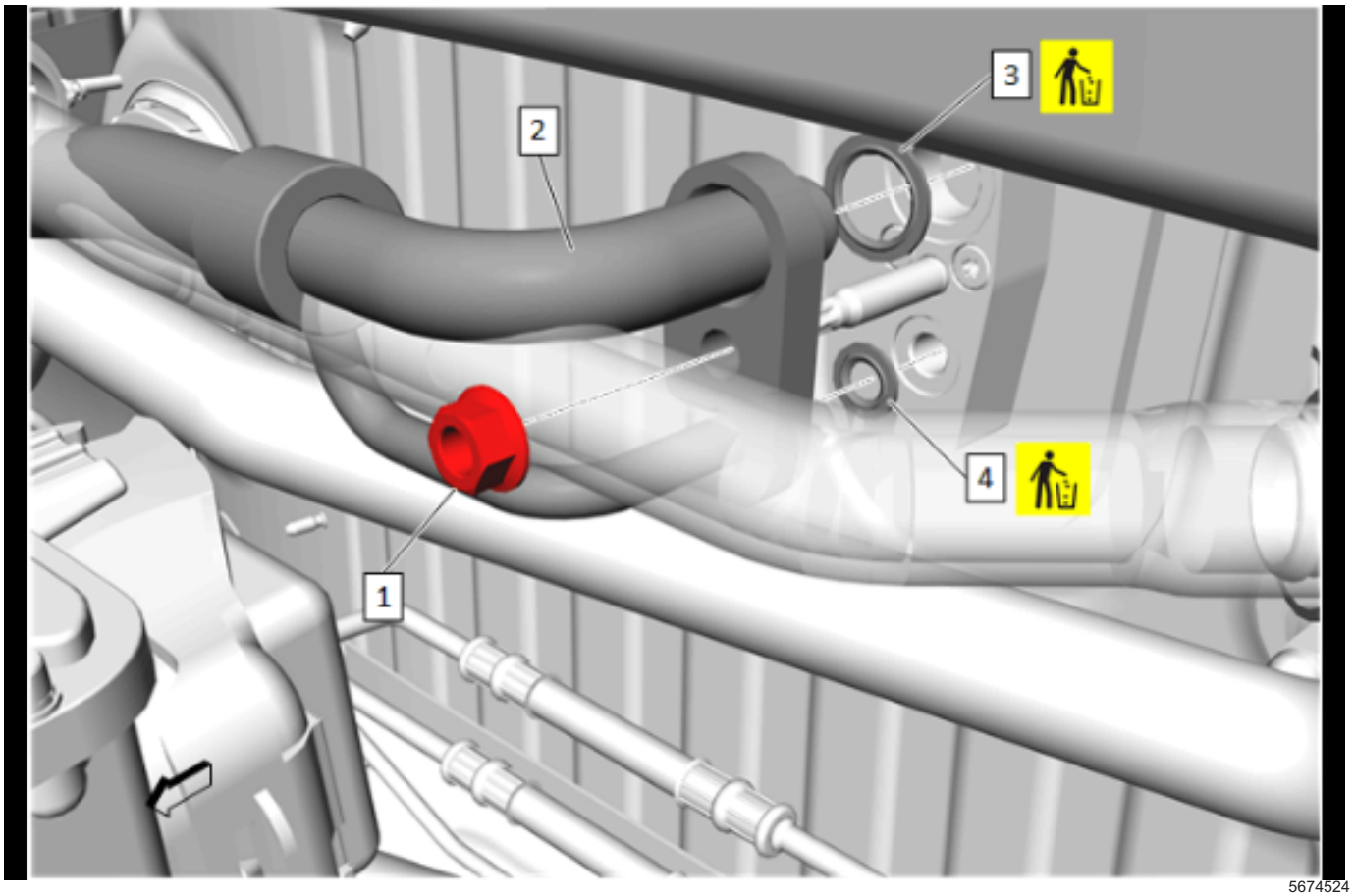

5674524

9. Air Conditioning Evaporator Hose Nut (1) » Remove
10. Air Conditioning Evaporator Hose (2) @ Air Conditioning Evaporator Thermal Expansion Valve » Remove
11. Air Conditioning Evaporator Hose Seal - Large (3) » Remove and DISCARD
12. Air Conditioning Evaporator Hose Seal - Small (4) » Remove and DISCARD

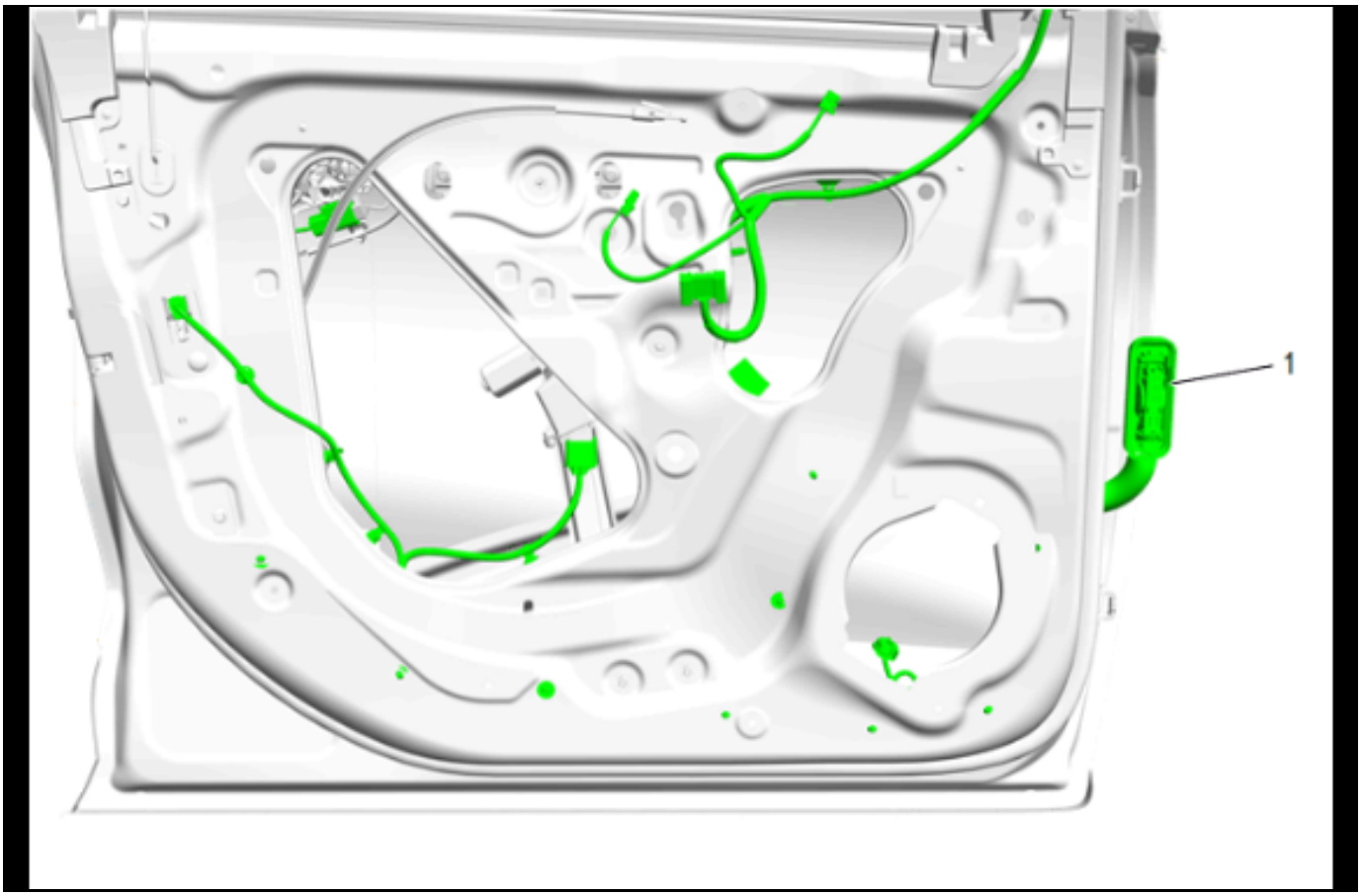

5671840

Note: Left side shown, right side similar.

13. Disconnect the left and right side of front side door wiring harness (1) electrical connectors.

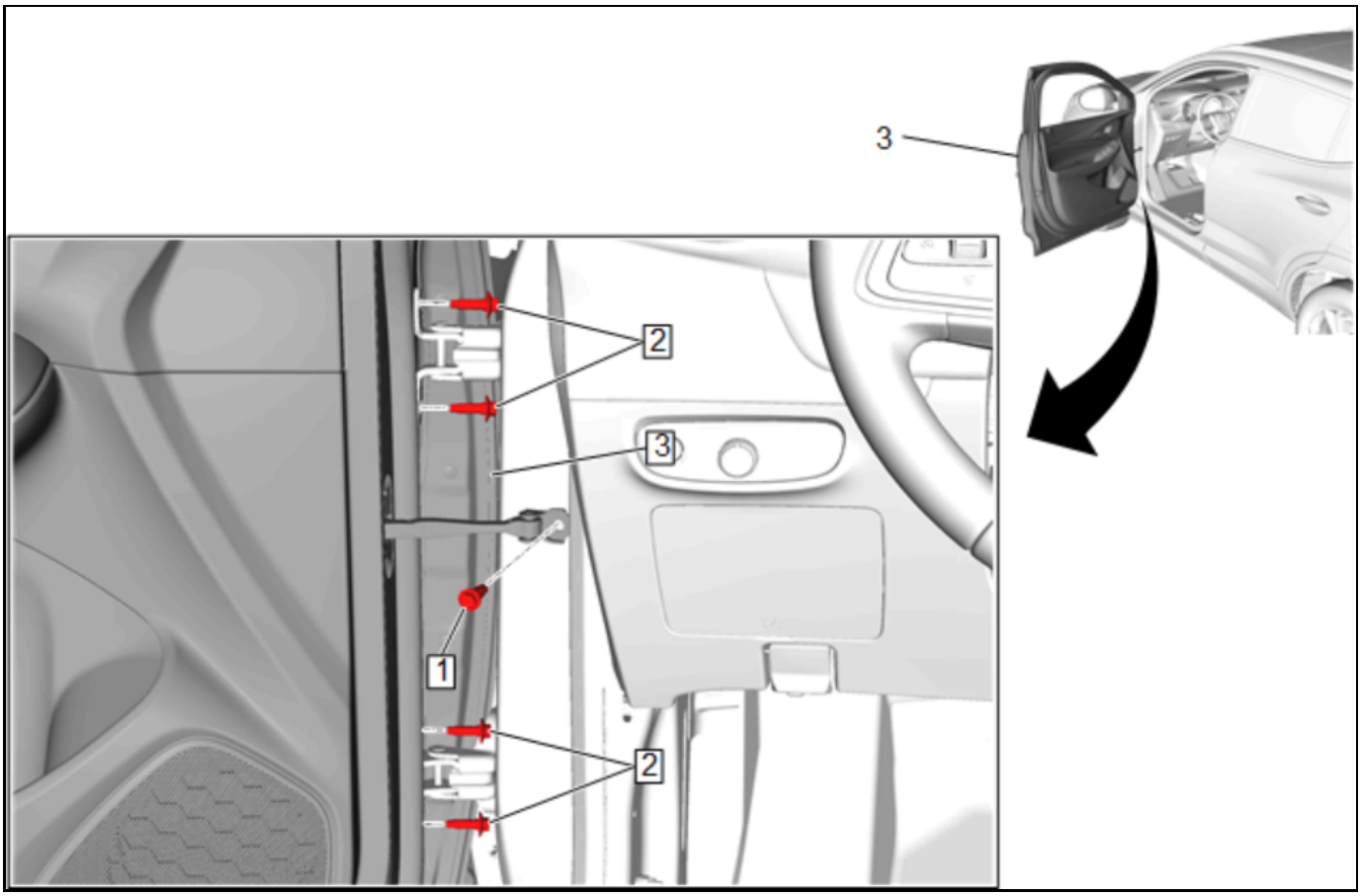

5220211

Note: Left side shown, right side similar.

14. Front Side Door Check Link Bolt - Left Side and Right Side (1) » Remove [2x]
15. Mark the location of the front side door hinges with a grease pencil to aid in alignment during installation.
16. Support the door before removing the hinge fastener.
17. Front Side Door Hinge Bolt - Door Side - Left Side and Right Side (2) » Remove [8x]
18. With the aid of an assistant, remove the front side door. (3)

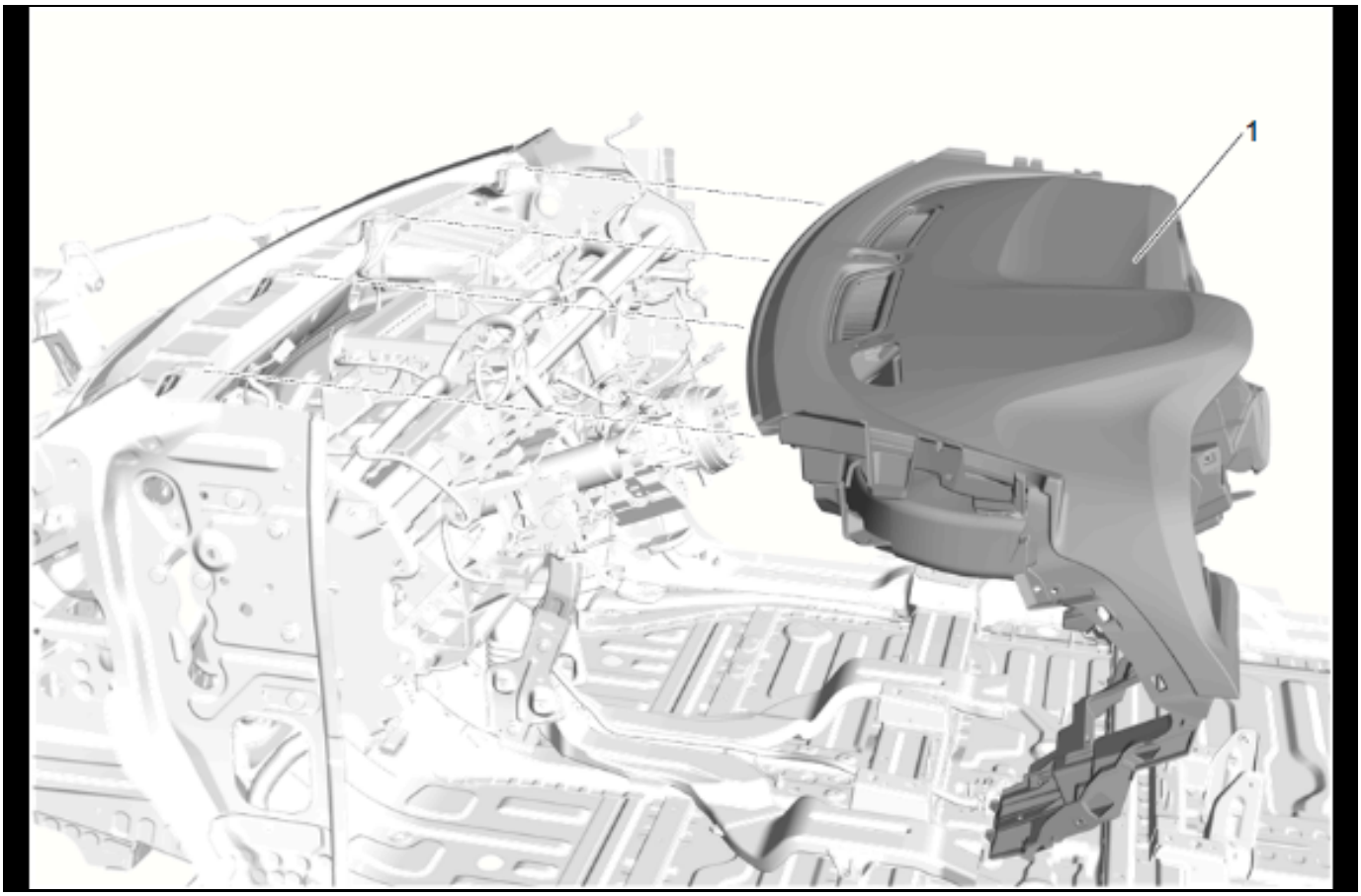

5699361

19. Instrument Panel Assembly (1) » Remove — Instrument Panel Removal and Installation

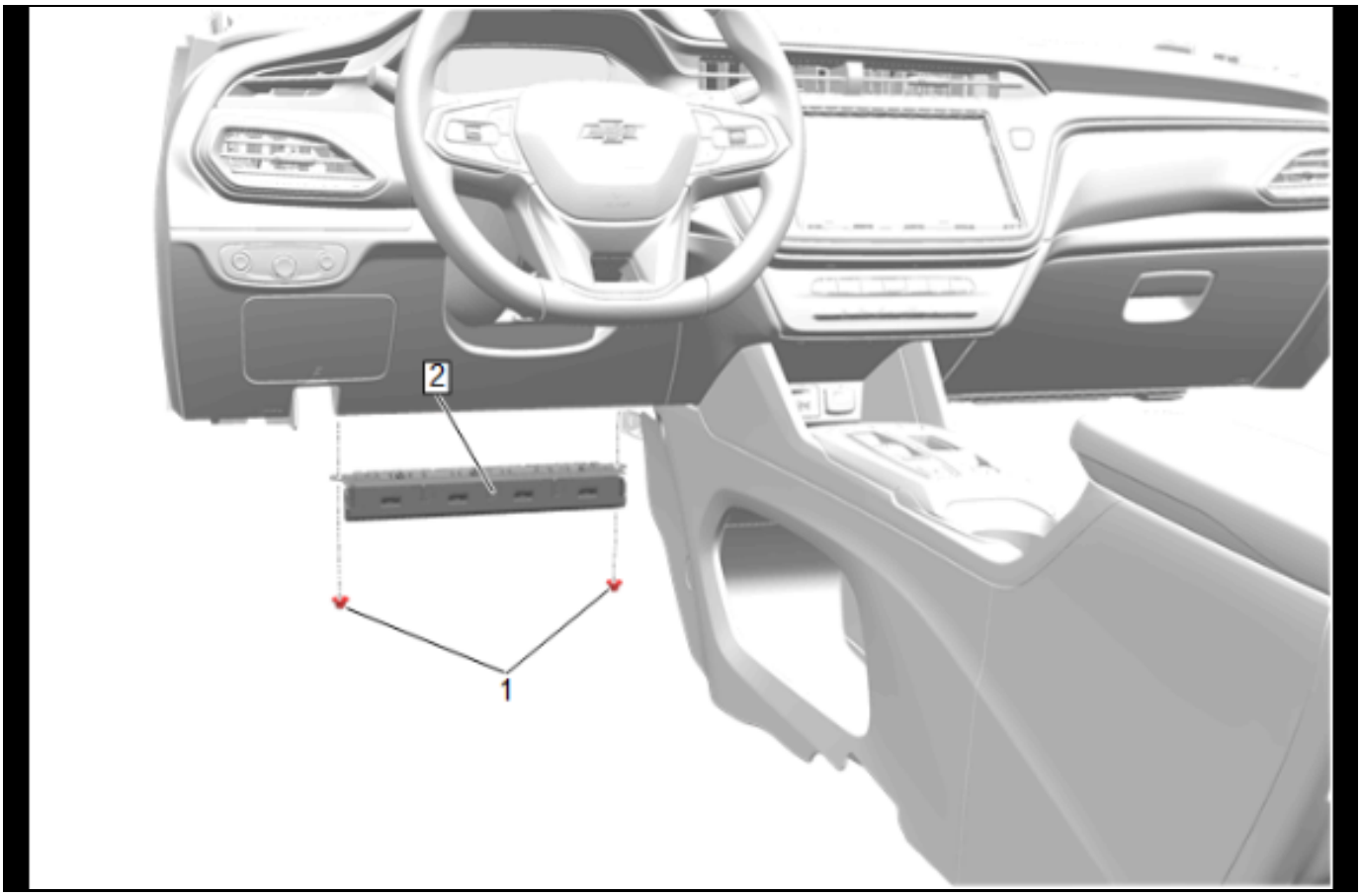

5664034

20. Instrument Panel Lower Airbag Nut (1) » Remove [2x]
21. Instrument Panel Lower Airbag - Driver Side (2) » Remove
22. Disconnect the electrical connector.

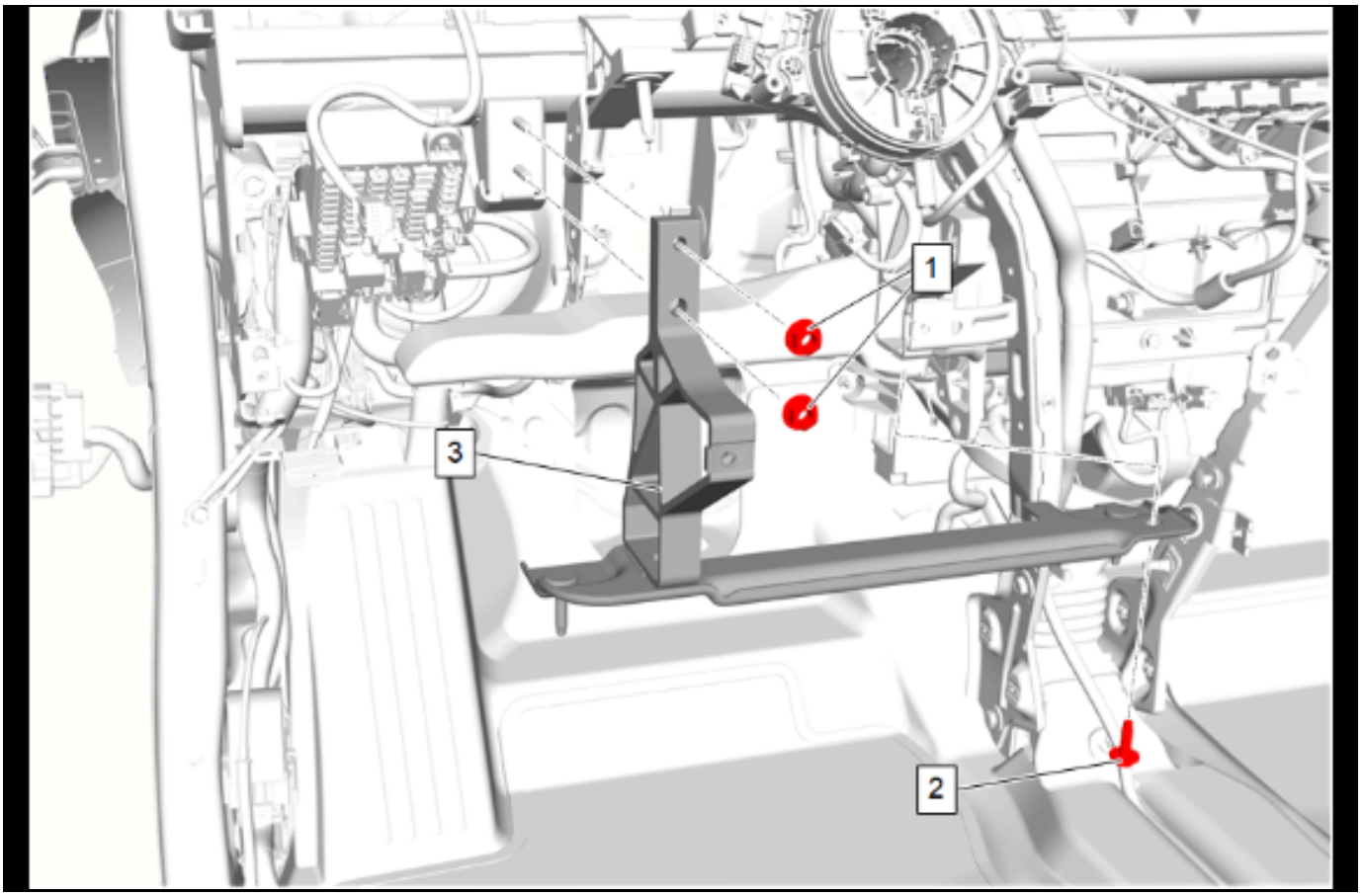

5699965

23. Instrument Panel Tie Bar Brace Nut (1) » Remove [2x]
24. Instrument Panel Tie Bar Brace Bolt (2) » Remove
25. Instrument Panel Tie Bar Brace (3) » Remove

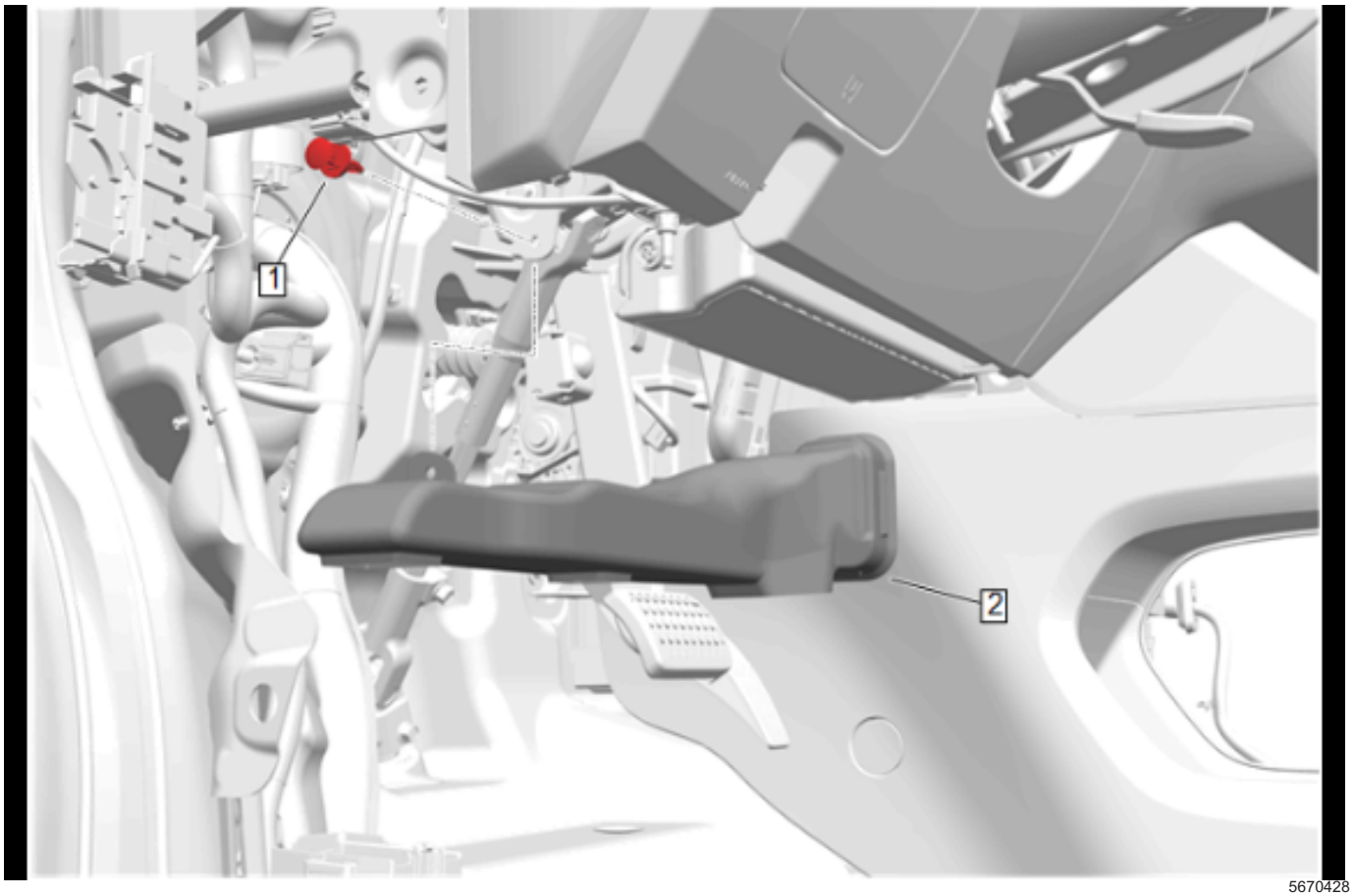

5670428

26. Floor Front Air Outlet Duct Retainer (1) » Remove
27. Floor Front Air Outlet Duct - Left Side (2) » Remove

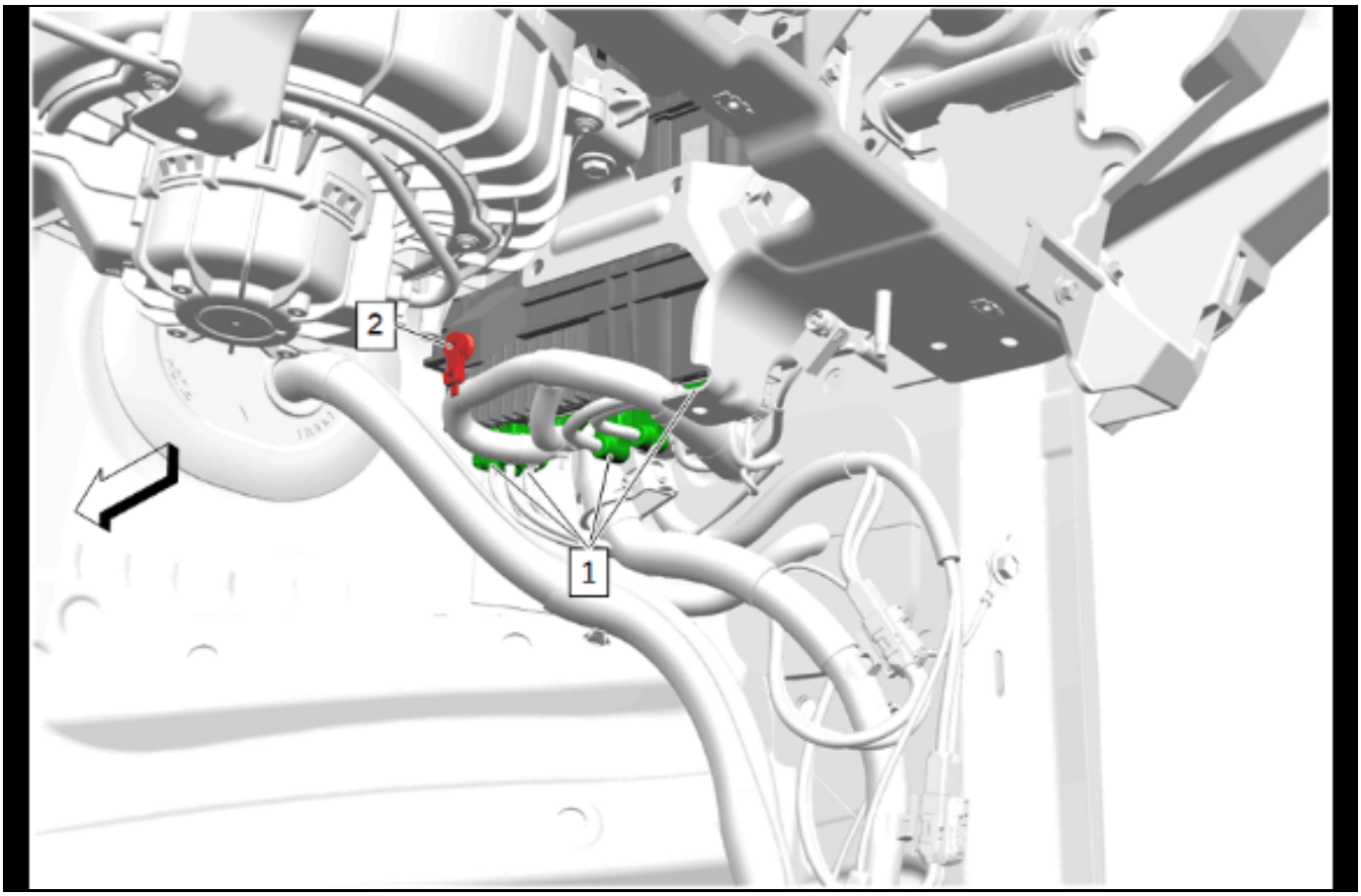

5672264

Note: Typical wiring harness shown. Individual wiring harness may differ based on option content.

28. Disconnect the electrical connectors and reposition the wiring harness as necessary. (1)

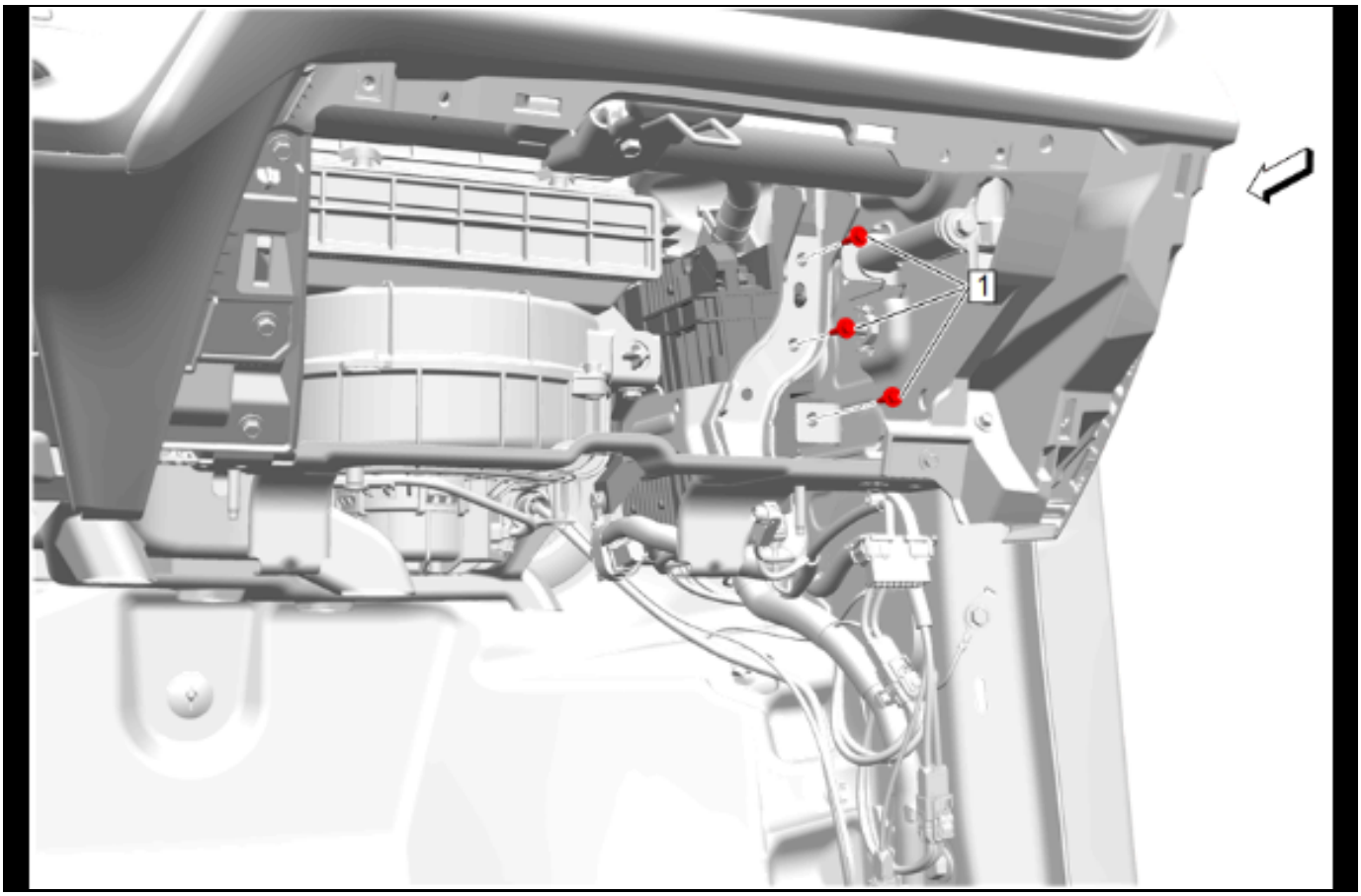

5672265

29. Radio Bracket Bolt (1) » Remove [3x]

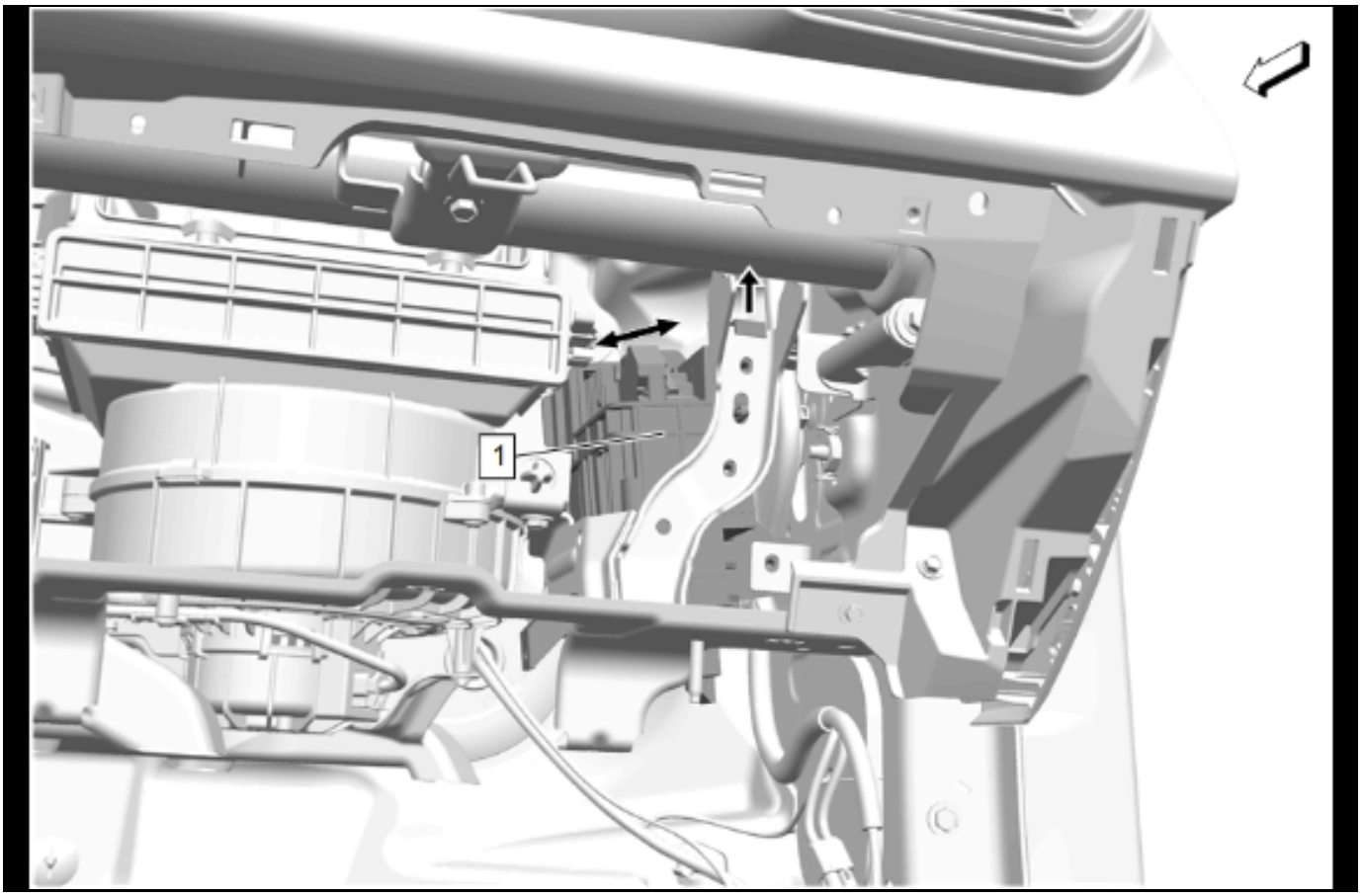

5672266

30. Lift up the radio bracket (1) and then push it forward.

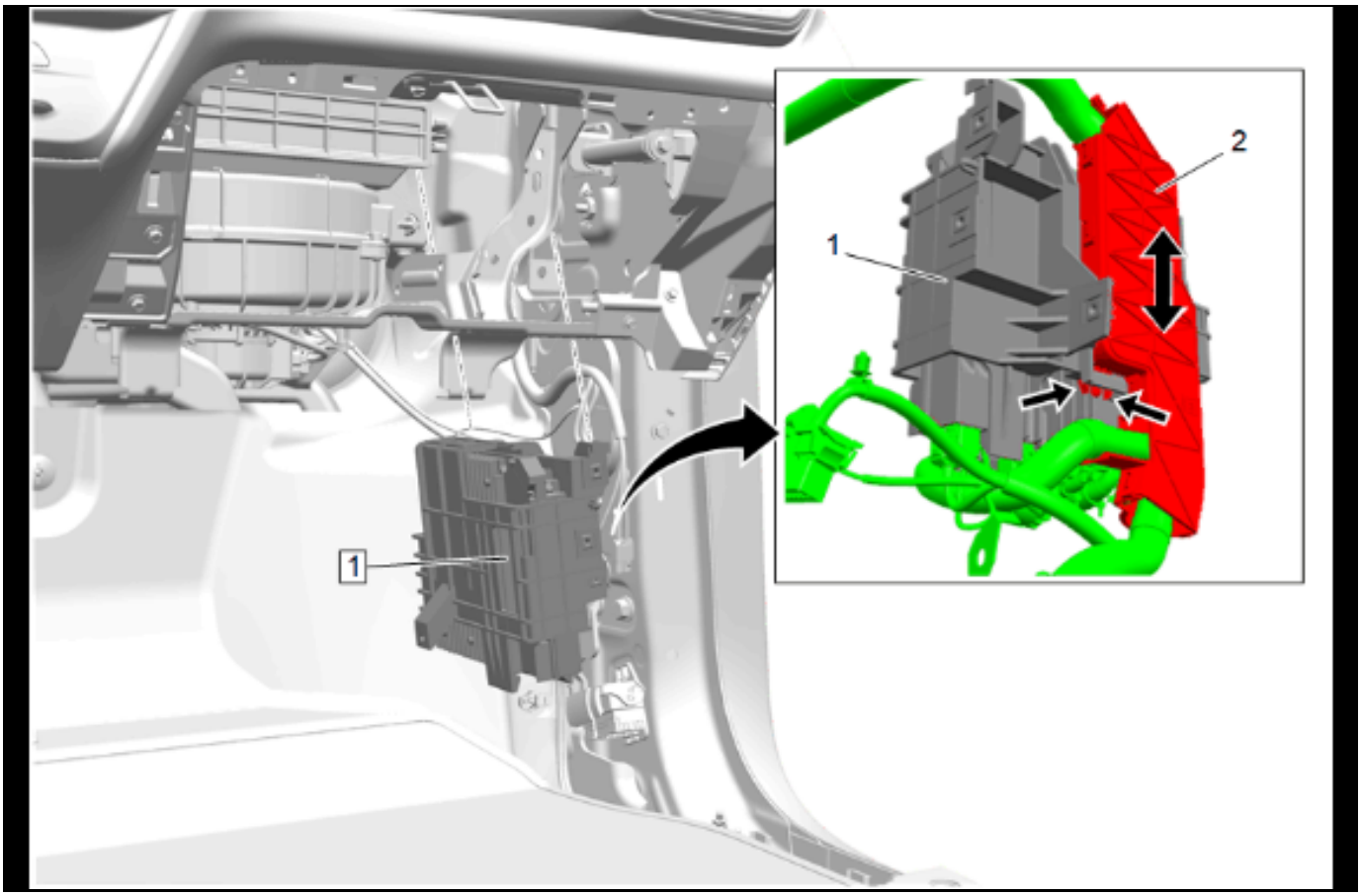

5672267

31. Remove the electrical wiring harness retainer (2) from the radio bracket (1) by releasing the retaining tabs.
32. Radio Bracket (1) » Remove

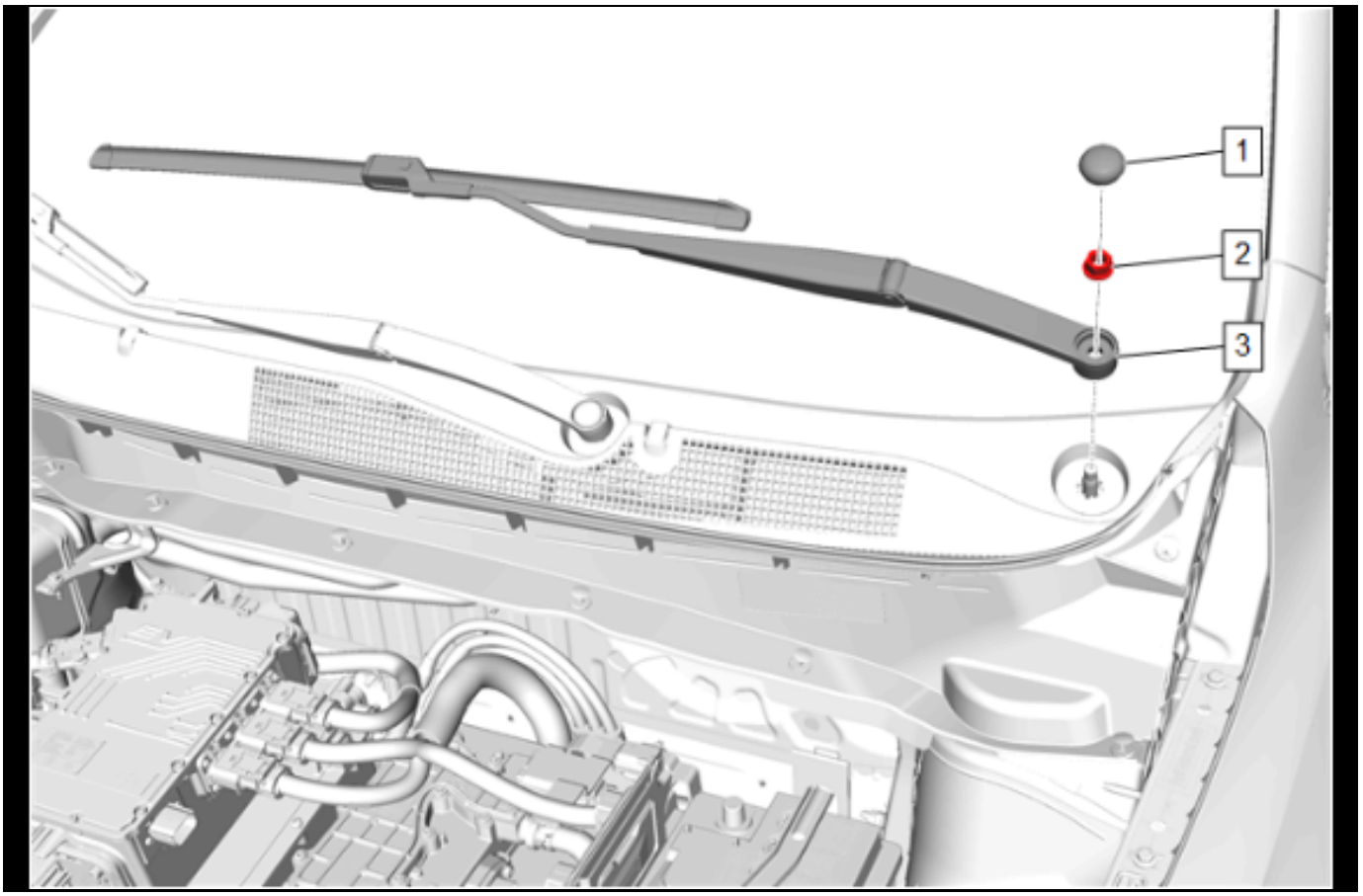

5493737

33. Using the appropriate trim tool, remove the windshield wiper arm finish cap (1) from the windshield wiper arm (3).
34. Windshield Wiper Arm Nut (2) » Remove
35. Use the *BO–49385* Wiper Arm Puller to remove the wiper arm (3) from the wiper motor pivot shaft.

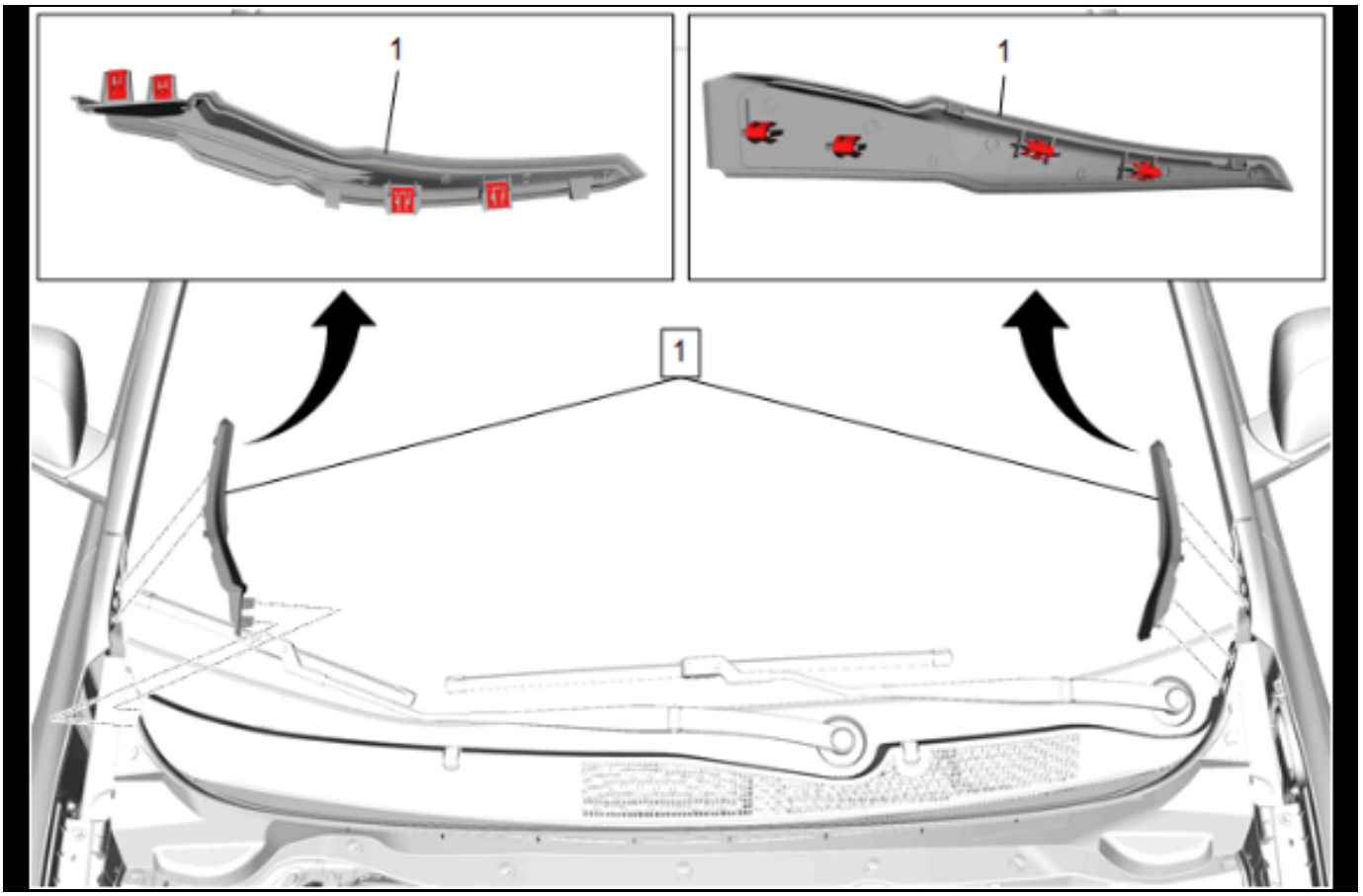

5491617

36. Apply two layers of masking tape around the top edge of the service part to prevent paint damage.
37. Using a suitable plastic trim tool, carefully release the air inlet grille panel extension clips.
38. Remove the air inlet grille panel extension (1) from the air inlet grille panel and upper front fender.
39. Remove the masking tape.

40. Remove any remaining adhesive residue.
    40.1. Remove any remaining adhesive residue with a 50/50 mixture by volume of isopropyl alcohol and clean drinkable water. Wipe the surface dry with a clean lint-free towel.

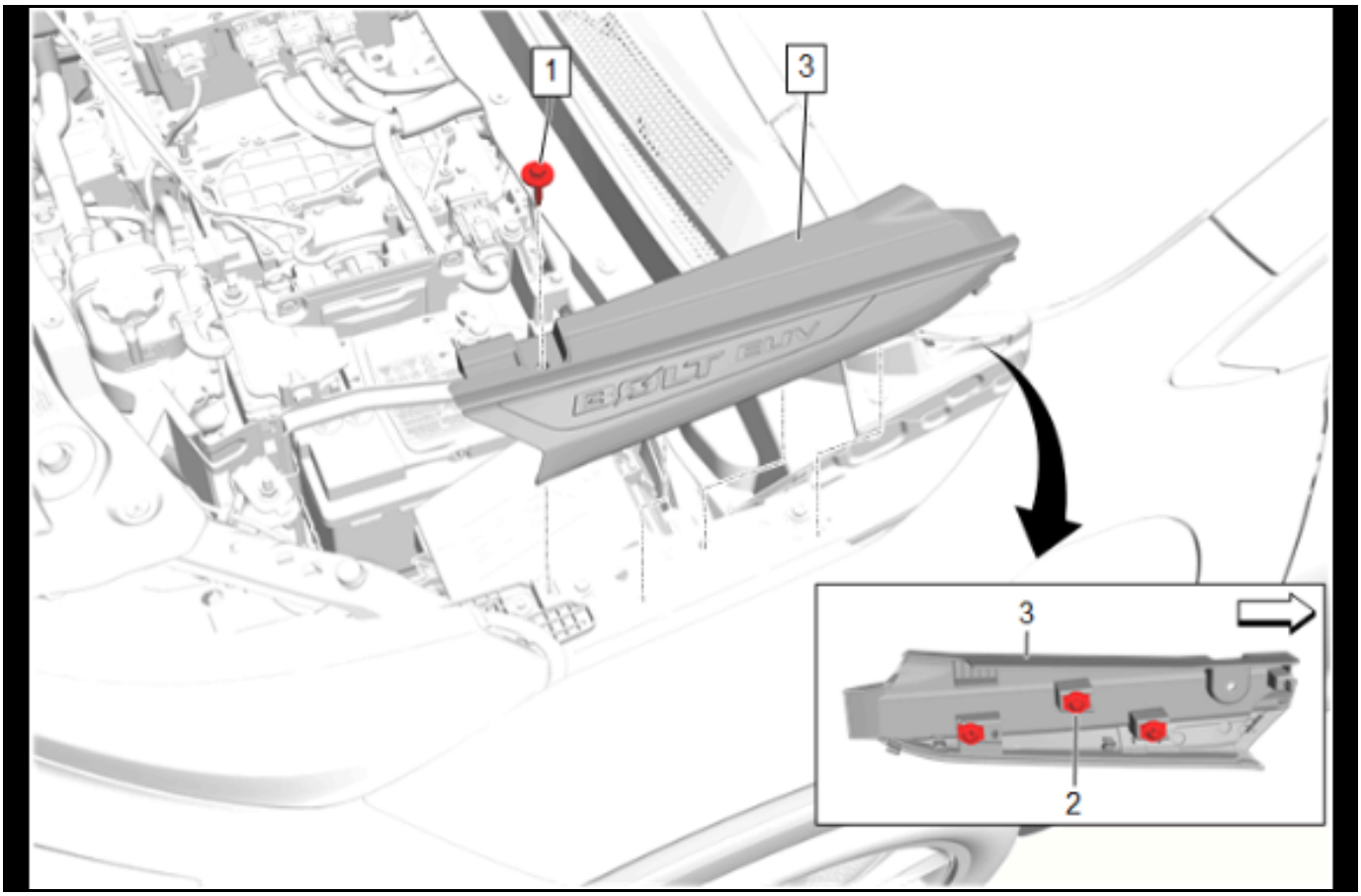

5666188

41. Body Side Upper Front Applique Bolt (1) » Remove
42. Using an appropriate trim tool, release the body side upper front applique retainers. (2) [3x]
43. Body Side Upper Front Applique (3) » Remove

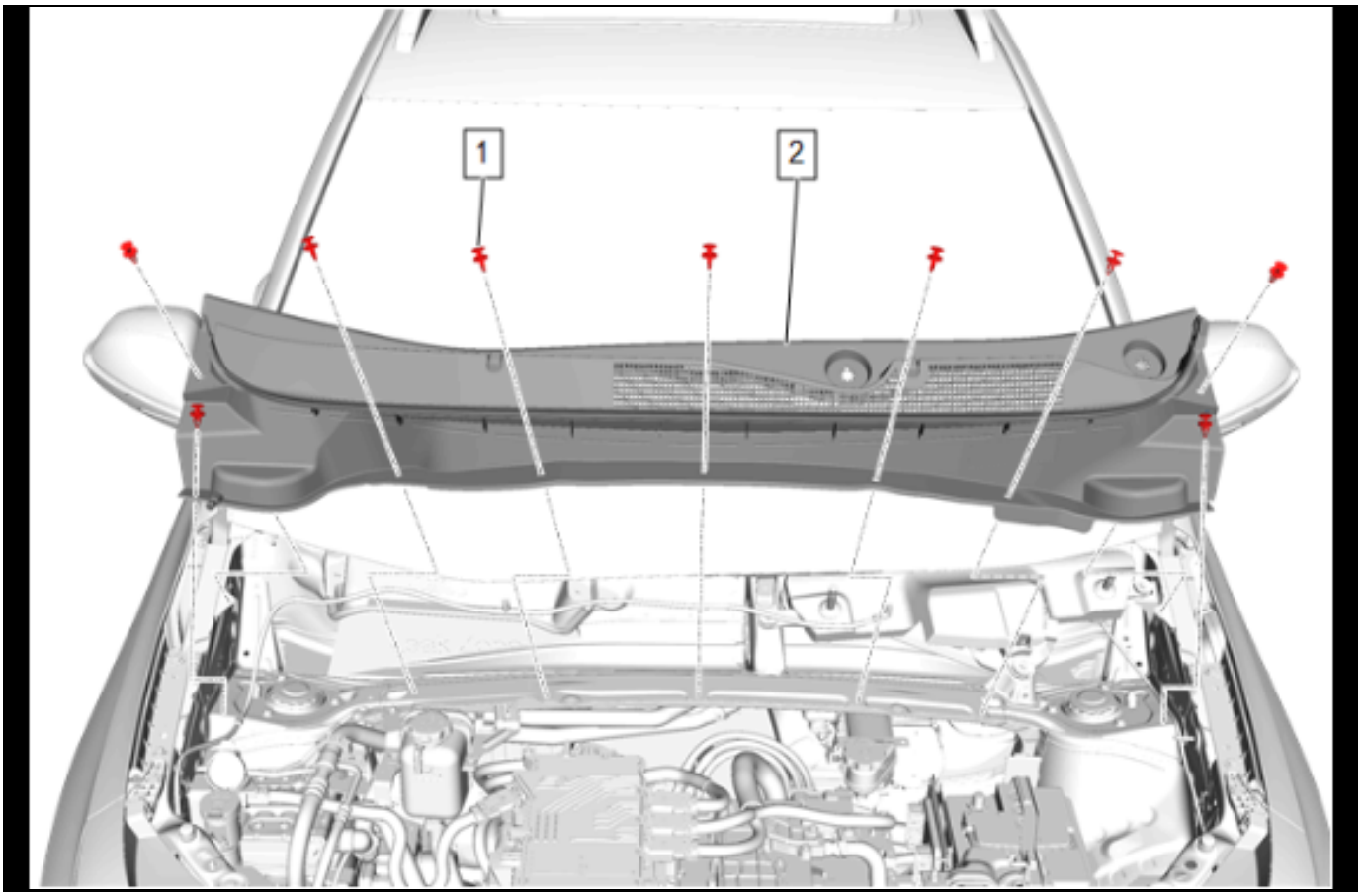

5491629

44. Air Inlet Grille Panel Retainer (1) » Remove [9x]
45. Air Inlet Grille Panel (2) » Remove
46. Windshield Washer Nozzle Hose @ Windshield Washer Pump Hose » Disconnect

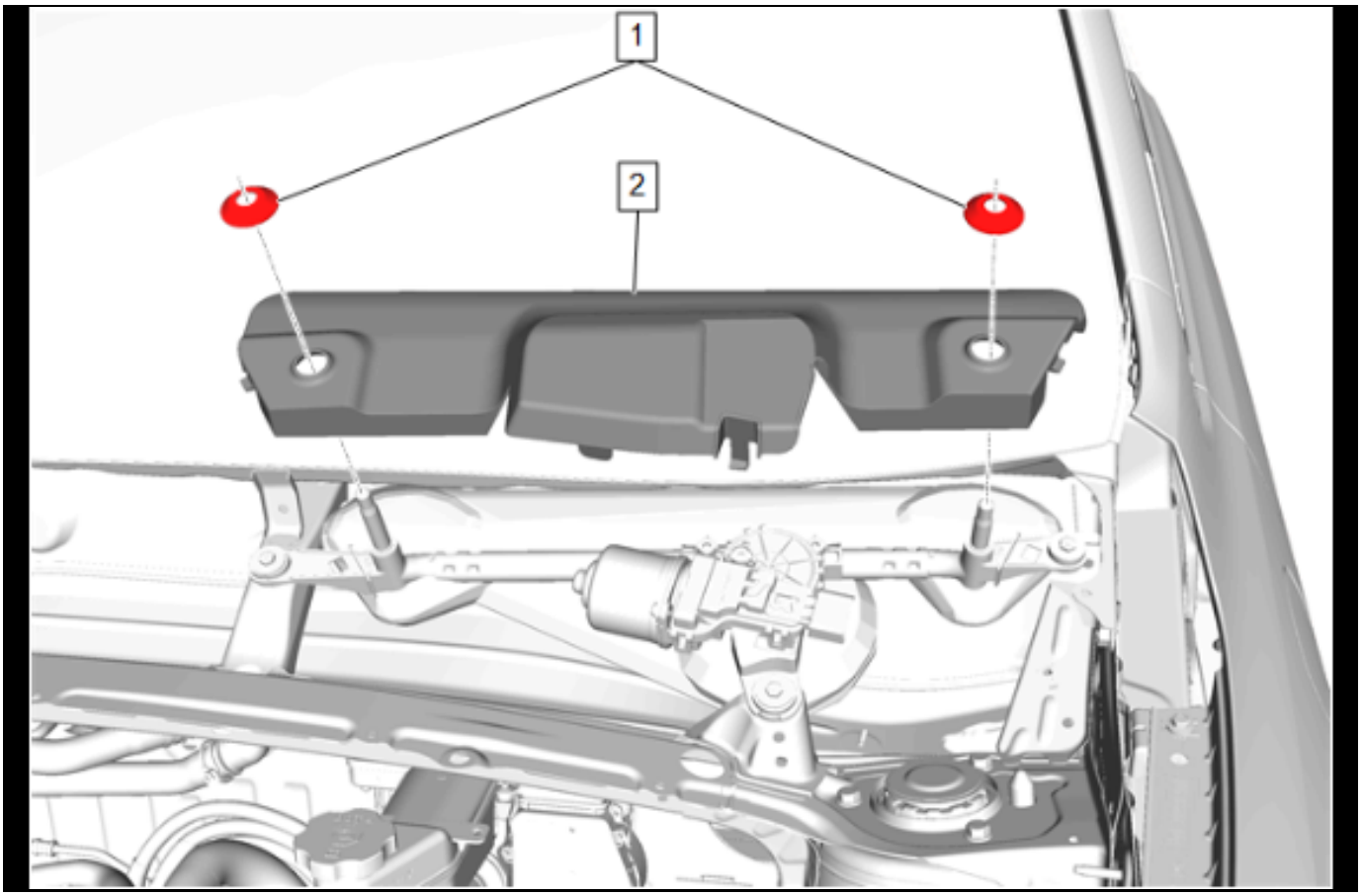

5493743

47. Windshield Wiper System Module Shield Retainer (1) » Remove [2x]
48. Windshield Wiper System Module Shield (2) » Remove

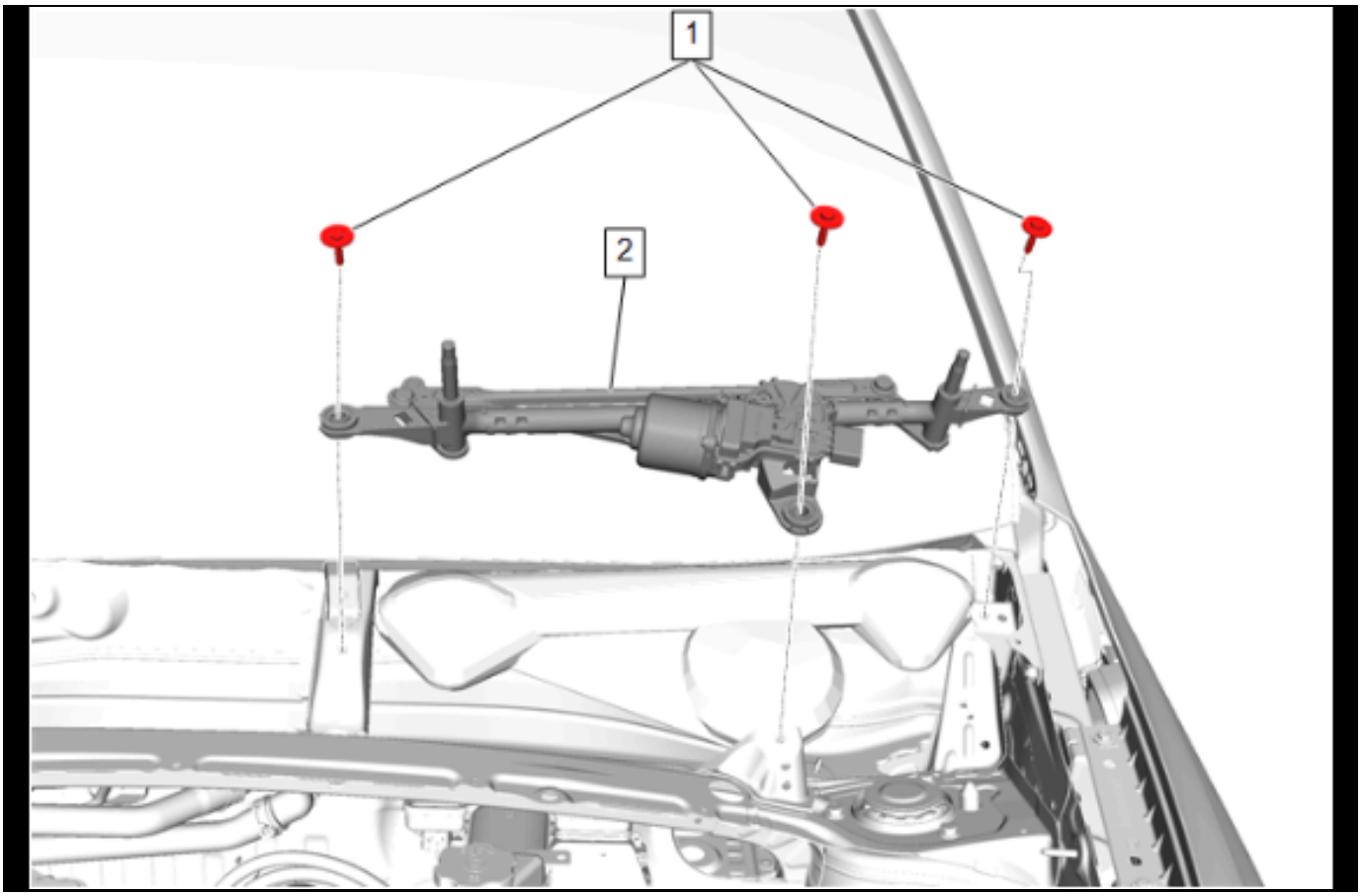

5493739

49. Windshield Wiper System Module Bolt (1) » Remove [3x]
50. Disconnect the electrical connector.
51. Windshield Wiper System Module (2) » Remove

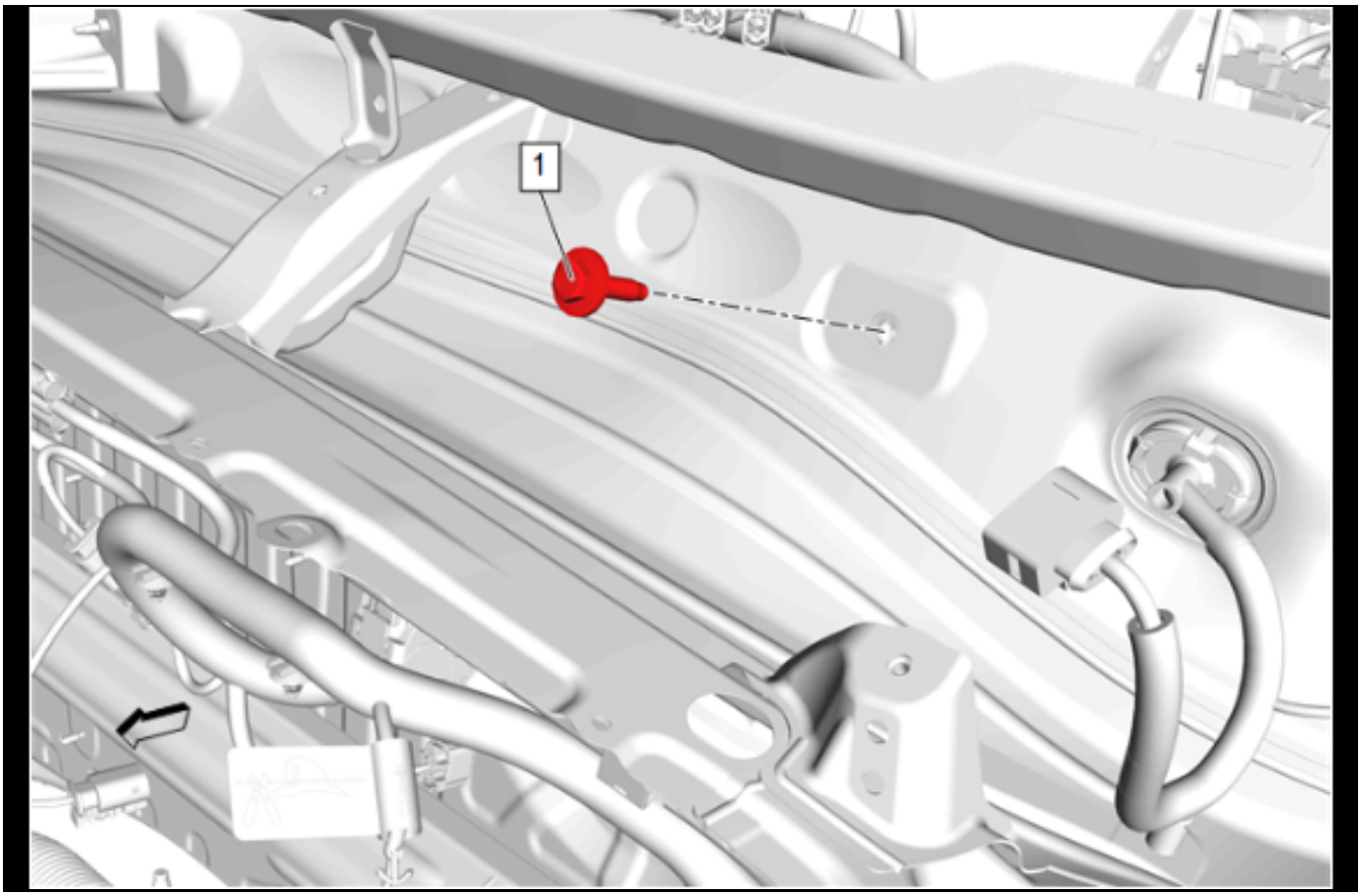

5512053

52. Instrument Panel Tie Bar Bolt (1) @ Plenum Lower Panel » Remove

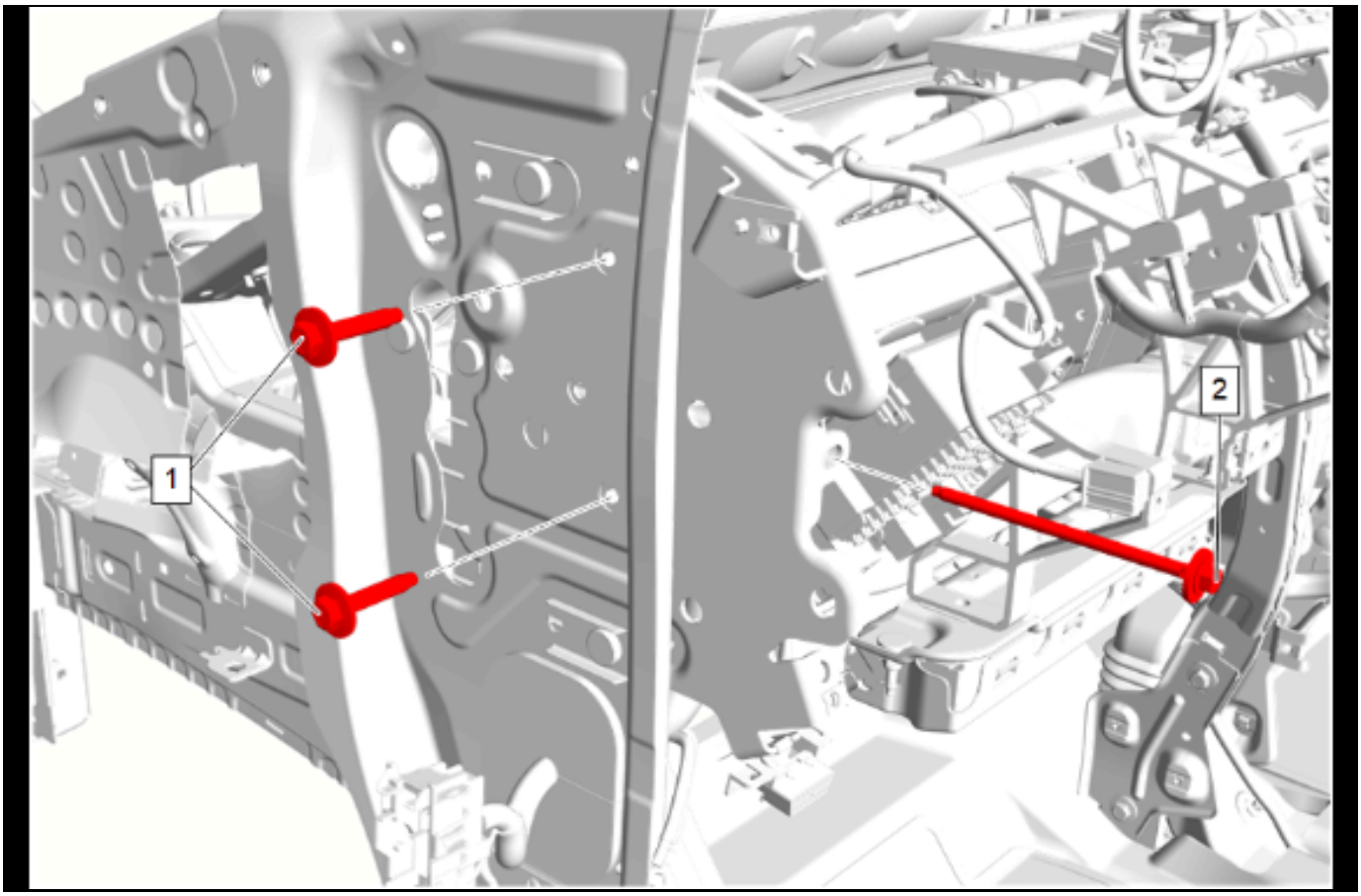

5699813

53. Instrument Panel Tie Bar Bolt (1) @ Front Side Door » Remove [2x]
54. Instrument Panel Tie Bar Bolt (2) » Remove

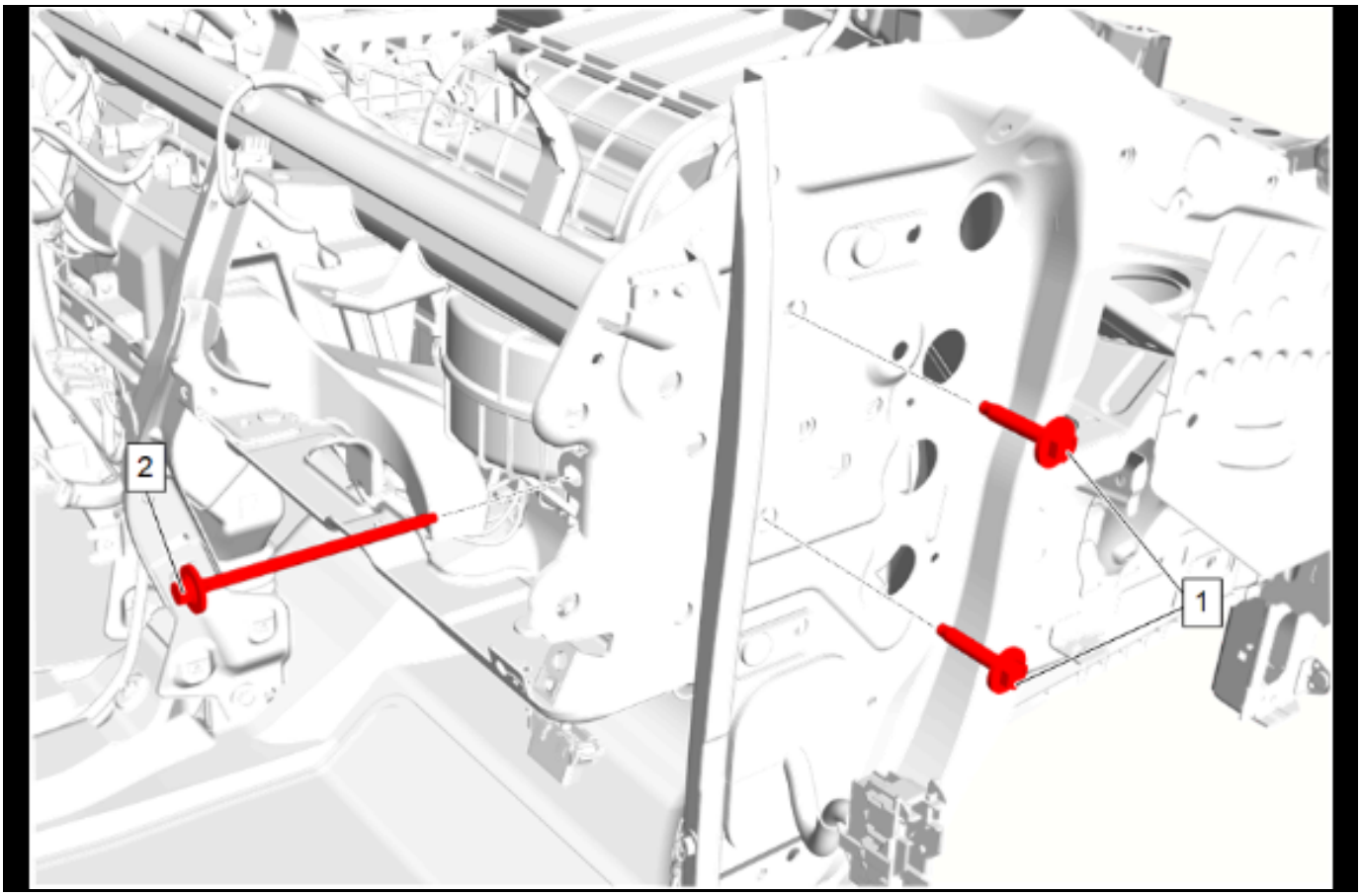

5699824

55. Instrument Panel Tie Bar Bolt @ Front Side Door (1) » Remove [2x]
56. Instrument Panel Tie Bar Bolt (2) » Remove

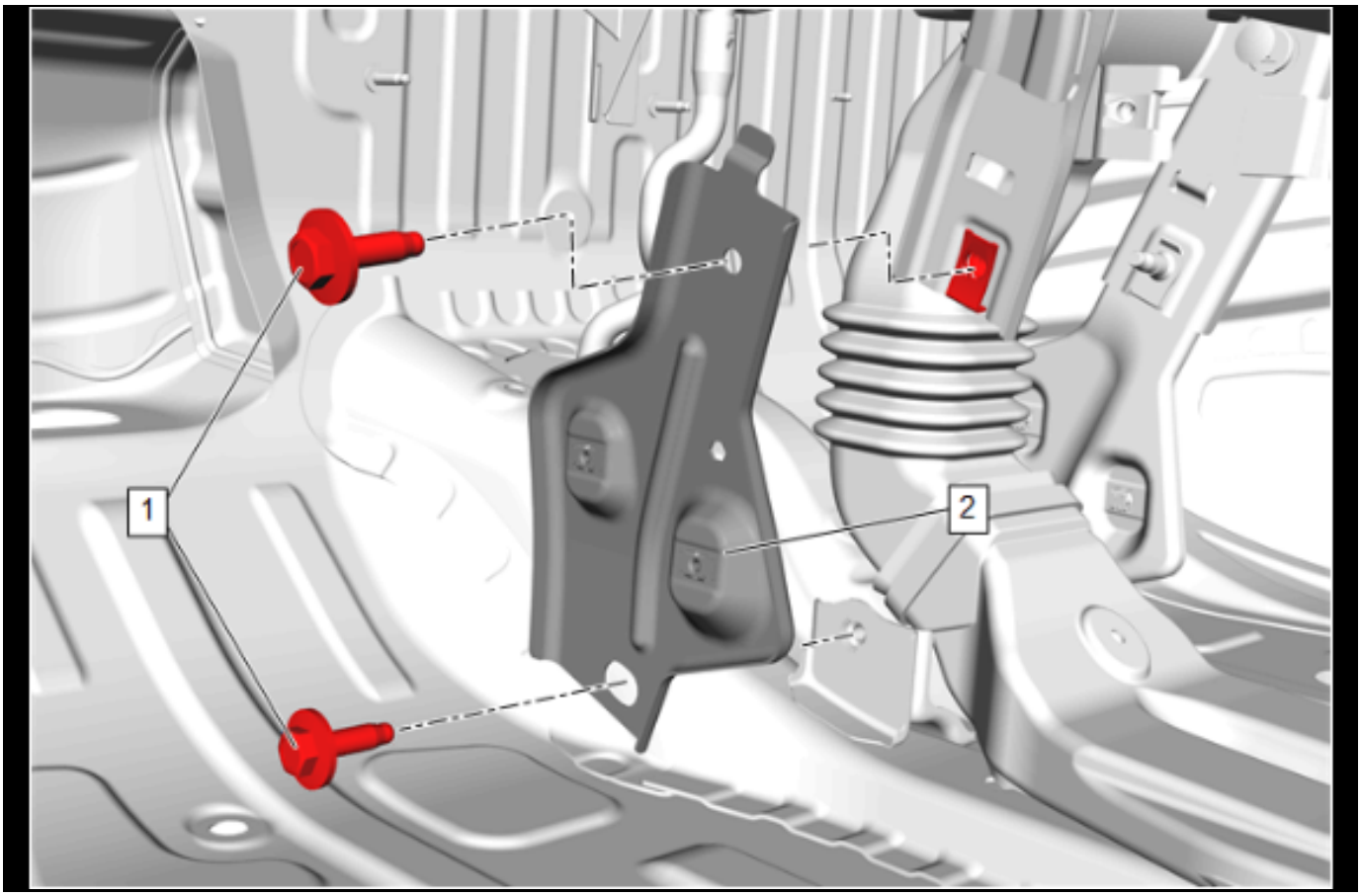

5482077

Note: Left side shown, right side similar.

57. Instrument Panel Tie Bar Brace Bolt - Left Side and Right Side (1) » Remove [4x]
58. Instrument Panel Tie Bar Brace - Left Side and Right Side (2) » Remove [2x]

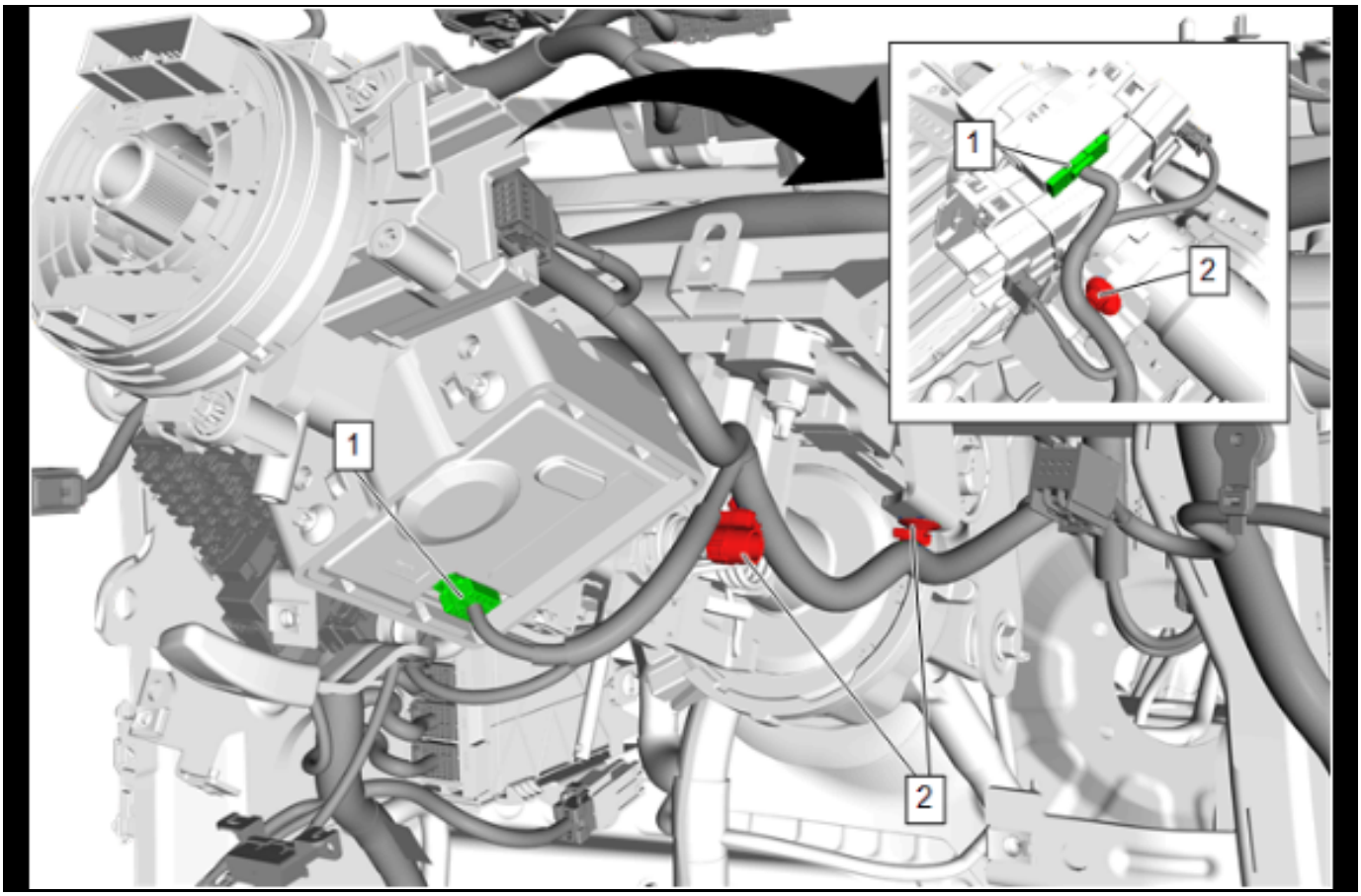

5512072

59. Disconnect all electrical connectors. (1) [2x]
60. Release the retainers. (2) [3x]

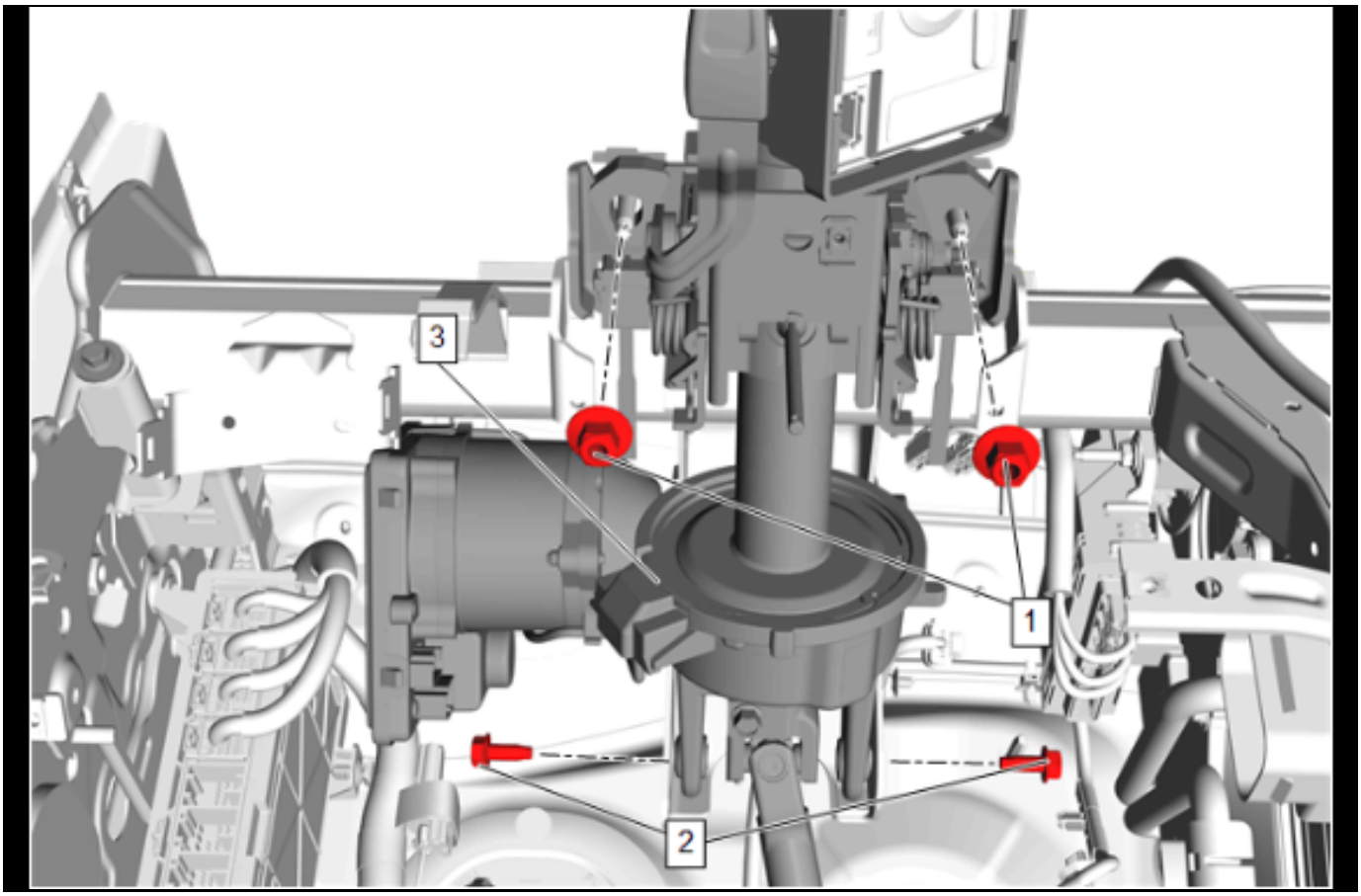

5512069

61. Steering Column Upper Support Bracket Nut (1) » Remove [2x]
62. Steering Column Lower Support Bracket Bolt (2) » Remove [2x]
63. Disconnect the electrical connectors and remove the retainers before repositioning steering column.
64. Steering Column (3) » Reposition

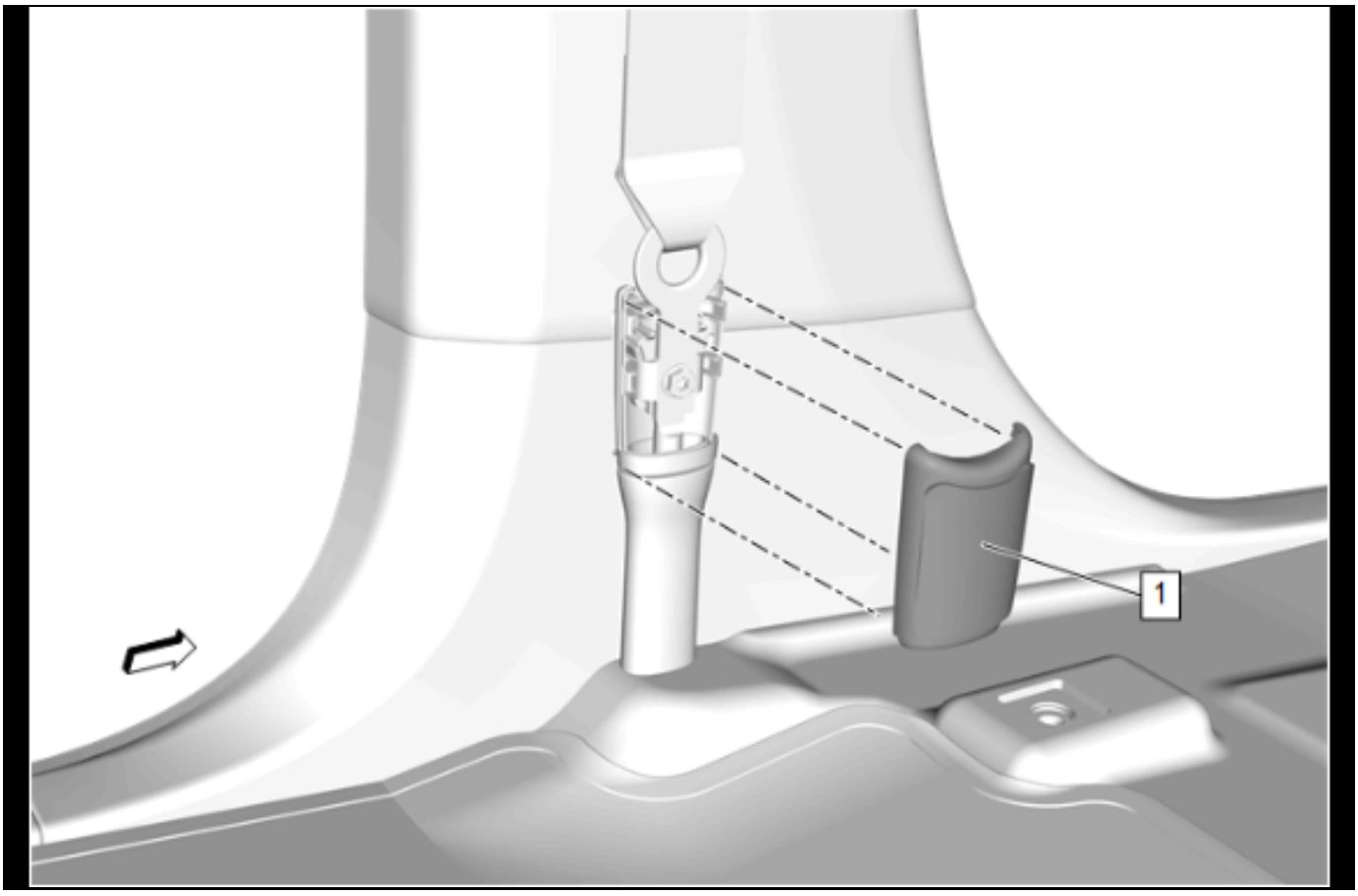

5480375

Note: Left side shown, right side similar.

65. Move the front seat fully forward.
    Note: Use a flat bladed plastic tool to remove.
66. Front Seat Belt Anchor Plate Tensioner Cover (1)
    » Remove

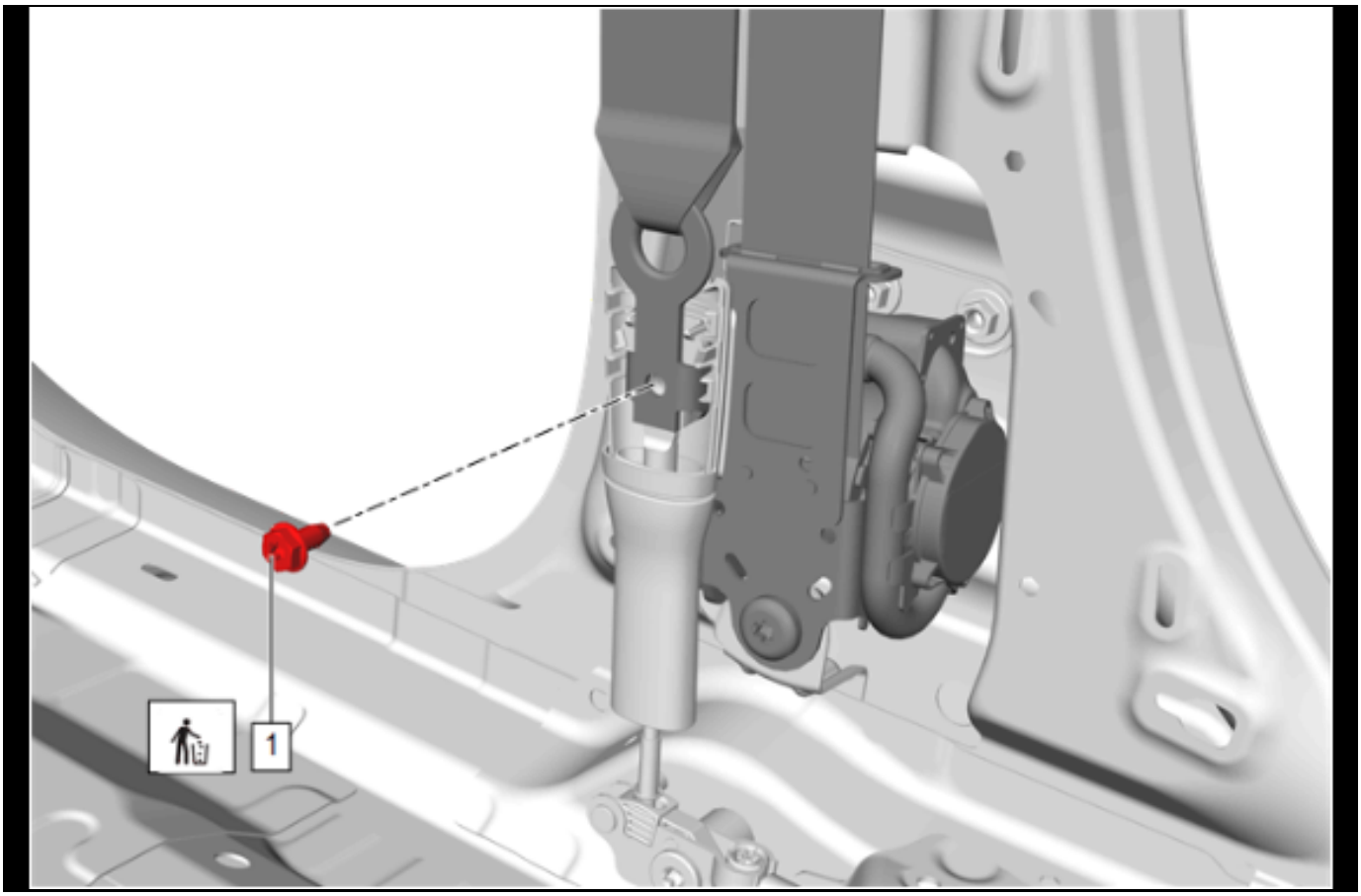

5482337

Note: Left side shown, right side similar.

67. Front Seat Belt Anchor Plate Tensioner Bolt (1) »
Remove and DISCARD

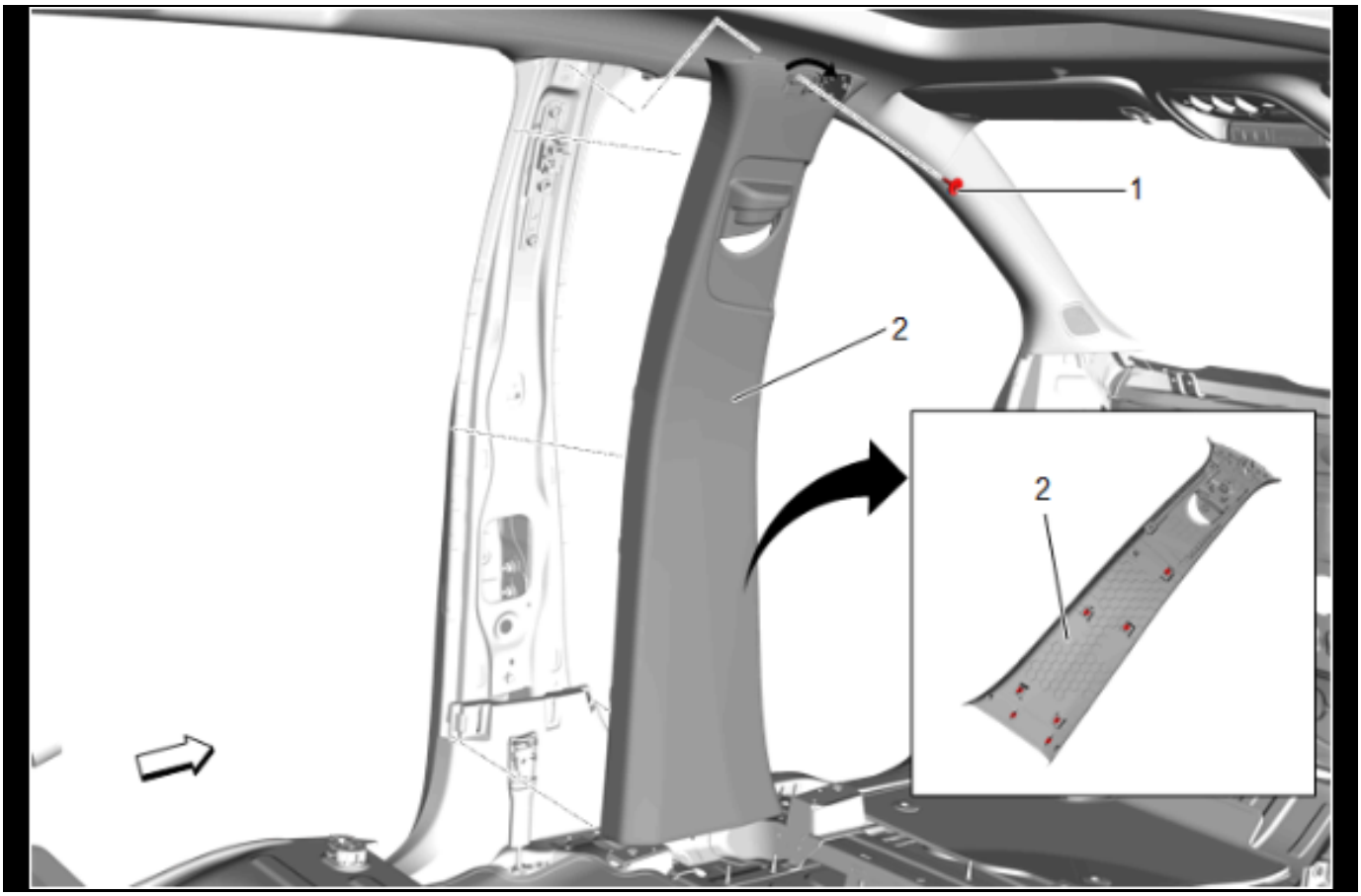

5480374

Note: Left side shown, right side similar.

68. Use a flat-bladed tool to open the bolt cap.
69. Use a magnetic tool to remove and install the bolt carefully because the bolt may drop inside the vehicle.
70. Center Pillar Upper Garnish Molding Bolt - Left Side and Right Side (1) » Remove [2x]
71. Pull the left and right side of center pillar trim panels (2) toward the inside of the vehicle to disengage the retainers.

    Note: When replacing the center pillar trim panel, feed the front seat belt through the panel.
72. Center Pillar Trim Panel - Left Side and Right Side (2) » Remove [2x]

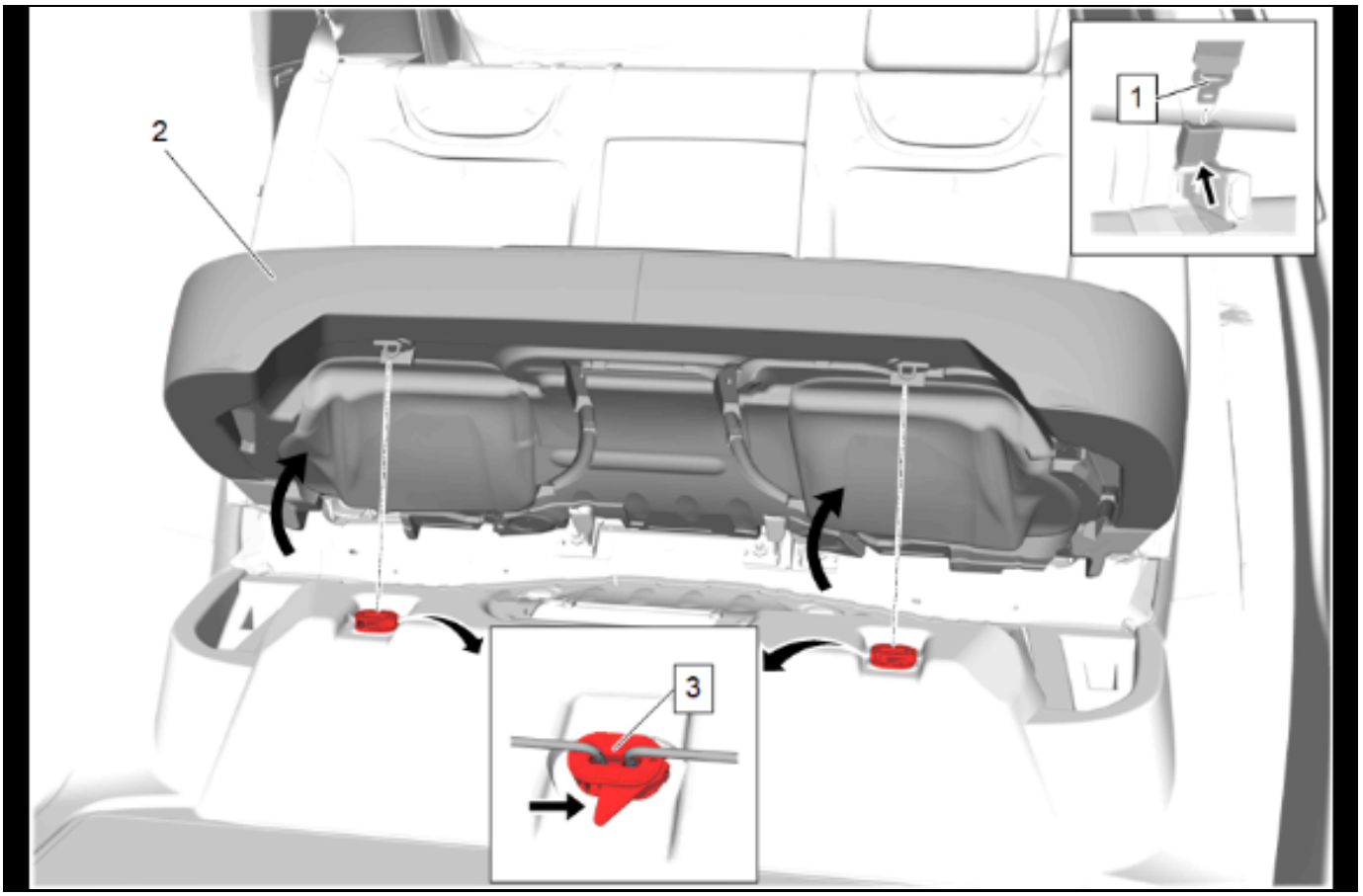

5675661

73. Rear Seat Cushion (1) » Remove — Rear Seat Cushion Removal and Installation

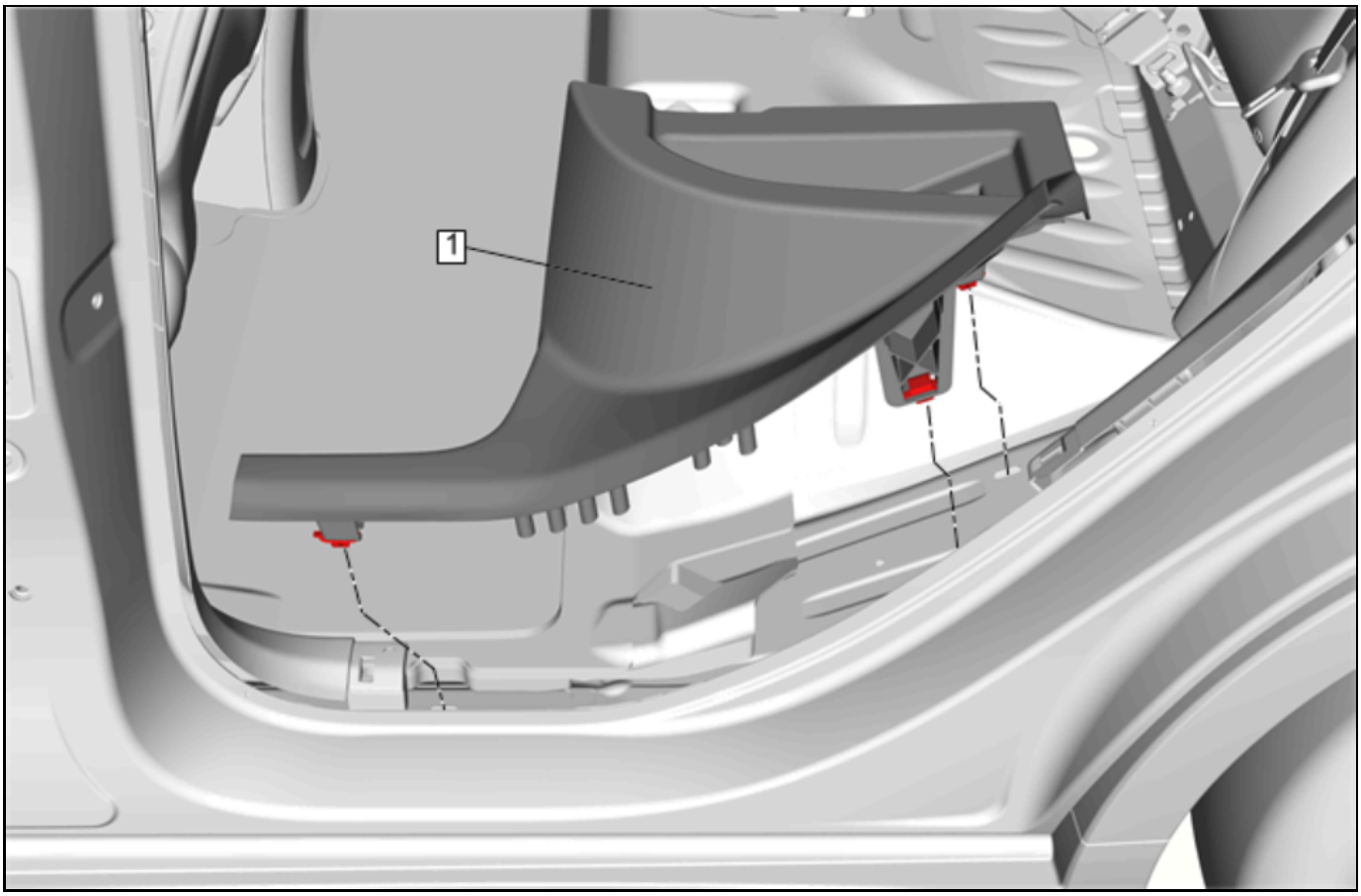

5480463

Note: Left side shown, right side similar.

74. Rear Side Door Sill Garnish Molding - Left Side and Right Side (1) » Remove [2x]
    74.1. Starting at the front of the sill garnish molding, pull upward at the B-Pillar joint to disengage sill garnish molding.
    74.2. Work your way rearward disengaging all of the garnish molding clips then pull forward to disengage from the C-Pillar lower.
    74.3. Replace the retainers as required.

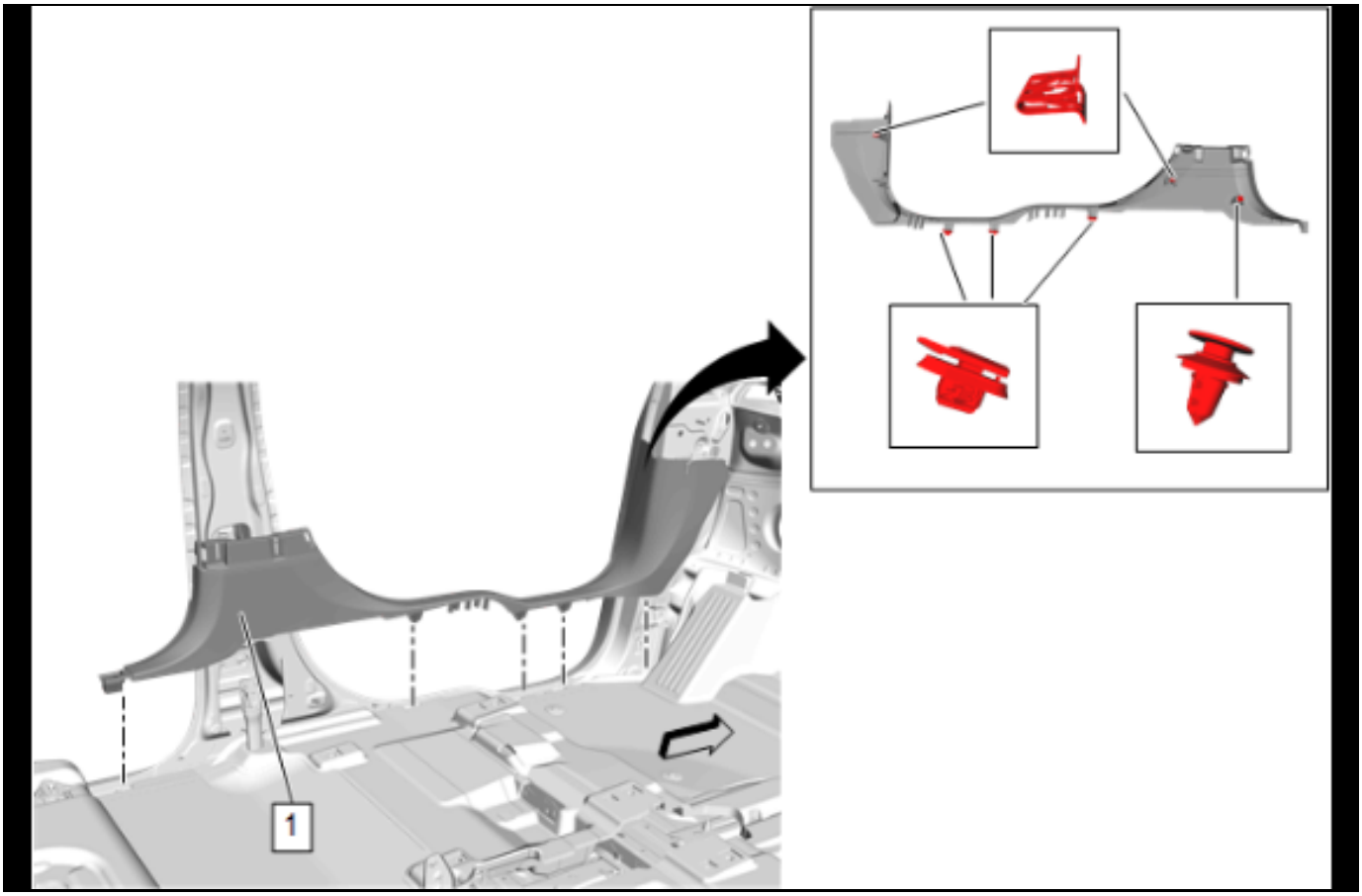

5480376

Note: Left side shown, right side similar.

75. Front Side Door Sill Garnish Molding - Left Side and Right Side (1) » Remove [2x]
    - 75.1. Starting at the rear of the garnish molding, pull upward at the B-Pillar joint to disengage garnish molding.
    - 75.2. Work your way forward disengaging all of the garnish molding clips then pull rearward to disengage the clip on the forward vertical wall.
    - 75.3. Reposition the front floor panel carpet as needed.

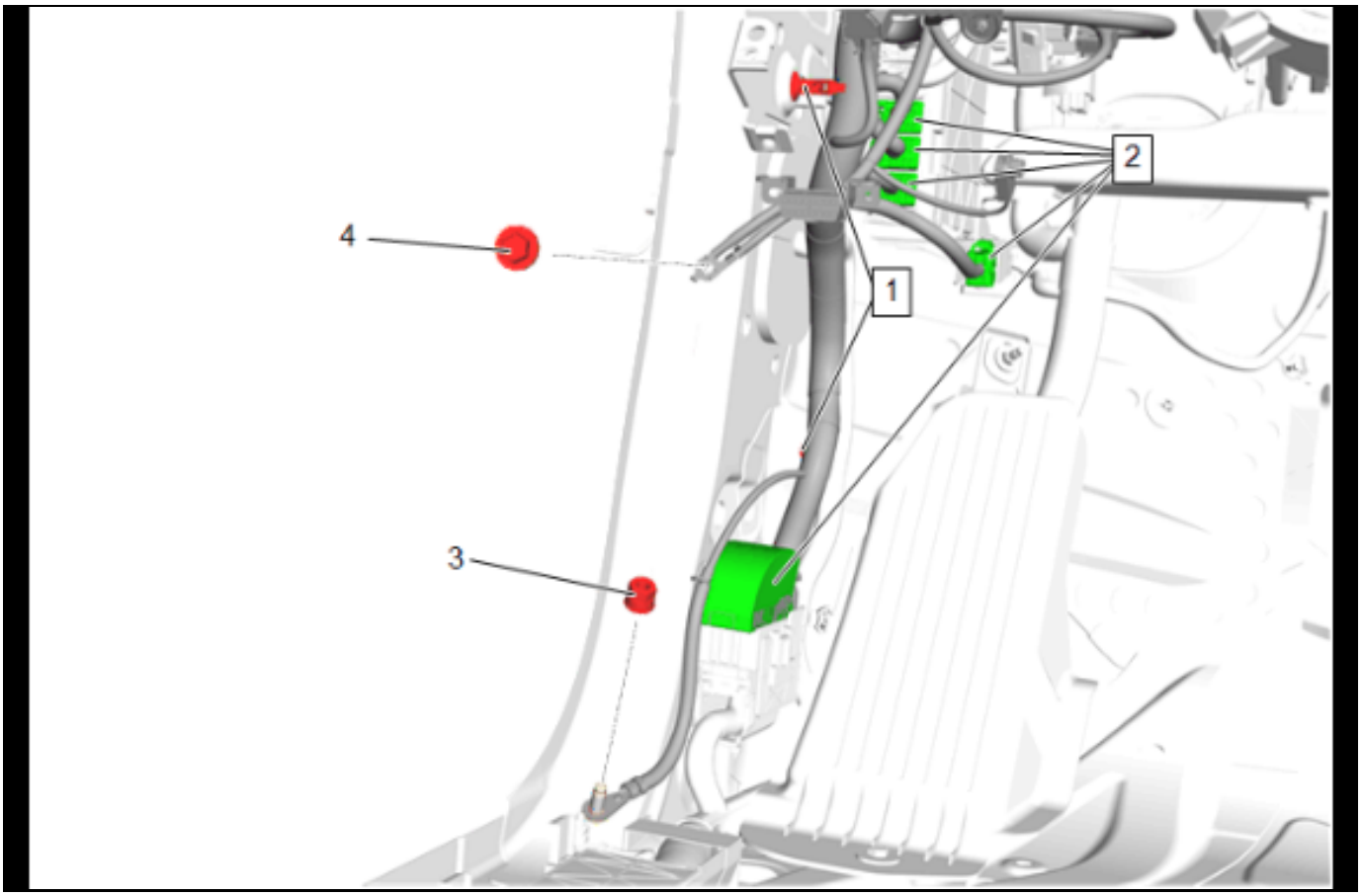

5512077

76. Disconnect all electrical connectors. (1) [6x]
77. Instrument Panel Wiring Harness Ground Bolt(2) » Remove
78. Instrument Panel Wiring Harness Ground Nut (3) » Remove
79. Reposition the front floor panel carpet as necessary.

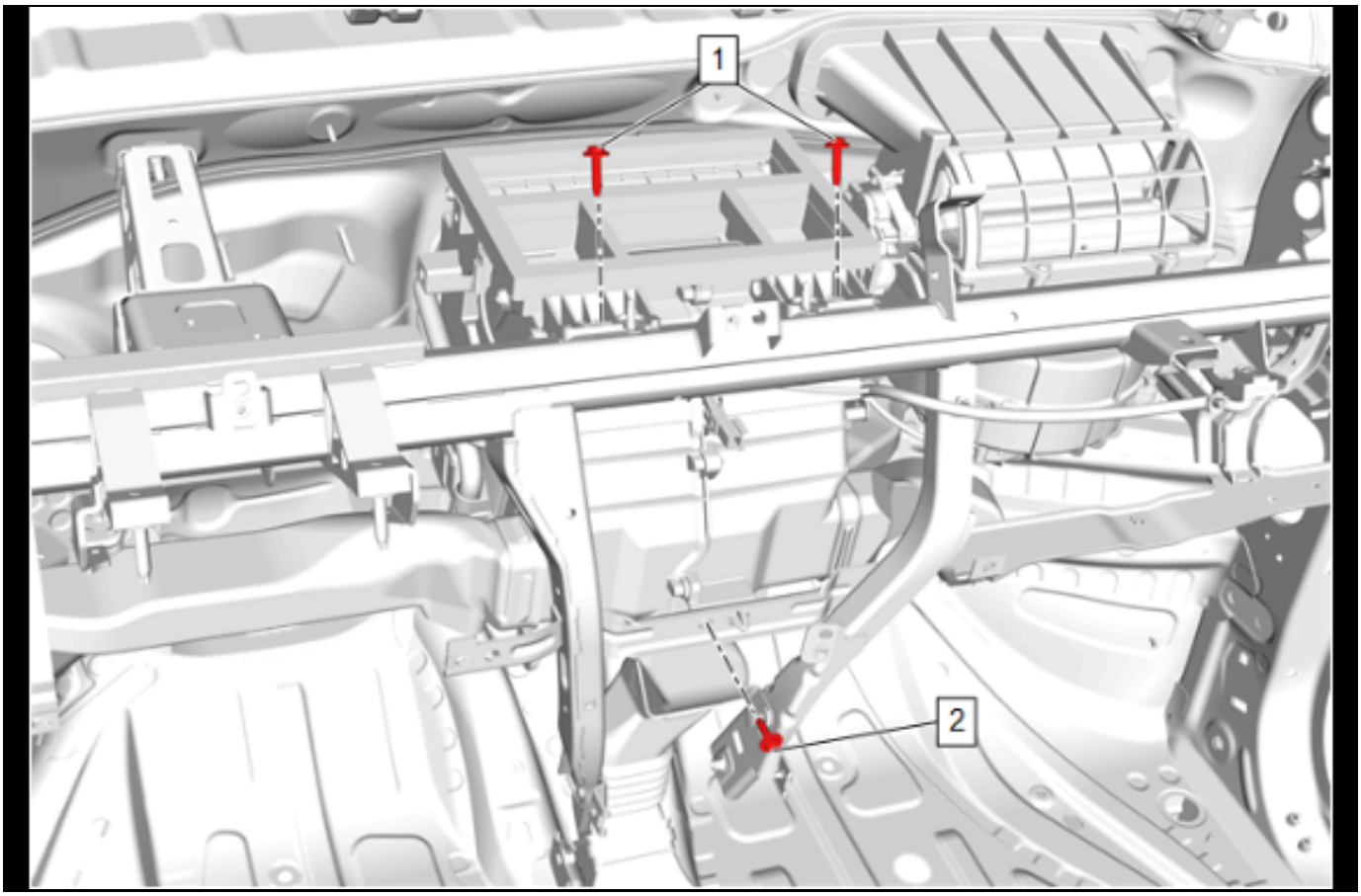

5536783

80. Heater and Air Conditioning Evaporator and Blower Module Bolt - Upper (1) » Remove [2x]
81. Heater and Air Conditioning Evaporator and Blower Module Bolt - Lower (2) » Remove

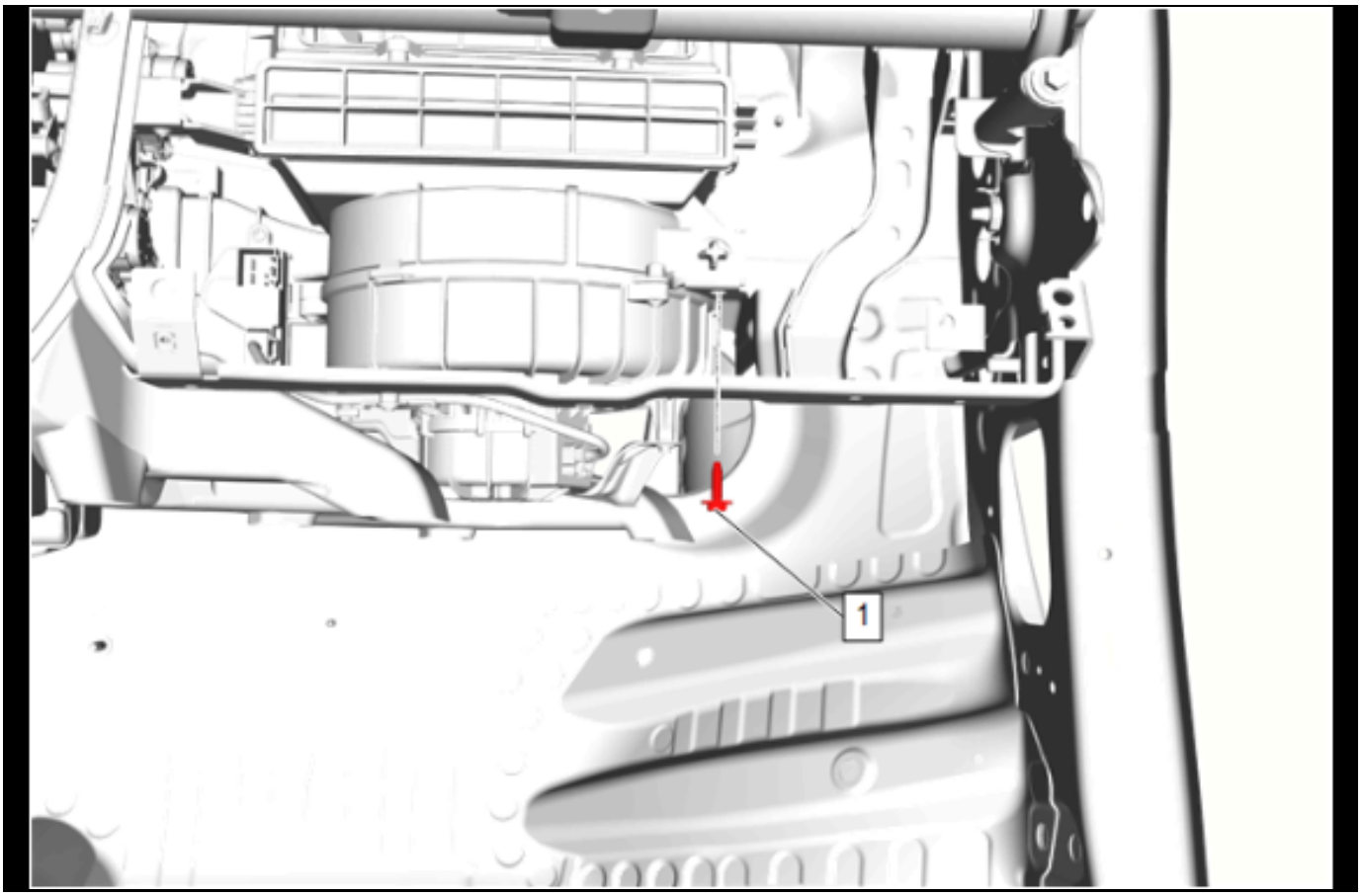

5551272

82. Heater and Air Conditioning Evaporator and Blower Module Bolt (1) » Remove

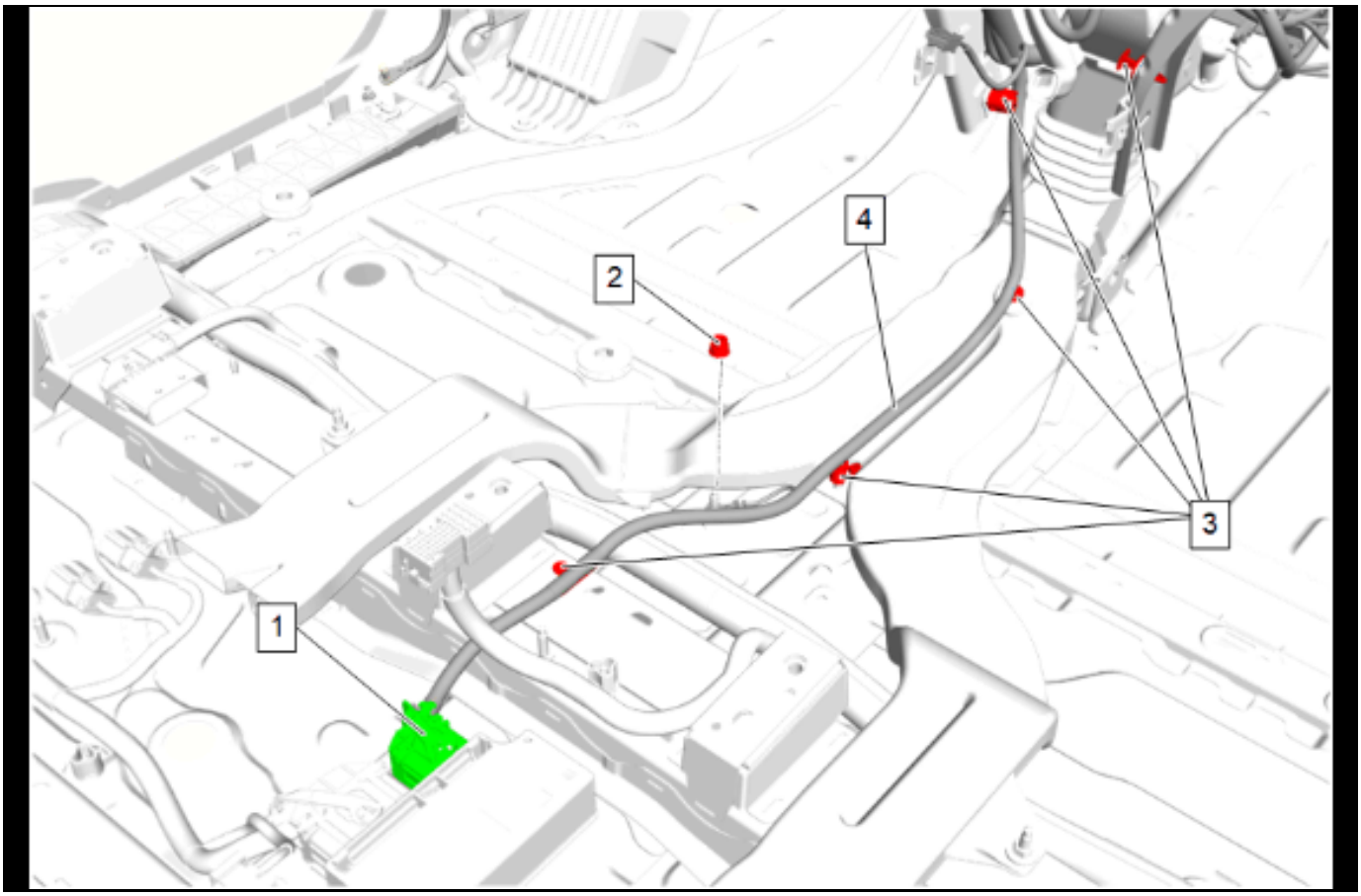

5699928

83. Disconnect the electrical connector. (1)
84. Instrument Panel Wiring Harness Ground Nut (2)
    » Remove
85. Wiring Harness Retainer (3) » Remove [5x]
86. Remove the instrument panel wiring harness. (4)

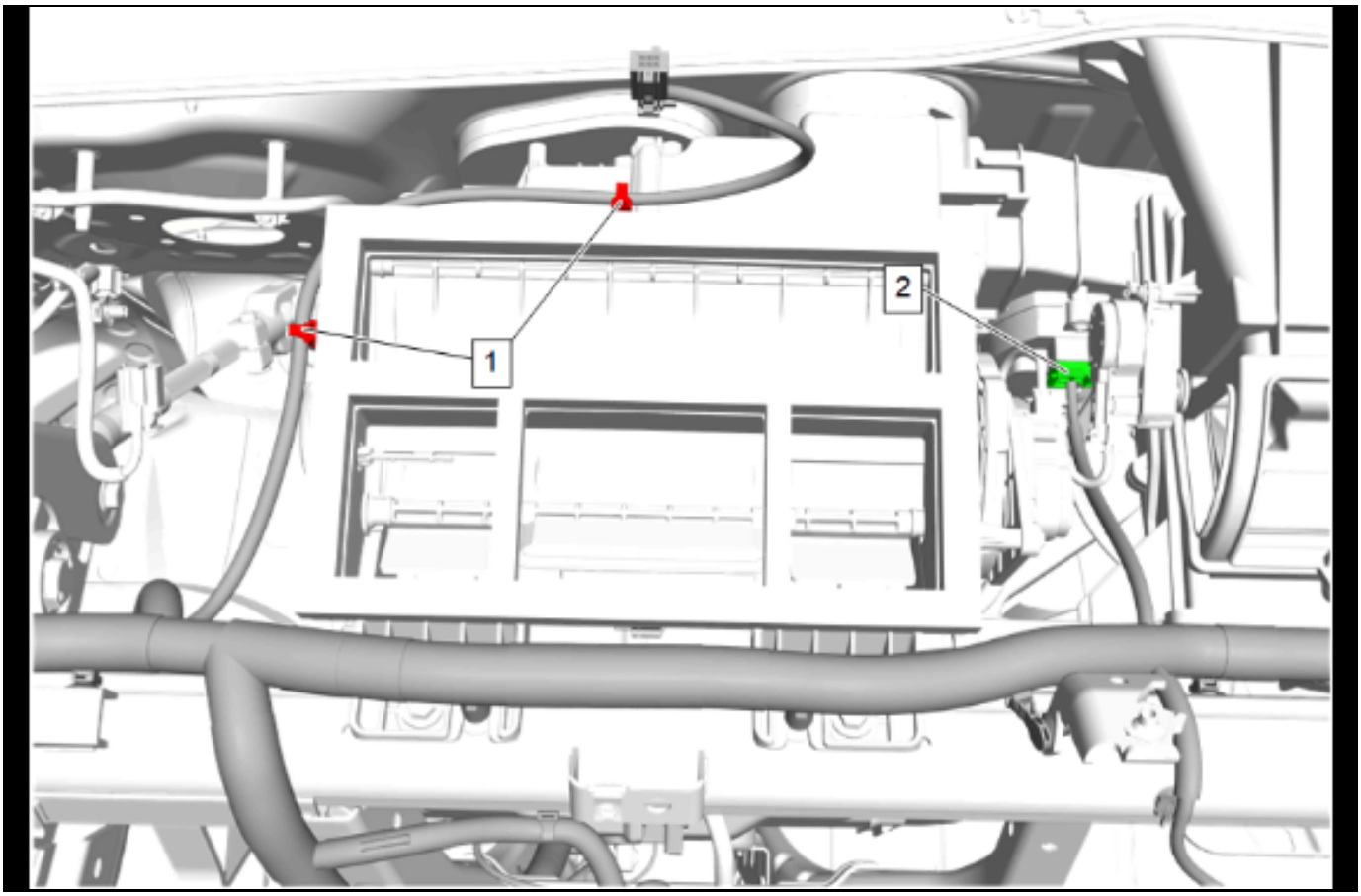

5699929

87. Wiring Harness Retainer (1) » Remove [2x]
88. Disconnect the electrical connector. (2)

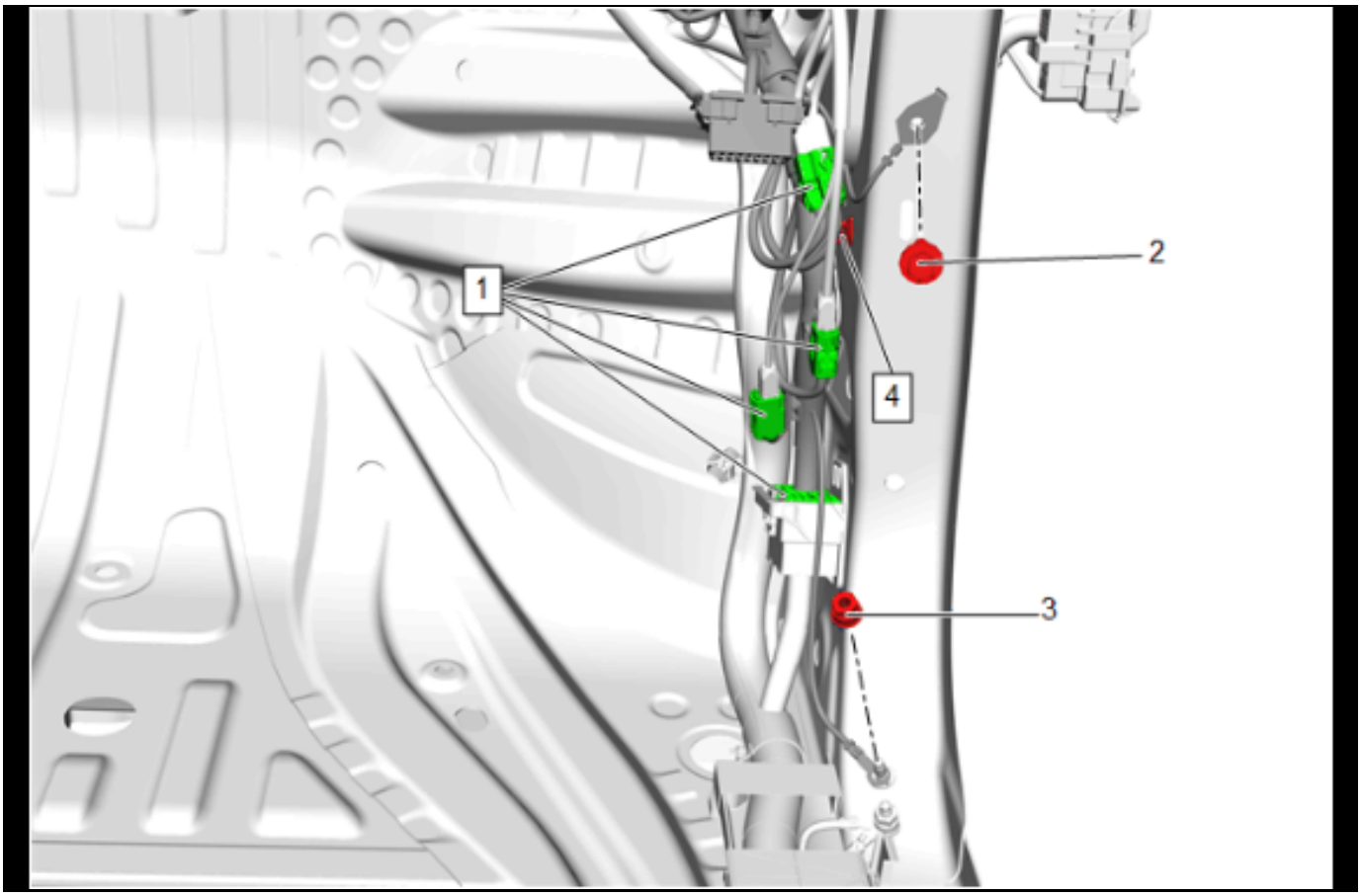

5512081

89. Disconnect all electrical connectors. (1)
90. Instrument Panel Wiring Harness Ground Bolt(2) » Remove
91. Instrument Panel Wiring Harness Ground Nut (3) » Remove
92. Release the retainer. (4)

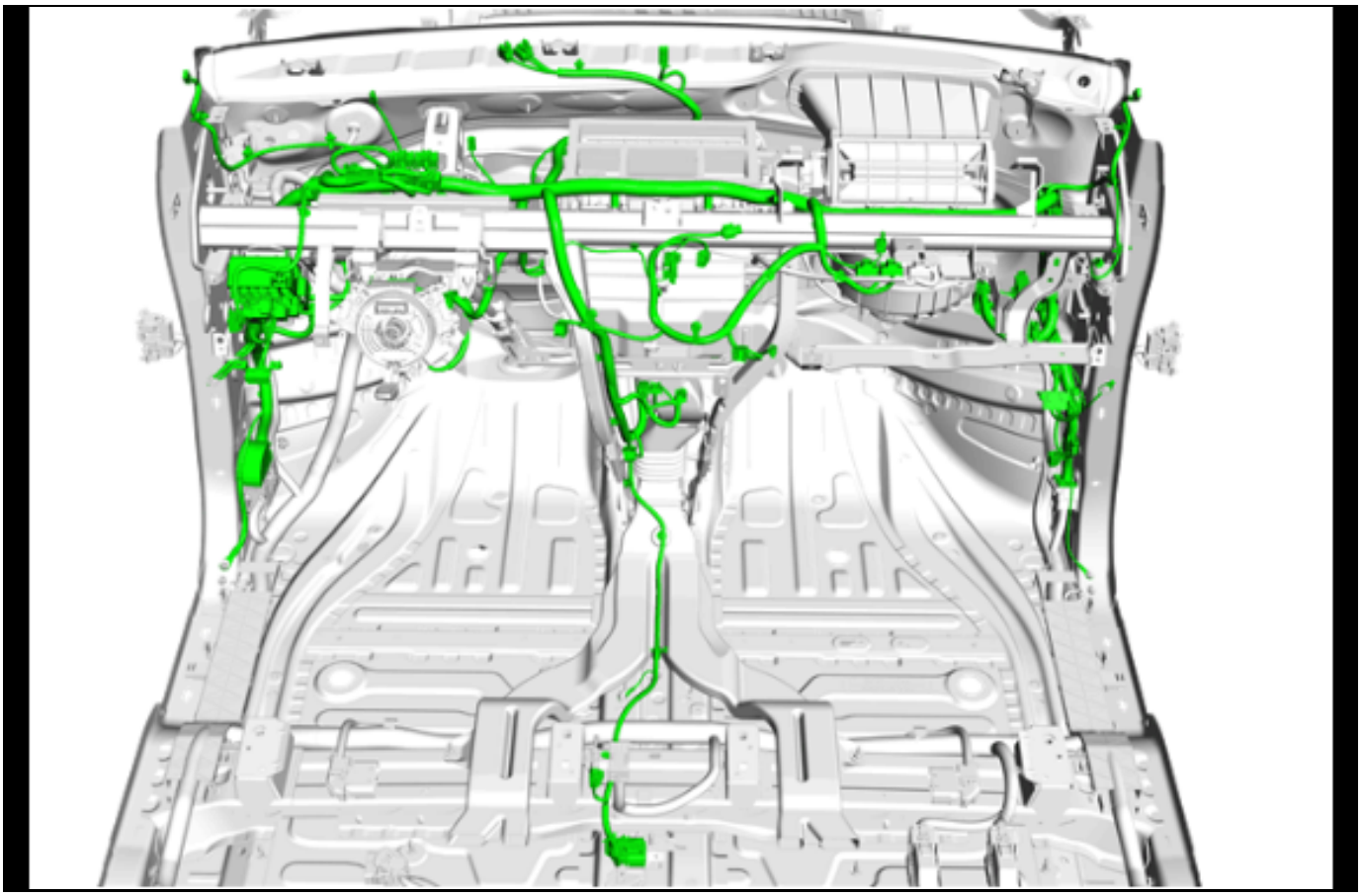

5512084

93. Note the location and routing of the instrument panel wiring harness prior to removal to ensure proper installation.

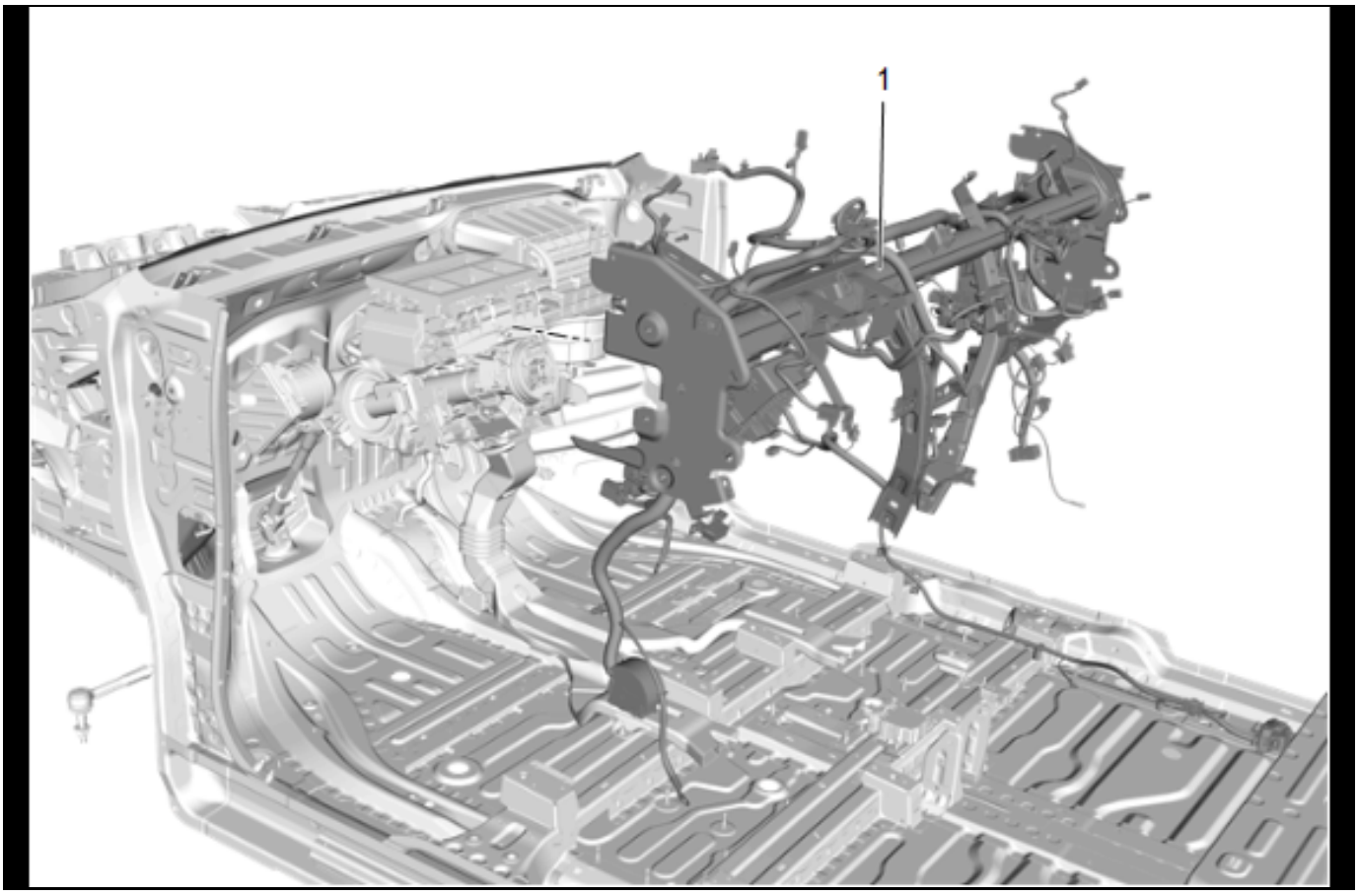

5512085

94. Support the HVAC module in order to prevent damage.
95. With the aid of an assistant, remove the instrument panel assembly from the vehicle. (1)

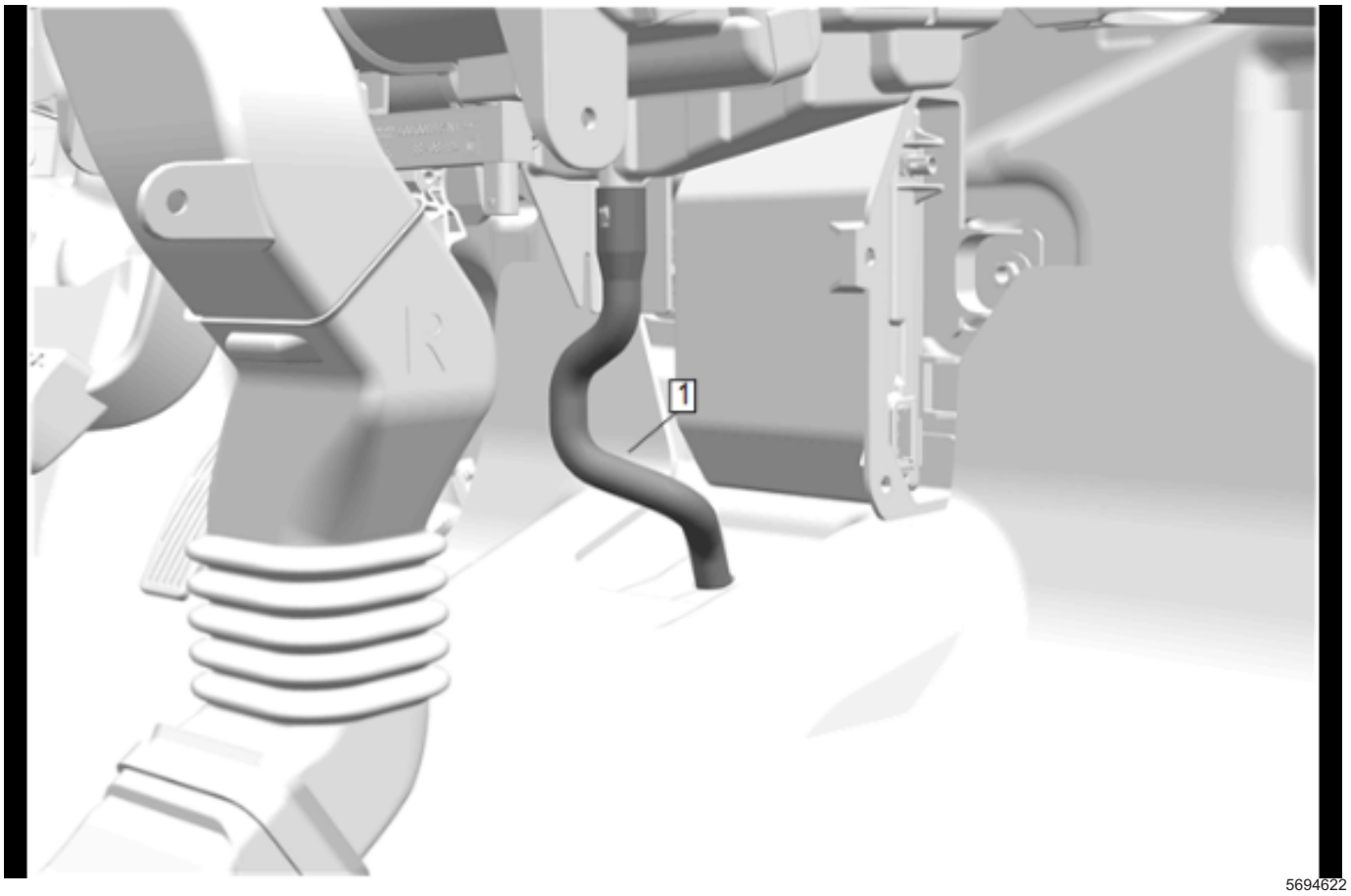

96. Air Conditioning Evaporator and Blower Module Drain Hose (1) » Remove

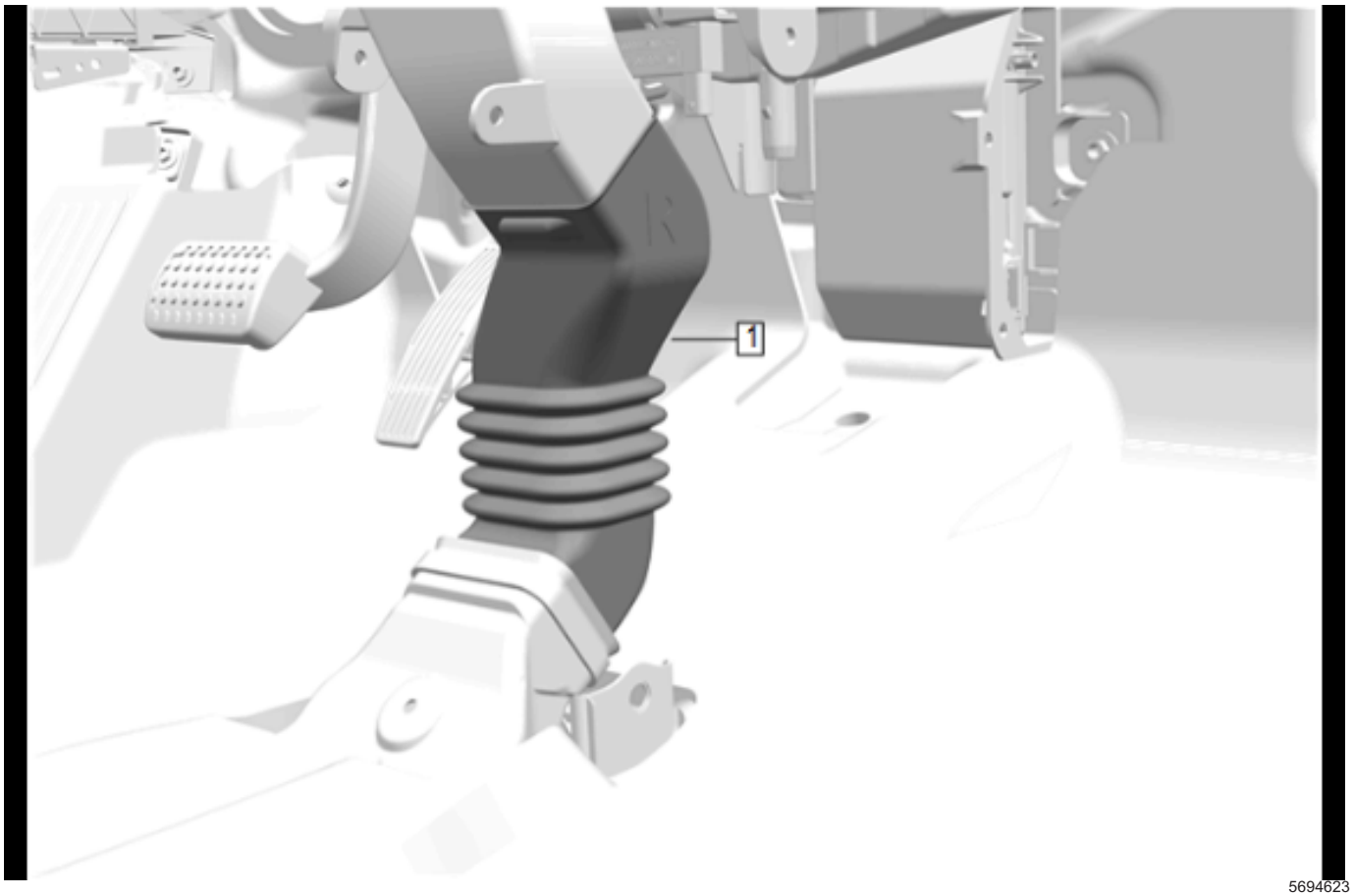

5694623

97. Floor Rear Air Outlet Duct Adapter (1) » Remove

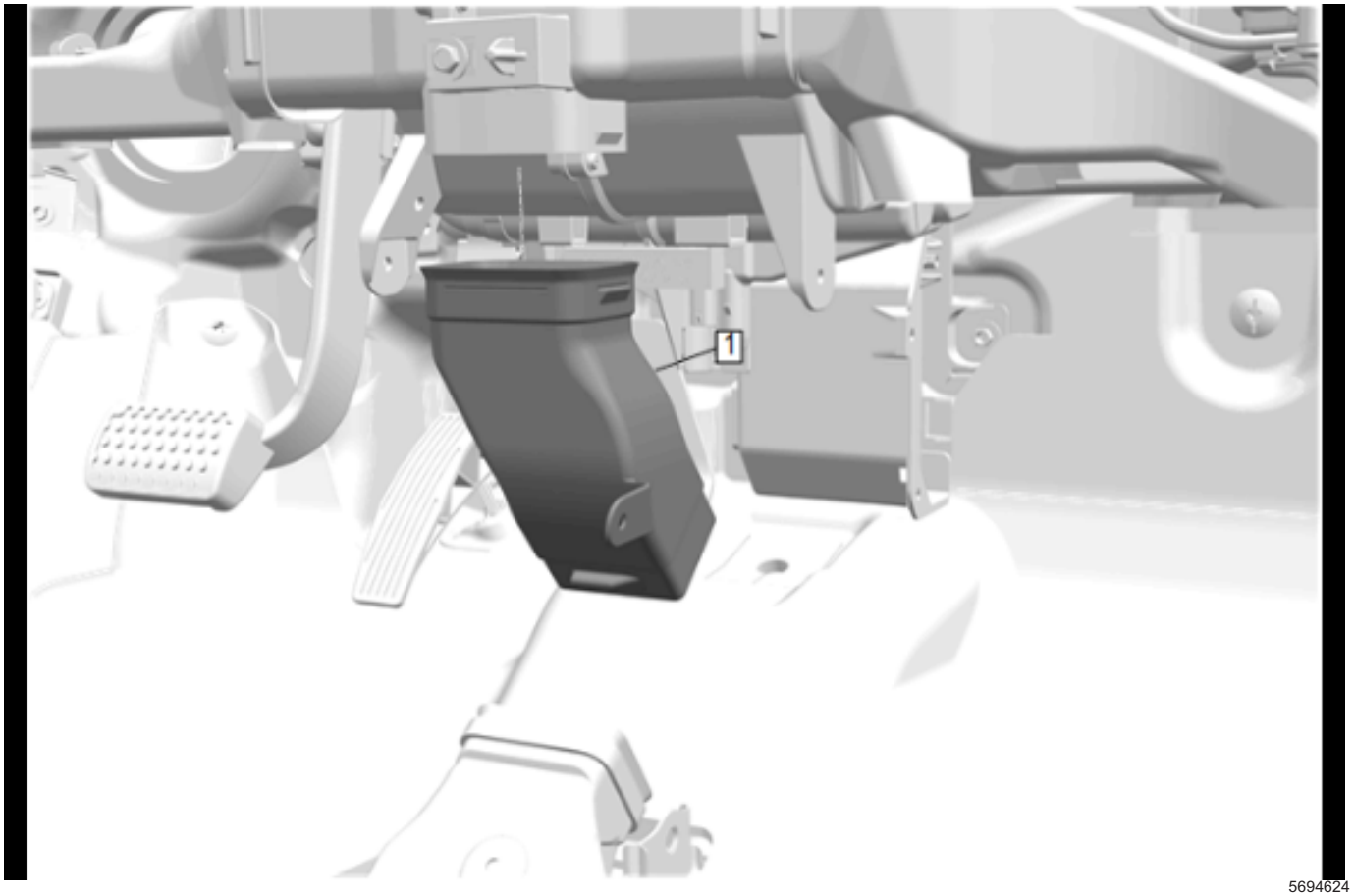

5694624

98. Floor Front Air Outlet Duct (1) » Remove
99. Cap the heater core tube to prevent spillage.

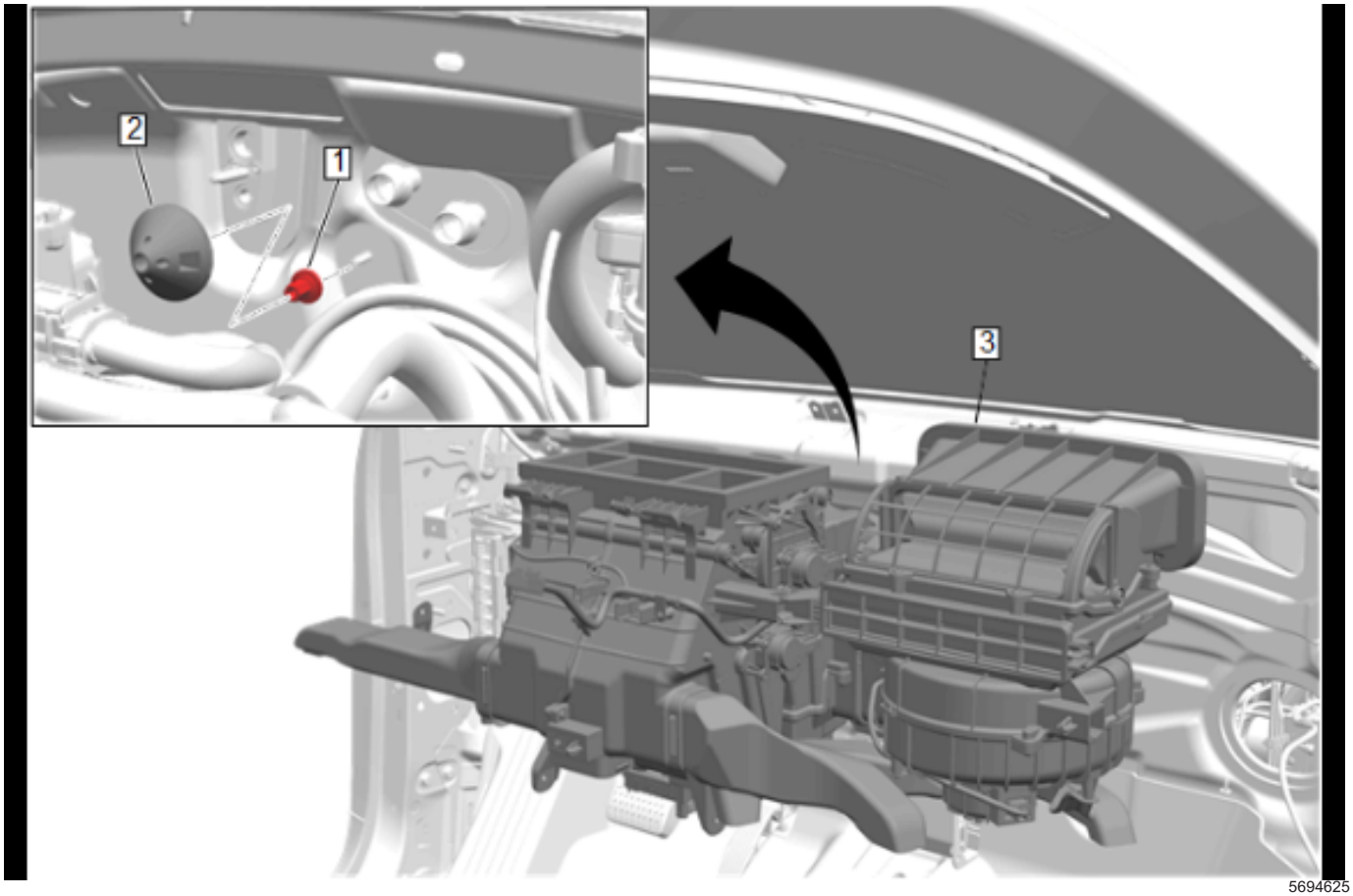

5694625

100. Air Conditioning Evaporator and Blower Module Stud Cap (2) » Remove
101. From within the engine compartment, remove the heater and air conditioning evaporator and blower module nut (1) securing the heater and air conditioning evaporator and blower module to the cowl panel.
102. Heater and Air Conditioning Evaporator and Blower Module (3) » Remove
103. Transfer components as necessary.

Installation Procedure

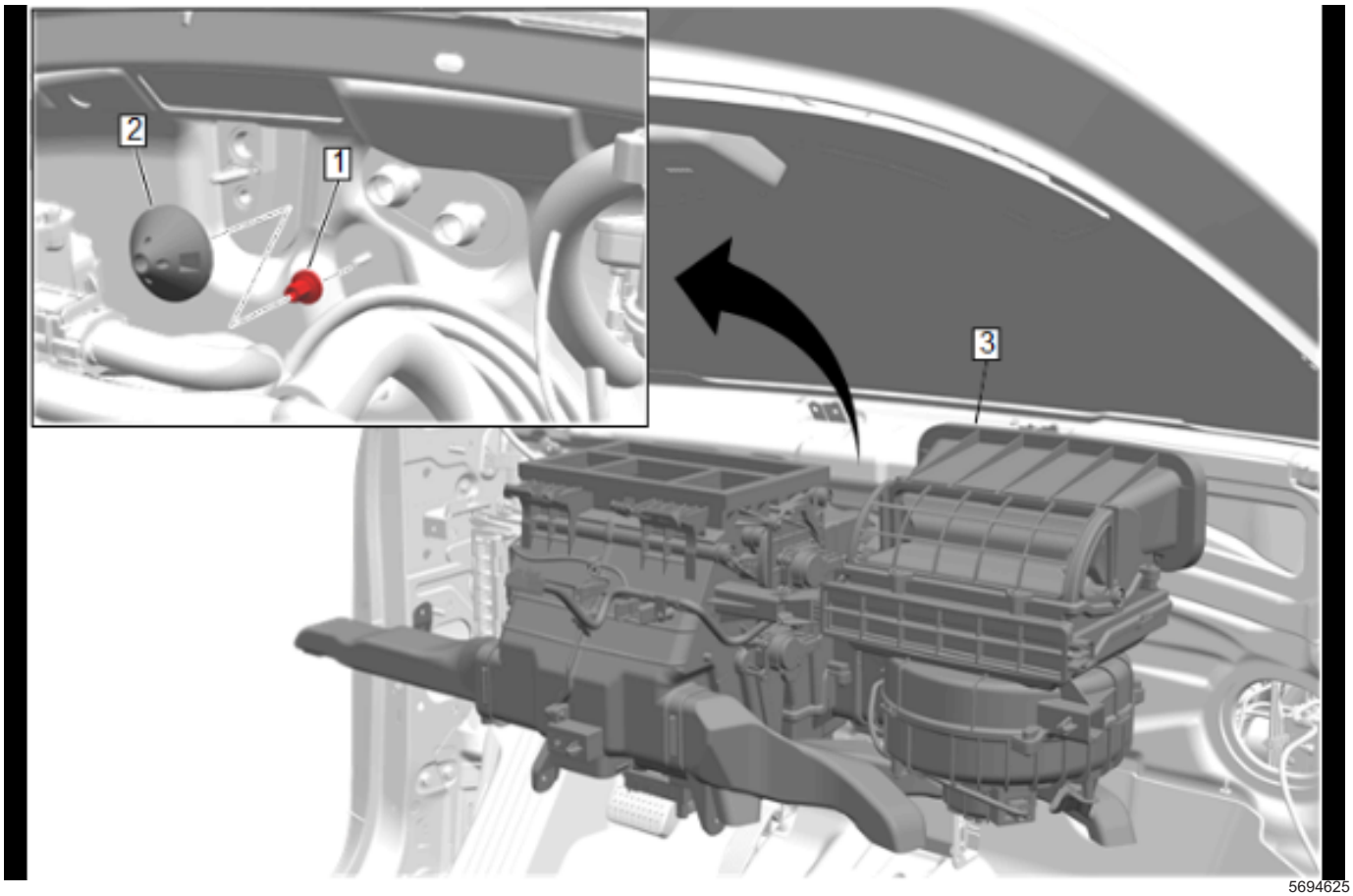

5694625

1. Position the Heater and Air Conditioning Evaporator and Blower Module (3) into the vehicle and temporarily support it.
2. From within the engine compartment, install the heater and air conditioning evaporator and blower module nut (1) securing the heater and air conditioning evaporator and blower module to the cowl panel.
3. Heater and Air Conditioning Evaporator and Blower Module Nut (1) » Tighten — *Fastener Specifications on page 5-3*
4. Air Conditioning Evaporator and Blower Module Stud Cap (2) » Install
5. Uncap the heater core tube.

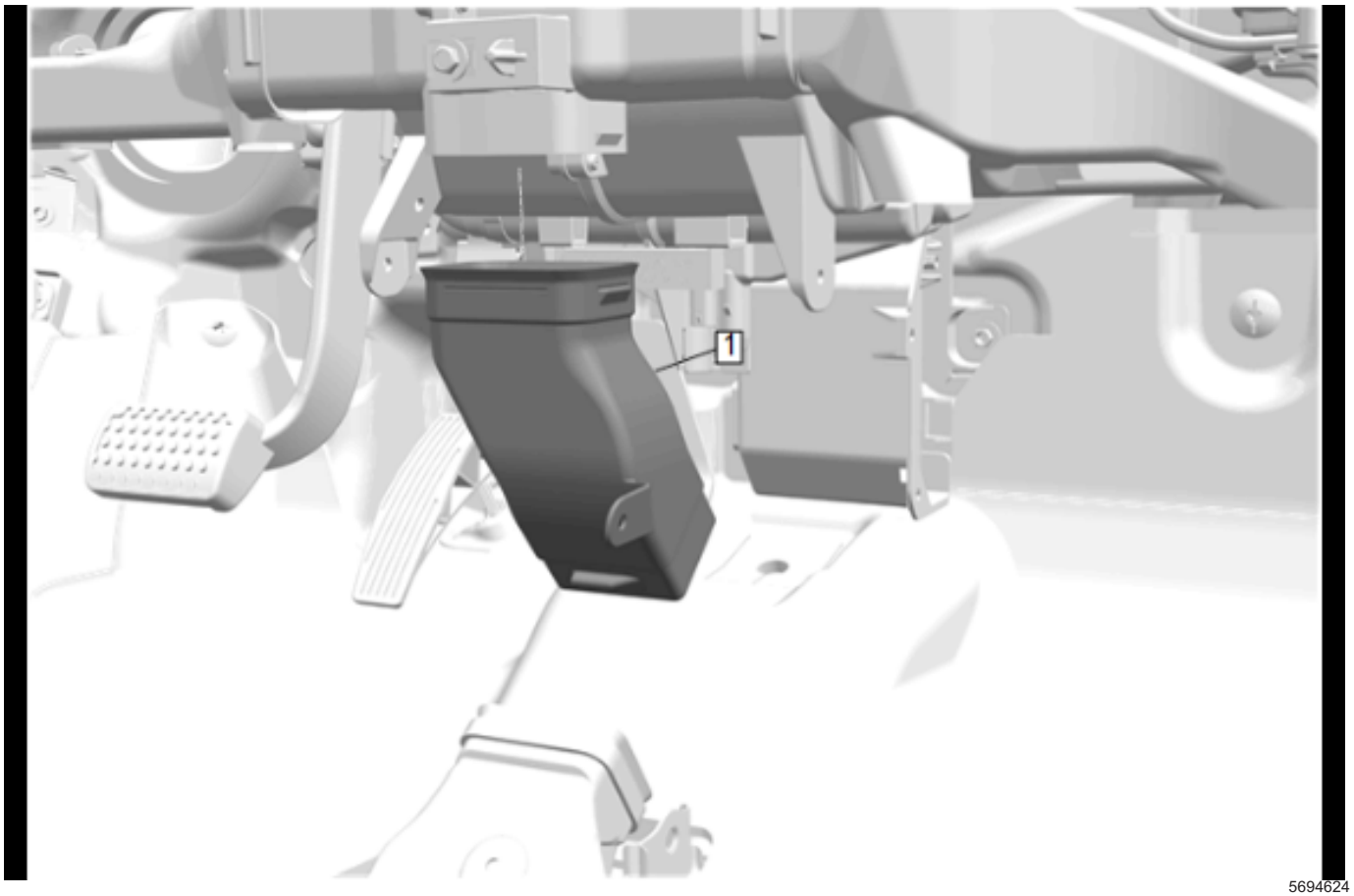

5694624

6. Floor Front Air Outlet Duct (1) » Install

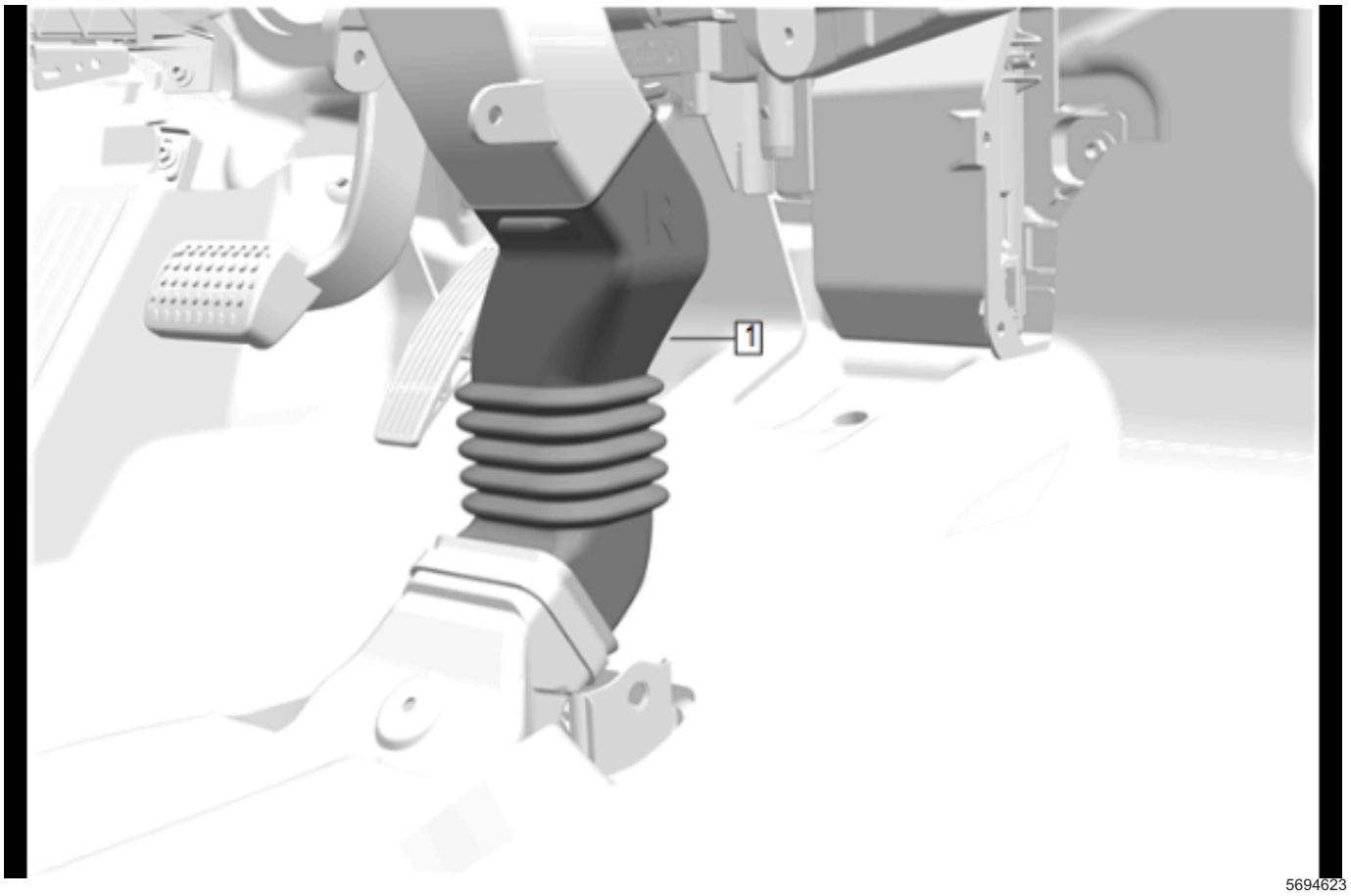

7. Floor Rear Air Outlet Duct Adapter (1) » Install

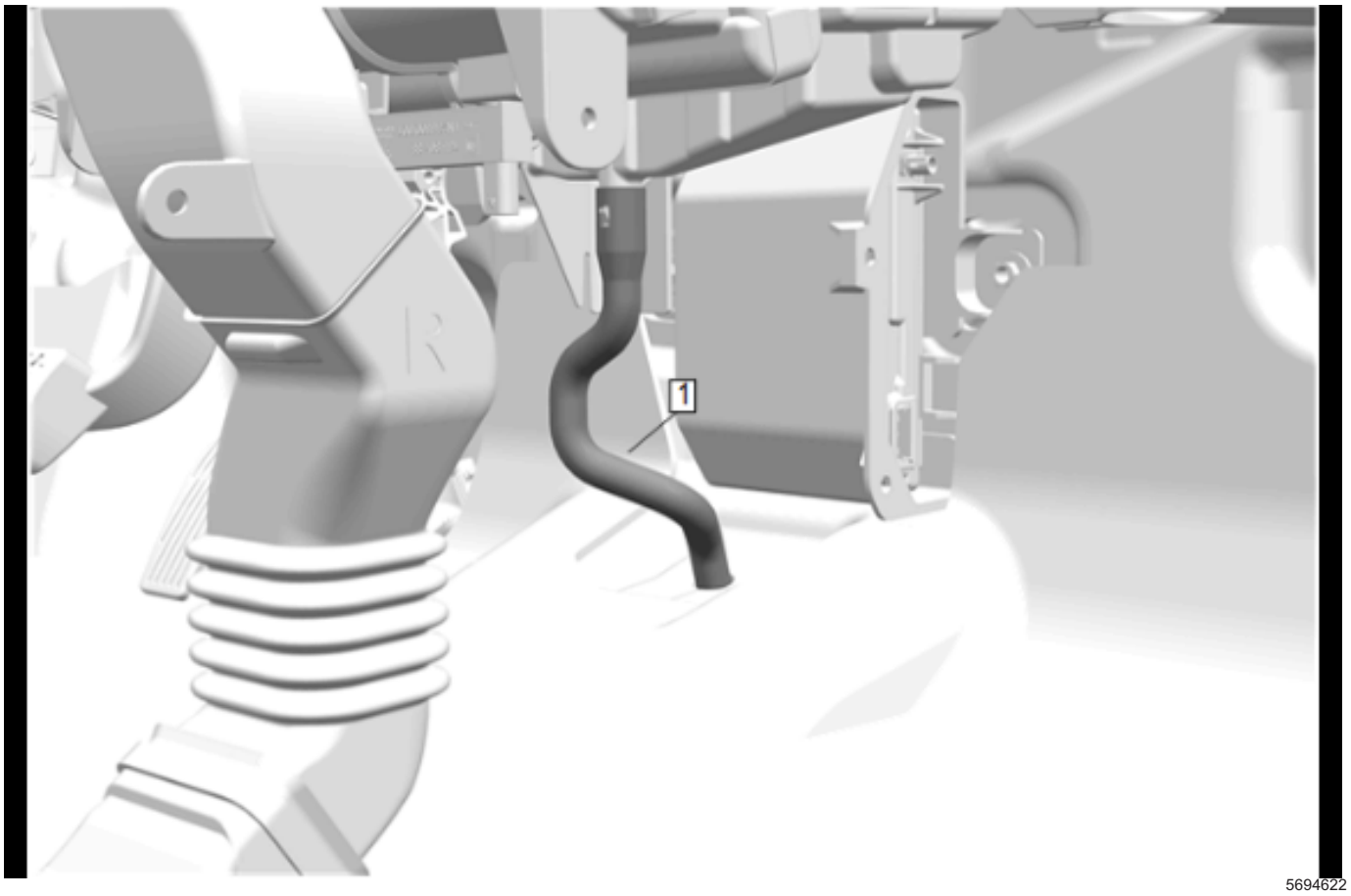

8. Air Conditioning Evaporator and Blower Module Drain Hose (1) » Install

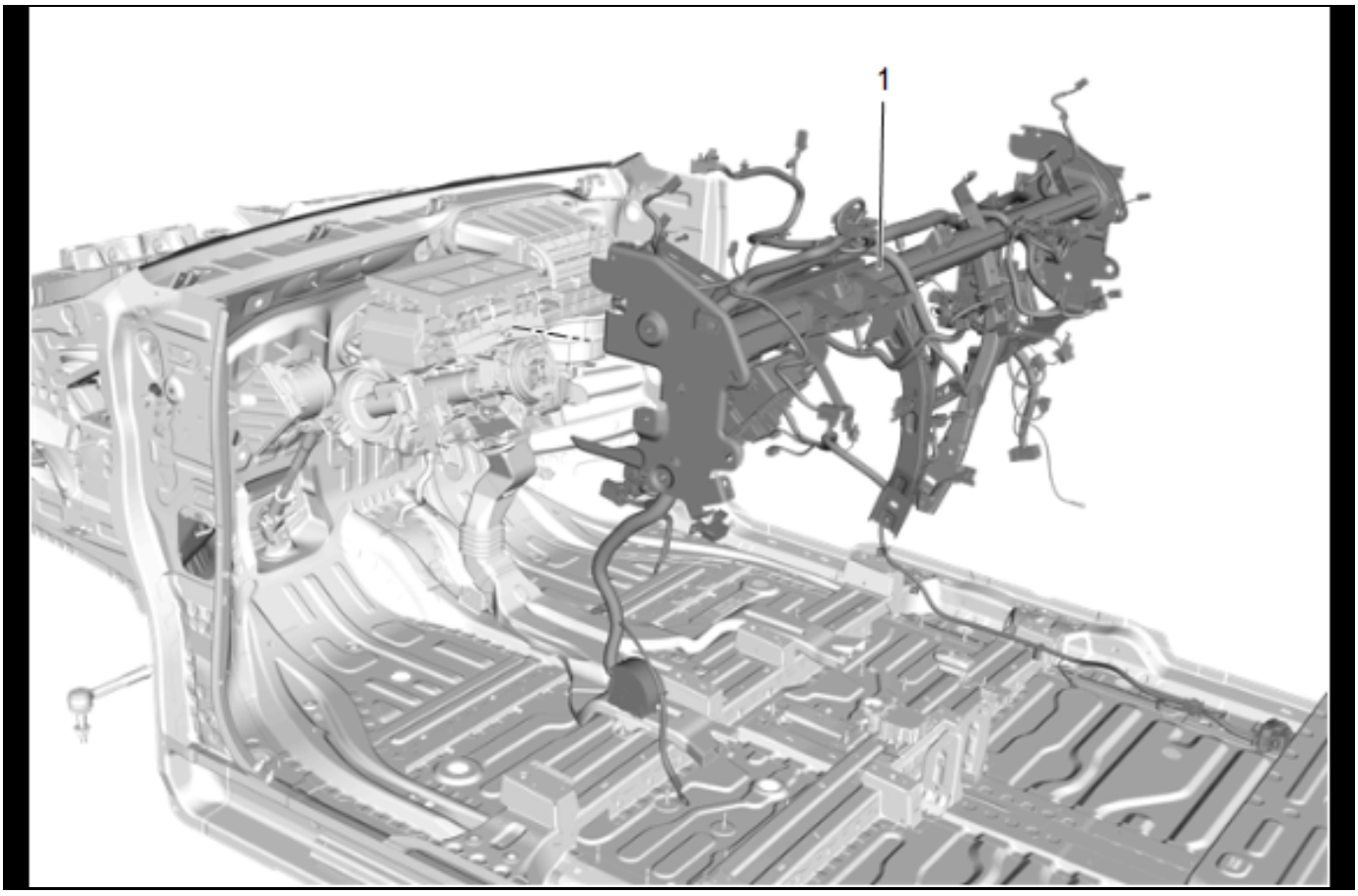

5512085

9. With the aid of an assistant, position the instrument panel tie bar assembly into the vehicle. (1)
10. Install the instrument panel wiring harness to the position noted in the removal procedure.

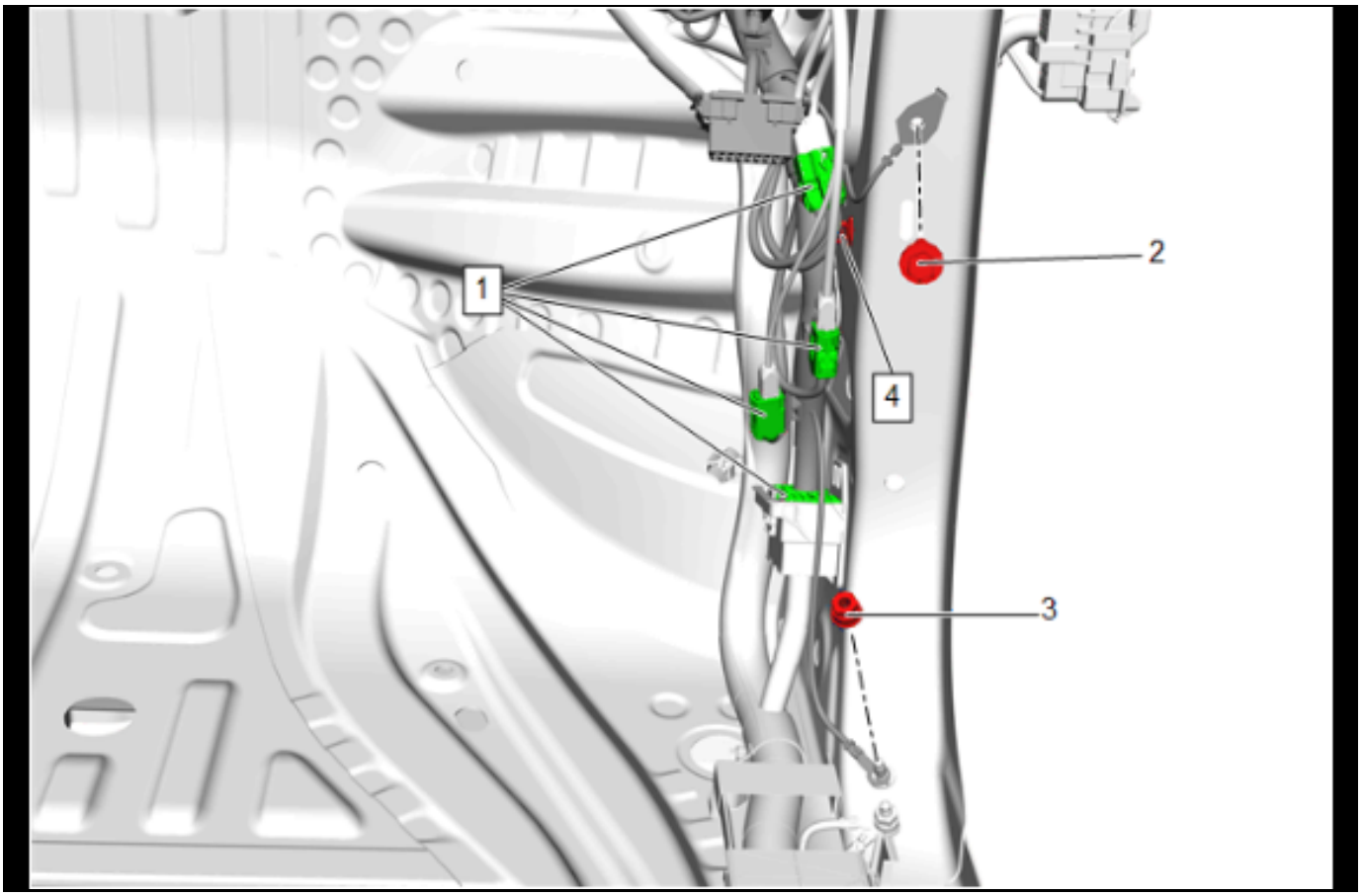

5512081

11. Wiring Harness Retainer (4) » Install
12. Instrument Panel Wiring Harness Ground Nut (3) » Install and tighten
13. Instrument Panel Wiring Harness Ground Bolt(2) » Install and tighten — Fastener Specifications
14. Connect the electrical connectors. (1)

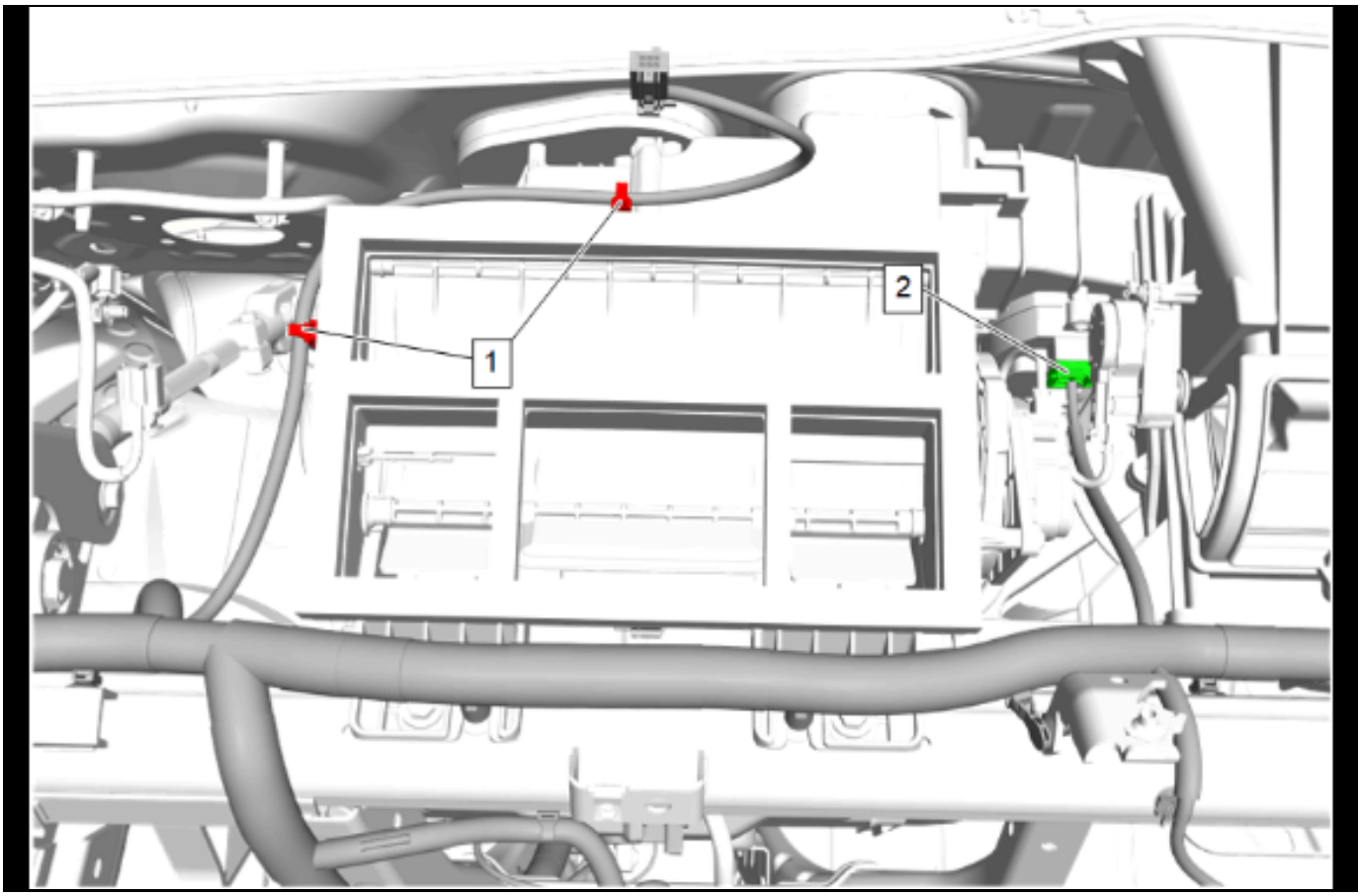

5699929

15. Connect the electrical connector. (2)
16. Wiring Harness Retainer (1) » Install [2x]

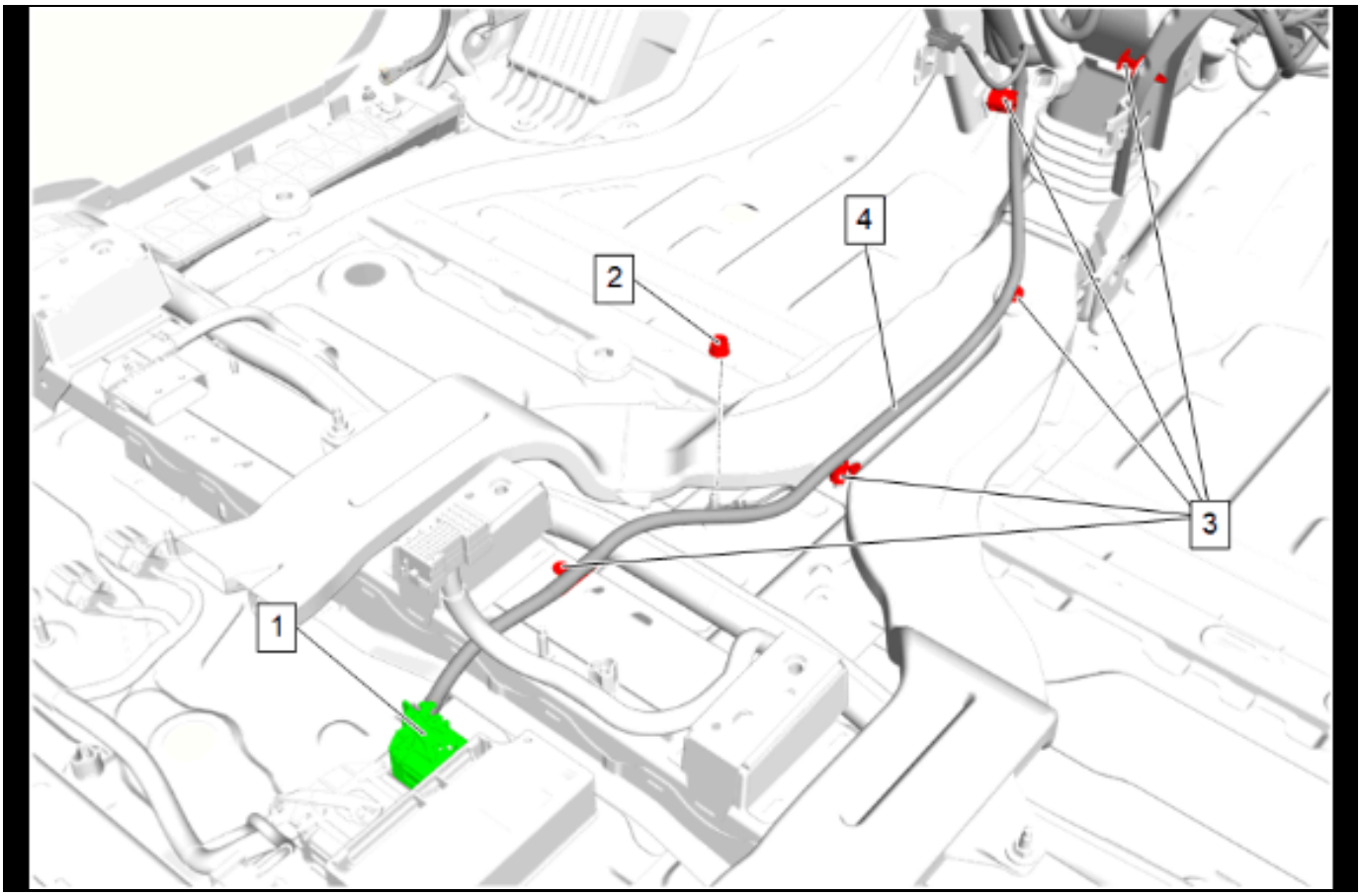

5699928

17. Install the instrument panel wiring harness. (4)
18. Wiring Harness Retainer (3) » Install [5x]
19. Instrument Panel Wiring Harness Ground Nut (2)
    » Install and tighten — Fastener Specifications
20. Connect the electrical connector. (1)

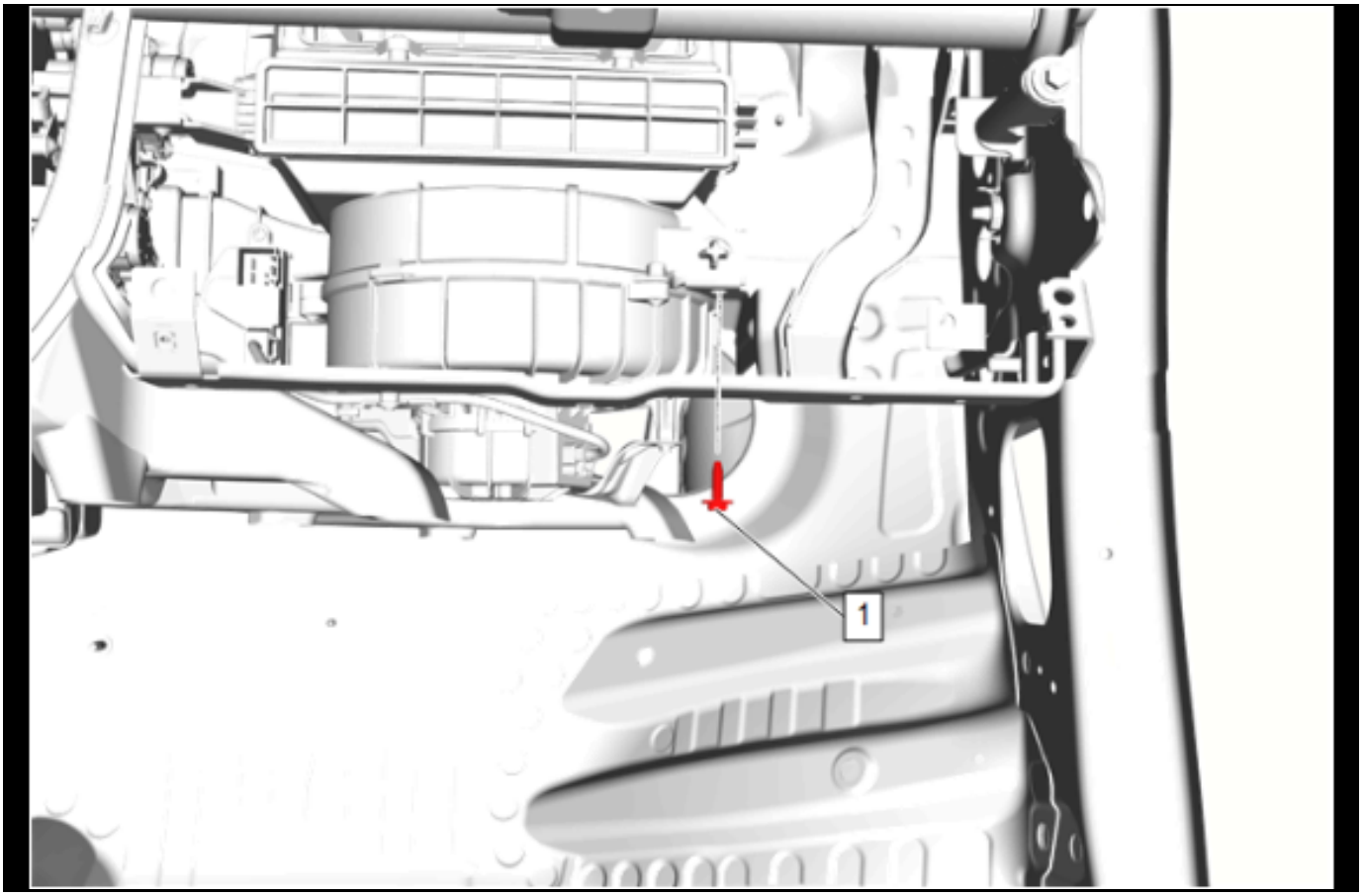

5551272

21. Heater and Air Conditioning Evaporator and Blower Module Bolt (1) » Install and tighten — Fastener Specifications

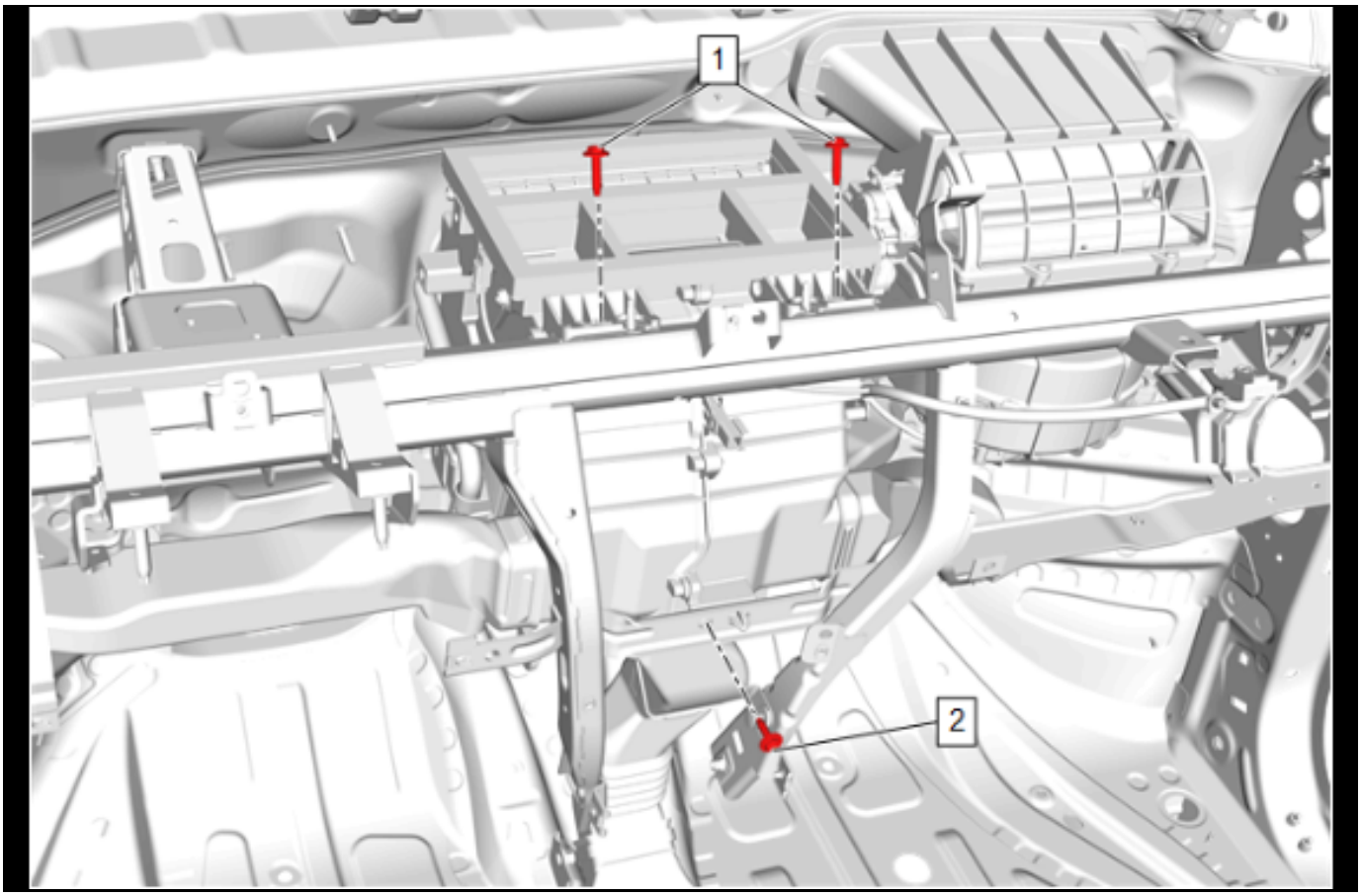

5536783

22. Heater and Air Conditioning Evaporator and Blower Module Bolt - Upper (1) » Install and tighten [2x] — Fastener Specifications
23. Heater and Air Conditioning Evaporator and Blower Module Bolt - Lower (2) » Install and tighten — Fastener Specifications

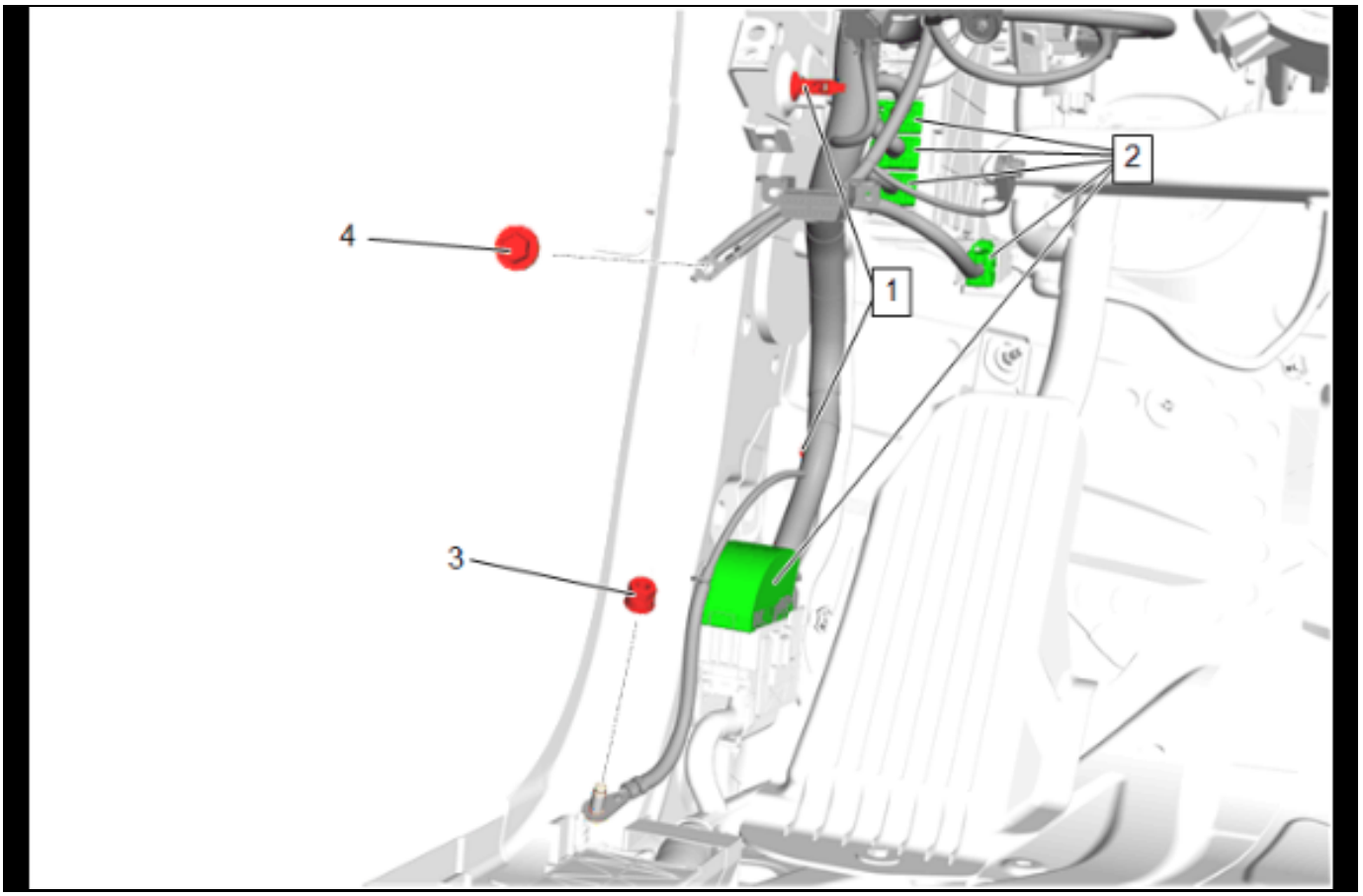

5512077

24. Instrument Panel Wiring Harness Ground Nut (3)
    » Install and tighten — Fastener Specifications
25. Instrument Panel Wiring Harness Ground Bolt(2) »
    Install and tighten — Fastener Specifications
26. Connect the electrical connectors. (1) [6x]

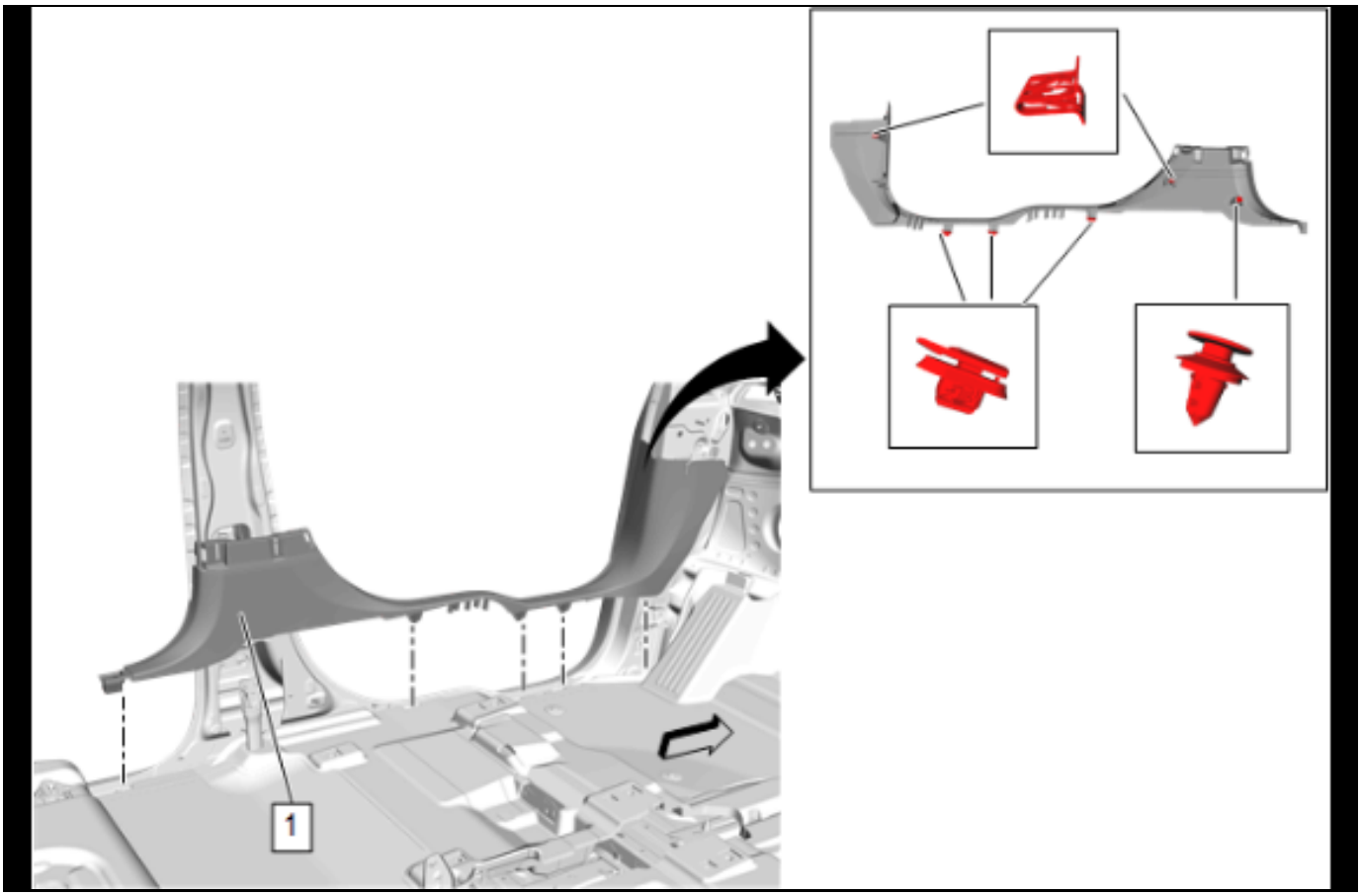

5480376

27. Front Side Door Sill Garnish Molding - Left Side and Right Side (1) » Install [2x]

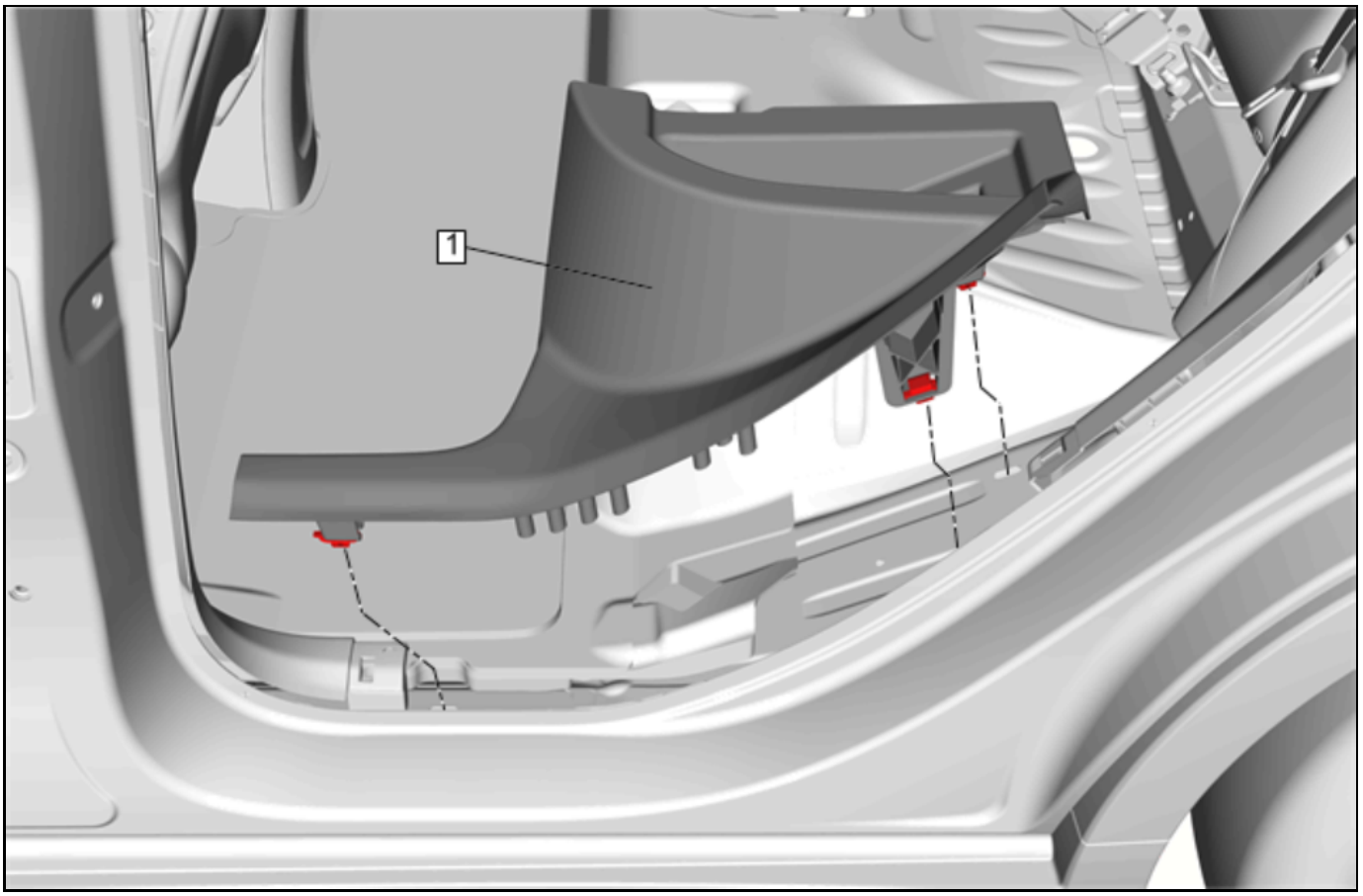

5480463

28. Rear Side Door Sill Garnish Molding - Left Side and Right Side (1) » Install [2x]

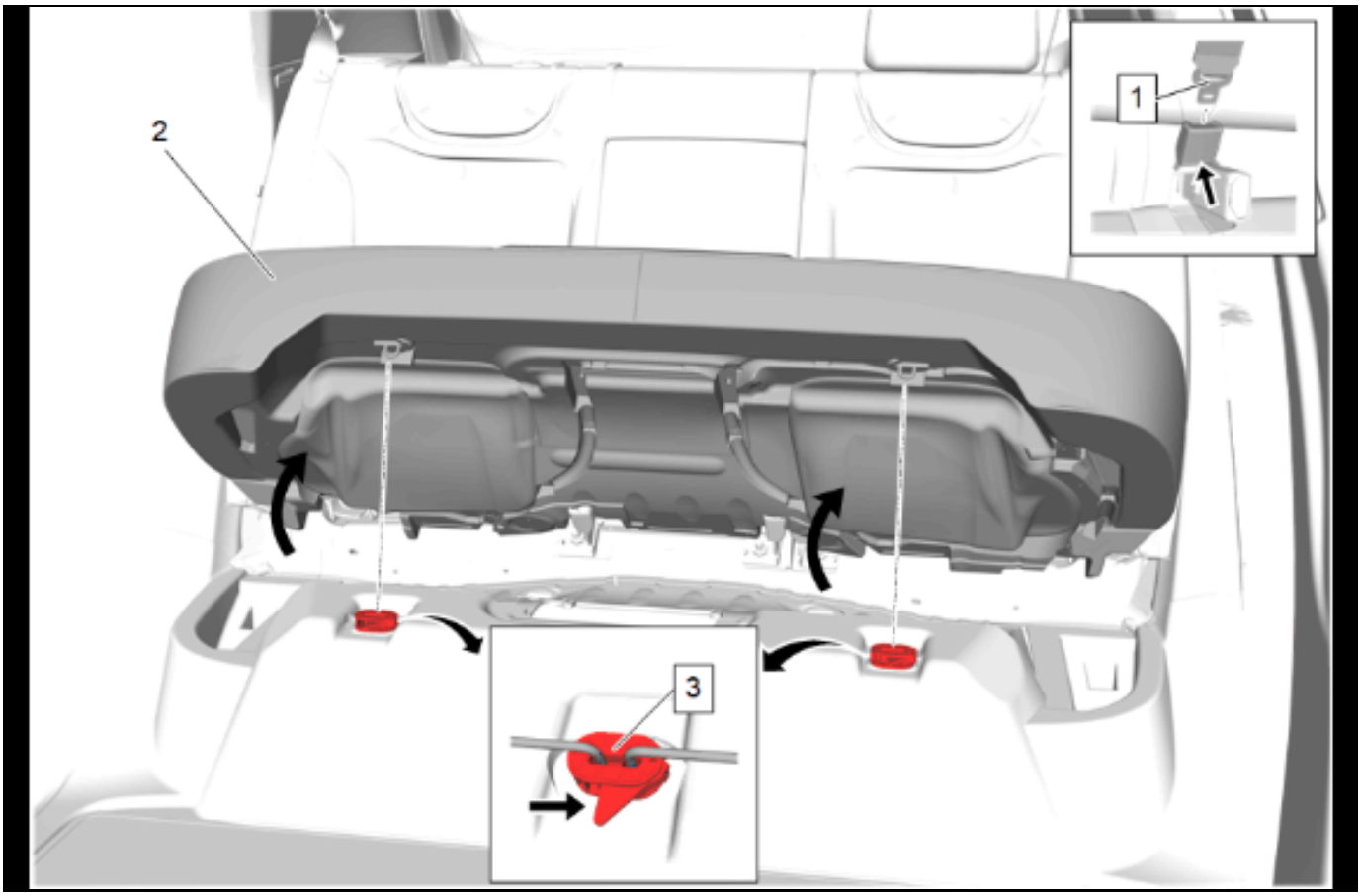

5675661

29. Rear Seat Cushion (1) » Install — Rear Seat Cushion Removal and Installation

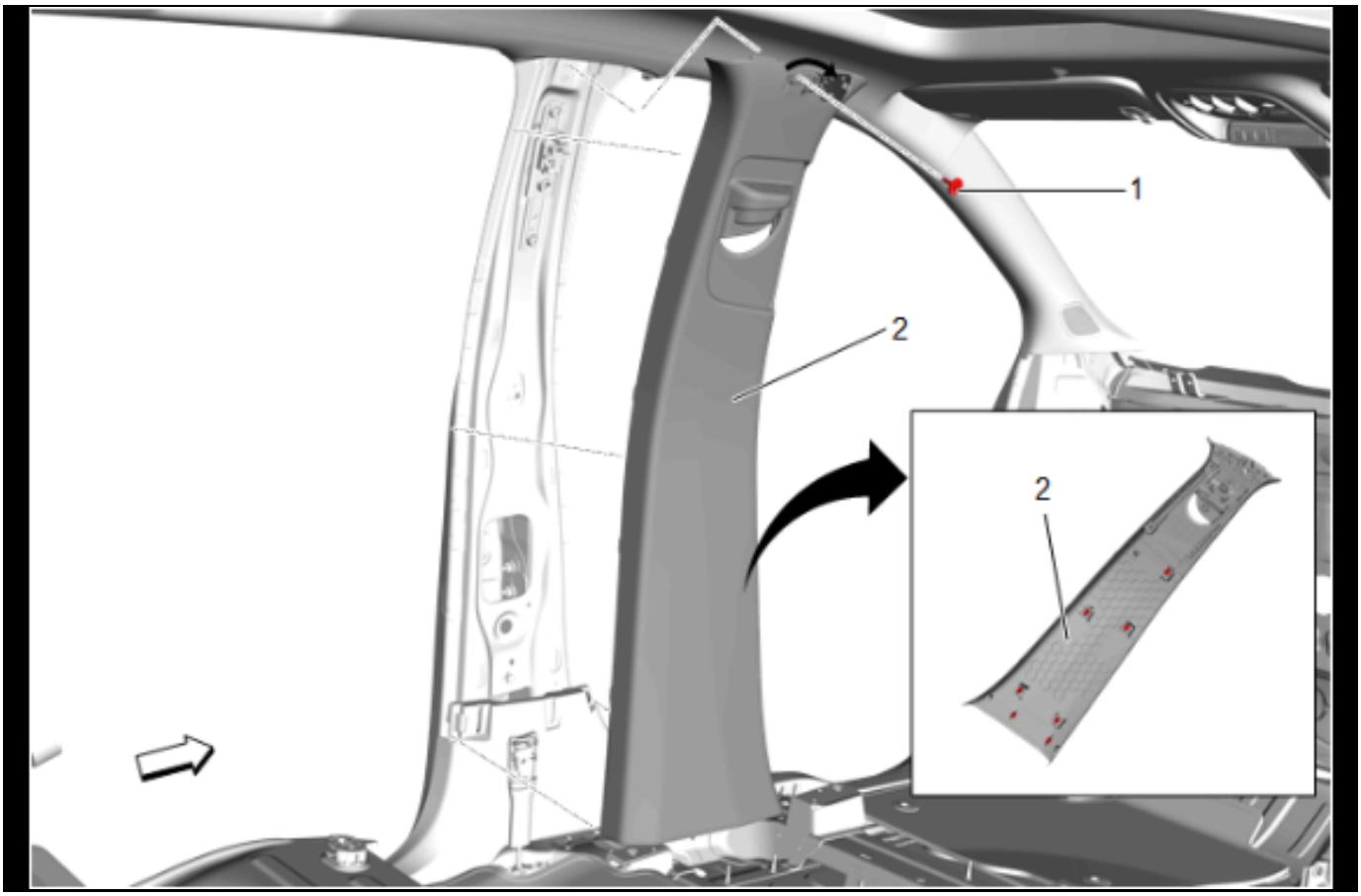

5480374

Note: When replacing the center pillar trim panel, feed the front seat belt through the panel.

30. Center Pillar Trim Panel - Left Side and Right Side (2) » Install [2x]
31. Center Pillar Upper Garnish Molding Bolt - Left Side and Right Side (1) » Install and tighten — Fastener Specifications[2x]
32. Close the bolt cap.

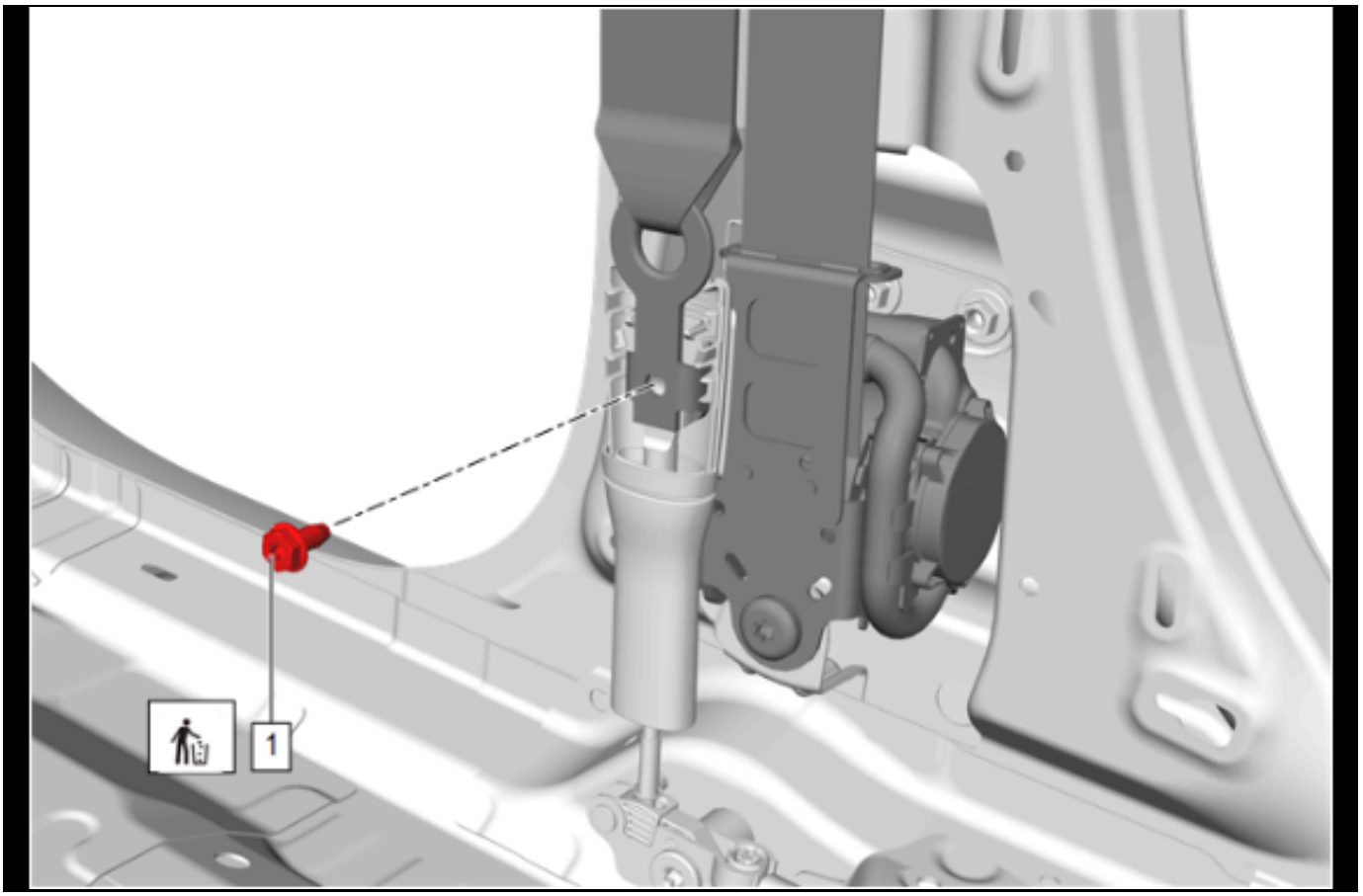

5482337

33. Front Seat Belt Anchor Plate Tensioner Bolt - Left Side and Right Side (1) » Install NEW and tighten [2x] — Fastener Specifications

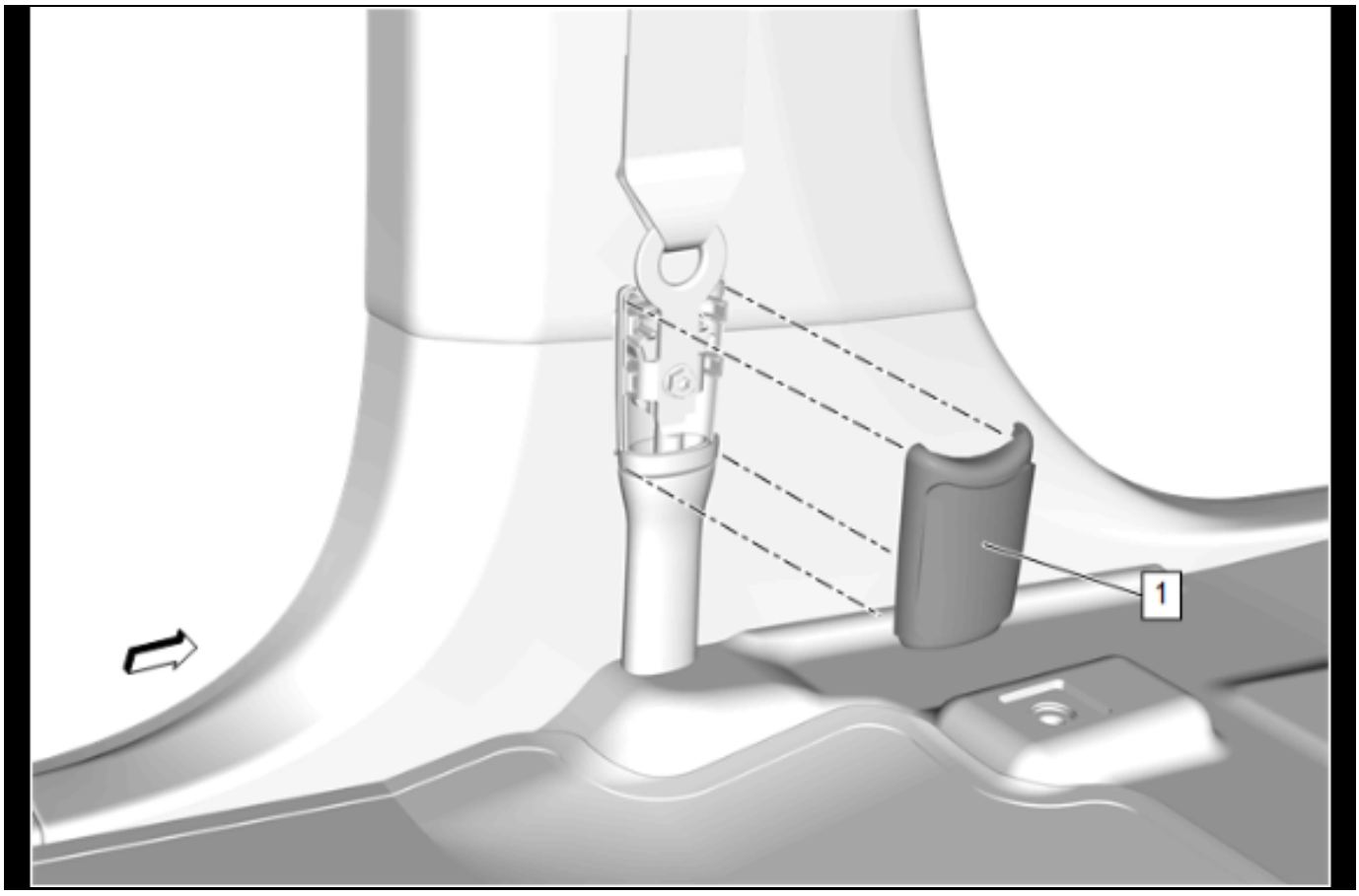

5480375

34. Front Seat Belt Anchor Plate Tensioner Cover - Left Side and Right Side (1) [2x] » Install

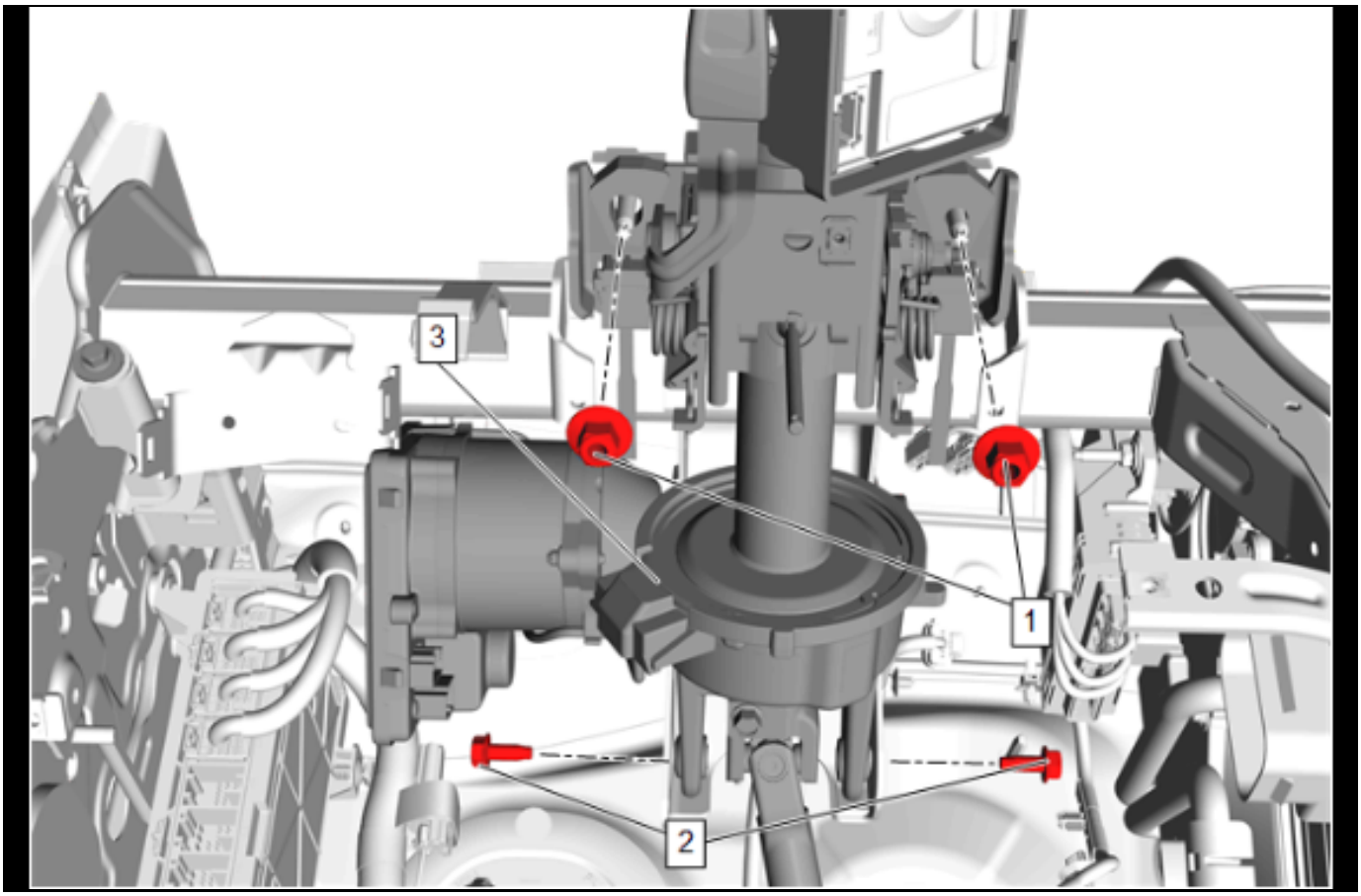

5512069

35. Steering Column (3) » Install
36. Steering Column Lower Support Bracket Bolt (2) » Install and tighten [2x] — Fastener Specifications
37. Steering Column Upper Support Bracket Nut (1) » Install and tighten [2x] — Fastener Specifications
38. Connect the electrical connectors and install retainers.

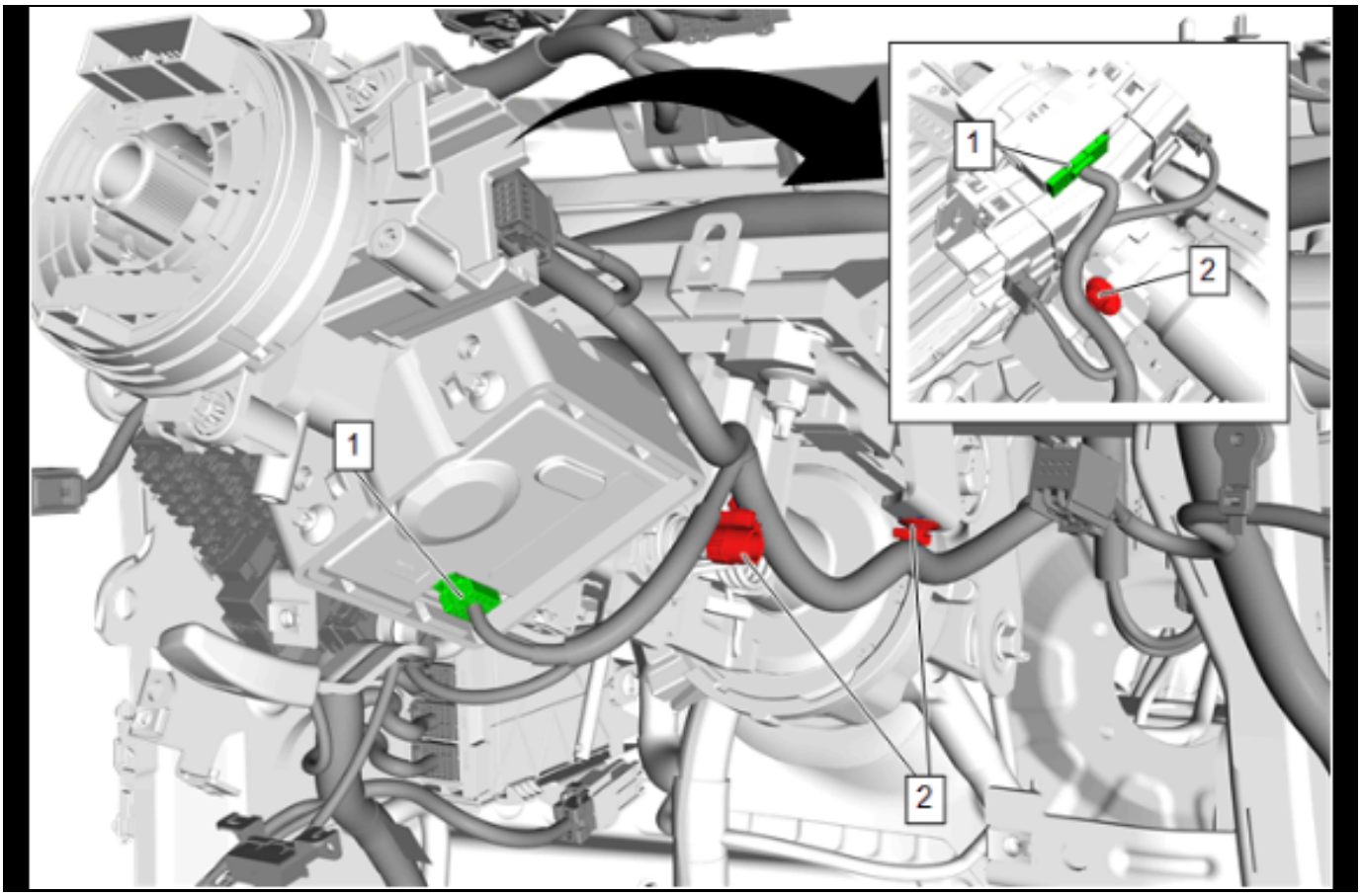

5512072

39. Connect the electrical connectors. (1) [2x]
40. Wiring Harness Retainer (2) » Install [3x]

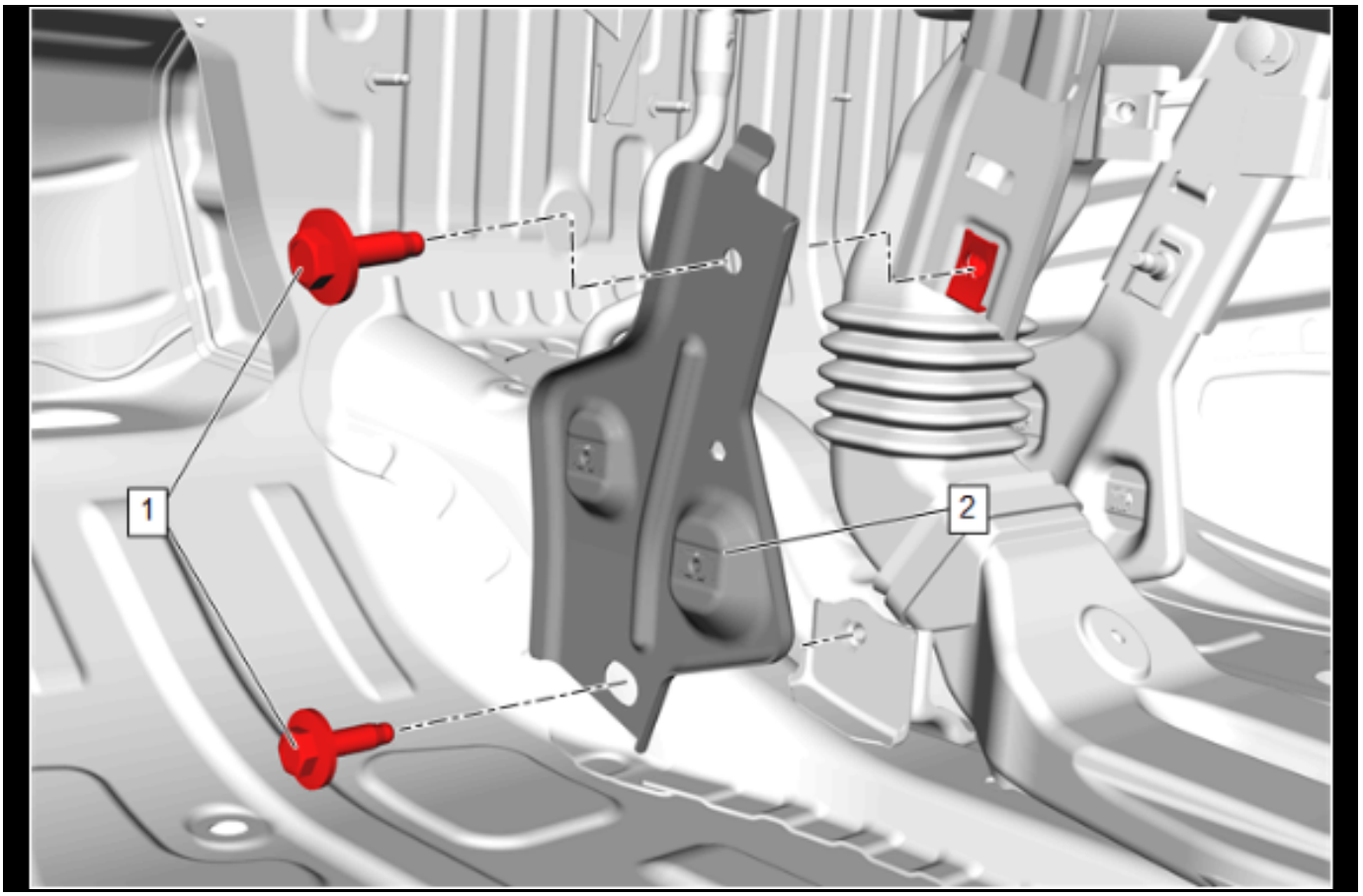

5482077

41. Instrument Panel Tie Bar Brace - Left Side and Right Side (2) » Install [2x]
42. Instrument Panel Tie Bar Brace Bolt - Left Side and Right Side (1) » Install and tighten [4x] — Fastener Specifications

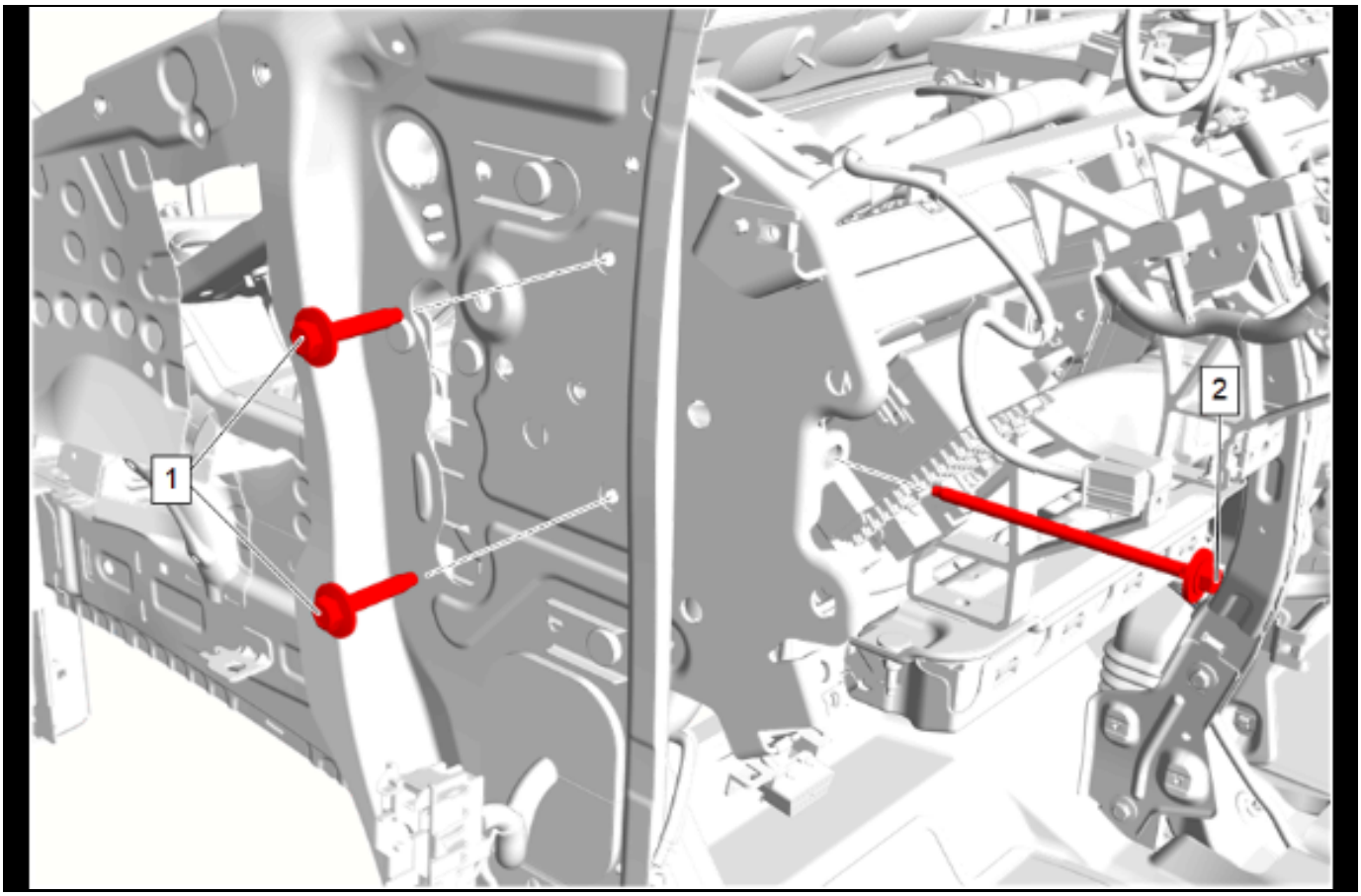

5699813

43. Instrument Panel Tie Bar Bolt @ Front Side Door (1) » Install and tighten [2x] — Fastener Specifications
44. Instrument Panel Tie Bar Bolt (2) » Install and tighten

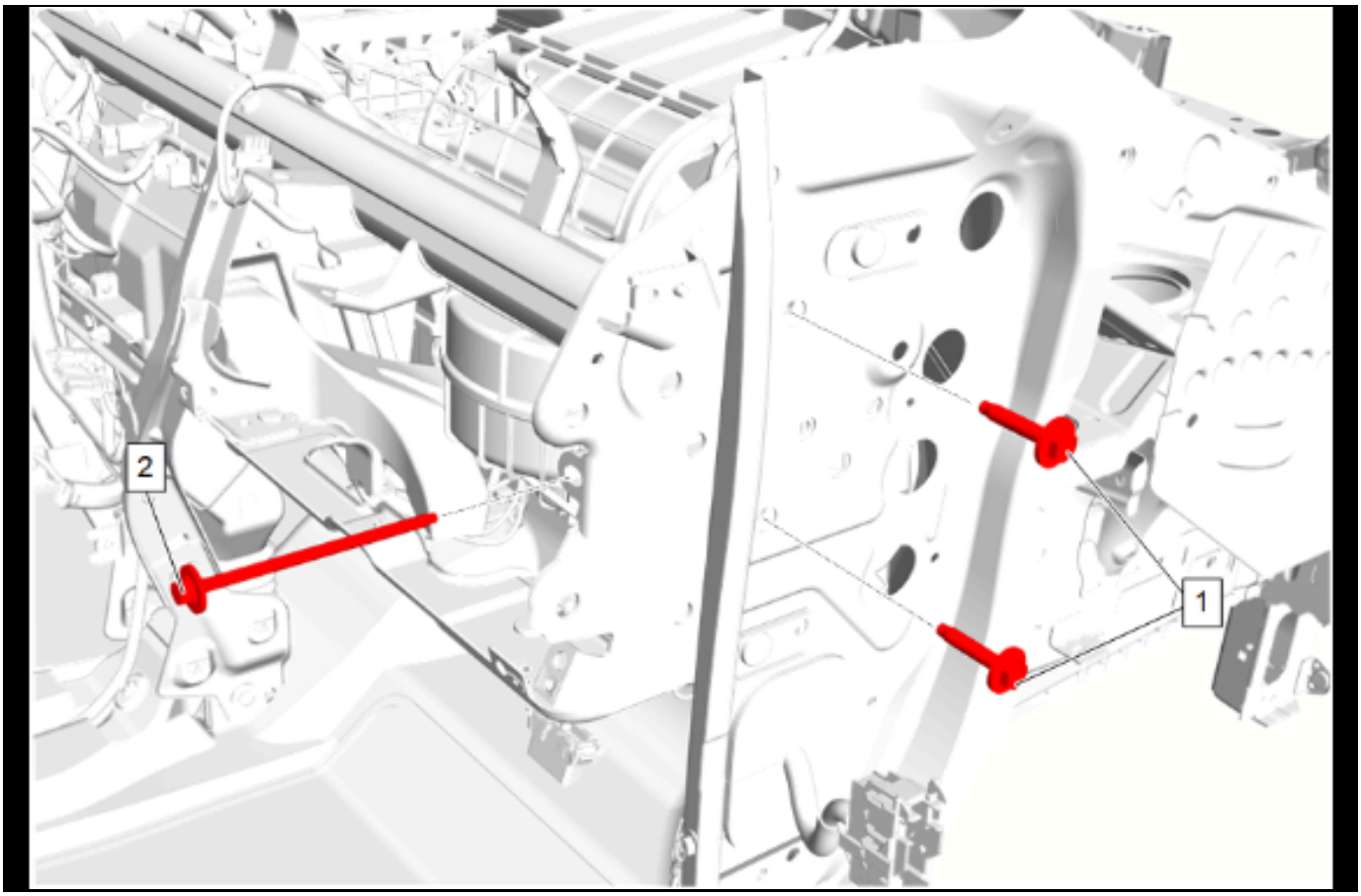

5699824

45. Instrument Panel Tie Bar Bolt @ Front Side Door (1) » Install and tighten [2x] — Fastener Specifications
46. Instrument Panel Tie Bar Bolt (2) » Install and tighten — Fastener Specifications

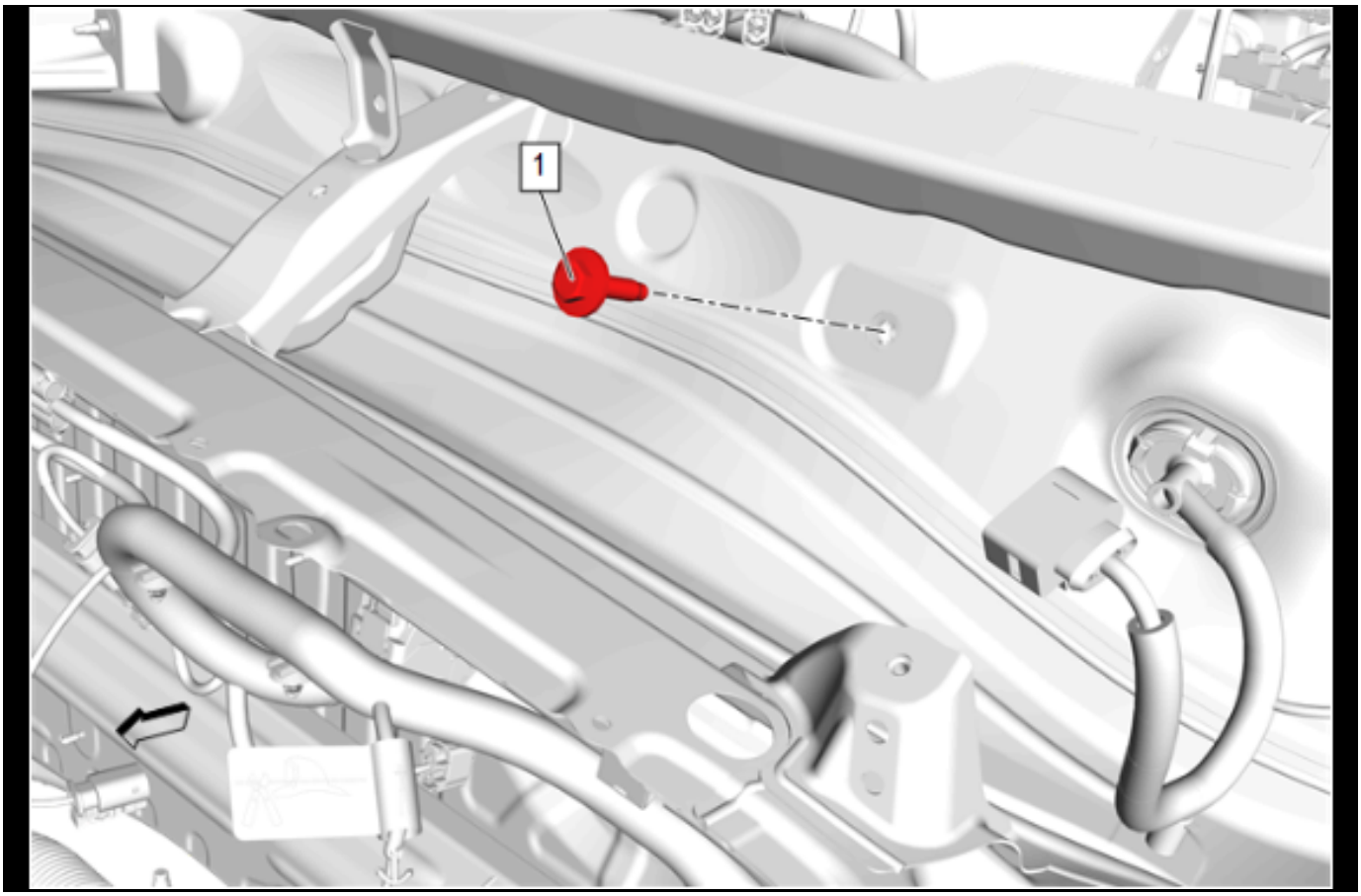

5512053

47. Instrument Panel Tie Bar Bolt (1) @ Plenum Lower Panel » Install and tighten — Fastener Specifications

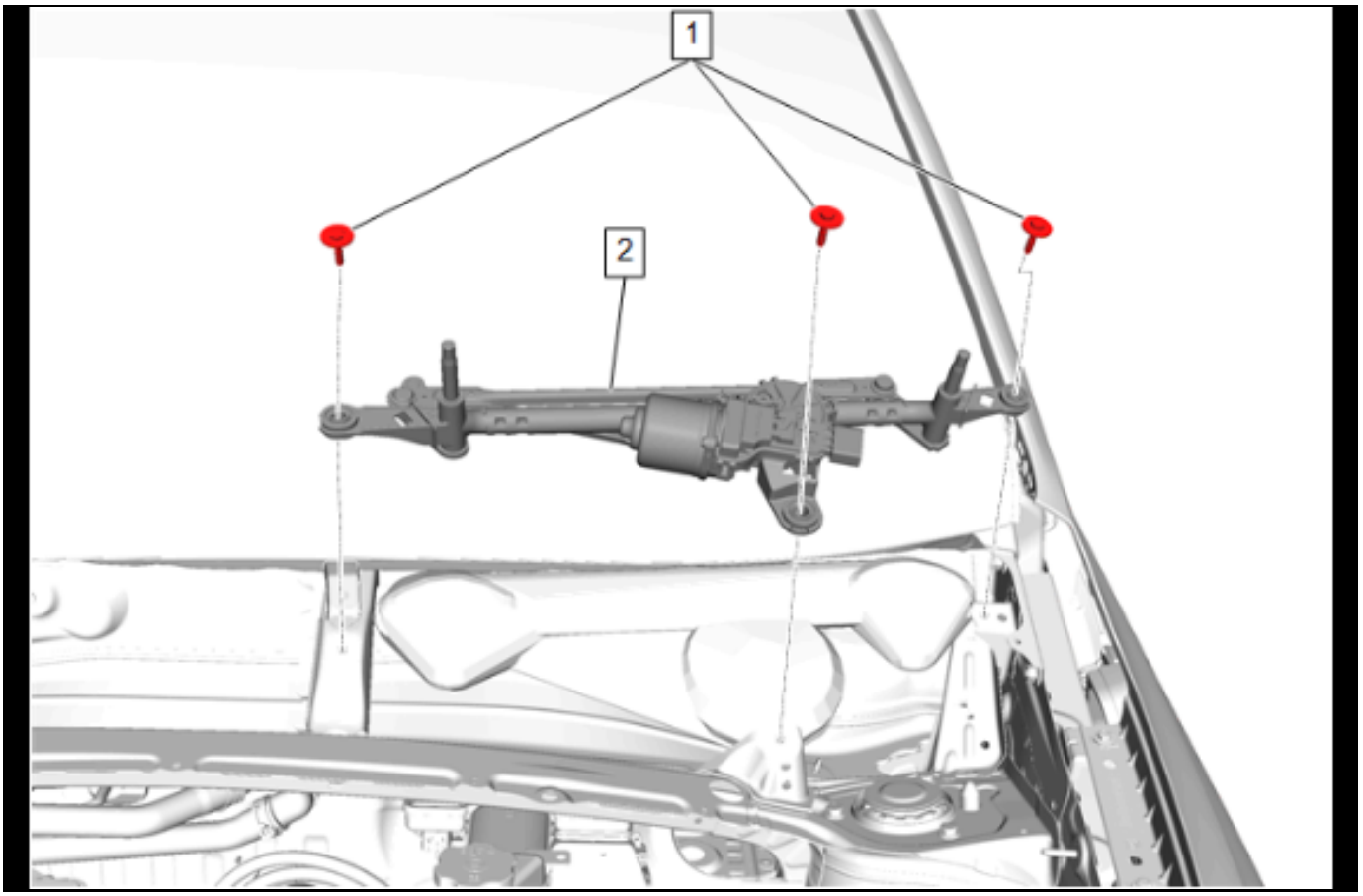

5493739

48. Windshield Wiper System Module (2) » Install
49. Connect the electrical connector.
50. Windshield Wiper System Module Bolt (1) »
    Install and tighten [3x] — Fastener Specifications

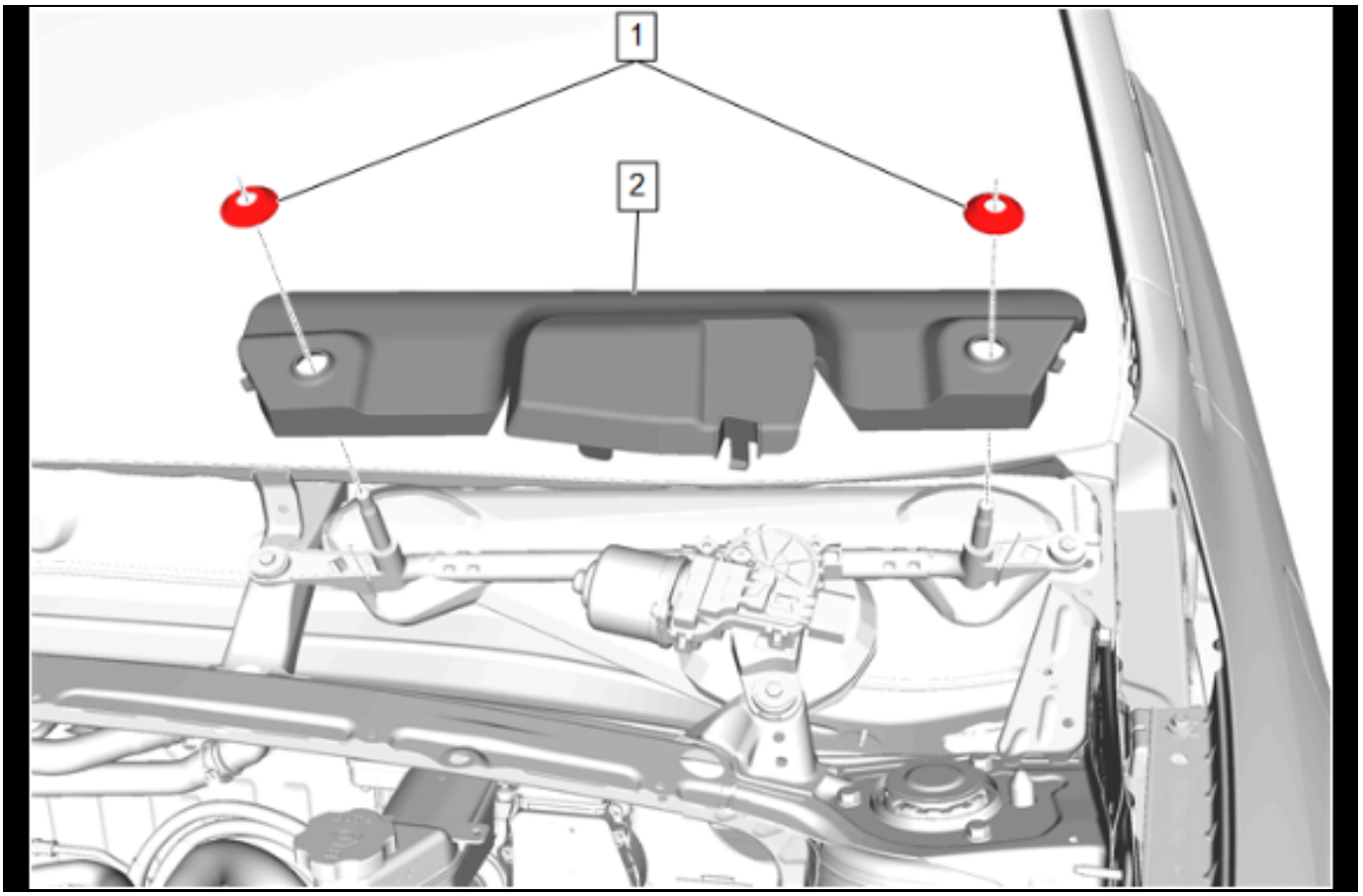

5493743

51. Windshield Wiper System Module Shield (2) » Install
52. Windshield Wiper System Module Shield Retainer (1) » Install [2x]

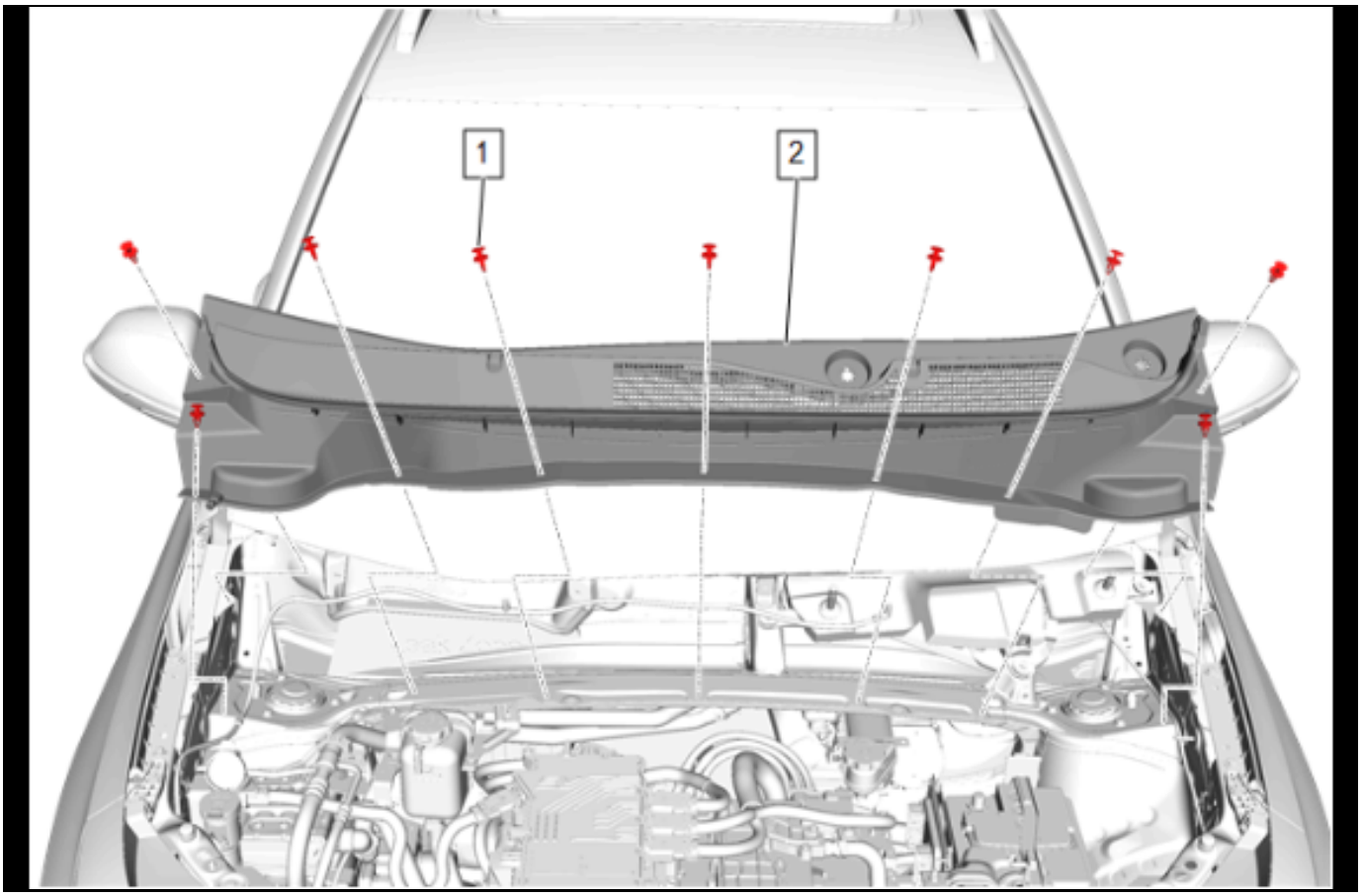

5491629

53. Air Inlet Grille Panel (2) » Install
54. Windshield Washer Nozzle Hose @ Windshield Washer Pump Hose » Connect
55. Air Inlet Grille Panel Retainer (1) » Install [9x]

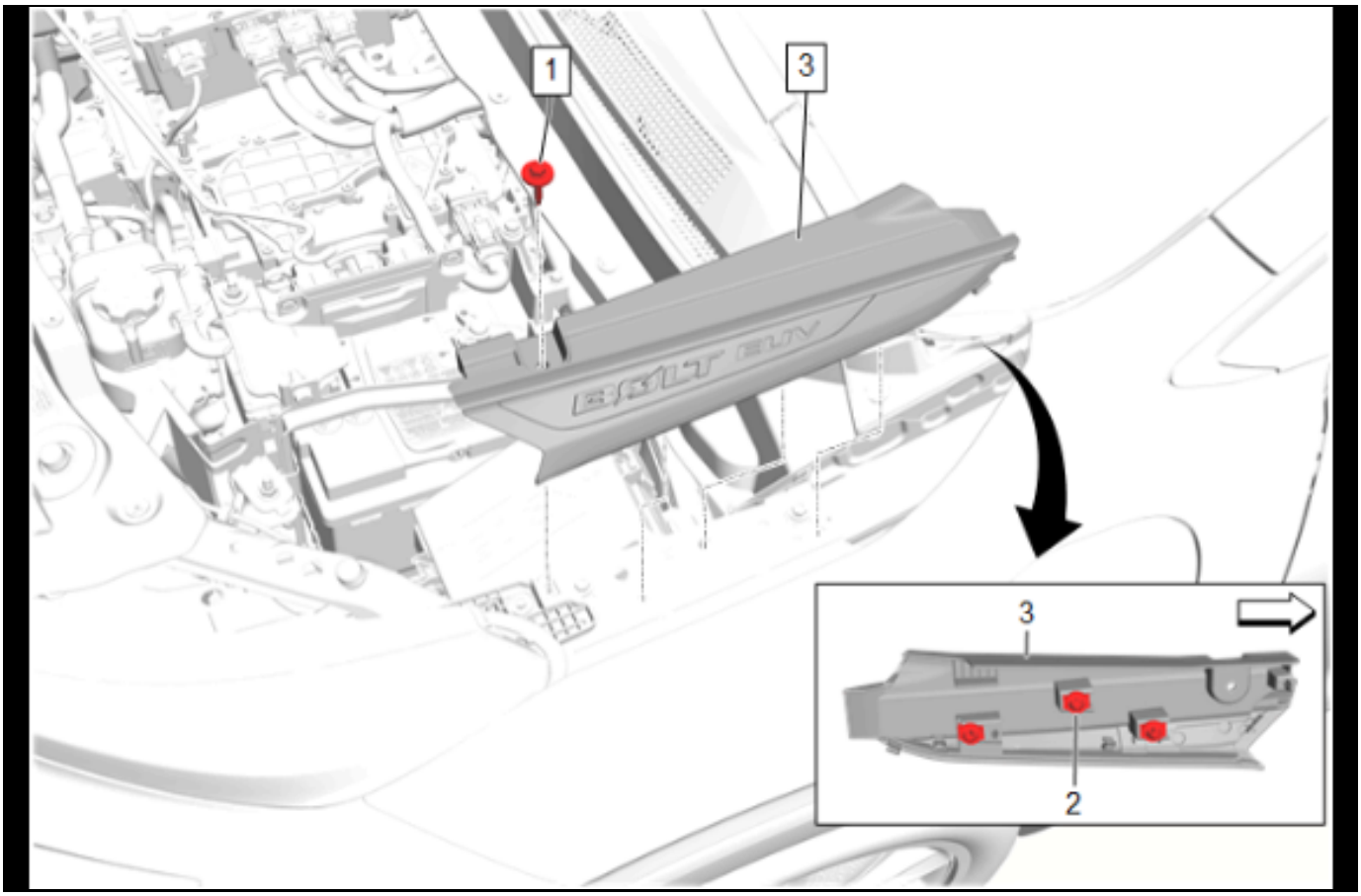

5666188

56. Body Side Upper Front Applique (3) » Install
57. Body Side Upper Front Applique Bolt (1) » Install and tighten — Fastener Specifications

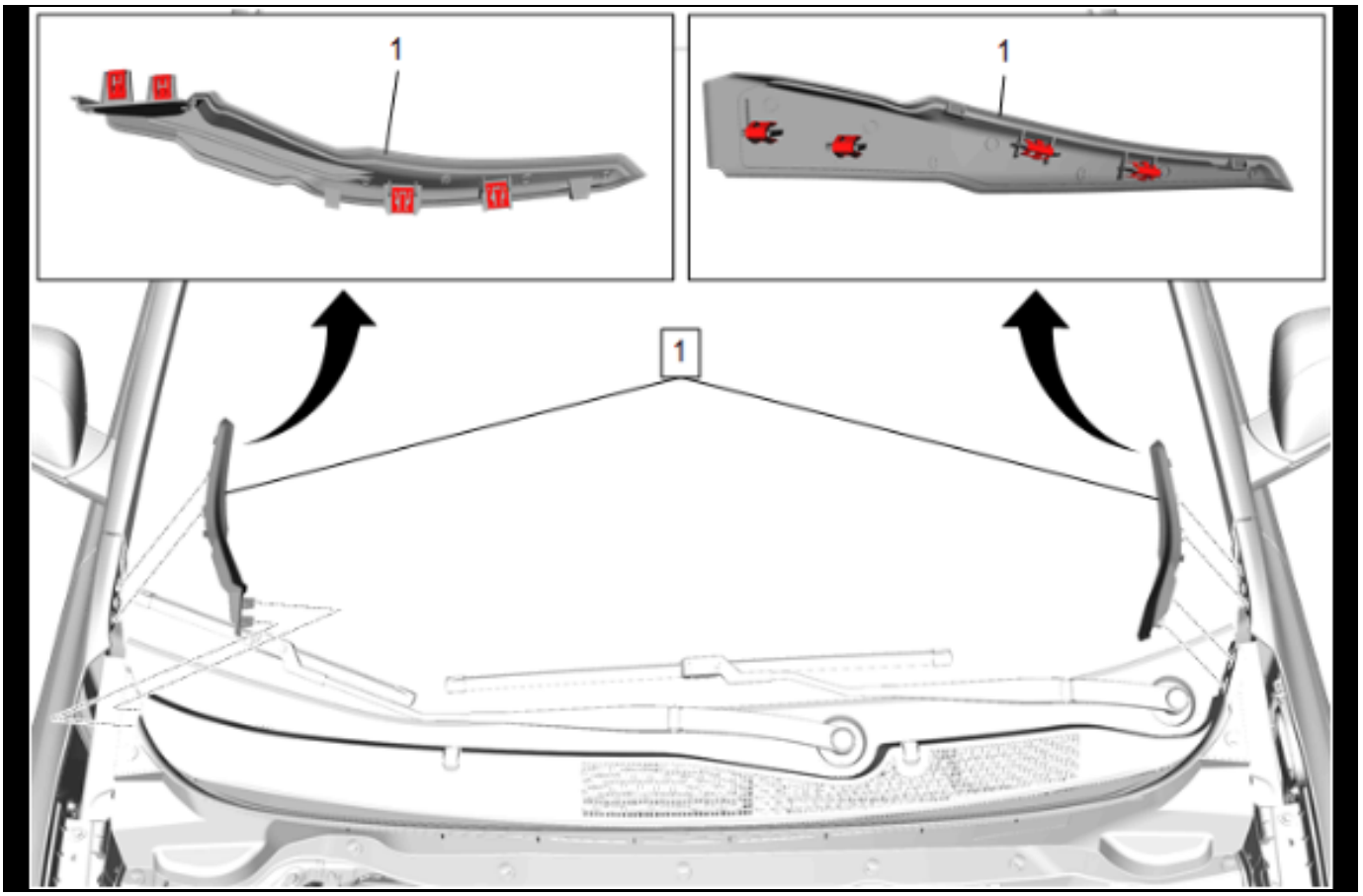

5491617

58. Air Inlet Grille Panel Extension (1) » Install

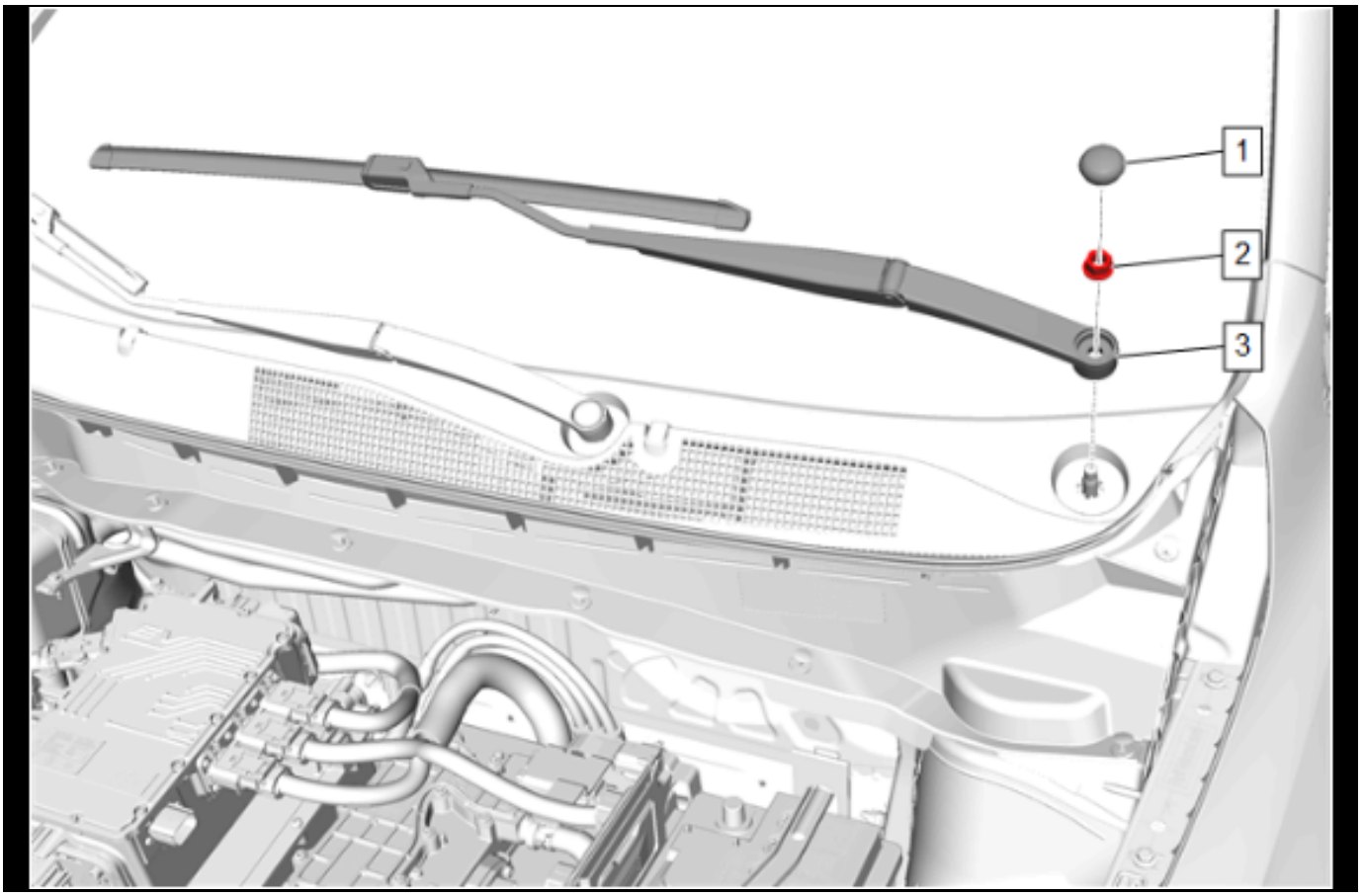

5493737

59. Clean the windshield wiper transmission pivot shaft splines with a soft wire brush before installing the windshield wiper arm (3).
60. Position the windshield wiper arm (3) on the windshield wiper transmission pivot shaft.
61. Windshield Wiper Arm Nut (2) » Install and tighten — Fastener Specifications
62. Windshield Wiper Arm Finish Cap (1) » Install

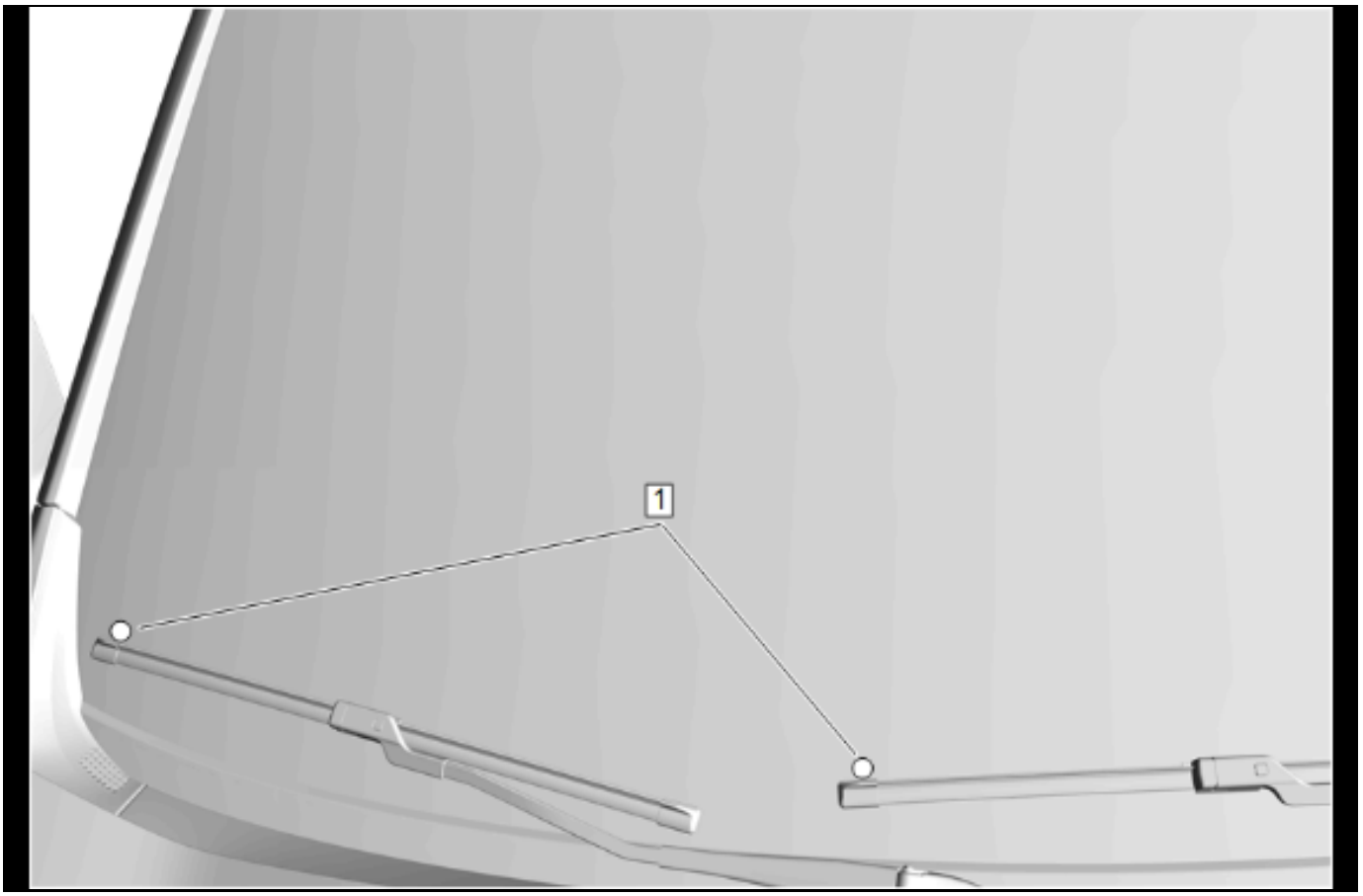

5532162

63. If required, realign the windshield wipers to their respective alignment circles (1) on the windshield.
64. Lubricate the windshield with clean washer fluid.
65. Run the windshield wipers for two complete cycles then turn off the windshield wipers.
66. Ensure the windshield wipers are in the full park position.

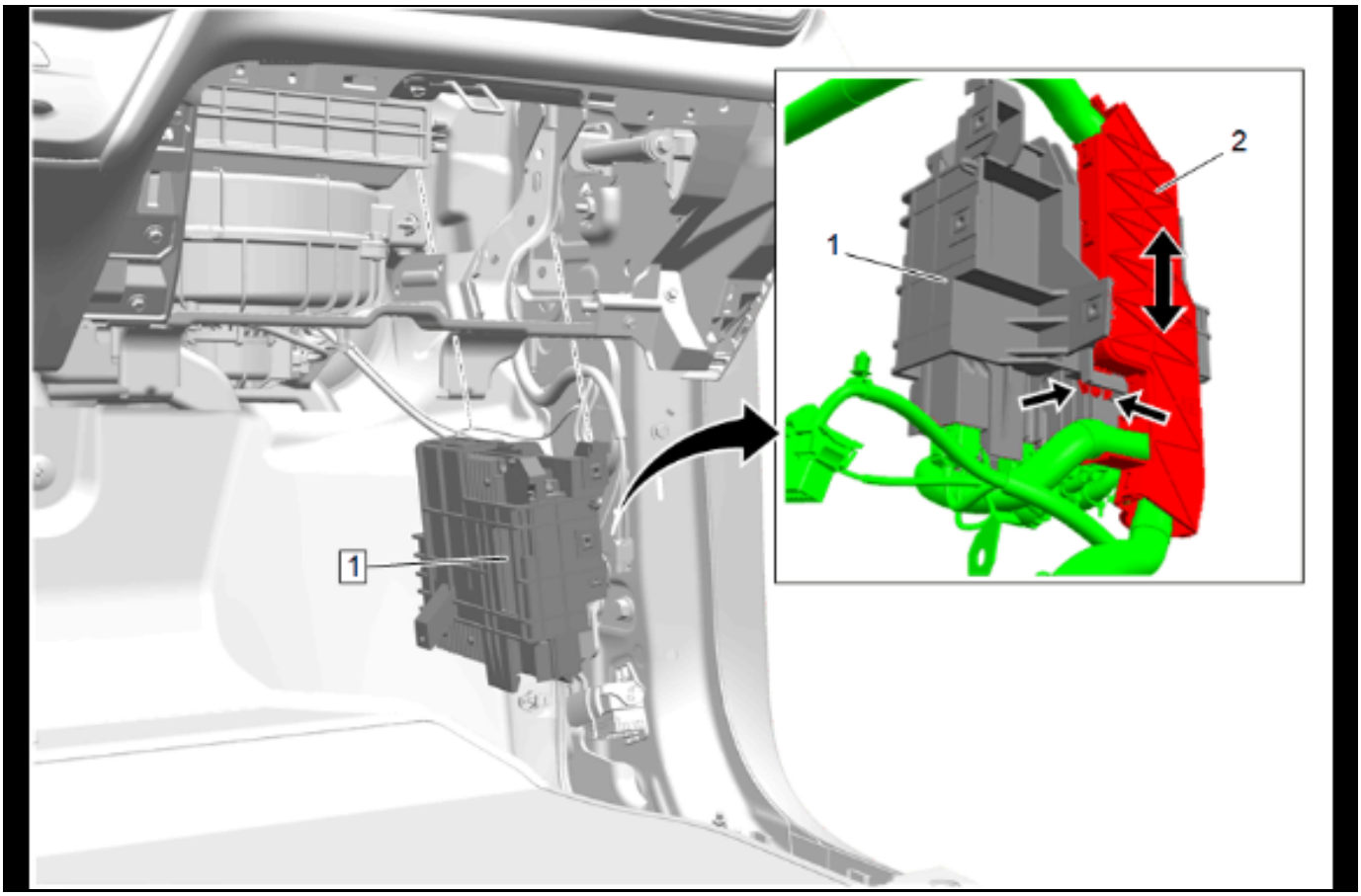

5672267

67. Install the electrical wiring harness retainer (2) to the radio bracket (1)
68. Radio Bracket (1) » Install

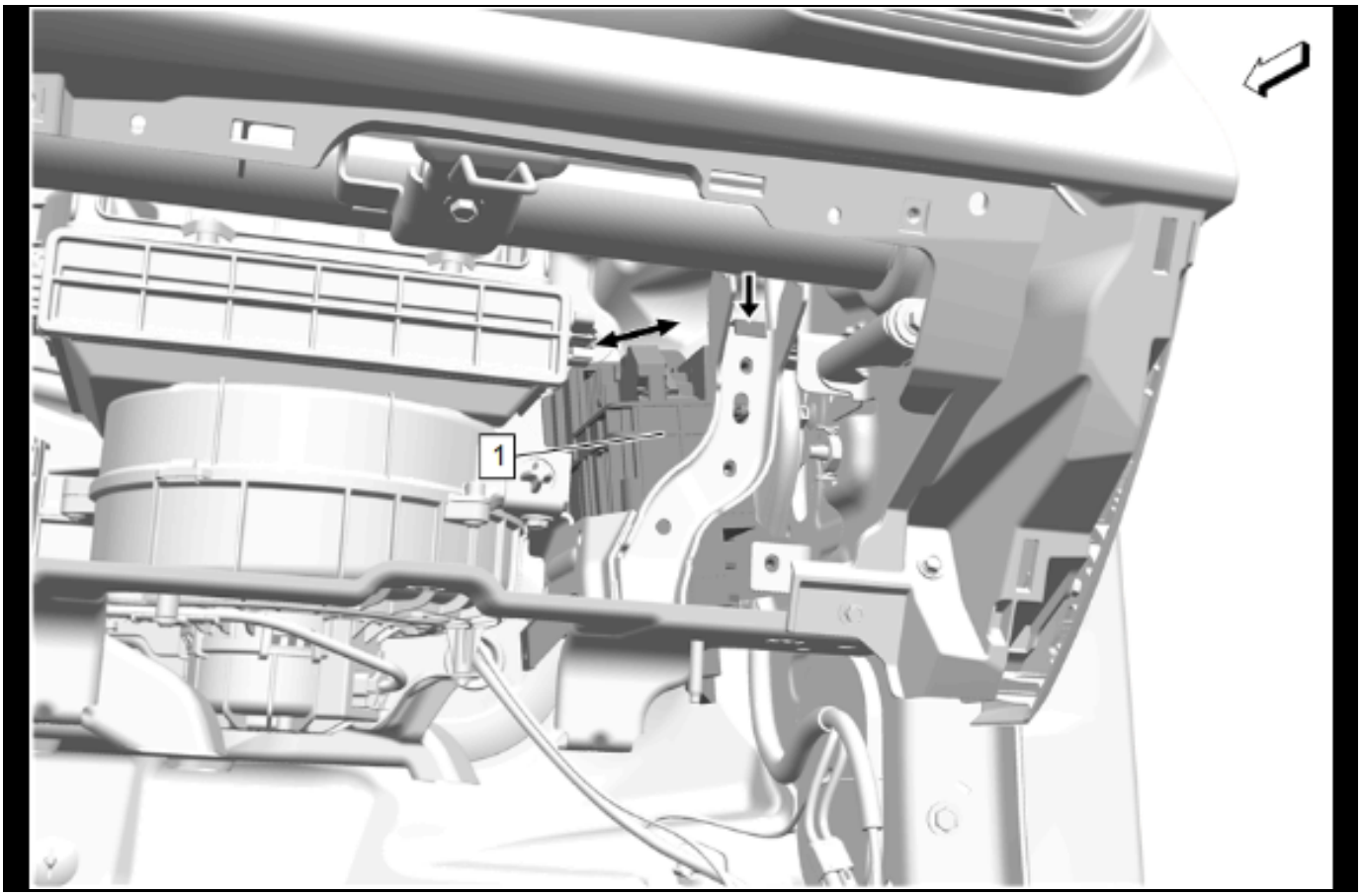

5672268

69. Push the radio bracket rearward and then down it (1) .

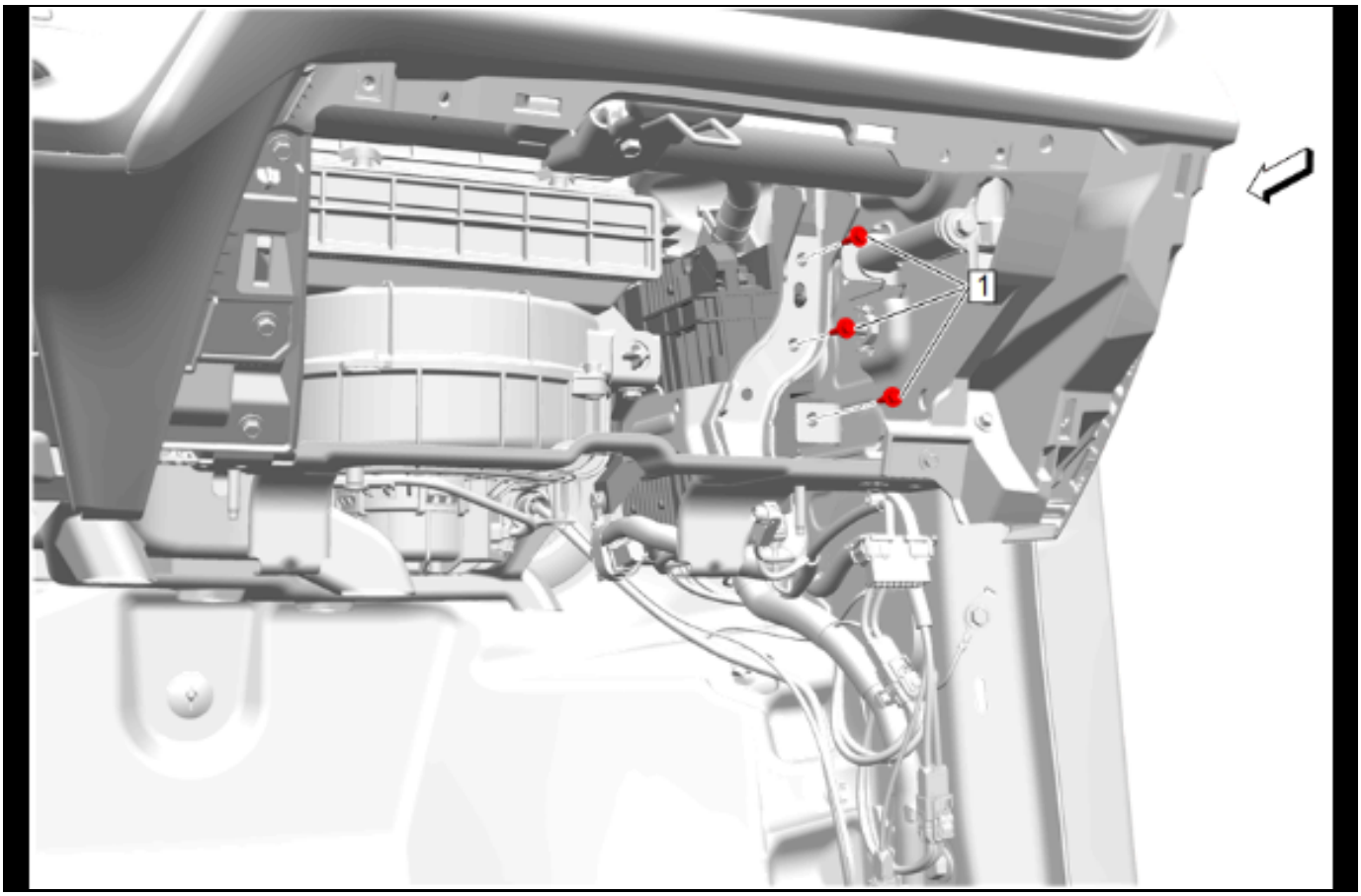

5672265

70. Radio Bracket Bolt (1) » Install and tighten [3x]
    — Fastener Specifications

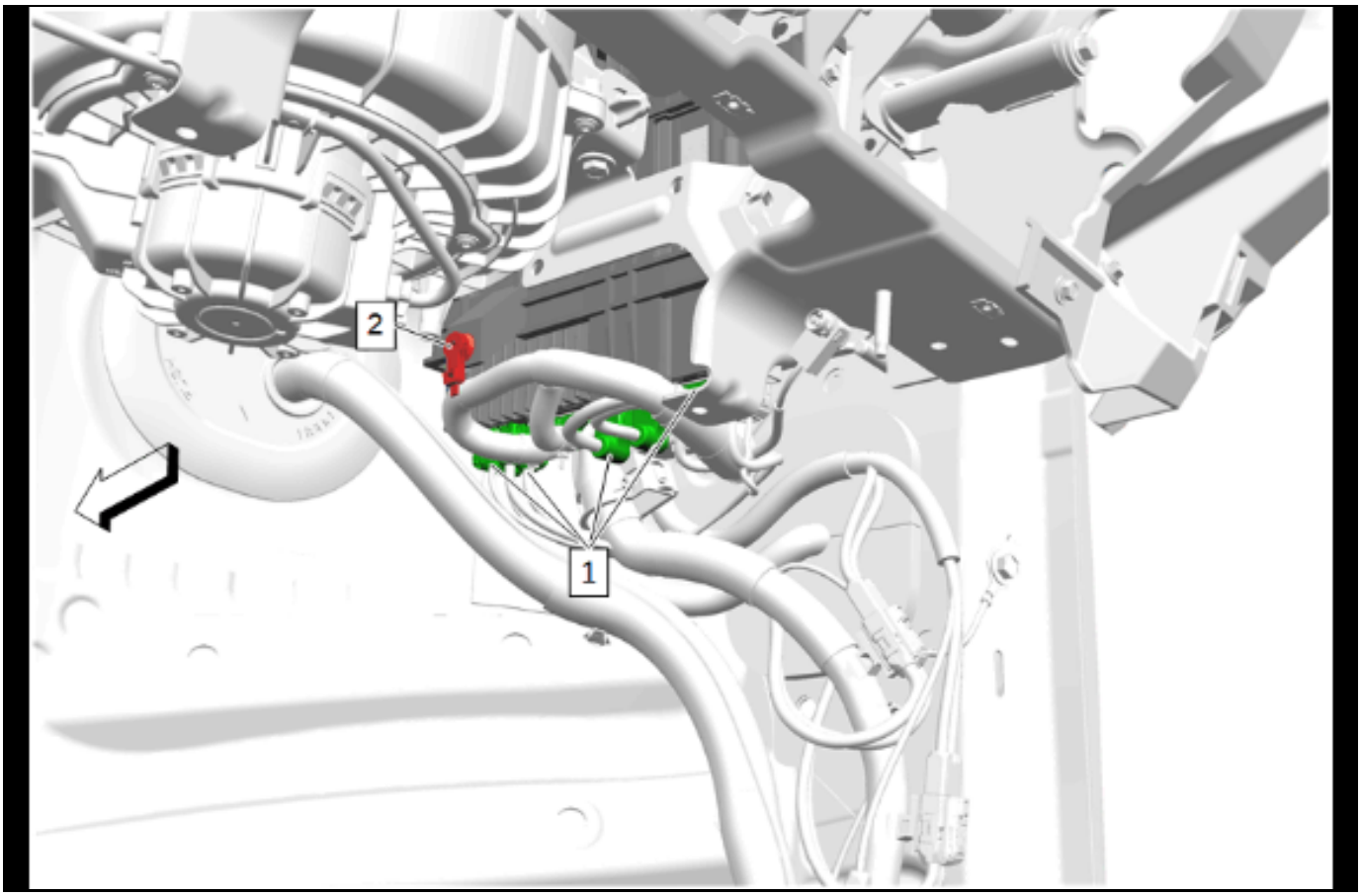

5672264

Note: Typical wiring harness shown. Individual wiring harness may differ based on option content.

71. Connect the electrical connectors and install the wiring harness retainers as necessary. (1)

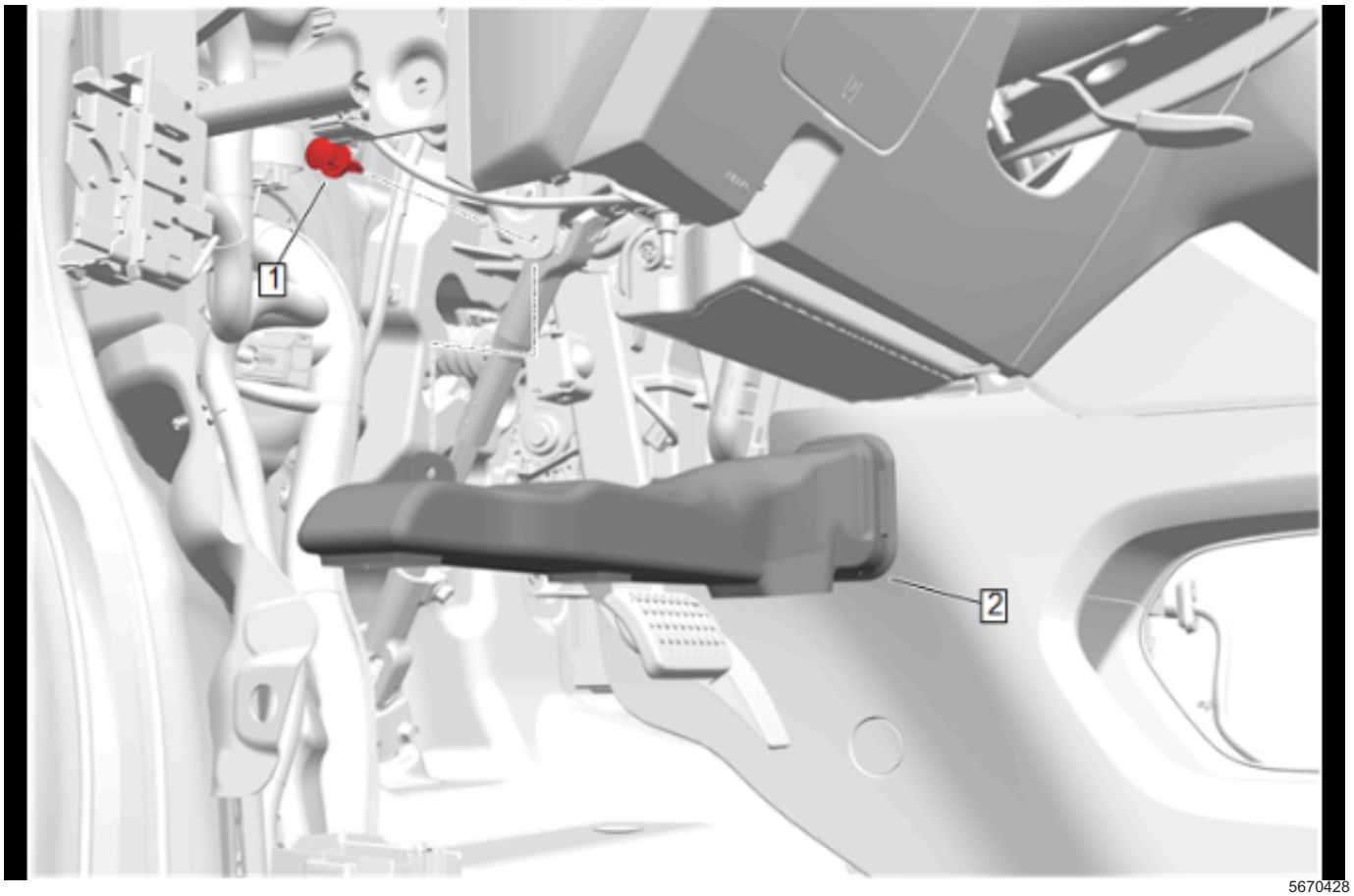

5670428

72. Floor Front Air Outlet Duct - Left Side (2) » Install
73. Floor Front Air Outlet Duct Retainer (1) » Install

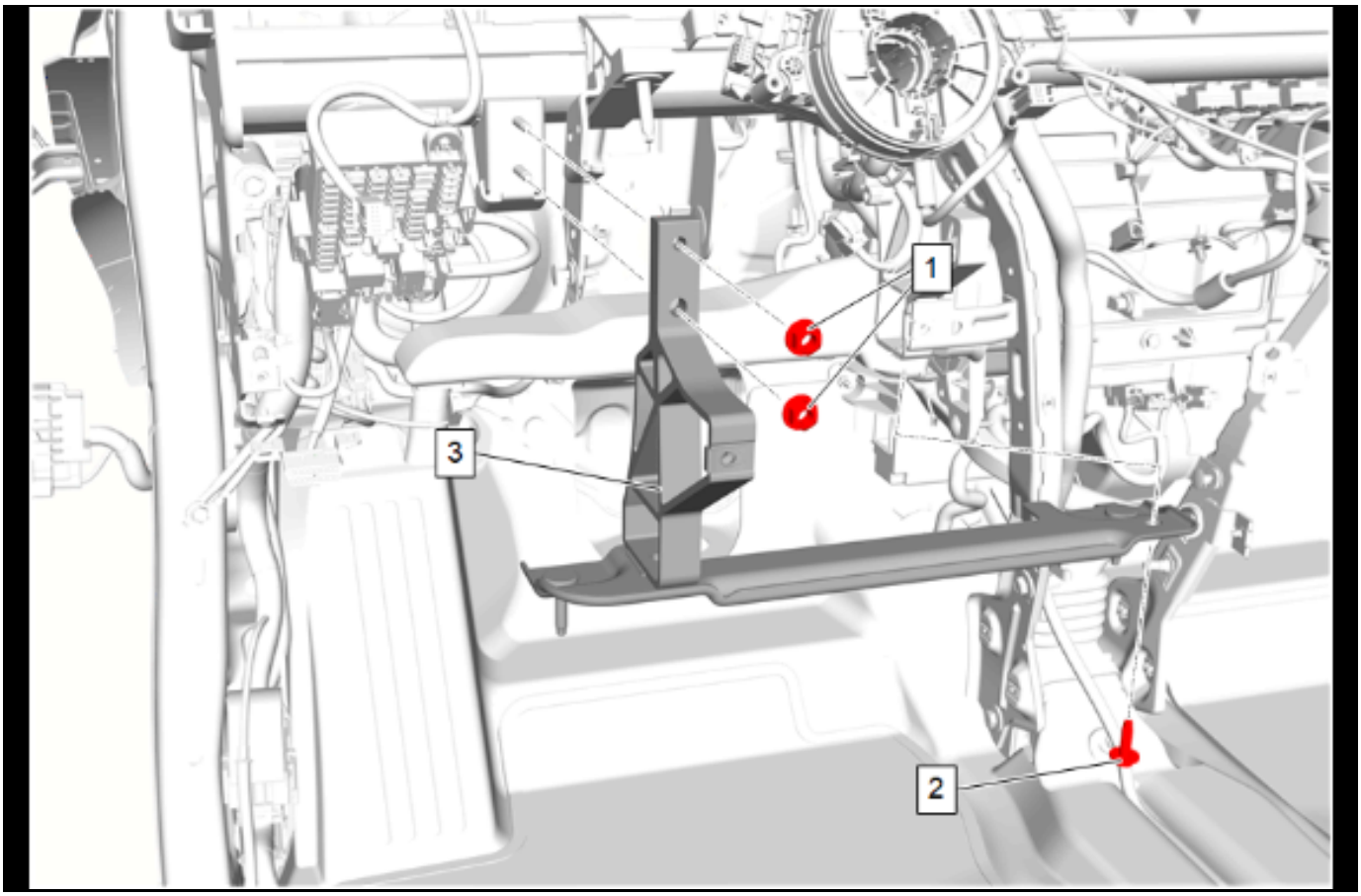

5699965

74. Instrument Panel Tie Bar Brace (3) » Install
75. Instrument Panel Tie Bar Brace Nut (1) » Install and tighten [2x] — Fastener Specifications
76. Instrument Panel Tie Bar Brace Bolt (2) » Install and tighten — Fastener Specifications

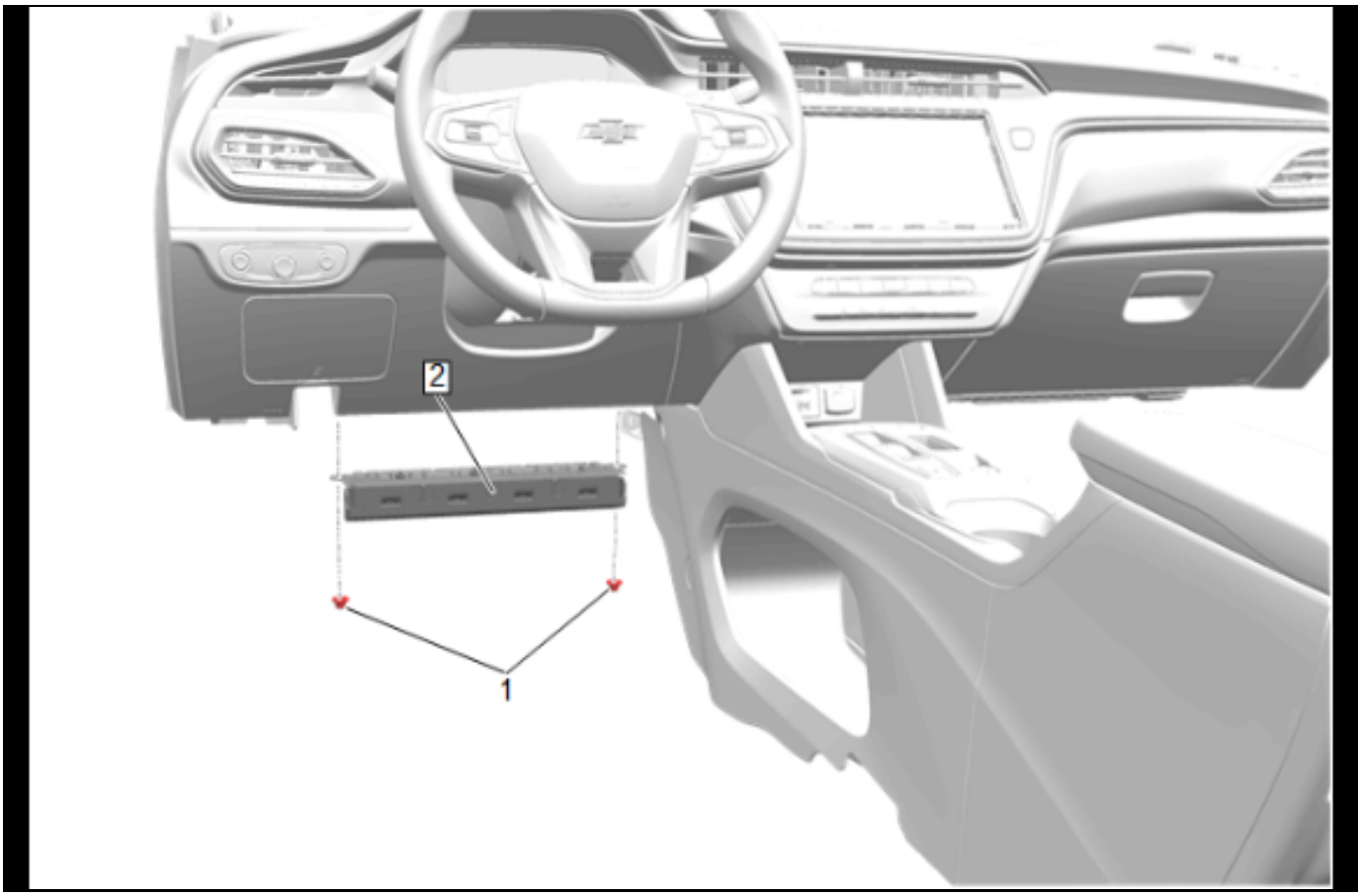

5664034

77. Connect the electrical connector.
78. Instrument Panel Lower Airbag - Driver Side (2) » Install
79. Instrument Panel Lower Airbag Nut (1) » Install and tighten

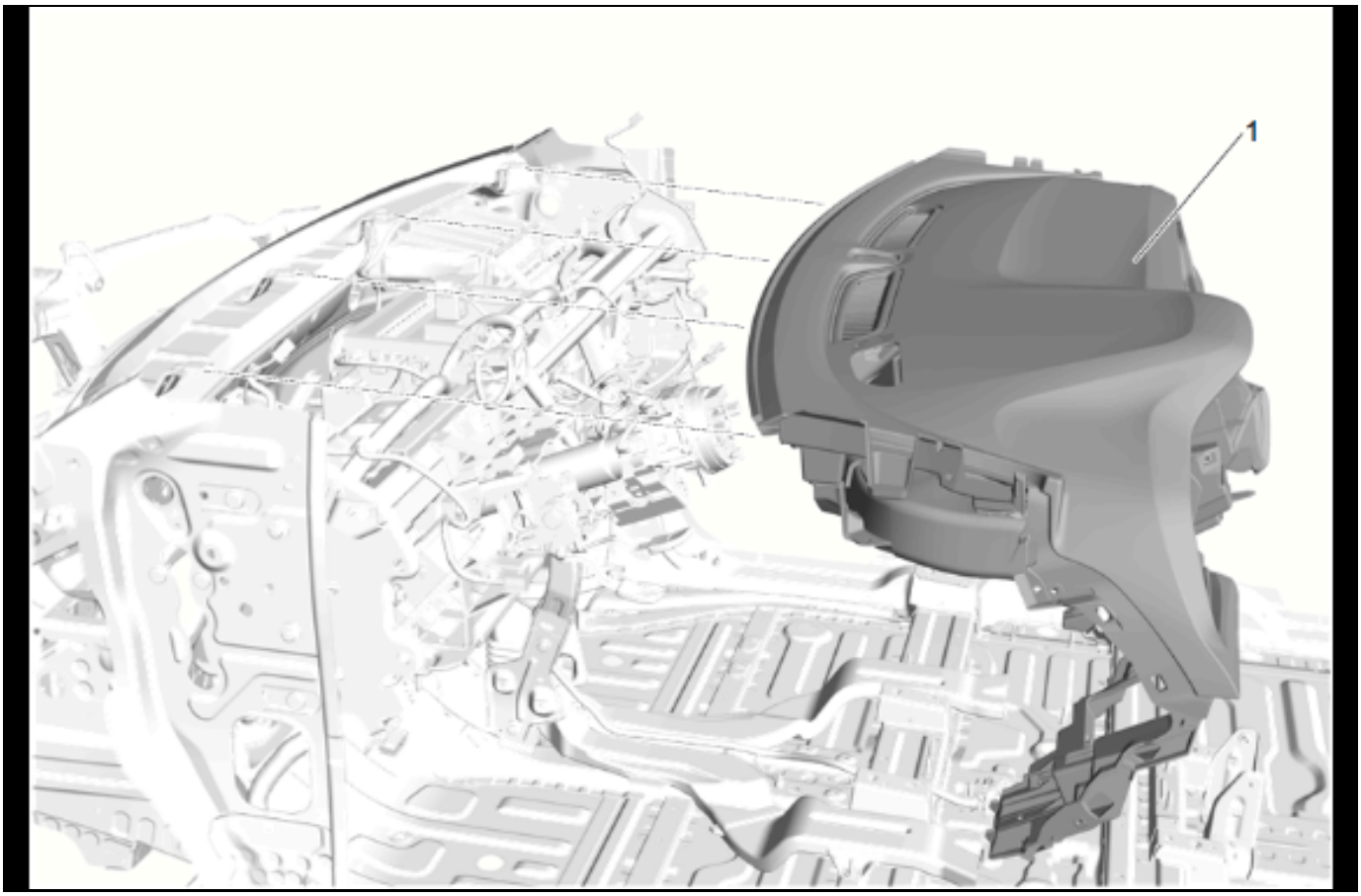

5699361

80. Instrument Panel Assembly (1) » Install — Instrument Panel Removal and Installation

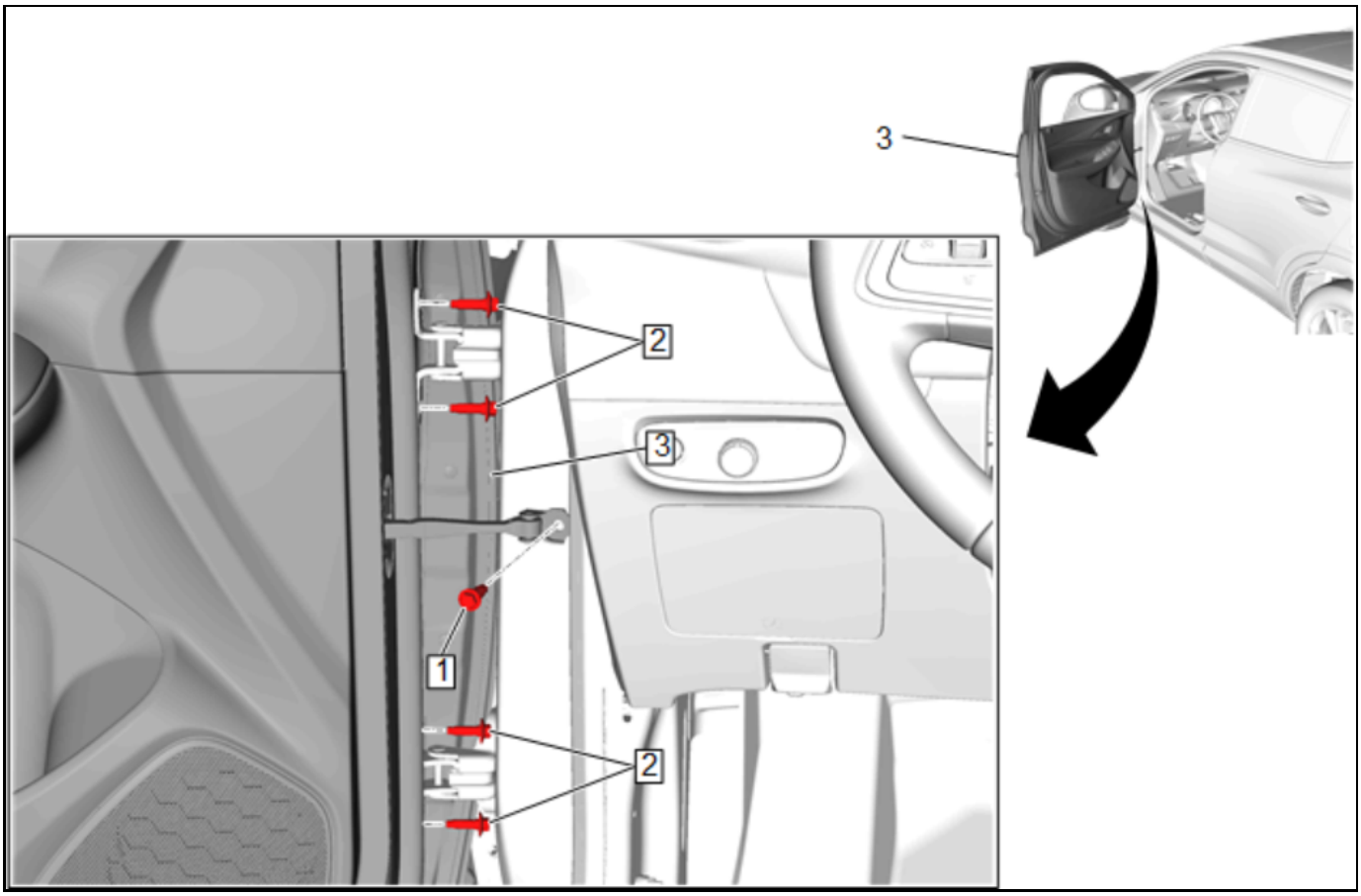

5220211

81. With the aid of an assistant, install the front side door (3).
82. Align the door hinges with the markings made with the grease pencil.
83. Front Side Door Hinge Bolt - Door Side - Left Side and Right Side (2) » Install and tighten [8x] — Fastener Specifications
84. Front Side Door Check Link Bolt - Left Side and Right Side (1) » Install and tighten [2x] — Fastener Specifications

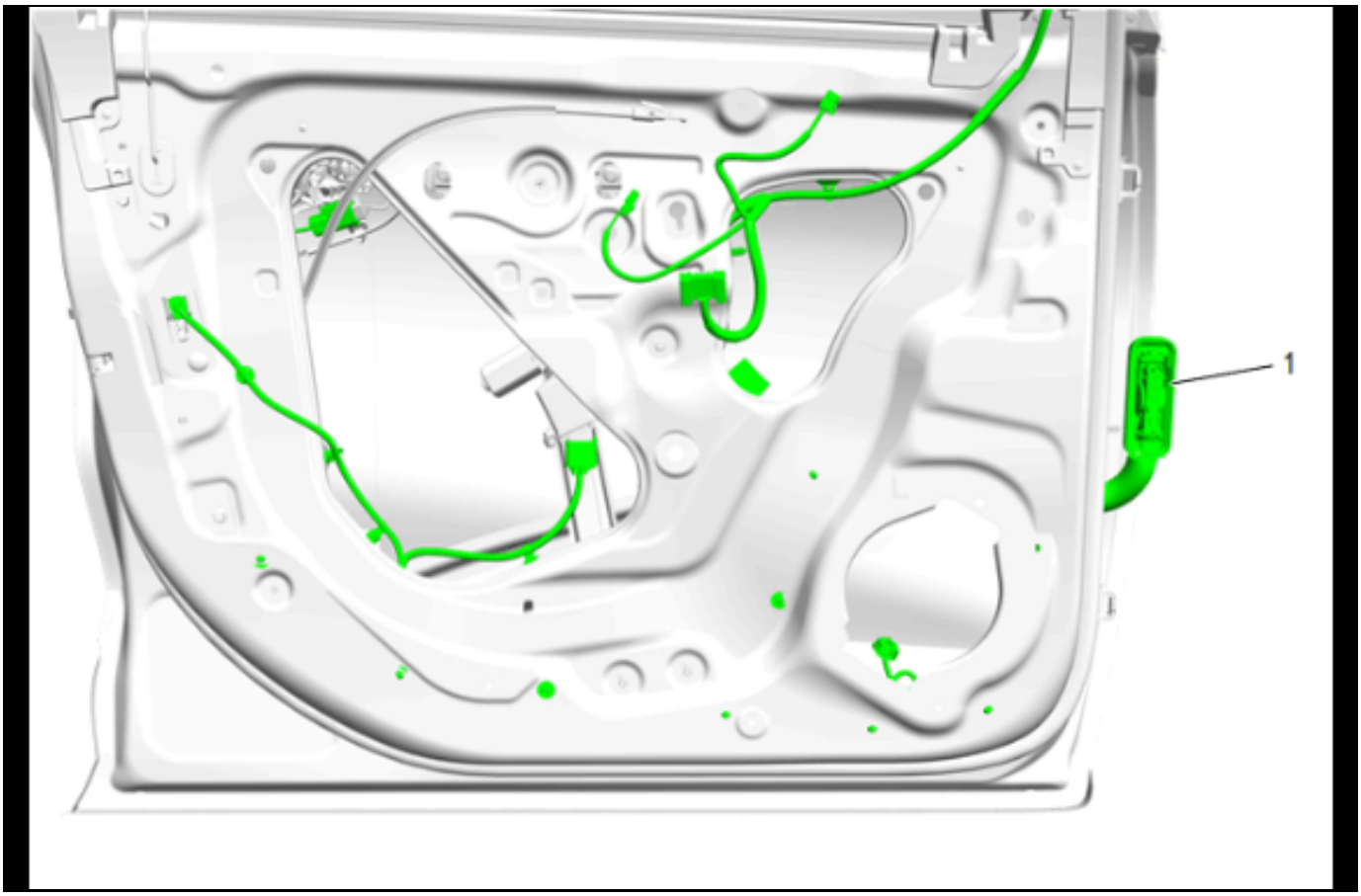

5671840

85. Connect the left and right side of front side door wiring harness (1) electrical connectors.
86. Inspect the door for proper operation and alignment.
87. If necessary, adjust the front side door.

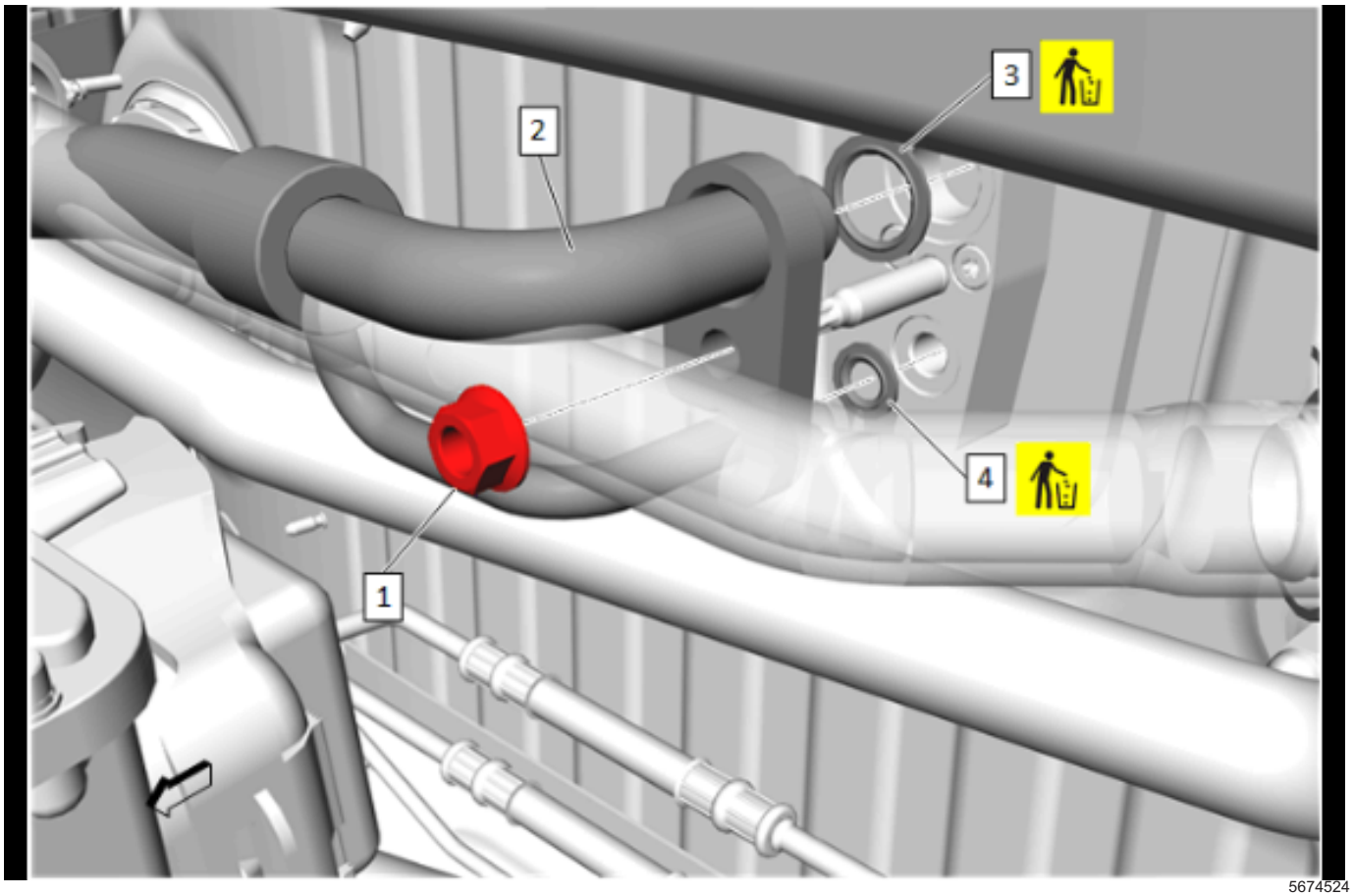

5674524

88. Air Conditioning Evaporator Hose Seal - Small (4)
    » Install NEW
89. Air Conditioning Evaporator Hose Seal - Large (3)
    » Install NEW
90. Air Conditioning Evaporator Hose (2) @ Air Conditioning Evaporator Thermal Expansion Valve
    » Install
91. Air Conditioning Evaporator Hose Nut (1) » Install and tighten — *Fastener Specifications on page 5-3*

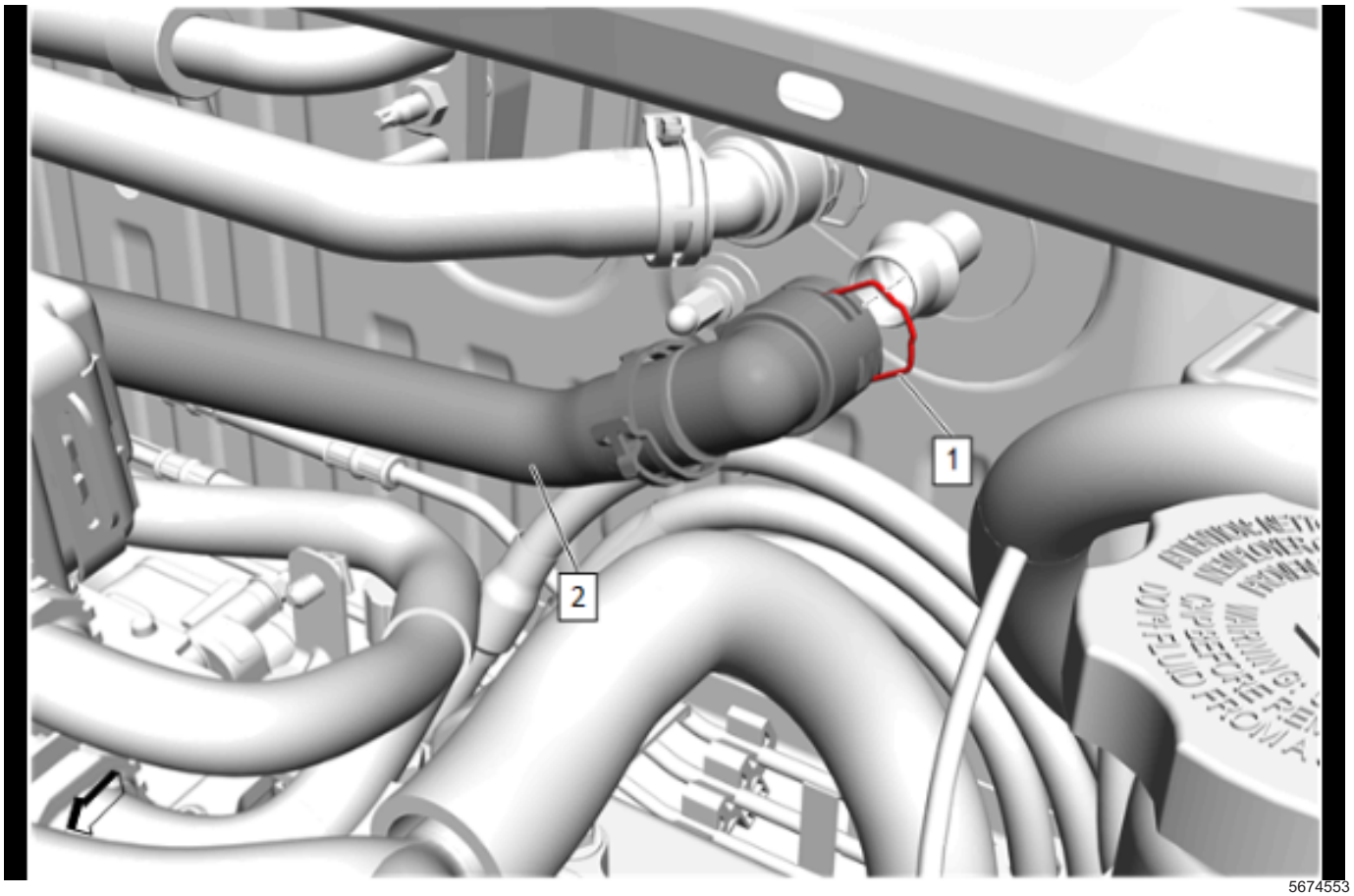

5674553

92. Heater Outlet Hose (2) @ Heater Core Outlet Tube » Install
93. Heater Outlet Hose Connector Retainer (1) » Engage

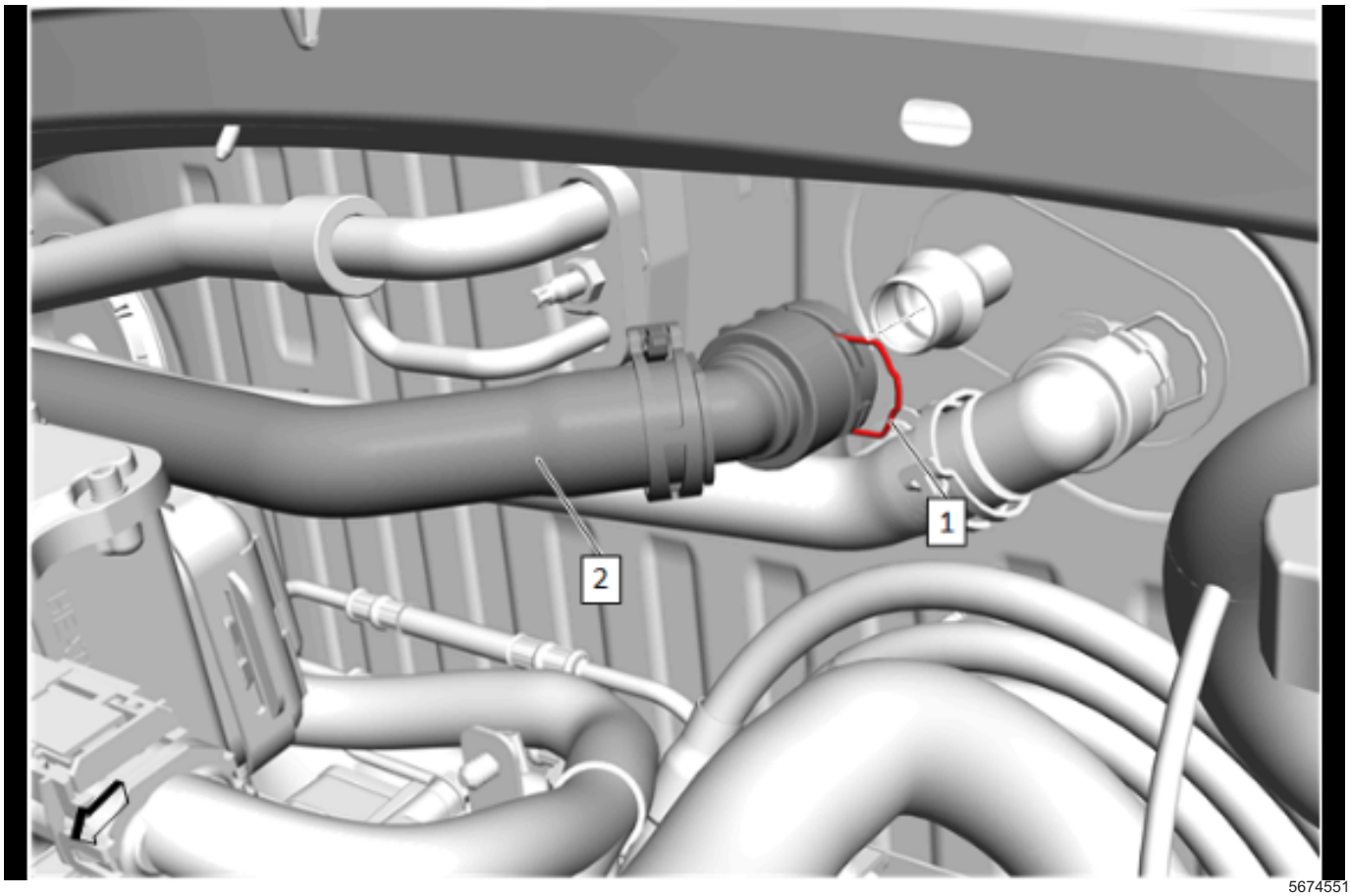

5674551

94. Heater Inlet Hose (2) @ Heater Core Inlet Tube » Install
95. Heater Inlet Hose Connector Retainer (1) » Engage
96. Connect the battery negative cable.
97. Fill the cooling system to the proper level. *Heater Coolant Heater Draining and Filling on page 5-39*
98. Evacuate and charge the refrigerant system. *Refrigerant Recovery and Recharging on page 5-36*
99. Perform the actuator calibration procedure.
100. Enable the SIR System.
101. Clear the DTCs.
102. Inspect for coolant leaks.
103. Inspect for refrigerant leaks.

Heater and Air Conditioning Evaporator Case Replacement

Removal Procedure

1. Heater and Air Conditioning Evaporator and Blower Module — *Heater and Air Conditioning Evaporator and Blower Module Removal and Installation on page 5-199*
2. Drain the cooling system. *Heater Coolant Heater Draining and Filling on page 5-39*

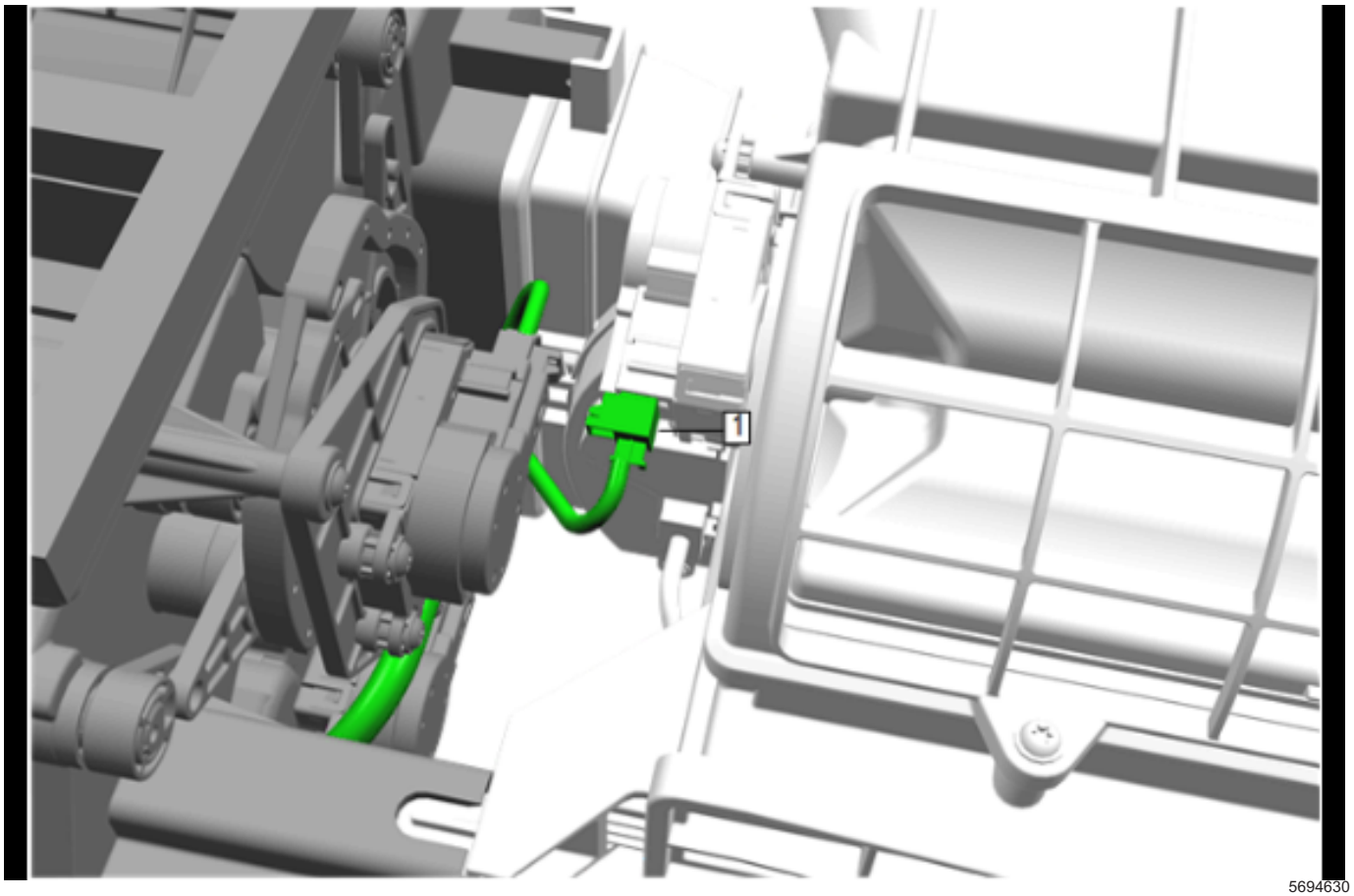

5694630

3. Electrical Connector (1) » Disconnect

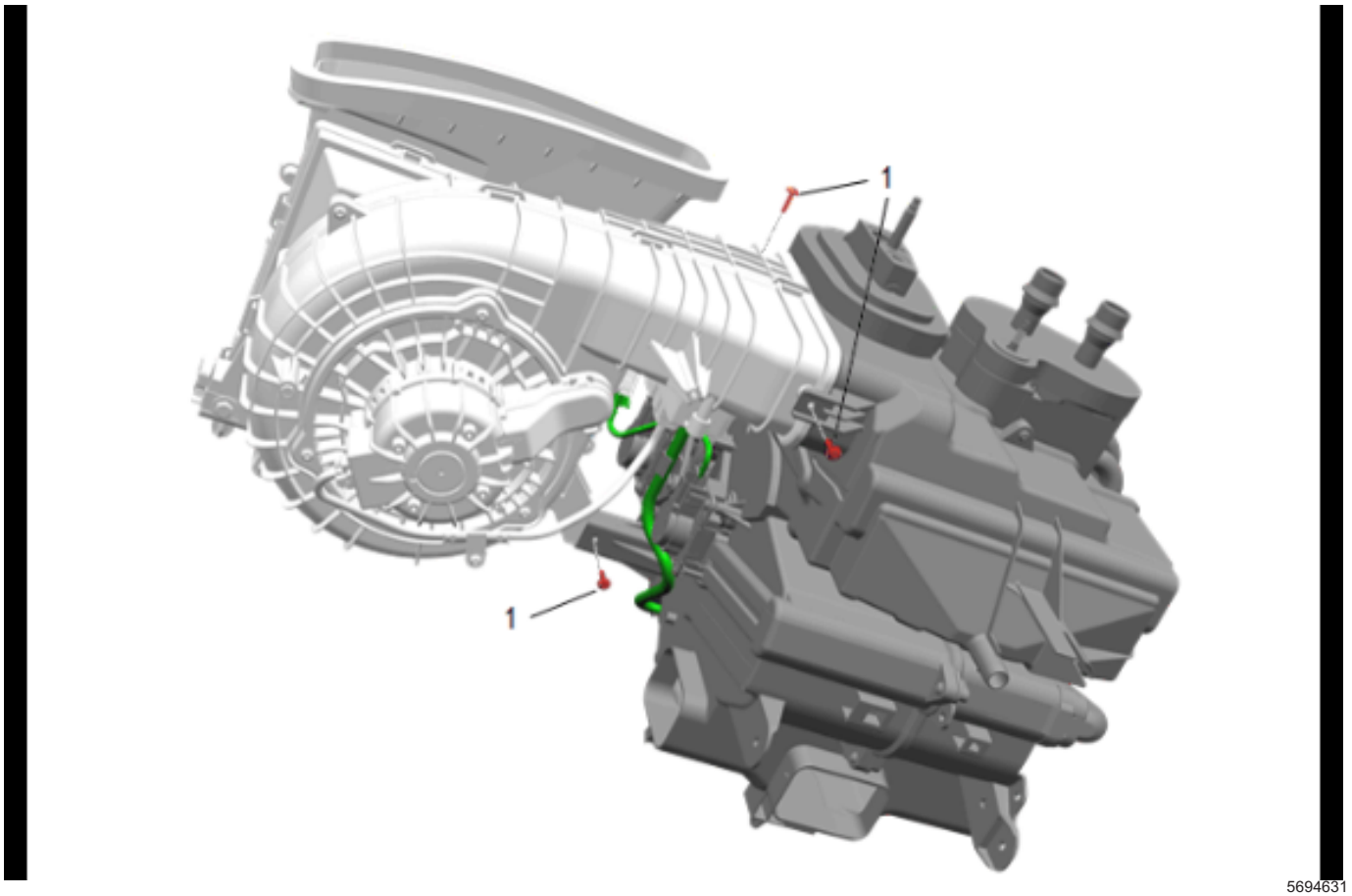

5694631

4. Heater and Air Conditioning Evaporator Case Bolt
   (1) » Remove [3x]

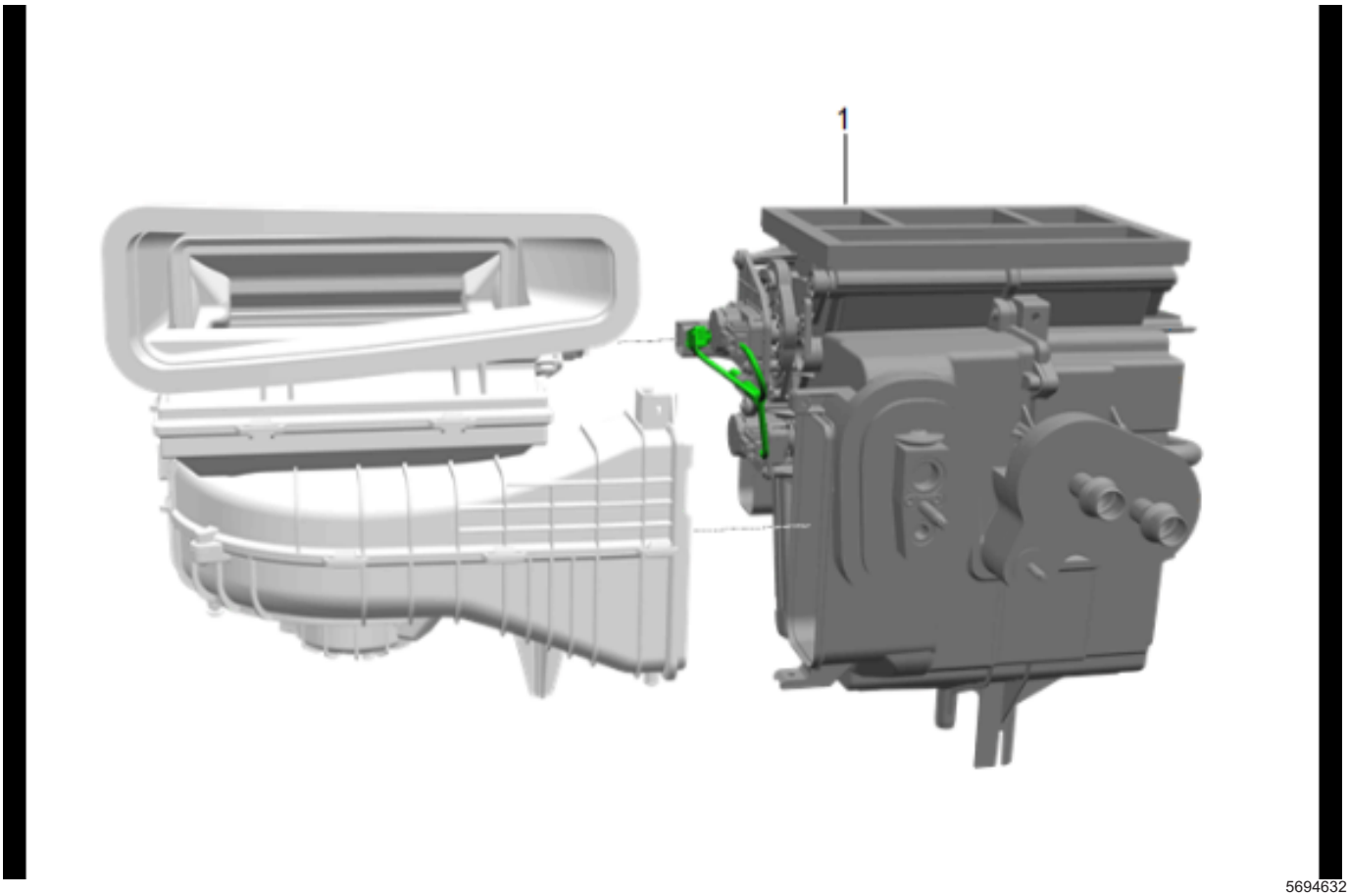

5694632

5. Heater and Air Conditioning Evaporator Case (1)
   » Remove

Installation Procedure

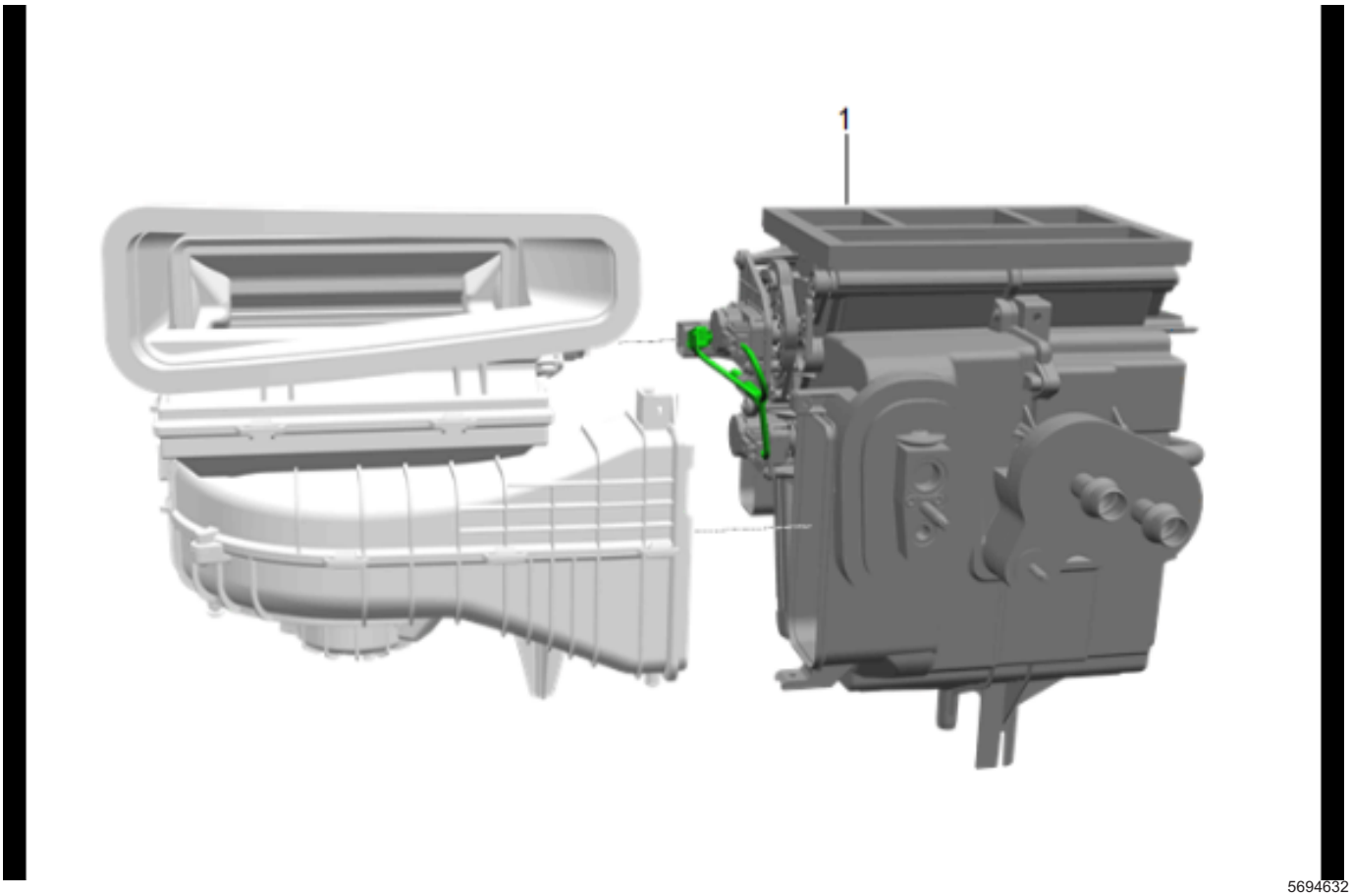

5694632

1. Heater and Air Conditioning Evaporator Case (1)
   » Install

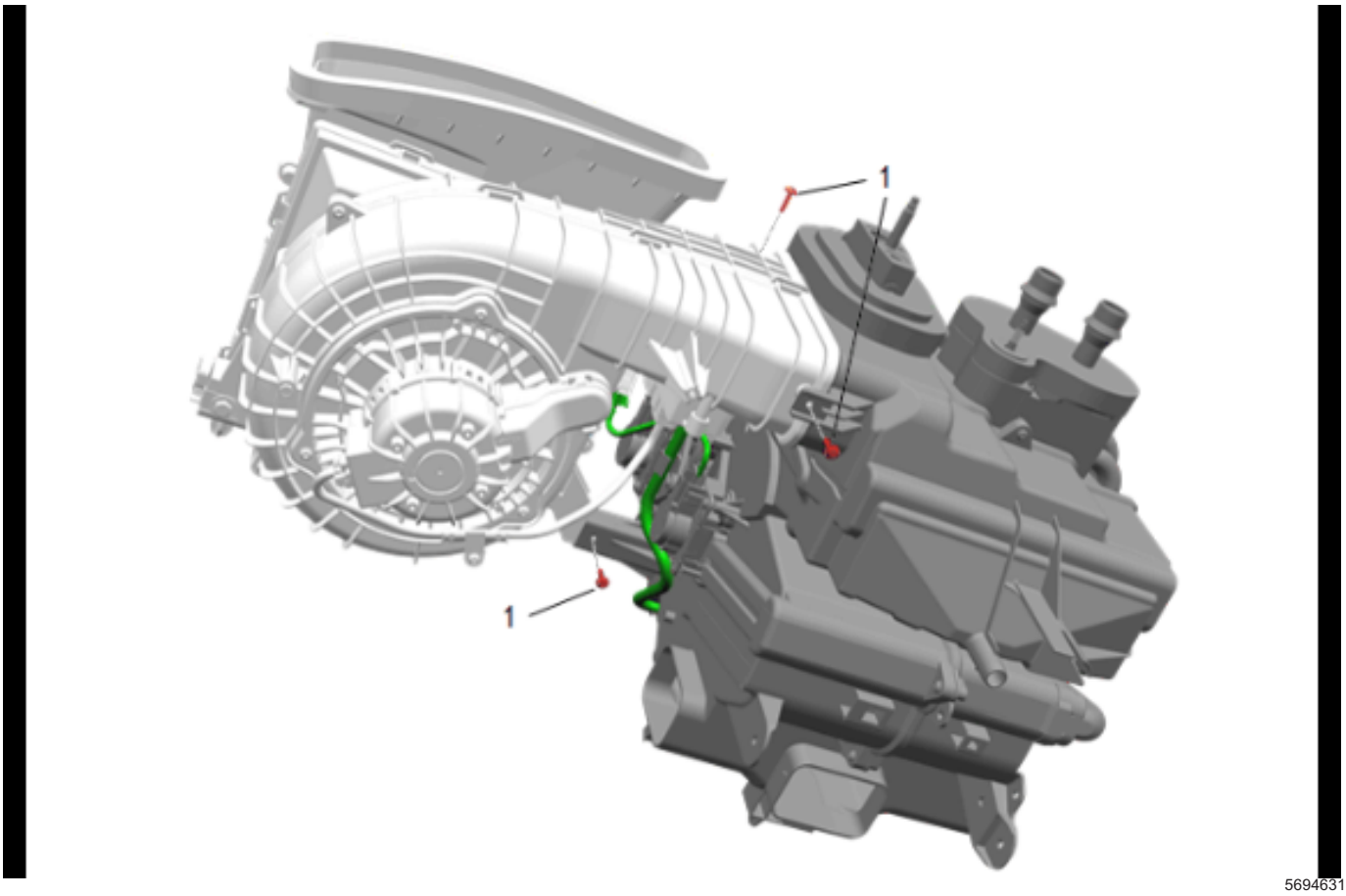

2. Heater and Air Conditioning Evaporator Case Bolt (1) » Install and tighten — *Fastener Specifications on page 5-3*[3x]

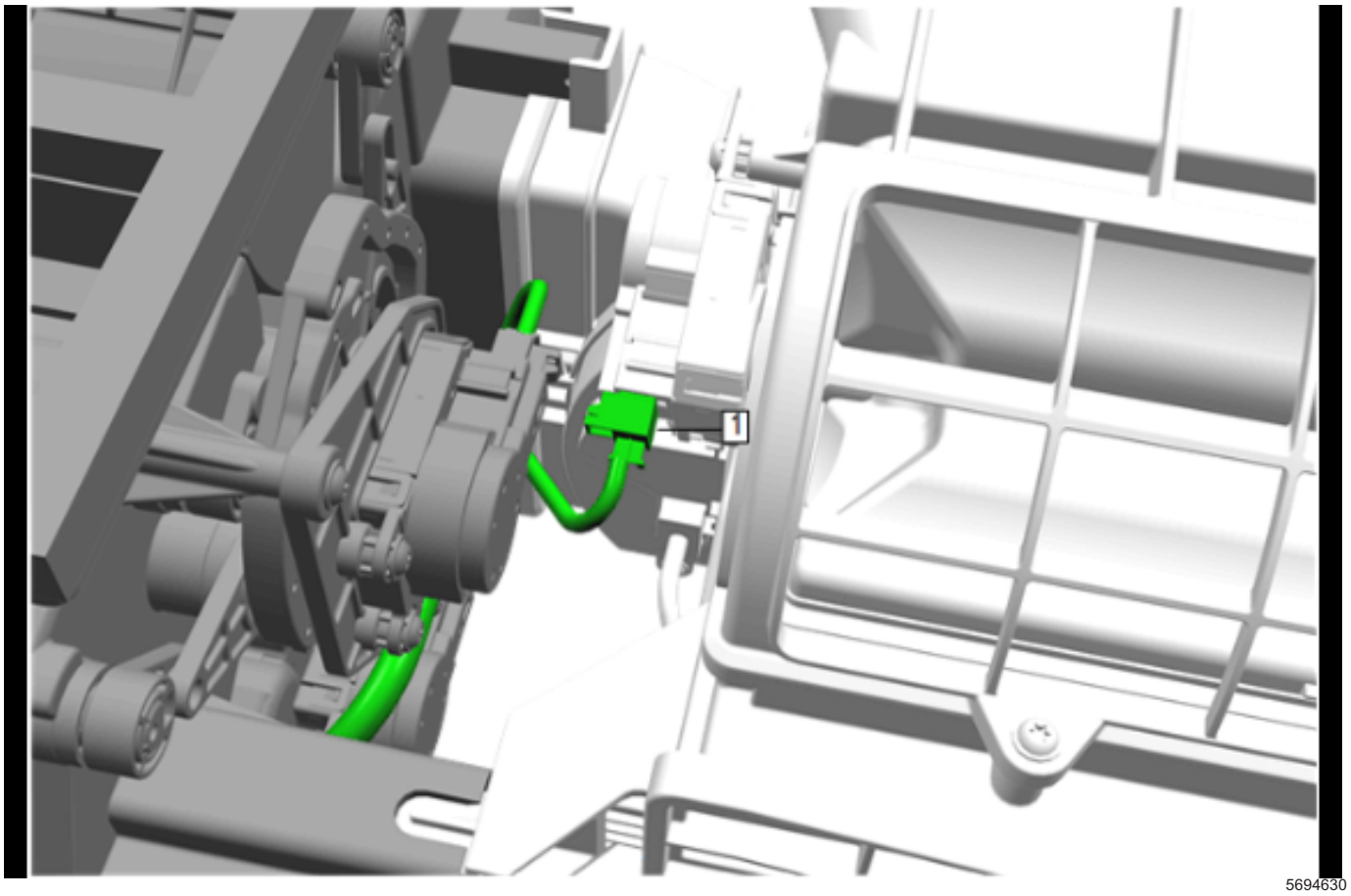

3. Electrical Connector (1) » Connect
4. Heater and Air Conditioning Evaporator and Blower Module — *Heater and Air Conditioning Evaporator and Blower Module Removal and Installation on page 5-199*
5. Fill the cooling system to the proper level. *Heater Coolant Heater Draining and Filling on page 5-39*

Blower Lower Case Replacement

Removal Procedure

1. Heater and Air Conditioning Evaporator and Blower Module — *Heater and Air Conditioning Evaporator and Blower Module Removal and Installation on page 5-199*
2. Drain the cooling system. *Heater Coolant Heater Draining and Filling on page 5-39*

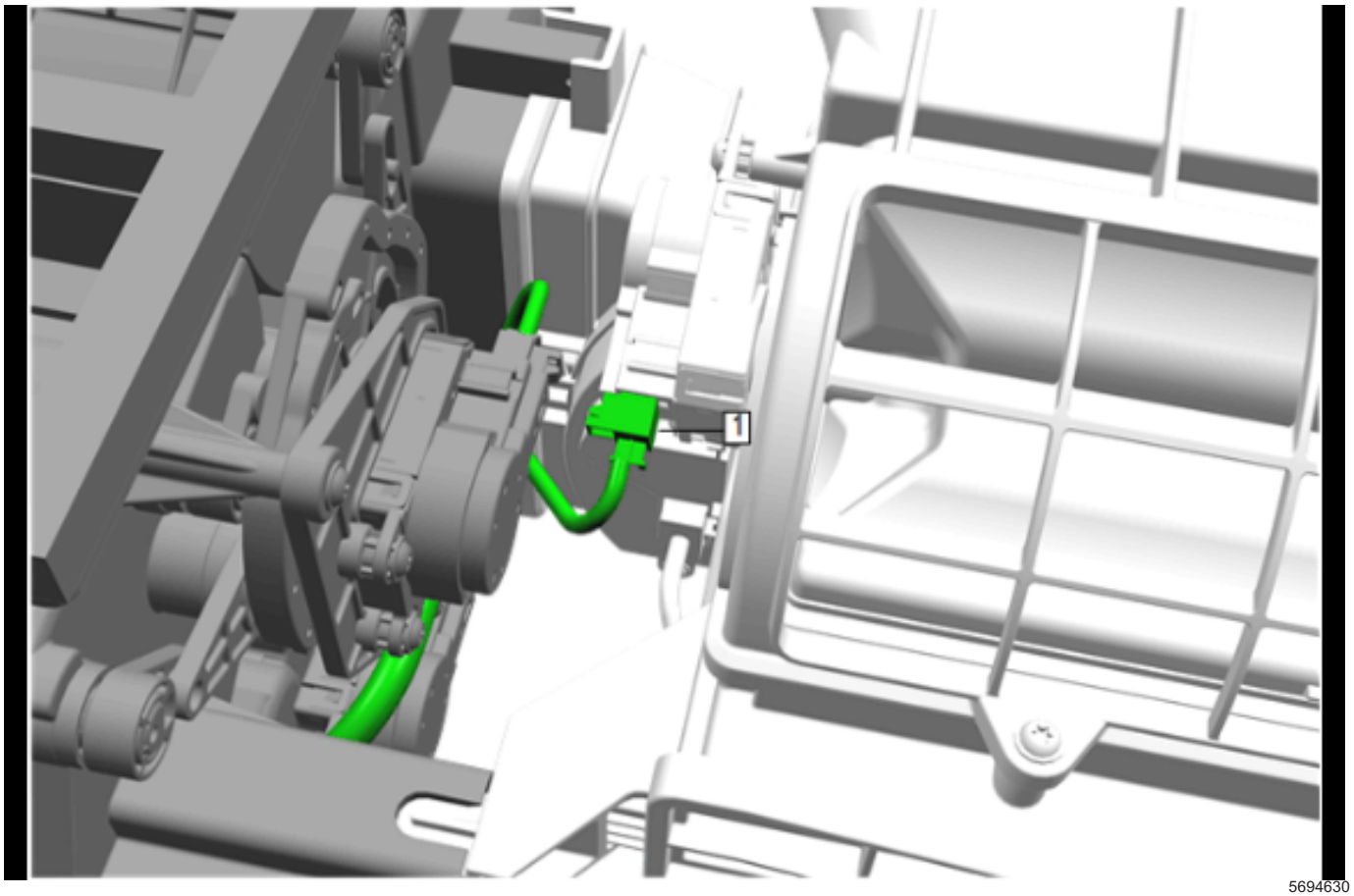

5694630

3. Electrical Connector (1) » Disconnect

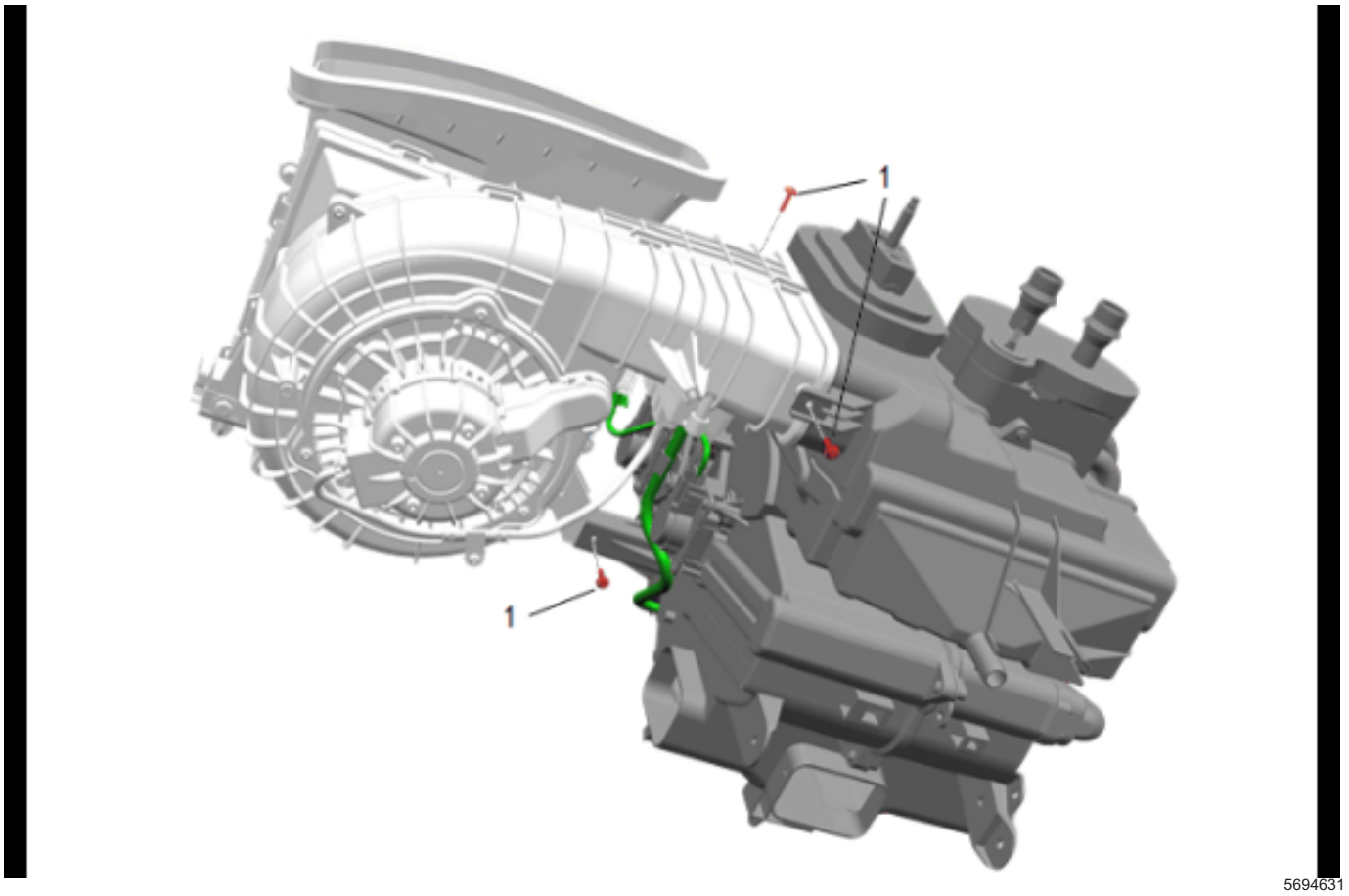

5694631

4. Heater and Air Conditioning Evaporator Case Bolt
   (1) » Remove [3x]

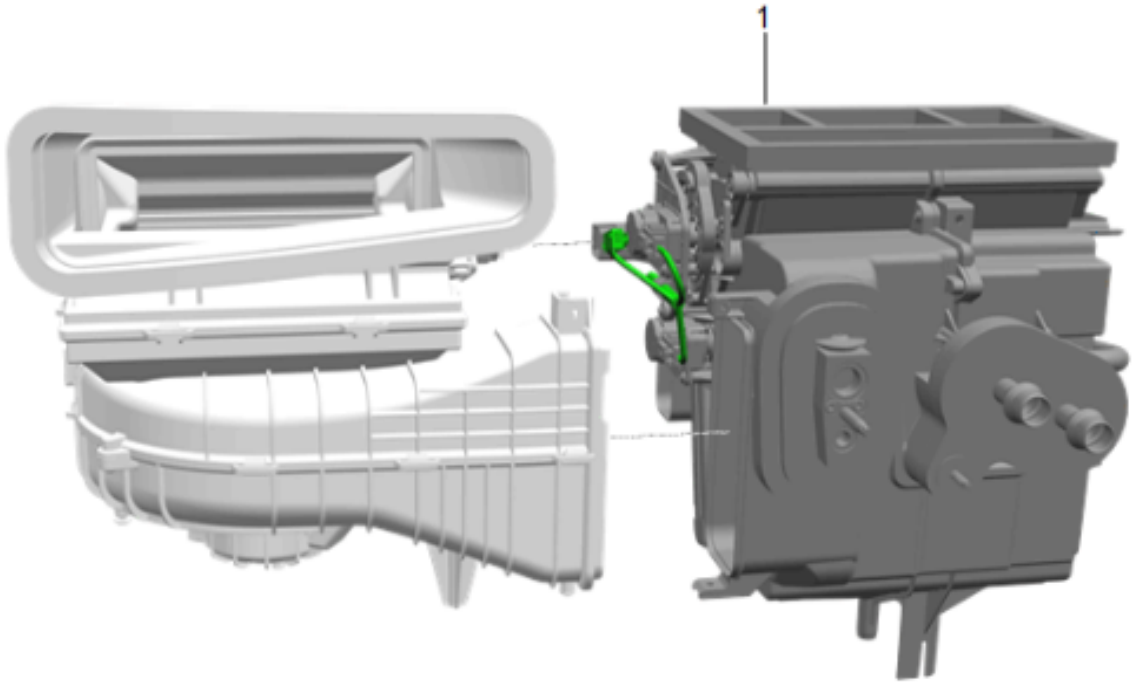

5694632

5. Heater and Air Conditioning Evaporator Case (1)
   » Remove

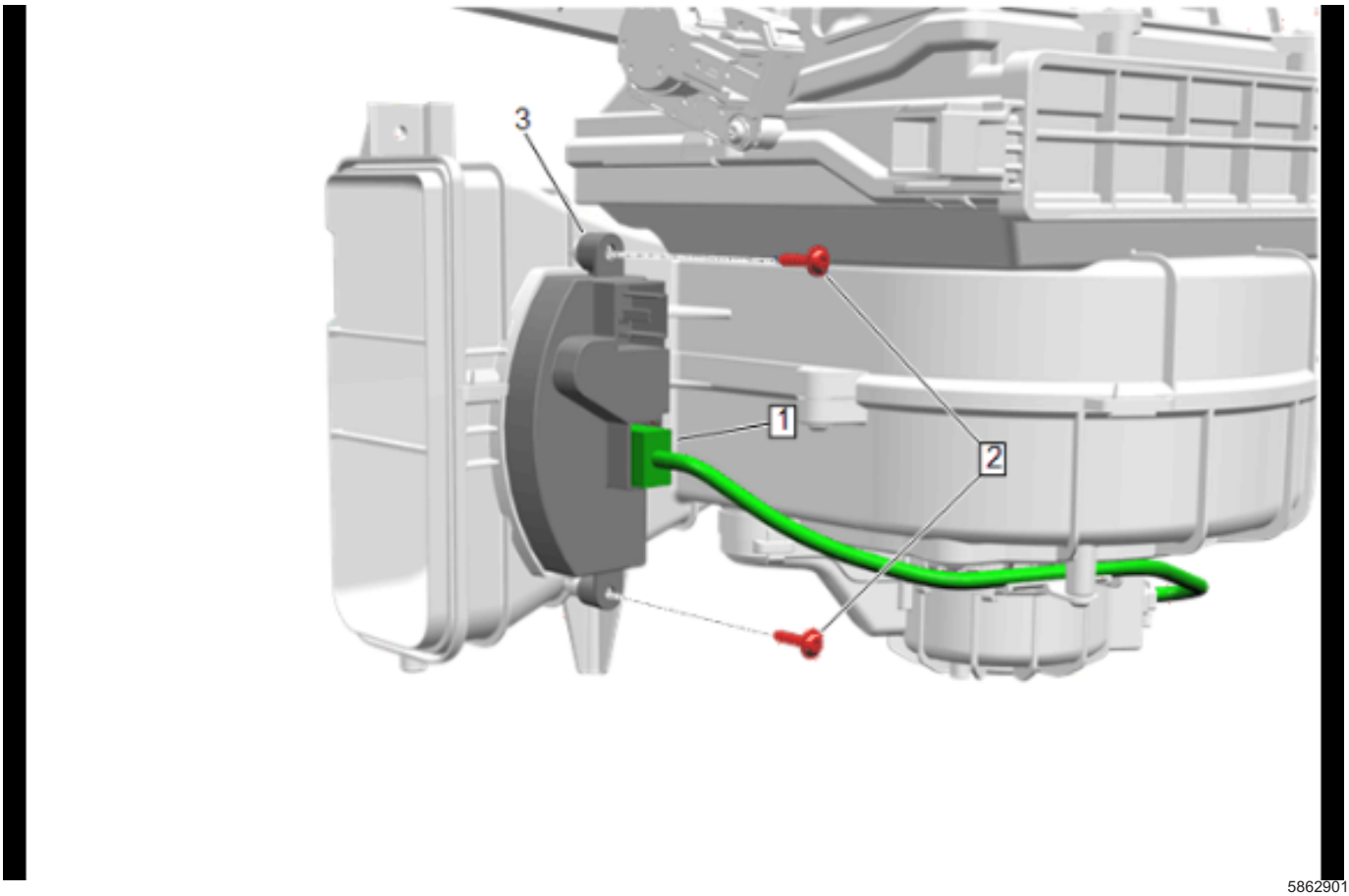

5862901

6. Electrical Connector (1) » Disconnect
7. Blower Motor Control Module Bolt (2) » Remove
8. Blower Motor Control Module (3) » Remove

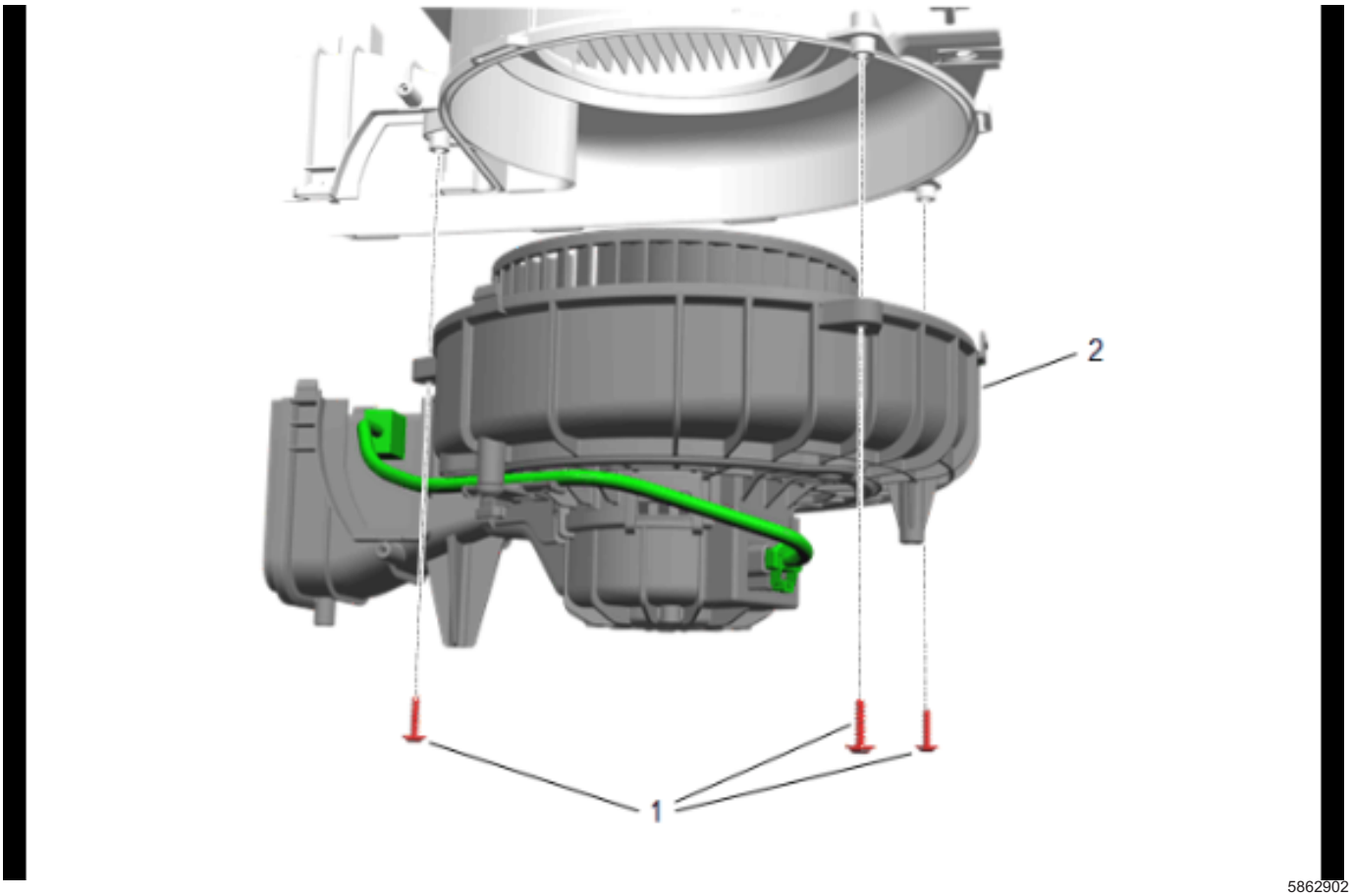

5862902

9. Blower Upper Case Screw (1) » Remove [3x]
10. Blower Lower Case (2) » Remove
11. Using the appropriate tools, release the integral retaining features.

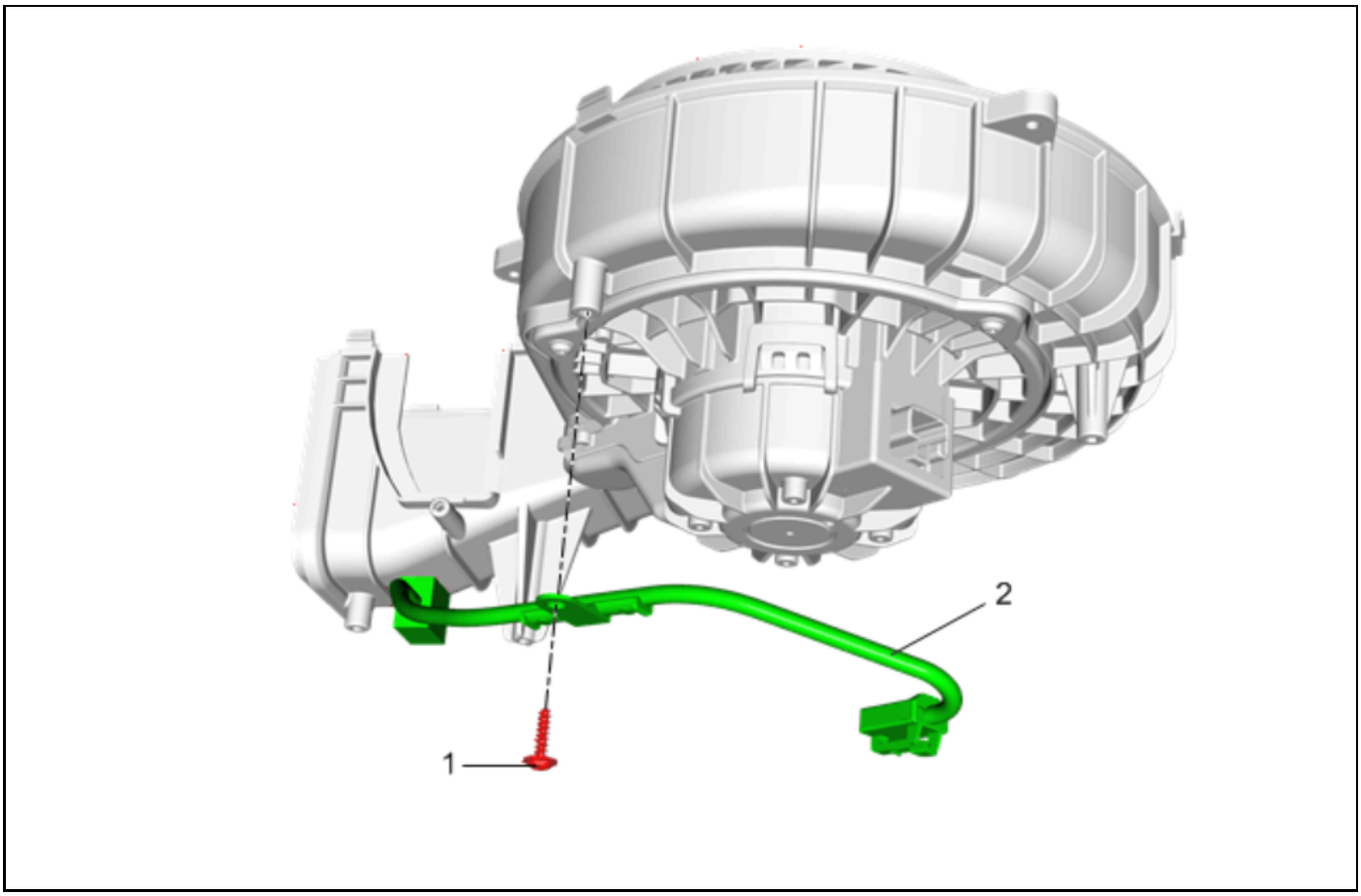

4545690

12. Screw (1) » Remove
13. Wiring Harness (2) » Remove

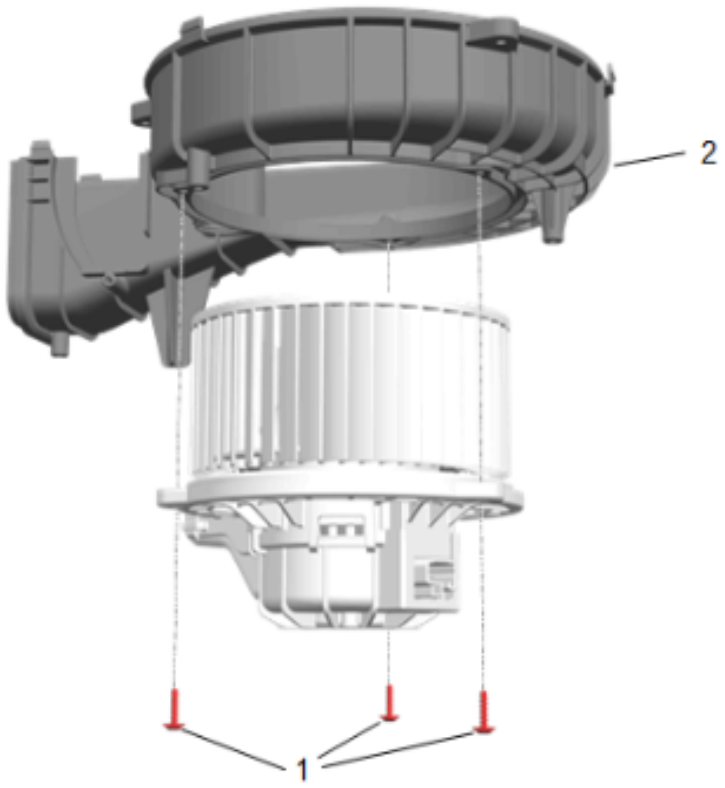

5694864

14. Blower Lower Case Screw (1) » Remove [3x]
15. Blower Lower Case (2) » Remove

Installation Procedure

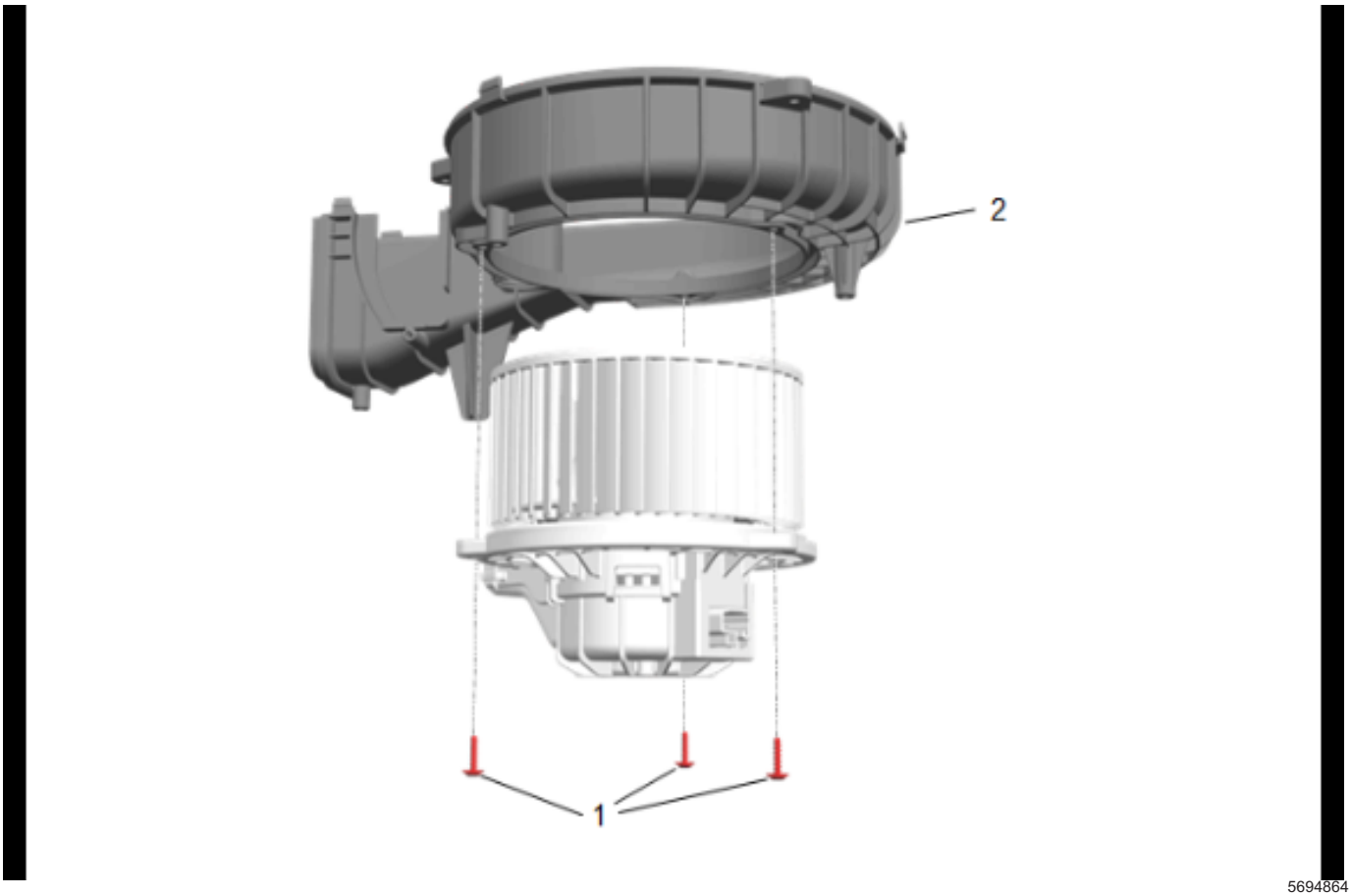

5694864

1. Blower Lower Case (2) » Install
2. Blower Lower Case Screw (1) » Install and tighten
   — *Fastener Specifications on page 5-3*[3x]

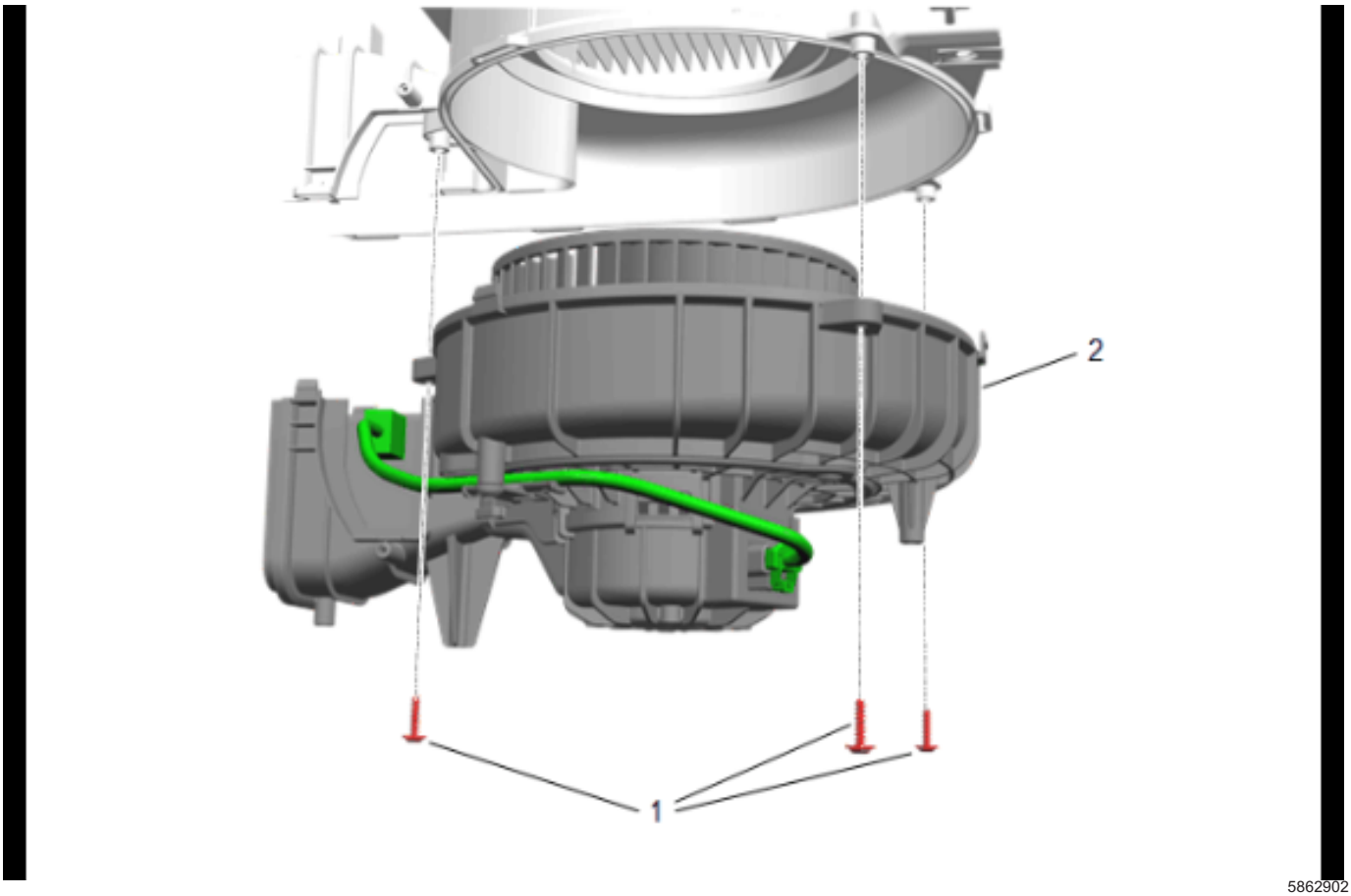

5862902

3. Blower Lower Case (2) » Install
4. Blower Upper Case Screw (1)» Install and tighten
   — *Fastener Specifications on page 5-3*[3x]

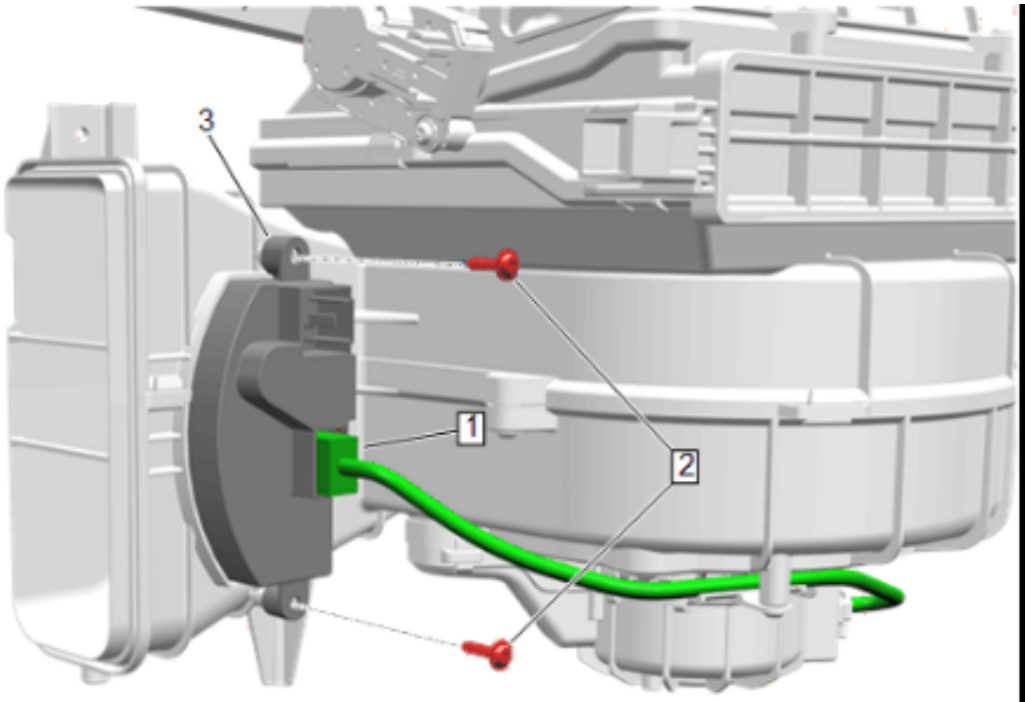

5862901

5. Blower Motor Control Module (3) » Install
6. Blower Motor Control Module Bolt (2) » Install and tighten — *Fastener Specifications on page 5-3*[2x]
7. Electrical Connector (1) » Connect

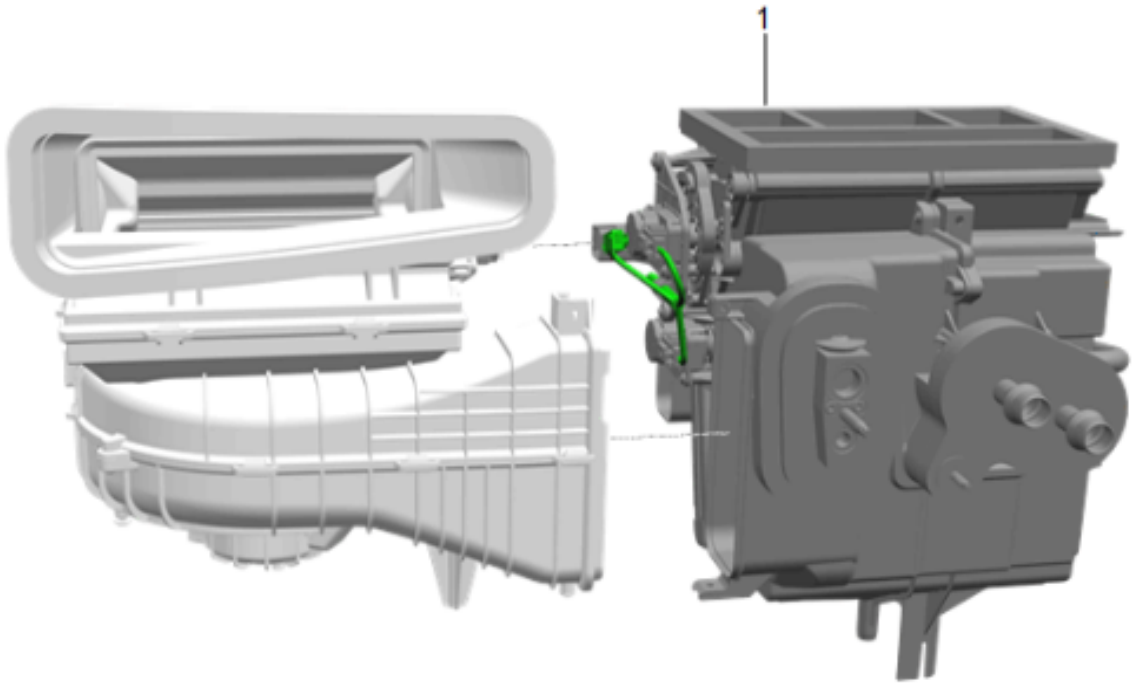

5694632

8. Heater and Air Conditioning Evaporator Case (1)
   » Install

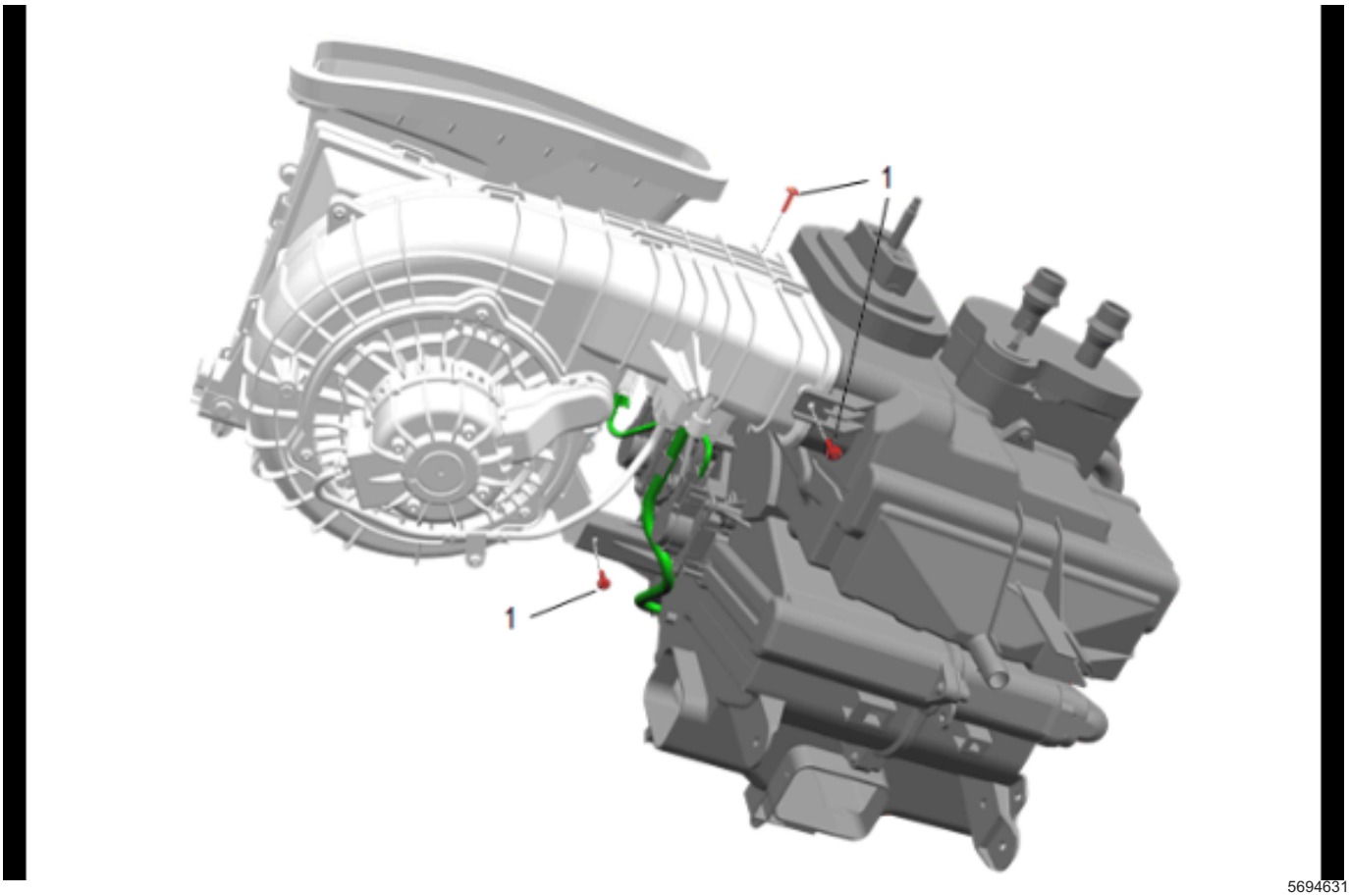

5694631

9. Heater and Air Conditioning Evaporator Case Bolt (1) » Install and tighten — *Fastener Specifications on page 5-3*[3x]

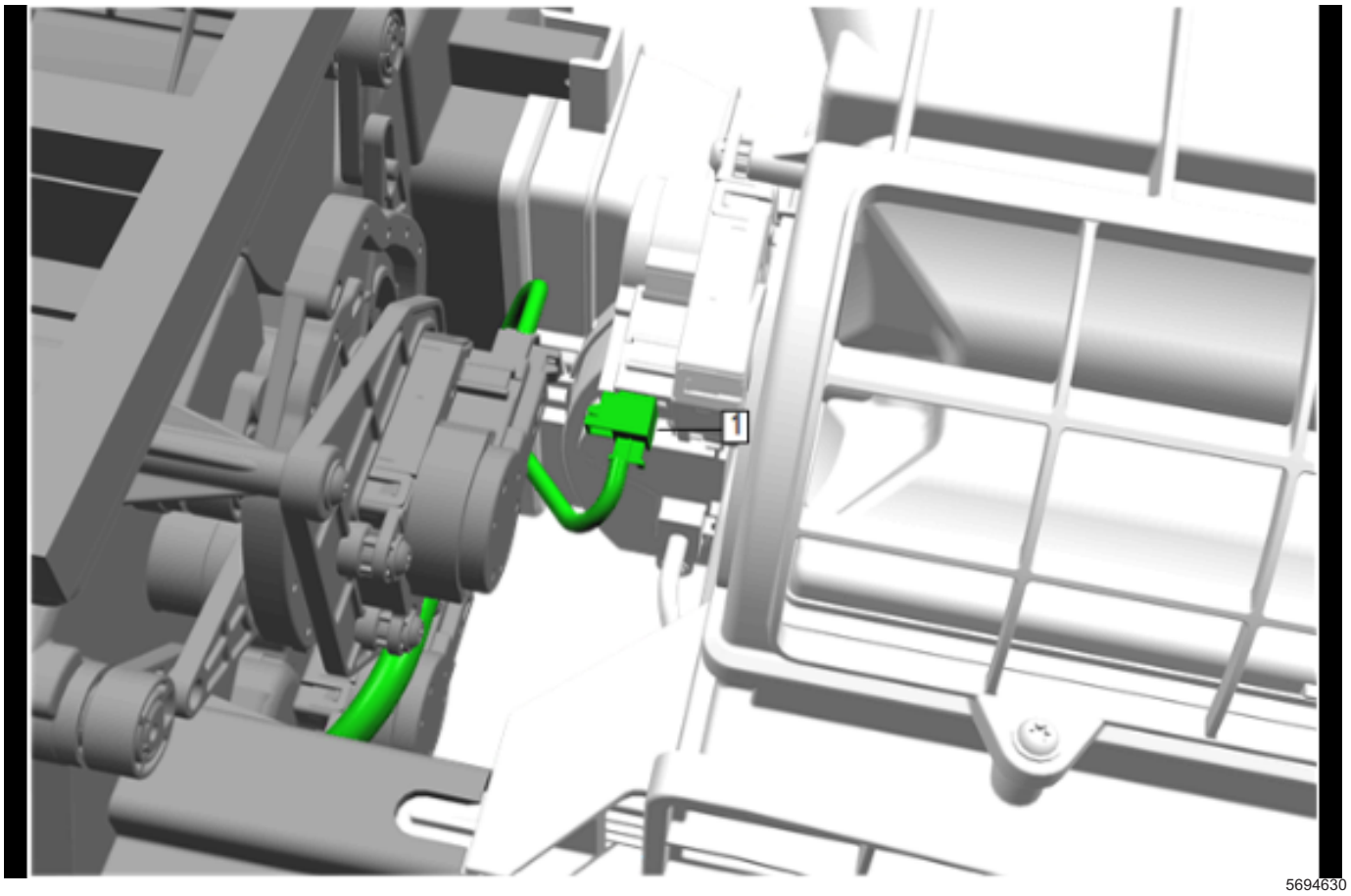

10. Electrical Connector (1) » Connect
11. Heater and Air Conditioning Evaporator and Blower Module — *Heater and Air Conditioning Evaporator and Blower Module Removal and Installation on page 5-199*
12. Fill the cooling system to the proper level. *Heater Coolant Heater Draining and Filling on page 5-39*

Blower Upper Case Replacement

Removal Procedure

1. Heater and Air Conditioning Evaporator and Blower Module — *Heater and Air Conditioning Evaporator and Blower Module Removal and Installation on page 5-199*
2. Drain the cooling system. *Heater Coolant Heater Draining and Filling on page 5-39*

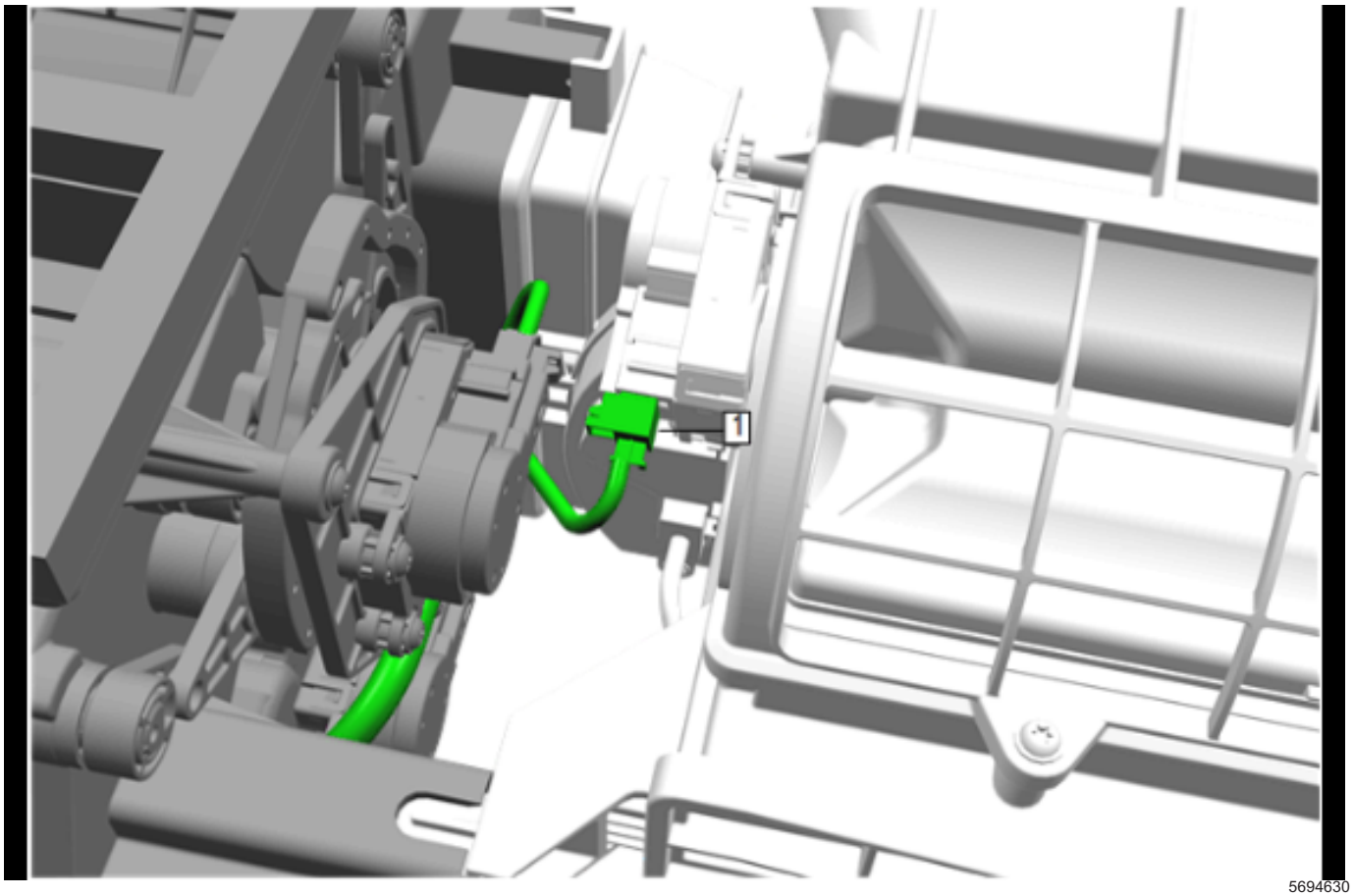

5694630

3. Electrical Connector (1) » Disconnect

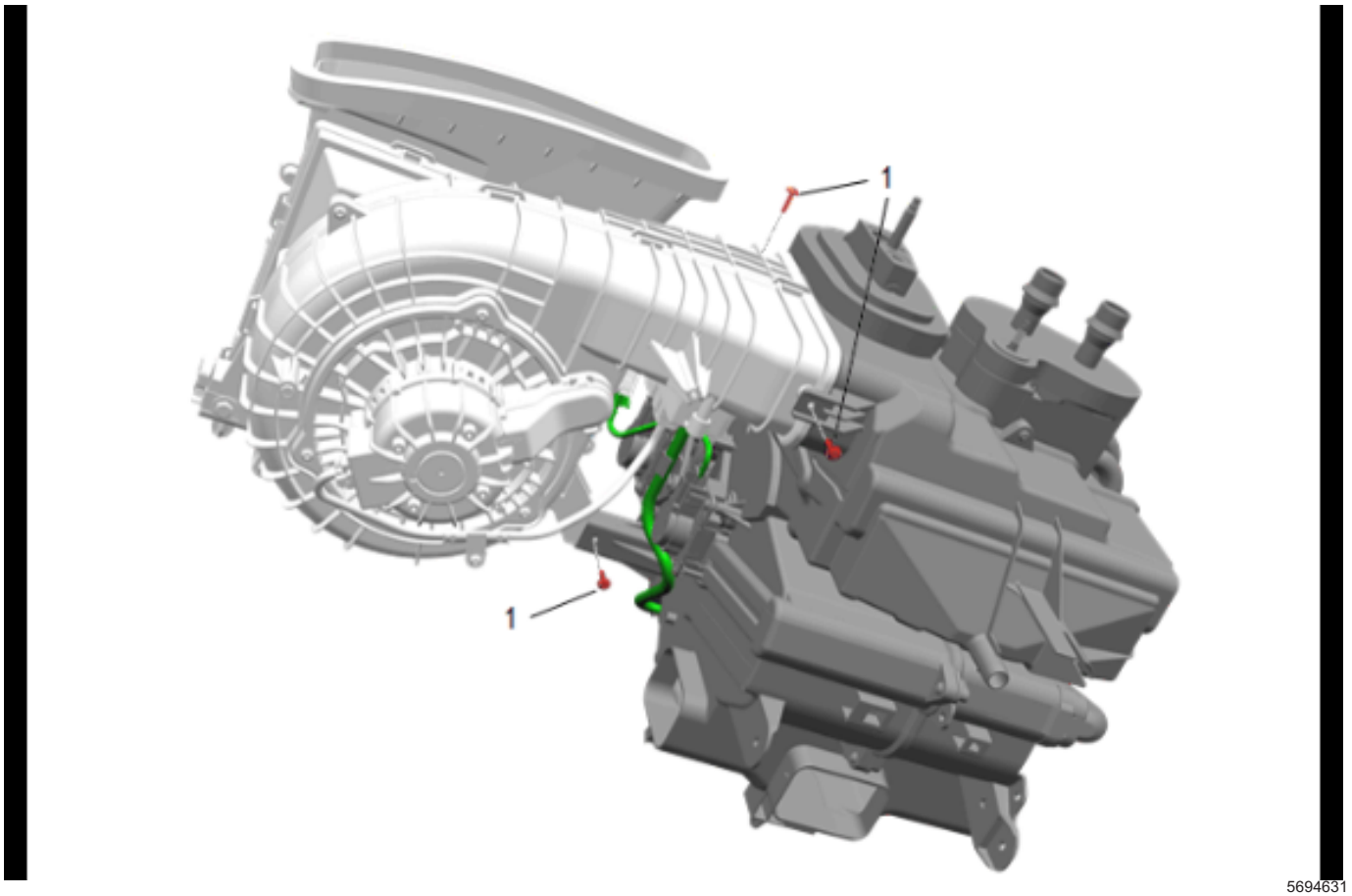

5694631

4. Heater and Air Conditioning Evaporator Case Bolt
   (1) » Remove [3x]

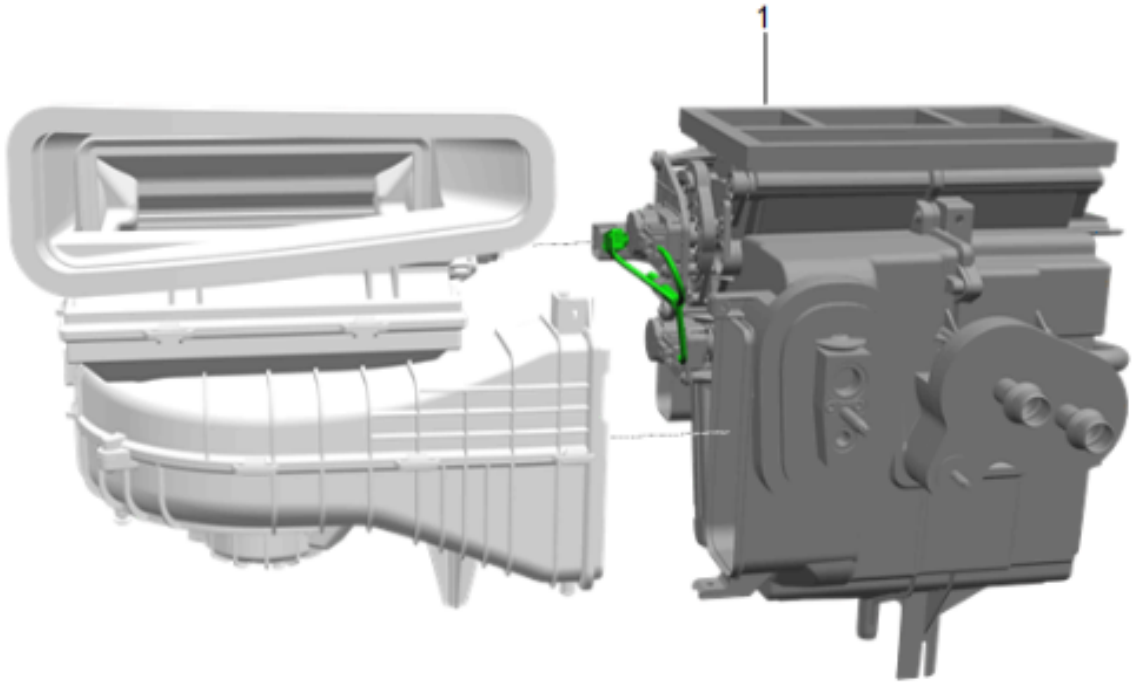

5694632

5. Heater and Air Conditioning Evaporator Case (1)
   » Remove

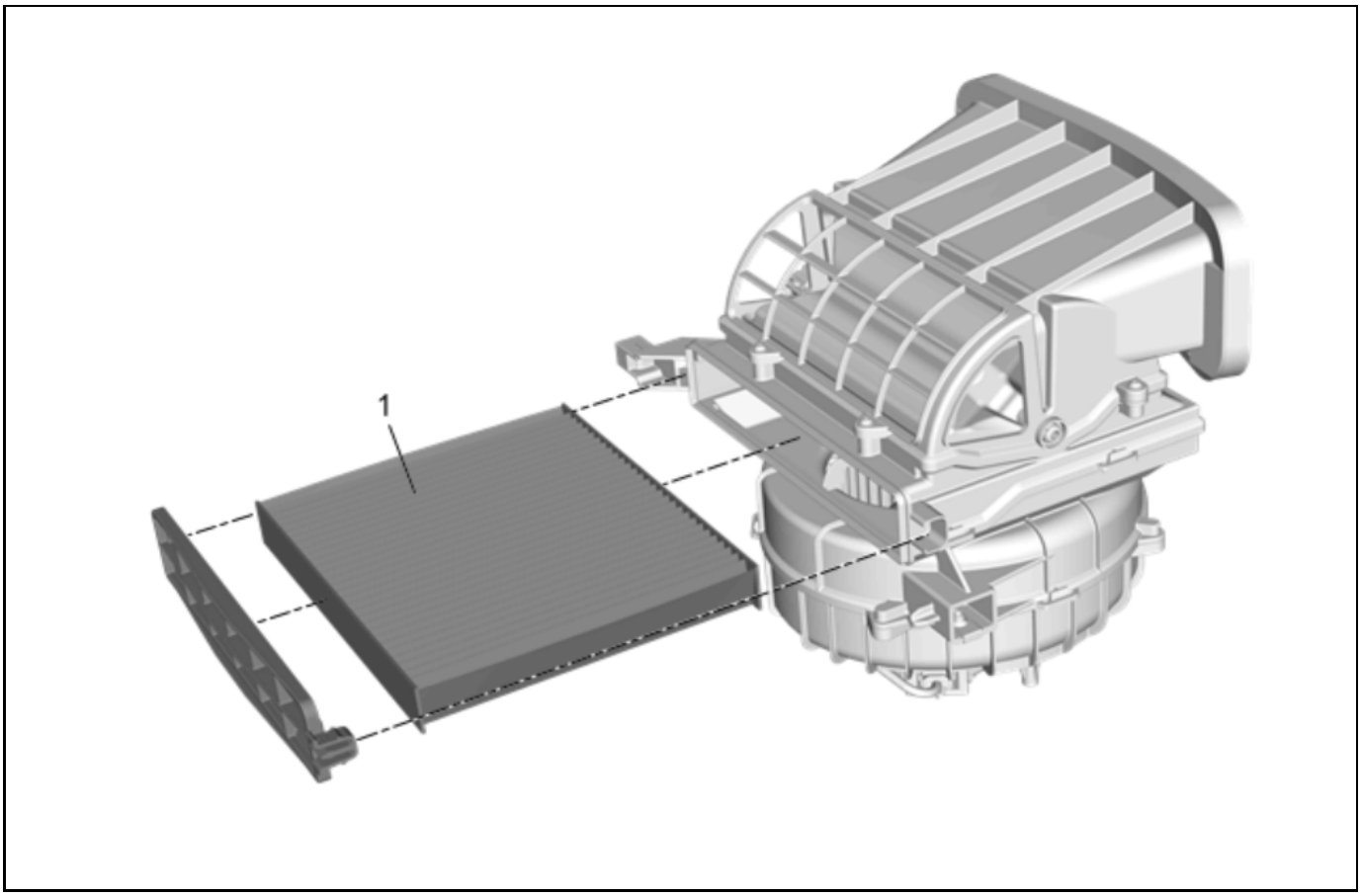

4545686

6. Passenger Compartment Air Filter (1) » Remove

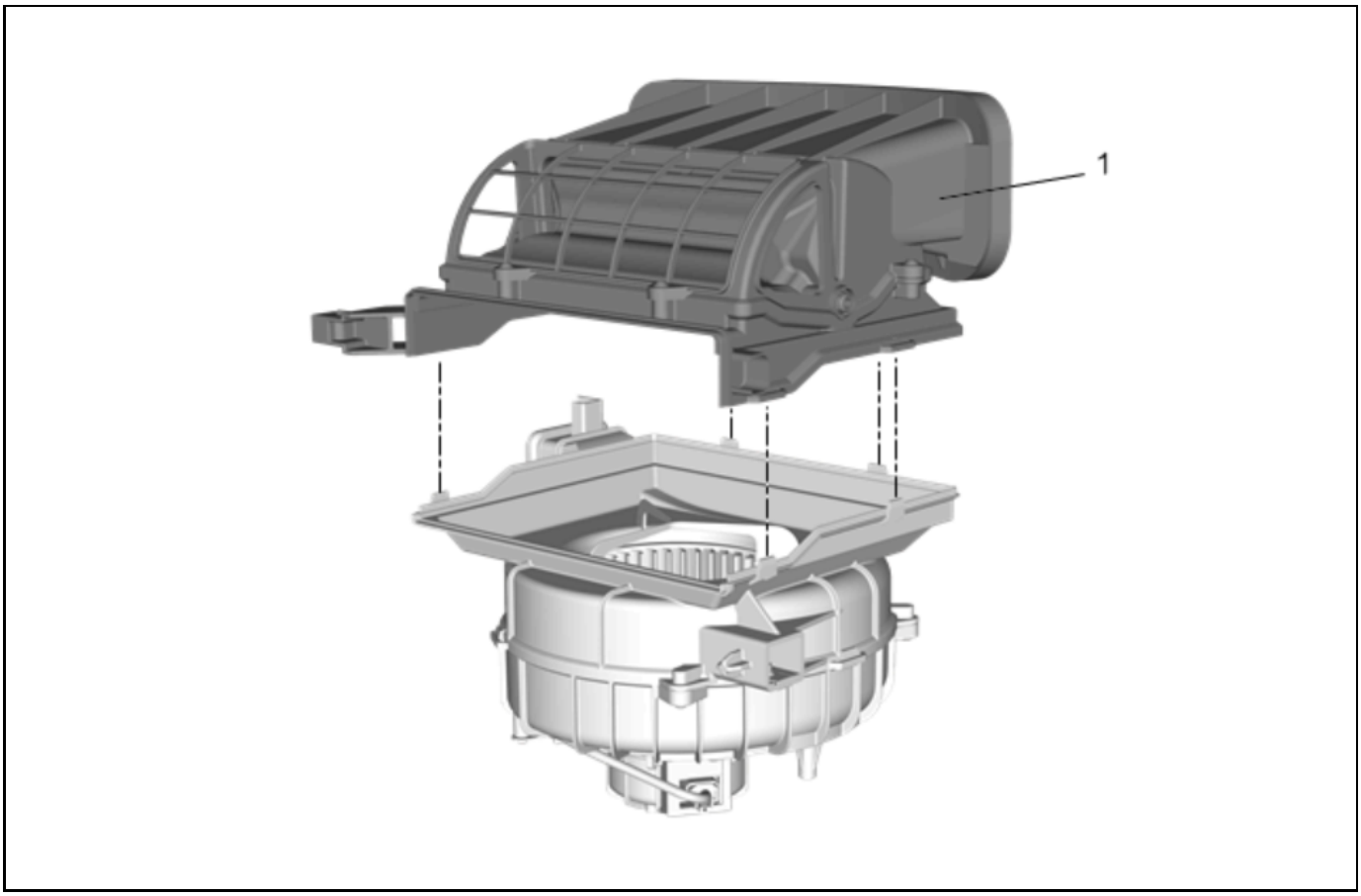

4545687

7. Air Inlet Housing (1) » Remove

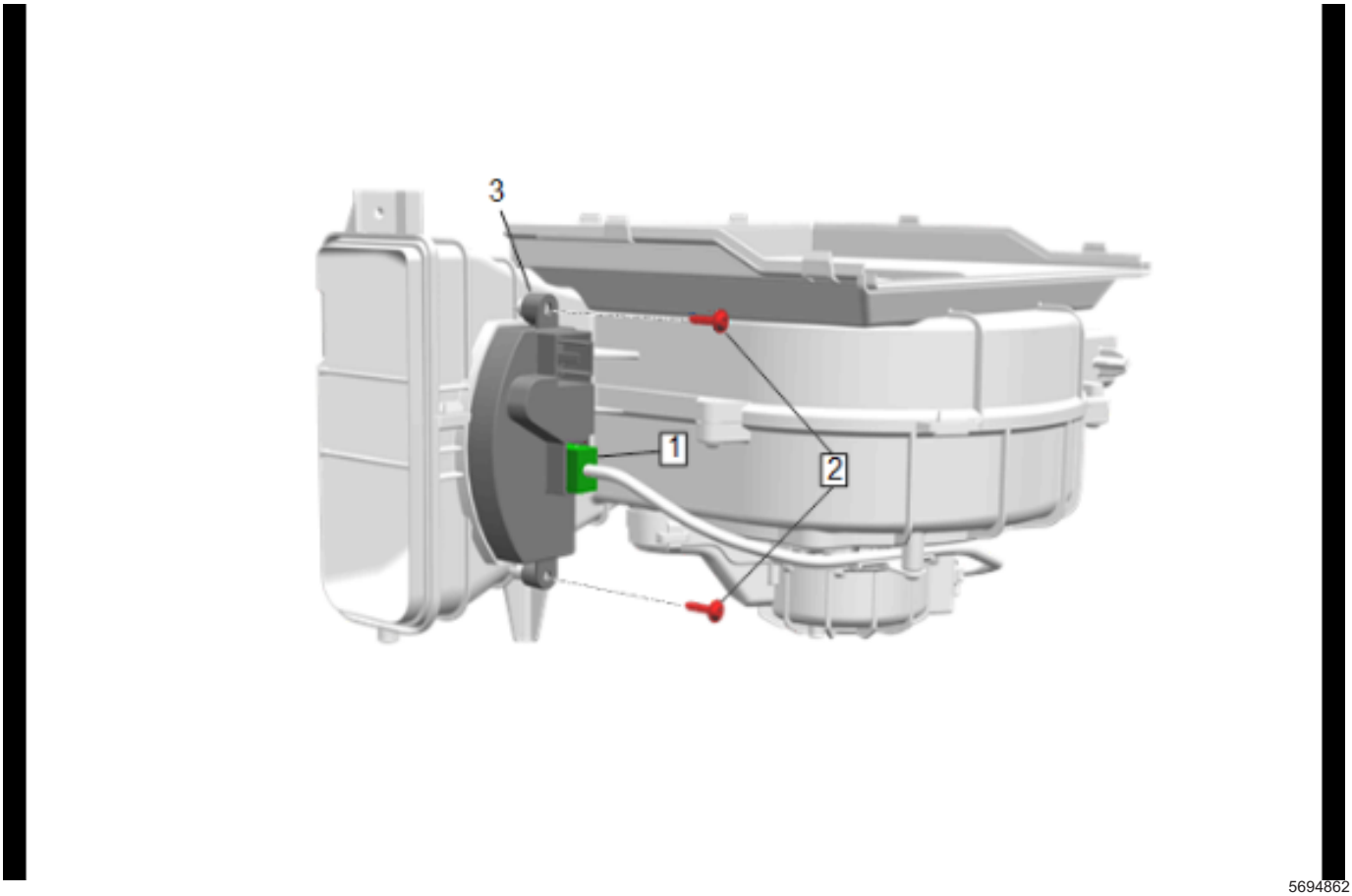

5694862

8. Electrical Connector (1) » Disconnect
9. Blower Motor Control Module Bolt (2) » Remove
10. Blower Motor Control Module (3) » Remove

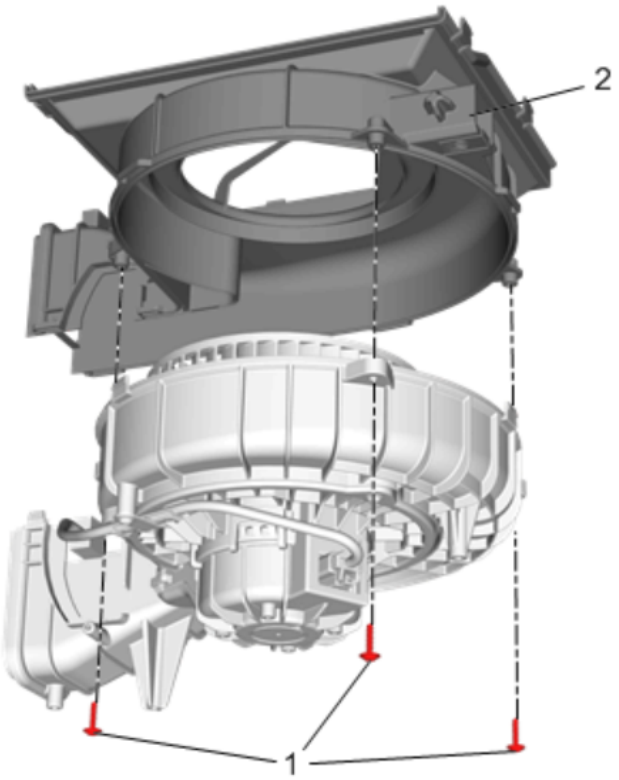

4545689

11. Blower Upper Case Screw (1) » Remove [3x]
12. Blower Upper Case (2) » Remove
13. Using the appropriate tools, release the integral retaining features.

Installation Procedure

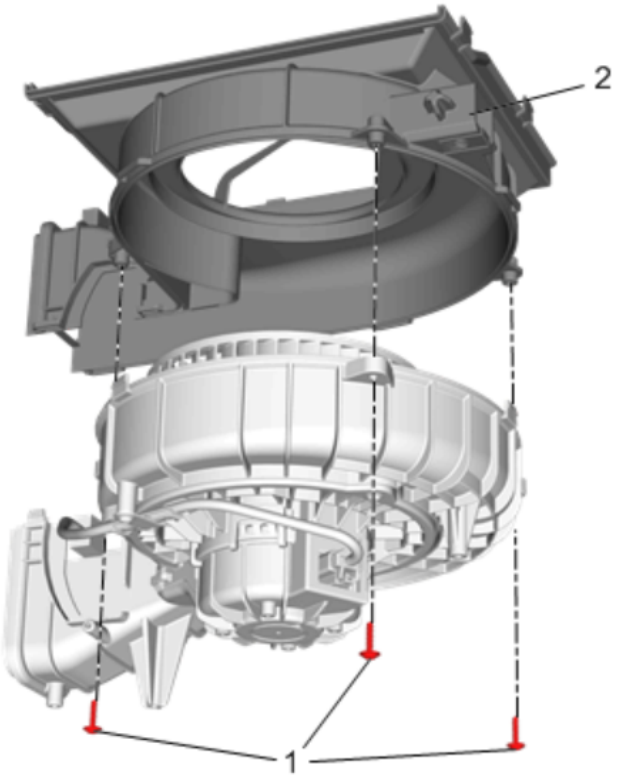

4545689

1. Blower Upper Case (2) » Install
2. Blower Upper Case Screw (1)» Install and tighten
   — *Fastener Specifications on page 5-3*[3x]

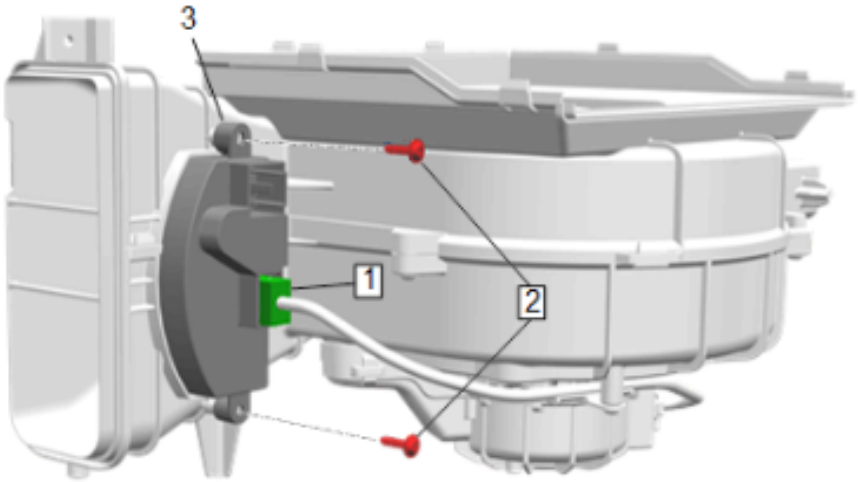

5694862

3. Blower Motor Control Module (3) » Install
4. Blower Motor Control Module Bolt (2) » Install and tighten — *Fastener Specifications on page 5-3*[2x]
5. Electrical Connector (1) » Connect

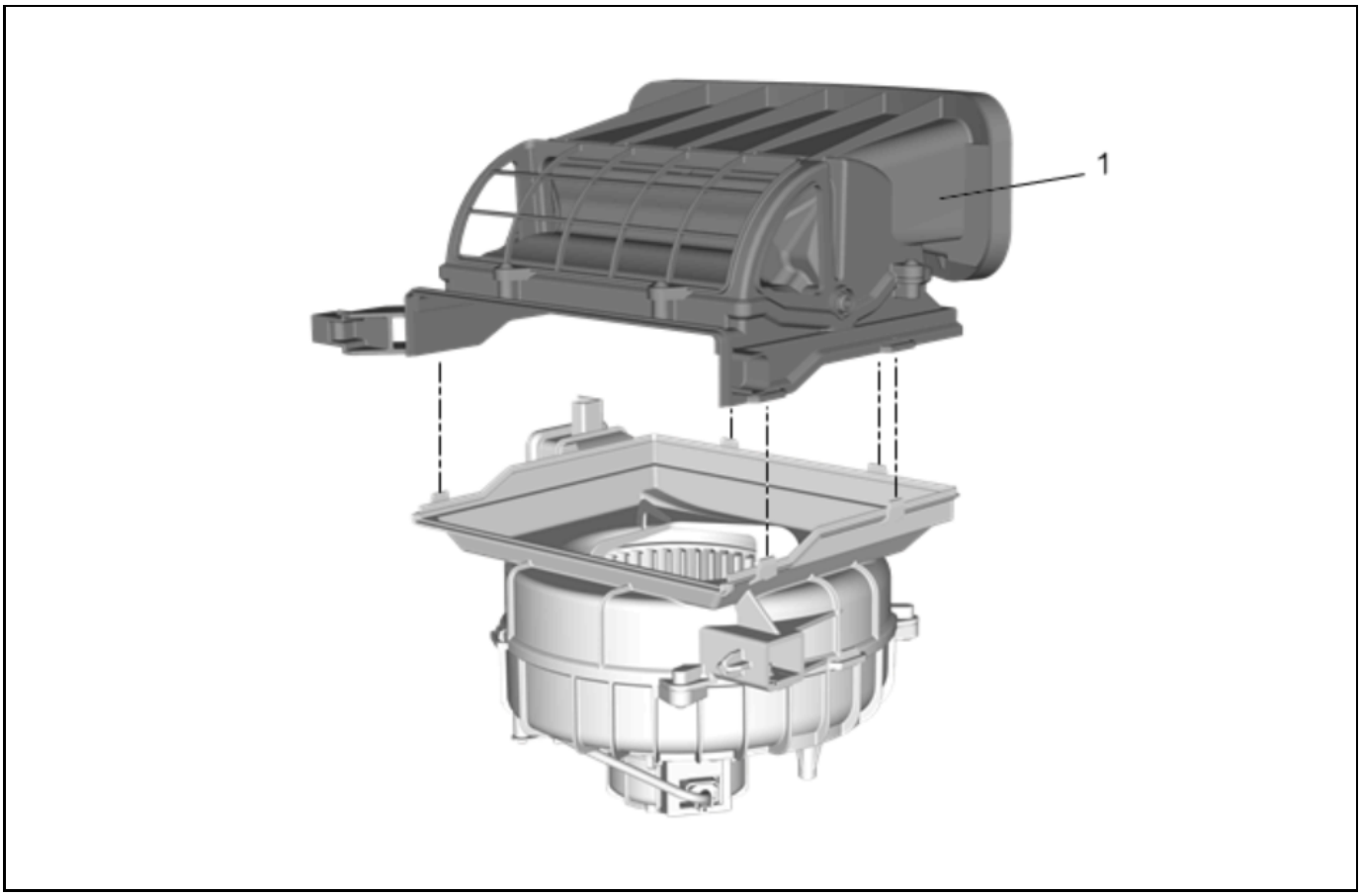

4545687

6. Air Inlet Housing (1) » Install

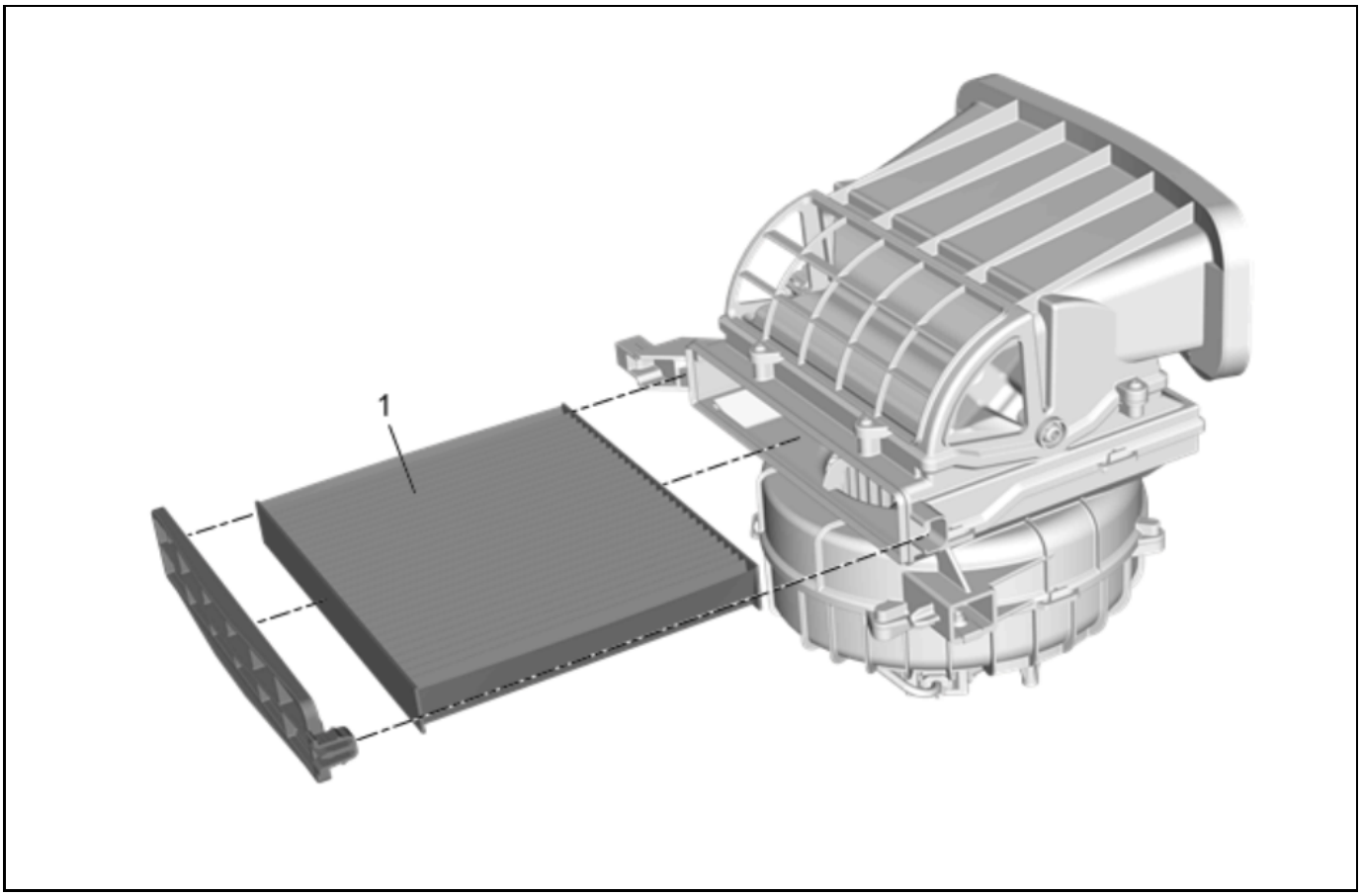

4545686

7. Passenger Compartment Air Filter (1) » Install

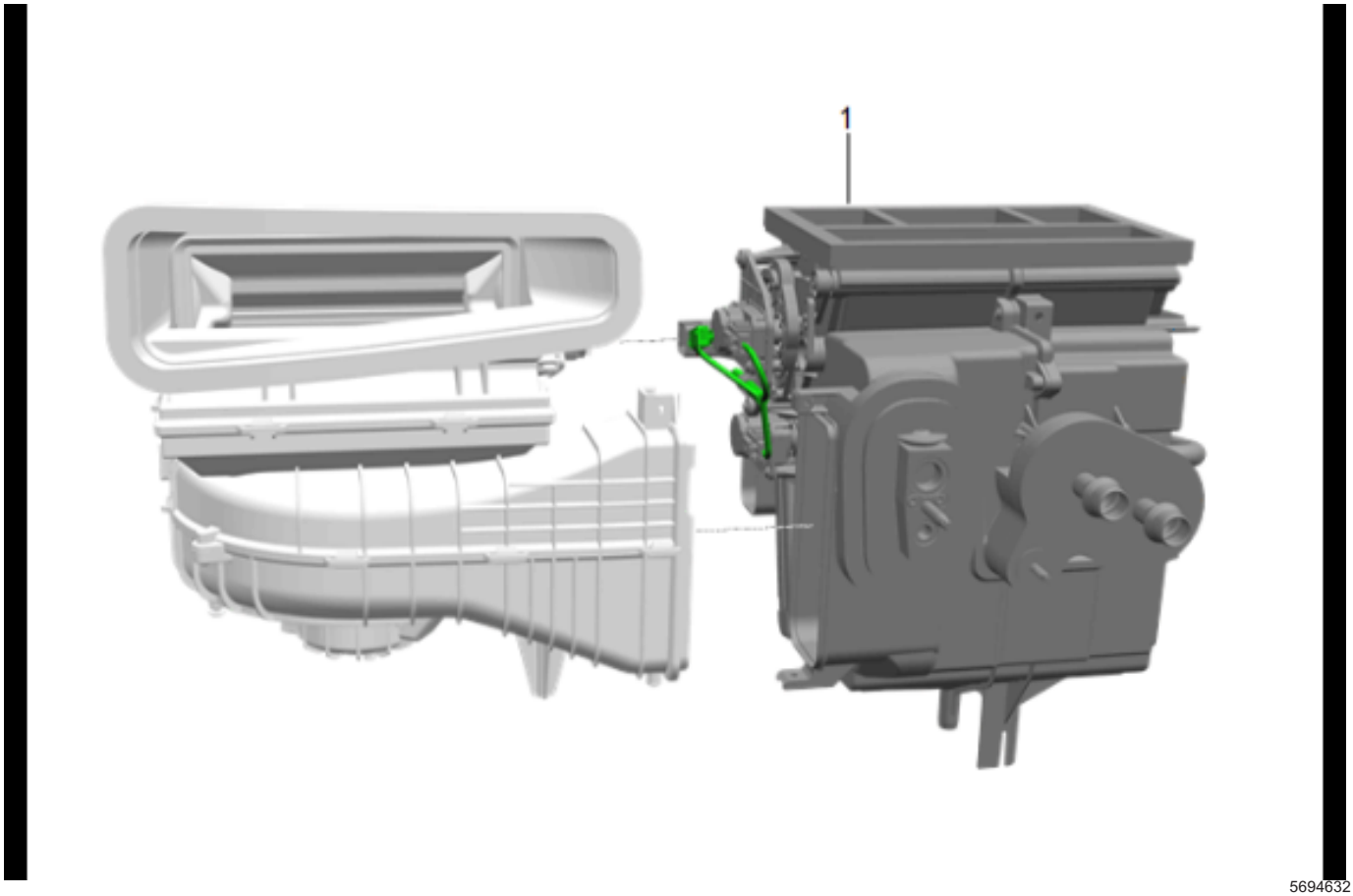

5694632

8. Heater and Air Conditioning Evaporator Case (1)
   » Install

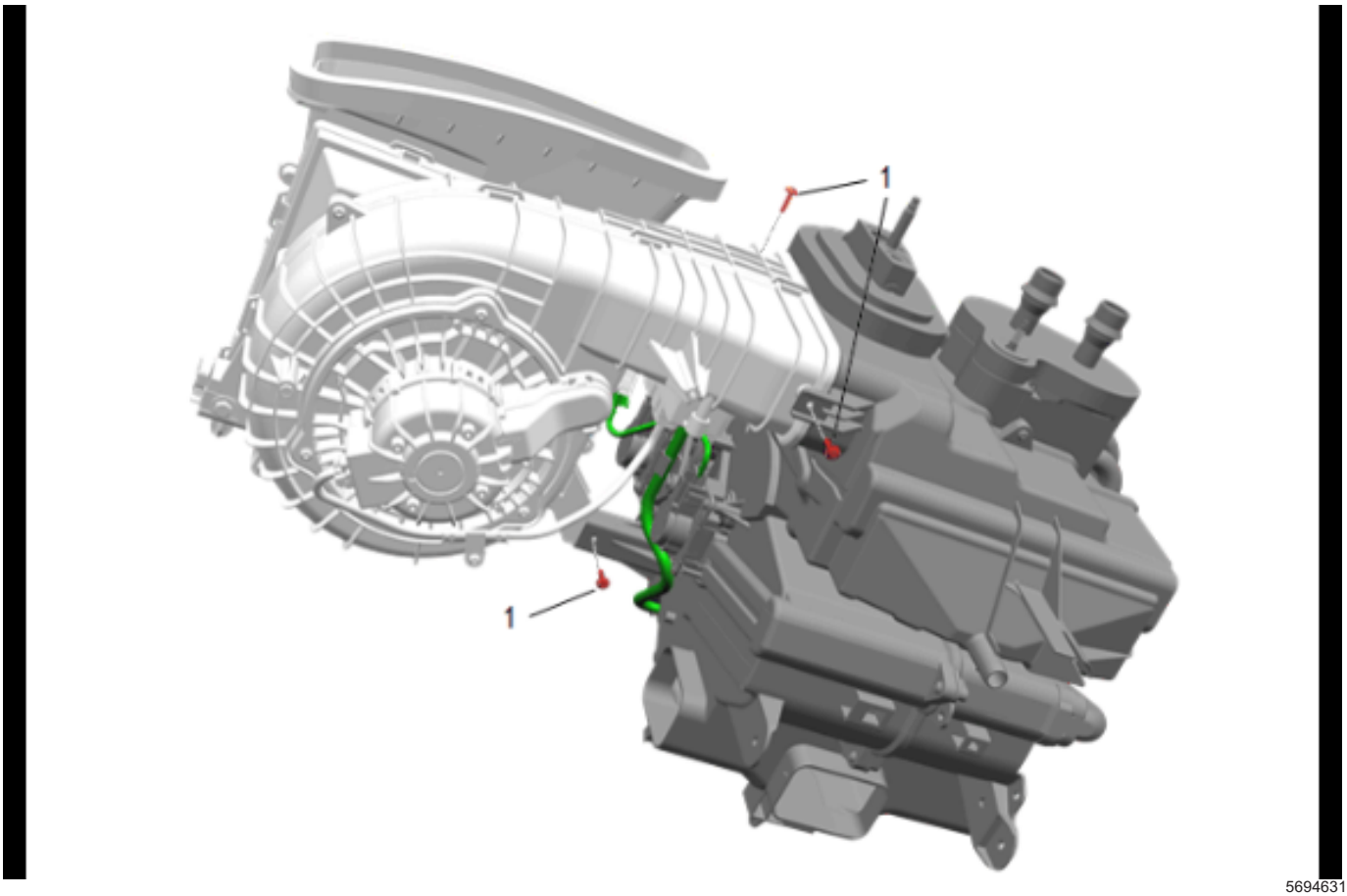

5694631

9. Heater and Air Conditioning Evaporator Case Bolt (1) » Install and tighten — *Fastener Specifications on page 5-3*[3x]

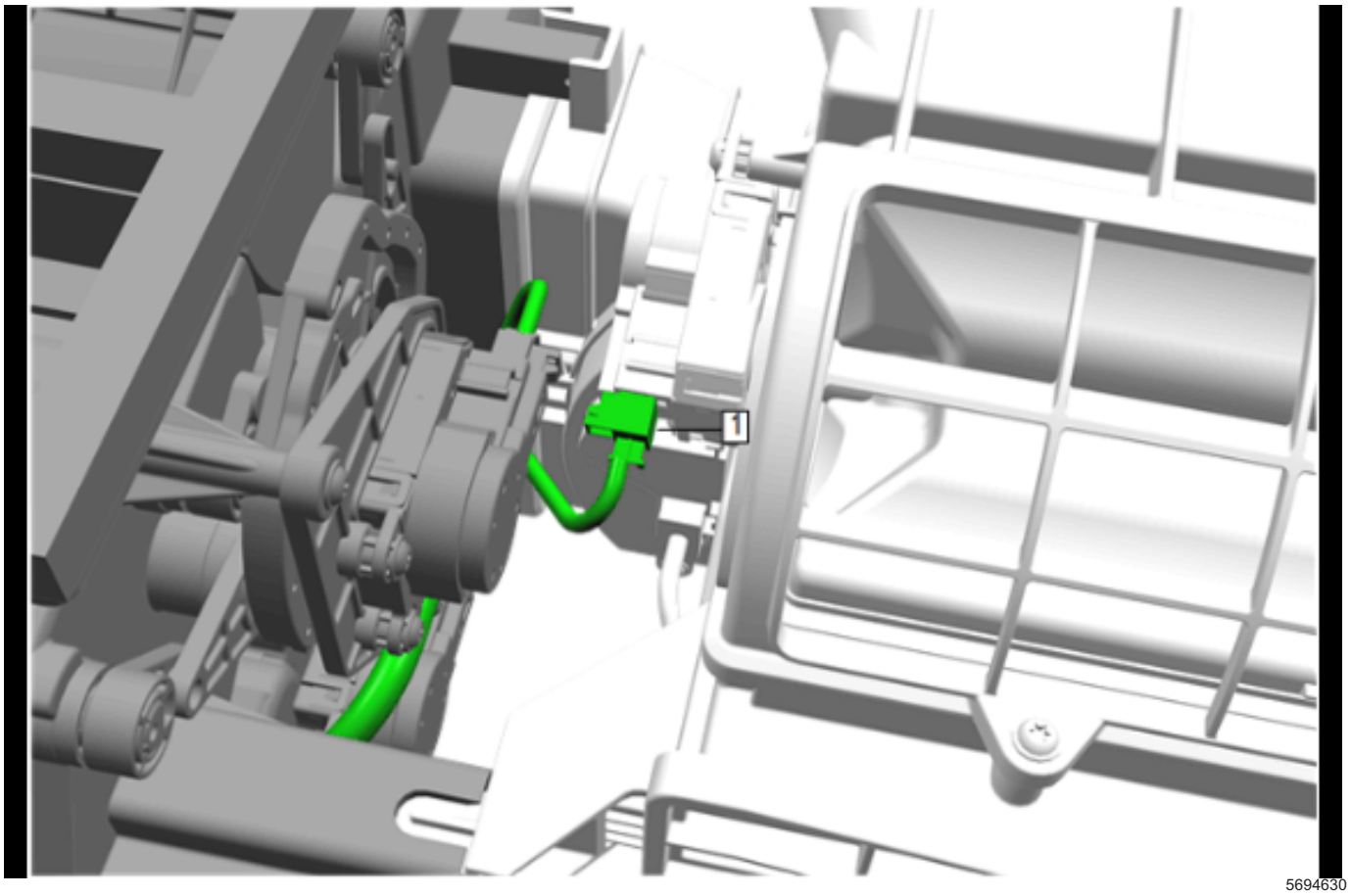

10. Electrical Connector (1) » Connect
11. Heater and Air Conditioning Evaporator and Blower Module — *Heater and Air Conditioning Evaporator and Blower Module Removal and Installation on page 5-199*
12. Fill the cooling system to the proper level. *Heater Coolant Heater Draining and Filling on page 5-39*

Air Conditioning Evaporator Replacement

Removal Procedure

1. Heater and Air Conditioning Evaporator and Blower Module — *Heater and Air Conditioning Evaporator and Blower Module Removal and Installation on page 5-199*
2. Drain the cooling system. *Heater Coolant Heater Draining and Filling on page 5-39*

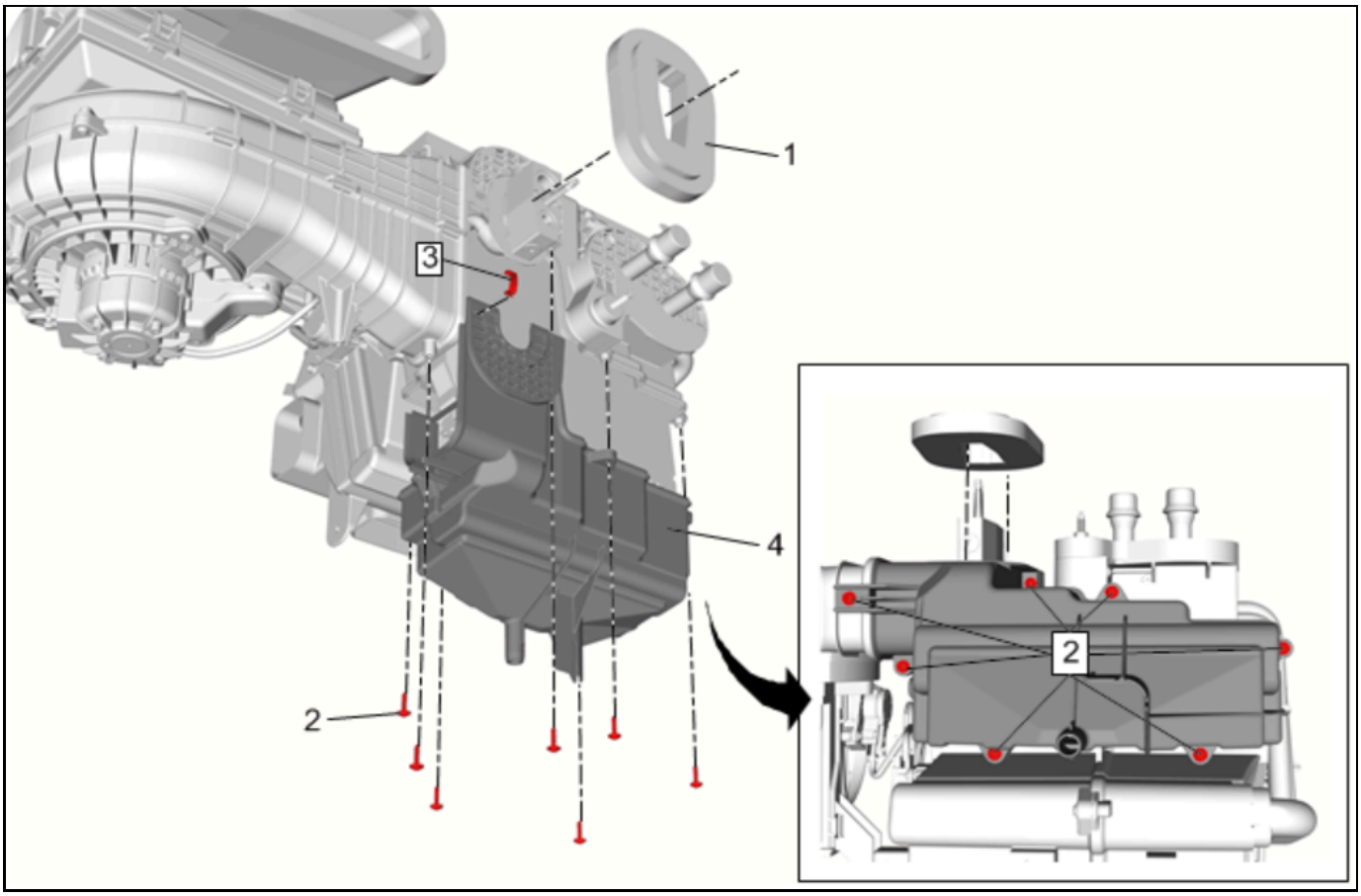

4648272

3. Heater and Air Conditioning Evaporator and Blower Module Seal (1) » Remove
4. Heater Case Screw (2) » Remove [7x]
5. Heater and Air Conditioning Evaporator Case Clip (3) » Remove
6. Heater Case (4) » Remove

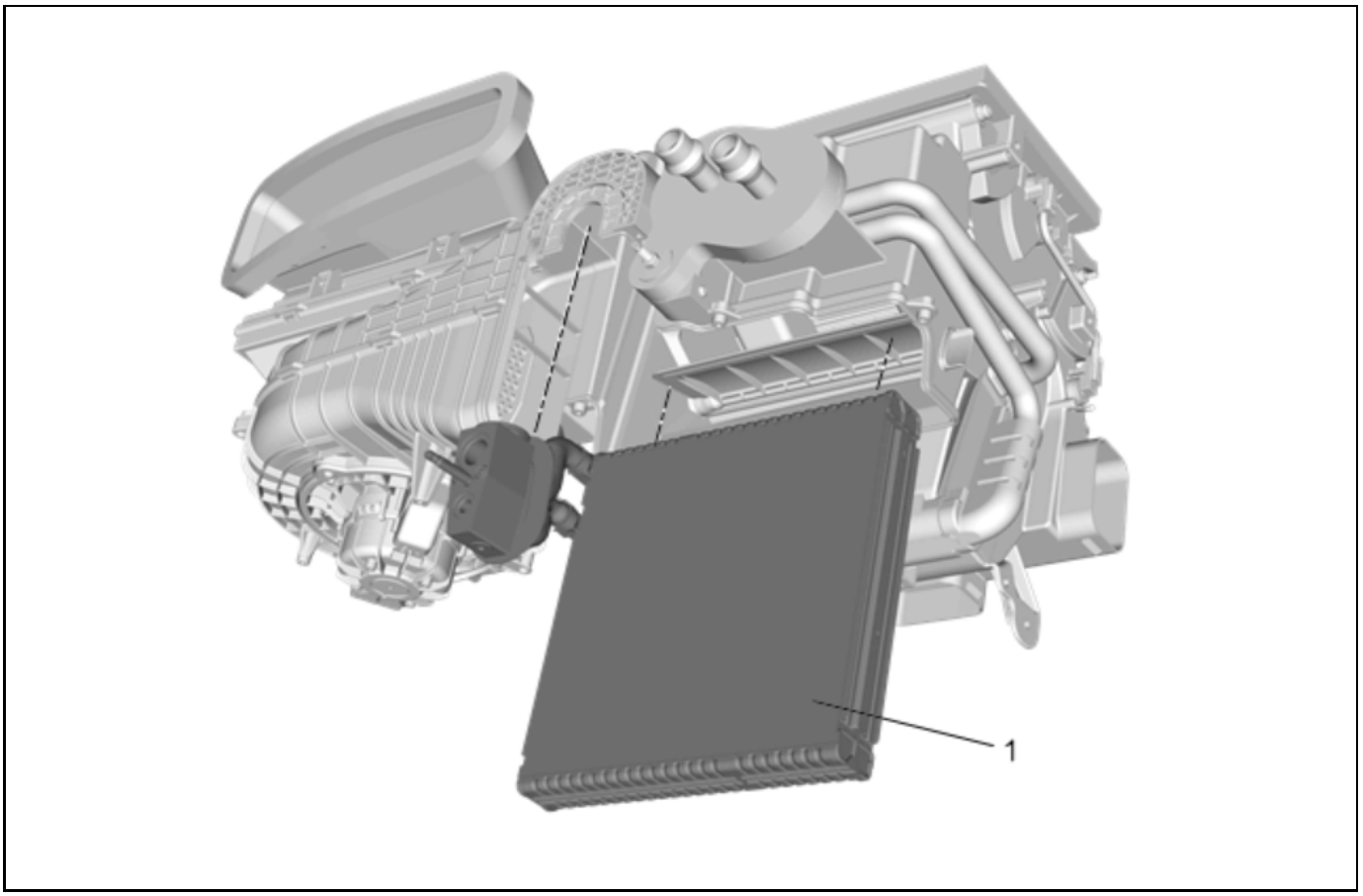

4544254

7. Air Conditioning Evaporator (1) » Remove

Installation Procedure

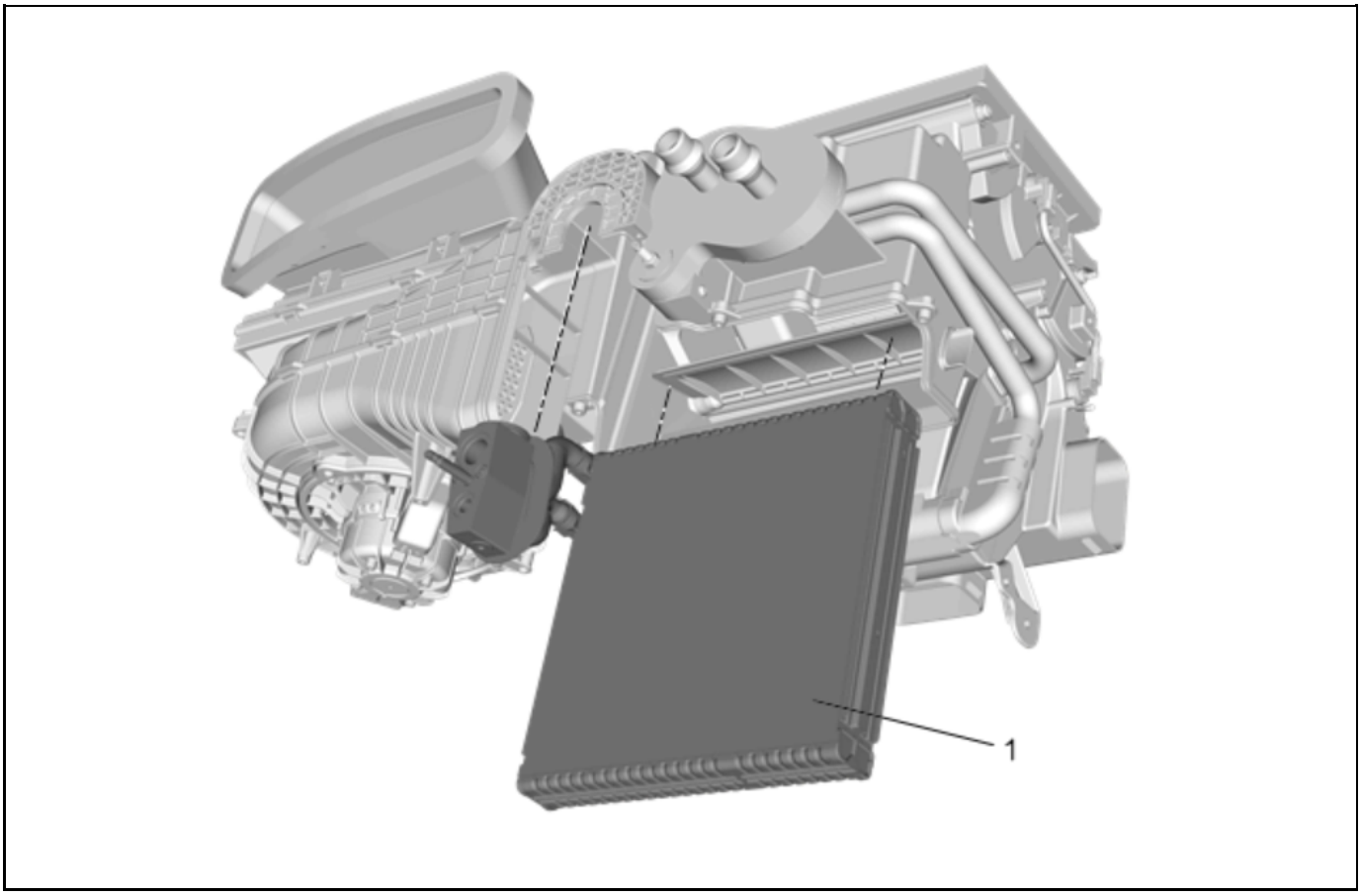

4544254

1. Air Conditioning Evaporator (1) » Install

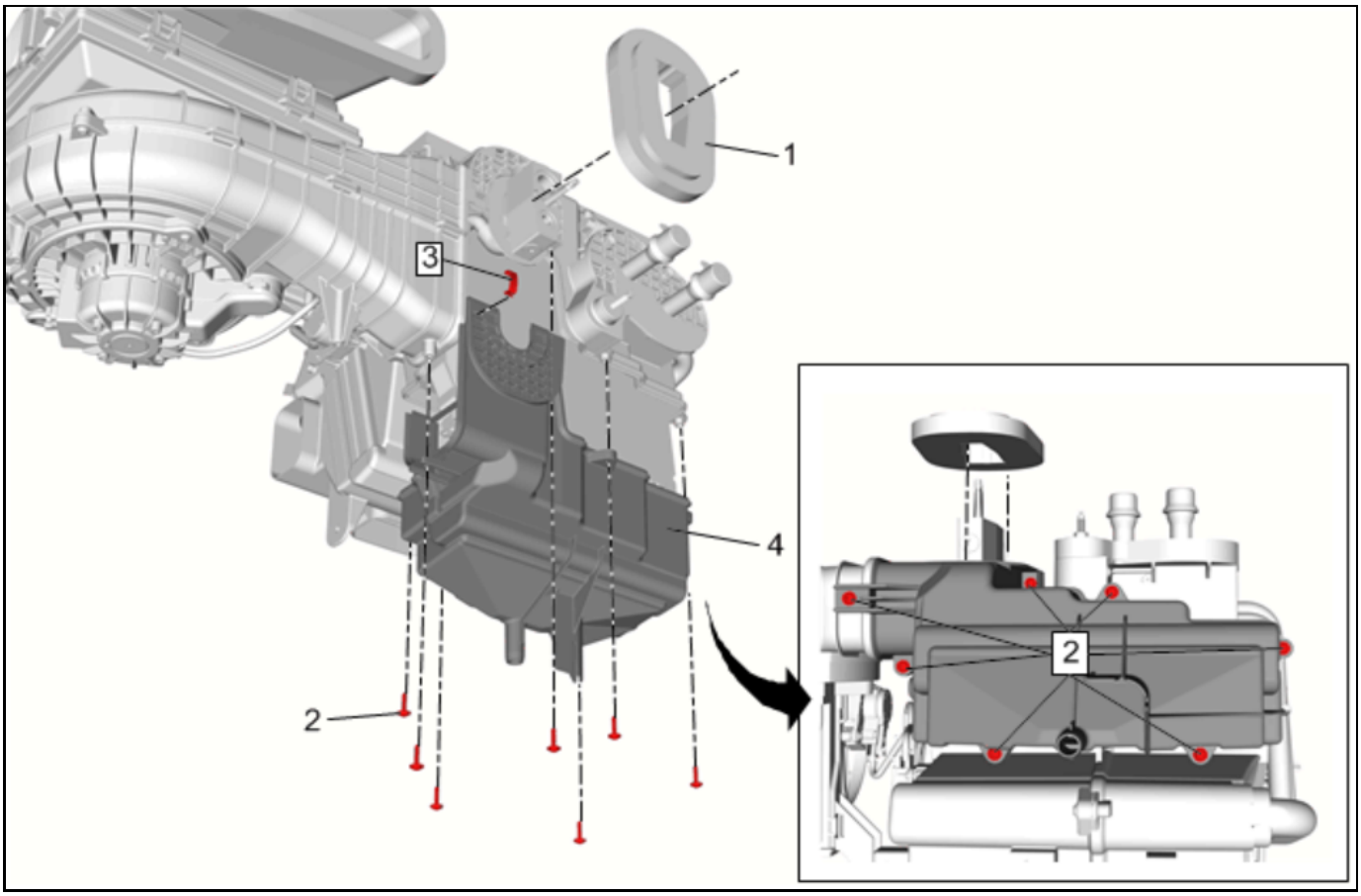

4648272

2. Heater Case (4) » Install
3. Heater Case Screw (2) » Install and tighten — *Fastener Specifications on page 5-3*[7x]
4. Heater and Air Conditioning Evaporator Case Clip (3) » Install
5. Heater and Air Conditioning Evaporator and Blower Module Seal (1) » Install
6. Heater and Air Conditioning Evaporator and Blower Module — *Heater and Air Conditioning Evaporator and Blower Module Removal and Installation on page 5-199*
7. Fill the cooling system to the proper level. *Heater Coolant Heater Draining and Filling on page 5-39*

Air Conditioning Evaporator and Blower Module Drain Hose Replacement

Removal Procedure

1. Reposition the seats as necessary to access the fasteners.

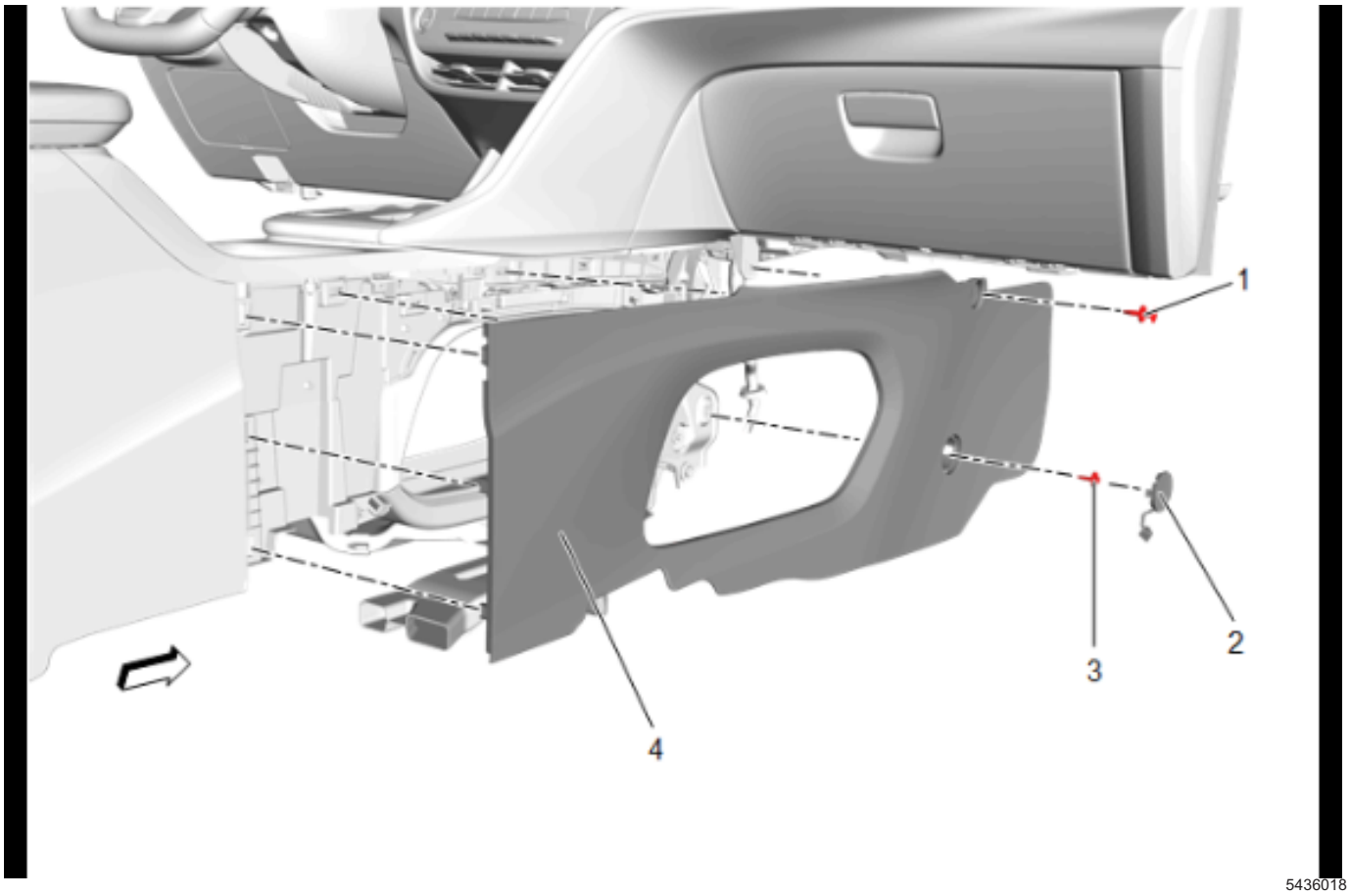

2. Front Floor Console Extension Panel Retainer (1) » Remove

   Note: Use a flat bladed plastic tool to remove.

3. Front Floor Console Extension Panel Bolt Access Hole Cover (2) » Remove
4. Front Floor Console Extension Panel Bolt (3) » Remove

   Note: Use a flat bladed plastic tool to remove.

5. Front Floor Console Extension Panel - Right Side (4) » Remove

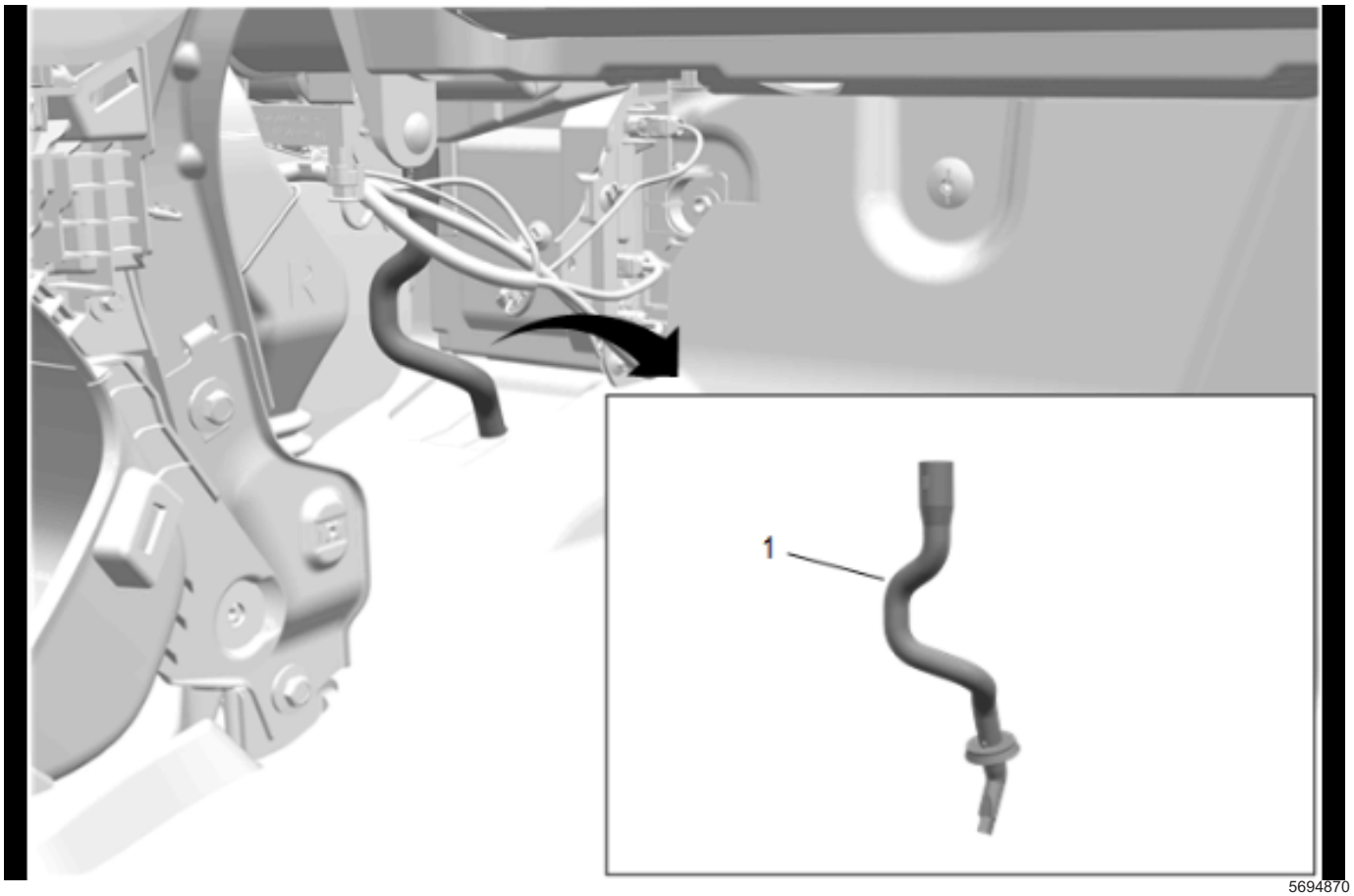

5694870

6. Release and pull off the drain hose from the HVAC module assembly and unsnap the drain fitting grommet from the front floor panel.
7. Air Conditioning Evaporator and Blower Module Drain Hose (1) » Remove

Installation Procedure

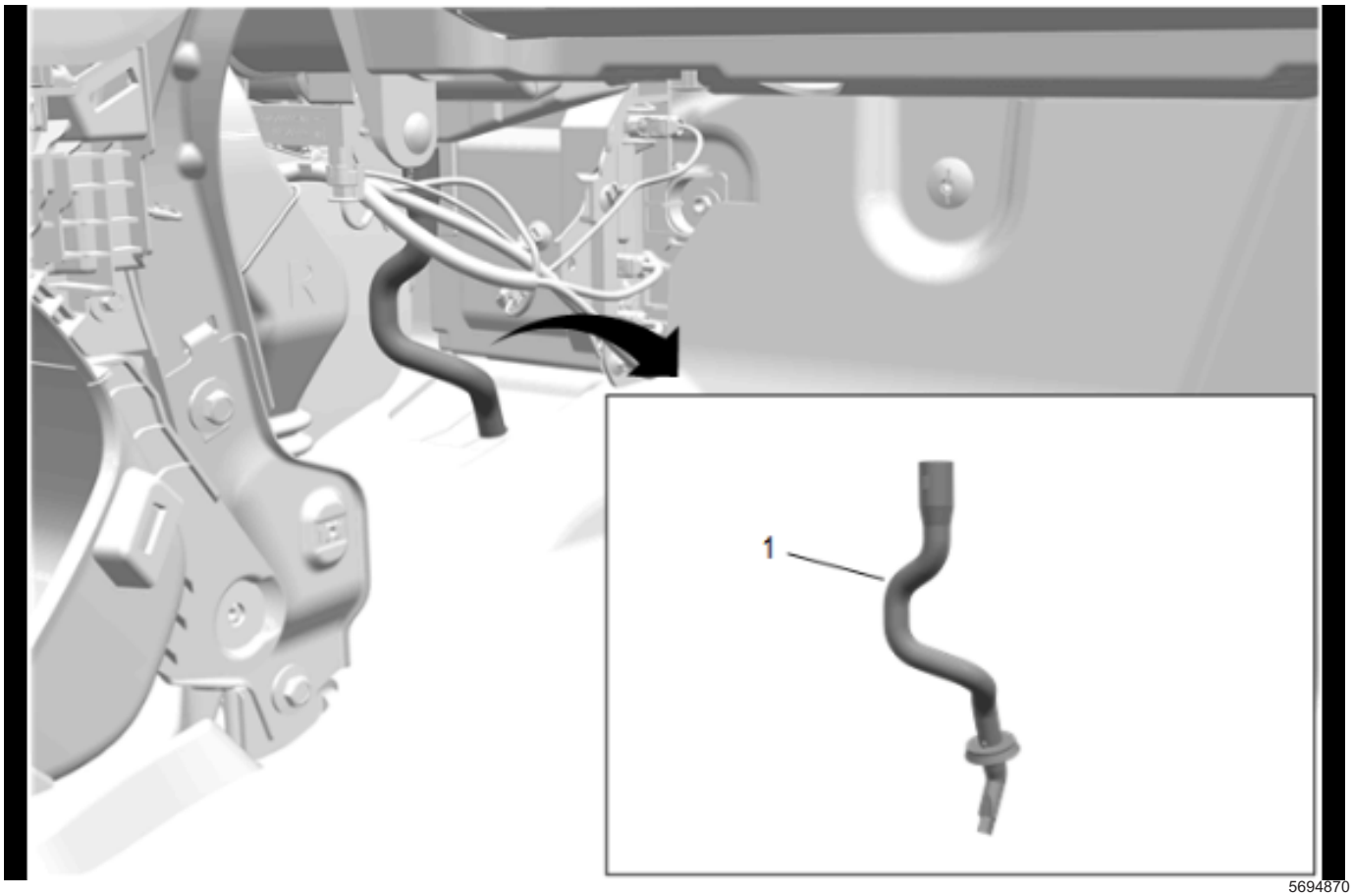

5694870

1. Air Conditioning Evaporator and Blower Module Drain Hose (1) » Install

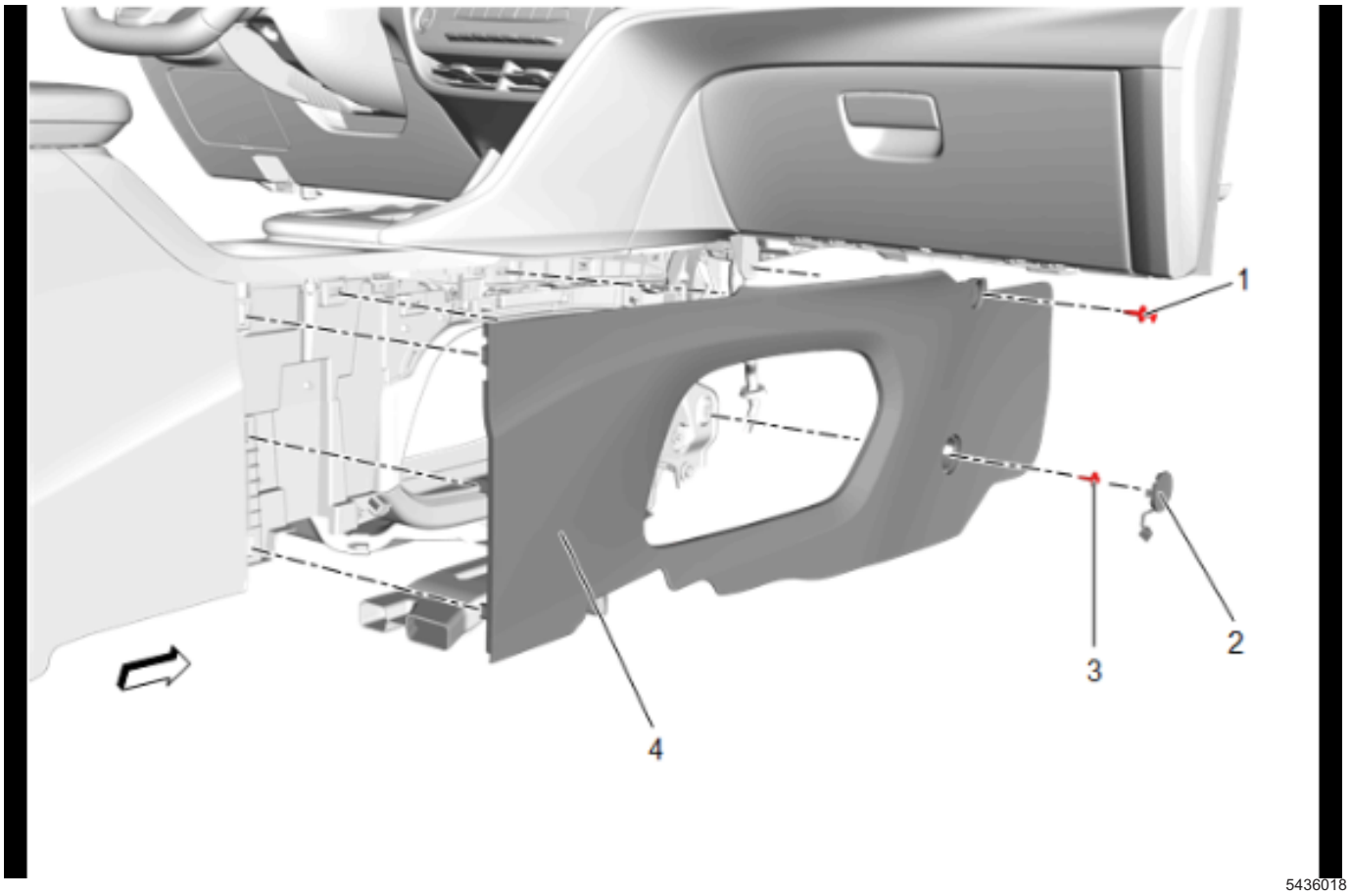

2. Front Floor Console Extension Panel - Right Side (4) » Install
3. Front Floor Console Extension Panel Bolt (3) » Install and tighten — Fastener Specifications
4. Front Floor Console Extension Panel Bolt Access Hole Cover (2) » Install
5. Front Floor Console Extension Panel Retainer (1) » Install
6. Return the seat to its original position.

Heater Inlet Hose Replacement

Removal Procedure

Danger: Before conducting any repair to this high voltage cooling system, it is necessary to determine/verify whether no high-voltage system faults exist. If high-voltage faults exist, follow published DTC diagnostics/repair procedures prior to performing any cooling system repairs. Failure to correct High Voltage Faults before working on the high voltage cooling system could result in personal injury or death.

1. Turn vehicle power OFF and remove all keyless entry transmitters from the vehicle and secure in a place outside the vehicle.
2. Drain the cooling system. *Heater Coolant Heater Draining and Filling on page 5-39*

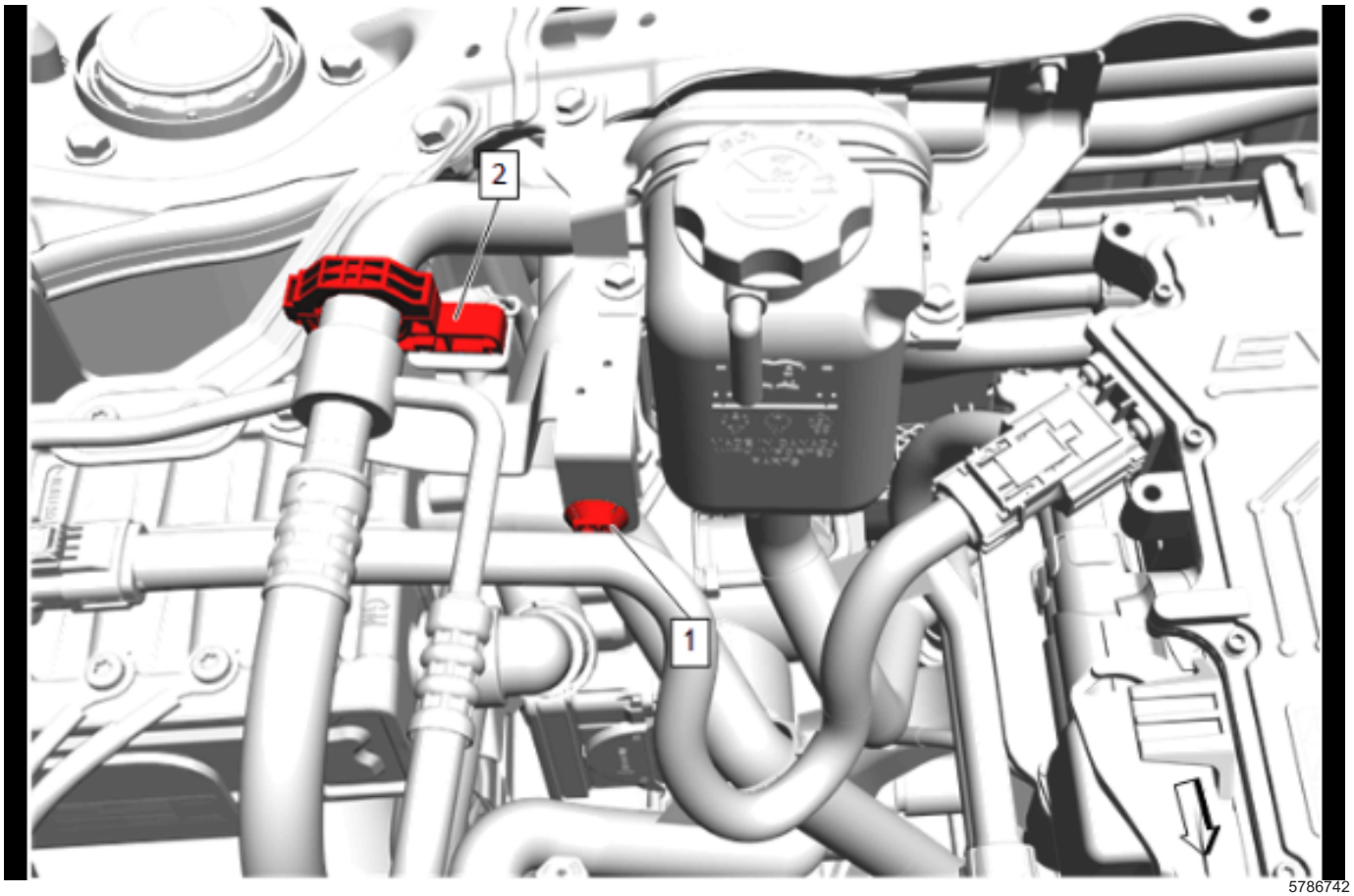

5786742

3. Retainer (1) » Remove
4. Air Conditioning Evaporator Hose Clip (2) » Remove

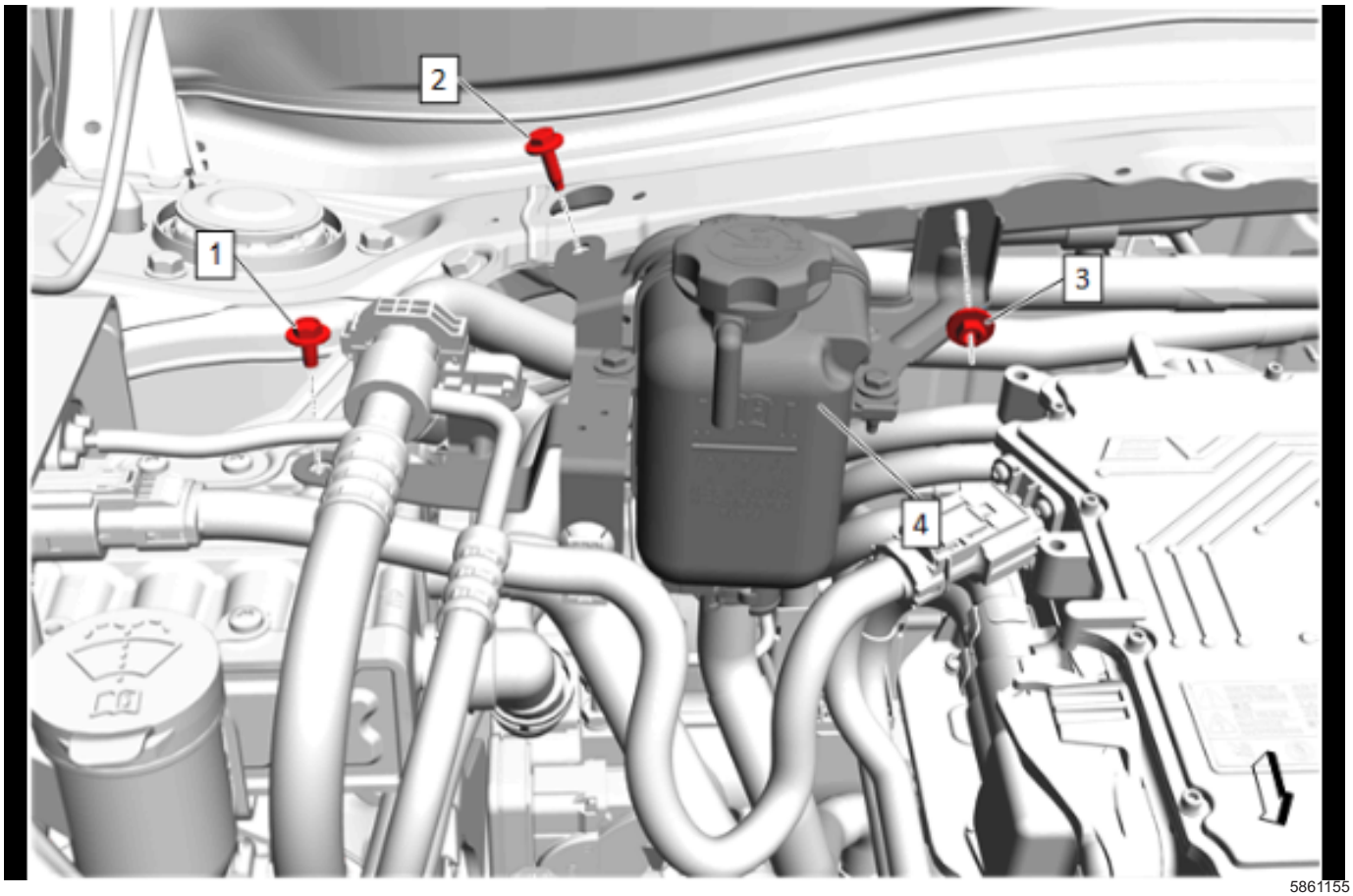

5861155

5. Heater Water Flow Control Valve Bolt (1) » Remove
6. Radiator Surge Tank Bracket Bolt (2) » Remove
7. Radiator Surge Tank Bracket Nut (3) » Remove
8. Position aside the heater coolant surge tank (4).

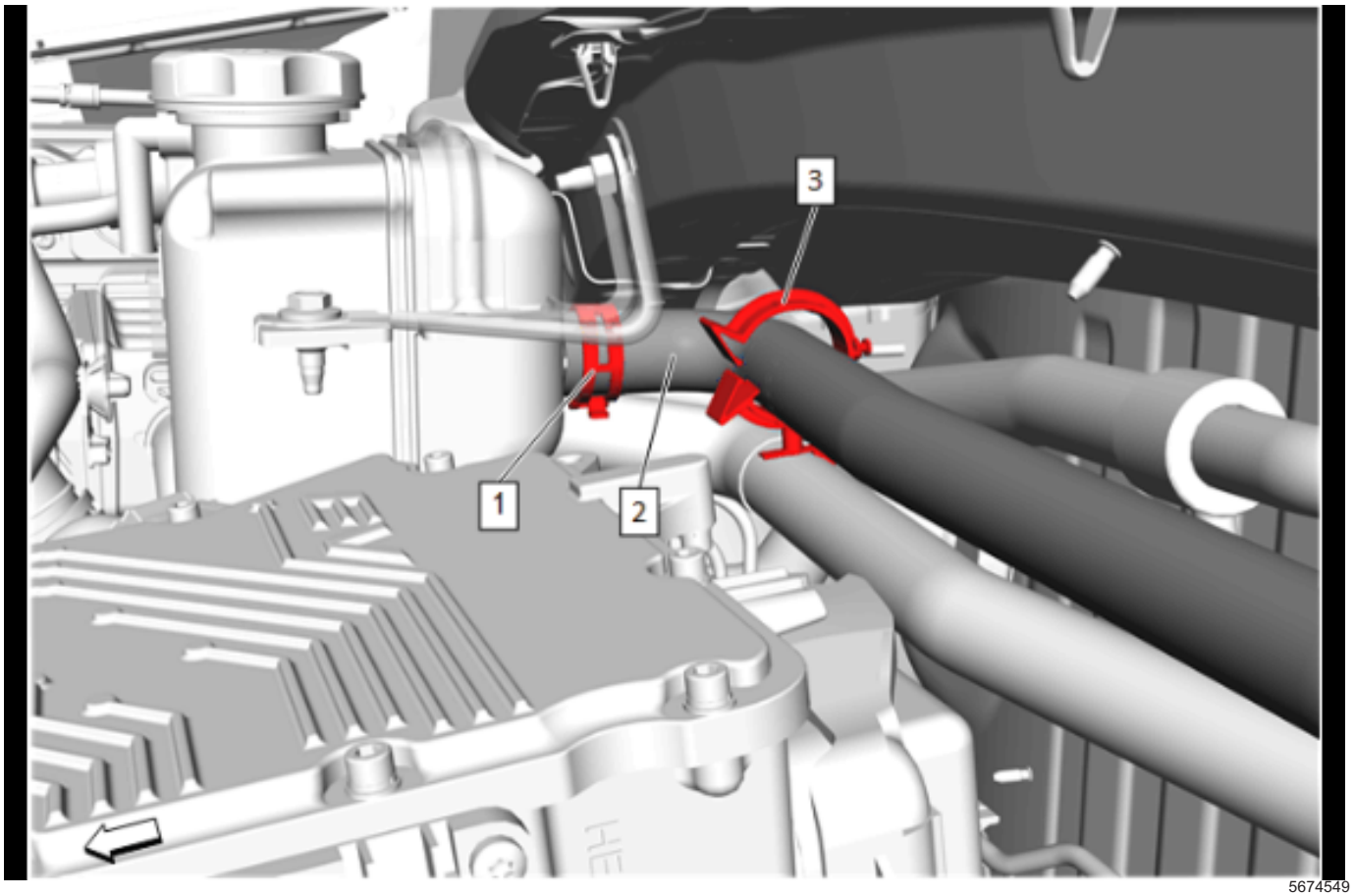

5674549

9. Clamp (1) » Disengage — Hose Clamp Replacement Guidelines - Spring Type
10. Heater Inlet Hose (2) @ Heater Coolant Surge Tank » Remove
11. Heater Inlet Hose (2) @ Retainer (3) » Remove

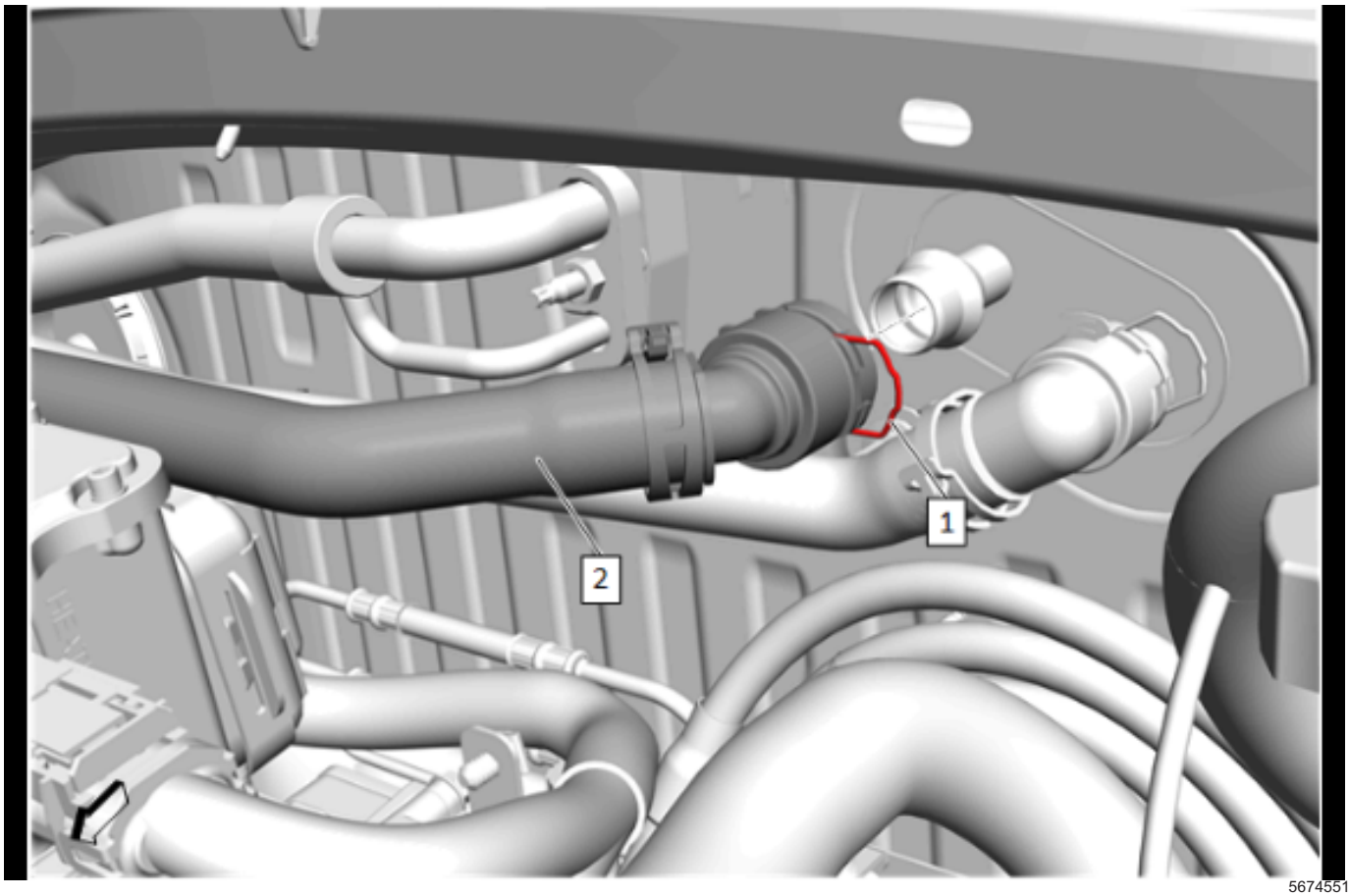

5674551

12. Heater Inlet Hose Connector Retainer (1) » Disengage
13. Heater Inlet Hose (2) @ Heater Core Inlet Tube » Remove

Installation Procedure

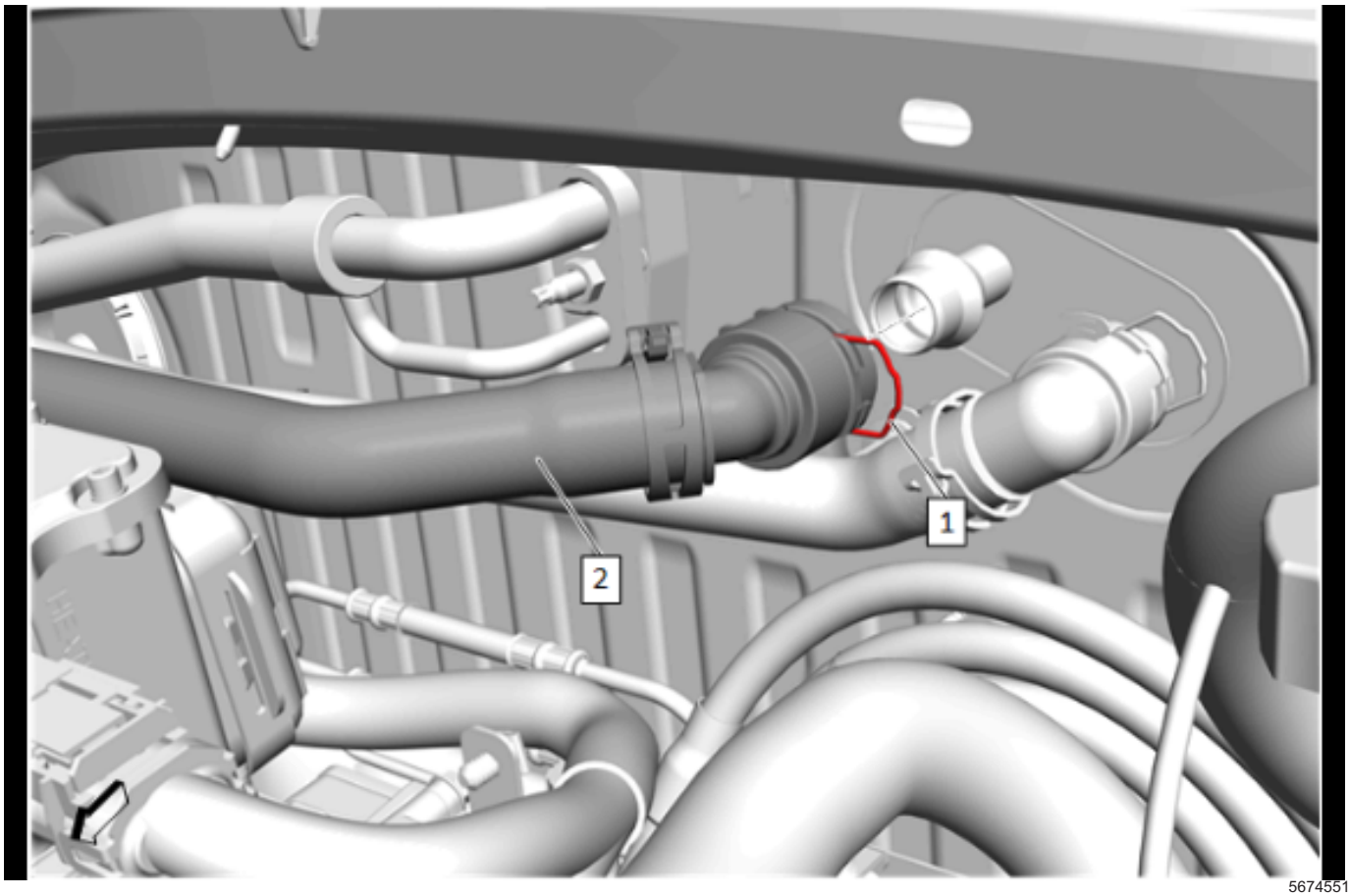

5674551

1. Heater Inlet Hose (2) @ Heater Core Inlet Tube
   » Install
2. Heater Inlet Hose Connector Retainer (1) »
   Engage

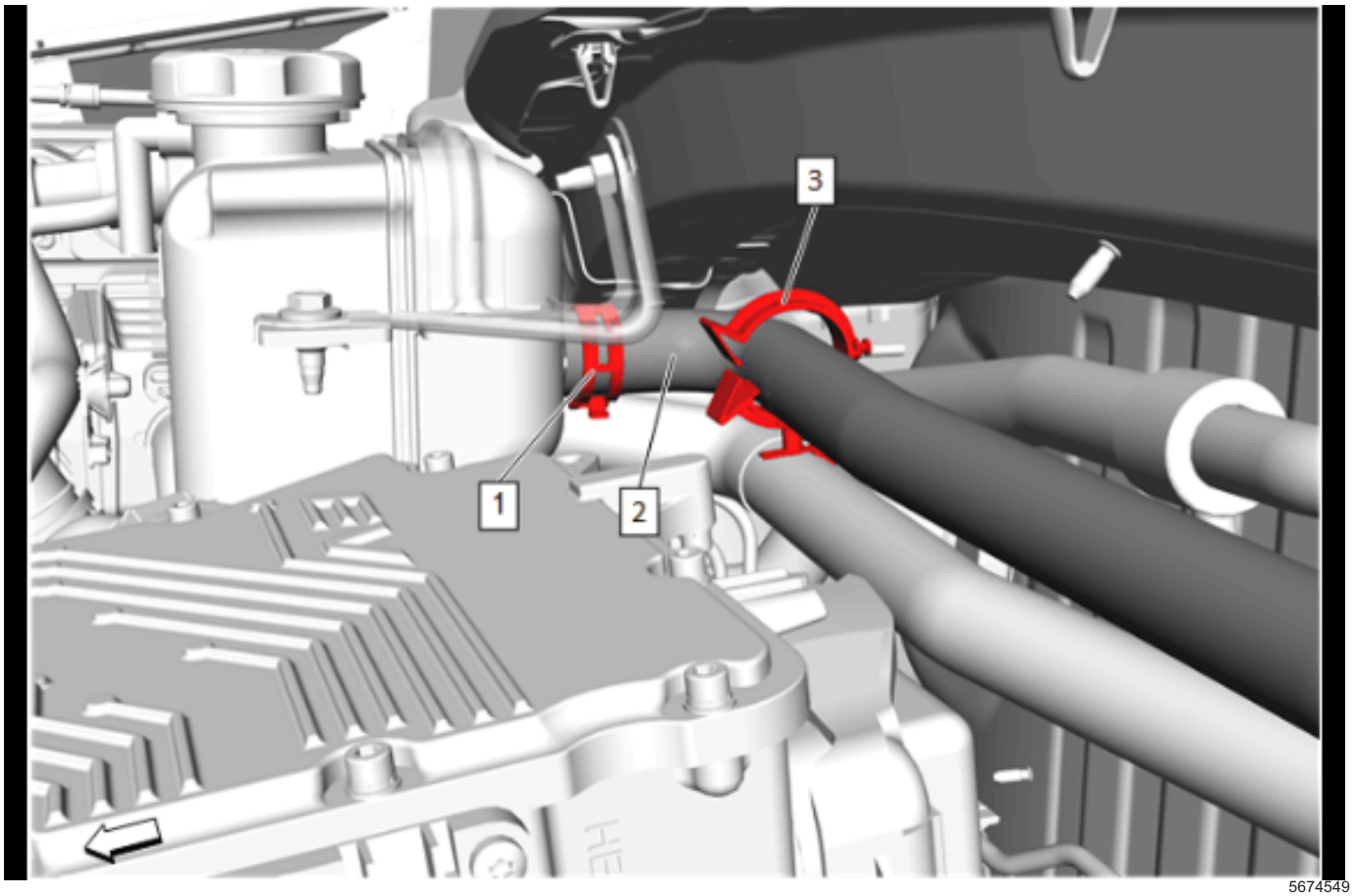

5674549

3. Heater Inlet Hose (2) @ Retainer (3) » Install
4. Heater Inlet Hose (2) @ Heater Coolant Surge Tank » Install
5. Clamp (1) » Engage — Hose Clamp Replacement Guidelines - Spring Type

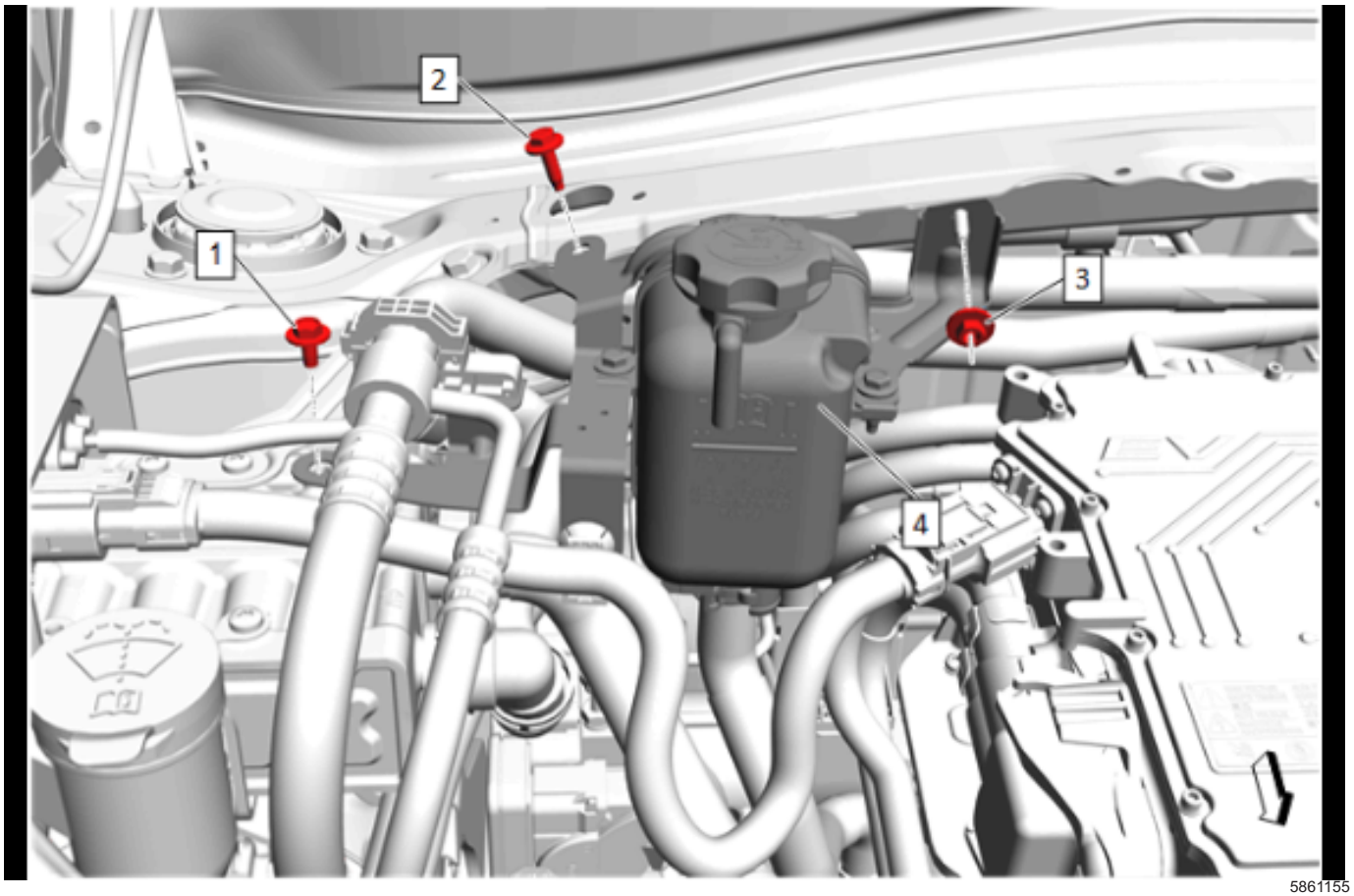

5861155

6. Heater Coolant Surge Tank (4) » Install
7. Radiator Surge Tank Bracket Nut (3) » Install and tighten
8. Radiator Surge Tank Bracket Bolt (2) » Install and tighten
9. Heater Water Flow Control Valve Bolt (1) » Install and tighten

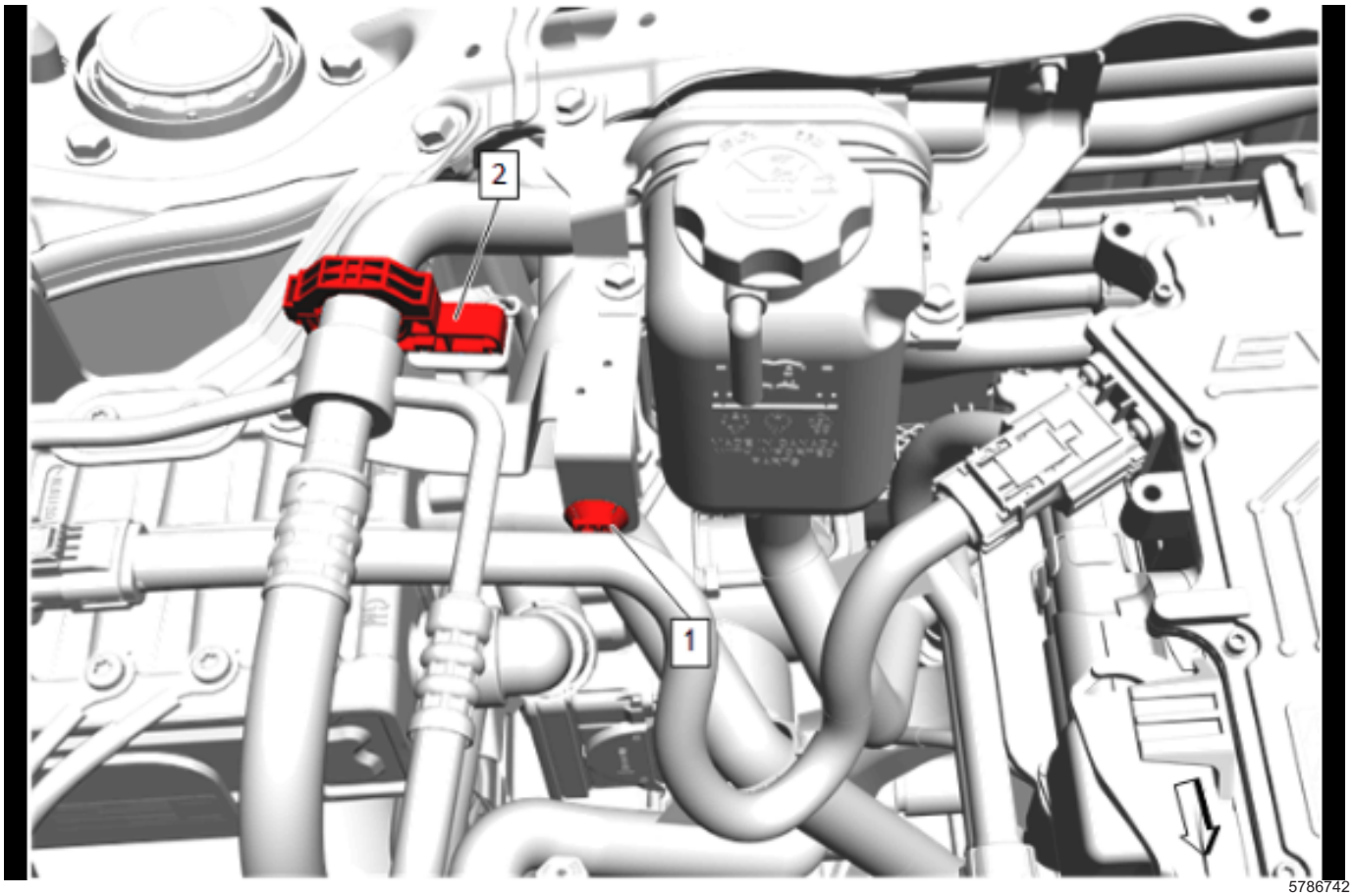

5786742

10. Air Conditioning Evaporator Hose Clip (2) » Install
11. Retainer (1) » Install
12. Fill the cooling system. *Heater Coolant Heater Draining and Filling on page 5-39*
13. Check the cooling system for leaks.

Auxiliary Heater Inlet Hose Replacement

Removal Procedure

Danger: Before conducting any repair to this high voltage cooling system, it is necessary to determine/verify whether no high-voltage system faults exist. If high-voltage faults exist, follow published DTC diagnostics/repair procedures prior to performing any cooling system repairs. Failure to correct High Voltage Faults before working on the high voltage cooling system could result in personal injury or death.

1. Turn vehicle power OFF and remove all keyless entry transmitters from the vehicle and secure in a place outside the vehicle.
2. Disconnect the battery negative cable.
3. Drain the cooling system. *Heater Coolant Heater Draining and Filling on page 5-39*
4. Raise and support the vehicle.

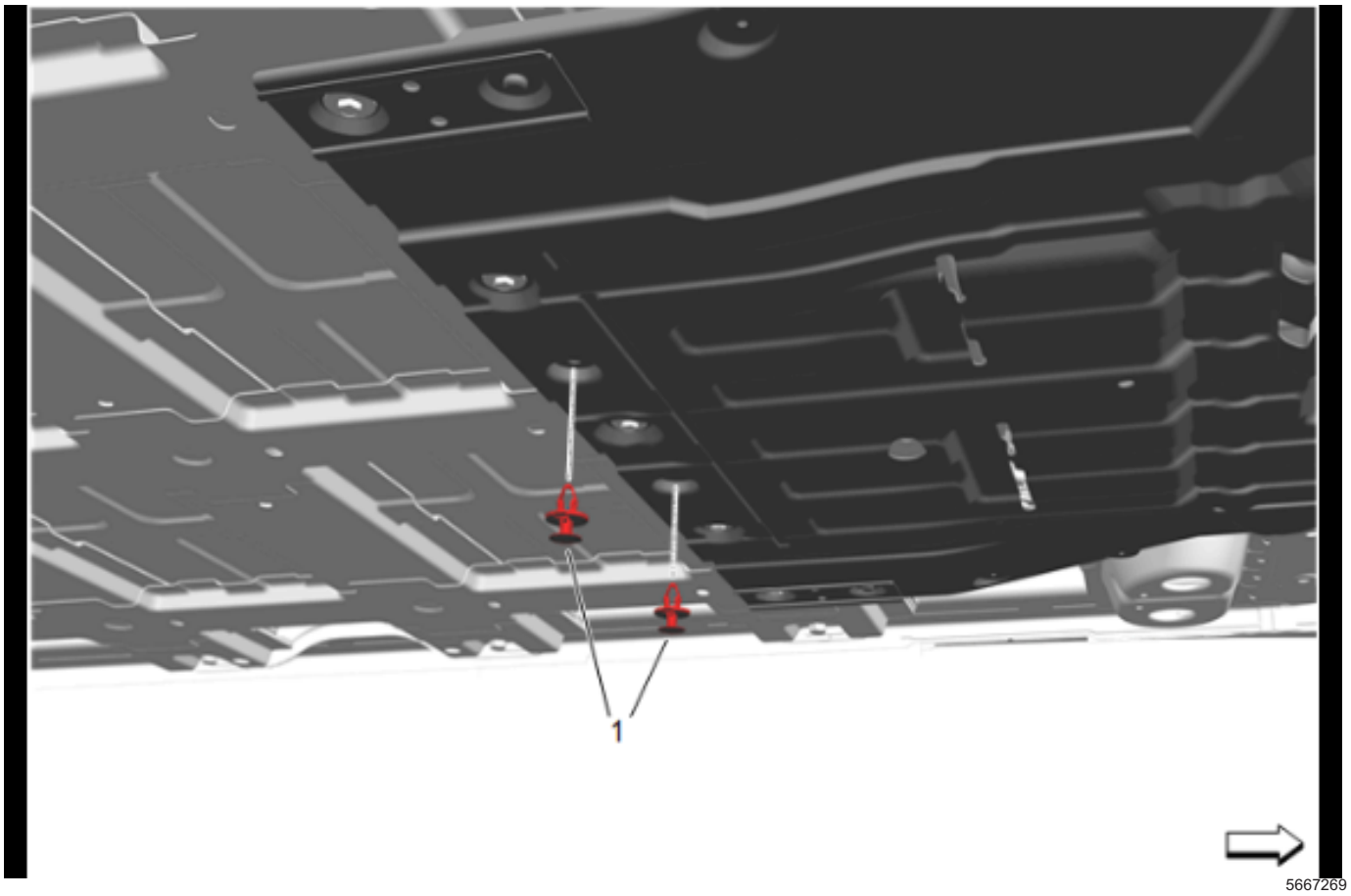

5. Front Compartment Air Deflector Retainer (1) » Remove [2x]

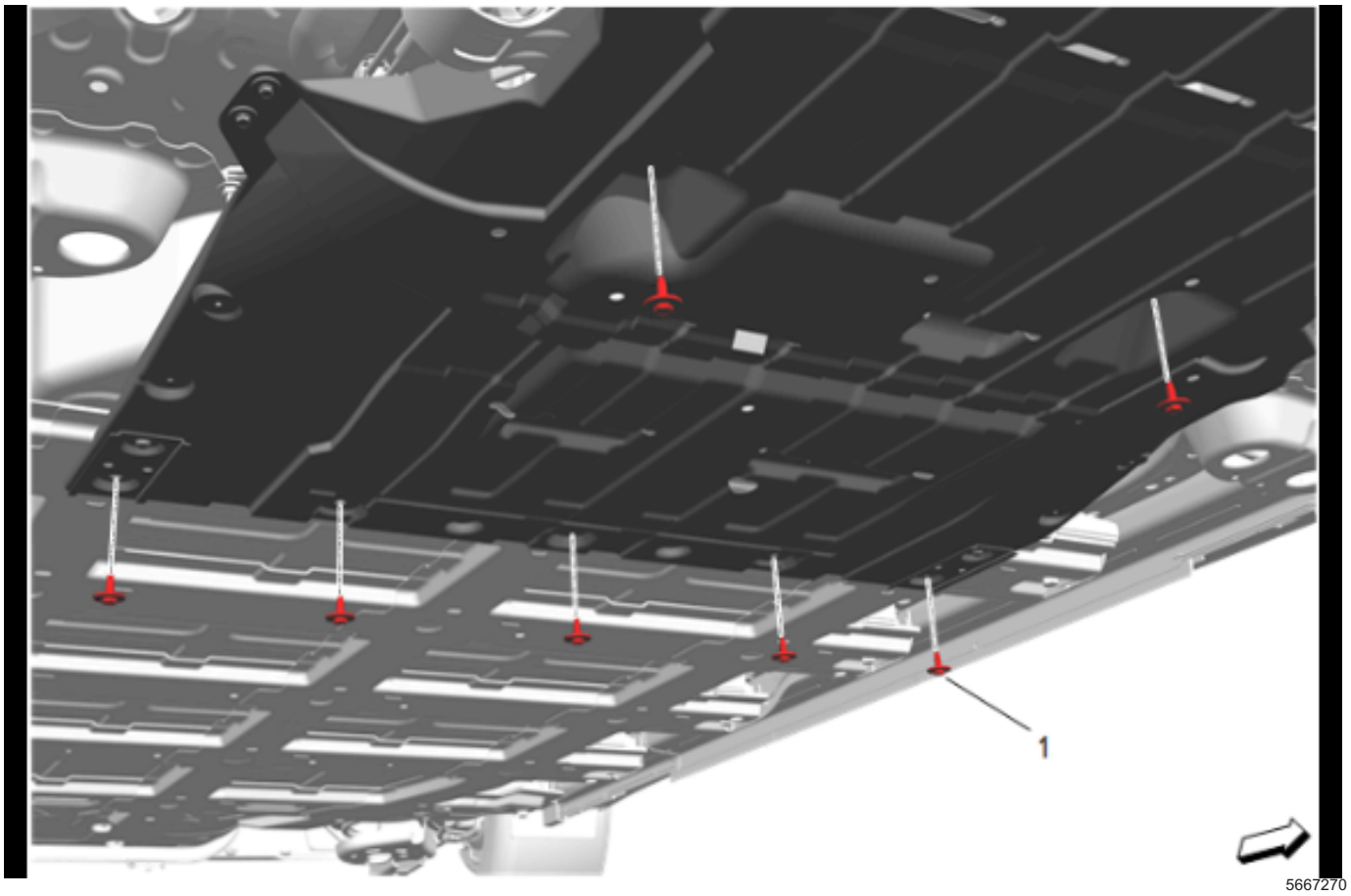

6. Front Compartment Air Deflector Bolt (1) »
   Remove [7x]

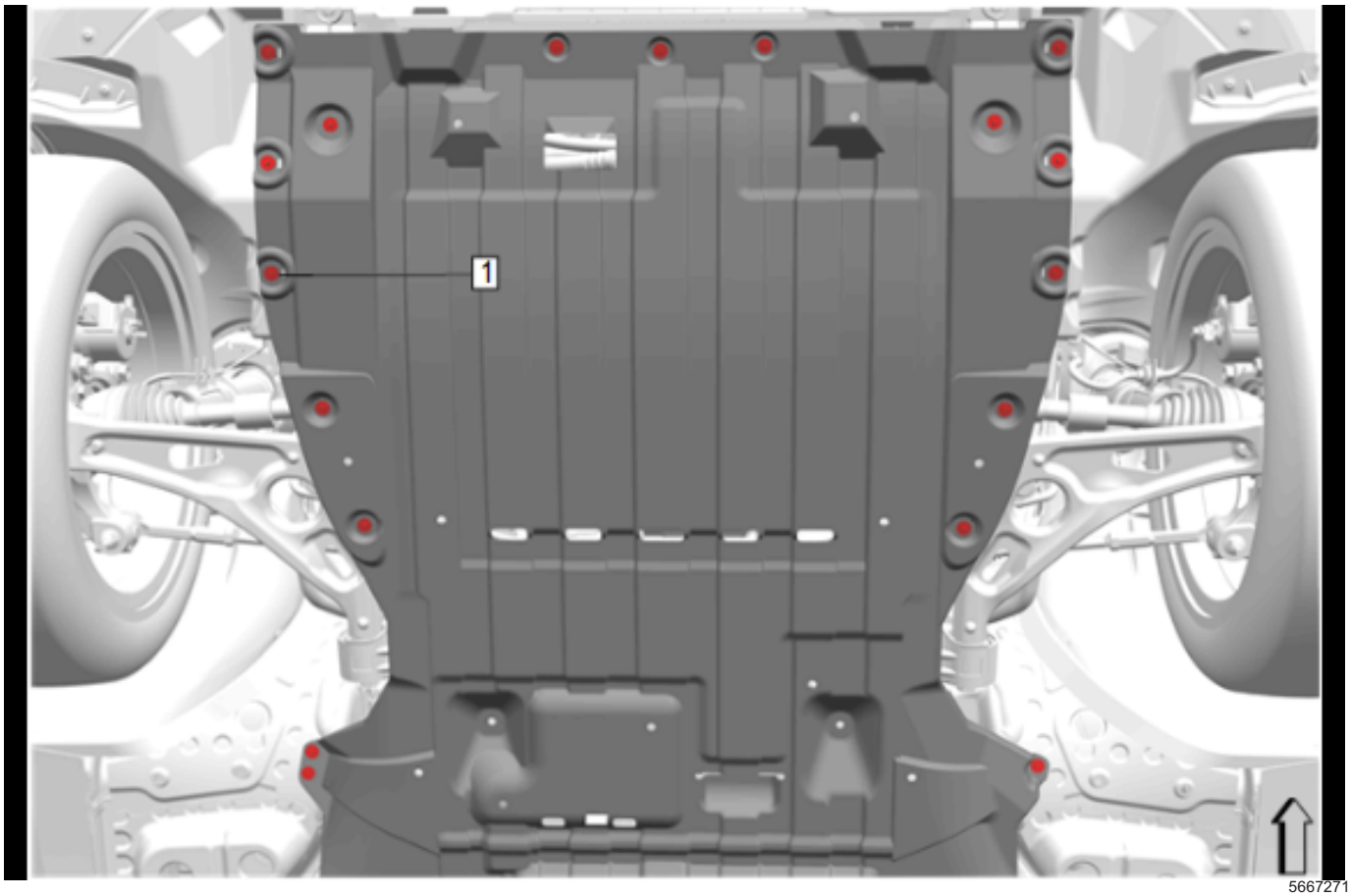

5667271

7. Front Compartment Air Deflector Bolt (1) »
   Remove [18x]

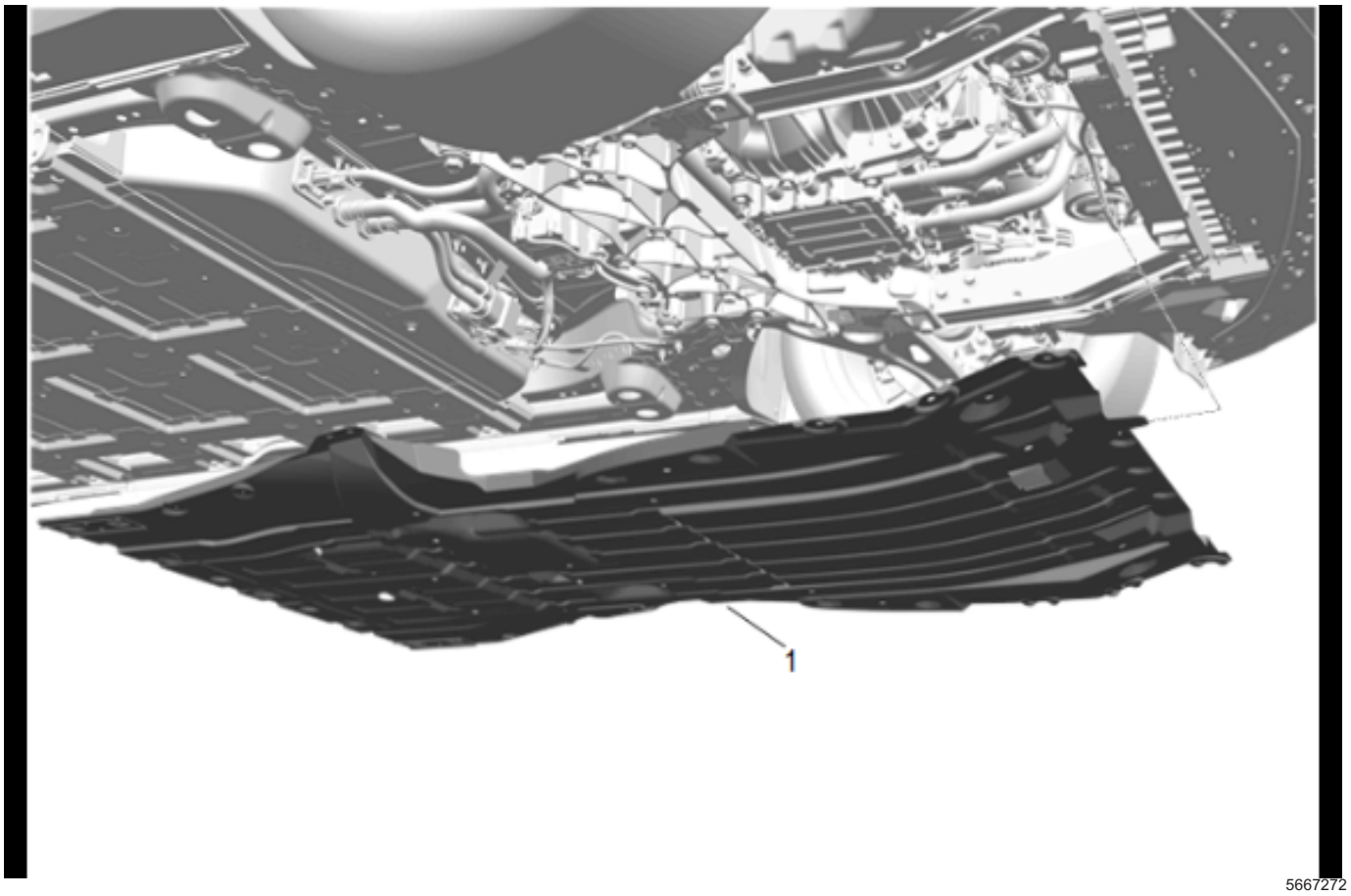

8. Front Compartment Air Deflector (1) » Remove
9. Remove the right front tire and wheel assembly.

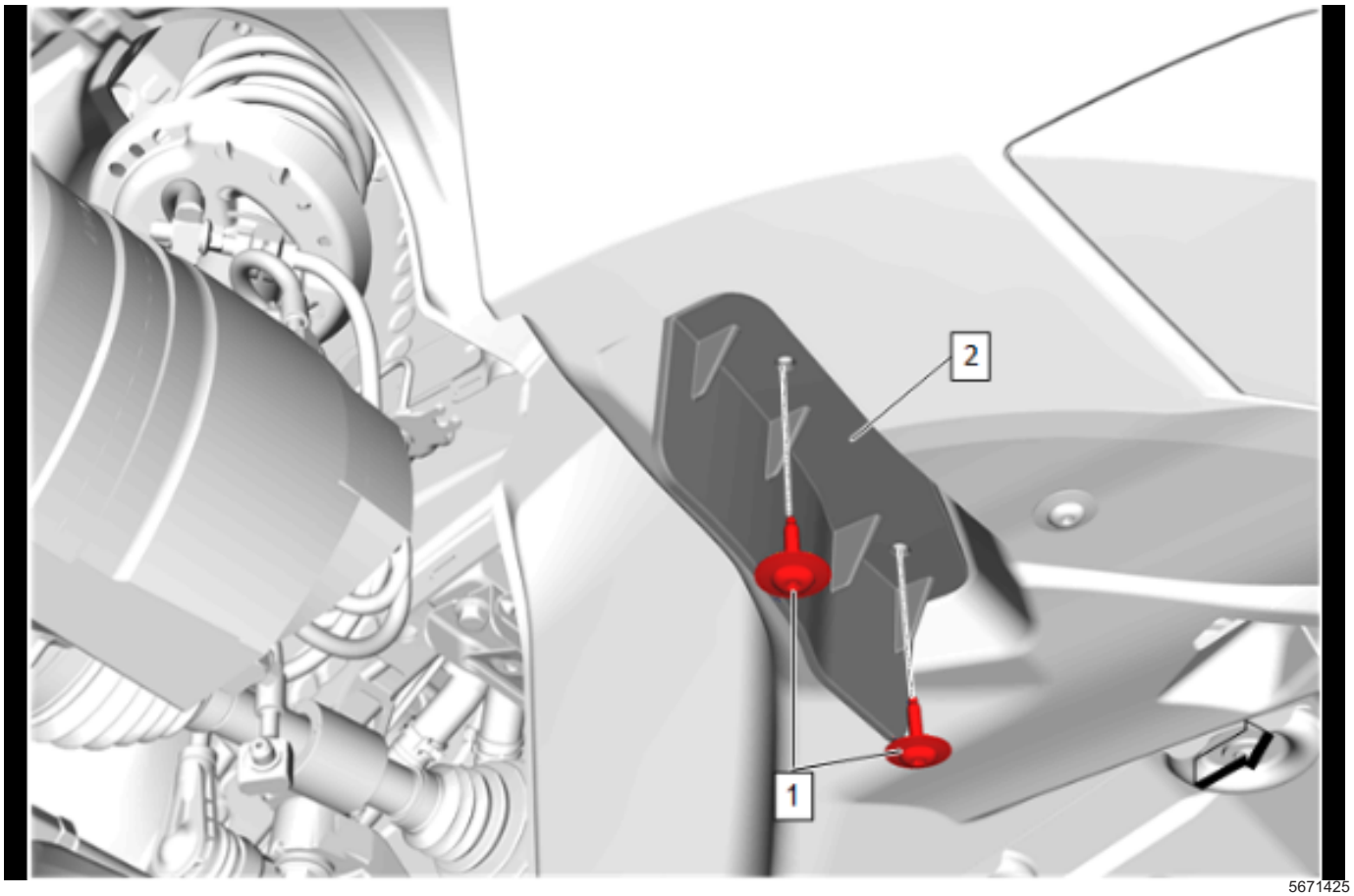

5671425

10. Front Tire Front Air Deflector Bolt (1) » Remove [2x]
11. Front Tire Front Air Deflector (2) » Remove

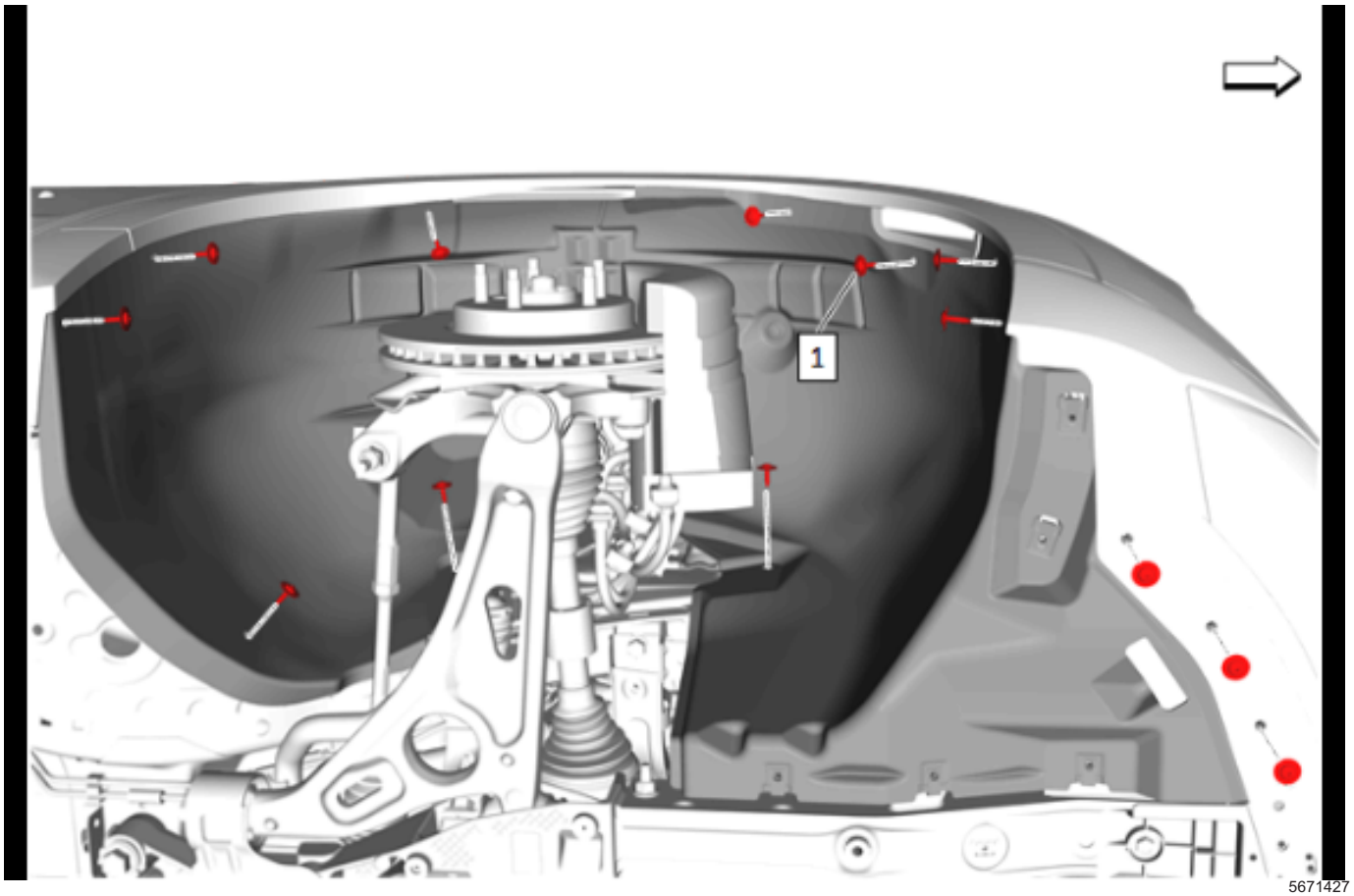

5671427

12. Front Wheelhouse Liner Bolt (1) » Remove [13x]

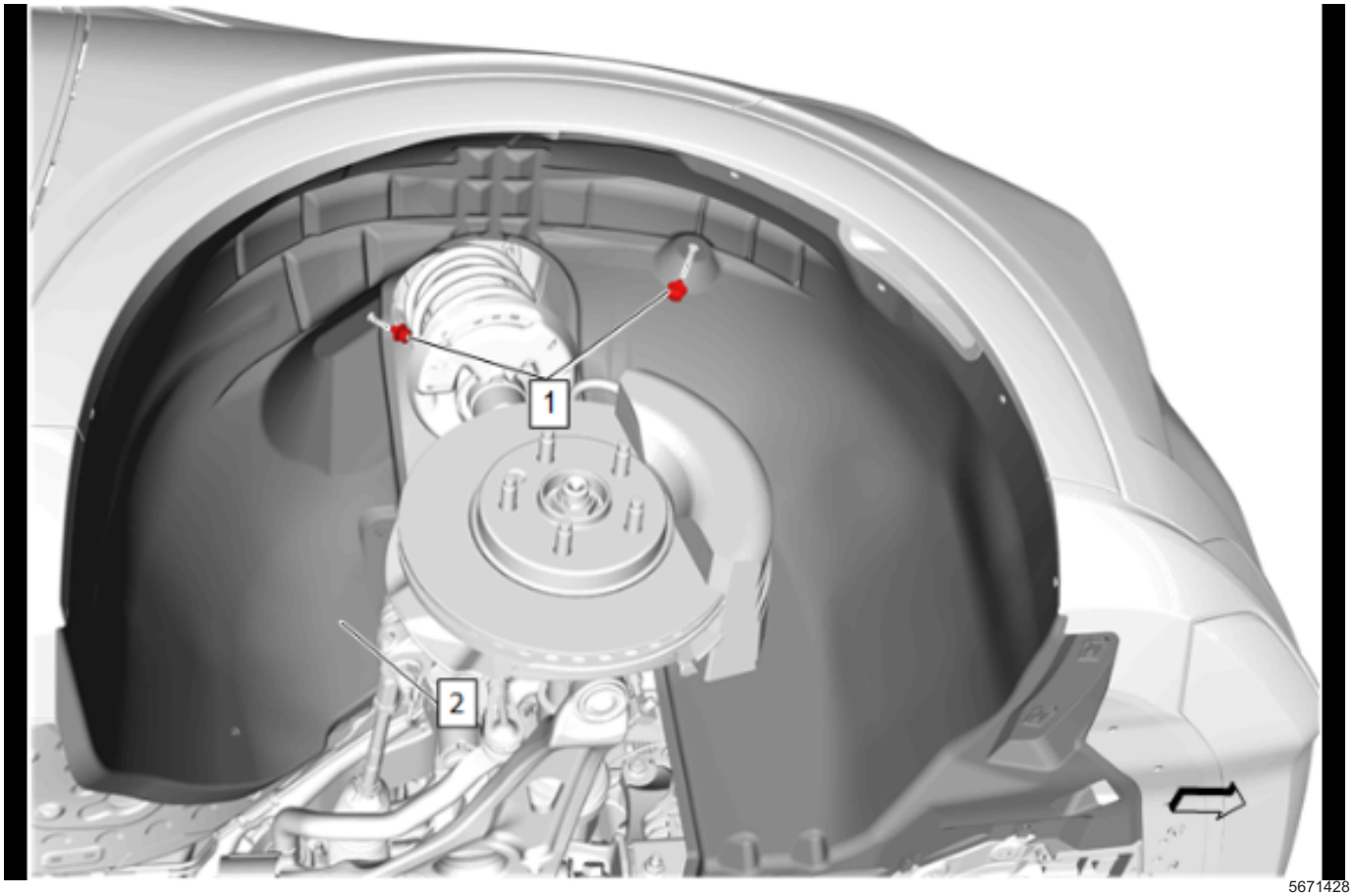

5671428

13. Front Wheelhouse Liner Retainer (1) » Remove [2x]
14. Front Wheelhouse Liner - Right Side (2) » Remove

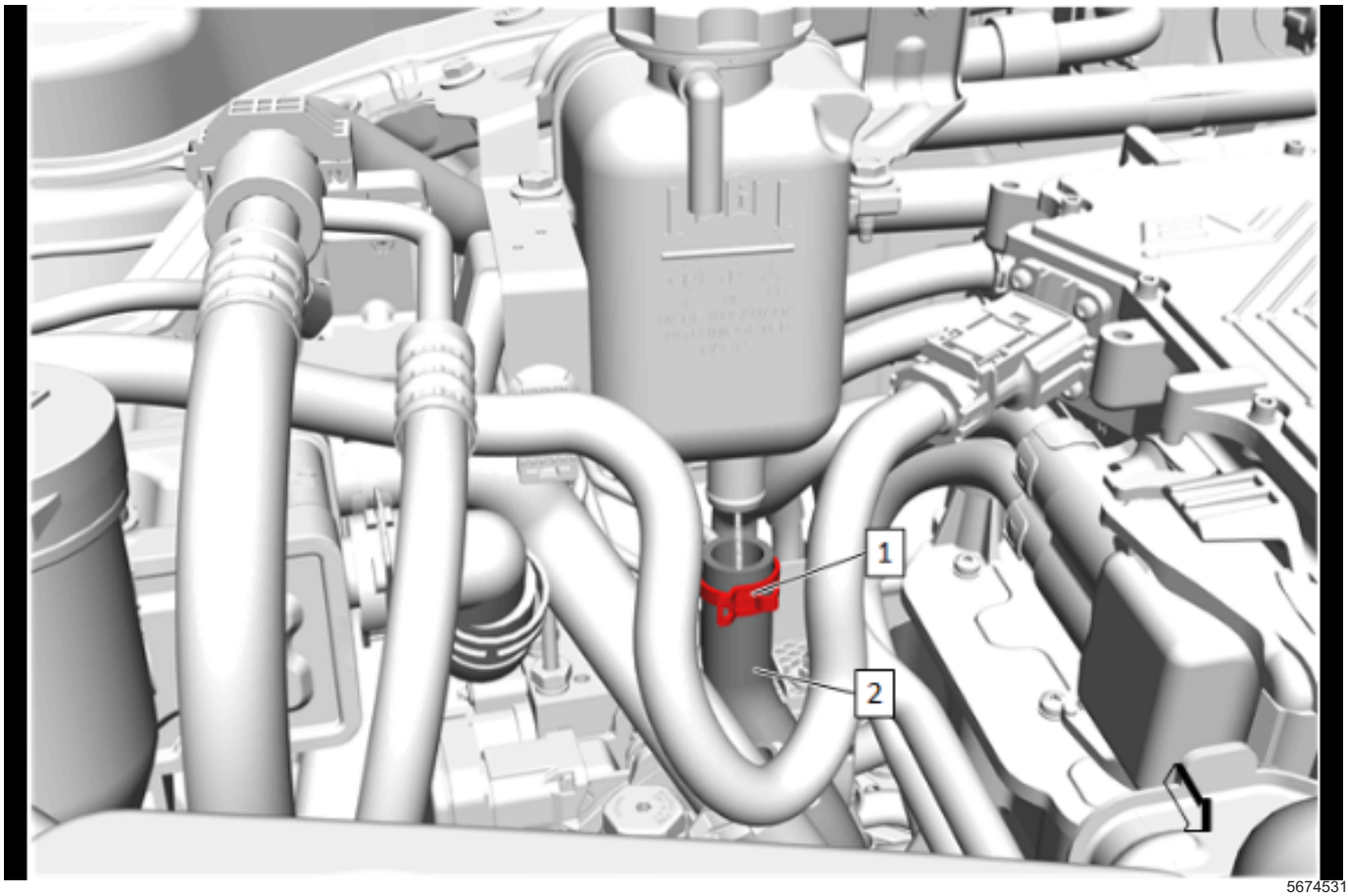

5674531

15. Clamp (1) » Disengage — Hose Clamp Replacement Guidelines - Spring Type
16. Auxiliary Heater Inlet Hose (2) @ Heater Coolant Surge Tank » Remove

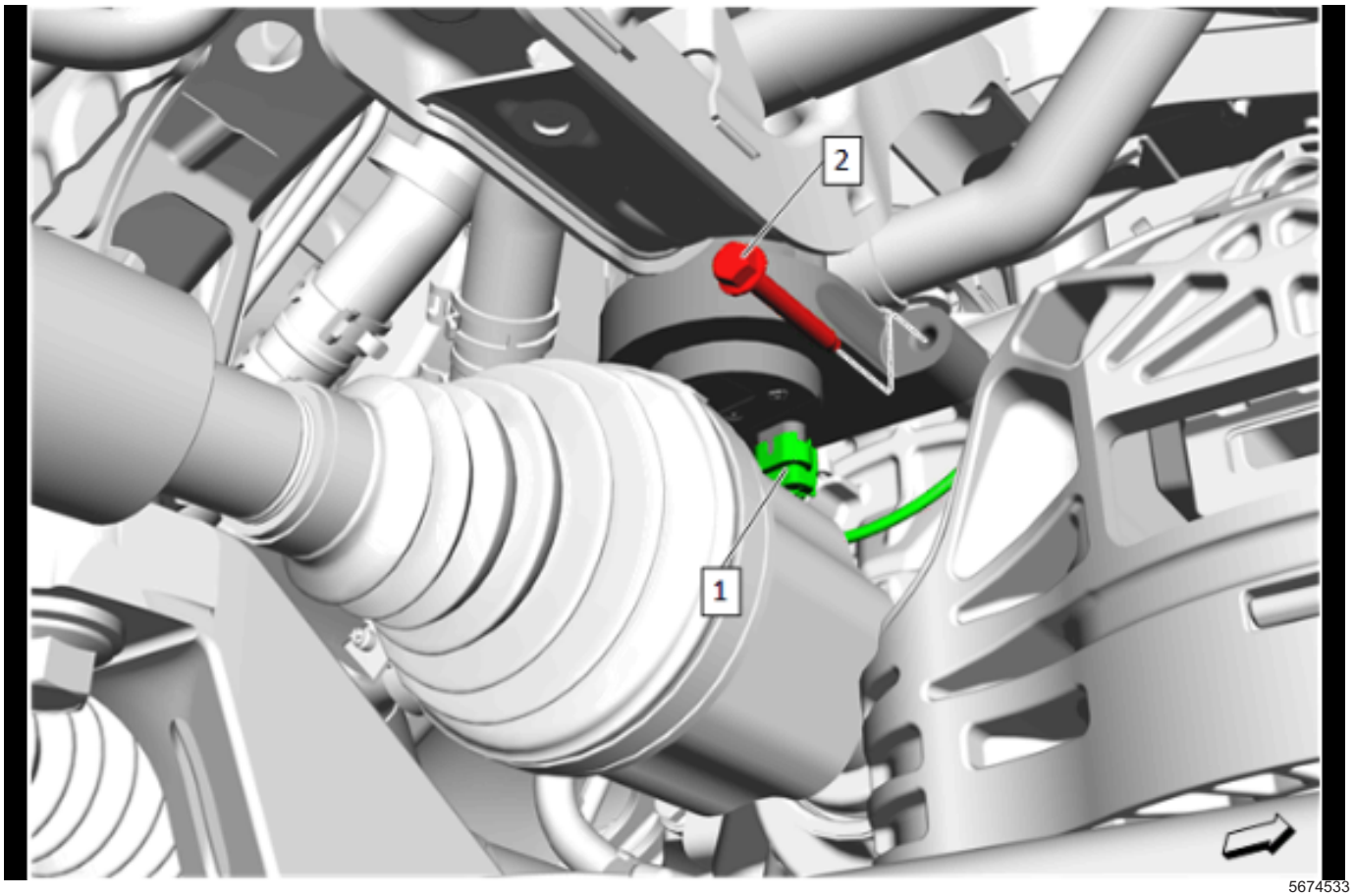

5674533

17. Electrical Connector (1) » Disconnect
18. Heater Coolant Pump Bolt (2) » Remove
19. Reposition the heater coolant pump on the rubber mount to access the clamp.

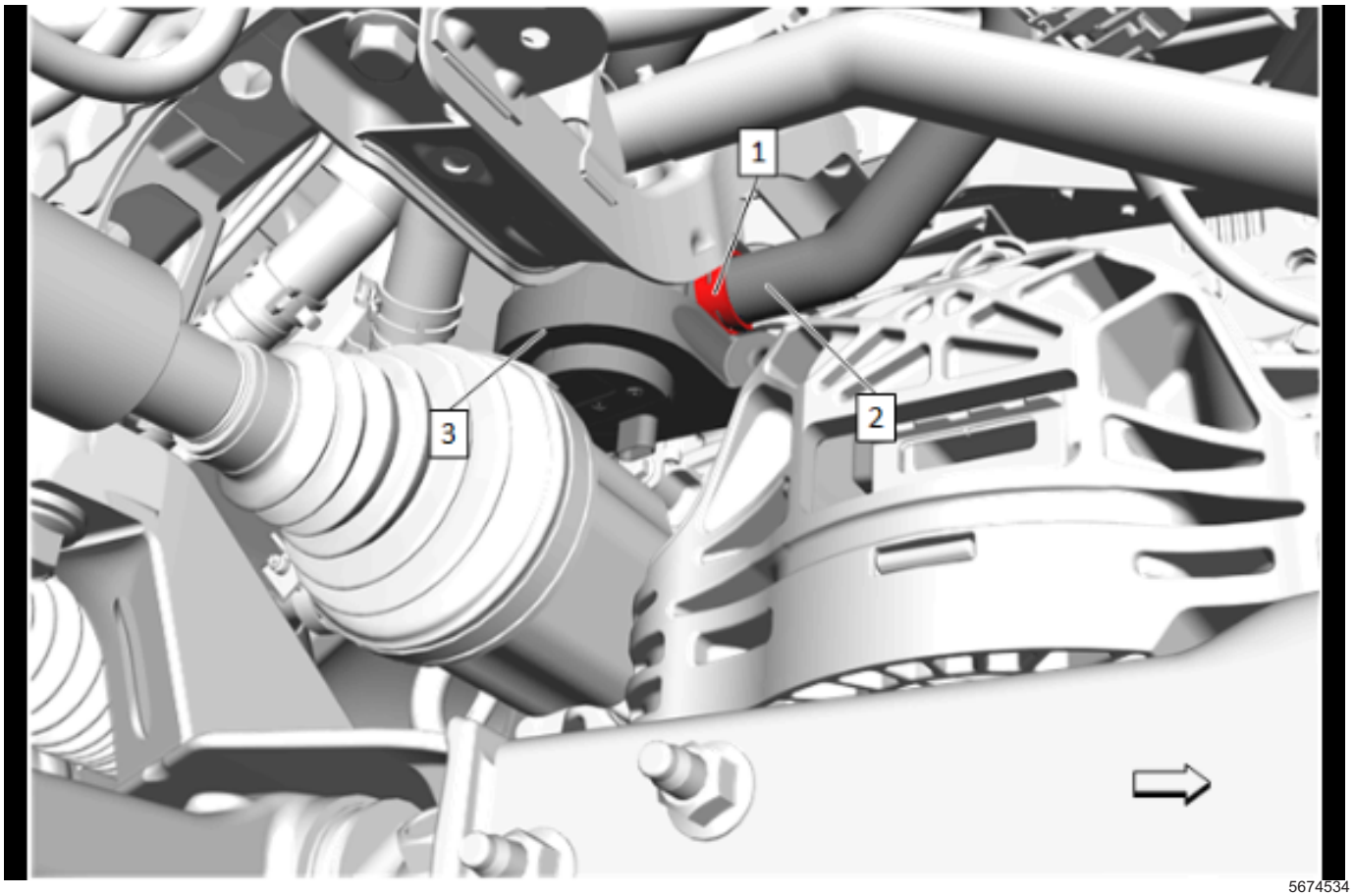

5674534

20. Clamp (1) » Disengage — Hose Clamp Replacement Guidelines - Spring Type
21. Auxiliary Heater Outlet Hose (2) @ Heater Coolant Pump (3) » Remove
22. Remove the heater coolant pump with the auxiliary heater inlet hose.

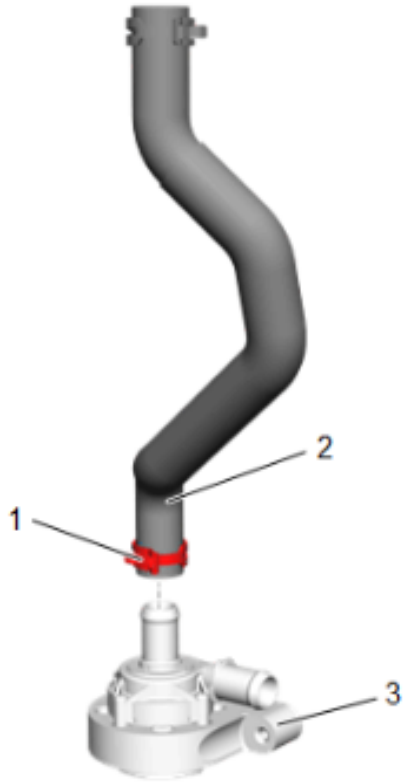

5674536

23. Clamp (1) » Disengage — Hose Clamp Replacement Guidelines - Spring Type
24. Auxiliary Heater Inlet Hose (2) @ Heater Coolant Pump (3) » Remove

Installation Procedure

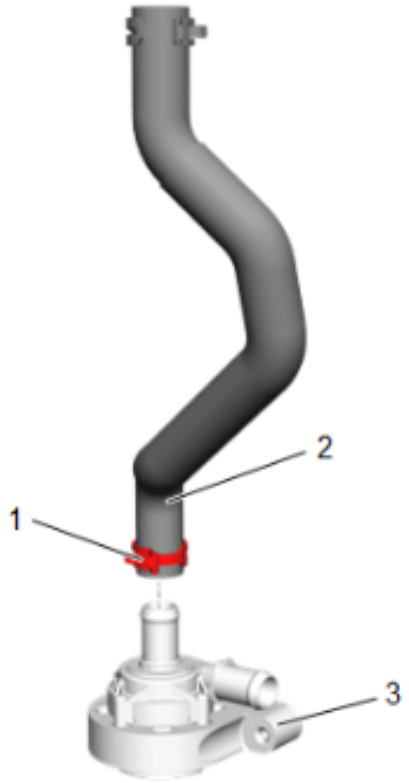

5674536

1. Auxiliary Heater Inlet Hose (2) @ Heater Coolant Pump (3) » Install
2. Clamp (1) » Engage — Hose Clamp Replacement Guidelines - Spring Type
3. Position the heater coolant pump with the auxiliary heater inlet hose.

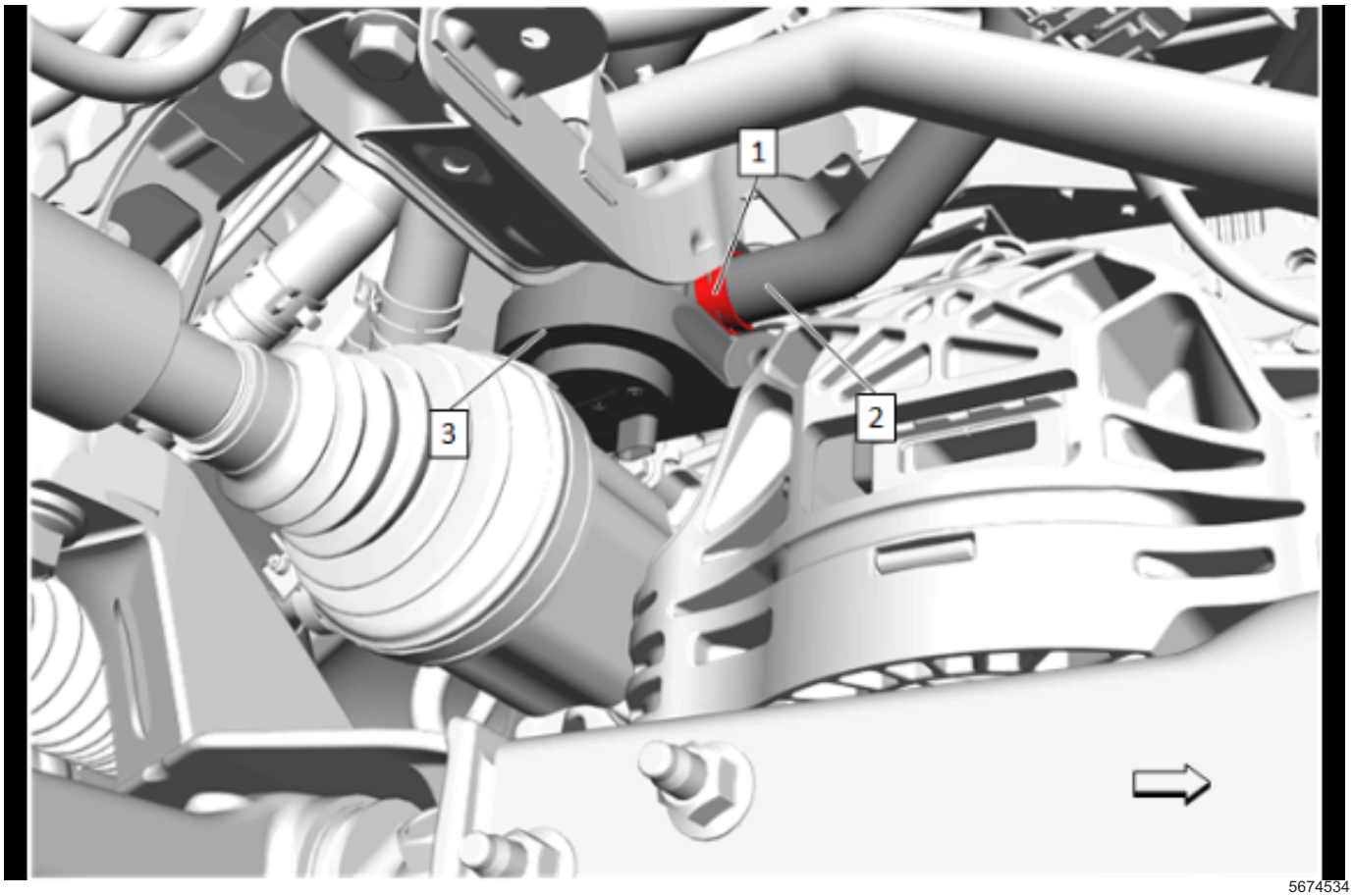

5674534

4. Auxiliary Heater Outlet Hose (2) @ Heater Coolant Pump (3) » Install
5. Clamp (1) » Engage — Hose Clamp Replacement Guidelines - Spring Type

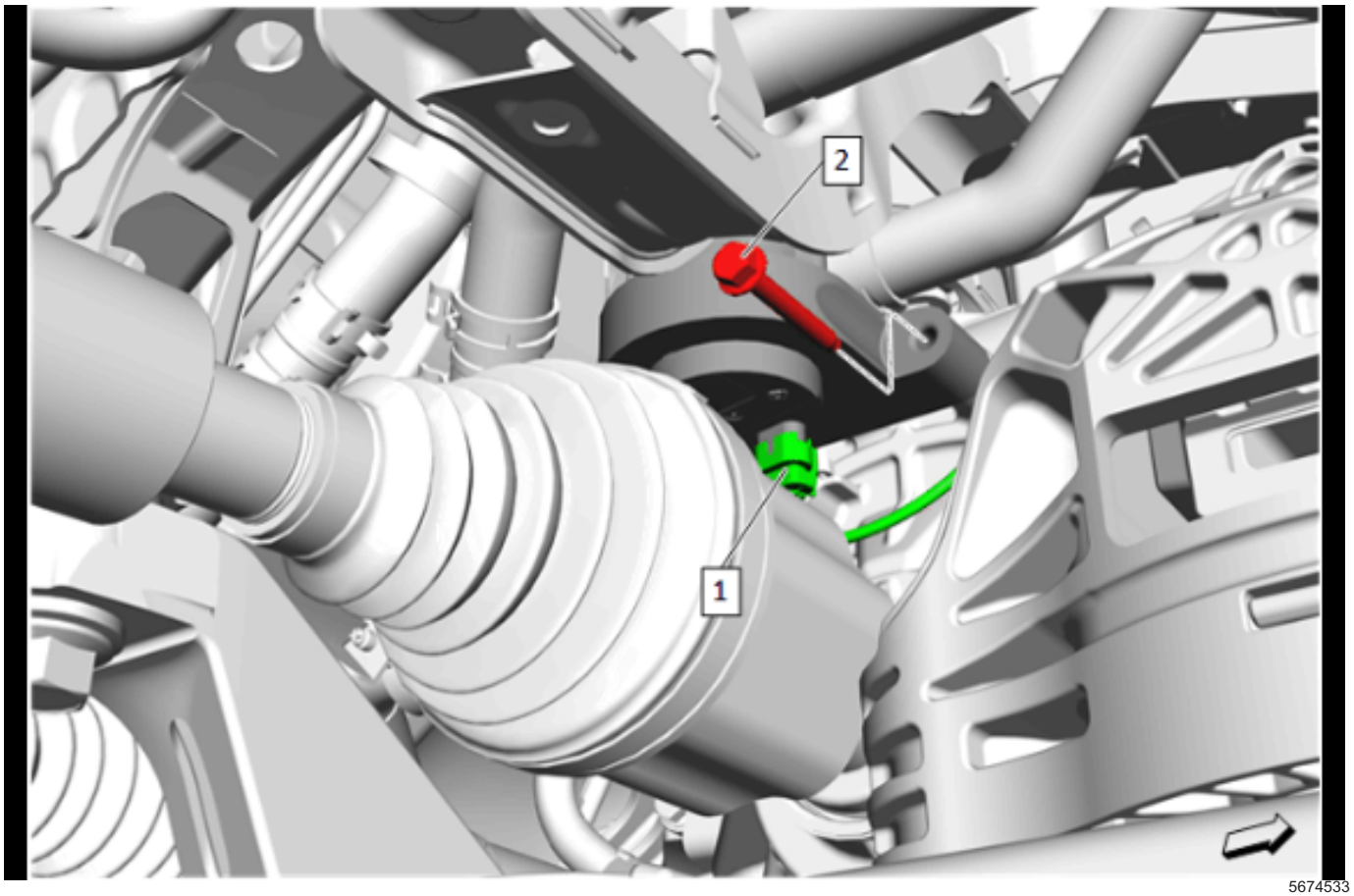

5674533

6. Heater Coolant Pump Bolt (2) » Install and tighten — *Fastener Specifications on page 5-3*
7. Electrical Connector (1) » Connect

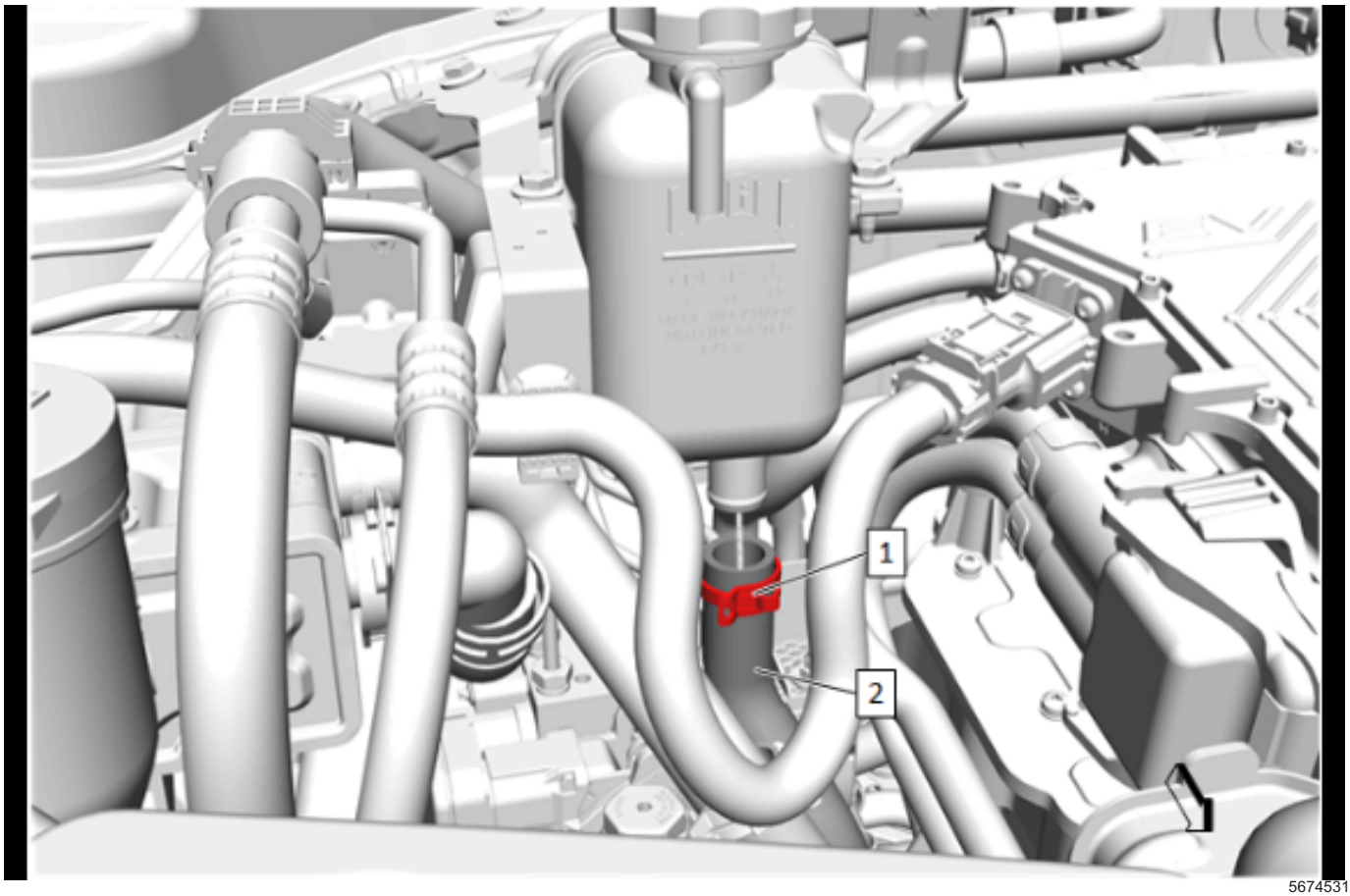

5674531

8. Auxiliary Heater Inlet Hose (2) @ Heater Coolant Surge Tank » Install
9. Clamp (1) » Engage— Hose Clamp Replacement Guidelines - Spring Type

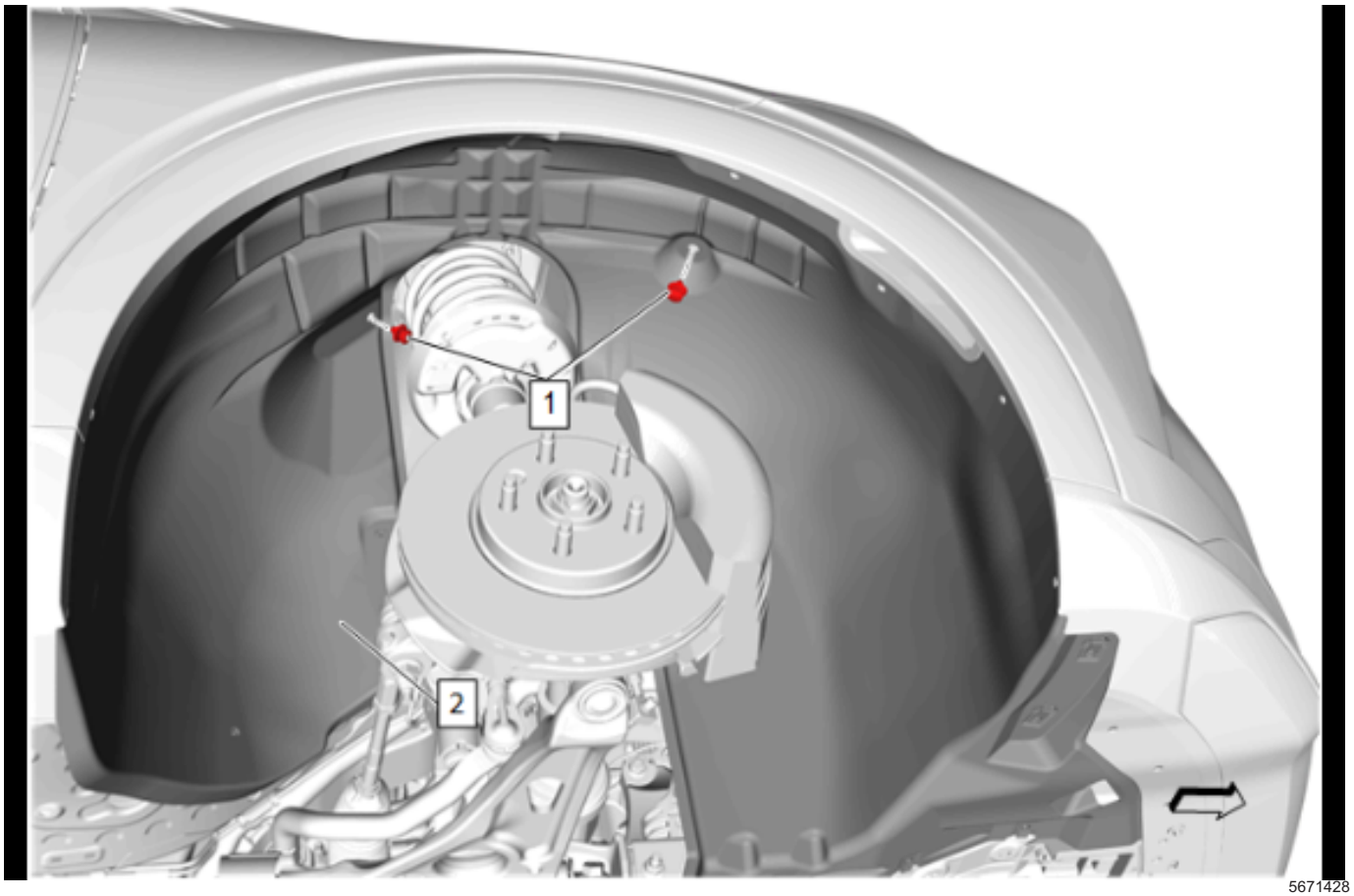

5671428

10. Front Wheelhouse Liner - Right Side (2) » Install
11. Front Wheelhouse Liner Retainer (1) » Install [2x]

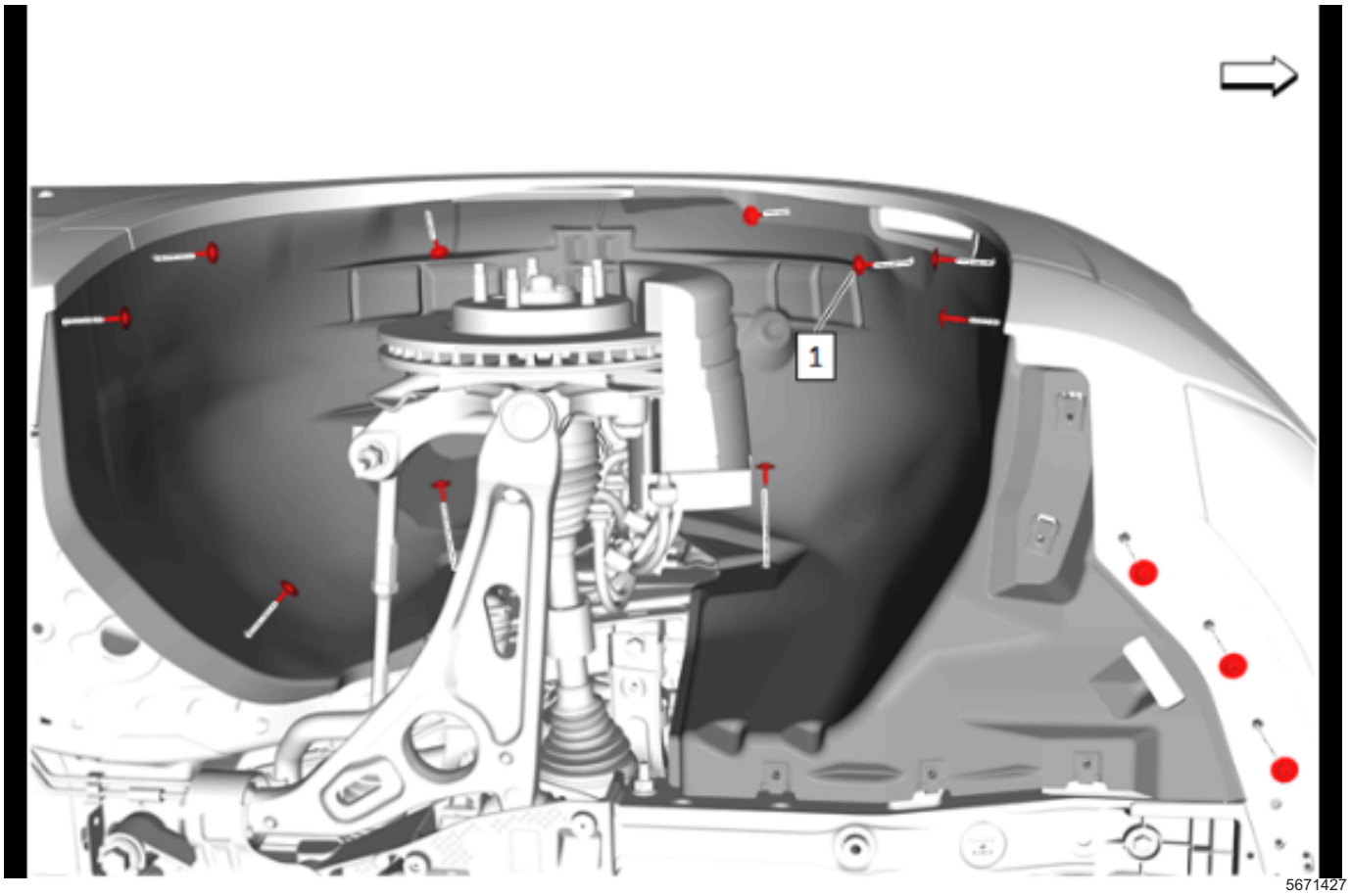

12. Front Wheelhouse Liner Bolt (1) » Install and tighten [13x] — Fastener Specifications

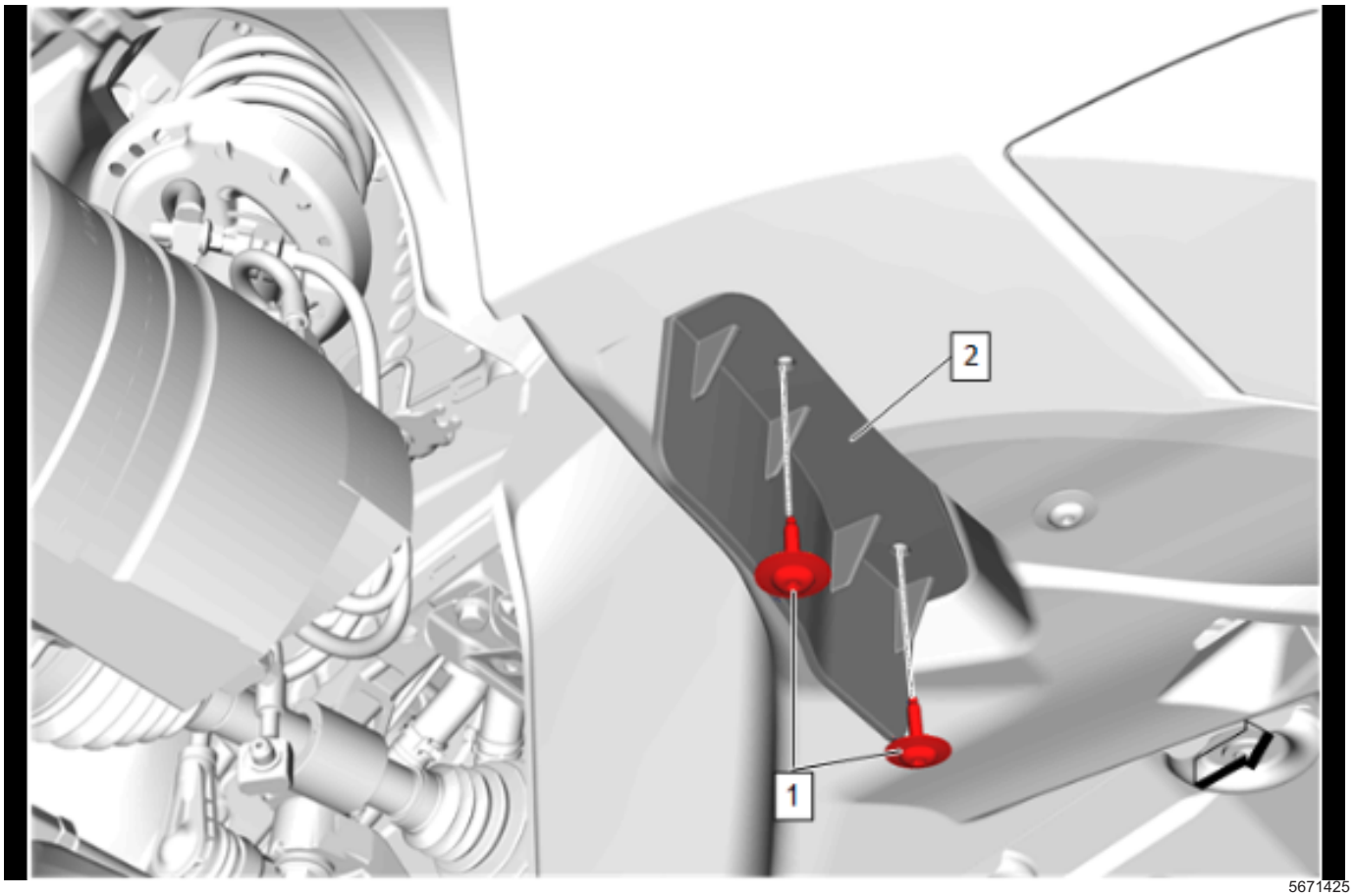

5671425

13. Front Tire Front Air Deflector (2) » Install
14. Front Tire Front Air Deflector Bolt (1) » Install and tighten [2x] — Fastener Specifications
15. Install the right front tire and wheel assembly.

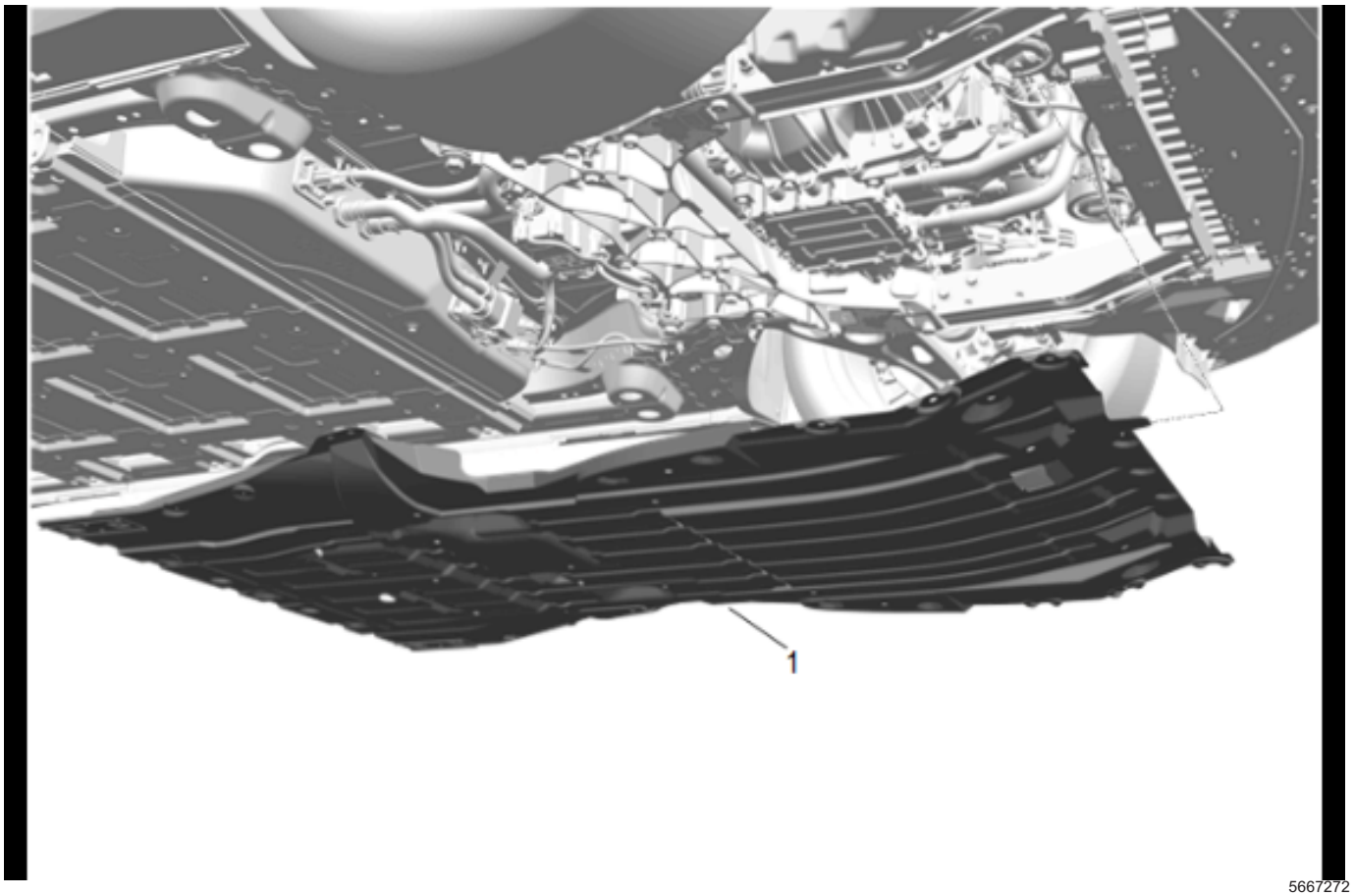

5667272

16. Front Compartment Air Deflector (1) » Install

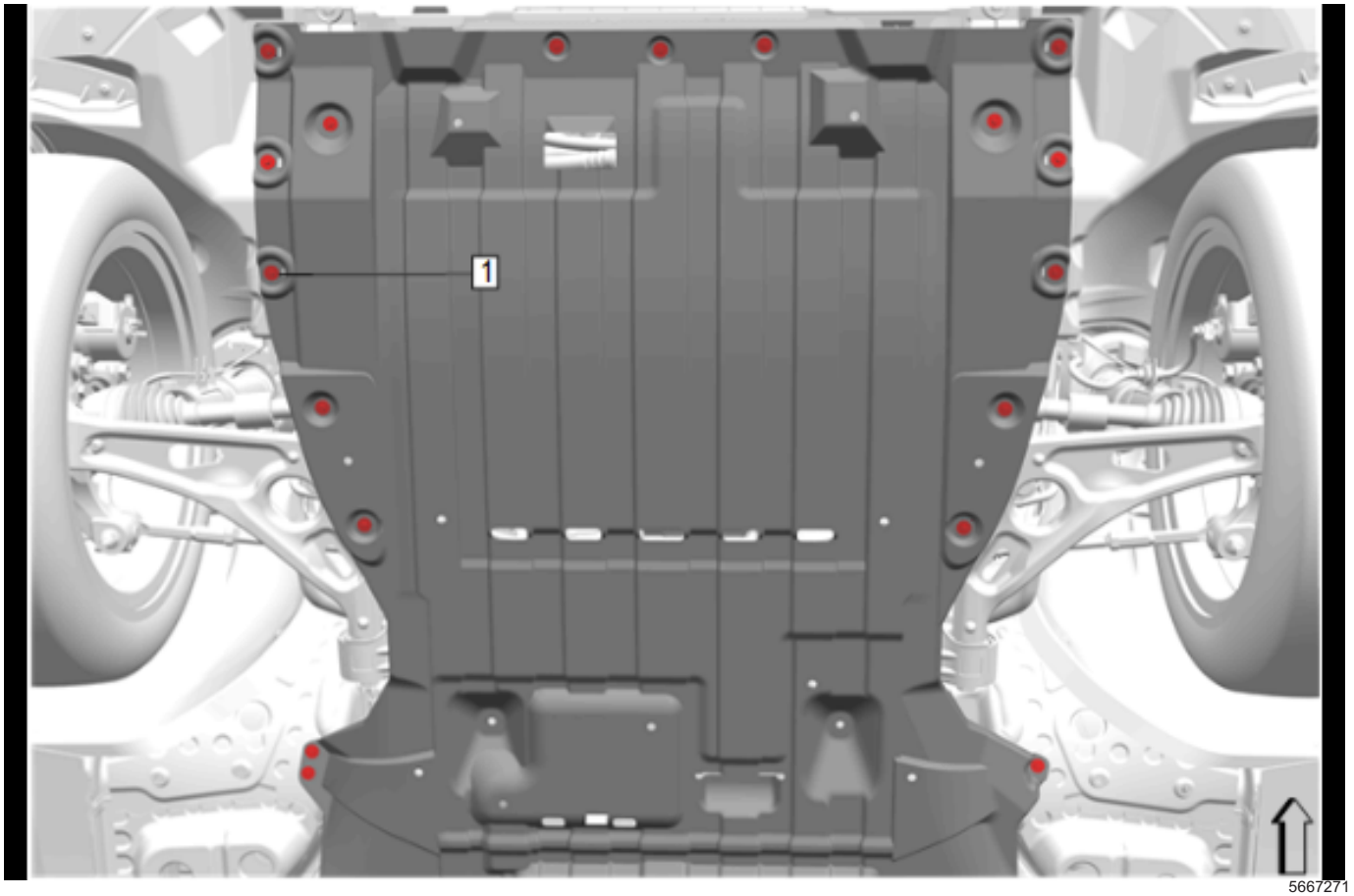

5667271

17. Front Compartment Air Deflector Bolt (1) » Install and tighten [18x] — Fastener Specifications

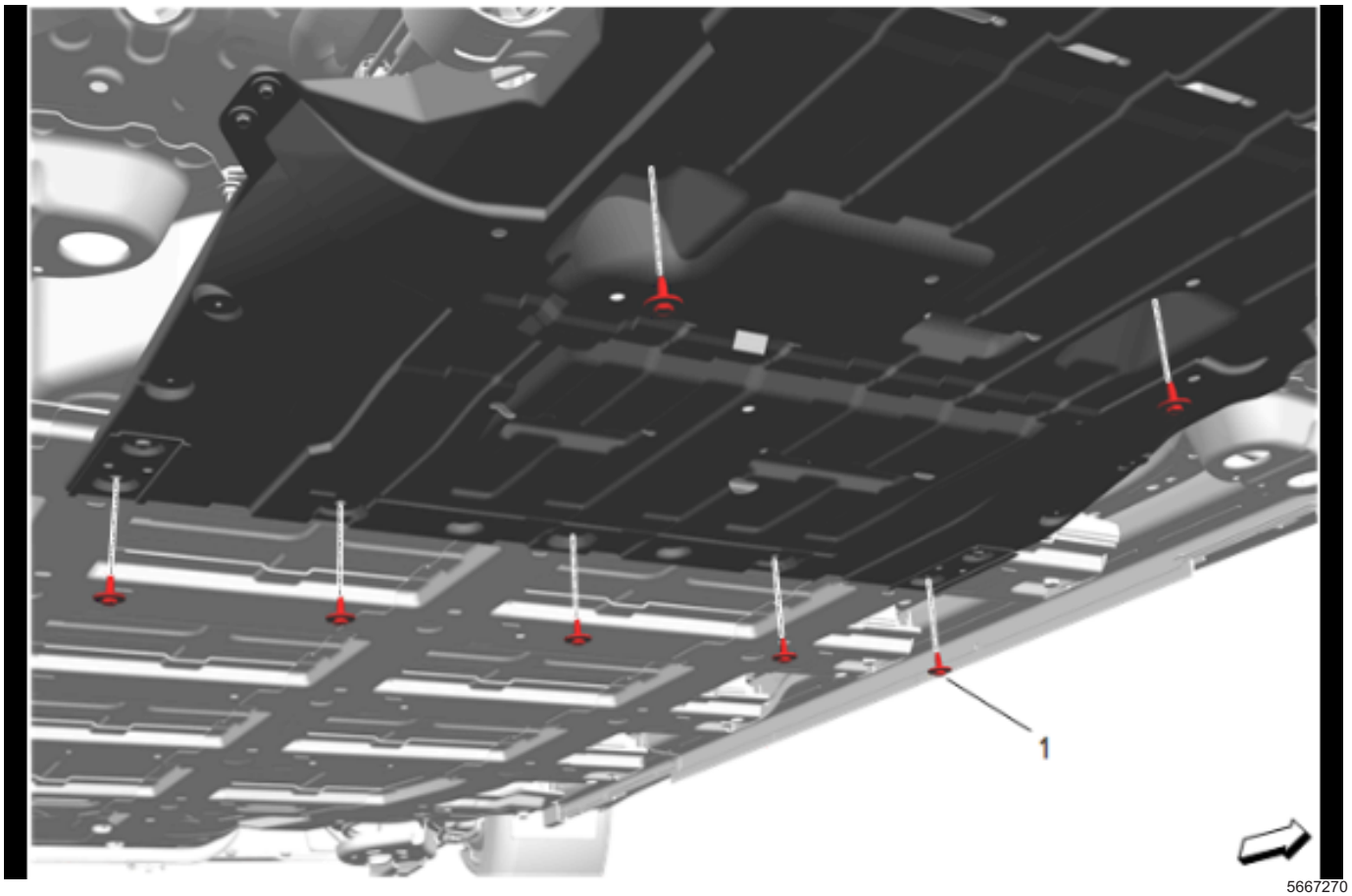

18. Front Compartment Air Deflector Bolt (1) » Install and tighten [7x] — Fastener Specifications

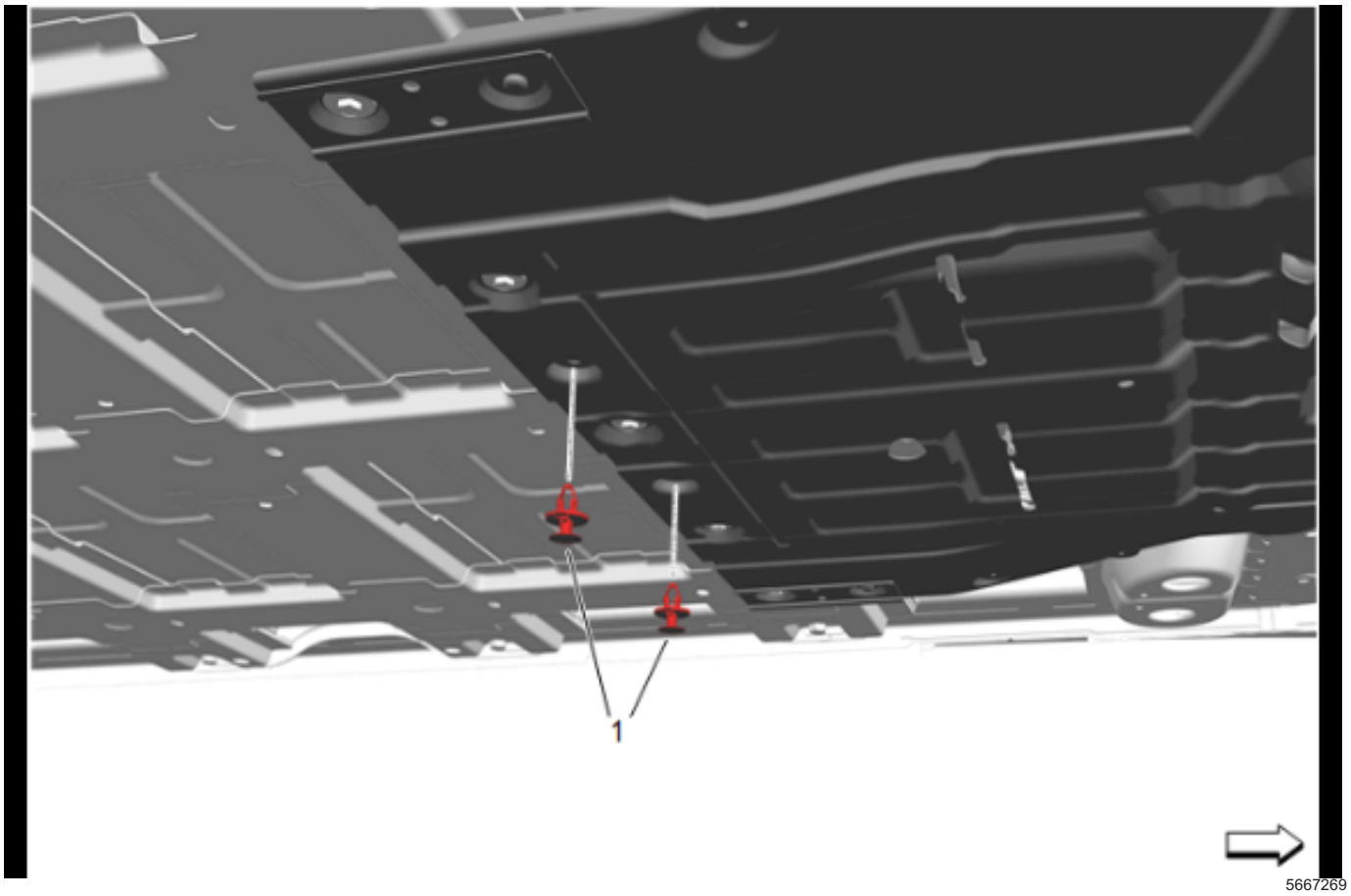

19. Front Compartment Air Deflector Retainer (1) » Install [2x]
20. Lower the vehicle.
21. Fill the cooling system. *Heater Coolant Heater Draining and Filling on page 5-39*
22. Connect the battery negative cable.
23. Check the cooling system for leaks.

Auxiliary Heater Outlet Hose Replacement

Removal Procedure

Danger: Always perform the High Voltage Disabling procedure prior to servicing any High Voltage component or connection. Personal Protection Equipment (PPE) and proper procedures must be followed.

The High Voltage Disabling procedure includes the following steps:

- ***Identify how to disable high voltage.***
- ***Identify how to test for the presence of high voltage.***
- ***Identify condition under which high voltage is always present and personal protection equipment (PPE) and proper procedures must be followed.***

Before working on any high voltage system, be sure to wear the following Personal Protection Equipment:

- ***Safety glasses with appropriate side shields when within 15 meters (50 feet) of the vehicle, either indoors or outdoors.***
- ***Certified and up-to-date Class "0" Insulation gloves rated at 1000V with leather protectors.***
  - ***Visually and functionally inspect the gloves before use.***
  - ***Wear the Insulation gloves with leather protectors at all times when working with the high voltage battery assembly, whether the system is energized or not.***

Failure to follow the procedures may result in serious injury or death.

1. Disable the high voltage system.
2. Drain the cooling system. *Heater Coolant Heater Draining and Filling on page 5-39*
3. Raise and support the vehicle.

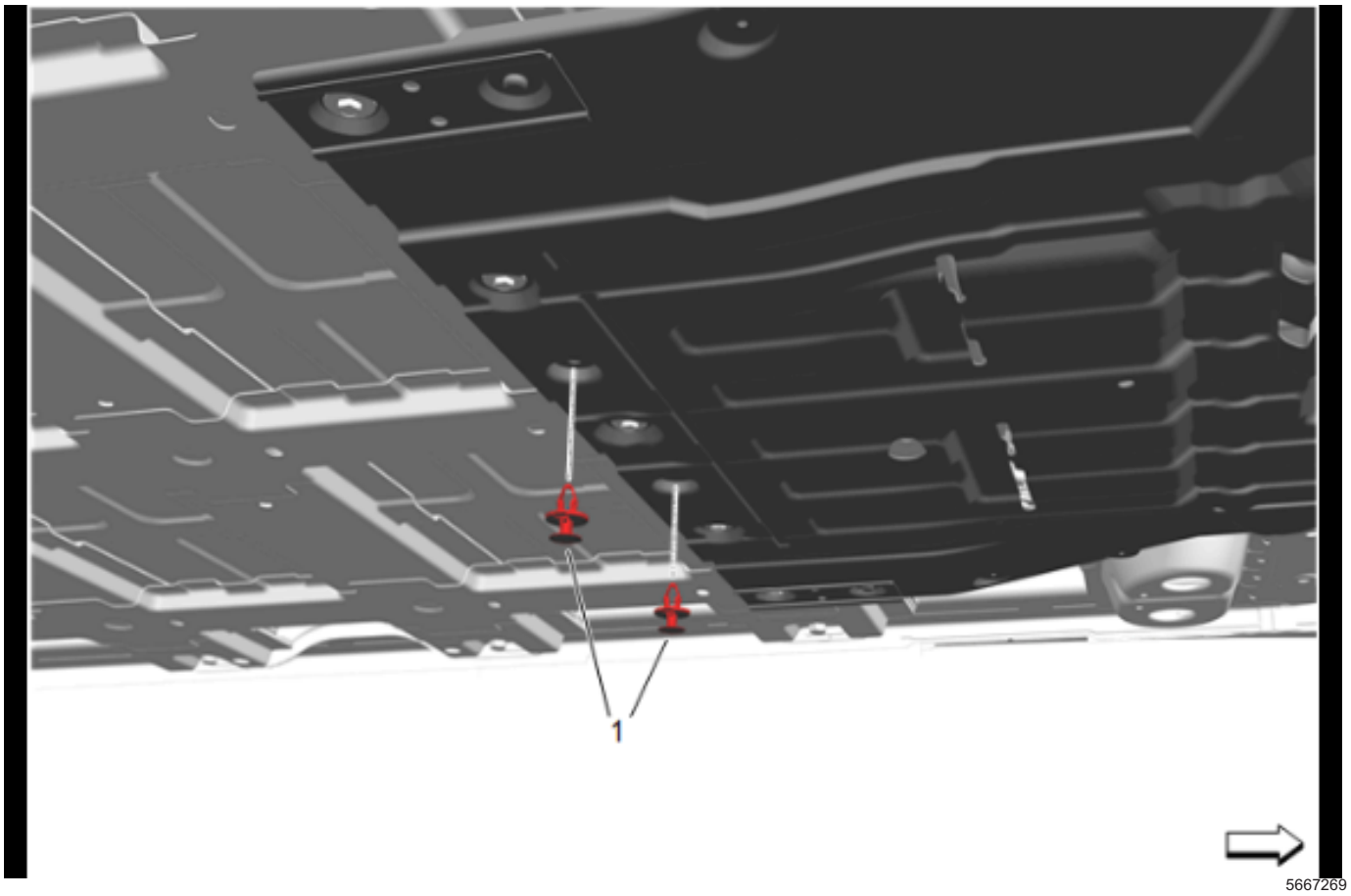

4. Front Compartment Air Deflector Retainer (1) »
   Remove [2x]

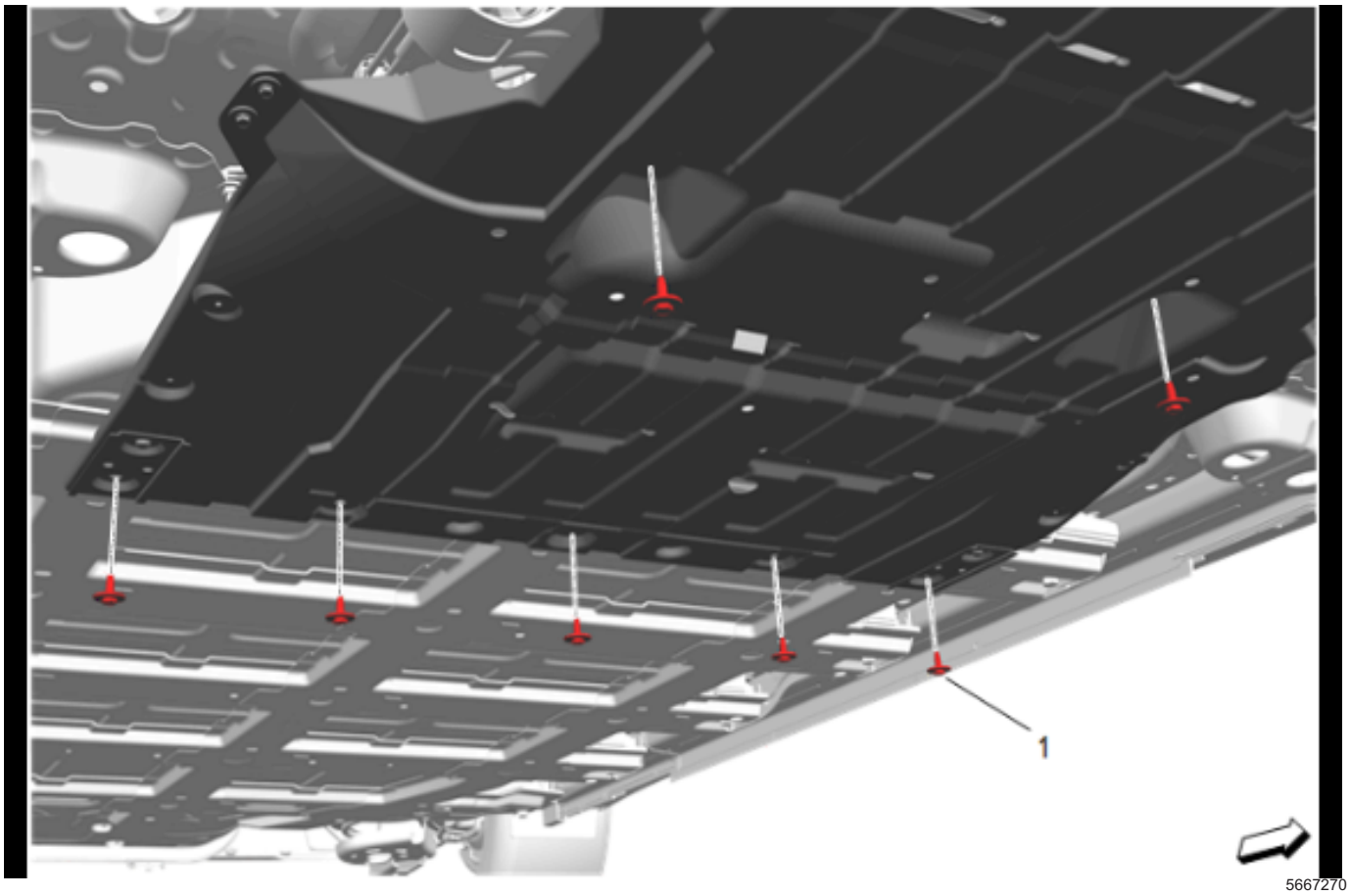

5. Front Compartment Air Deflector Bolt (1) » Remove [7x]

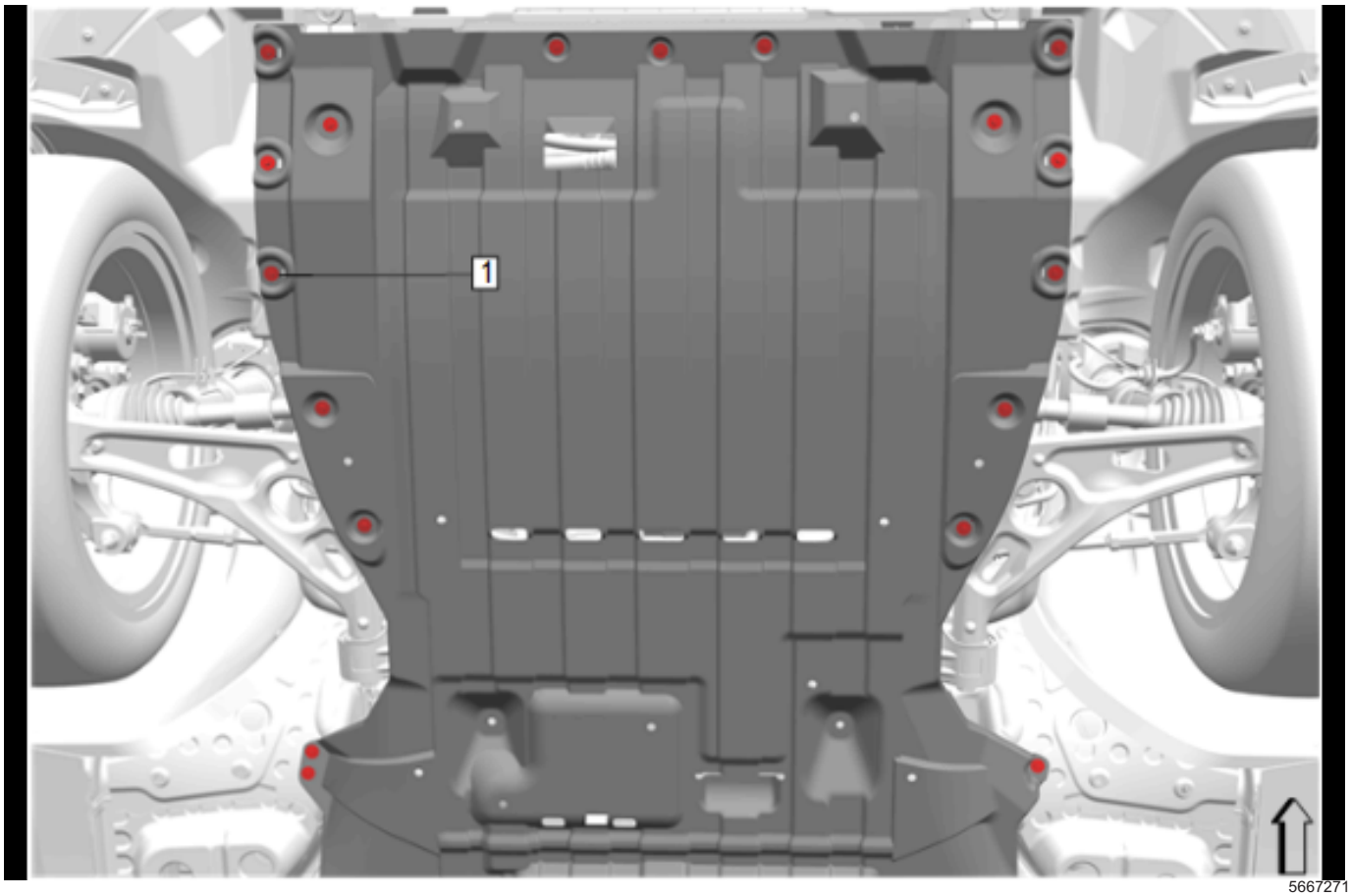

5667271

6. Front Compartment Air Deflector Bolt (1) »
   Remove [18x]

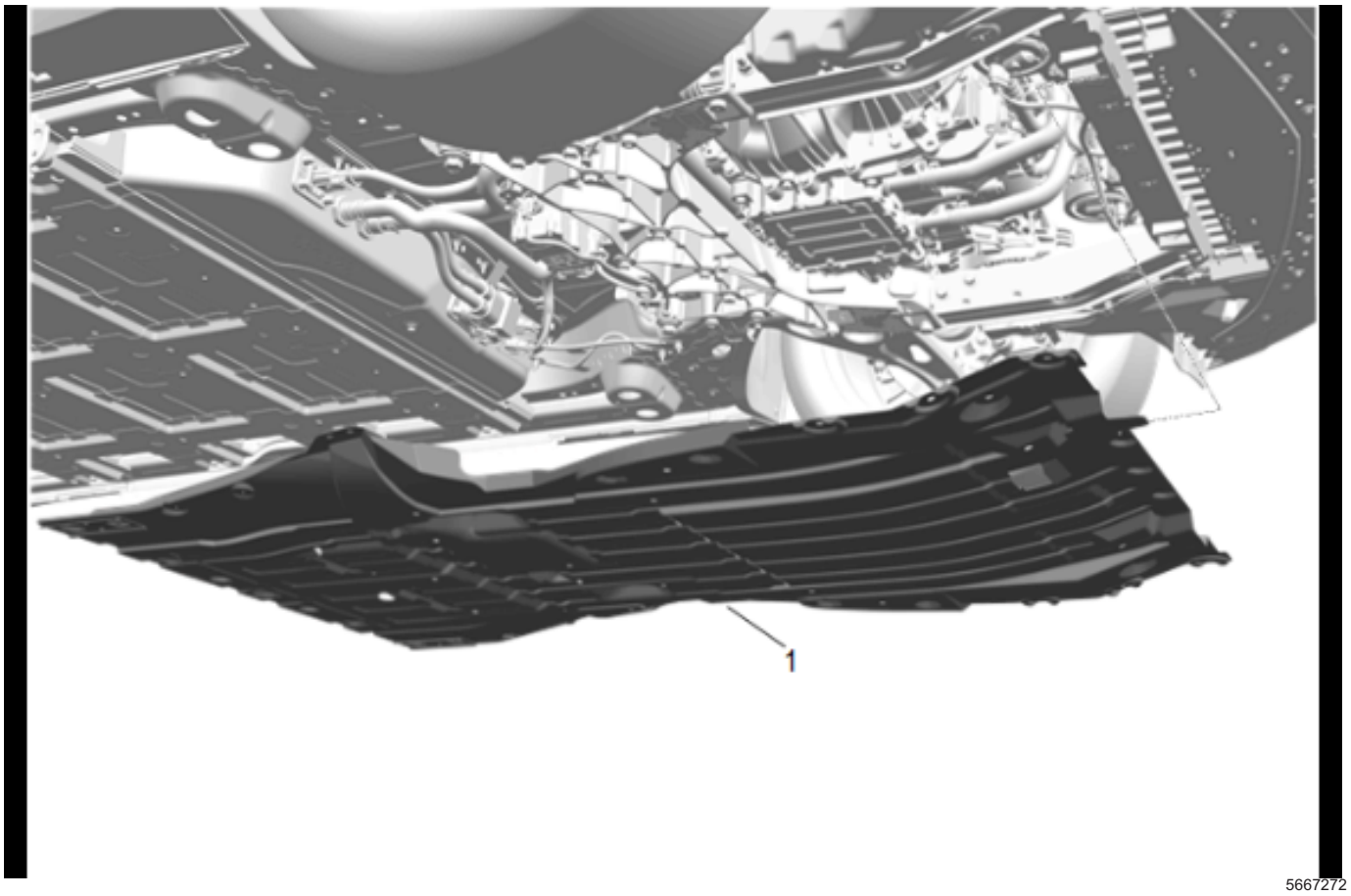

7. Front Compartment Air Deflector (1) » Remove
8. Remove the right front tire and wheel assembly.

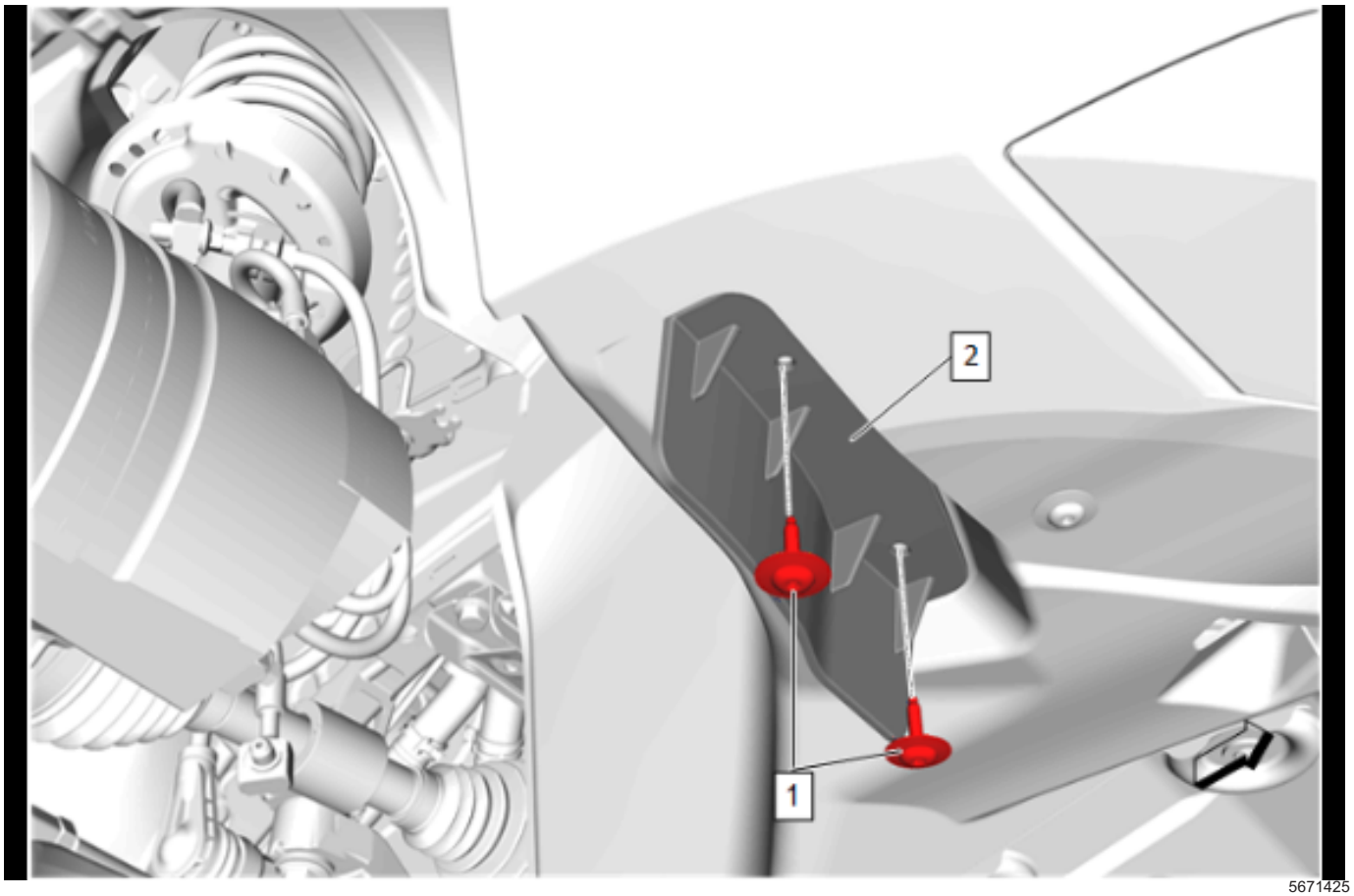

5671425

9. Front Tire Front Air Deflector Bolt (1) » Remove [2x]
10. Front Tire Front Air Deflector (2) » Remove

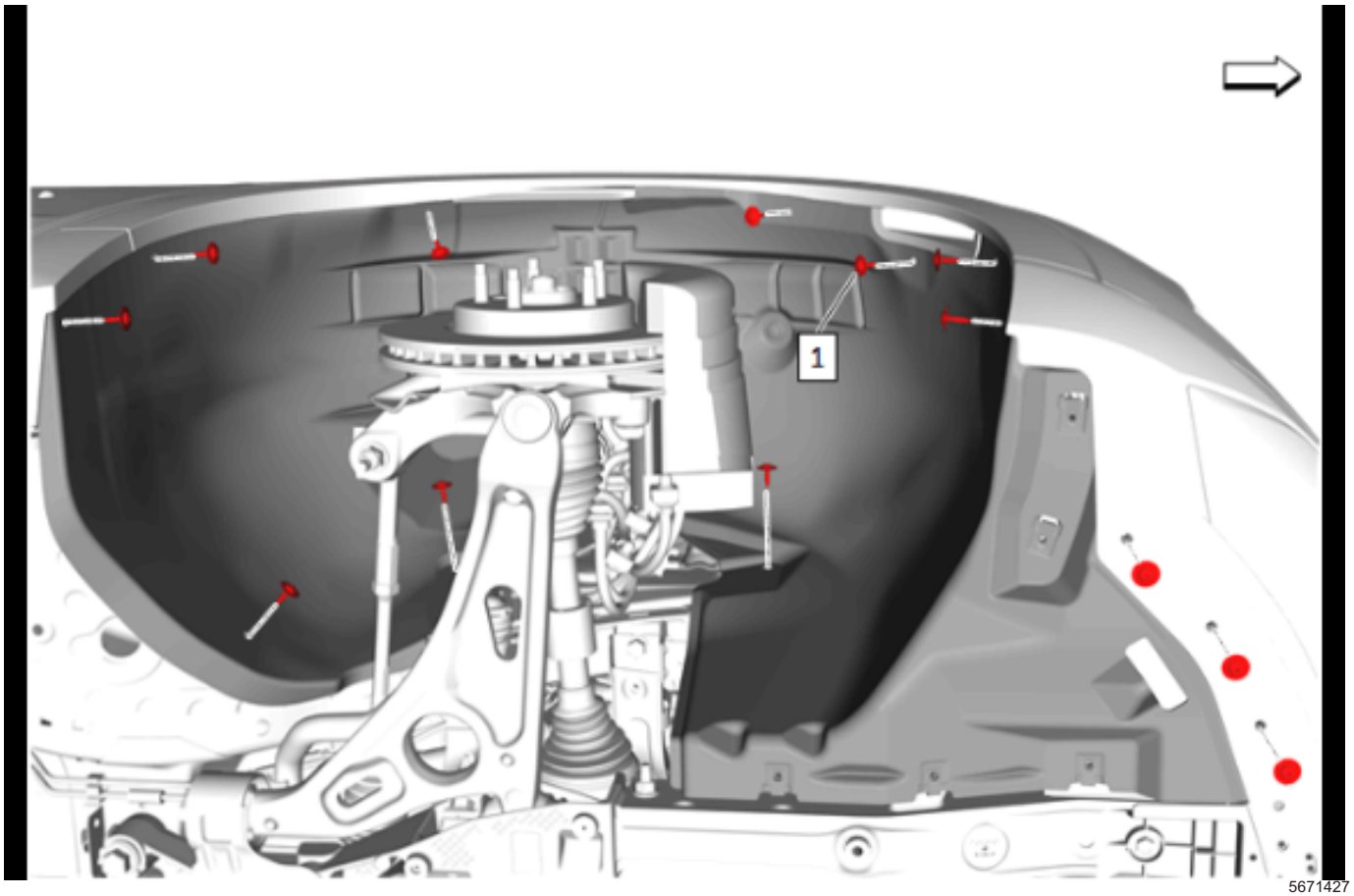

5671427

11. Front Wheelhouse Liner Bolt (1) » Remove [13x]

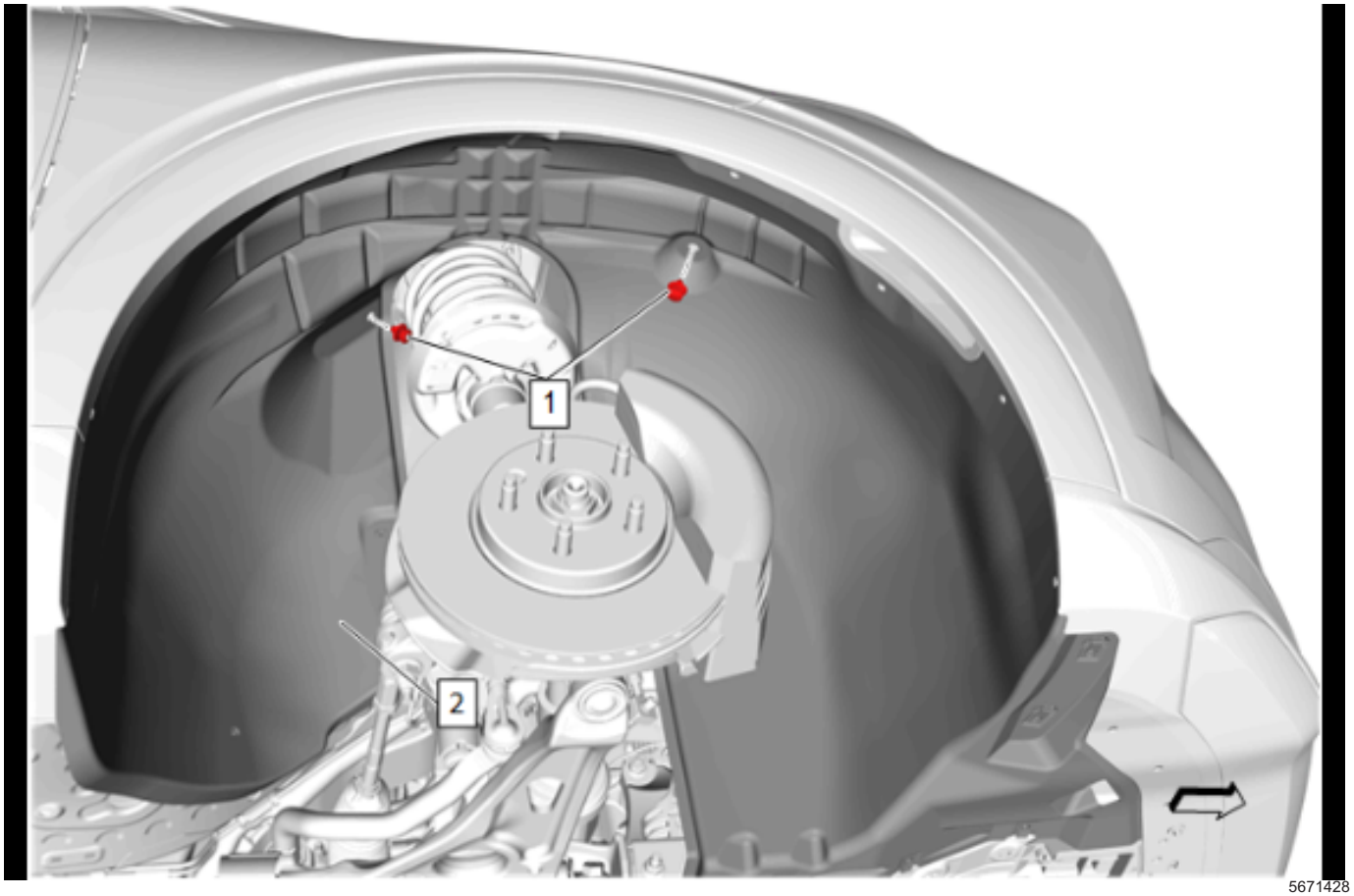

5671428

12. Front Wheelhouse Liner Retainer (1) » Remove [2x]
13. Front Wheelhouse Liner - Right Side (2) » Remove

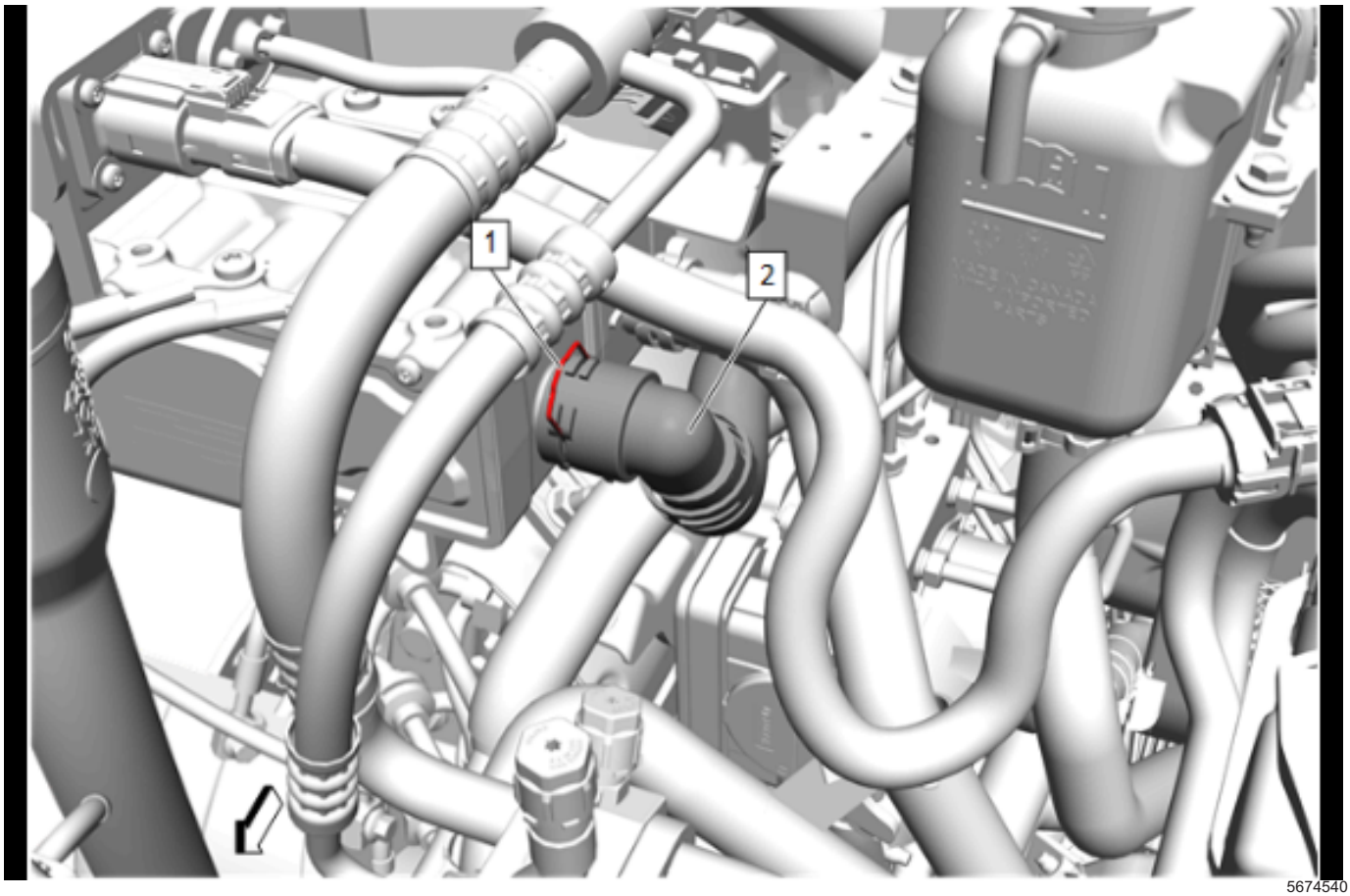

5674540

14. Heater Outlet Hose Connector Retainer (1) » Disengage
15. Heater Outlet Hose (2) @ Heater Coolant Heater » Remove

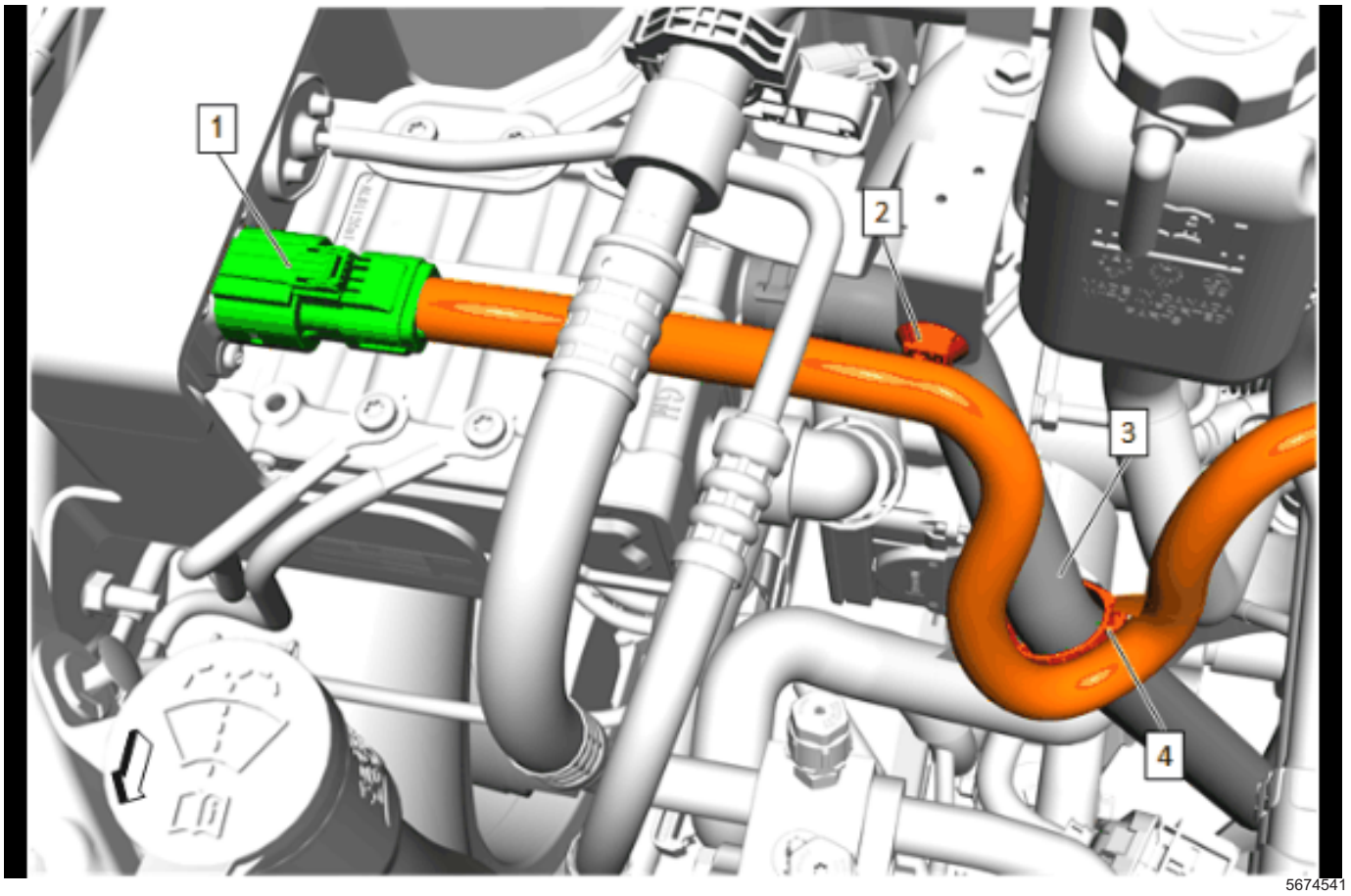

16. High Voltage Cable Electrical Connector (1) » Disconnect
17. Retainer (2) » Remove
18. Auxiliary Heater Outlet Hose (3) @ Retainer (4) » Remove

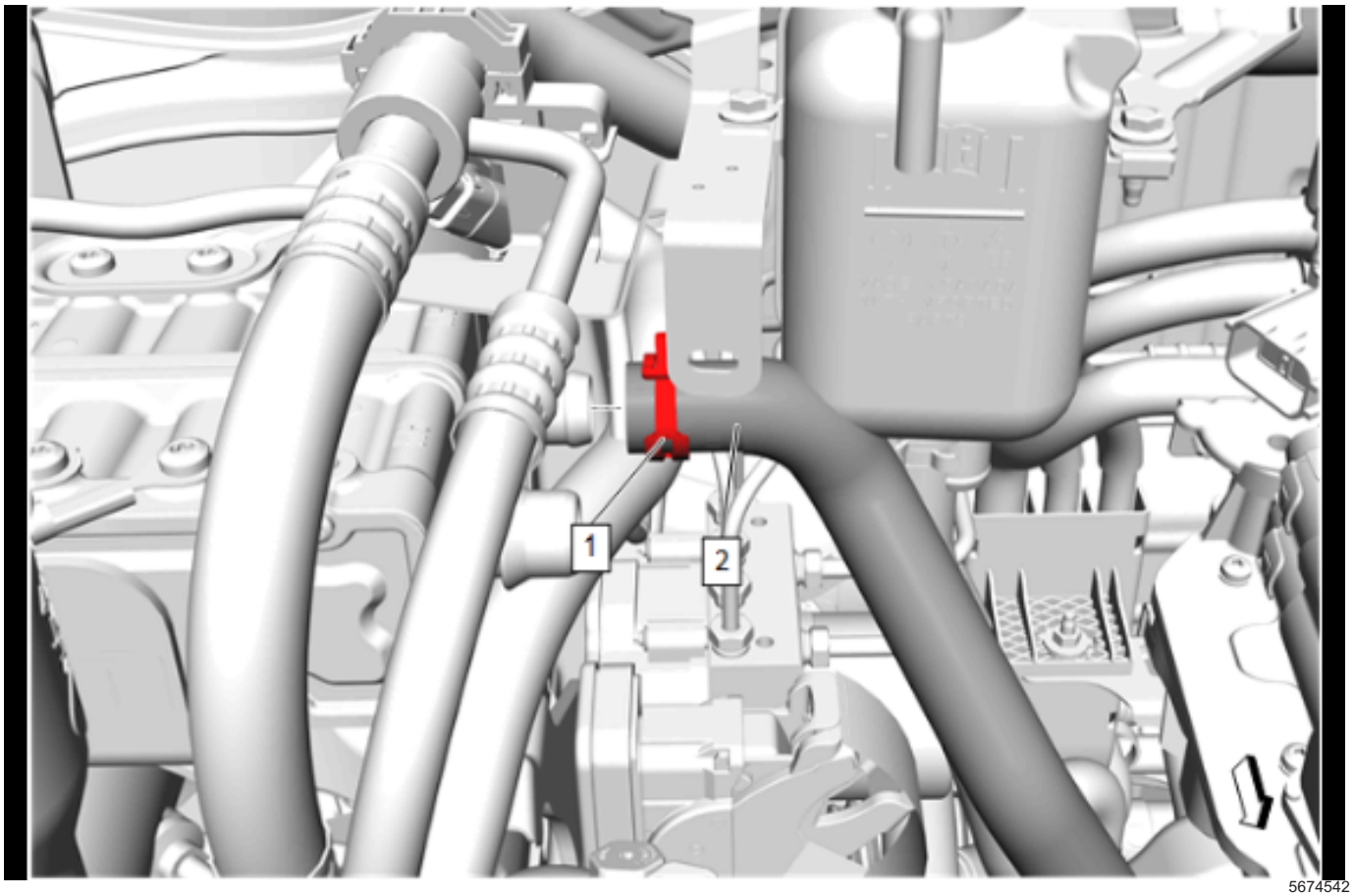

5674542

19. Clamp (1) » Disengage — Hose Clamp Replacement Guidelines - Spring Type
20. Auxiliary Heater Outlet Hose (2) @ Heater Coolant Heater » Remove

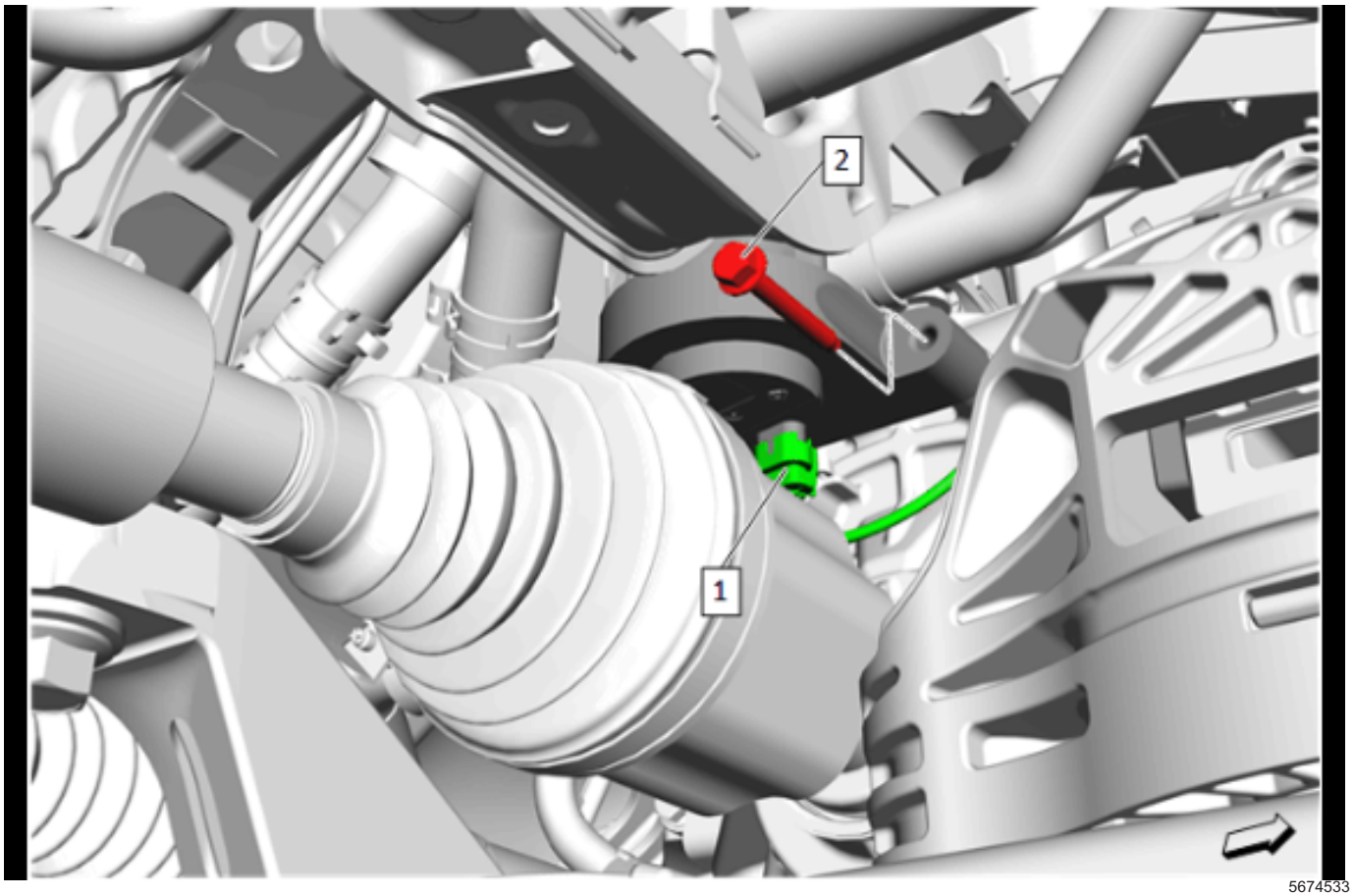

5674533

21. Electrical Connector (1) » Disconnect
22. Heater Coolant Pump Bolt (2) » Remove
23. Reposition the heater coolant pump on the rubber mount to access the clamp.

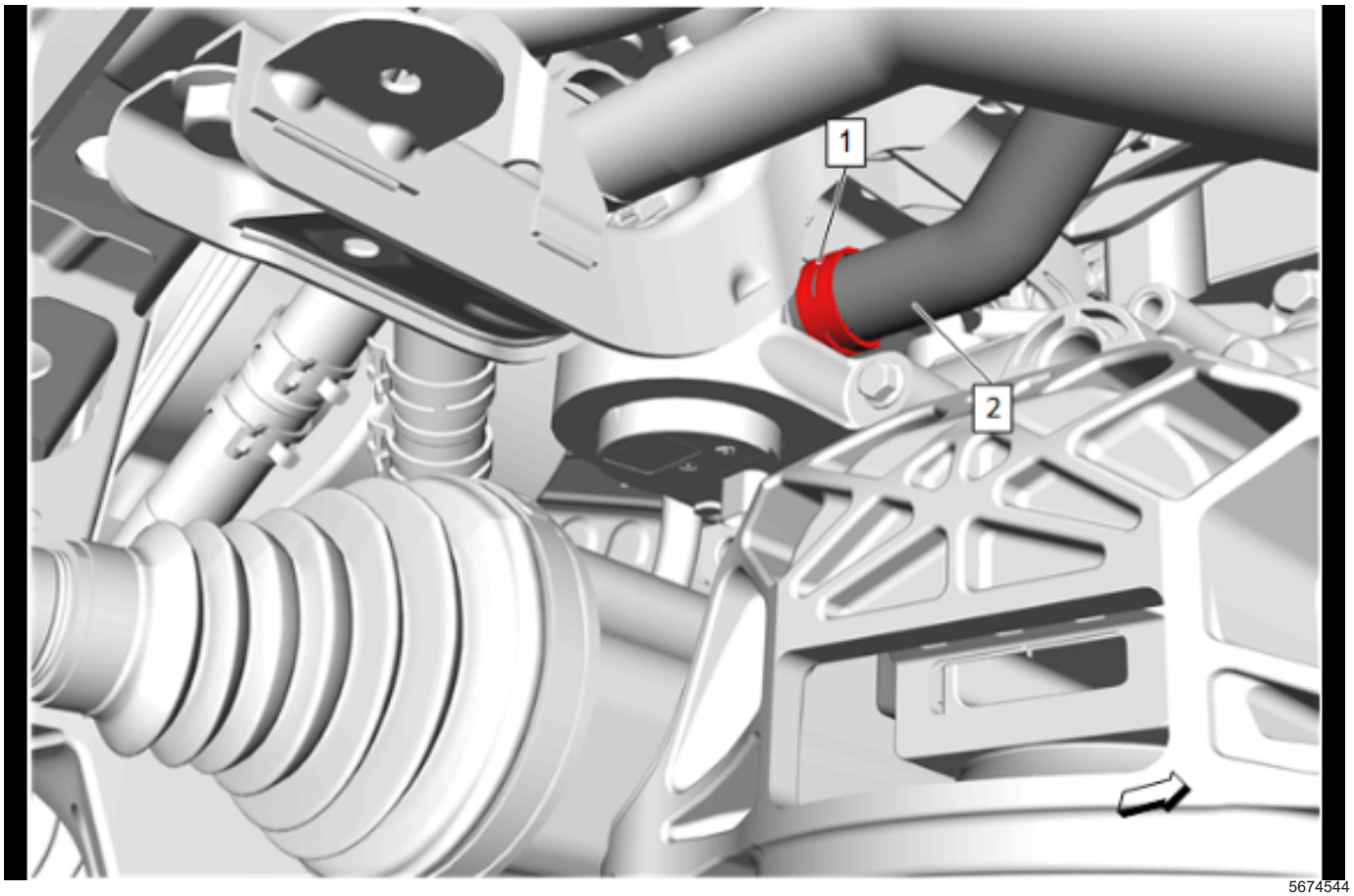

5674544

24. Clamp (1) » Disengage — Hose Clamp Replacement Guidelines - Spring Type
25. Auxiliary Heater Outlet Hose (2) @ Heater Coolant Pump » Remove
26. Auxiliary Heater Outlet Hose (2) @ Vehicle » Remove

Installation Procedure

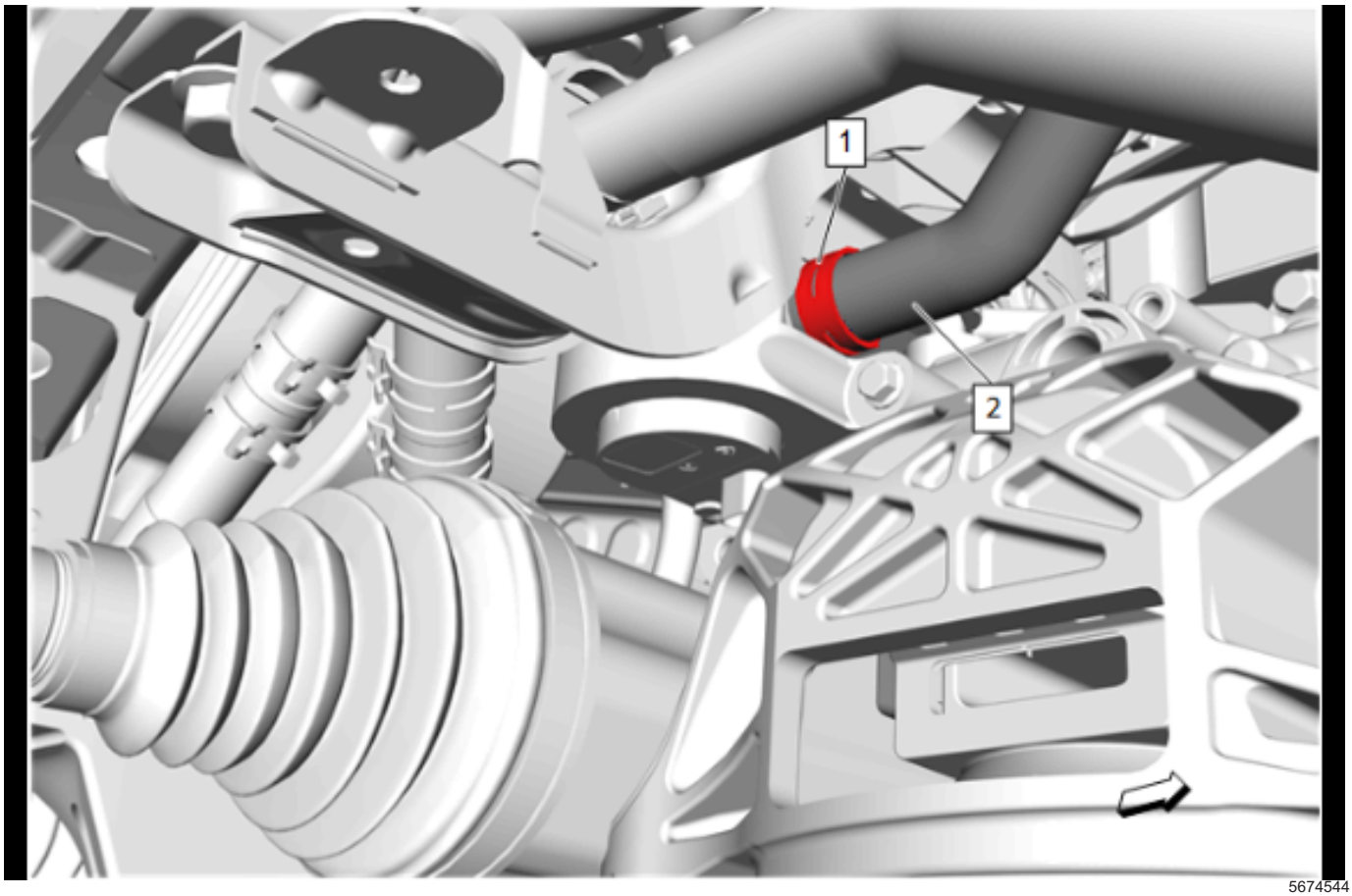

5674544

1. Auxiliary Heater Outlet Hose (2) @ Heater Coolant Pump » Install
2. Clamp (1) » Engage — Hose Clamp Replacement Guidelines - Spring Type

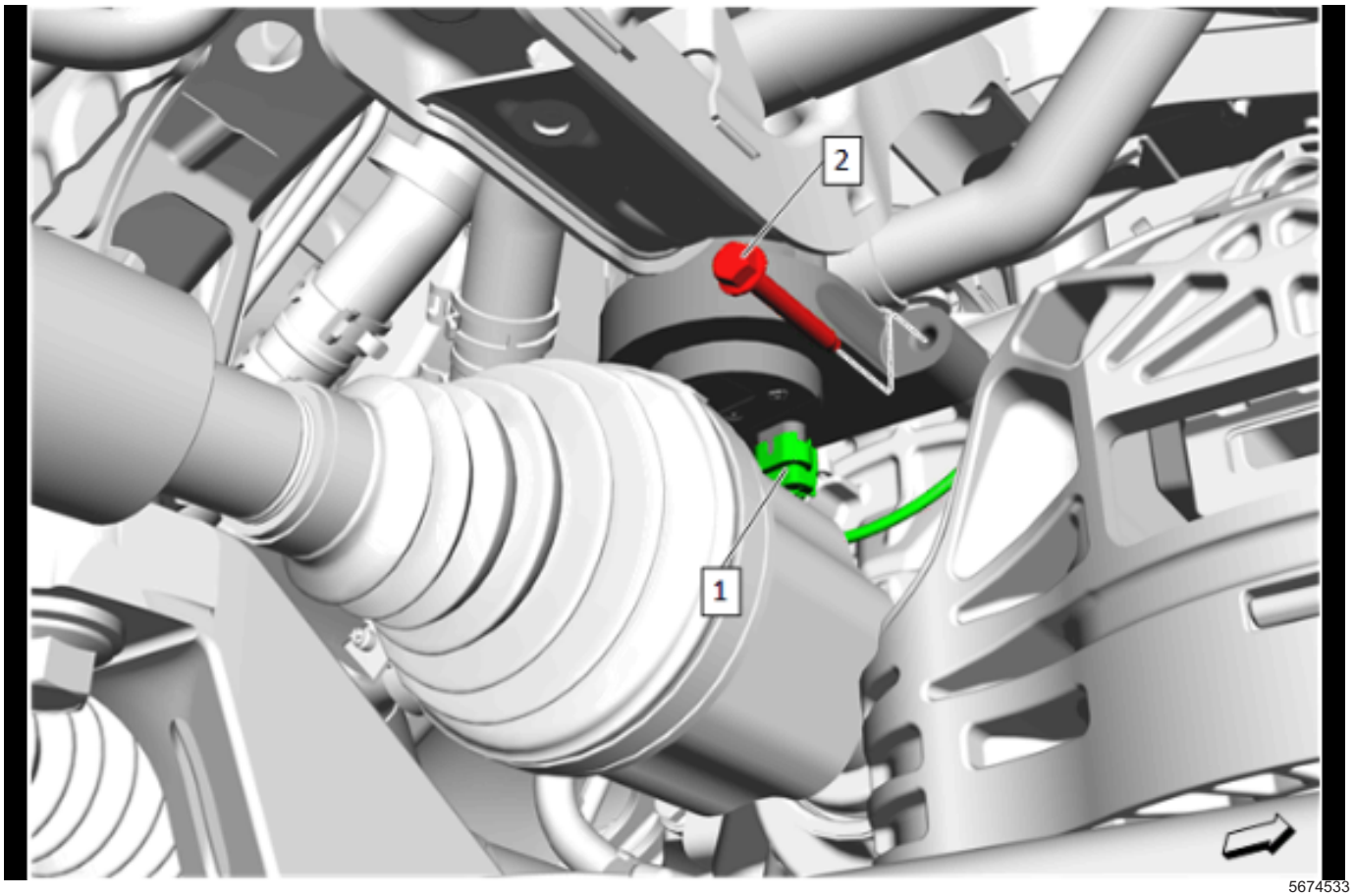

5674533

3. Heater Coolant Pump Bolt (2) » Install and tighten — *Fastener Specifications on page 5-3*
4. Electrical Connector (1) » Connect

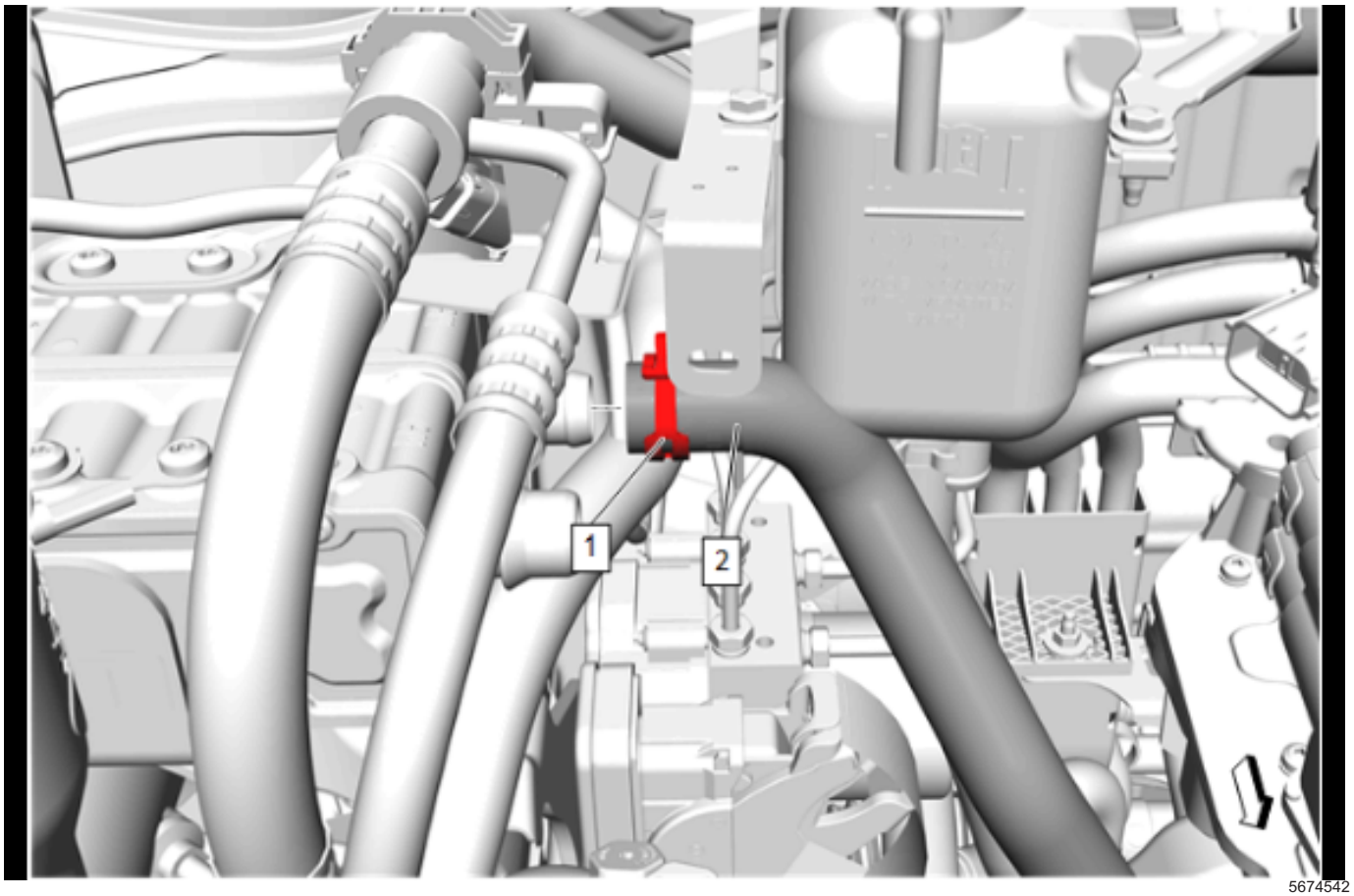

5674542

5. Auxiliary Heater Outlet Hose (2) @ Heater Coolant Heater » Install
6. Clamp (1) » Engage — Hose Clamp Replacement Guidelines - Spring Type

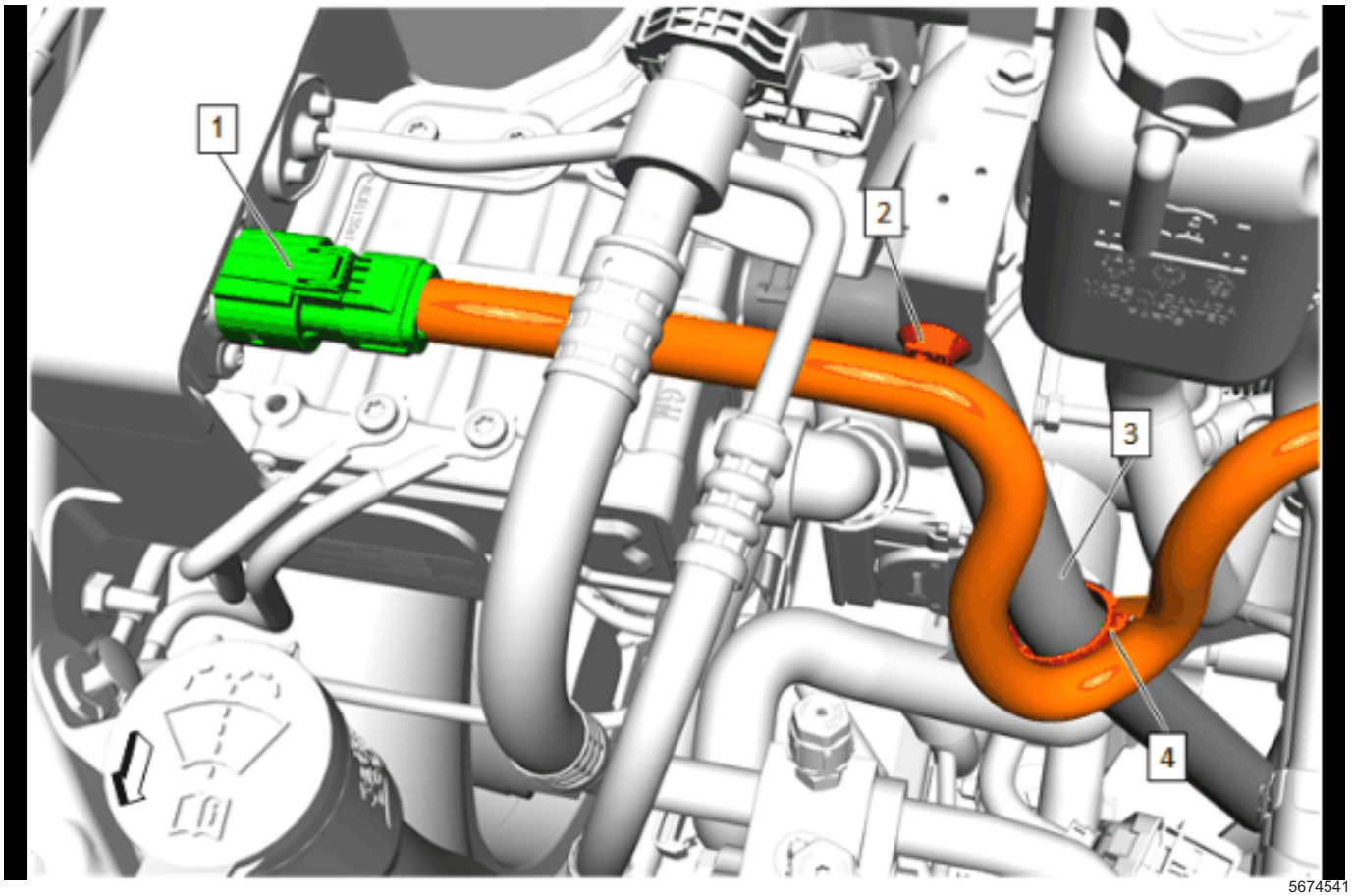

5674541

7. Auxiliary Heater Outlet Hose (3) @ Retainer (4)
   » Install
8. Retainer (2) » Install
9. High Voltage Cable Connector (1) » Connect

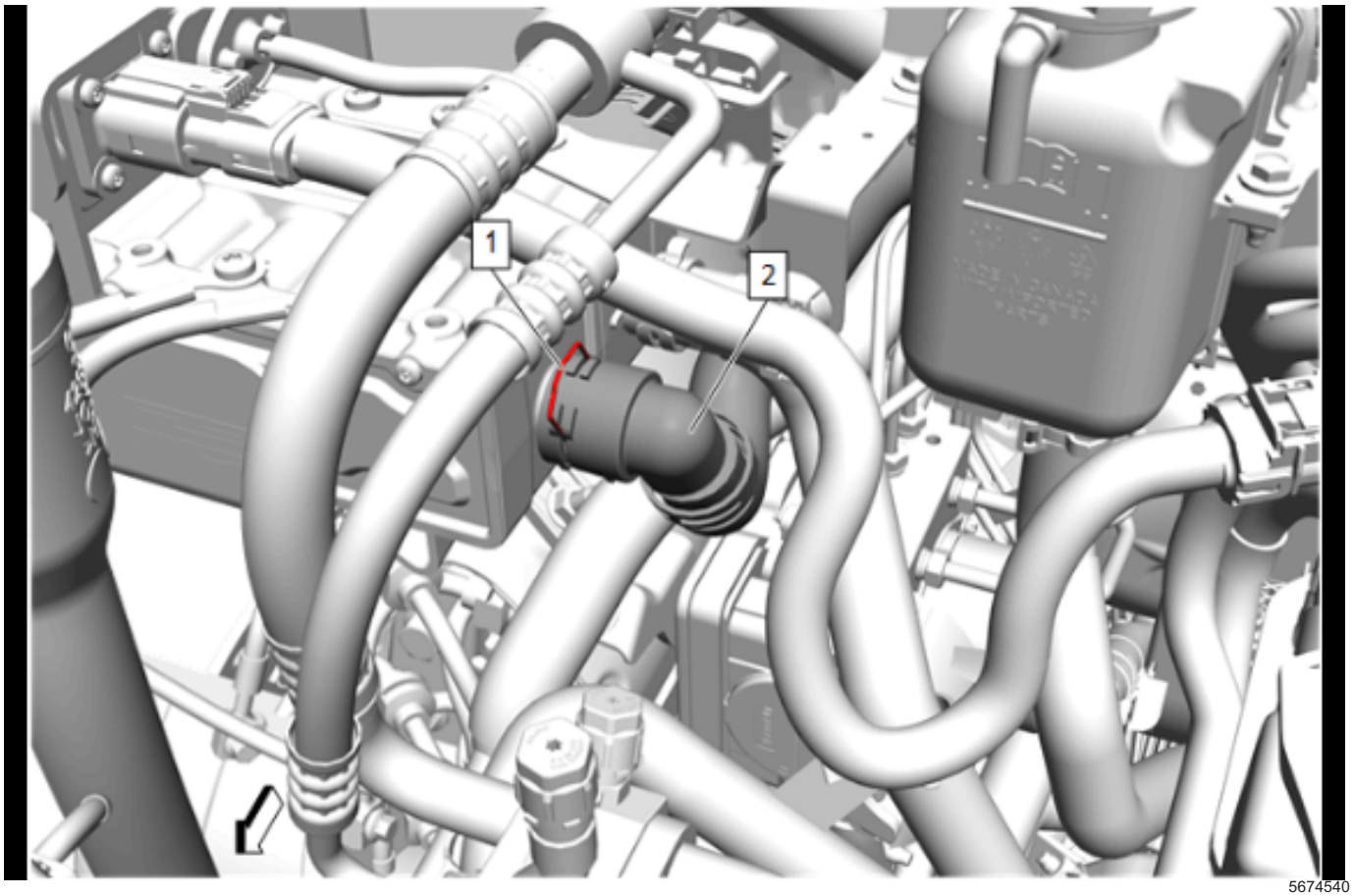

5674540

10. Heater Outlet Hose (2) @ Heater Coolant Heater
    » Install
11. Heater Outlet Hose Connector Retainer (1) »
    Engage

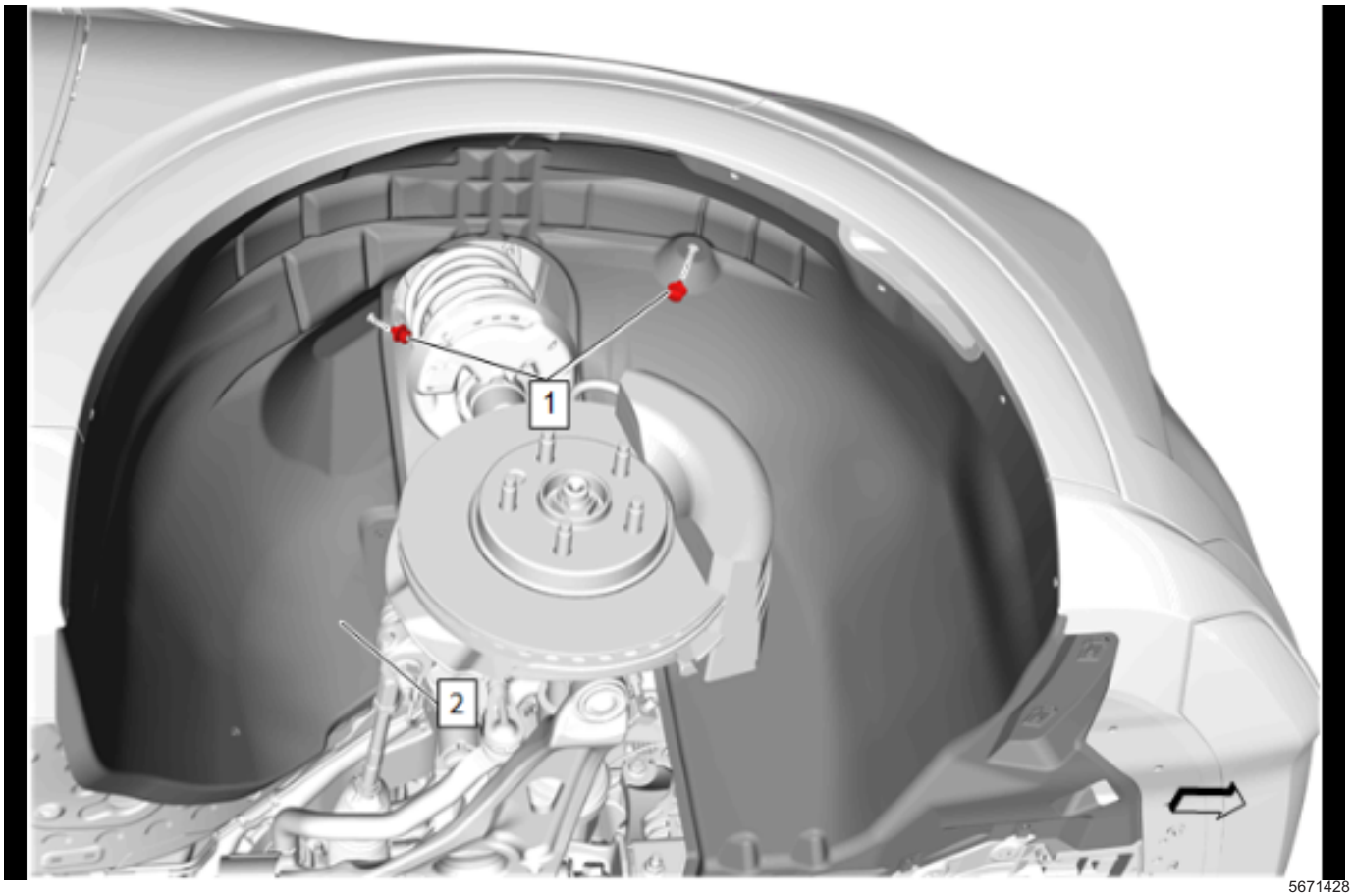

5671428

12. Front Wheelhouse Liner - Right Side (2) » Install
13. Front Wheelhouse Liner Retainer (1) » Install [2x]

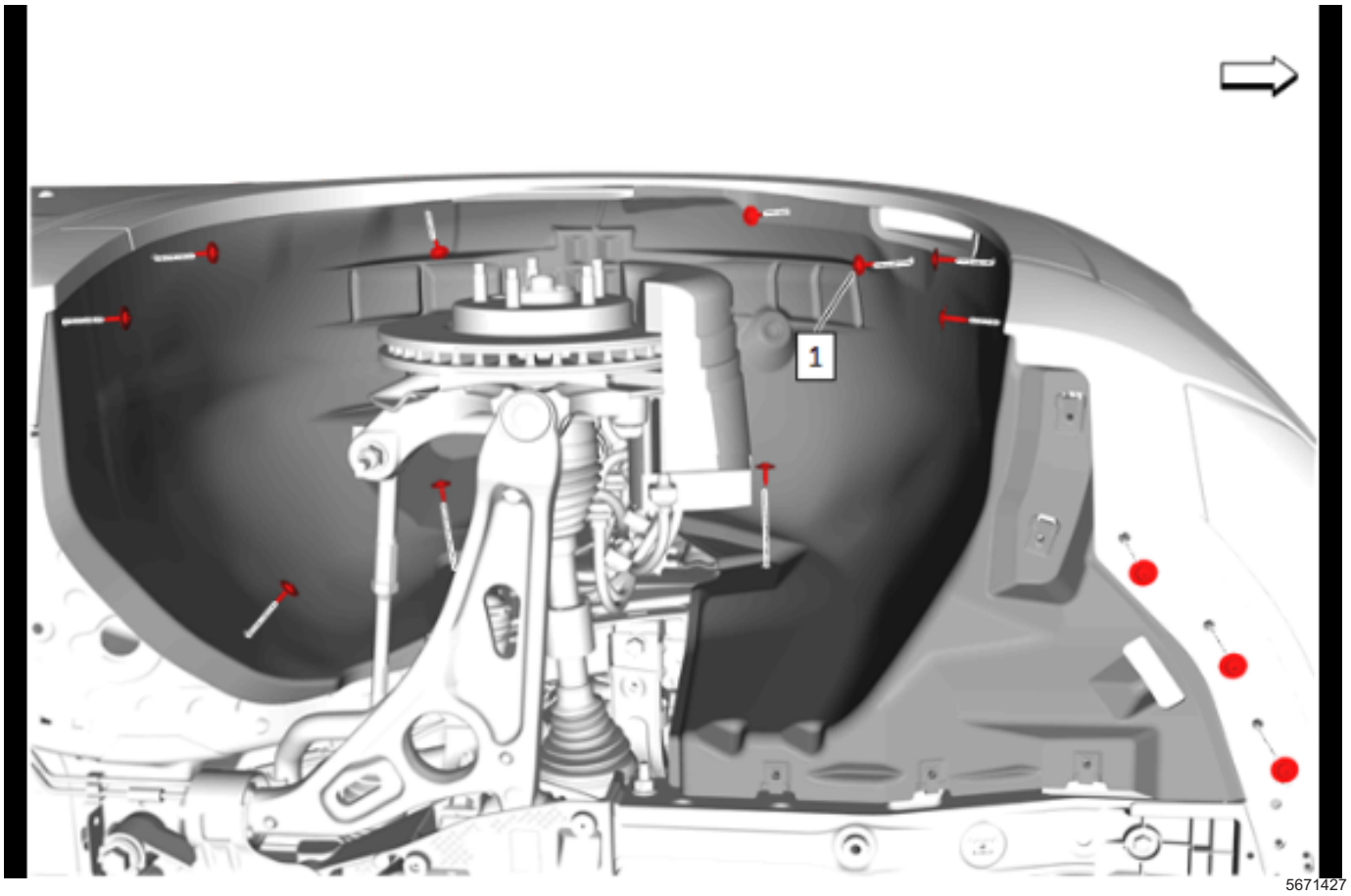

14. Front Wheelhouse Liner Bolt (1) » Install and tighten [13x]

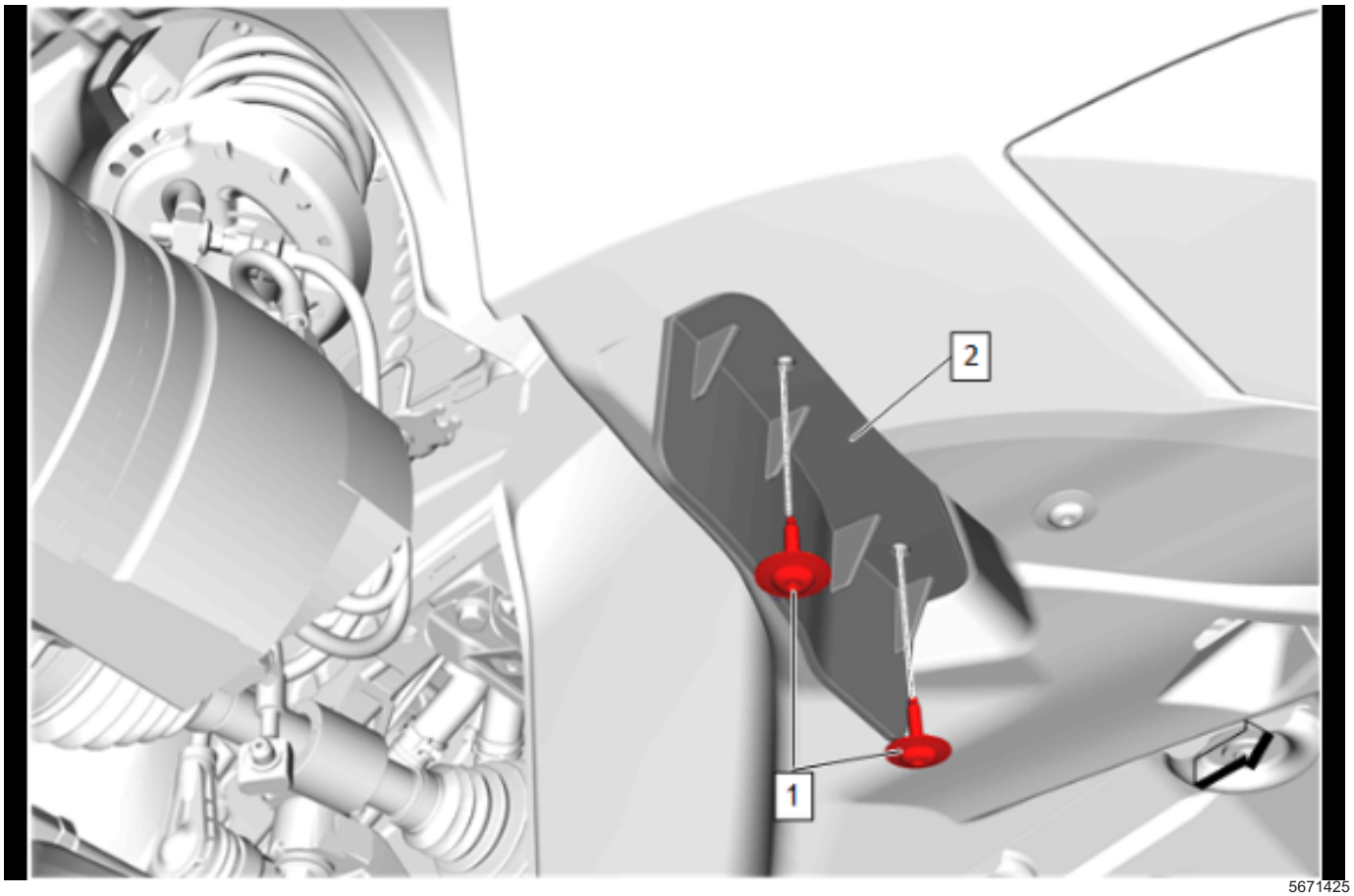

5671425

15. Front Tire Front Air Deflector (2) » Install
16. Front Tire Front Air Deflector Bolt (1) » Install and tighten [2x]
17. Install the right front tire and wheel assembly.

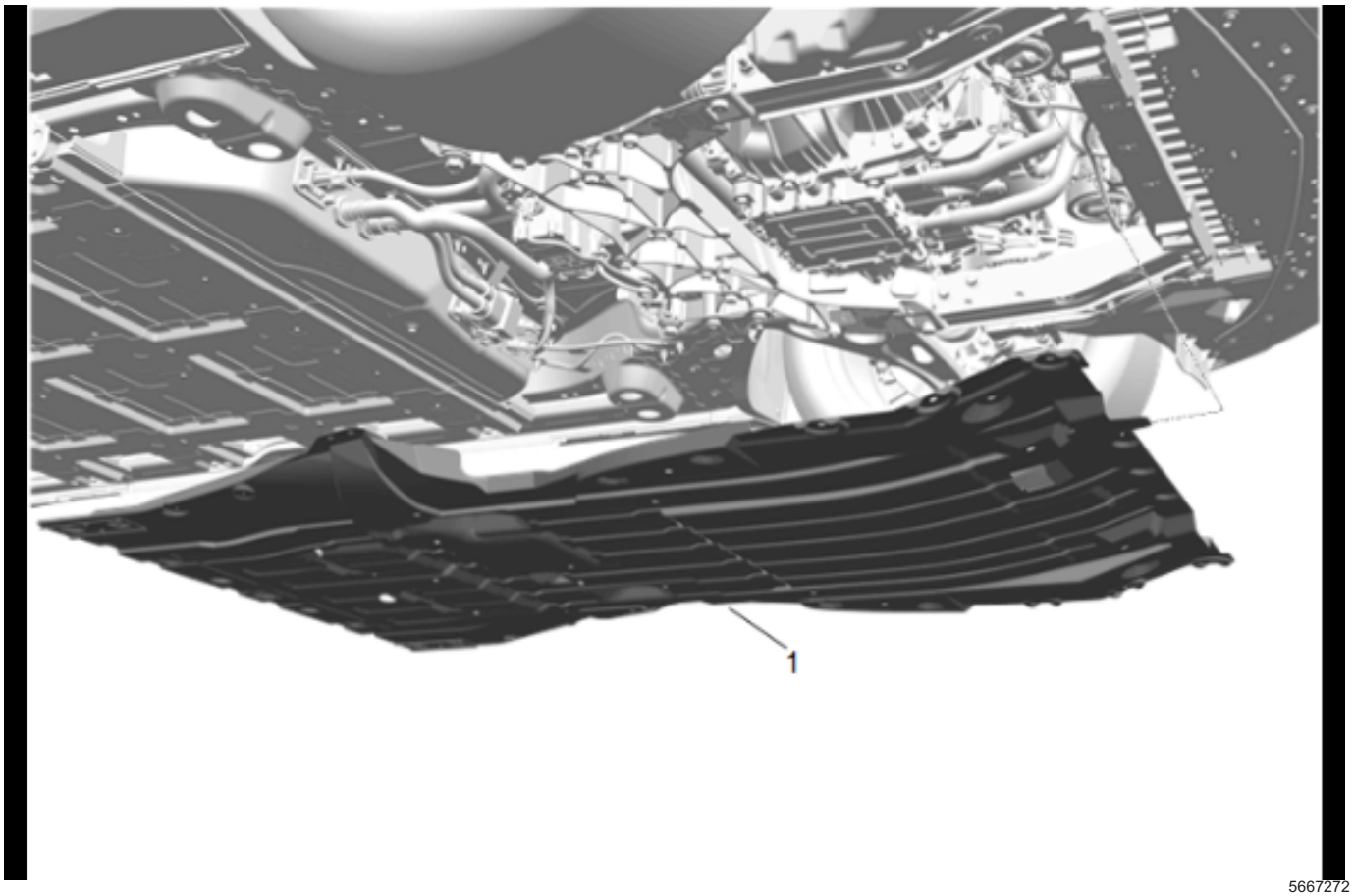

5667272

18. Front Compartment Air Deflector (1) » Install

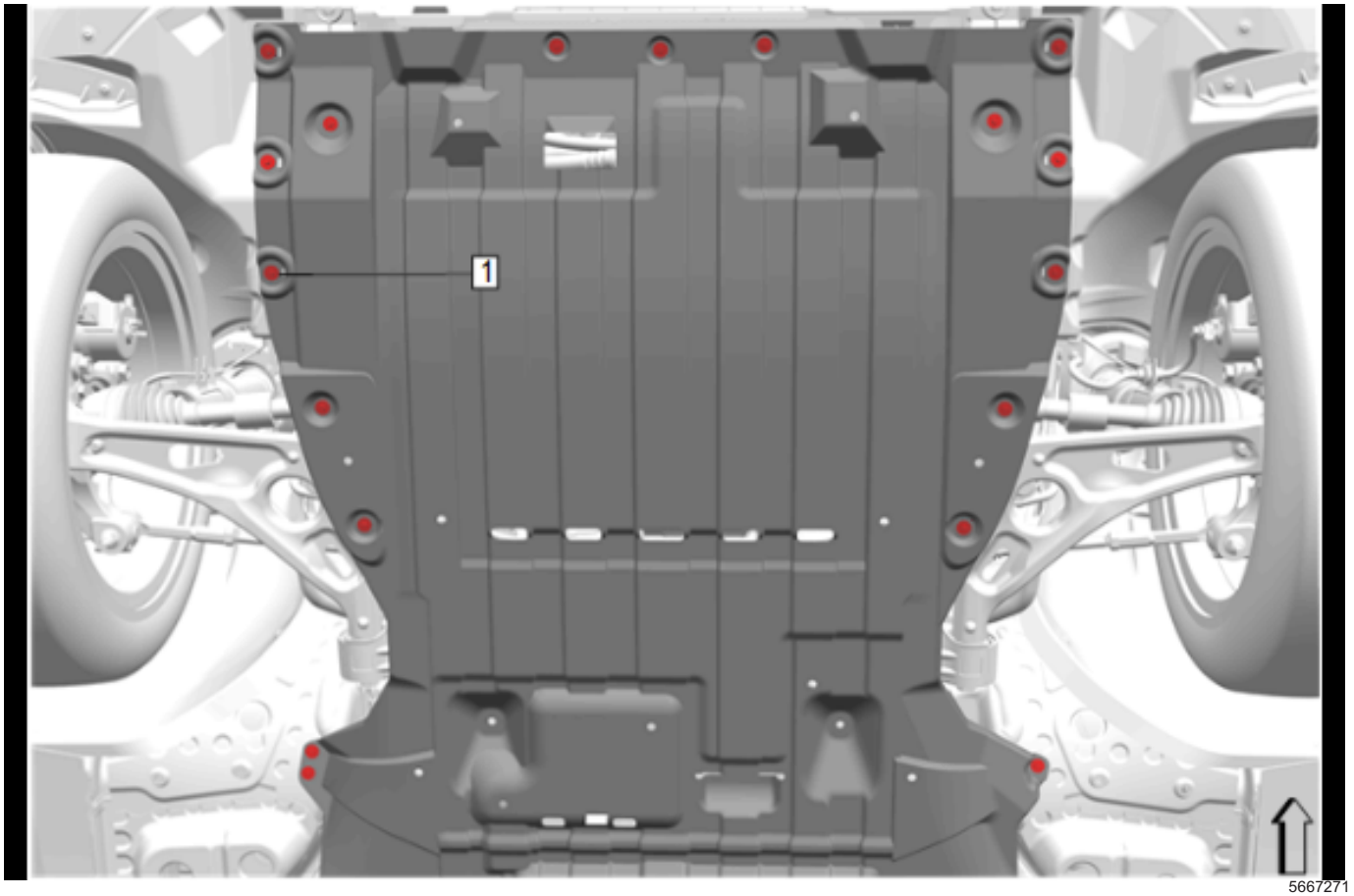

5667271

19. Front Compartment Air Deflector Bolt (1) » Install and tighten [18x]

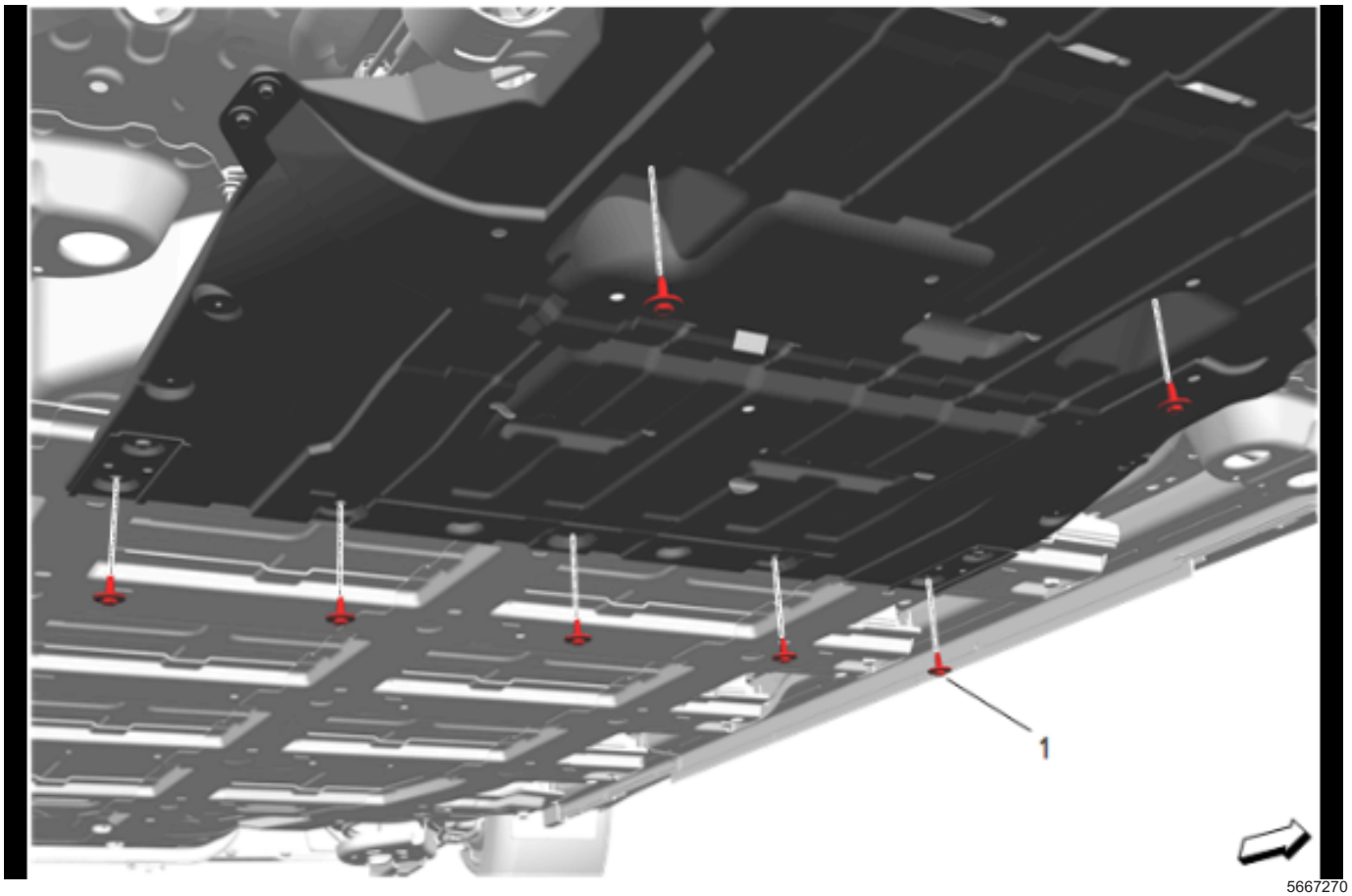

5667270

20. Front Compartment Air Deflector Bolt (1) » Install and tighten [7x]

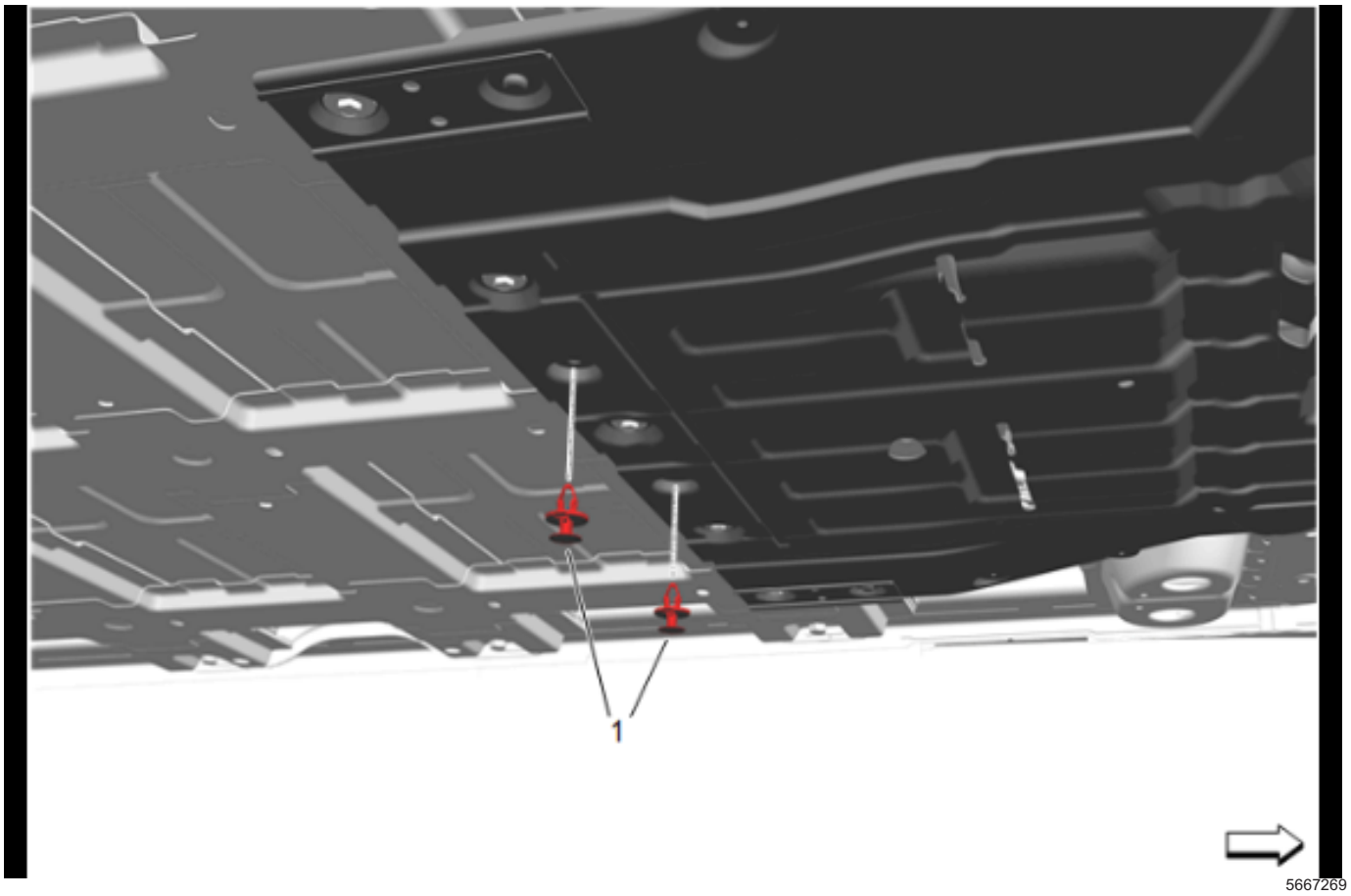

21. Front Compartment Air Deflector Retainer (1) » Install [2x]
22. Lower the vehicle.
23. Fill the cooling system. *Heater Coolant Heater Draining and Filling on page 5-39*
24. Enable the high voltage system.
25. Check the cooling system for leaks.

Heater Outlet Hose Replacement

Removal Procedure

Danger: Before conducting any repair to this high voltage cooling system, it is necessary to determine/verify whether no high-voltage system faults exist. If high-voltage faults exist, follow published DTC diagnostics/repair procedures prior to performing any cooling system repairs. Failure to correct High Voltage Faults before working on the high voltage cooling system could result in personal injury or death.

1. Turn vehicle power OFF and remove all keyless entry transmitters from the vehicle and secure in a place outside the vehicle.
2. Drain the cooling system. *Heater Coolant Heater Draining and Filling on page 5-39*

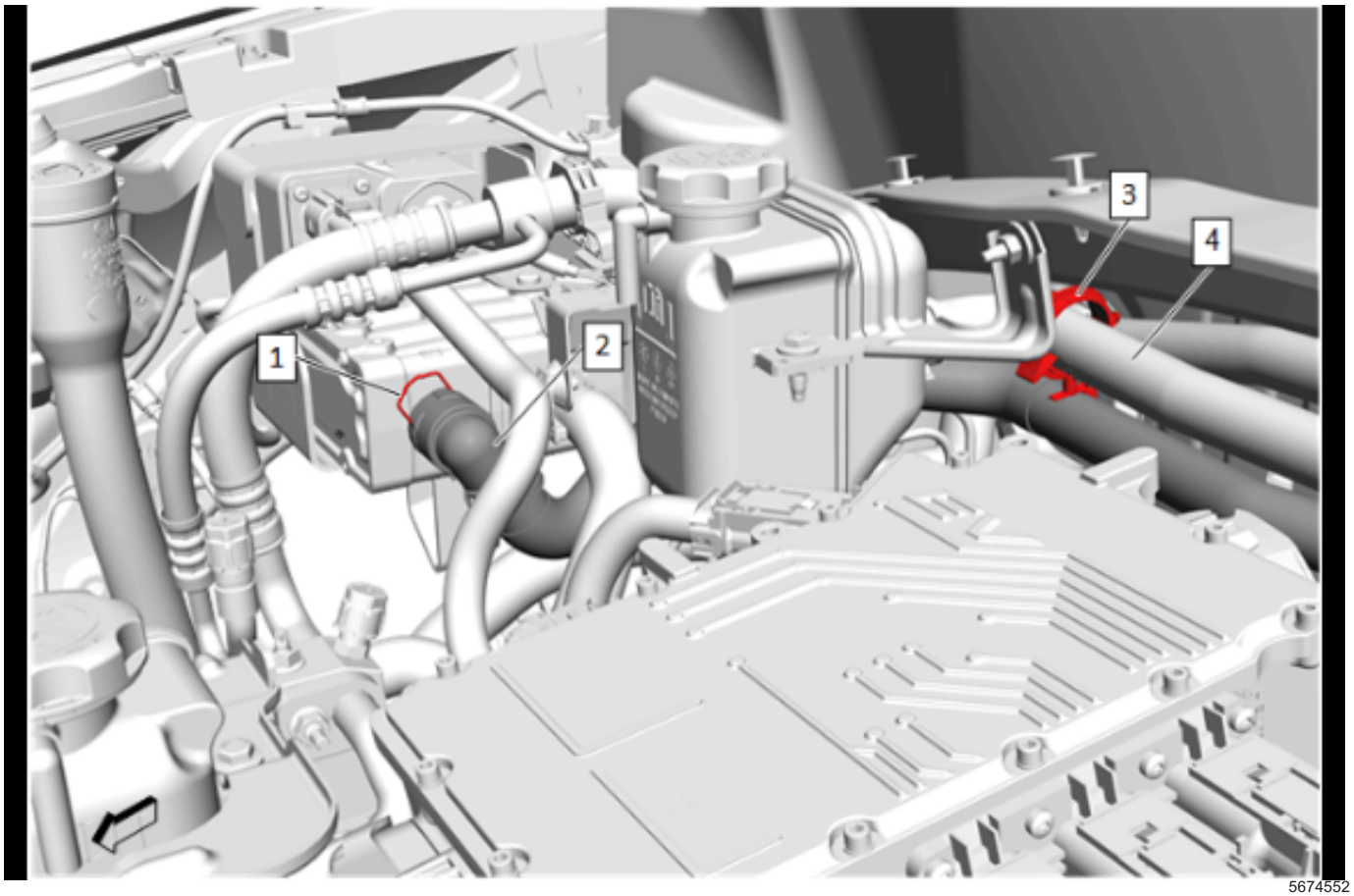

5674552

3. Heater Outlet Hose Connector Retainer (1) » Disengage
4. Heater Outlet Hose (2) @ Heater Coolant Heater » Remove
5. Heater Inlet Hose (4) @ Retainer (3) » Remove

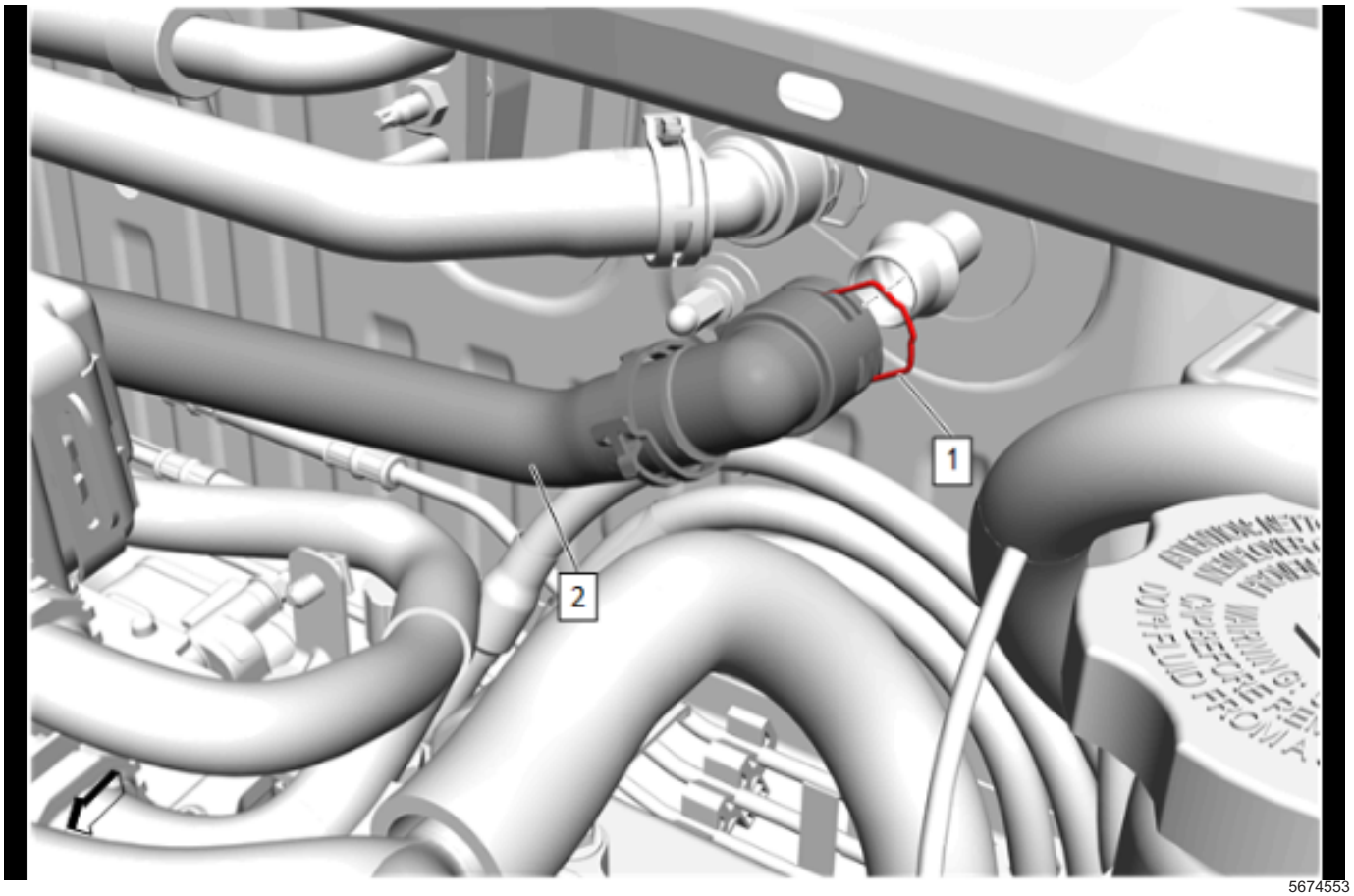

5674553

6. Heater Outlet Hose Connector Retainer (1) » Disengage
7. Heater Outlet Hose (2) @ Heater Core Outlet Tube » Remove

Installation Procedure

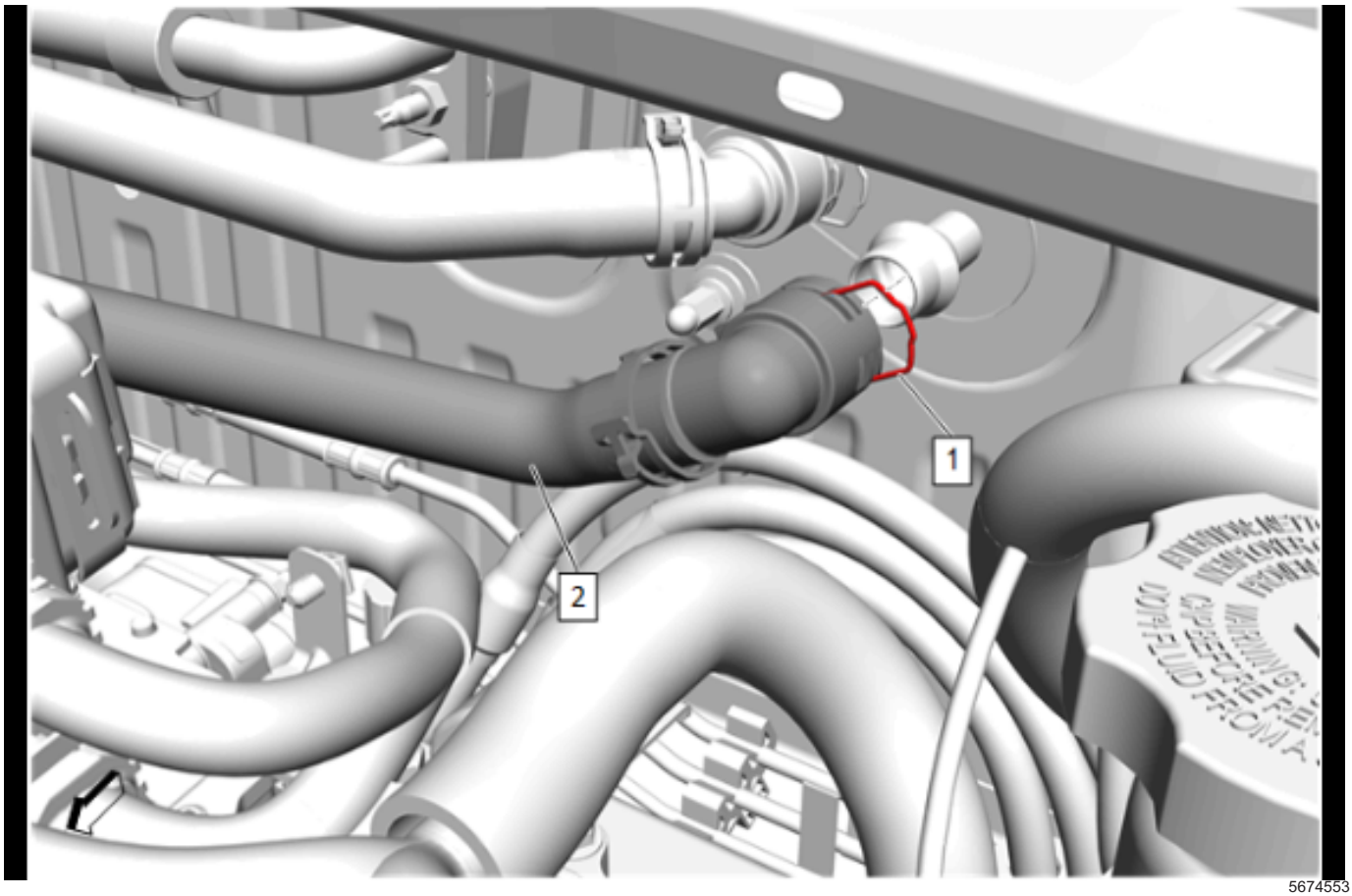

5674553

1. Heater Outlet Hose (2) @ Heater Core Outlet Tube » Install
2. Heater Outlet Hose Connector Retainer (1) » Engage

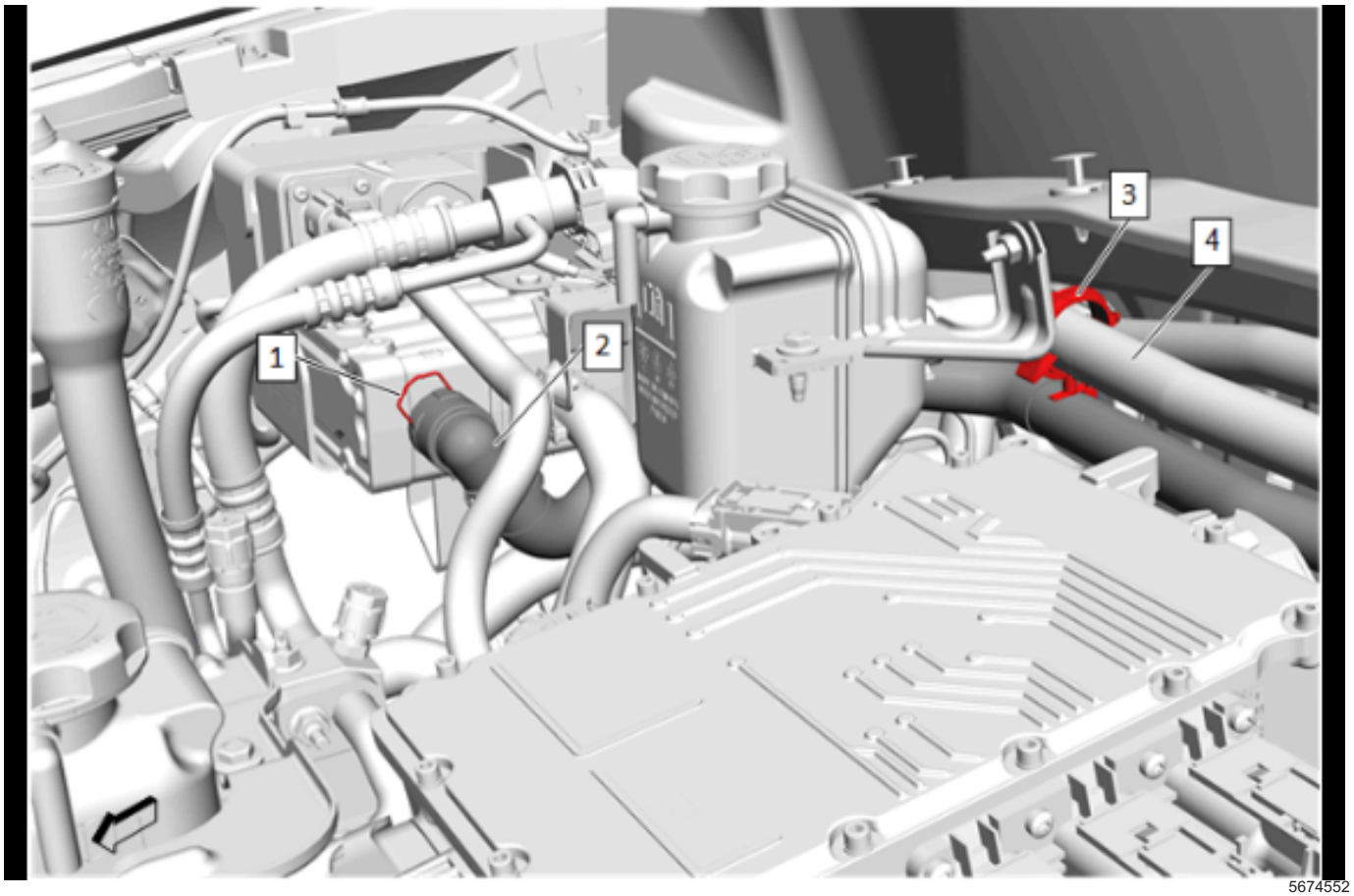

5674552

3. Heater Inlet Hose (4) @ Retainer (3) » Install
4. Heater Outlet Hose (2) @ Heater Coolant Heater » Install
5. Heater Outlet Hose Connector Retainer (1) » Engage
6. Fill the cooling system. *Heater Coolant Heater Draining and Filling on page 5-39*
7. Check the cooling system for leaks.

Heater Coolant Pump Replacement

Removal Procedure

Danger: Before conducting any repair to this high voltage cooling system, it is necessary to determine/verify whether no high-voltage system faults exist. If high-voltage faults exist, follow published DTC diagnostics/repair procedures prior to performing any cooling system repairs. Failure to correct High Voltage Faults before working on the high voltage cooling system could result in personal injury or death.

1. Turn vehicle power OFF and remove all keyless entry transmitters from the vehicle and secure in a place outside the vehicle.
2. Disconnect the battery negative cable.
3. Drain the cooling system. *Heater Coolant Heater Draining and Filling on page 5-39*
4. Raise and support the vehicle.

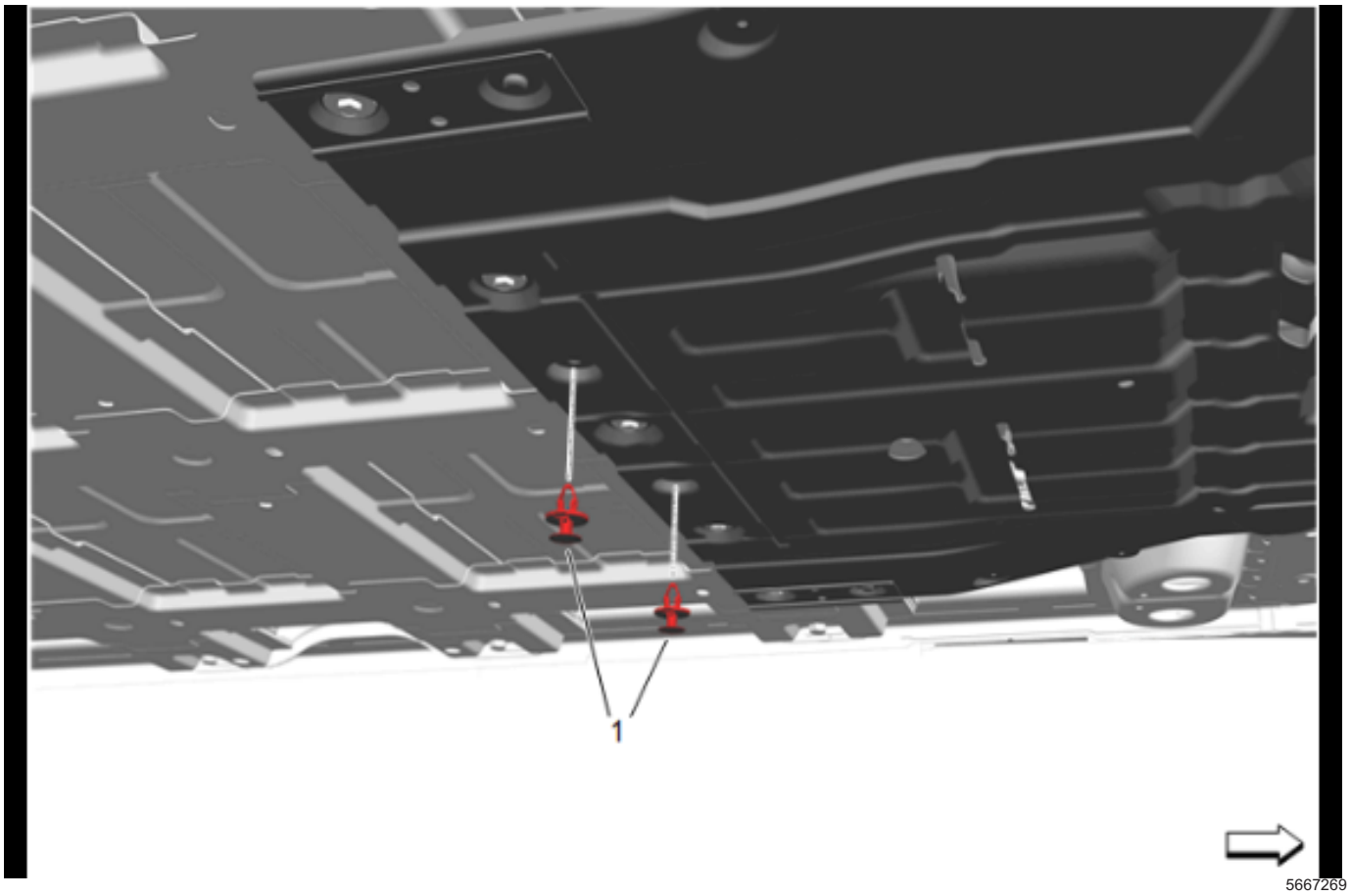

5. Front Compartment Air Deflector Retainer (1) » Remove [2x]

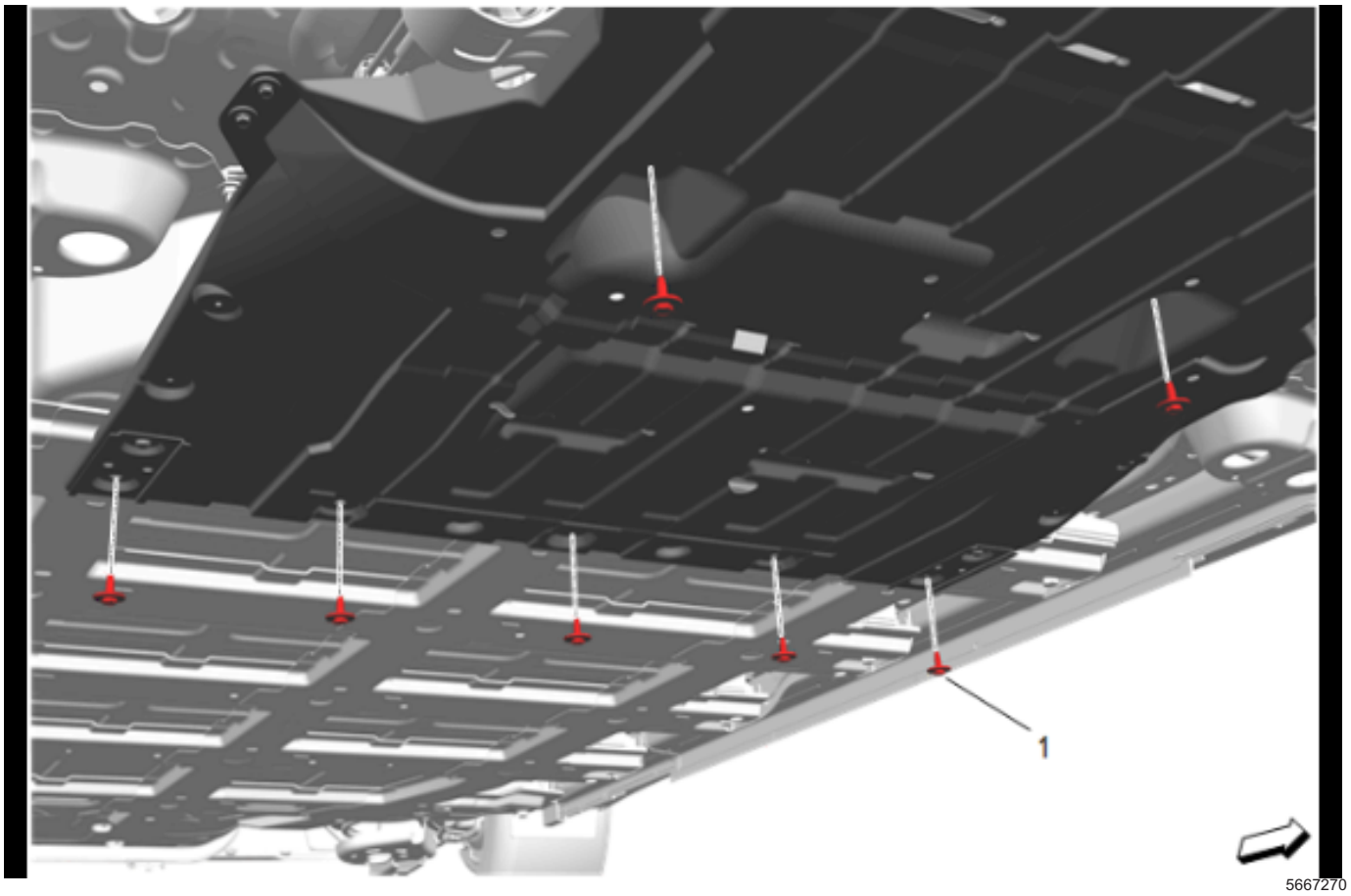

6. Front Compartment Air Deflector Bolt (1) »
   Remove [7x]

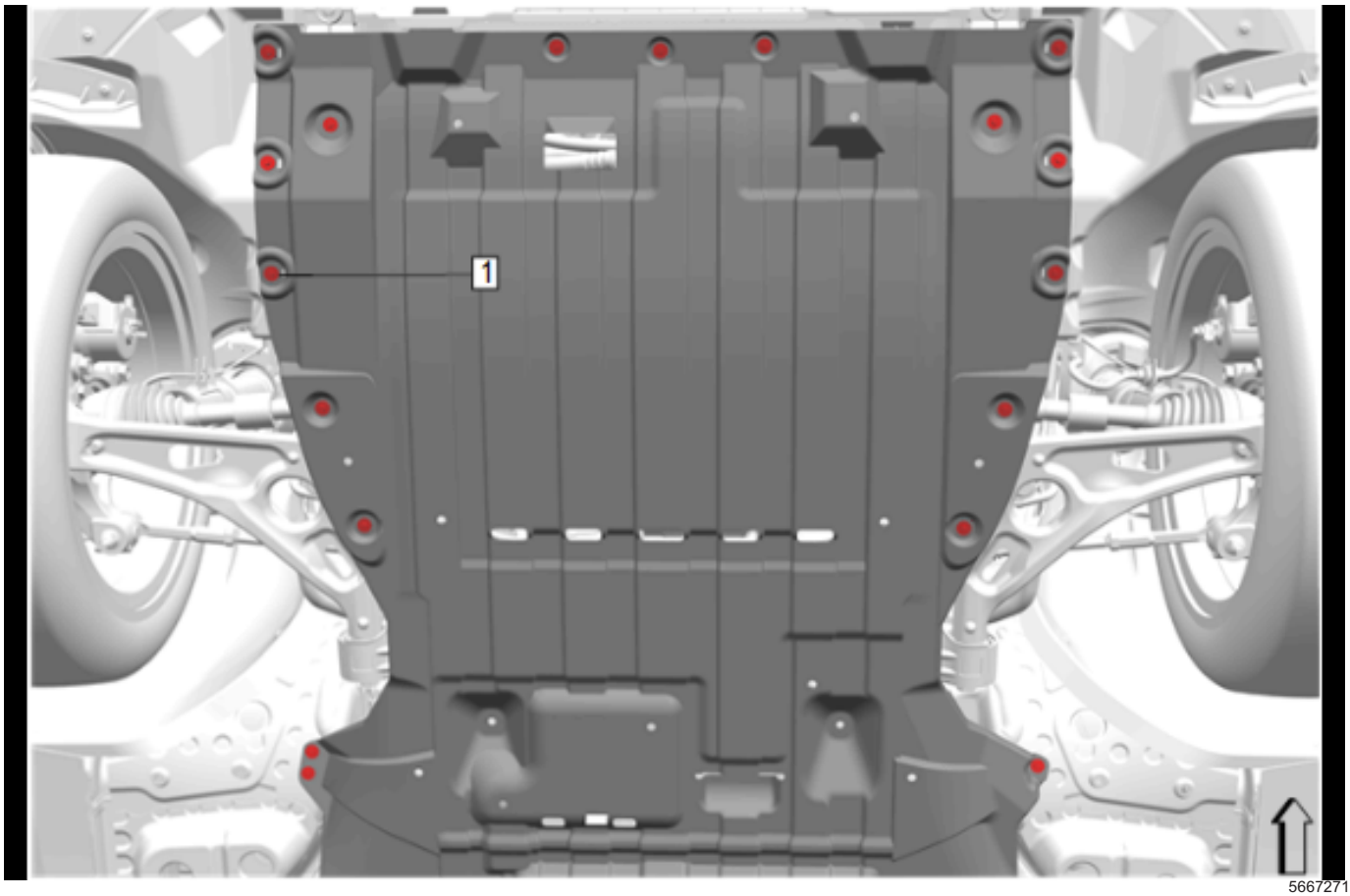

5667271

7. Front Compartment Air Deflector Bolt (1) »
   Remove [18x]

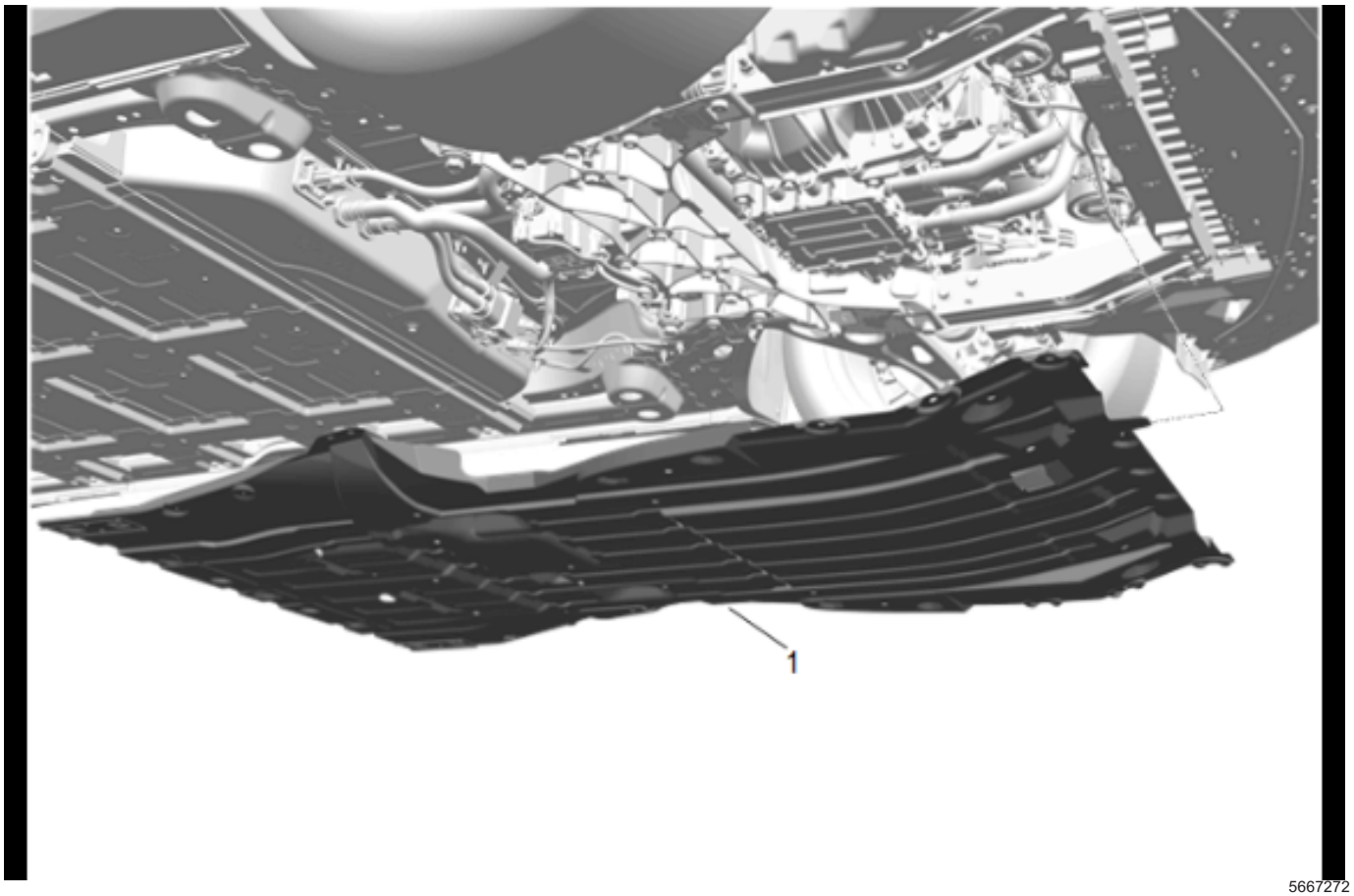

5667272

8. Front Compartment Air Deflector (1) » Remove
9. Remove the right front tire and wheel assembly.

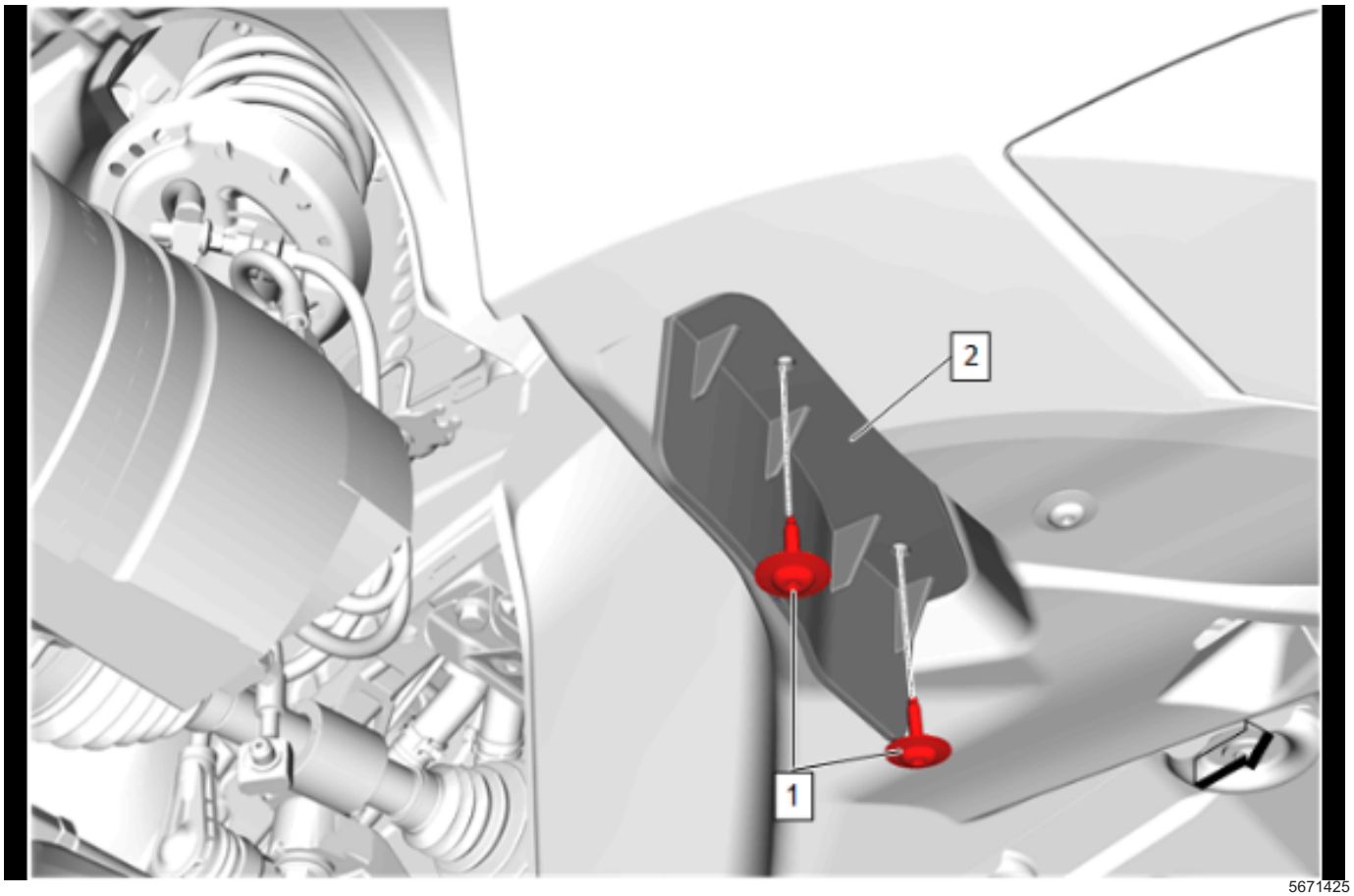

5671425

10. Front Tire Front Air Deflector Bolt (1) » Remove [2x]
11. Front Tire Front Air Deflector (2) » Remove

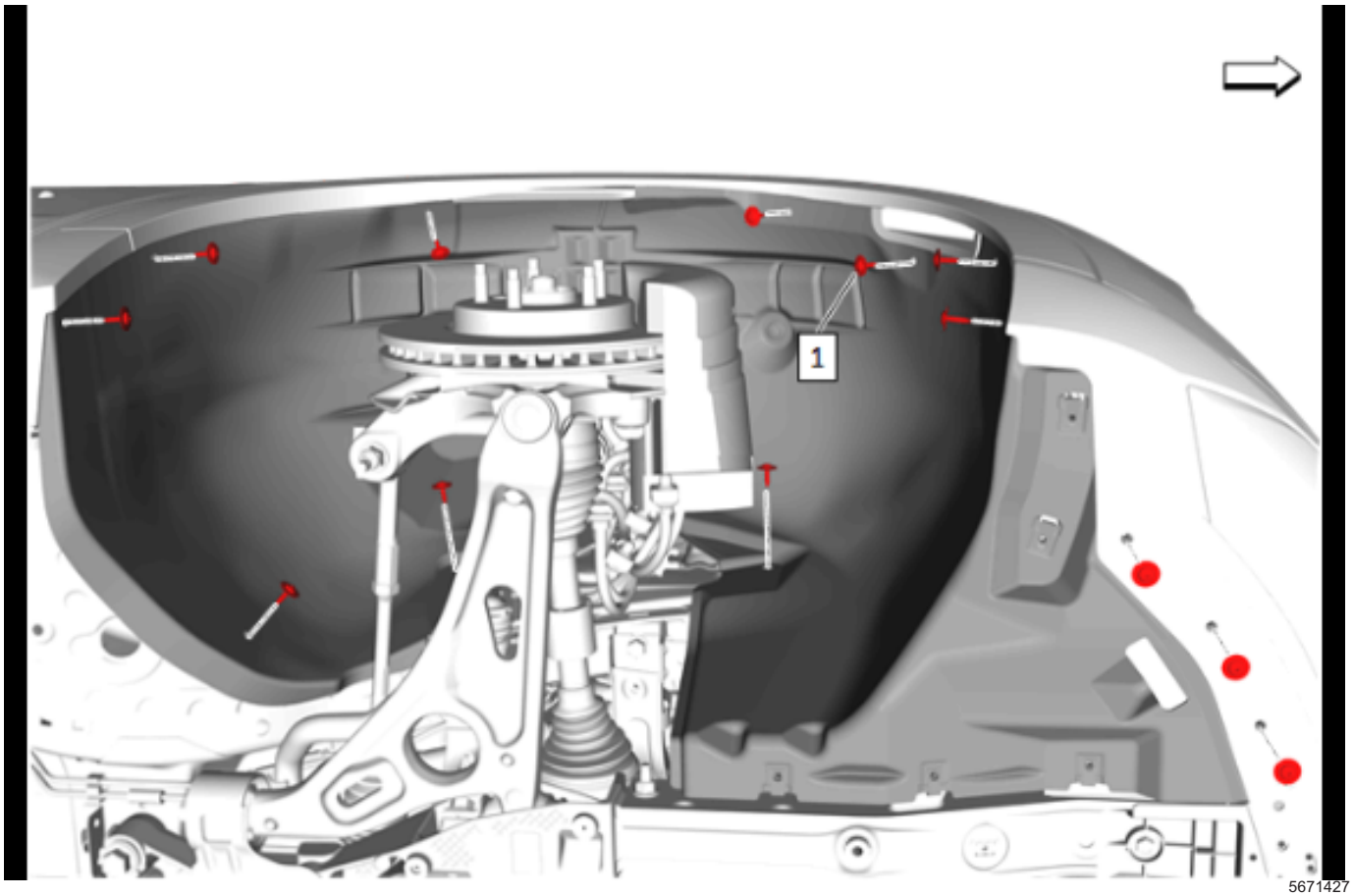

5671427

12. Front Wheelhouse Liner Bolt (1) » Remove [13x]

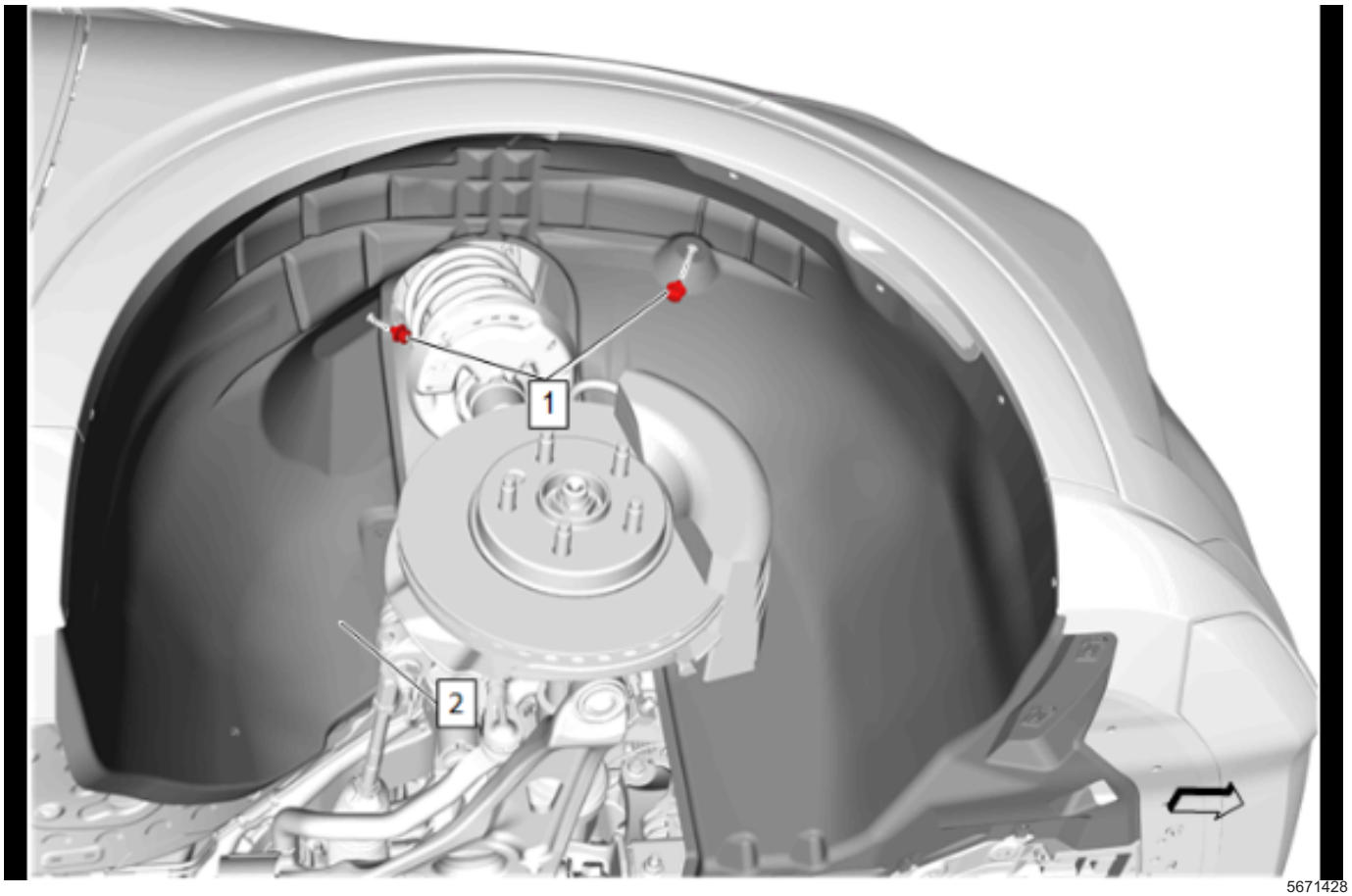

5671428

13. Front Wheelhouse Liner Retainer (1) » Remove [2x]
14. Front Wheelhouse Liner - Right Side (2) » Remove

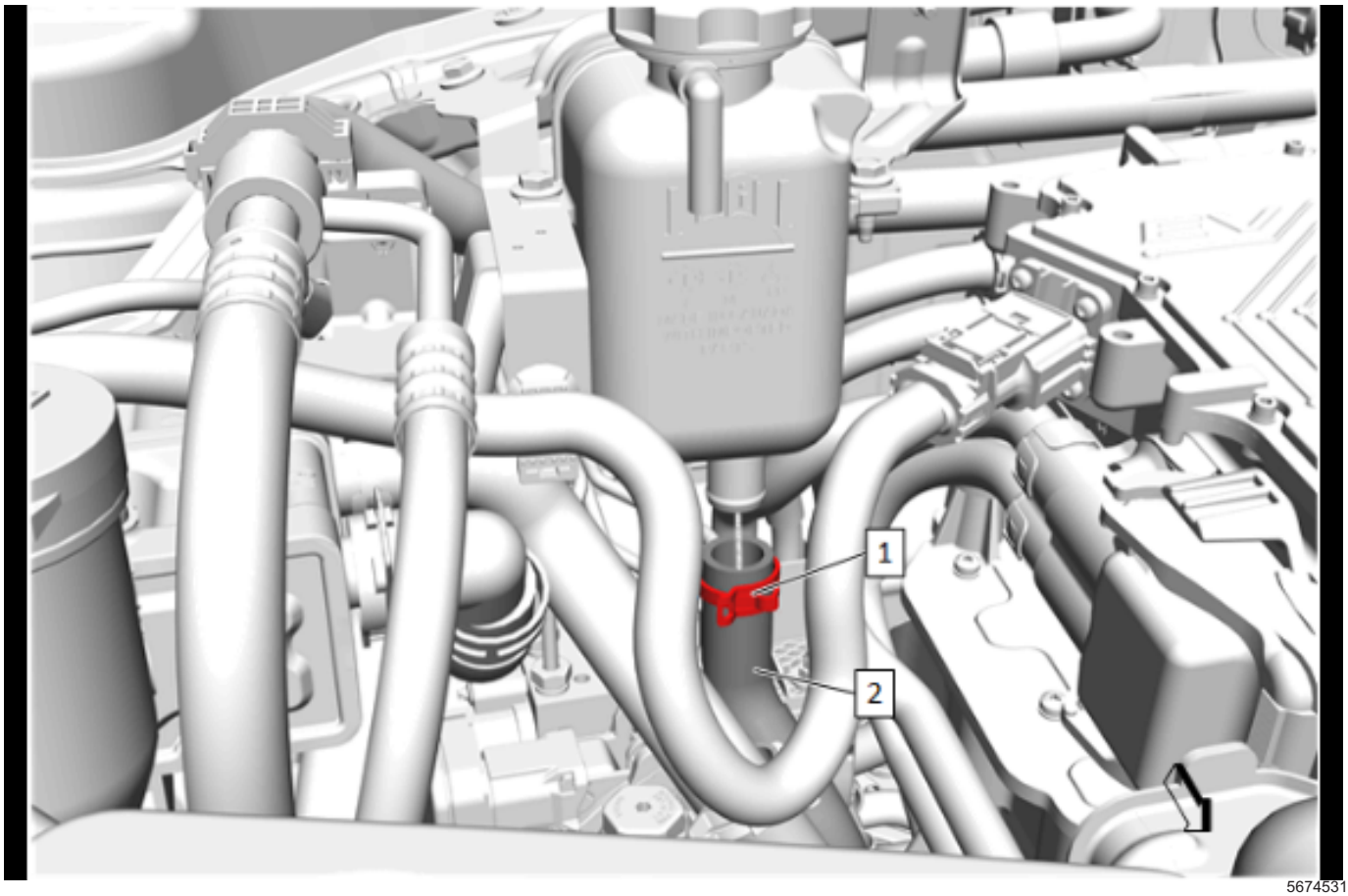

5674531

15. Clamp (1) » Disengage — Hose Clamp Replacement Guidelines - Spring Type
16. Auxiliary Heater Inlet Hose (2) @ Heater Coolant Surge Tank » Remove

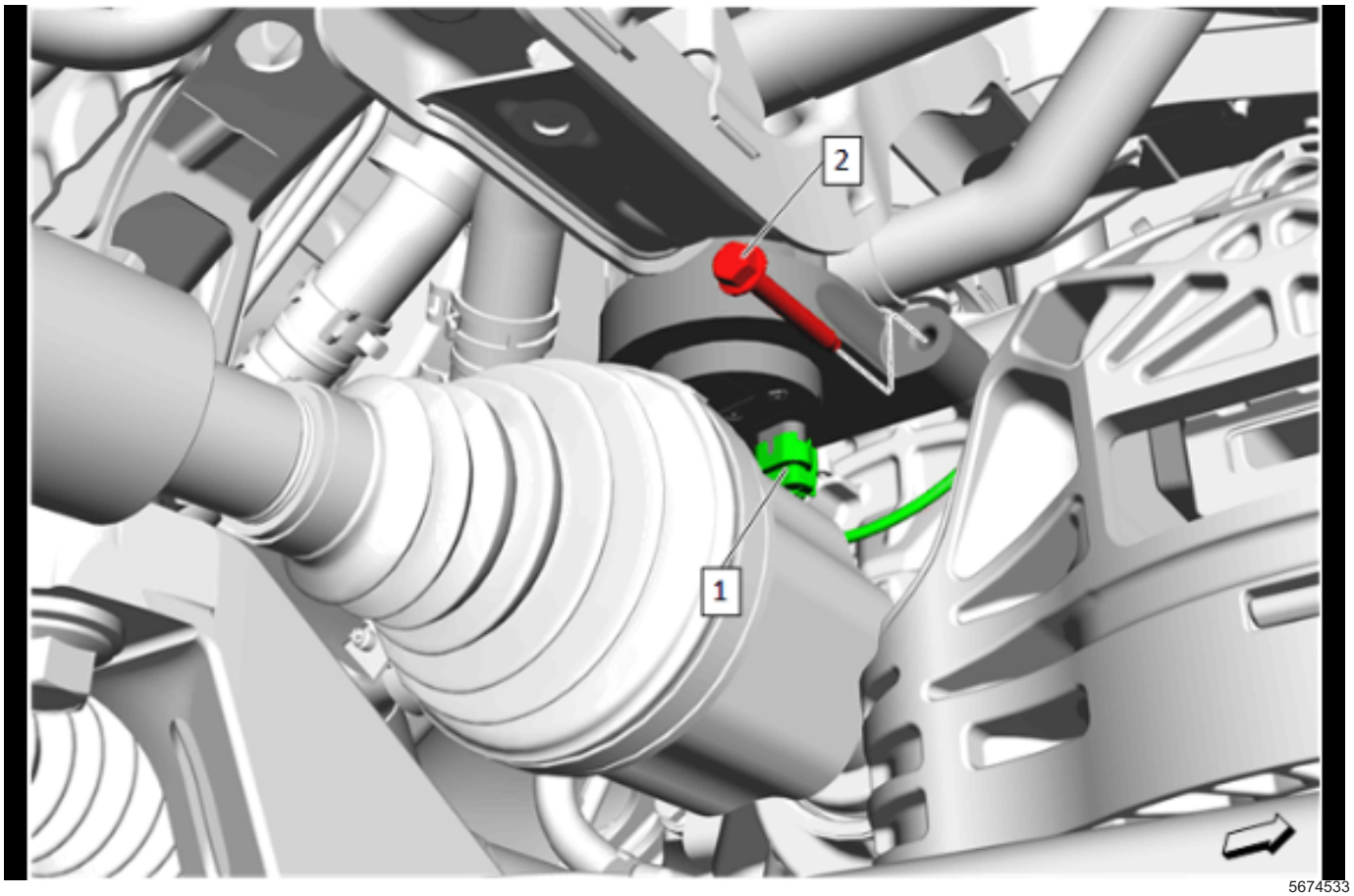

5674533

17. Electrical Connector (1) » Disconnect
18. Heater Coolant Pump Bolt (2) » Remove
19. Reposition the heater coolant pump on the rubber mount to access the clamp.

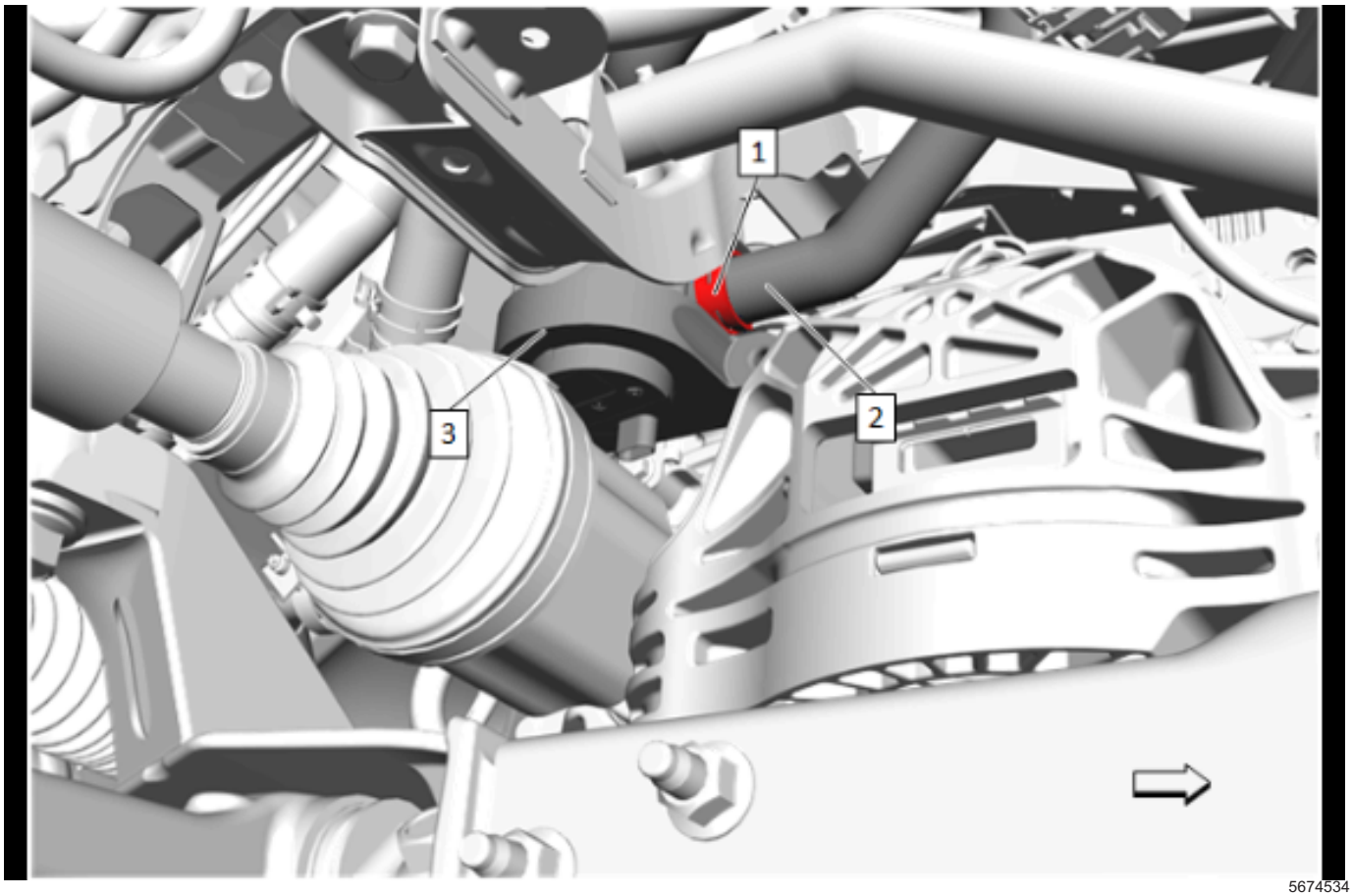

5674534

20. Clamp (1) » Disengage — Hose Clamp Replacement Guidelines - Spring Type
21. Auxiliary Heater Outlet Hose (2) @ Heater Coolant Pump (3) » Remove

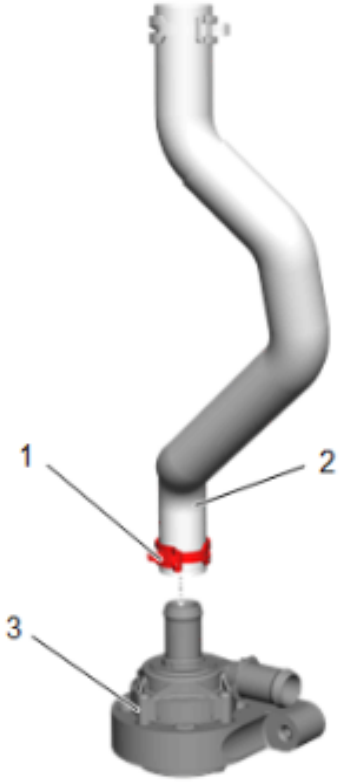

5674546

22. Remove the heater coolant pump with the auxiliary heater inlet hose.
23. Clamp (1) » Disengage — Hose Clamp Replacement Guidelines - Spring Type
24. Heater Coolant Pump (3) @ Auxiliary Heater Inlet Hose (2) » Remove

Installation Procedure

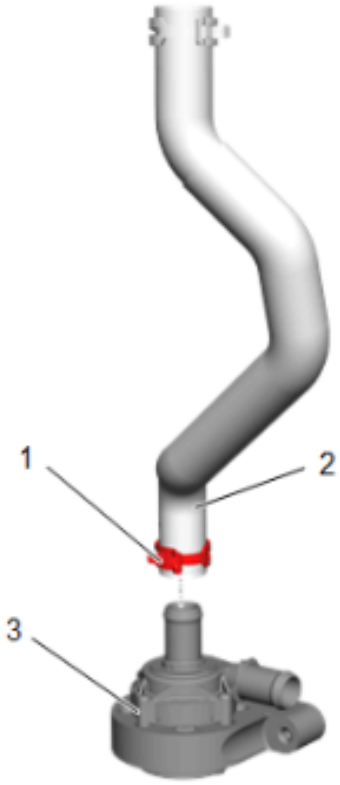

5674546

1. Heater Coolant Pump (3) @ Auxiliary Heater Inlet Hose (2) » Install
2. Clamp (1) » Engage — Hose Clamp Replacement Guidelines - Spring Type
3. Position the heater coolant pump with the auxiliary heater inlet hose.

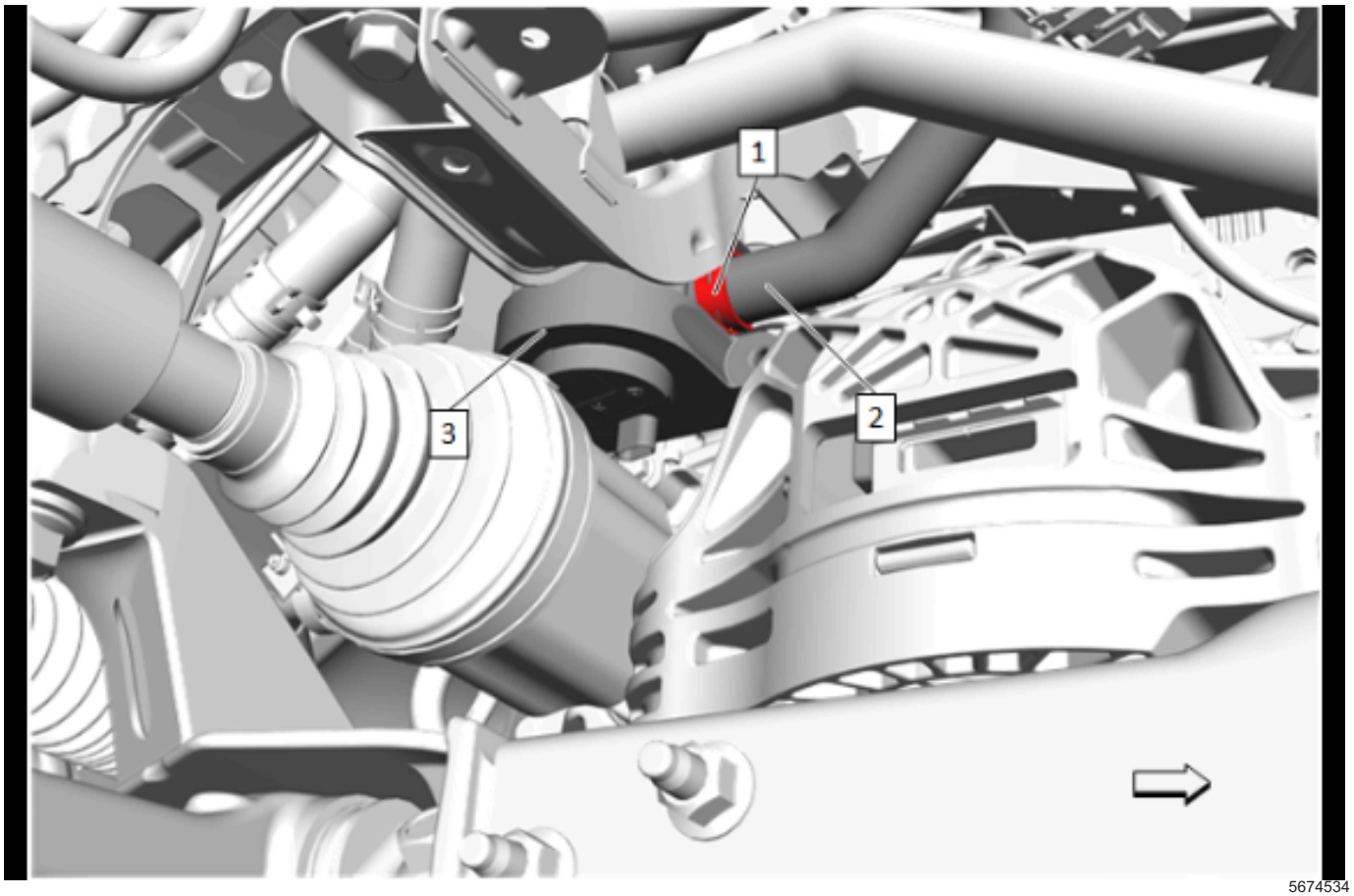

5674534

4. Auxiliary Heater Outlet Hose (2) @ Heater Coolant Pump (3) » Install
5. Clamp (1) » Engage — Hose Clamp Replacement Guidelines - Spring Type

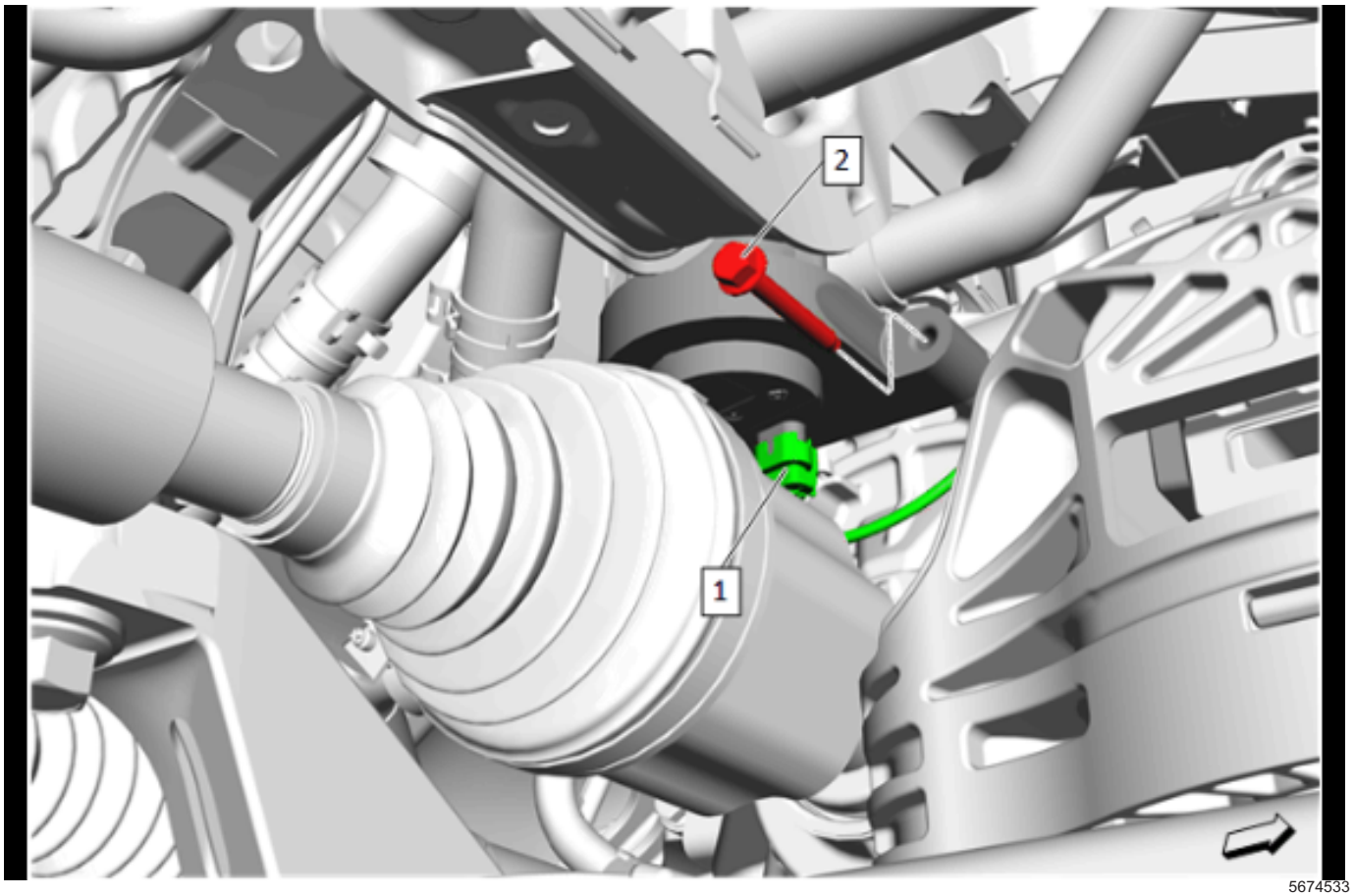

5674533

6. Heater Coolant Pump Bolt (2) » Install and tighten — *Fastener Specifications on page 5-3*
7. Electrical Connector (1) » Connect

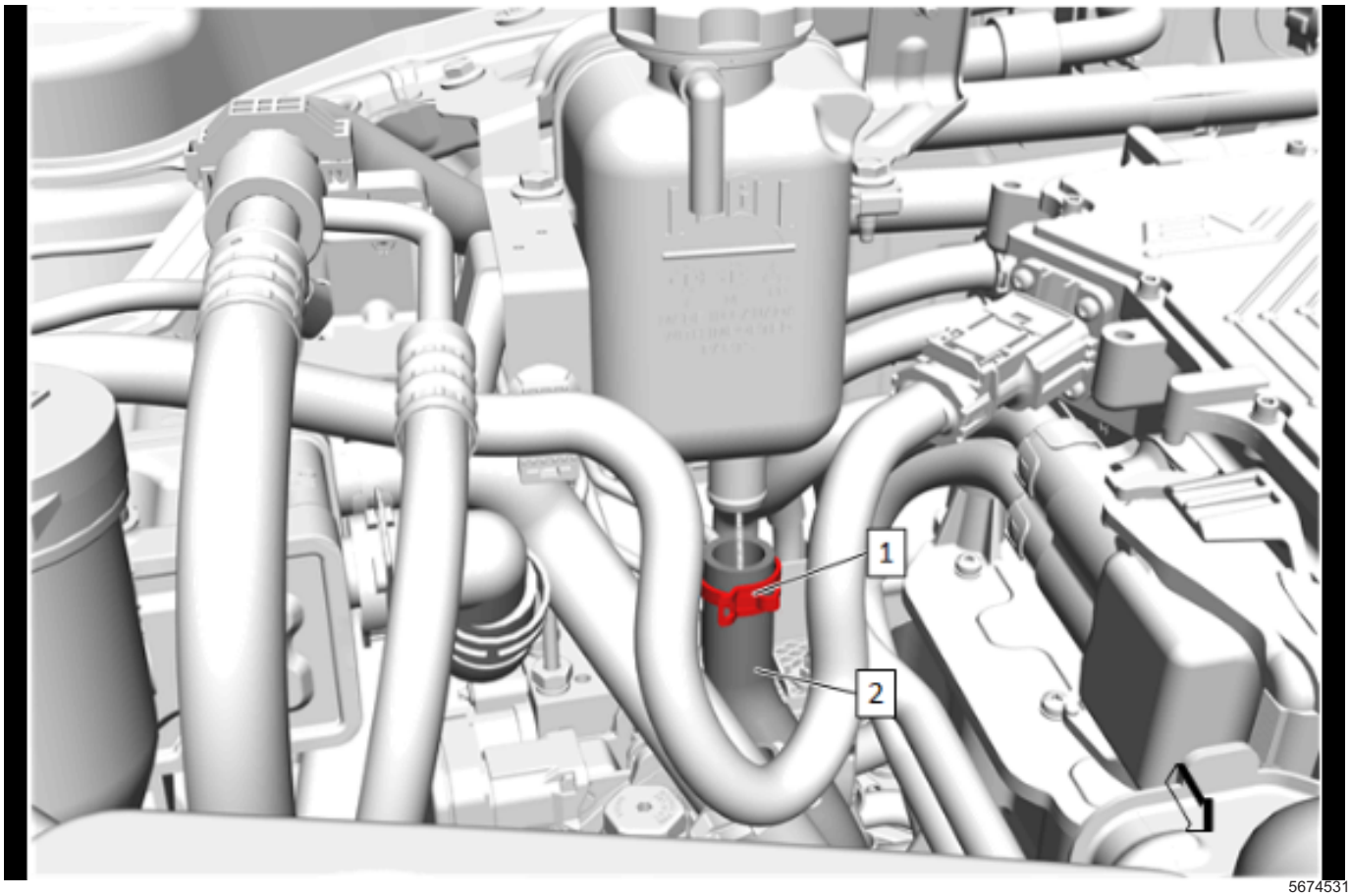

5674531

8. Auxiliary Heater Inlet Hose (2) @ Heater Coolant Surge Tank » Install
9. Clamp (1) » Engage— Hose Clamp Replacement Guidelines - Spring Type

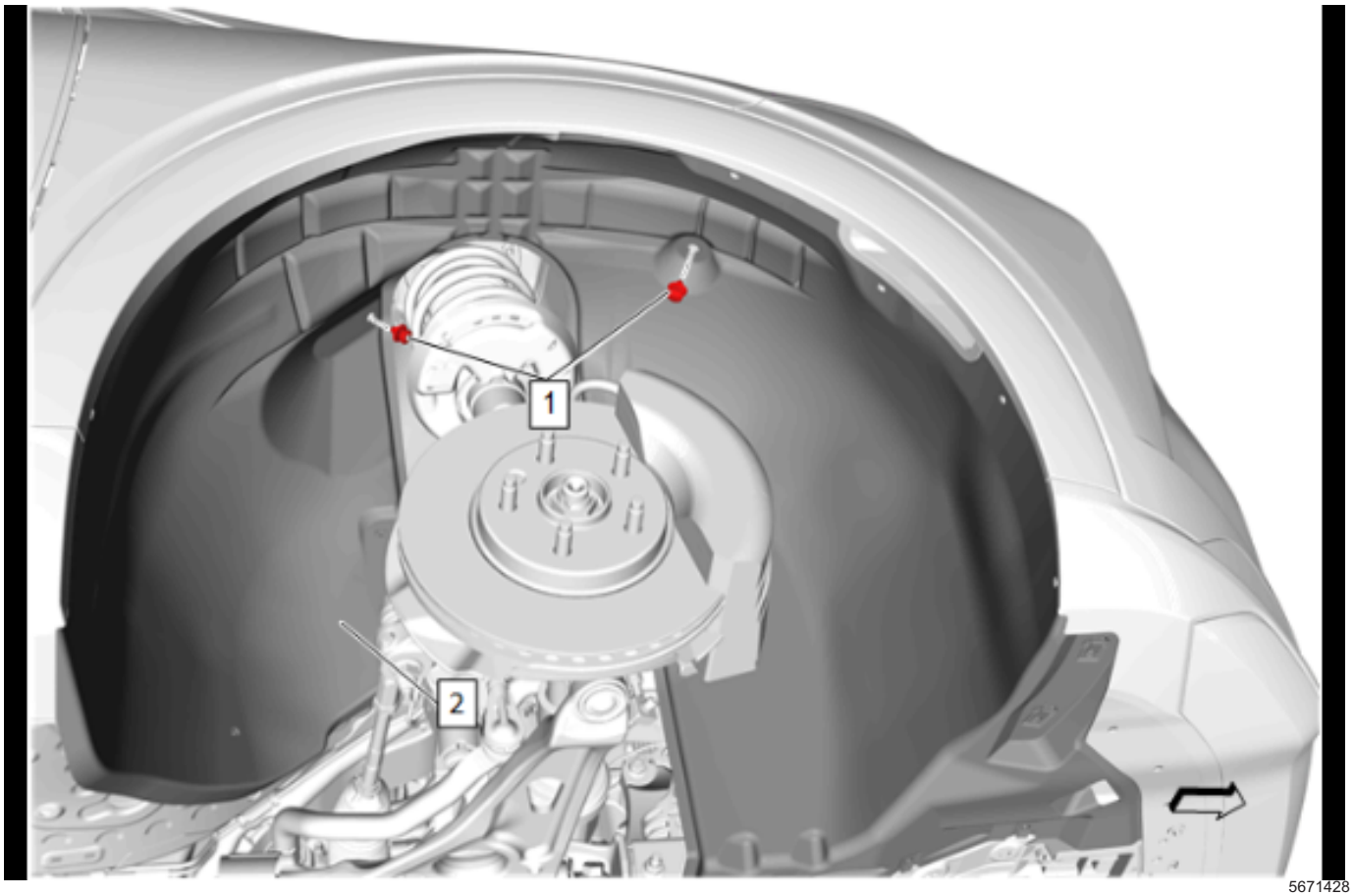

5671428

10. Front Wheelhouse Liner - Right Side (2) » Install
11. Front Wheelhouse Liner Retainer (1) » Install [2x]

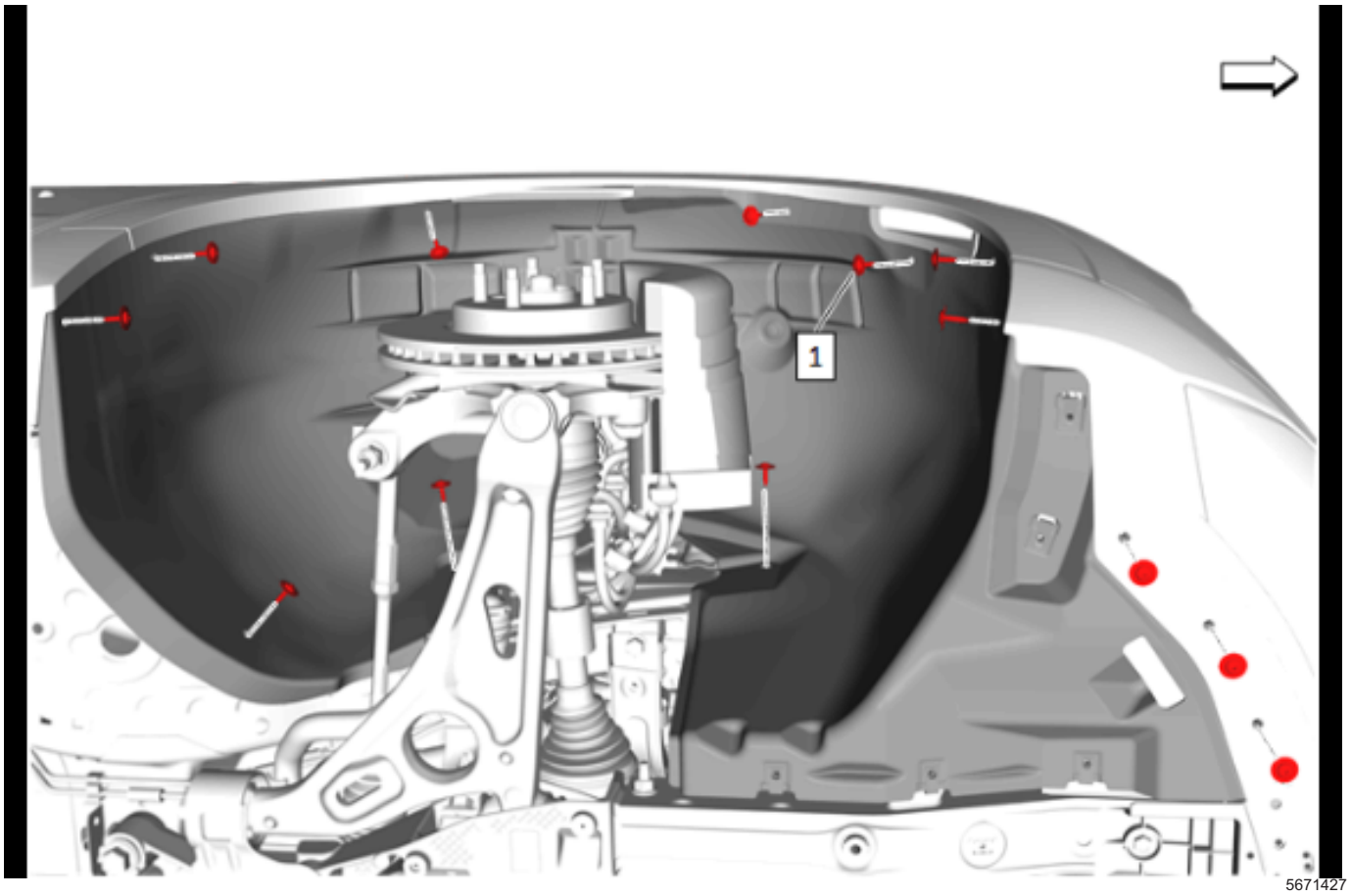

12. Front Wheelhouse Liner Bolt (1) » Install and tighten [13x]

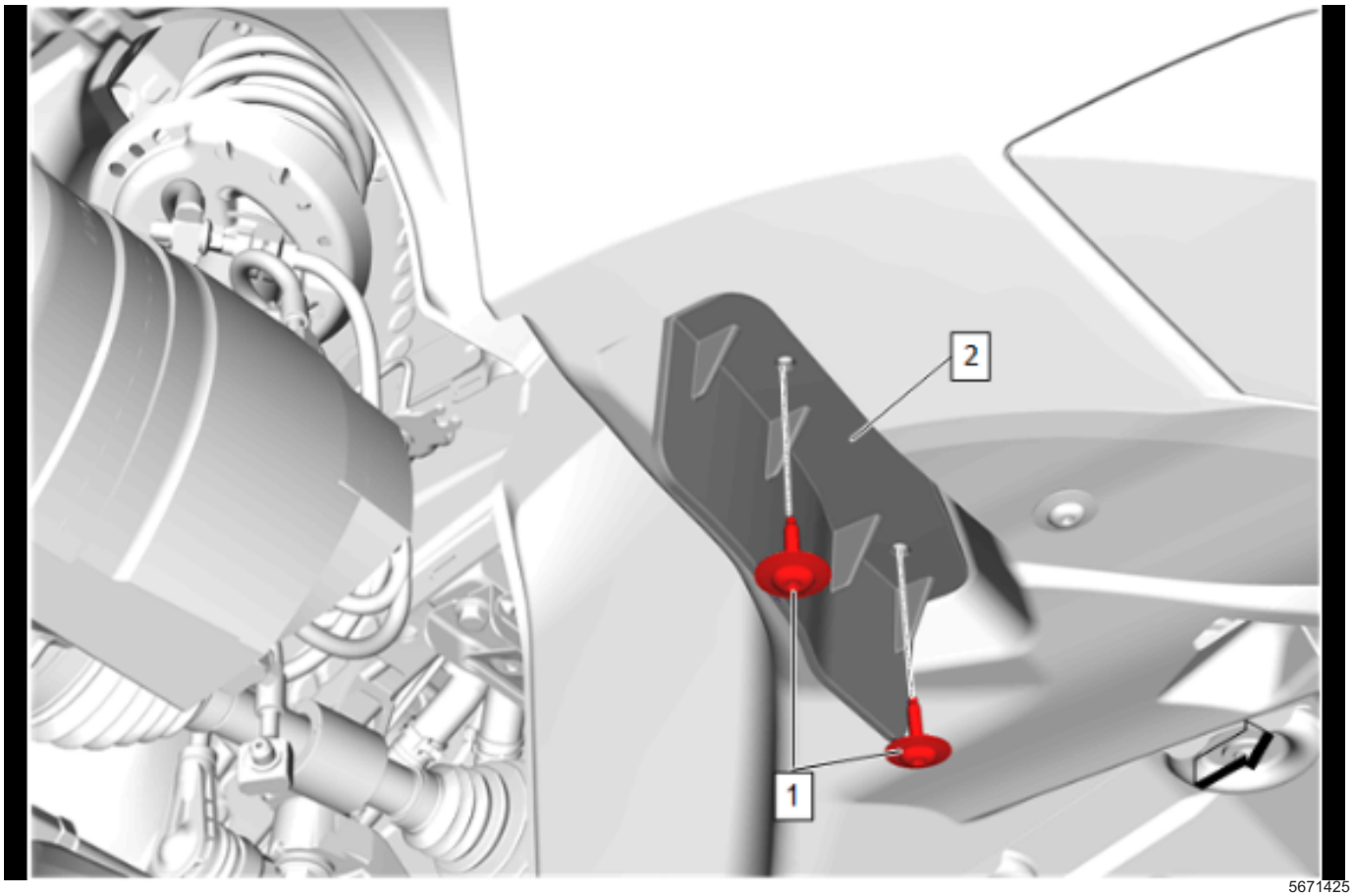

5671425

13. Front Tire Front Air Deflector (2) » Install
14. Front Tire Front Air Deflector Bolt (1) » Install and tighten [2x]
15. Install the right front tire and wheel assembly.

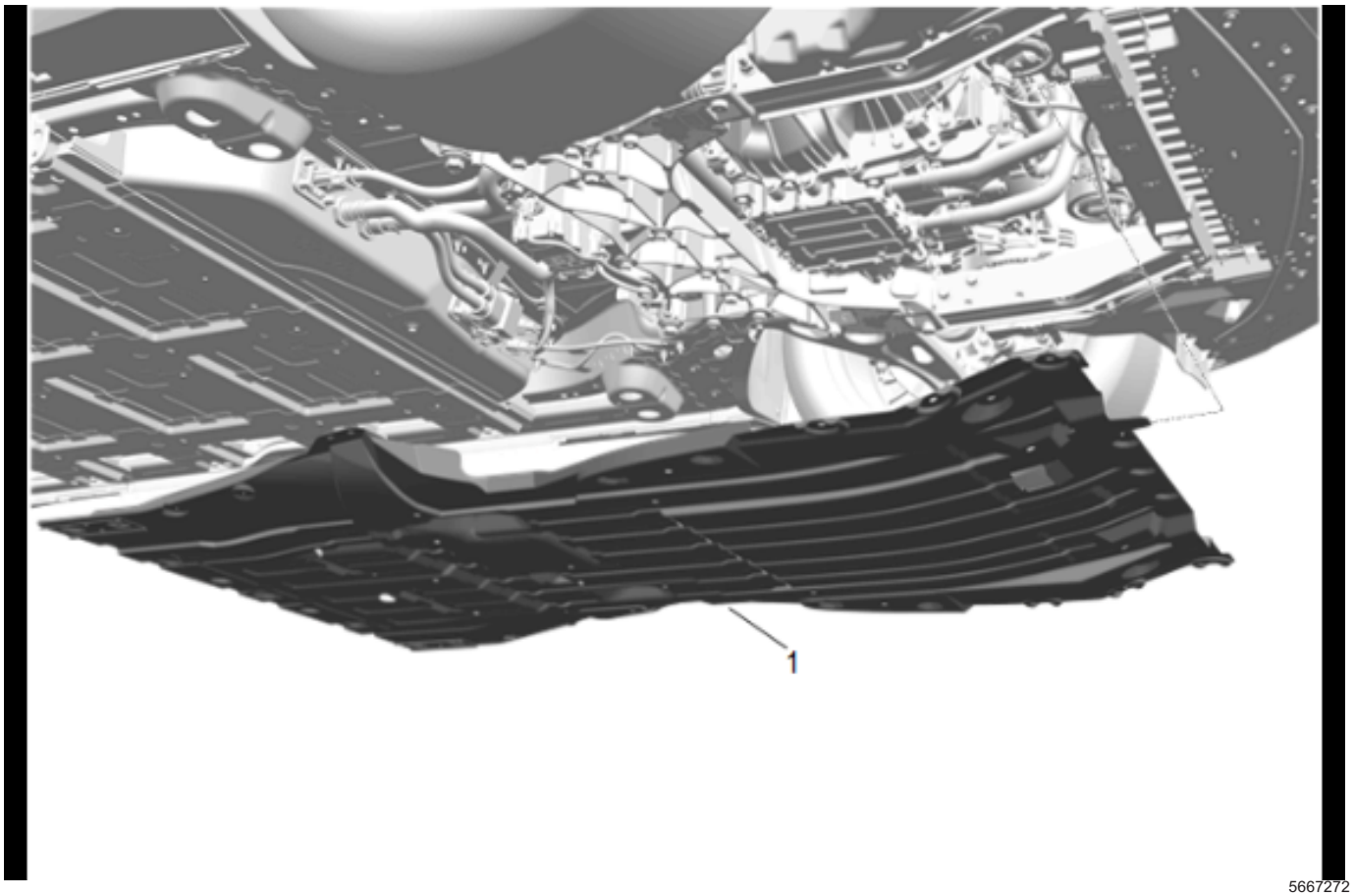

5667272

16. Front Compartment Air Deflector (1) » Install

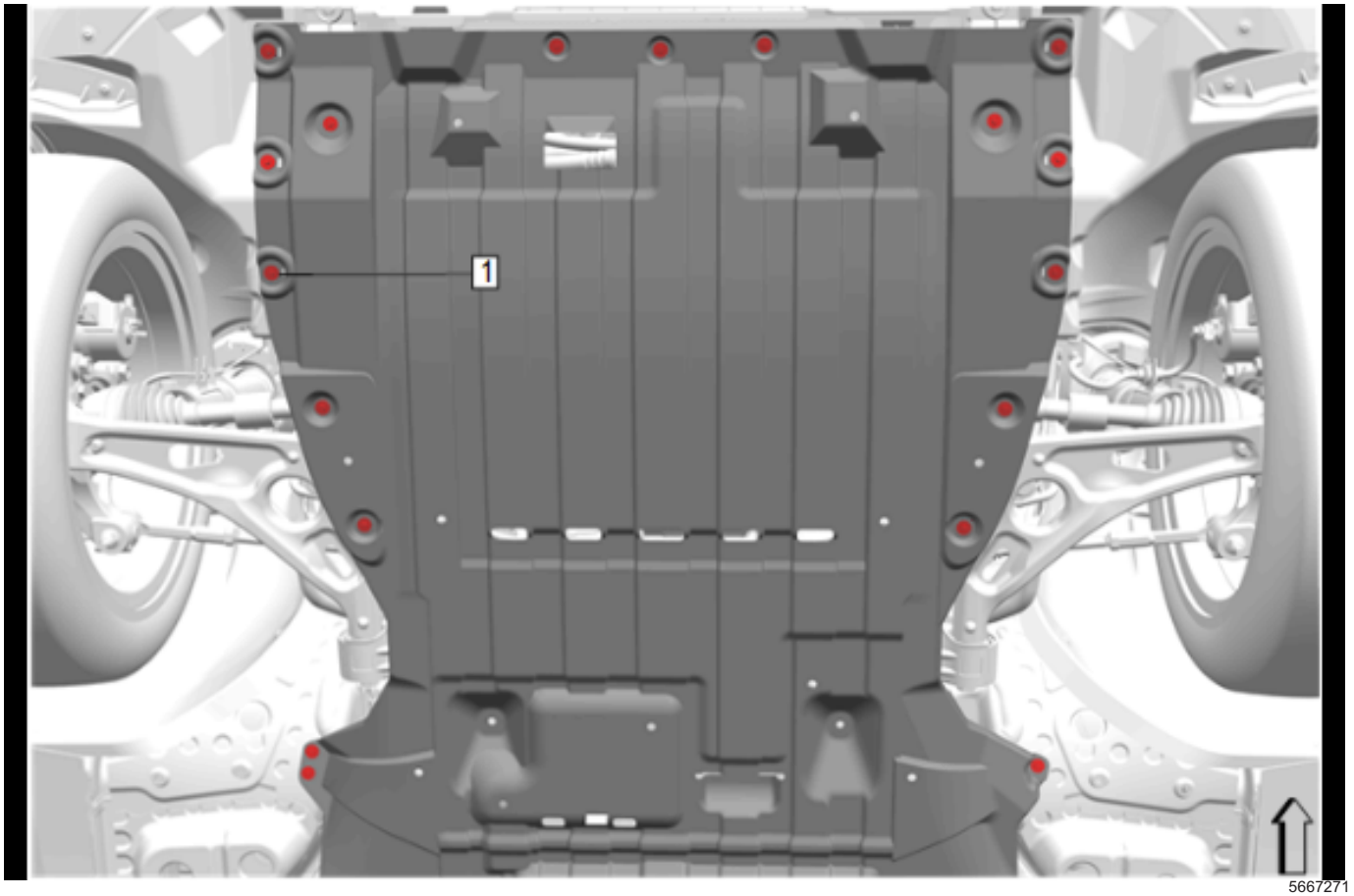

5667271

17. Front Compartment Air Deflector Bolt (1) » Install and tighten [18x]

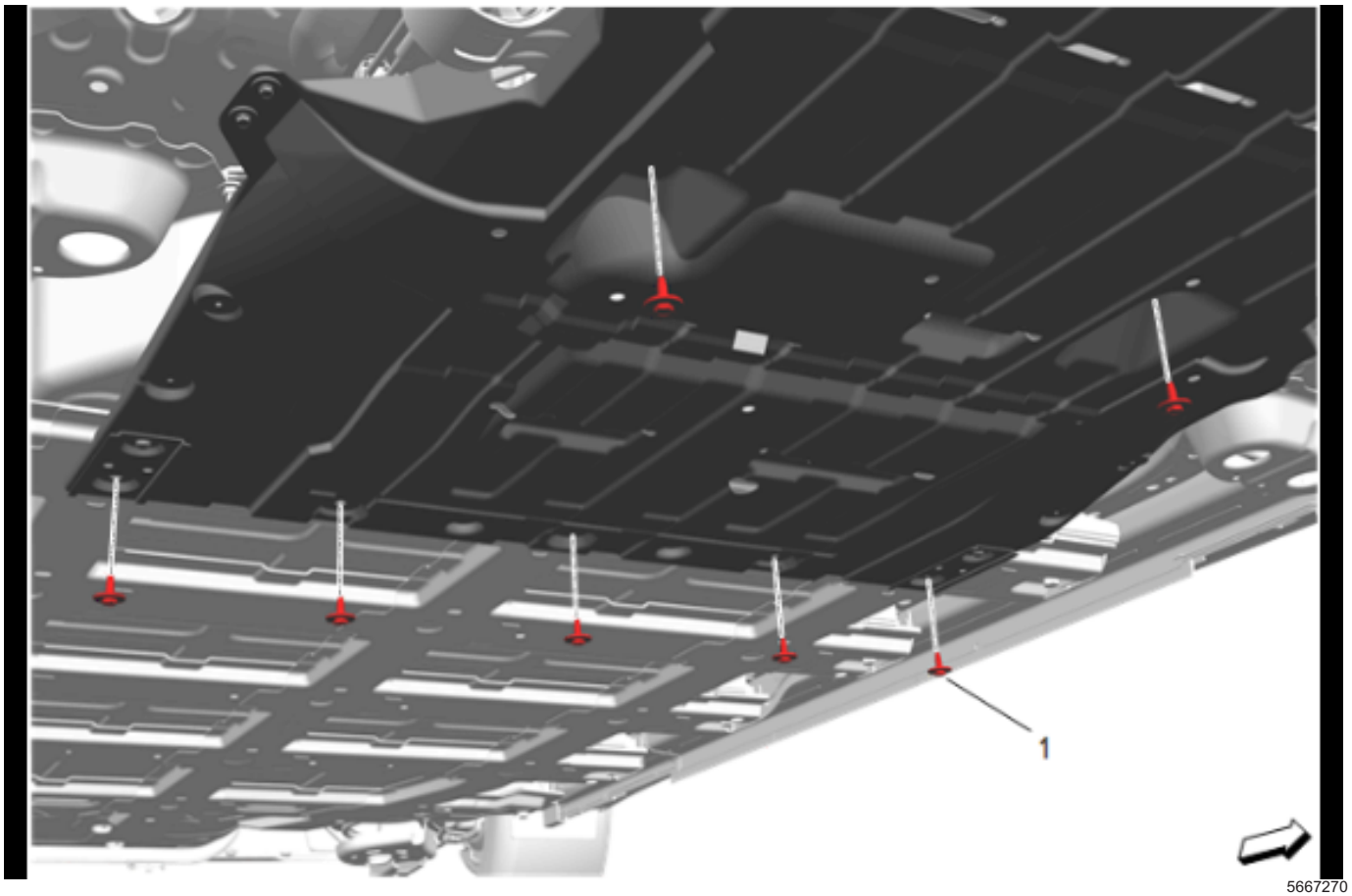

5667270

18. Front Compartment Air Deflector Bolt (1) » Install and tighten [7x]

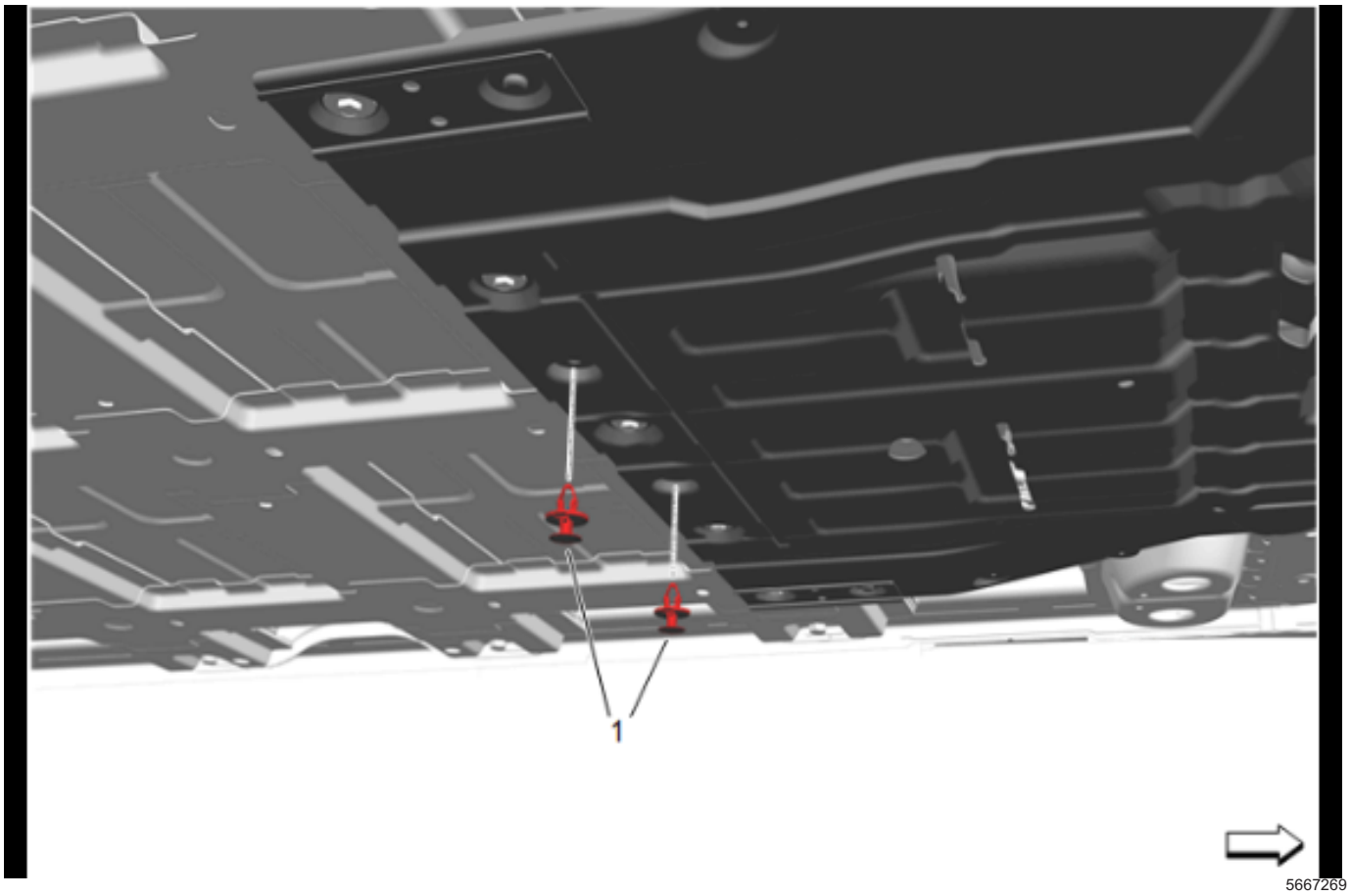

19. Front Compartment Air Deflector Retainer (1) » Install [2x]
20. Lower the vehicle.
21. Fill the cooling system. *Heater Coolant Heater Draining and Filling on page 5-39*
22. Connect the battery negative cable.
23. Check the cooling system for leaks.

Air Inlet Deflector Water Deflector Replacement

Special Tools

BO–49385 Wiper Arm Puller

Equivalent regional tools: Special Tools

Removal Procedure

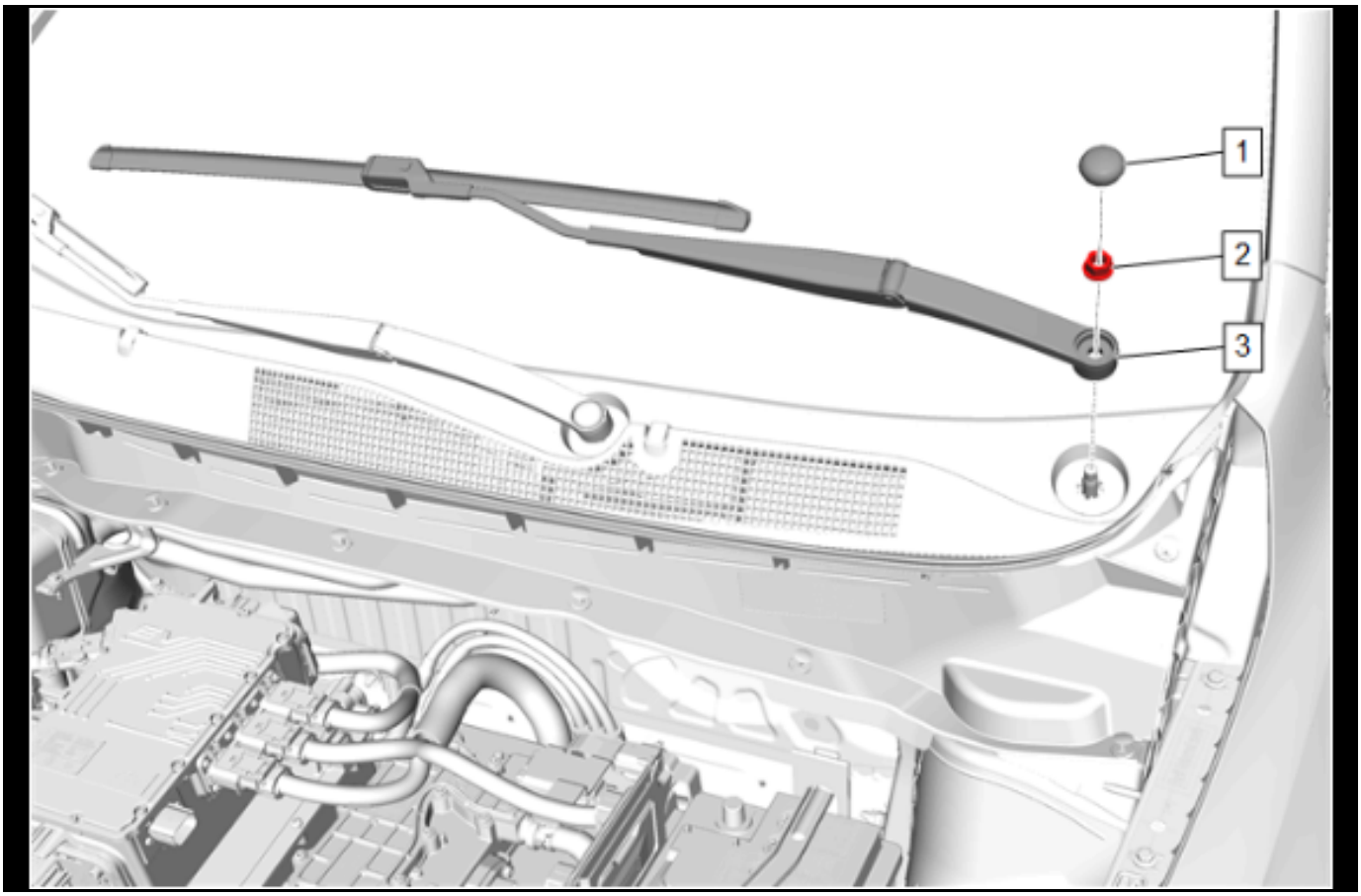

5493737

1. Using the appropriate trim tool, remove the windshield wiper arm finish cap (1) from the windshield wiper arm (3).
2. Windshield Wiper Arm Nut (2) » Remove
3. Use the *BO–49385* Wiper Arm Puller to remove the wiper arm (3) from the wiper motor pivot shaft.

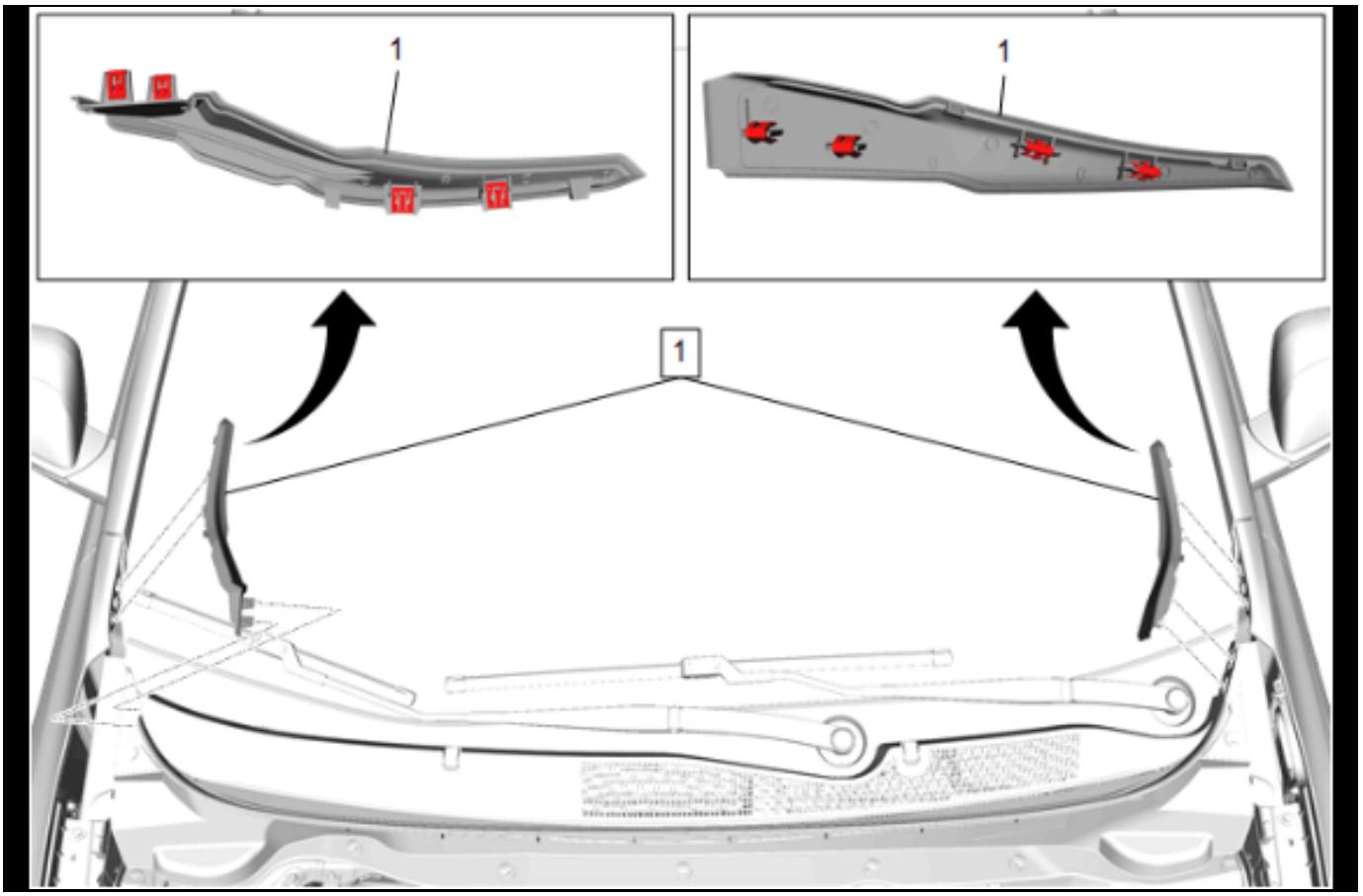

5491617

4. Apply two layers of masking tape around the top edge of the service part to prevent paint damage.
5. Using a suitable plastic trim tool, carefully release the air inlet grille panel extension clips.
6. Remove the air inlet grille panel extension (1) from the air inlet grille panel and upper front fender.
7. Remove the masking tape.

8. Remove any remaining adhesive residue.
   8.1. Remove any remaining adhesive residue with a 50/50 mixture by volume of isopropyl alcohol and clean drinkable water. Wipe the surface dry with a clean lint-free towel.

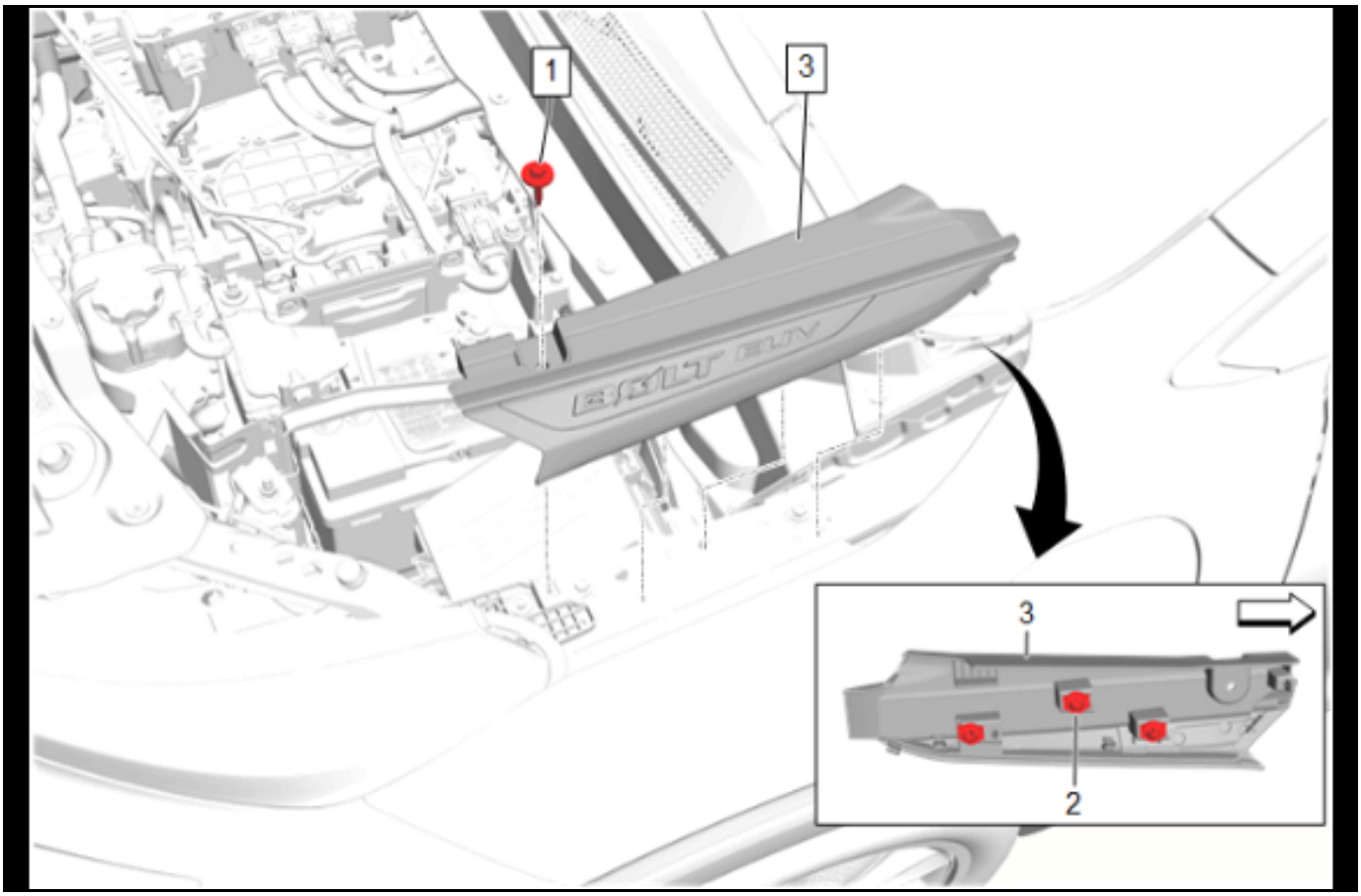

5666188

9. Body Side Upper Front Applique Bolt (1) » Remove
10. Using an appropriate trim tool, release the body side upper front applique retainers. (2) [3x]
11. Body Side Upper Front Applique (3) » Remove

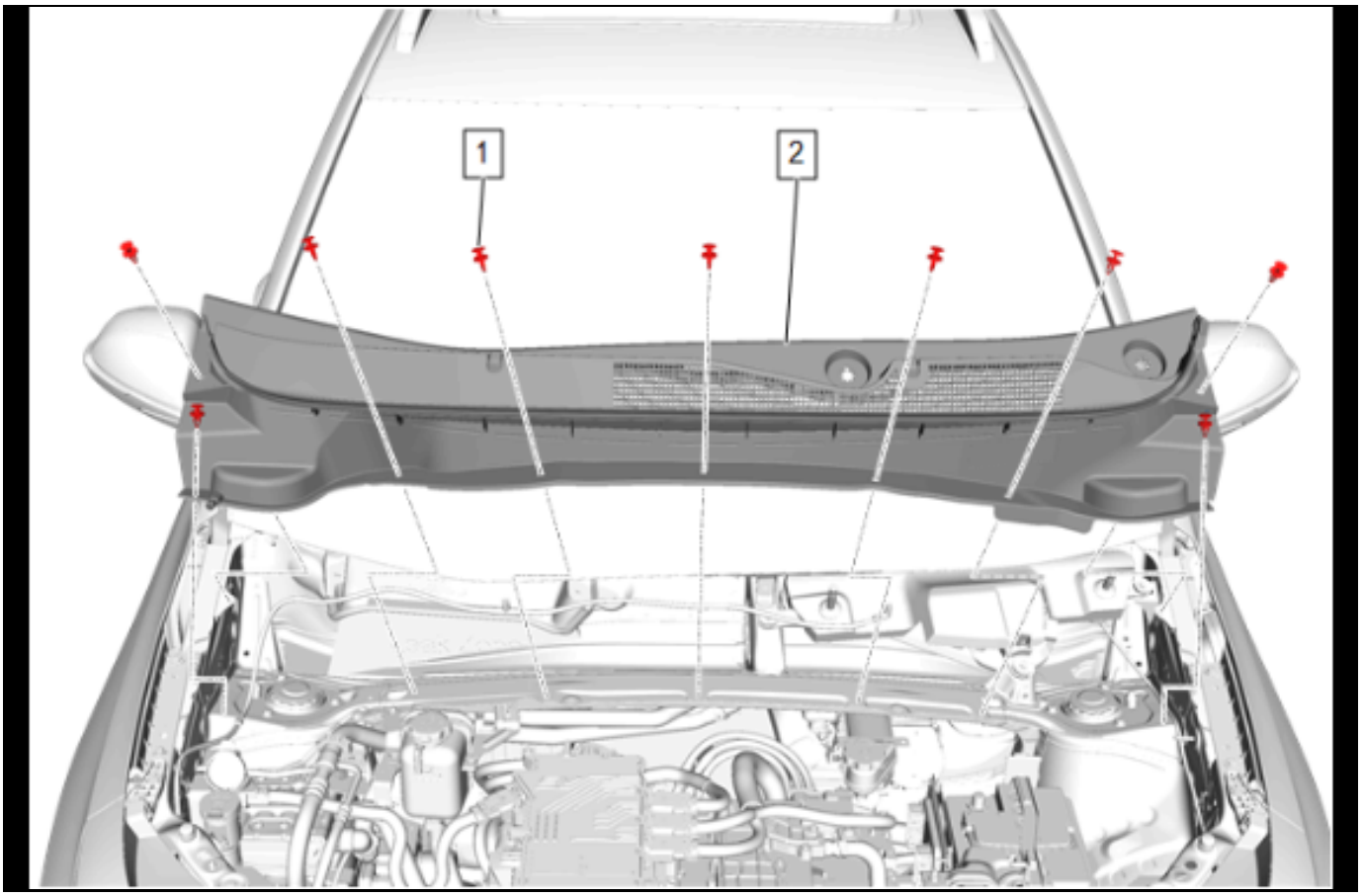

5491629

12. Air Inlet Grille Panel Retainer (1) » Remove [9x]
13. Air Inlet Grille Panel (2) » Remove
14. Windshield Washer Nozzle Hose @ Windshield Washer Pump Hose » Disconnect

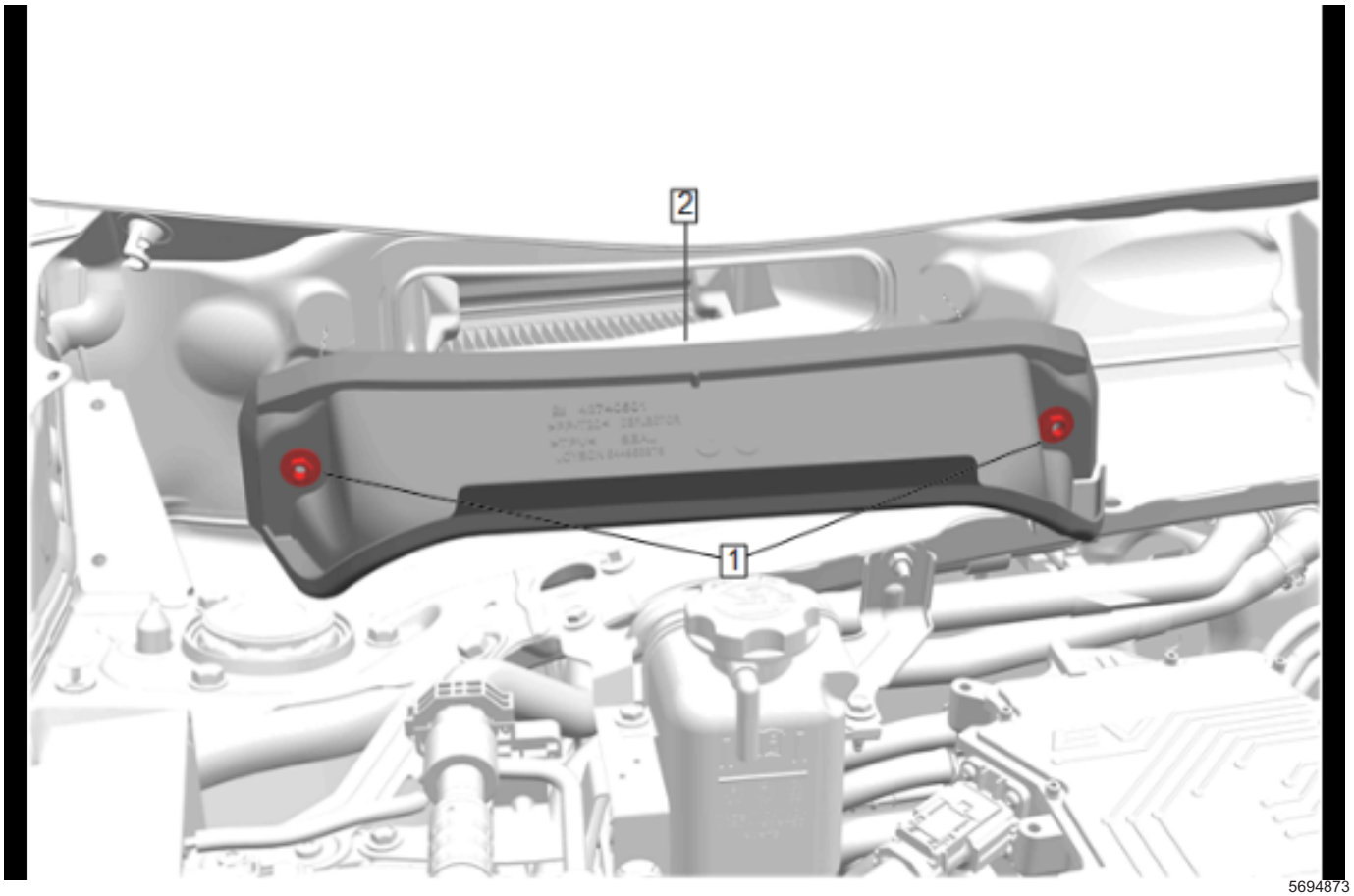

5694873

15. Air Inlet Deflector Water Deflector Retainer Nut (1)
    » Loosen [2x]
16. Air Inlet Deflector Water Deflector (2) » Remove

Installation Procedure

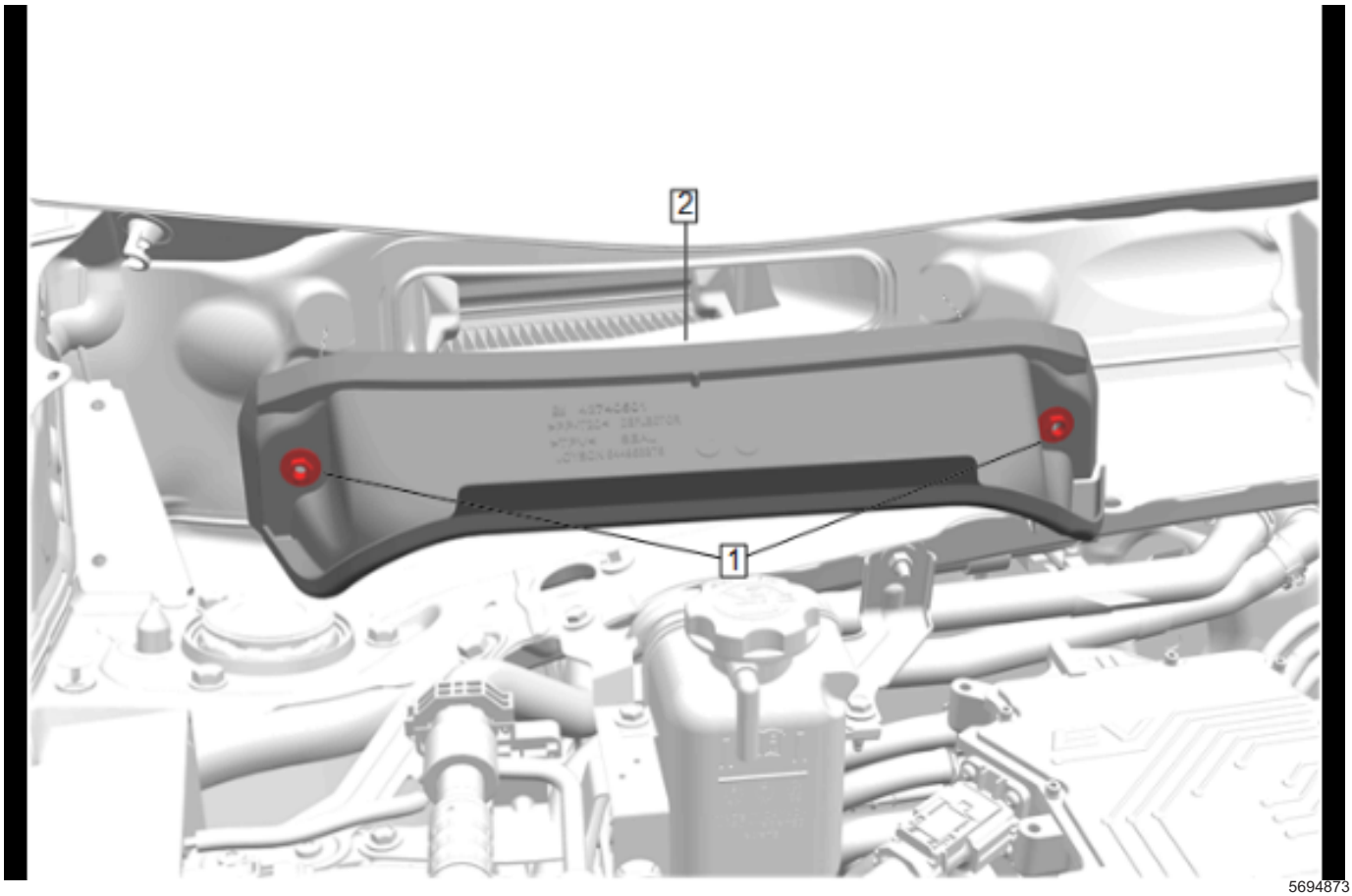

5694873

1. Air Inlet Deflector Water Deflector (2) » Install
2. Air Inlet Deflector Water Deflector Retainer Nut (1) » Tighten — *Fastener Specifications on page 5-3* [2x]

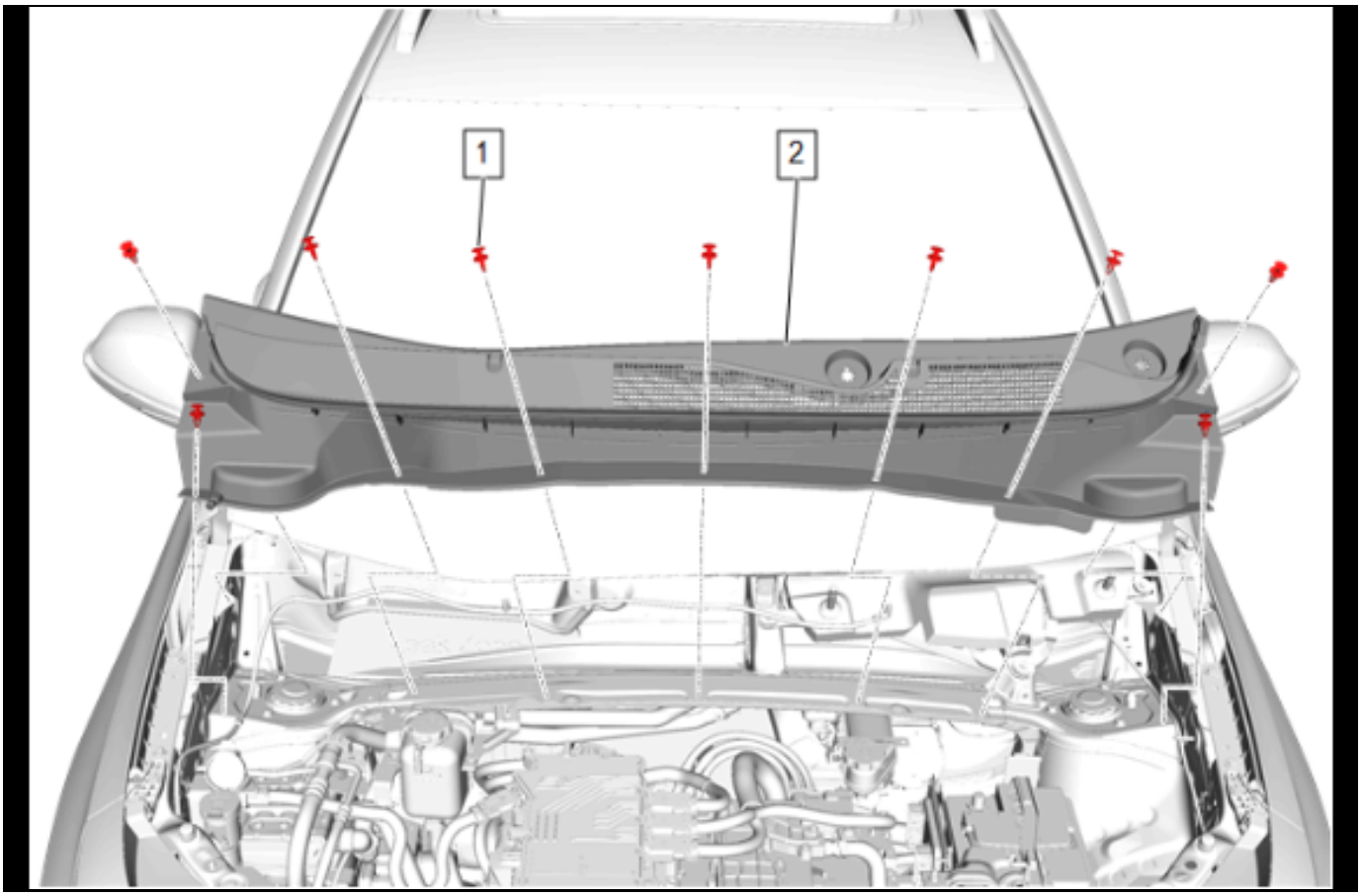

5491629

3. Air Inlet Grille Panel (2) » Install
4. Windshield Washer Nozzle Hose @ Windshield Washer Pump Hose » Connect
5. Air Inlet Grille Panel Retainer (1) » Install [9x]

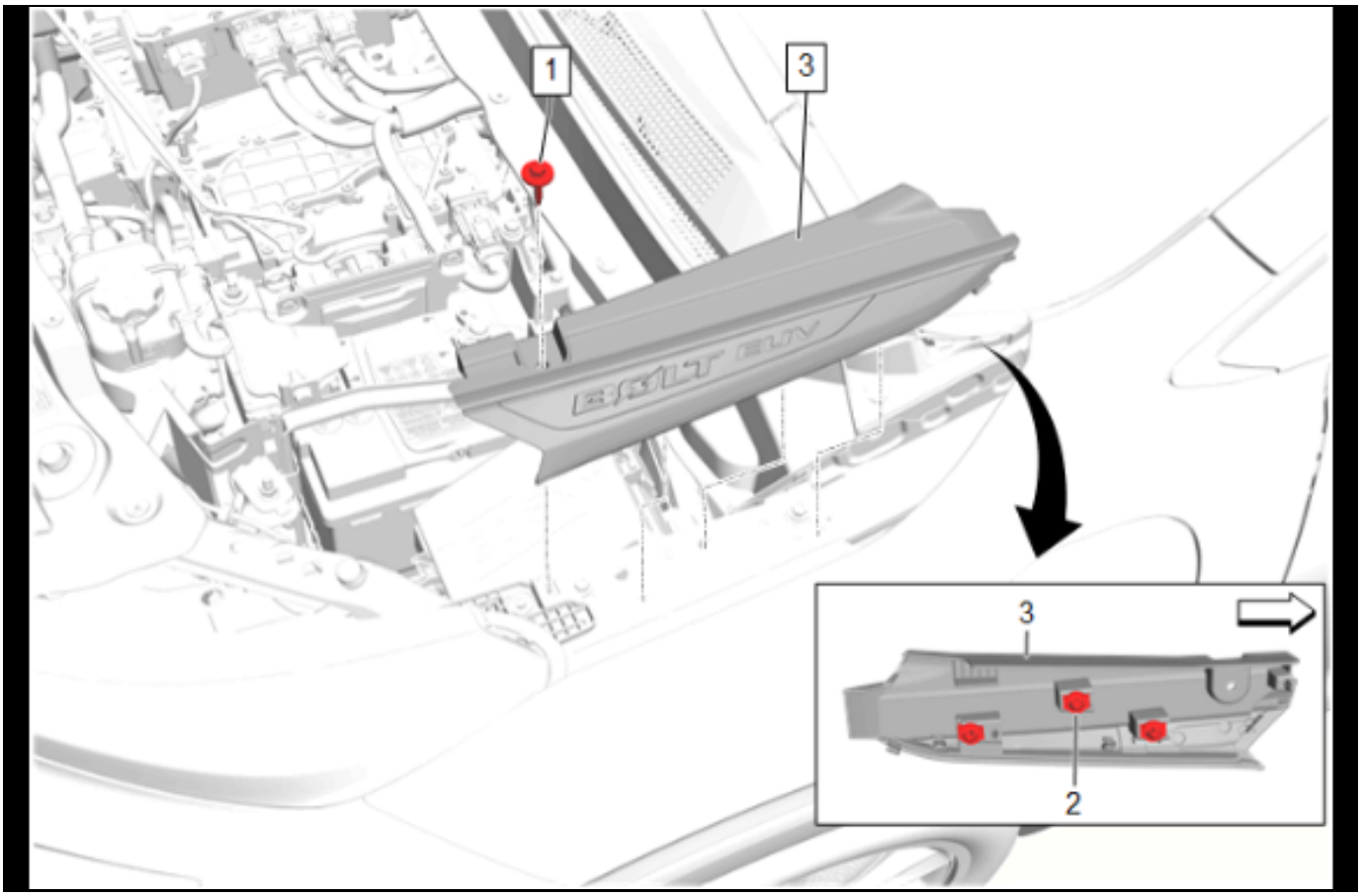

5666188

6. Body Side Upper Front Applique (3) » Install
7. Body Side Upper Front Applique Bolt (1) » Install and tighten

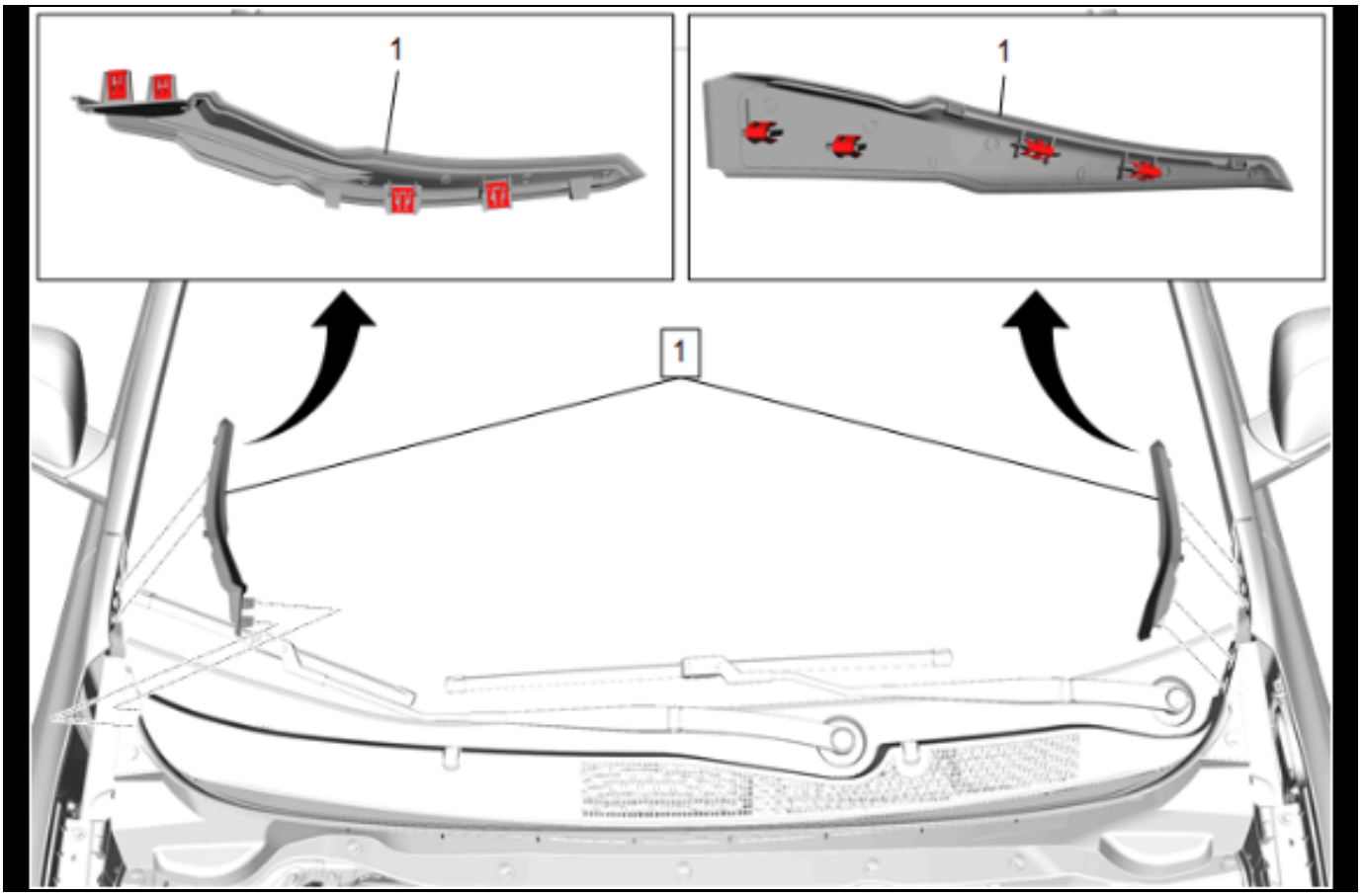

5491617

8. Air Inlet Grille Panel Extension (1) » Install

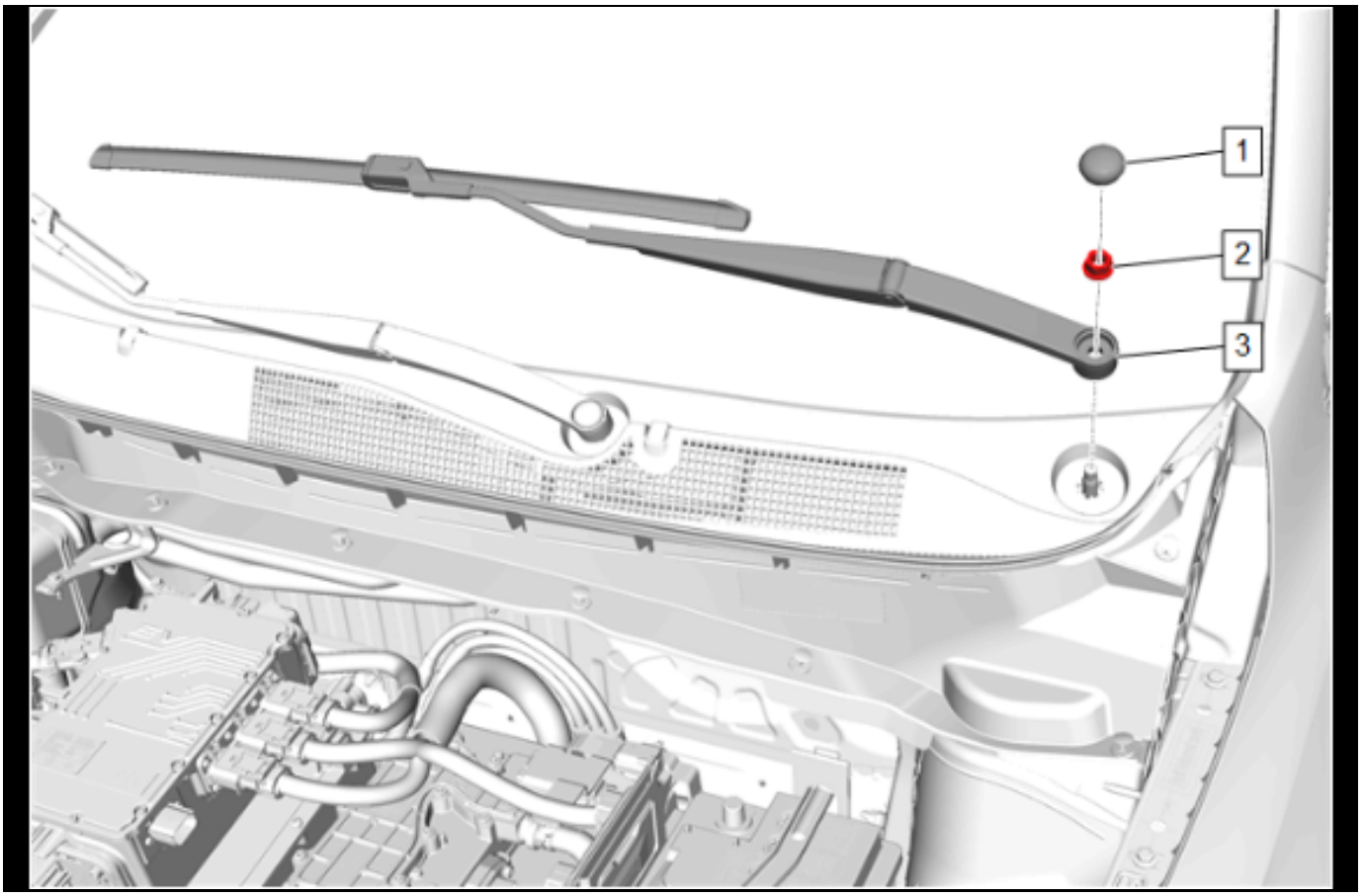

5493737

9. Clean the windshield wiper transmission pivot shaft splines with a soft wire brush before installing the windshield wiper arm (3).
10. Position the windshield wiper arm (3) on the windshield wiper transmission pivot shaft.
11. Windshield Wiper Arm Nut (2) » Install and tighten
12. Windshield Wiper Arm Finish Cap (1) » Install

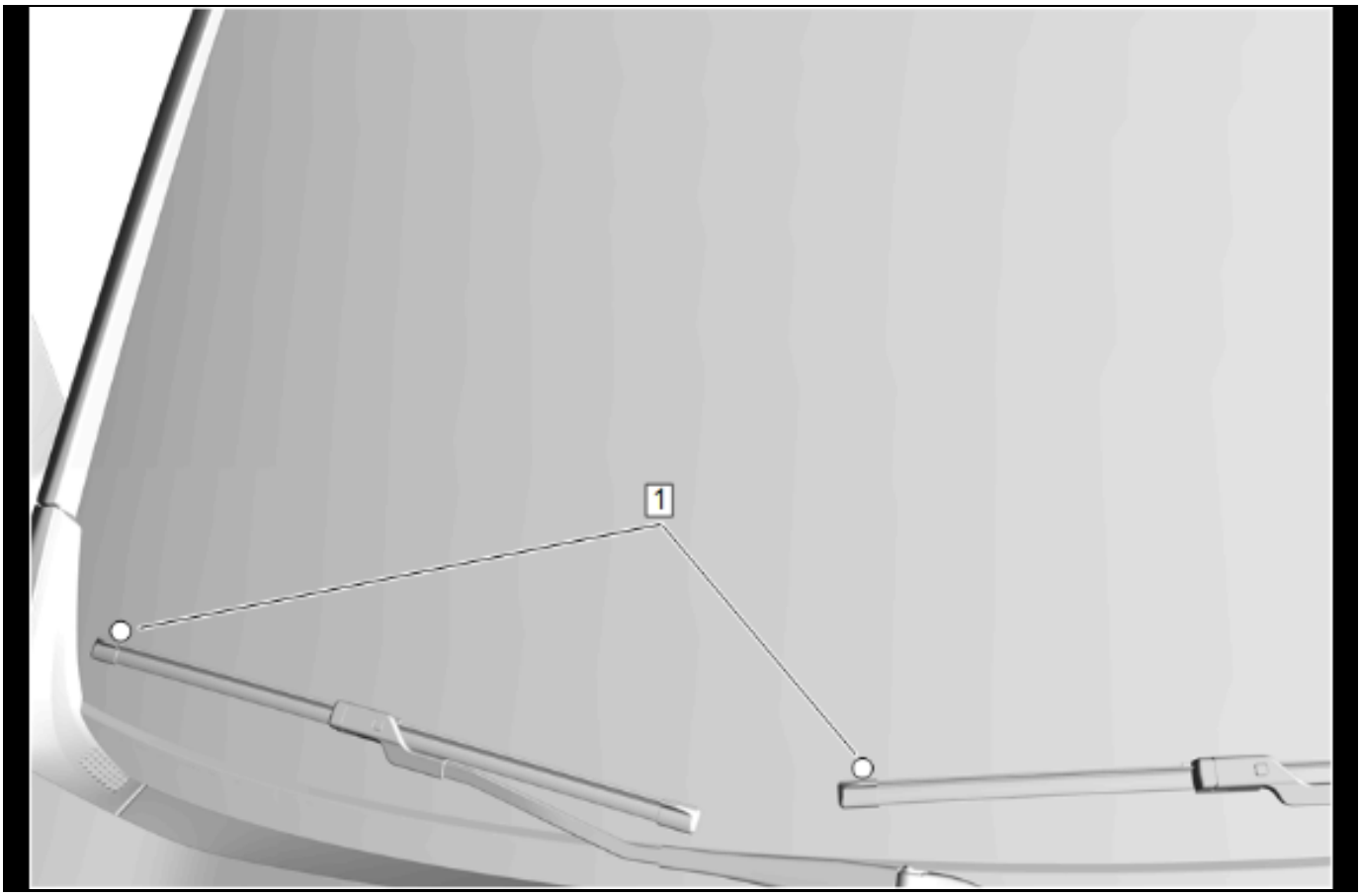

5532162

13. If required, realign the windshield wipers to their respective alignment circles (1) on the windshield.
14. Lubricate the windshield with clean washer fluid.
15. Run the windshield wipers for two complete cycles then turn off the windshield wipers.
16. Ensure the windshield wipers are in the full park position.

Passenger Compartment Air Filter Replacement

Removal Procedure

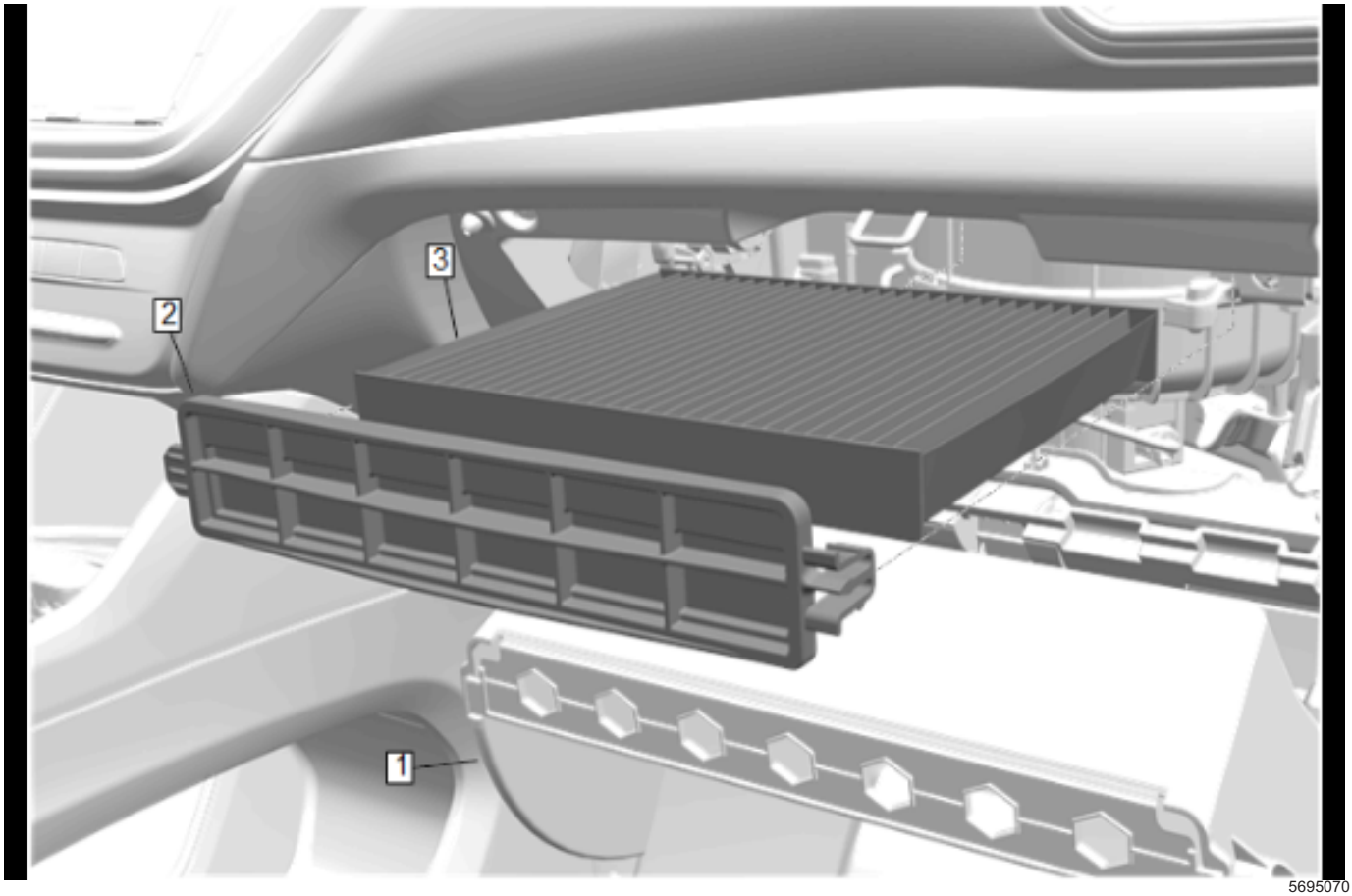

5695070

1. Instrument Panel Compartment Door (1) » Open
2. Disconnect the instrument panel compartment door dampener from the instrument panel compartment door.
3. Squeeze the sides of the instrument panel compartment to allow the door to open past the stops.
4. Passenger Compartment Air Filter Cover (2) » Remove
5. Passenger Compartment Air Filter (3) » Remove

Installation Procedure

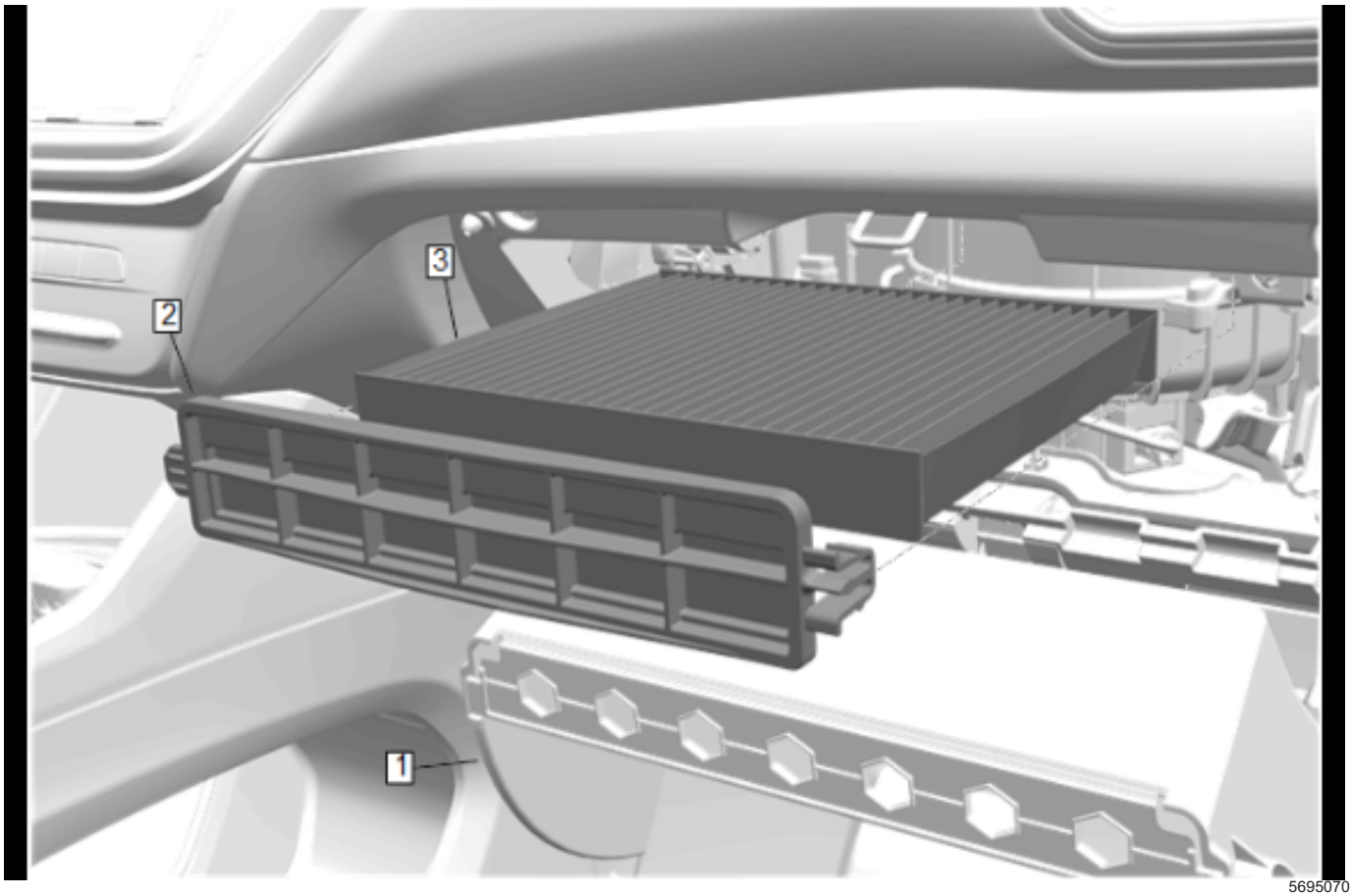

5695070

1. Passenger Compartment Air Filter (3) » Install
2. Passenger Compartment Air Filter Cover (2) » Install
3. Squeeze the sides of the instrument panel compartment to allow the door to close past the stops.
4. Instrument Panel Compartment Door (1) » Close

Air Inlet Housing Replacement

Removal Procedure

1. Heater and Air Conditioning Evaporator and Blower Module — *Heater and Air Conditioning Evaporator and Blower Module Removal and Installation on page 5-199*
2. Drain the cooling system. *Heater Coolant Heater Draining and Filling on page 5-39*

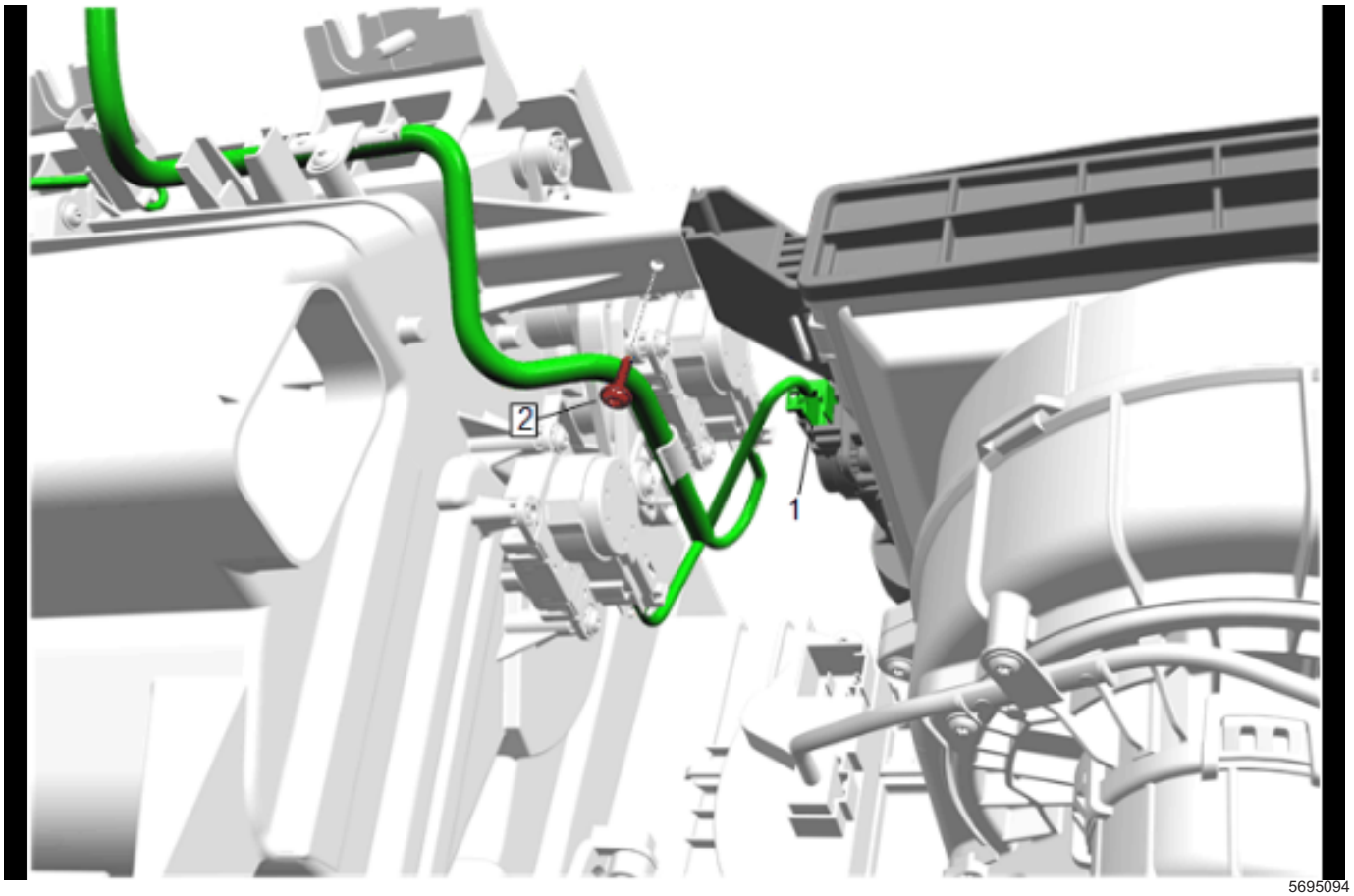

5695094

3. Electrical Connector (1) » Disconnect
4. Heater and Air Conditioning Evaporator Case Bolt (2) » Remove

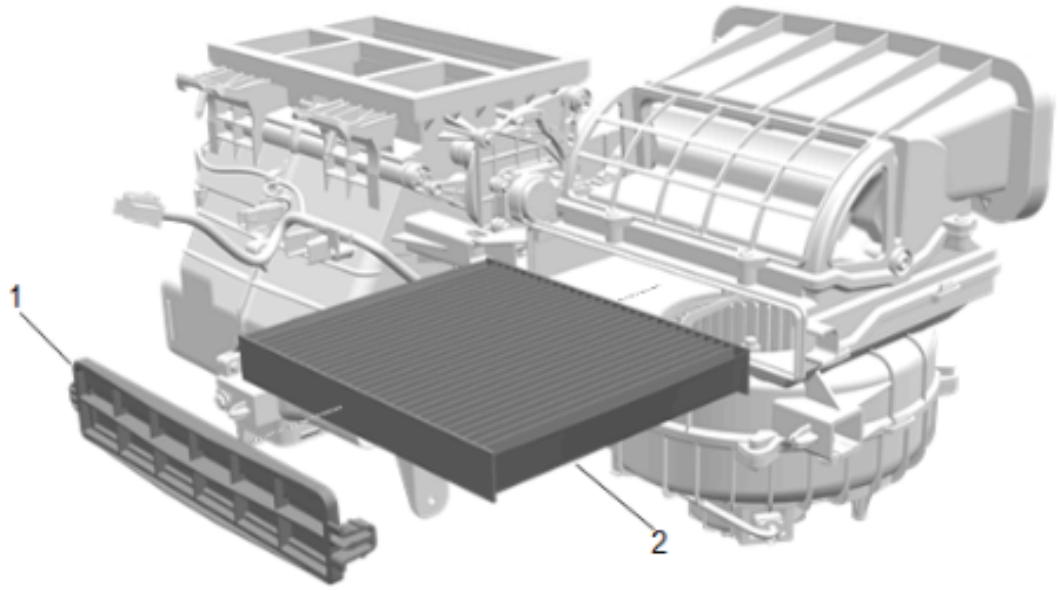

5695095

5. Passenger Compartment Air Filter Cover (1) » Remove
6. Passenger Compartment Air Filter (2) » Remove

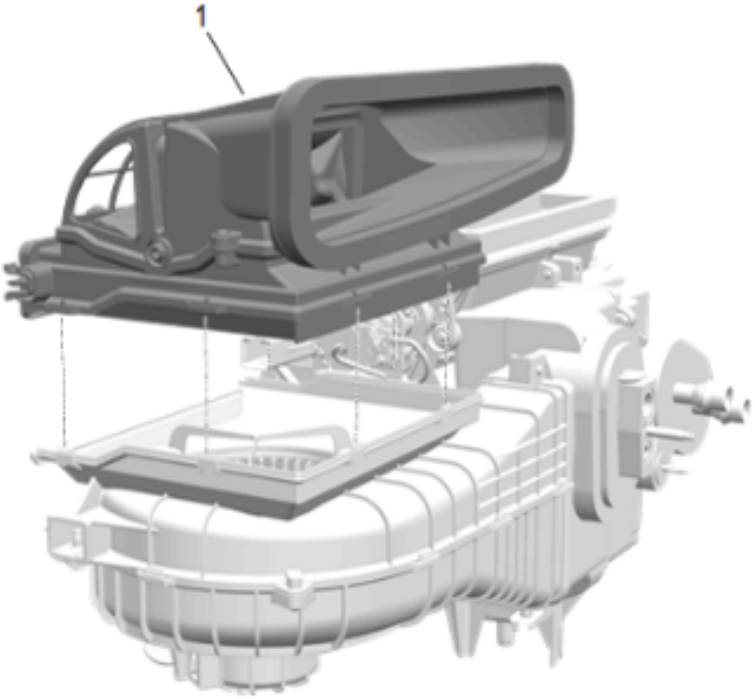

5695096

7. Air Inlet Housing (1) » Remove

Installation Procedure

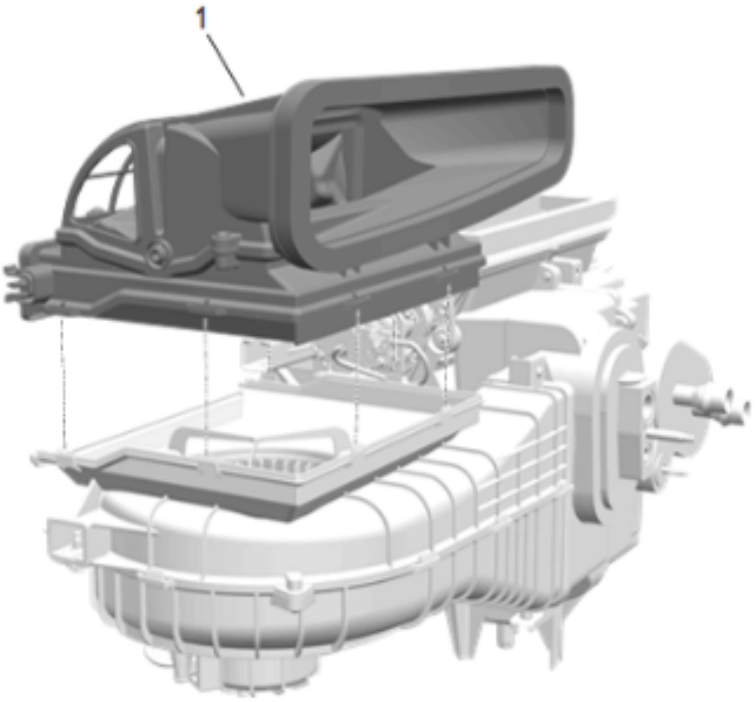

5695096

1. Air Inlet Housing (1) » Install

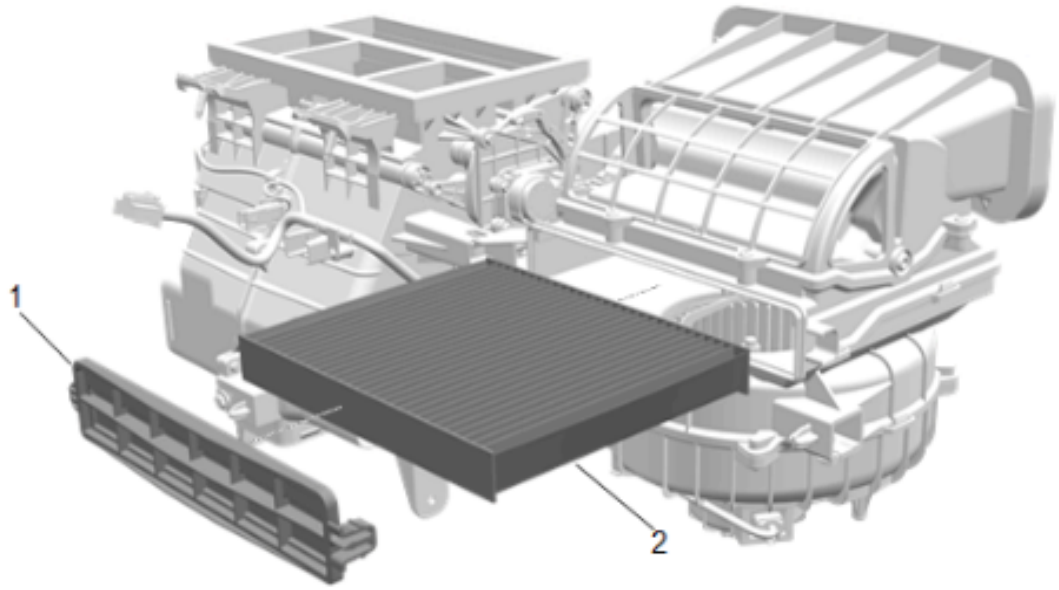

5695095

2. Passenger Compartment Air Filter (2) » Install
3. Passenger Compartment Air Filter Cover (1) » Install

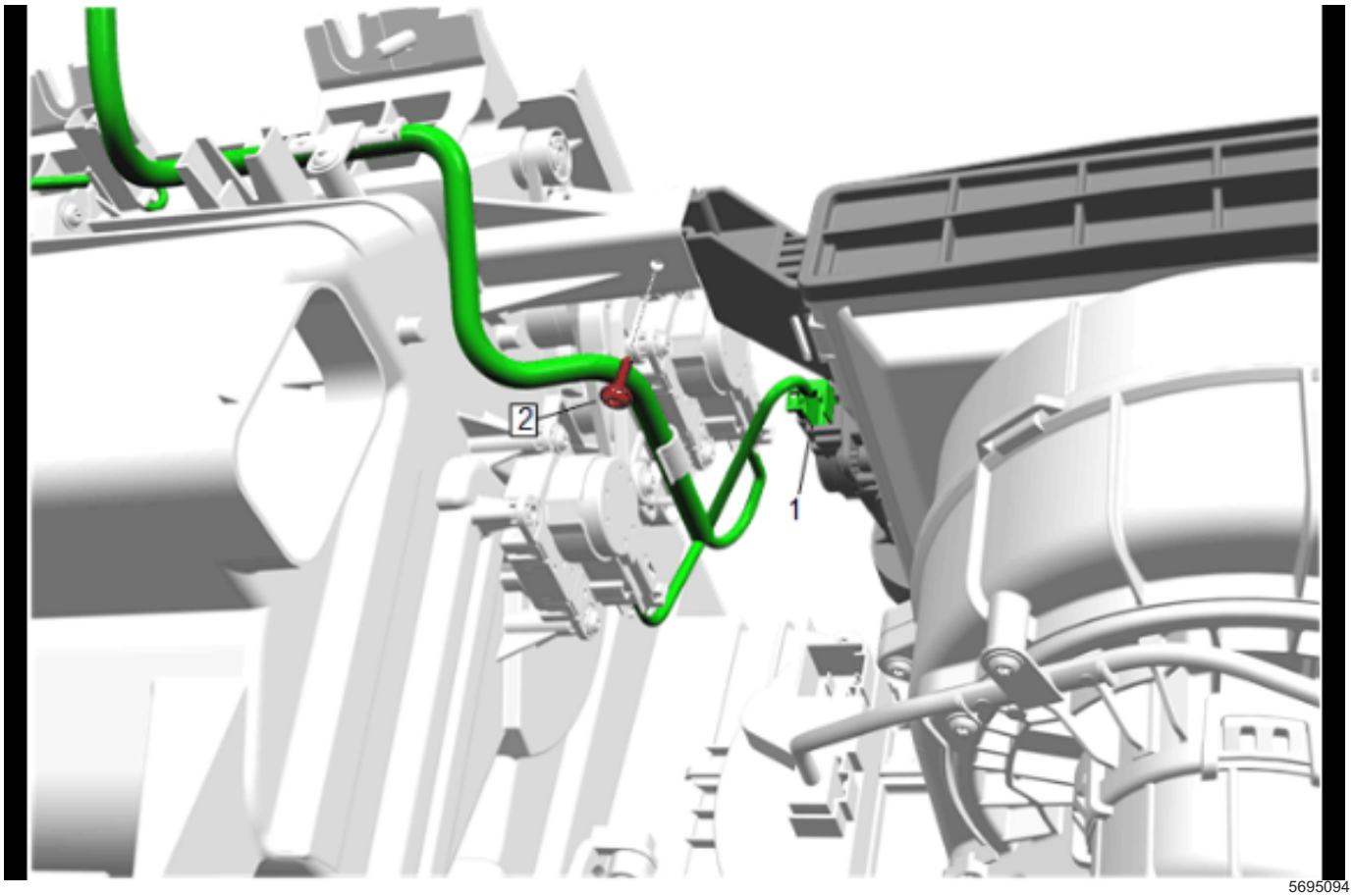

5695094

4. Heater and Air Conditioning Evaporator Case Bolt (2) » Install and tighten — *Fastener Specifications on page 5-3*
5. Electrical Connector (1) » Connect
6. Heater and Air Conditioning Evaporator and Blower Module — *Heater and Air Conditioning Evaporator and Blower Module Removal and Installation on page 5-199*
7. Fill the cooling system to the proper level. *Heater Coolant Heater Draining and Filling on page 5-39*

Blower Motor Control Replacement

Removal Procedure

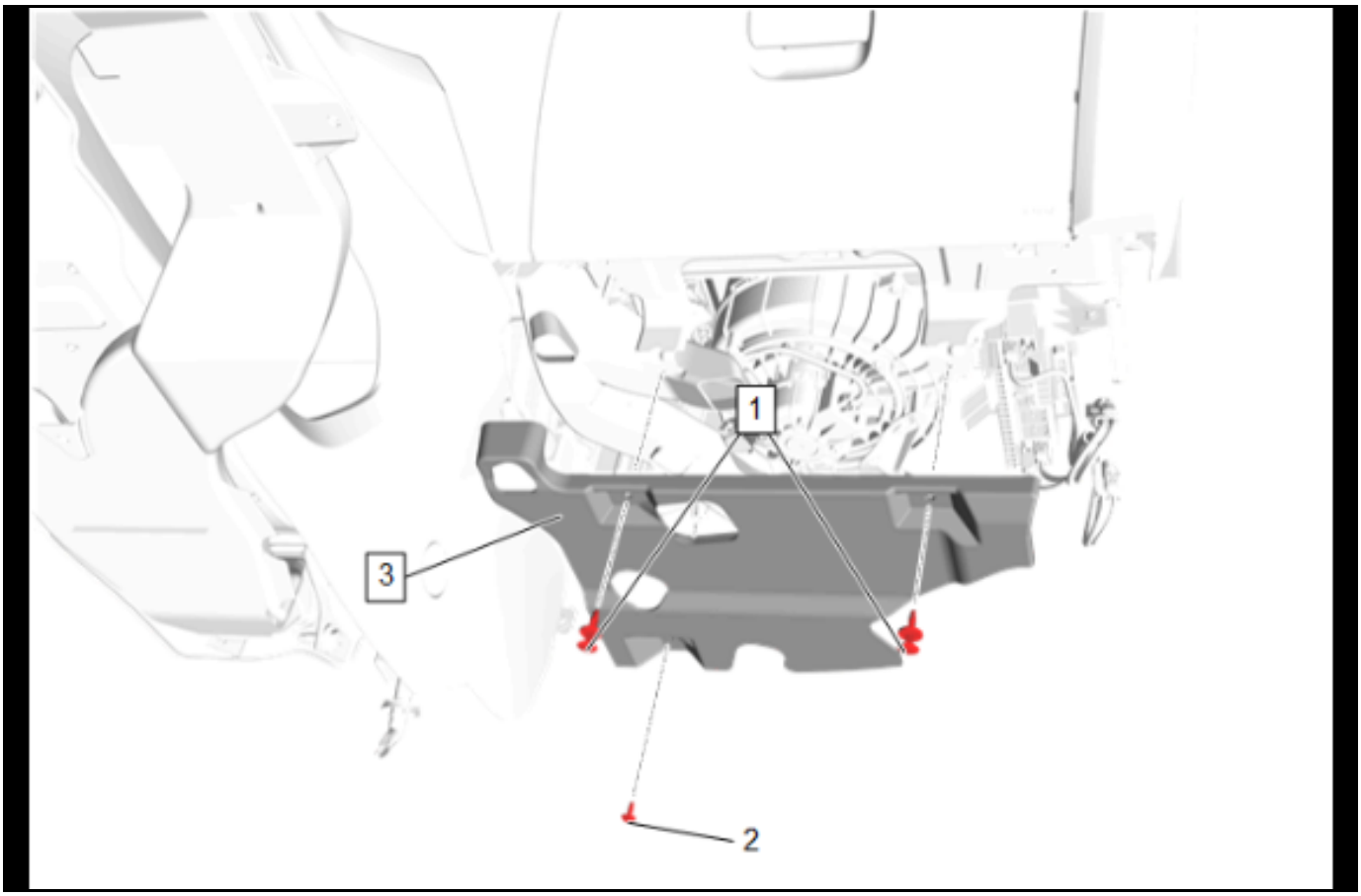

5661045

1. Instrument Panel Lower Insulator Retainer (1) » Remove [2x]
2. Instrument Panel Insulator Bolt (1) » Remove
3. Instrument Panel Lower Trim Panel Insulator (1) » Remove

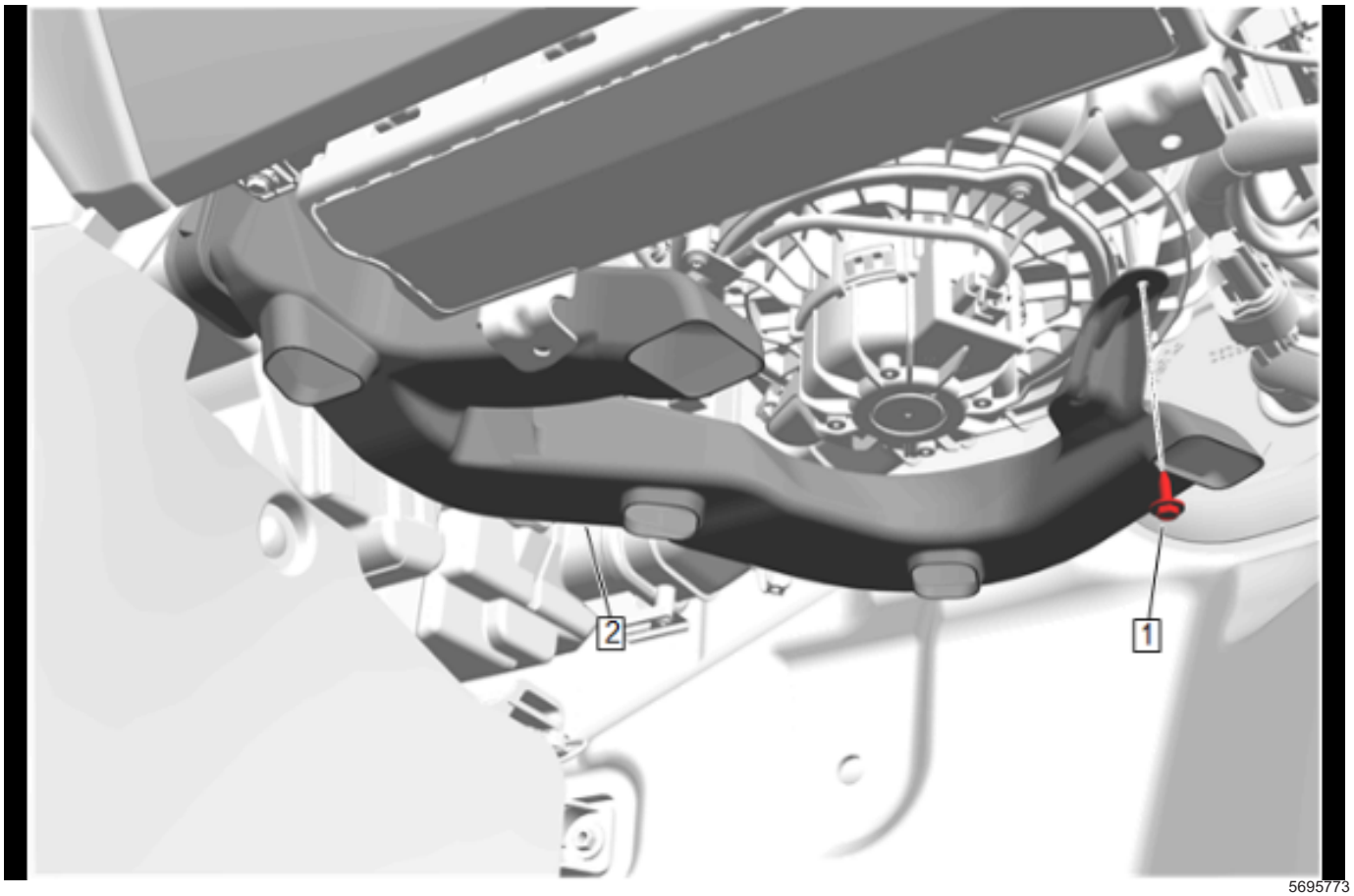

5695773

4. Floor Front Air Outlet Duct Bolt (1) » Remove
5. Floor Front Air Outlet Duct - Right Side (2) » Remove

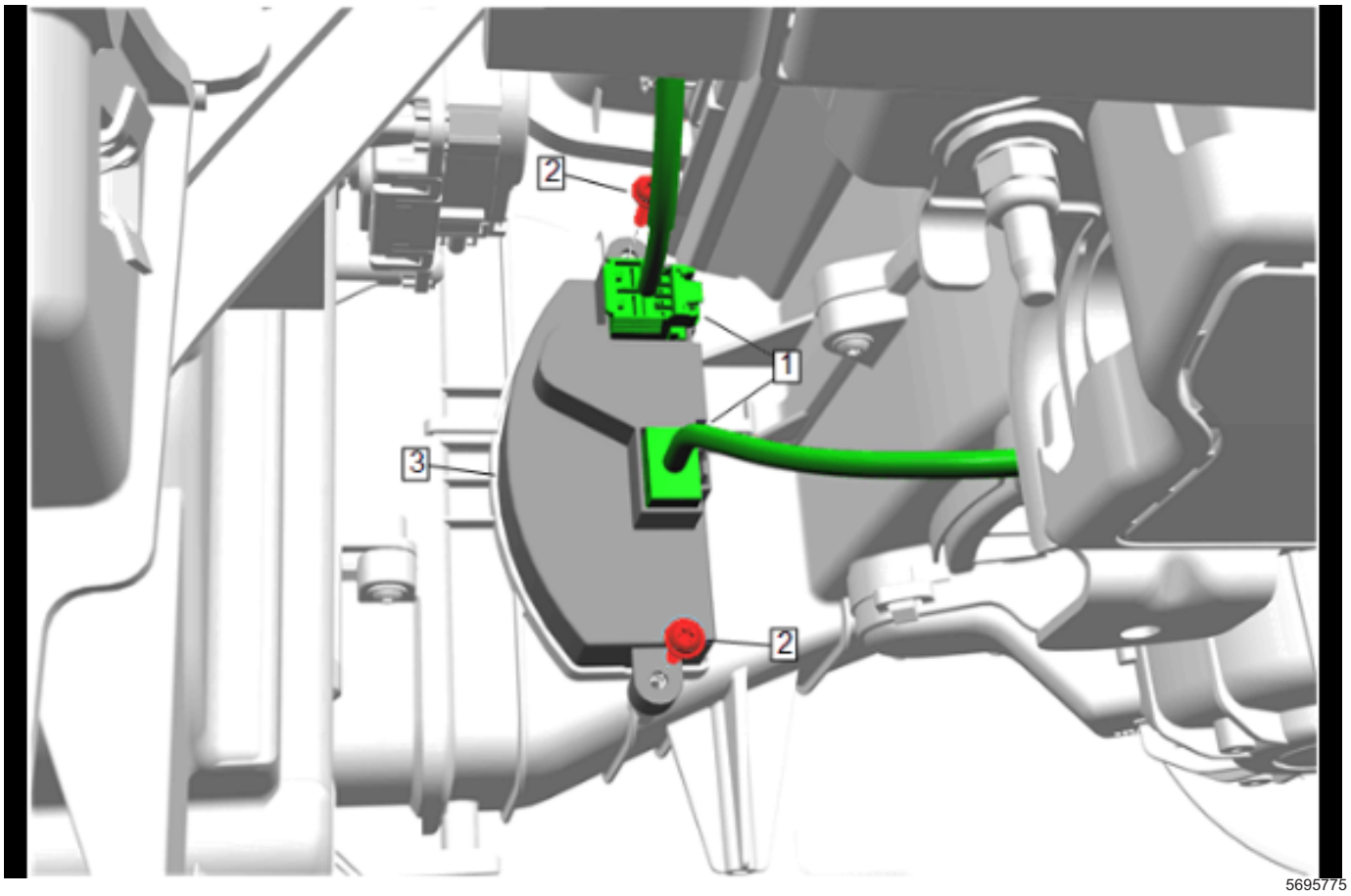

6. Electrical Connector (1) » Disconnect [2x]
7. Blower Motor Control Bolt (2) » Remove [2x]
8. Blower Motor Control (3) » Remove

Installation Procedure

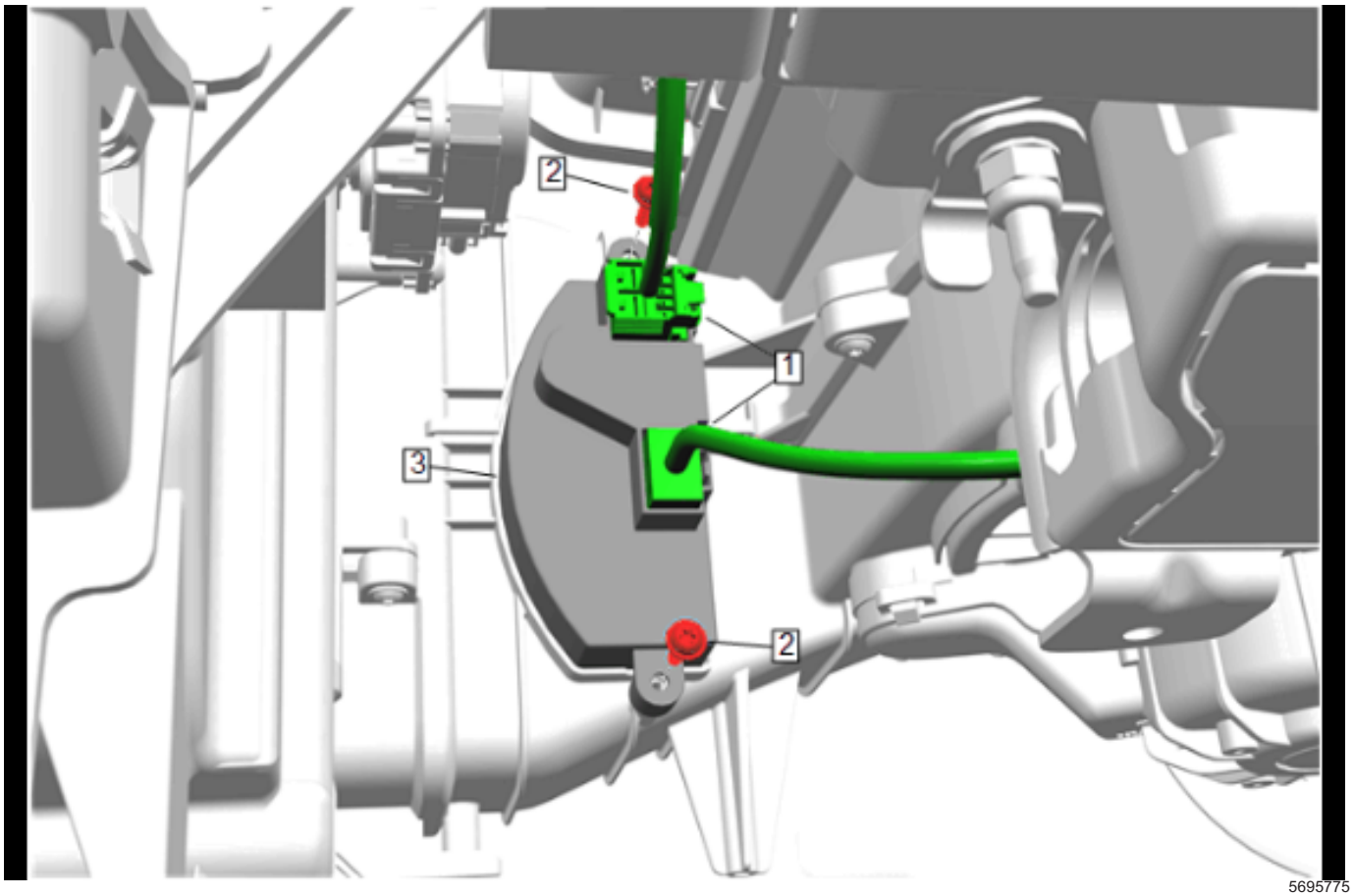

5695775

1. Blower Motor Control (3) » Install
2. Blower Motor Control Bolt (2) » Install and tighten
   — *Fastener Specifications on page 5-3*[2x]
3. Electrical Connector (1) » Connect [2x]

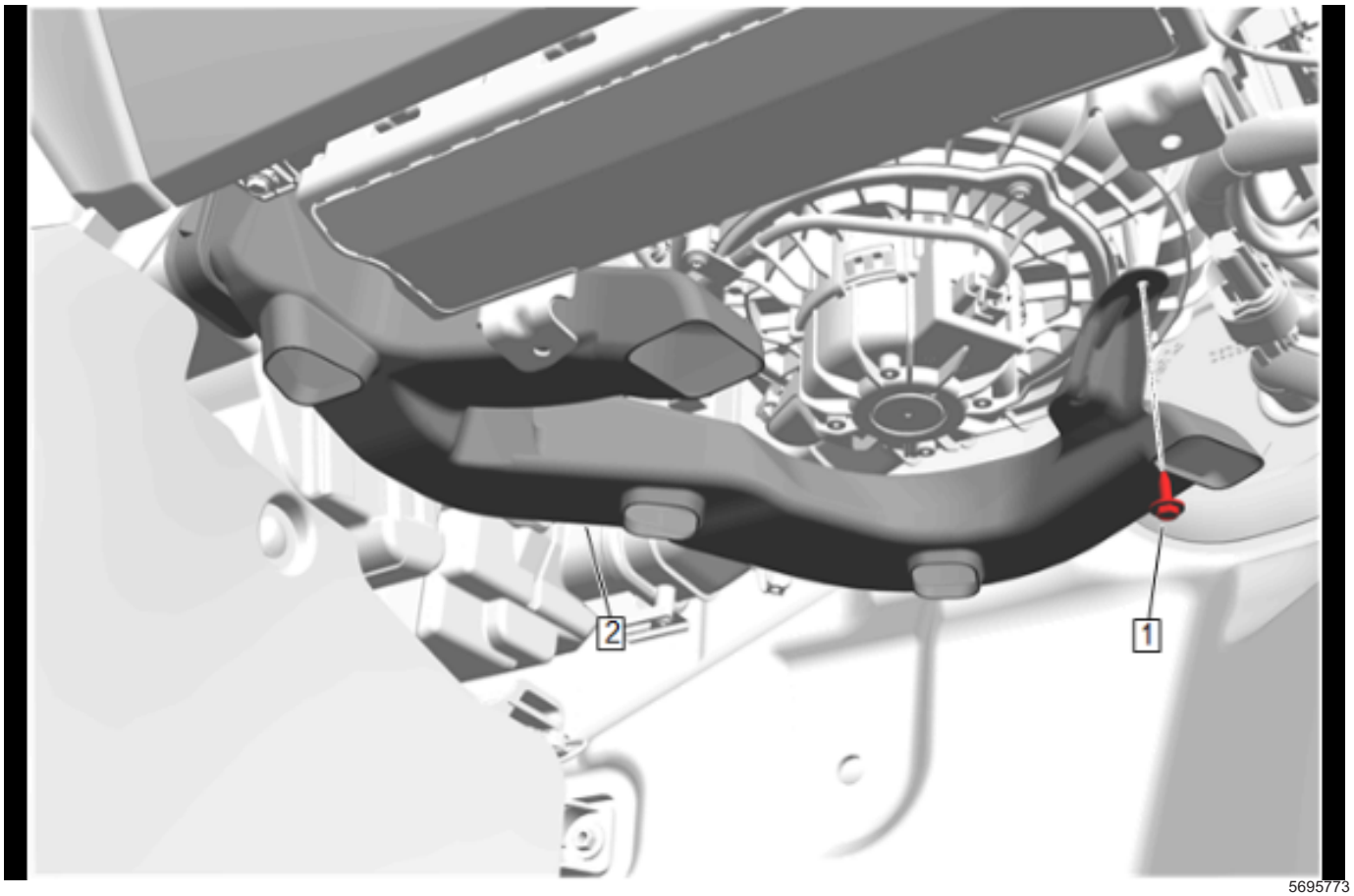

5695773

4. Floor Front Air Outlet Duct - Right Side (2) » Install
5. Floor Front Air Outlet Duct Bolt (1) » Install and tighten — *Fastener Specifications on page 5-3*

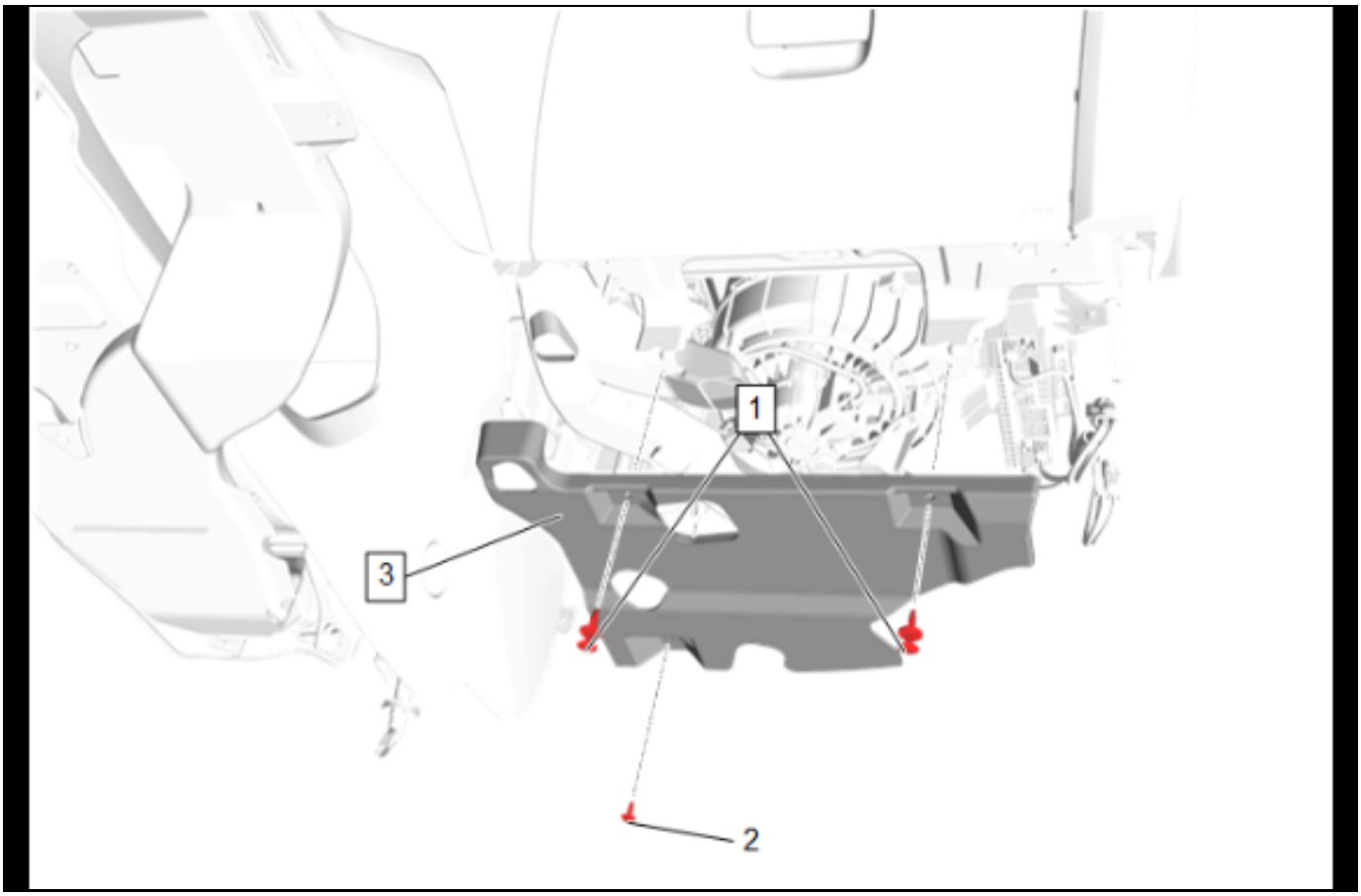

5661045

6. Instrument Panel Lower Trim Panel Insulator (1) » Install
7. Instrument Panel Lower Insulator Retainer (1) » Install [2x]
8. Instrument Panel Insulator Bolt (2) » Install and tighten

Blower Motor Replacement

Removal Procedure

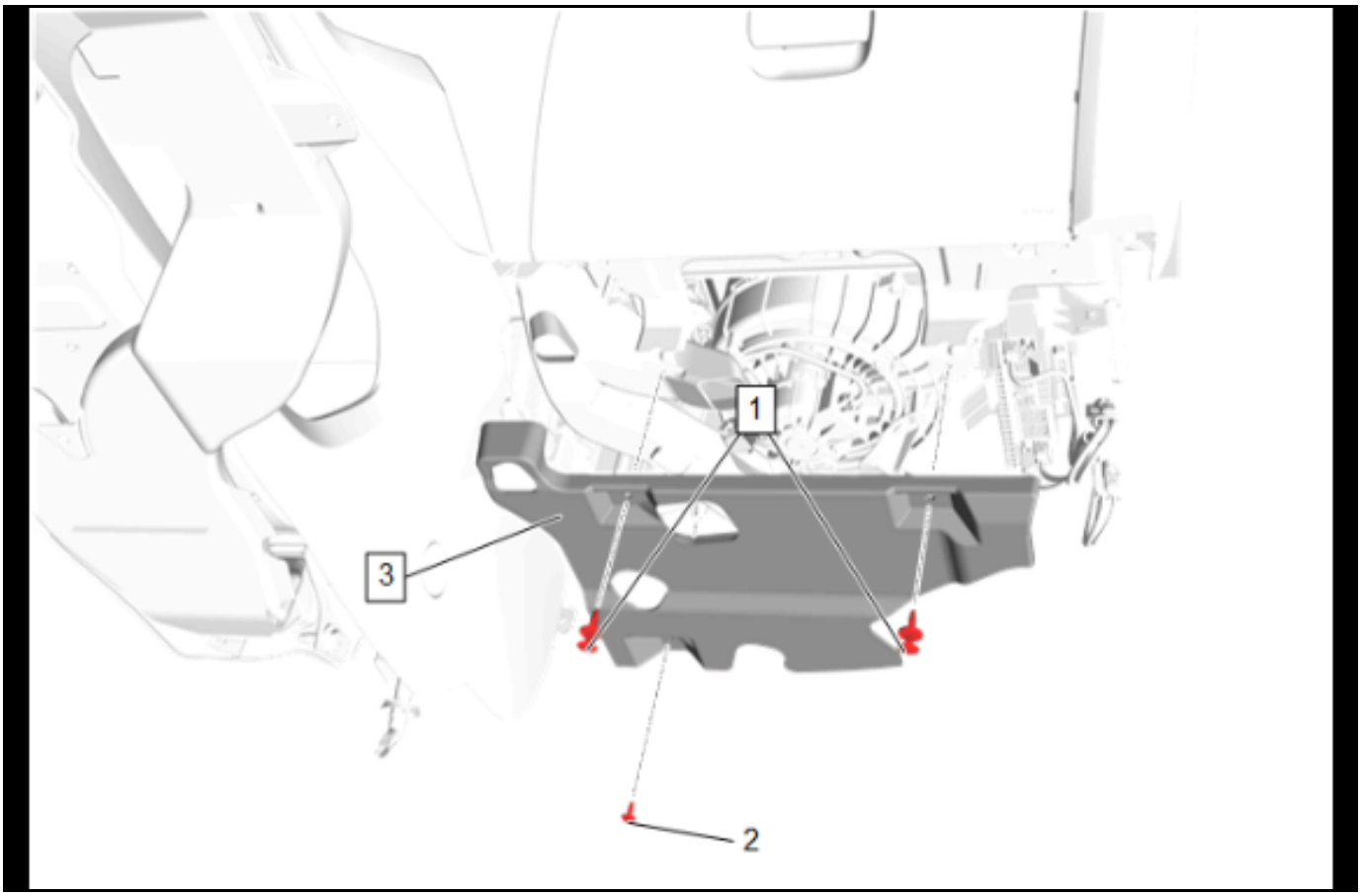

5661045

1. Instrument Panel Lower Insulator Retainer (1) » Remove [2x]
2. Instrument Panel Insulator Bolt (1) » Remove
3. Instrument Panel Lower Trim Panel Insulator (1) » Remove

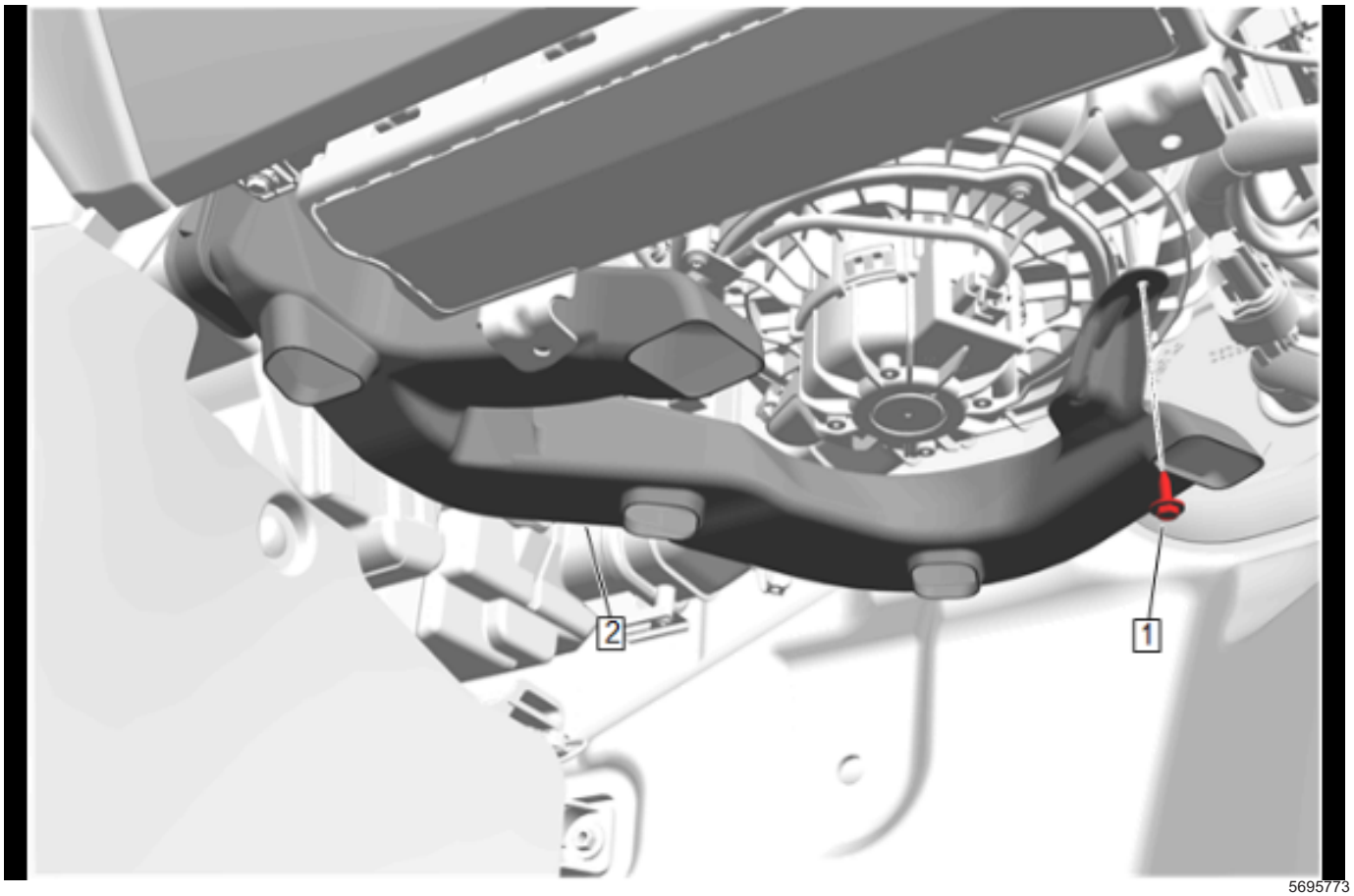

5695773

4. Floor Front Air Outlet Duct Bolt (1) » Remove
5. Floor Front Air Outlet Duct - Right Side (2) » Remove

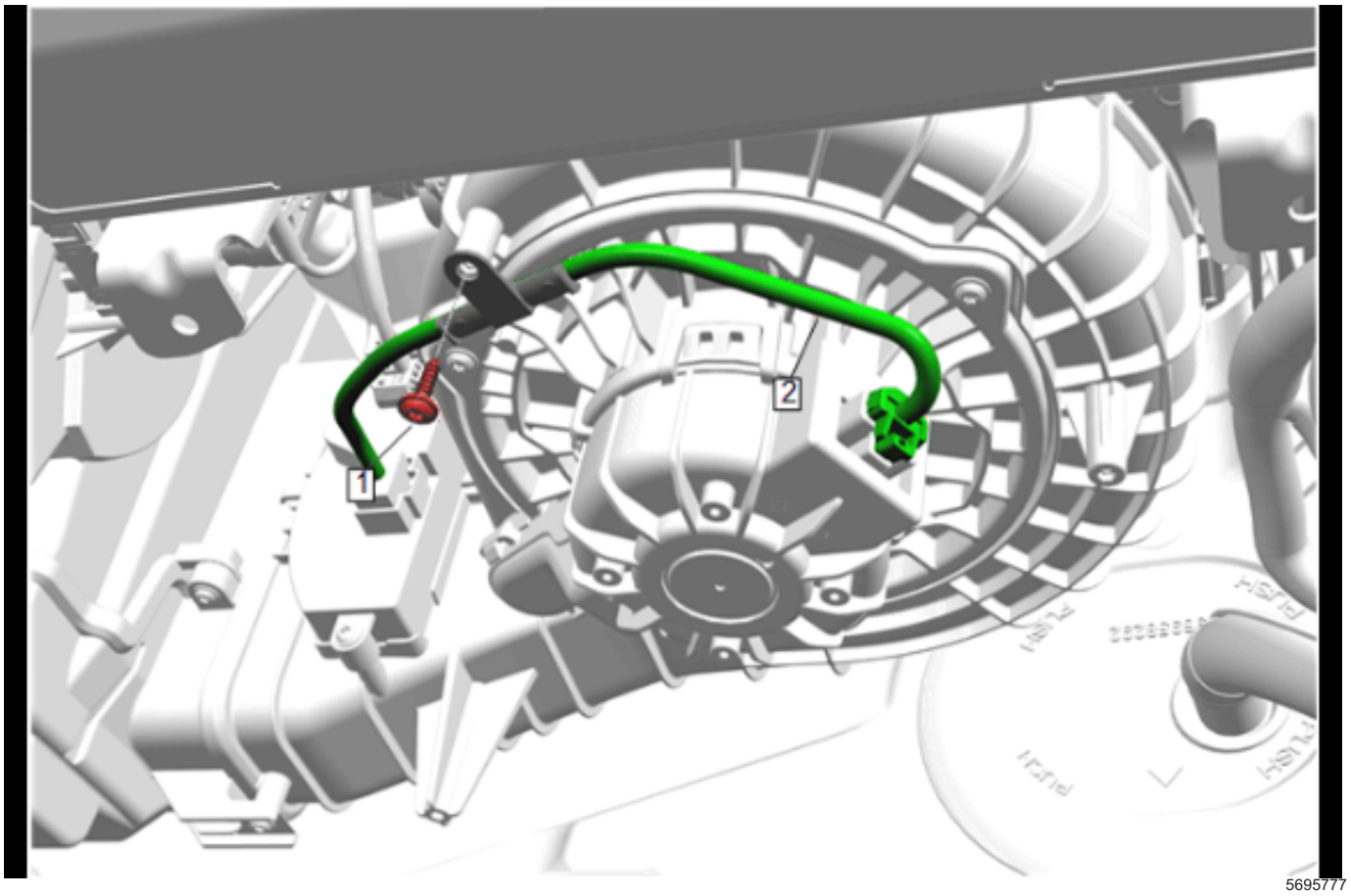

6. Screw (1) » Remove
7. Wiring Harness (2) » Disconnect and position aside

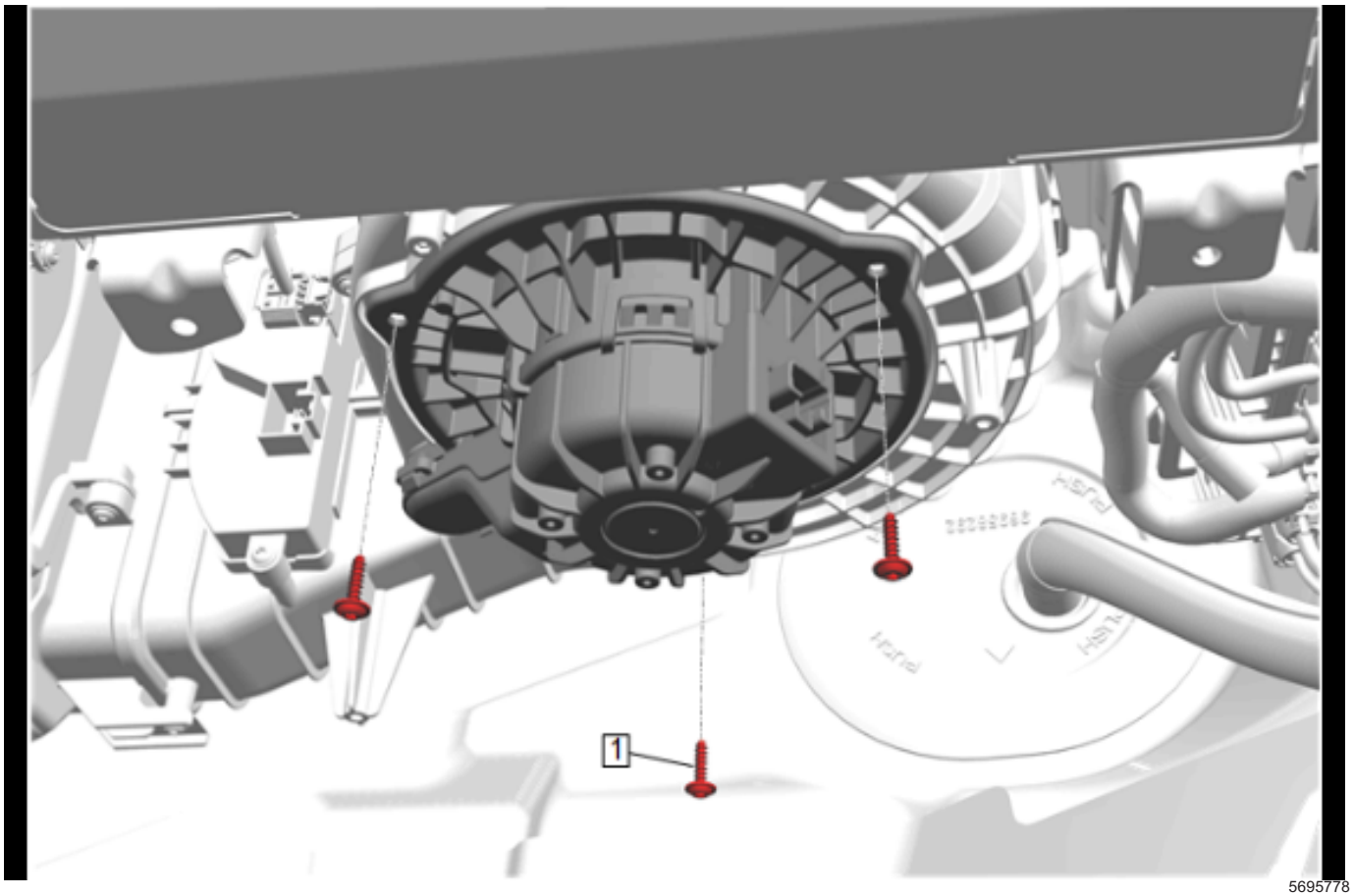

5695778

8. Blower Motor Bolt (1) » Remove [3x]

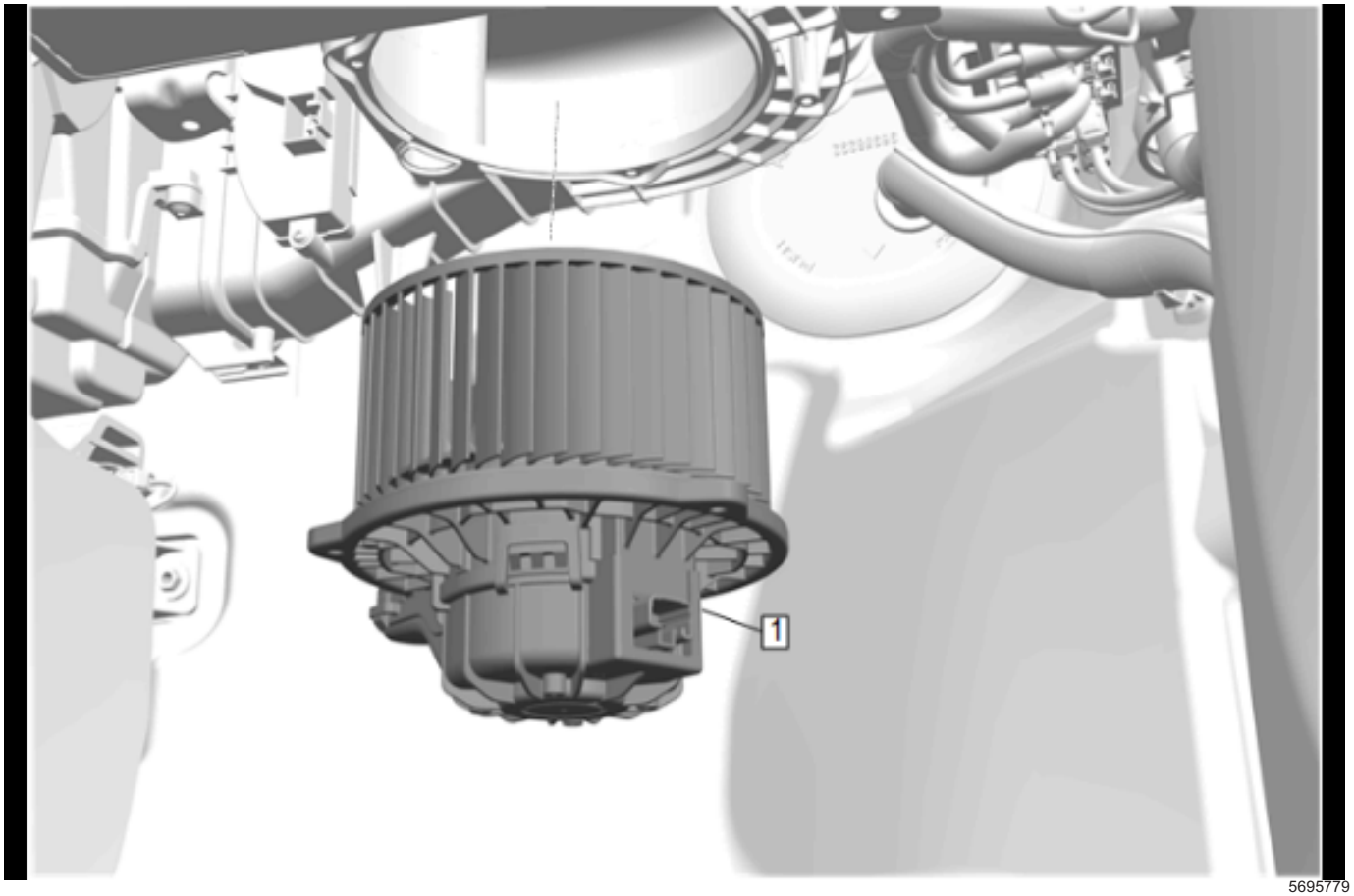

5695779

9. Blower Motor (1) » Remove

Installation Procedure

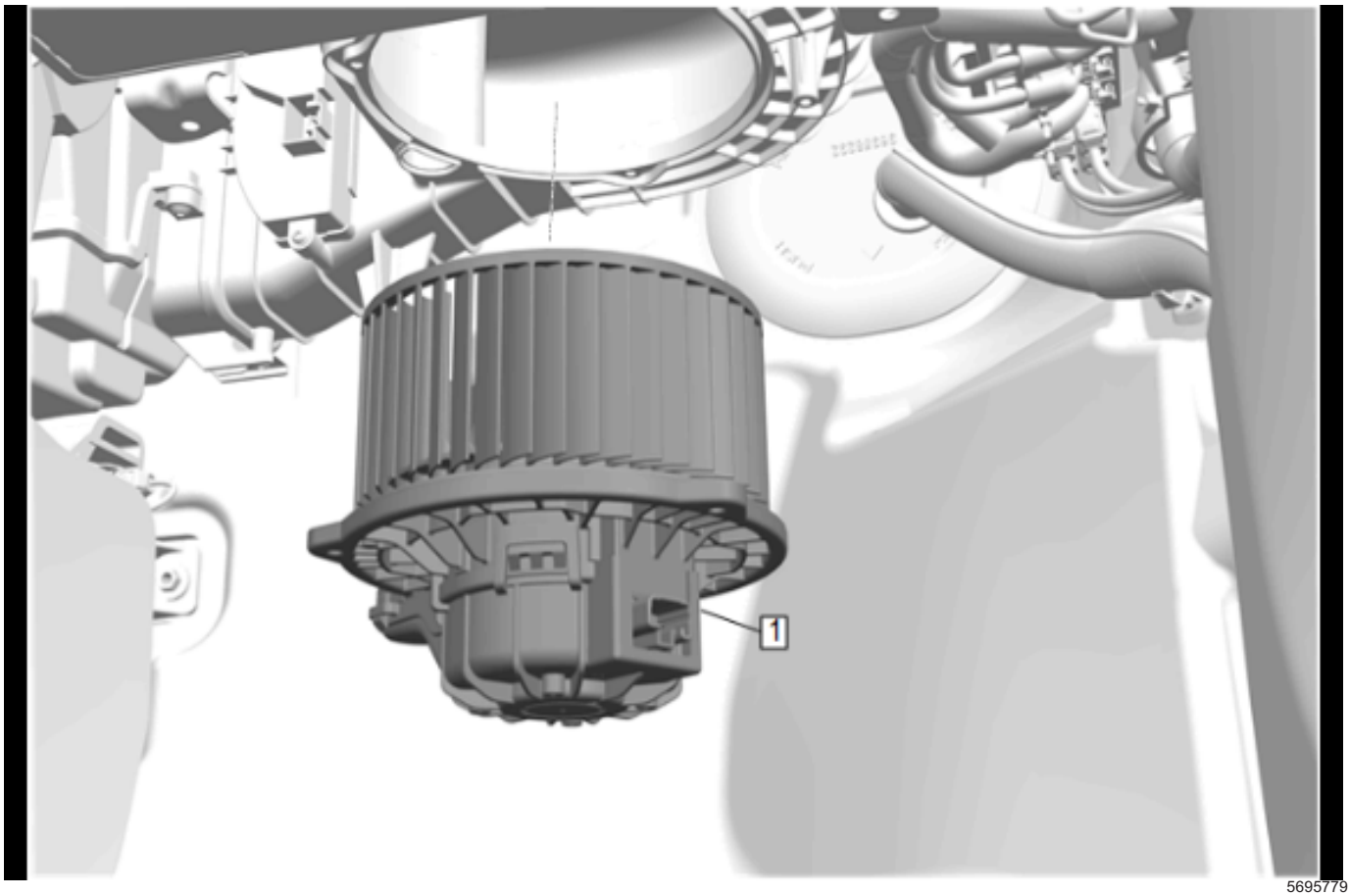

5695779

1. Blower Motor (1) » Install

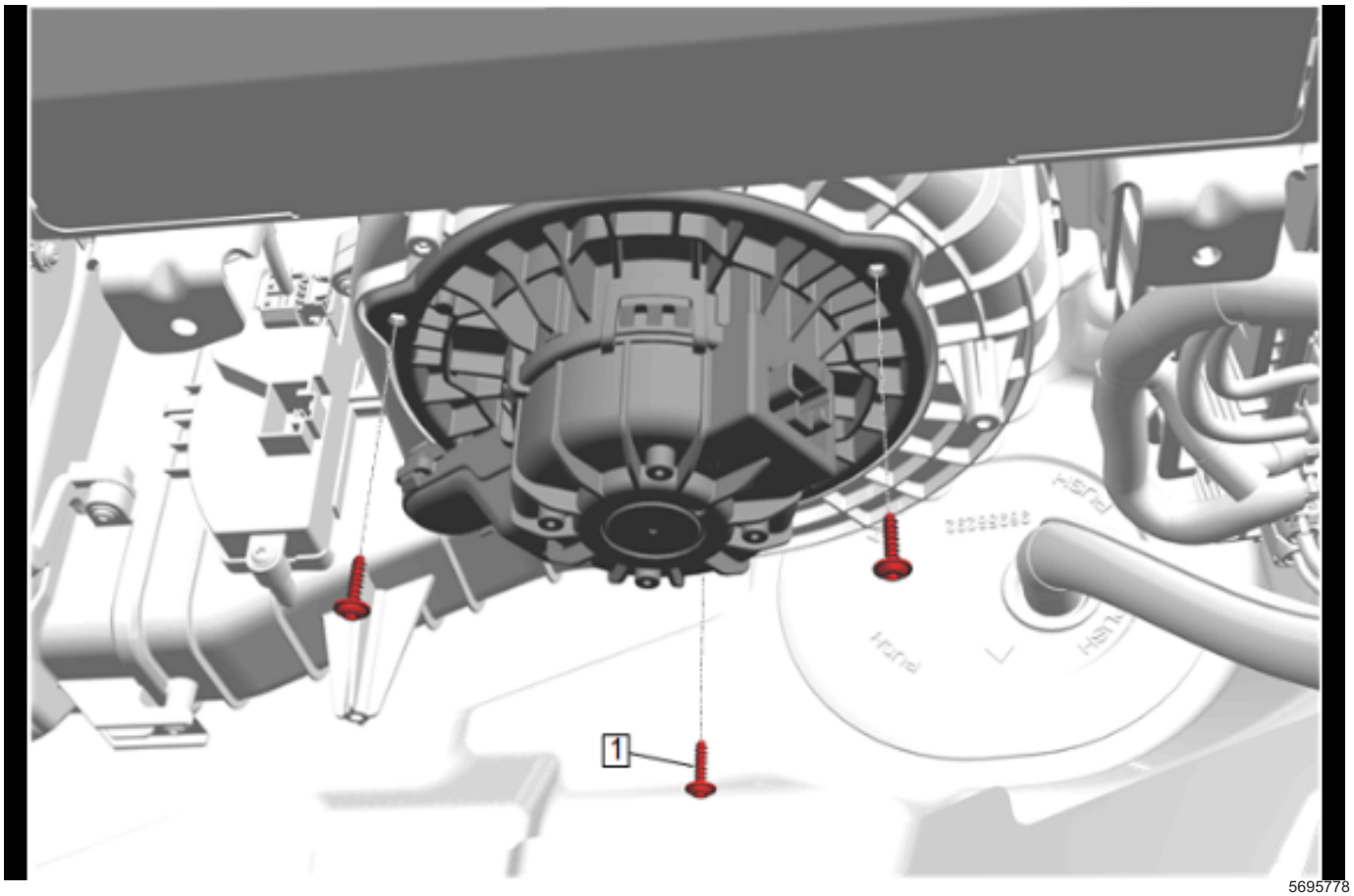

5695778

2. Blower Motor Bolt (1) » Install and tighten — *Fastener Specifications on page 5-3*[3x]

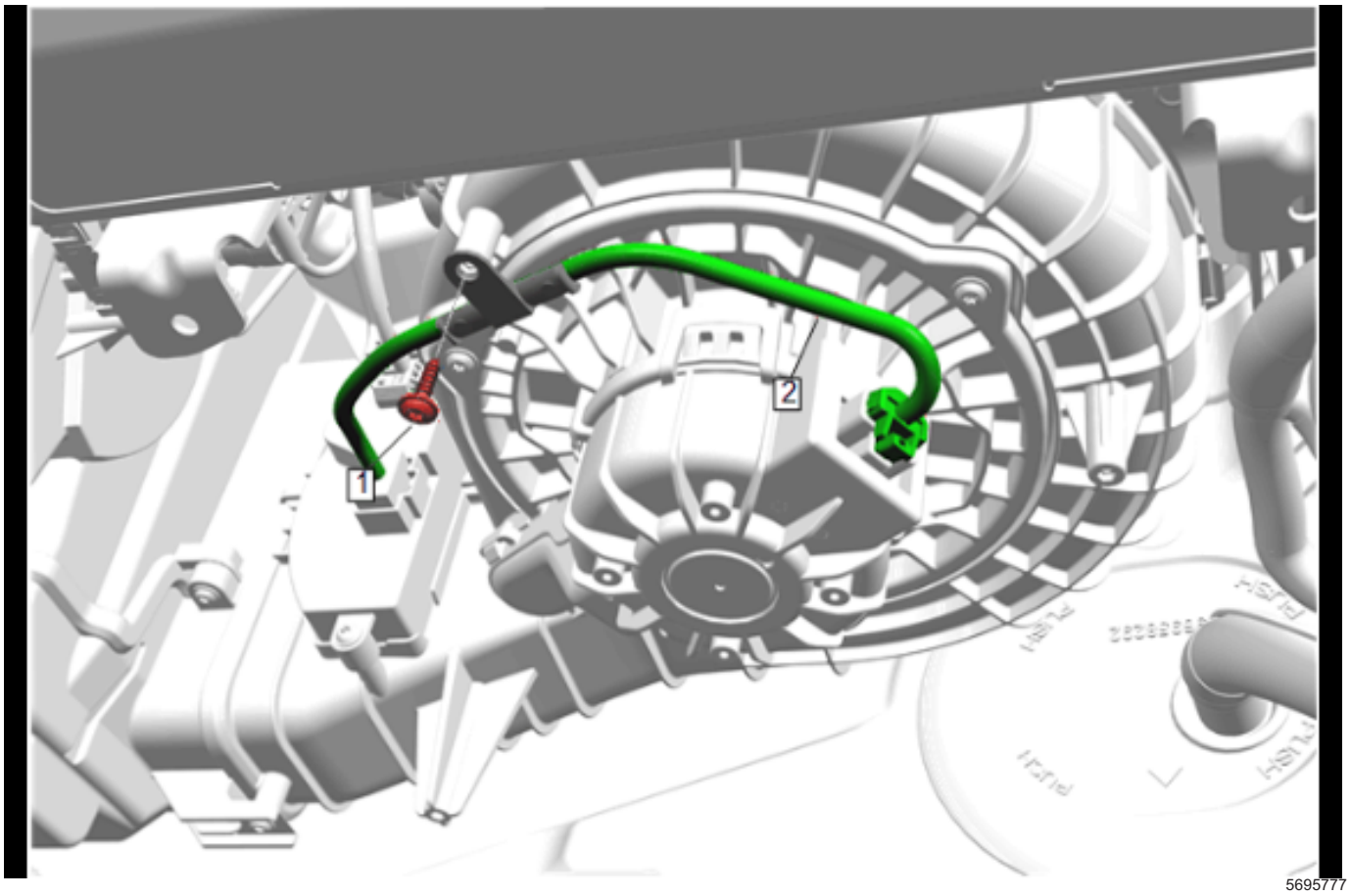

3. Wiring Harness (2) » Install
4. Screw (1) » Install and tighten — *Fastener Specifications on page 5-3*

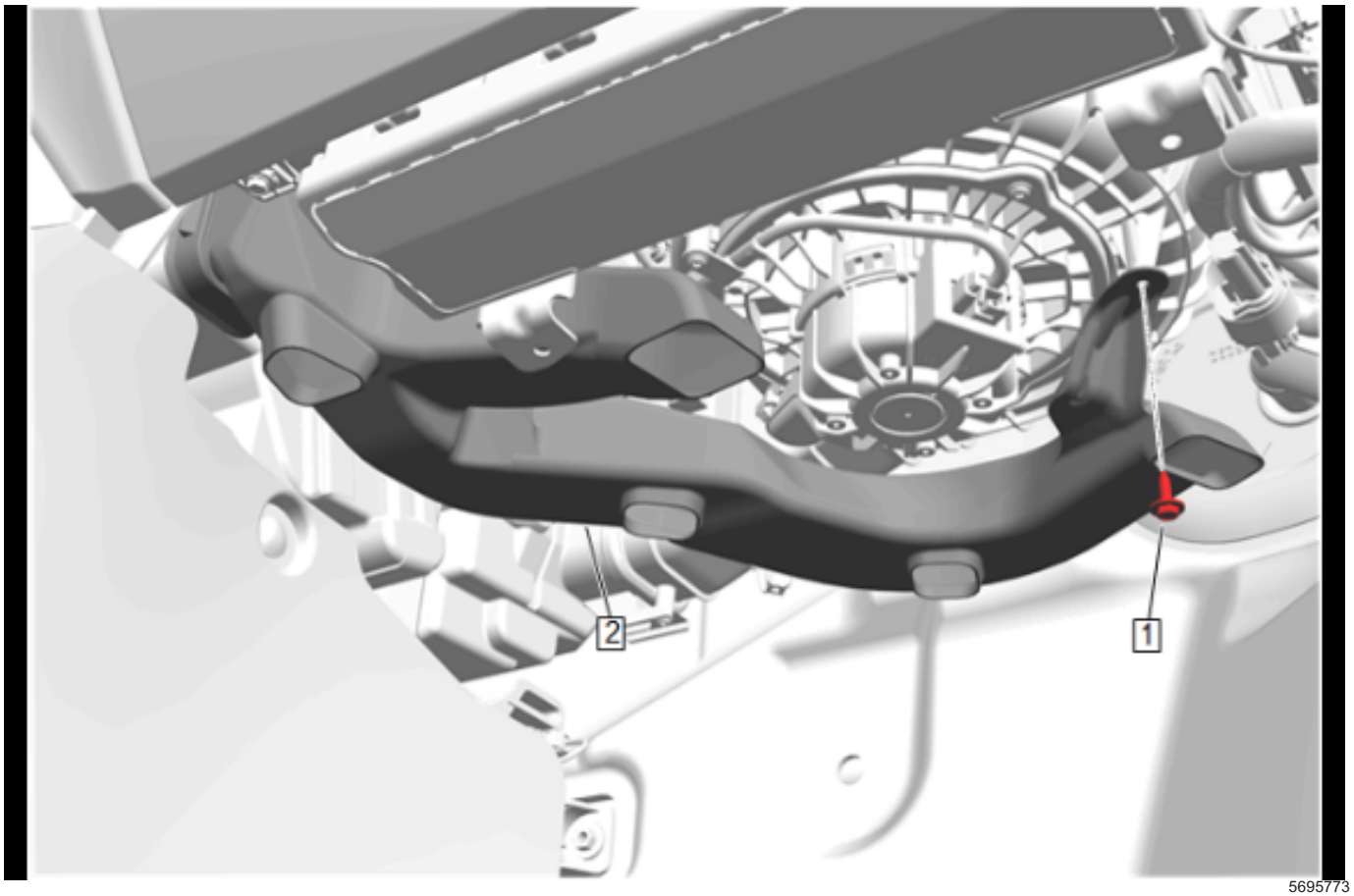

5695773

5. Floor Front Air Outlet Duct - Right Side (2) » Install
6. Floor Front Air Outlet Duct Bolt (1) » Install and tighten — *Fastener Specifications on page 5-3*

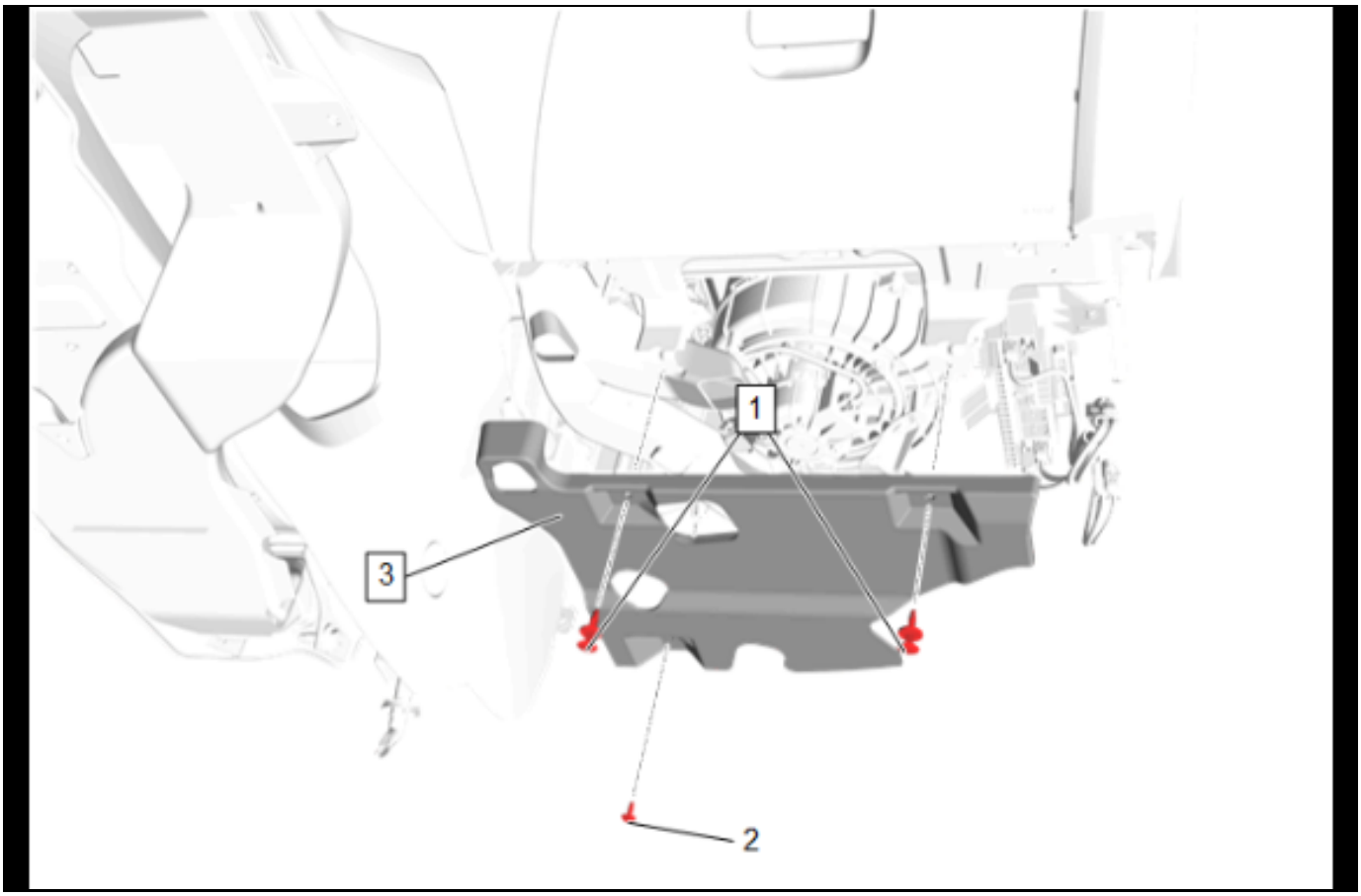

5661045

7. Instrument Panel Lower Trim Panel Insulator (1) » Install
8. Instrument Panel Lower Insulator Retainer (1) » Install [2x]
9. Instrument Panel Insulator Bolt (2) » Install and tighten

Side Window Defogger Outlet Grille Replacement - Left Side

Warning: After installation of the steering wheel airbag module to the steering wheel, slightly pull the module outward. If there is no give on the airbag module then it is secured correctly. If the airbag module is not fully attached personal injury could result.

Removal Procedure

1. Disable the SIR system.
2. Extend the steering column to its furthest point to allow the instrument panel steering column upper trim cover to clear the instrument panel.

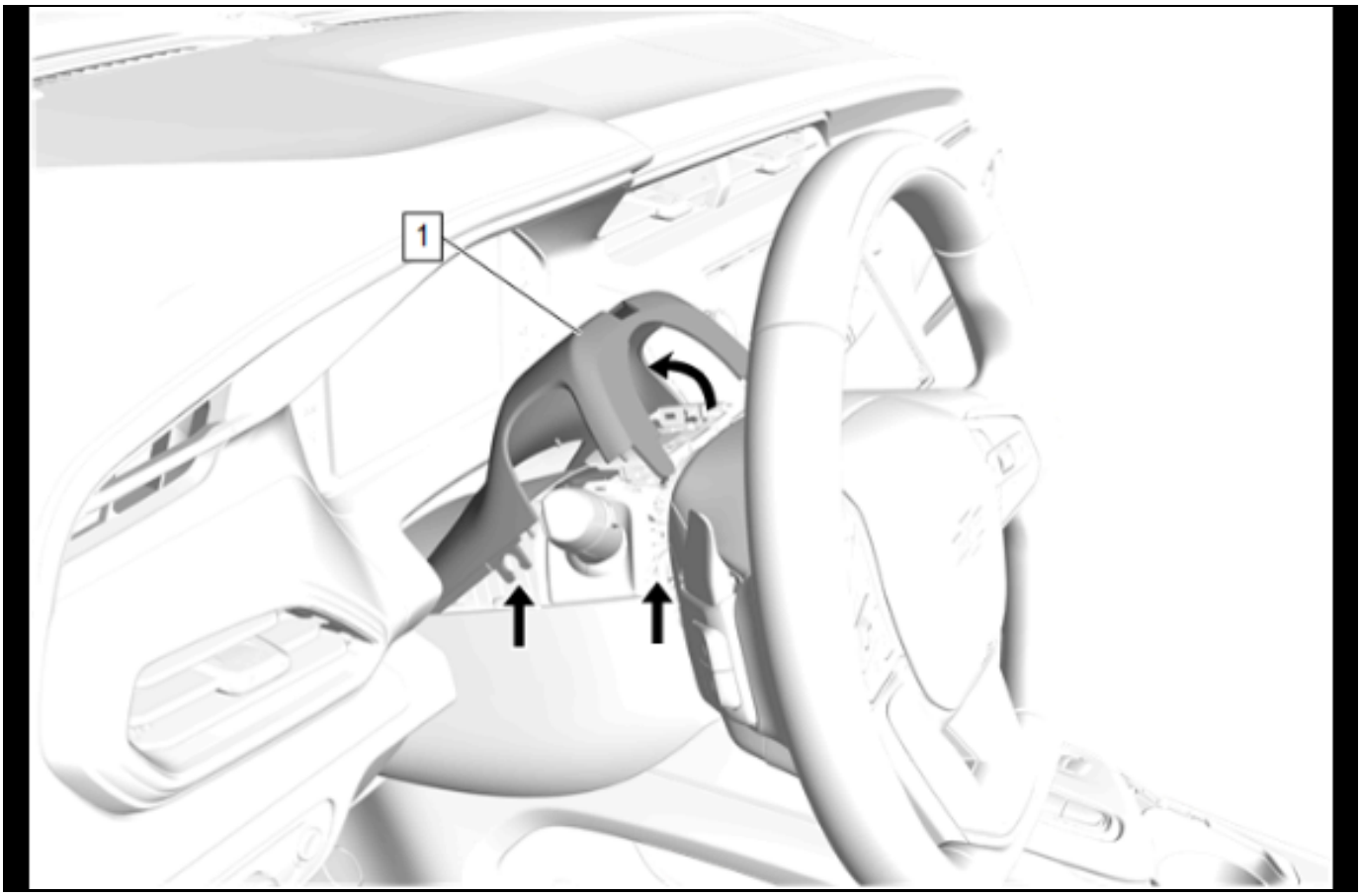

5661051

3. Using a small plastic trim tool, separate the instrument panel steering column upper trim cover (1) from the instrument panel steering column lower trim cover.

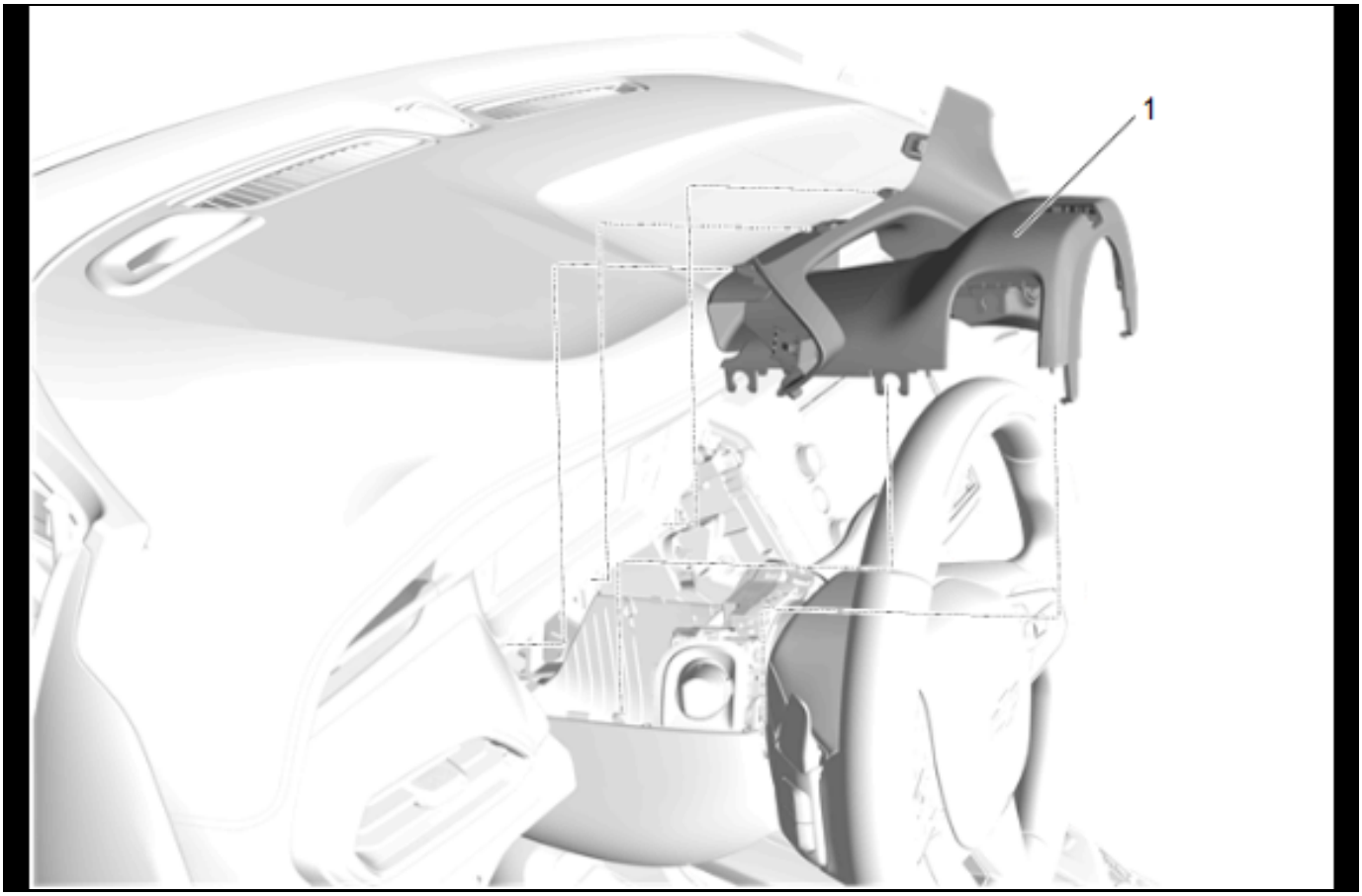

5661052

4. Using a suitable plastic trim tool, release instrument panel steering column upper trim cover (1).
5. Disconnect the electrical connector.
6. Instrument Panel Steering Column Upper Trim Cover (1) » Remove

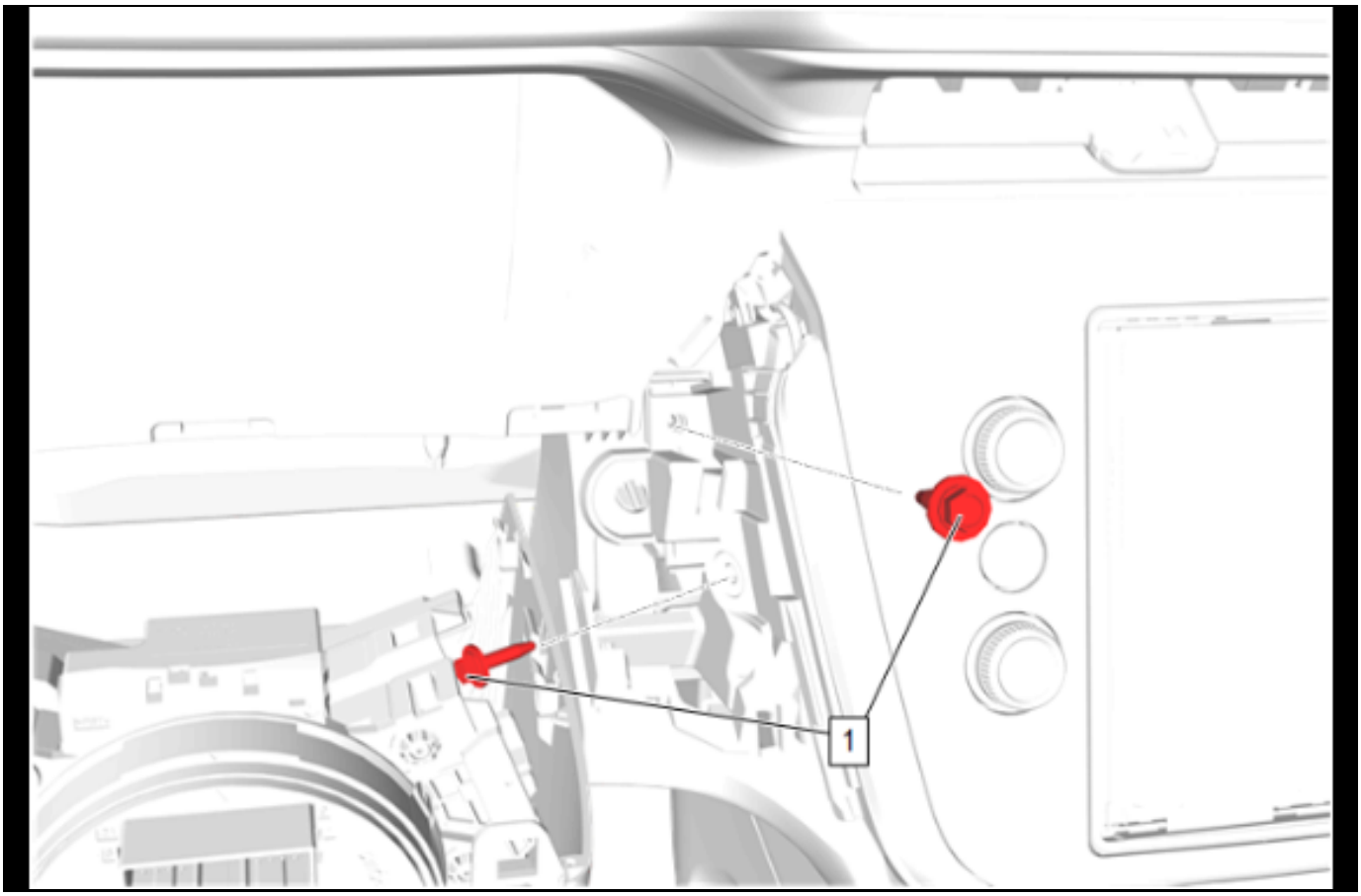

5663838

7. Instrument Panel Accessory Center Trim Plate Bolt
   (1) » Remove [2x]

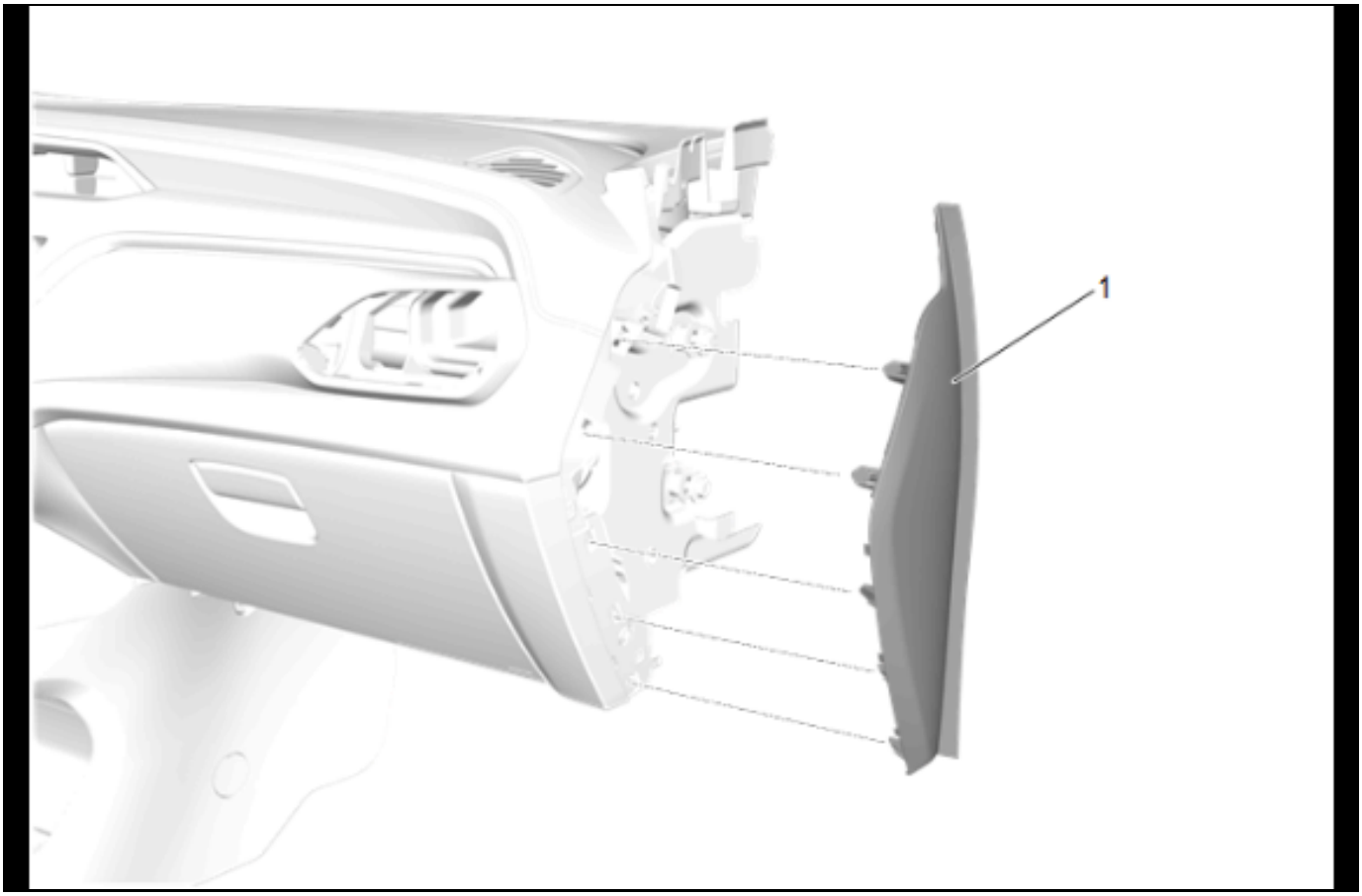

5660657

8. With a flat bladed plastic trim tool, start at the front and work your way back to release the clips.
9. Instrument Panel Outer Trim Cover - Right Side (1) » Remove

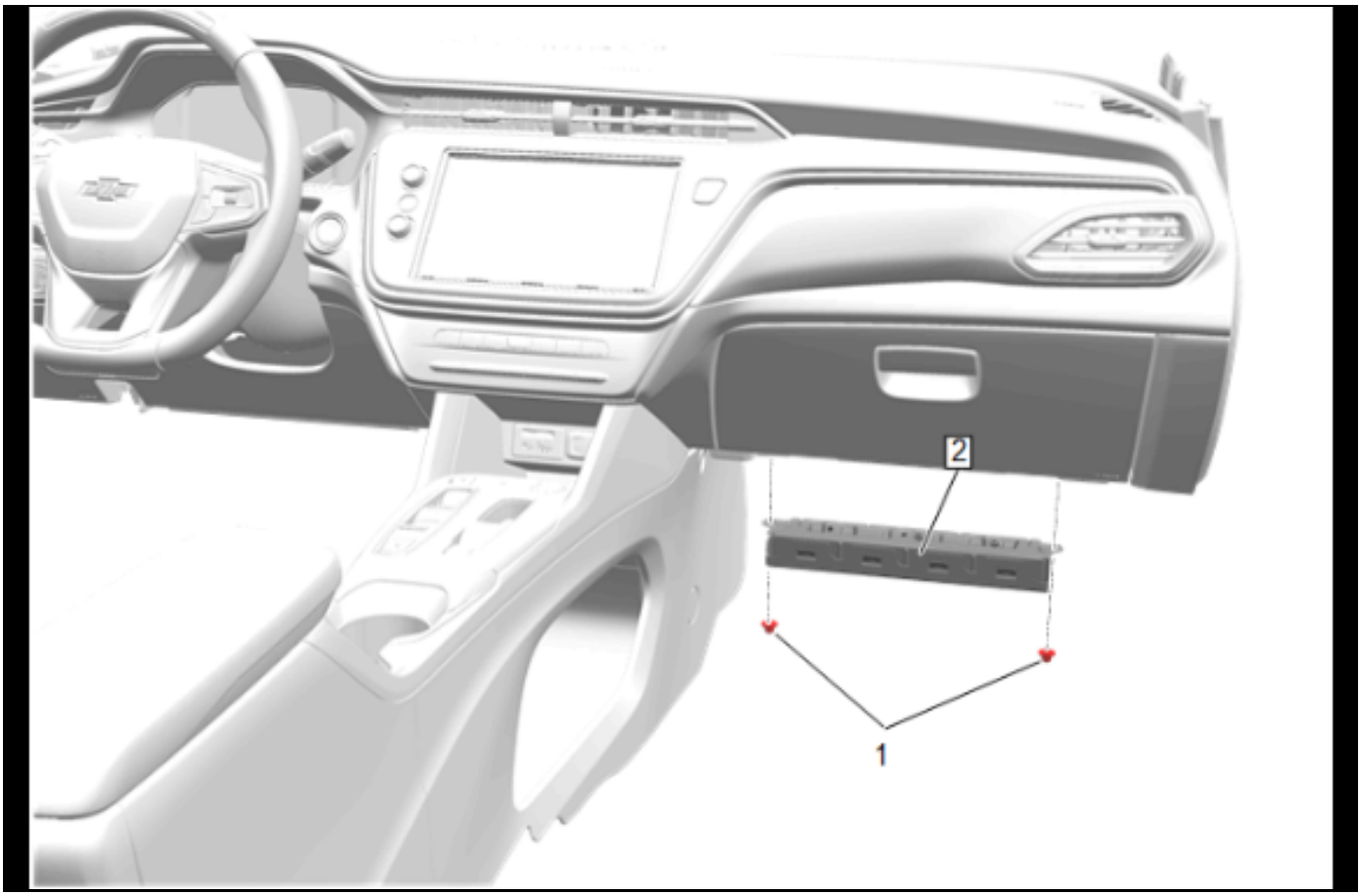

5664037

10. Instrument Panel Lower Airbag Nut (1) » Remove [2x]
11. Instrument Panel Lower Airbag - Passenger Side (2) » Remove
12. Disconnect the electrical connector.

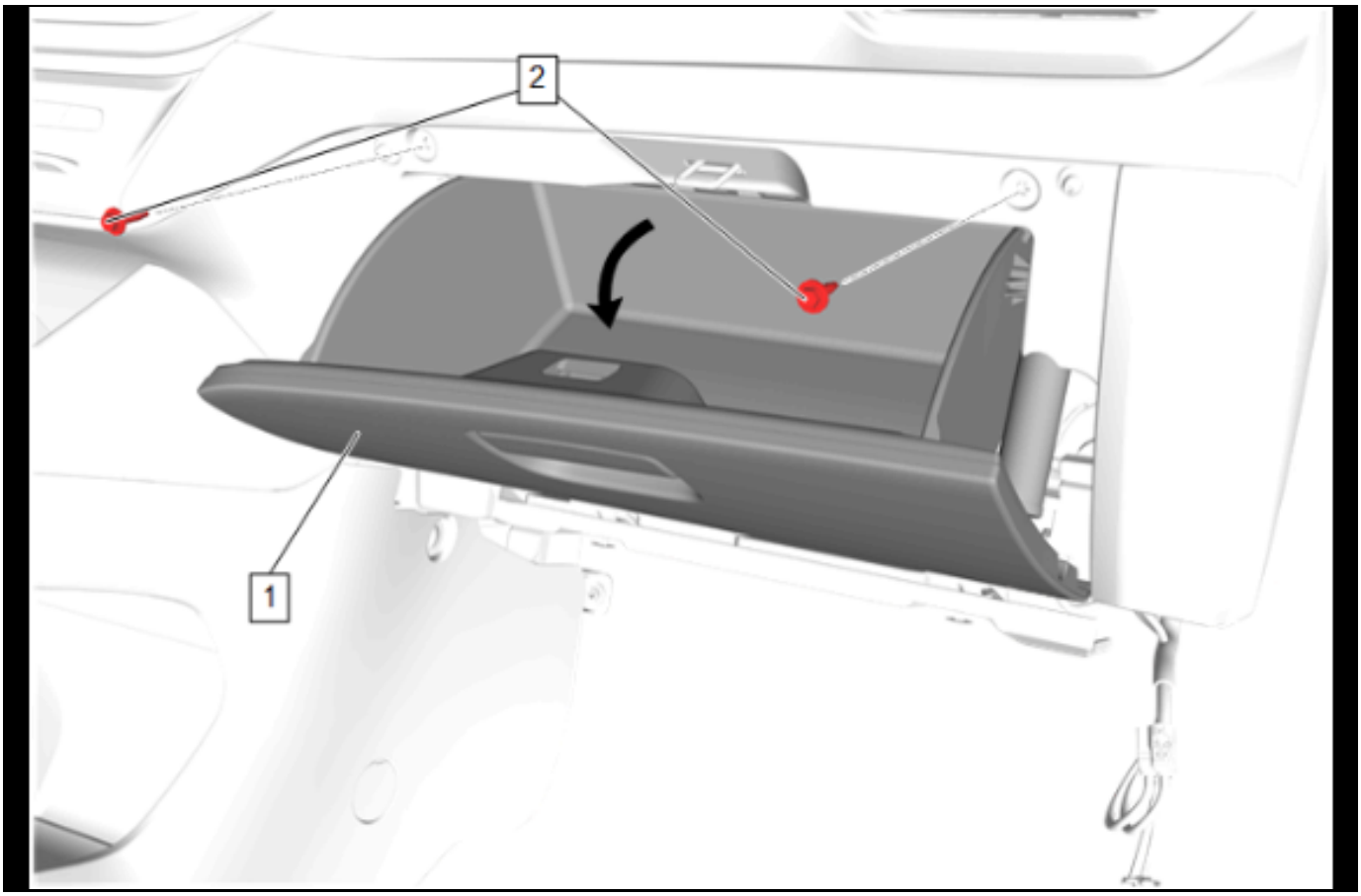

5663566

13. Open the instrument panel compartment door. (1)
14. Instrument Panel Compartment Bolt (2) »
    Remove [2x]

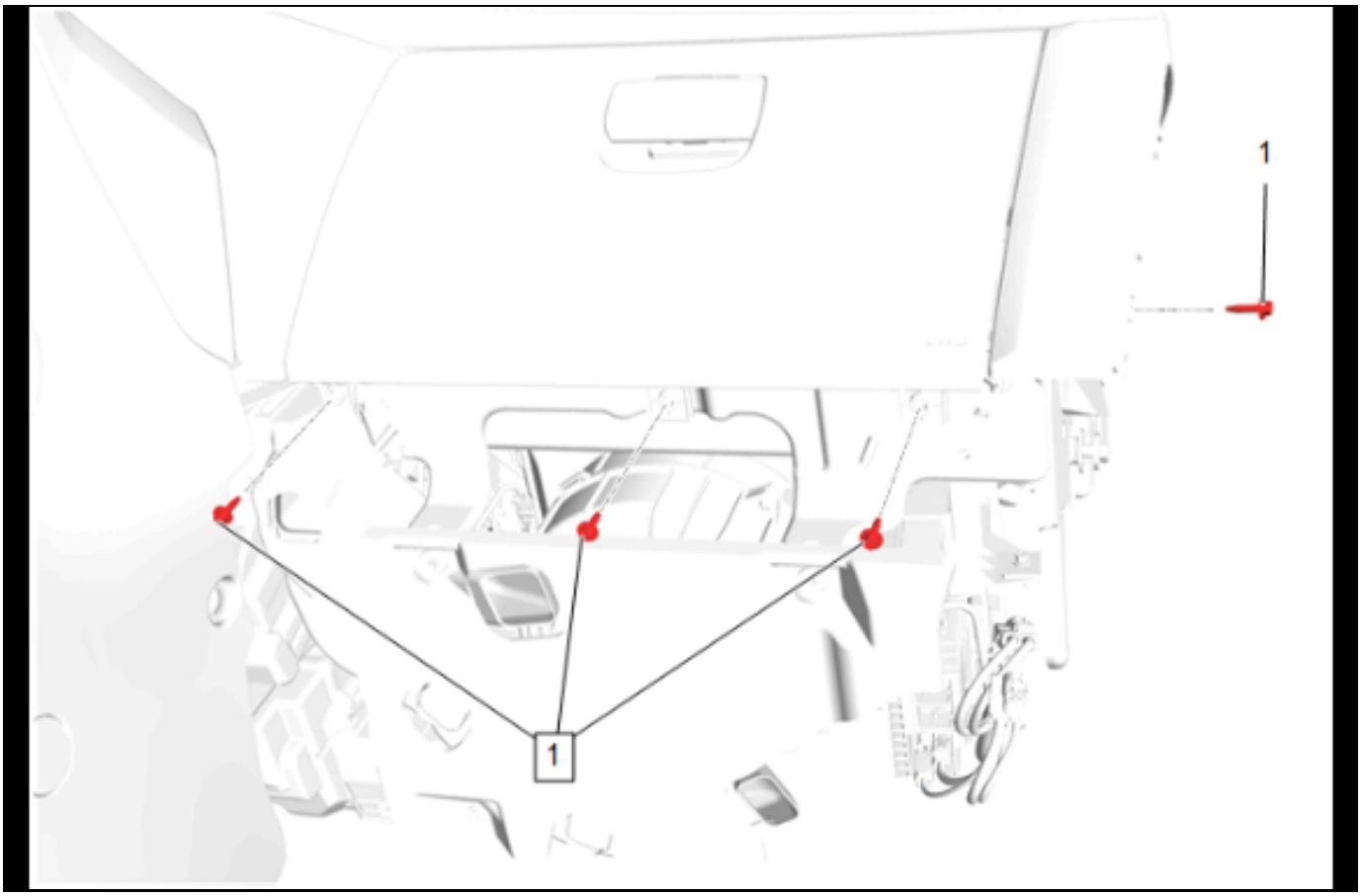

5663567

15. Instrument Panel Compartment Bolt (1) »
    Remove [4x]

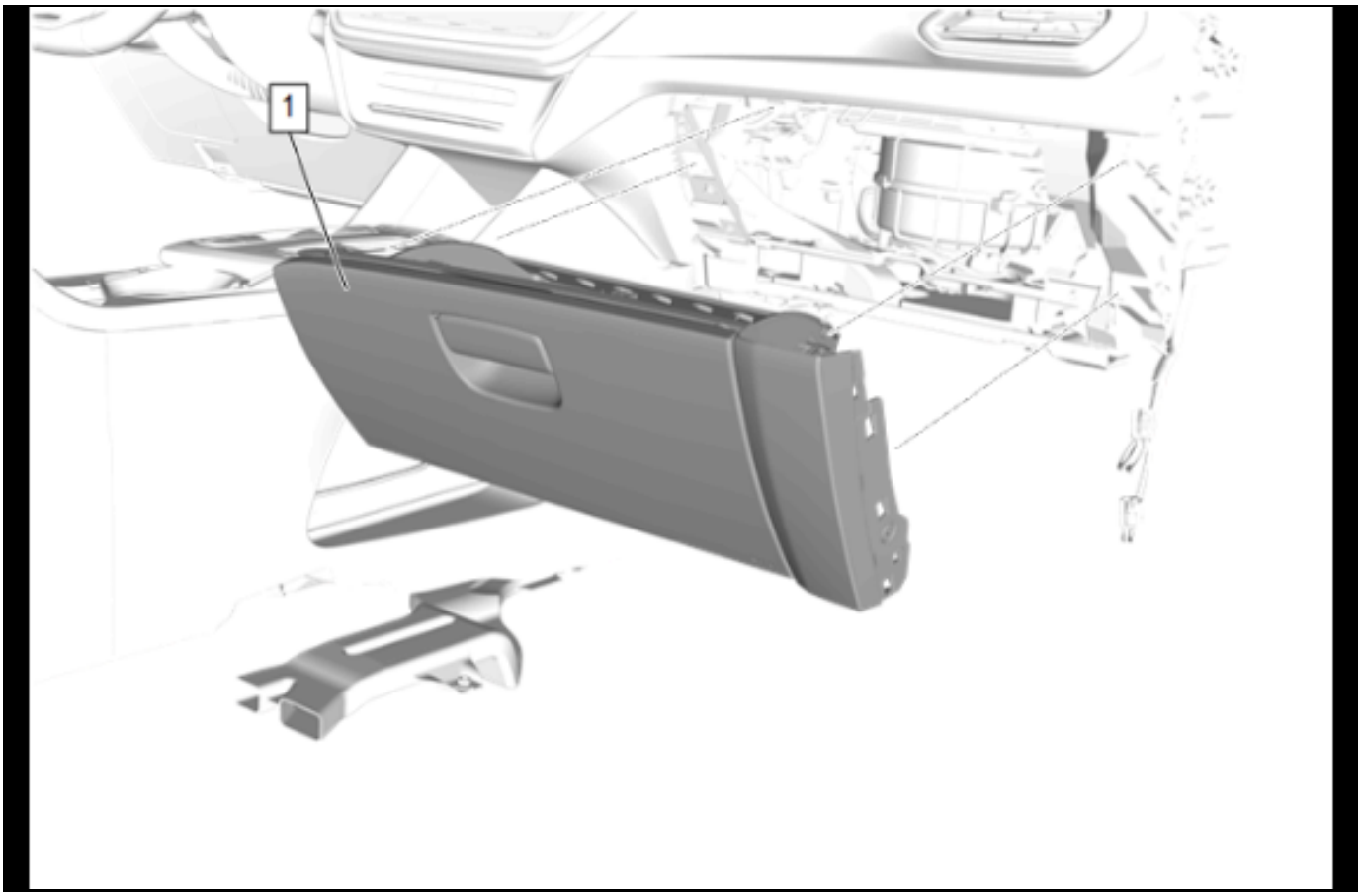

5663568

16. Instrument Panel Compartment (1) » Remove

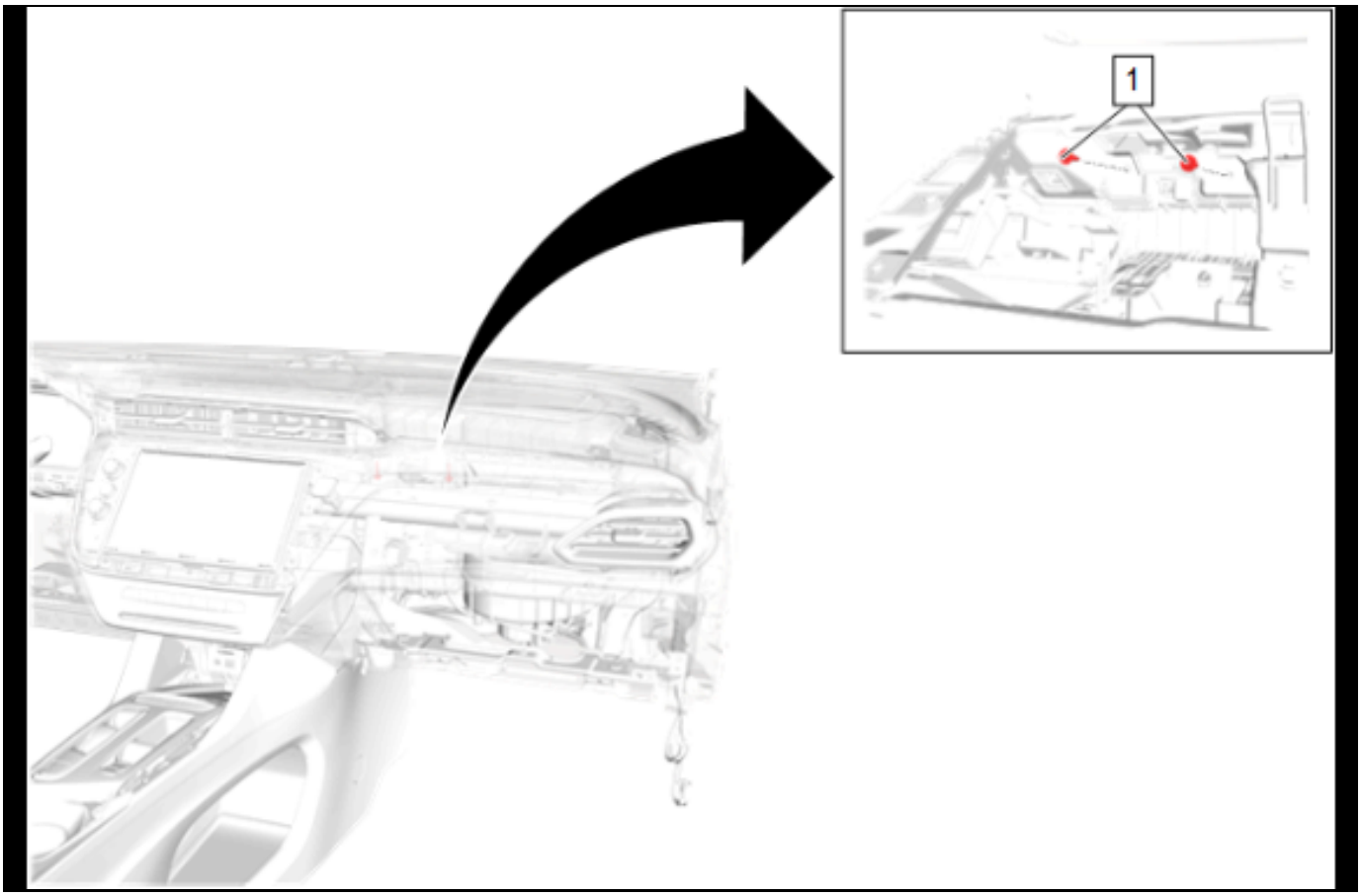

5663839

17. Instrument Panel Accessory Center Trim Plate Bolt
    (1) » Remove [2x]
18. Disconnect the electrical connectors.

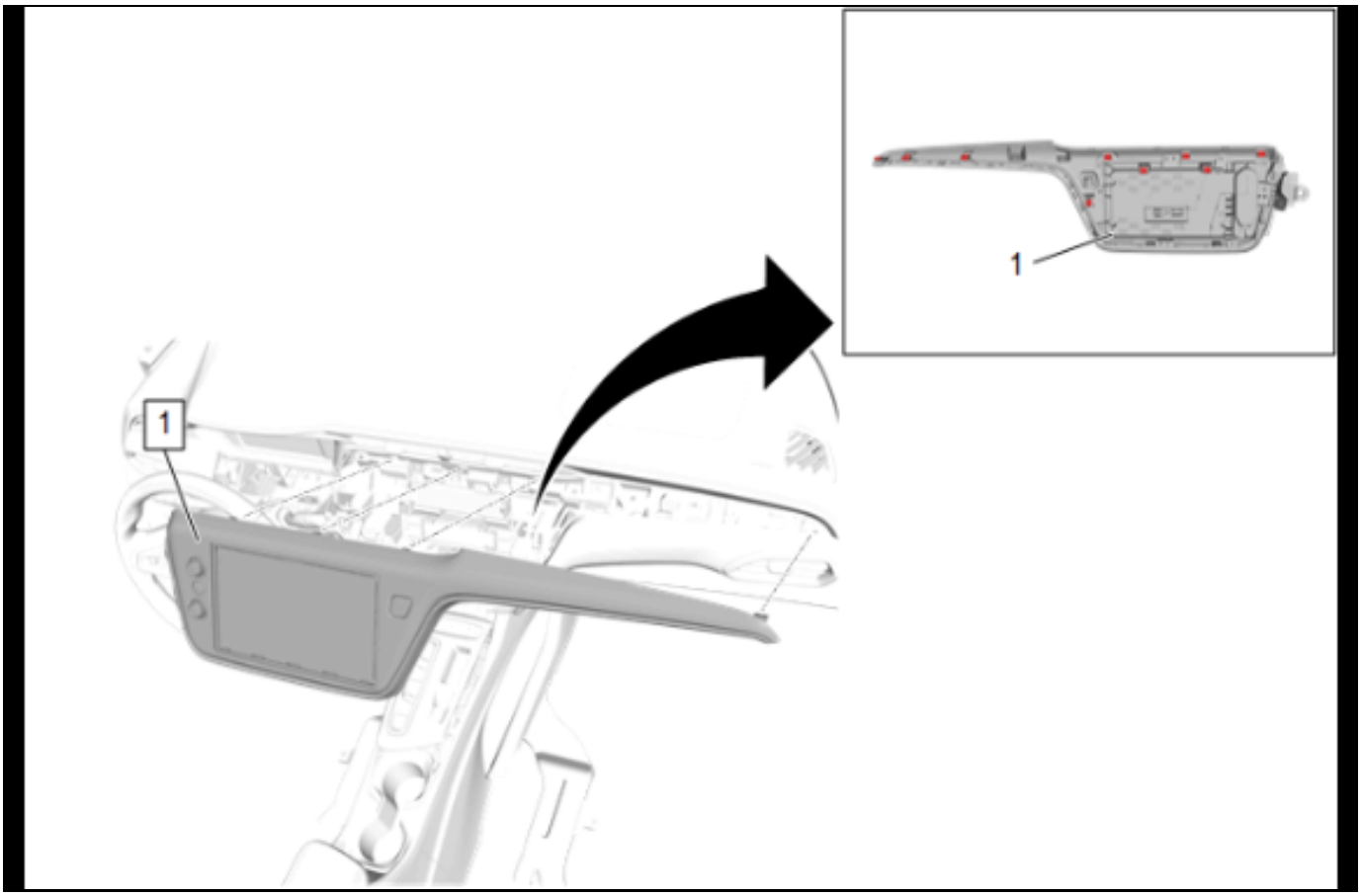

5663840

19. Using a flat-bladed plastic trim tool, release the retaining clips.
20. Instrument Panel Accessory Center Trim Plate (1)
    » Remove

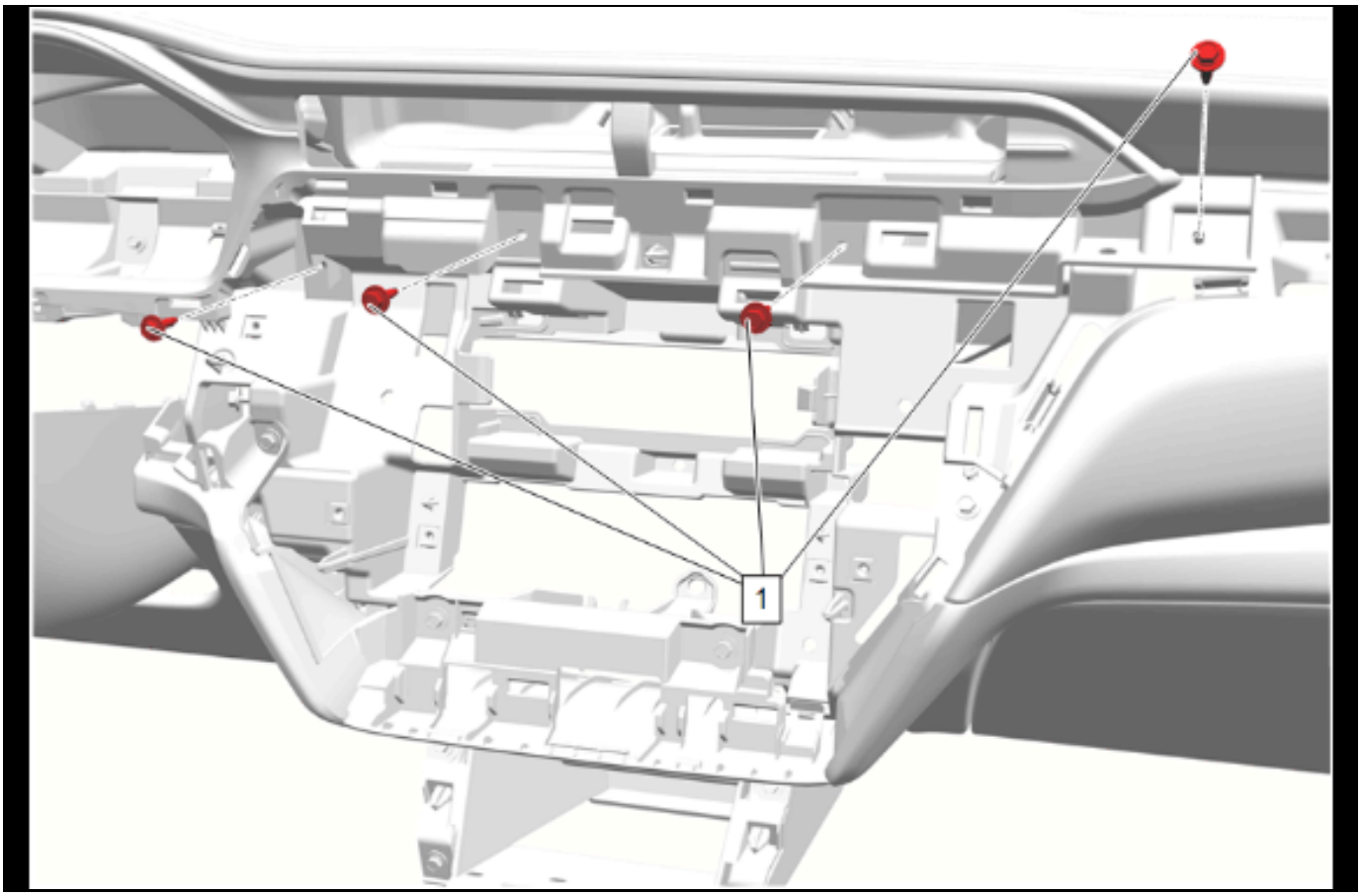

5664384

21. Instrument Panel Cluster Trim Plate Bolt (1) »
    Remove [5x]

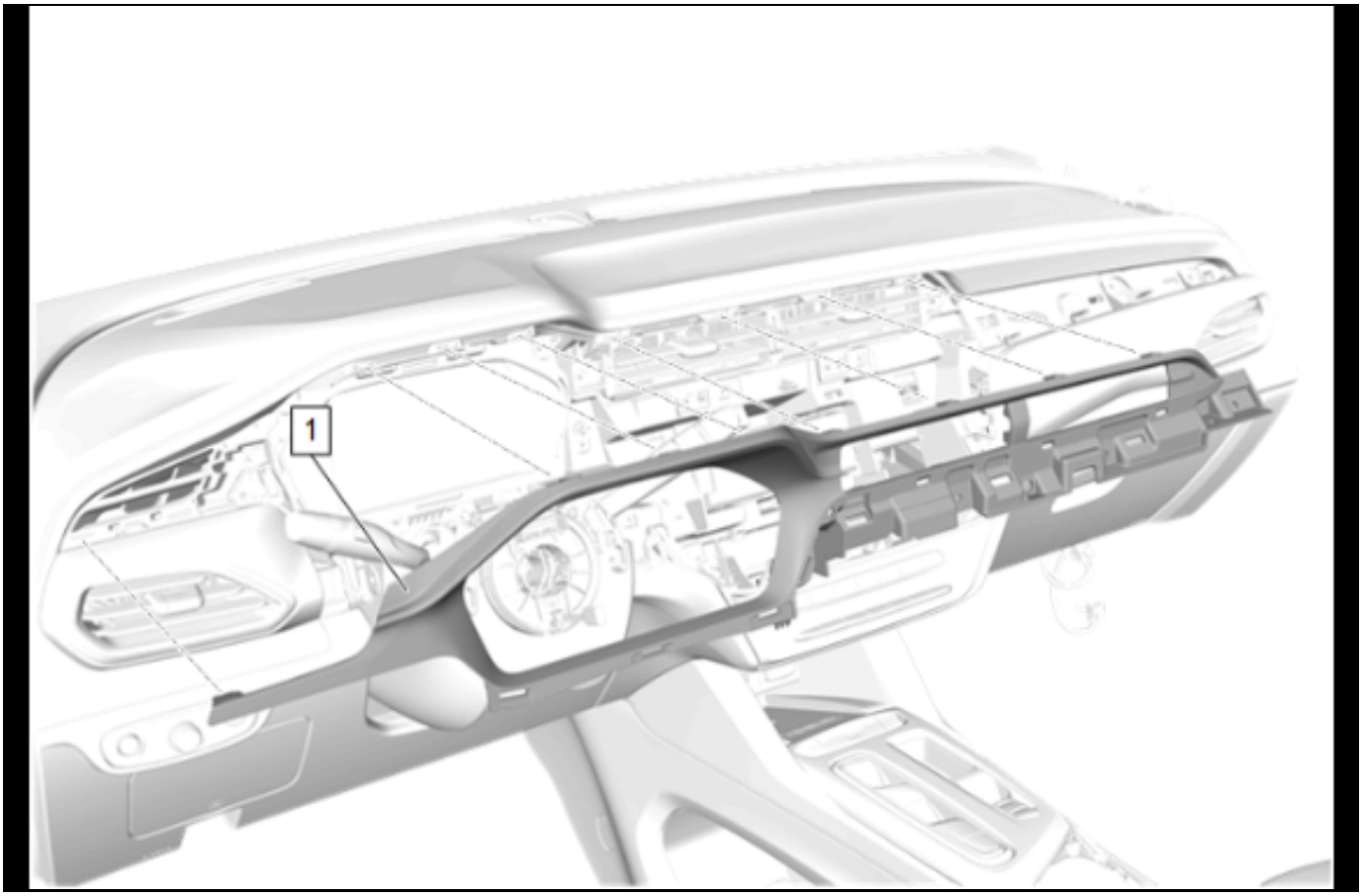

5664385

22. Using a flat-bladed plastic trim tool, release the retaining tabs.
23. Instrument Panel Cluster Trim Plate (1) » Remove

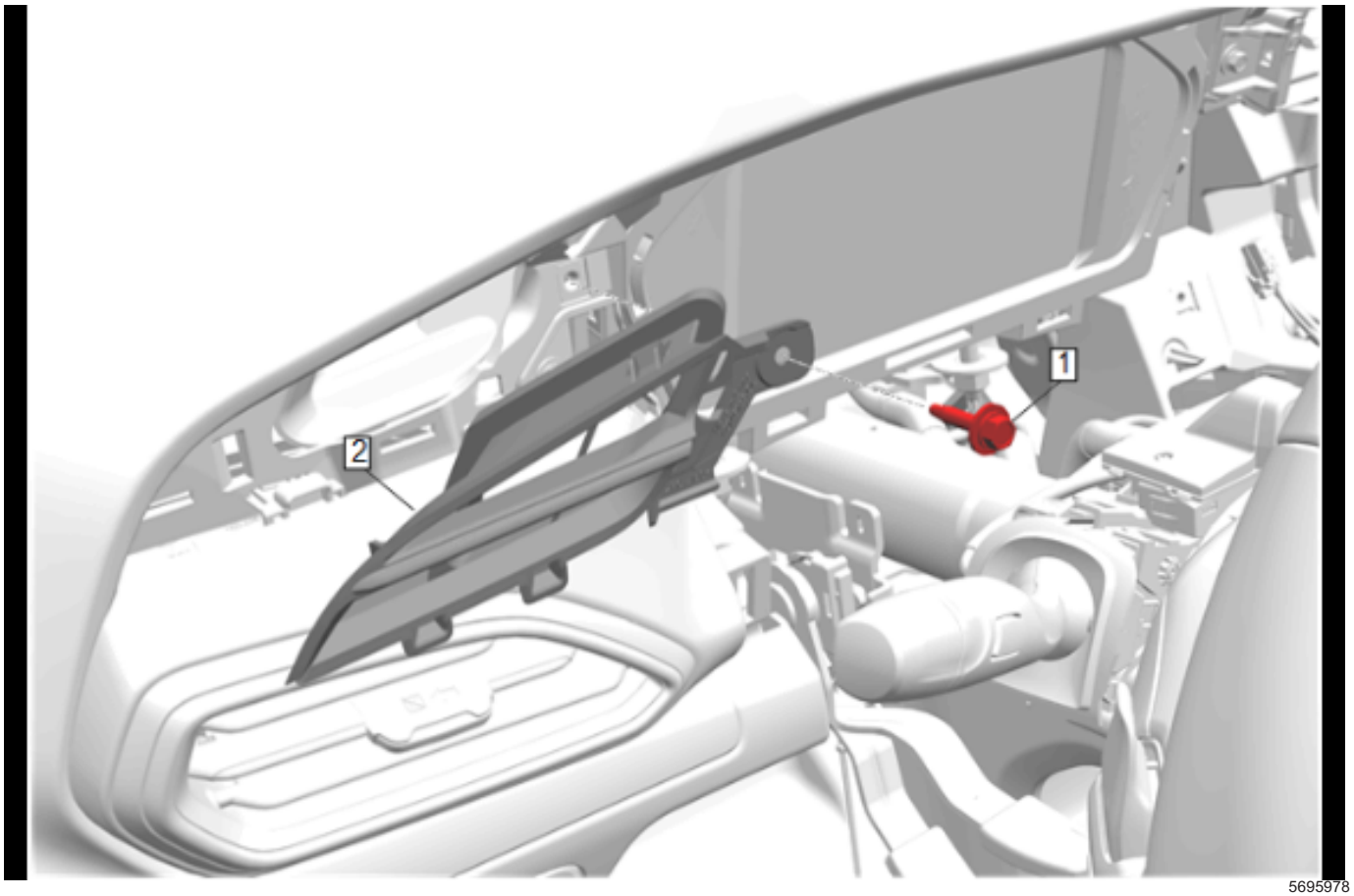

5695978

24. Side Window Defogger Outlet Grille Bolt (1) » Remove
25. Side Window Defogger Outlet Grille - Left Side (2) » Remove

Installation Procedure

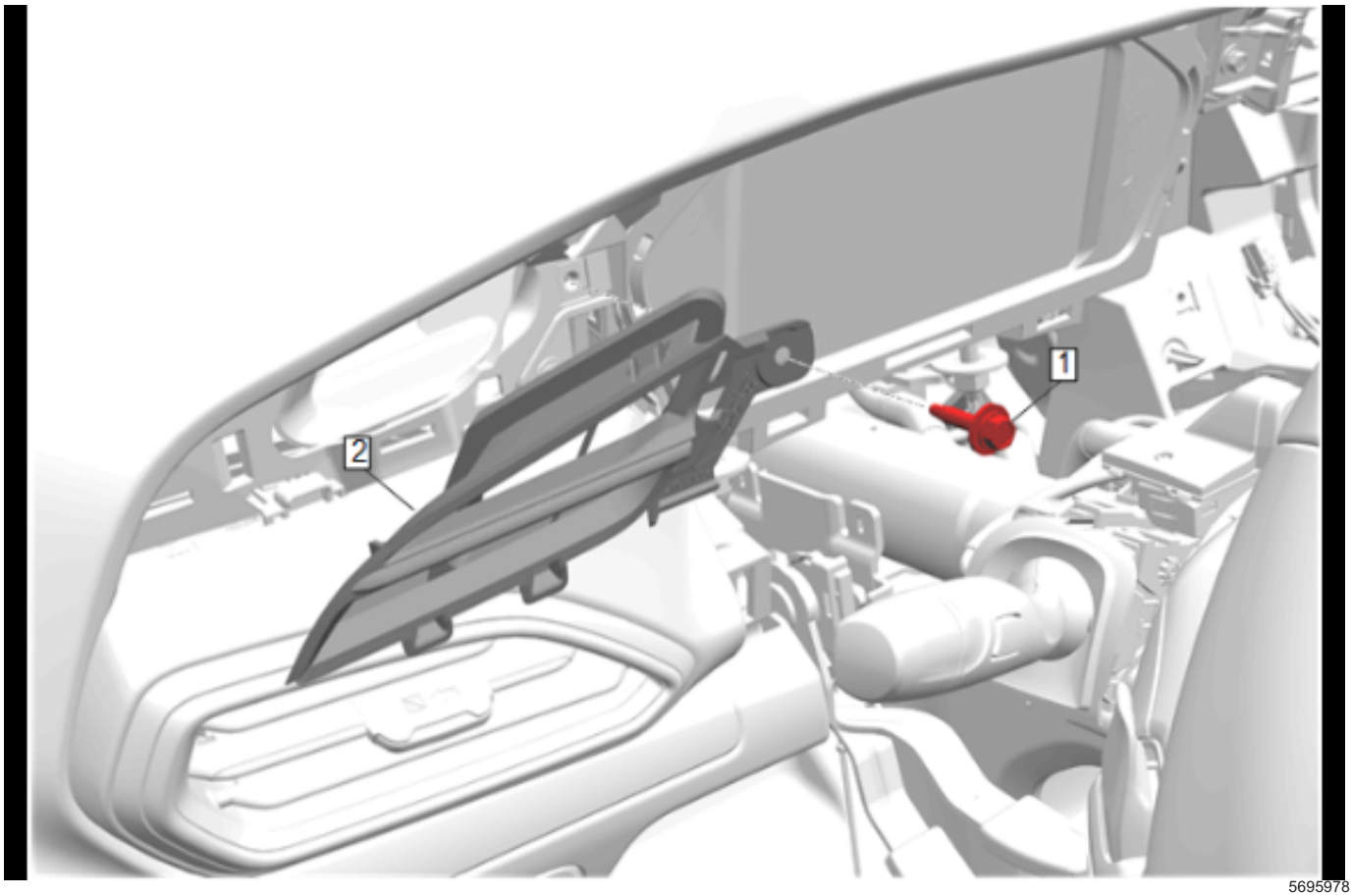

5695978

1. Side Window Defogger Outlet Grille - Left Side (2)
   » Install
2. Side Window Defogger Outlet Grille Bolt (1) »
   Install and tighten — *Fastener Specifications on page 5-3*

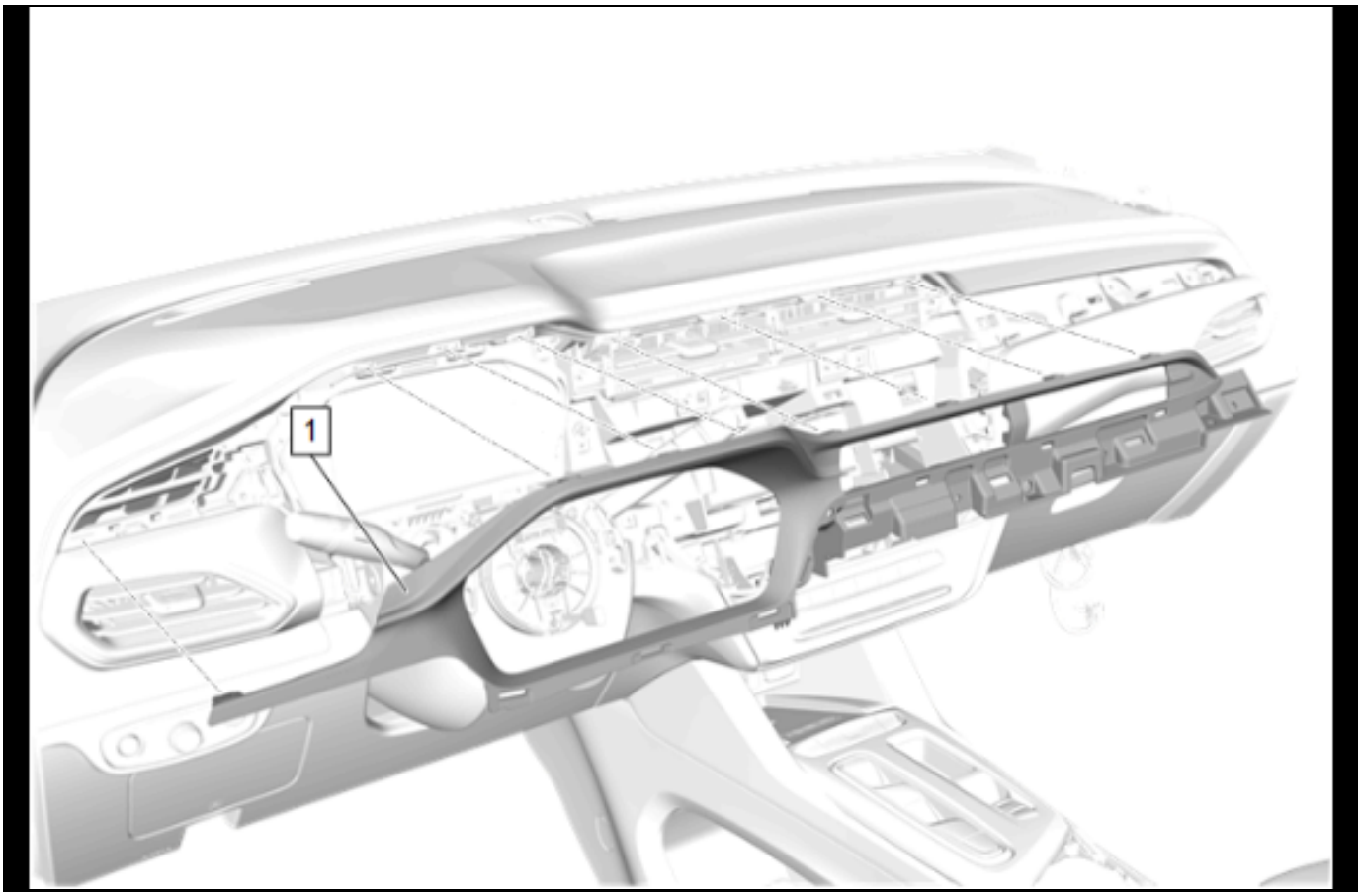

5664385

3. Instrument Panel Cluster Trim Plate (1) » Install

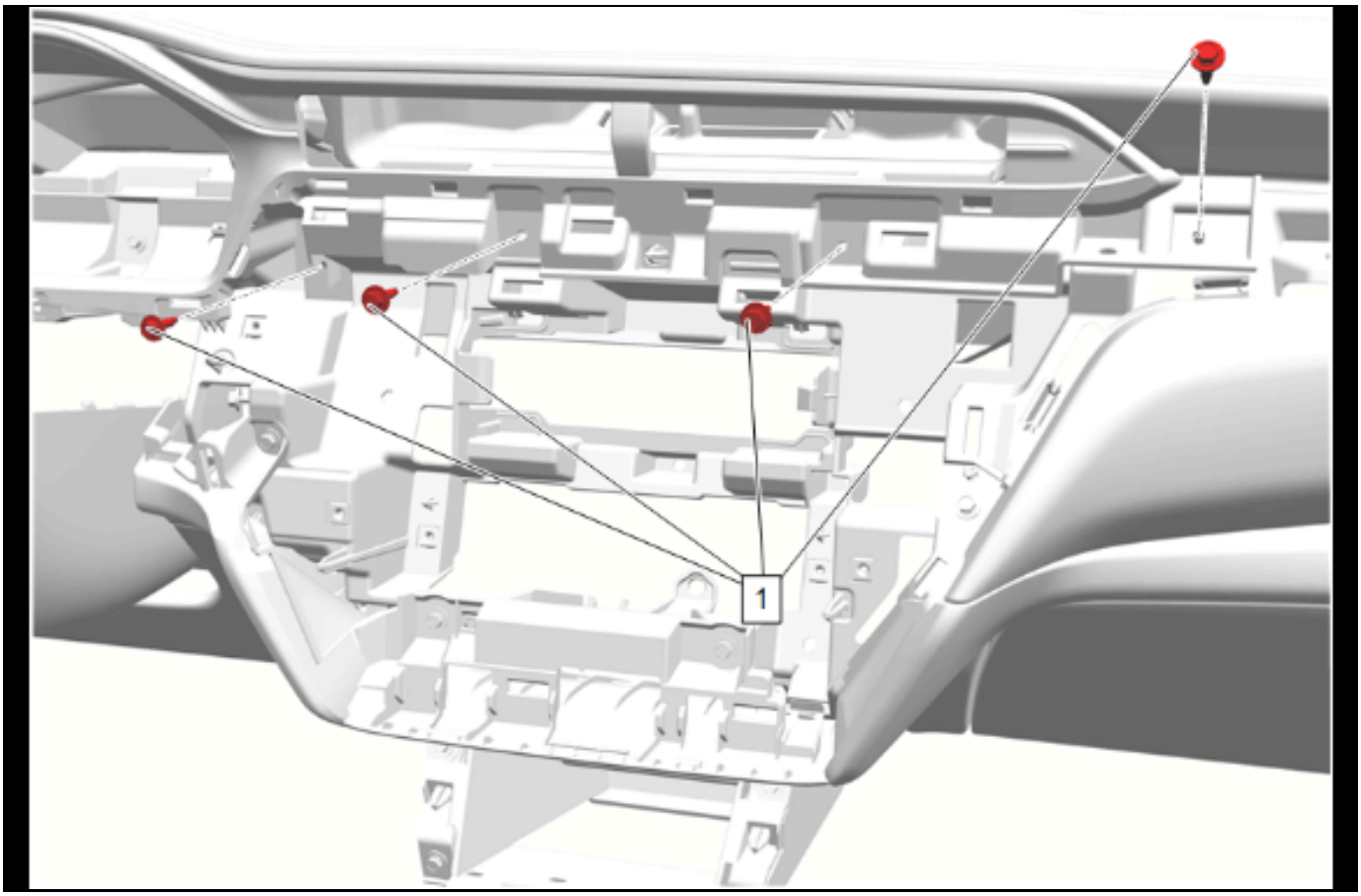

5664384

4. Instrument Panel Cluster Trim Plate Bolt (1) »
   Install and tighten [5x]

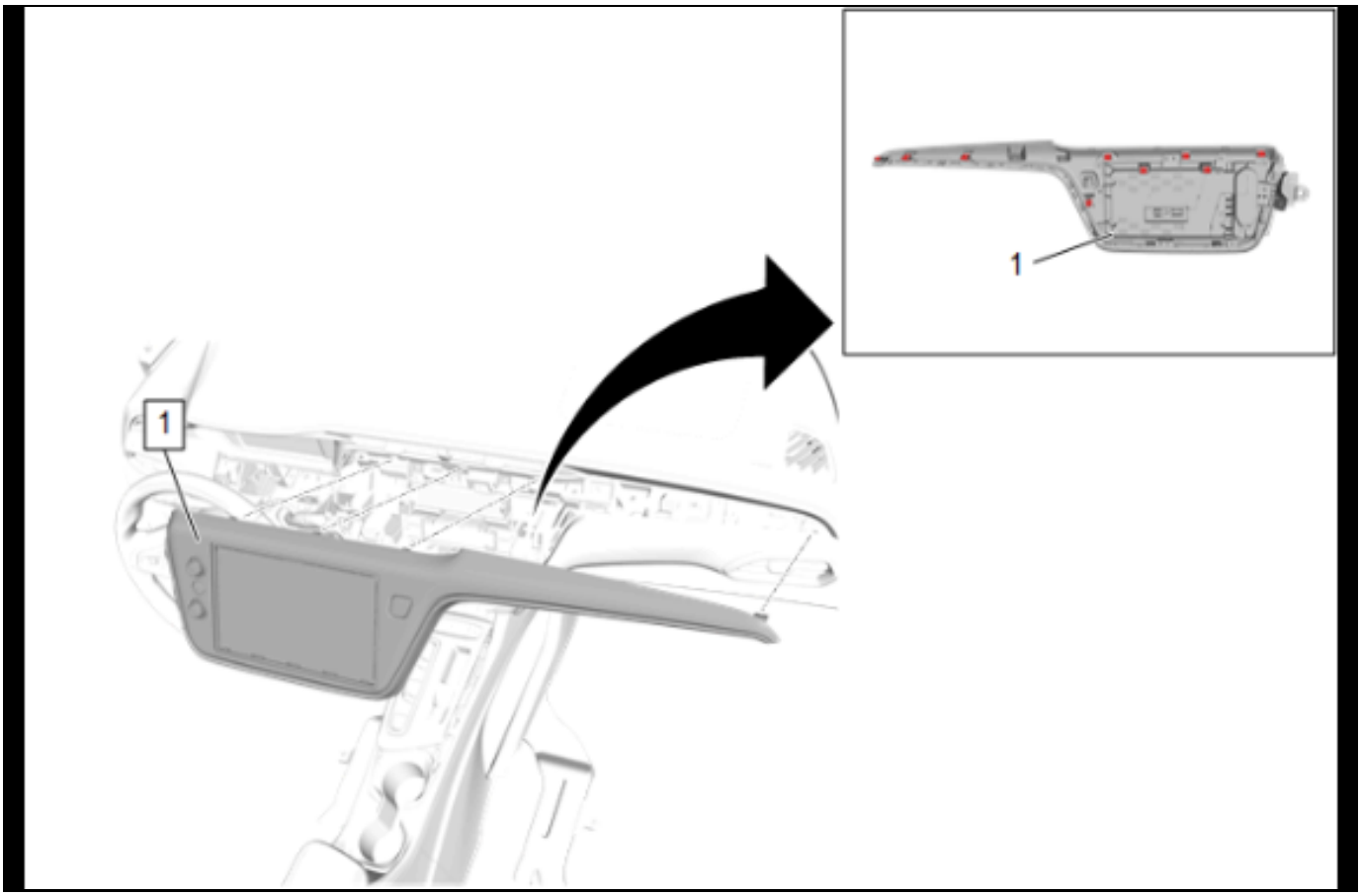

5663840

5. Connect the electrical connectors.
6. Instrument Panel Accessory Center Trim Plate (1)
   » Install

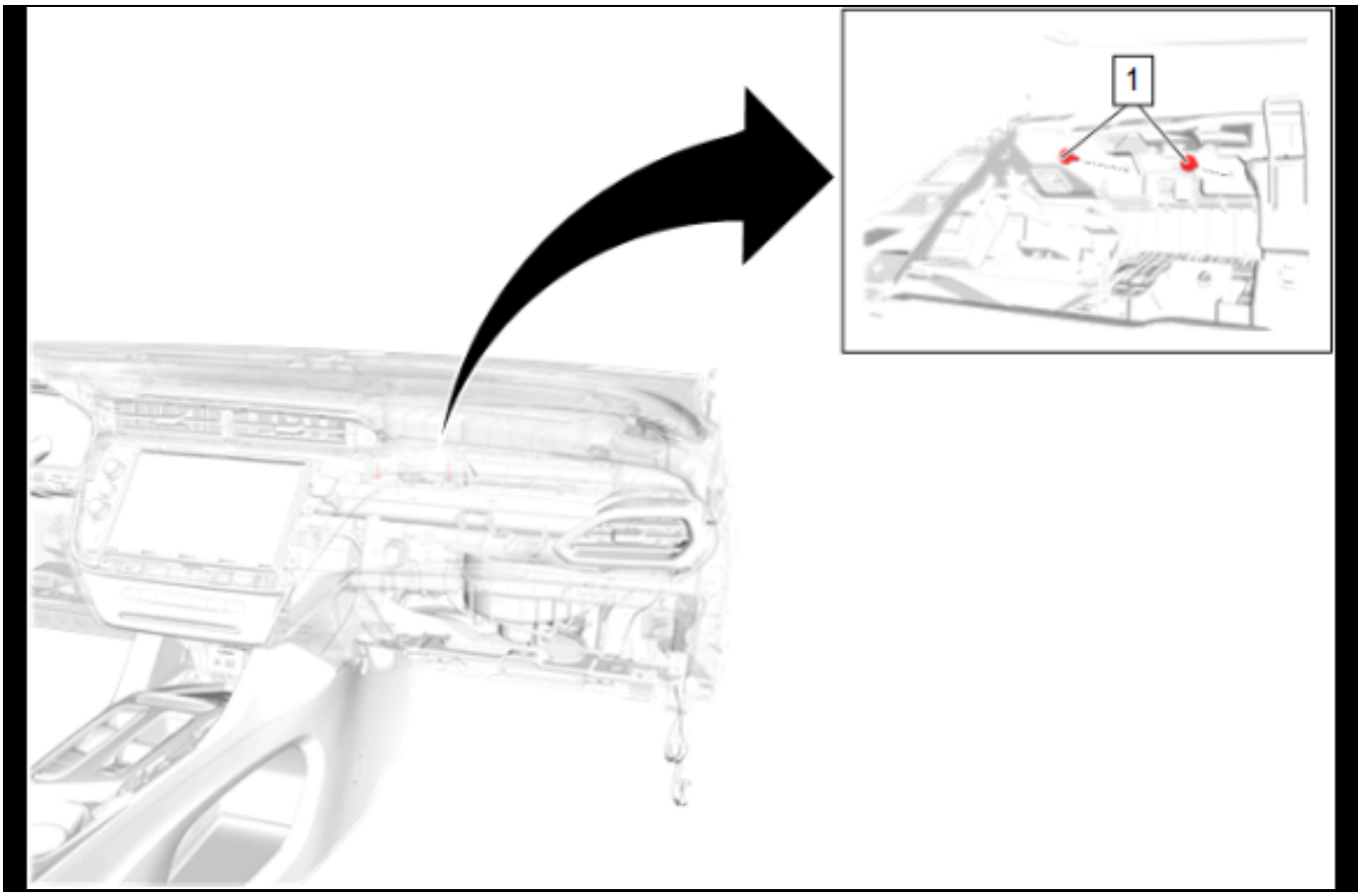

5663839

7. Instrument Panel Accessory Center Trim Plate Bolt
   (1) » Install and tighten [2x]

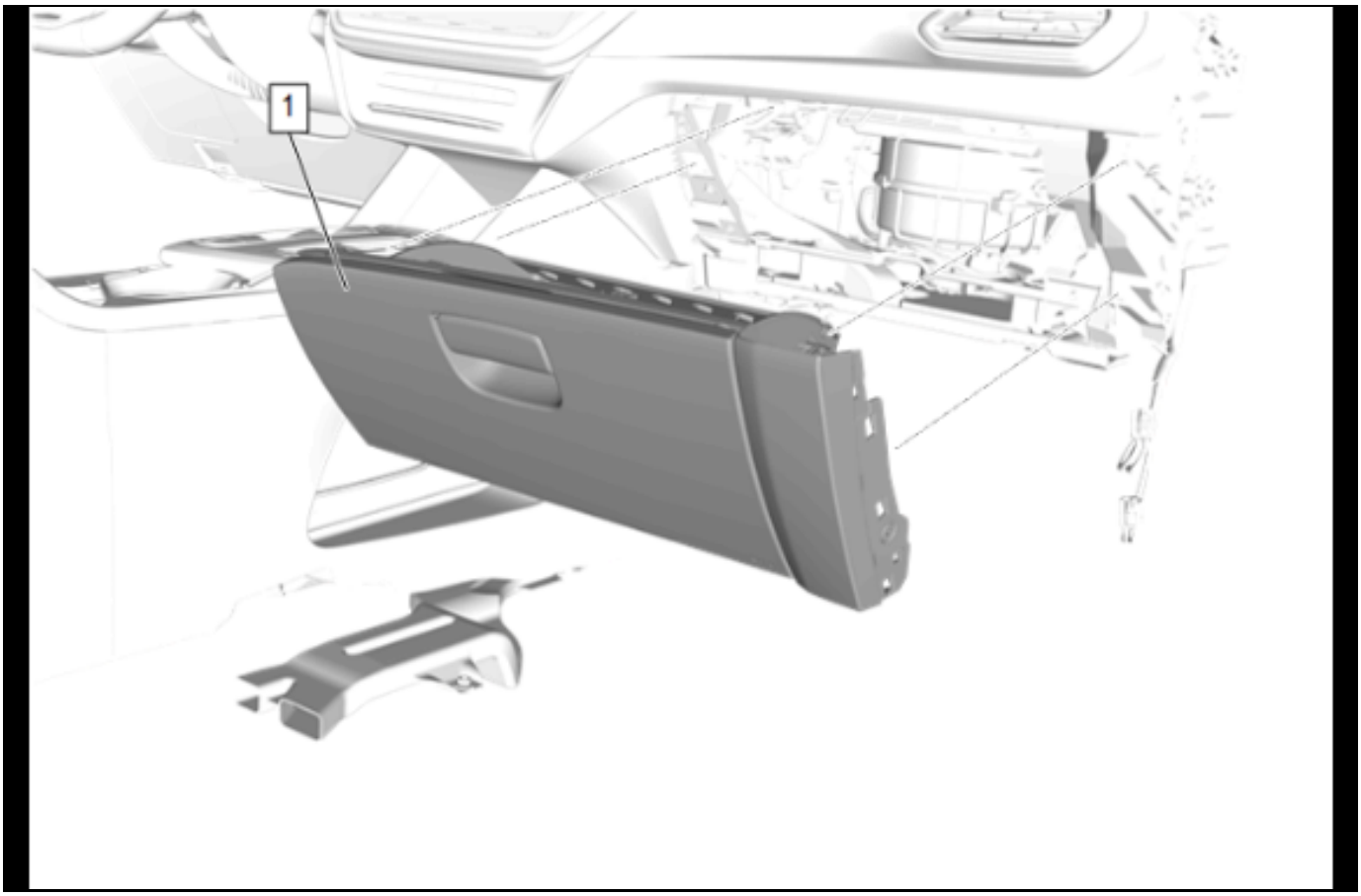

5663568

8. Instrument Panel Compartment (1) » Install

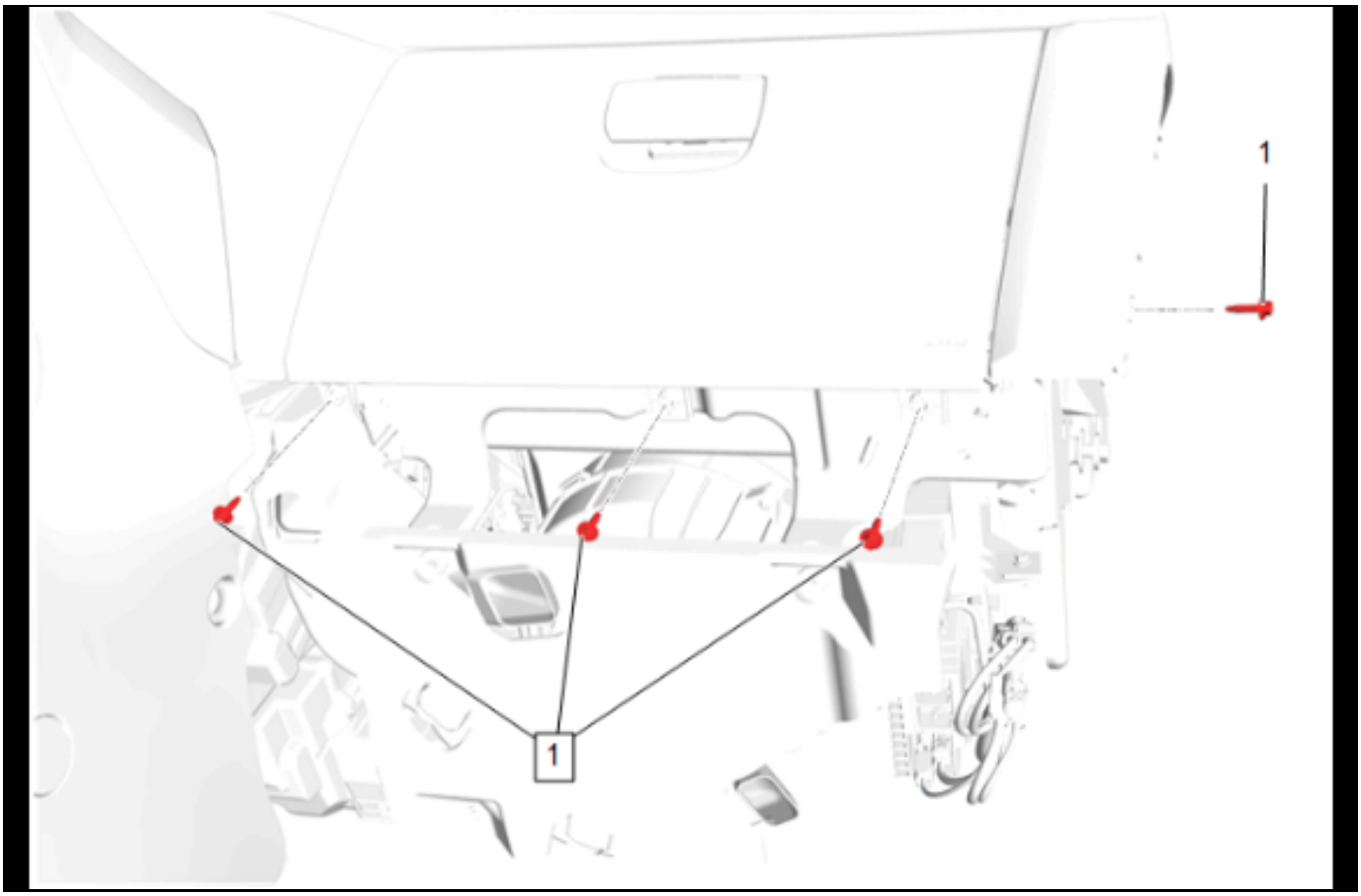

5663567

9. Instrument Panel Compartment Bolt (1) » Install and tighten [4x]

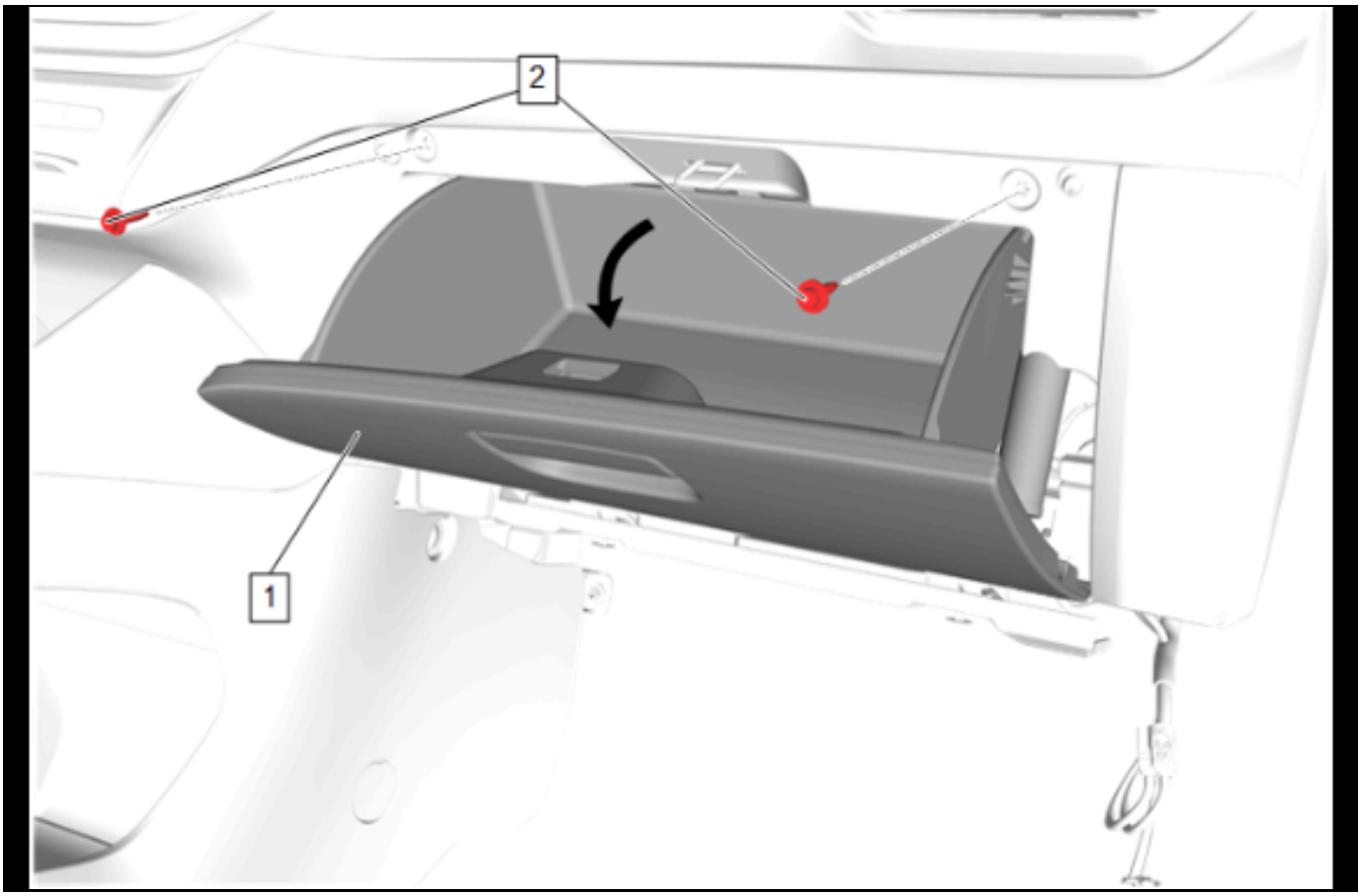

5663566

10. Instrument Panel Compartment Bolt (1) » Install and tighten [2x]

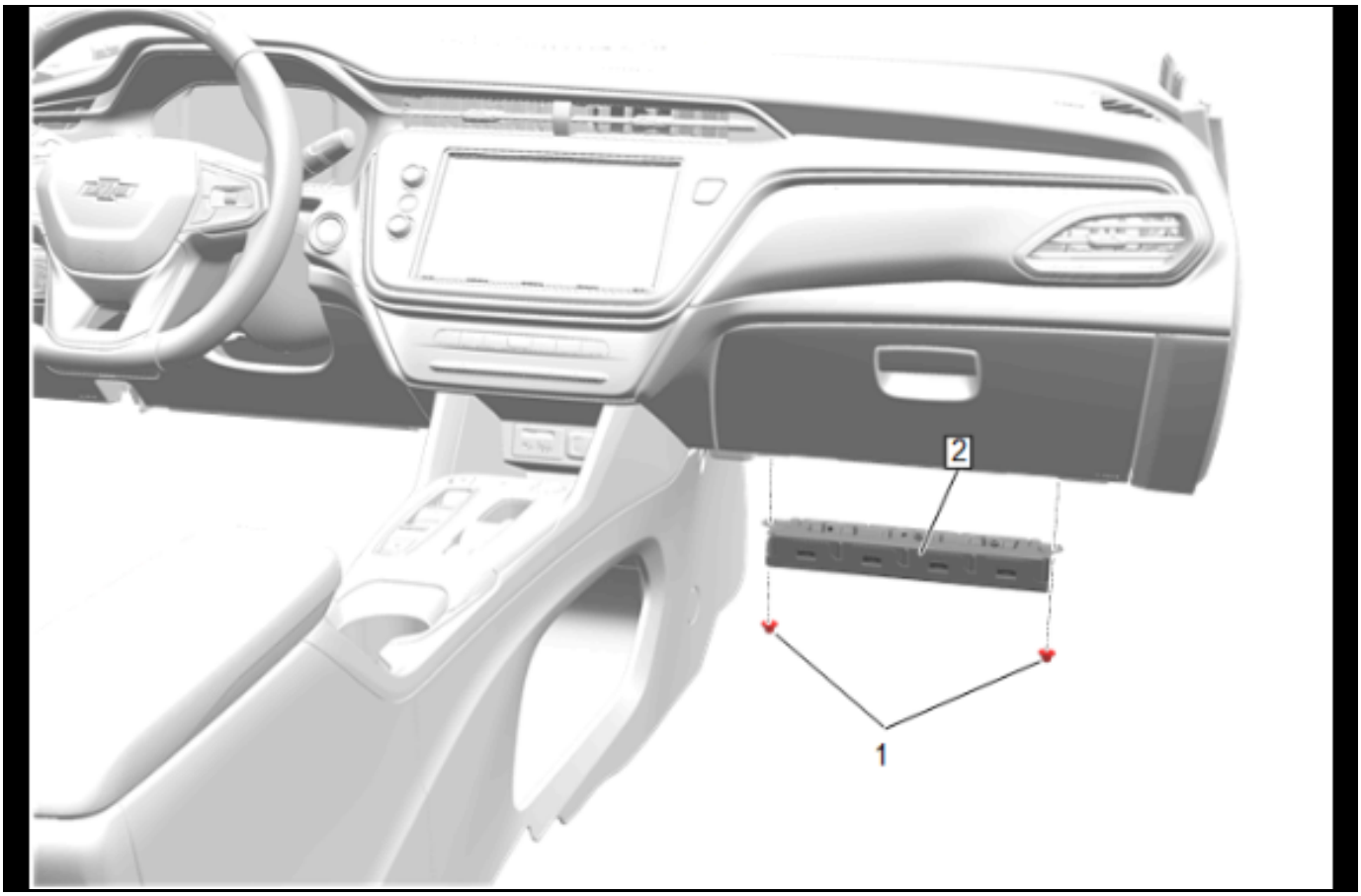

5664037

11. Connect the electrical connector.
12. Instrument Panel Lower Airbag - Passenger Side (2) » Install
13. Instrument Panel Lower Airbag Nut (1) » Install and tighten

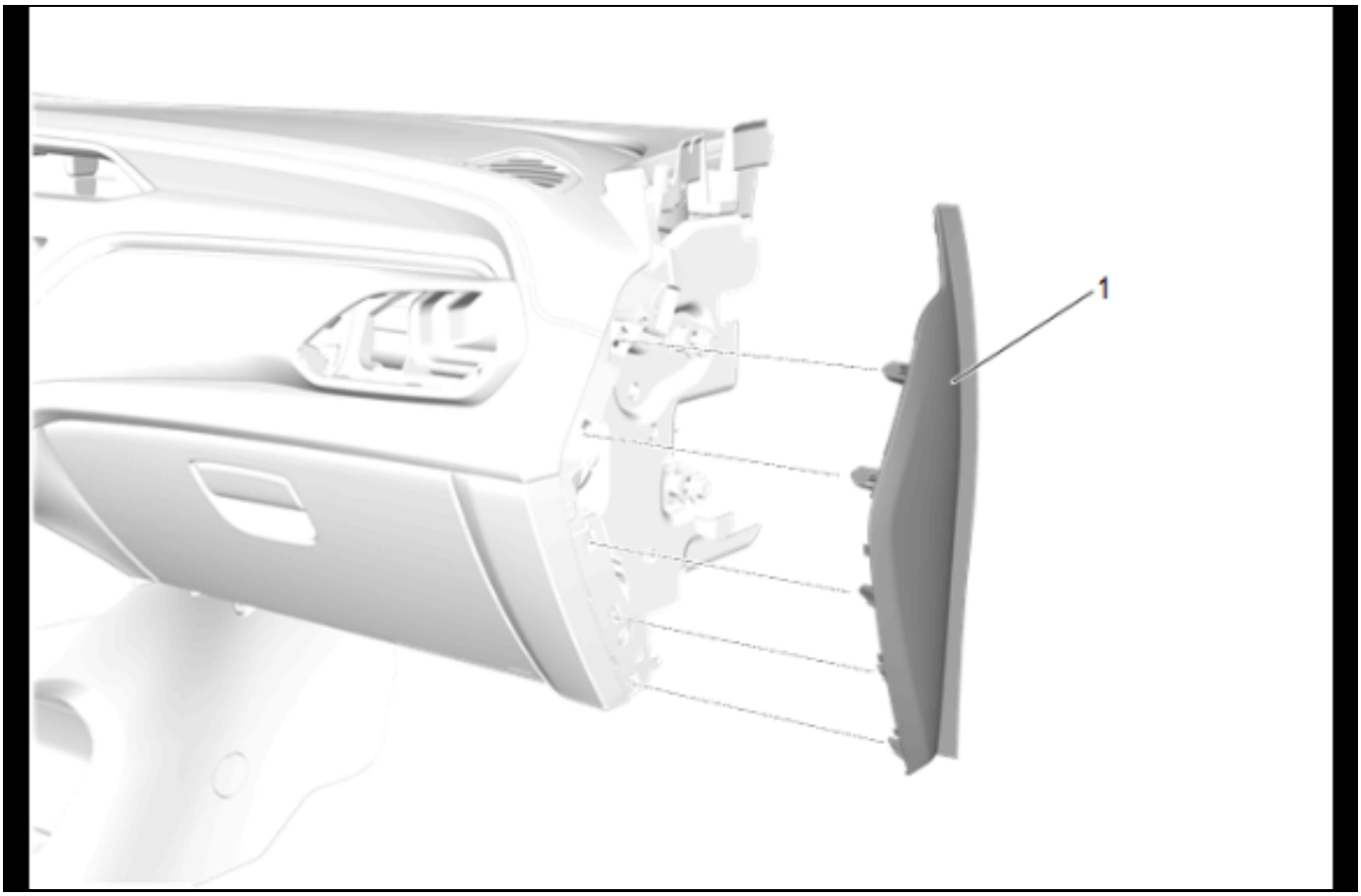

5660657

14. Instrument Panel Outer Trim Cover - Right Side
    (1) » Install

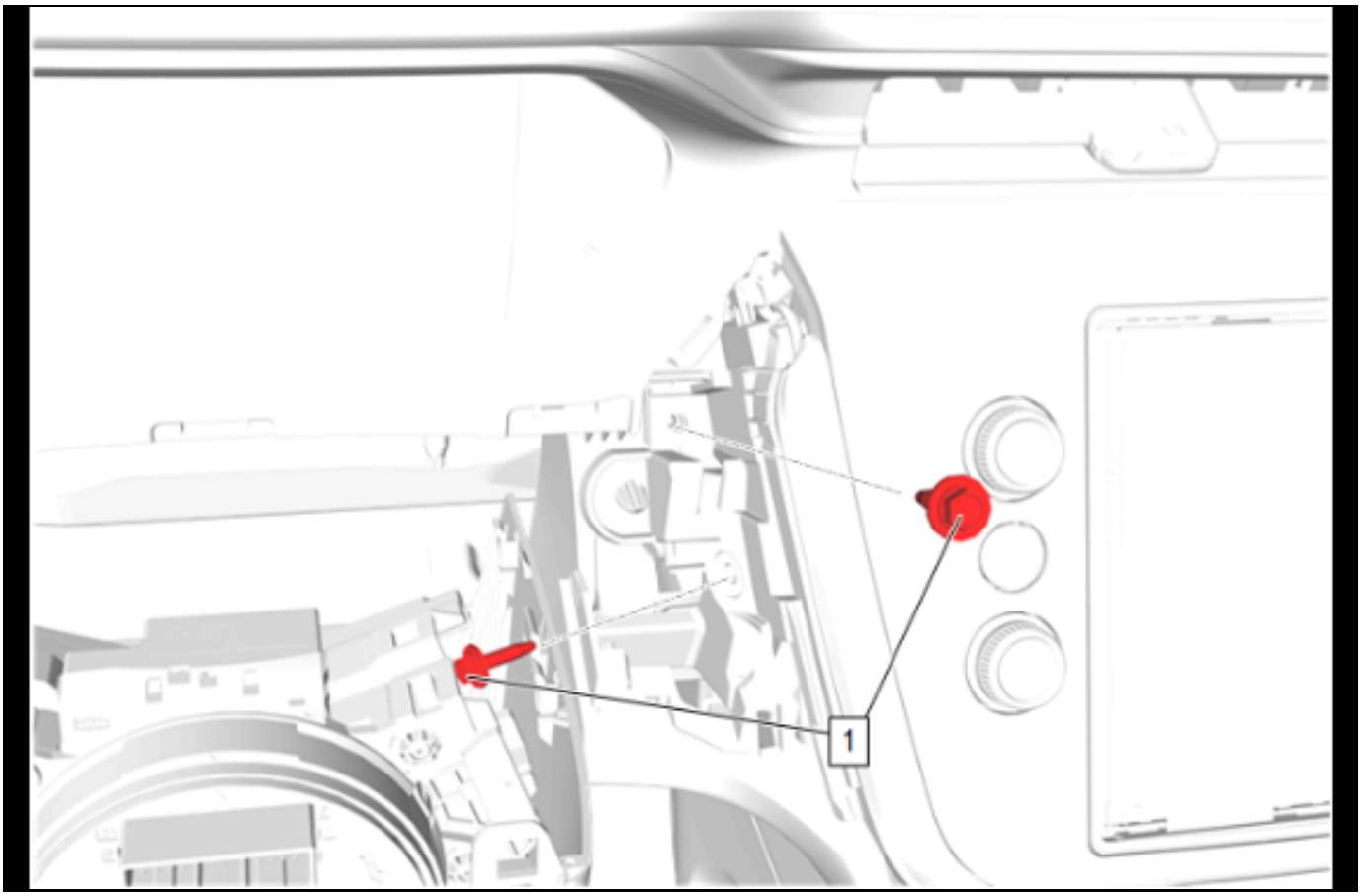

5663838

15. Instrument Panel Accessory Center Trim Plate Bolt
    (1) » Install and tighten [2x]

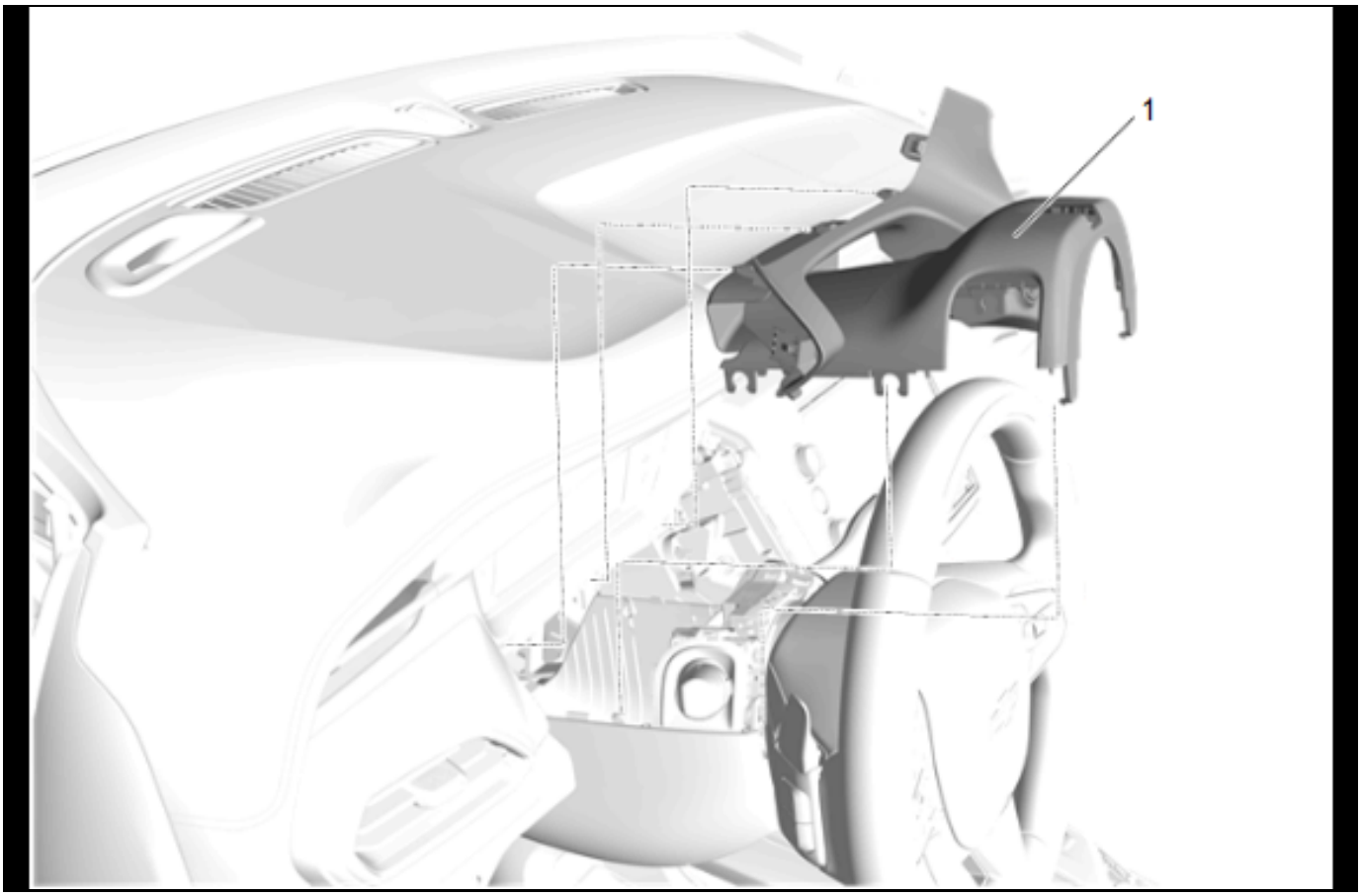

5661052

16. Connect the electrical connector.
17. Instrument Panel Steering Column Upper Trim Cover (1) » Install

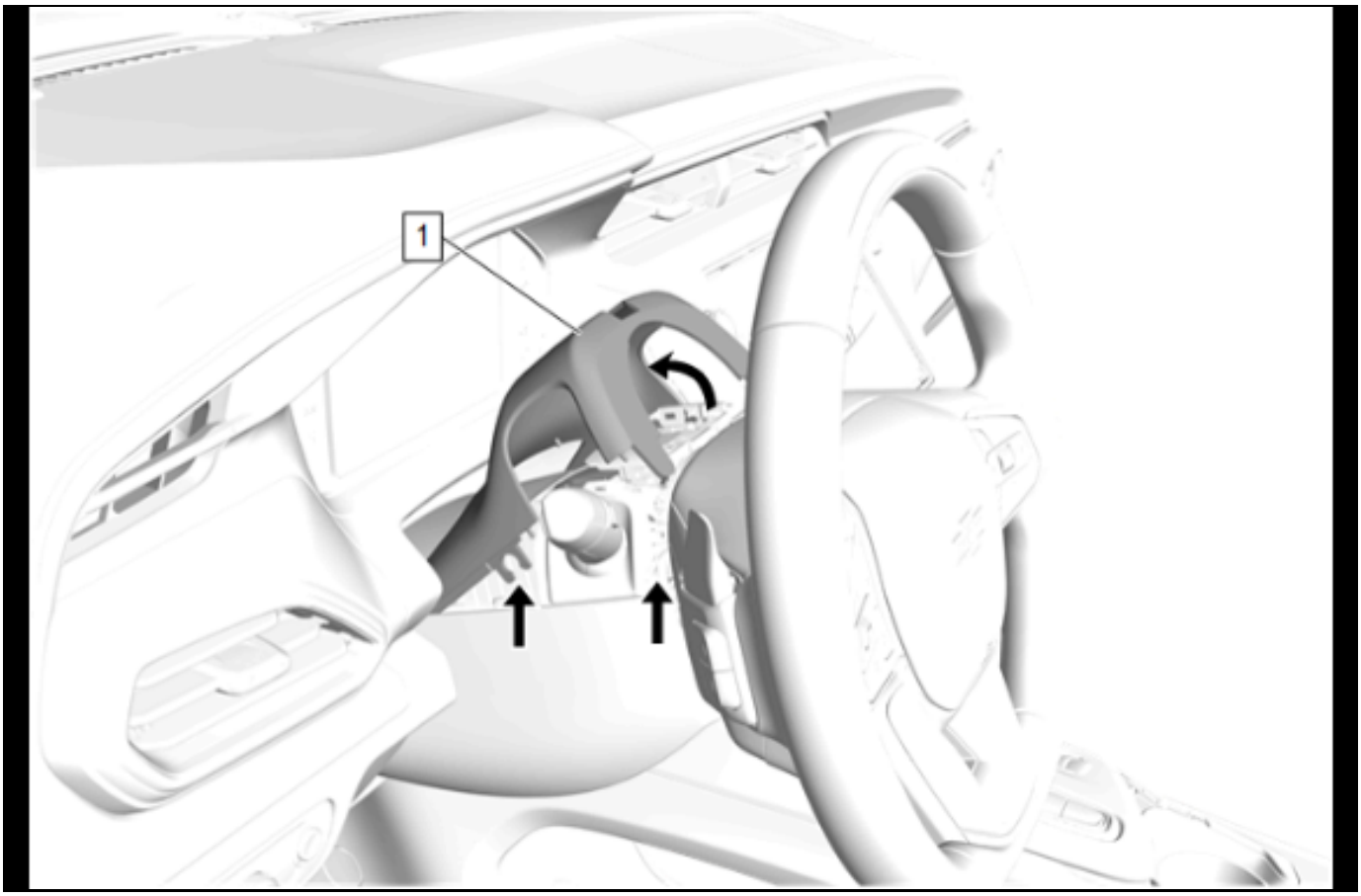

5661051

18. Secure the instrument panel steering column upper trim cover (1) to the instrument panel steering column lower trim cover.
19. Enable the SIR System.

Side Window Defogger Outlet Grille Replacement - Right Side

Removal Procedure

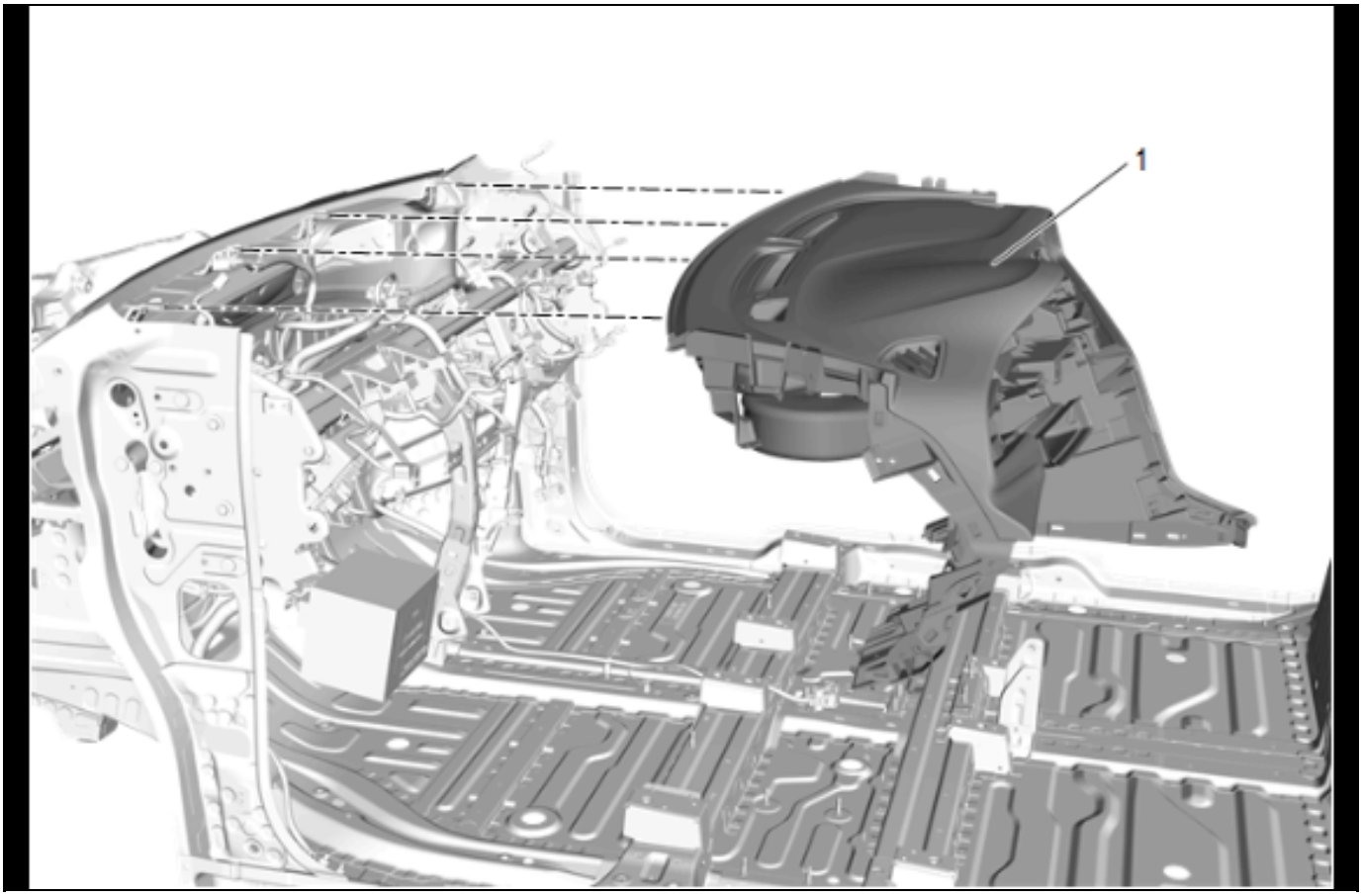

5487804

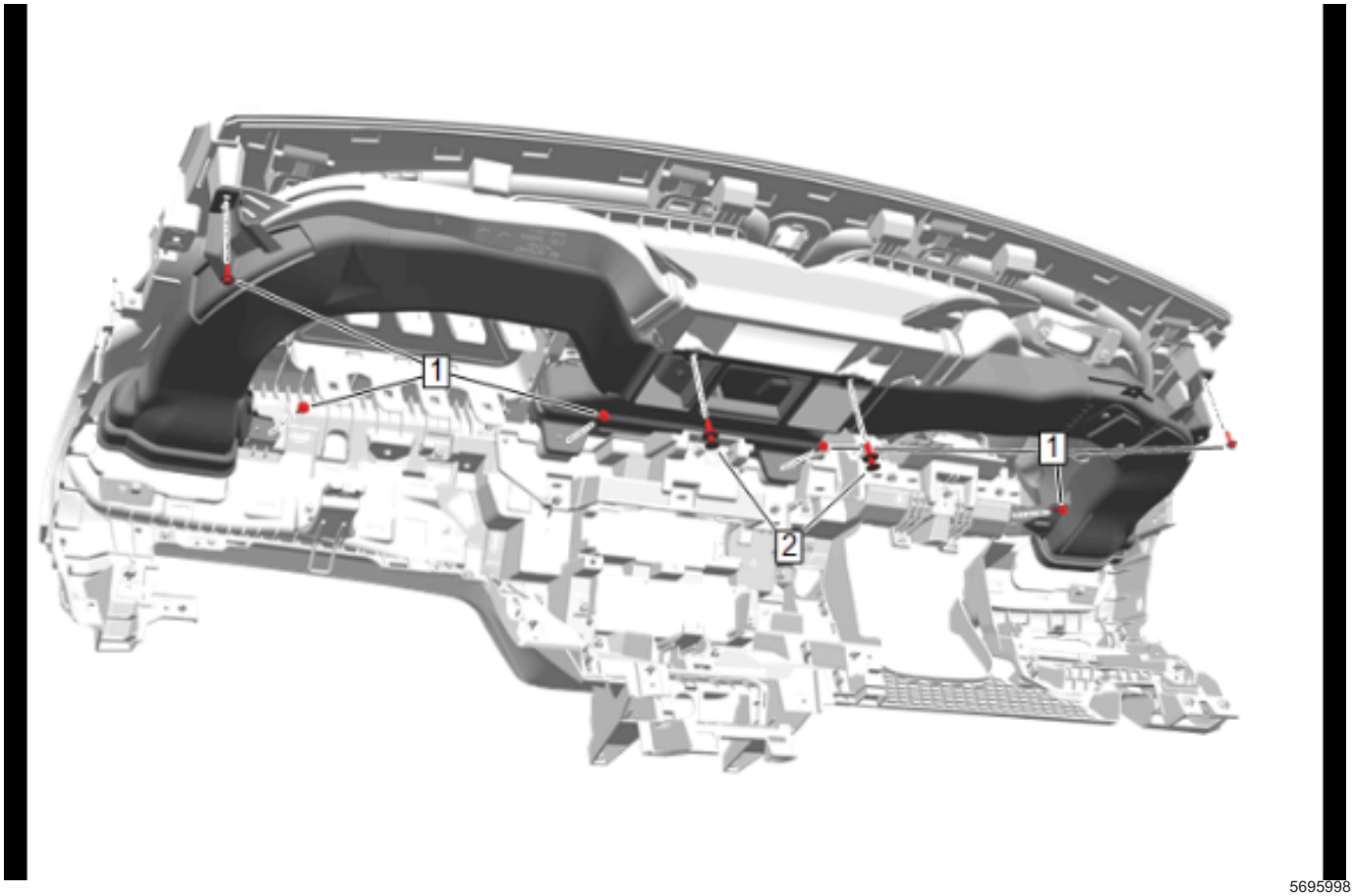

5695998

1. Instrument Panel Outer Air Outlet Duct Bolt (1) » Remove [6x]
2. Instrument Panel Outer Air Outlet Duct Retainer (2) » Remove [2x]

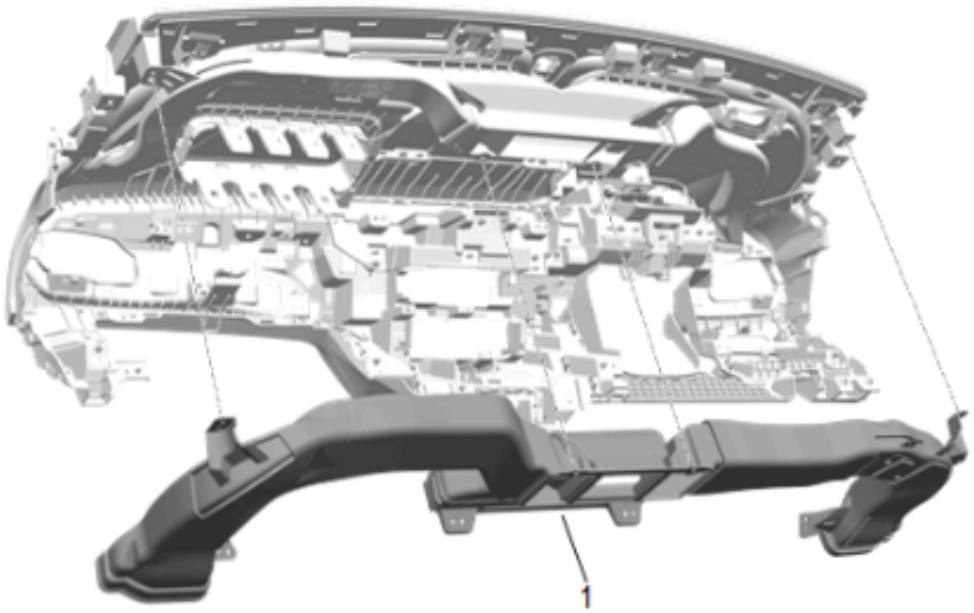

5695999

3. Instrument Panel Outer Air Outlet Duct (1) » Remove

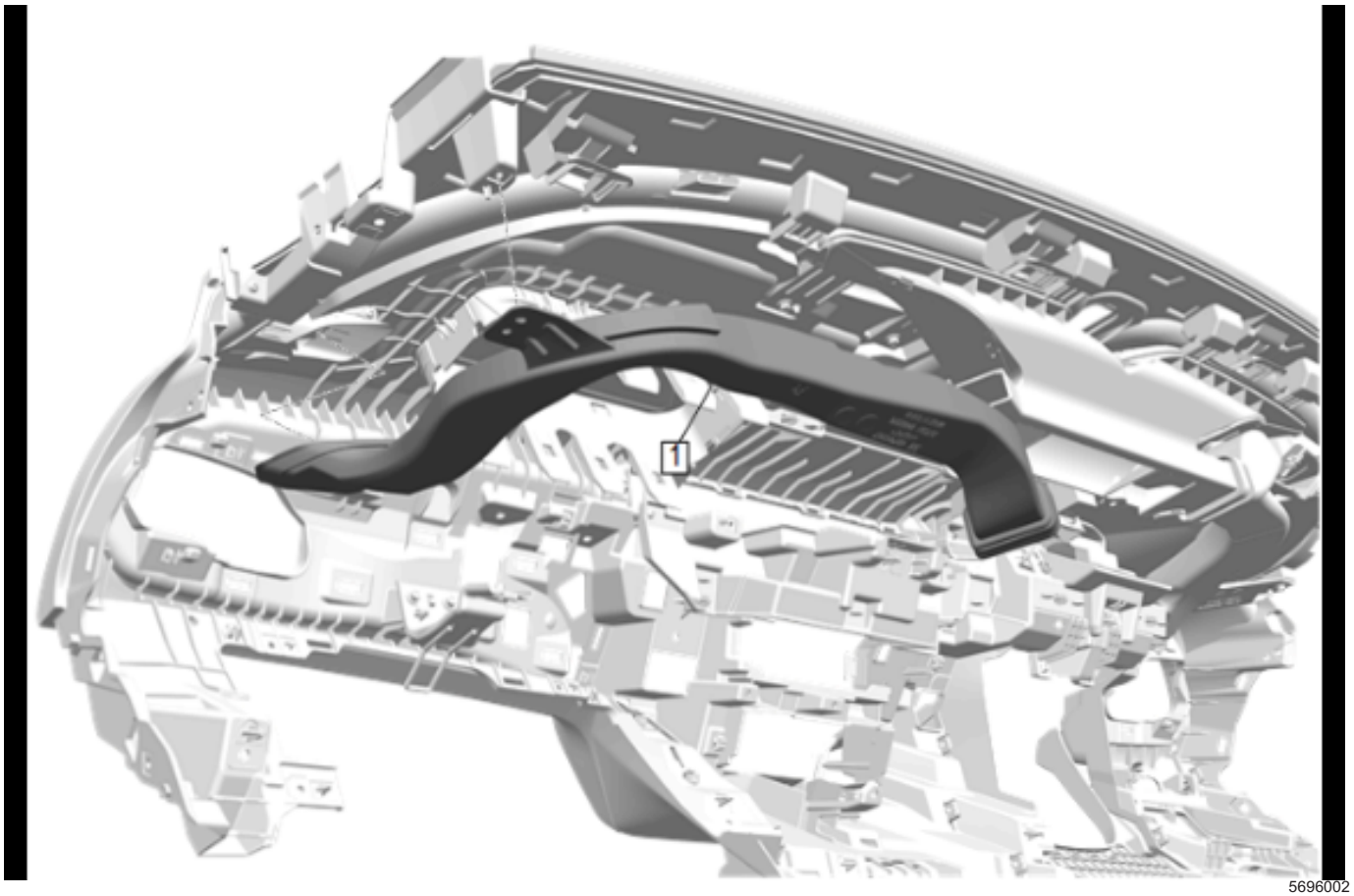

5696002

4. Side Window Defogger Outlet Duct - Right Side
   (1) » Remove

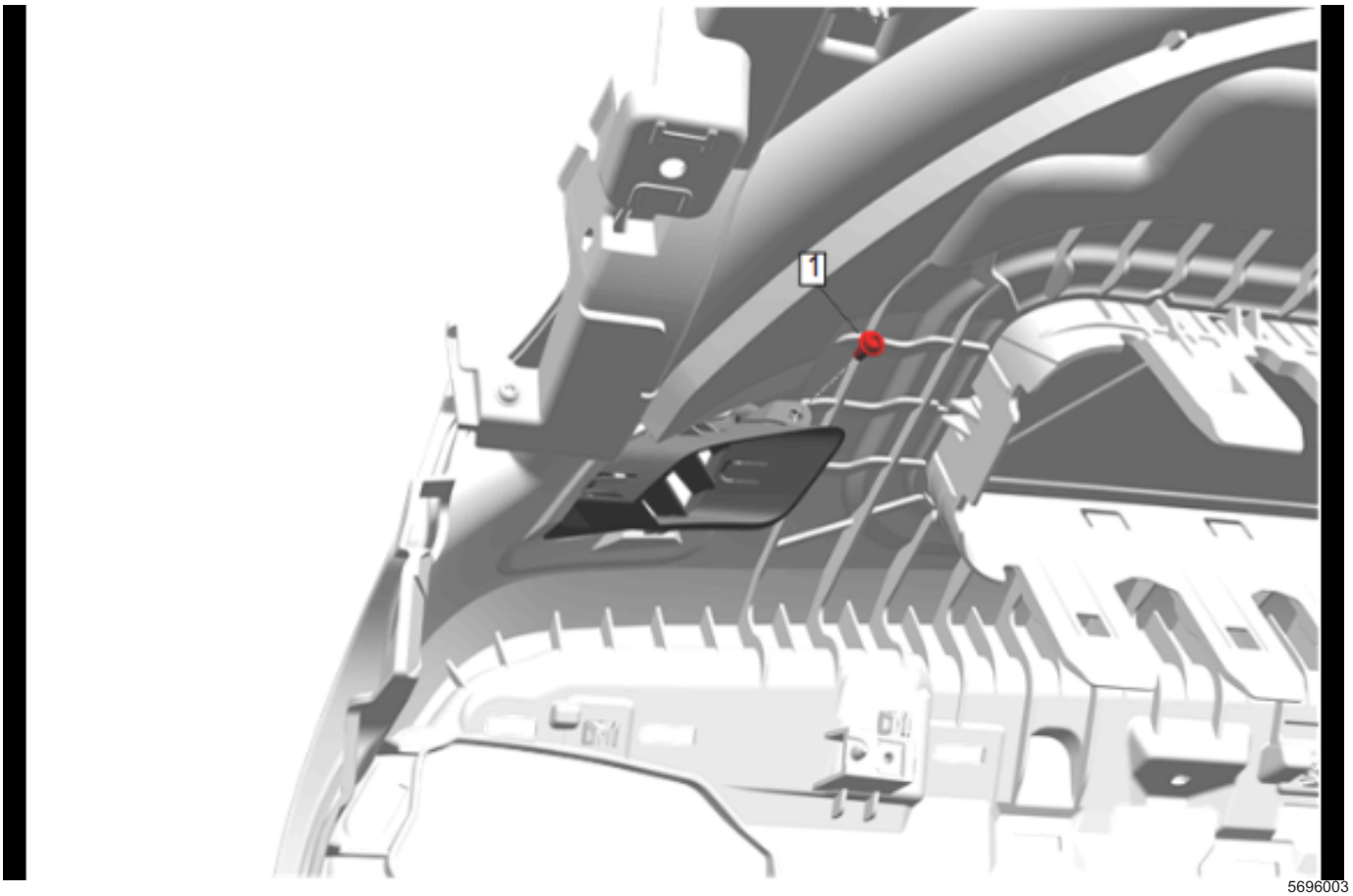

5696003

5. Screw (1) » Remove

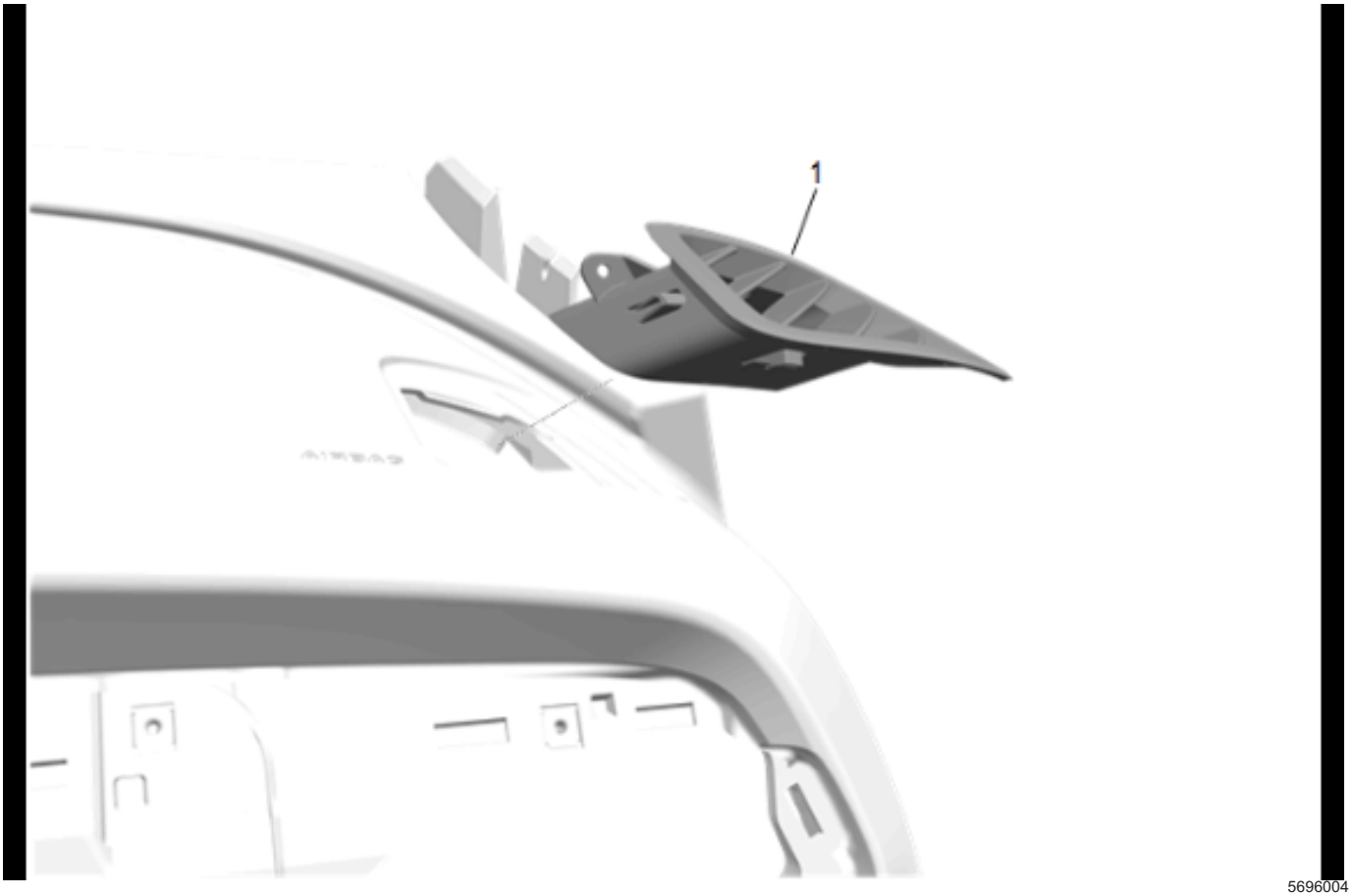

5696004

Note: Using a flat-bladed tool, release the plastic retaining tabs.

6. Side Window Defogger Outlet Grille - Right Side (1) » Remove

Installation Procedure

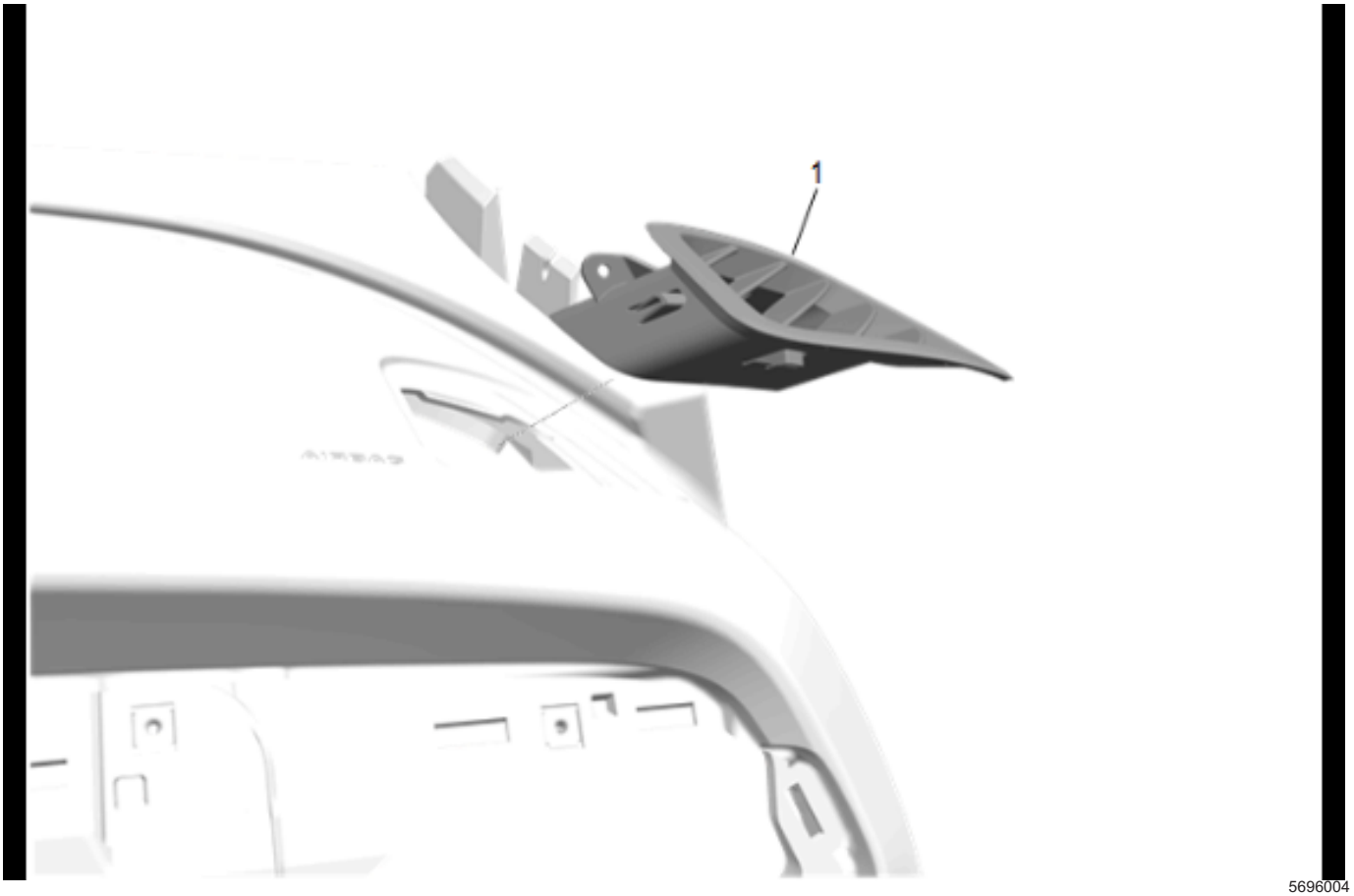

5696004

1. Side Window Defogger Outlet Grille - Right Side (1) » Install

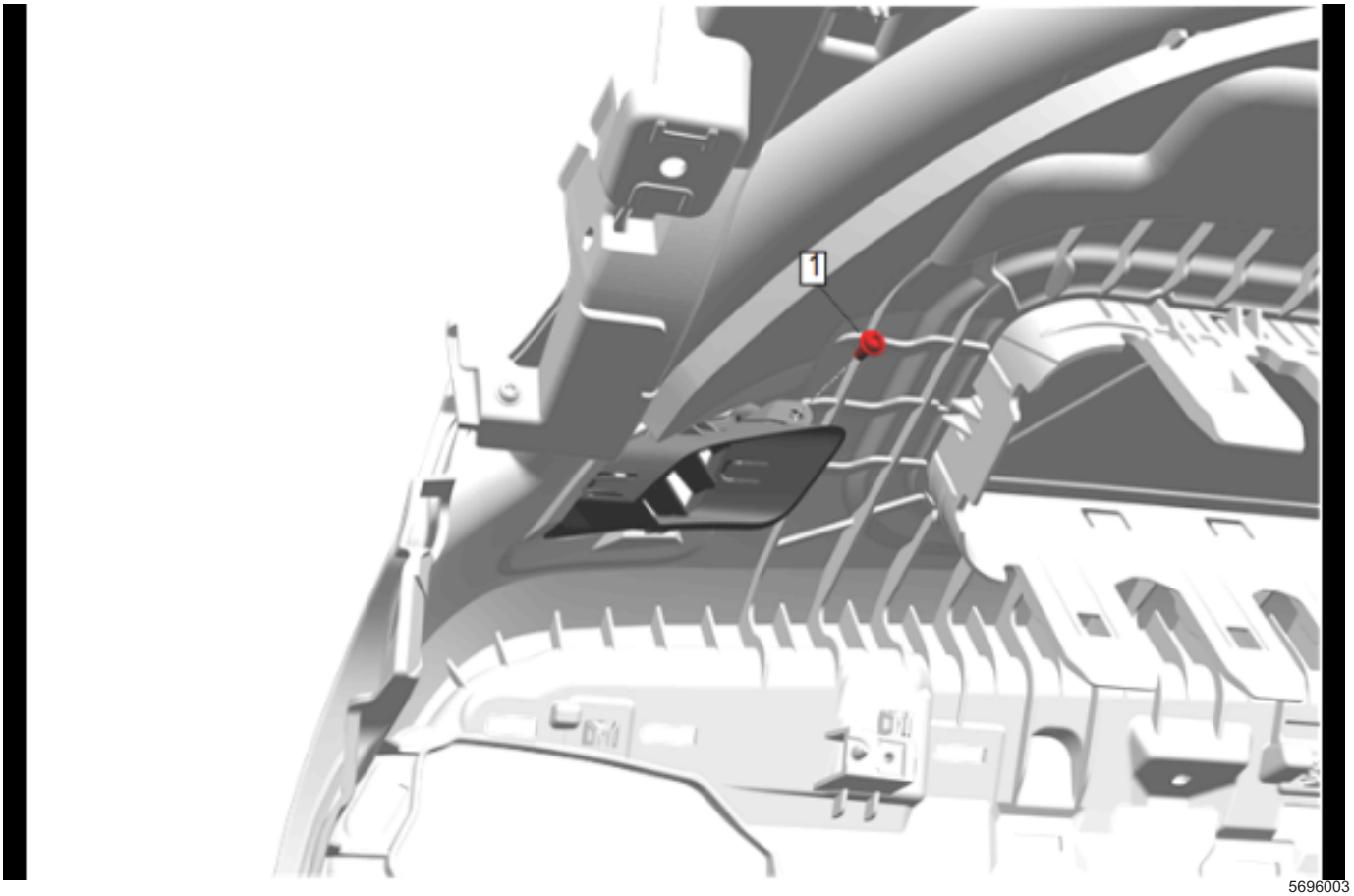

5696003

2. Screw (1) » Install and tighten — *Fastener Specifications on page 5-3*

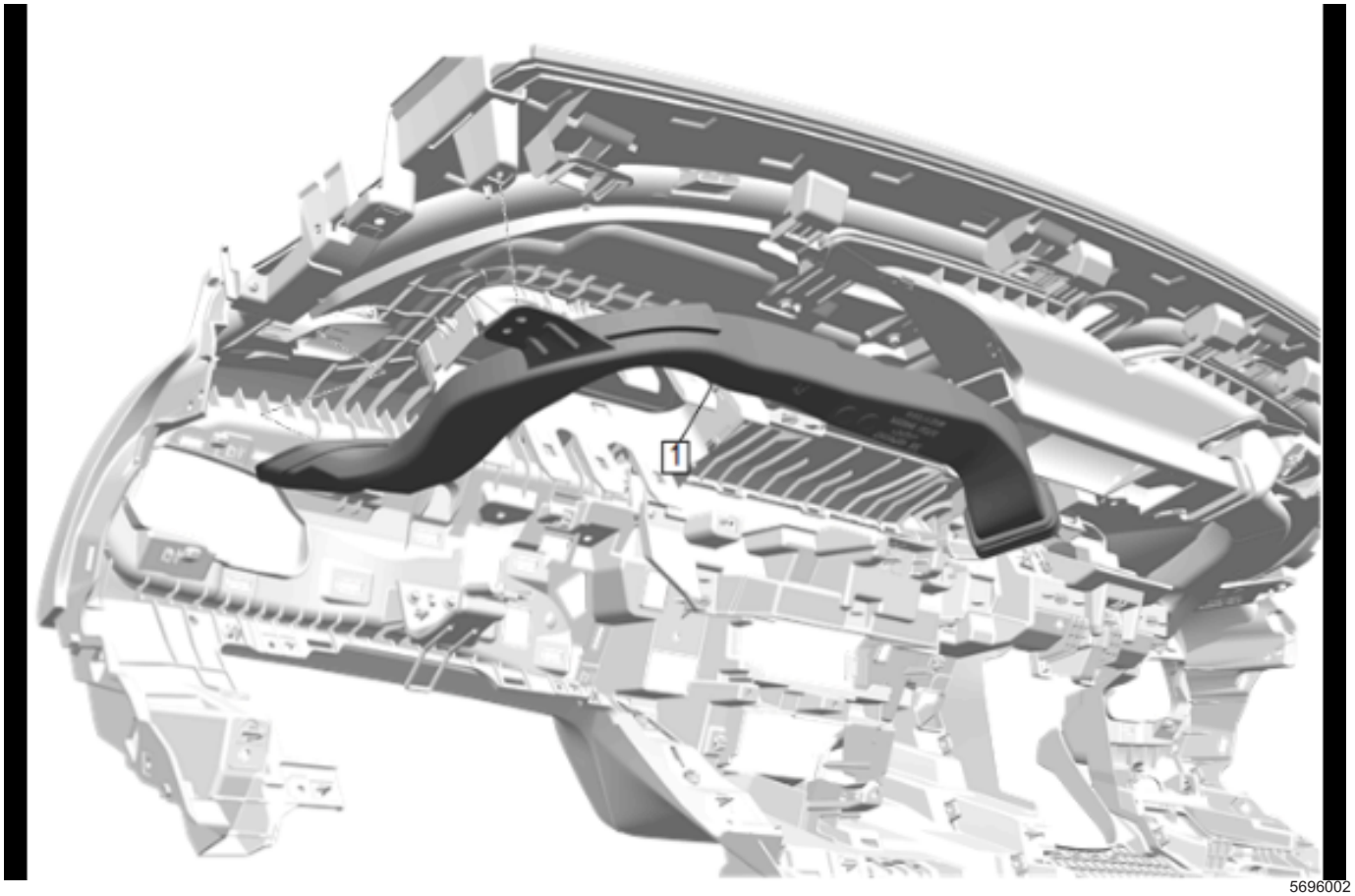

5696002

3. Side Window Defogger Outlet Duct - Right Side
   (1) » Install

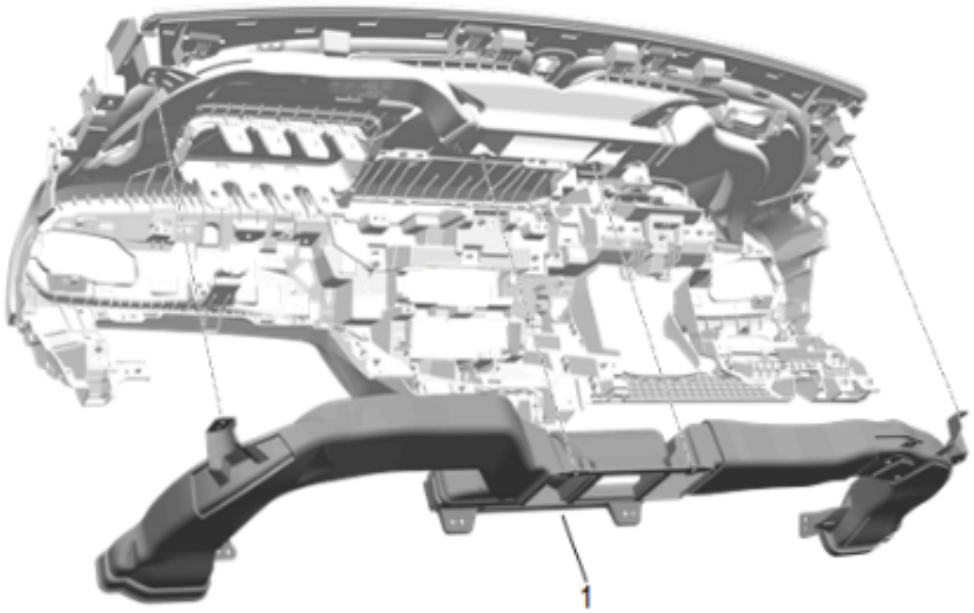

5695999

4. Instrument Panel Outer Air Outlet Duct (1) »
   Install

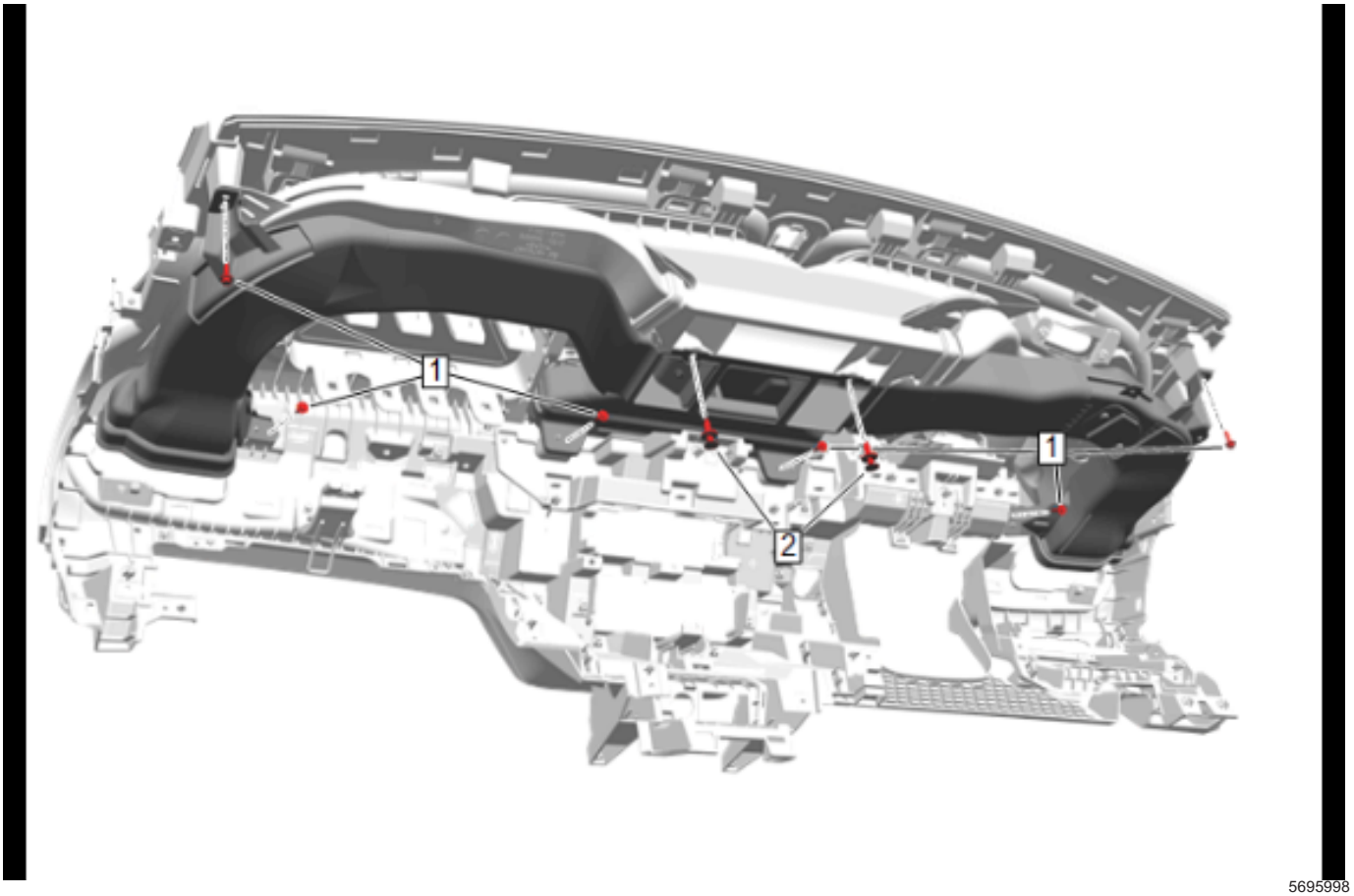

5695998

5. Instrument Panel Outer Air Outlet Duct Bolt (1) » Install and tighten — *Fastener Specifications on page 5-3*[6x]
6. Instrument Panel Outer Air Outlet Duct Retainer (2) » Install [2x]

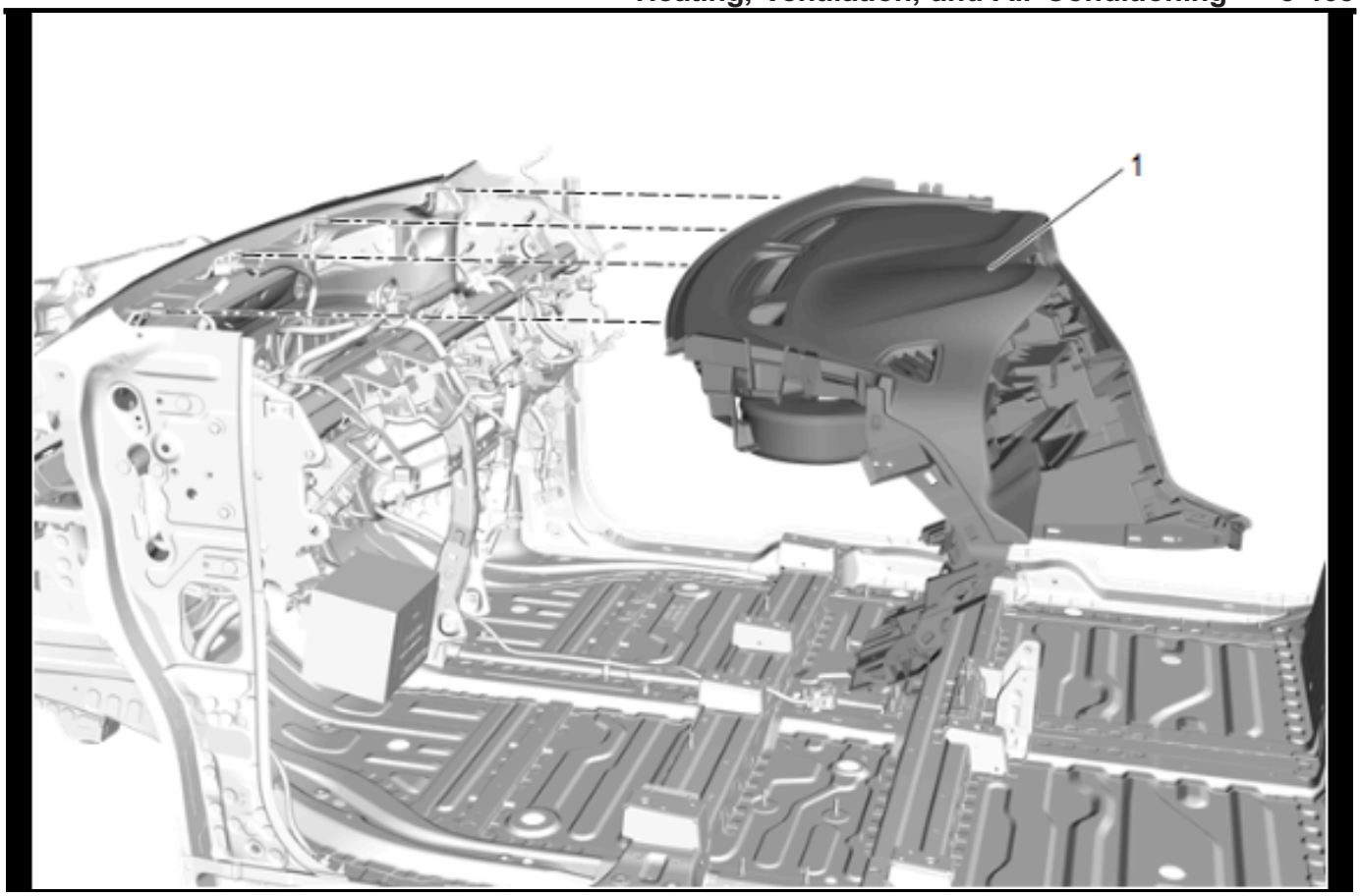

5487804

Instrument Panel Outer Air Outlet Replacement - Left Side

Removal Procedure

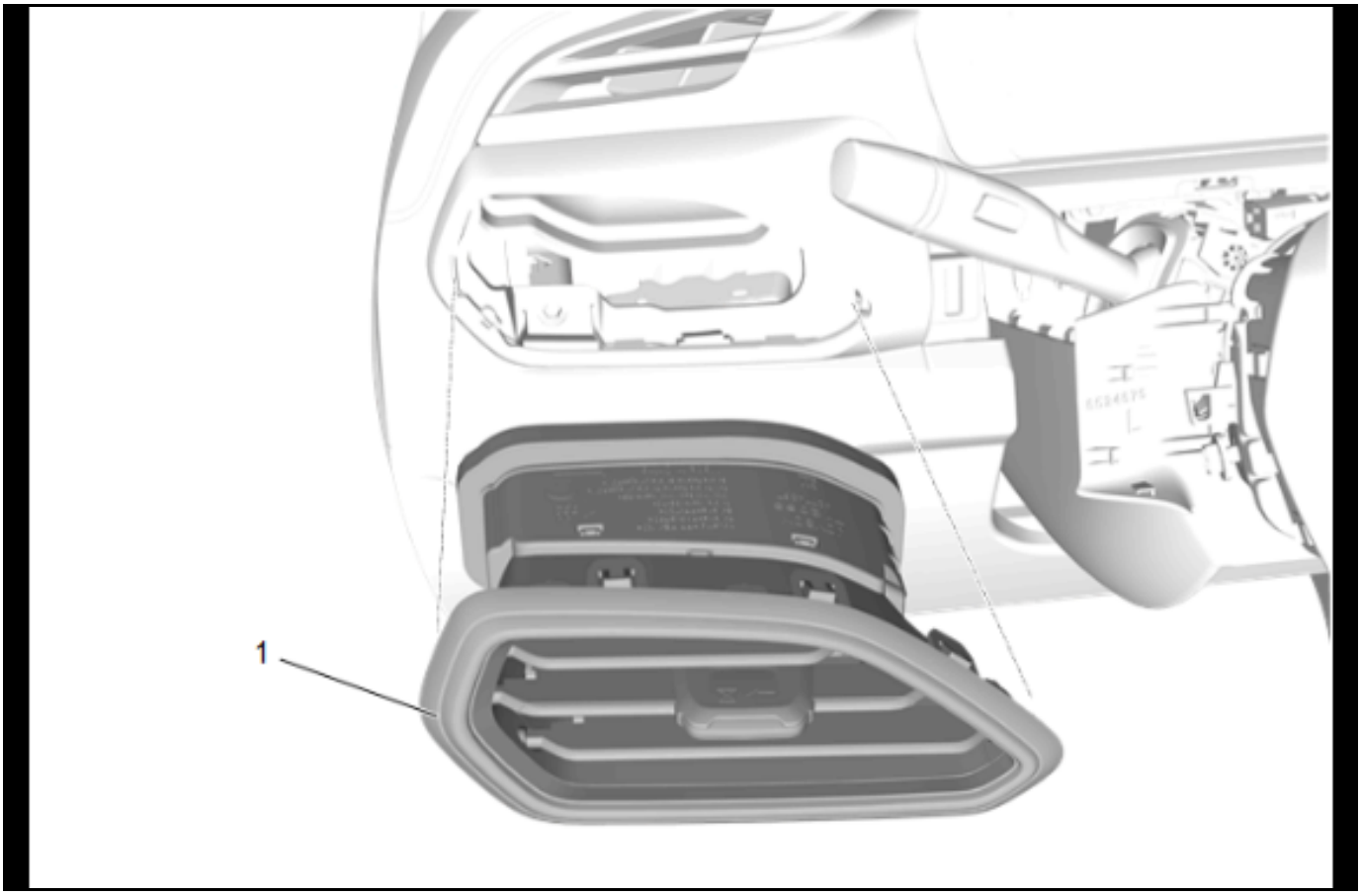

5664386

1. Using a flat-bladed plastic trim tool, release the retaining clips.
2. Instrument Panel Outer Air Outlet - Left Side (1) » Remove

Installation Procedure

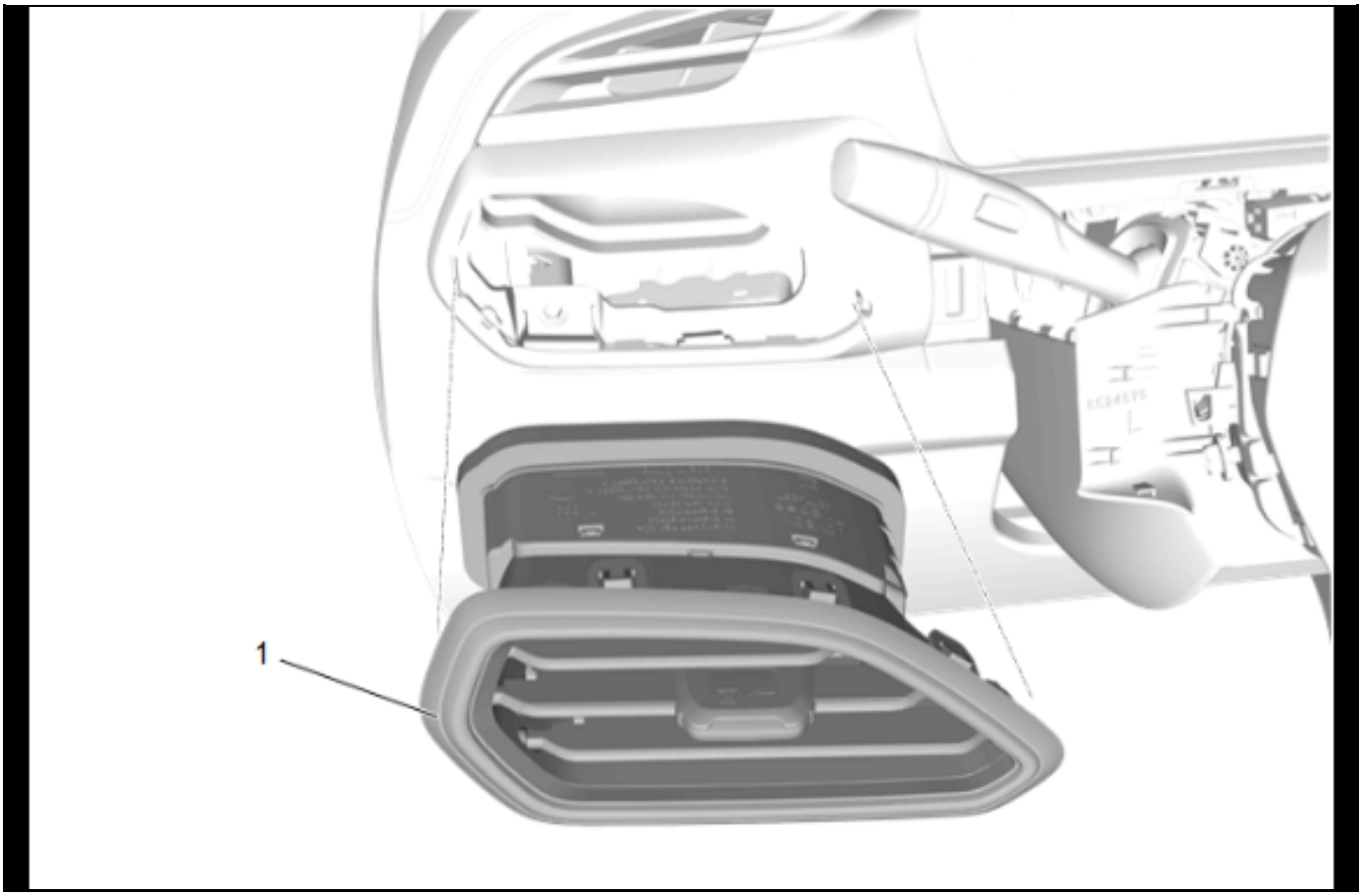

5664386

1. Instrument Panel Outer Air Outlet - Left Side (1) » Install

Instrument Panel Center Air Outlet Replacement

Warning: After installation of the steering wheel airbag module to the steering wheel, slightly pull the module outward. If there is no give on the airbag module then it is secured correctly. If the airbag module is not fully attached personal injury could result.

Removal Procedure

1. Disable the SIR system.
2. Extend the steering column to its furthest point to allow the instrument panel steering column upper trim cover to clear the instrument panel.

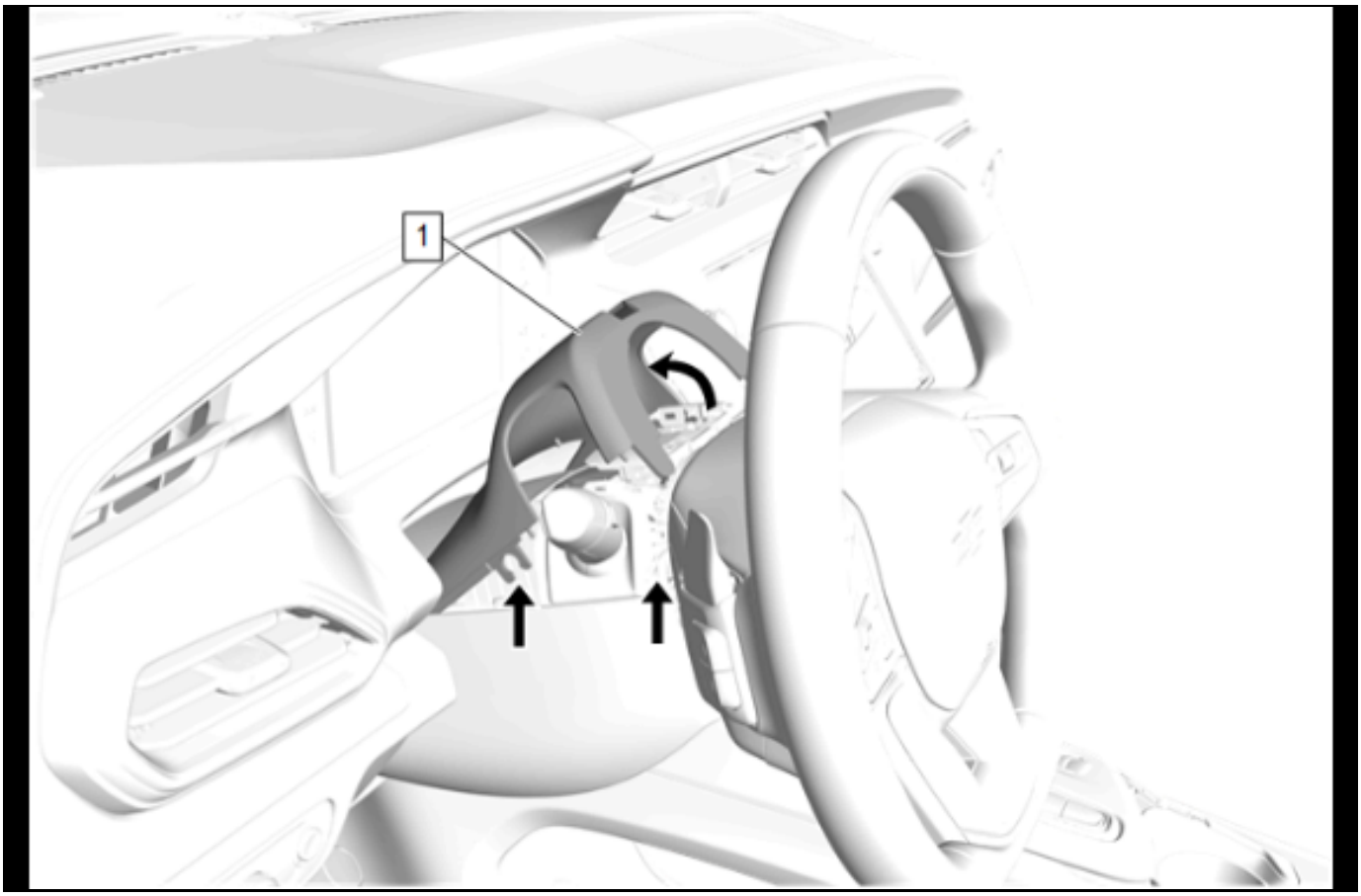

5661051

3. Using a small plastic trim tool, separate the instrument panel steering column upper trim cover (1) from the instrument panel steering column lower trim cover.

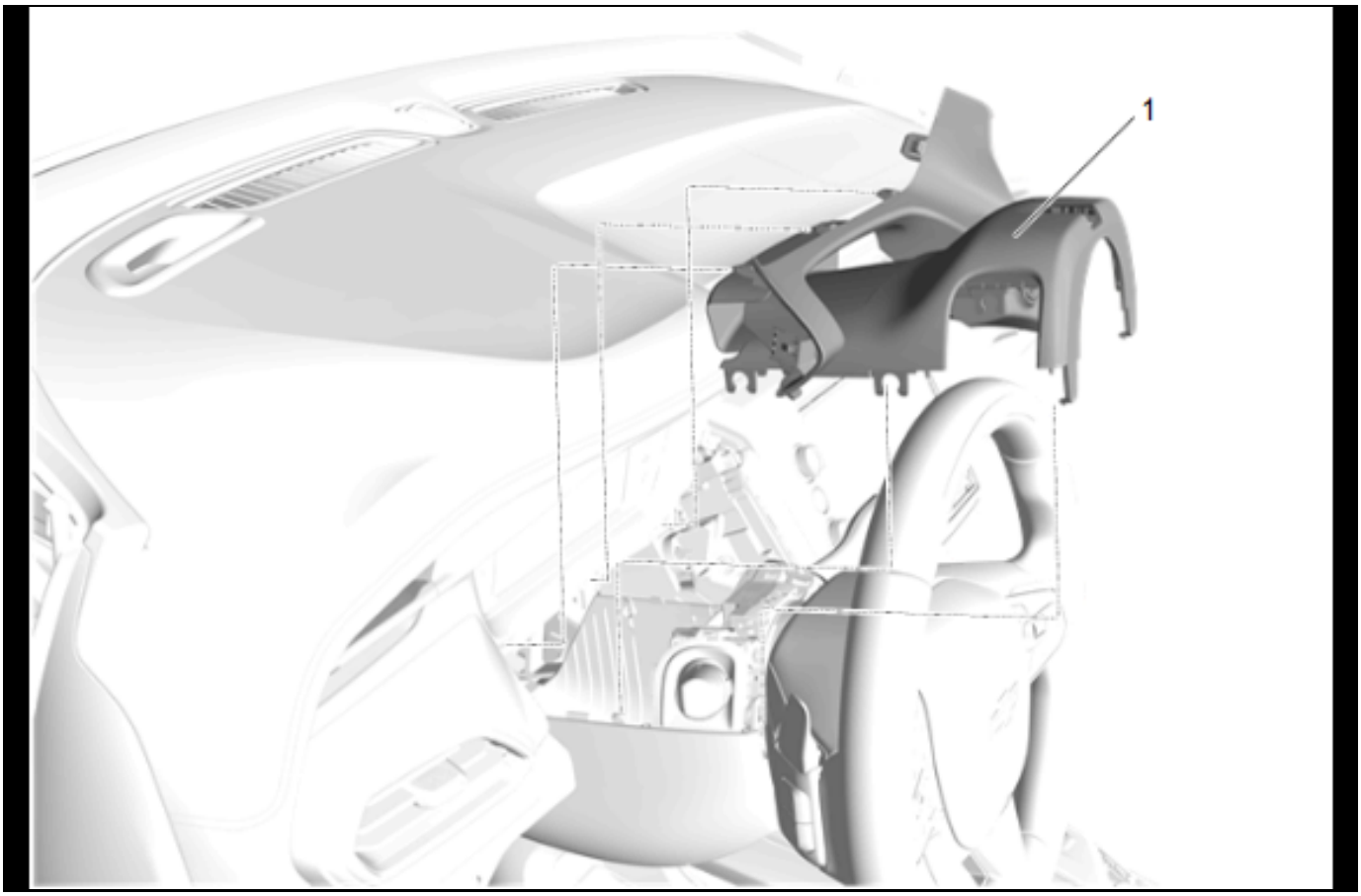

5661052

4. Using a suitable plastic trim tool, release instrument panel steering column upper trim cover (1).
5. Disconnect the electrical connector.
6. Instrument Panel Steering Column Upper Trim Cover (1) » Remove

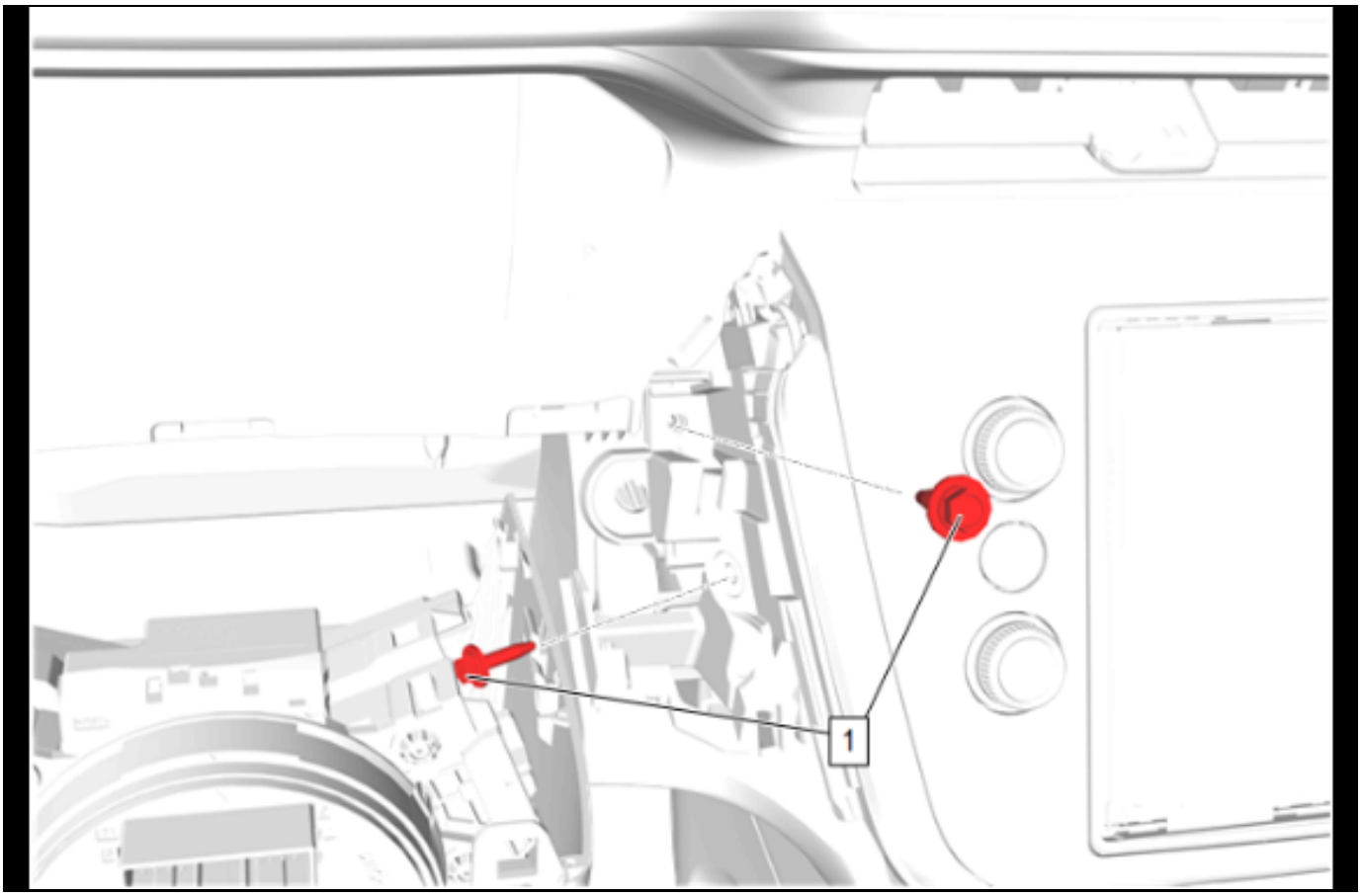

5663838

7. Instrument Panel Accessory Center Trim Plate Bolt
   (1) » Remove [2x]

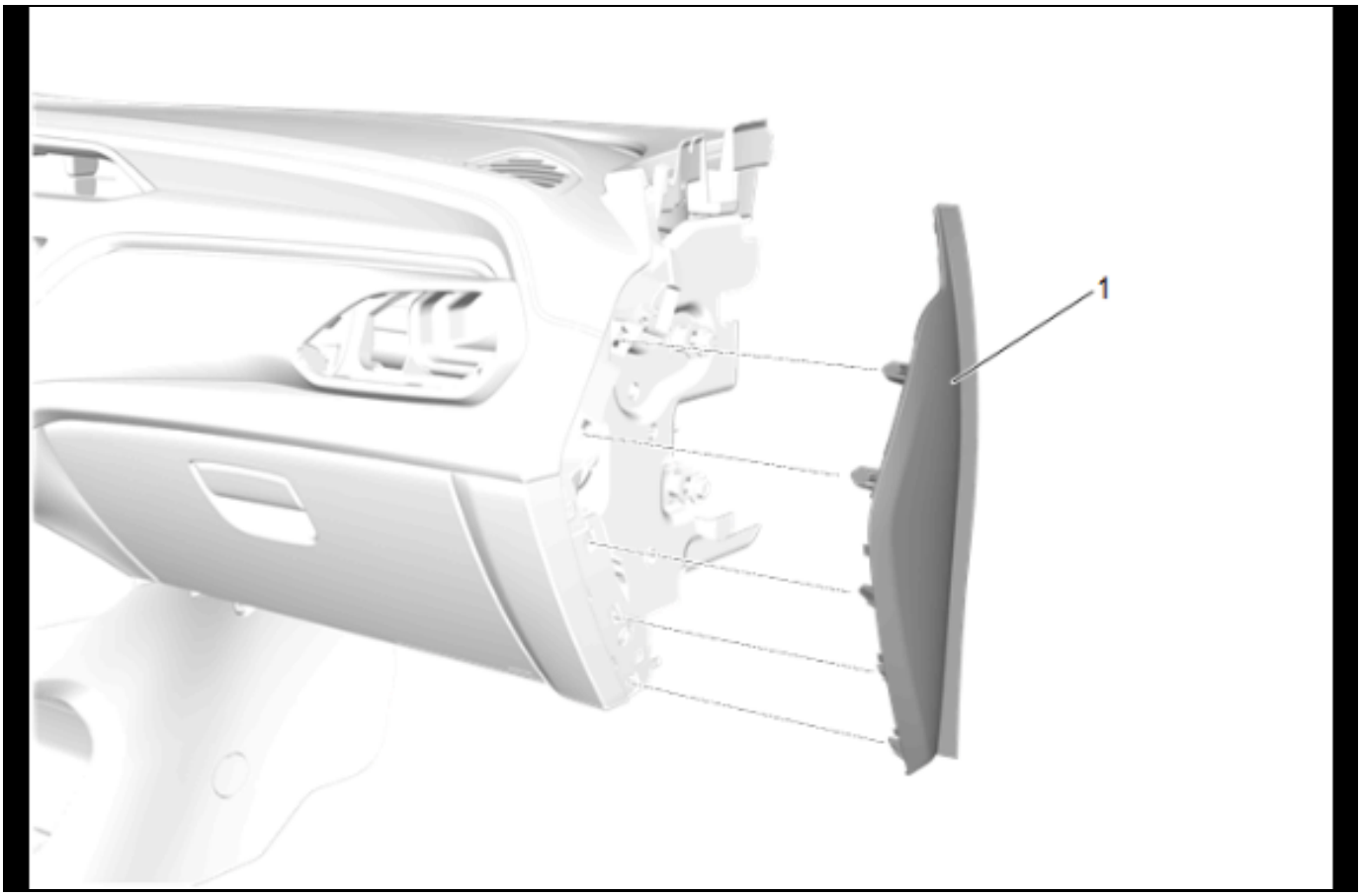

5660657

8. With a flat bladed plastic trim tool, start at the front and work your way back to release the clips.
9. Instrument Panel Outer Trim Cover - Right Side (1) » Remove

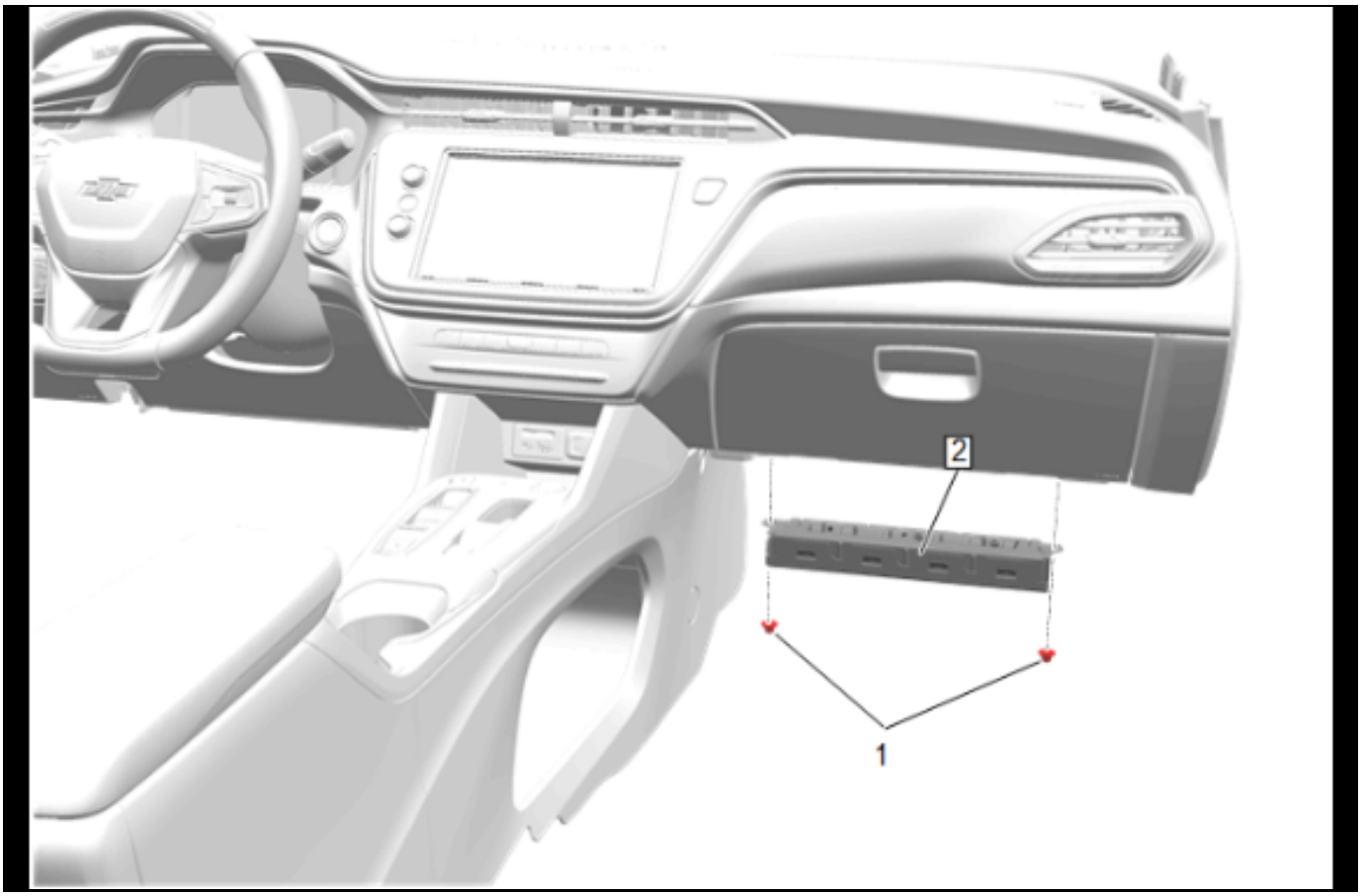

5664037

10. Instrument Panel Lower Airbag Nut (1) » Remove [2x]
11. Instrument Panel Lower Airbag - Passenger Side (2) » Remove
12. Disconnect the electrical connector.

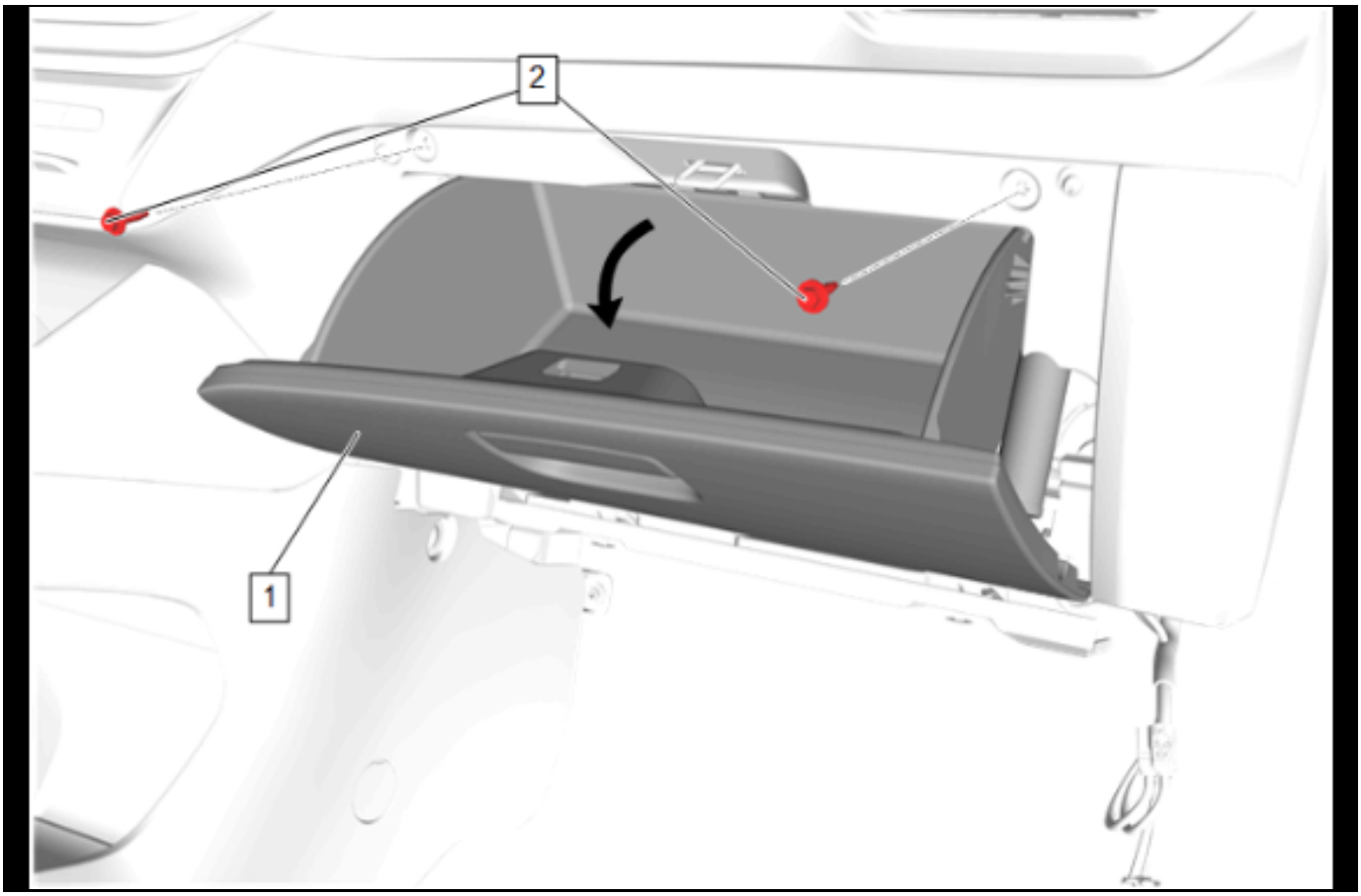

5663566

13. Open the instrument panel compartment door. (1)
14. Instrument Panel Compartment Bolt (2) »
    Remove [2x]

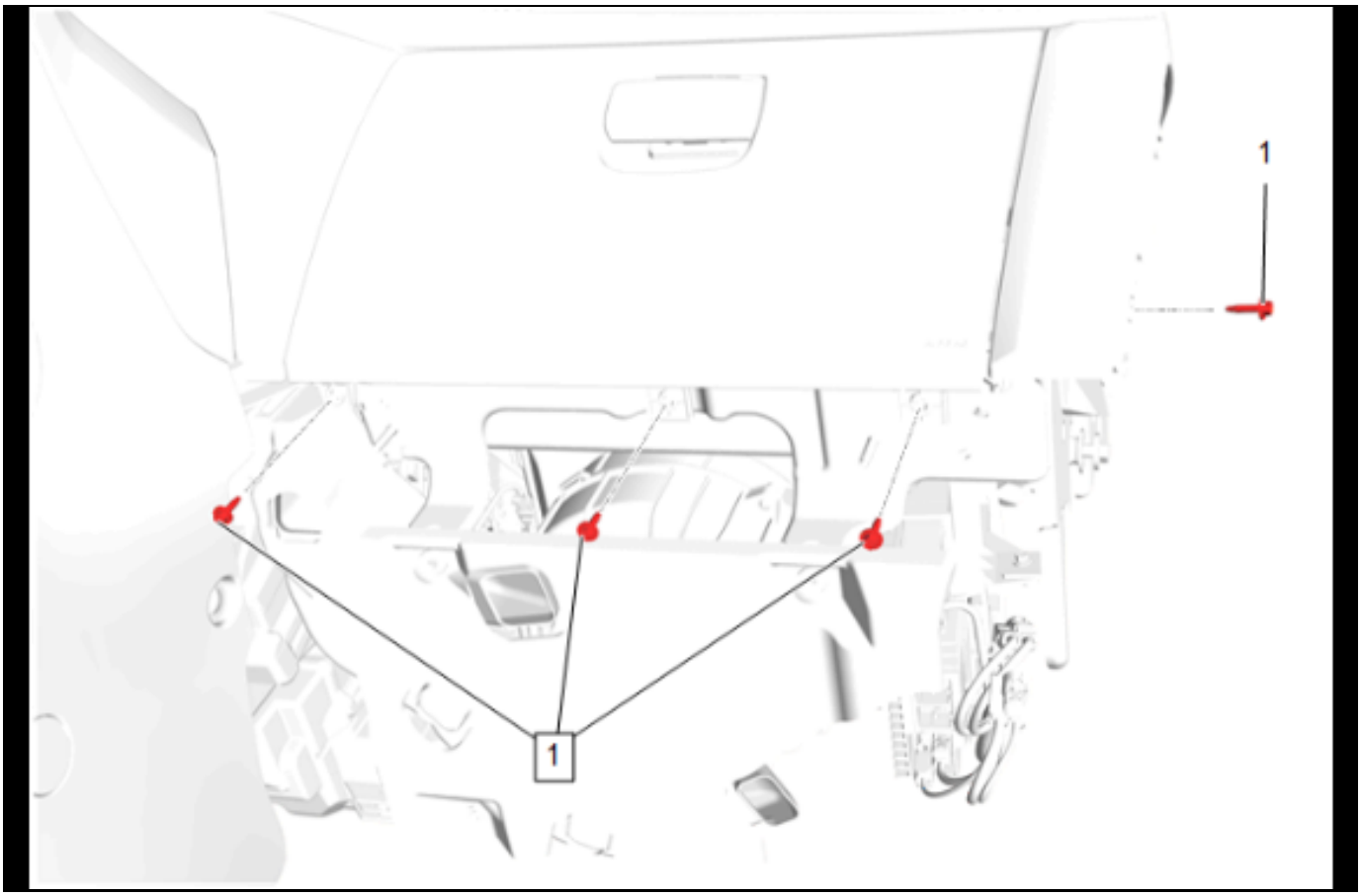

5663567

15. Instrument Panel Compartment Bolt (1) »
    Remove [4x]

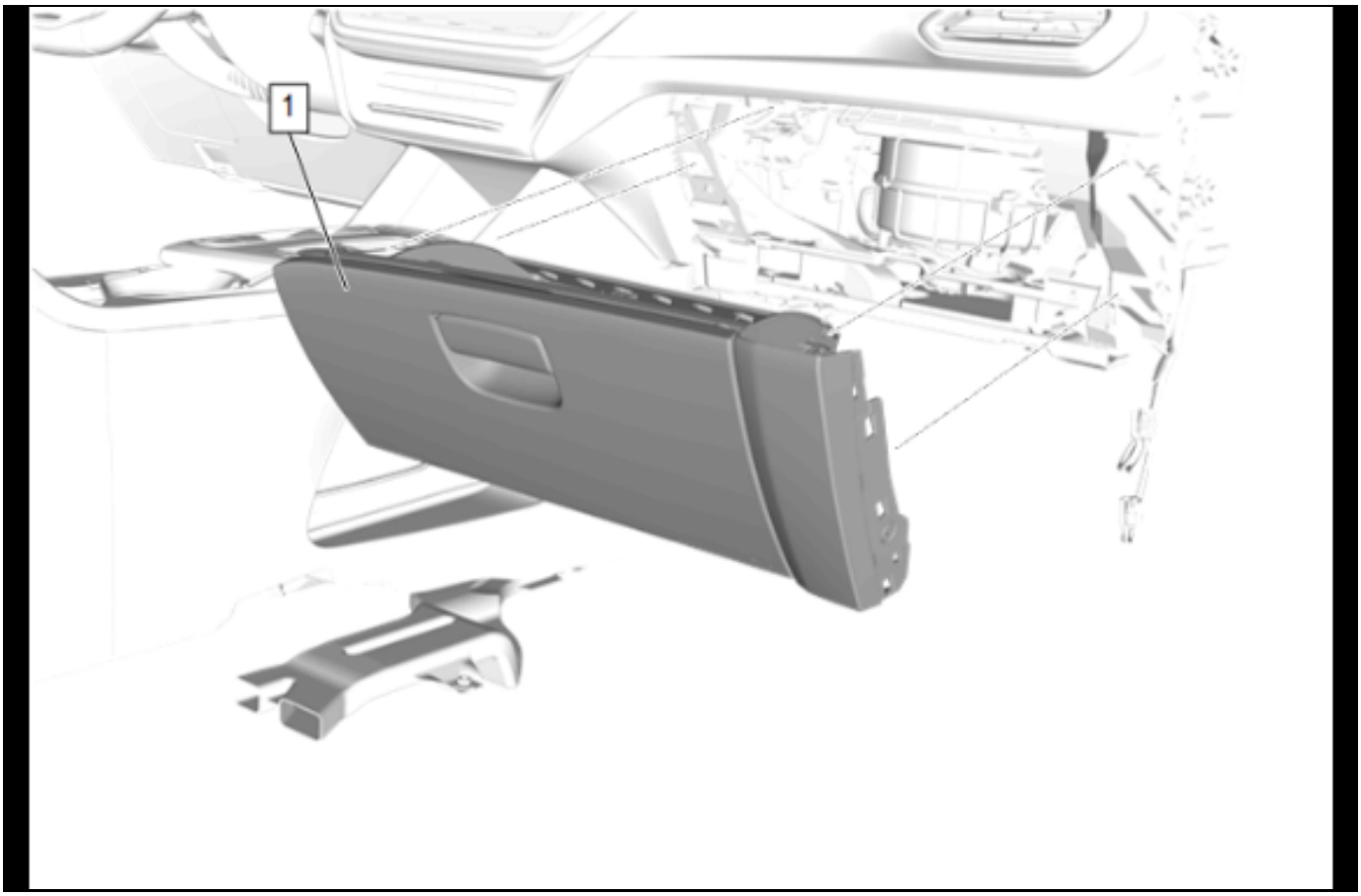

5663568

16. Instrument Panel Compartment (1) » Remove

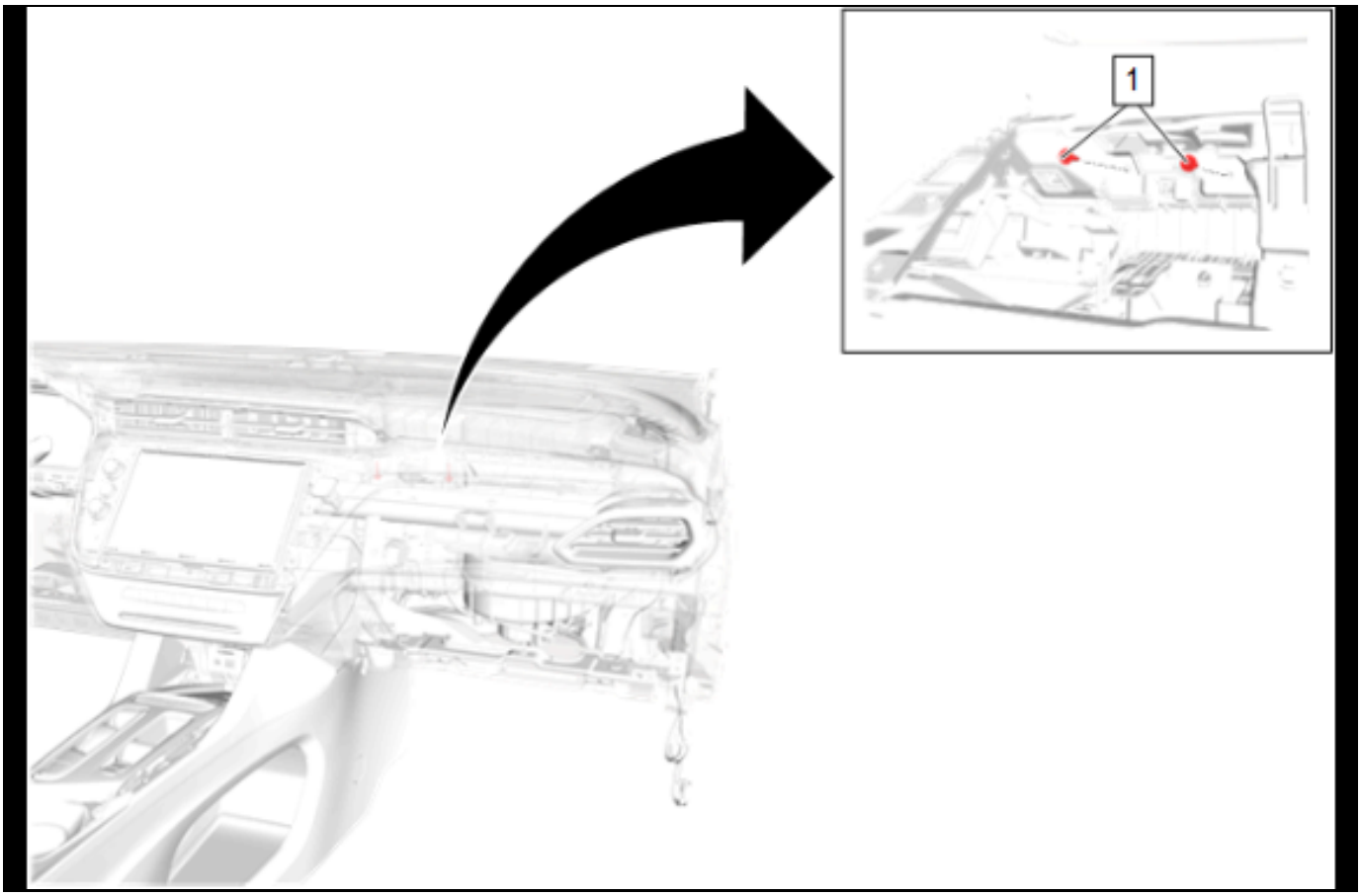

5663839

17. Instrument Panel Accessory Center Trim Plate Bolt
    (1) » Remove [2x]
18. Disconnect the electrical connectors.

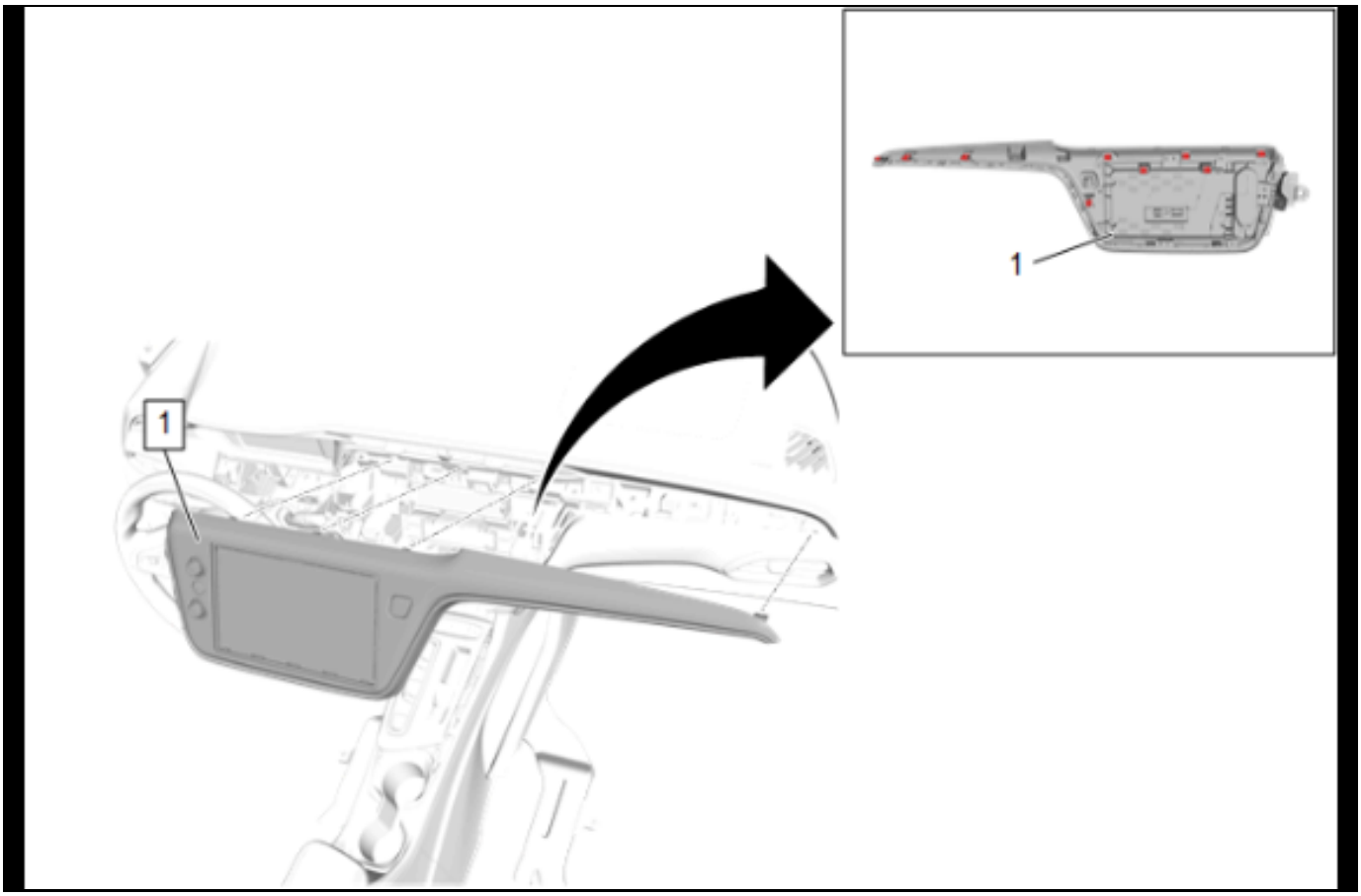

5663840

19. Using a flat-bladed plastic trim tool, release the retaining clips.
20. Instrument Panel Accessory Center Trim Plate (1)
    » Remove

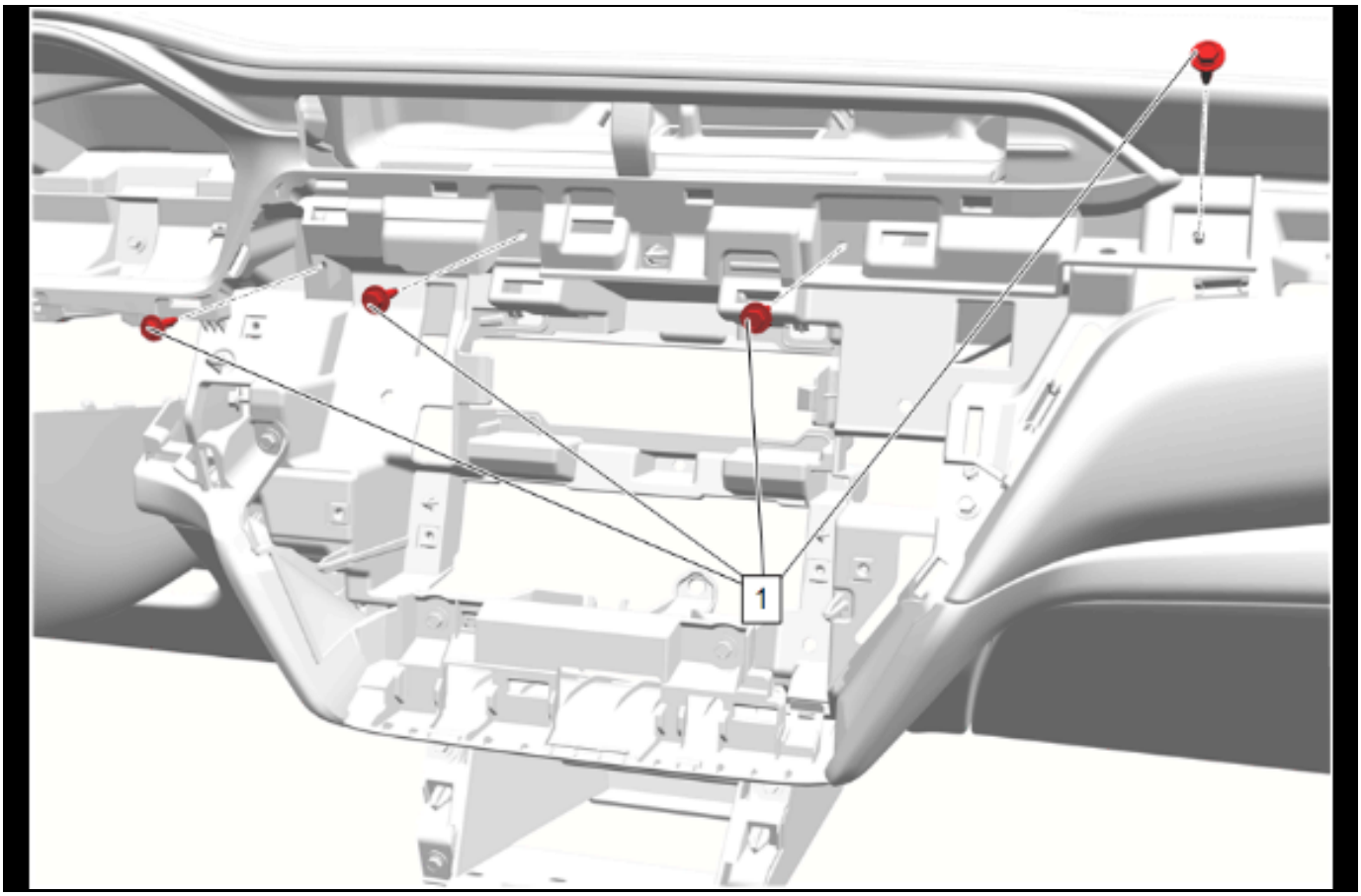

5664384

21. Instrument Panel Cluster Trim Plate Bolt (1) »
    Remove [5x]

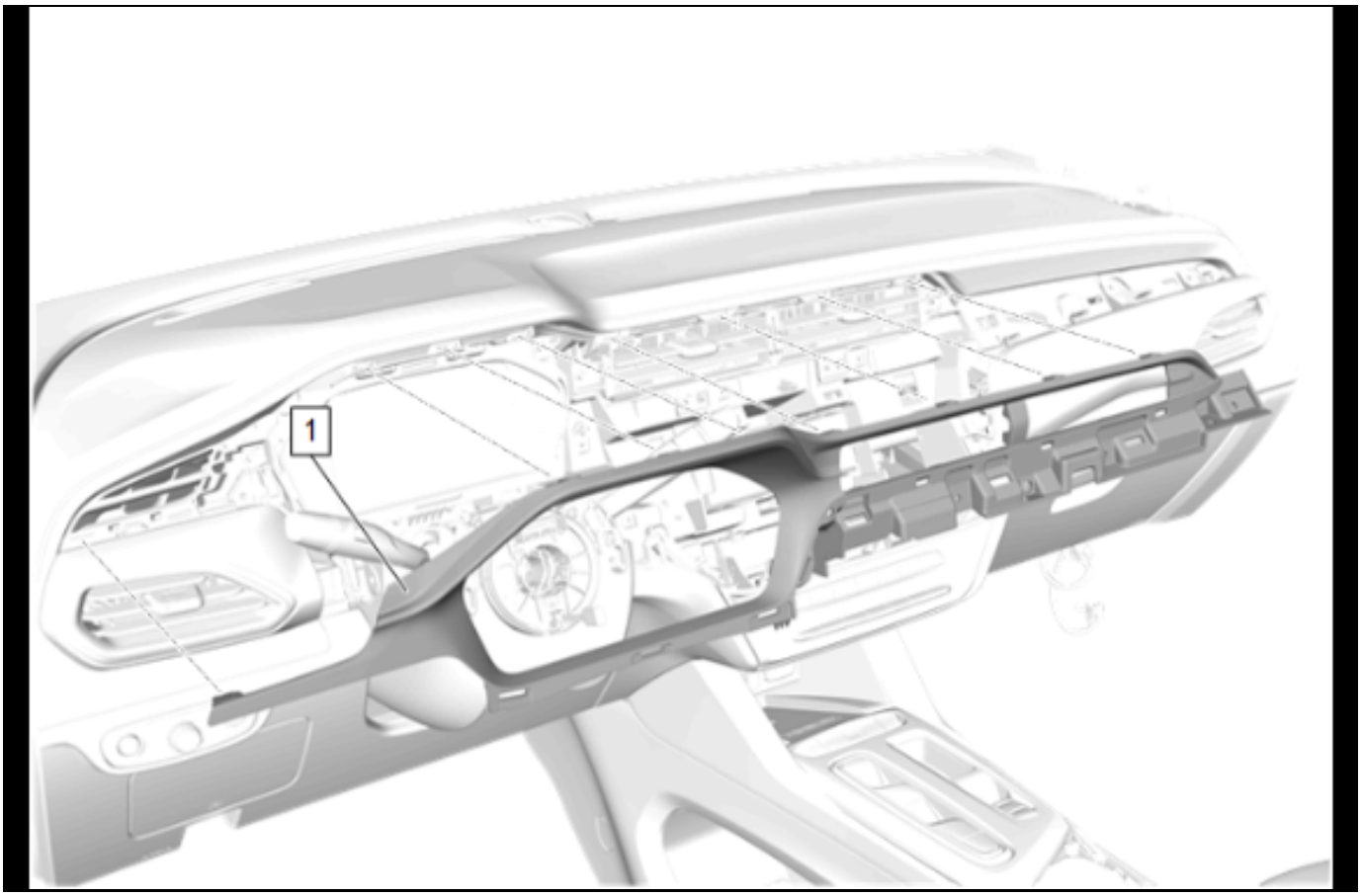

5664385

22. Using a flat-bladed plastic trim tool, release the retaining tabs.
23. Instrument Panel Cluster Trim Plate (1) » Remove

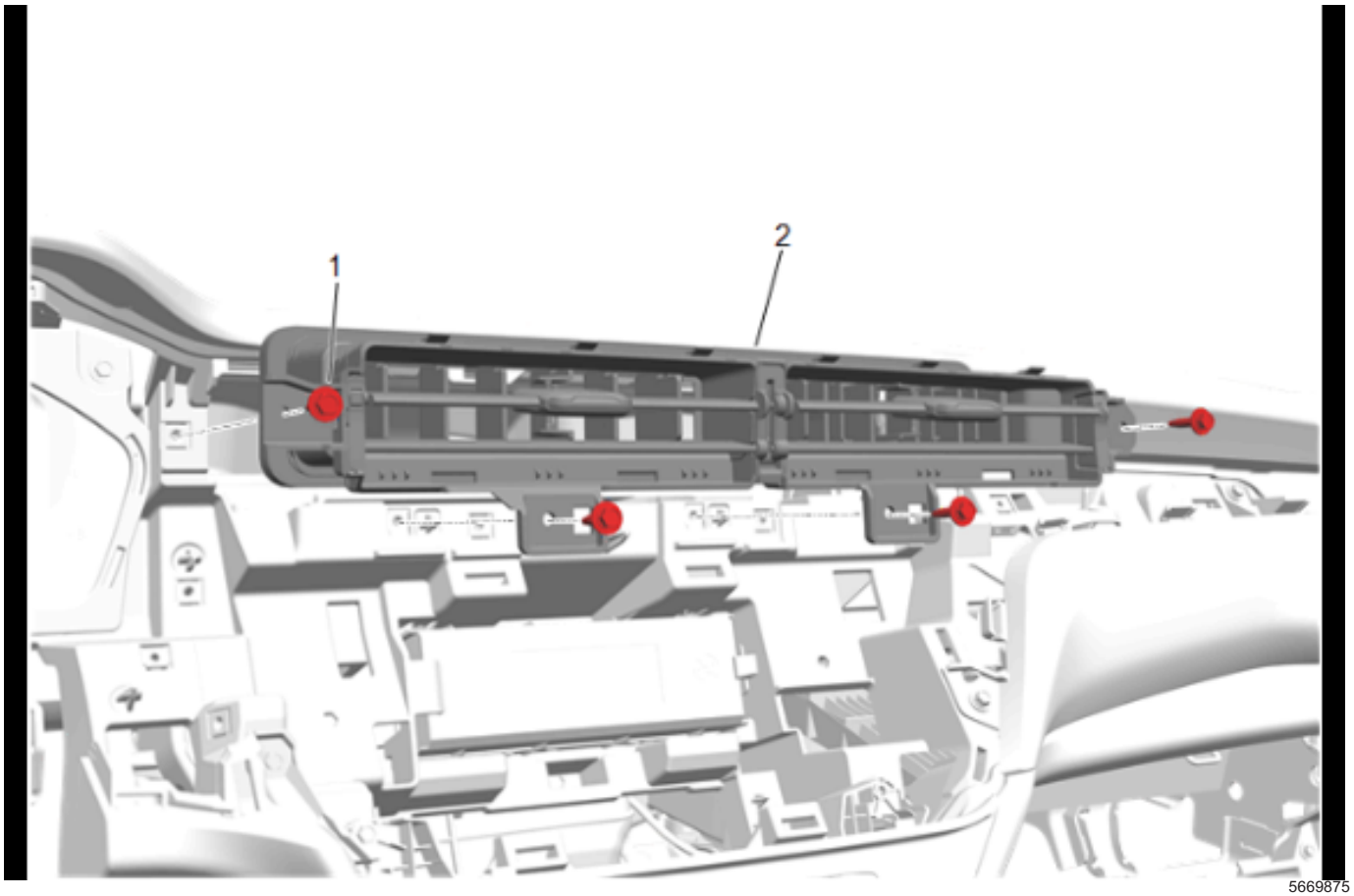

5669875

24. Instrument Panel Center Air Outlet Bolt (1) » Remove [4x]
25. Instrument Panel Center Air Outlet (2) » Remove

Installation Procedure

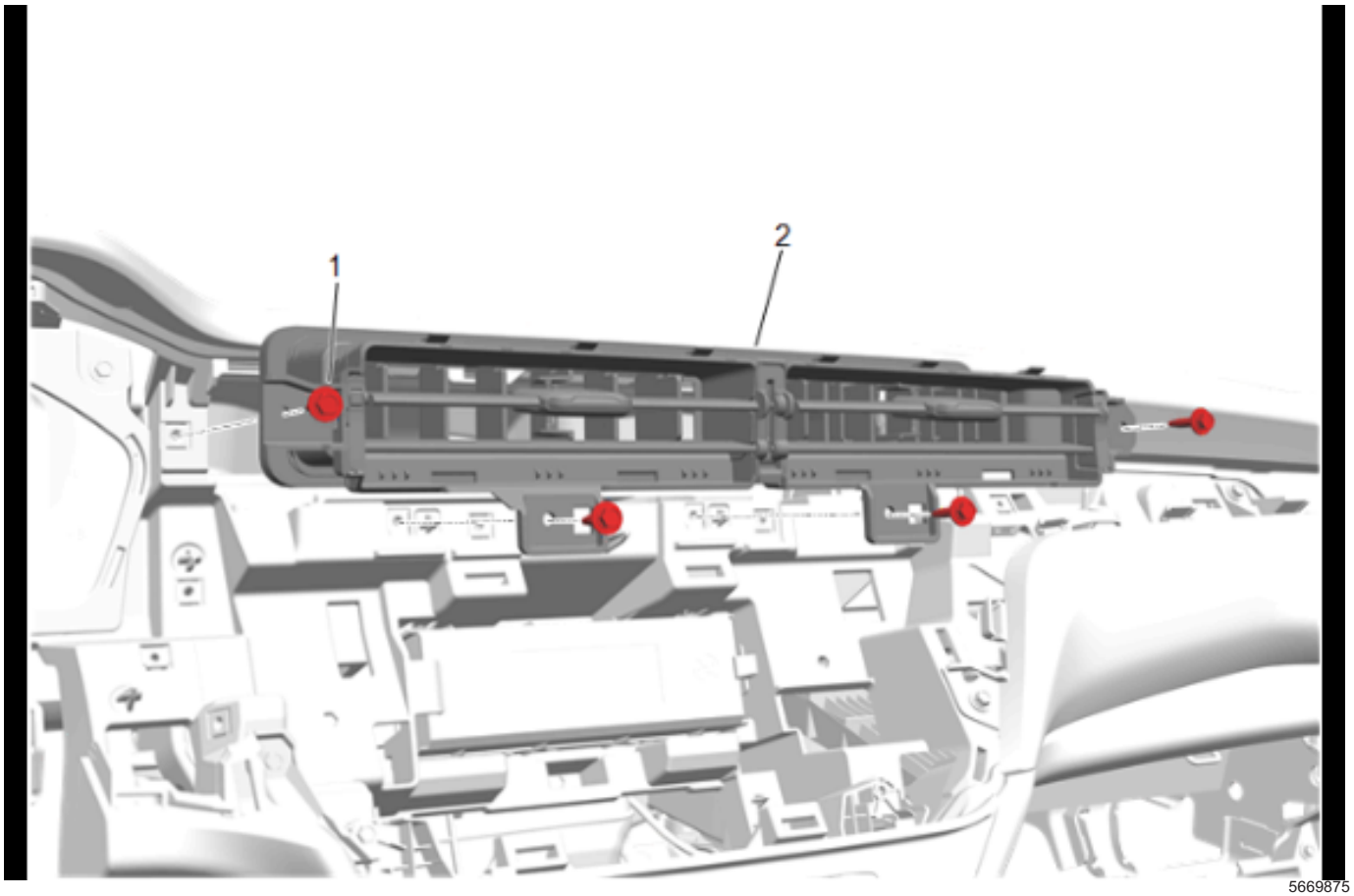

5669875

1. Instrument Panel Center Air Outlet (2) » Install
2. Instrument Panel Center Air Outlet Bolt (1) » Install and tighten [4x] — *Fastener Specifications on page 5-3*

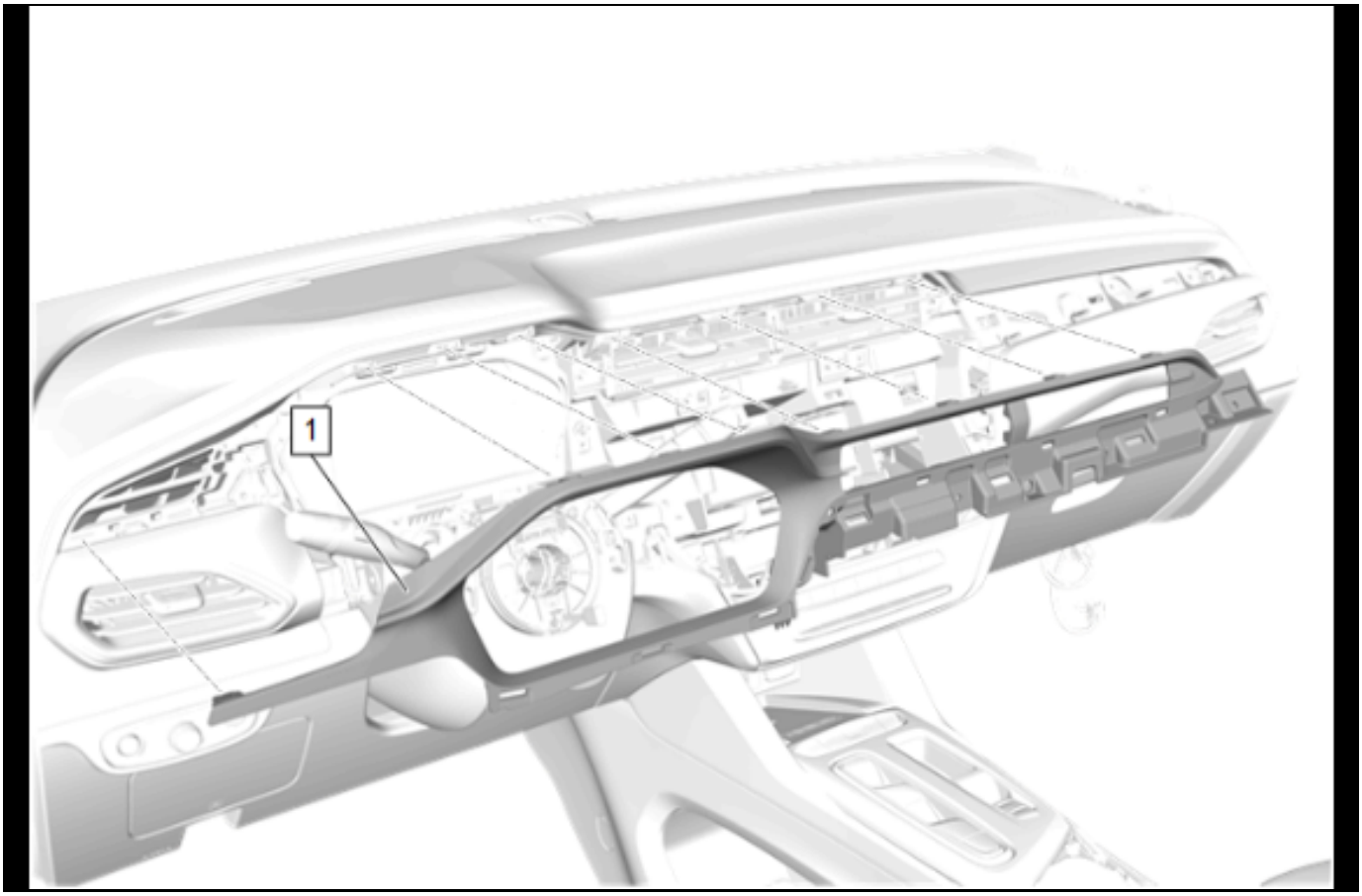

5664385

3. Instrument Panel Cluster Trim Plate (1) » Install

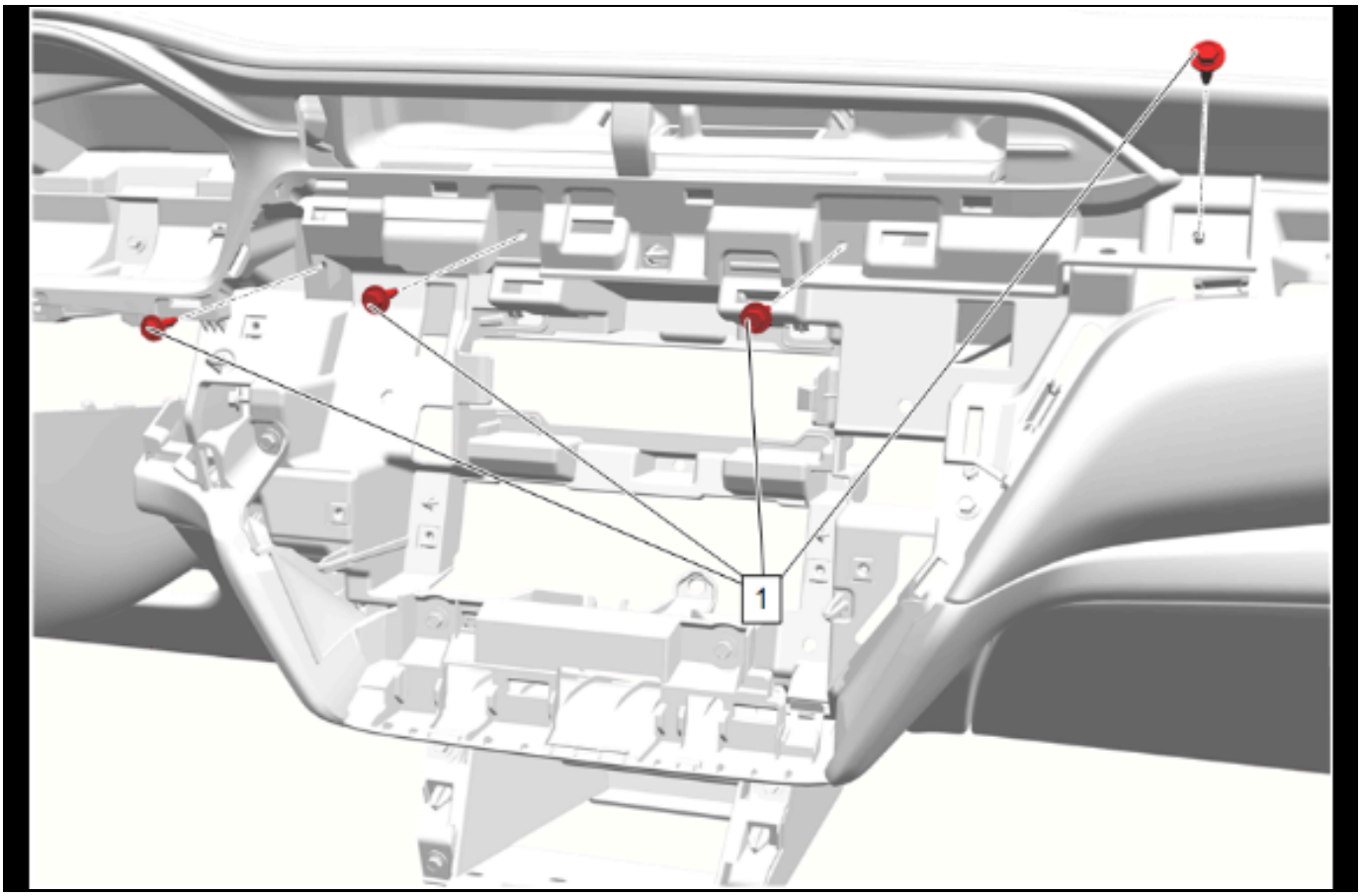

5664384

4. Instrument Panel Cluster Trim Plate Bolt (1) »
   Install and tighten [5x]

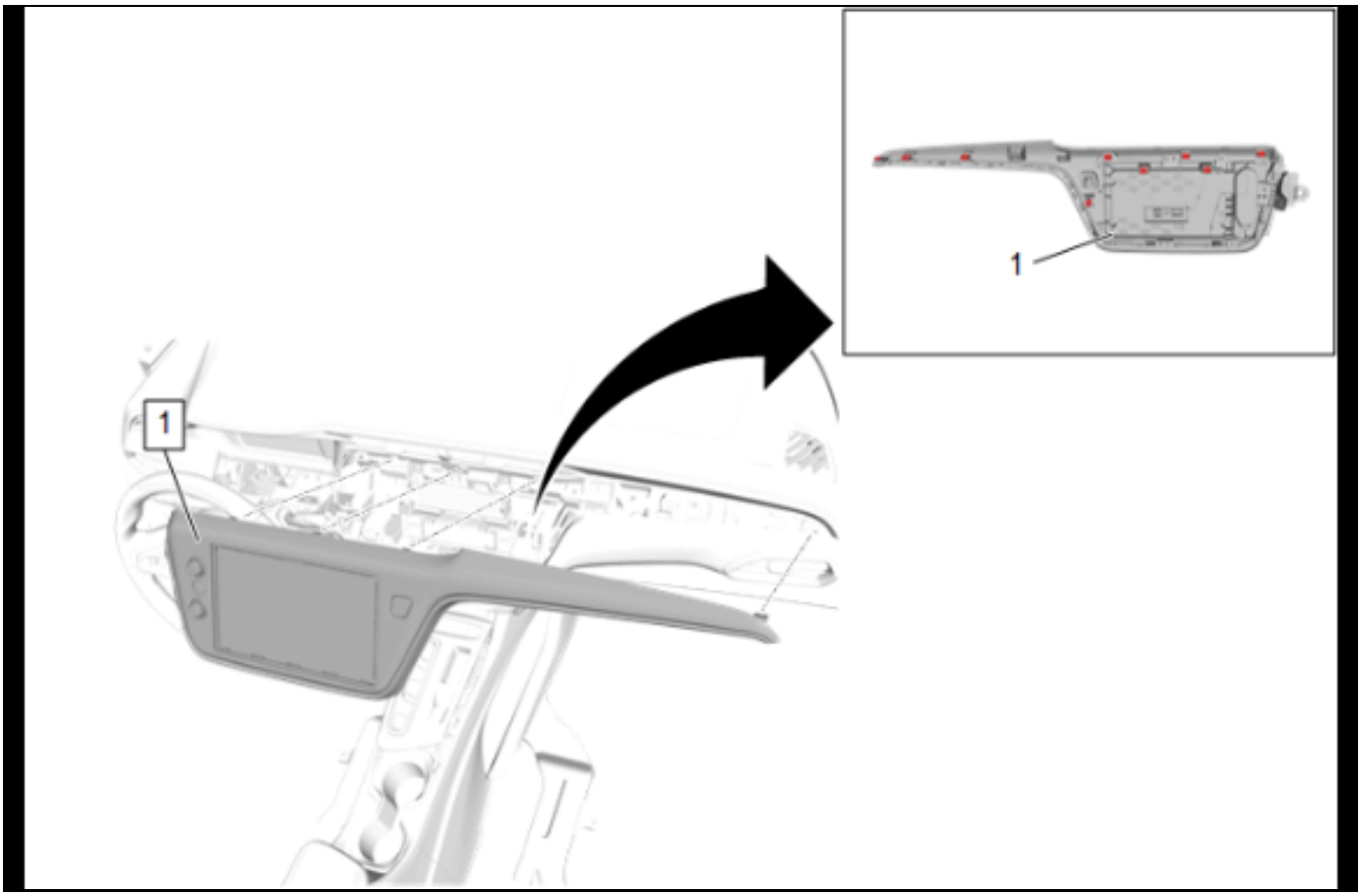

5663840

5. Connect the electrical connectors.
6. Instrument Panel Accessory Center Trim Plate (1)
   » Install

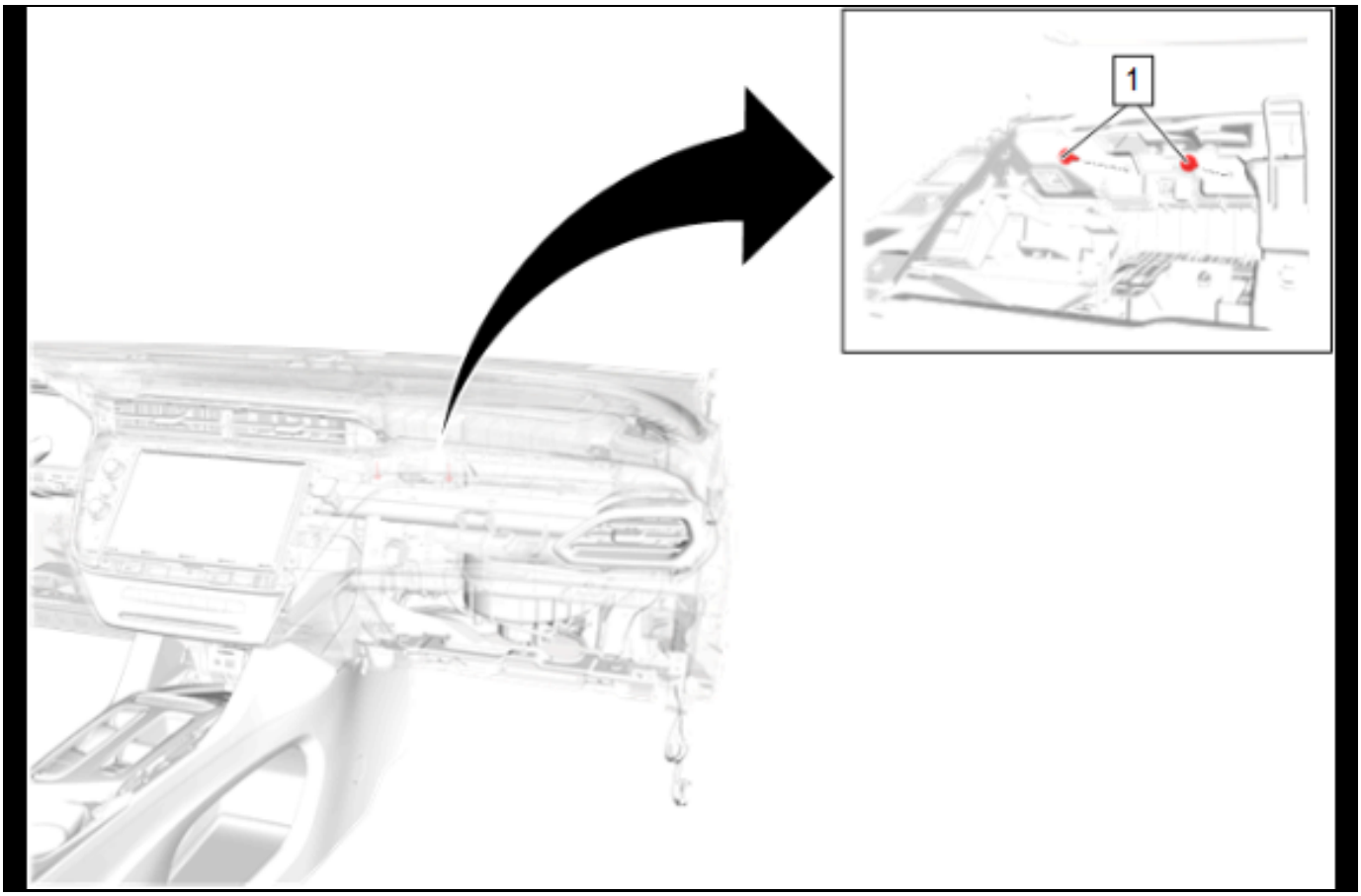

5663839

7. Instrument Panel Accessory Center Trim Plate Bolt
   (1) » Install and tighten [2x]

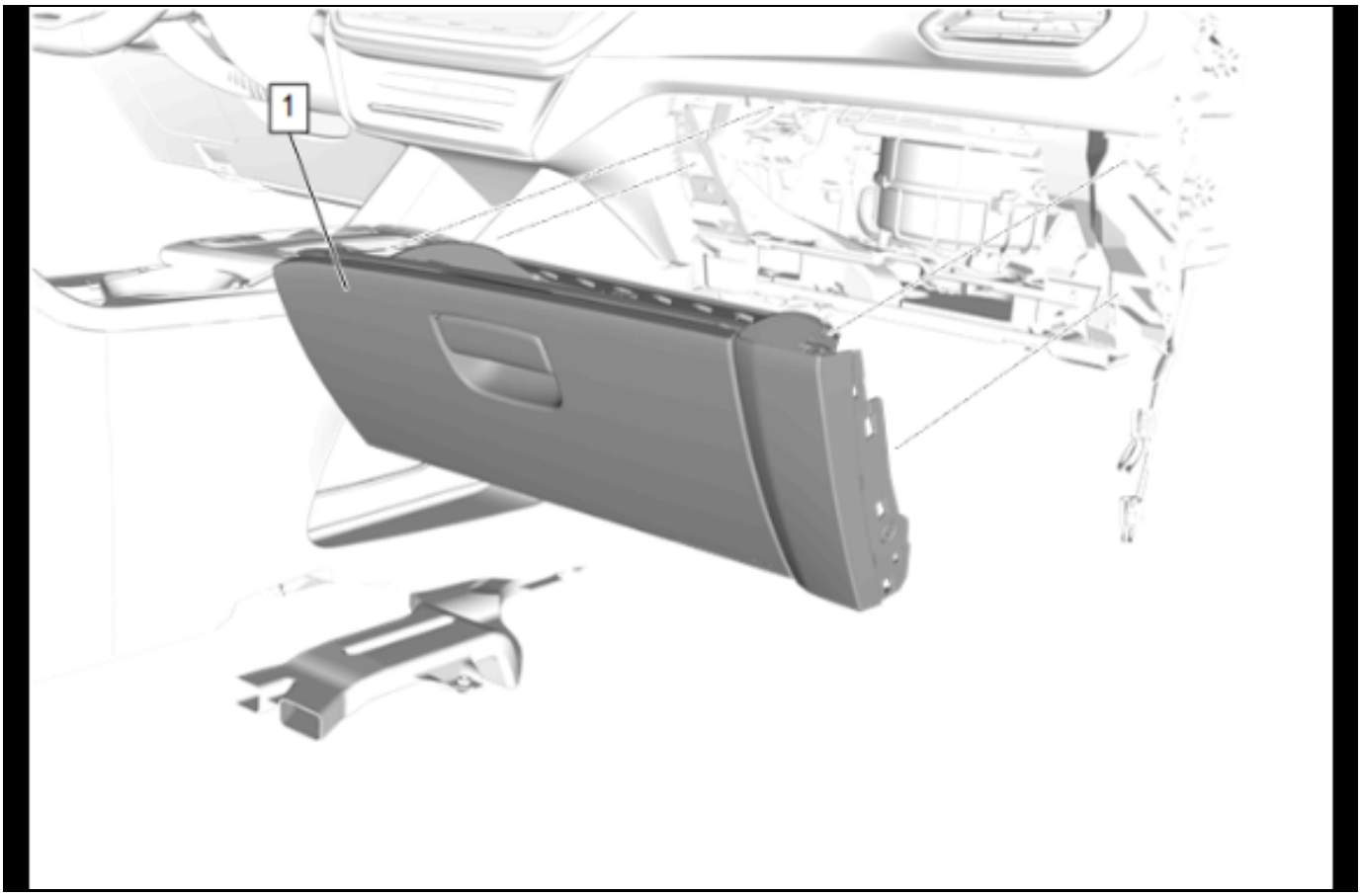

5663568

8. Instrument Panel Compartment (1) » Install

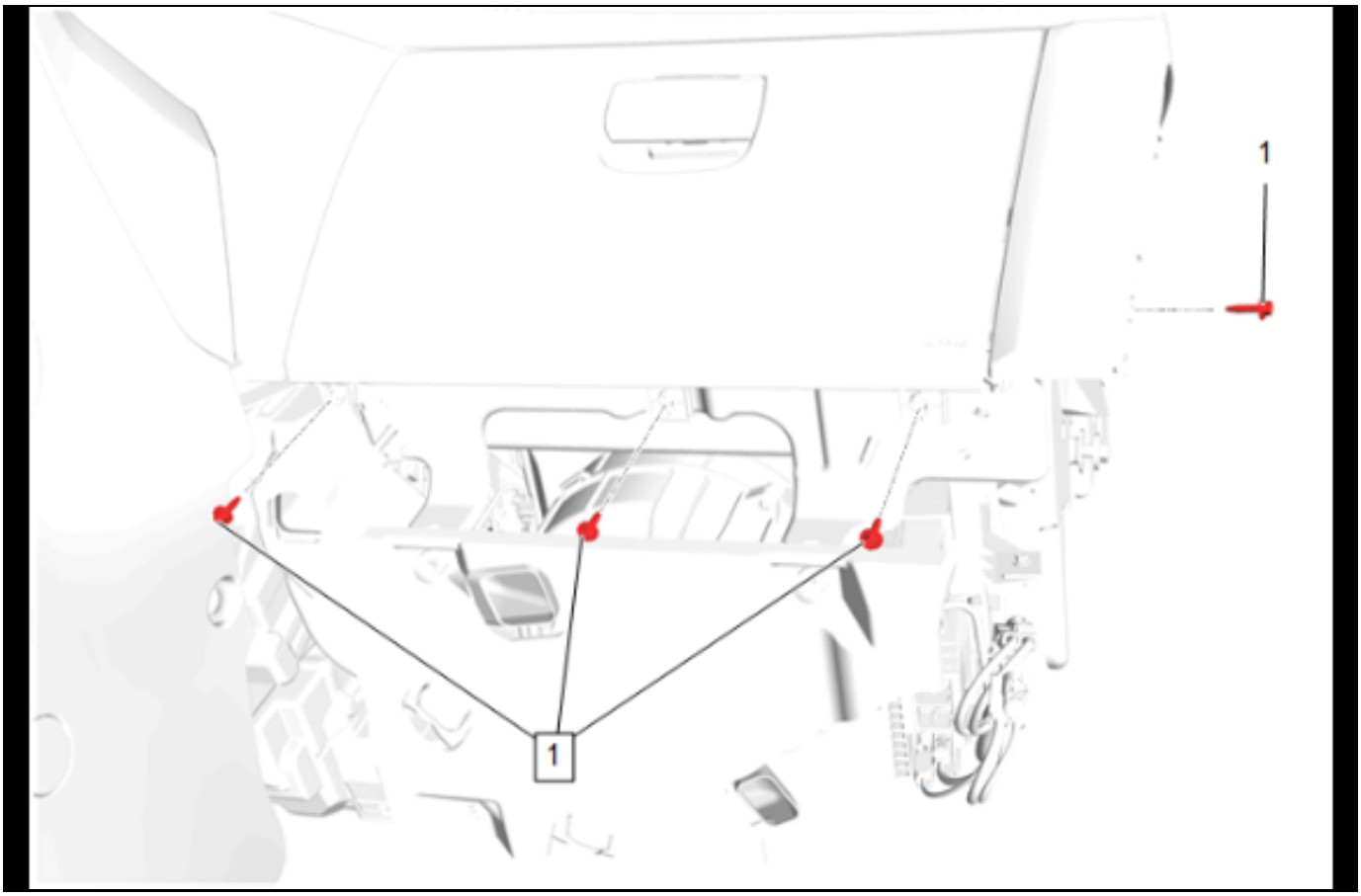

5663567

9. Instrument Panel Compartment Bolt (1) » Install and tighten [4x]

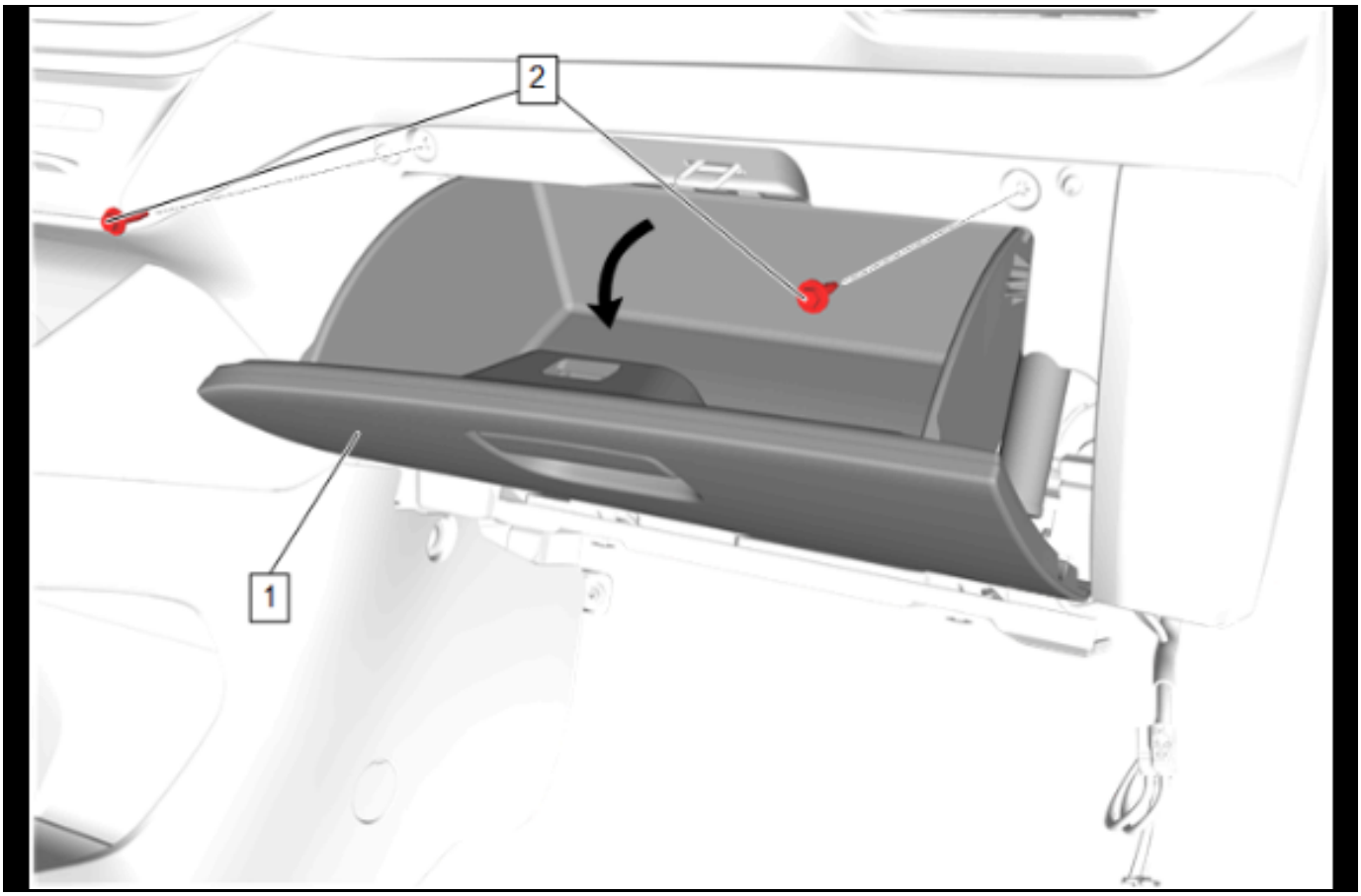

5663566

10. Instrument Panel Compartment Bolt (1) » Install and tighten [2x]

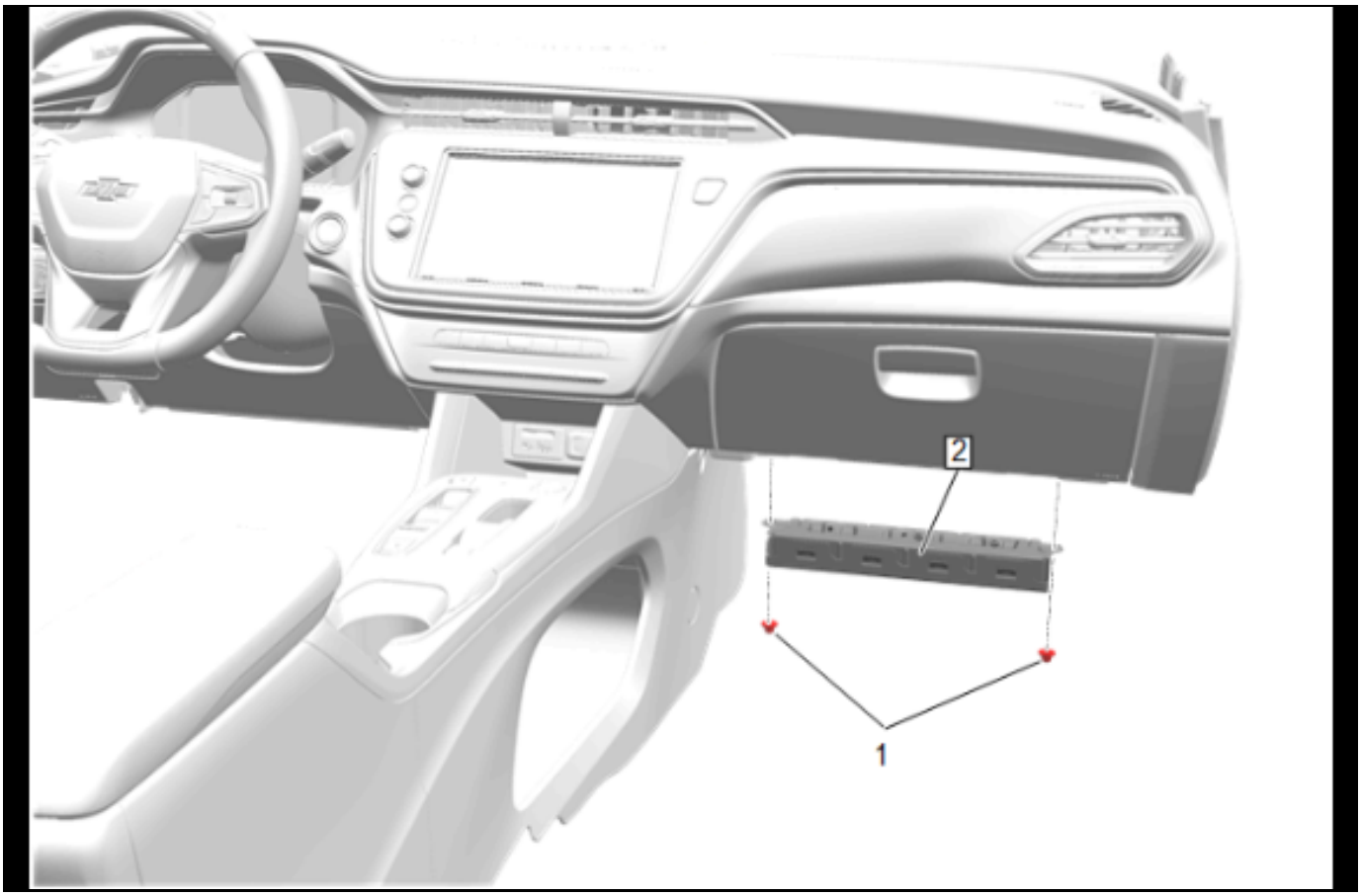

5664037

11. Connect the electrical connector.
12. Instrument Panel Lower Airbag - Passenger Side (2) » Install
13. Instrument Panel Lower Airbag Nut (1) » Install and tighten [2x]

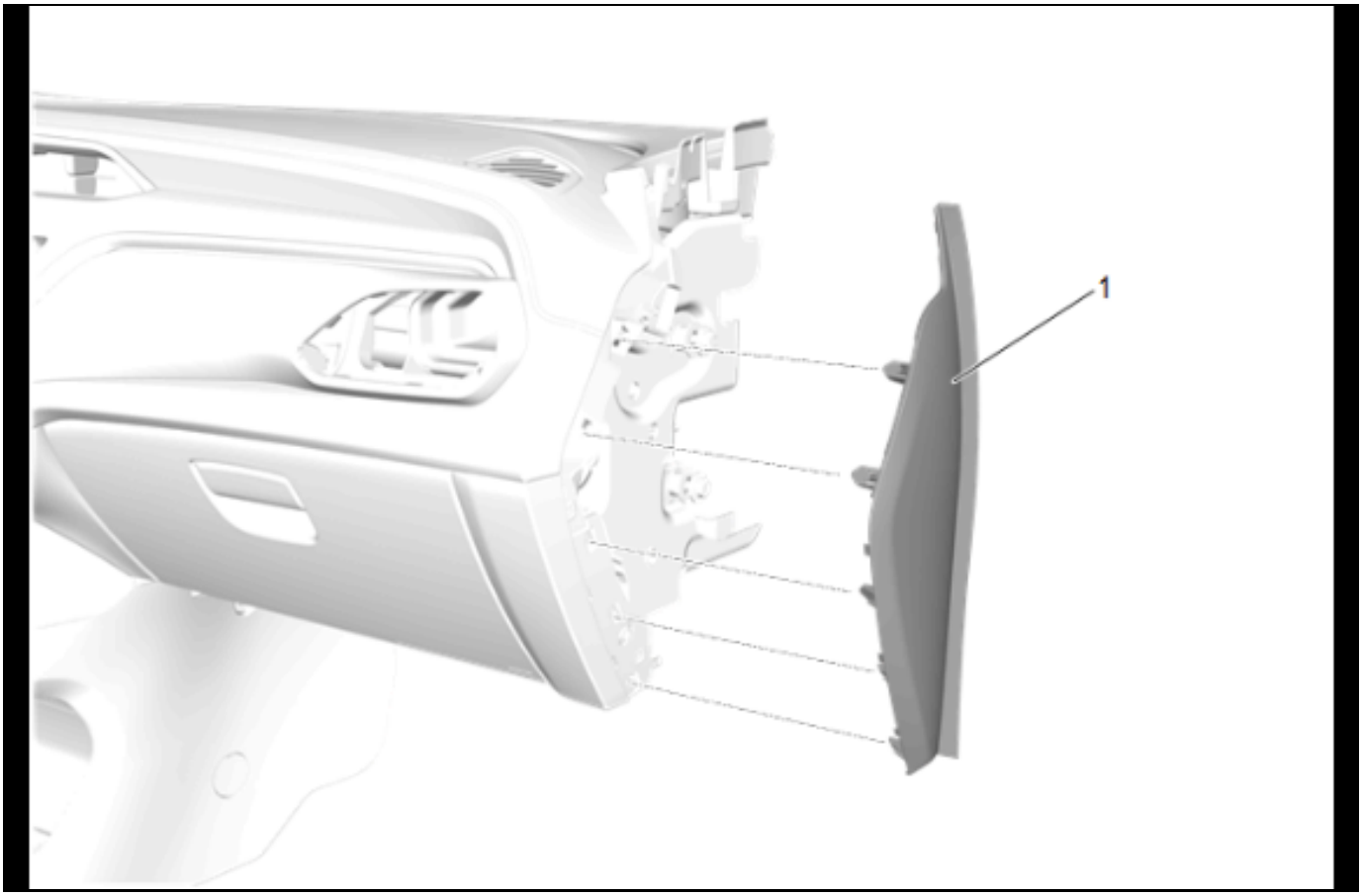

5660657

14. Instrument Panel Outer Trim Cover - Right Side
    (1) » Install

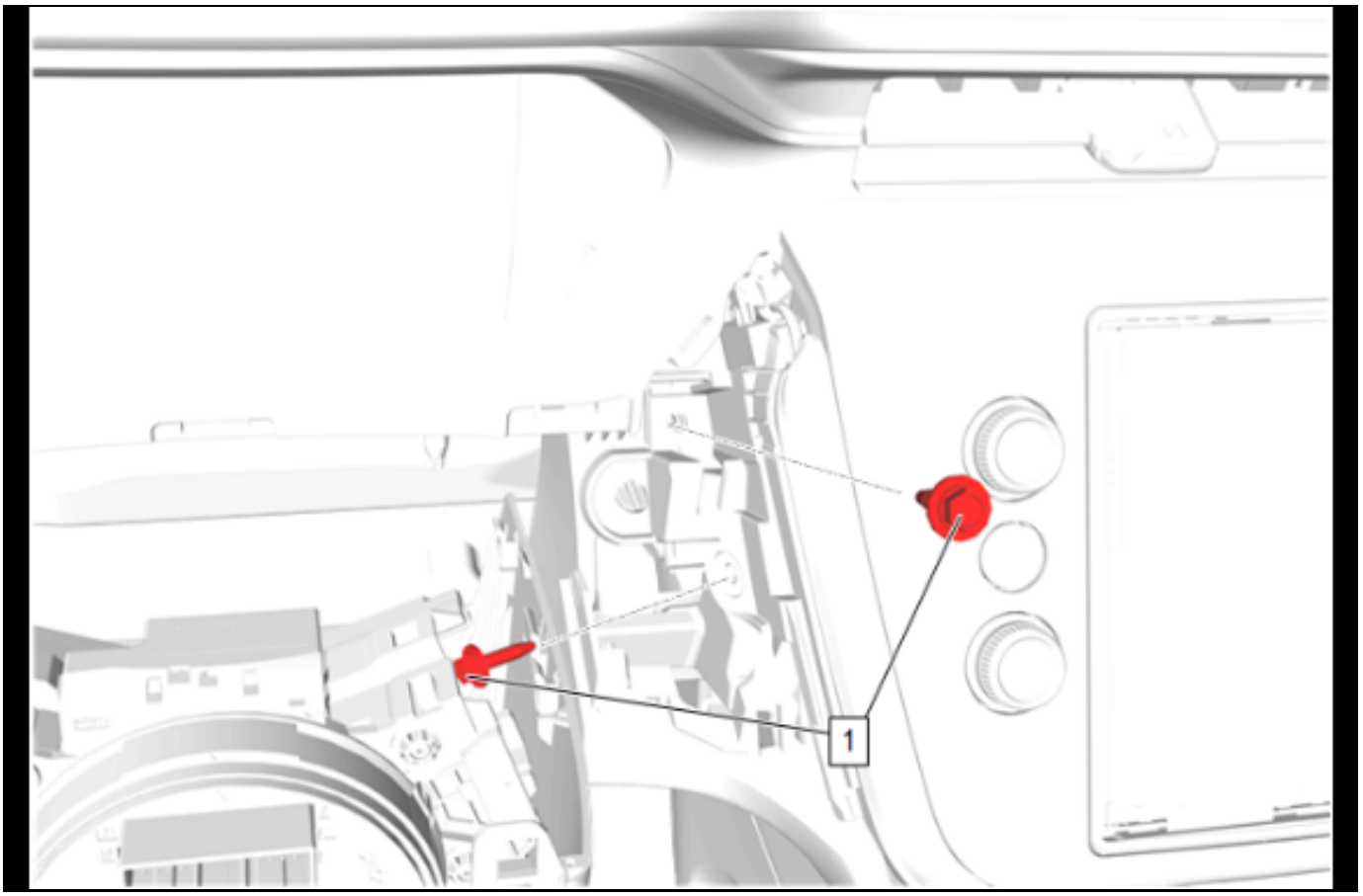

5663838

15. Instrument Panel Accessory Center Trim Plate Bolt
    (1) » Install and tighten [2x]

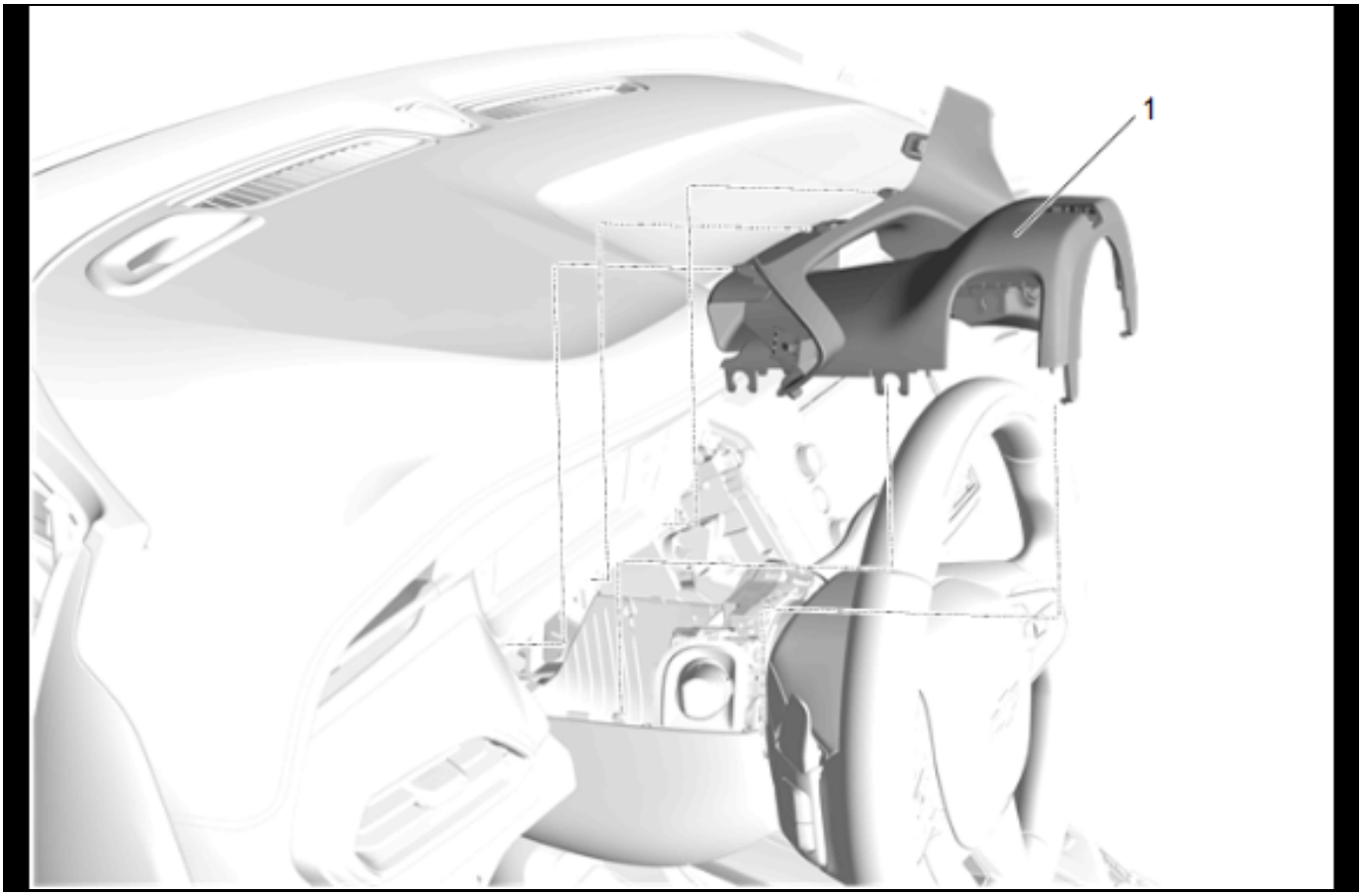

5661052

16. Connect the electrical connector.
17. Instrument Panel Steering Column Upper Trim Cover (1) » Install

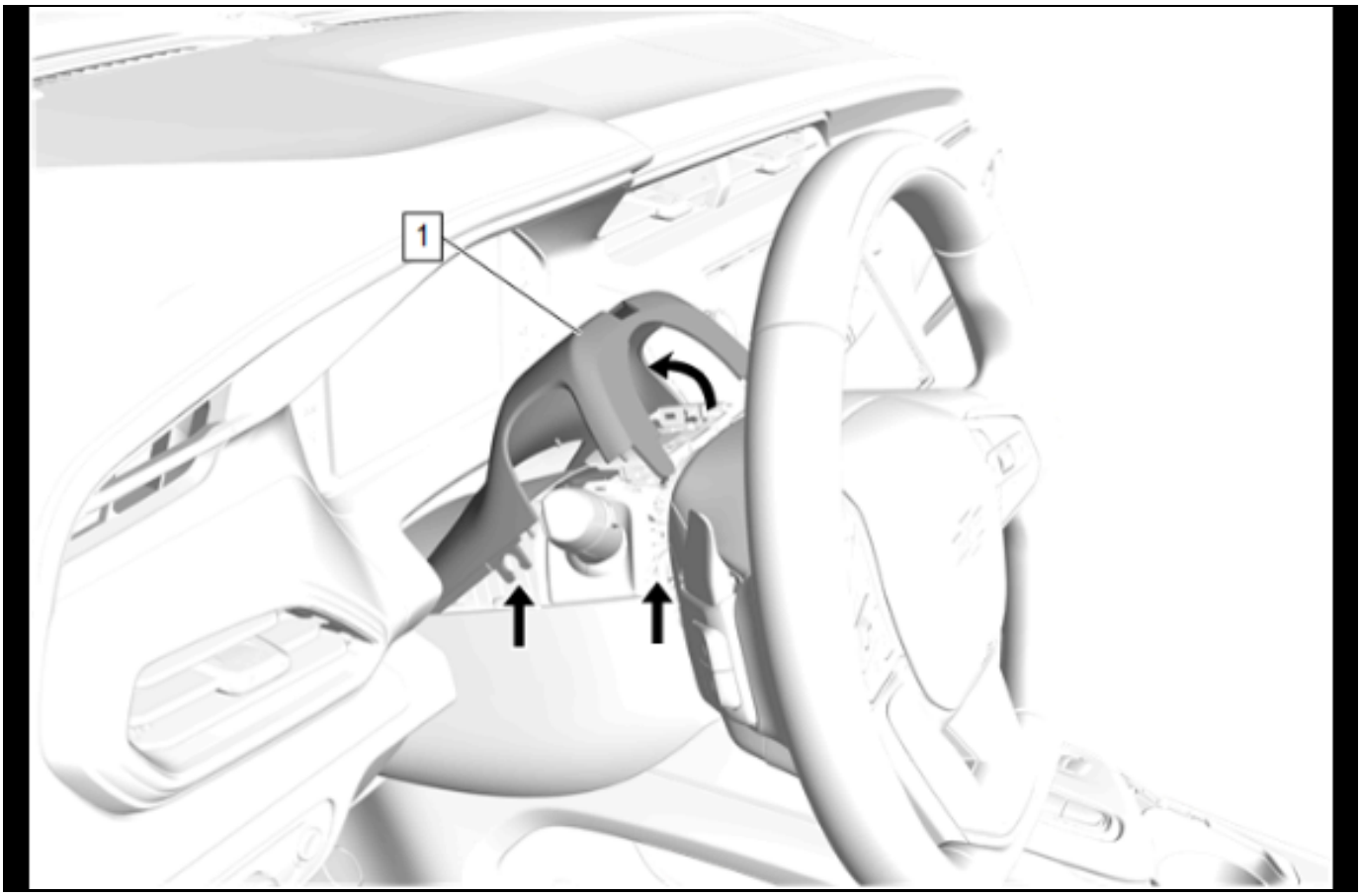

5661051

18. Secure the instrument panel steering column upper trim cover (1) to the instrument panel steering column lower trim cover.
19. Enable the SIR System.

Instrument Panel Outer Air Outlet Replacement - Right Side

Removal Procedure

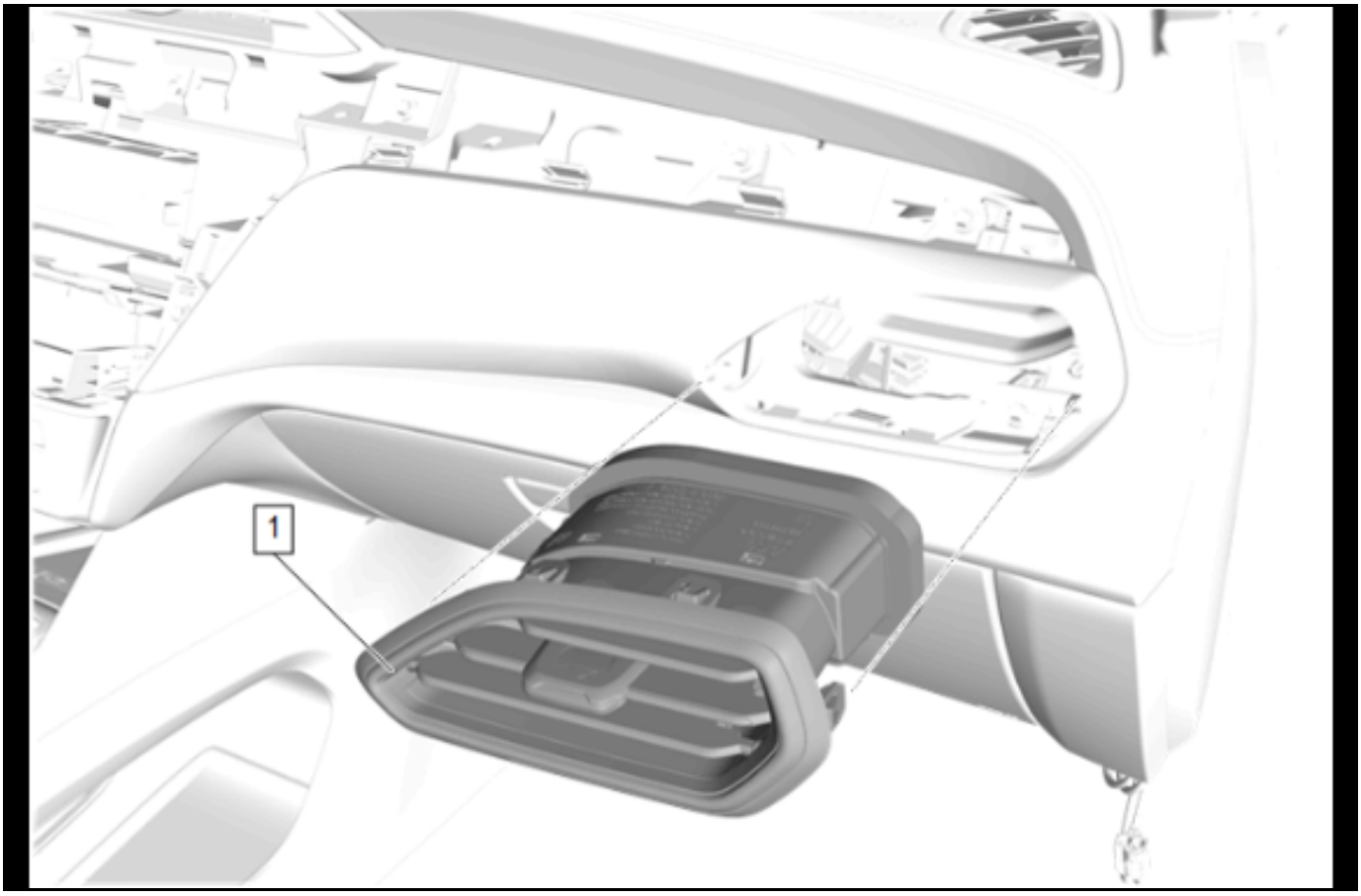

5663923

1. Using a flat-bladed plastic trim tool, release the retaining clips.
2. Instrument Panel Outer Air Outlet - Right Side (1)
   » Remove

Installation Procedure

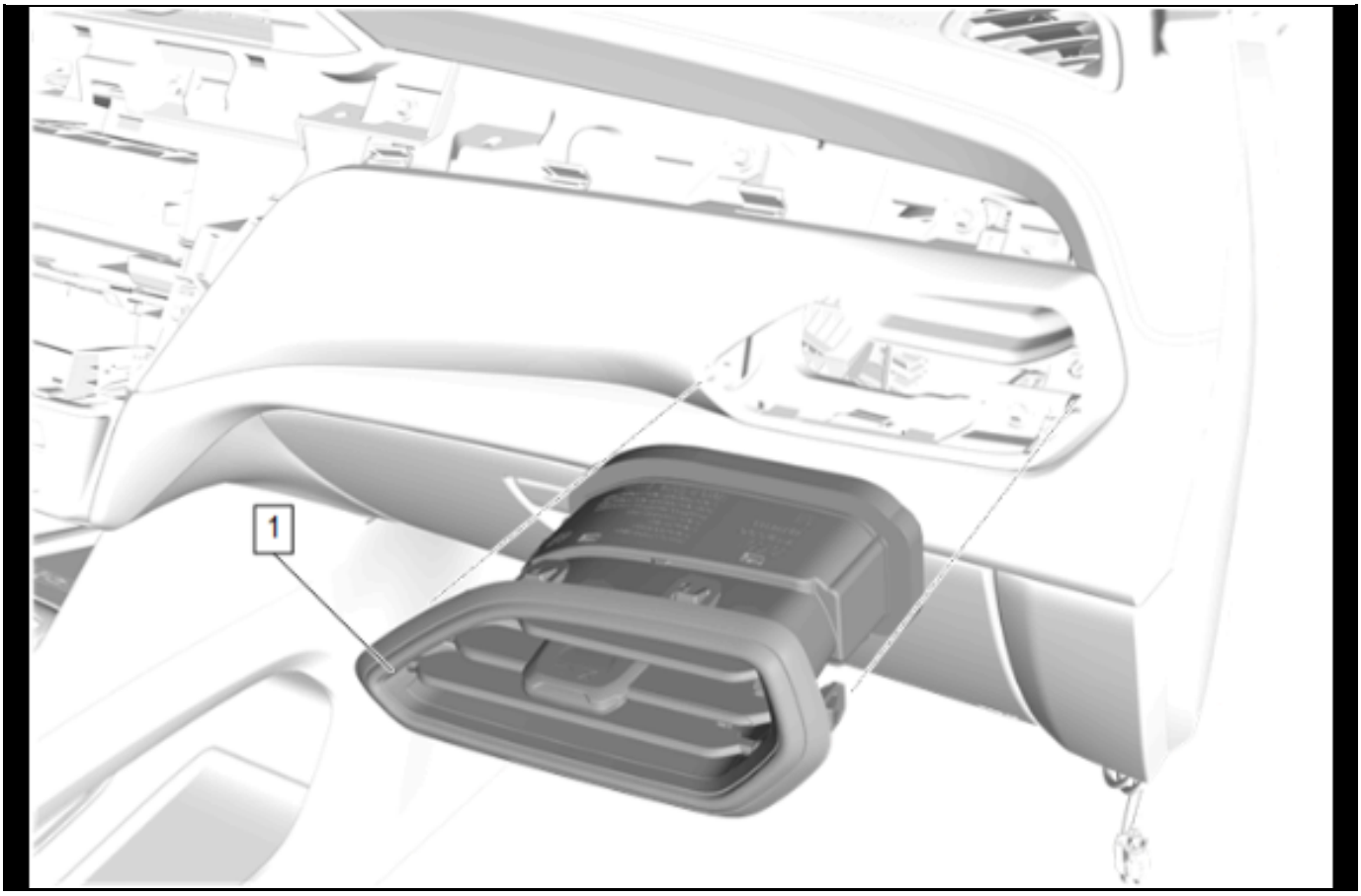

5663923

1. Instrument Panel Outer Air Outlet - Right Side (1)
   » Install

Floor Front Air Outlet Duct Replacement - Right Side

Removal Procedure

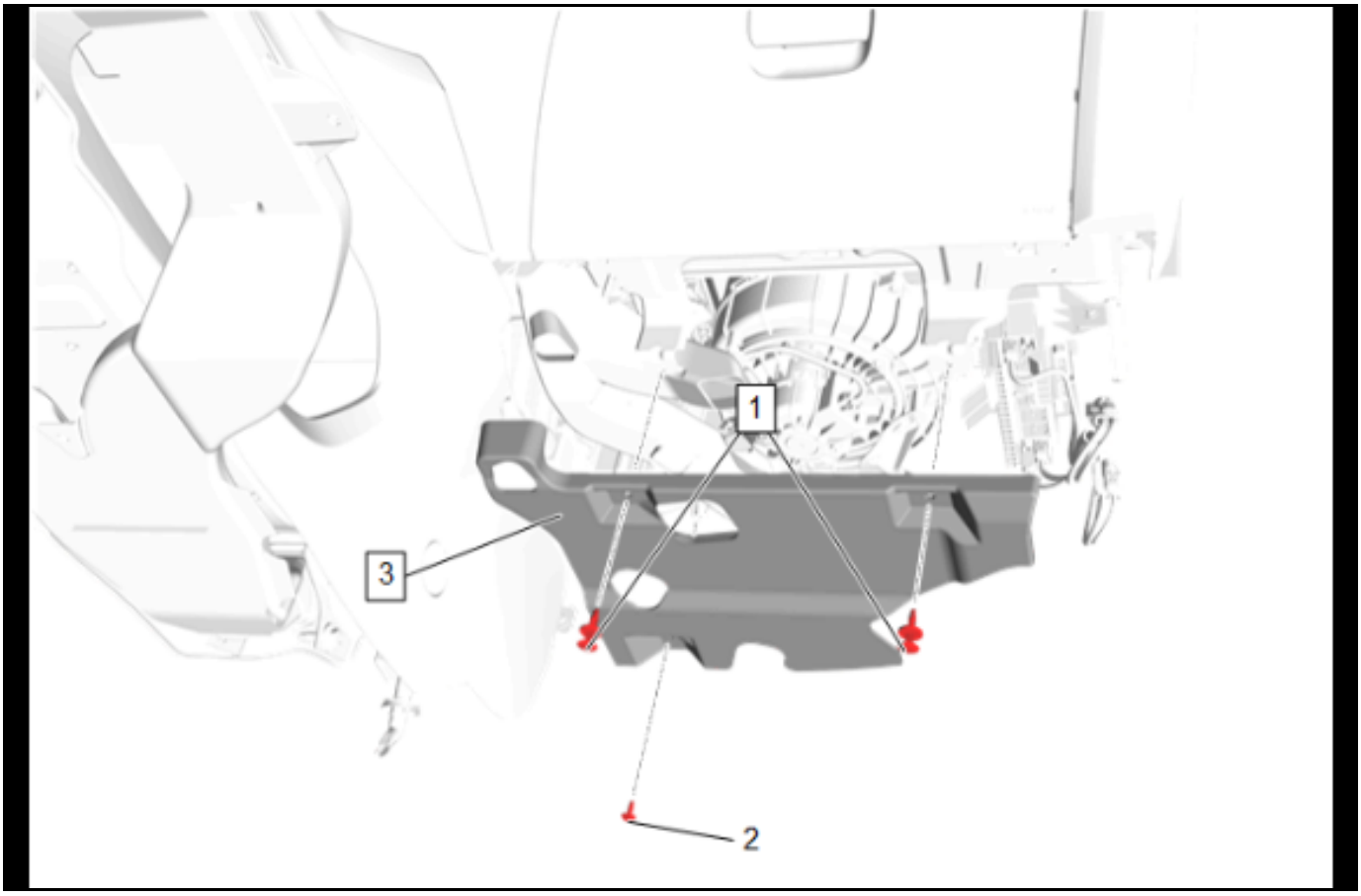

5661045

1. Instrument Panel Lower Insulator Retainer (1) » Remove [2x]
2. Instrument Panel Insulator Bolt (1) » Remove
3. Instrument Panel Lower Trim Panel Insulator (1) » Remove

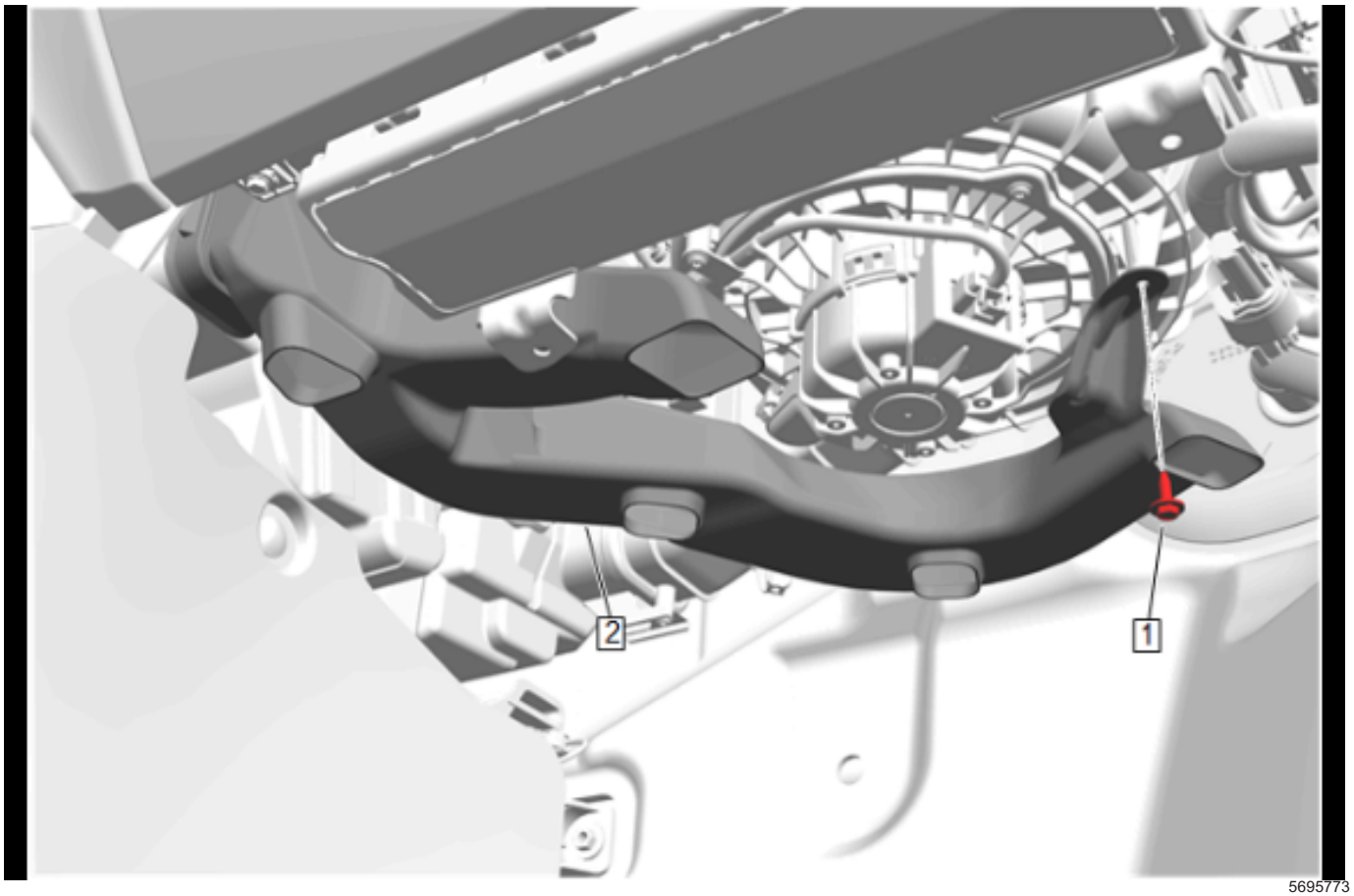

5695773

4. Floor Front Air Outlet Duct Bolt (1) » Remove
5. Floor Front Air Outlet Duct - Right Side (2) » Remove

Installation Procedure

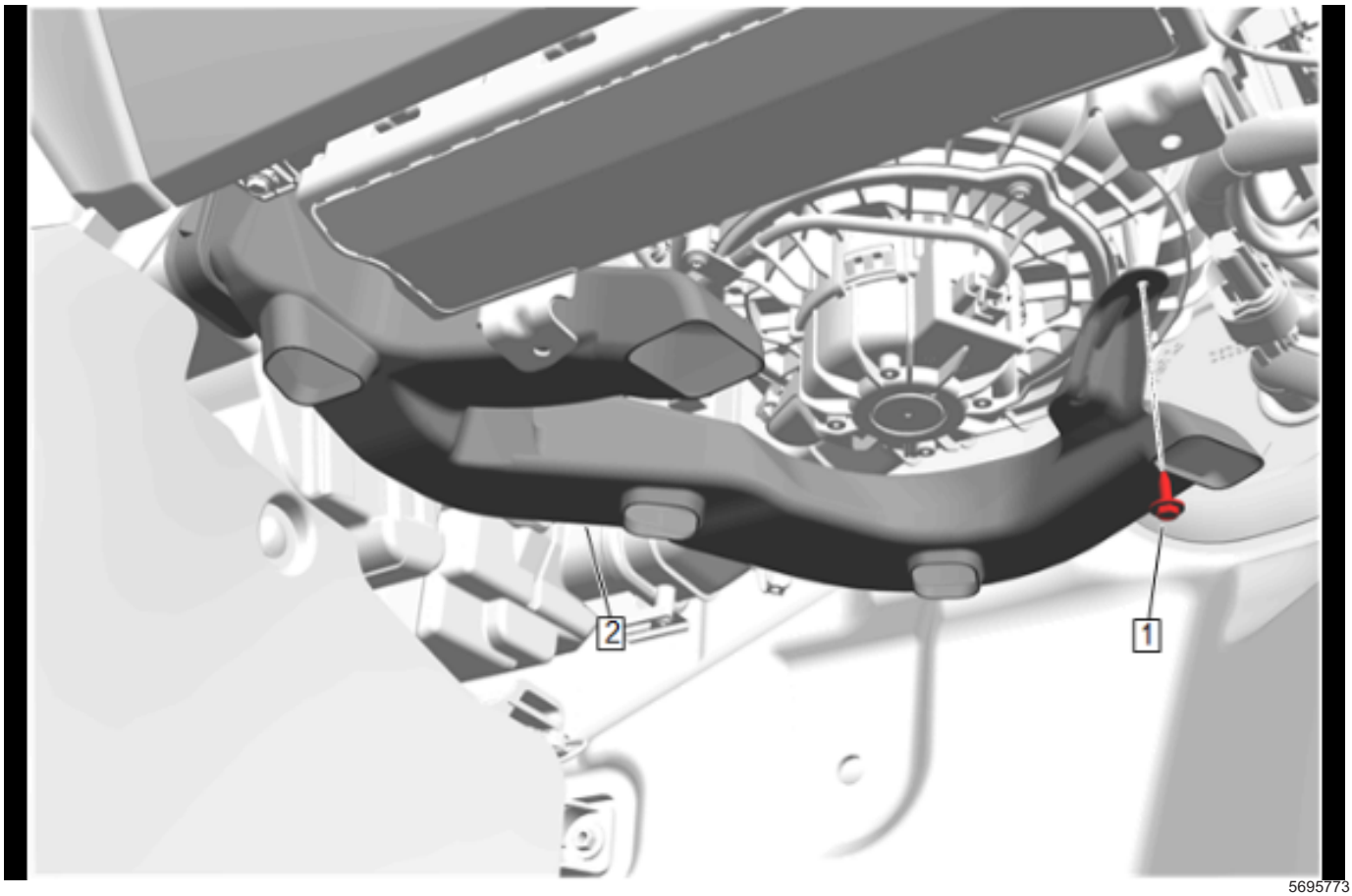

5695773

1. Floor Front Air Outlet Duct - Right Side (2) » Install
2. Floor Front Air Outlet Duct Bolt (1) » Install and tighten — *Fastener Specifications on page 5-3*

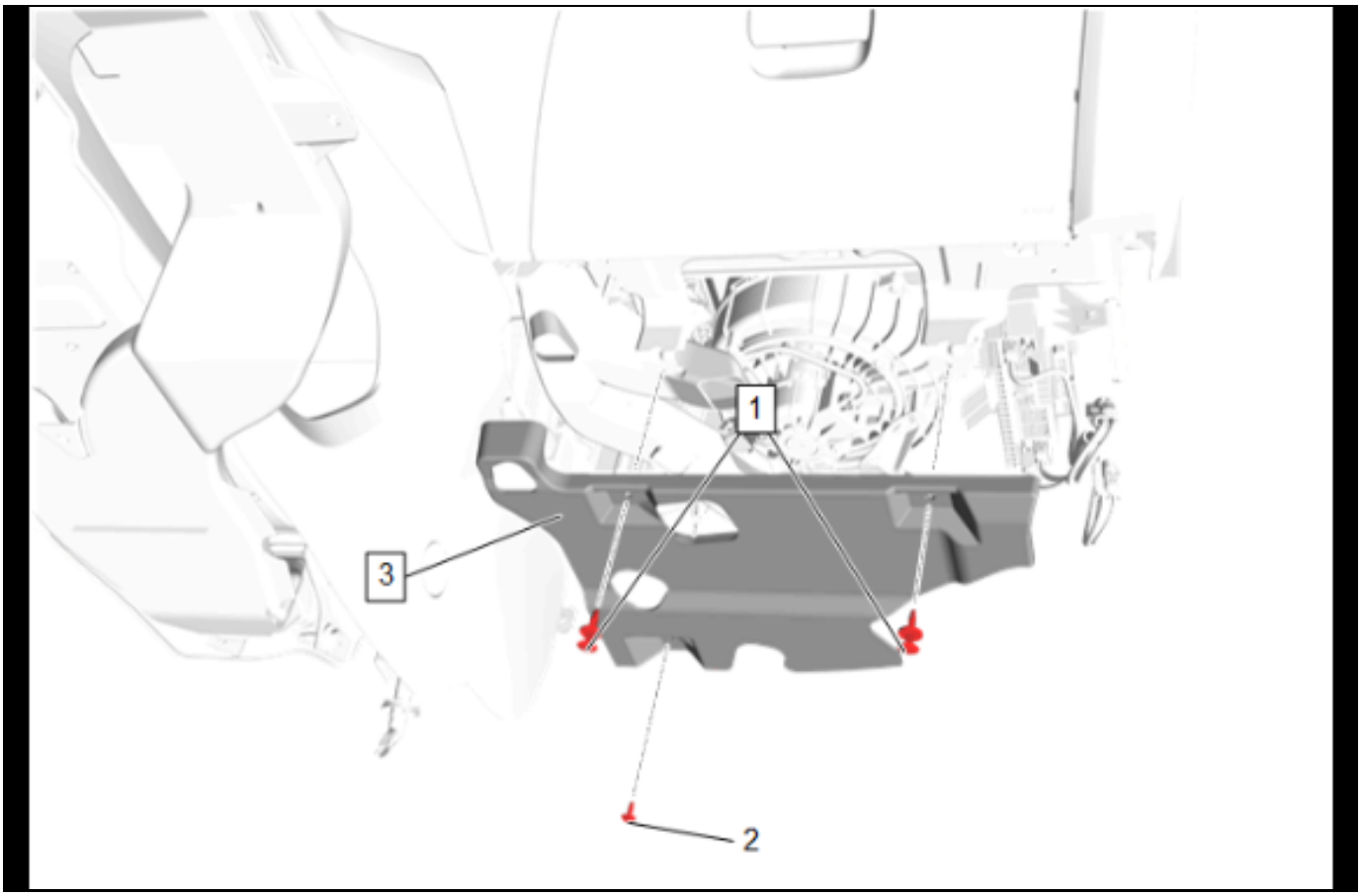

5661045

3. Instrument Panel Lower Trim Panel Insulator (1) » Install
4. Instrument Panel Lower Insulator Retainer (1) » Install [2x]
5. Instrument Panel Insulator Bolt (2) » Install and tighten

Floor Front Air Outlet Duct Replacement - Left Side

Removal Procedure

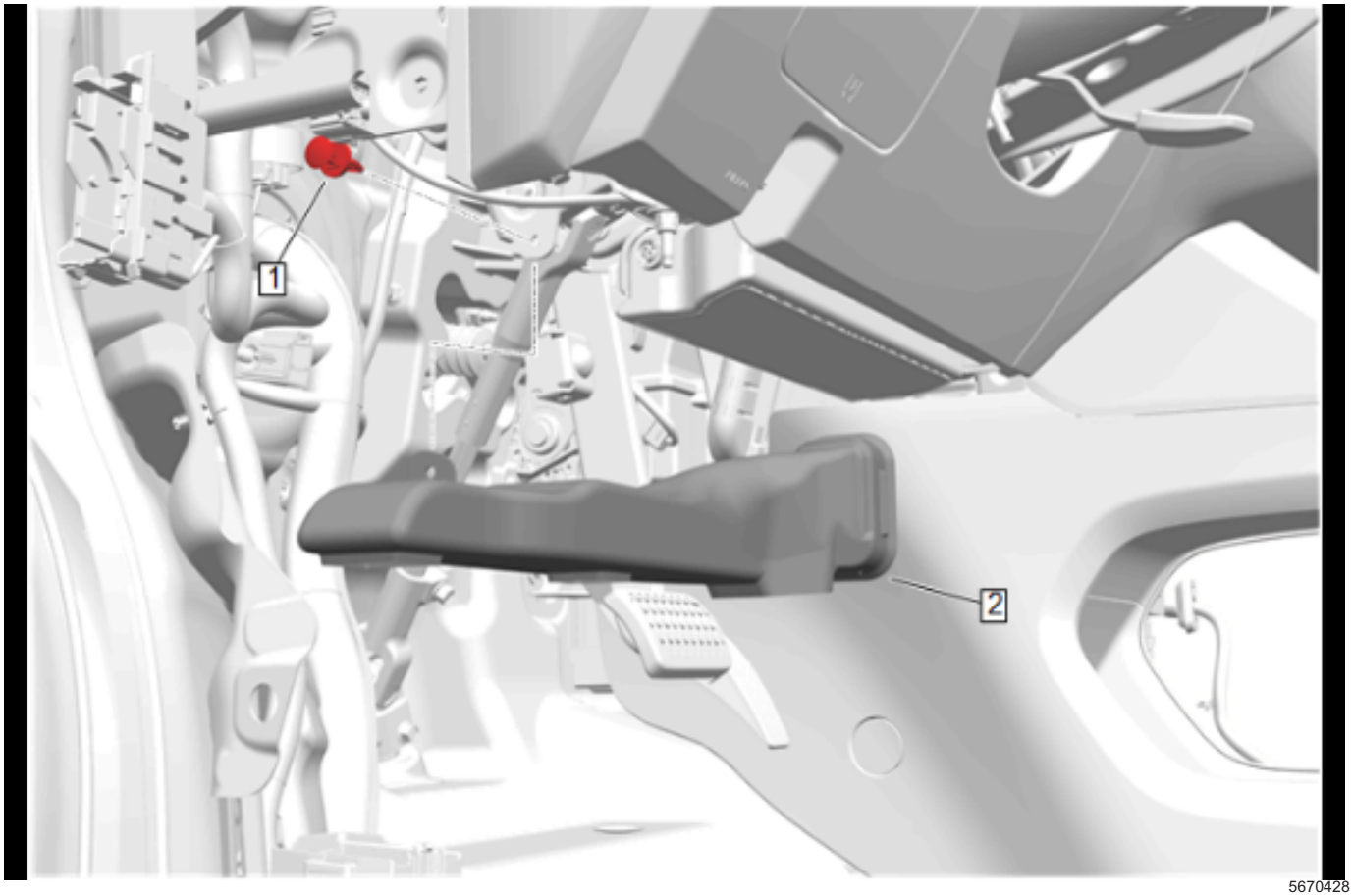

5670428

1. Floor Front Air Outlet Duct Retainer (1) » Remove
2. Floor Front Air Outlet Duct - Left Side (2) » Remove

Installation Procedure

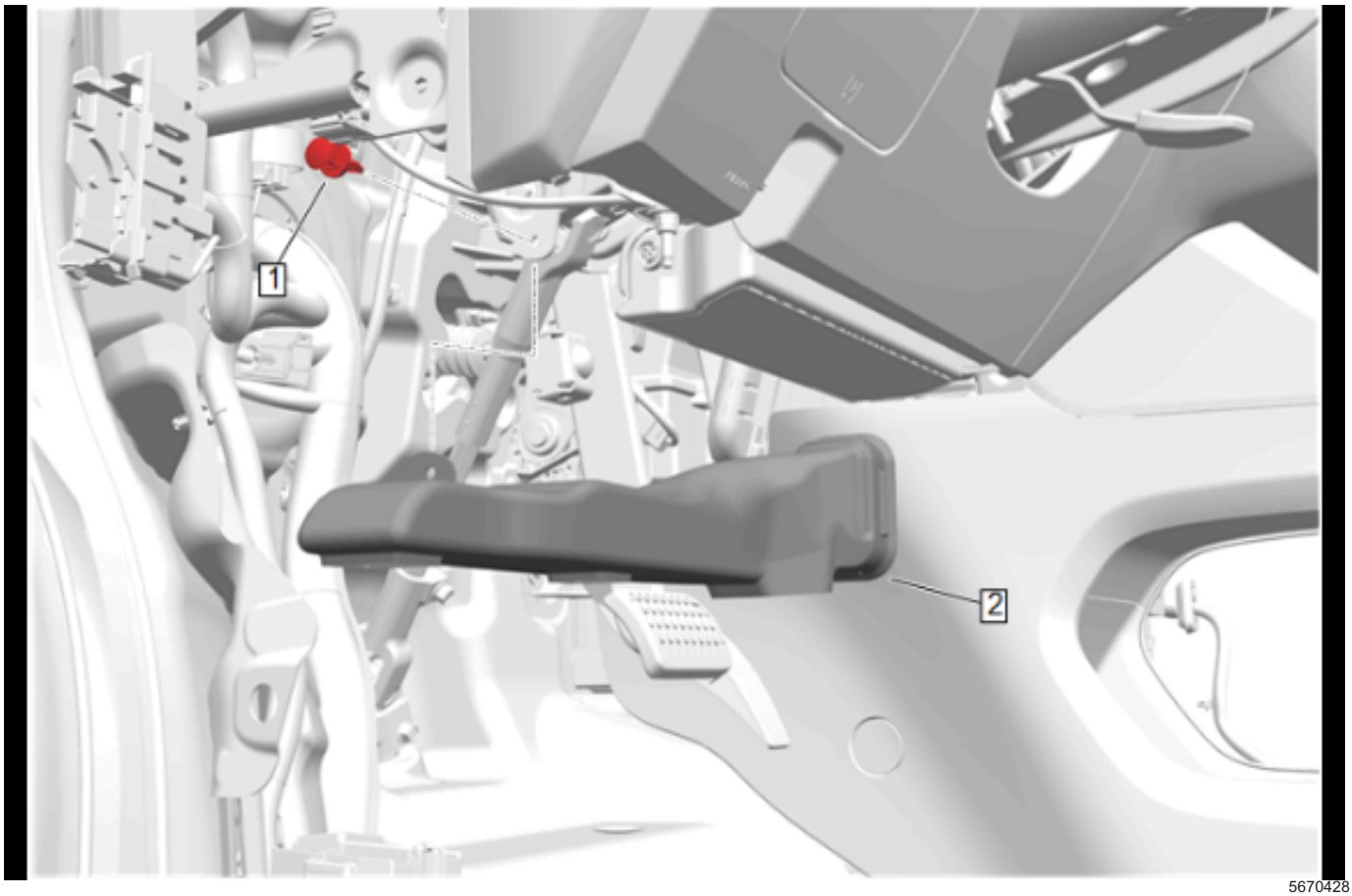

5670428

1. Floor Front Air Outlet Duct - Left Side (2) » Install
2. Floor Front Air Outlet Duct Retainer (1) » Install

Floor Front Air Outlet Center Duct Replacement

Removal Procedure

1. Reposition the seats as necessary to access the fasteners.

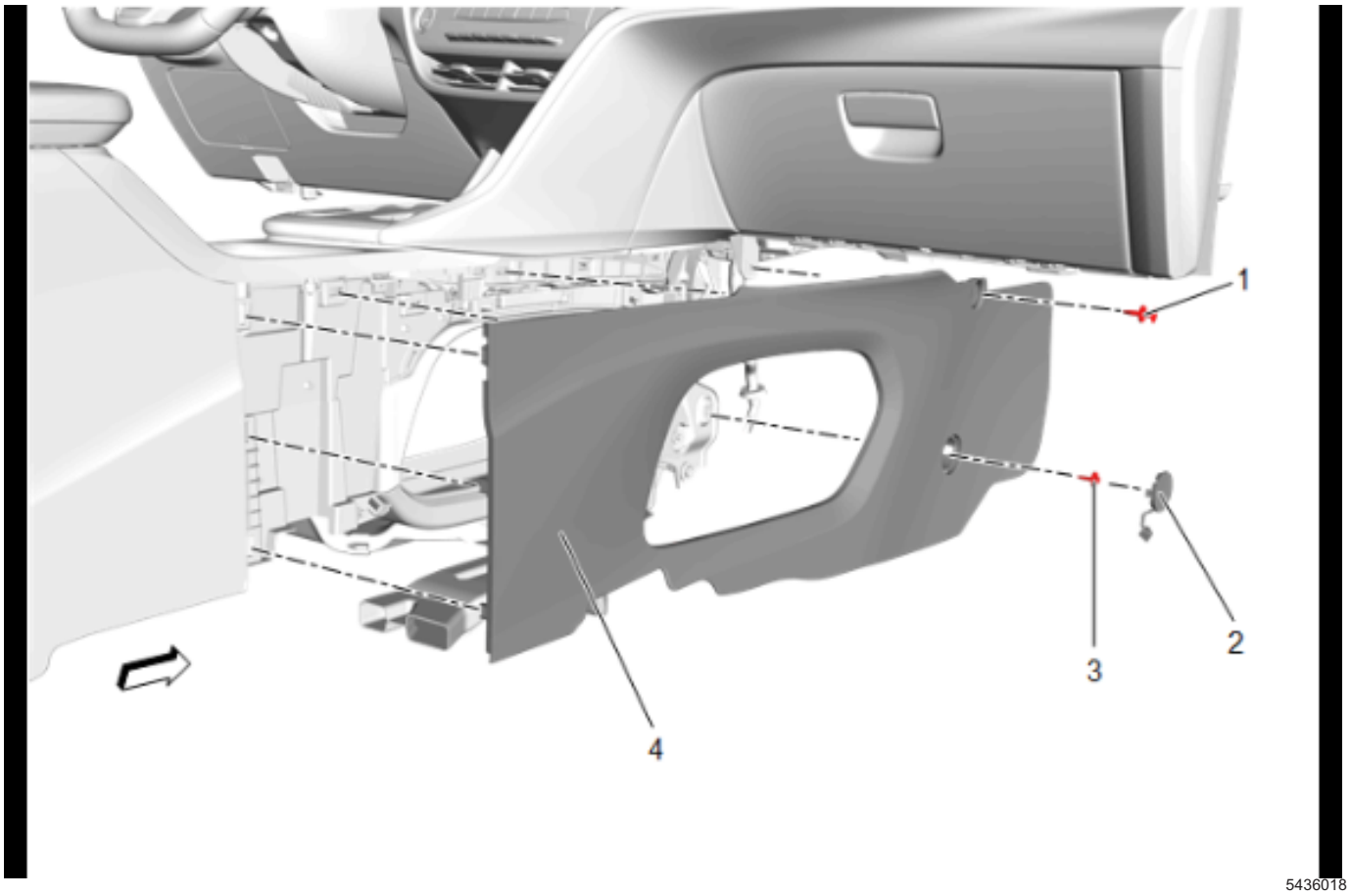

2. Front Floor Console Extension Panel Retainer (1) » Remove

   Note: Use a flat bladed plastic tool to remove.

3. Front Floor Console Extension Panel Bolt Access Hole Cover (2) » Remove
4. Front Floor Console Extension Panel Bolt (3) » Remove

   Note: Use a flat bladed plastic tool to remove.

5. Front Floor Console Extension Panel - Right Side (4) » Remove

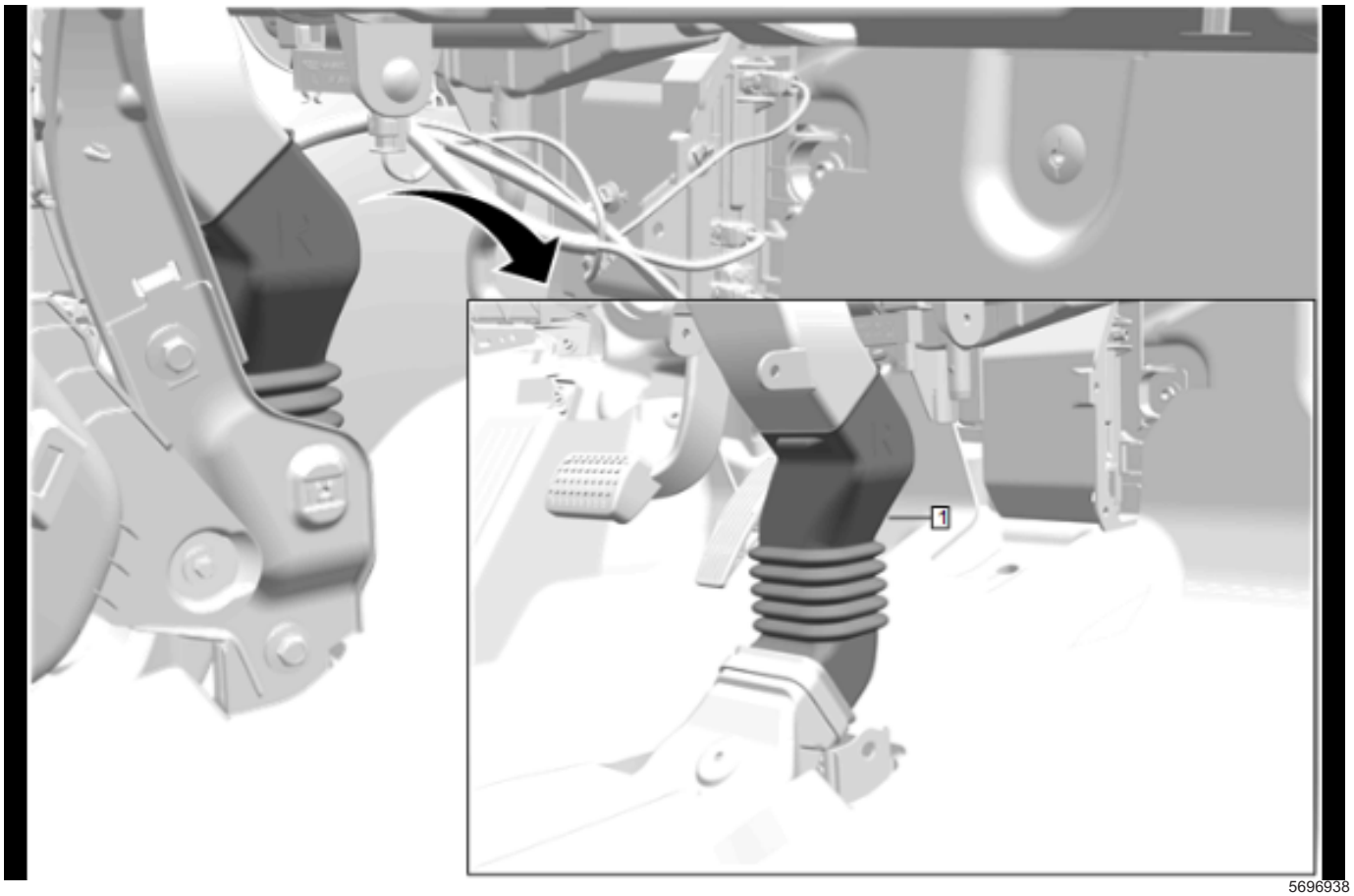

5696938

6. Floor Rear Air Outlet Duct Adapter (1) » Remove

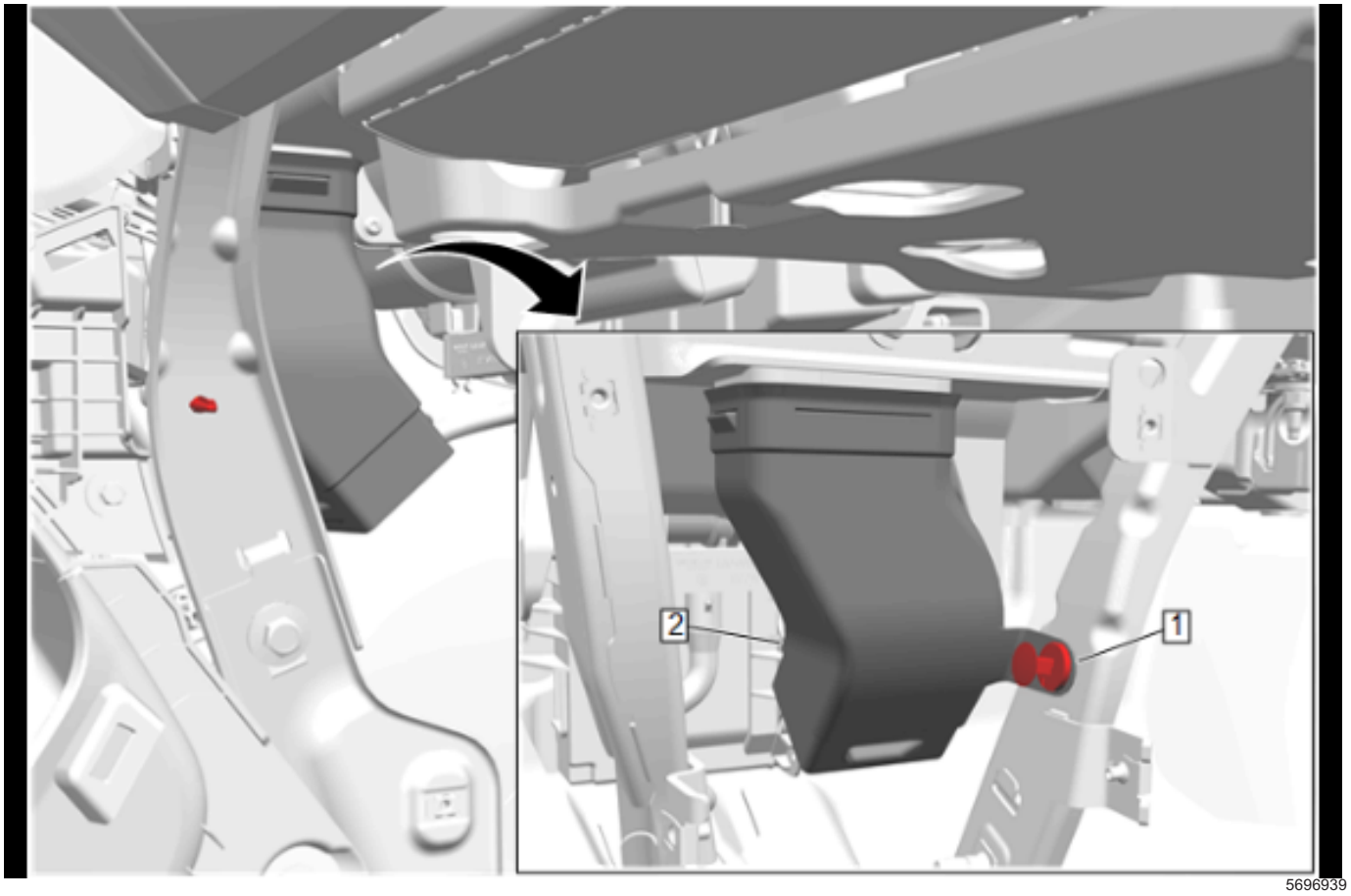

5696939

7. Floor Front Air Outlet Center Duct Push Pin (1) » Remove
8. Floor Front Air Outlet Center Duct (2) » Remove

Installation Procedure

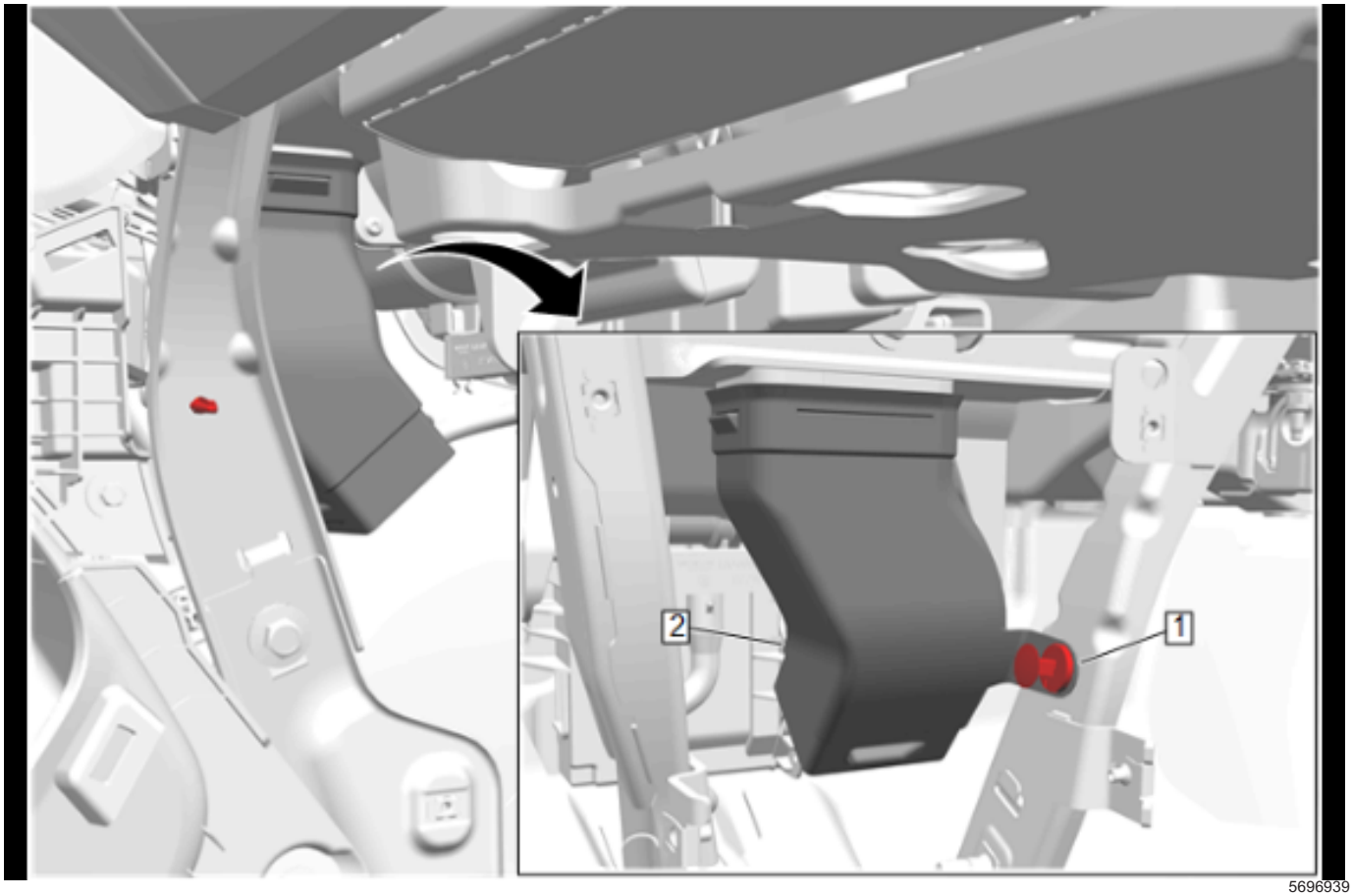

5696939

1. Floor Front Air Outlet Center Duct (2) » Install
2. Floor Front Air Outlet Center Duct Push Pin (1) » Install

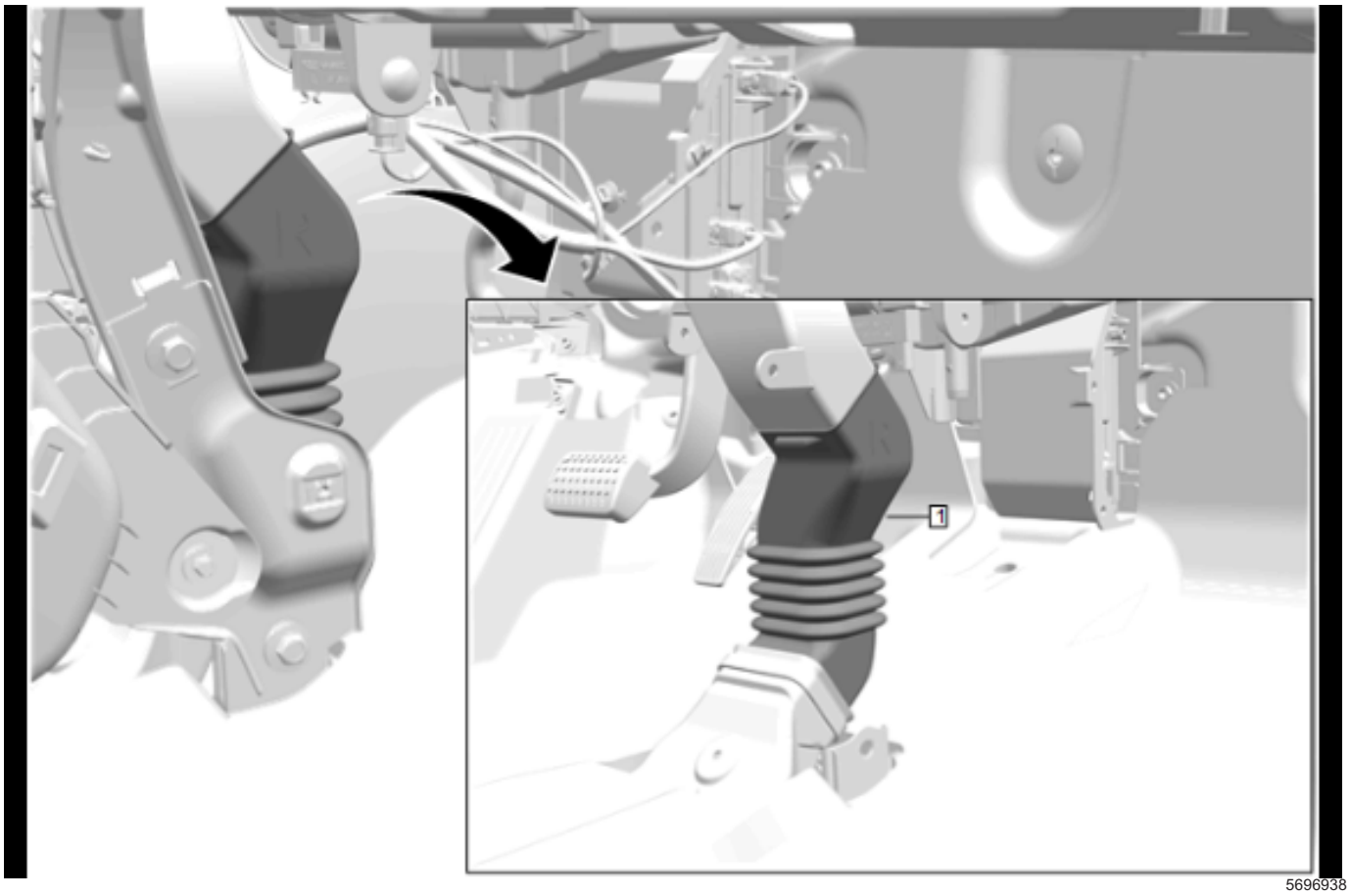

5696938

3. Floor Rear Air Outlet Duct Adapter (1) » Install

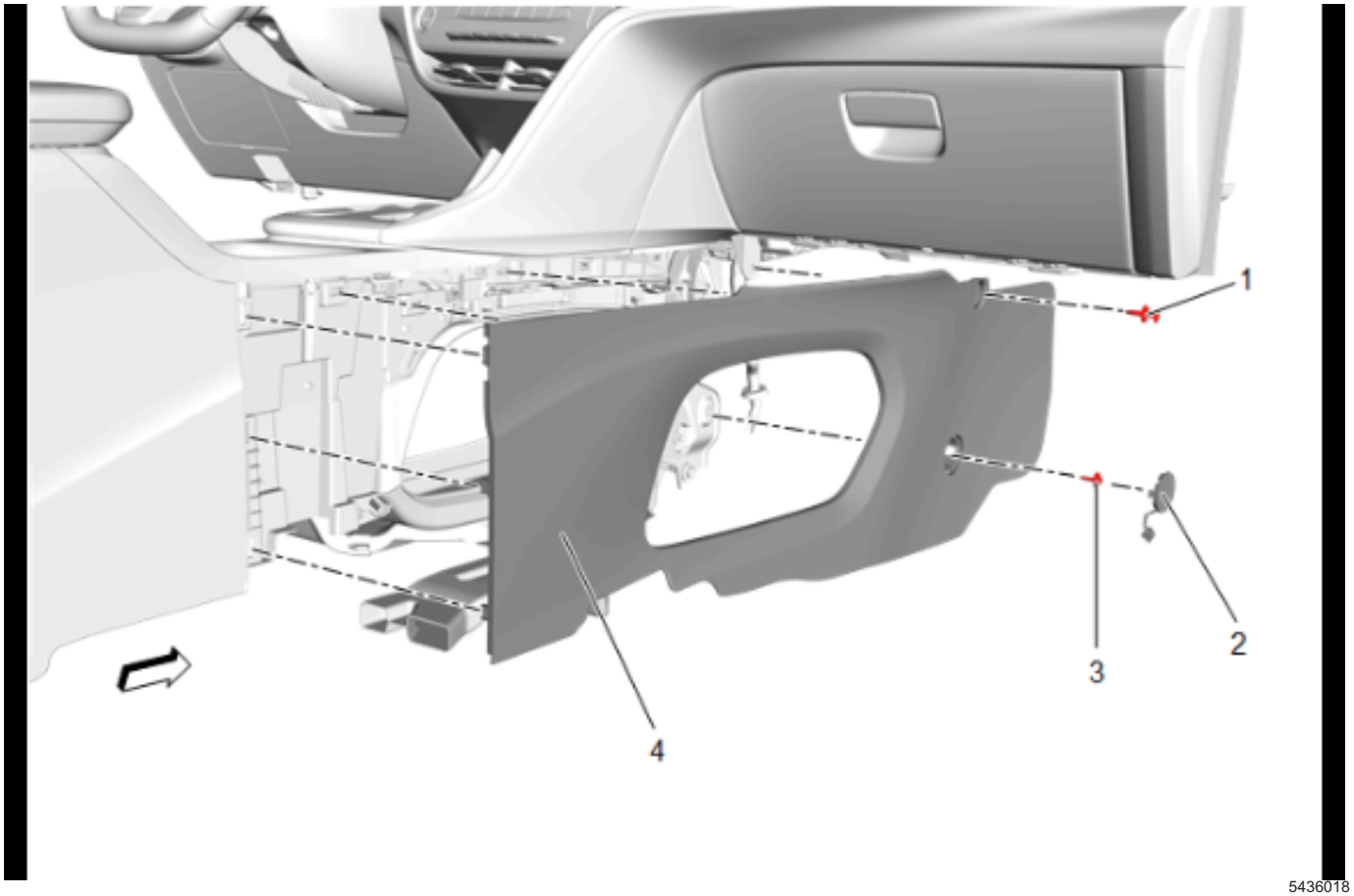

5436018

4. Front Floor Console Extension Panel - Right Side (4) » Install
5. Front Floor Console Extension Panel Bolt (3) » Install and tighten
6. Front Floor Console Extension Panel Bolt Access Hole Cover (2) » Install
7. Front Floor Console Extension Panel Retainer (1) » Install
8. Return the seat to its original position.

Floor Rear Air Outlet Duct Adapter Replacement

Removal Procedure

1. Reposition the seats as necessary to access the fasteners.

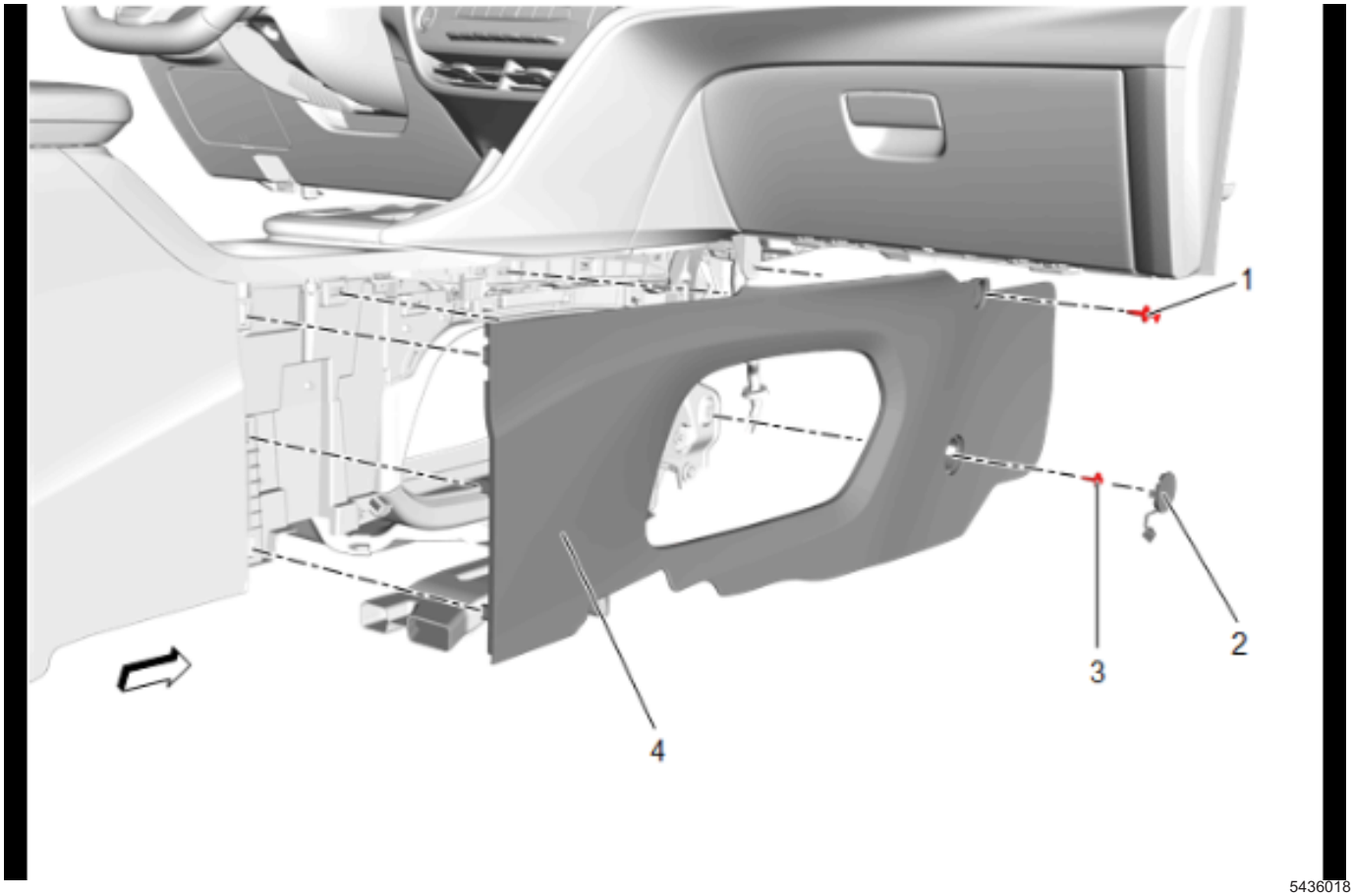

5436018

2. Front Floor Console Extension Panel Retainer (1) » Remove

   Note: Use a flat bladed plastic tool to remove.

3. Front Floor Console Extension Panel Bolt Access Hole Cover (2) » Remove
4. Front Floor Console Extension Panel Bolt (3) » Remove

   Note: Use a flat bladed plastic tool to remove.

5. Front Floor Console Extension Panel - Right Side (4) » Remove

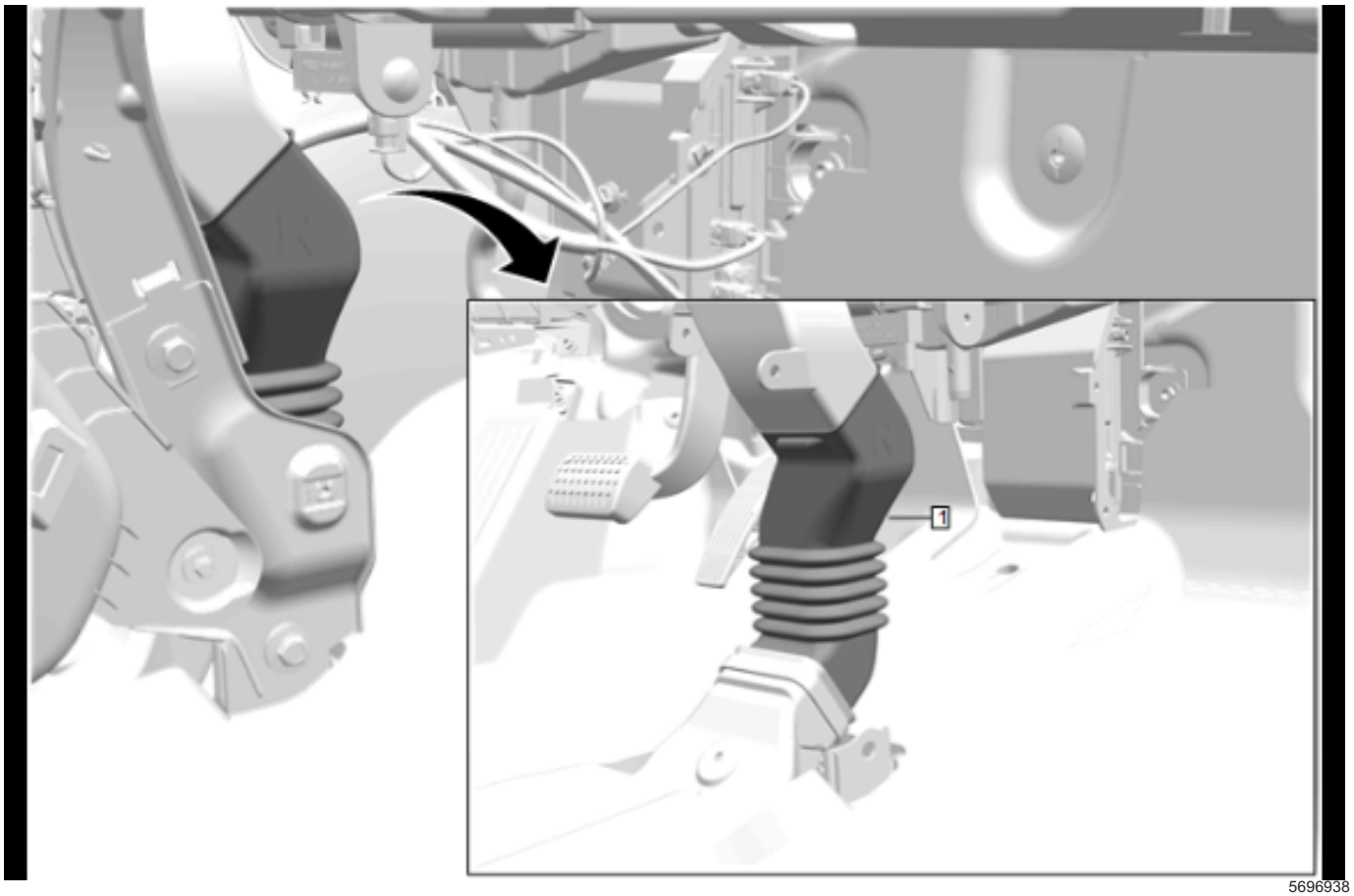

5696938

6. Floor Rear Air Outlet Duct Adapter (1) » Remove

Installation Procedure

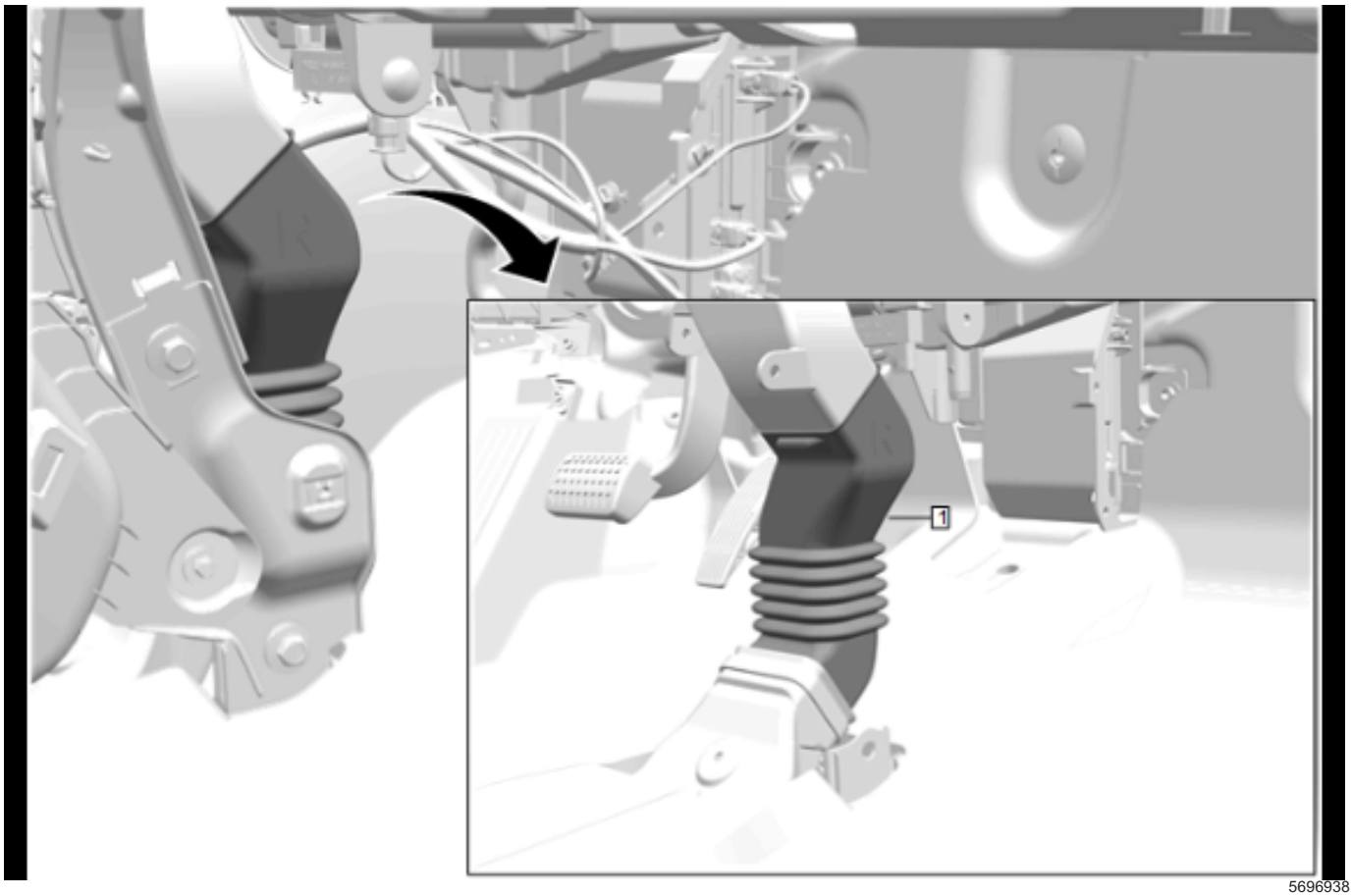

5696938

1. Floor Rear Air Outlet Duct Adapter (1) » Install

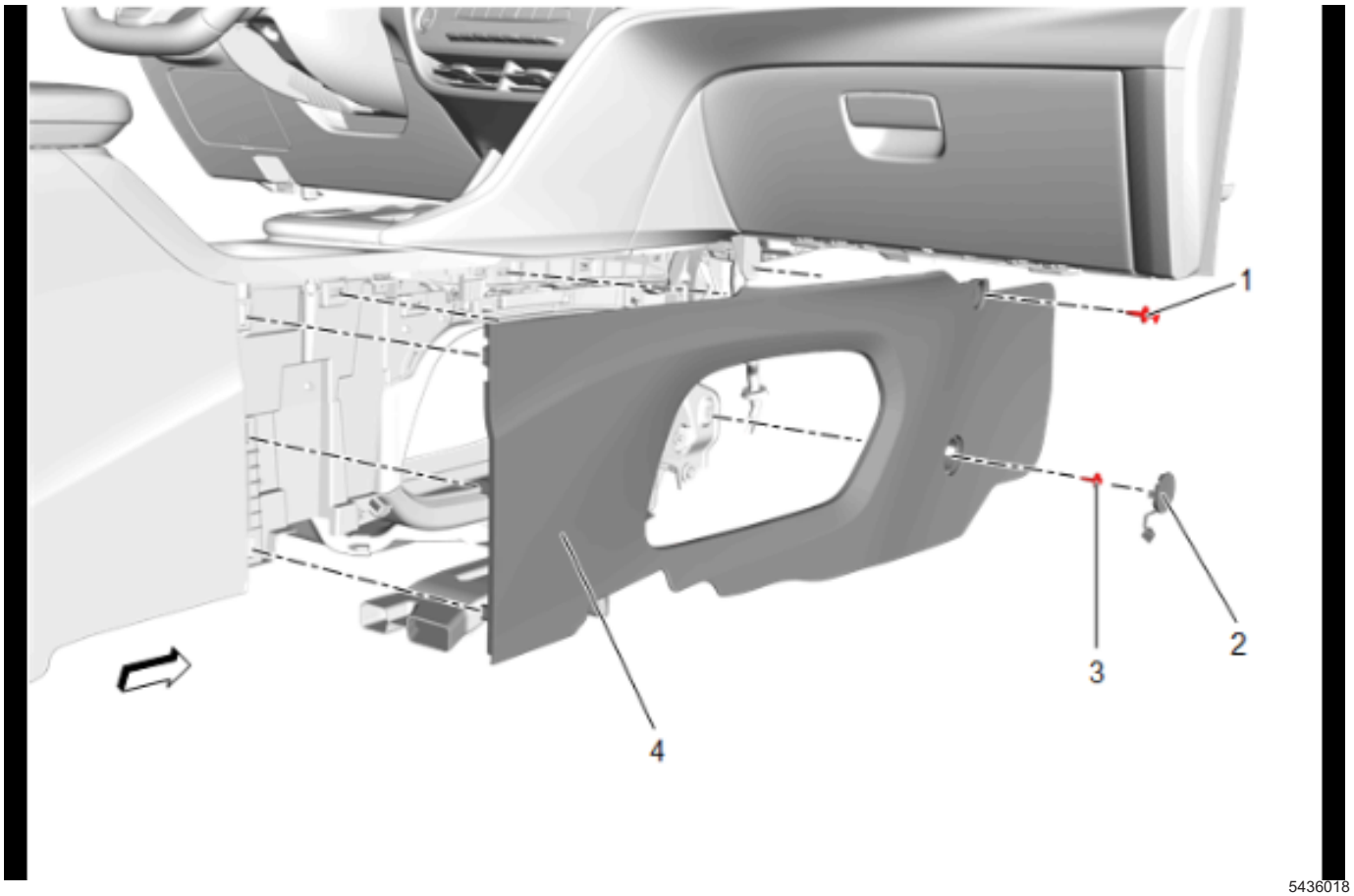

5436018

2. Front Floor Console Extension Panel - Right Side (4) » Install
3. Front Floor Console Extension Panel Bolt (3) » Install and tighten
4. Front Floor Console Extension Panel Bolt Access Hole Cover (2) » Install
5. Front Floor Console Extension Panel Retainer (1) » Install
6. Return the seat to its original position.

Instrument Panel Outer Air Outlet Duct Replacement

Removal Procedure

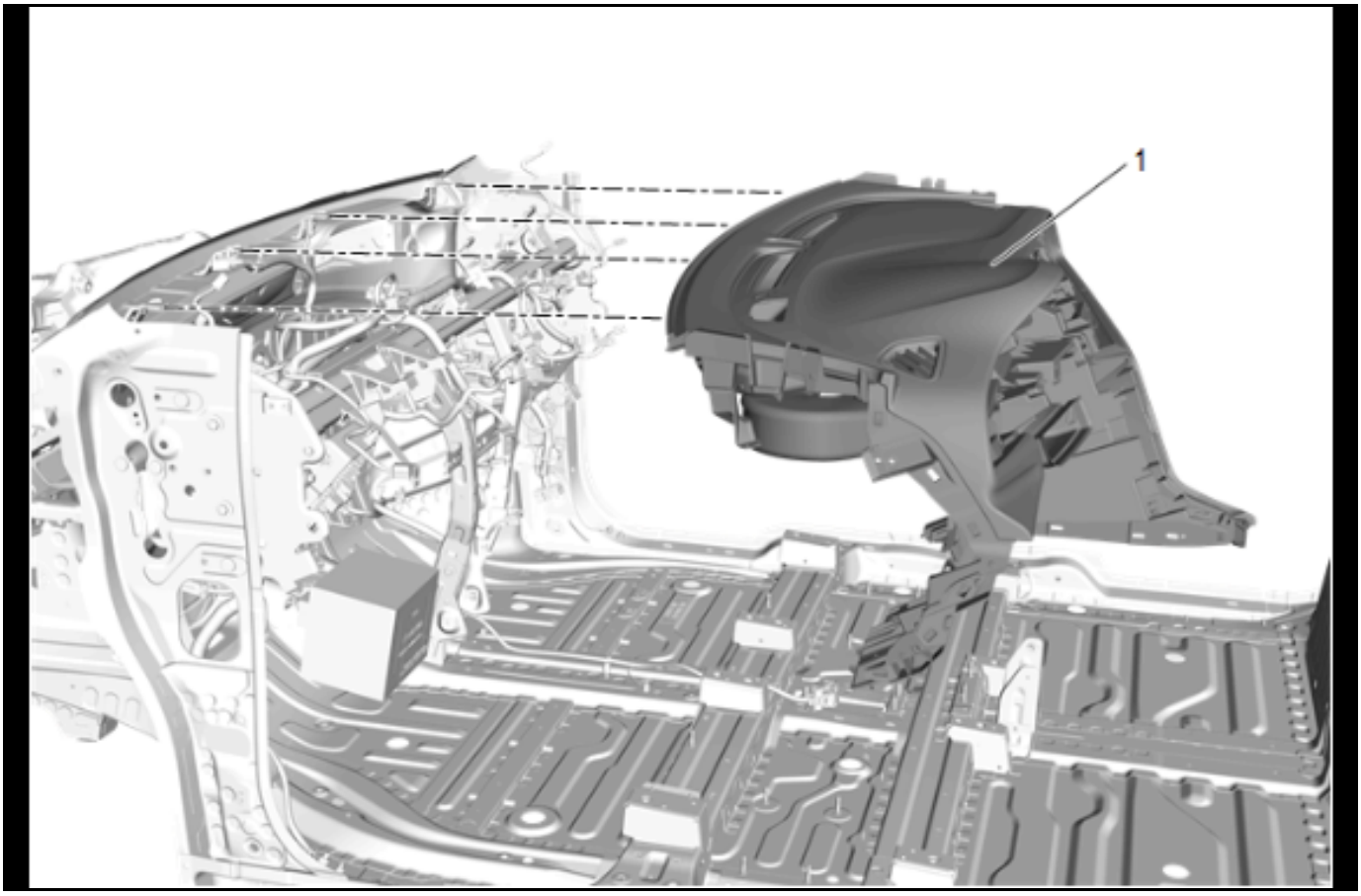

5487804

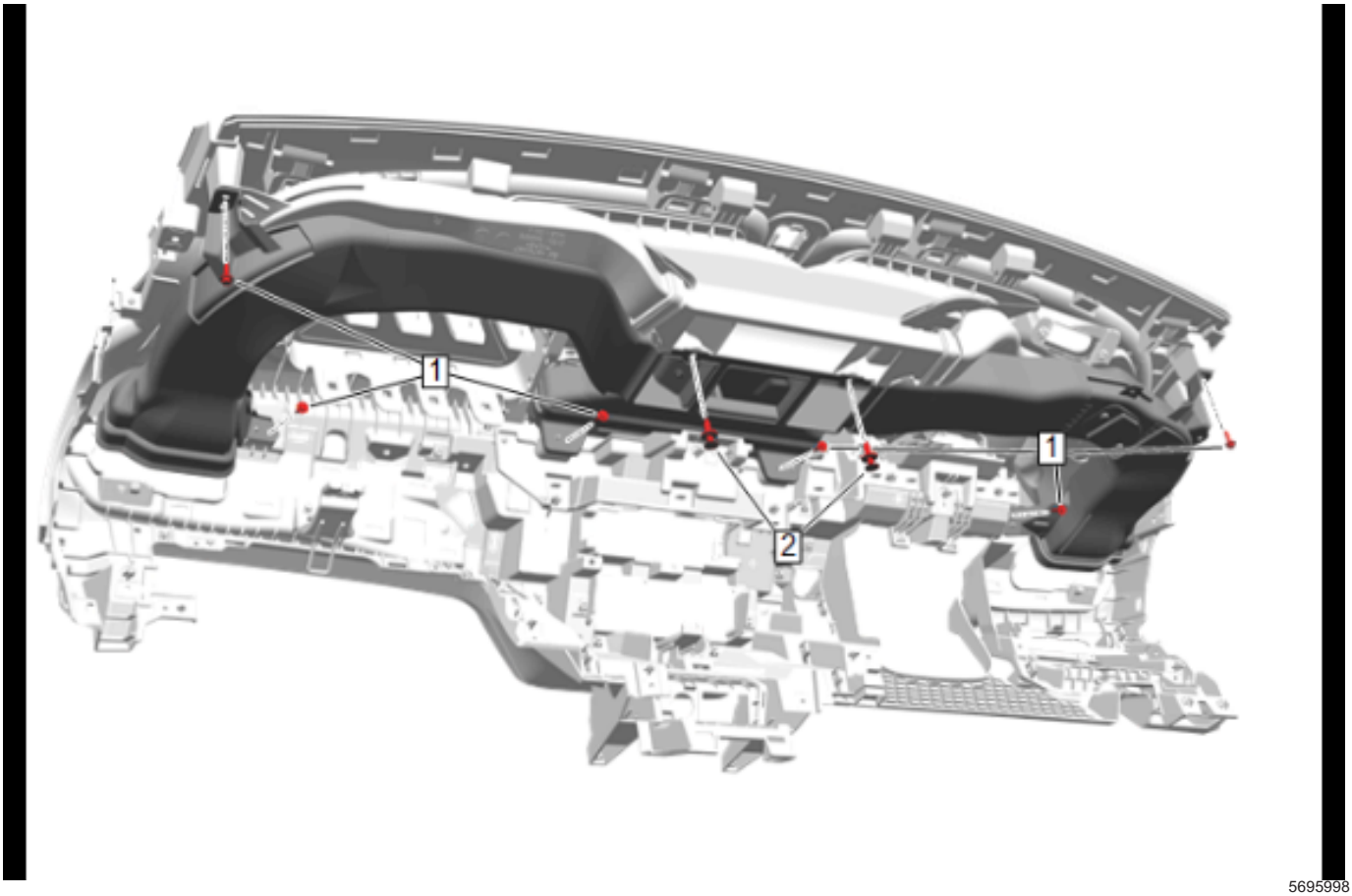

5695998

2. Instrument Panel Outer Air Outlet Duct Bolt (1) » Remove [6x]
3. Instrument Panel Outer Air Outlet Duct Retainer (2) » Remove [2x]

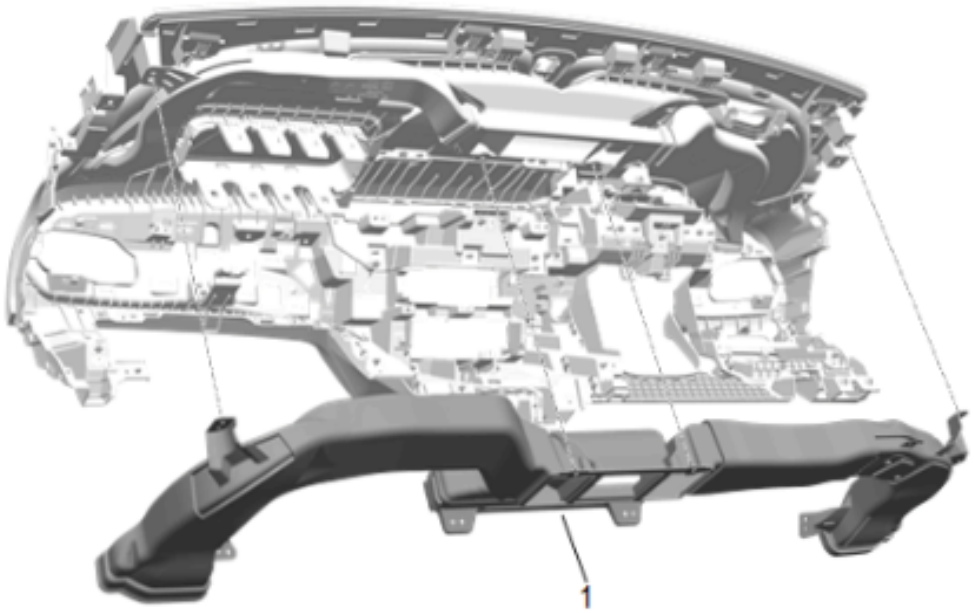

5695999

4. Instrument Panel Outer Air Outlet Duct (1) »
   Remove

Installation Procedure

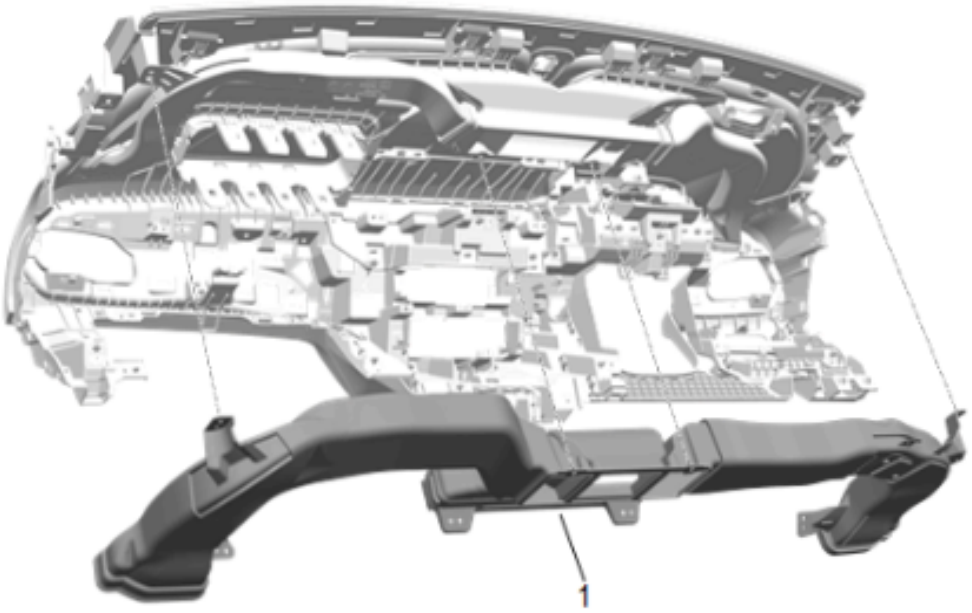

5695999

1. Instrument Panel Outer Air Outlet Duct (1) » Install

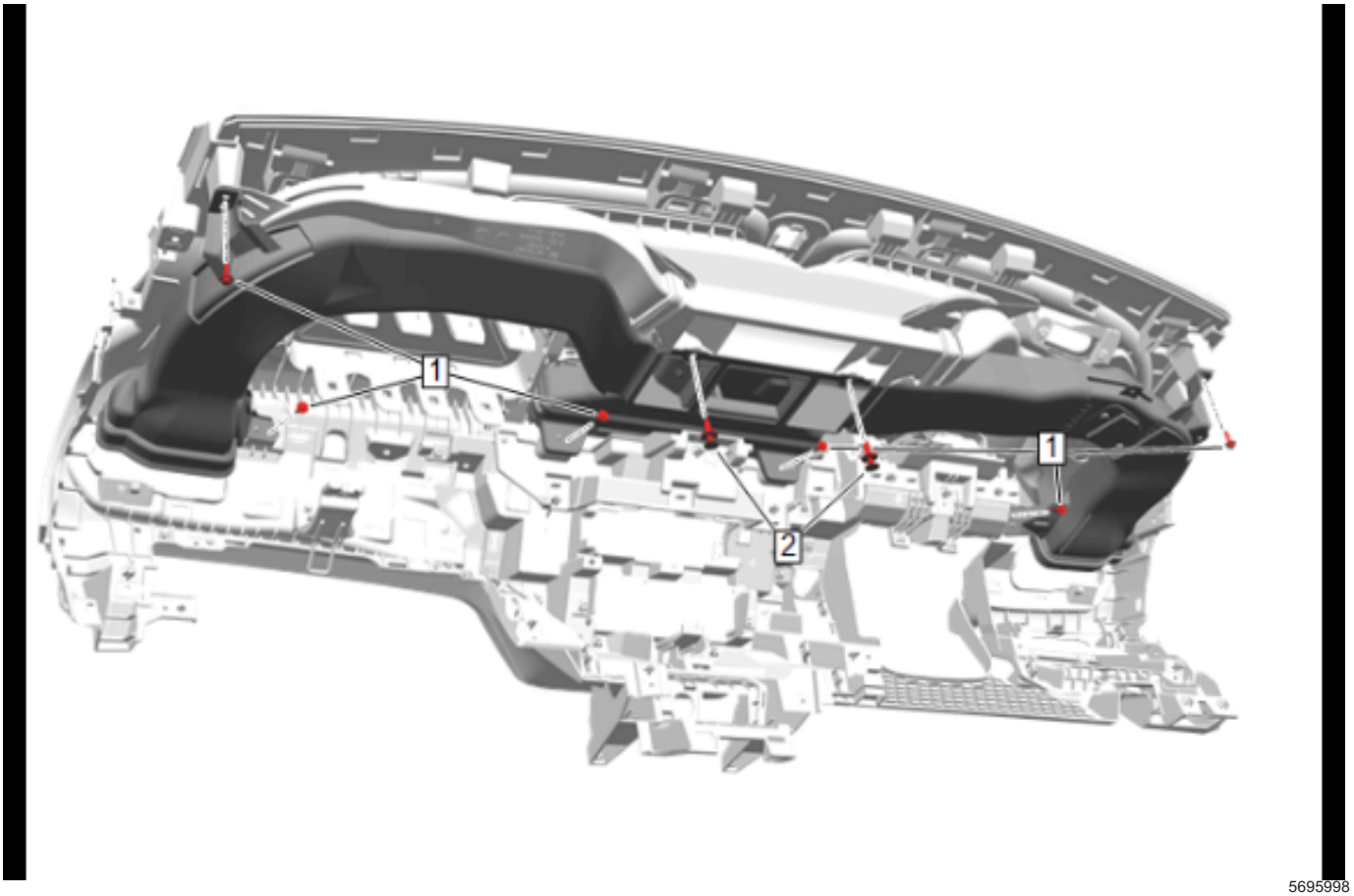

5695998

2. Instrument Panel Outer Air Outlet Duct Bolt (1) » Install and tighten — *Fastener Specifications on page 5-3*[6x]
3. Instrument Panel Outer Air Outlet Duct Retainer (2) » Install [2x]

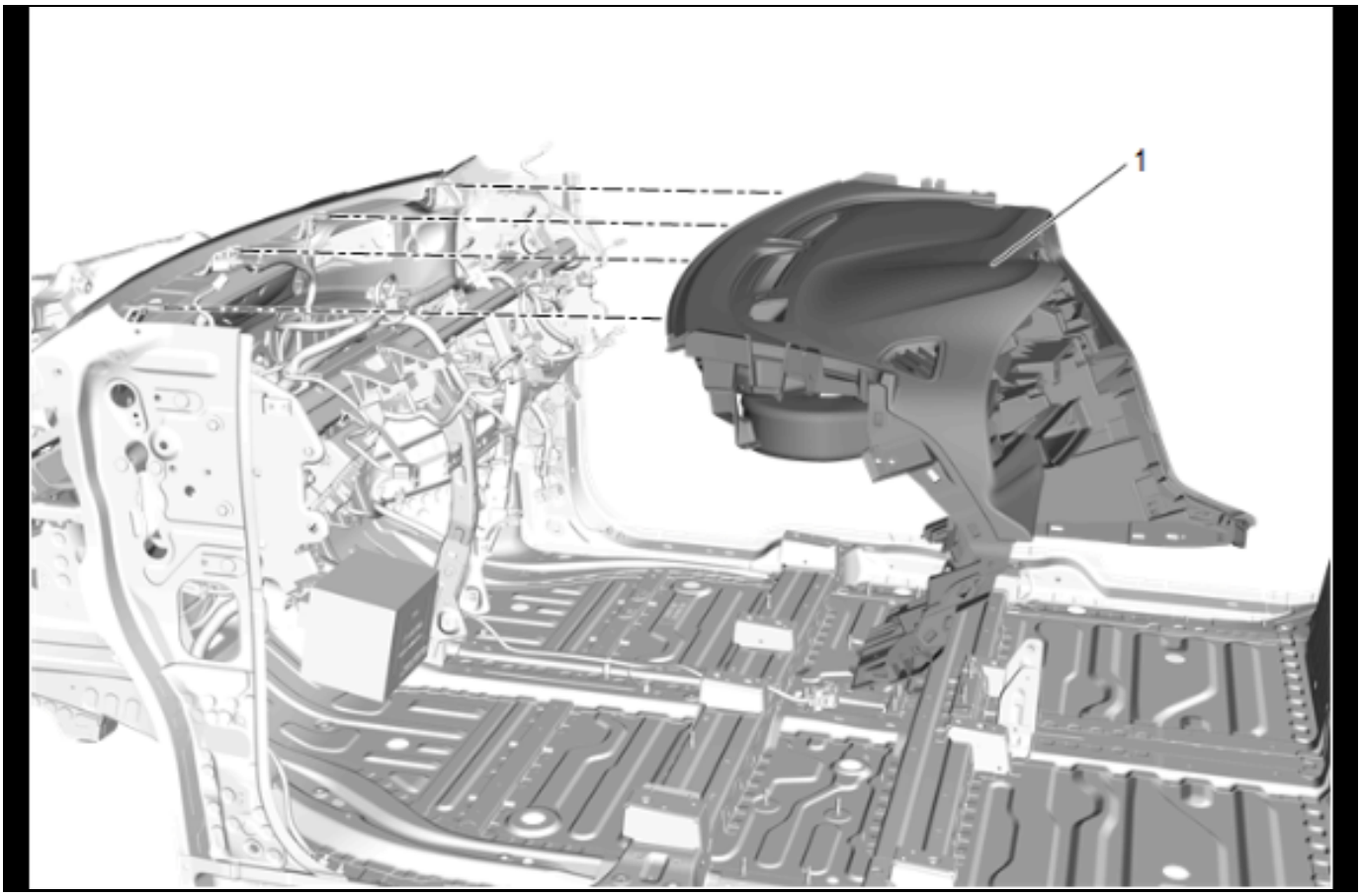

5487804

4. Instrument Panel Removal and Installation

Windshield Defroster Outlet Duct Replacement

Removal Procedure

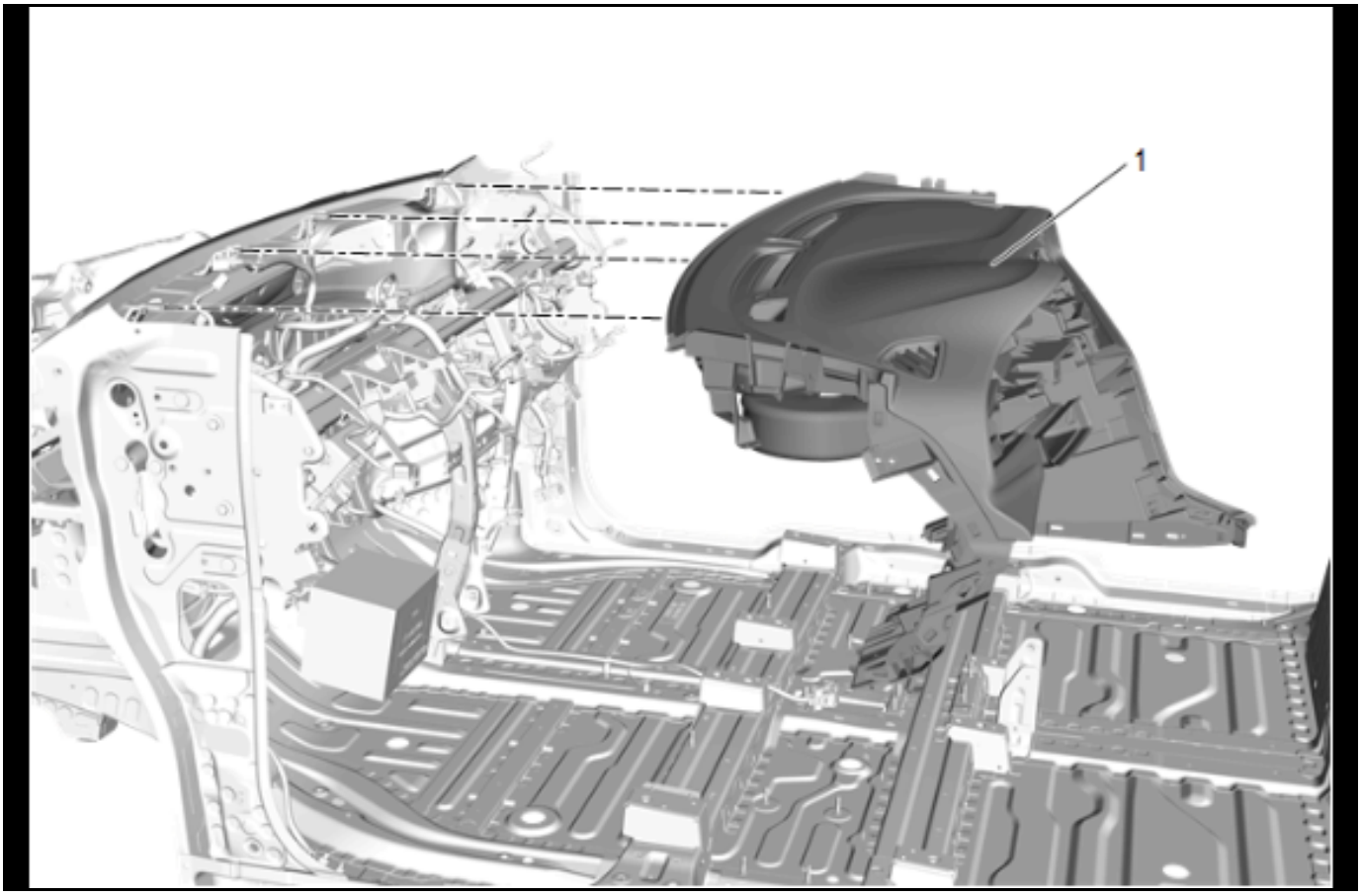

5487804

1. Instrument Panel Removal and Installation

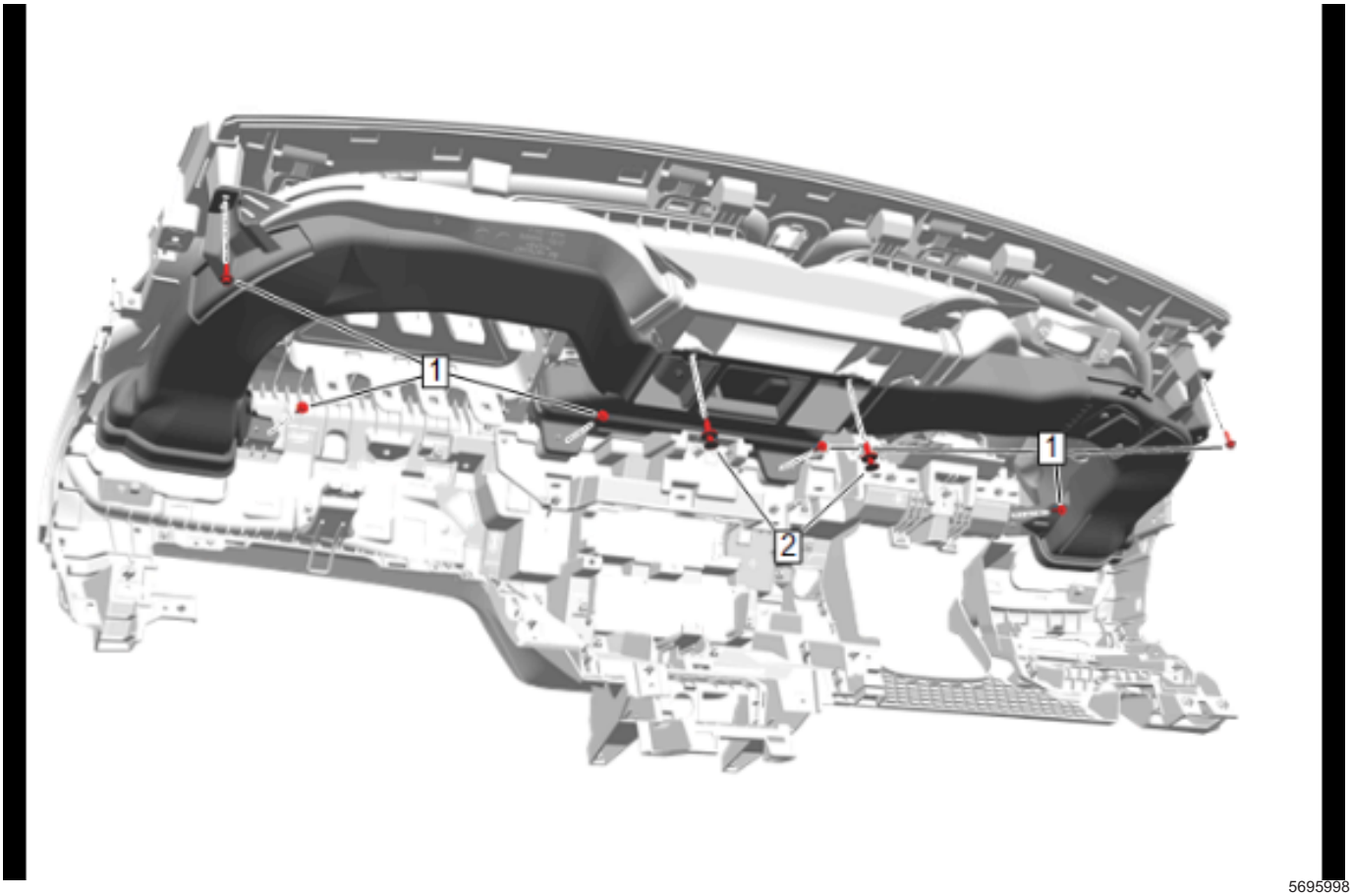

5695998

2. Instrument Panel Outer Air Outlet Duct Bolt (1) » Remove [6x]
3. Instrument Panel Outer Air Outlet Duct Retainer (2) » Remove [2x]

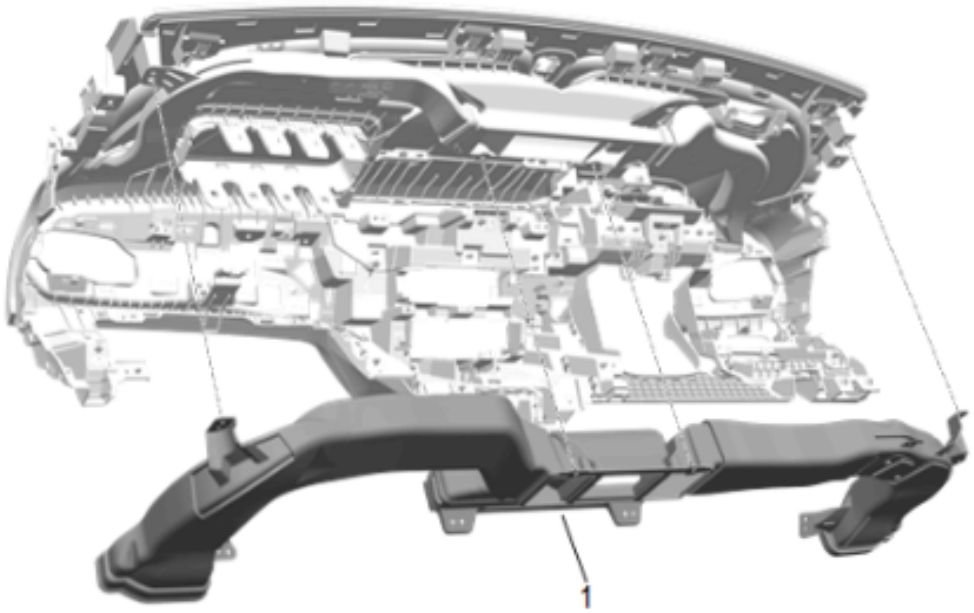

5695999

4. Instrument Panel Outer Air Outlet Duct (1) »
   Remove

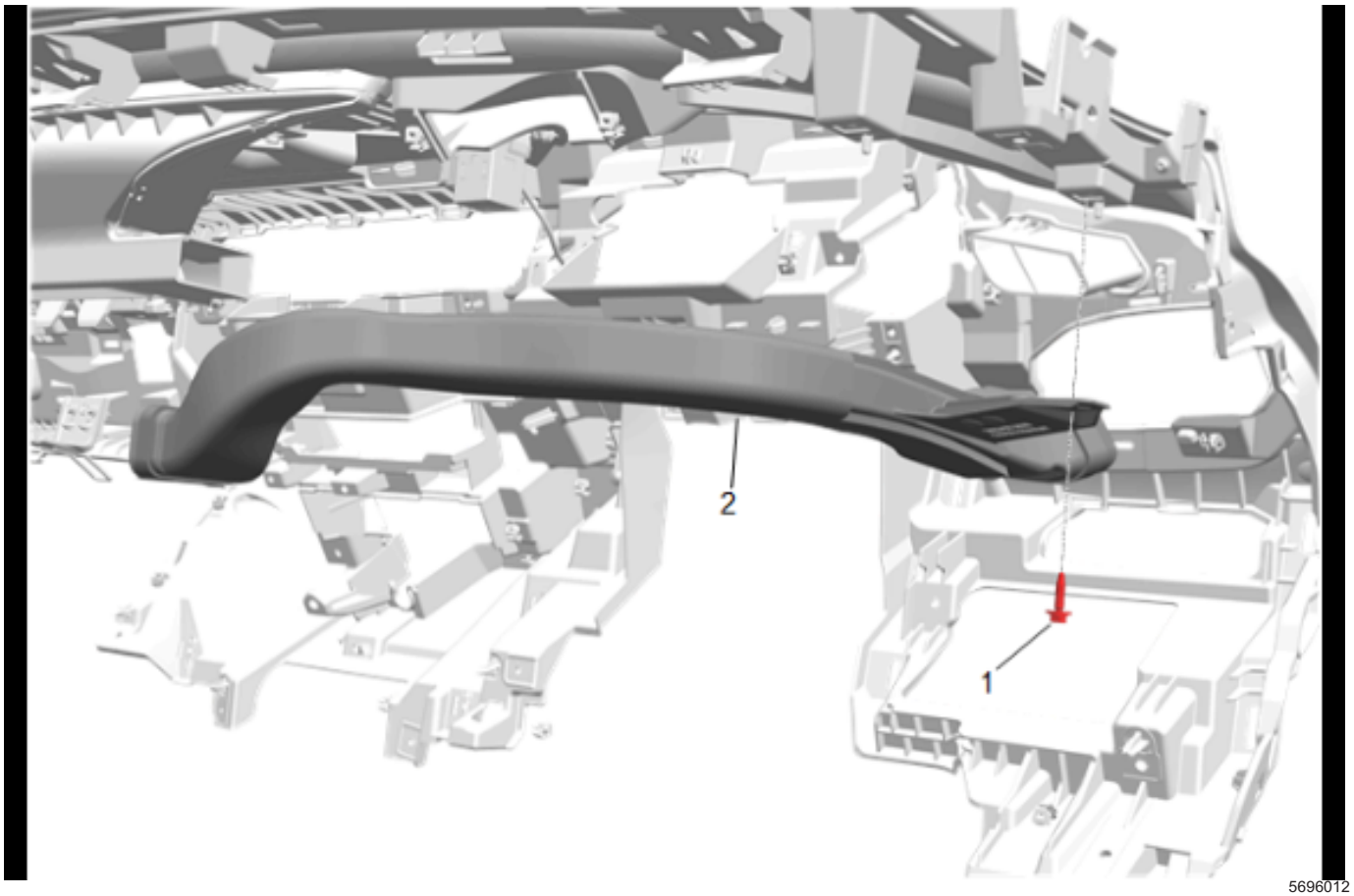

5696012

5. Side Window Defogger Outlet Duct Bolt (1) » Remove
6. Side Window Defogger Outlet Duct - Left Side (2) » Remove

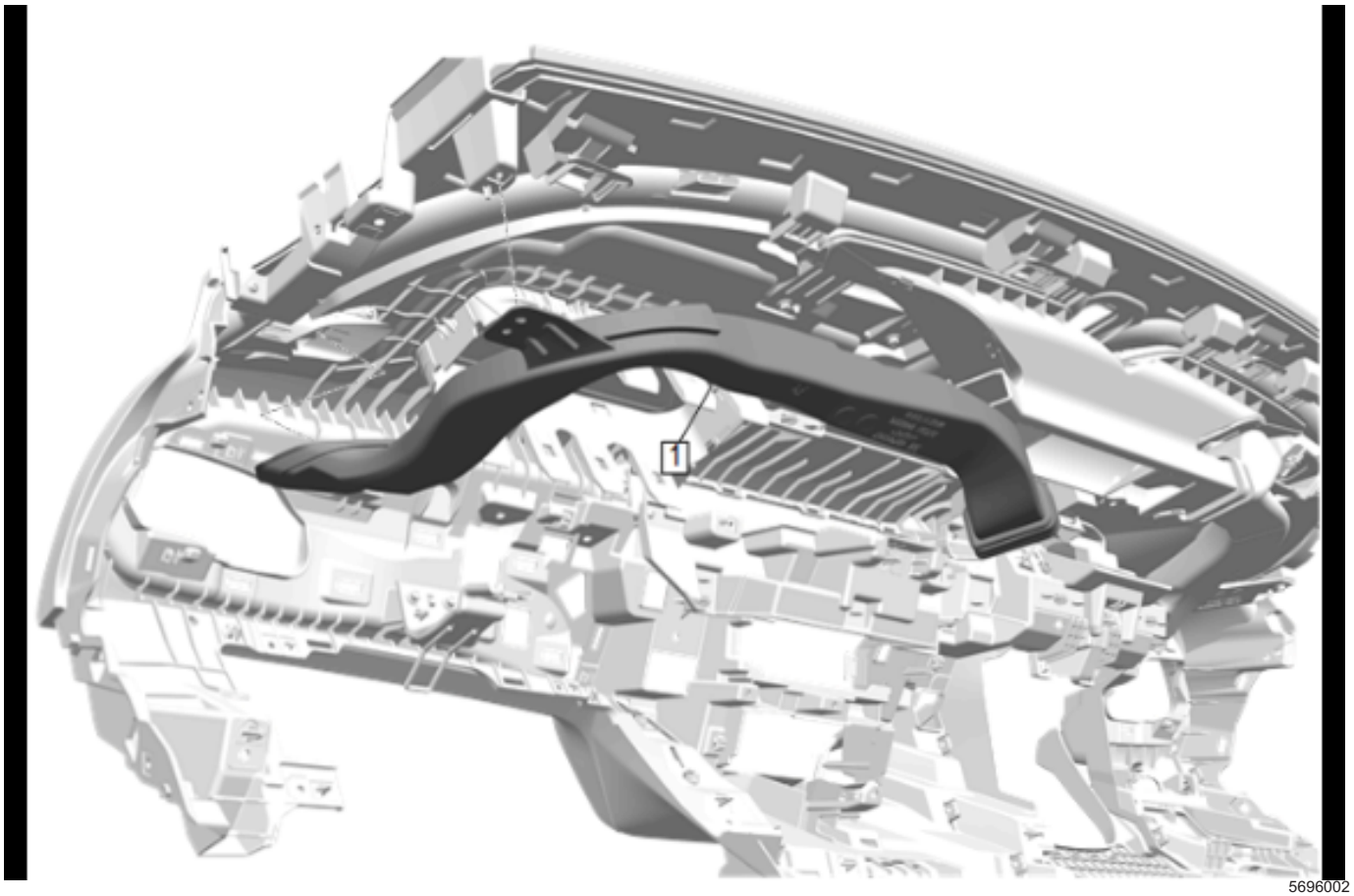

5696002

7. Side Window Defogger Outlet Duct - Right Side
   (1) » Remove

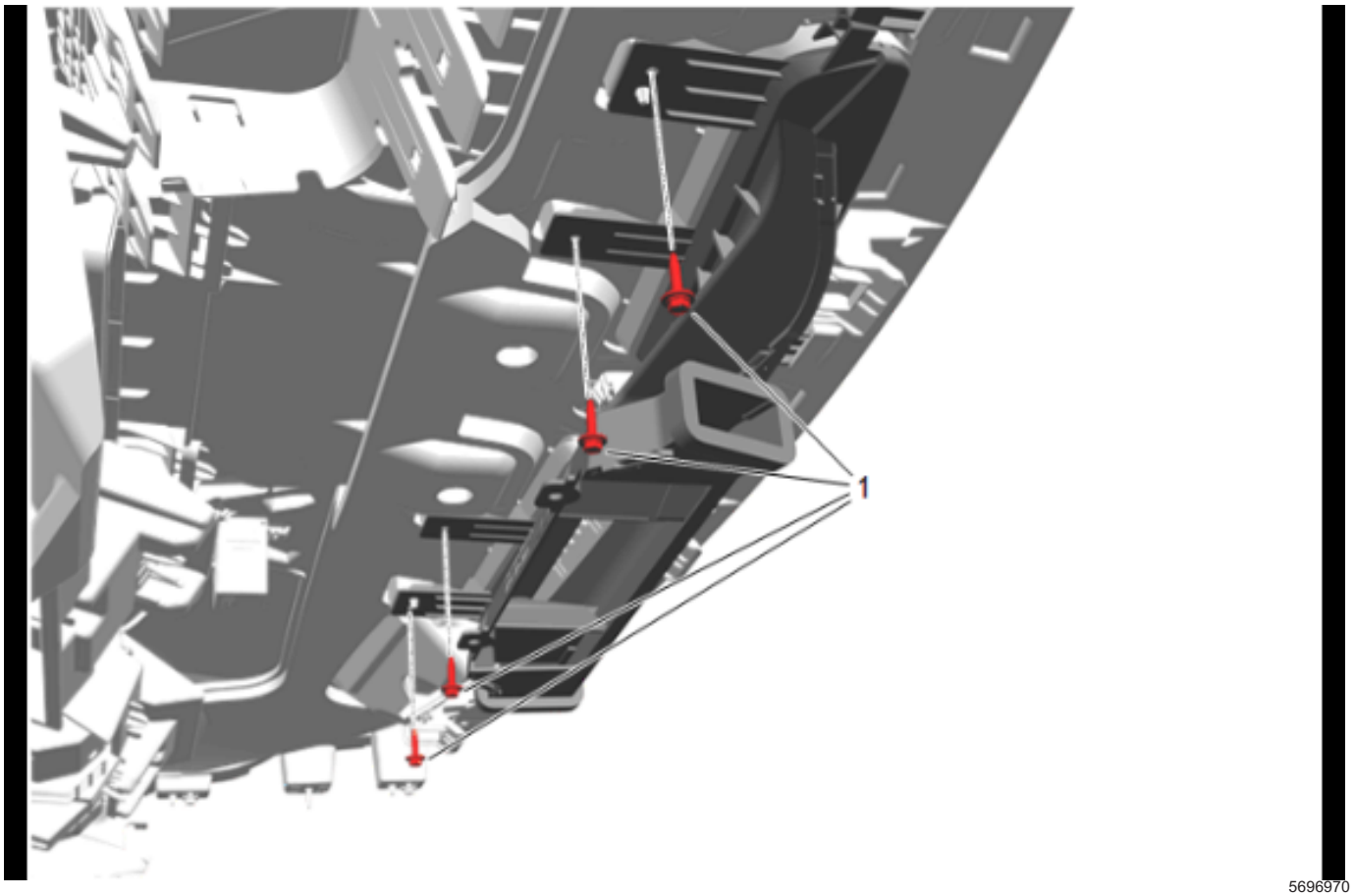

5696970

8. Windshield Defroster Outlet Duct Bolt (1) »
   Remove [4x]

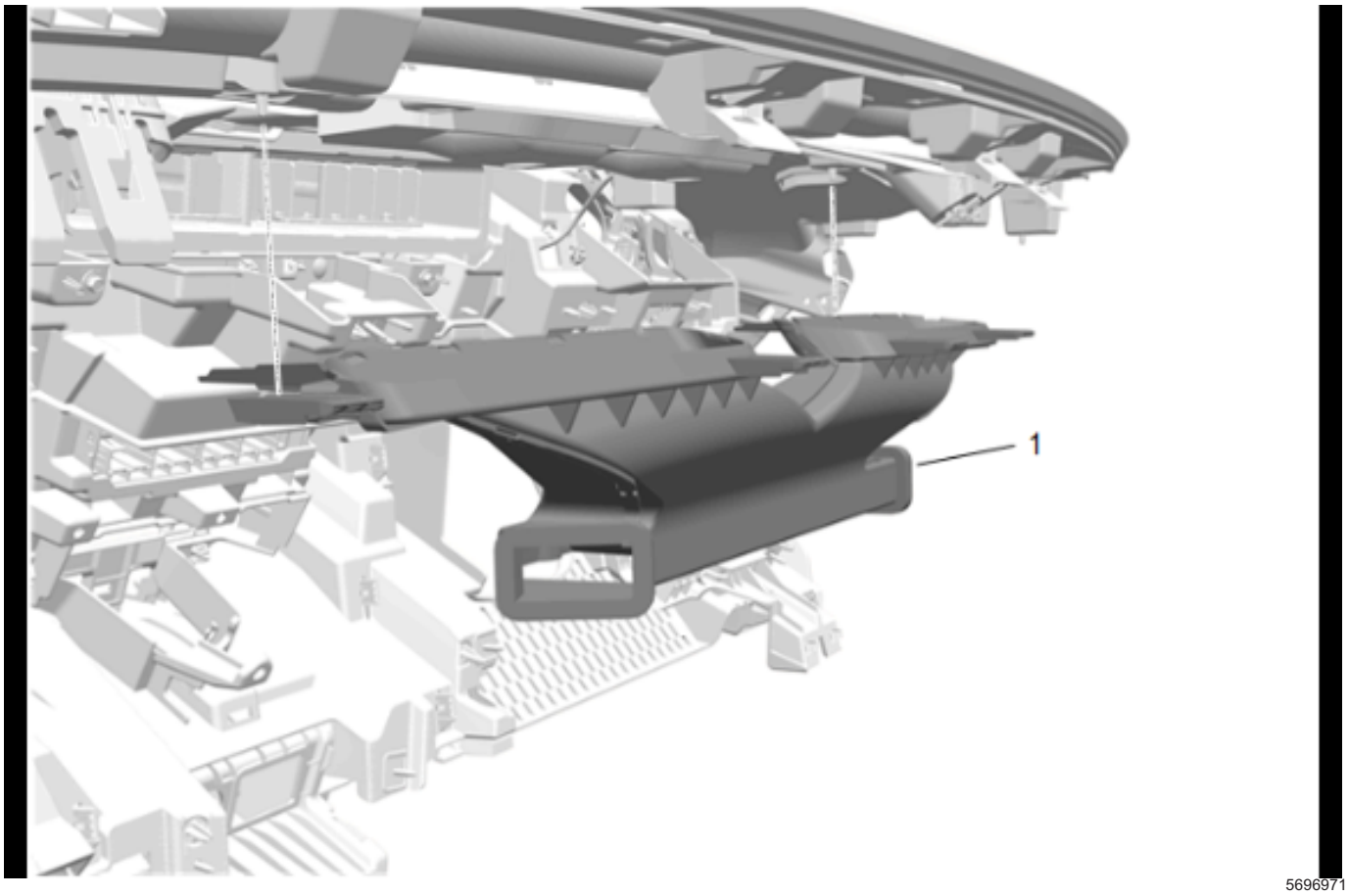

9. Windshield Defroster Outlet Duct (1) » Remove

Installation Procedure

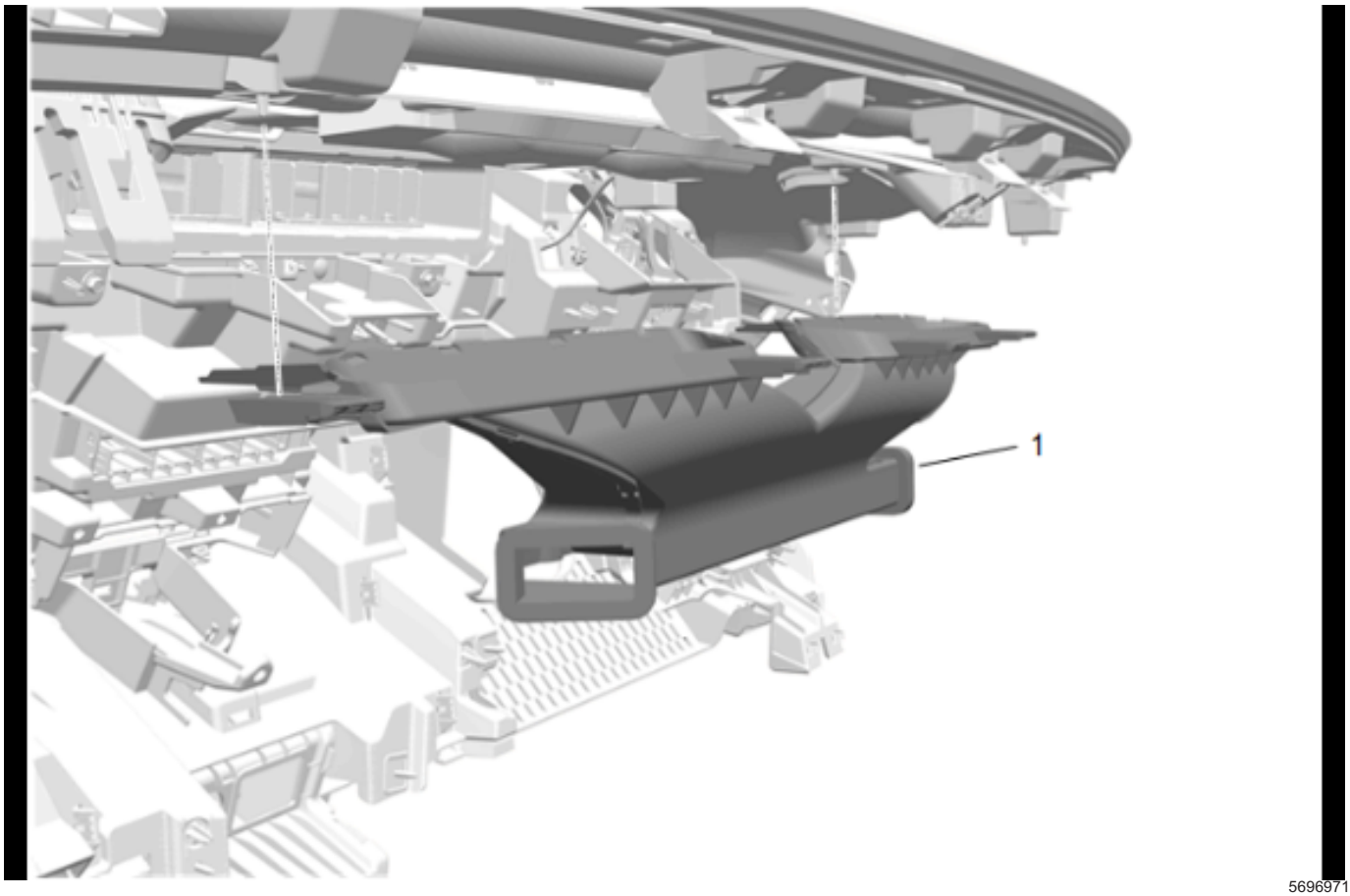

5696971

1. Windshield Defroster Outlet Duct (1) » Install

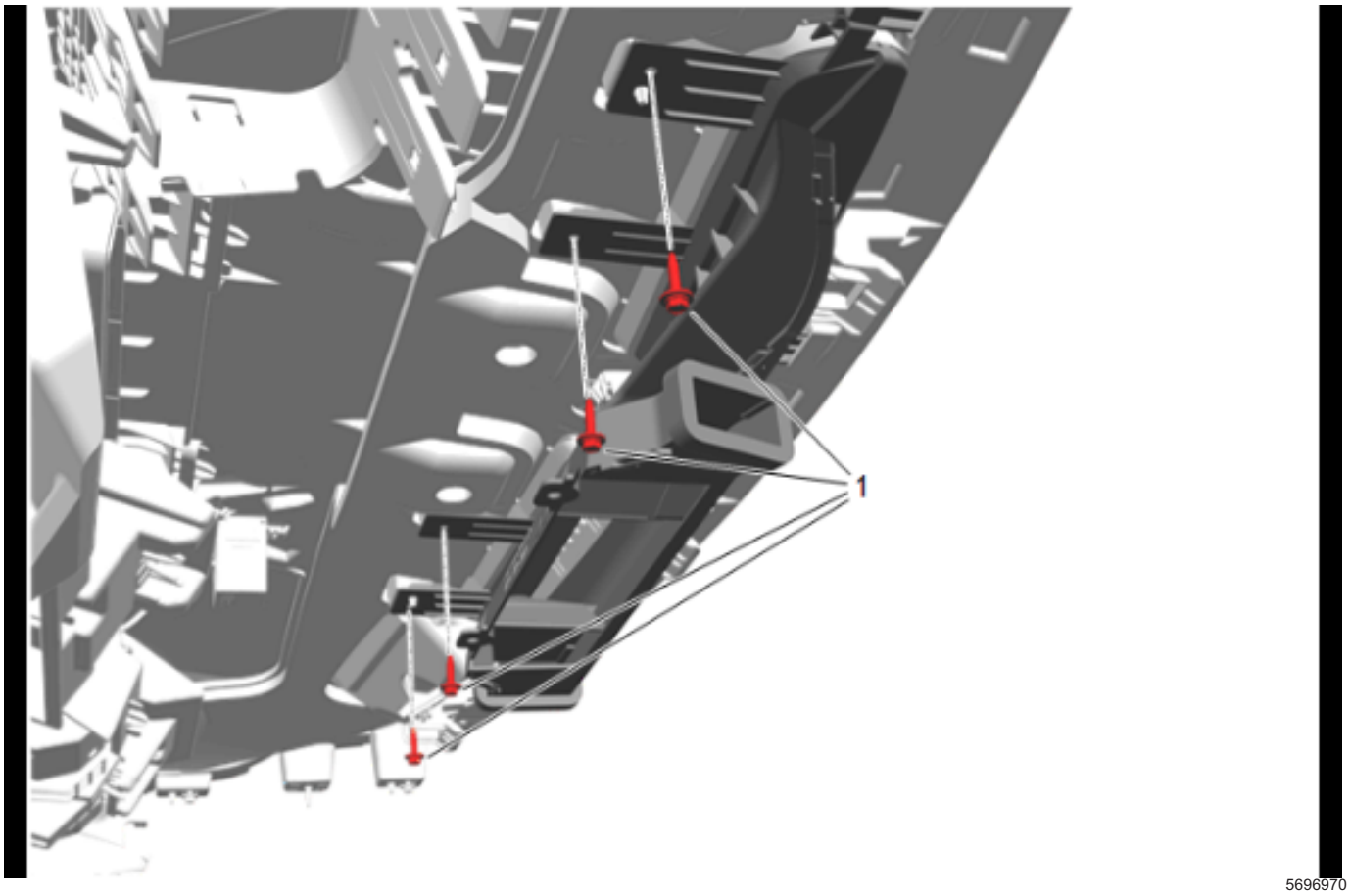

2. Windshield Defroster Outlet Duct Bolt (1) » Install and tighten — *Fastener Specifications on page 5-3*[4x]

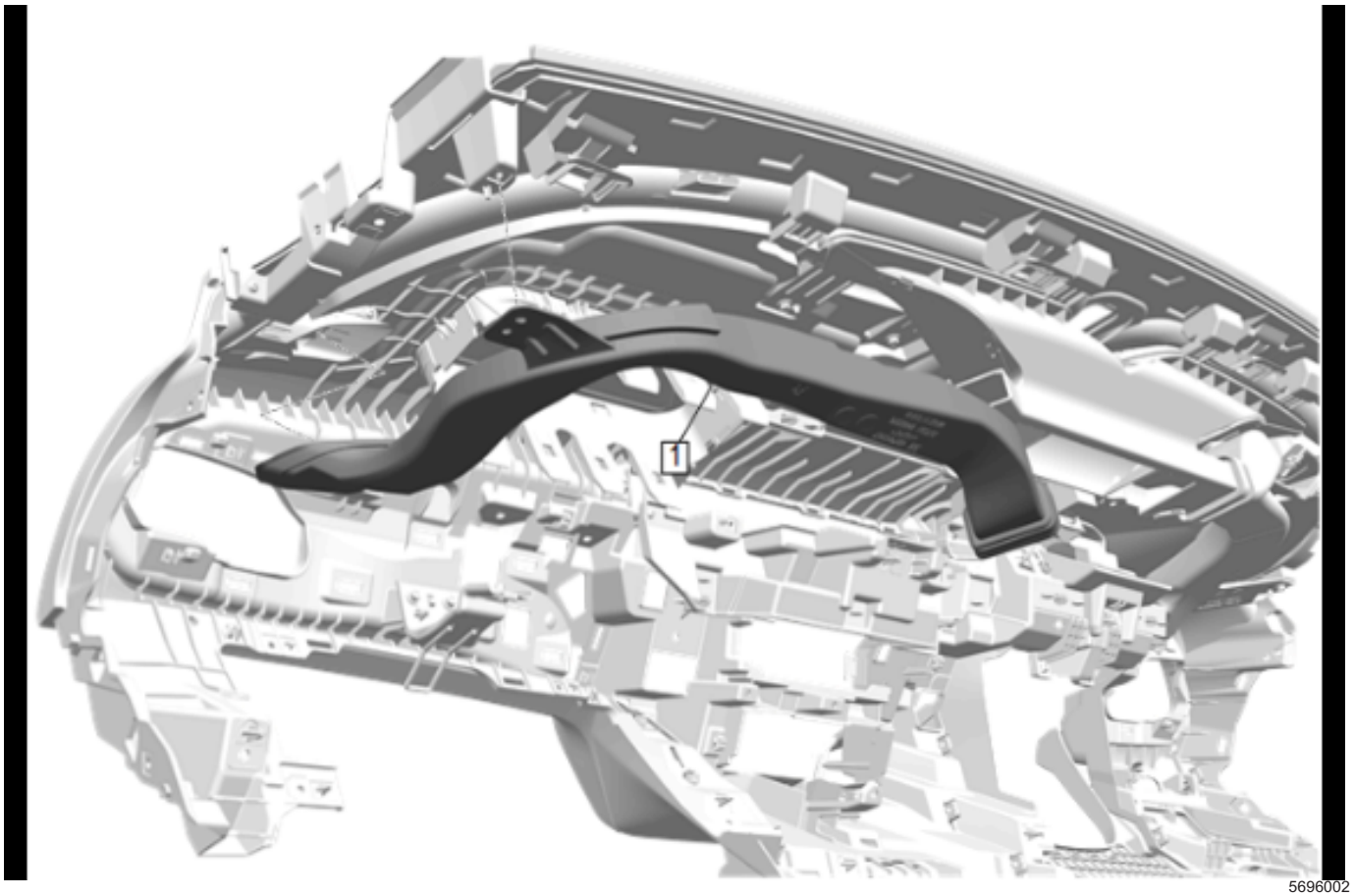

5696002

3. Side Window Defogger Outlet Duct - Right Side
   (1) » Install

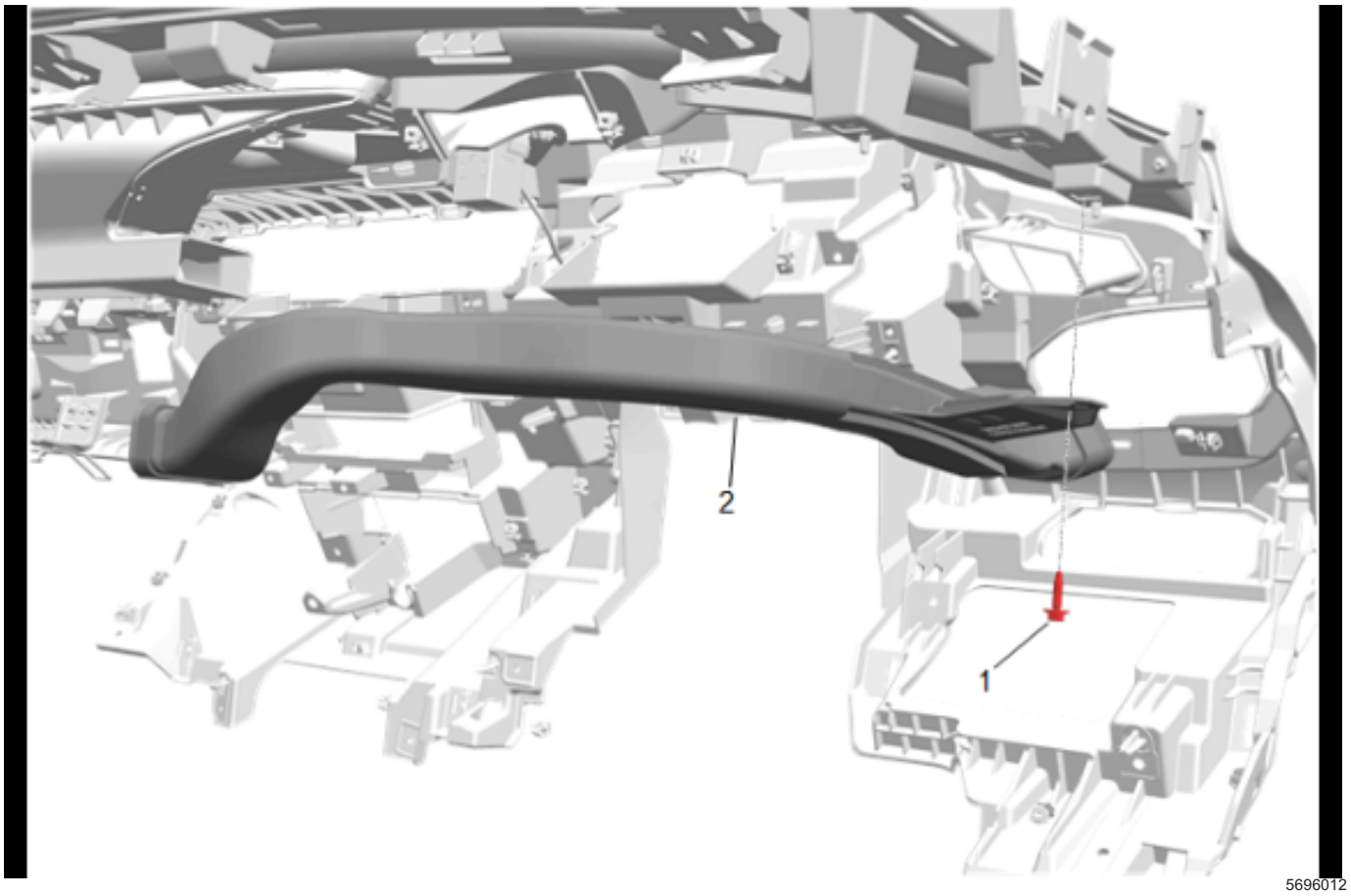

4. Side Window Defogger Outlet Duct - Left Side (2)
   » Install
5. Side Window Defogger Outlet Duct Bolt (1) »
   Install and tighten — *Fastener Specifications on page 5-3*

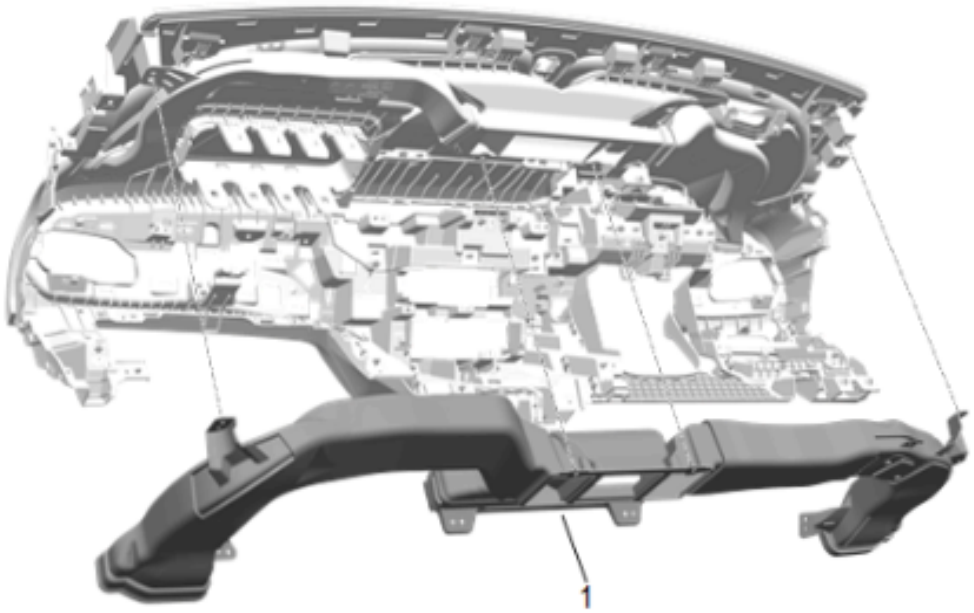

5695999

6. Instrument Panel Outer Air Outlet Duct (1) » Install

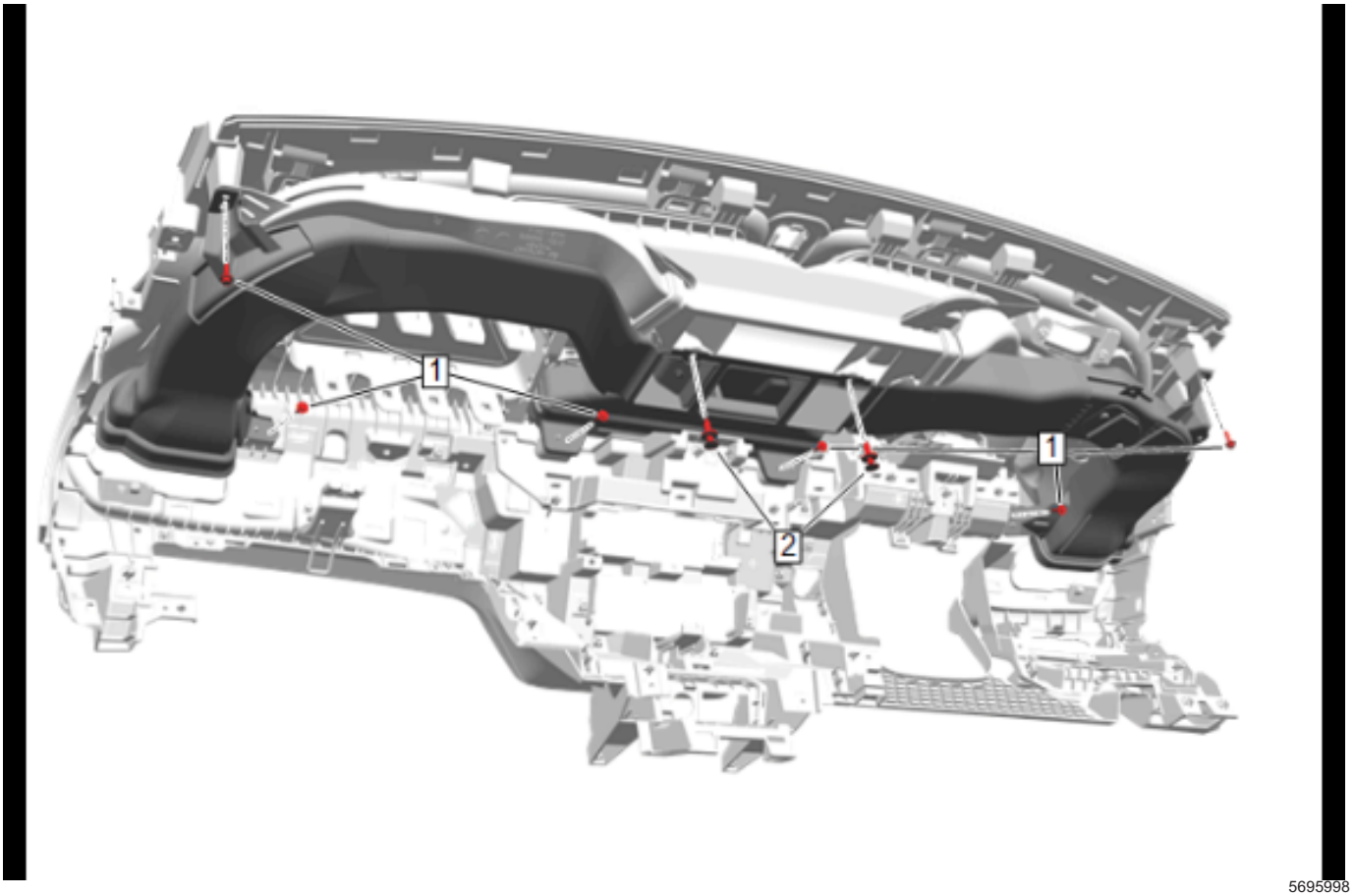

5695998

7. Instrument Panel Outer Air Outlet Duct Bolt (1) » Install and tighten — *Fastener Specifications on page 5-3*[6x]
8. Instrument Panel Outer Air Outlet Duct Retainer (2) » Install [2x]

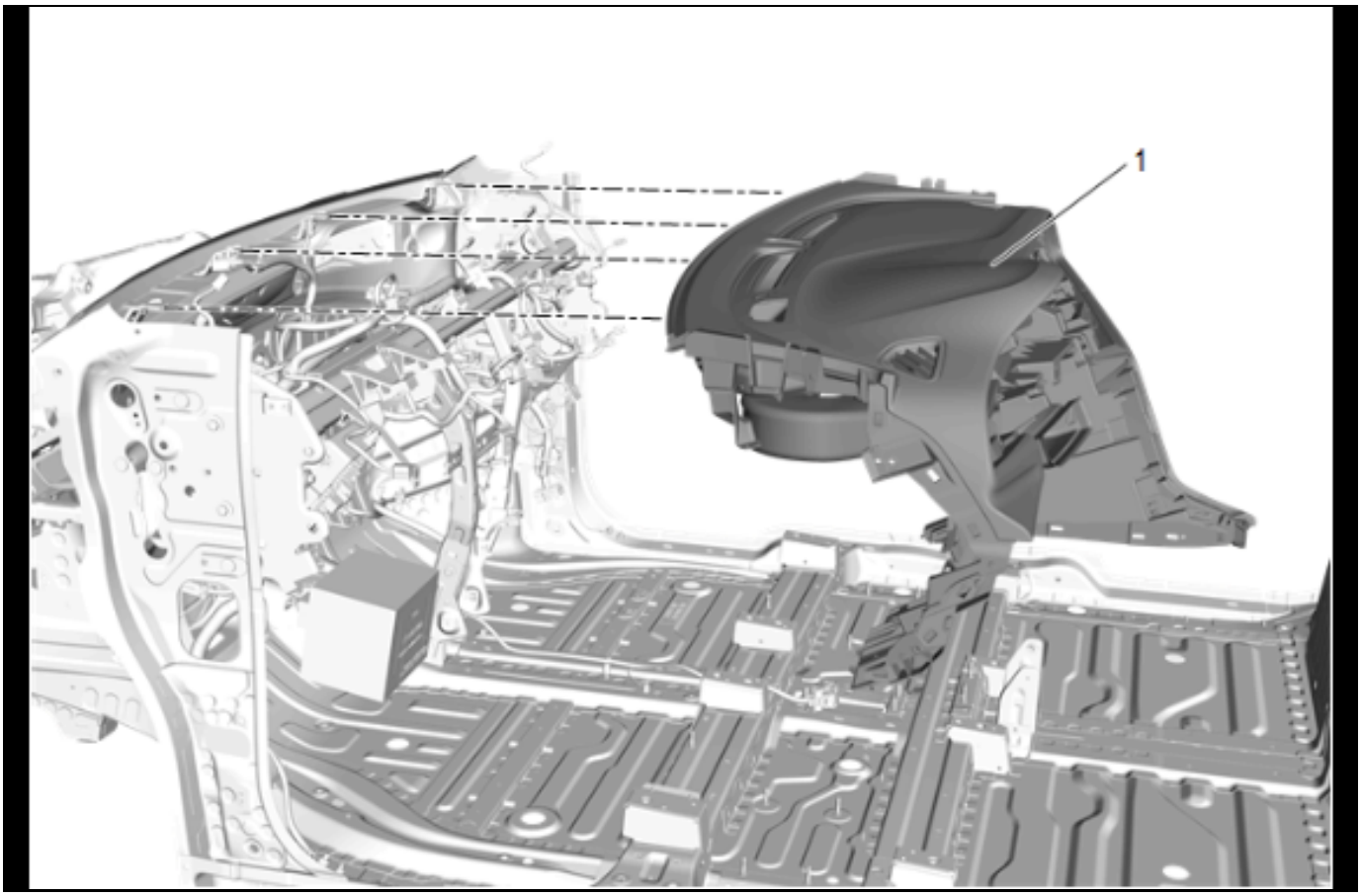

5487804

9. Instrument Panel Removal and Installation

Side Window Defogger Outlet Duct Replacement - Left Side

Removal Procedure

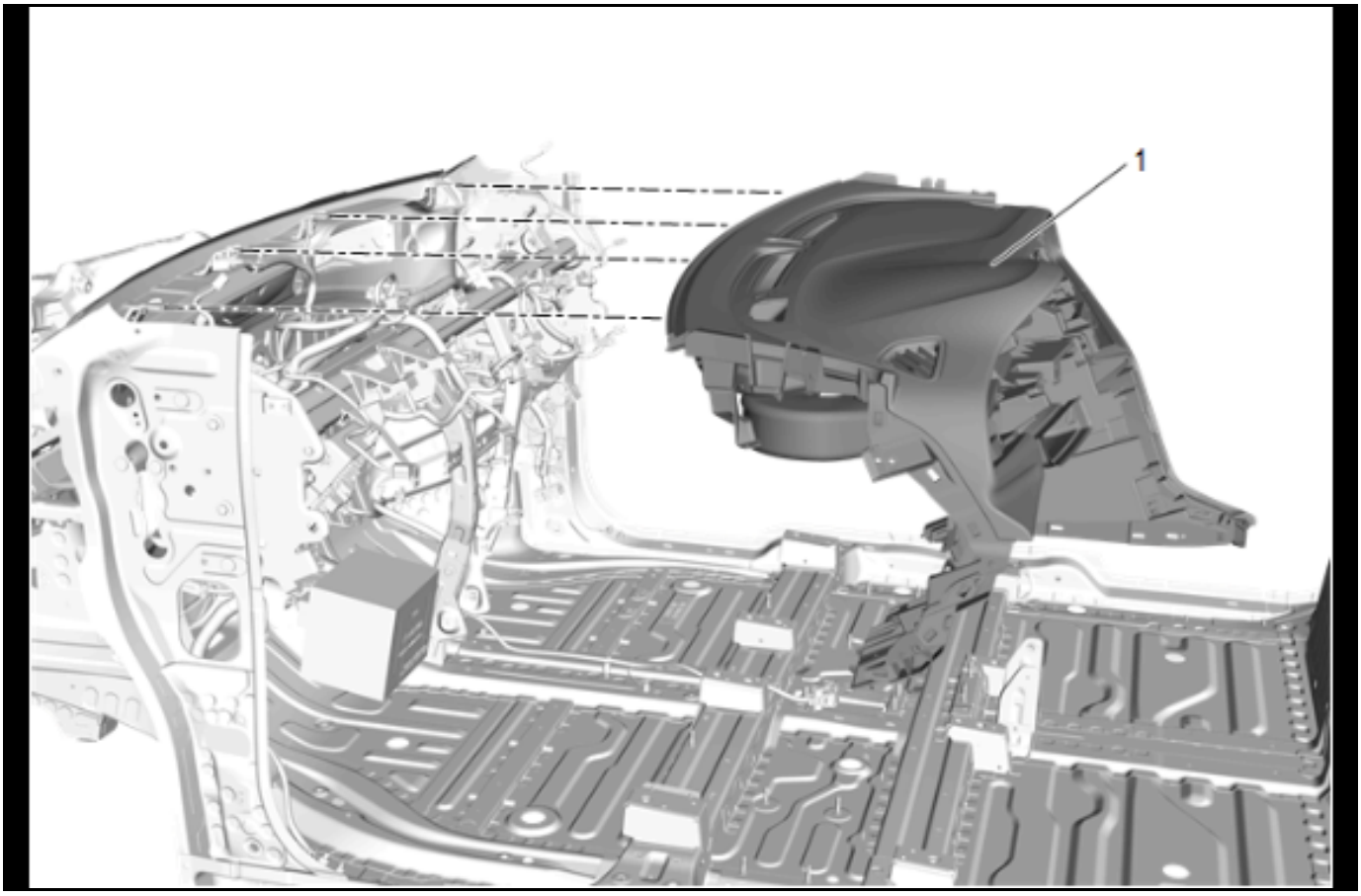

5487804

1. Instrument Panel Removal and Installation

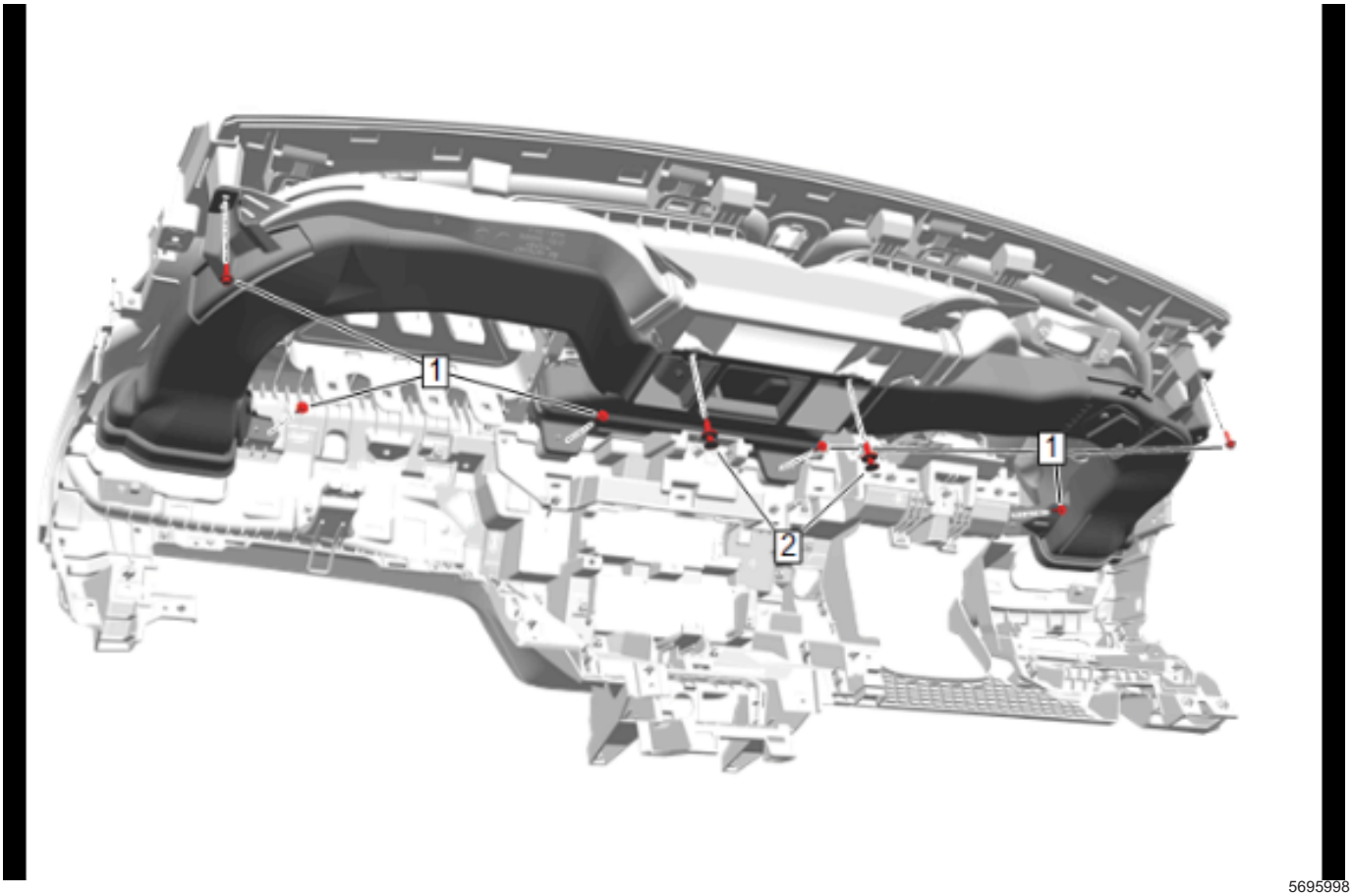

5695998

2. Instrument Panel Outer Air Outlet Duct Bolt (1) » Remove [6x]
3. Instrument Panel Outer Air Outlet Duct Retainer (2) » Remove [2x]

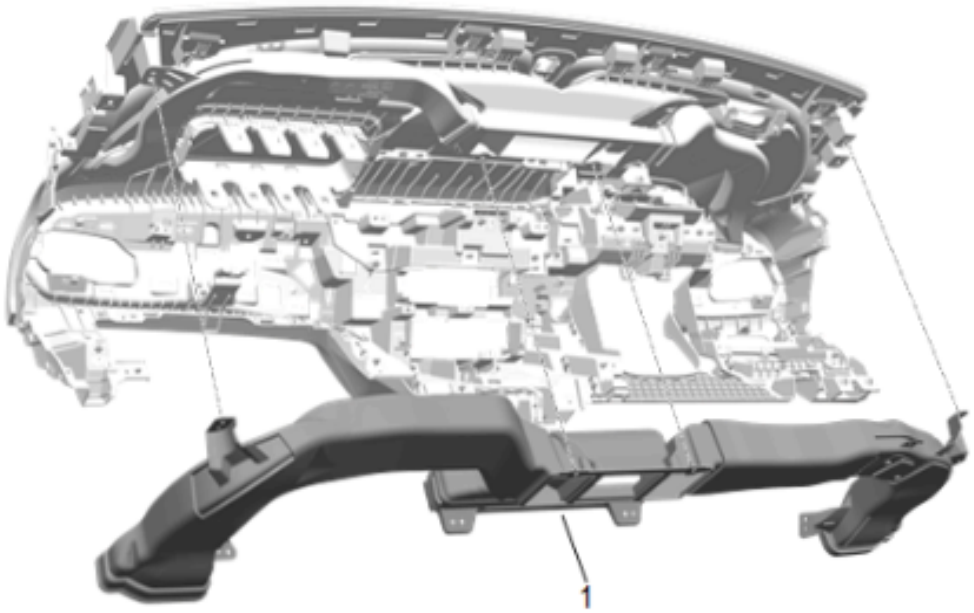

5695999

4. Instrument Panel Outer Air Outlet Duct (1) »
   Remove

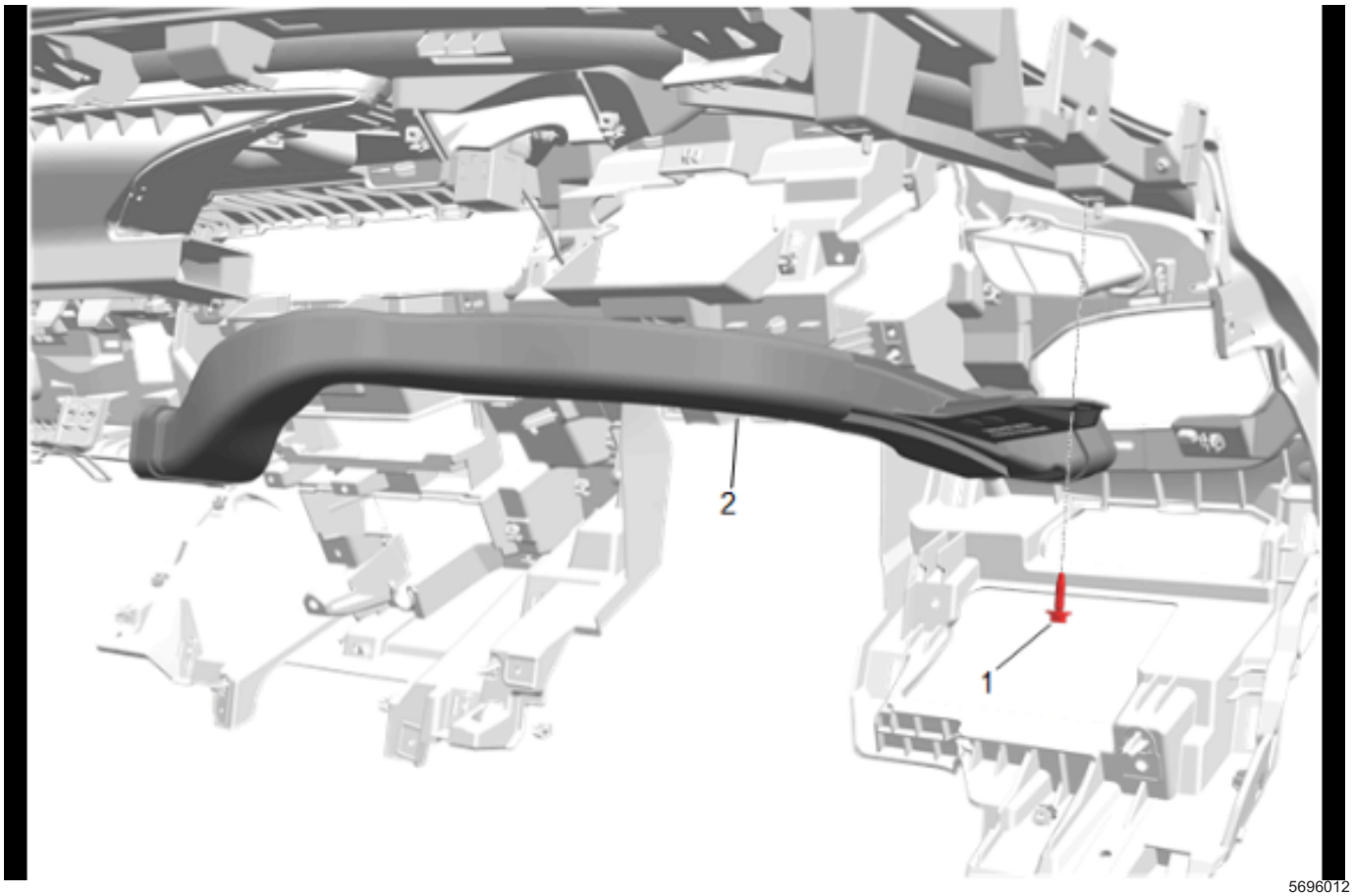

5696012

5. Side Window Defogger Outlet Duct Bolt (1) » Remove
6. Side Window Defogger Outlet Duct - Left Side (2) » Remove

Installation Procedure

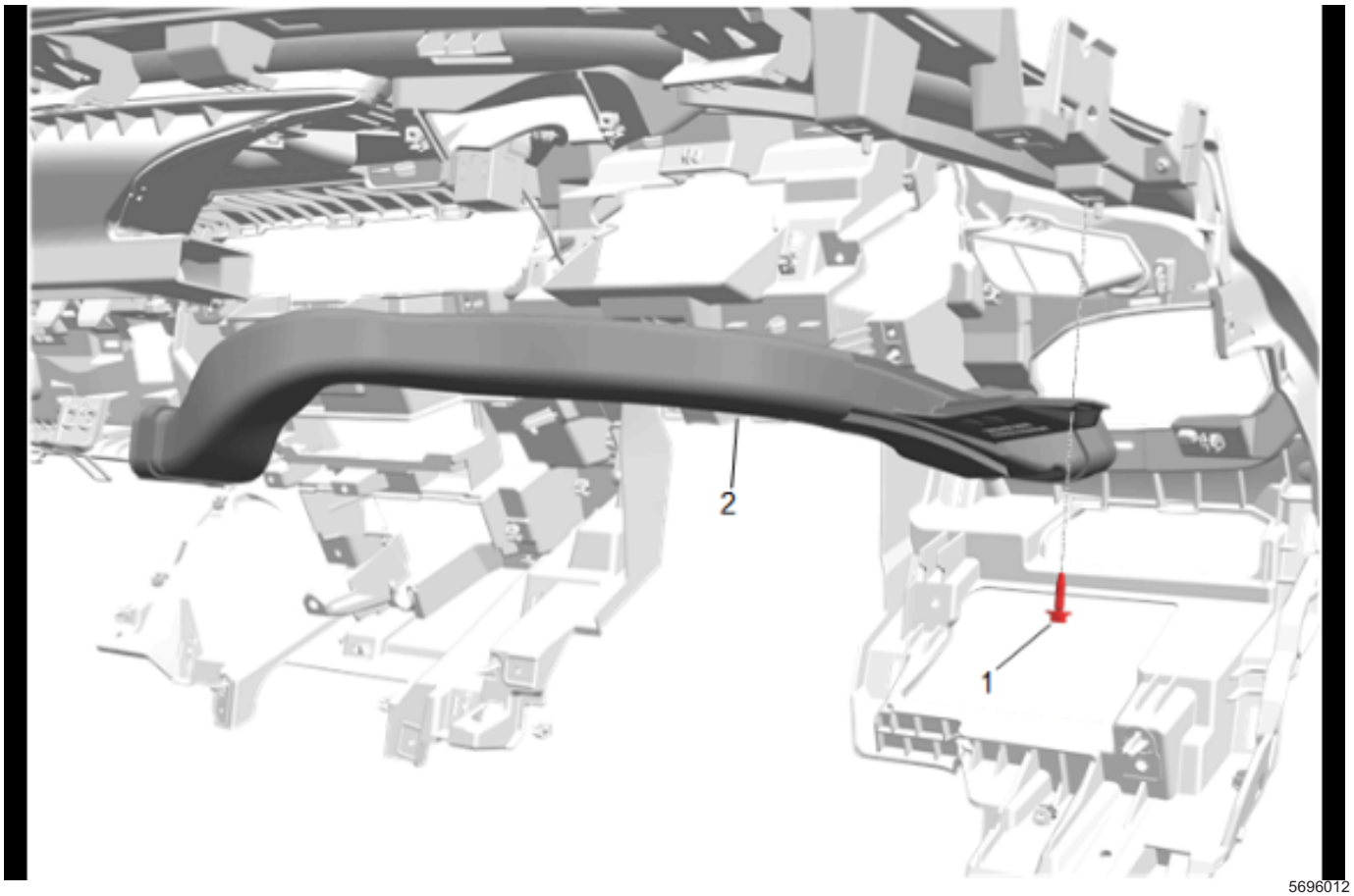

5696012

1. Side Window Defogger Outlet Duct - Left Side (2)
   » Install
2. Side Window Defogger Outlet Duct Bolt (1) »
   Install and tighten — *Fastener Specifications on page 5-3*

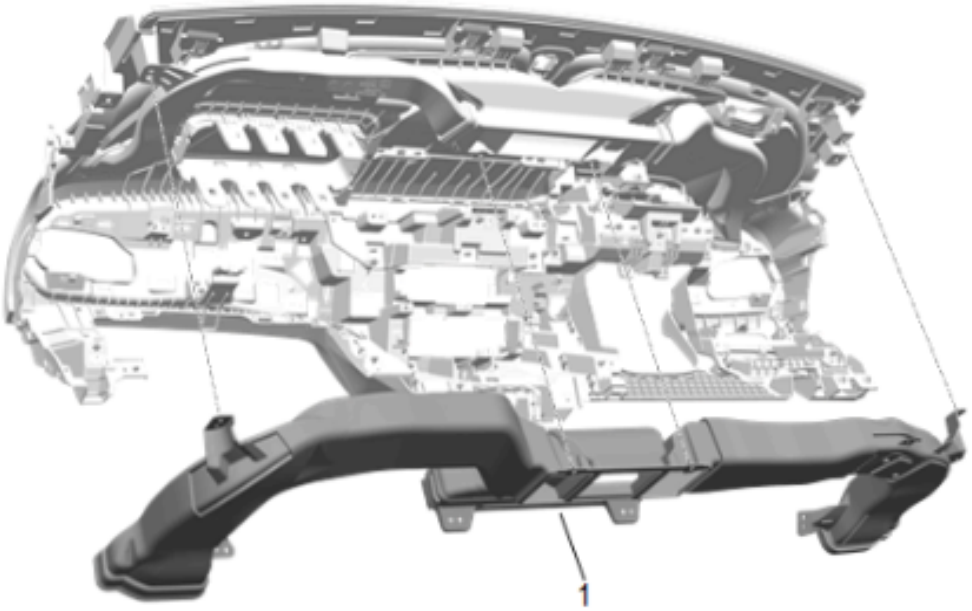

5695999

3. Instrument Panel Outer Air Outlet Duct (1) »
   Install

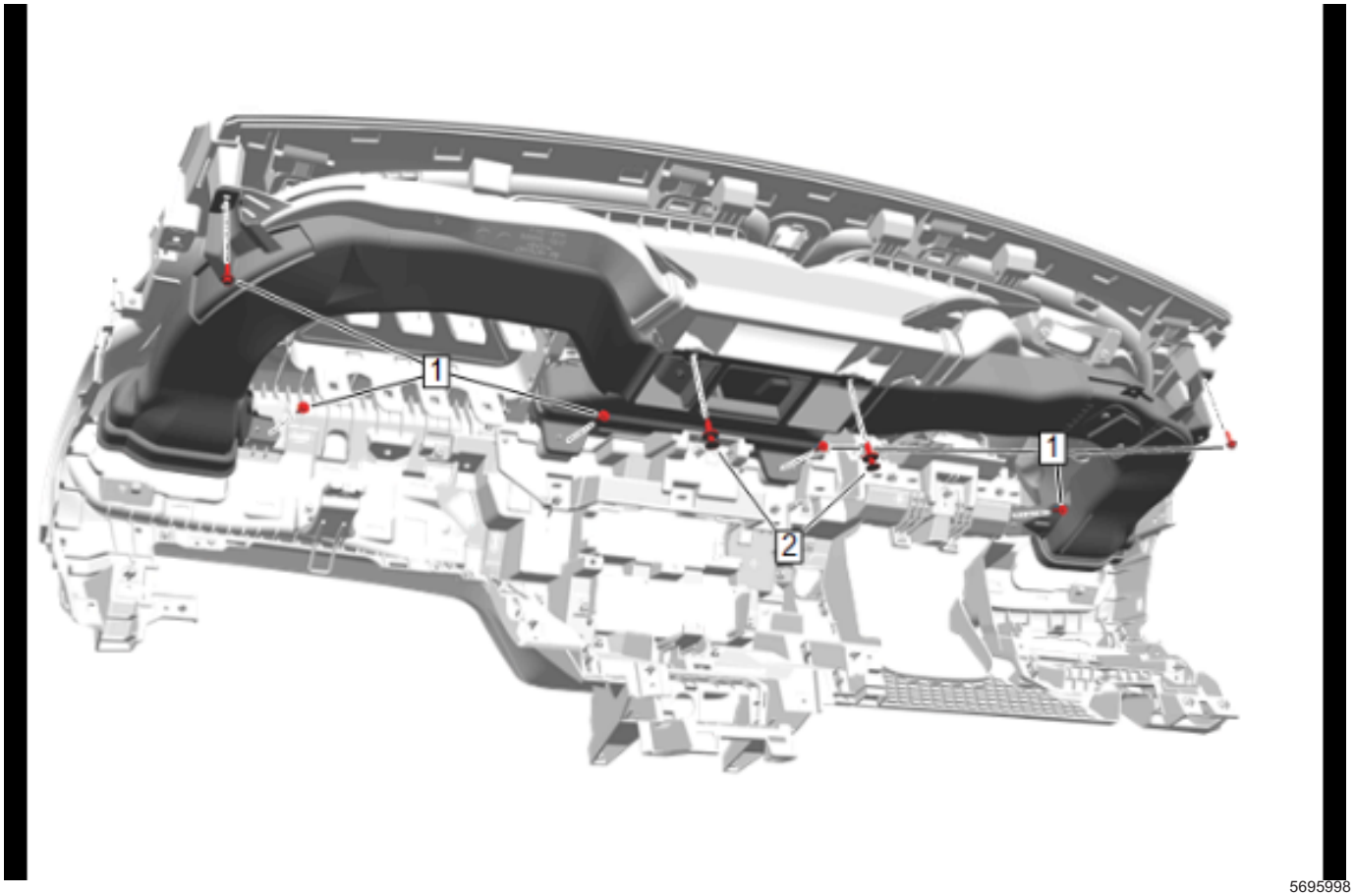

5695998

4. Instrument Panel Outer Air Outlet Duct Bolt (1) » Install and tighten — *Fastener Specifications on page 5-3*[6x]
5. Instrument Panel Outer Air Outlet Duct Retainer (2) » Install [2x]

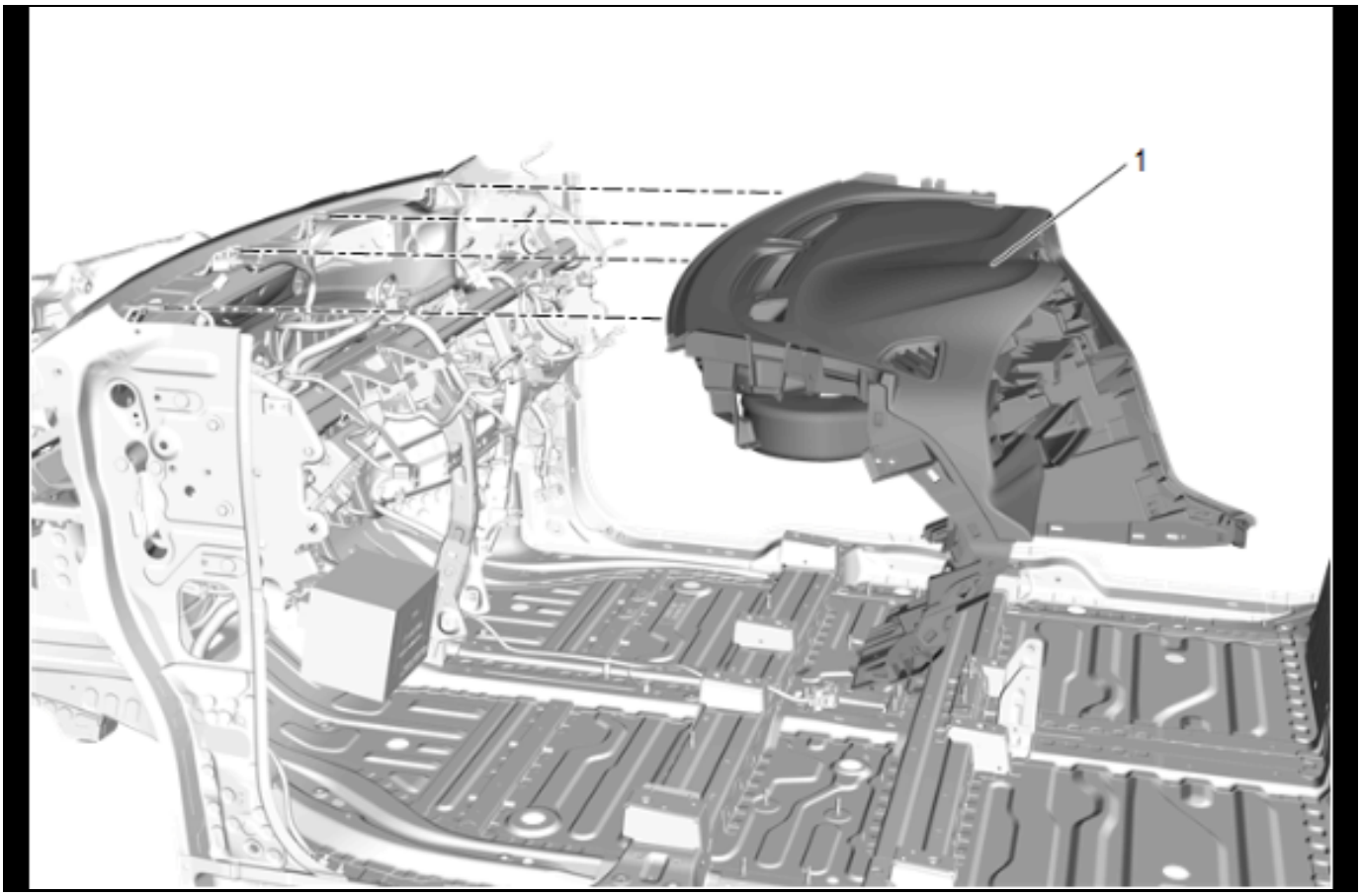

5487804

6. Instrument Panel Removal and Installation

Side Window Defogger Outlet Duct Replacement - Right Side

Removal Procedure

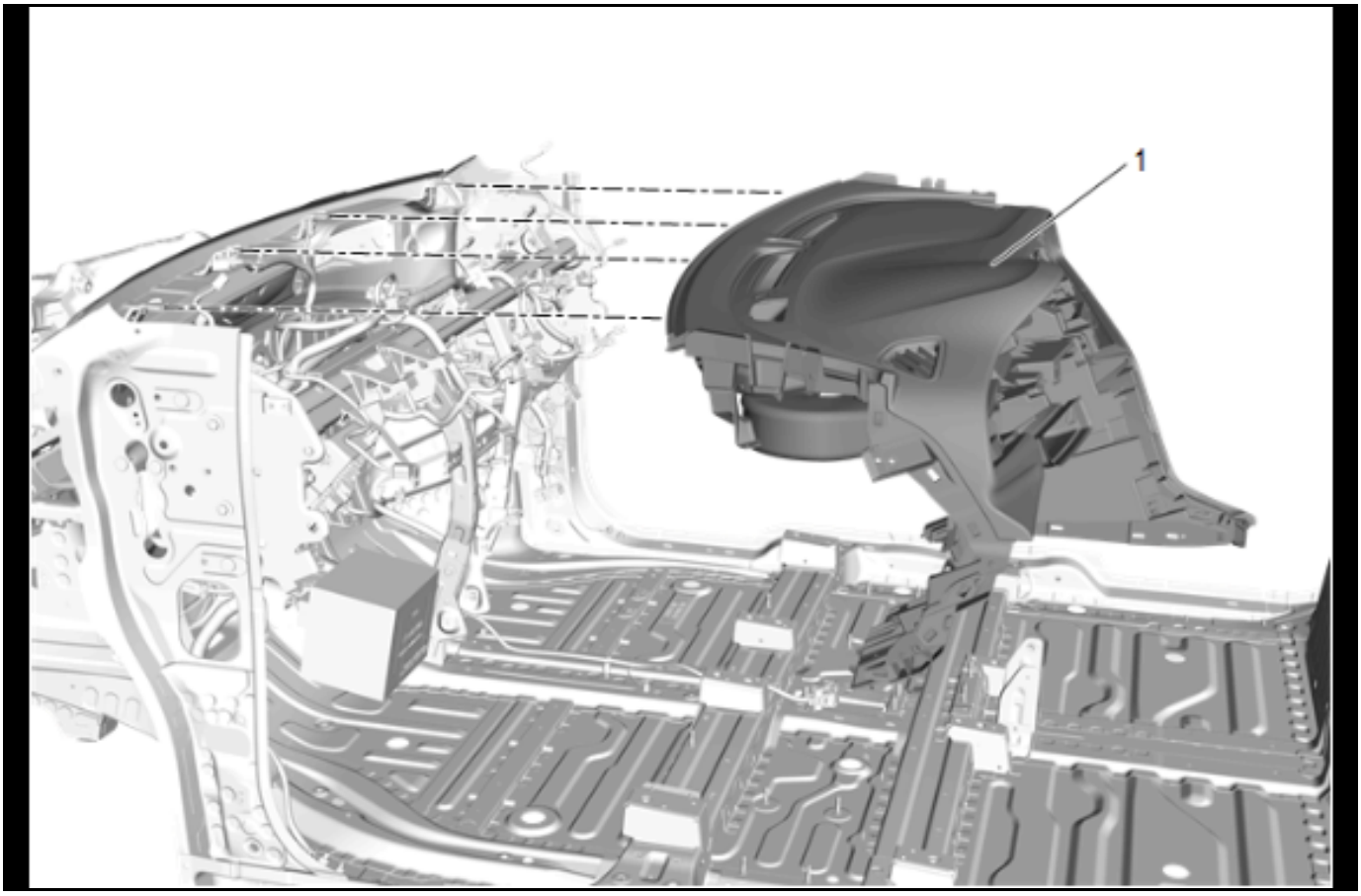

5487804

1. Instrument Panel Removal and Installation

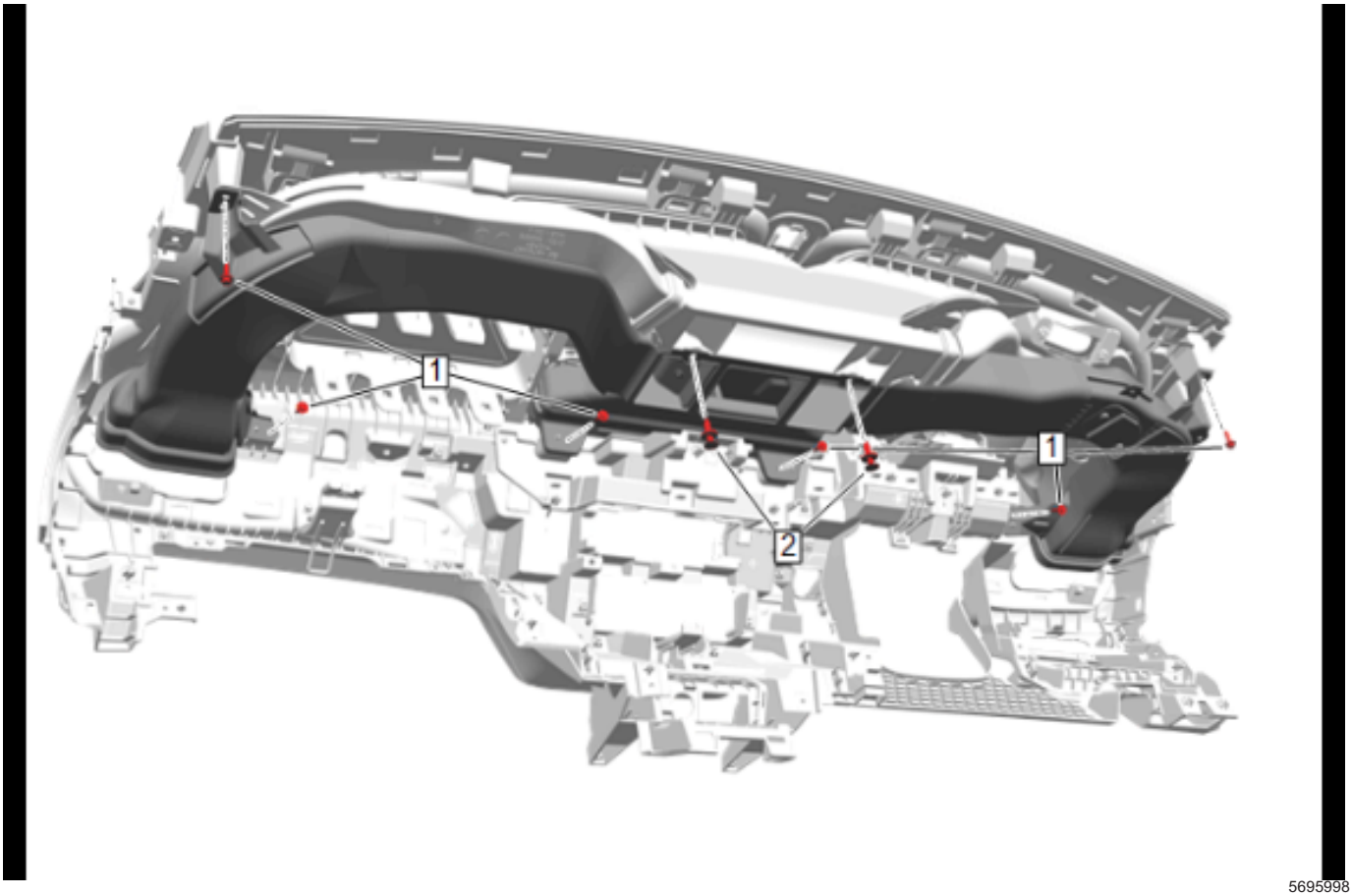

5695998

2. Instrument Panel Outer Air Outlet Duct Bolt (1) » Remove [6x]
3. Instrument Panel Outer Air Outlet Duct Retainer (2) » Remove [2x]

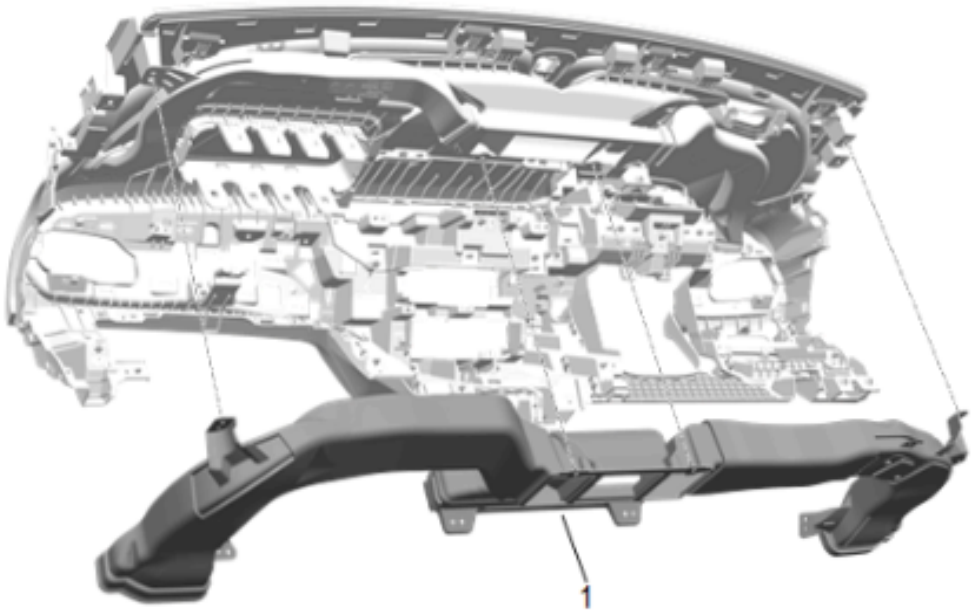

5695999

4. Instrument Panel Outer Air Outlet Duct (1) »
   Remove

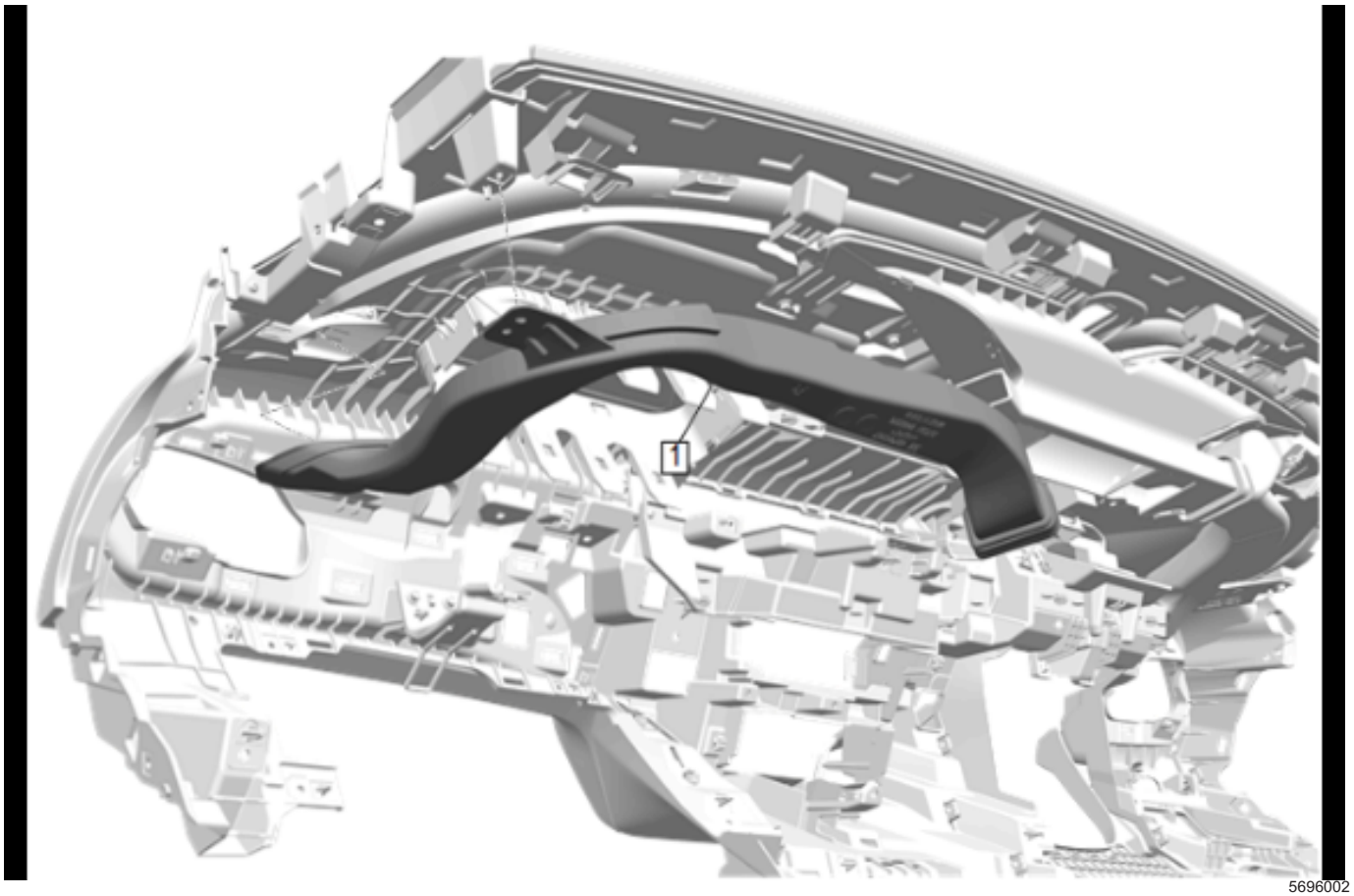

5696002

5. Side Window Defogger Outlet Duct - Right Side
   (1) » Remove

Installation Procedure

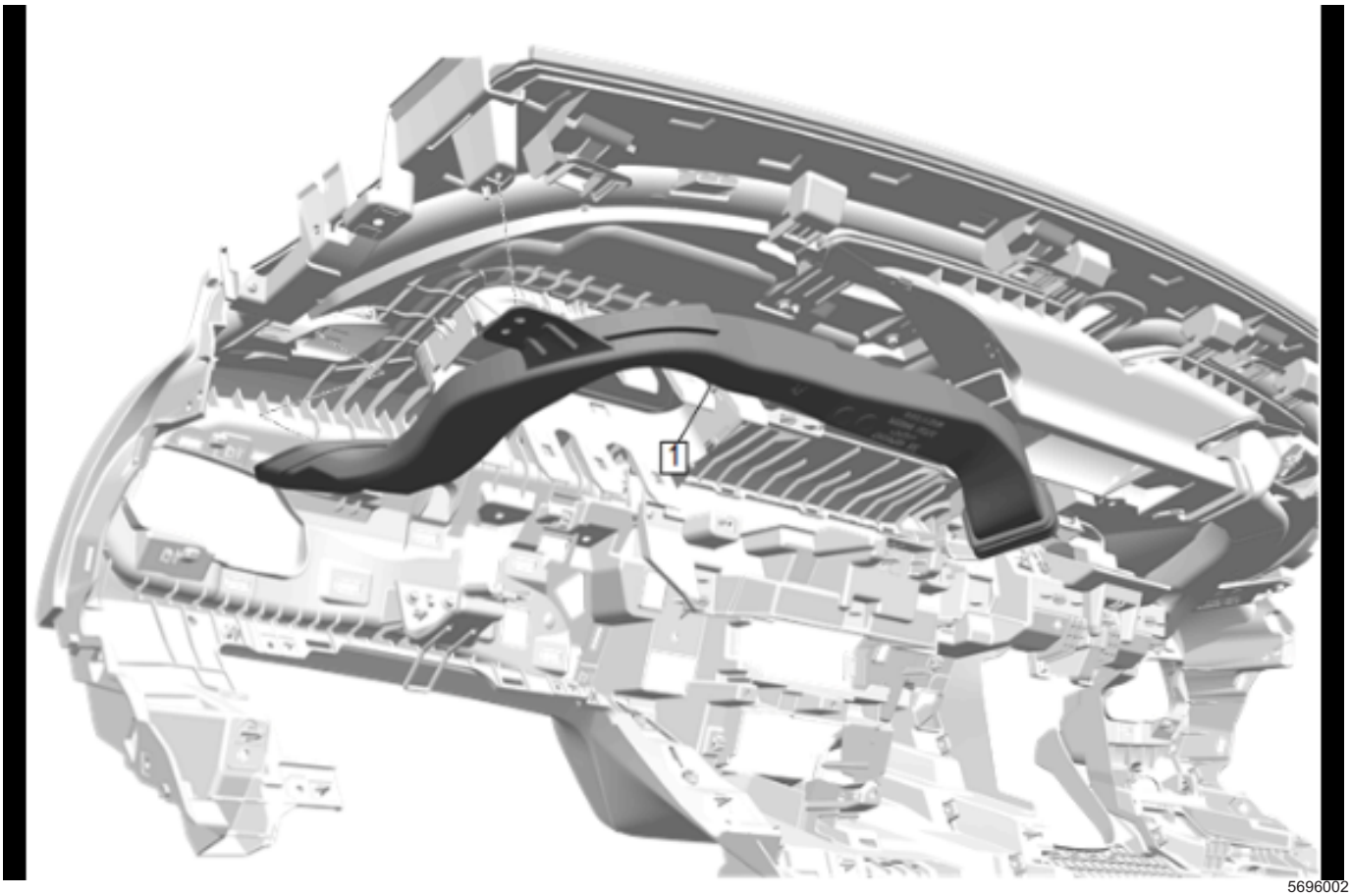

5696002

1. Side Window Defogger Outlet Duct - Right Side
   (1) » Install

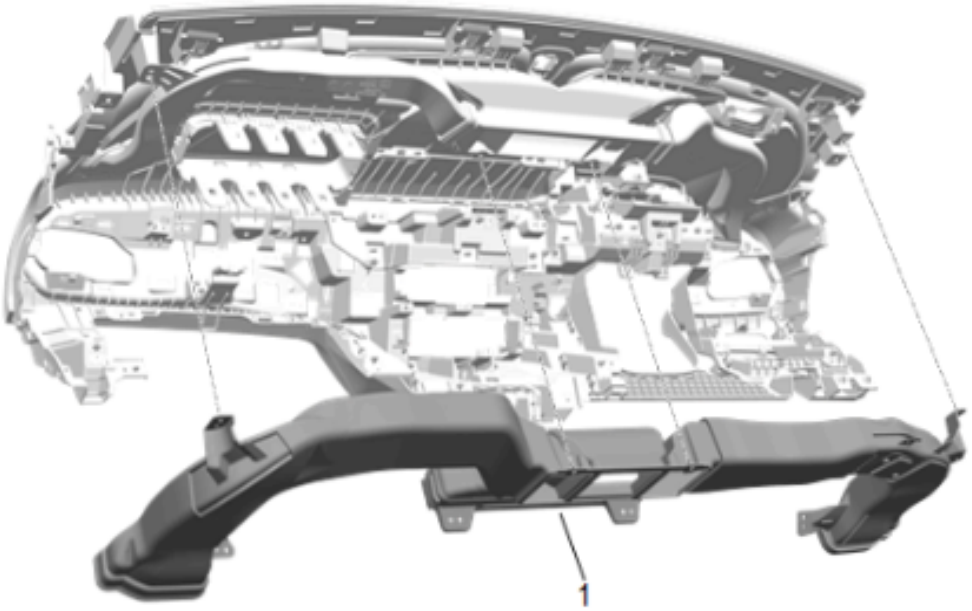

5695999

2. Instrument Panel Outer Air Outlet Duct (1) » Install

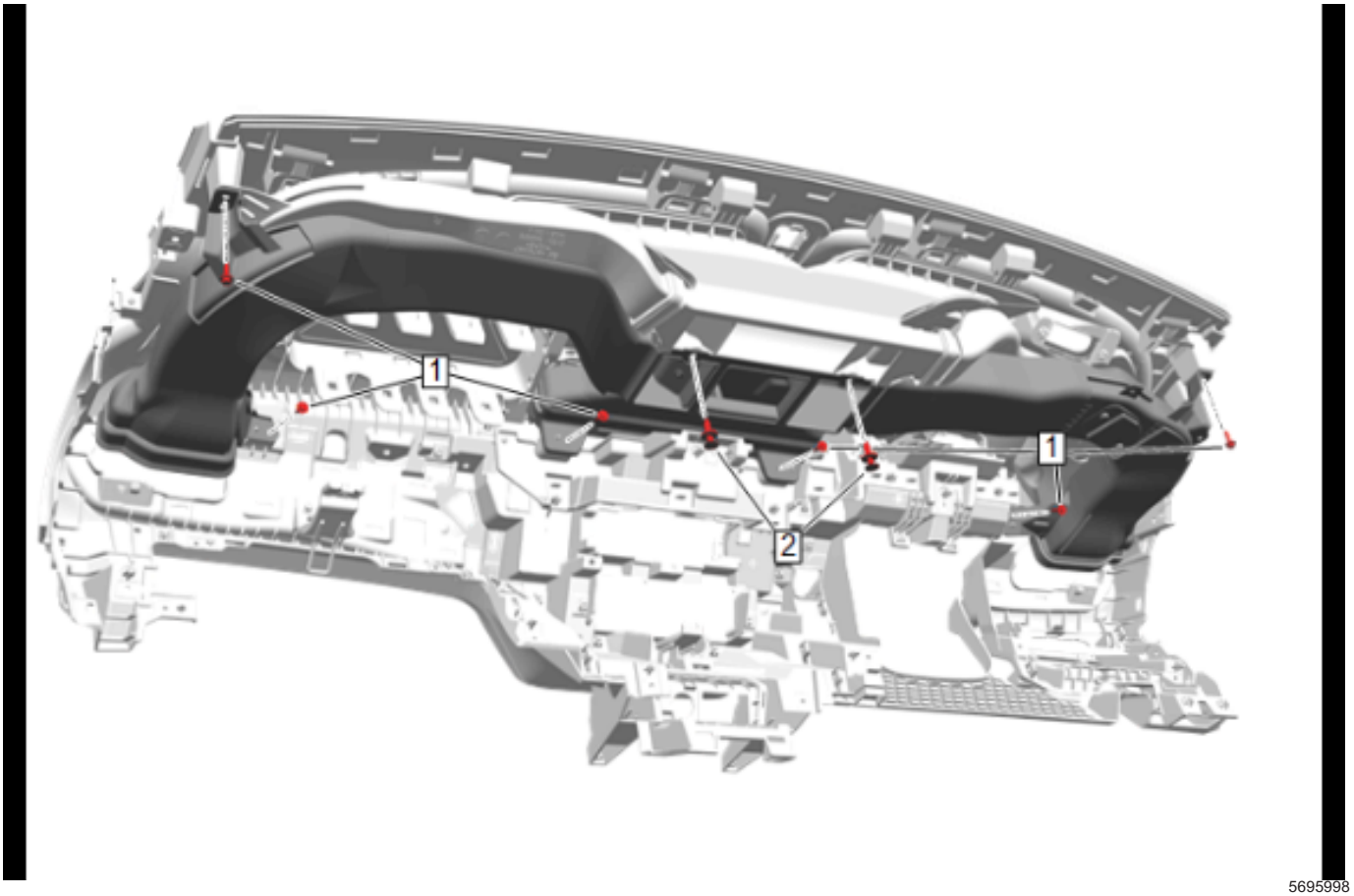

5695998

3. Instrument Panel Outer Air Outlet Duct Bolt (1) » Install and tighten — *Fastener Specifications on page 5-3*[6x]
4. Instrument Panel Outer Air Outlet Duct Retainer (2) » Install [2x]

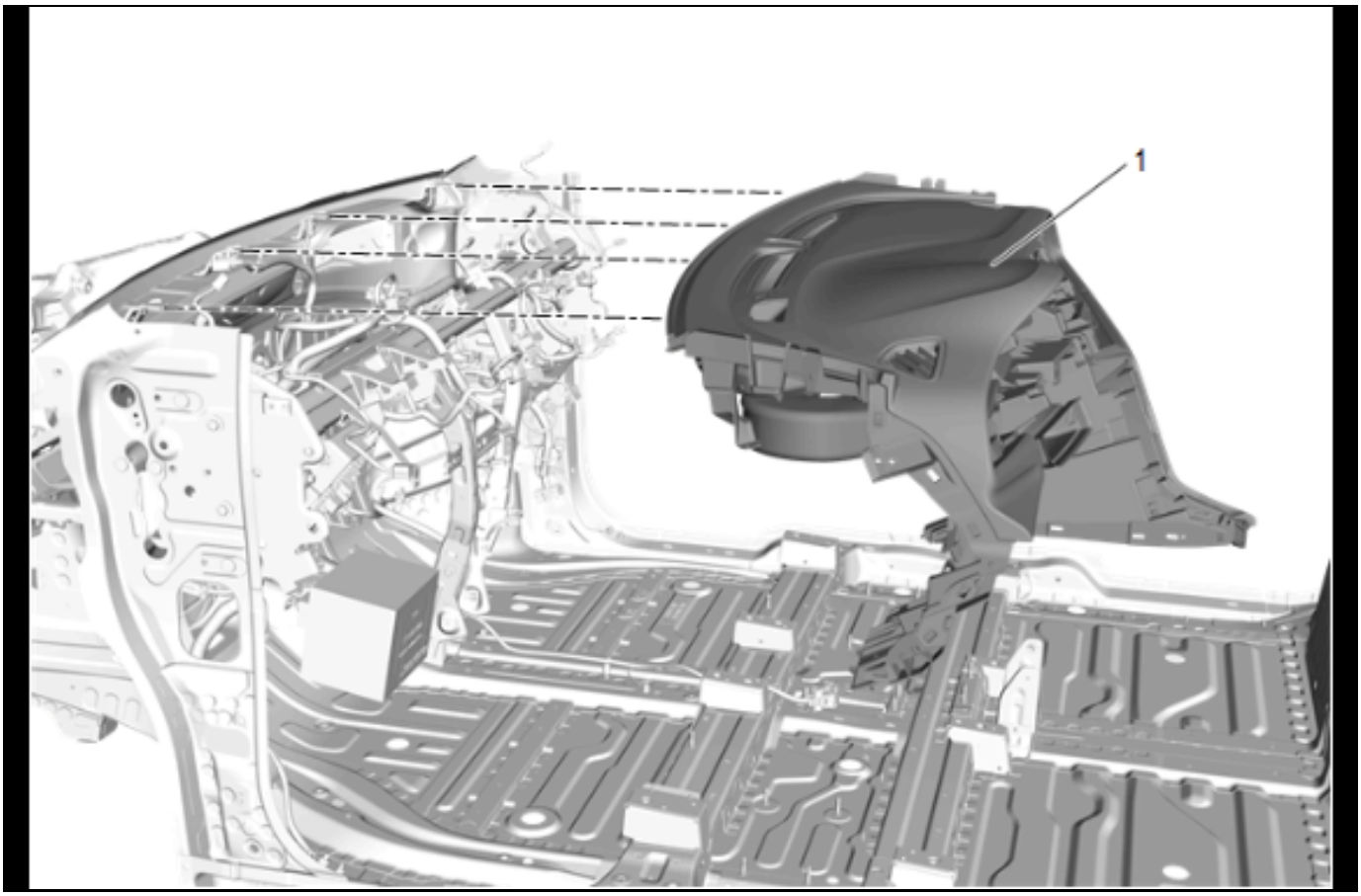

5487804

5. Instrument Panel Removal and Installation

Floor Rear Air Outlet Duct Replacement

Single Use Fasteners and Components

Front Seat Belt Anchor Plate Tensioner Bolt [2x]

Caution: Use care when working around the head curtain inflator module. Sharp tools may puncture the curtain airbag. If the head curtain inflator module is damaged in any way, it must be replaced.

Removal Procedure

1. Disable the SIR system.

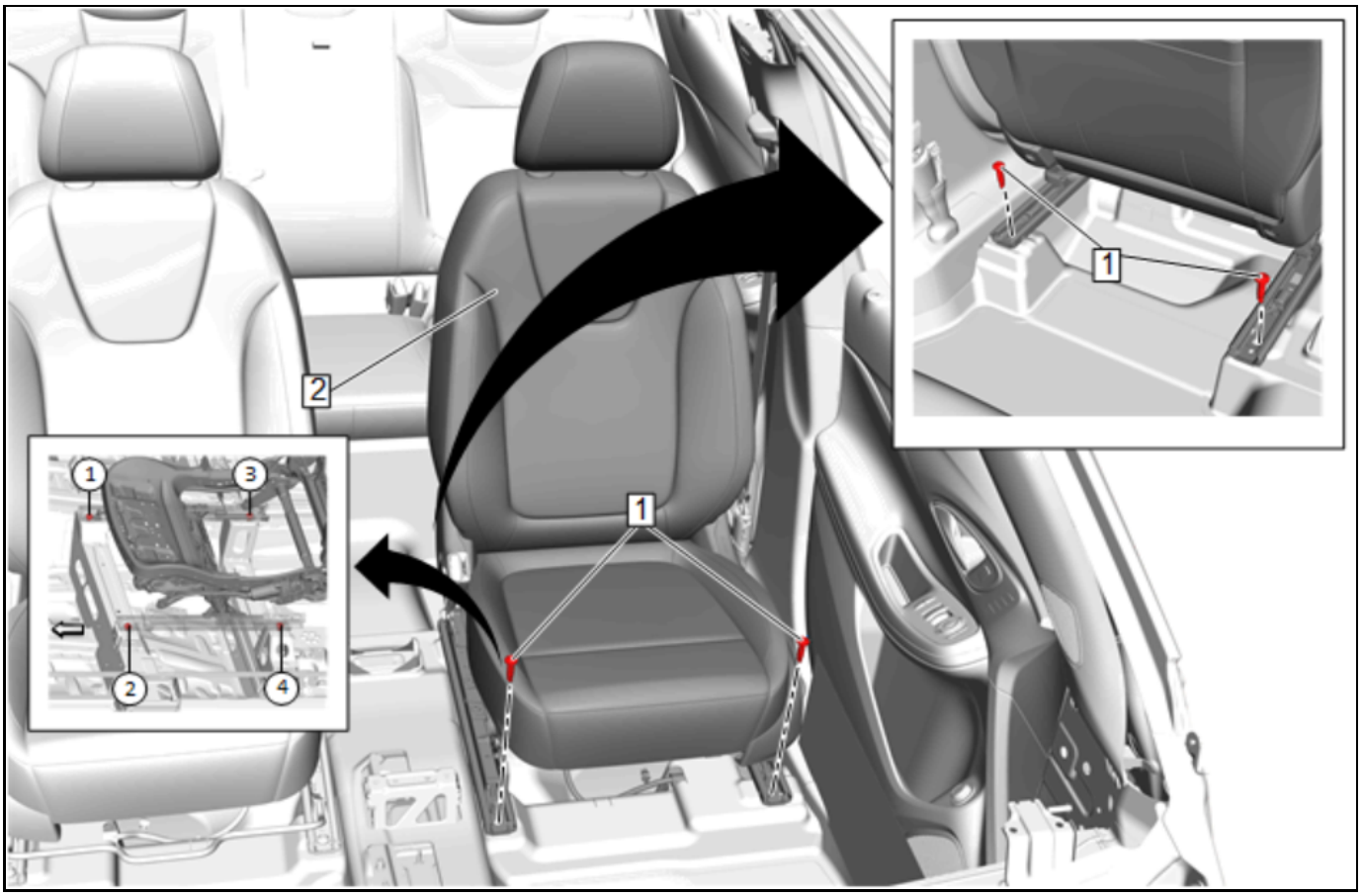

5482373

2. Remove the driver and passenger seat (2).

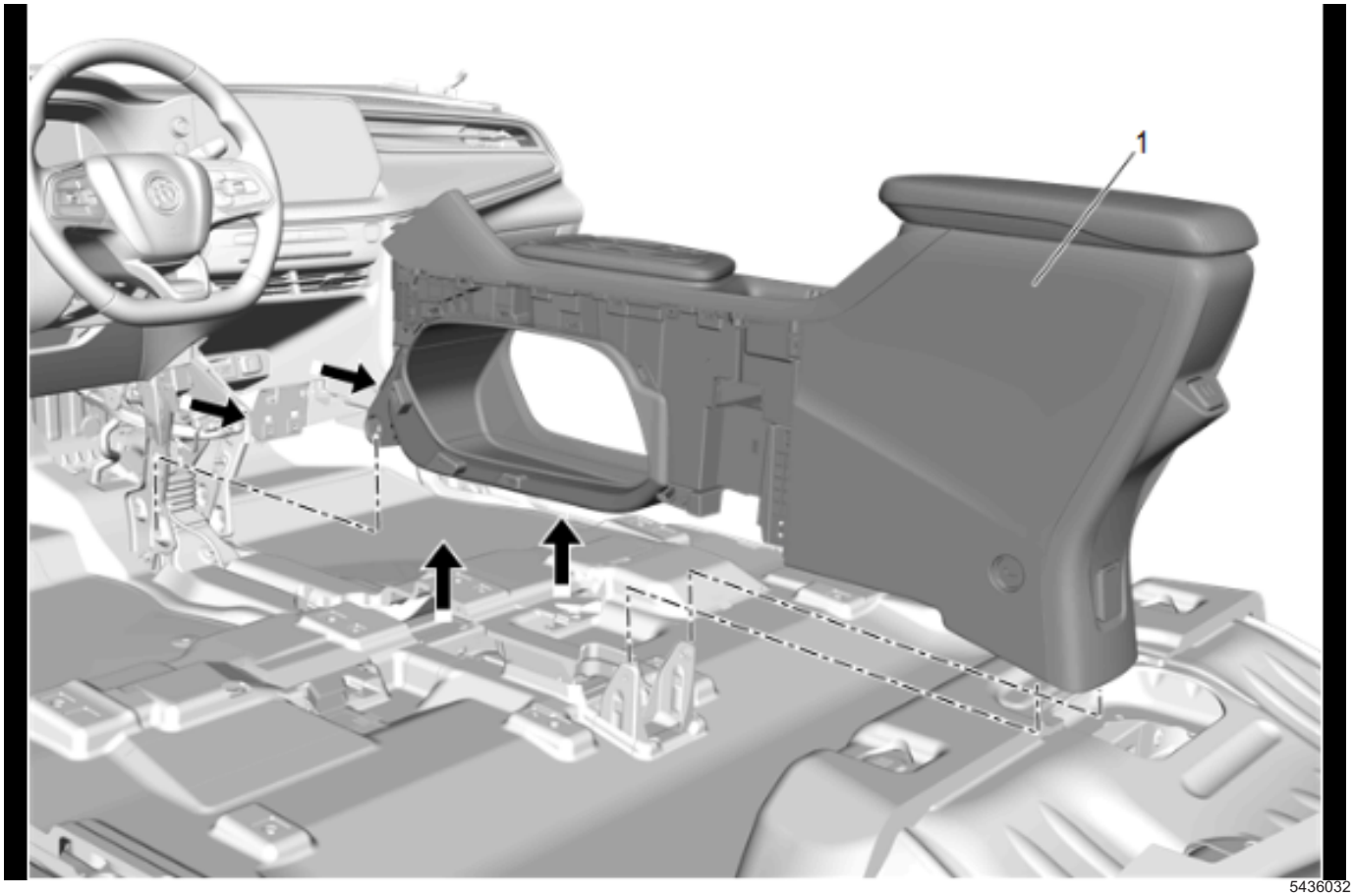

5436032

3. Front Floor Console (1) » Remove — Front Floor Console Removal and Installation

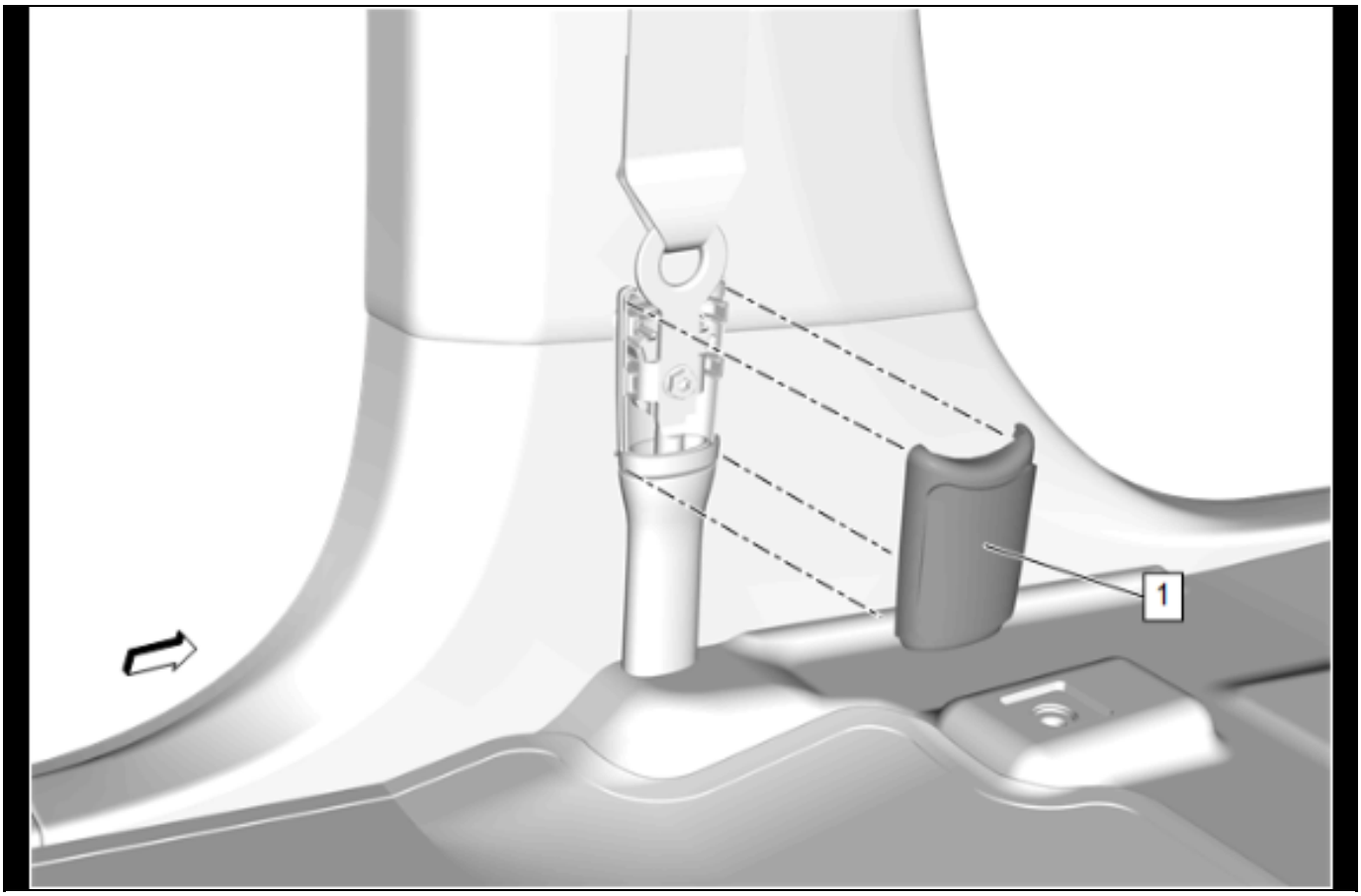

5480375

Note: Use a flat bladed plastic tool to remove.

Note: Left side shown, right side similar.

4. Front Seat Belt Anchor Plate Tensioner Cover (1) - Left Side and Right Side » Remove [2x]

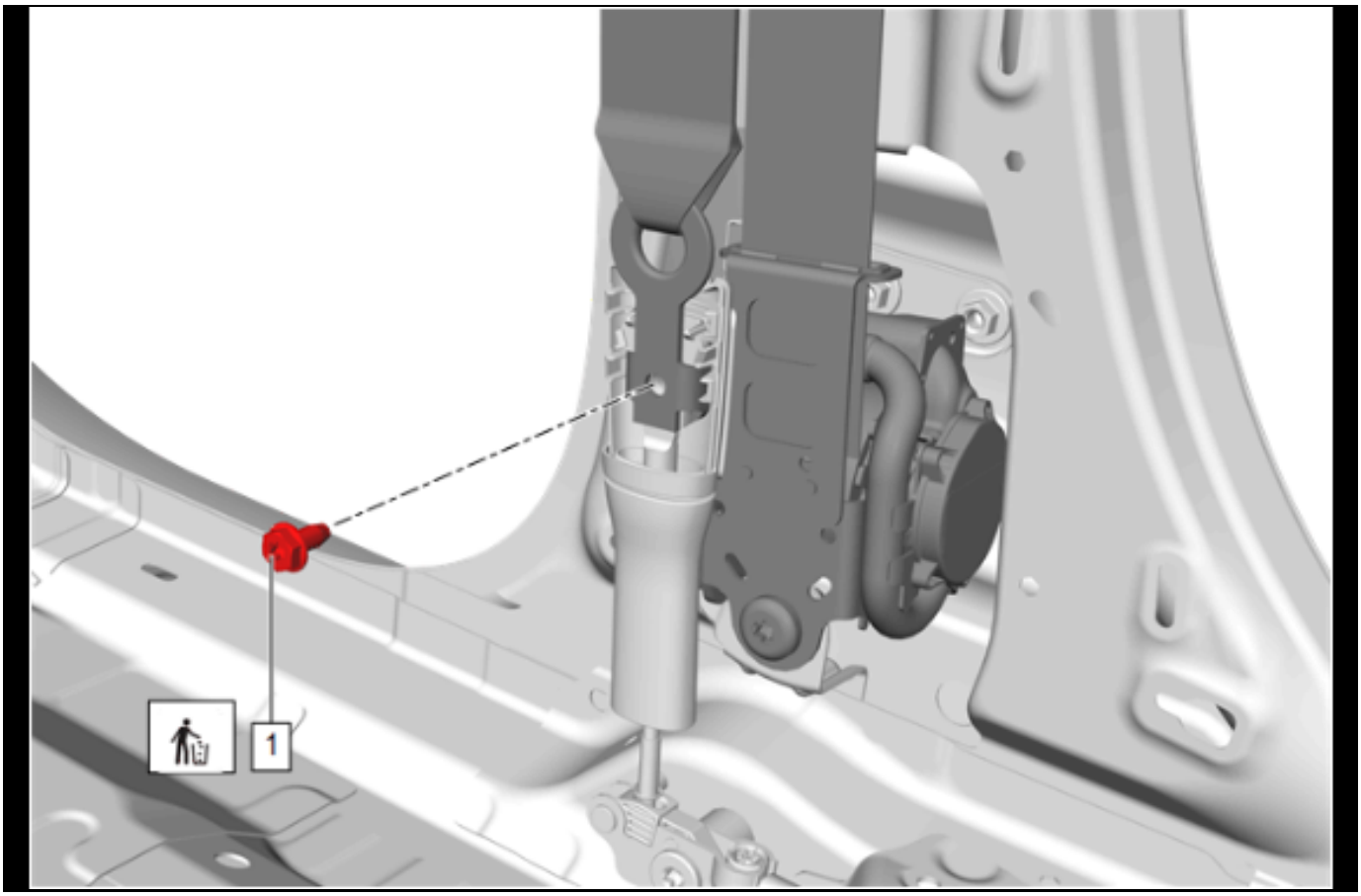

5482337

Note: Left side shown, right side similar.

5. Front Seat Belt Anchor Plate Tensioner Bolt (1) - Left Side and Right Side » Remove and DISCARD [2x]

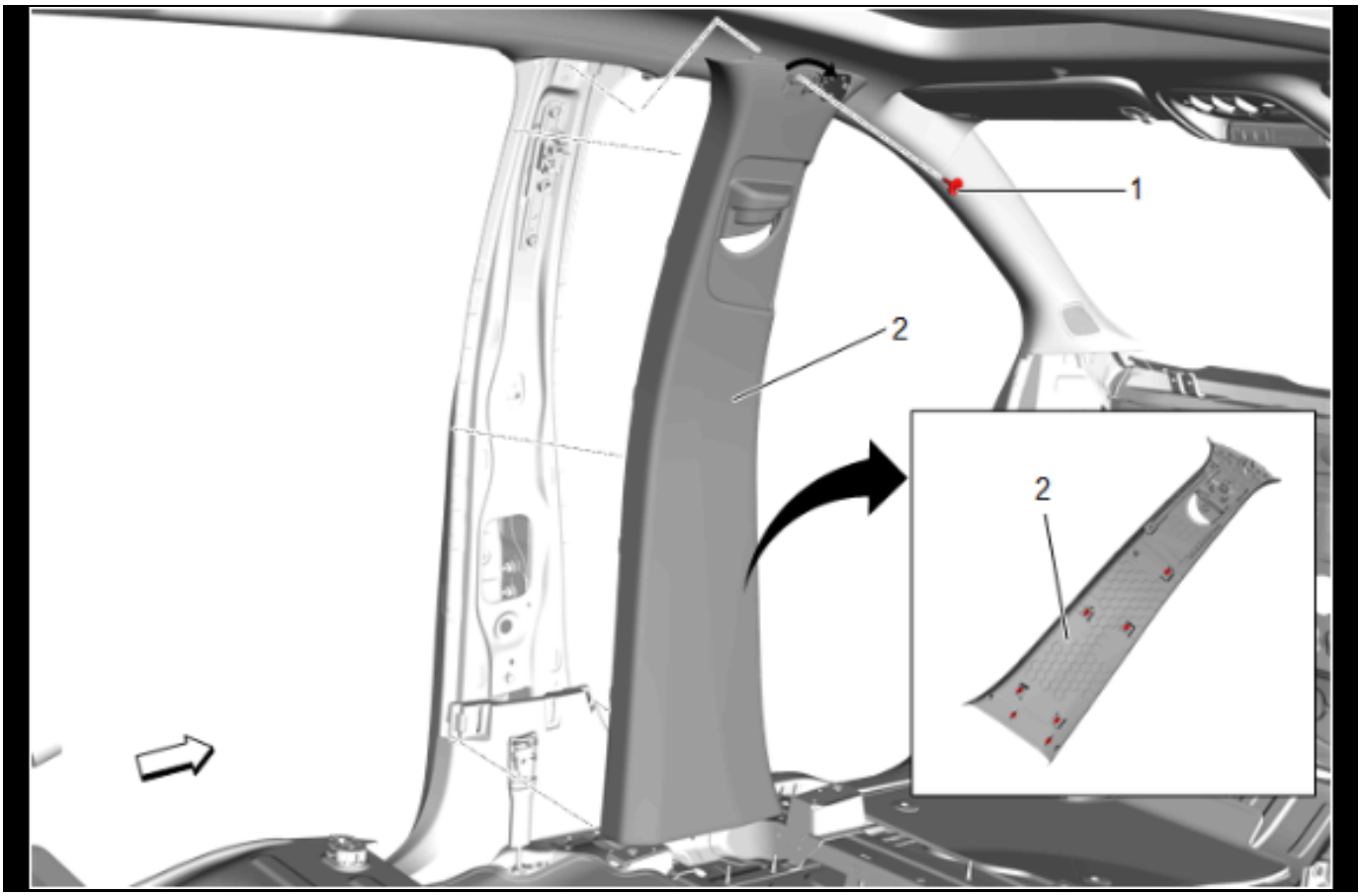

5480374

Note: Left side shown, right side similar.

6. Use a flat-bladed tool to open the bolt cap.

   Note: Use a magnetic tool to remove and install the bolt carefully because the bolt may drop inside the vehicle.

7. Center Pillar Upper Garnish Molding Bolt (1) - Left Side and Right Side » Remove [2x]
8. Pull the left and right side of center pillar trim panels (2) toward the inside of the vehicle to disengage the retainers.

   Note: When replacing the center pillar trim panel, feed the front seat belt through the panel.

9. Center Pillar Trim Panel (2) - Left Side and Right Side » Remove [2x]

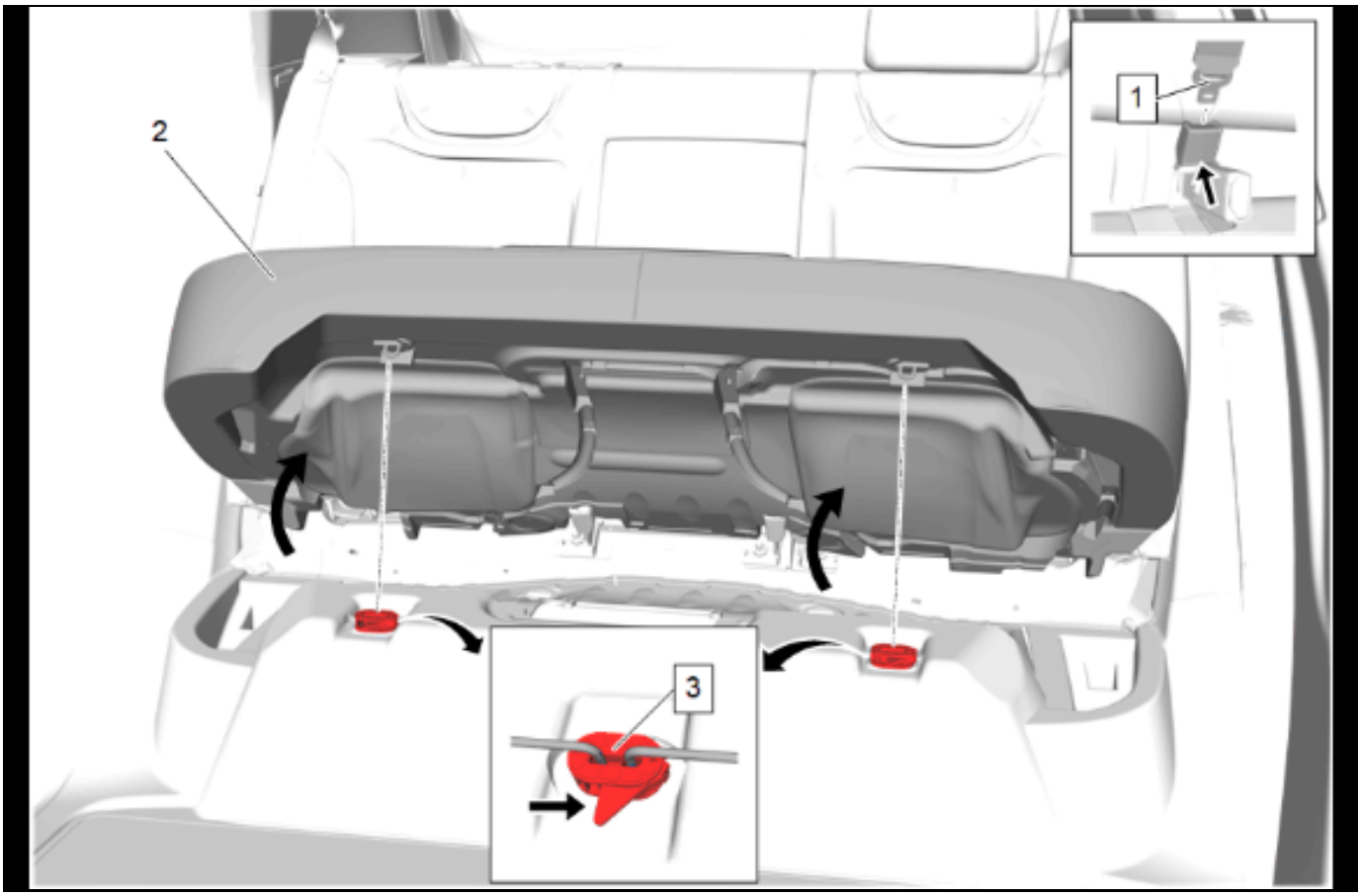

5675661

10. Rear Seat Cushion (2) » Remove — Rear Seat Cushion Removal and Installation

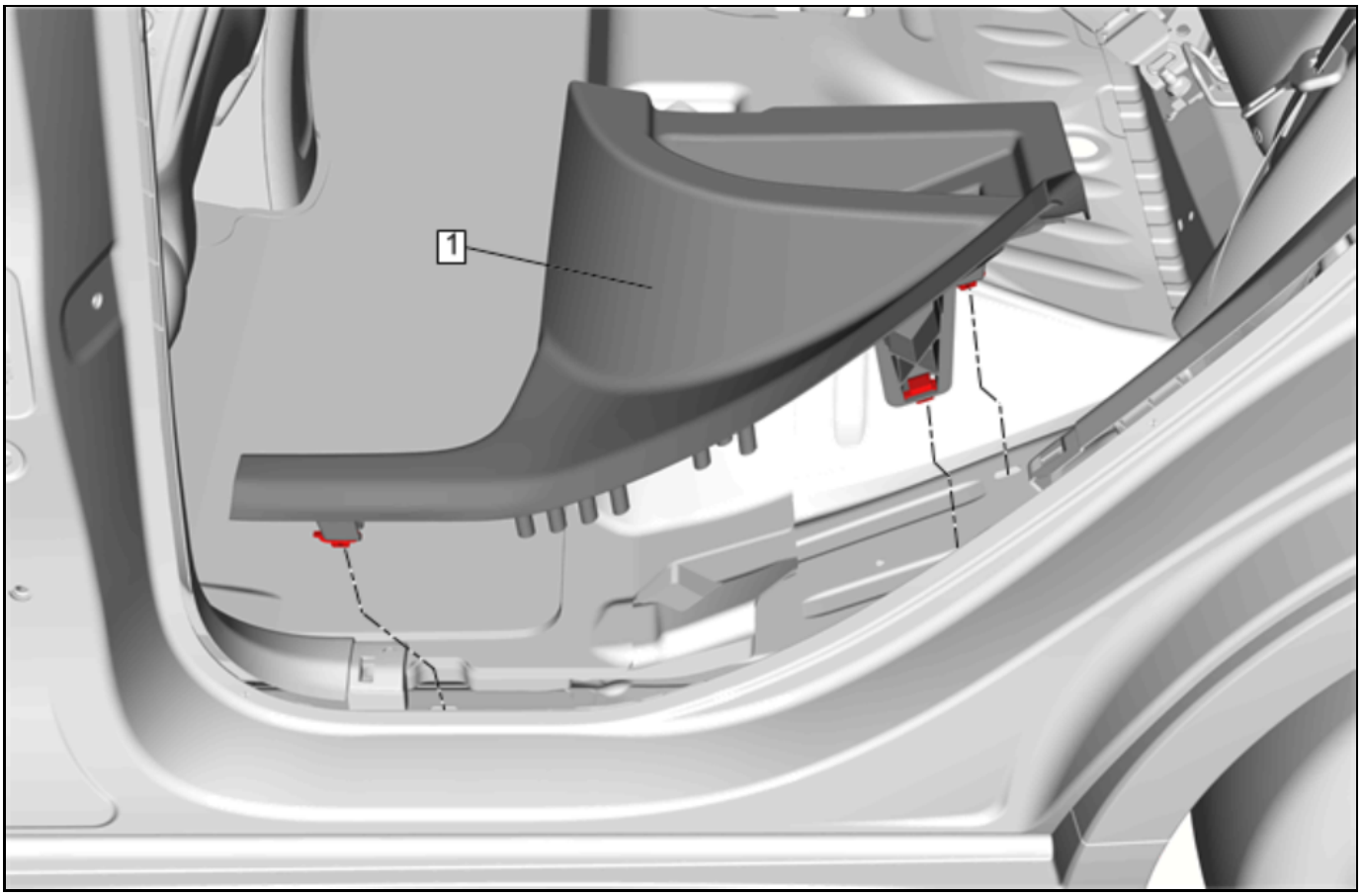

5480463

Note: Left side shown, right side similar.

11. Rear Side Door Sill Garnish Molding (1) - Left Side and Right Side » Remove [2x]
    - 11.1. Starting at the front of the sill garnish molding, pull upward at the B-Pillar joint to disengage sill garnish molding.
    - 11.2. Work your way rearward disengaging all of the garnish molding clips then pull forward to disengage from the C-Pillar lower.
    - 11.3. Replace the retainers as required.

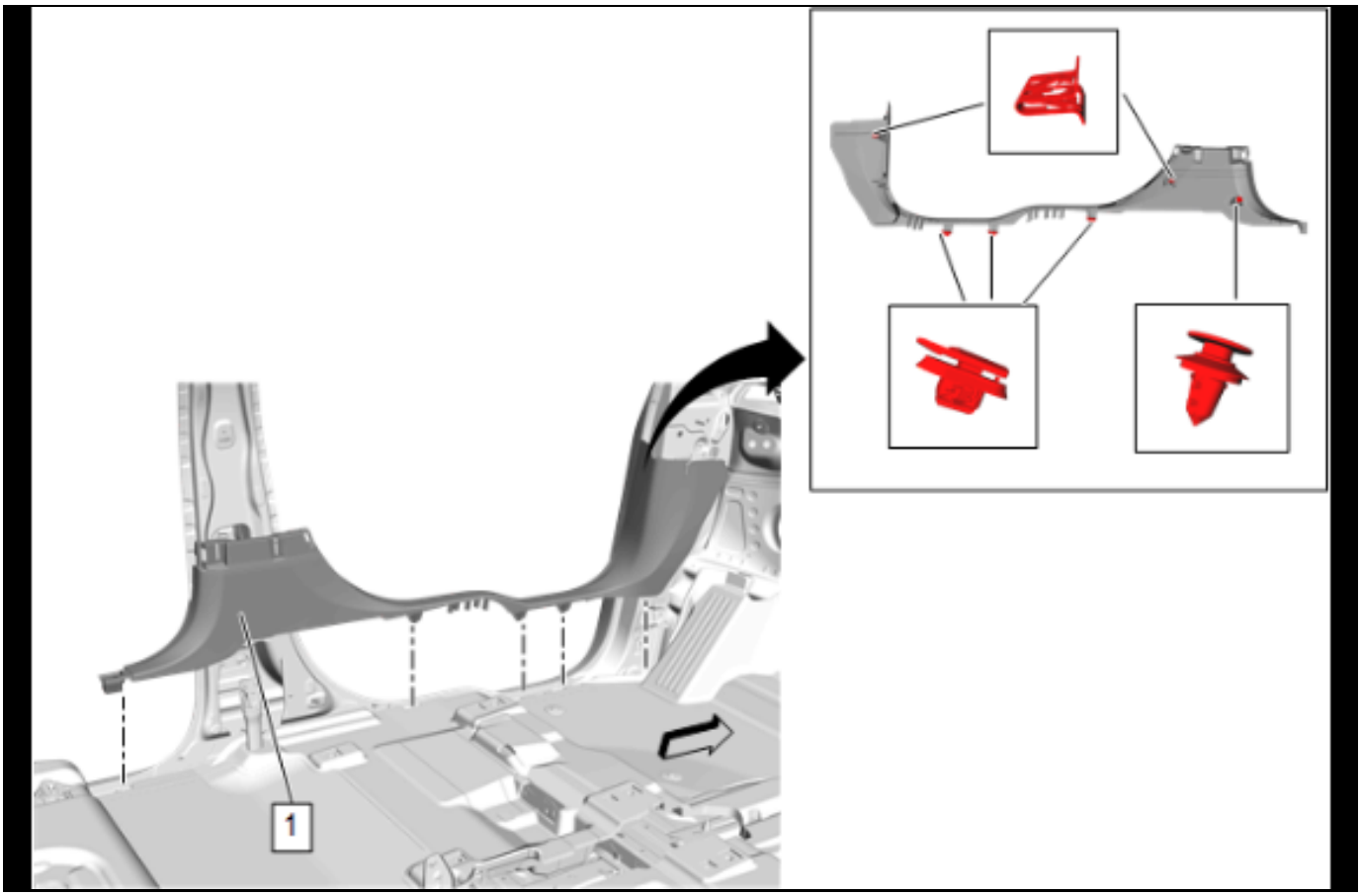

5480376

12. Front Side Door Sill Garnish Molding (1) - Left Side and Right Side » Remove [2x]
    12.1. Starting at the rear of the garnish molding, pull upward at the B-Pillar joint to disengage garnish molding.
    12.2. Work your way forward disengaging all of the garnish molding clips then pull rearward to disengage the clip on the forward vertical wall.
    12.3. Reposition the front floor panel carpet as needed.

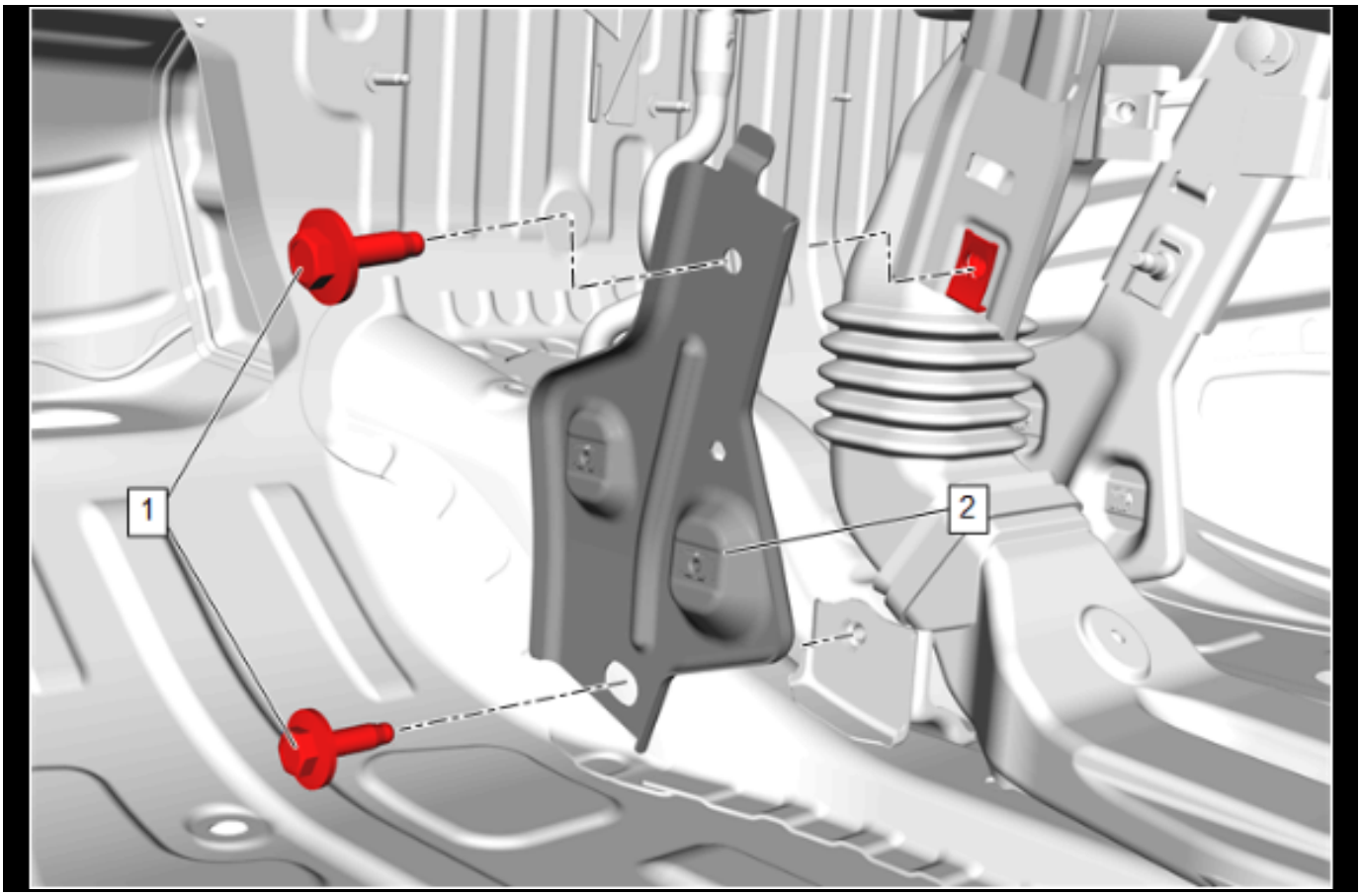

5482077

Note: Left side shown, right side similar.

13. Instrument Panel Tie Bar Brace Bolt (1) - Left Side and Right Side » Remove [4x]
14. Instrument Panel Tie Bar Brace (2) - Left Side and Right Side » Remove [2x]

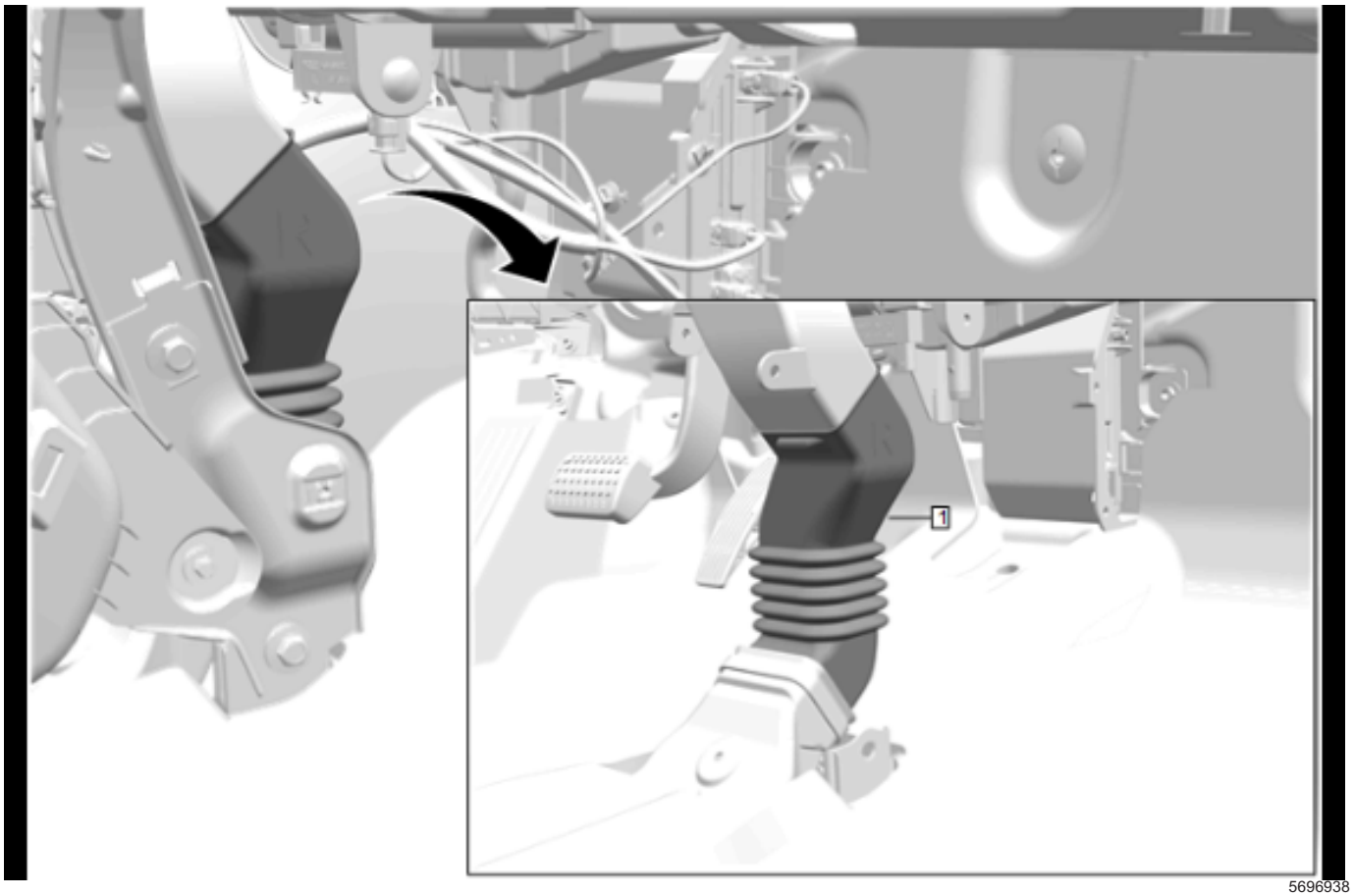

5696938

15. Floor Rear Air Outlet Duct Adapter (1) » Remove

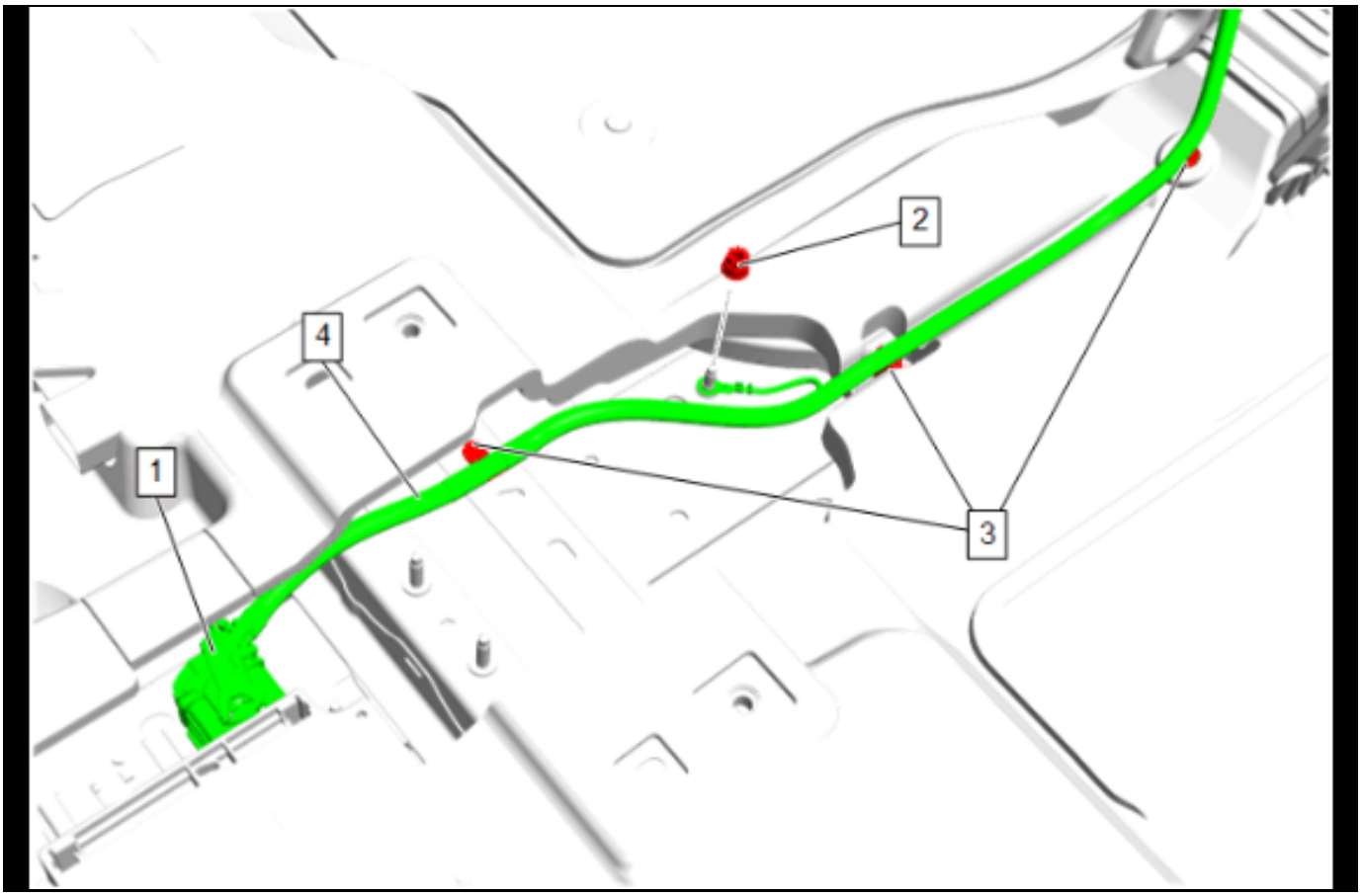

5699205

16. Disconnect the electrical connector. (1)
17. Instrument Panel Wiring Harness Ground Nut (2)
    » Remove
18. Wiring Harness Retainer (3) » Remove [3x]
19. Reposition the wiring harness. (4)

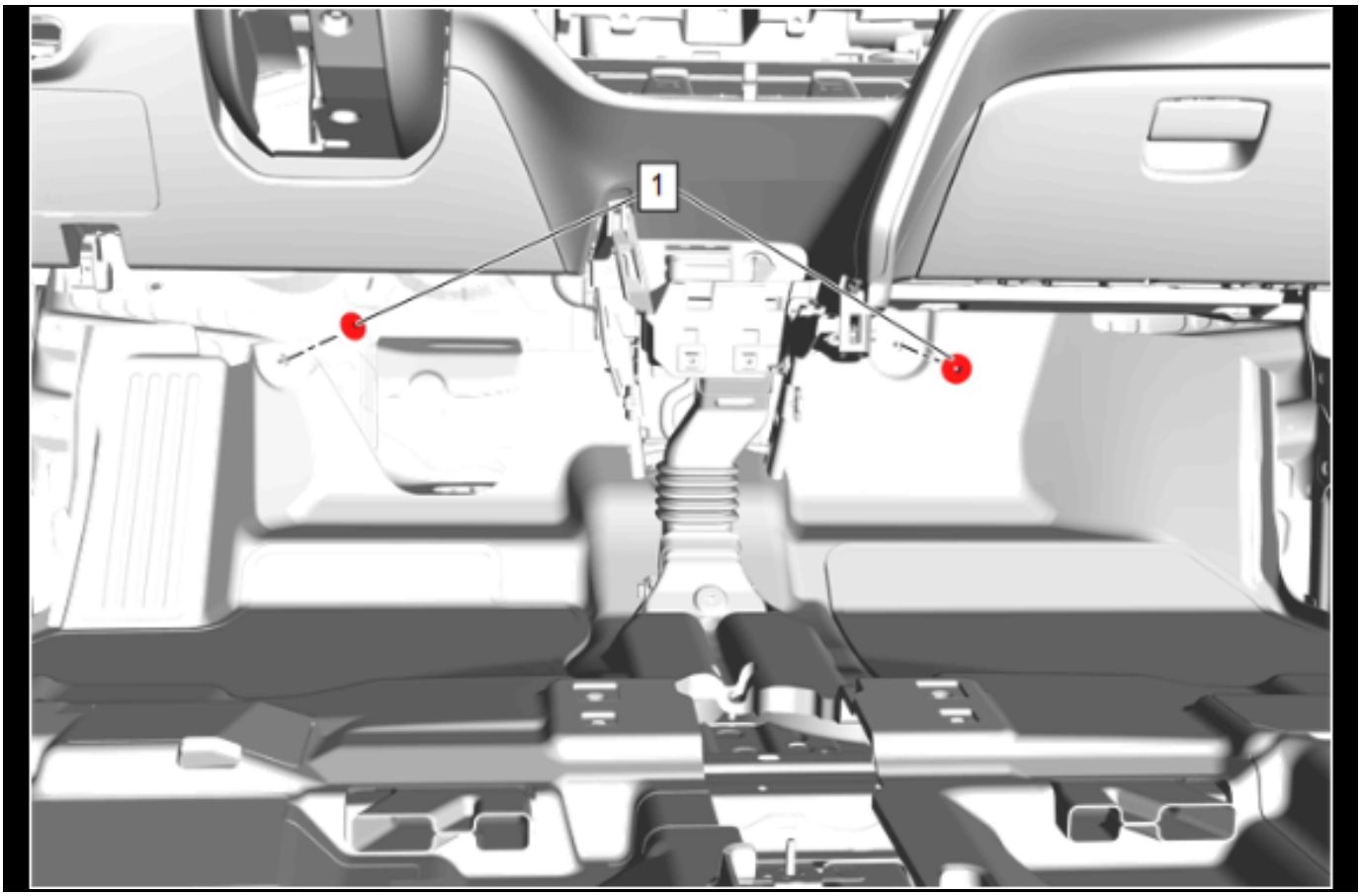

5483670

20. Floor Carpet Retainer Button (1) » Remove [2x]

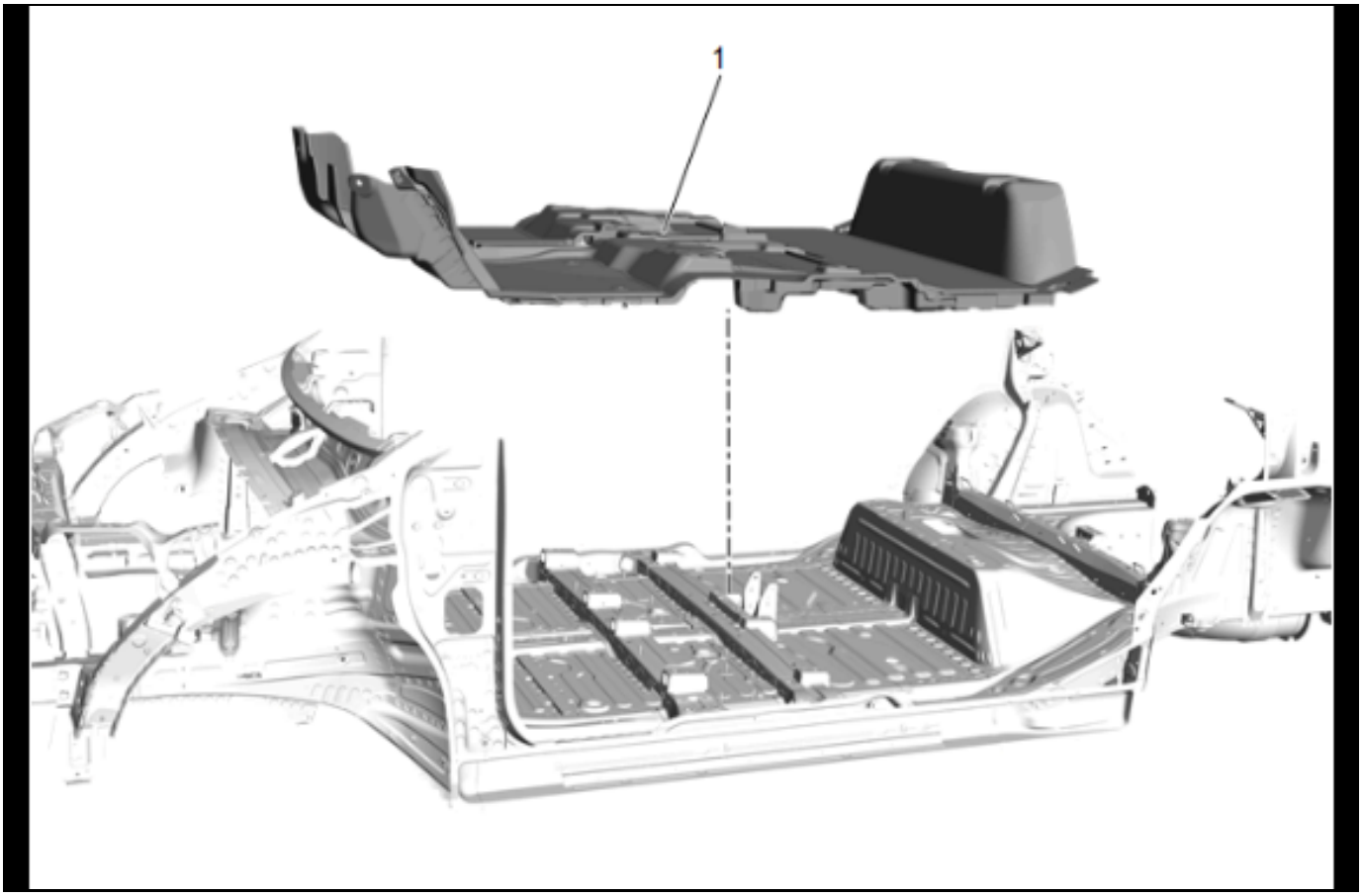

5483671

21. Floor Panel Carpet (1) » Remove

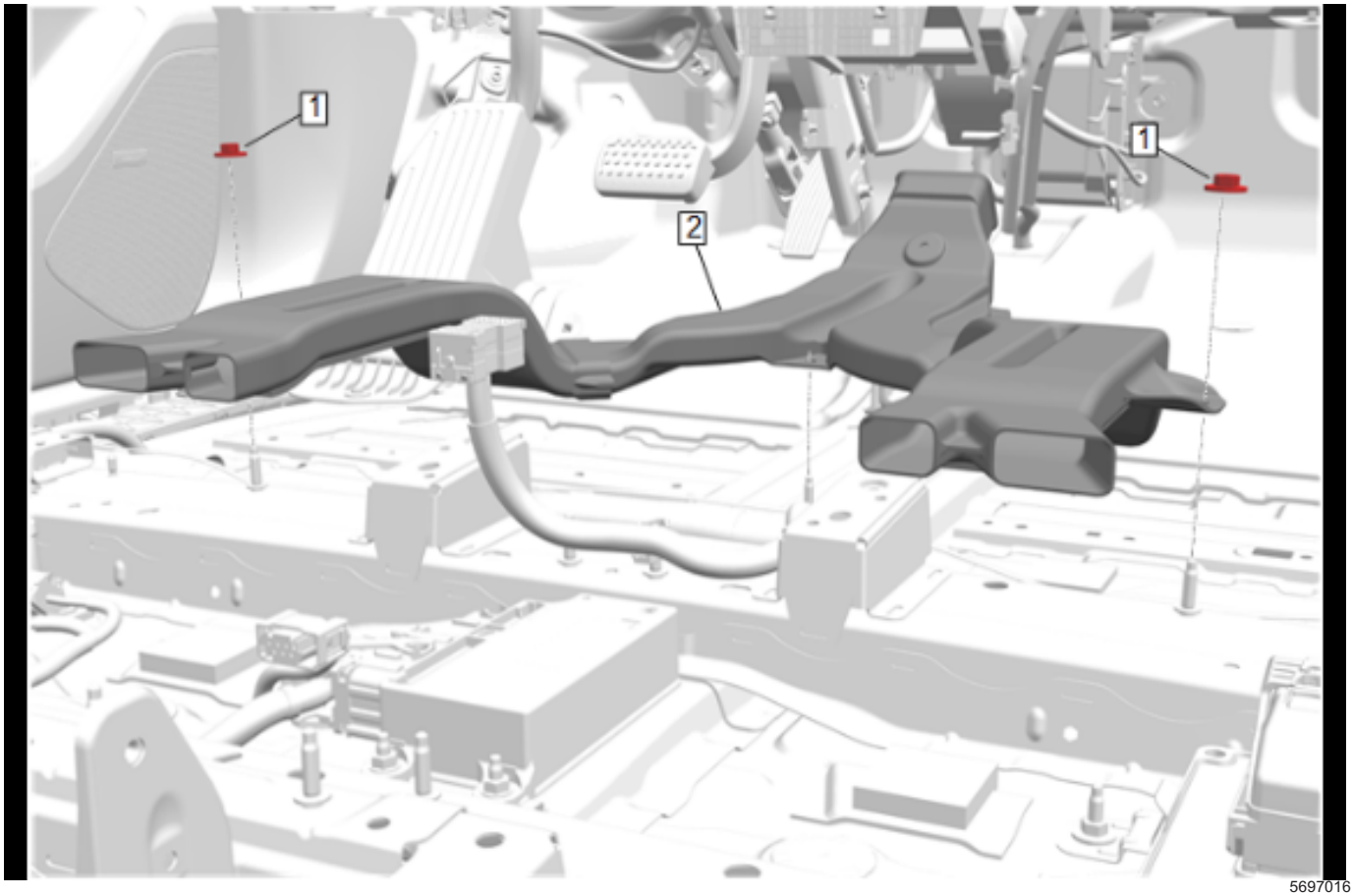

5697016

22. Floor Rear Air Outlet Duct Nut (1) » Remove [2x]
23. Floor Rear Air Outlet Duct (2) » Remove

Installation Procedure

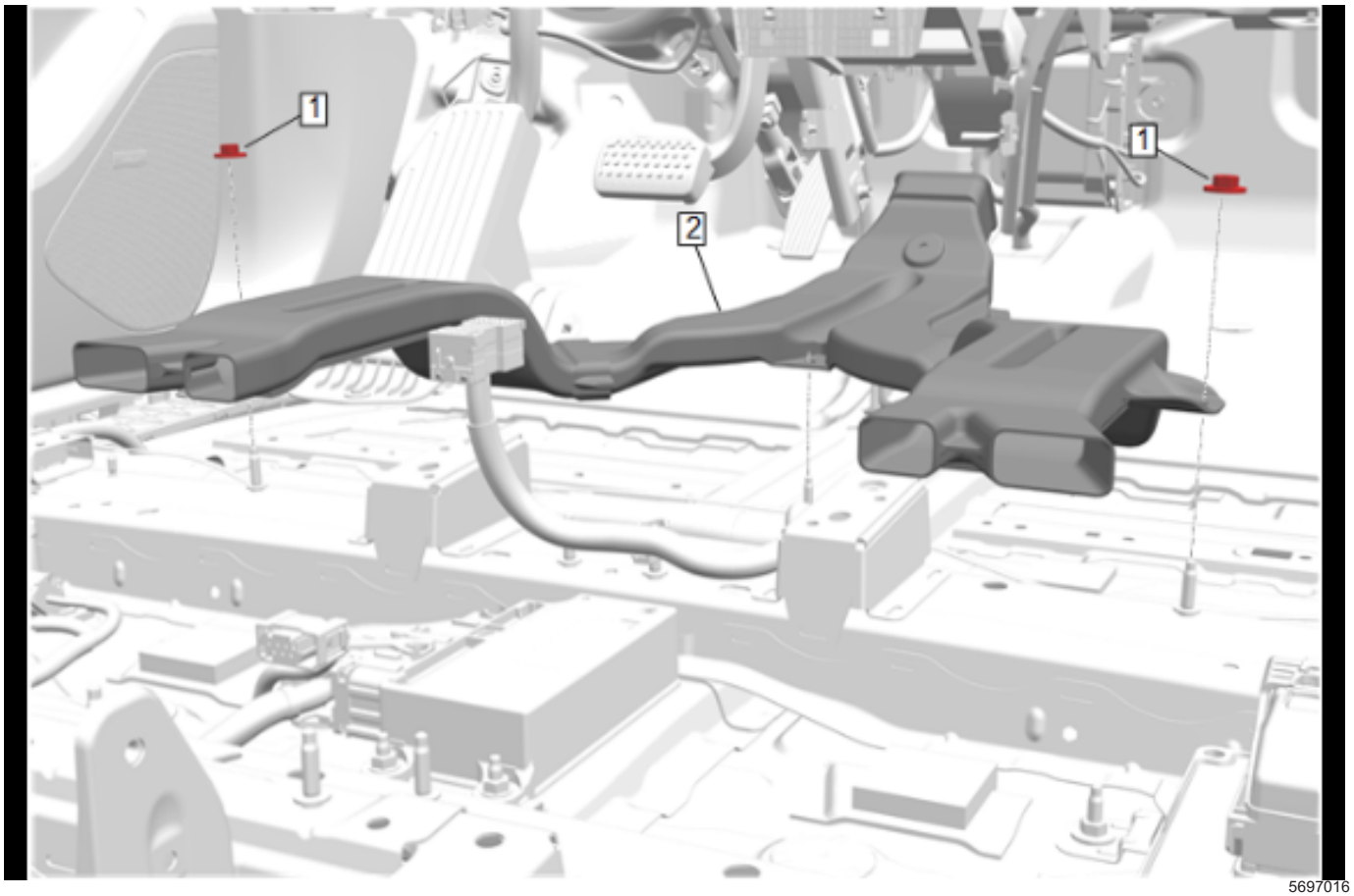

5697016

1. Floor Rear Air Outlet Duct (2) » Install
2. Floor Rear Air Outlet Duct Nut (1) » Install and tighten — *Fastener Specifications on page 5-3*[2x]

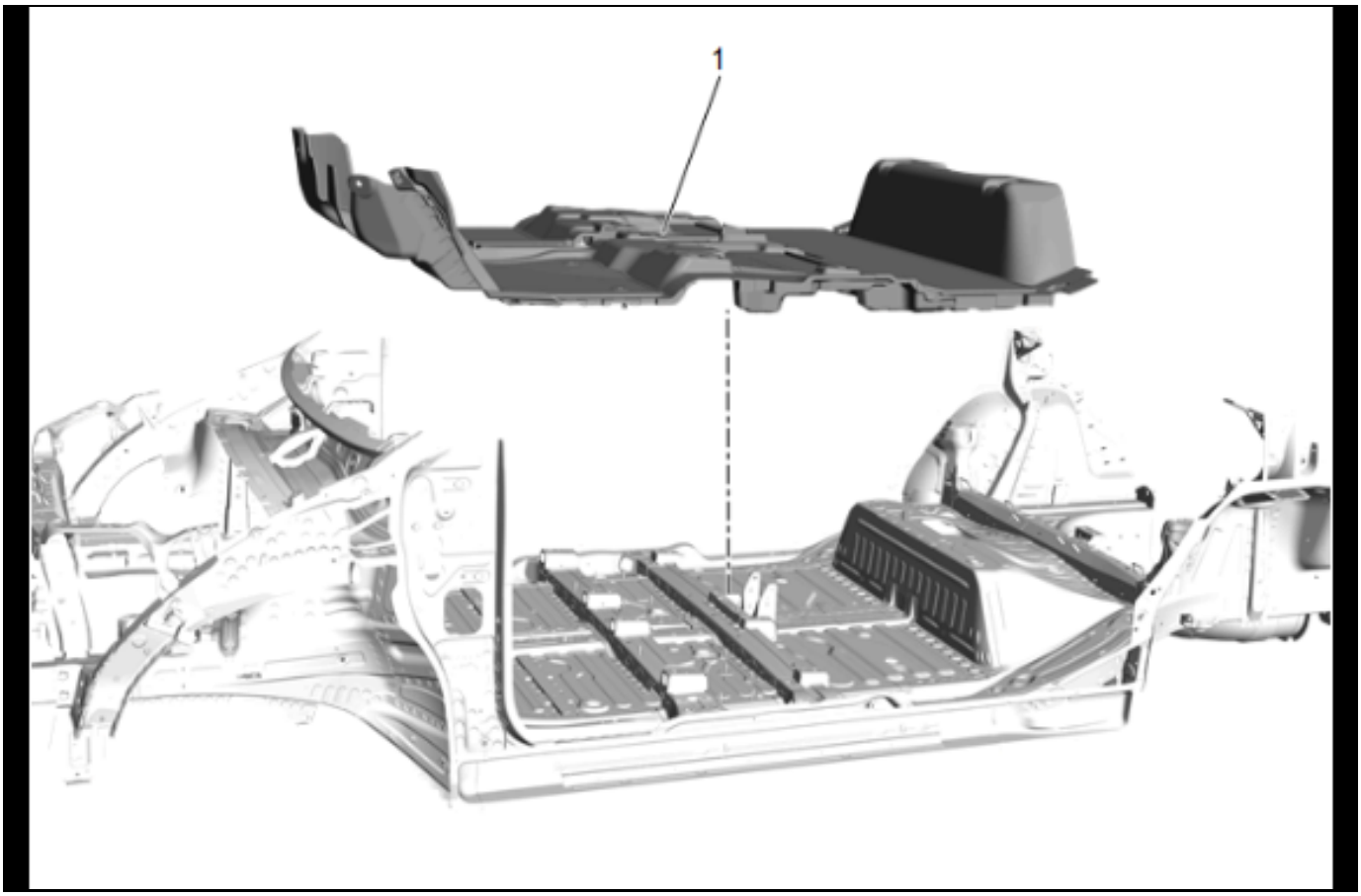

5483671

3. Floor Panel Carpet (1) » Install

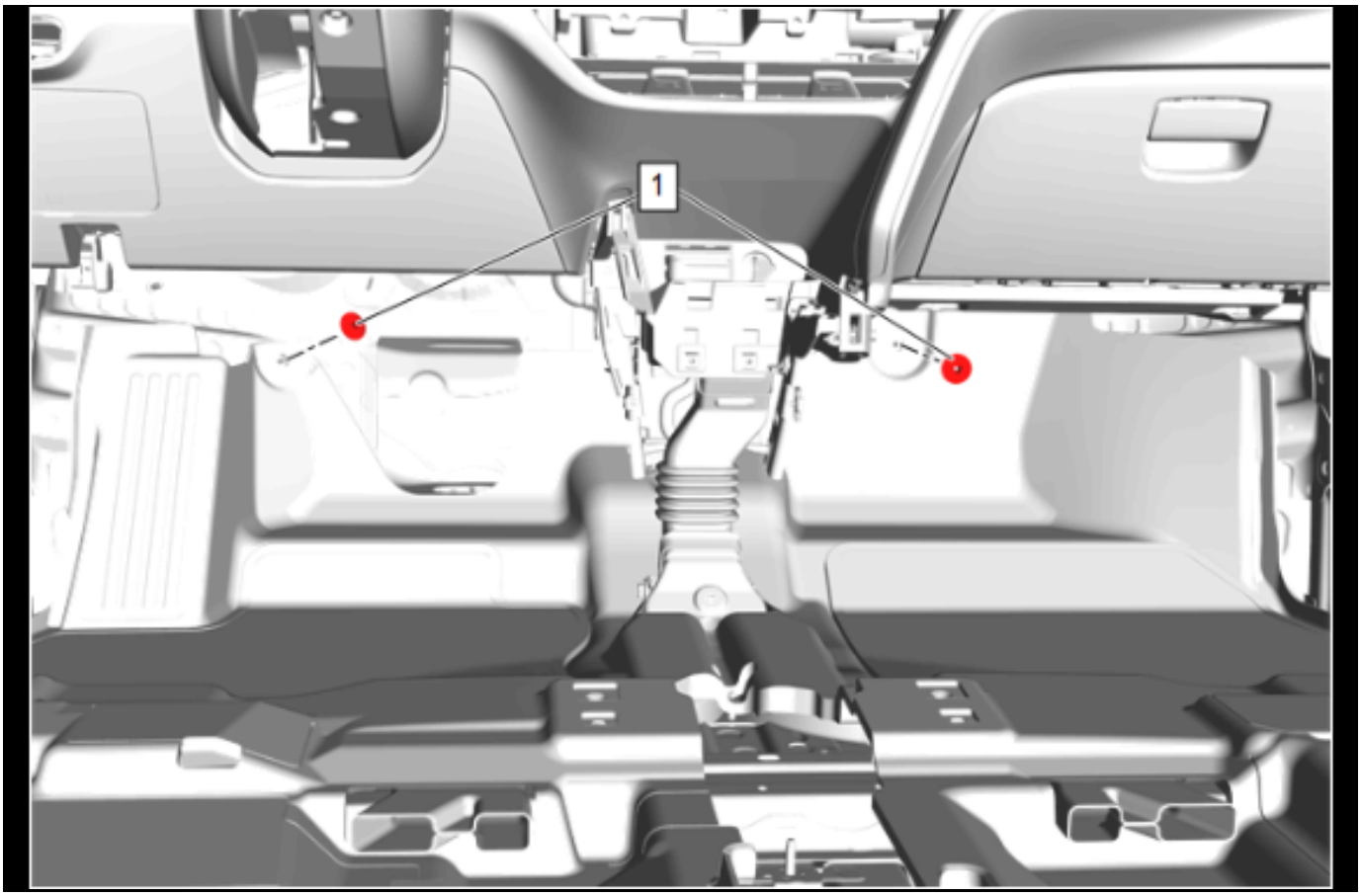

5483670

4. Floor Carpet Retainer Button (1) » Install [2x]

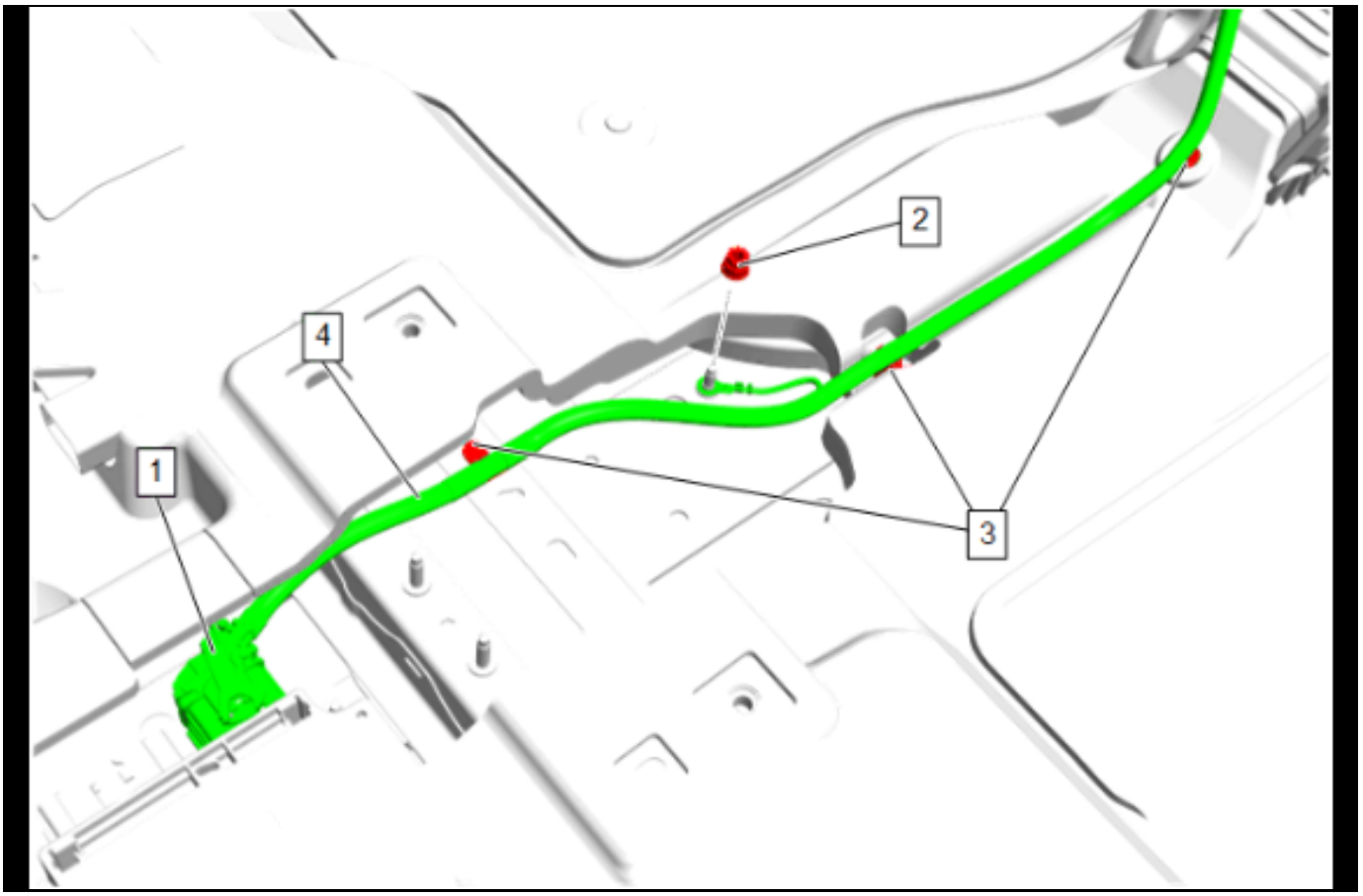

5699205

5. Install the wiring harness. (4)
6. Connect the electrical connector. (1)
7. Wiring Harness Retainer (3) » Install [3x]
8. Instrument Panel Wiring Harness Ground Nut (2)
   Install and tighten

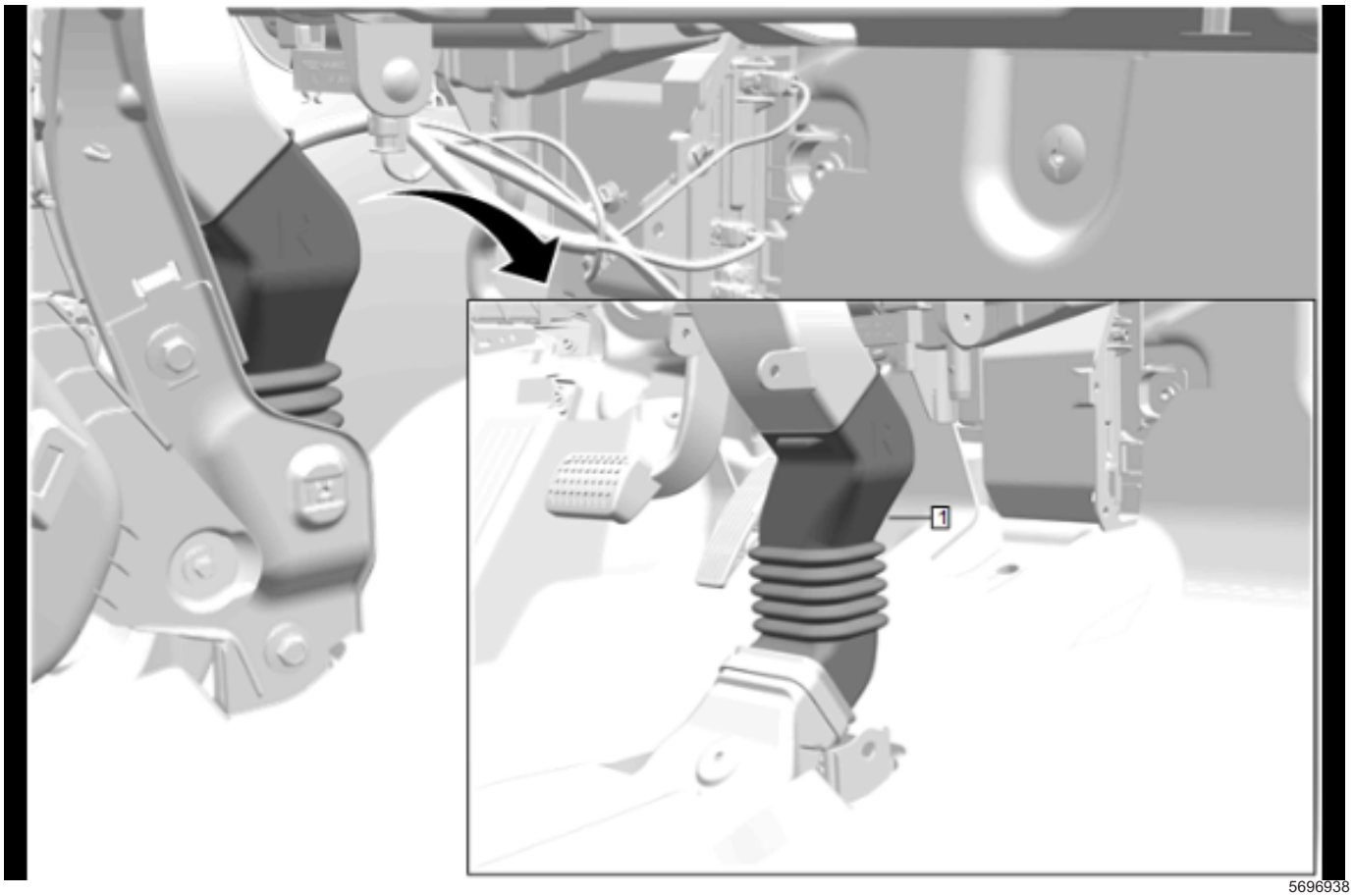

5696938

9. Floor Rear Air Outlet Duct Adapter (1) » Install

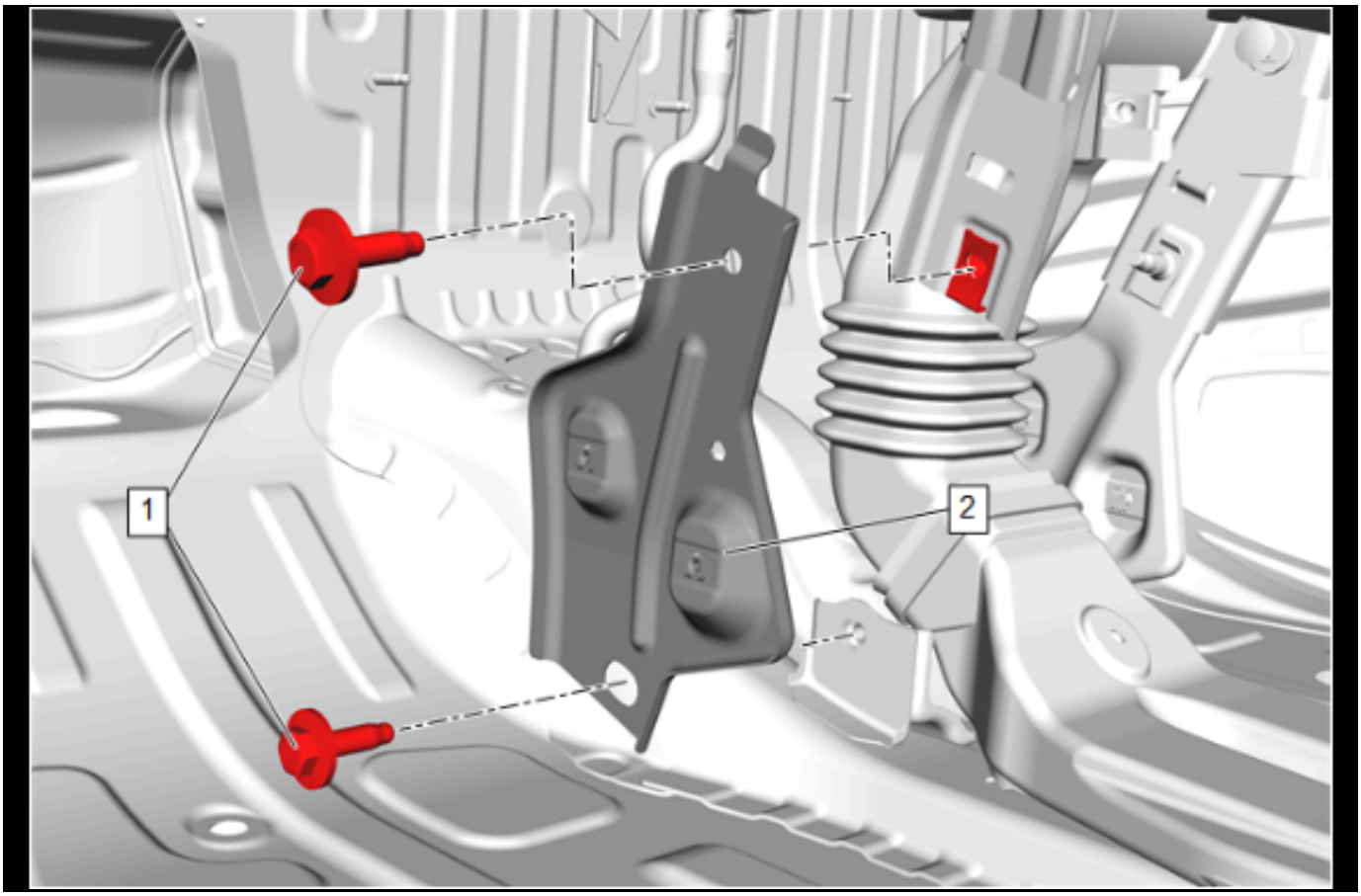

5482077

10. Instrument Panel Tie Bar Brace (2) - Left Side and Right Side » Install [2x]
11. Instrument Panel Tie Bar Brace Bolt (1) - Left Side and Right Side » Install and tighten [4x]

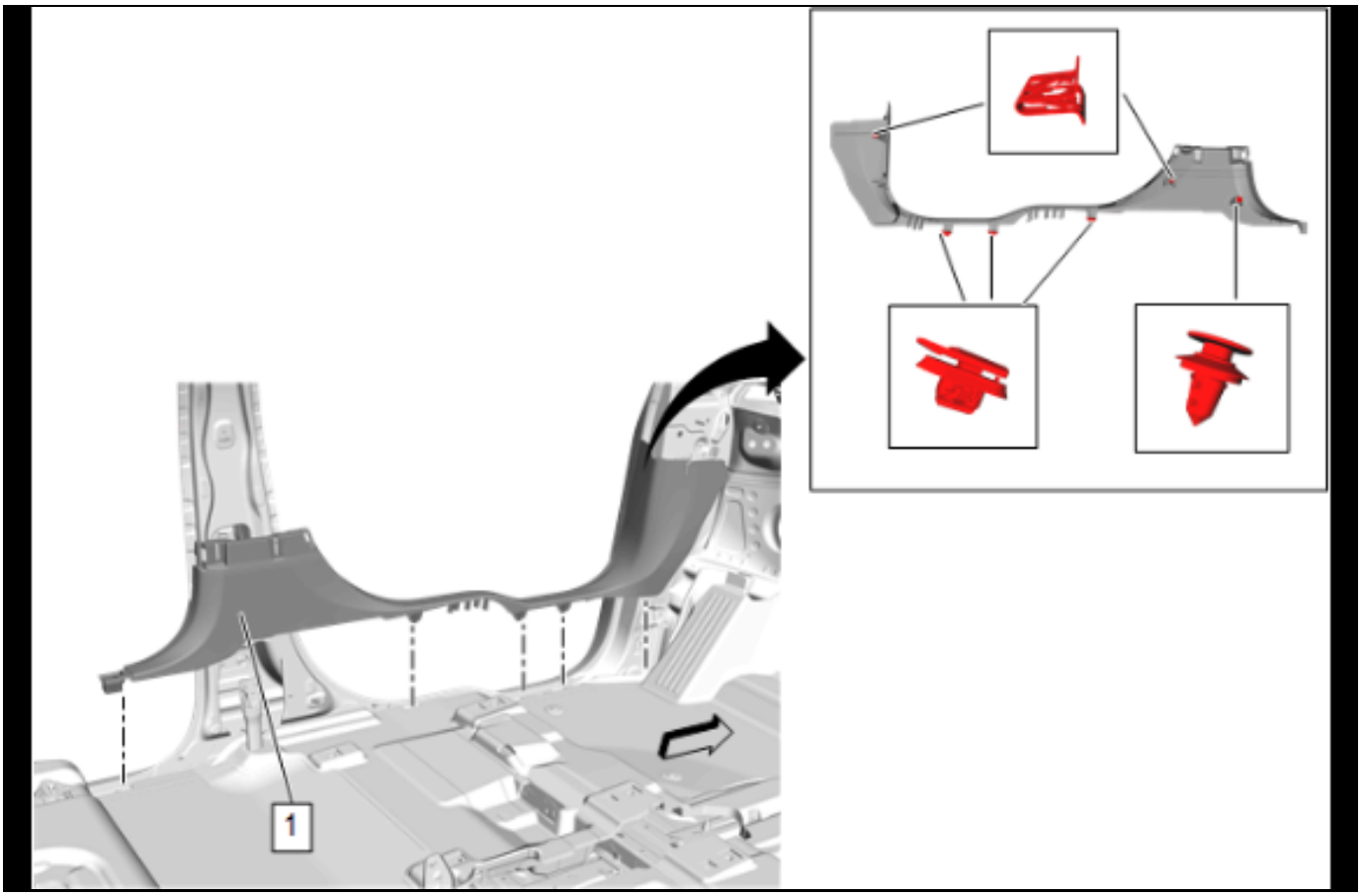

5480376

12. Front Side Door Sill Garnish Molding (1) - Left Side and Right Side » Install [2x]

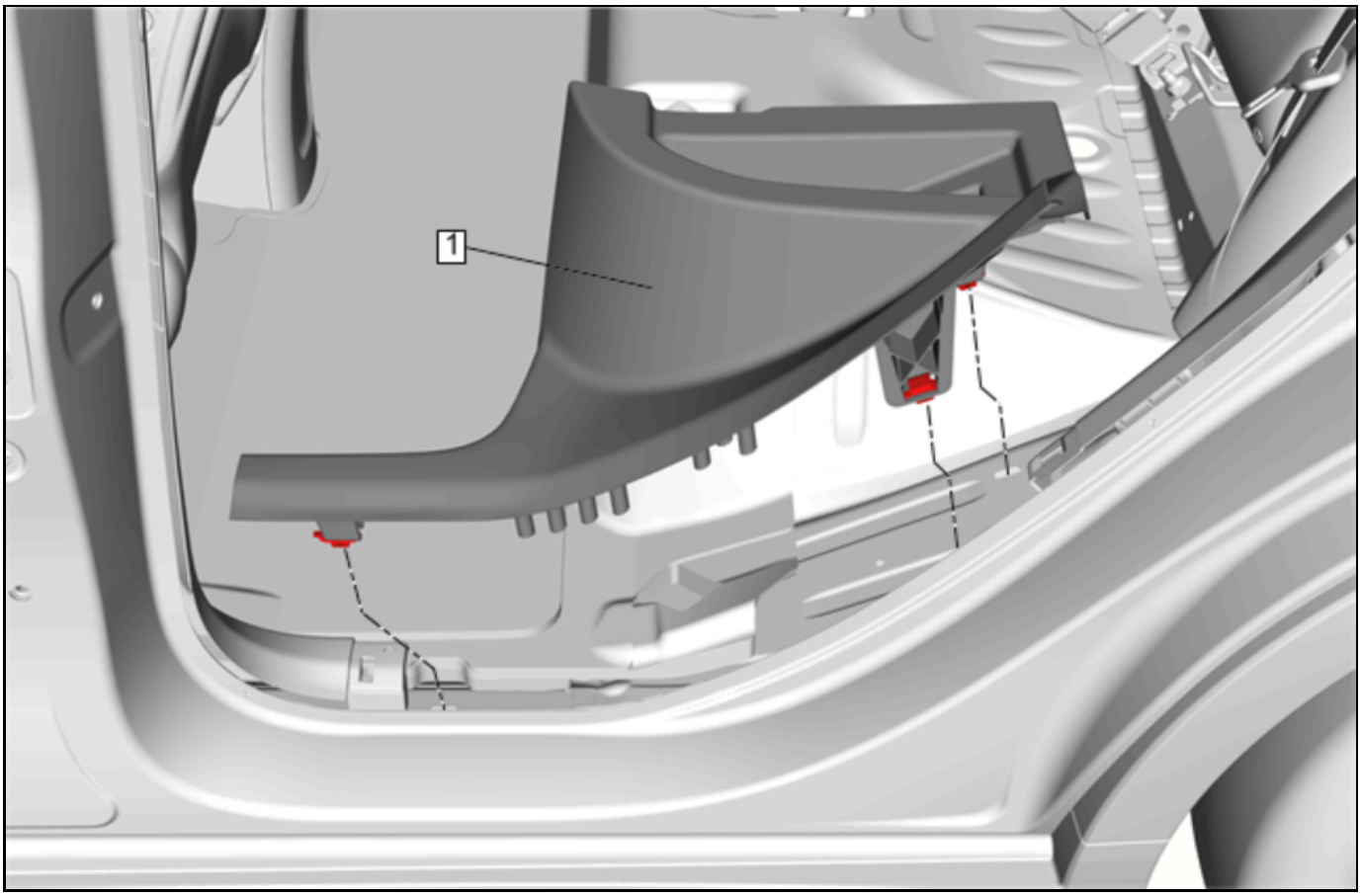

5480463

13. Rear Side Door Sill Garnish Molding (1) - Left Side and Right Side » Install [2x]

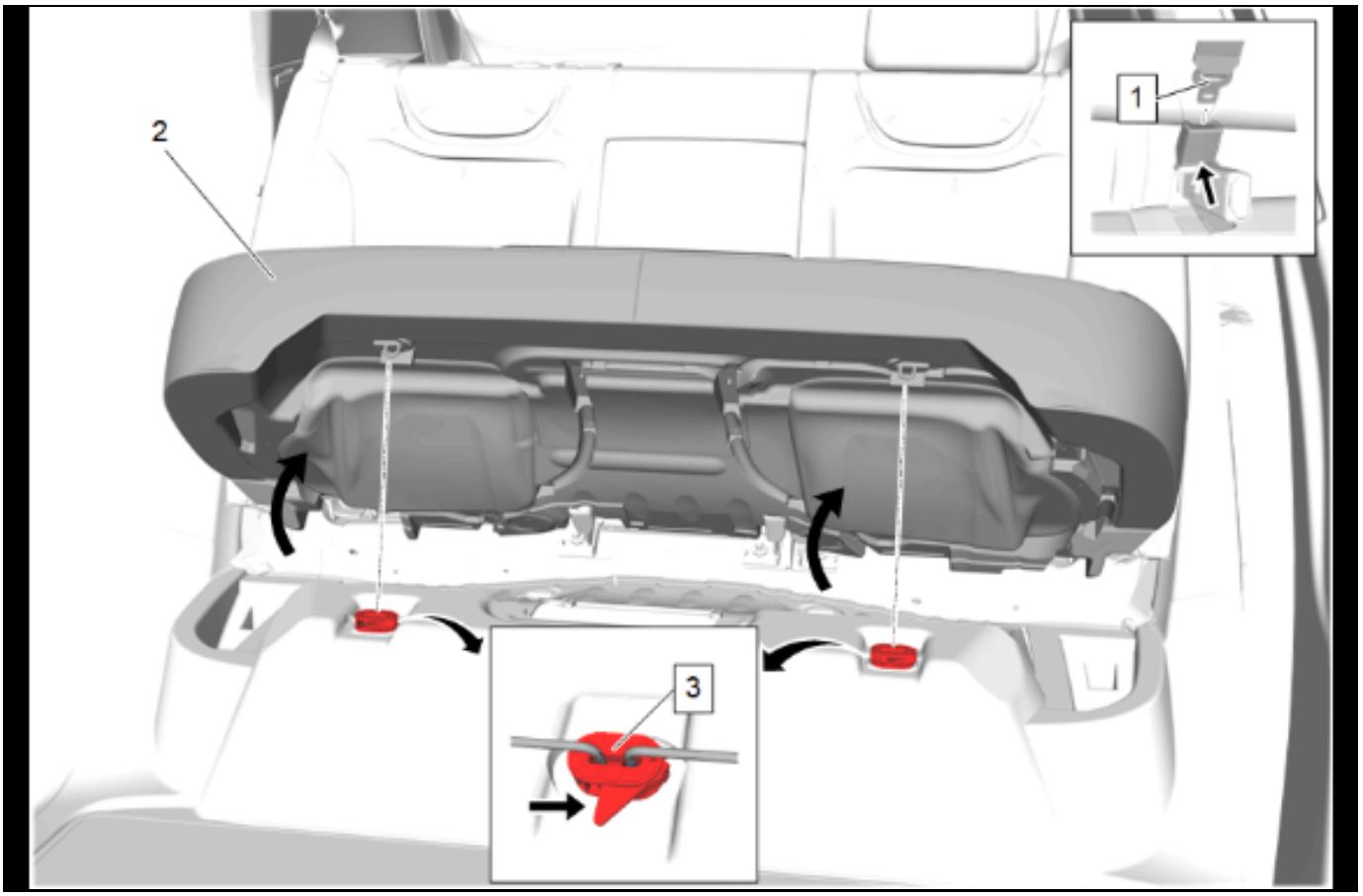

5675661

14. Rear Seat Cushion (2) » Install

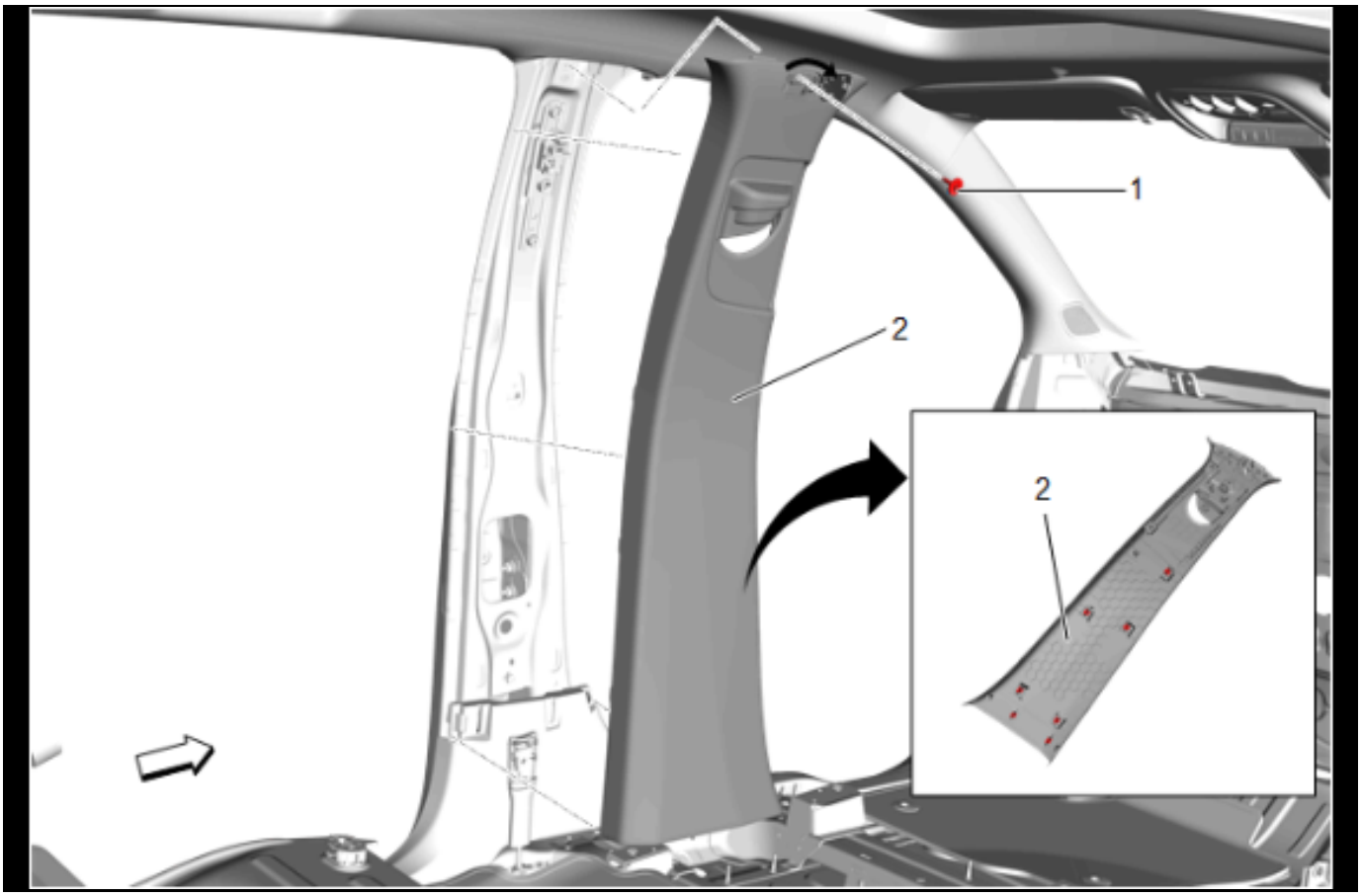

5480374

Note: When replacing the center pillar trim panel, feed the front seat belt through the panel.

15. Center Pillar Lower Trim Panel (2) - Left Side and Right Side » Install [2x]

    Note: Use a magnetic tool to remove and install the bolt carefully because the bolt may drop inside the vehicle.

16. Center Pillar Upper Garnish Molding Bolt (1) - Left Side and Right Side » Install and tighten [2x]
17. Close the bolt cap.

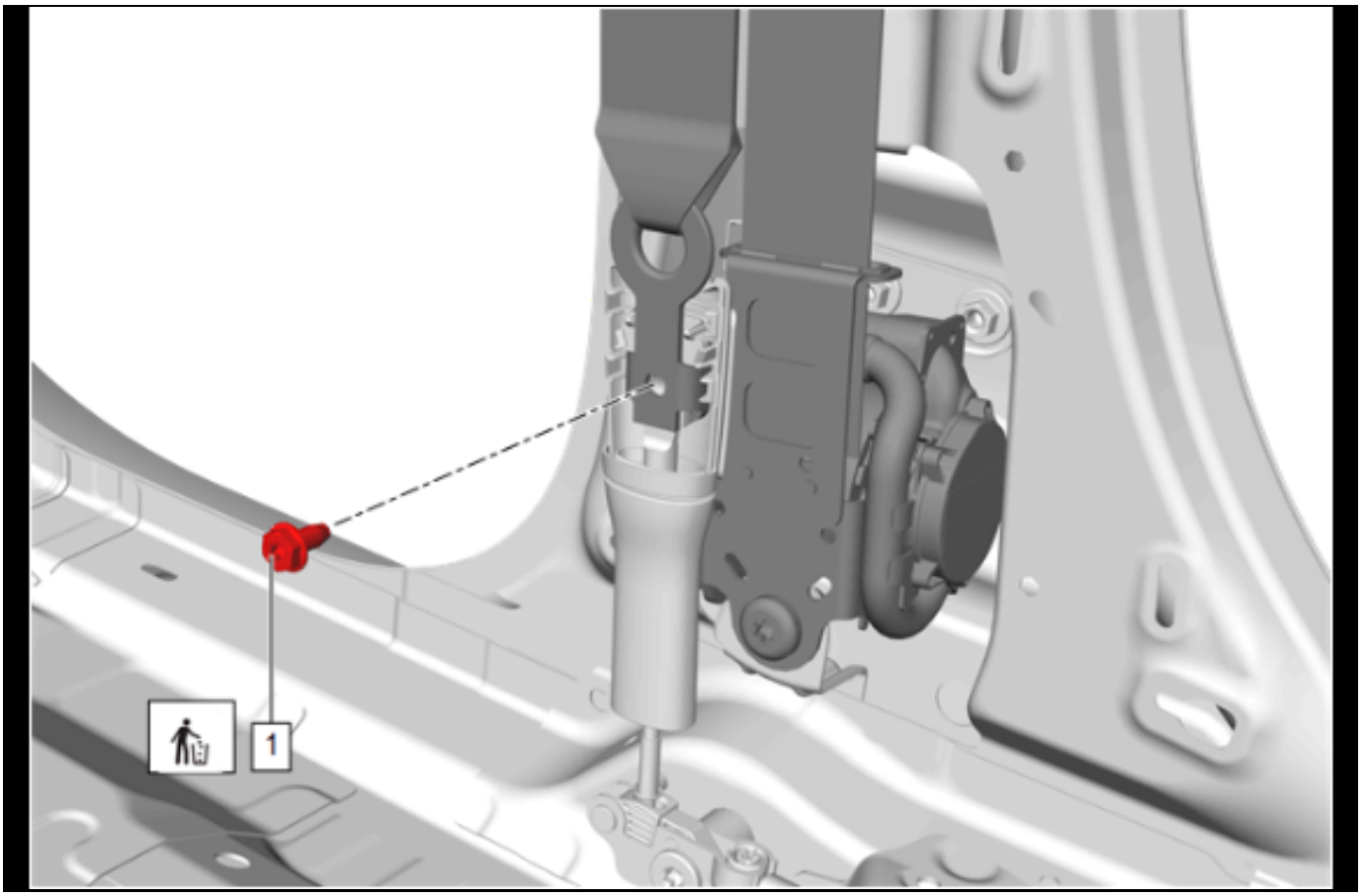

5482337

18. Front Seat Belt Anchor Plate Tensioner Bolt (1) - Left Side and Right Side » Install NEW and tighten [2x]

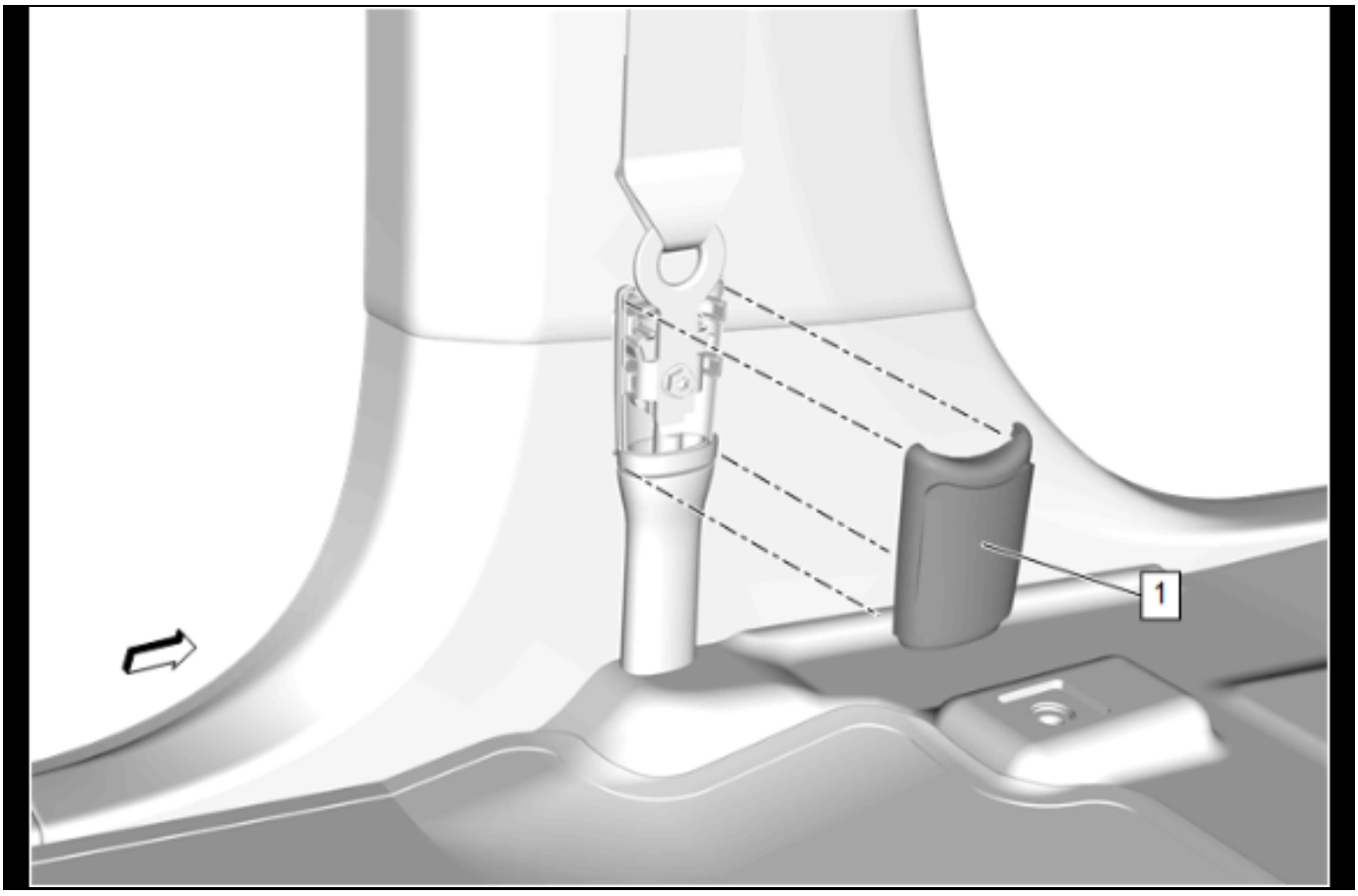

5480375

19. Front Seat Belt Anchor Plate Tensioner Cover (1)
    - Left Side and Right Side » Install [2x]

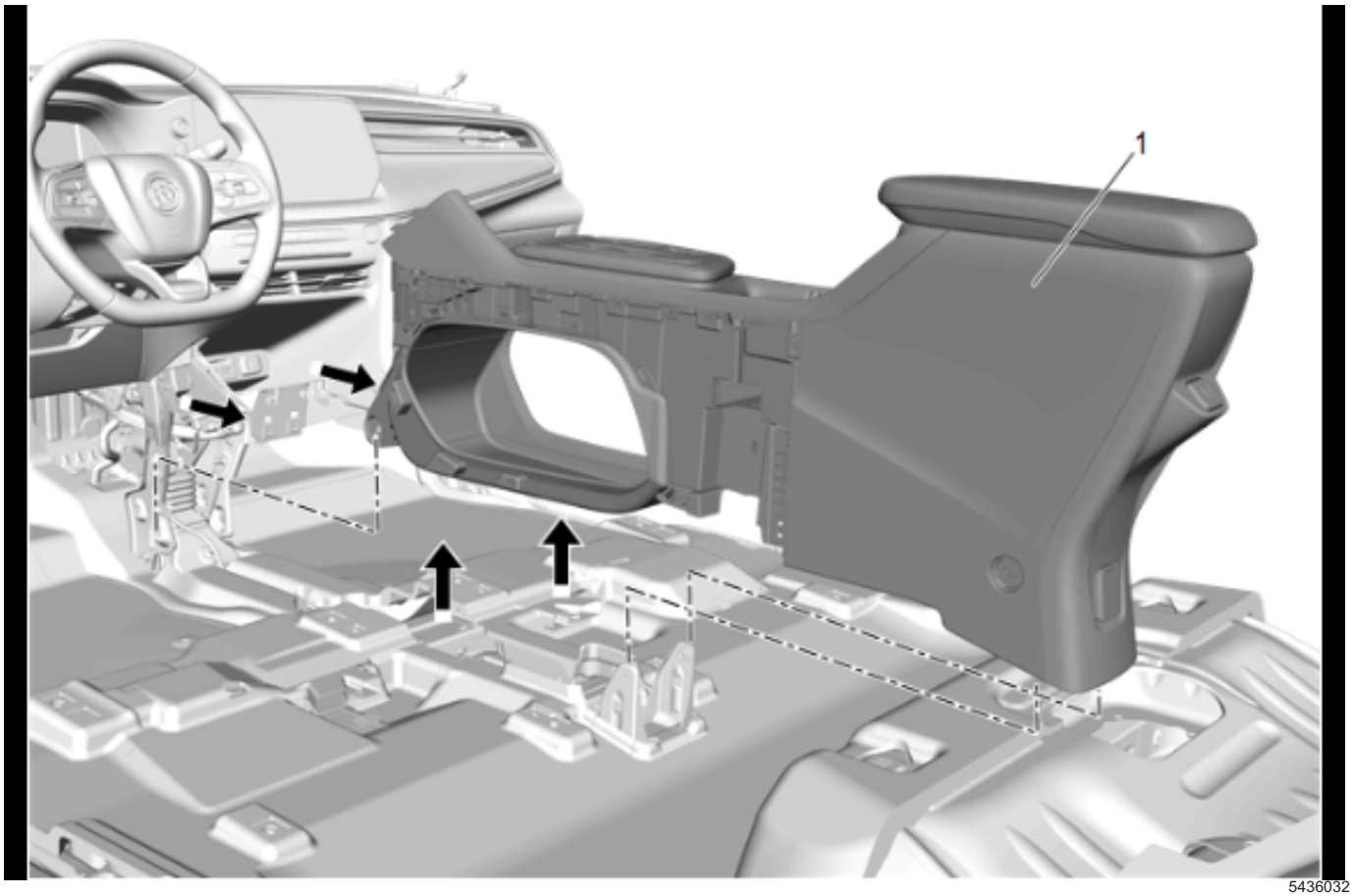

5436032

20. Front Floor Console (1) » Install

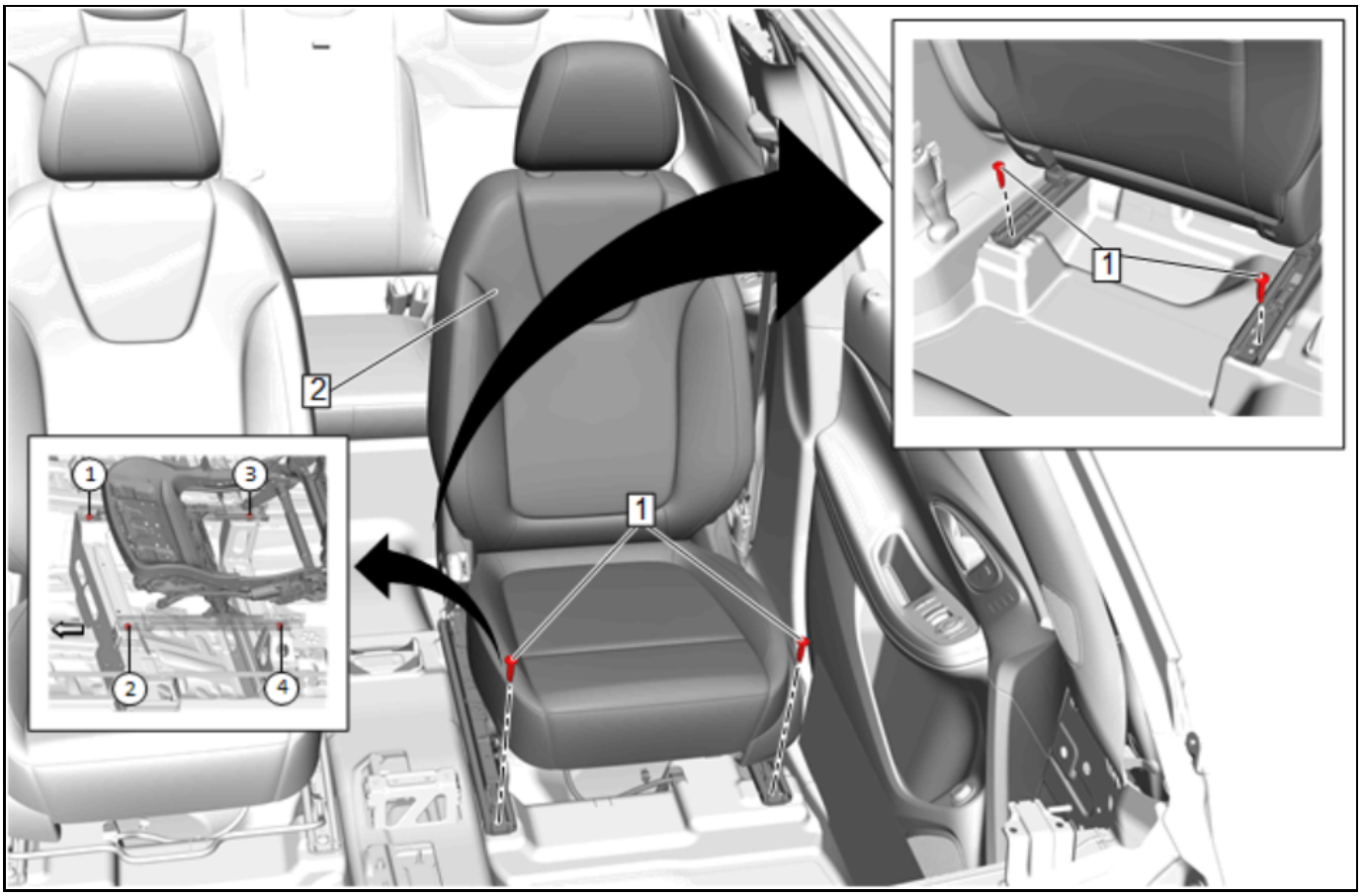

5482373

21. Install the driver and passenger seat (2).
22. Enable the SIR System.

Heater Core Replacement

Removal Procedure

1. Heater and Air Conditioning Evaporator and Blower Module — *Heater and Air Conditioning Evaporator and Blower Module Removal and Installation on page 5-199*
2. Drain the cooling system. *Heater Coolant Heater Draining and Filling on page 5-39*

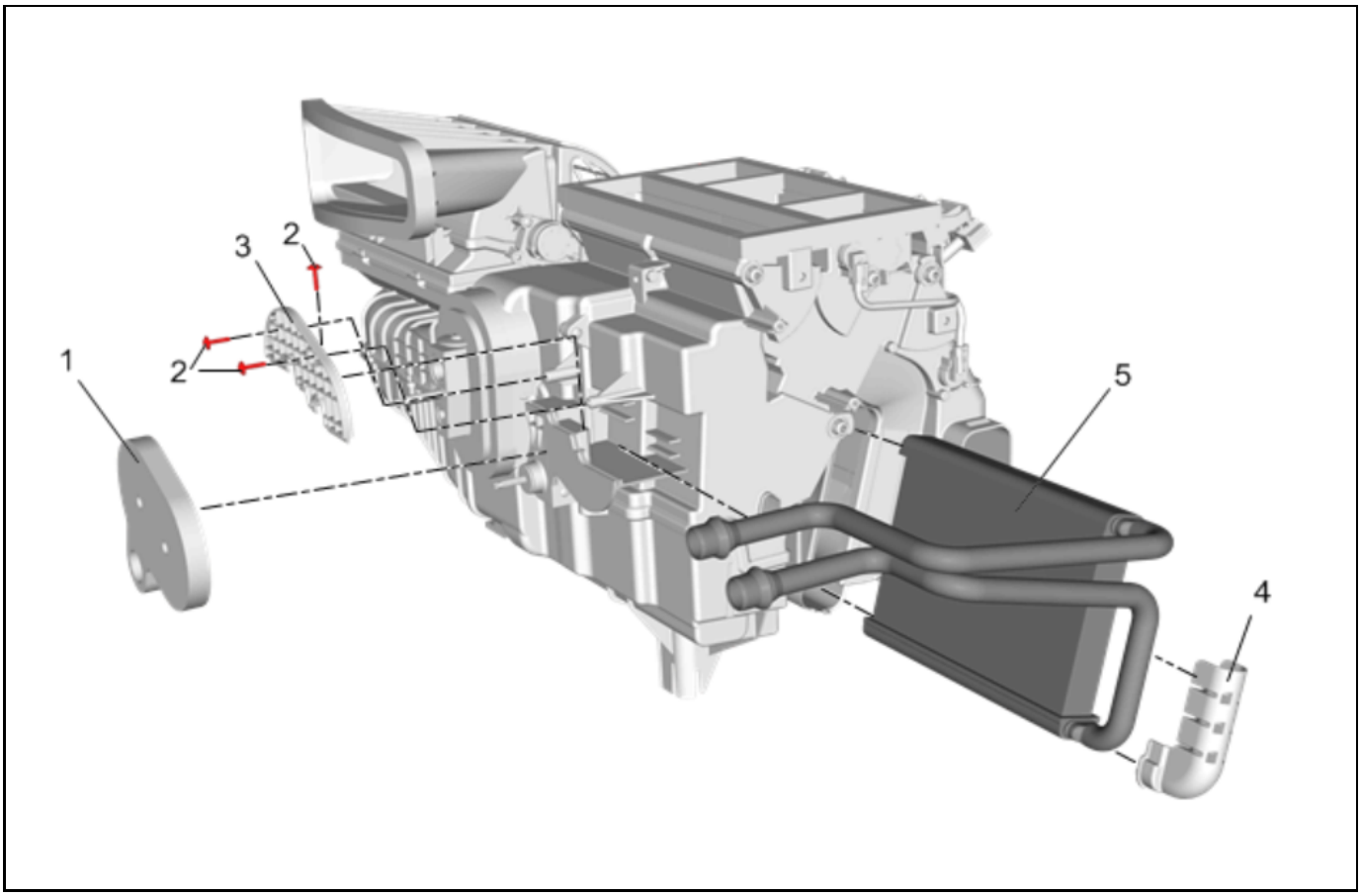

4544255

3. Heater And Air Conditioning Evaporator Tube Seal (1) » Remove
4. Heater Core Tube Bracket Bolt (2) » Remove [3x]
5. Heater Core Tube Bracket (3) » Remove
6. Heater Core Tube Cover (4) » Remove
7. Heater Core (5) » Remove

Installation Procedure

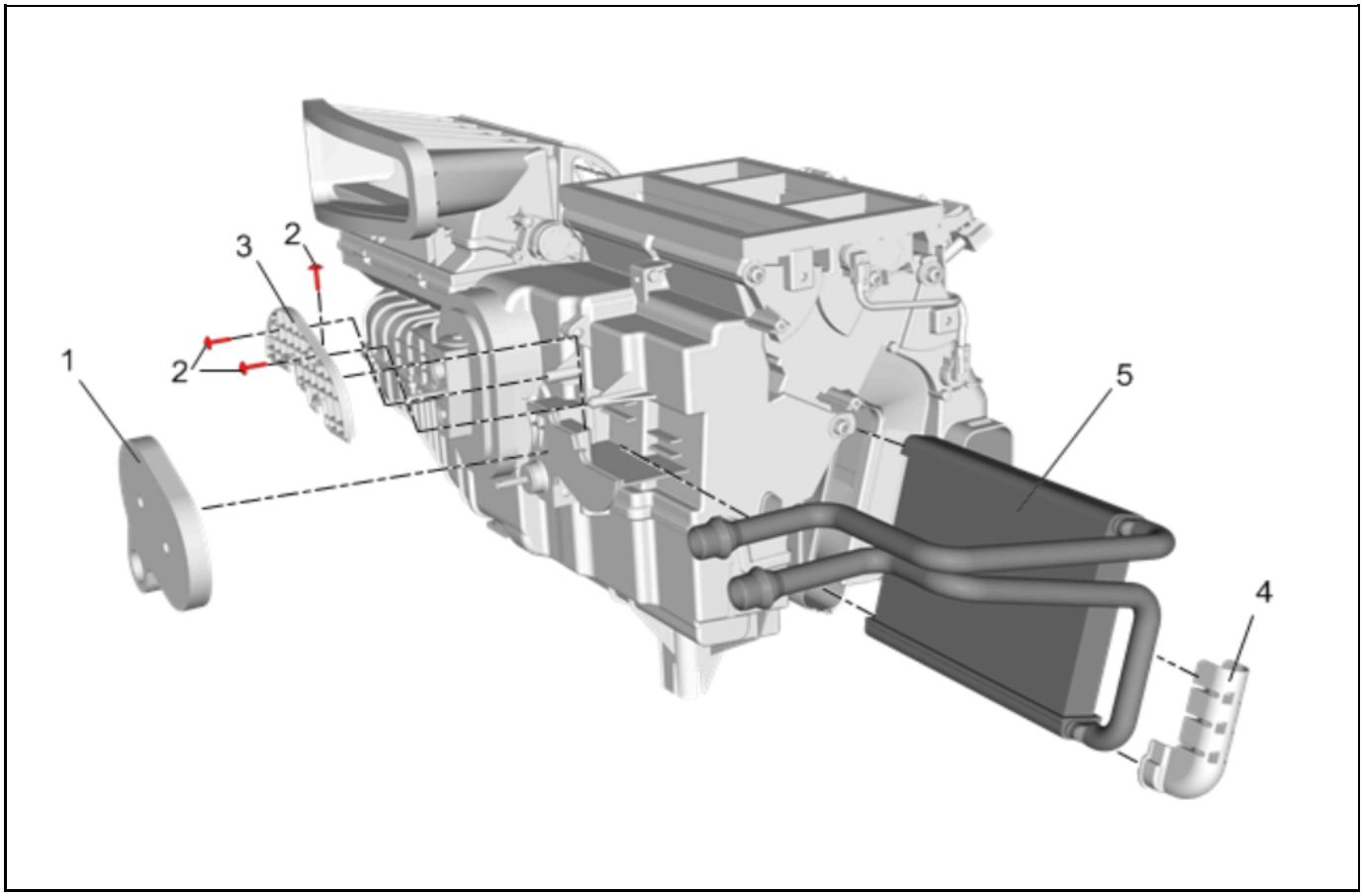

4544255

1. Heater Core (5) » Install
2. Heater Core Tube Cover (4) » Install
3. Heater Core Tube Bracket (3) » Install
4. Heater Core Tube Bracket Bolt (2) » Install and tighten — *Fastener Specifications on page 5-3*[3x]
5. Heater And Air Conditioning Evaporator Tube Seal (1) » Install
6. Heater and Air Conditioning Evaporator and Blower Module — *Heater and Air Conditioning Evaporator and Blower Module Removal and Installation on page 5-199*
7. Fill the cooling system to the proper level. *Heater Coolant Heater Draining and Filling on page 5-39*

Heater Coolant Heater Replacement

Single Use Fasteners and Components

- Air Conditioning Compressor Hose Seal - Large
- Air Conditioning Condenser Hose Seal - Small
- Air Conditioning Evaporator Hose Seal - Large [2x]
- Air Conditioning Evaporator Hose Seal - Small [2x]

Removal Procedure

Danger: Always perform the High Voltage Disabling procedure prior to servicing any High Voltage component or connection. Personal Protection Equipment (PPE) and proper procedures must be followed.

The High Voltage Disabling procedure includes the following steps:

- ***Identify how to disable high voltage.***
- ***Identify how to test for the presence of high voltage.***
- ***Identify condition under which high voltage is always present and personal protection equipment (PPE) and proper procedures must be followed.***

Before working on any high voltage system, be sure to wear the following Personal Protection Equipment:

- ***Safety glasses with appropriate side shields when within 15 meters (50 feet) of the vehicle, either indoors or outdoors.***

- ***Certified and up-to-date Class "0" Insulation gloves rated at 1000V with leather protectors.***
  - ***Visually and functionally inspect the gloves before use.***
  - ***Wear the Insulation gloves with leather protectors at all times when working with the high voltage battery assembly, whether the system is energized or not.***

Failure to follow the procedures may result in serious injury or death.

1. Disable the high voltage system.
2. Drain the cooling system. *Heater Coolant Heater Draining and Filling on page 5-39*
3. Recover the refrigerant. *Refrigerant Recovery and Recharging on page 5-36*

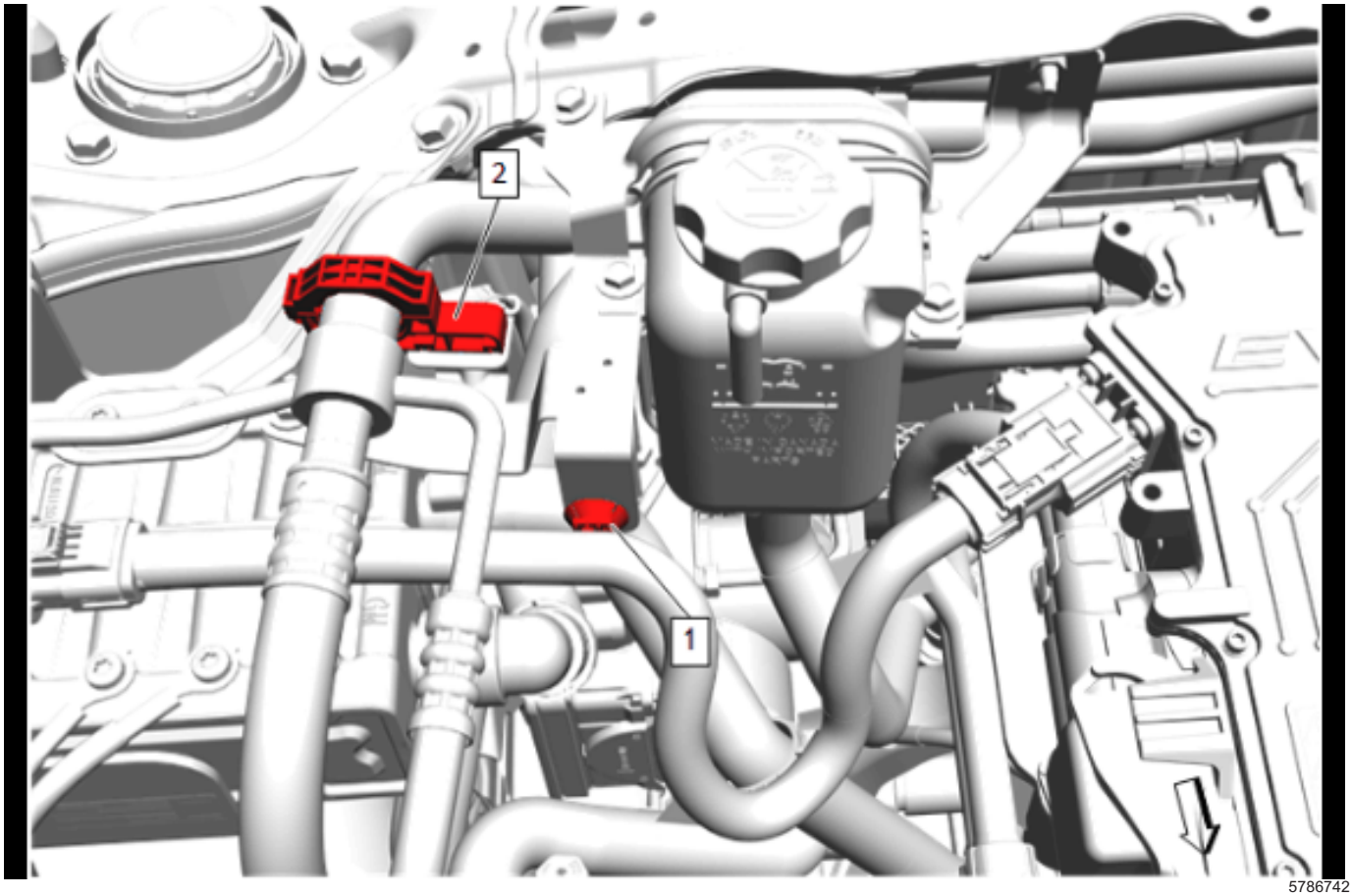

5786742

4. Retainer (1) » Remove
5. Air Conditioning Evaporator Hose Clip (2) » Remove

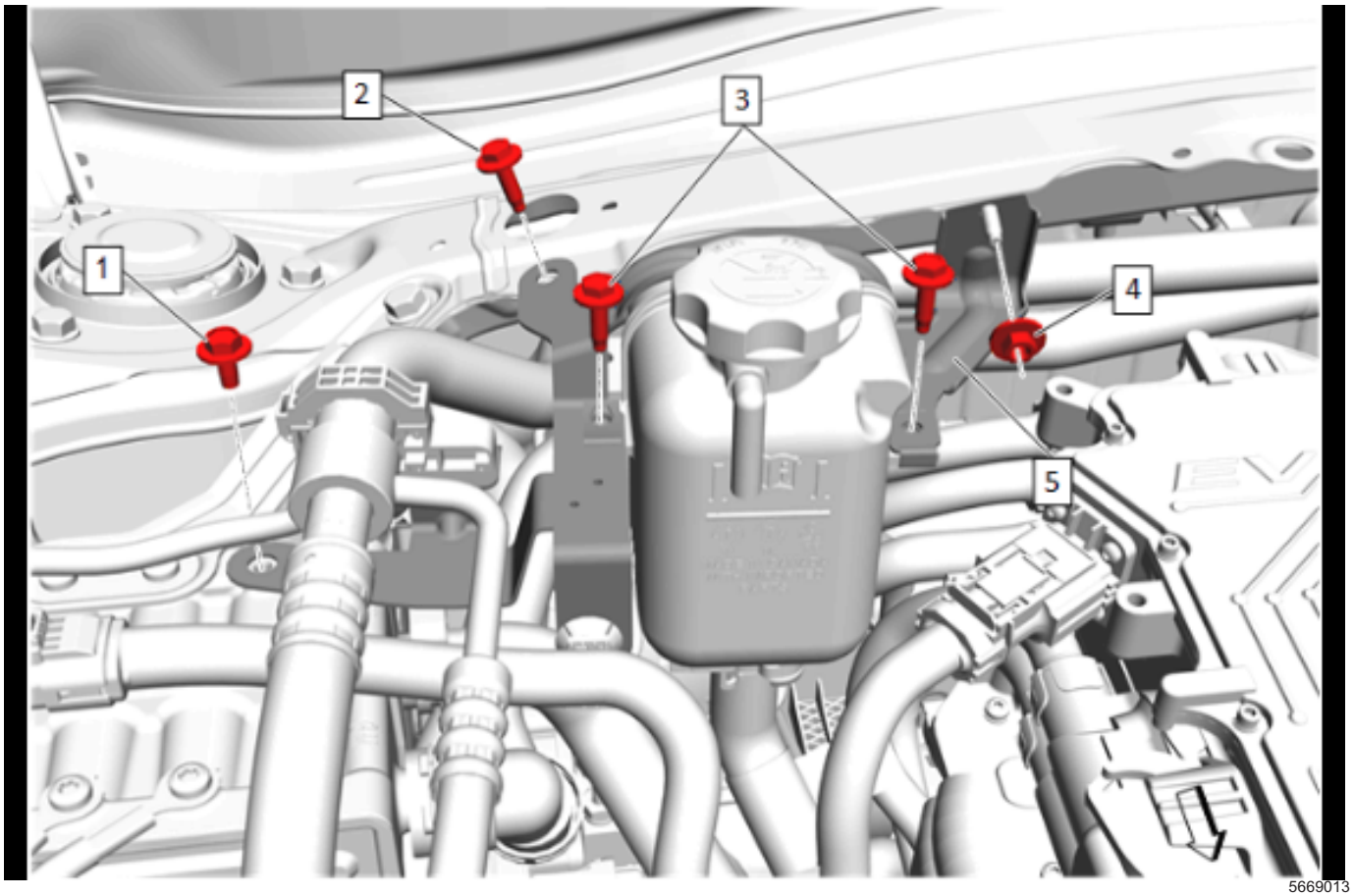

5669013

Note: Do not remove any coolant hoses from the surge tanks.

6. Heater Water Flow Control Valve Bolt (1) » Remove
7. Radiator Surge Tank Bracket Bolt (2) » Remove
8. Radiator Surge Tank Bolt (3) » Remove [2x]
9. Radiator Surge Tank Bracket Nut (4) » Remove
10. Radiator Surge Tank Bracket (5) » Remove

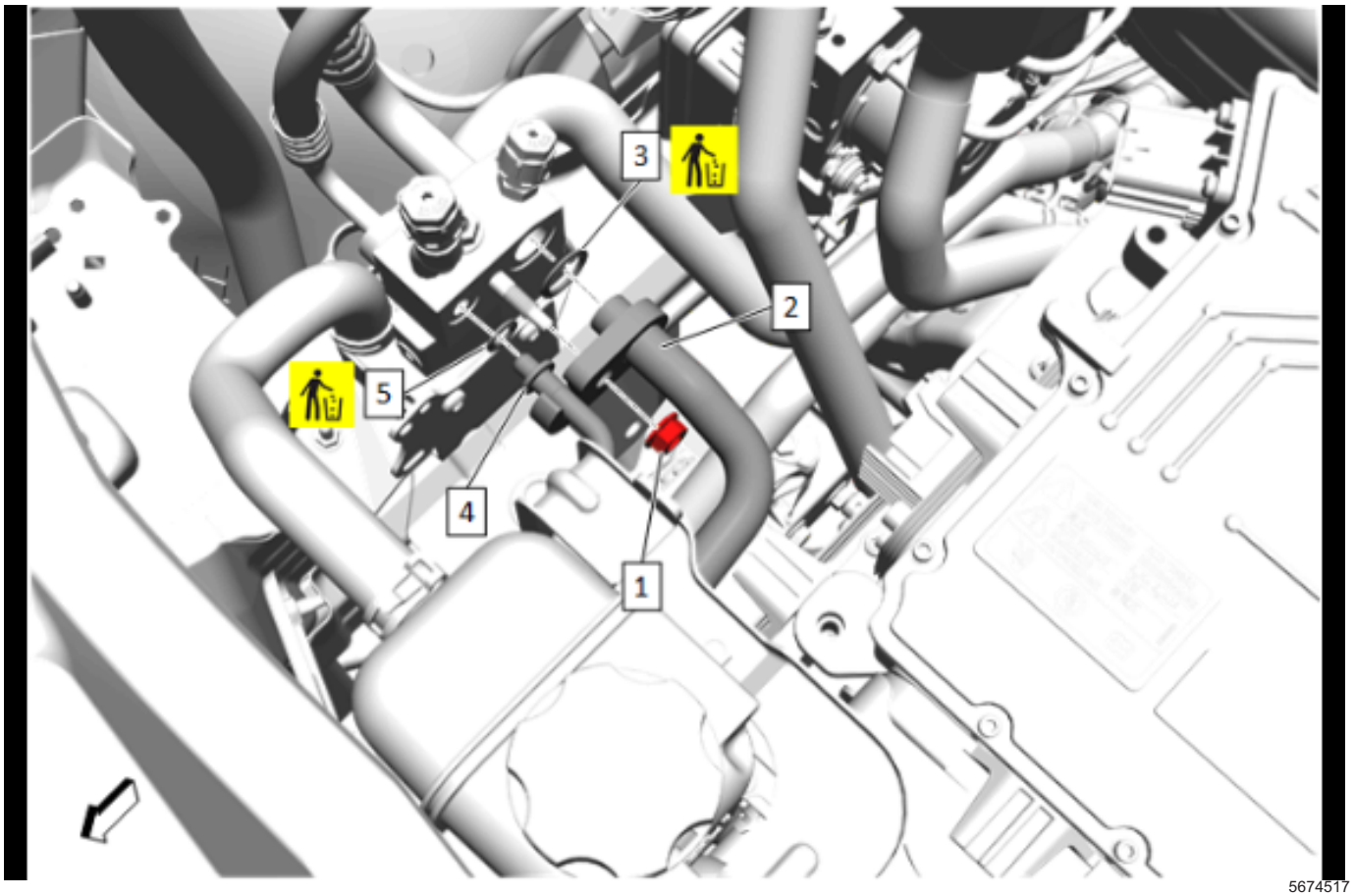

5674517

11. Air Conditioning Compressor Hose Nut (1) » Remove
12. Air Conditioning Compressor Hose (2) @ Air Conditioning Evaporator Hose » Remove
13. Air Conditioning Compressor Hose Seal - Large (3) » Remove and DISCARD
14. Air Conditioning Condenser Hose (4) @ Air Conditioning Evaporator Hose » Remove
15. Air Conditioning Condenser Hose Seal - Small (5) » Remove and DISCARD

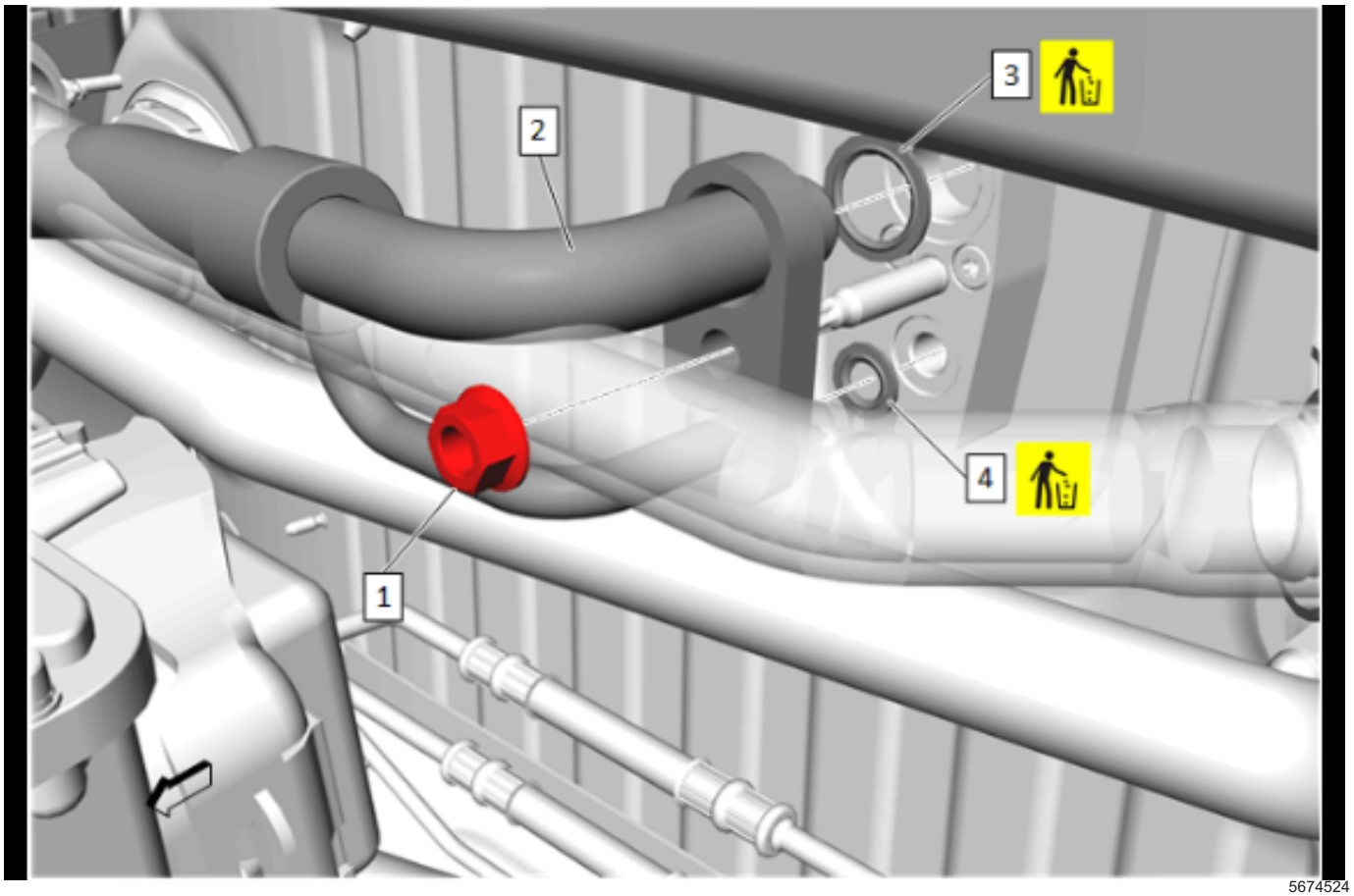

5674524

16. Air Conditioning Evaporator Hose Nut (1) » Remove
17. Air Conditioning Evaporator Hose (2) @ Air Conditioning Evaporator Thermal Expansion Valve » Remove
18. Air Conditioning Evaporator Hose Seal - Large (3) » Remove and DISCARD
19. Air Conditioning Evaporator Hose Seal - Small (4) » Remove and DISCARD

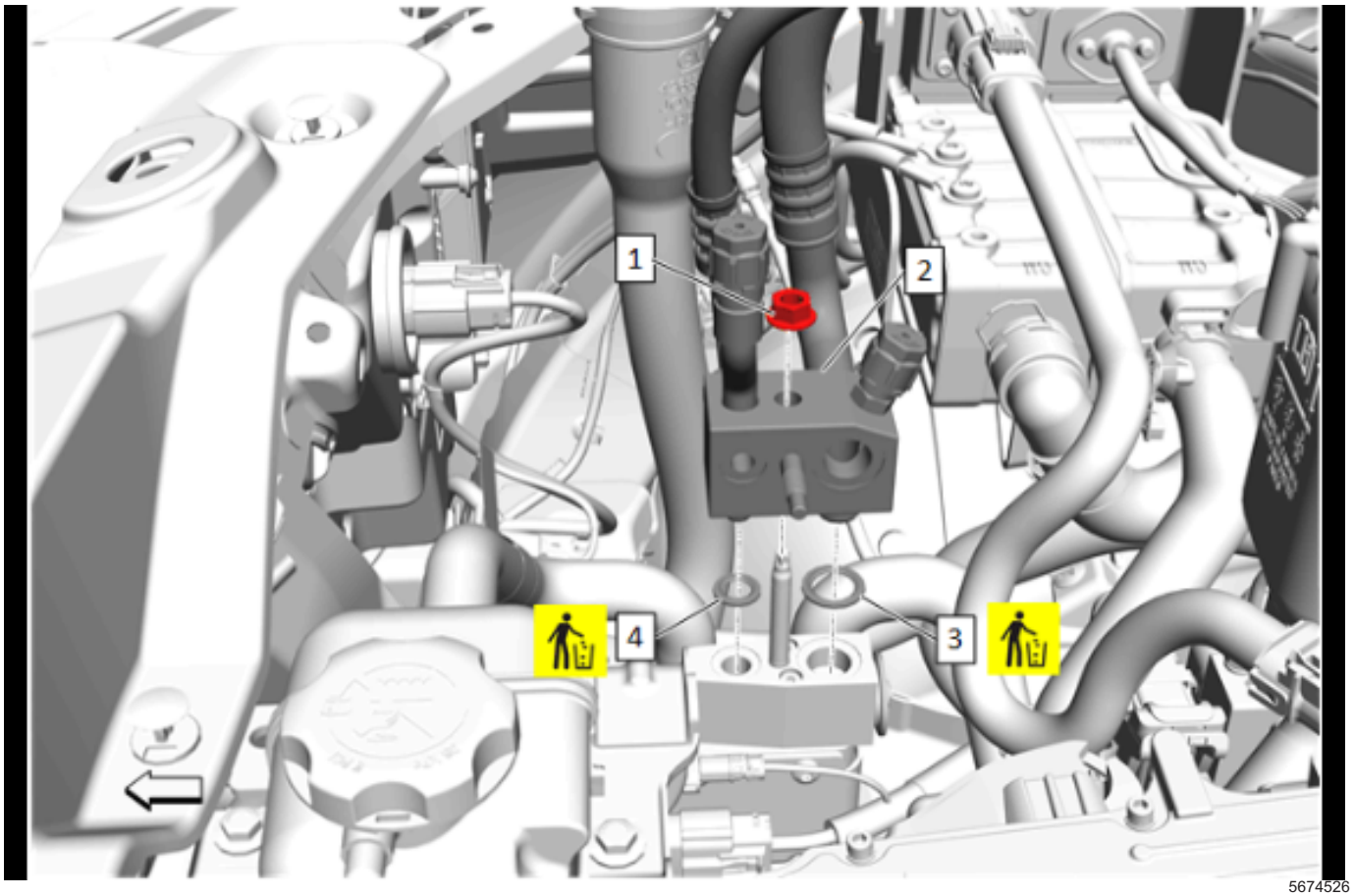

5674526

20. Air Conditioning Evaporator Hose Nut (1) » Remove
21. Air Conditioning Evaporator Hose (2) @ Air Conditioning Evaporator Thermal Expansion Valve » Remove
22. Air Conditioning Evaporator Hose Seal - Large (3) » Remove and DISCARD
23. Air Conditioning Evaporator Hose Seal - Small (4) » Remove and DISCARD
24. Air Conditioning Evaporator Hose (2) @ Vehicle » Remove

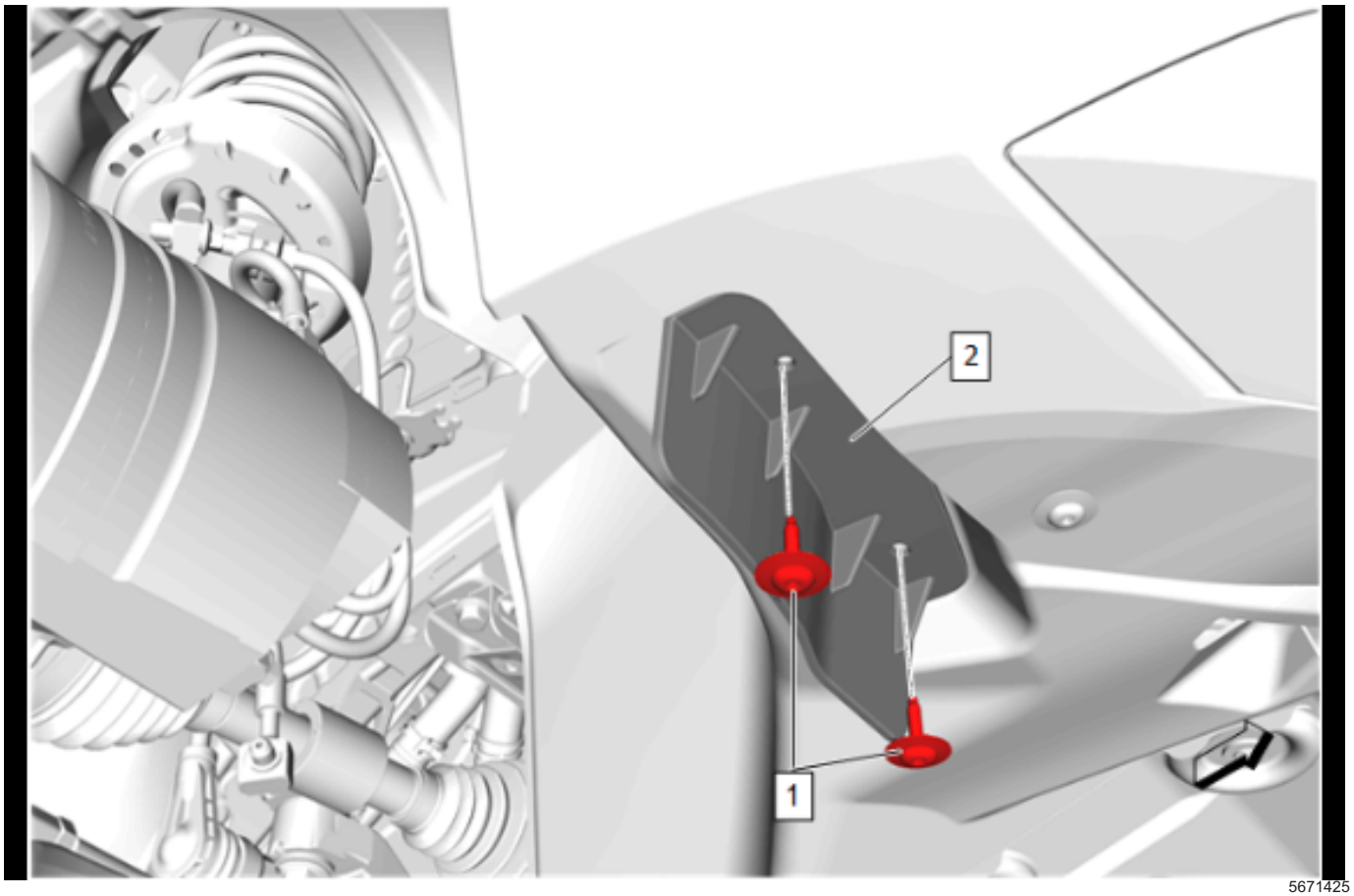

5671425

25. Front Tire Front Air Deflector Bolt (1) » Remove [2x]
26. Front Tire Front Air Deflector (2) » Remove

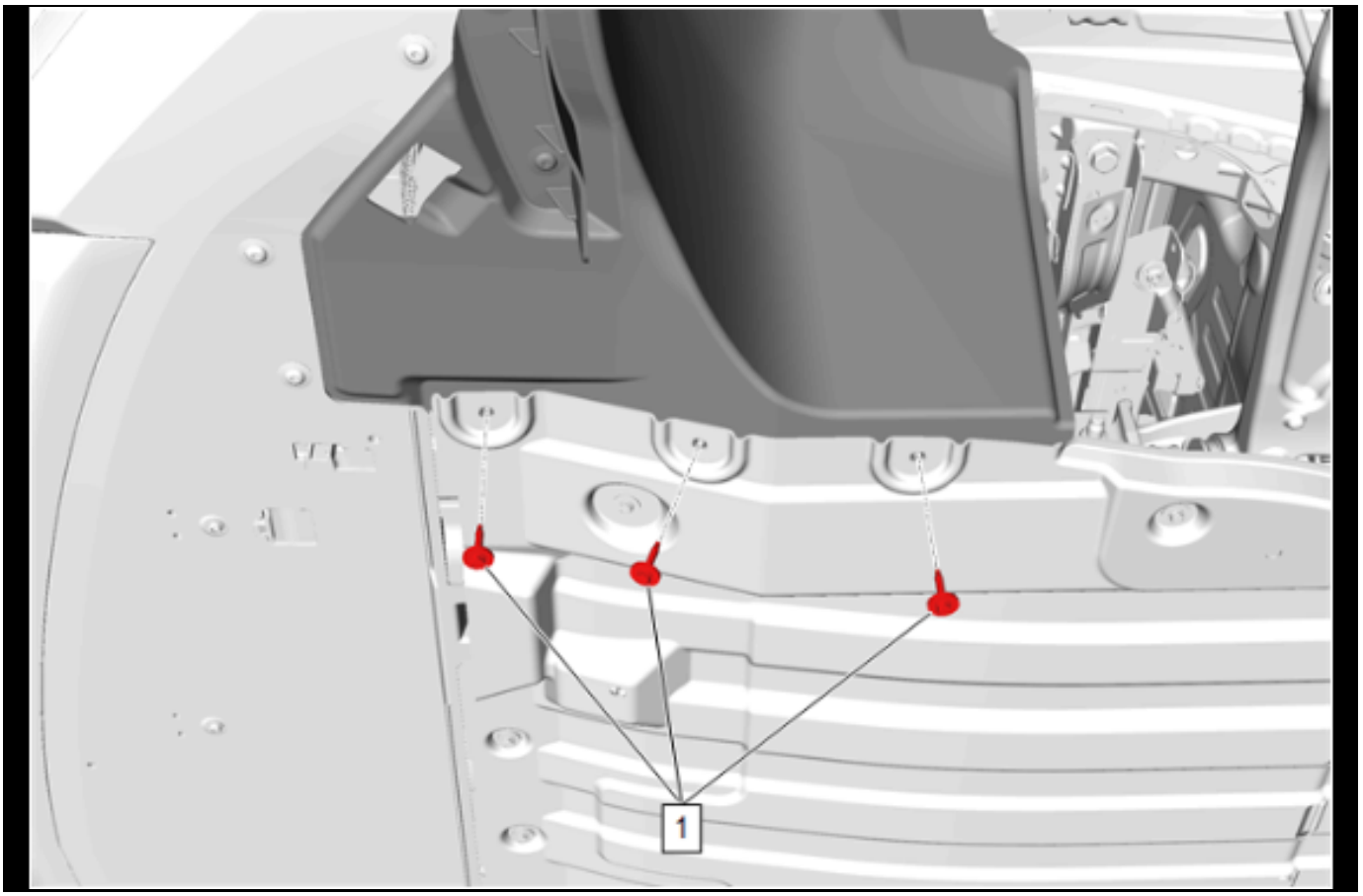

5491618

Note: Left side shown, right side similar.

27. Front Compartment Insulator Bolt (1) »
    Remove [3x]

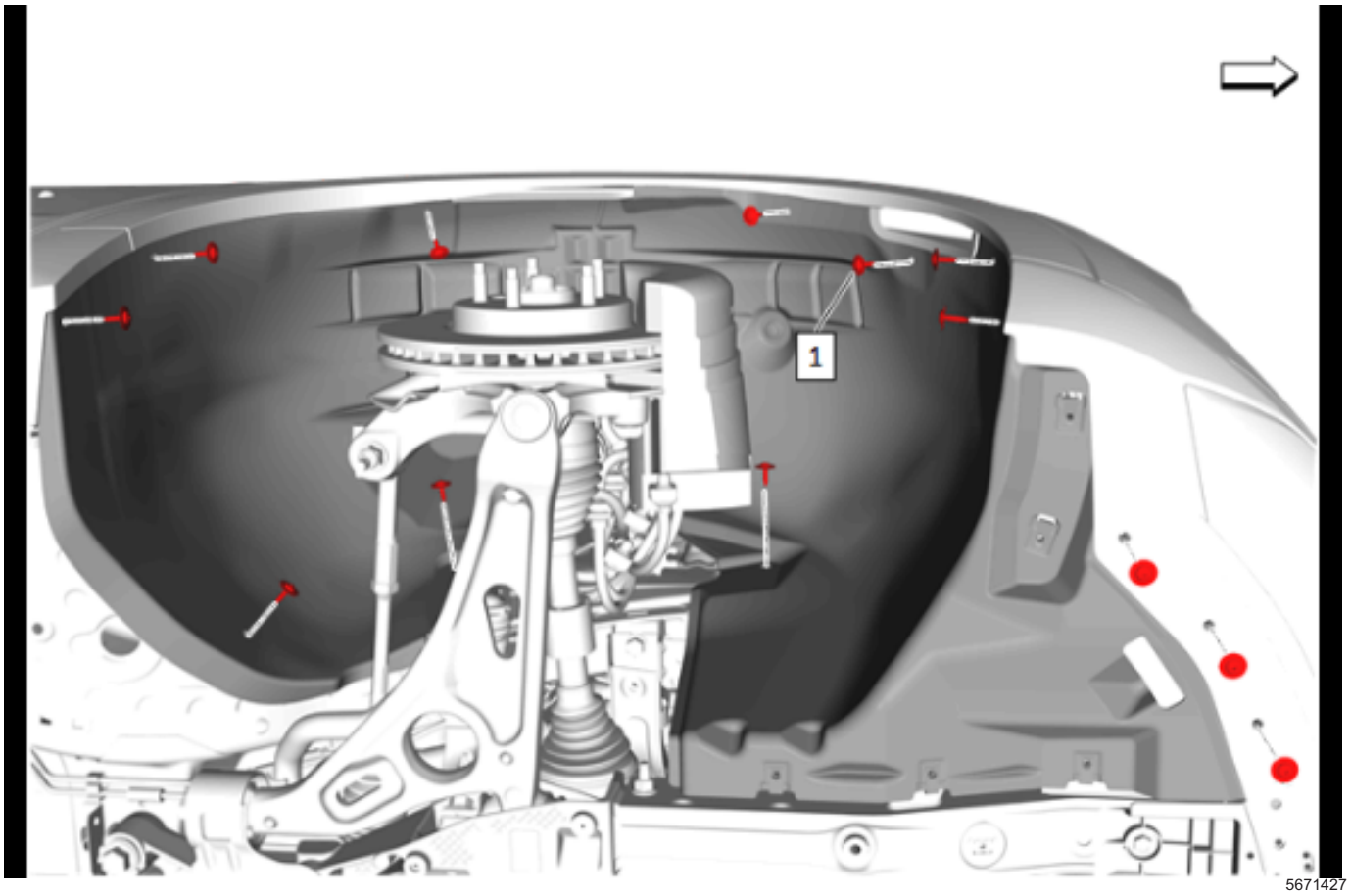

5671427

28. Front Wheelhouse Liner Bolt (1) » Remove [13x]

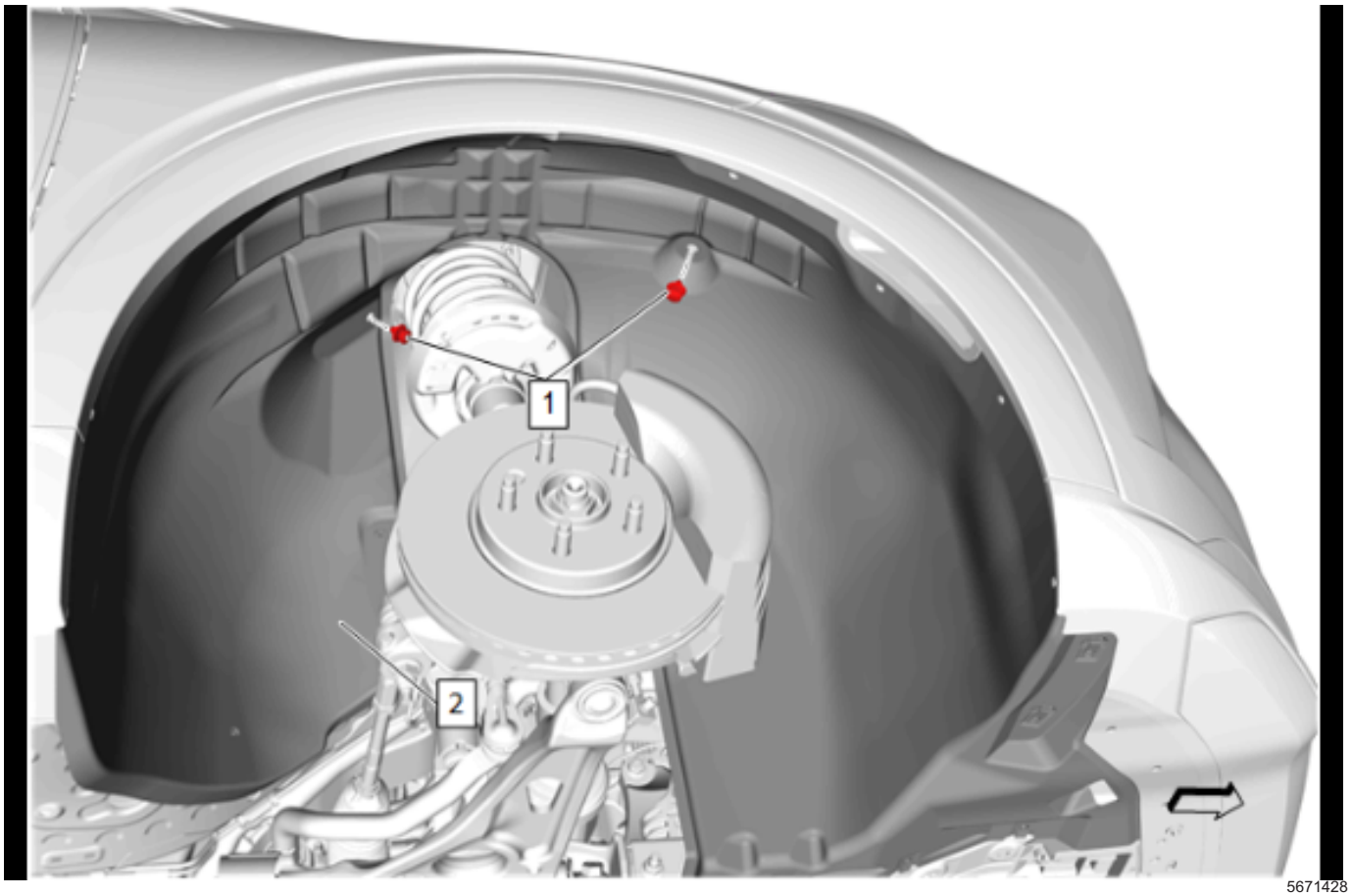

5671428

29. Front Wheelhouse Liner Retainer (1) » Remove [2x]
30. Front Wheelhouse Liner - Right Side (2) » Remove

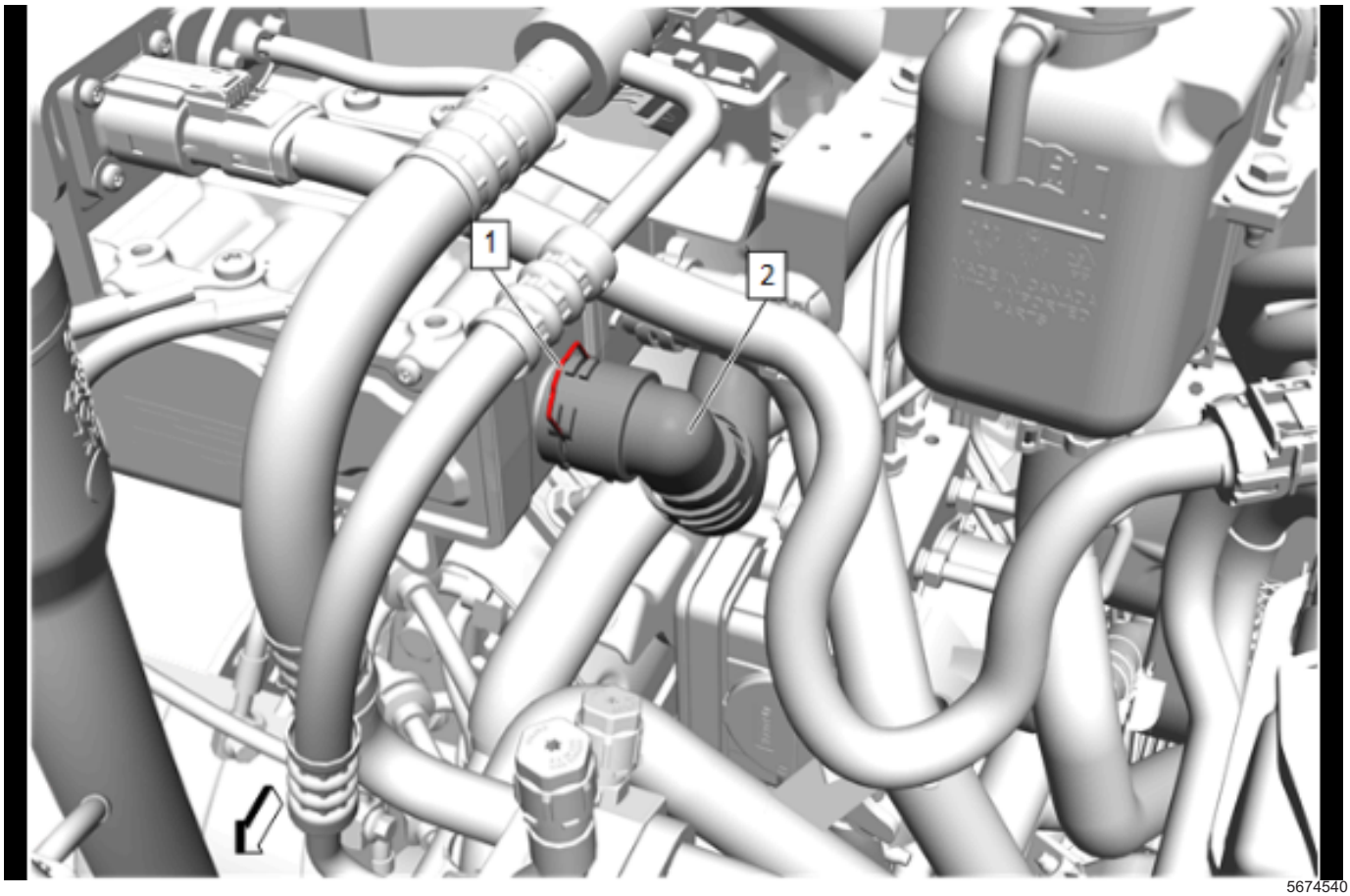

5674540

31. Heater Outlet Hose Connector Retainer (1) » Disengage
32. Heater Outlet Hose (2) @ Heater Coolant Heater » Remove

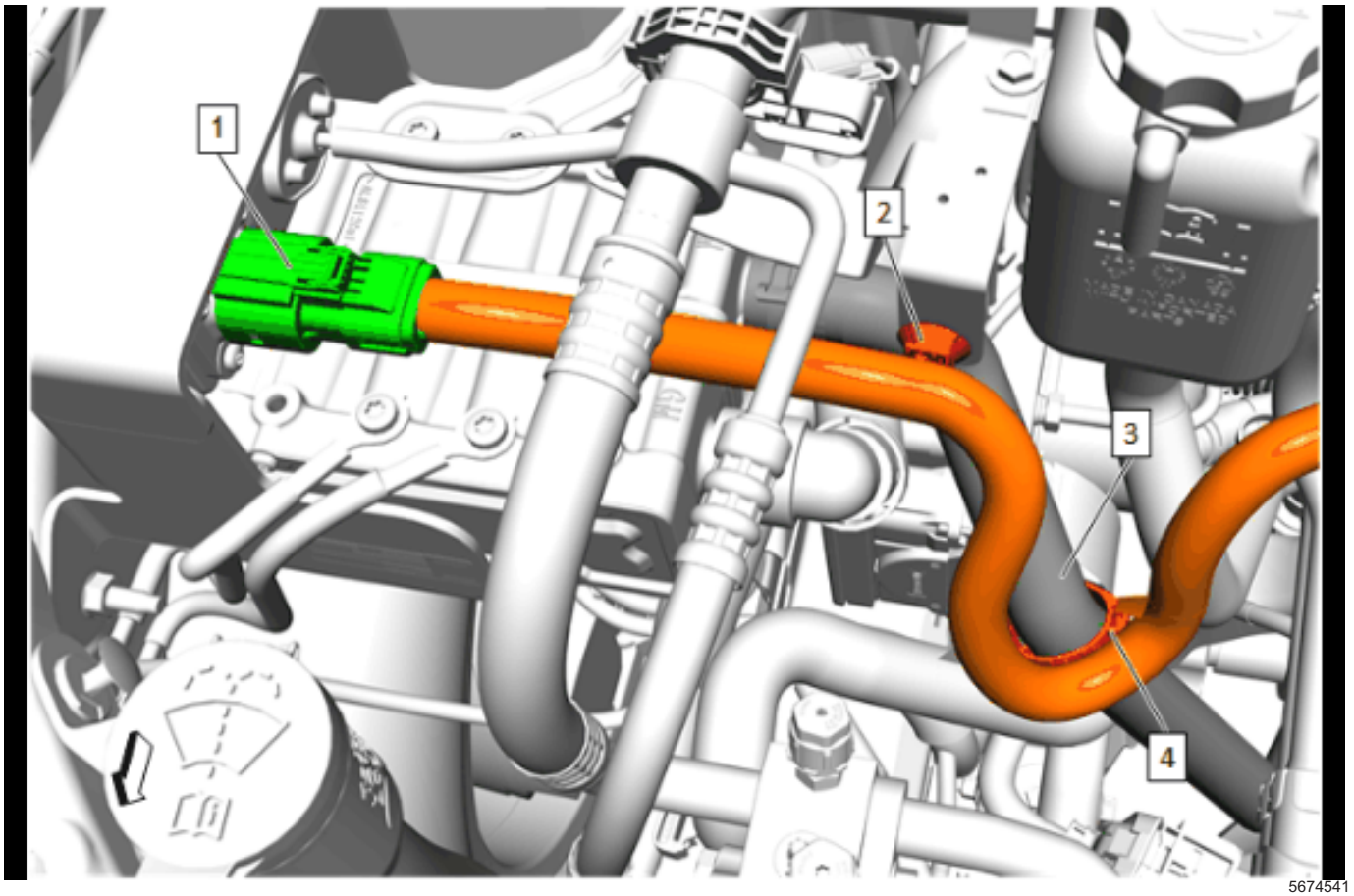

5674541

33. High Voltage Cable Electrical Connector (1) » Disconnect
34. Retainer (2) » Remove
35. Auxiliary Heater Outlet Hose (3) @ Retainer (4) » Remove

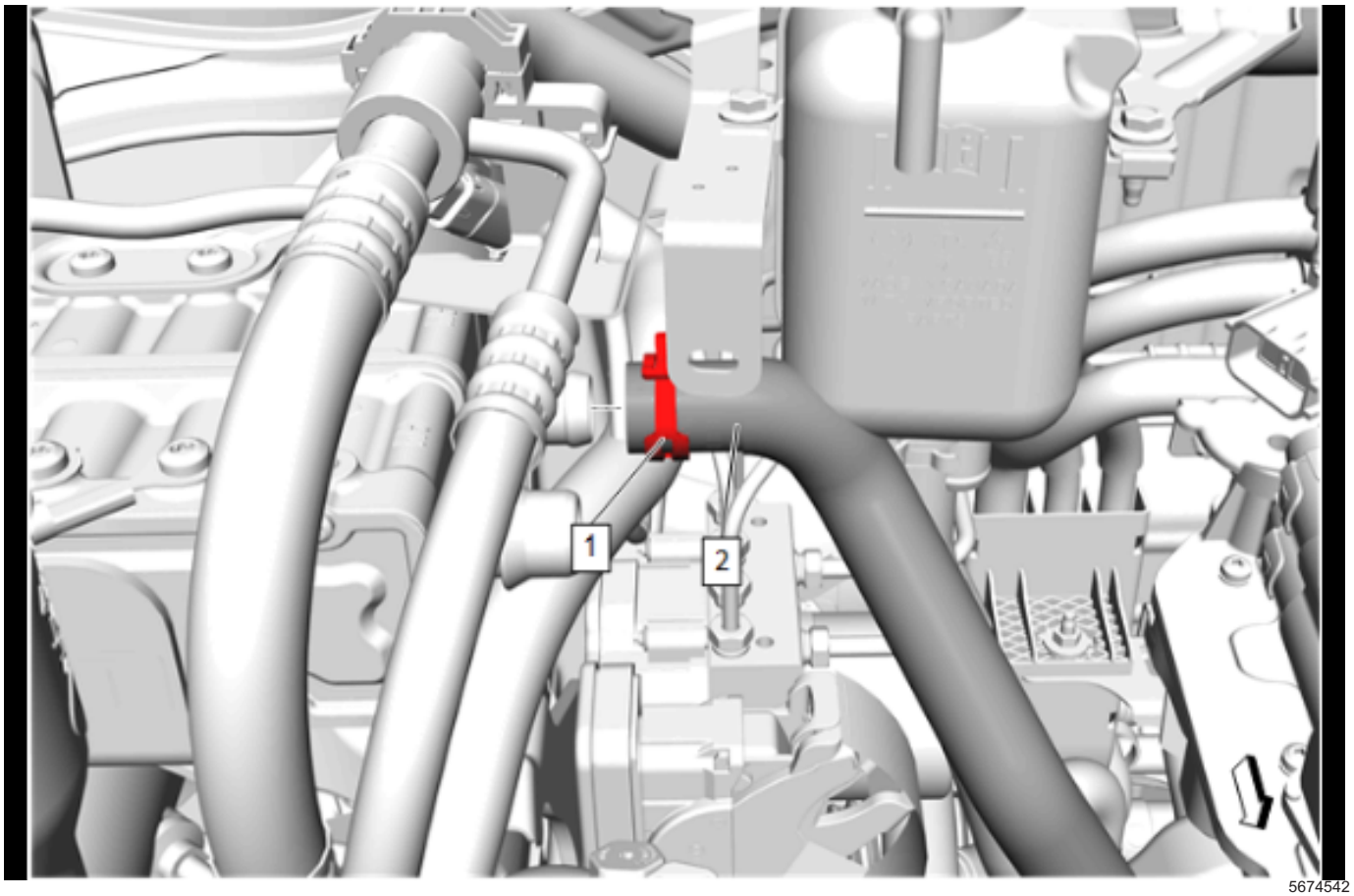

5674542

36. Clamp (1) » Disengage — Hose Clamp Replacement Guidelines - Spring Type
37. Auxiliary Heater Outlet Hose (2) @ Heater Coolant Heater » Remove

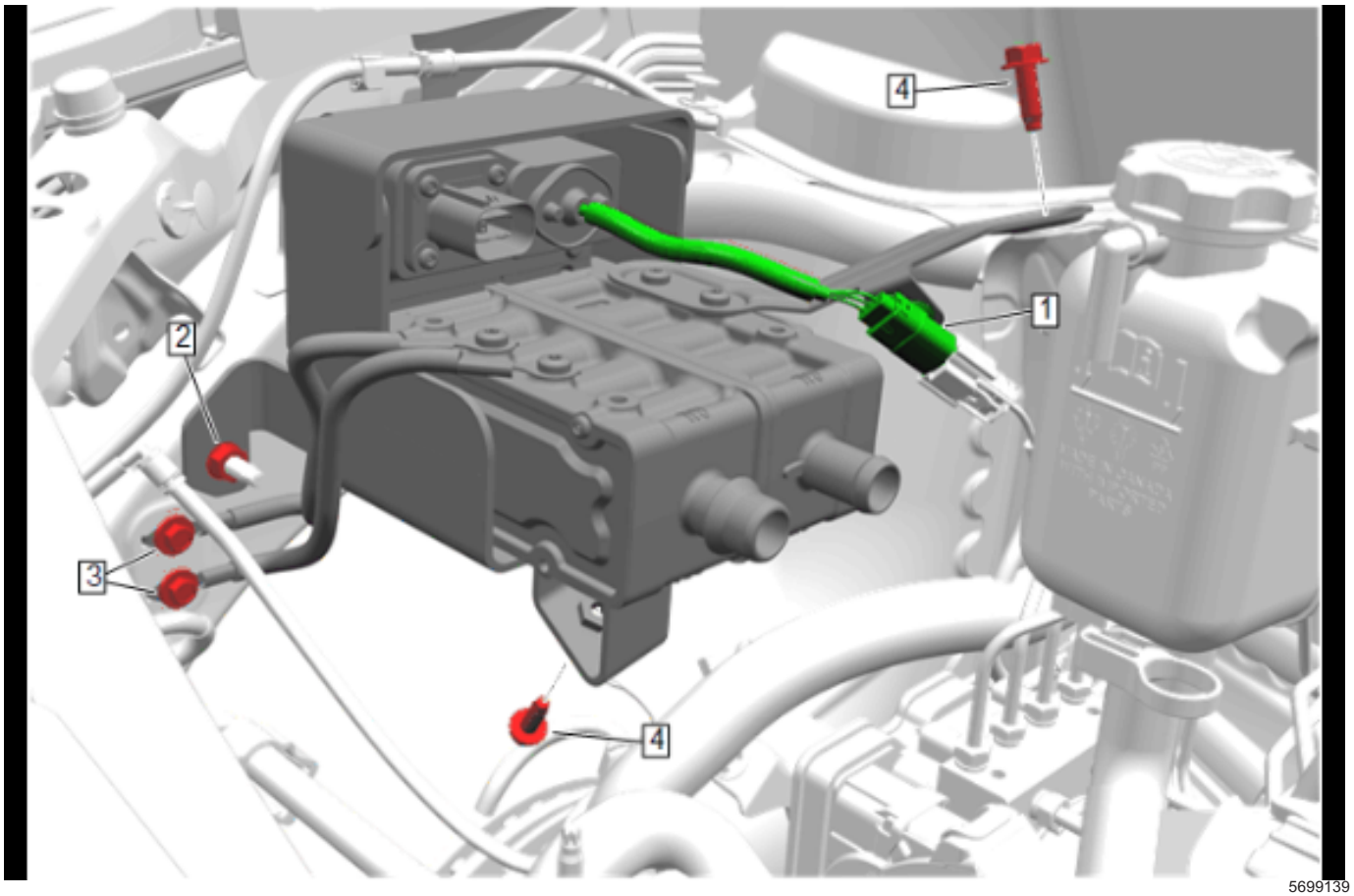

5699139

38. Electrical Connector (1) » Disconnect
39. Heater Coolant Heater Nut (2) » Remove
40. Remove the 2 heater coolant heater wiring harness bolts (3) with the wiring harness
41. Heater Coolant Heater Bracket Bolt (4) » Remove [2x]

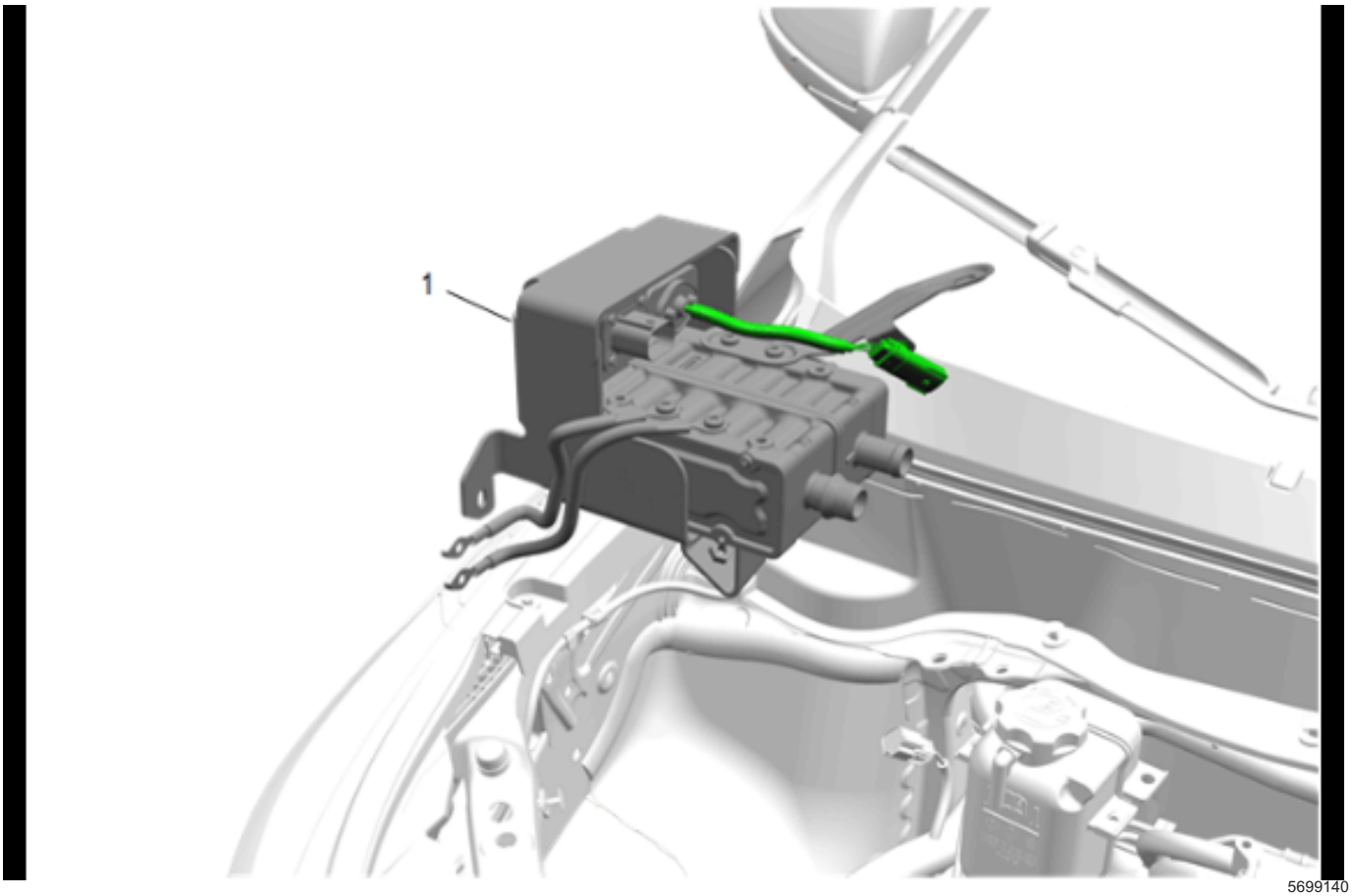

5699140

42. Heater Coolant Heater (1) » Remove

Installation Procedure

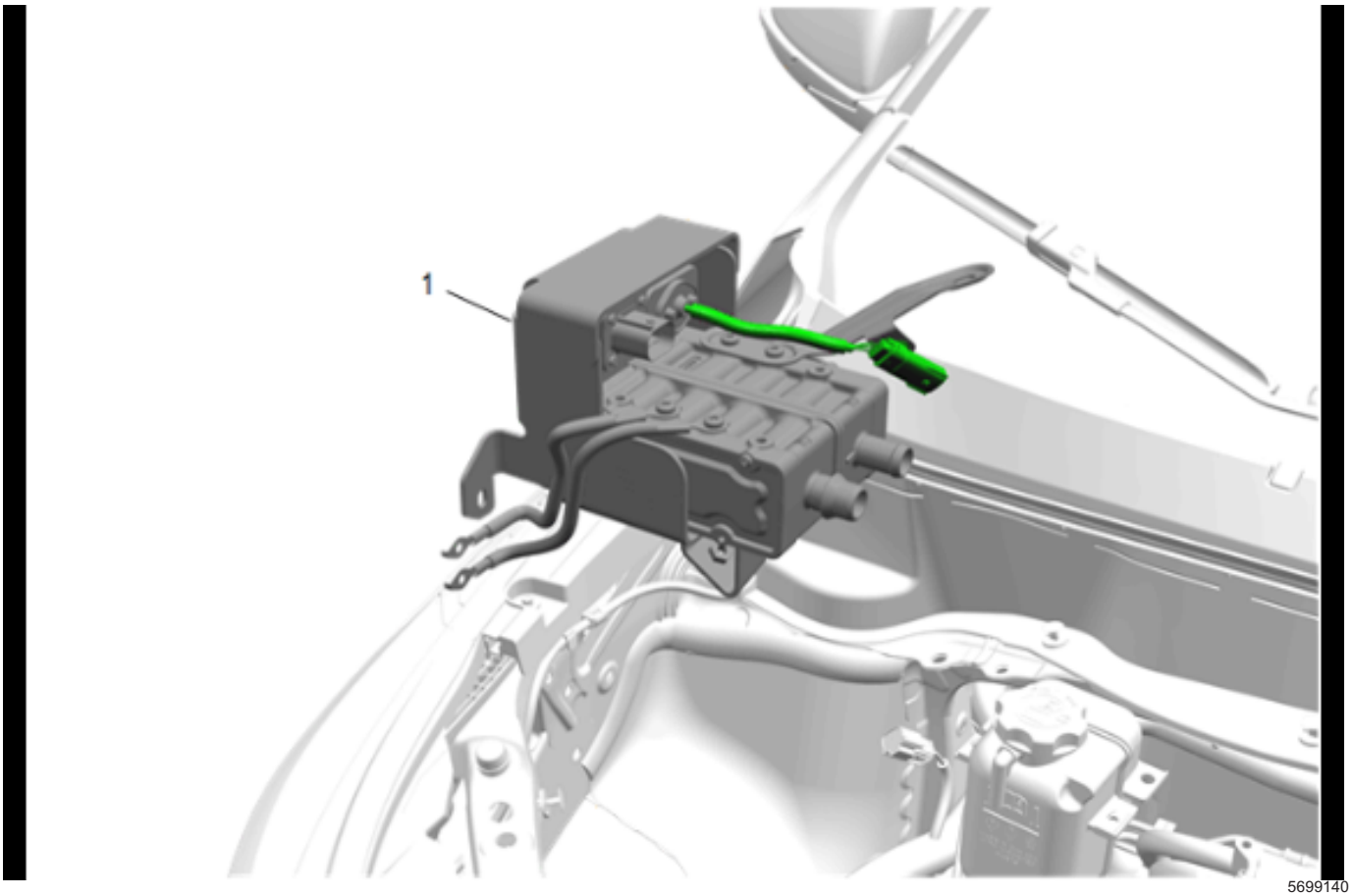

5699140

1. Heater Coolant Heater (1) » Install

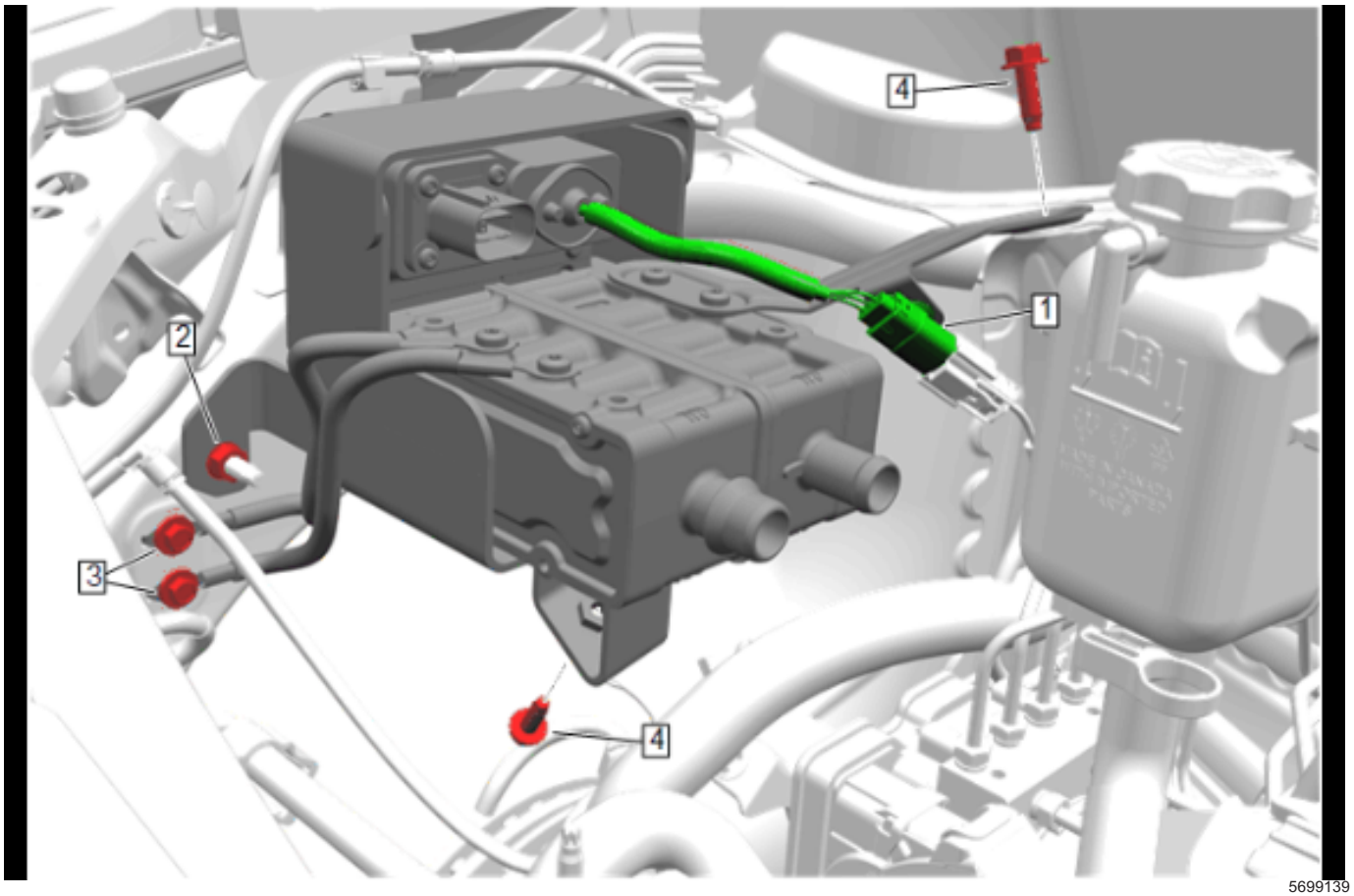

5699139

2. Heater Coolant Heater Bracket Bolt (4) » Install and tighten — *Fastener Specifications on page 5-3*[2x]
3. Install the 2 heater coolant heater wiring harness bolts (3) with the wiring harness and tighten.— *Fastener Specifications on page 5-3*
4. Heater Coolant Heater Nut (2) » Install and tighten — *Fastener Specifications on page 5-3*
5. Electrical Connector (1) » Connect

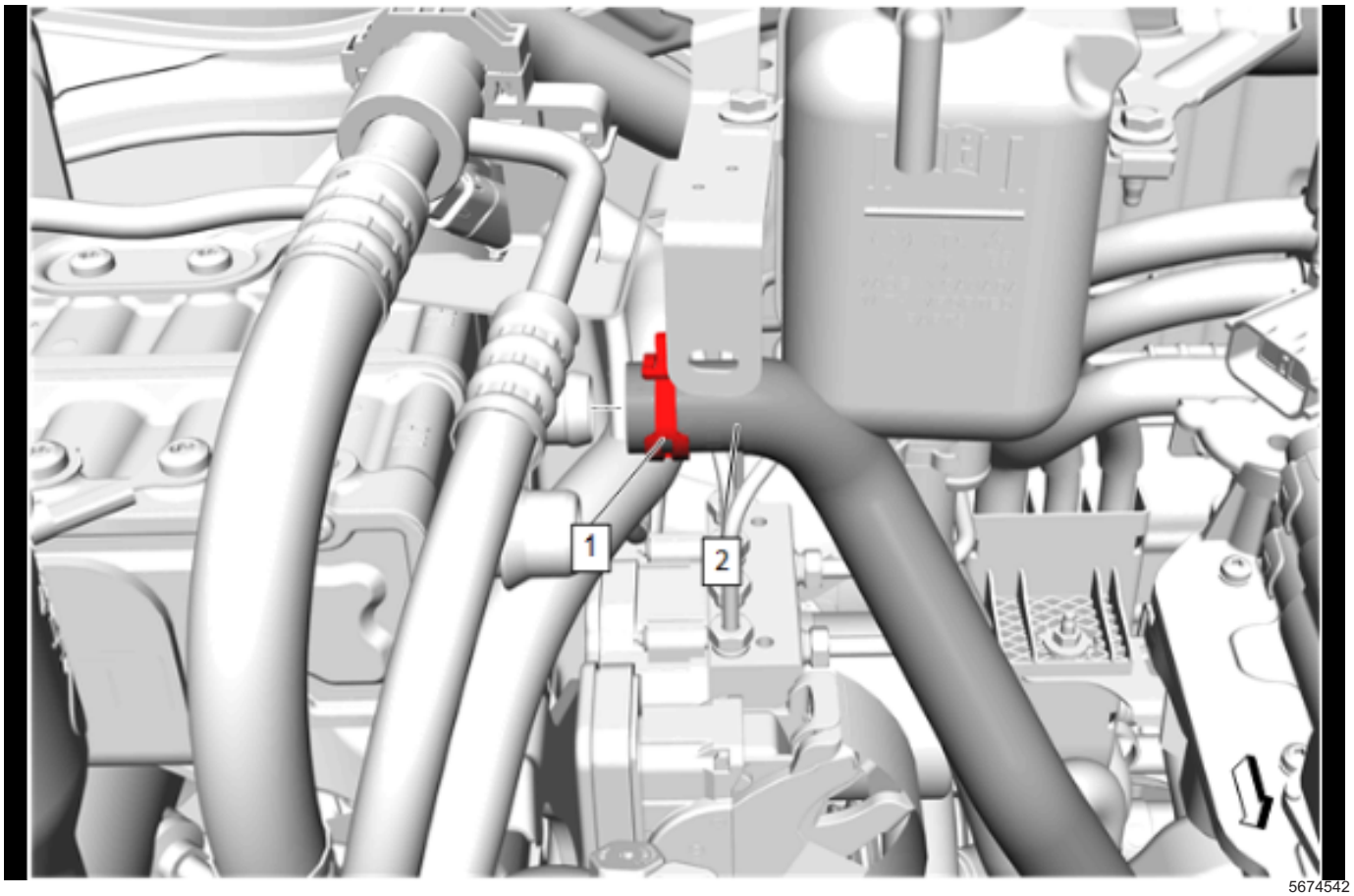

5674542

6. Auxiliary Heater Outlet Hose (2) @ Heater Coolant Heater » Install
7. Clamp (1) » Engage — Hose Clamp Replacement Guidelines - Spring Type

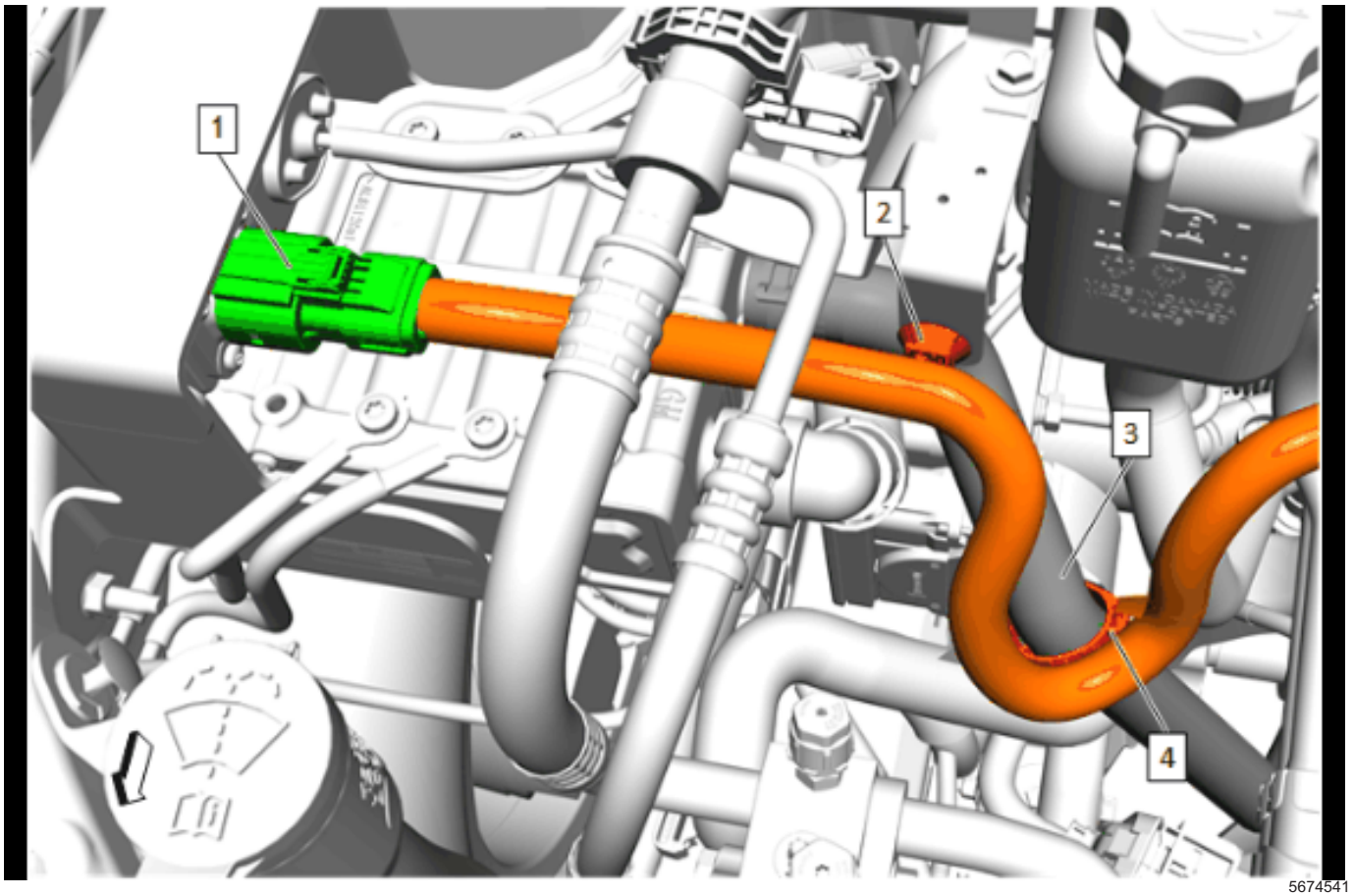

5674541

8. Auxiliary Heater Outlet Hose (3) @ Retainer (4)
   » Install
9. Retainer (2) » Install
10. High Voltage Cable Connector (1) » Connect

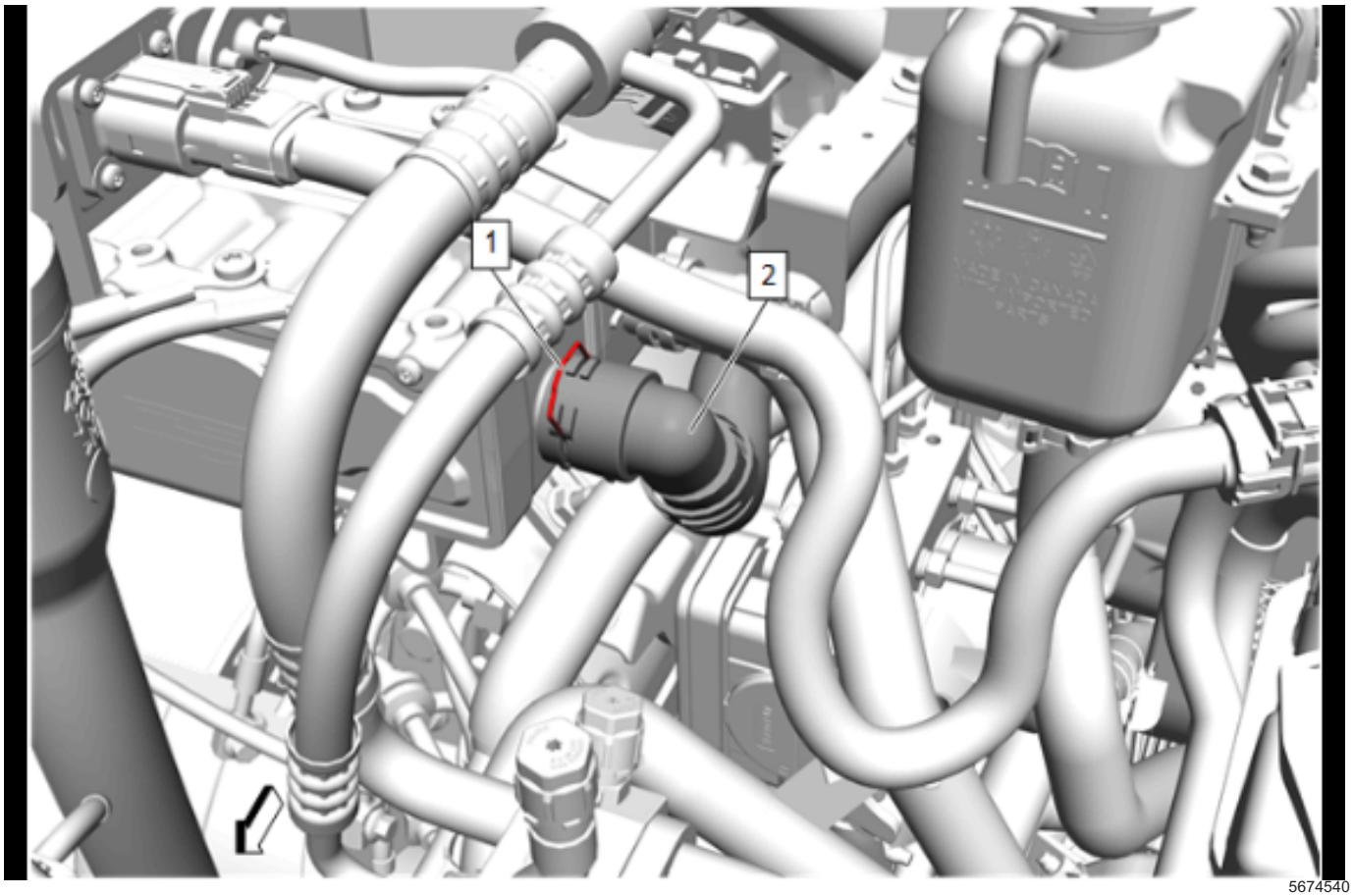

5674540

11. Heater Outlet Hose (2) @ Heater Coolant Heater
    » Install
12. Heater Outlet Hose Connector Retainer (1) »
    Engage

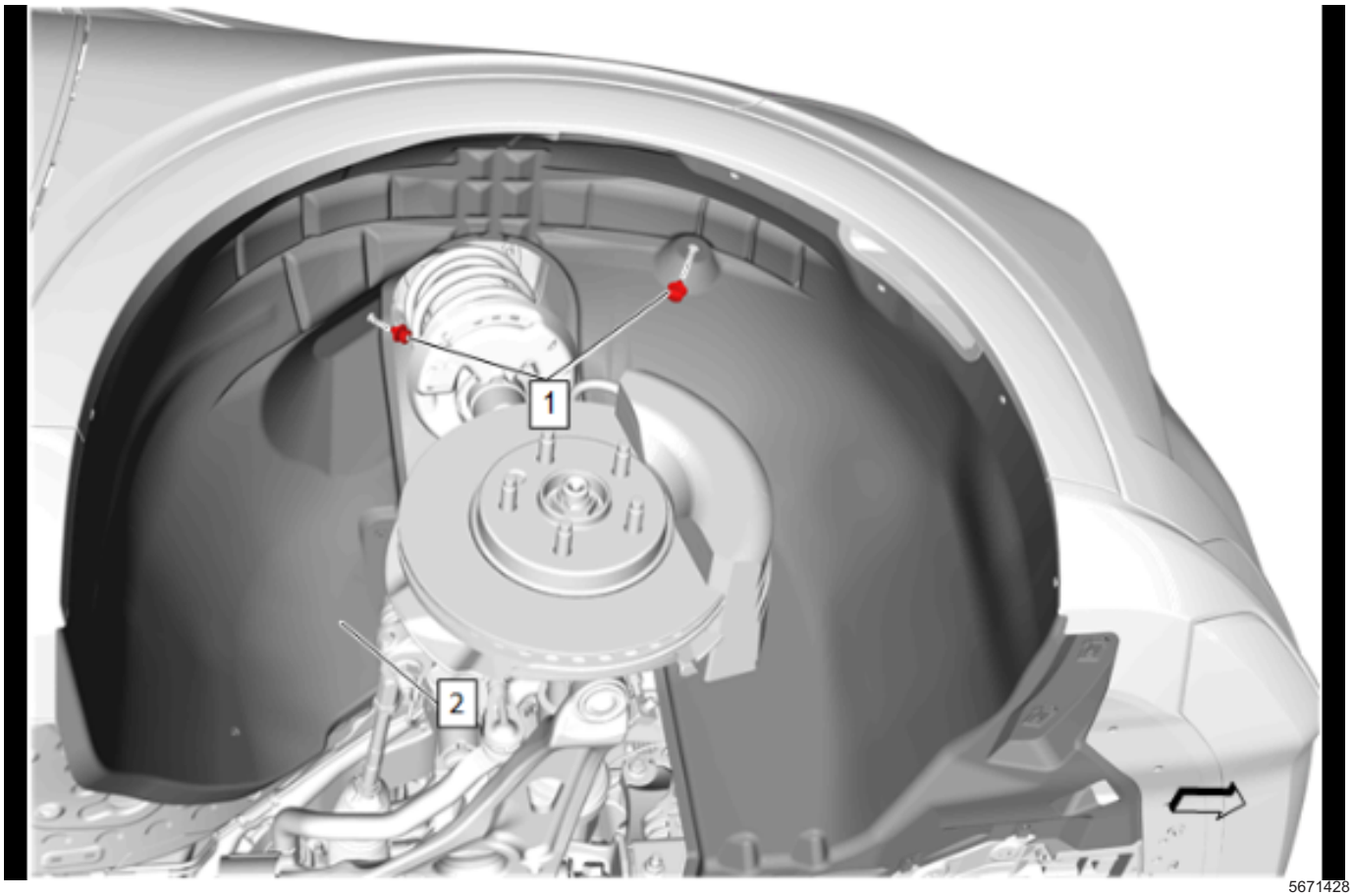

5671428

13. Front Wheelhouse Liner - Right Side (2) » Install
14. Front Wheelhouse Liner Retainer (1) » Install [2x]

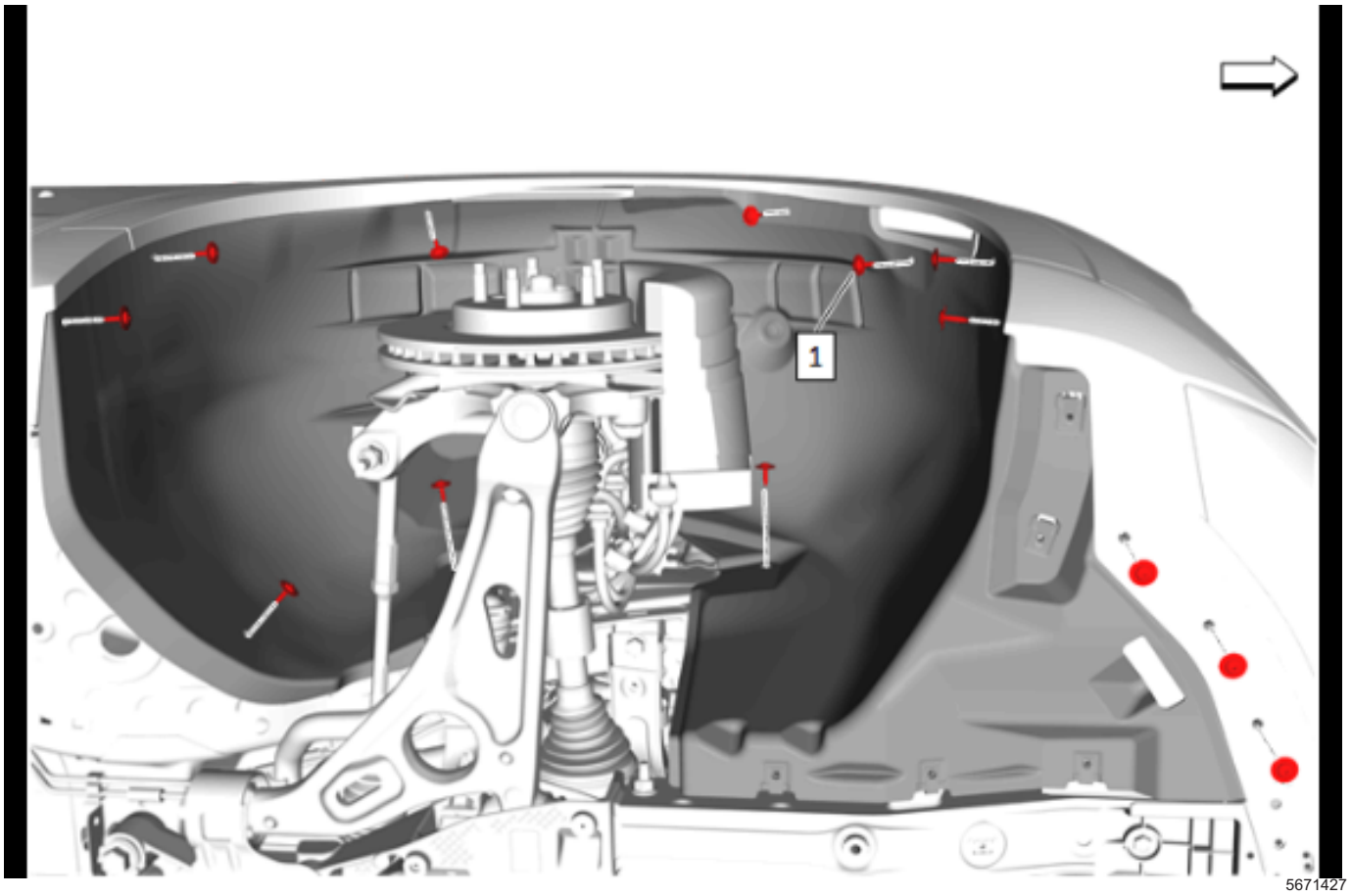

15. Front Wheelhouse Liner Bolt (1) » Install and tighten

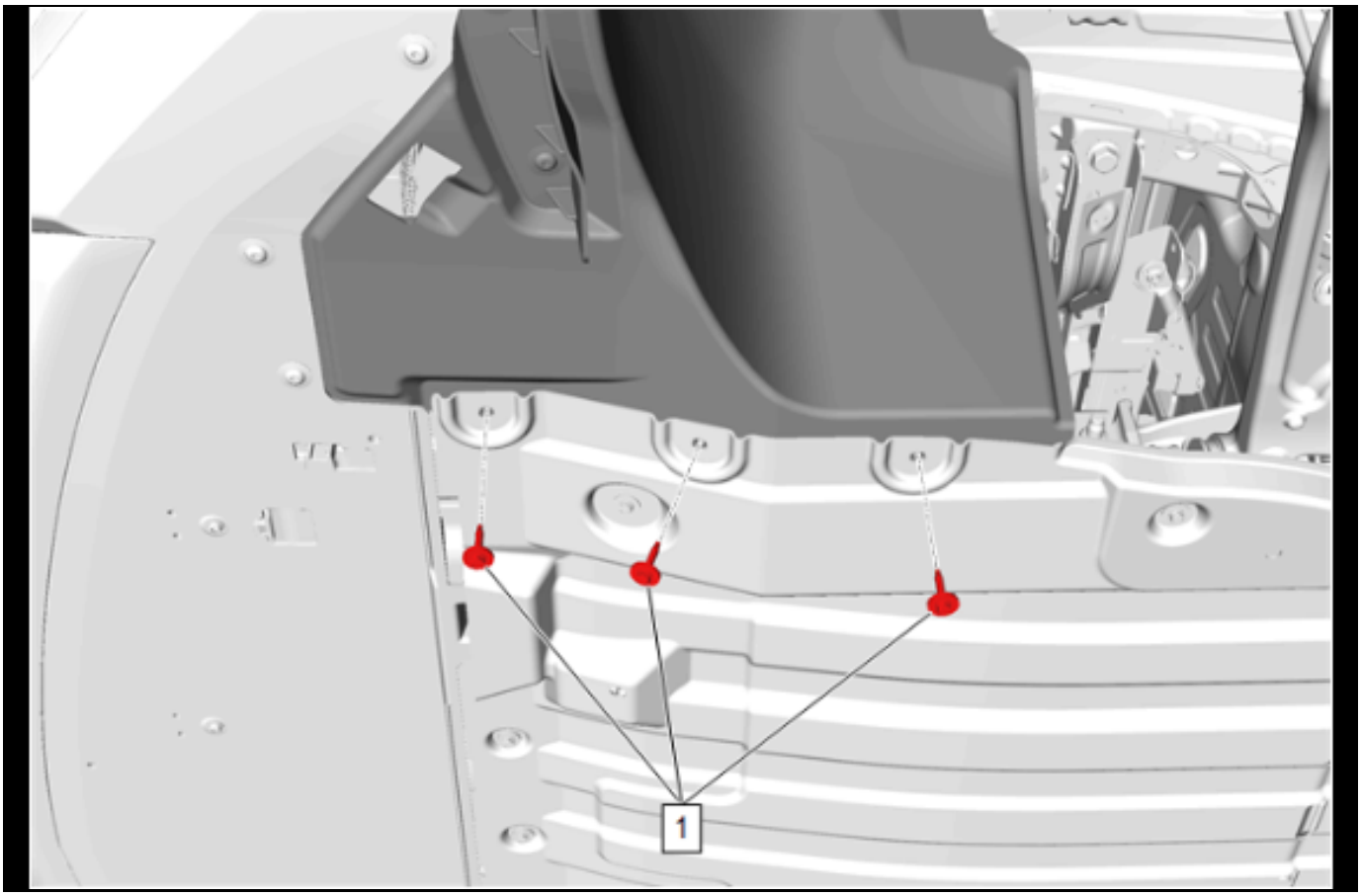

5491618

Note: Left side shown, right side similar.

16. Front Compartment Insulator Bolt (1) » Install and tighten

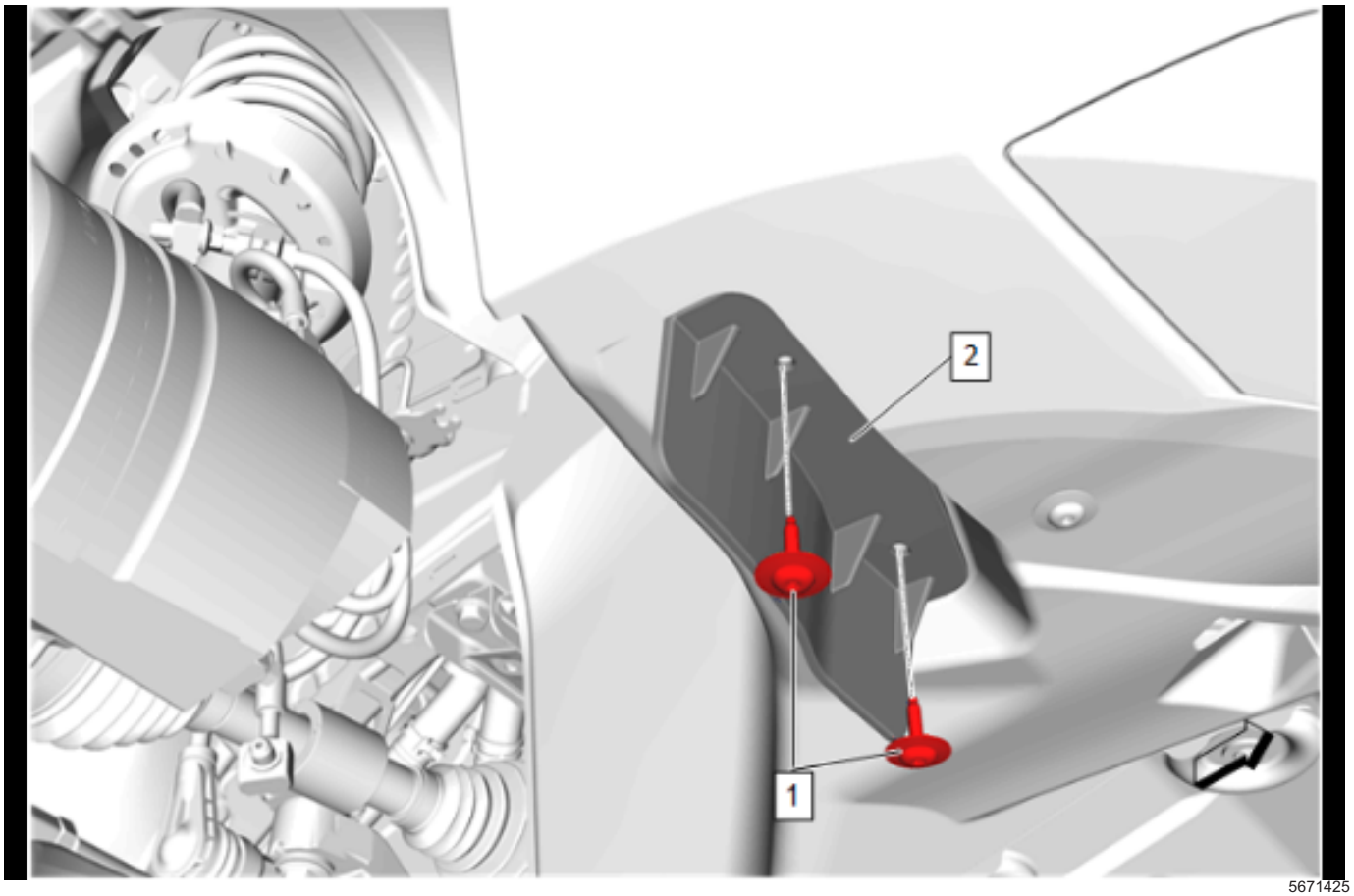

5671425

17. Front Tire Front Air Deflector (2) » Install
18. Front Tire Front Air Deflector Bolt (1) » Install and tighten [2x]

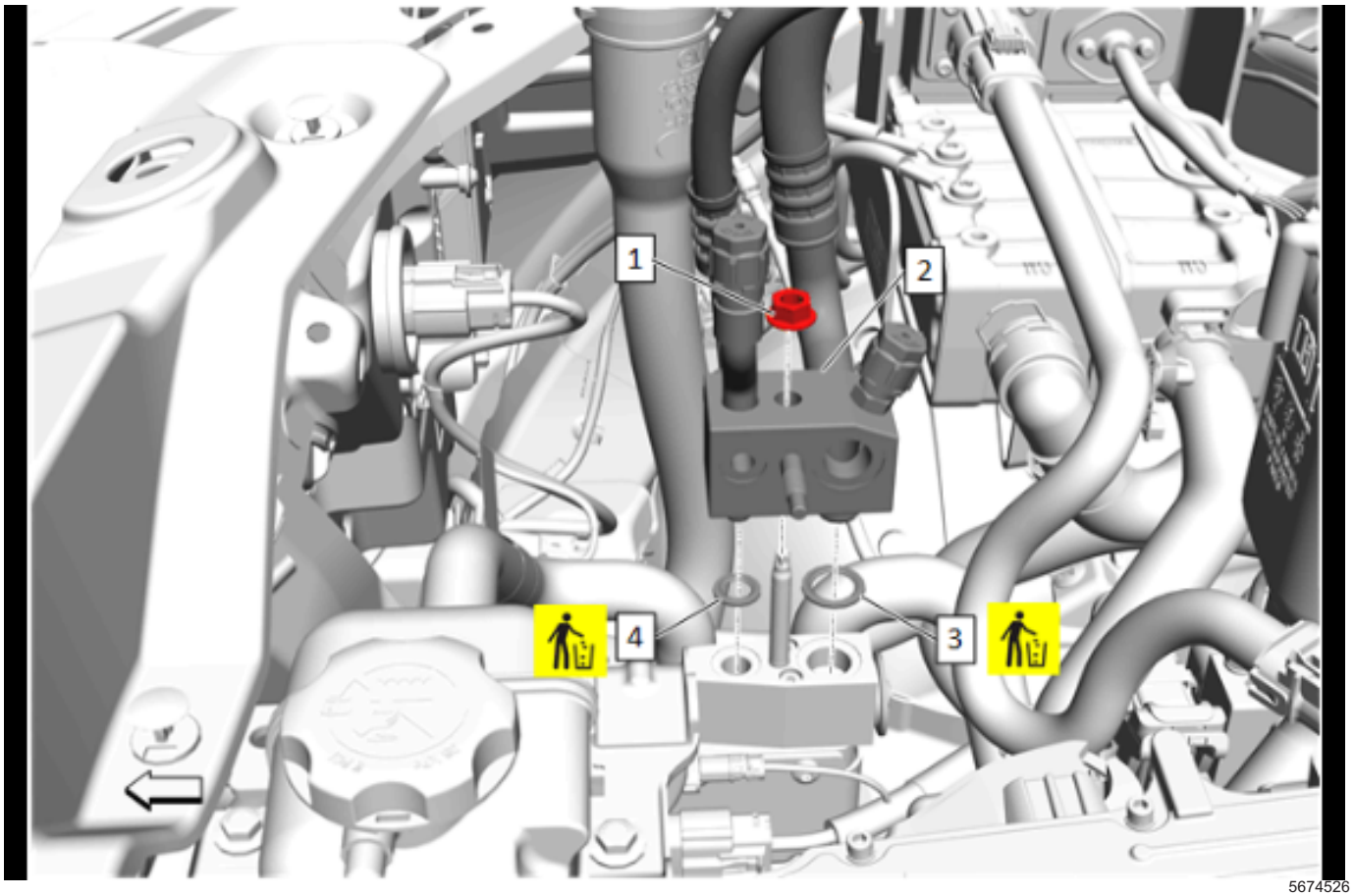

5674526

19. Air Conditioning Evaporator Hose (2) @ Vehicle
    » Install
20. Air Conditioning Evaporator Hose Seal - Small (4)
    » Install NEW
21. Air Conditioning Evaporator Hose Seal - Large (3)
    » Install NEW
22. Air Conditioning Evaporator Hose (2) @ Air Conditioning Evaporator Thermal Expansion Valve
    » Install
23. Air Conditioning Evaporator Hose Nut (1) » Install and tighten — *Fastener Specifications on page 5-3*

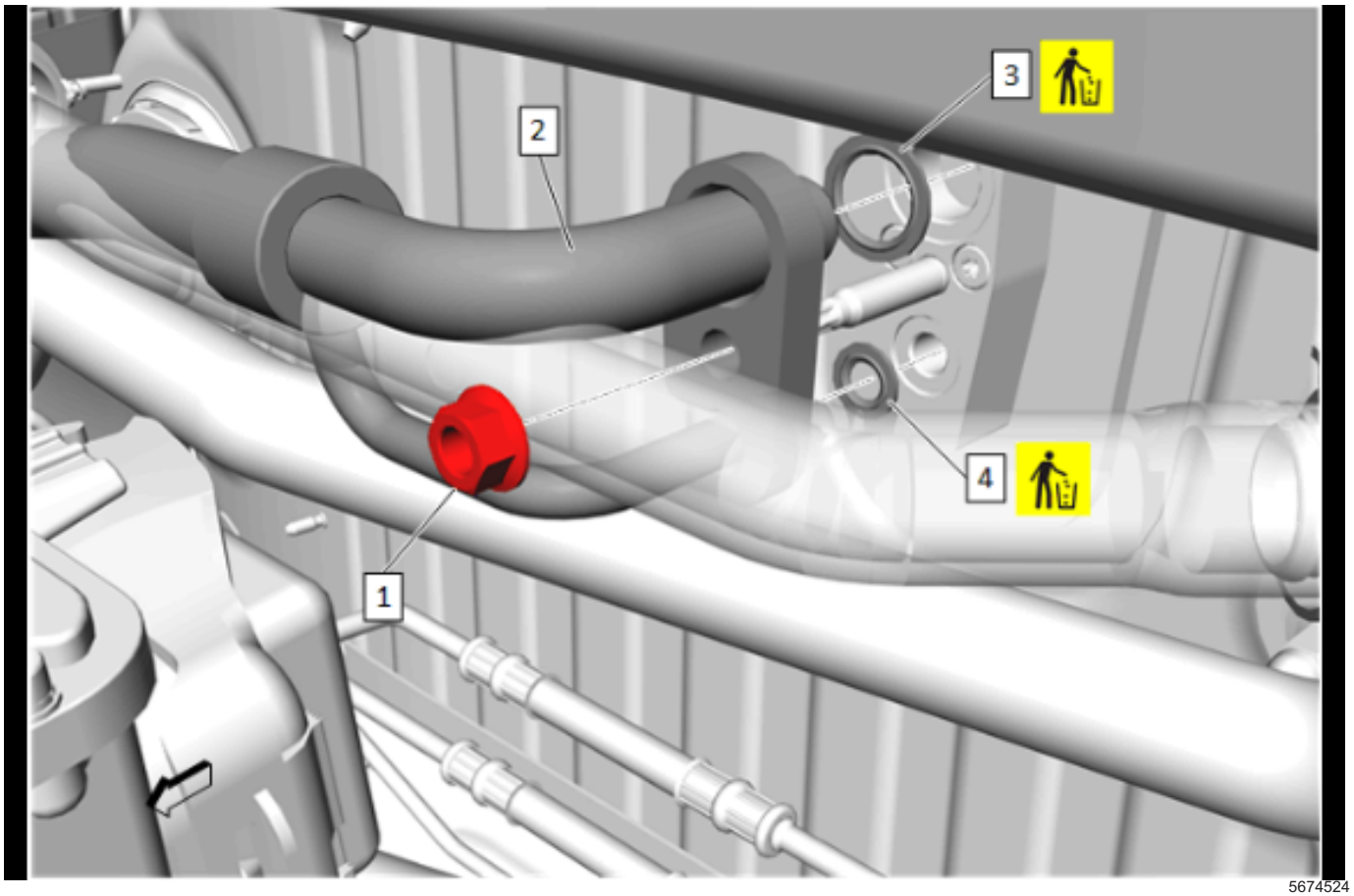

5674524

24. Air Conditioning Evaporator Hose Seal - Small (4)
    » Install NEW
25. Air Conditioning Evaporator Hose Seal - Large (3)
    » Install NEW
26. Air Conditioning Evaporator Hose (2) @ Air Conditioning Evaporator Thermal Expansion Valve
    » Install
27. Air Conditioning Evaporator Hose Nut (1) » Install and tighten — *Fastener Specifications on page 5-3*

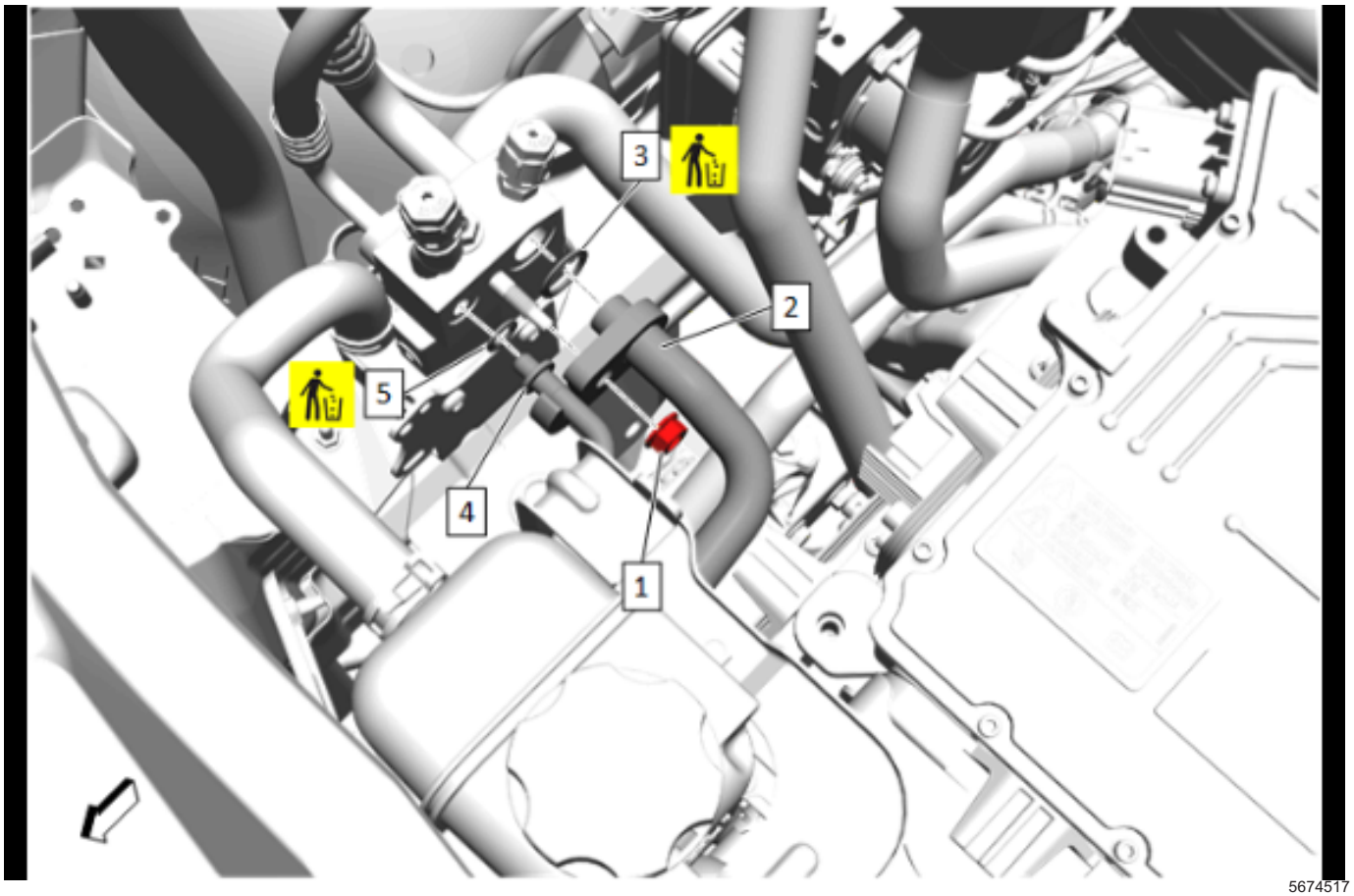

5674517

28. Air Conditioning Condenser Hose Seal - Small (5) » Install NEW
29. Air Conditioning Condenser Hose (4) @ Air Conditioning Evaporator Hose » Install
30. Air Conditioning Compressor Hose Seal - Large (3) » Install NEW
31. Air Conditioning Compressor Hose (2) @ Air Conditioning Evaporator Hose » Install
32. Air Conditioning Compressor Hose Nut (1) » Install and tighten — *Fastener Specifications on page 5-3*

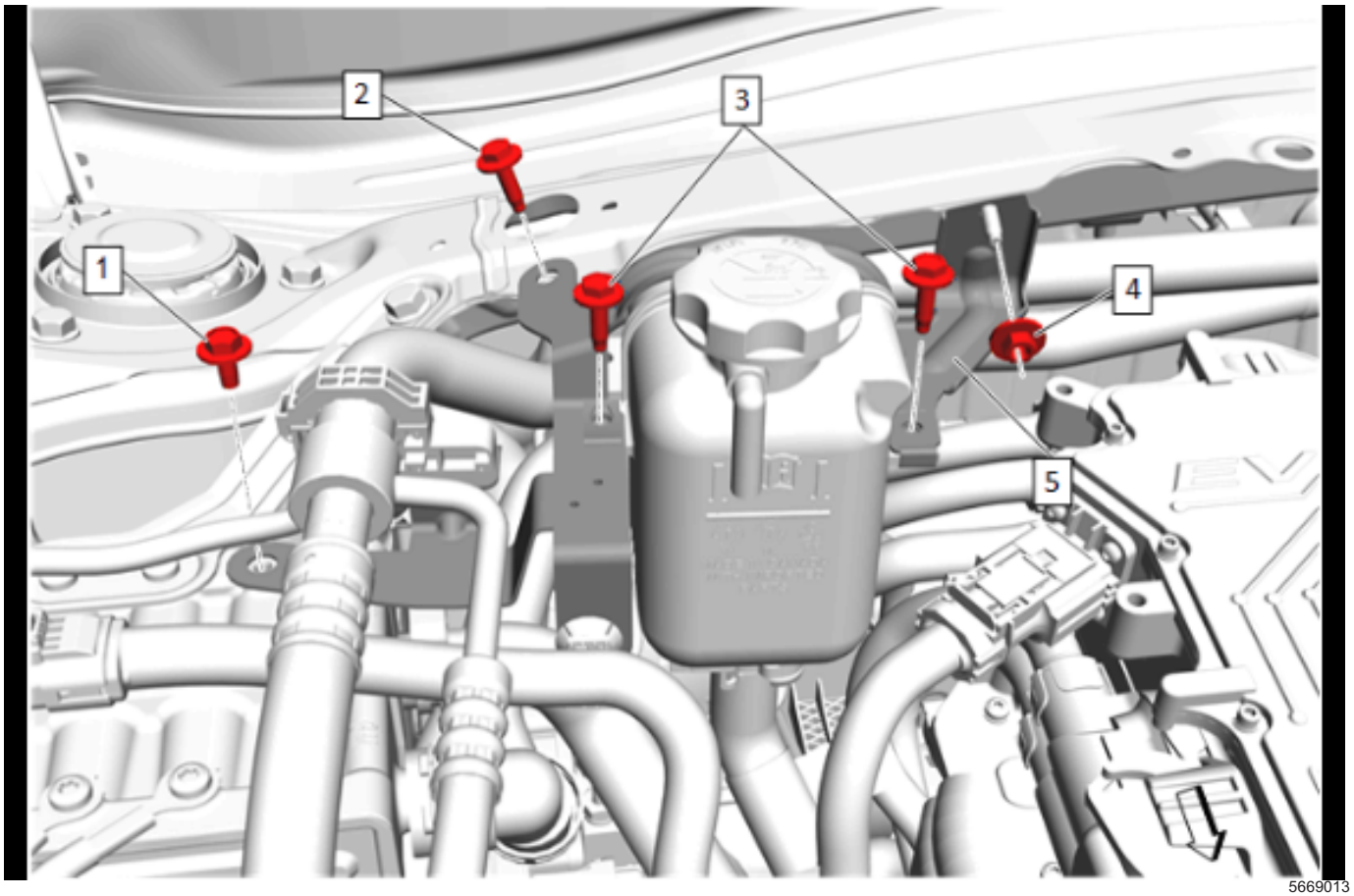

5669013

33. Radiator Surge Tank Bracket (5) » Install
34. Radiator Surge Tank Bracket Nut (4) » Install and tighten
35. Radiator Surge Tank Bolt (3) » Install and tighten [2x]
36. Radiator Surge Tank Bracket Bolt (2) » Install and tighten
37. Heater Water Flow Control Valve Bolt (1) » Install and tighten

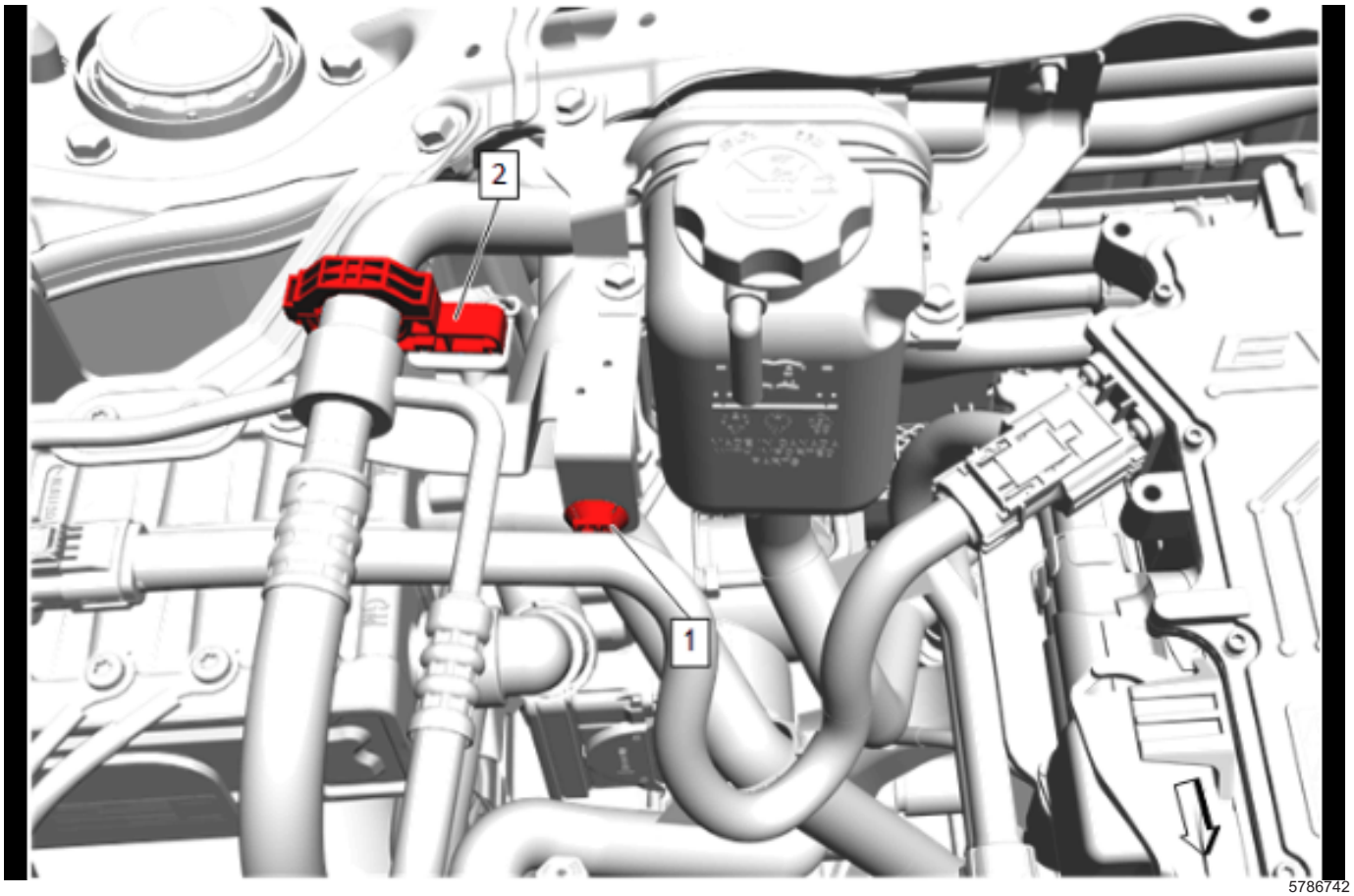

5786742

38. Air Conditioning Evaporator Hose Clip (2) » Install
39. Retainer (1) » Install
40. Recharge the refrigerant. *Refrigerant Recovery and Recharging on page 5-36*

Heater Case Replacement

Removal Procedure

1. Heater and Air Conditioning Evaporator and Blower Module — *Heater and Air Conditioning Evaporator and Blower Module Removal and Installation on page 5-199*
2. Drain the cooling system. *Heater Coolant Heater Draining and Filling on page 5-39*

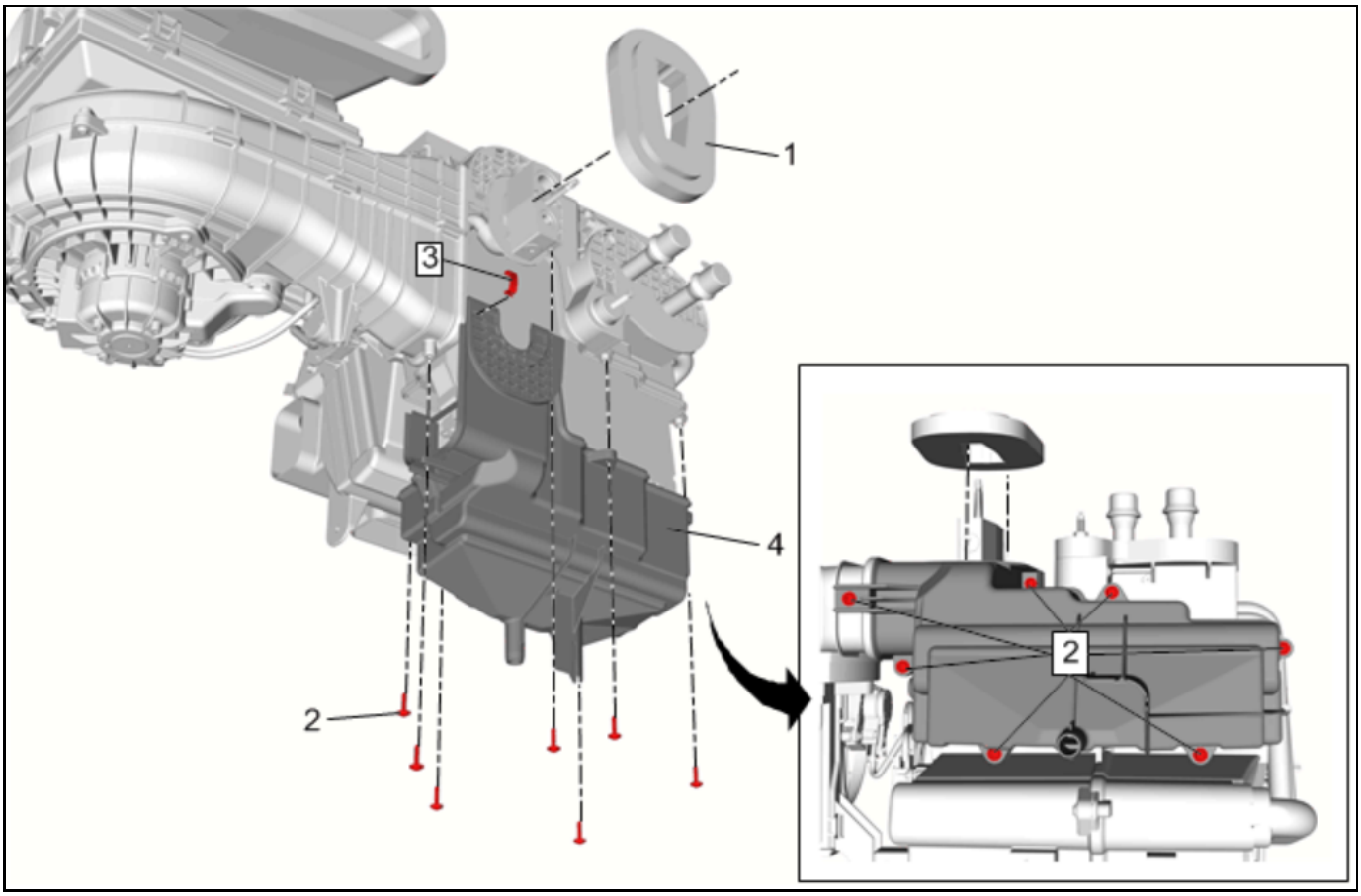

4648272

3. Heater And Air Conditioning Evaporator Tube Seal (1) » Remove
4. Screw (2) » Remove [7x]
5. Clip (3) » Remove
6. Heater Case (4) » Remove

Installation Procedure

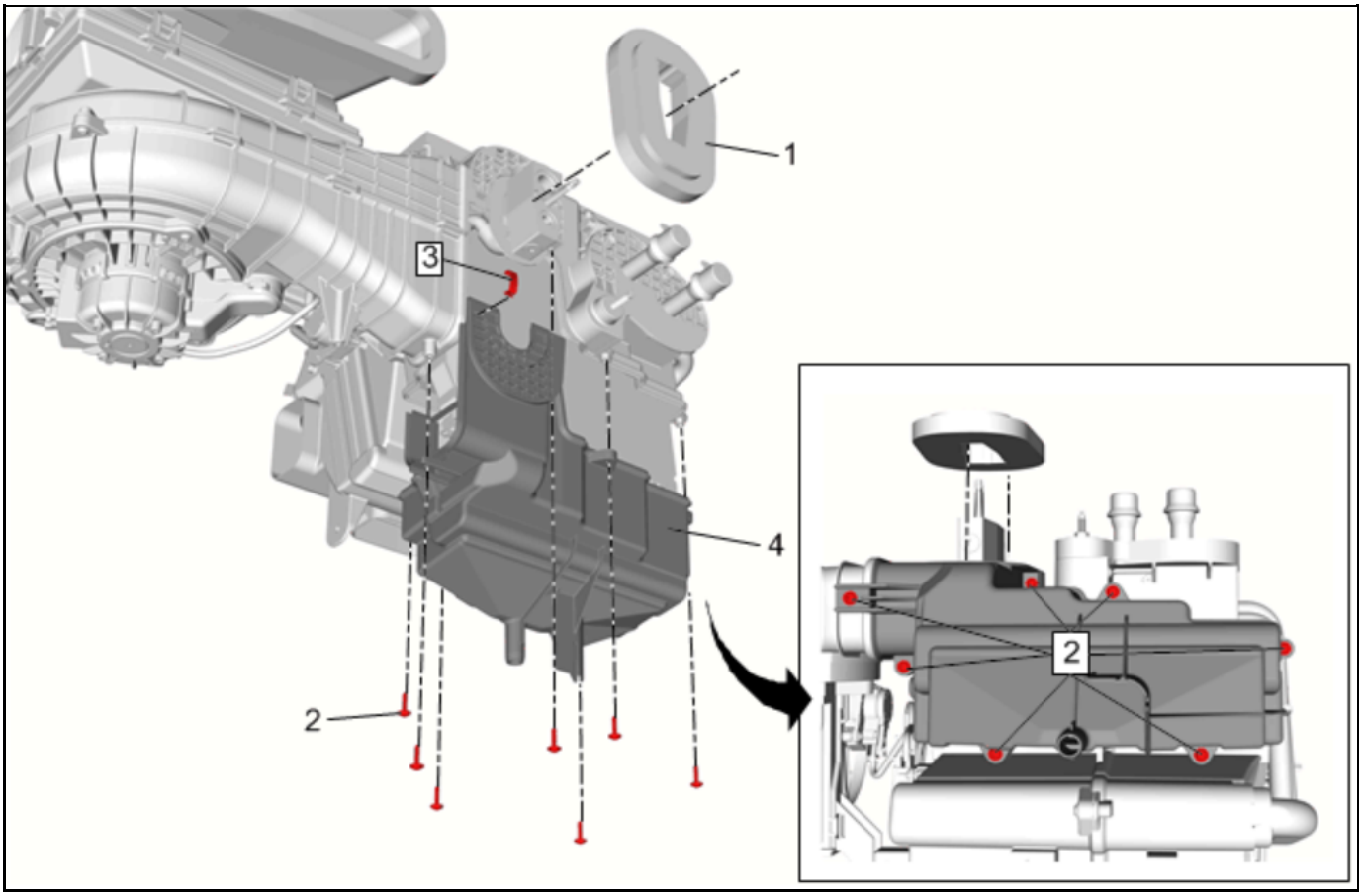

4648272

1. Heater Case (4) » Install
2. Clip (3) » Install
3. Screw (2) » Install and tighten — *Fastener Specifications on page 5-3*[7x]
4. Heater And Air Conditioning Evaporator Tube Seal (1) » Install
5. Heater and Air Conditioning Evaporator and Blower Module — *Heater and Air Conditioning Evaporator and Blower Module Removal and Installation on page 5-199*
6. Fill the cooling system to the proper level. *Heater Coolant Heater Draining and Filling on page 5-39*

Description and Operation

Heating and Air Conditioning System Description and Operation

Heating

The heating system uses a high voltage heater to provide heat to the passenger compartment. The high voltage heater is used when the passenger compartment heat is requested. The high voltage heater provides different levels of heat depending on the amount of heat needed and outside temperature.

The HVAC Control Module turns on the coolant pump and monitors the temperature sensors in the passenger compartment, outside air and high voltage heater to determine the position of the coolant flow control valve and if the high voltage heater is needed. Passenger compartment heat is provided by air flowing through the heater core. The heater core is heated by coolant from the high voltage heater.

The heating system circulates a 50/50 mixture of Dex-cool and deionized water.

Air Conditioning

The A/C system uses the refrigerant R-1234yf which is a gas at very low temperatures and can transfer heat from the passenger compartment and high voltage battery to the outside air. The A/C system is mechanically protected with the use of a high pressure relief valve on the A/C compressor. If the refrigerant pressure sensor were to fail or if the A/C system becomes restricted and the refrigerant pressure continued to rise, the high pressure relief will open and release refrigerant from the system.

The high voltage electric A/C compressor is a self contained high voltage inverter, electric motor, and direct coupled compressor. The electric A/C compressor has the ability to run and provide cooling performance while the vehicle is not running. The electronic climate control module and the Vehicle Integration Control Module (VICM) will command the electric A/C compressor to a speed necessary to maintain a desired cooling level rather than cycle the electric A/C compressor on and off.

The electric A/C compressor builds pressure and adds heat to the refrigerant gas. The refrigerant gas flows from the electric A/C compressor to the condenser where heat is transferred to the outside air when the refrigerant condenses from a gas to a liquid. The liquid refrigerant then flows to a thermal expansion valve (TXV) on the battery chiller. The TXV lowers the pressure of the liquid refrigerant which makes the refrigerant expand from a liquid to a vapor. The low pressure refrigerant vapor flows into the battery chiller and begins to boil and change into a gas as the refrigerant absorbs heat from the battery coolant also flowing inside the battery chiller. The battery coolant and refrigerant are separated by several plates inside the battery chiller. The liquid refrigerant also flows to a second TXV on the evaporator. The low pressure refrigerant vapor flows from the TXV into the evaporator and begins to boil and change into a gas as the refrigerant absorbs heat from the passenger compartment air that is flowing through the outside of the evaporator. The moister in the passenger compartment air condenses on the outside of the evaporator and flows down to the bottom of the HVAC module where it drains outside the passenger compartment through a drain hose. The low pressure refrigerant gas then flows from the battery chiller and the evaporator back to the electric A/C compressor where the cycle is repeated.

Special Tools and Equipment

Illustration	Tool Number/ Description
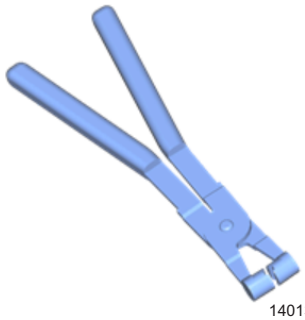 14013	BO 38185 J 38185 Hose Clamp Pliers
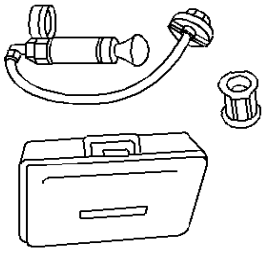 1405	EN 24460-A J 24460-A Cooling System Pressure Tester
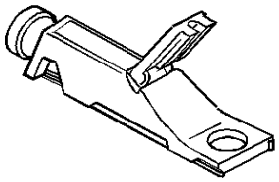 12869	GE 26568 J 26568 Coolant and Battery Tester
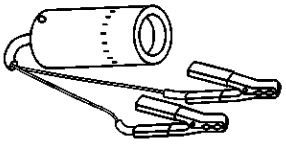 677808	GE 42220 J 42220 Universal 12V Leak Detection Lamp
748416	GE 43872 J 43872 Fluorescent Dye Cleaner
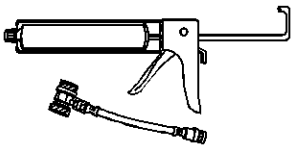 817931	GE 45037-A J 45037-A A/C PAG/POE Oil Injector
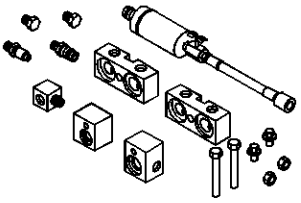 767049	GE 45268 J 45268 Flush Adapter Kit

Illustration	Tool Number/ Description
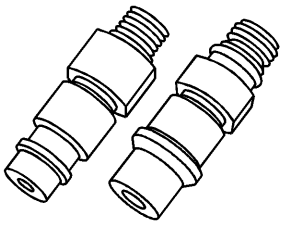 3581409	GE-45268-130 (Includes GE-45268-128 and GE-45268-129) R1234yf Flush Adapters
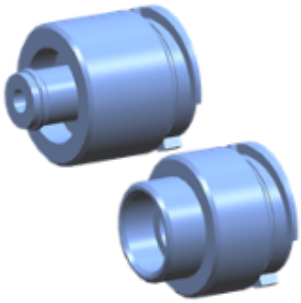 1385126	GE 46143 Cooling System Adapter
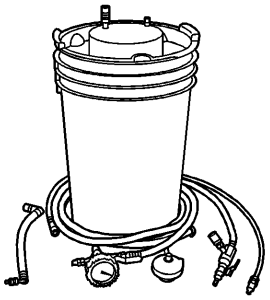 1617830	GE 47716 Vac-N-Fill Coolant Refill Tool
2772114	GE-50078 Infrared Refrigerant Leak Detector
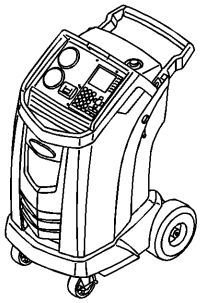 2772007	GE-48800 CoolTech A/C Recharge Machine

HVAC - Automatic

Schematic and Routing Diagrams

HVAC Schematics (Power, Ground, Data Communication and Blower Controls)

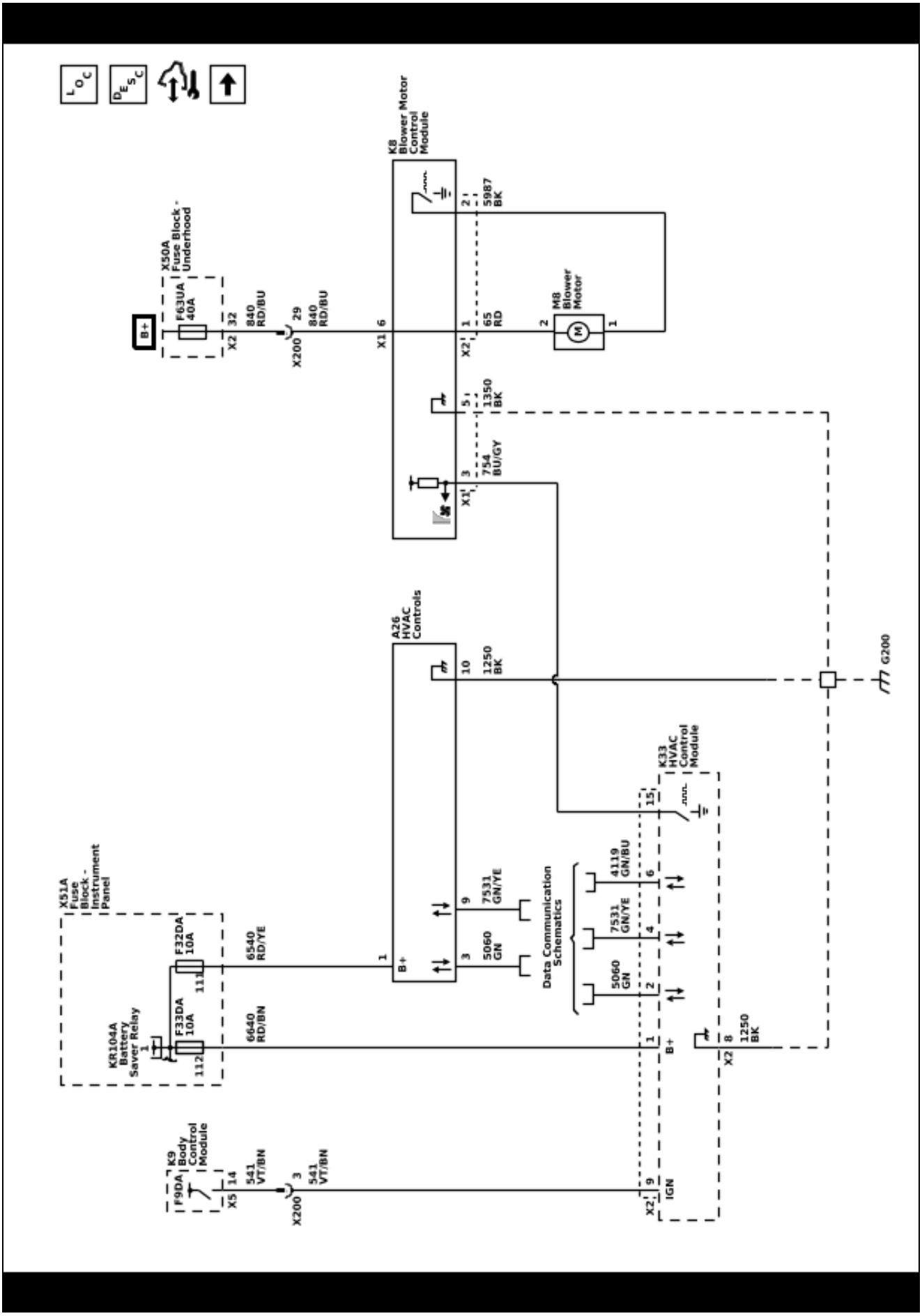

HVAC Schematics (Actuators)

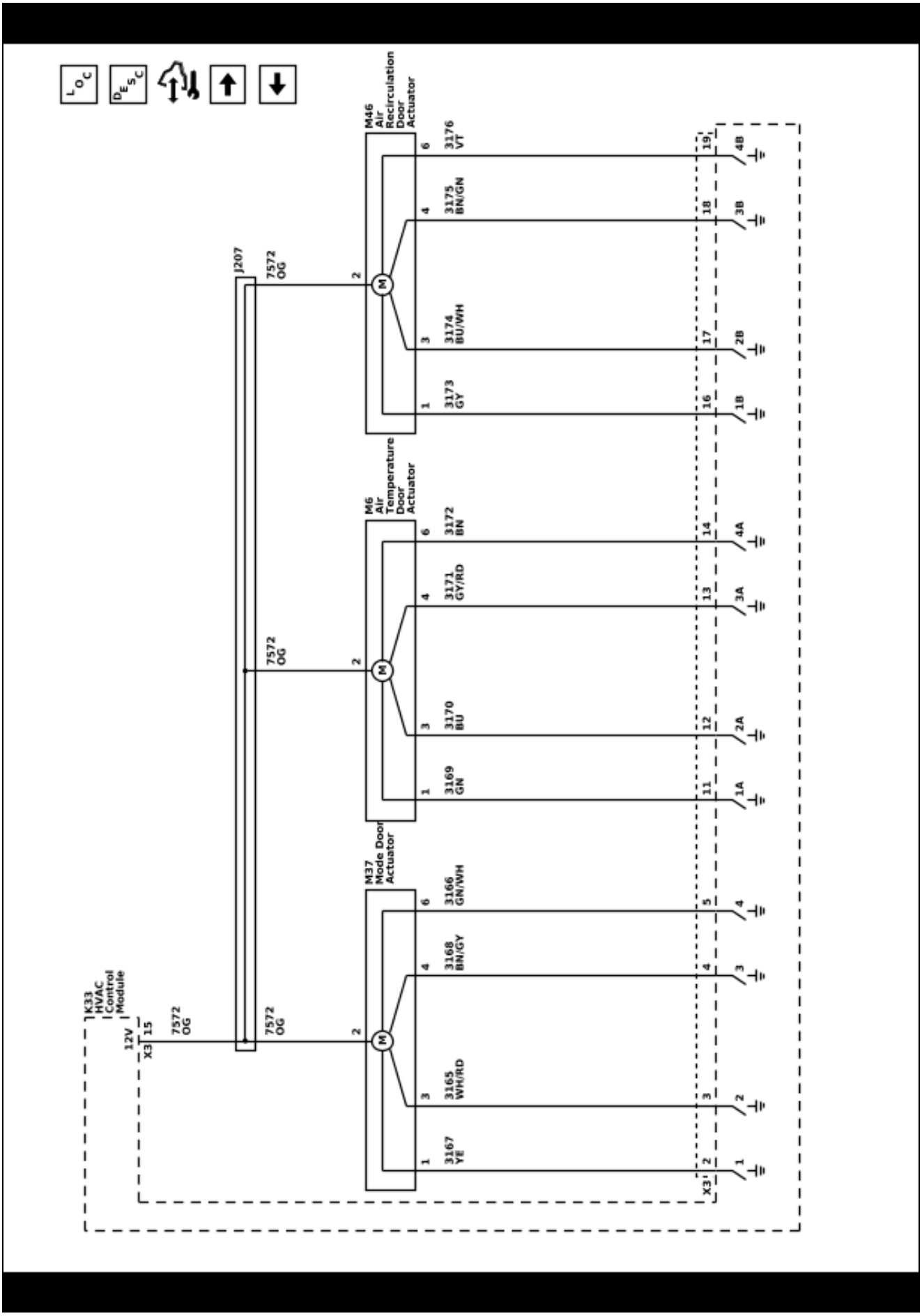

5910103

HVAC Schematics (Sensors)

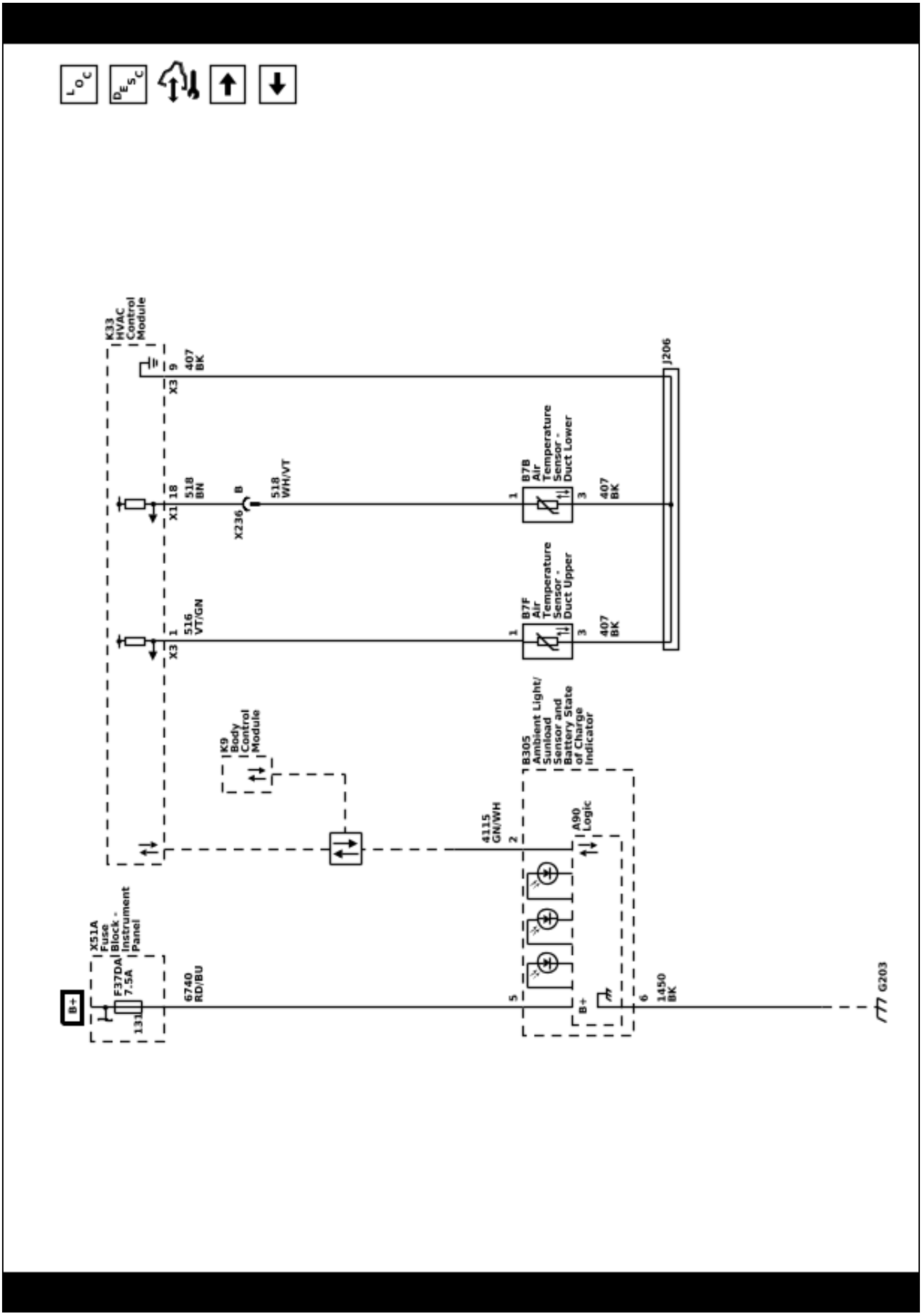

5910104

HVAC Schematics (Heater Coolant Pump)

5910105

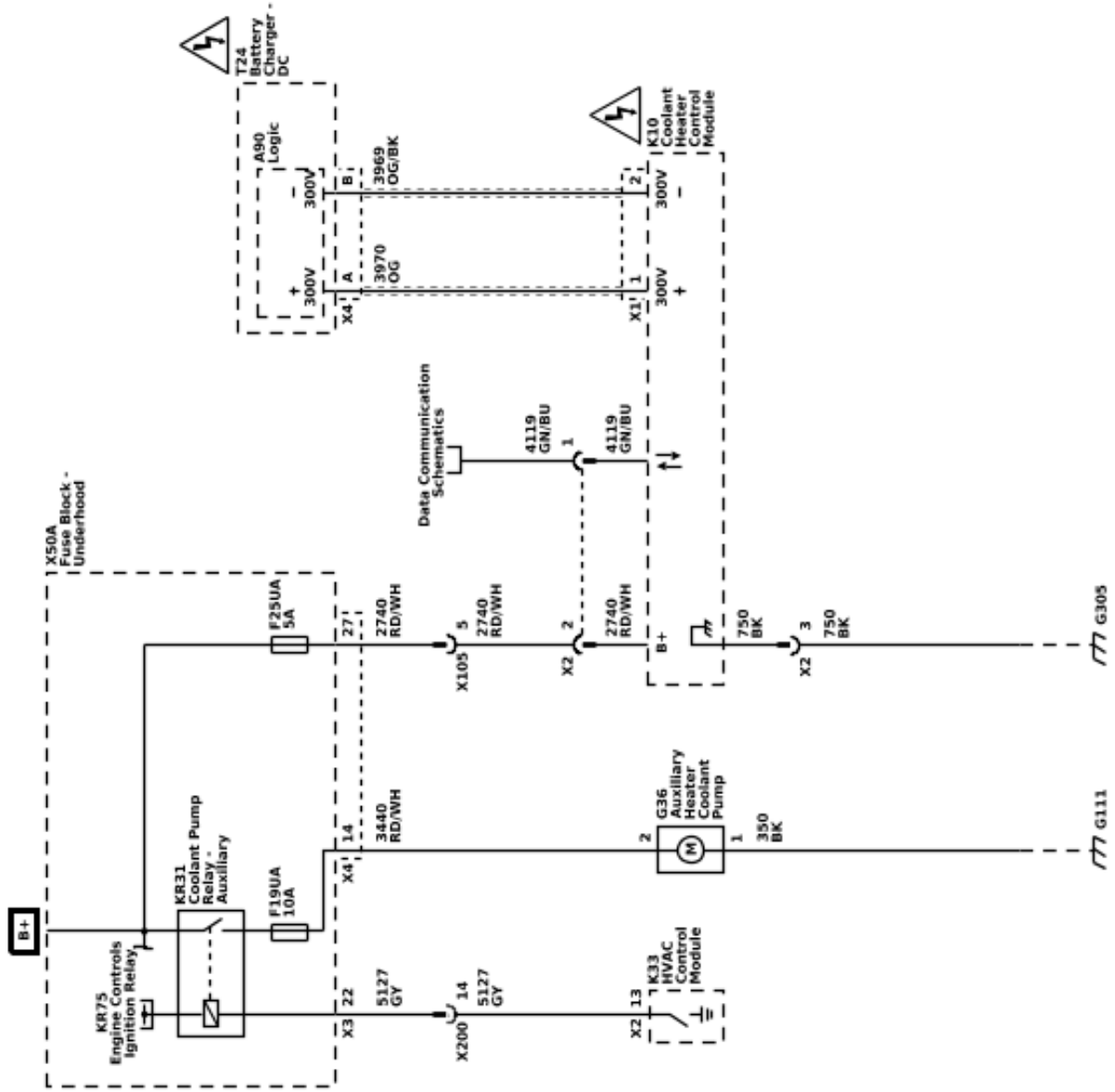

HVAC Schematics (Compressor Controls)

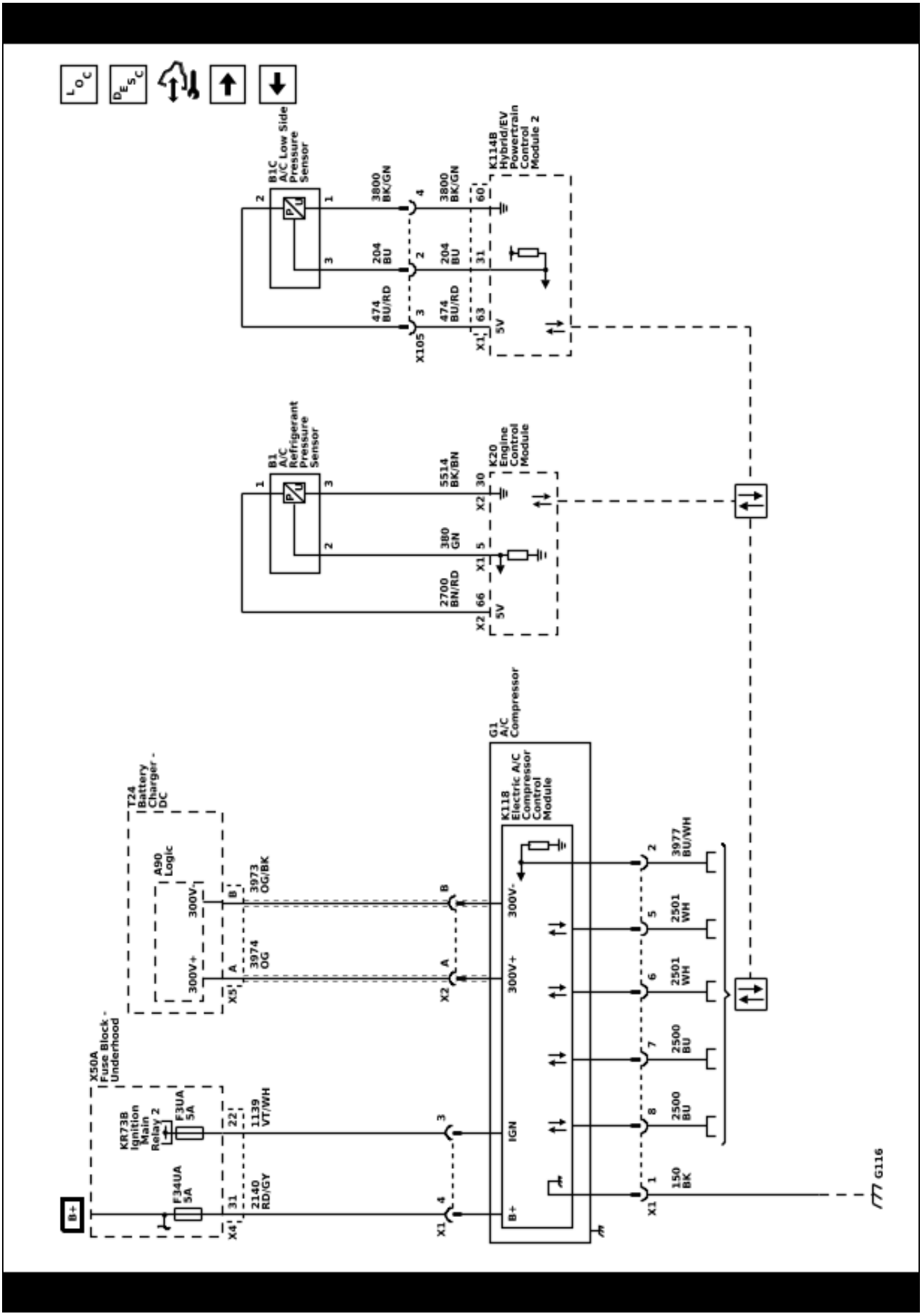

5910106

5910107

HVAC Schematics (Air Ionizer (KEM))

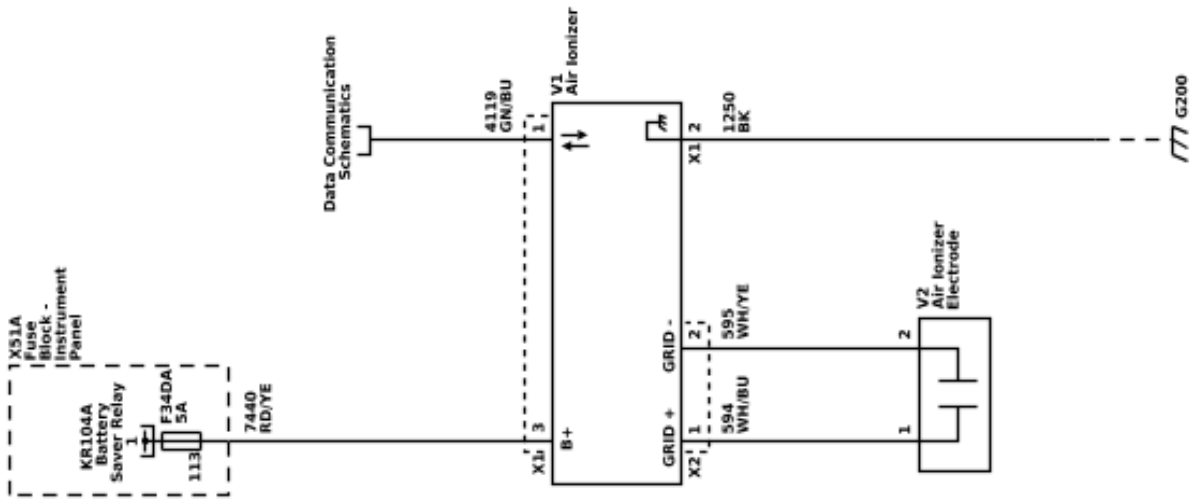

Description and Operation

Automatic HVAC Description and Operation

The air temperature and the air delivery description and operation are divided into the following areas:

- HVAC Control Components
- Air Speed
- Air Delivery
- Heating and A/C Operation
- Recirculation Operation
- Automatic Operation
- Coolant Heater Control Module
- Coolant and A/C System Refrigerant

HVAC Control Components

HVAC Control

The HVAC control contains all the switches and knobs which are required to control the functions of HVAC and serve as interface between the operator and the HVAC control module. The HVAC controls are part of the radio/HVAC controls assembly. The selected values are passed to the HVAC control module via serial data.

HVAC Control Module

The HVAC control module is a serial data device that interfaces between the operator and the HVAC system to maintain and control desired air temperature and air distribution settings. The battery positive voltage circuit provides power that the HVAC control module uses for keep alive memory. If the battery positive voltage circuit loses power, all HVAC DTCs and settings will be erased from keep alive memory. The body control module (BCM), which is the vehicle power mode master, provides a device ON-Signal. The HVAC control module provides blower, air delivery mode and air temperature settings.

Actuators

Doors in the HVAC case assembly are used to control air flow. The HVAC control module operates the doors through the use of actuators, with one actuator being used for each door. The system has the following air control doors and associated actuators: mode, temperature, and recirculation.

Each actuator used in the system is a 5-wire stepper motor. The HVAC control module supplies a 12 V reference voltage to the stepper motor and energizes the 4 stepper motor coils with a pulsed ground signal. The stepper motor moves the associated air control door into the calculated position in order to reach the selected position. The null point of the stepper motor will be calibrated, if the stepper motor is new. When the stepper motor is calibrated, the HVAC control module can drive the applicable coil to reach exactly the desired position of the air control door.

Blower Motor Control Module

The blower motor control module controls the speed of the blower motor by increasing or decreasing the voltage drop on the ground side of the blower motor. The HVAC control module provides a low side pulse width modulation (PWM) signal to the blower motor control module via the blower motor speed control circuit. As the requested blower speed increases, the HVAC control module increases the amount of time that the speed signal is modulated to ground. As the requested blower speed decreases, the HVAC control module decreases the amount of time that the signal is modulated to ground.

Duct Temperature Sensors

The air temperature sensors are 2-wire negative temperature co-efficient thermistors. The sensors operate within a temperature range of -40 to +85°C (-40 to +185°F). The sensors are installed in the air distribution ducts and measure the temperature of the air that streams from the ducts. The HVAC control module uses these values to calculate the mixed air door position.

A/C Refrigerant High Pressure Sensor

The A/C refrigerant pressure sensor is a 3-wire piezoelectric pressure transducer. A 5 V reference voltage, low reference, and signal circuits enable the sensor to operate. The A/C pressure signal can be between 0.2–4.8 V. When the A/C refrigerant pressure is low, the signal value is near 0 V. When the A/C refrigerant pressure is high, the signal value is near 5 V. The engine control module (ECM) converts the voltage signal to a pressure value. When pressure is too high or too low, the ECM will not allow the A/C compressor to engage.

A/C Refrigerant Low Pressure Sensor

The A/C refrigerant pressure sensor is a 3-wire piezoelectric pressure transducer. A 5 V reference voltage, low reference, and signal circuits enable the sensor to operate. The A/C pressure signal can be between 0.2–4.8 V. When the A/C refrigerant pressure is low, the signal value is near 0 V. When the A/C refrigerant pressure is high, the signal value is near 5 V. The Hybrid/EV Powertrain Control Module 2 monitors the low side refrigerant pressure through the A/C pressure sensor.

A/C Compressor

The AC compressor function is to provide refrigerant flow in the AC refrigerant loop to help cool down the cabin, help dehumidify the air in a defrost mode and help maintain the battery temperature. Rather than a more-typical pulley, the A/C compressor uses a 3-phase alternating current, high voltage electric motor to operate. It has an on-board inverter that takes high voltage direct current from the vehicle's high voltage battery and inverts it to alternating current for the motor. The AC compressor may be activated when any of the three following events occur:

- The customer selects Heat and A/C
- The HVAC system is set to fan only but the customer selects defrost mode
- The High Voltage Battery thermal system requests the AC compressor on to help maintain the battery temperature

The A/C compressor contains an integrated control module. The A/C compressor control module operates and monitors the A/C compressor, and communicates with other modules via serial data. The A/C compressor

control module reports any malfunctions to the hybrid/EV powertrain control module 2, which sets the appropriate DTC for the malfunction.

The hybrid/EV powertrain control module 2 uses values from the A/C refrigerant pressure sensor, duct temperature sensors, ambient air temperature sensor , passenger compartment temperature sensor, battery cell temperature sensors, battery coolant temperature sensors, and battery coolant pumps to determine the speed at which the compressor will operate. This message is sent from the hybrid/EV powertrain control module 2 to the A/C compressor control module via serial data message.

Ambient Light/Sunload Sensor

The ambient light/sunload sensor includes the sunload sensor and passenger compartment temperature sensor.

This sensor assembly provides information about:

- Sun heat intensity
- Passenger compartment temperature

The solar sensor is connected to ground and to a 5 V stabilized voltage supply through the HVAC control module. As the sunload increases, the sensor signal voltage also increases and vice versa. The signal varies between 1.4–4.5 V and is provided to the HVAC control module.

The passenger compartment temperature sensor is a negative temperature co-efficient thermistor. A signal and low reference circuit enables the sensor to operate. As the air temperature increases, the sensor resistance decreases. The sensor signal varies between 0–5 V.

Bright or high intensity light causes the vehicles interior temperature to increase. The HVAC system compensates for the increased temperature by diverting additional cool air into the vehicle.

Windshield Temperature and Inside Moisture Sensor

The windshield temperature and inside moisture sensor includes the relative humidity sensor, windshield temperature sensor and humidity sensing element temperature sensor.

This sensor assembly provides information about:

- Relative humidity level at windshield (compartment side)
- Temperature of the windshield inside (compartment side)
- Temperature of the humidity sensor element

The relative humidity sensor measures the relative humidity of the compartment side of the windshield. It also detects the temperature of the windshield surface on the passenger compartment side. Both values are used as control inputs for the HVAC control module application to calculate the fog risk on windshield compartment side and ability to reduce fuel consumption by decreasing A/C compressor power to a minimum without causing any fog. The sensor will also enable partial recirculation mode in order to improve heat-up performance of the passenger compartment under cold ambient temperature conditions without the risk of mist build-up on the windshield. The humidity sensor element temperature sensor supplies the temperature of the humidity sensor element.

The B160 Inside Air Moisture and Windshield Temperature Sensor is a LIN device, and the windshield temperature and humidity values are transmitted to the HVAC control module via serial data.

HVAC Coolant Pump

The coolant heater pump is controlled by a relay. When operating conditions exist that requires coolant flow, the HVAC control module turns ON the heater coolant pump by applying ground to the relay control circuit which energizes the heater coolant pump relay.

Air Ionizer (KEM)

The ionizer is a method of electronically cleaning the air to improve the air quality in the vehicle cabin. The air ionizer electrodes produce positive and negative ions to reduce certain pollutants and odors. The ionizer uses a battery voltage circuit, ground circuit, and a serial data signal from the HVAC control module to operate. When the air ionizer is enabled, the HVAC control module will send a serial data message for the ionizer to operate when the blower is on.

Refer to the owners manual for information regarding operation of the air ionizer.

Air Speed

The blower control switch is part of the HVAC faceplate control. The selected value of the blower switch position is sent to the HVAC control module via serial data.

The blower motor control circuitry is integrated within the blower motor control module. The HVAC control module provides a ground pulse width modulation (PWM) signal to the blower motor control module to request a specific motor speed. The blower motor control module translates the PWM signal and drives the motor accordingly.

Afterblow

Afterblow is a feature that dries the evaporator core by operating the blower motor after the engine is turned OFF under certain conditions. This reduces the amount of microbial growth that can create undesirable odors. For additional information on afterblow, the default setting, and changing the setting, refer to Afterblow Configuration.

Air Delivery

The HVAC control module controls the distribution of air within the passenger compartment by the use of the mode actuator. The modes that may be selected are:

- Defrost
- Defog
- Panel
- Floor
- BiLevel

In auto mode, the air delivery mode is controlled automatically based on cooling/warming needs of the compartment. The desired air distribution mode can be selected with the air distribution buttons at the HVAC faceplate control. The HVAC control delivers the values to the HVAC control module via serial data. The HVAC control module controls the mode actuator so that it drives the door to the calculated position. Depending

on the position of the door, air is distributed through various ducts leading to the outlets in the dash. Turning the mode door to the defrost position, the HVAC control module will move the recirculation actuator to outside air, reducing window fogging. When defrost is selected, the blower motor will be activated. The HVAC control module enables a high volume of air delivered to the front defrost vents. A/C is available in all modes.

The rear window defogger does not affect the HVAC system.

Recirculation Operation

The recirculation switch is integrated into the HVAC control. The selected recirculation setting is sent to the HVAC control module via LIN-Bus. The HVAC control module controls the air intake using the recirculation actuator. In recirculation mode the recirculation door is positioned to block outside air from entering and circulate the air within the vehicle. In outside air mode the recirculation door is positioned to route outside air into the vehicle.

Recirculation is only available if the defrost mode is not active. When the defrost mode is active, the recirculation actuator positions the recirculation door so that outside air is circulated to the windshield to reduce fogging.

In automatic mode the values of the sensors are used as inputs for the HVAC control module to calculate the fog risk on passenger compartment side of the windshield. The A/C compressor and the defrost mode may activated to prevent or remove fog on the passenger compartment side of the windshield.

Heating and A/C Operation

The purpose of the heating and A/C system is to provide heated and cooled air to the interior of the vehicle. The A/C system will also remove humidity from the interior and reduce windshield fogging. Regardless of the temperature setting, the following can affect the rate that the HVAC system can achieve the desired temperature:

- Ambient air temperature
- Difference between inside and desired temperature
- Blower motor speed setting
- Mode setting
- Air conditioning control module operation
- Hybrid/EV powertrain control module 2 operation
- Coolant heater control module

Selecting AUTO or pressing the Heat and A/C button enables the HVAC control module to determine whether to request A/C compressor or coolant heater activation. Based on the thermal conditions of the vehicle the HVAC control module sends a serial data message to the hybrid/EV powertrain control module 2 for the A/C request. The hybrid/EV powertrain control module 2 will request the A/C compressor control Module to engage A/C. The HVAC control module sends the heating request to the coolant heater control module to produce heat.

Fan Only mode will disable all heating and cooling of the vehicle unless overridden by dehumidification requirements.

Automatic Operation

The user can select to operate the Blower, Recirculation and Air Delivery operations in auto per auto operation mode.

To put the HVAC system in full automatic mode, the following is required:

1. The auto button must be pressed.
2. The system indicates that all 3 functions are being operated automatically by lighting the auto button LED.

When the auto button is pressed, the system responds by putting the blower, air delivery and recirculation into auto mode. If any of these functions are adjusted then the auto button indication shall go off and the function will leave auto operation and follow the user requested setting: auto, blower, air delivery and recirculation. In this setting the blower request is adjusted to quickly heat the cabin initially. After comfort is reached, the blower speed is minimized to reduce noise and temperature drifts.

Under cold ambient temperatures, the automatic HVAC system provides heat in the most efficient manner. The operator can select an extreme temperature setting but the system will not warm the vehicle any faster. Under warm ambient temperatures, the automatic HVAC system also provides air conditioning in the most efficient manner. Selecting an extreme cool temperature will not cool the vehicle any faster.

In automatic mode the values of the windshield temperature and inside moisture sensor are used as control inputs for the HVAC control module application to calculate the fog risk on the passenger compartment side of the windshield and ability to reduce fuel consumption by decreasing A/C compressor power to a minimum without causing any fog. The A/C compressor and the defrost mode may be activated to prevent or remove fog on the passenger compartment side of the windshield. The sensor will also enable partial recirculation mode in order to improve heat-up performance of the passenger compartment under cold ambient temperature conditions without the risk of mist build-up on the windshield.

Coolant Heater Control Module

The coolant heater control module is a high voltage electric heater. High voltage is supplied from the hybrid/EV battery pack. A fused battery input, ground, and LIN serial data from the HVAC control module are used to control the operation of the coolant heater control module.

The coolant heater control module is an essential element of the hybrid heating system. When cabin heat is required, the HVAC control module commands the coolant heater control module activation via serial data, and commands the coolant pump relay on to operate the coolant pump to circulate the coolant. Heated coolant from the coolant heater will meet HVAC temperature demands. The coolant heater control module will be commanded OFF if the coolant temperature exceeds the desired temperature.

Heater coolant enters the heater core through the inlet heater hose, in a pressurized state. The heater core is located inside the HVAC module. The ambient air drawn through the HVAC module, absorbs the heat of

the coolant flowing through the heater core. Heated air is distributed to the passenger compartment, through the HVAC module, for passenger comfort. Opening or closing the air temperature door controls the amount of heat delivered to the passenger compartment. The coolant exits the heater core through the return heater hose and recirculates back to the system.

Coolant and A/C System Refrigerant

For information on coolant, coolant flow, A/C refrigerant, and the A/C refrigerant cycle, refer to *Heating and Air Conditioning System Description and Operation on page 5-602*.

BLANK

Section 6

Power and Signal Distribution

Data Communications 6-3
Schematic and Routing Diagrams 6-3
Data Communication Schematics 6-4
Body Control System Schematics 6-25
Description and Operation 6-29
Data Link Communications Description and Operation 6-29

Electrical Component and Inline Harness Connector End Views 6-34
Component Locator 6-34
Electrical Center Identification Views 6-34
Component Connector End Views 6-60
Inline Harness Connector End Views 6-441

Electrical Component Locator and Harness Routing Views 6-532
Schematic and Routing Diagrams 6-532
Harness Routing Views 6-532
Component Locator 6-557
Front of Vehicle/Engine Compartment Component Views 6-557
Powertrain Component Views 6-564
Instrument Panel/Center Console Component Views 6-565
Passenger Compartment/Roof Component Views 6-572
Door Component Views 6-583
Luggage Compartment/Rear of Vehicle Component Views 6-591
Wheels/Vehicle Underbody Component Views 6-599
Ground Views 6-602

Power Outlets 6-624
Schematic and Routing Diagrams 6-624
Cigar Lighter/Power Outlet Schematics 6-625
Description and Operation 6-626
Mobile Device Wireless Charger Description and Operation 6-626
Power Outlets Description and Operation 6-627

Wiring Systems and Power Management 6-628
Schematic and Routing Diagrams 6-628
Power Distribution Schematics 6-629
Power Moding Schematics 6-640
Ground Distribution Schematics 6-643
Component Locator 6-653
Master Electrical Component List 6-653
Description and Operation 6-692
Electronic Park Lock Description and Operation 6-692
Power Mode Description and Operation 6-692
Retained Accessory Power Description and Operation 6-695

BLANK

Data Communications

Schematic and Routing Diagrams

Data Communication Schematics (Data Link Connector and Serial Data Gateway Module Power and Ground)

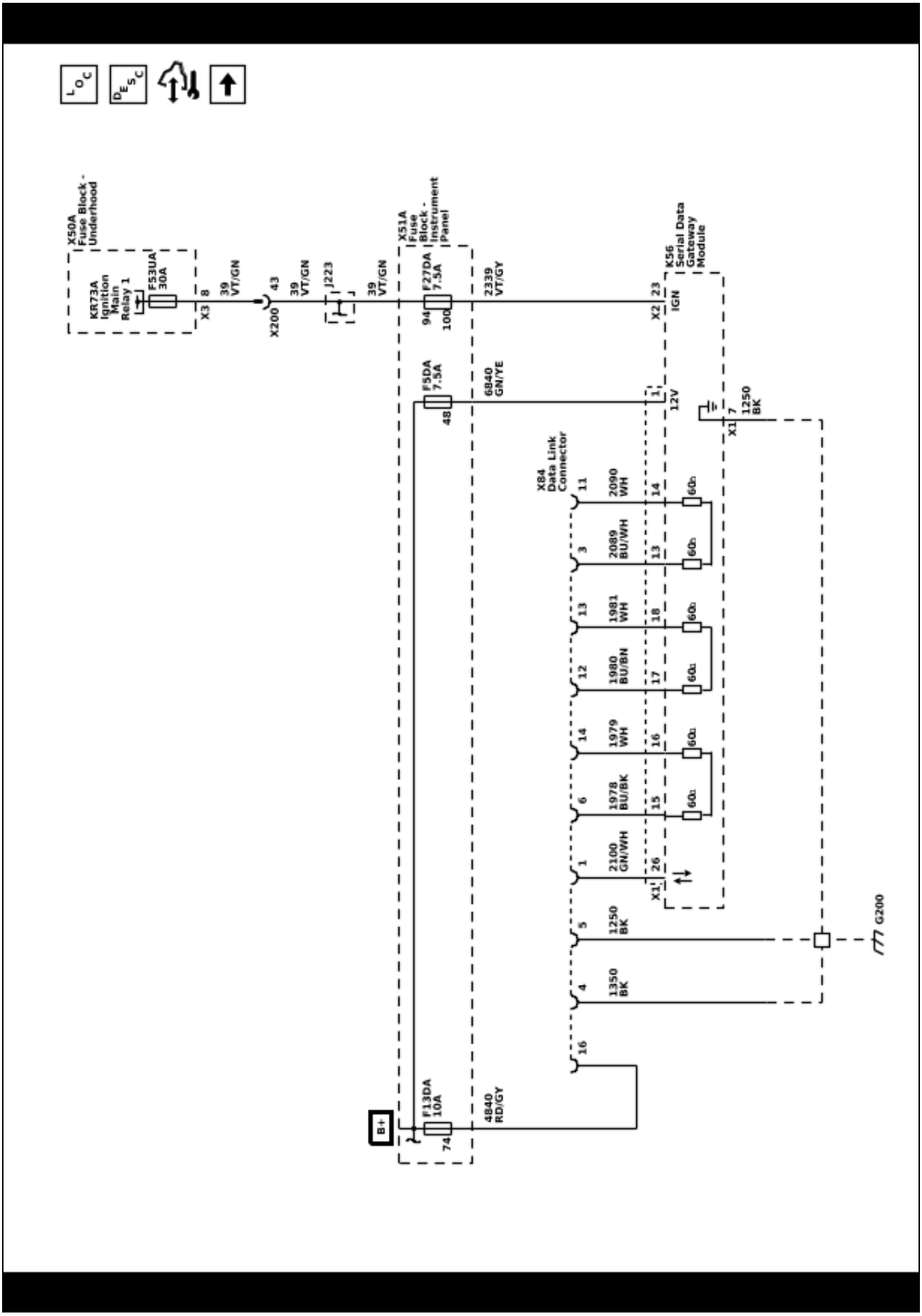

5910028

Data Communication Schematics (High Speed GMLAN (1 of 2))

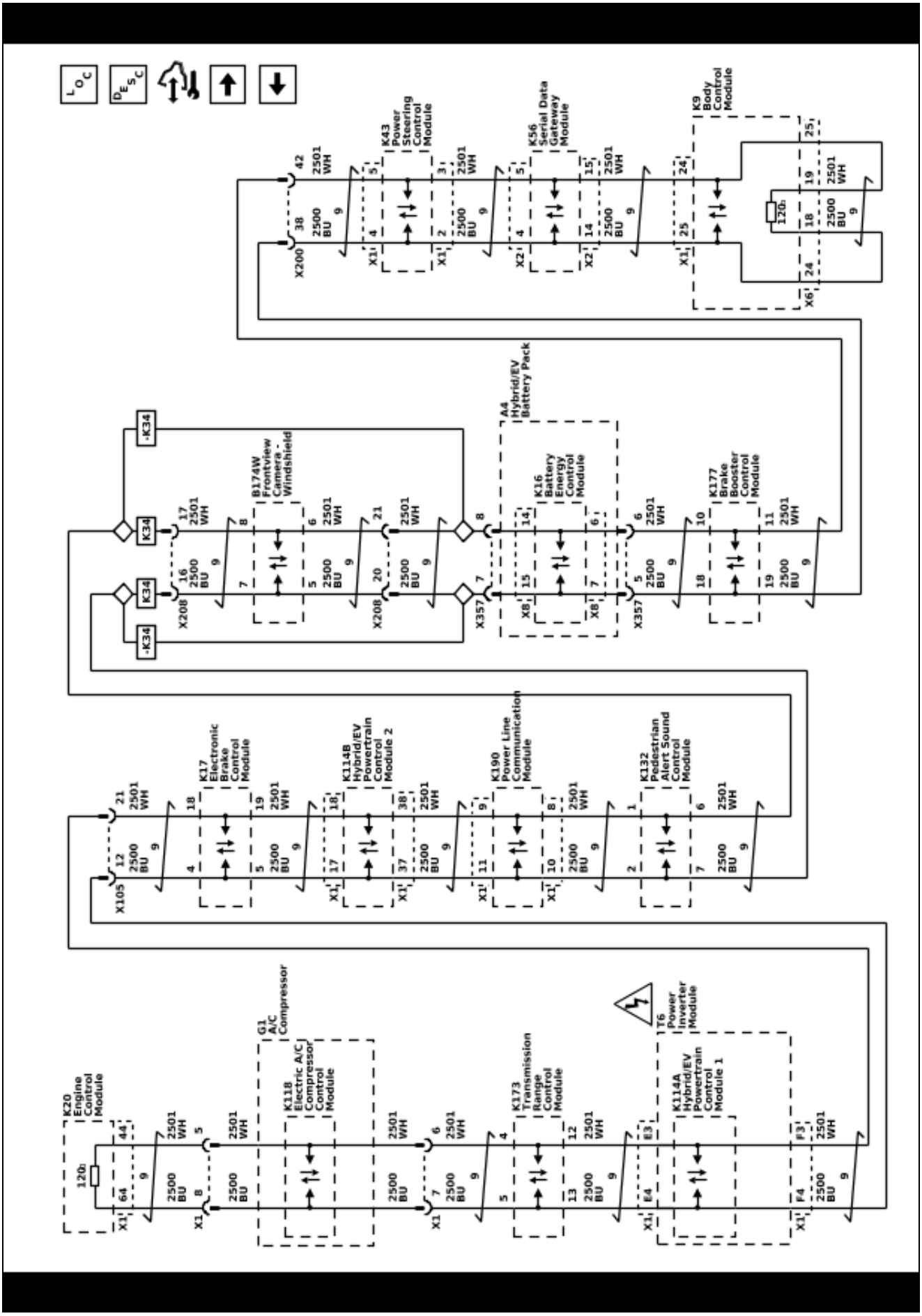

5910029

Data Communication Schematics (High Speed GMLAN (2 of 2))

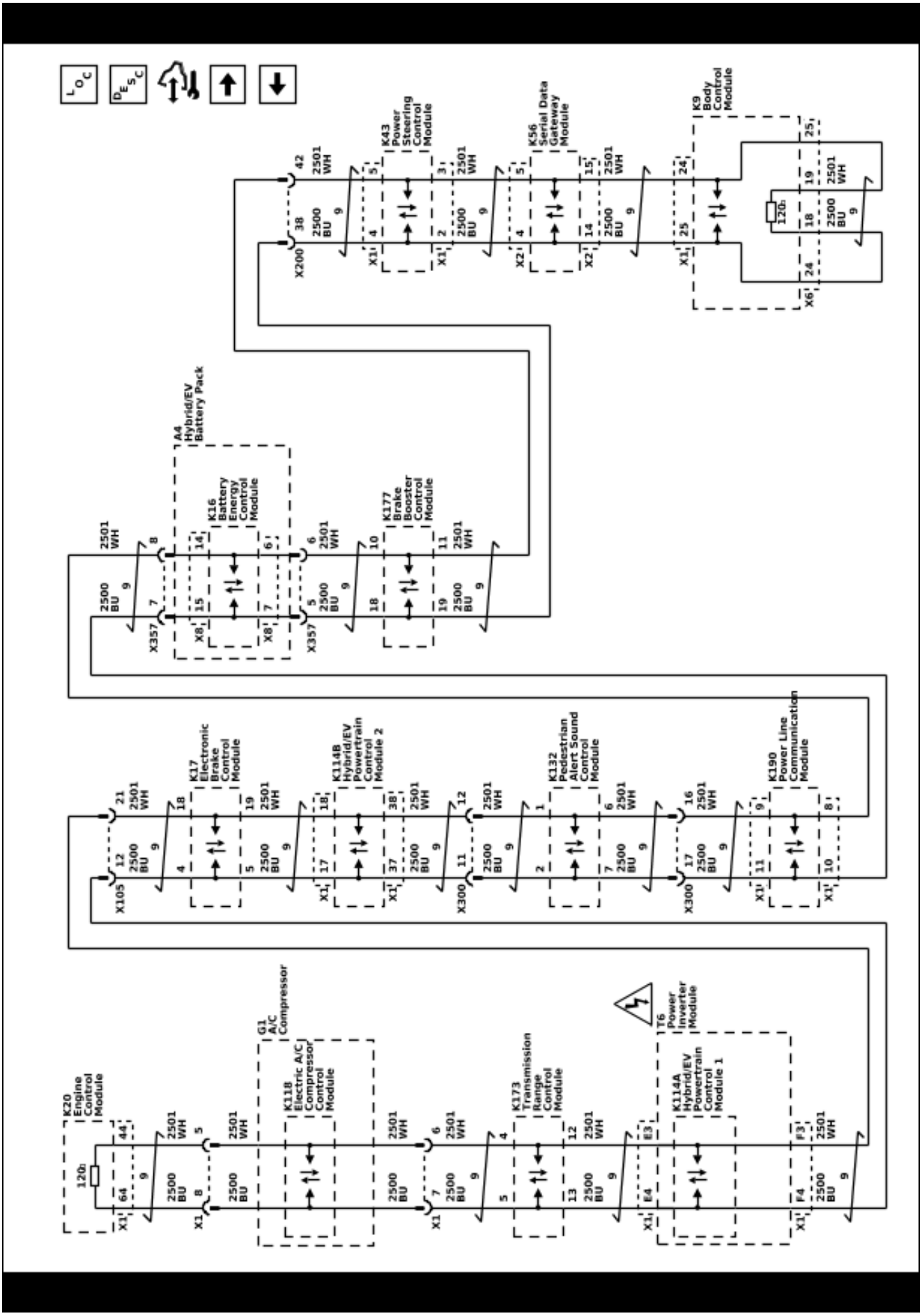

5910030

5910031

Data Communication Schematics (Primary High Speed Expansion Bus HEB 1)

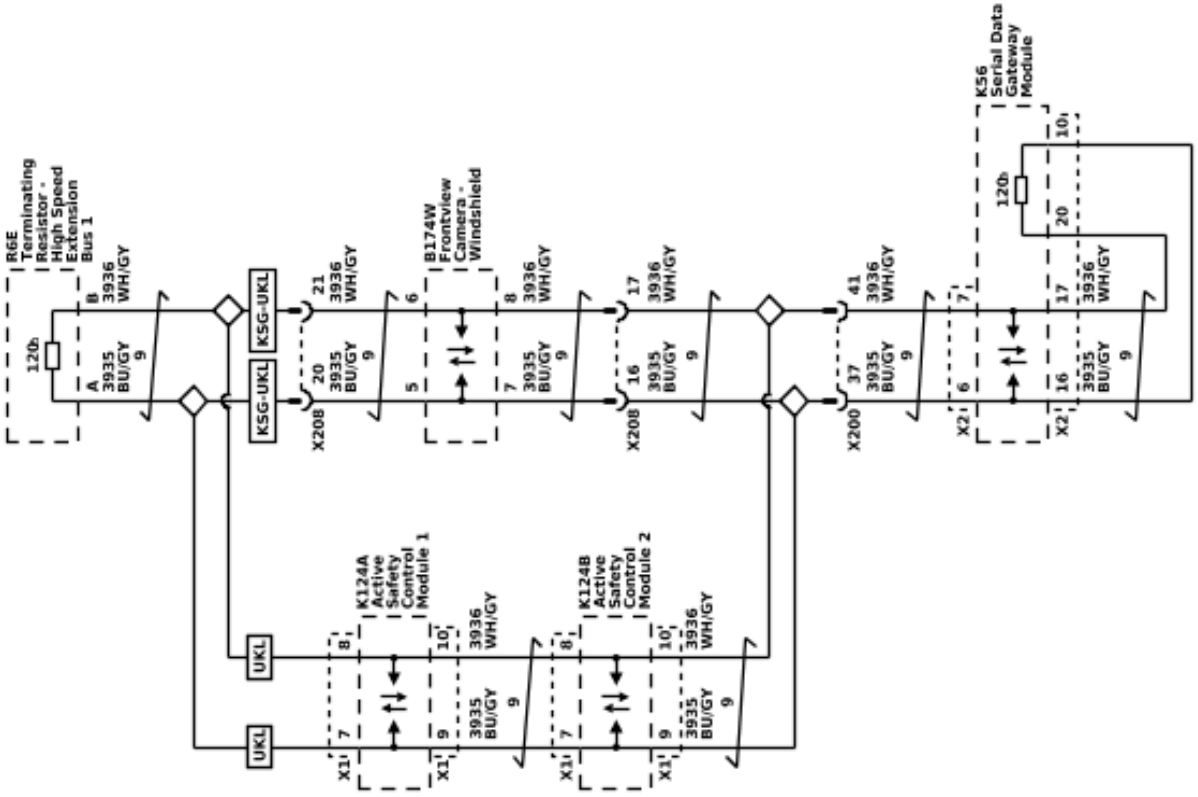

Data Communication Schematics (Primary High Speed Expansion Bus HEB 2)

5910032

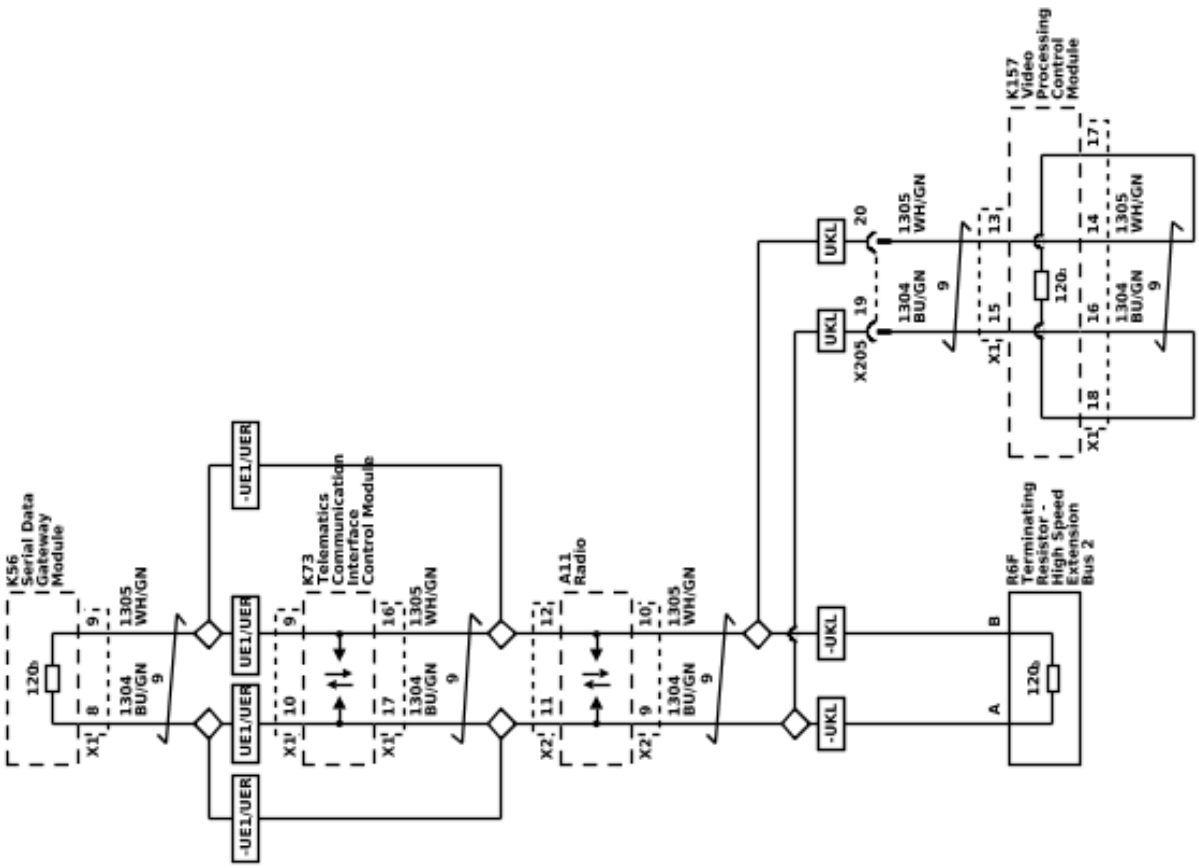

Data Communication Schematics (Serial Data Wake-Up)

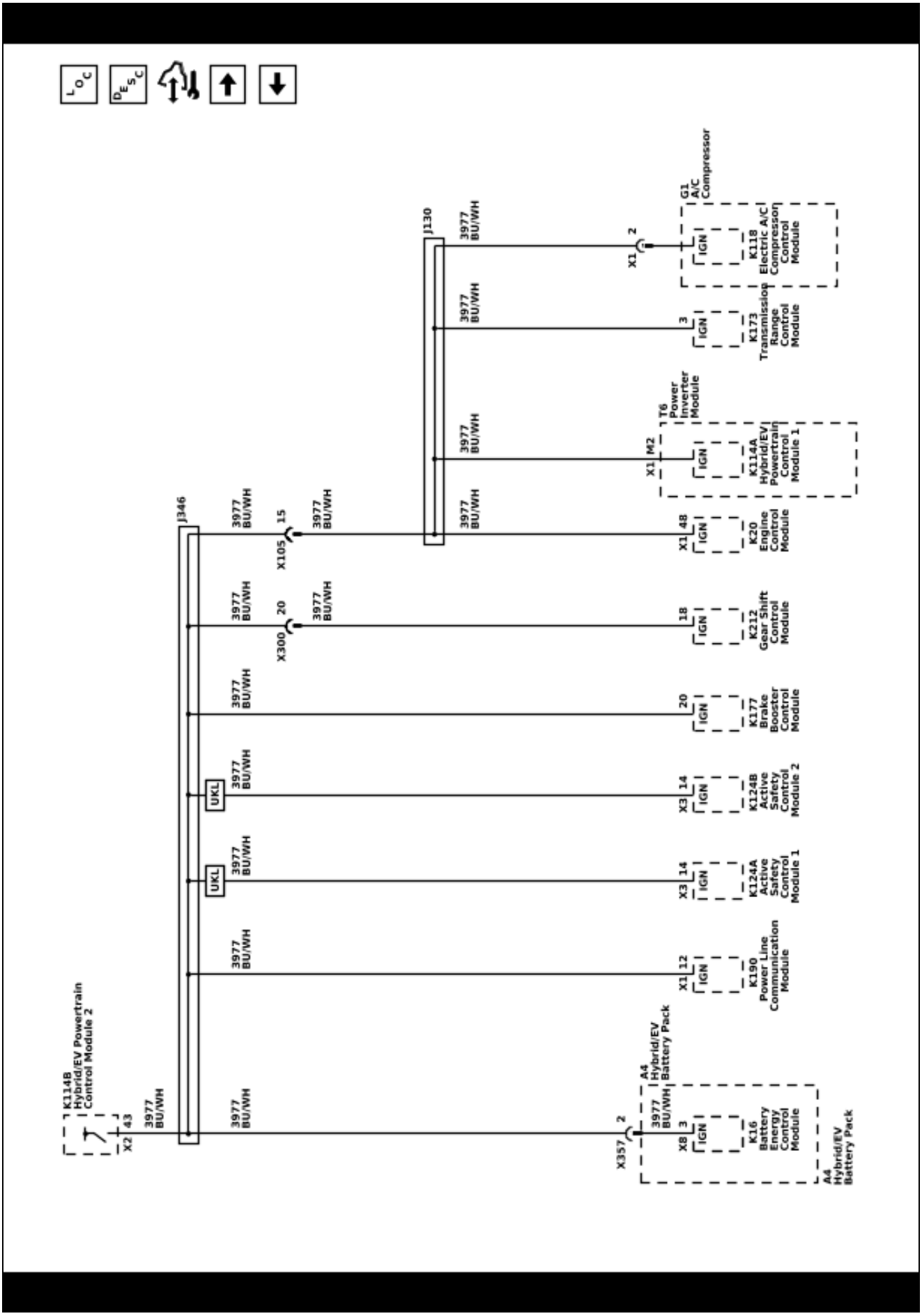

Data Communication Schematics (Low Speed GMLAN)

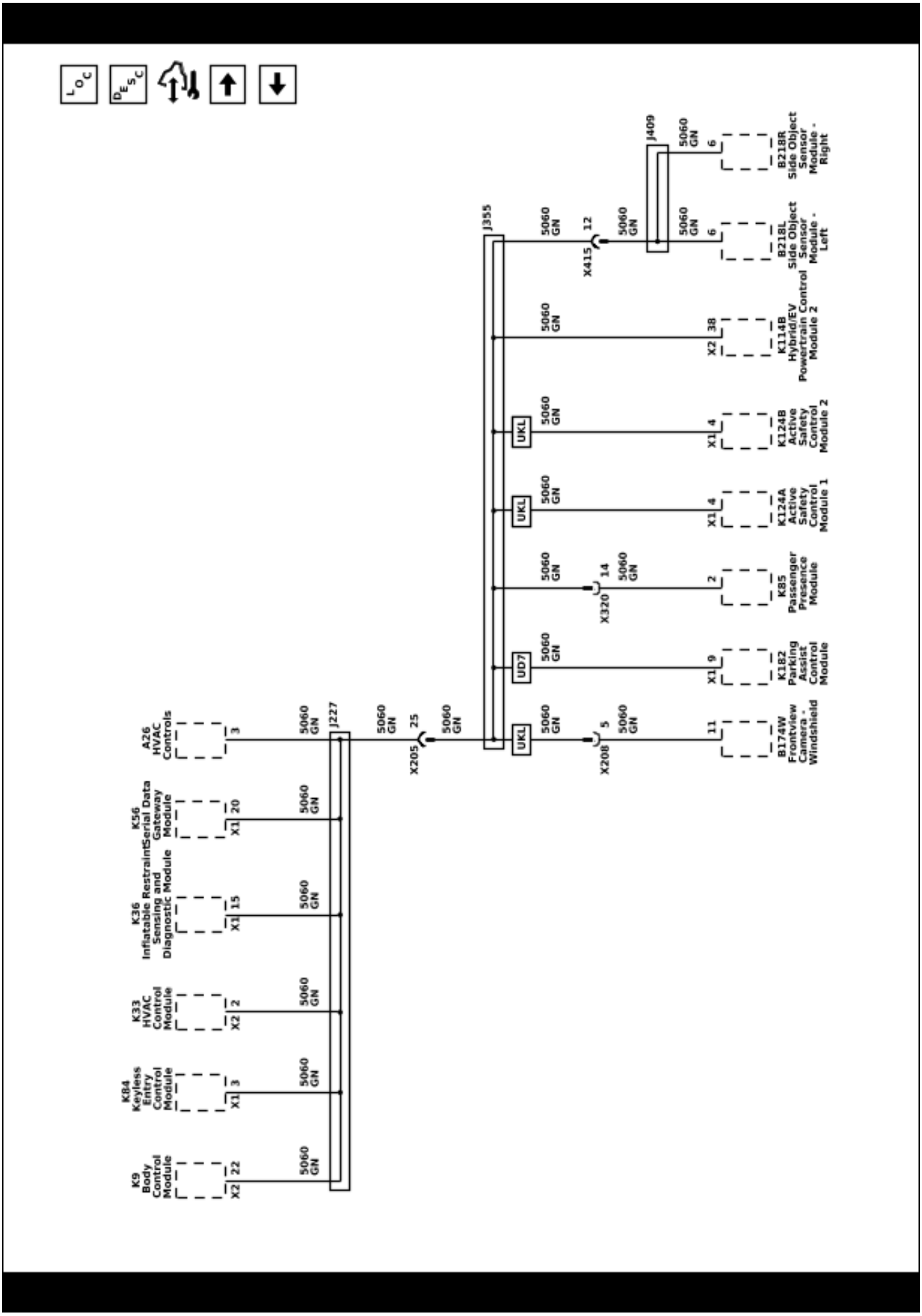

5910034

5910035

Data Communication Schematics (Isolated Low Speed GMLAN)

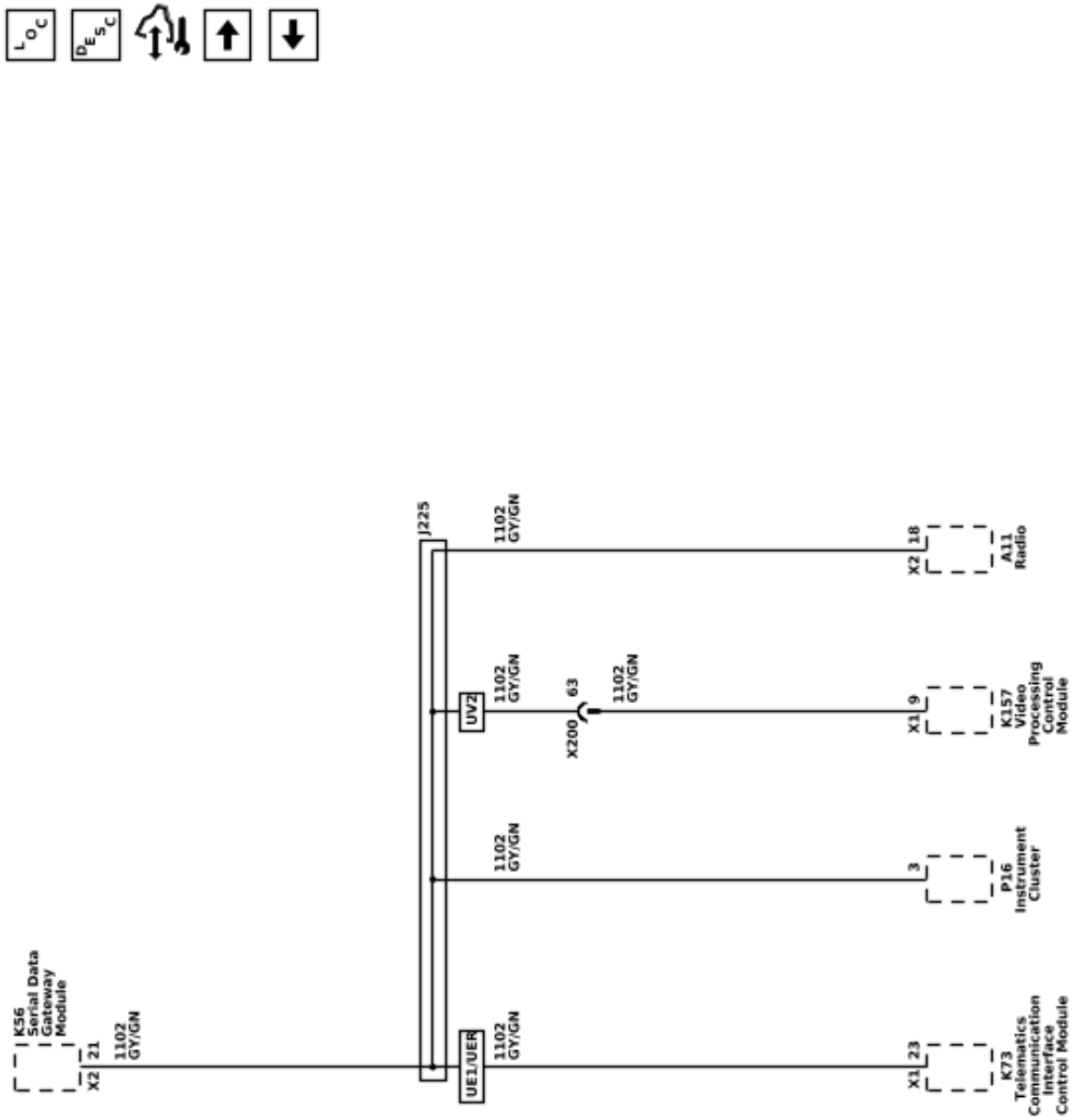

Data Communication Schematics (High Voltage Management Bus)

5910036

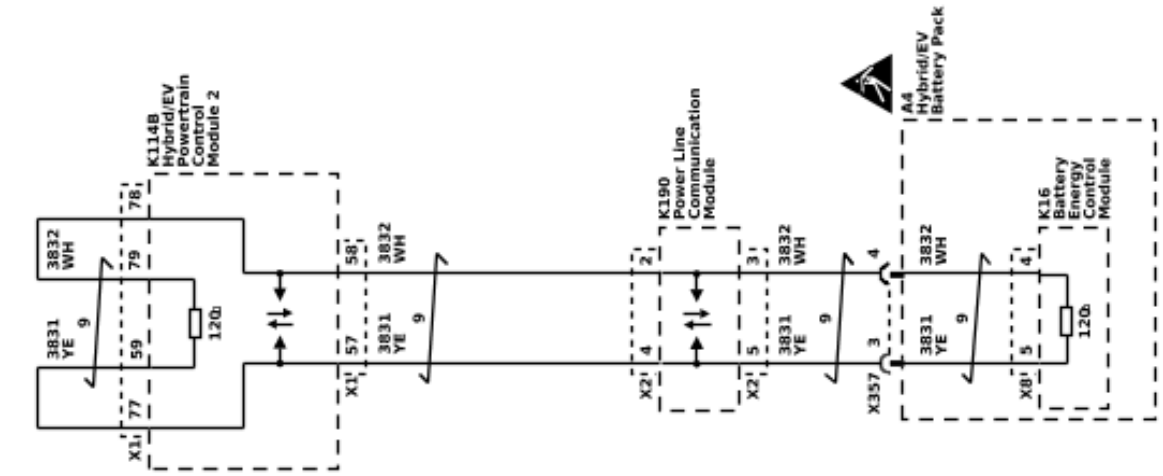

Data Communication Schematics (Powertrain Expansion Bus)

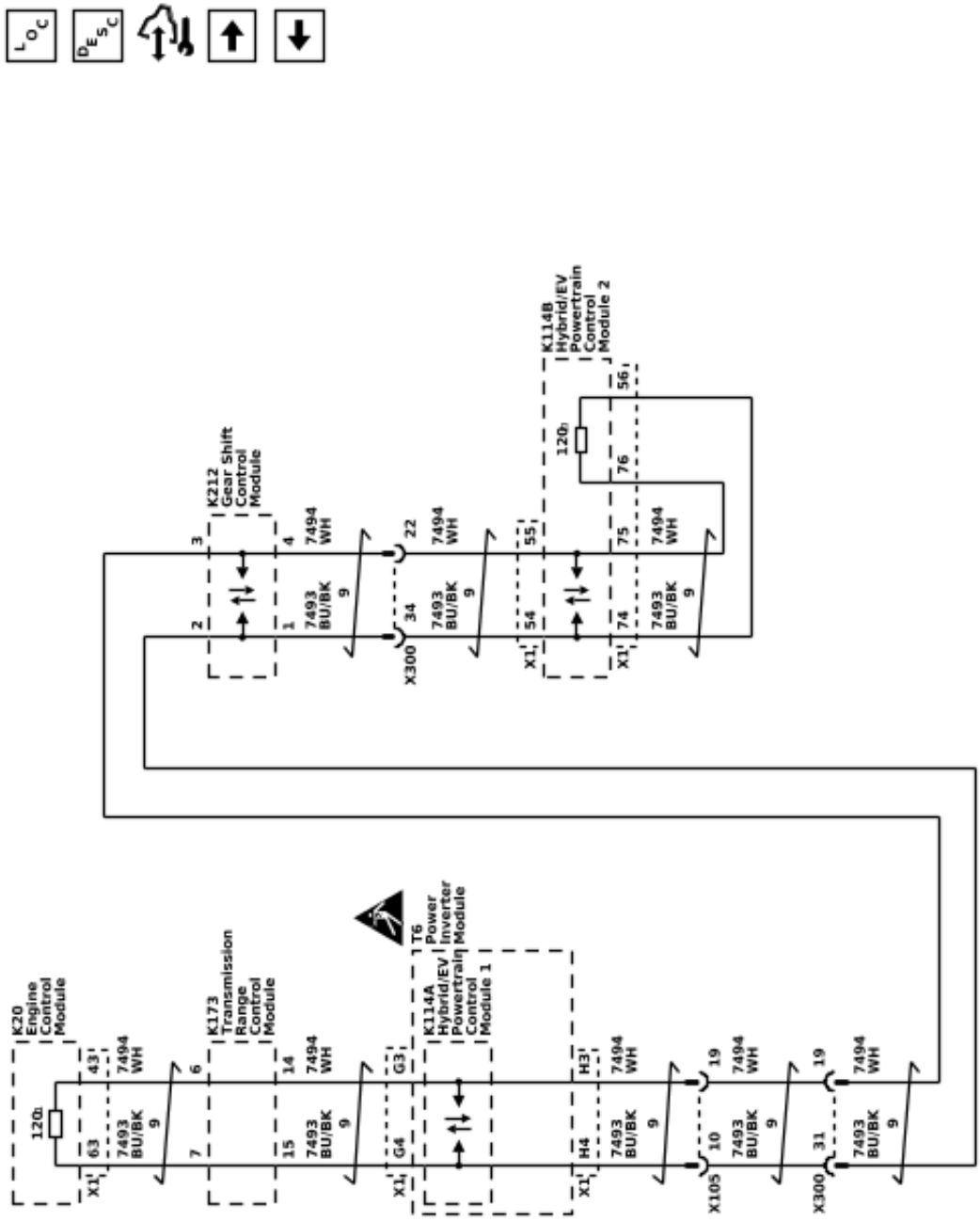

5910037

Data Communication Schematics (Powertrain Sensor Bus)

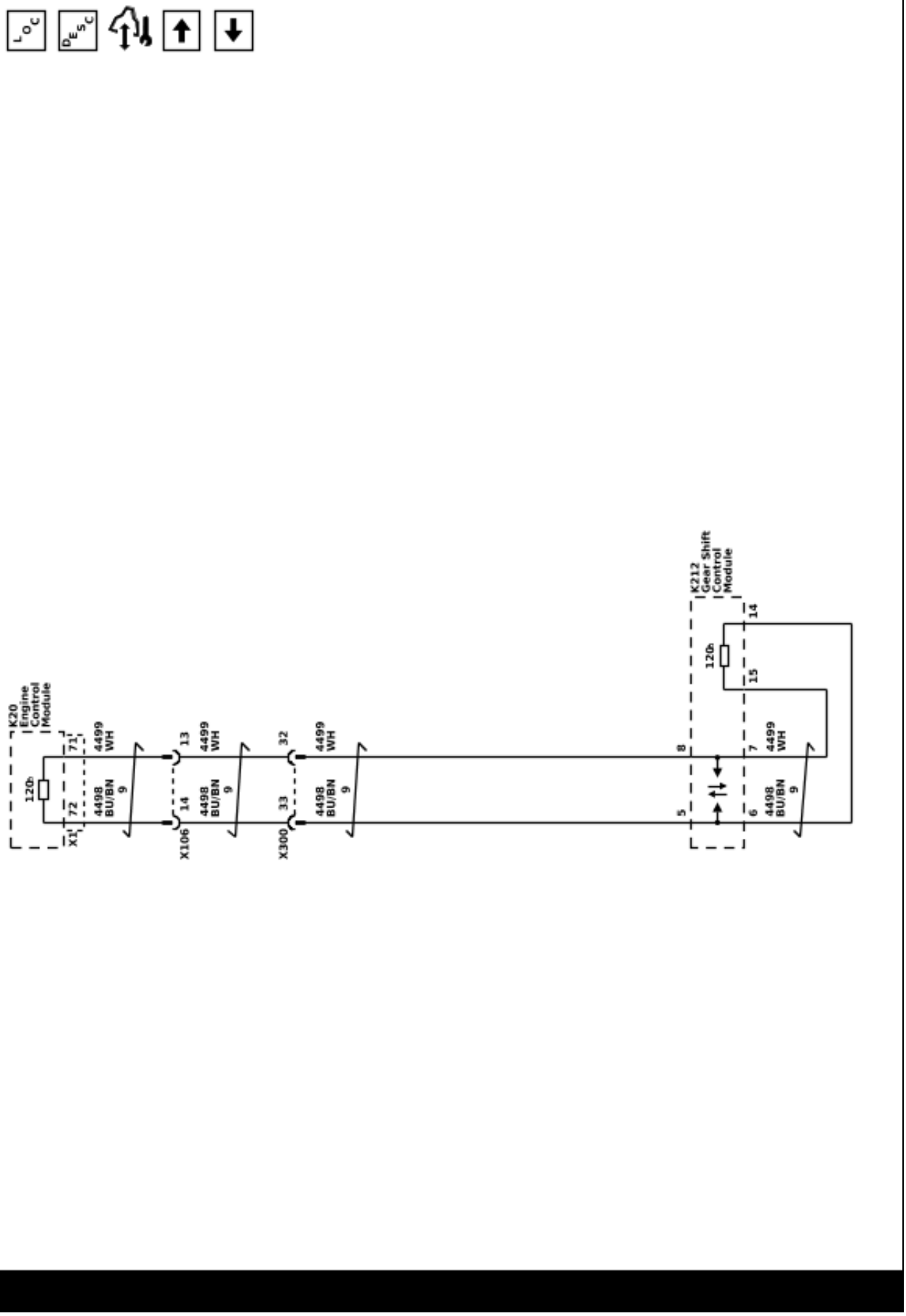

5910038

Data Communication Schematics (GMLAN Communication Enable)

5910039

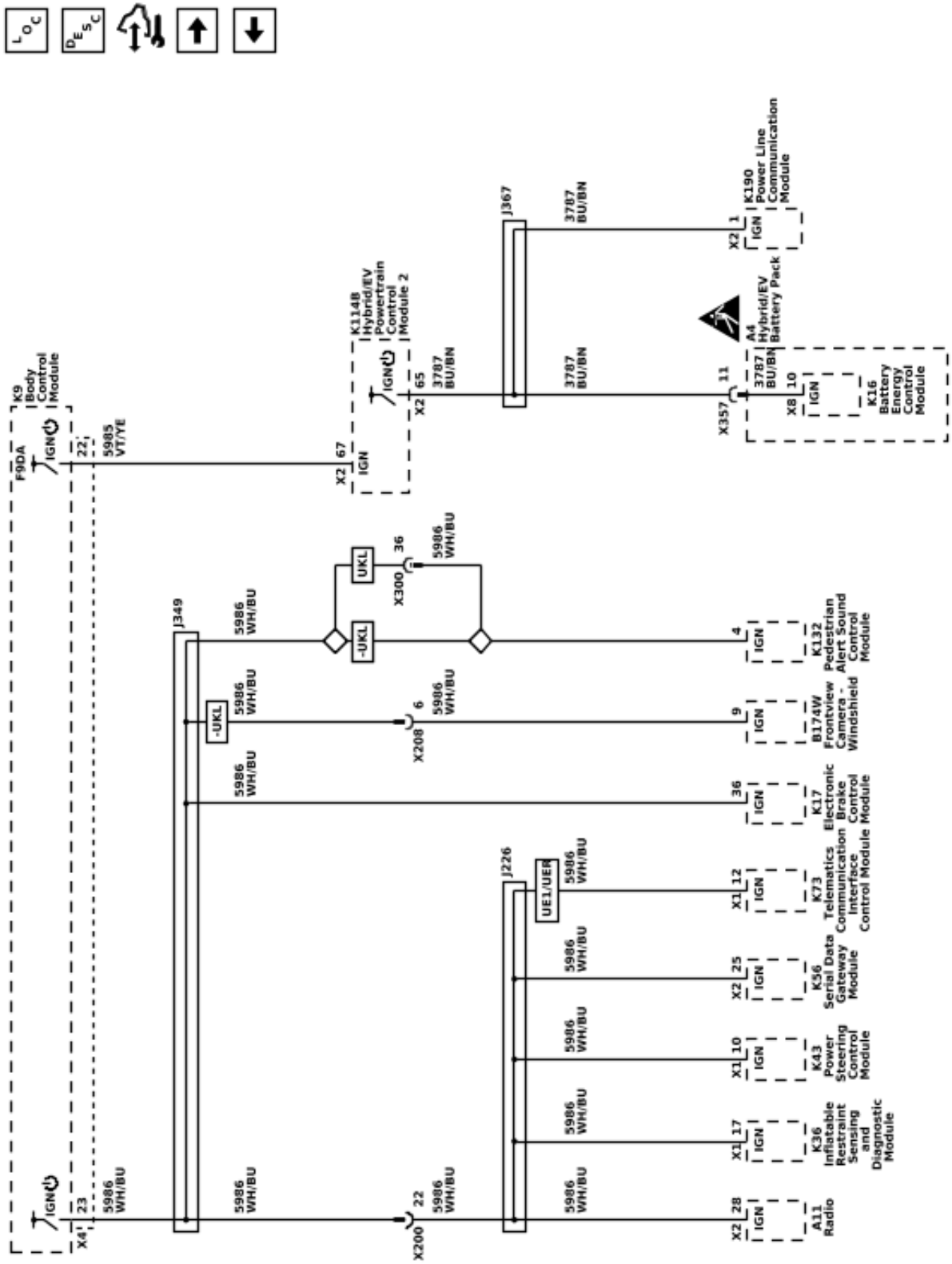

Data Communication Schematics (Chassis High Speed GMLAN)

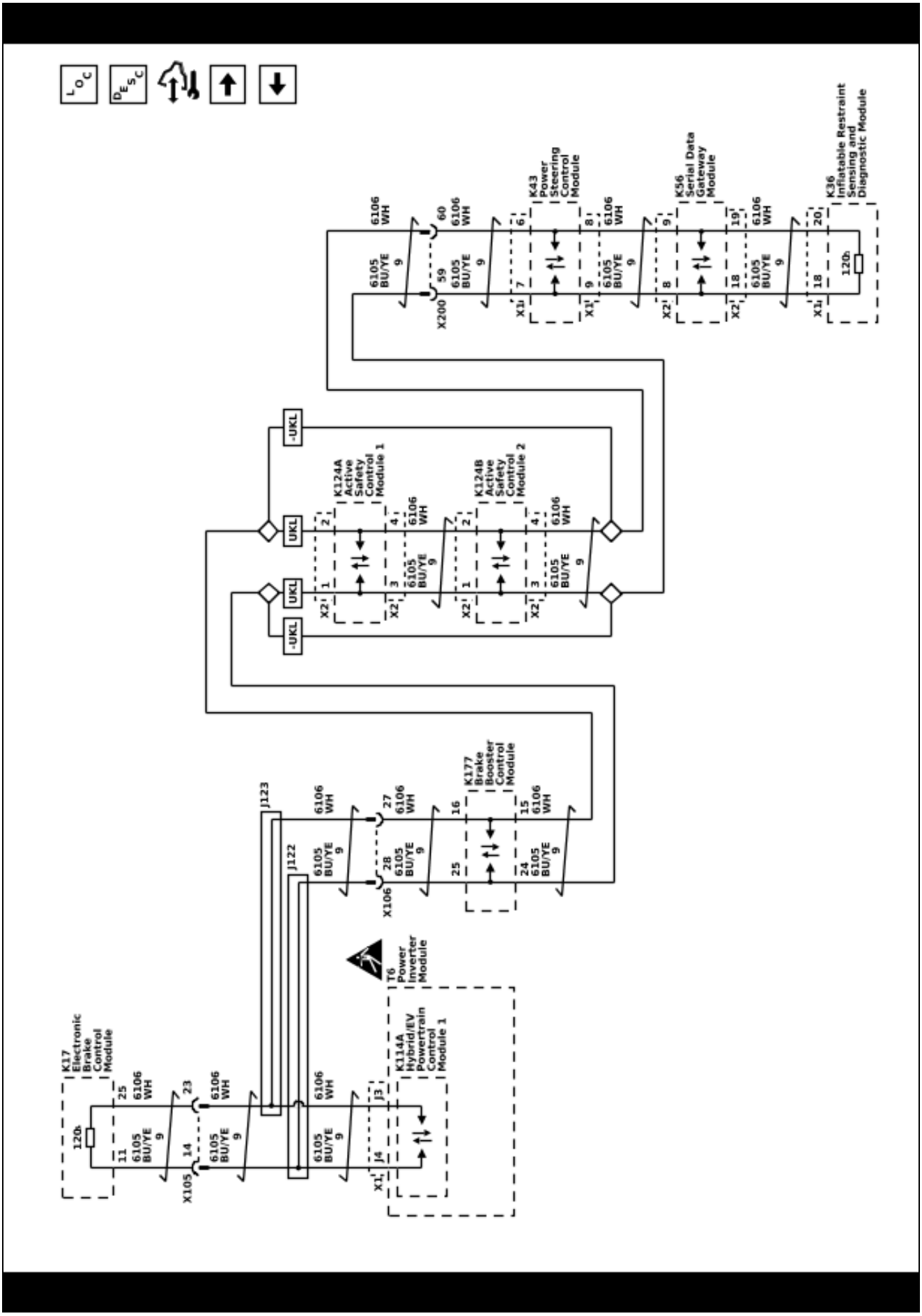

Data Communication Schematics (Front Object CAN Bus)

5910041

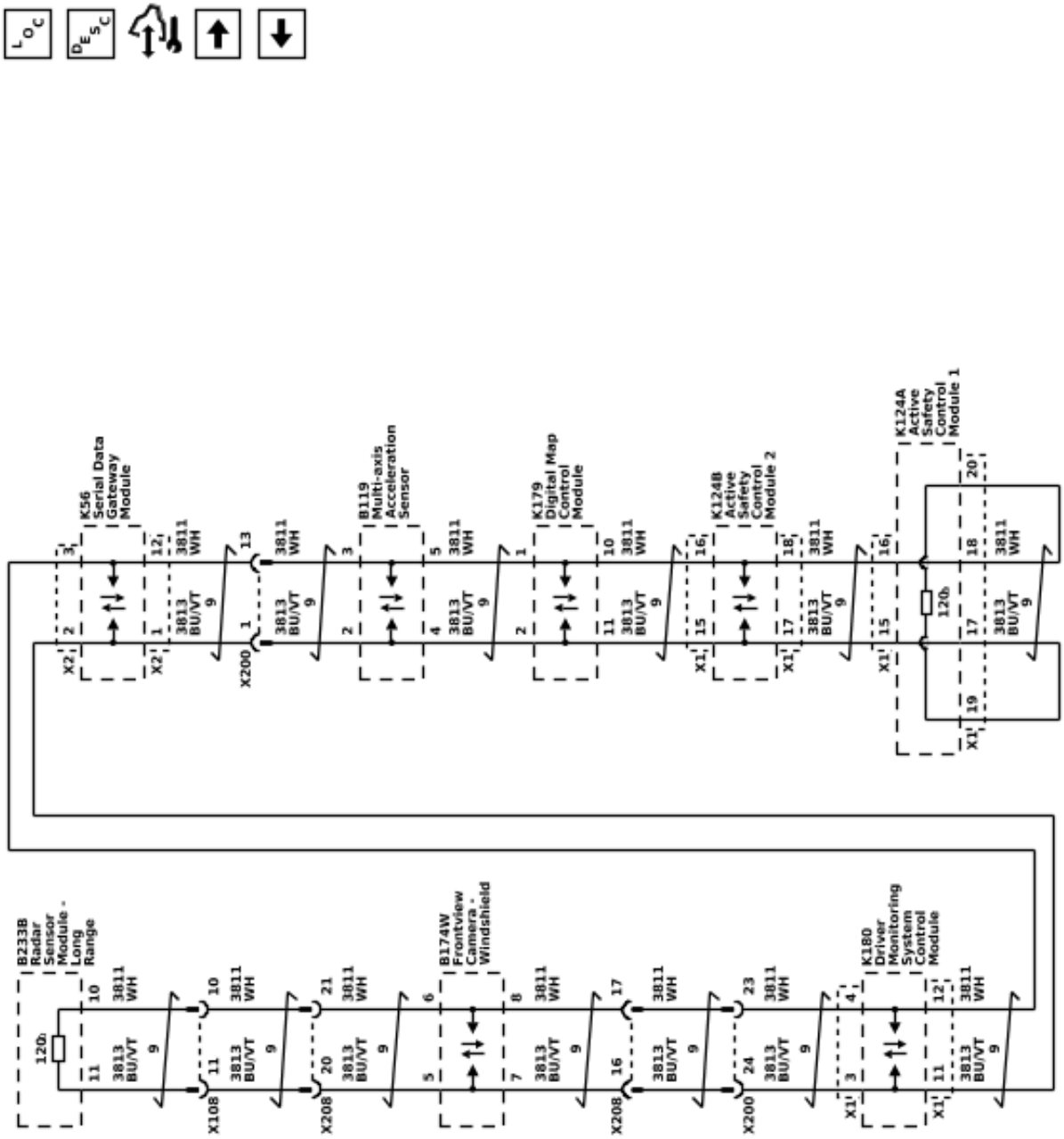

Data Communication Schematics (Front Object CAN Bus Communication Enable (UKL))

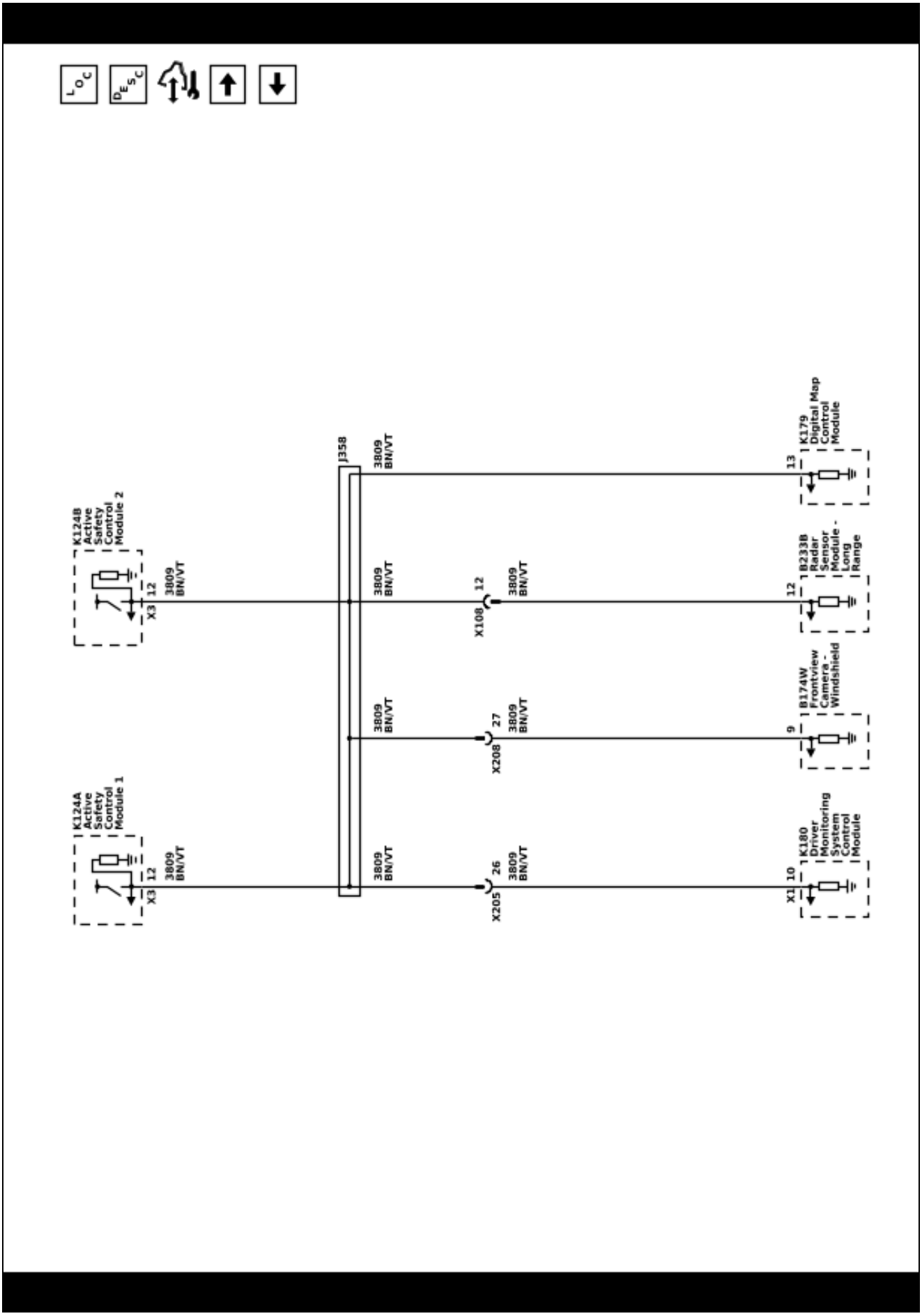

5910042

Data Communication Schematics (Flex Ray Bus Channel A (UKL))

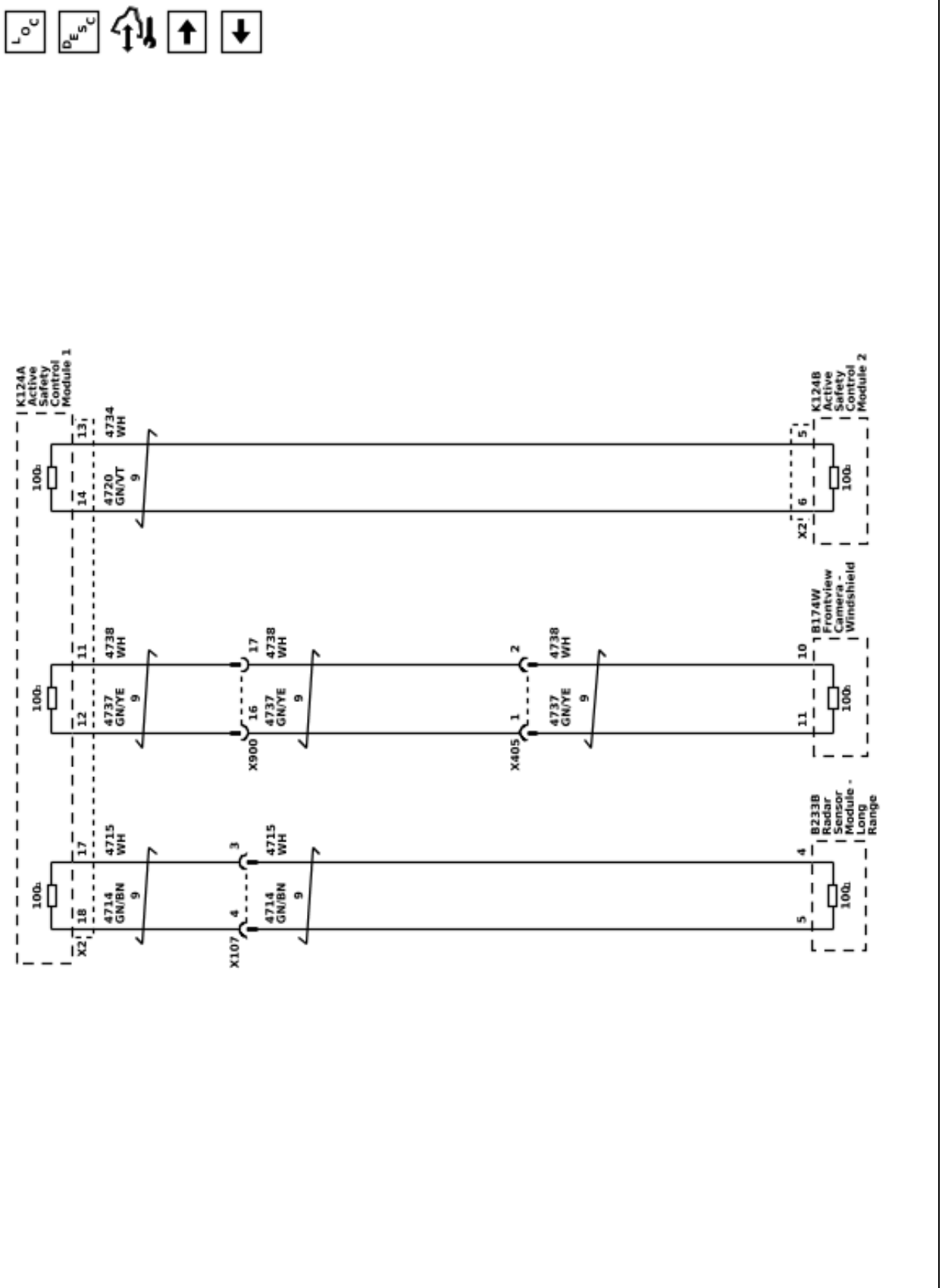

5910043

Data Communication Schematics (Flex Ray Bus Channel B (UKL))

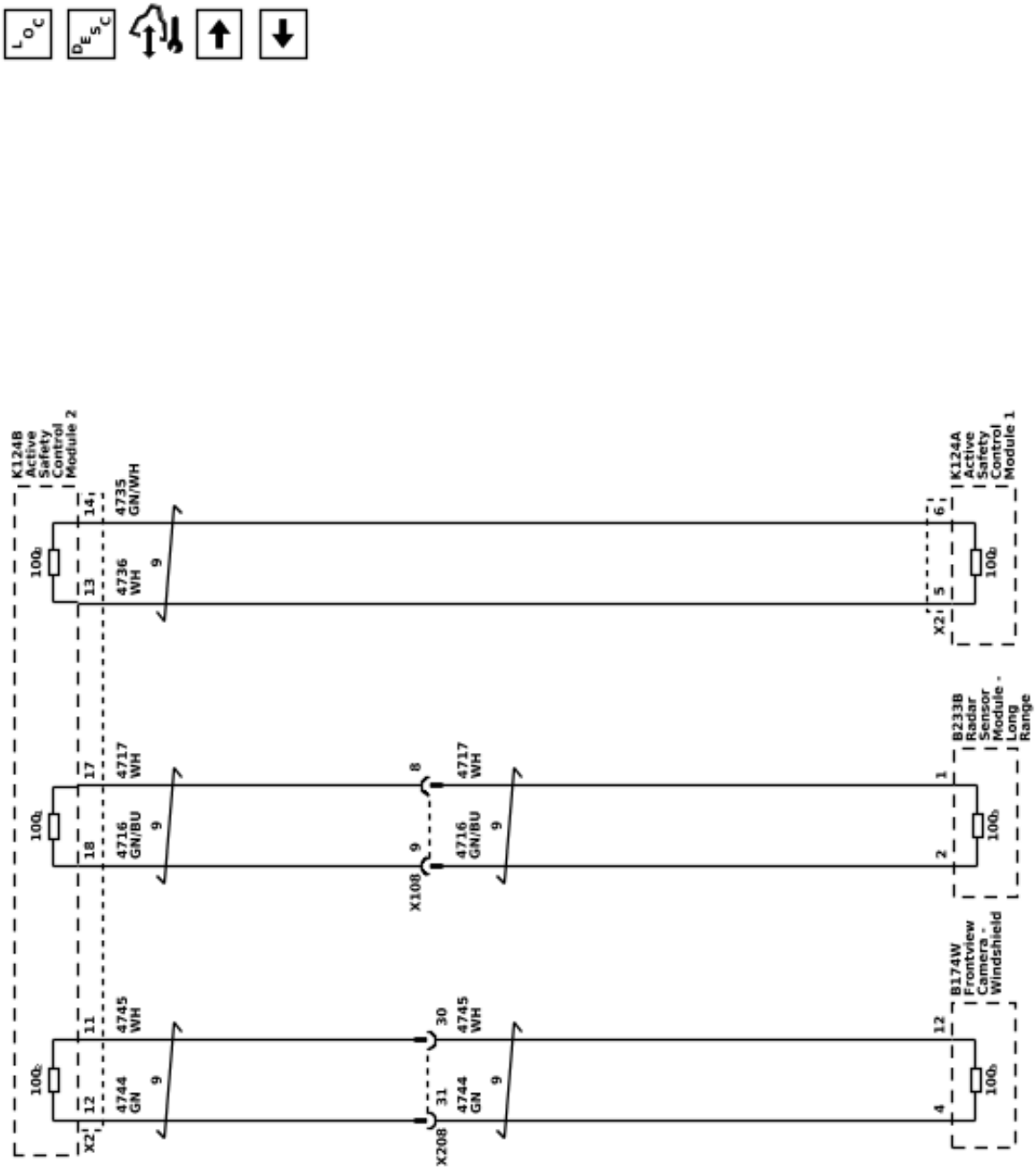

5910044

Data Communication Schematics (Flex Ray Communication Enable (UKL))

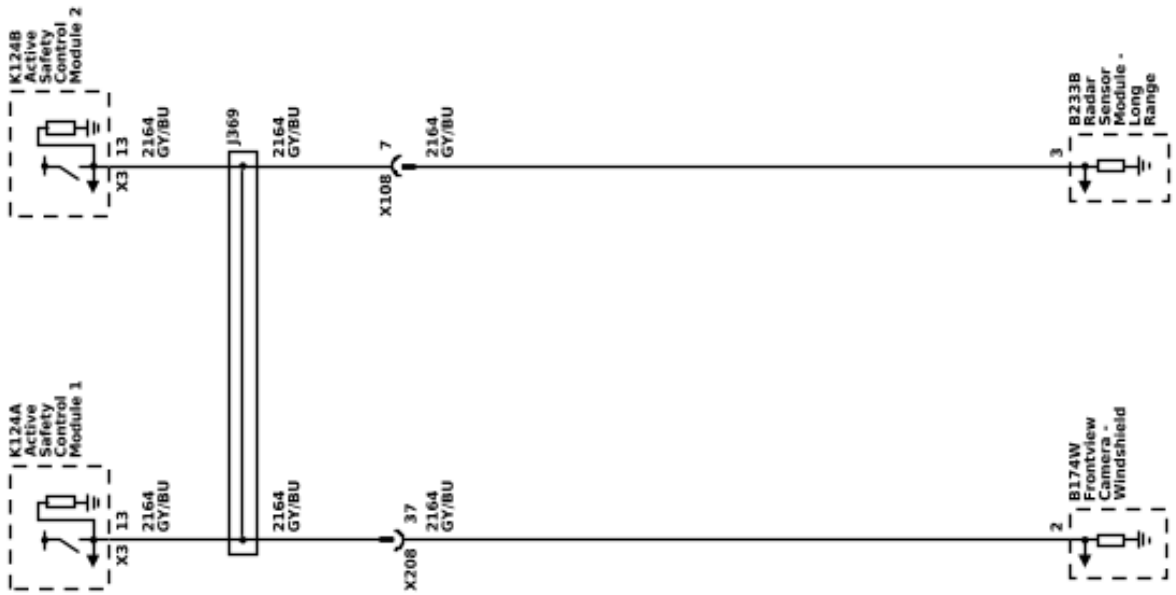

5910045

Data Communication Schematics (Local Interconnect Network (LIN) Communication Busses (1 of 2))

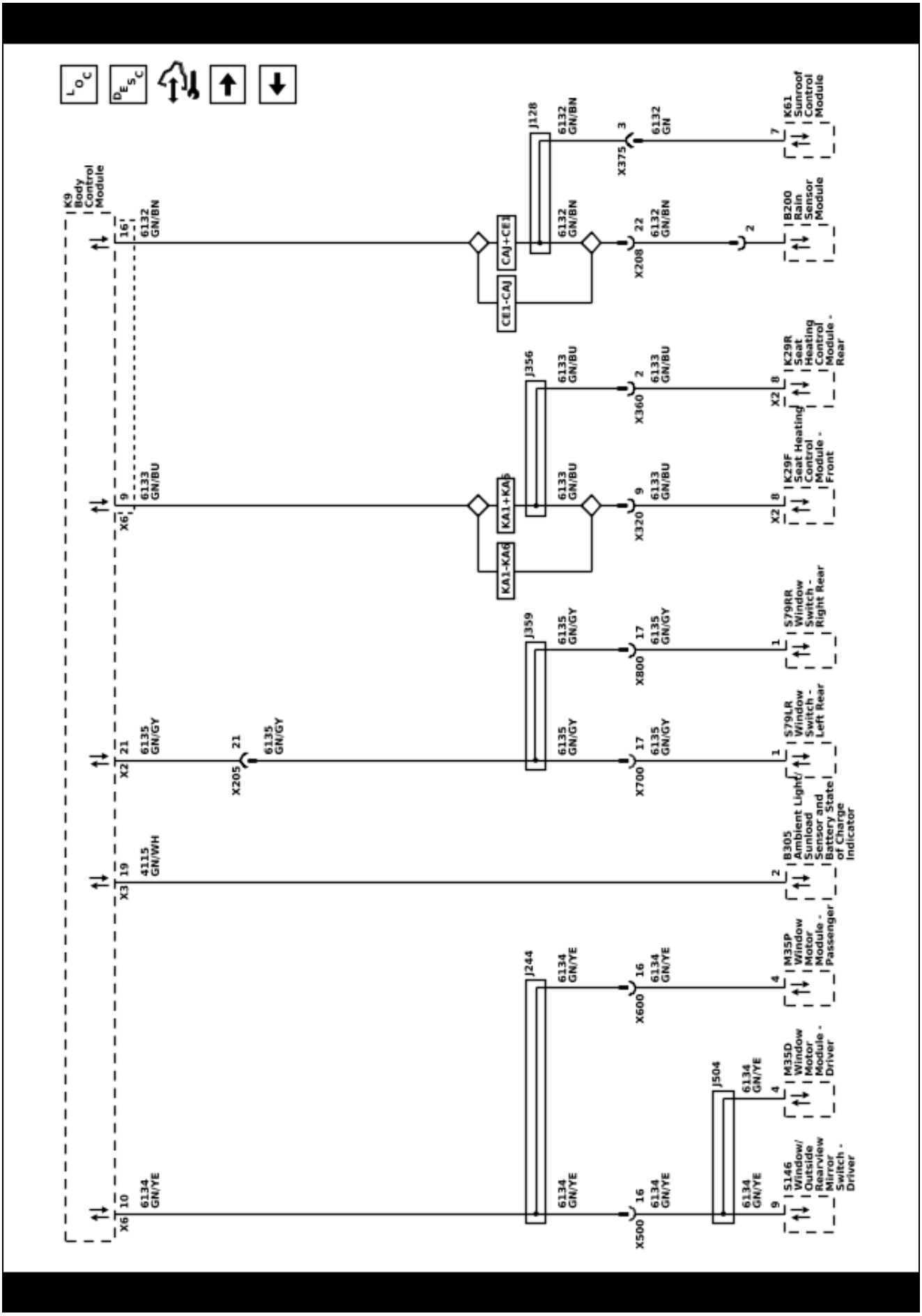

5910046

Data Communication Schematics (Local Interconnect Network (LIN) Communication Busses (2 of 2))

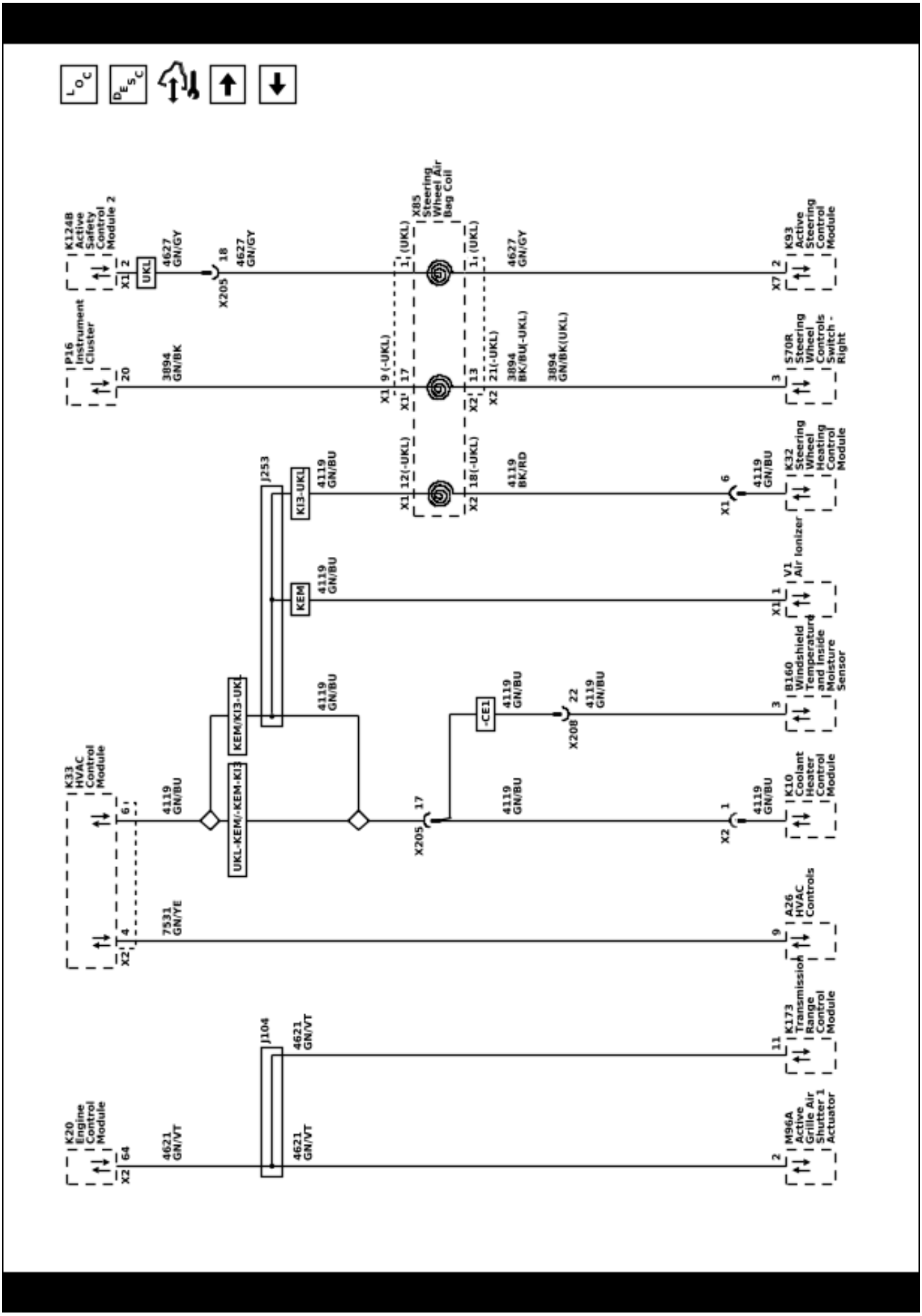

5910047

Data Communication Schematics (Ethernet Bus)

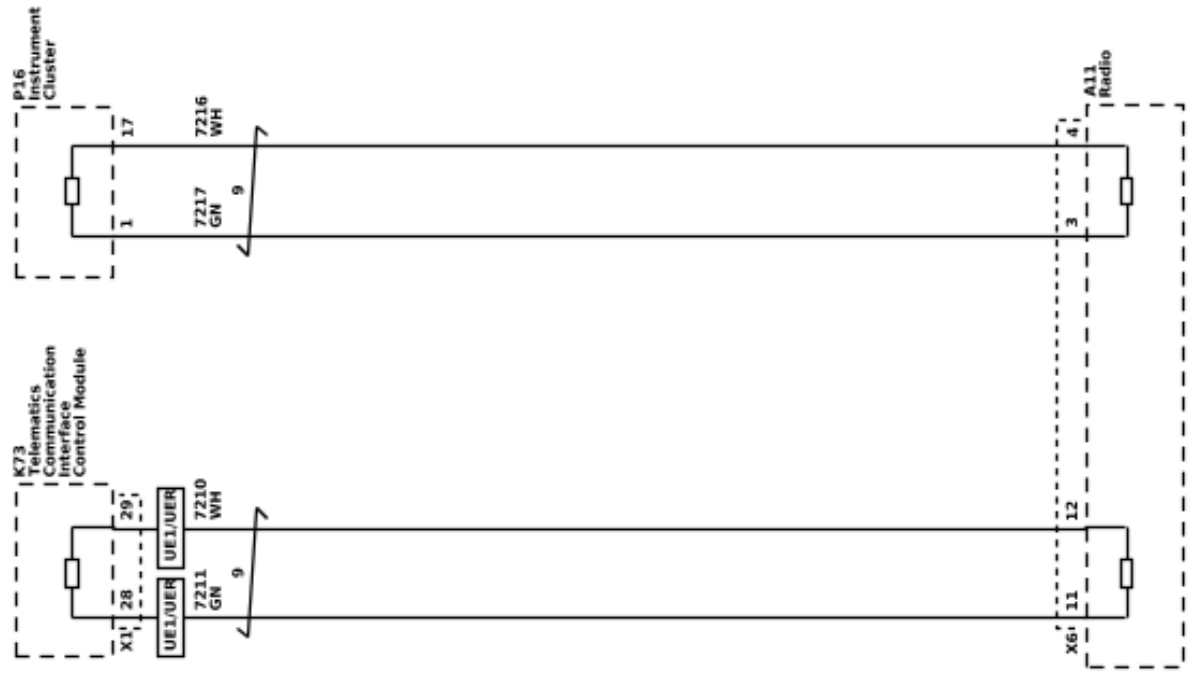

5910048

Body Control System Schematics (Power, Ground, Data Communications, and Subsystem References)

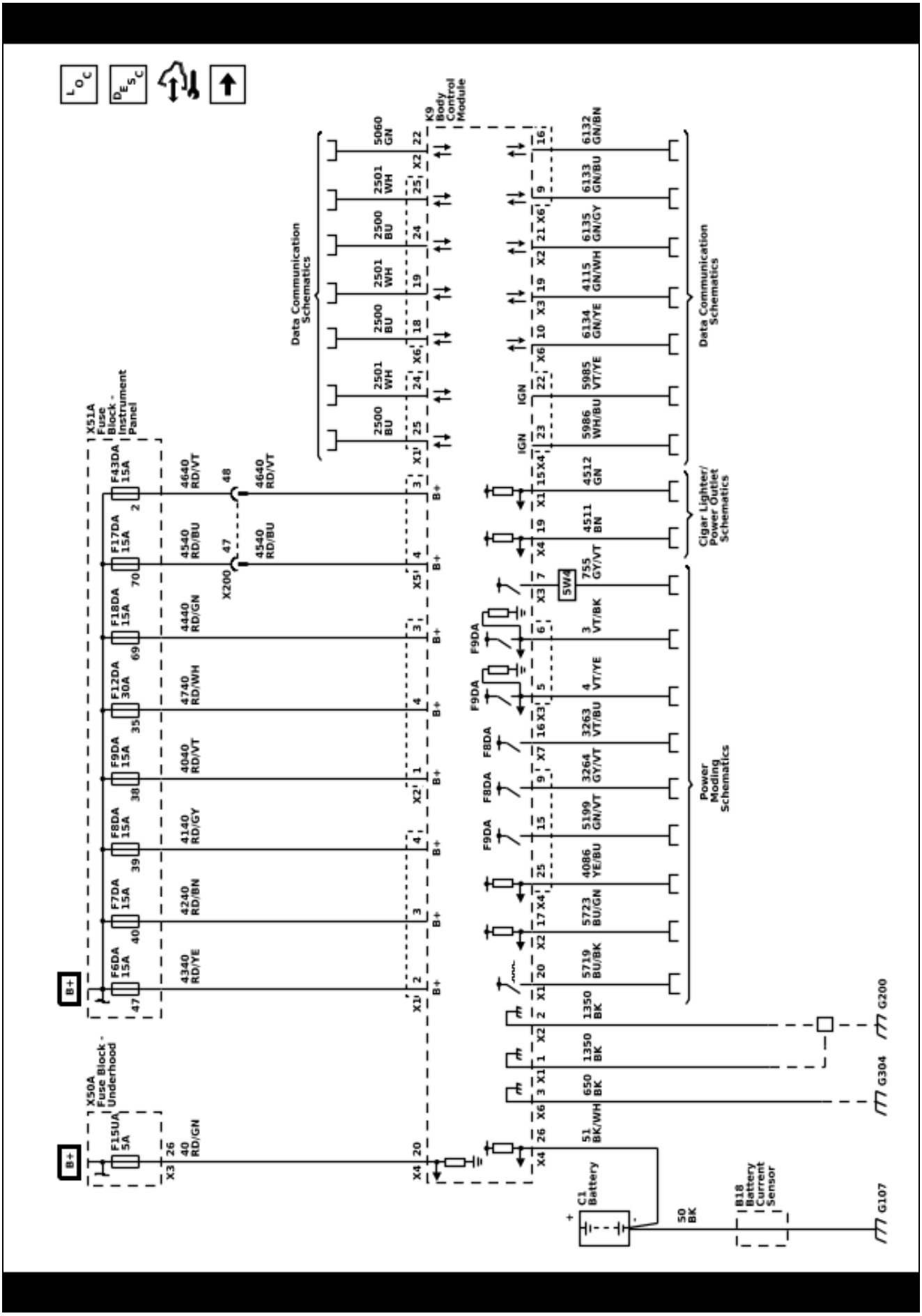

Body Control System Schematics (Subsystem References (1 of 3))

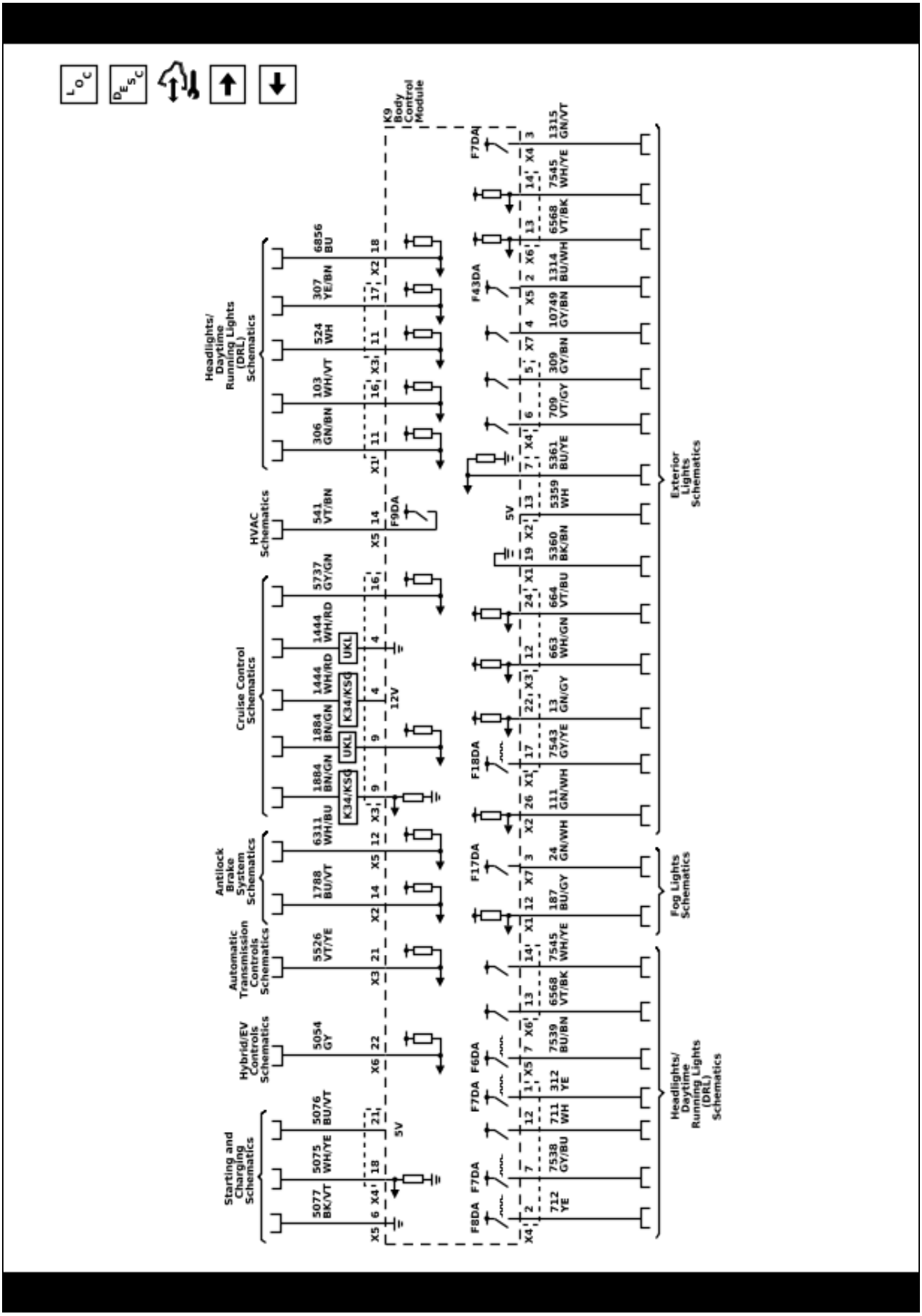

Body Control System Schematics (Subsystem References (2 of 3))

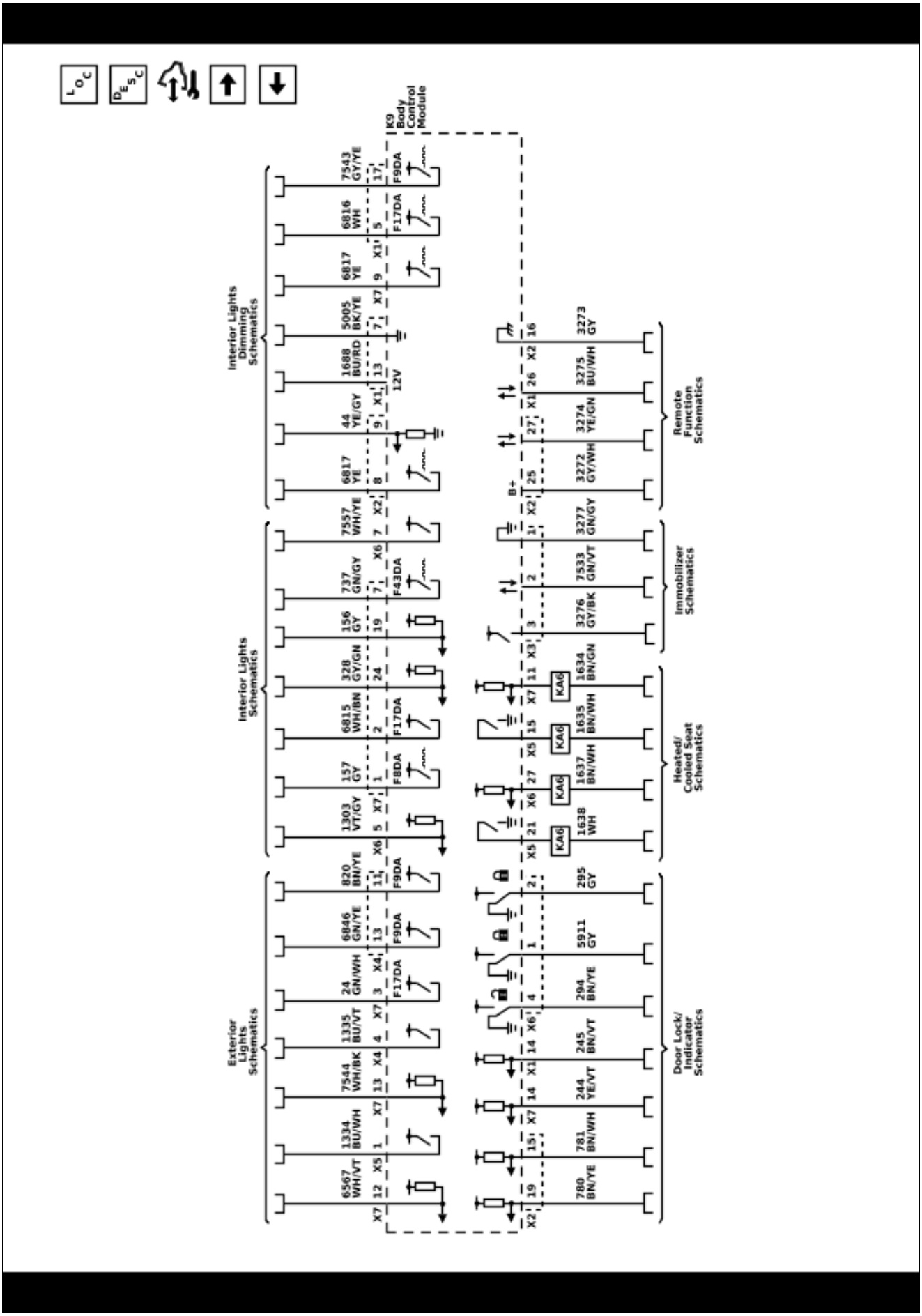

5910185

Body Control System Schematics (Subsystem References (3 of 3))

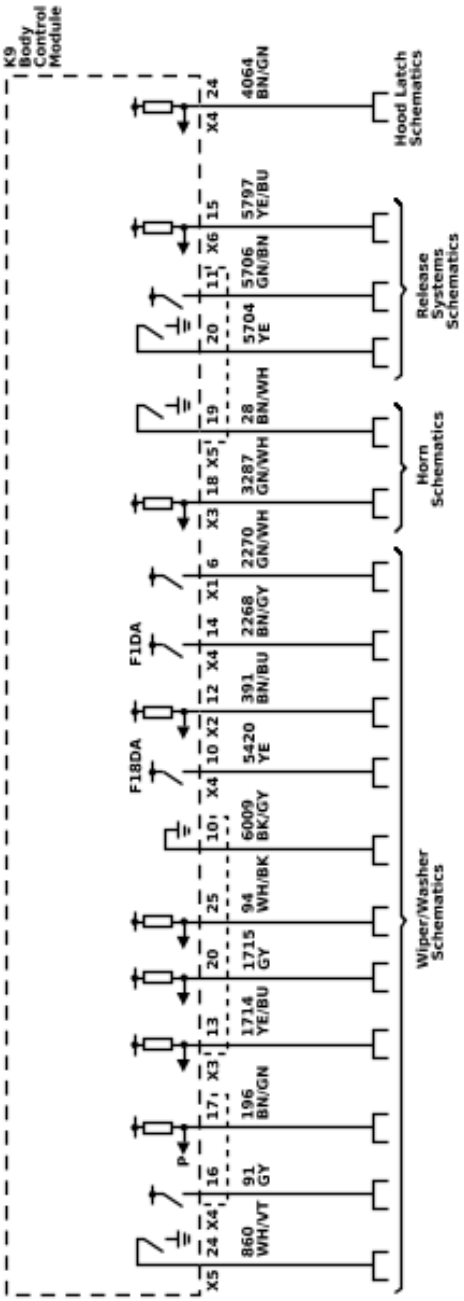

5910186

Description and Operation

Data Link Communications Description and Operation

Note: This is an overview of different serial data buses used by GM devices to communicate with each others. Use *Data Communication Schematics on page 6-4* to find out which serial data buses are configured for a specific vehicle.

Data Link Communications Overview

There are many components in a vehicle that rely on information from other sources, transmit information to other sources, or both. Serial data communication networks provide a reliable, cost effective, way for various components of the vehicle to “talk” to one another and share information.

GM uses a number of different communication buses to insure the timely and efficient exchange of information between devices. When compared to each other, some of these buses are different in nature as far as speed, signal characteristics, and behavior. An example of this is the High Speed GMLAN and Low Speed GMLAN Buses.

On the other hand, when other buses are compared to each other they have similar characteristics and simply operate in parallel. In this case they are used to group together components which have high interaction. Examples are the High Speed GMLAN, Powertrain Expansion, and Chassis Expansion Buses. This allows them to communicate with each other on a bus with reduced message congestion insuring faster and the more timely exchange of information than if all vehicle devices were on a single bus.

The majority of information that exists within a given network generally stays local; however some information will have to be shared on other networks. Control modules designated as Gateway’s perform the function of transferring information between the various buses. A Gateway module is connected to at least 2 buses and will interact with each network according to its message strategy and transmission models.

GMLAN provides the capability for a receiving device to monitor message transmissions from other devices in order to determine if messages of interest are not being received. The primary purpose is to allow reasonable default values to be substituted for the information no longer being received. Additionally, a device may set a Diagnostic Trouble Code (DTC) to indicate that the device it is expecting information from is no longer communicating. A lost communication DTC typically is set in devices other than the device with a communication failure.

K9 Body Control Module (BCM)

The K9 Body Control Module has discrete input and output terminals to control the vehicle's body functions. The K9 Body Control Module is wired to the High Speed GMLAN Bus, Low Speed GMLAN Bus and multiple Local Interconnect Network (LIN) Buses and acts as a gateway between them. The various K9 Body Control Module input and output circuits are illustrated in the corresponding functional areas on the K9 Body Control Module electrical schematics. Refer to the *Body Control System Schematics on page 6-25* for more detailed information.

Power Mode Master

The K9 Body Control Module functions as the power mode master. The ignition switch is a low current switch with multiple discrete ignition switch signals to the power mode master for determining the power mode that will be sent over the serial data circuits to the other devices that need this information; the power mode master will activate relays and other direct outputs of the power mode master as needed. Refer to *Power Mode Description and Operation on page 6-692* for a complete description of power mode functions.

Gateway

The K9 Body Control Module functions as a gateway or translator. The purpose of the gateway is to translate serial data messages between the High Speed GMLAN Bus and the Low Speed GMLAN Bus for communication between the various devices. The gateway will interact with each network according to that network's transmission protocol. All communication between the K9 Body Control Module and a scan tool is done through the primary High Speed GMLAN Bus.

K56 Serial Data Gateway Module (Gen 3)

Note: The Data Bus Diagnostic Tool will not work with vehicles equipped with K56 Serial Data Gateway Module gen 3.

This vehicle is equipped with a K56 Serial Data Gateway Module gen 3. The K56 Serial Data Gateway Module is used to handle communications between multiple GMLAN buses and functions as a gateway to isolate the secure networks from the unsecured networks. It was created to mitigate bus loading to support cyber security and new active/advanced safety features (if equipped). The K56 Serial Data Gateway Module is used as a frame-to-frame gateway for all functional messages. Communication between the K56 Serial Data Gateway Module and a scan tool is done through the primary High Speed GMLAN bus. When the K56 Serial Data Gateway Module is not communicating, the scan tool can not communicate with the vehicle.

The K56 Serial Data Gateway Module has two microprocessors within the electronic control unit. Each microprocessor is diagnosed/programmed independently via the scan tool because the two microprocessors do not talk internally. Each of these processors are responsible for managing the traffic for specific communication buses on the vehicle. The two particular buses that they will manage are high speed and low speed. If communication does not exist or the particular micros have not been programmed, control modules won’t be able to communicate with or through the K56 Serial Data Gateway Module.

Low speed Microprocessor

- The low speed microprocessor is programmable via the X84 Data Link Connector (DLC) terminal 1. This low speed bus between the X84 Data Link Connector and the K56 Serial Data Gateway Module is called the Low Speed DLC Bus.
- The low speed microprocessor is capable of gating signals between the Low Speed DLC, the primary Low Speed GMLAN, and the Gateway Isolated Low Speed GMLAN Buses.
- The low speed microprocessor is also capable of gating signals between the Object High Speed DLC Bus (DLC terminals 3 & 11) and the Object High Speed GMLAN Bus.

High speed Microprocessor

- The high speed micro is programmable via the X84 Data Link Connector (DLC) terminals 6 & 14. This high speed bus between the X84 Data Link Connector and the K56 Serial Data Gateway Module is called High Speed DLC Bus.
- The high speed micro is capable of gating signals between the High Speed DLC, the primary High Speed GMLAN, the Gateway Expansion High Speed GMLAN, and the Gateway Isolated High Speed GMLAN Buses.
- The high speed micro is also capable of gating signals between the Chassis High Speed DLC Bus (DLC terminals 12 & 13) and the Chassis High Speed GMLAN Bus.

High Speed GMLAN Bus (Circuits 2500 & 2501)

Note: Continuity check cannot be performed between the X84 Data Link Connector and control modules on the primary High Speed GMLAN Bus.

A primary High Speed GMLAN Bus is used where data needs to be exchanged at a high enough rate to minimize the delay between the occurrence of a change in sensor value and the reception of this information by a control device using the information to adjust vehicle system performance.

The primary High Speed GMLAN serial data network consists of two twisted wires. One signal circuit is identified as GMLAN-High and the other signal circuit is identified as GMLAN-Low. At each end of the data bus there is a 120 Ω termination resistor between the GMLAN-High and GMLAN-Low circuits.

Data symbols (1's and 0's) are transmitted sequentially at a rate of 500 Kbit/s. The data to be transmitted over the bus is represented by the voltage difference between the GMLAN-High signal voltage and the GMLAN-Low signal voltage.

When the two wire bus is at rest the GMLAN-High and GMLAN-Low signal circuits are not being driven and this represents a logic "1". In this state both signal circuits are at the same voltage of 2.5 V. The differential voltage is approximately 0 V.

When a logic "0" is to be transmitted, the GMLAN-High signal circuit is driven higher to about 3.5 V and the GMLAN-Low circuit is driven lower to about 1.5 V. The differential voltage becomes approximately 2.0 (+/- 0.5) V.

High Speed DLC Bus (Circuits 1978 & 1979)

Between the X84 Data Link Connector (DLC) terminals 6 & 14 and the K56 Serial Data Gateway Module terminals 15 X1 & 16 X1, there is a high speed bus called the High Speed DLC Bus. The High Speed DLC Bus is similar to the primary High Speed GMLAN Bus. Between the GMLAN-High and GMLAN-Low circuits, there is a 120 Ω termination resistor internal to the K56 Serial Data Gateway Module. There is no terminating resistor at the DLC.

The K56 Serial Data Gateway Module uses its high speed microprocessor to gate signals between the High Speed DLC, the primary High Speed GMLAN, the Gateway Expansion High Speed GMLAN, and the Gateway Isolated High Speed GMLAN Buses.

Chassis High Speed GMLAN Bus (Circuits 6105 & 6106) (if equipped)

Note: Continuity check cannot be performed between the X84 Data Link Connector and control modules on the Chassis High Speed GMLAN Bus.

The Chassis High Speed GMLAN Bus (or Chassis Expansion Bus) is basically a copy of the High Speed GMLAN Bus except that its use is reserved for chassis components. This implementation splits message congestion between two parallel buses helping to insure timely message transmission and reception. Sometimes communication is required between the Chassis High Speed GMLAN Bus and the primary High Speed GMLAN Bus. This is accomplished by using the K17 Electronic Brake Control Module as the Gateway module. Since the Chassis High Speed GMLAN Bus and primary High Speed GMLAN Bus operate in the same manner, the diagnostics for each are similar.

Chassis High Speed DLC Bus (Circuits 1980 & 1981)

Between the X84 Data Link Connector (DLC) terminals 12 & 13 and the K56 Serial Data Gateway Module terminals 17 X1 & 18 X1, there is a high speed bus called the Chassis High Speed DLC Bus. The Chassis High Speed DLC Bus is similar to the Chassis High Speed GMLAN Bus. Between the GMLAN-High and GMLAN-Low circuits, there is a 120 Ω termination resistor internal to the K56 Serial Data Gateway Module. There is no terminating resistor at the DLC.

The K56 Serial Data Gateway Module uses its high speed microprocessor to gate signals between the Chassis High Speed DLC Bus and the Chassis High Speed GMLAN Bus.

Powertrain High Speed GMLAN Bus (Circuits 7493 & 7494) (if equipped)

Note: Continuity check cannot be performed between the X84 Data Link Connector and control modules on the Powertrain High Speed GMLAN Bus.

The Powertrain High Speed GMLAN Bus (or Powertrain Expansion Bus) is basically a copy of the High Speed GMLAN Bus except that its use is reserved for Powertrain components. The bus is optional based upon feature content. Sometimes communication is required between the Powertrain High Speed GMLAN

Bus and the primary High Speed GMLAN Bus. This is accomplished by using the K20 Engine Control Module as the Gateway module. Since the Powertrain High Speed GMLAN Bus and the primary High Speed GMLAN Bus operate in the same manner, the diagnostics for each are similar.

Powertrain Sensor High Speed GMLAN Bus (Circuits 4498 & 4499) (if equipped)

Note: Continuity check cannot be performed between the X84 Data Link Connector and control modules on the Powertrain Sensor High Speed GMLAN Bus.

The Powertrain Sensor High Speed GMLAN Bus is basically a copy of the primary High Speed GMLAN Bus except that its use is reserved for Powertrain components. The bus is optional based upon feature content. Sometimes communication is required between the Powertrain Sensor High Speed GMLAN Bus and the primary High Speed GMLAN Bus. This is accomplished by using the K20 Engine Control Module as the Gateway module. Since the Powertrain Sensor High Speed GMLAN Bus and the primary High Speed GMLAN Bus operate in the same manner, the diagnostics for each are similar.

Object High Speed GMLAN Bus (Circuits 3811 & 3813) (if equipped)

Note: Continuity check cannot be performed between the X84 Data Link Connector and control modules on the Object High Speed GMLAN Bus.

The Object High Speed GMLAN Bus is basically a copy of the High Speed GMLAN Bus except that its use is reserved for the enhanced safety system. This implementation is used to isolate the heavy communication among the enhanced safety system devices from the other vehicle buses, reducing congestion. The K124 Active Safety Control Module is connected to the Object High Speed GMLAN Bus as well as the primary High Speed GMLAN Bus, the Chassis High Speed GMLAN Bus, and the Low Speed GMLAN Bus. The K124 Active Safety Control Module acts as a Gateway module for all required communication between the Object High Speed GMLAN Bus devices and devices on these other vehicle buses. The Object High Speed GMLAN Bus operates in the same manner as the Chassis High Speed GMLAN and primary High Speed GMLAN buses and so the diagnostics are similar. The Object High Speed GMLAN Bus is physically partitioned into a Front Object Bus and a Rear Object Bus with each partition having its own communication enable circuit to activate the partition, but functional operation of both is identical. The Front Object Bus standard devices are the K124 Active Safety Control Module, the K109 Frontview Camera Module (or B174W Frontview Camera – Windshield), and the B233B Radar Sensor Module – Long Range. The Front Object Bus optional devices are the B233LF Radar Sensor Module – Short Range Left Front and the B233RF Radar Sensor Module – Short Range Right Front. The Rear Object Bus is optional and when present will have the K124 Active Safety Control Module, B233LR Radar Sensor Module – Short Range Left Rear, and B233RR Radar Sensor Module – Short Range Right Rear on the bus. All Object High Speed GMLAN Bus components are powered by the K124 Active Safety Control Module via the communication enable circuits, except the K109 Frontview Camera Module (or B174W Frontview Camera – Windshield) which is powered directly by battery.

Object High Speed DLC Bus (Circuits 2089 & 2090)

Between the X84 Data Link Connector (DLC) terminals 3 & 11 and the K56 Serial Data Gateway Module terminals 13 X1 & 14 X1, there is a high speed bus called the Object High Speed DLC Bus. The Object High Speed DLC Bus is similar to the Object High Speed GMLAN Bus. Between the GMLAN-High and GMLAN-Low circuits, there is a 120 Ω termination resistor internal to the K56 Serial Data Gateway Module. There is no terminating resistor at the DLC.

The K56 Serial Data Gateway Module uses its low speed microprocessor to gate signals between the Object High Speed DLC Bus and the Object High Speed GMLAN Bus.

Gateway Isolated High Speed GMLAN Bus (Circuits 1304 & 1305)

Note: Continuity check cannot be performed between the X84 Data Link Connector (or control modules on the primary High Speed GMLAN Bus) and control modules on the Gateway Isolated High Speed GMLAN Bus.

The Gateway Isolated High Speed GMLAN Bus is an extension of the primary High Speed GMLAN Bus except it is separated from the primary High Speed GMLAN Bus by the K56 Serial Data Gateway Module for cybersecurity protection. The K56 Serial Data Gateway Module verifies data messages being transmitted from the control modules on the Gateway Isolated High Speed GMLAN Bus back to the primary High Speed GMLAN Bus are good with valid transmitter messages. This bus does not terminate to the X84 Data Link Connector.

The Gateway Isolated High Speed GMLAN Bus consists of two twisted wires. One signal circuit is identified as GMLAN-High and the other signal circuit is identified as GMLAN-Low. At each end of the data bus there is a 120 Ω termination resistor between the GMLAN-High and GMLAN-Low circuits.

Gateway Expansion High Speed GMLAN Bus (Circuits 3935 & 3936)

Note: Continuity check cannot be performed between the X84 Data Link Connector (or control modules on the primary High Speed GMLAN Bus) and control modules on the Gateway Expansion High Speed GMLAN Bus.

The Gateway Expansion High Speed GMLAN Bus is not cybersecurity protected and does not terminate at the X84 Data Link Connector. This expansion bus is created to alleviate the throughput on the primary High Speed GMLAN Bus.

The Gateway Expansion High Speed GMLAN Bus consists of two twisted wires. One signal circuit is identified as GMLAN-High and the other signal circuit is identified as GMLAN-Low. At each end of the data bus there is a 120 Ω termination resistor between the GMLAN-High and GMLAN-Low circuits.

Ethernet Bus (if equipped)

At the core of the infotainment system is the Radio Ethernet Audio Video Bridging switch which communicates directly to each contributing Infotainment module terminator. The Ethernet harness consists of twisted pair wires from point to point. Each device on the Ethernet infotainment system sends/receives data at 100 Mbit/s to/from a specified port at the A11 Radio. The Radio/Ethernet will also be used to program USB software update files to the devices connected to the Ethernet ports.

The A11 Radio is the Ethernet master. The Radio communicates with other devices and systems in the vehicle via GMLAN and LIN buses. Diagnostic Trouble Codes will be read on GMLAN to diagnose Ethernet, LIN and system faults. GMLAN will also be used for programming calibrations.

Media Oriented Systems Transport (MOST) Bus (Circuits 3997 & 3998) (if equipped)

The MOST Infotainment network is a dedicated high speed multimedia streaming data bus independent from GMLAN. The MOST Bus will be configured in a physical hardwired loop with each device within the bus sends and receives data on an assigned MOST addresses in a set order. Each device on the MOST Bus will be required to have twisted pair copper wires (2 transmit TX, 2 receive RX, and 1 electronic control line which is a 12 V wakeup signal line). The A11 Radio is the MOST Master and will monitor the bus for vehicle configuration, Infotainment data messages and errors on the bus. The MOST initialization consists of a short 100 ms low voltage pulse on the electronic control line (or MOST control line) connected to all devices contained on the MOST ring. This wakeup message once received by each device, will first respond with a generic device response. Once these initial responses on the MOST Bus are reported successfully without error to the A11 Radio, the second data request will record the MOST device addresses, their functionality requirements and capabilities within. The A11 Radio will learn this information and also record the address node sequence on the MOST Bus at this point. This node address list will now be stored within the A11 Radio as the MOST Bus configuration (called “Last Working MOST ID of Node 1 – 9” on scan tool data display).

When MOST receive, transmit, or control line faults are detected, transmit/receive messages will not received as expected from the wakeup request. The A11 Radio and the K74 Human Machine Interface Control Module will then perform diagnostics to isolate these MOST faults. If the MOST control line is shorted low to 0 V for excess amount of time, the A11 Radio will set a U2098 DTC and K74 Human Machine Interface Control Module will set a U0029 02 DTC. At this point the MOST Bus will be unable to communicate until the shorted MOST control line is repaired.

Once the shorted MOST control line diagnostics pass, the A11 Radio will attempt to resend the initial short pulse attempts up to 3 times on the MOST control line. If the expected responses are not received, the A11 Radio continues into a failure mode setting a U0028 DTC and will continue on to send one 300 ms long pulse, which will enable the furthest upstream transmitting device to become the surrogate MOST Master in this MOST fault/diagnostic mode. When the A11 Radio receives this new MOST Master identity, the surrogate MOST master device can be identified based on scan tool data parameter “Surrogate MOST Master Node Upstream Position”. The scan tool should be used to determine the MOST Bus configuration and direction by utilizing the “Last Working MOST ID of Node 1 – 9” parameters from the A11 Radio data display. When a fault is present, it will indicate the newly enabled “Surrogate MOST Master Node Upstream Position” from the A11 Radio. This will assist in determining where the MOST bus/control is at fault. The MOST device upstream from the surrogate MOST master device, transmit, receive, or control lines will be the suspect areas for diagnostics at this point. These faults can be associated with any of the MOST transmit, receive, or control line twisted copper wires or possibly an internal device fault.

The K74 Human Machine Interface Control Module will set a U0029 00 DTC when it diagnoses a MOST bus not communicating properly after one attempt. When the DTC U0029 00 is set by the K74 Human Machine Interface Control Module without the corresponding DTC U0028 from the A11 Radio, it will be an indication of an intermittent wiring/device condition.

FlexRay Bus (if equipped)

The FlexRay Bus is developed for safety related applications and higher data rate in real time application. The communication is time triggered. The FlexRay serial data network consists of two unshielded twisted wires to connect FlexRay nodes together. A FlexRay node is a device connected to a FlexRay Bus.

The FlexRay serial data network features 2 communication channels: channel A and channel B. Each channel may be operated at a data rate of up to 10 Mbit/s. FlexRay nodes can be connected to either both channels or a single channel. Each FlexRay channel consists of multiple branches. Each branch is a private bus. At each end of a branch, there is a 100 Ω terminating resistor connected between the pair of FlexRay serial data circuits. The terminating resistors can be external or internal to a FlexRay device.

The second FlexRay channel can be used as a redundant channel for fault toleration or to increase data rate of up to 20 Mbit/s. The dual channel configuration consists of two independent data channels for fault-tolerance. When one channel fails, the communication can still continue with reduced bandwidth.

Low Speed GMLAN Bus (Circuit 5060)

Note: Continuity check cannot be performed between the X84 Data Link Connector and control modules on the Low Speed GMLAN Bus.

Low Speed GMLAN Bus is used in applications where a high data rate is not required which allows for the use of less complex components. It is typically used for operator controlled functions where the response time requirements are slower than those required for dynamic vehicle control.

The Low Speed GMLAN Serial Data Network consists of a single wire, ground referenced bus with high side voltage drive. During on road vehicle operation data symbols (1's and 0's) are transmitted sequentially at the normal rate of 33.3 Kbit/s. For component programming only, a special high speed data mode of 83.3 Kbit/s may be used.

Unlike the high speed dual wire networks, the single wire low speed network does not use terminating resistors at either end of the network.

The data symbols to be transmitted over the bus are represented by different voltage signals on the bus. When the Low Speed GMLAN Bus is at rest and is not being driven, there is a low signal voltage of approximately 0.2 V. This represents a logic "1". When a logic "0" is to be transmitted, the signal voltage is driven higher to around 4.0 V or higher.

Low Speed DLC Bus (Circuit 2100)

Between the X84 Data Link Connector (DLC) terminal 1 and the K56 Serial Data Gateway Module terminal 26 X1, there is a low speed bus called the Low Speed DLC Bus. The Low Speed DLC Bus is similar to the primary Low Speed GMLAN Bus.

The K56 Serial Data Gateway Module uses its low speed microprocessor to gate signals between the Low Speed DLC, the primary Low Speed GMLAN, and the Gateway Isolated Low Speed GMLAN Buses.

Gateway Isolated Low Speed GMLAN Bus (Circuit 1102)

Note: Continuity check cannot be performed between the X84 Data Link Connector (or control modules on the primary Low Speed GMLAN Bus) and control modules on the Gateway Isolated Low Speed GMLAN Bus.

The Gateway Isolated Low Speed GMLAN Bus is an extension of the primary Low Speed GMLAN Bus except it is separated from the primary Low Speed GMLAN Bus by the K56 Serial Data Gateway Module for cybersecurity protection. The K56 Serial Data Gateway Module verifies data messages being transmitted from the control modules on the Gateway Isolated Low Speed GMLAN Bus back to the primary Low Speed GMLAN Bus are good with valid transmitter messages. This bus does not terminate to the X84 Data Link Connector.

Local Interconnect Network (LIN) Bus

The Local Interconnect Network (LIN) Bus consists of a single wire with a transmission rate of 10.417 Kbit/s. This bus is used to exchange information between a master control module and other smart devices which provide supporting functionality. This type of configuration does not require the capacity or speed of either a High Speed GMLAN Bus or Low Speed GMLAN Bus and is thus relatively simpler.

The data symbols (1's and 0's) to be transmitted are represented by different voltage levels on the communication bus. When the LIN Bus is at rest and is not being driven, the signal is in a high voltage state of approximately Vbatt. This represents a logic "1". When a logic "0" is to be transmitted, the signal voltage is driven low to about ground (0.0 V).

Communication Enable Circuit Description

Devices on High Speed GMLAN Bus enable or disable communication based on the voltage level of the Serial Data Communication Enable circuit or Accessory Wakeup Serial Data circuit. When the circuit voltage is high (around 12 V), communications are enabled. When the circuit is low, communications are disabled.

X84 Data Link Connector (DLC)

The X84 Data Link Connector is a standardized 16-cavity connector. Connector design and location is dictated by an industry wide standard, and is required to provide the following:

- Terminal 1: Low Speed GMLAN Serial Data #3 terminal (Low Speed DLC Bus)
- Terminal 3: High Speed GMLAN Serial Data (+)(13) terminal (Object High Speed DLC Bus)
- Terminal 4: Scan tool power ground terminal
- Terminal 5: Common signal ground terminal
- Terminal 6: High Speed GMLAN Serial Data (+)(11) terminal (High Speed DLC Bus)
- Terminal 11: High Speed GMLAN Serial Data (-)(13) terminal (Object High Speed DLC Bus)
- Terminal 12: High Speed GMLAN Serial Data (+)(12) terminal (Chassis High Speed DLC Bus)
- Terminal 13: High Speed GMLAN Serial Data (-)(12) terminal (Chassis High Speed DLC Bus)
- Terminal 14: High Speed GMLAN Serial Data (-)(11) terminal (High Speed DLC Bus)
- Terminal 16: Scan tool power, battery positive voltage terminal

Serial Data Reference

The scan tool communicates over the various buses on the vehicle. When a scan tool is installed on a vehicle, the scan tool will try to communicate with every device that could be optioned into the vehicle. If an option is not installed on the vehicle, the scan tool will display No Comm (or Not Connected) for that optional device. In order to avert misdiagnoses of No Communication with a specific device, for a list of devices and the buses they communicate with. Use schematics and specific vehicle build RPO codes to determine optional devices.

Electrical Component and Inline Harness Connector End Views

Component Locator

Electrical Center Identification Views

X50A Fuse Block - Underhood Label

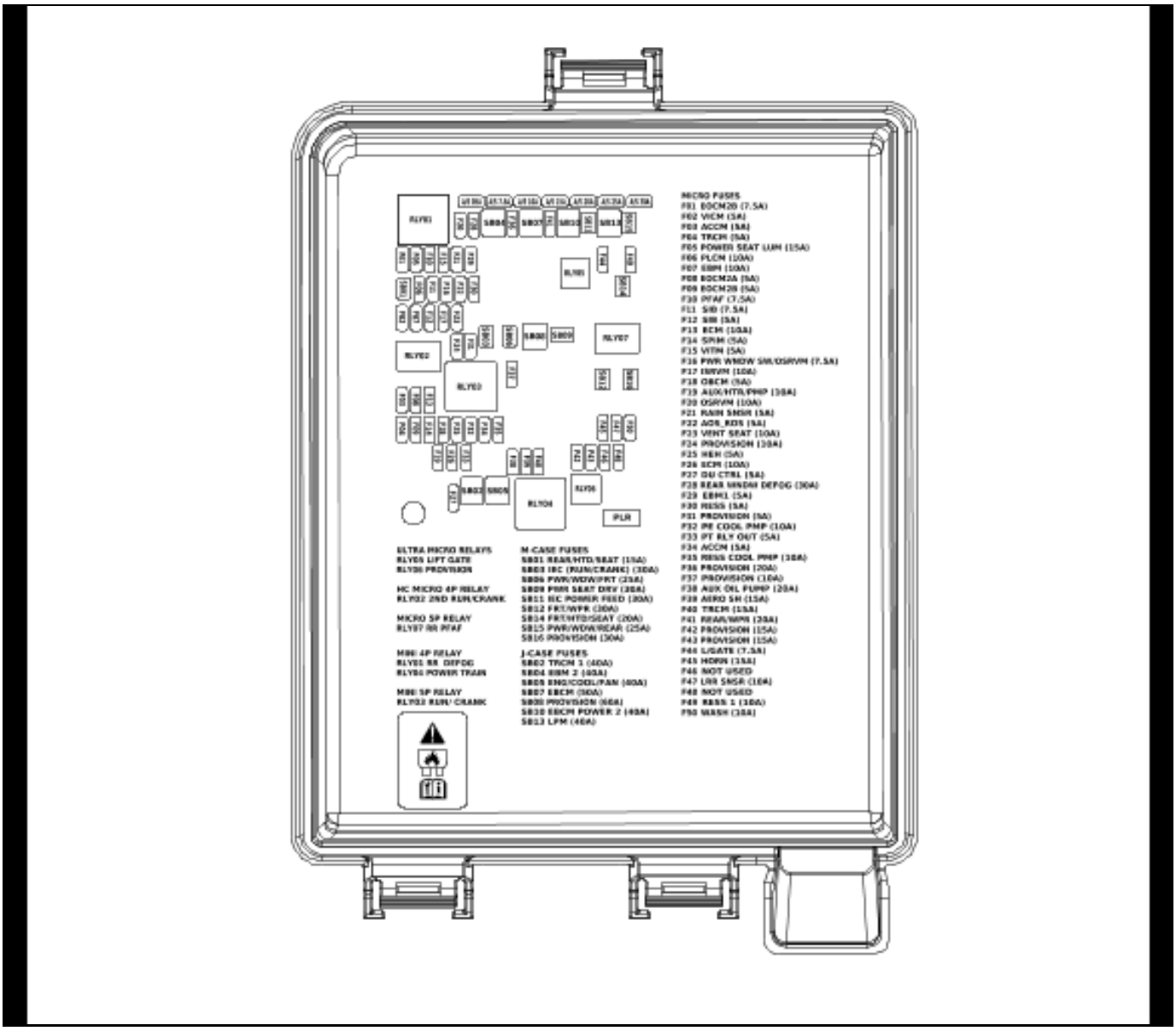

5956085

X50A Fuse Block - Underhood Top View

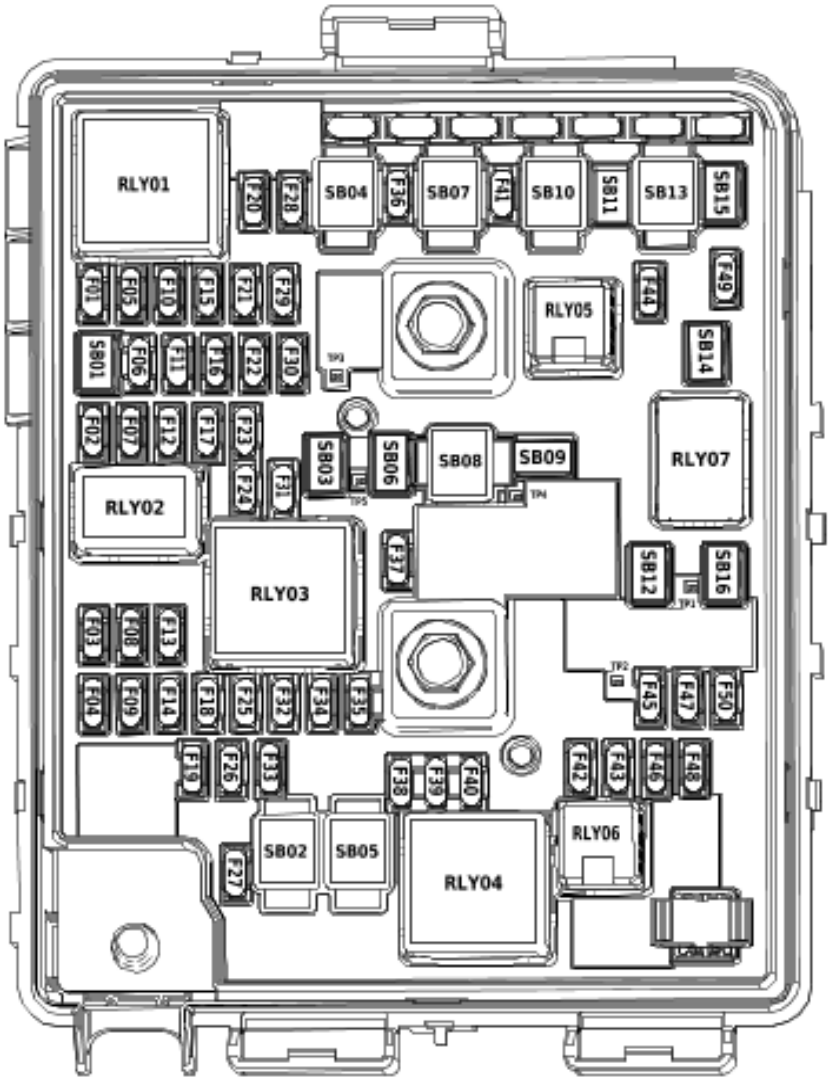

5750775

Usage Table

No.	Device Label Name	Device Assigned Name	Rating	Description
Fuses				
F01	EOCM2B	F1UA	7.5A	• K124B Active Safety Control Module 2 (UKL)
F02	VICM	F2UA	5A	• K114B Hybrid/EV Powertrain Control Module 2
F03	ACCM	F3UA	5A	• G1 A/C Compressor • K118 Electric A/C Compressor Control Module
F04	TRCM	F4UA	5A	• K173 Transmission Range Control Module
F05	POWER SEAT LUM	F5UA	15A	• S65D Seat Lumbar Support Switch - Driver (A2X)
F06	PLCM	F6UA	10A	• K190 Power Line Communication Module
F07	EBM	F7UA	10A	• K177 Brake Booster Control Module
F08	EOCM2A	F8UA	5A	• K124A Active Safety Control Module 1 (UKL)
F09	EOCM2B	F9UA	5A	• K124B Active Safety Control Module 2 (UKL)

Usage Table (cont'd)

No.	Device Label Name	Device Assigned Name	Rating	Description
F10	PFAF	F10UA	7.5A	• K132 Pedestrian Alert Sound Control Module
F11	SIB	F11UA	7.5A	• K212 Electronic Transmission Shift Control Pushbutton Circuit Board
F12	SIB	F12UA	5A	• K212 Electronic Transmission Shift Control Pushbutton Circuit Board
F13	ECM	F13UA	10A	• K20 Engine Control Module
F14	SPIM	F14UA	5A	• T6 Power Inverter Module
F15	VITM	F15UA	5A	• K9 Body Control Module
F16	PWR WNDW SW/ OSRVM	F16UA	7.5A	• S146 Window/Outside Rearview Mirror Switch - Driver
F17	ISRVM	F17UA	10A	• A10 Inside Rearview Mirror (DD8/DRZ)
F18	OBCM	F18UA	5A	• K57 Battery Charger Control Module • T18 Battery Charger
F19	AUX/HTR/PMP	F19UA	10A	• G36 Auxiliary Heater Coolant Pump
F20	OSRVM	F20UA	10A	• E17D Outside Rearview Mirror Glass - Driver • E17P Outside Rearview Mirror Glass - Passenger
F21	RAIN SNSR	F21UA	5A	• B160 Windshield Tempurature and Inside Moisture Sensor (-CE1) • B200 Rain Sensor Module (CE1)
F22	AOS_ROS	F22UA	5A	• K85 Passenger Presence Module
F23	VENT SEAT	F23UA	10A	• K53D Seat Blower Assembly - Driver Cushion (KU1) • K53P Seat Blower Assembly - Passenger Back (KU3) • K55D Seat Blower Assembly - Driver Cushion (KU1) • K55P Seat Blower Assembly - Passenger Cushion (KU3)
F24	PROVISION	F24UA	10A	• Not Used
F25	HEH	F25UA	5A	• K10 Coolant Heater Control Module
F26	ECM	F26UA	10A	• K20 Engine Control Module
F27	DU CTRL	F27UA	5A	• G5 Transmission Fluid Pump - Electric/Auxiliary
F28	REAR WNDW DE-FOG	F28UA	30A	• E18 Rear Defogger Grid
F29	EMB1	F29UA	5A	• K177 Brake Booster Control Module
F30	RESS	F30UA	5A	• A4 Hybrid/EV Battery Pack • K16 Battery Energy Control Module
F31	PROVISION	F31UA	5A	• Not Used
F32	PE COOL PMP	F32UA	10A	• G35 Hybrid/EV Electronics Coolant Pump
F33	PT RLY OUT	F33UA	5A	• K20 Engine Control Module
F34	ACCM	F34UA	5A	• G1 A/C Compressor • K118 Electric A/C Compressor Control Module
F35	RESS COOL PMP	F35UA	10A	• G37 Hybrid/EV Battery Pack Coolant Pump
F36	PROVISION	F36UA	20A	• Not Used
F37	PROVISION	F37UA	10A	• Not Used
F38	AUX OIL PUMP	F38UA	20A	• G5 Transmission Fluid Pump - Electric/Auxiliary
F39	AERO SH	F39UA	15A	• M96A Active Grille Air Shutter 1 Actuator
F40	TRCM	F40UA	15A	• K173 Transmission Range Control Module
F41	REAR/WPR	F41UA	20A	• KR7 Rear Wiper Relay • M45 Rear Wiper Motor

Usage Table (cont'd)

No.	Device Label Name	Device Assigned Name	Rating	Description
F42	PROVISION	F42UA	15A	• Not Used
F43	PROVISION	F43UA	15A	• Not Used
F44	L/GATE	F44UA	7.5A	• KR95A Liftgate Unlatch Relay
F45	HORN	F45UA	15A	• P12L Horn - Left • P12R Horn - Right
F46	NOT USED	F46UA	—	• Not Used
F47	LRR SNSR	F47UA	10A	• B233B Radar Sensor Module - Long Range (UKL)
F48	NOT USED	F48UA	—	• Not Used
F49	RESS 1	F49UA	10A	• A4 Hybrid/EV Battery Pack • K16 Battery Energy Control Module
F50	WASH	F50UA	10A	• KR6 Rear Window Washer Pump Relay • KR11 Windshield Washer Pump Relay
SB01	REAR/HTD/SEAT	F51UA	15A	• K29R Seat Heating Control Module - Rear (KA6)
SB02	TRCM1	F52UA	40A	• K173 Transmission Range Control Module
SB03	IEC (RUN/CRANK)	F53UA	30A	• F25DA Fuse • F26DA Fuse • F27DA Fuse • F28DA Fuse • F30DA Fuse
SB04	EBM 2	F54UA	40A	• K177 Brake Booster Control Module
SB05	ENG/COOL/FAN	F55UA	40A	• G10 Cooling Fan Motor
SB06	PWR/WDW/FRT	F56UA	25A	• M35D Window Motor Module - Driver • M35P Window Motor Module - Passenger
SB07	EBCM	F57UA	50A	• K17 Electronic Brake Control Module
SB08	PROVISION	F58UA	60A	• Not Used
SB09	PWR SEAT DRV	F59UA	30A	• S64D Seat Adjuster Switch - Driver (A2X)
SB10	EBCM POWER 2	F60UA	40A	• K17 Electronic Brake Control Module
SB11	IEC POWER FEED	F61UA	30A	• F19DA Fuse (UKL) • F20DA Fuse (UKL) • F21DA Fuse (UKL) • F54DA Fuse (5W4) • KR161A Configurable Provision Relay 1 (5W4)
SB12	FRT/WPR	F62UA	30A	• KR12B Windshield Wiper Relay
SB13	LPM	F63UA	40A	• K8 Blower Motor Control Module
SB14	FRT/HTD/SEAT	F64UA	20A	• K29F Seat Heating Control Module - Front (KA1)
SB15	PWR/WDW/REAR	F65UA	25A	• S79LR Window Switch - Left Rear • S79RR Window Switch - Right Rear,
SB16	PROVISION	F66UA	30A	• Not Used
Relays				
RLY01	RR DEFOG	KR5 Rear Defog-ger Relay	—	• F20UA Fuse • F28UA Fuse

Usage Table (cont'd)

No.	Device Label Name	Device Assigned Name	Rating	Description
RLY02	2ND RUN/CRANK	KR73B Ignition Main Relay 2	—	• F2UA Fuse • F3UA Fuse • F4UA Fuse • F8UA Fuse • F9UA Fuse • F14UA Fuse • F30UA Fuse
RLY03	RUN/ CRANK	KR73A Ignition Main Relay 1	—	• F7UA Fuse • F12UA Fuse • F13UA Fuse • F17UA Fuse • F23UA Fuse • F24UA Fuse • F31UA Fuse • F37UA Fuse • F53UA Fuse
RLY04	POWER TRAIN	KR75 Engine Controls Ignition Relay	—	• F27UA Fuse • F33UA Fuse • F39UA Fuse • F40UA Fuse • KR31 Coolant Pump Relay - Auxiliary
RLY05	LIFT GATE	KR95A Liftgate Unlatch Relay	—	• A23C Liftgate Latch Assembly
RLY06	PROVISION	—	—	• Not Used
RLY07	RR PFAF	KR199 Pedestrian Sound Alert Relay	—	• P48F Pedestrian Alert Sound Speaker - Front • P48R Pedestrian Alert Sound Speaker - Rear
Important: Relays listed below are non-serviceable Printed Circuit Board (PCB) relays and are internal to the block				
—	—	KR3 Horn Relay	—	• F45UA Fuse
—	—	KR7 Rear Wiper Relay	—	• M45 Rear Wiper Motor
—	—	KR6 Rear Window Washer Pump Relay	—	• G24 Windshield Washer Pump
—	—	KR11 Windshield Washer Pump Relay	—	• G24 Windshield Washer Pump
—	—	KR12B Windshield Wiper Relay	—	• KR12C Windshield Wiper Speed Control Relay
—	—	KR12C Windshield Wiper Speed Control Relay	—	• M75 Windshield Wiper Motor
—	—	KR31 Coolant Pump Relay - Auxillary	—	• F19UA Fuse

X50A Fuse Block - Underhood Bottom View

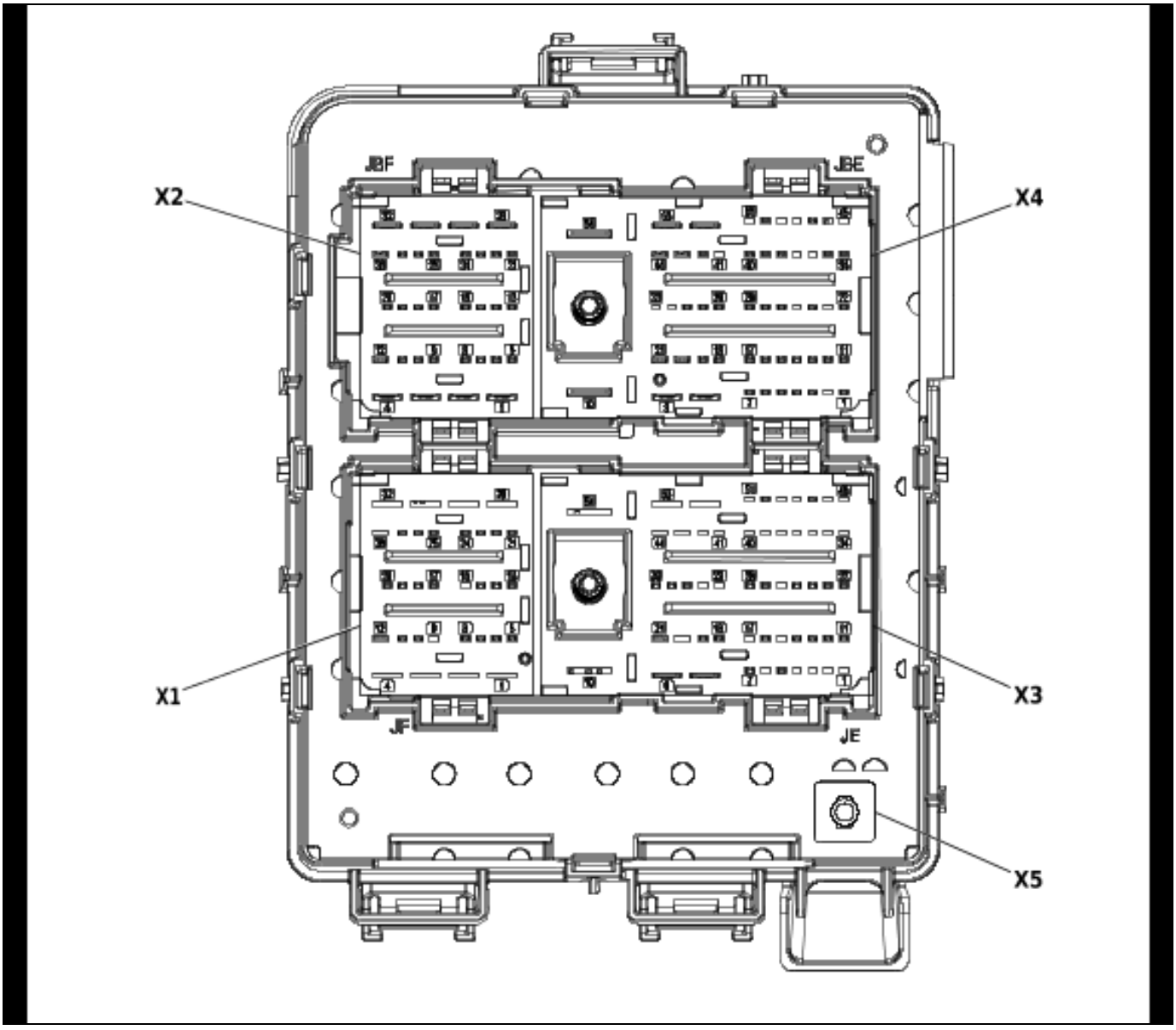

5750778

X50A Fuse Block - Underhood X1

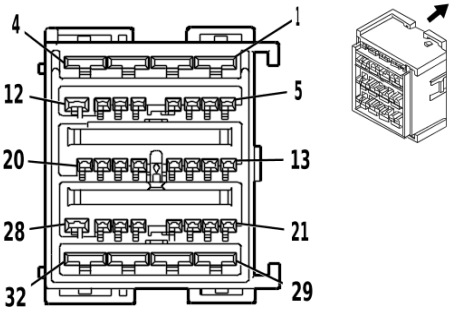

1827035

Connector Part Information

Harness Type: Forward Lamp Wiring Harness
OEM Connector: 7283-9458-30
Service Connector: 19153183
Description: 32-Way F YESC Kaizen Series(BK)

Terminal Part Information

Terminal Type ID	Terminated Lead	Diagnostic Test Probe	Terminal Removal Tool
I	19332534	J-35616-14 (GN)	J-38125-557
II	19368264	J-35616-4A (PU)	J-38125-11A

X50A Fuse Block - Underhood X1

Pin	Size	Color	Circuit	Function	Terminal Type ID	Option
1 - 4	—	—	—	Not Occupied	—	—
5	0.75	GN / VT	1315	Right Front Turn Signal Lamp Control	I	—
6 - 11	—	—	—	Not Occupied	—	—
12	2.5	BK	50	Ground	II	—
13	0.35	WH / VT	860	Windshield Wiper Switch High Signal	I	—
14	0.75	WH / YE	7545	Right Front Turn Signal Lamp Feedback Signal	I	—
15	0.5	VT / GY	709	Left Park Lamp Control	I	—
16	—	—	—	Not Occupied	—	—
17	1	BN / GY	29	Horn Control	I	—
18	1	BN / GY	29	Horn Control	I	—
19	0.75	VT / BK	6568	Front Turn Signal Lamp Feedback Signal	I	—
20	0.5	RD / GN	3140	Battery Positive Voltage	I	UKL
21	—	—	—	Not Occupied	—	—
22	0.75	BU / WH	1314	Left Front Turn Signal Lamp Control	I	—
23	0.5	GY / BN	309	Right Park Lamp Control	I	—
24	0.5	BU / VT	392	Rear Window Washer Pump Control	I	—
25 - 26	—	—	—	Not Occupied	—	—
27	0.5	GY / VT	228	Windshield Washer Pump Control	I	—
28 - 32	—	—	—	Not Occupied	—	—

X50A Fuse Block - Underhood X2

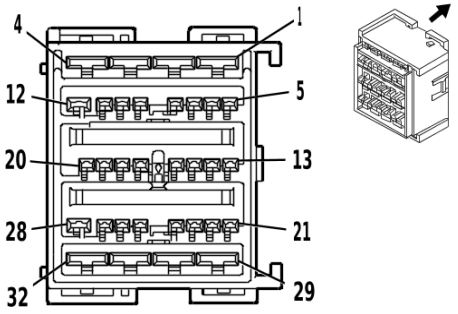

1827035

Connector Part Information

Harness Type: Body Wiring Harness
OEM Connector: 7283-9458-30
Service Connector: 19153183
Description: 32-Way F YESC Kaizen Series(BK)

Terminal Part Information

Terminal Type ID	Terminated Lead	Diagnostic Test Probe	Terminal Removal Tool
I	13575835	J-35616-42 (RD)	J-38125-11A
II	19332534	J-35616-14 (GN)	J-38125-557
III	19368264	J-35616-4A (PU)	J-38125-11A

X50A Fuse Block - Underhood X2

Pin	Size	Color	Circuit	Function	Terminal Type ID	Option
1	2.5	RD / WH	640	Battery Positive Voltage	I	—
2	2.5	YE / BN	95	Windshield Wiper Motor Low Speed Control	I	—
3	2.5	BK	450	Ground	I	—
4	—	—	—	Not Occupied	—	—
5	0.75	BU / WH	1314	Left Front Turn Signal Lamp Control	II	—
6	0.5	GY / BN	309	Right Park Lamp Control	II	—
7	0.35	GN / WH	2270	Rear Window Washer Relay Control	II	—
8	0.5	WH / YE	7545	Right Front Turn Signal Lamp Feedback Signal	II	—
9 - 10	—	—	—	Not Occupied	—	—
11	0.5 0.5	VT / BN VT / BN	4337 4337	Pedestrian Alert Sound Speaker [-] Control Pedestrian Alert Sound Speaker [-] Control	II II	UKL - UKL
12	1	RD / BU	540	Battery Positive Voltage	III	KA1
13	0.5	VT / GY	709	Left Park Lamp Control	II	—
14	0.5	BU / WH	6128	Rear Closure Unlatch Actuator Unlatch Control	II	—
15	0.5	VT / BK	6568	Front Turn Signal Lamp Feedback Signal	II	—
16	0.35	YE	5704	Endgate Latch Relay Coil Control	II	—
17	0.5	VT / BN	4337	Pedestrian Alert Sound Speaker [-] Control	II	—
18	0.5	GN / WH	24	Backup Lamp Control	II	—
19	0.5	VT / BN	4337	Pedestrian Alert Sound Speaker [-] Control	II	—
20	0.35	BN / WH	28	Horn Relay Control	II	

X50A Fuse Block - Underhood X2 (cont'd)

Pin	Size	Color	Circuit	Function	Terminal Type ID	Option
21	0.35	GY	91	Windshield Wiper Motor Relay Coil Control	II	—
22	—	—	—	Not Occupied	—	—
23	0.35	GN / BN	5706	Endgate Latch Relay Control	II	—
24	—	—	—	Not Occupied	—	—
25	0.35	BN / GY	2268	Windshield Washer Relay Control	II	—
26	—	—	—	Not Occupied	—	—
27	0.5	RD / VT	1640	Battery Positive Voltage	II	—
28	2	RD / BN	2940	Battery Positive Voltage	III	—
29	1	GY / VT	5780	Windshield Wiper Motor Park Switch Fused Signal	I	—
30	2.5	RD / BU	3242	Battery Positive Voltage	I	—
31	2	RD / WH	2040	Battery Positive Voltage	I	—
32	2.5	RD / BU	840	Battery Positive Voltage	I	—

X50A Fuse Block - Underhood X3

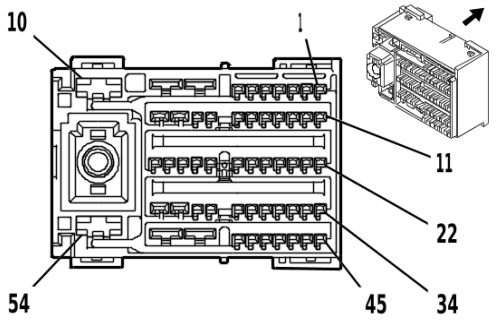

1827033

Connector Part Information

Harness Type: Body Wiring Harness
OEM Connector: 7283-9457-3W
Service Connector: 19153182
Description: 54-Way F YESC Kaizen Series(BK)

Terminal Part Information

Terminal Type ID	Terminated Lead	Diagnostic Test Probe	Terminal Removal Tool
I	13575835	J-35616-42 (RD)	J-38125-11A
II	13575850	J-35616-14 (GN)	J-38125-557
III	85126128	J-35616-22 (RD)	J-38125-11A
IV	85544080	J-35616-4A (PU)	J-38125-11A

X50A Fuse Block - Underhood X3

Pin	Size	Color	Circuit	Function	Terminal Type ID	Option
1	0.35	VT / GY	539	Run/Crank Ignition 1 Voltage	II	—
2	—	—	—	Not Occupied	—	—
3	0.35	VT / WH	639	Run/Crank Ignition 1 Voltage	II	—
4	0.35	GN / VT	5199	Run/Crank Relay Coil Control	II	—
5	0.35	VT / BK	339	Run/Crank Ignition 1 Voltage	II	DD8/ DRZ
6	0.5	VT / GN	439	Run/Crank Ignition 1 Voltage	II	KU1
7	—	—	—	Not Occupied	—	—
8	2	VT / GN	39	Run/Crank Ignition 1 Voltage	I	—
9	2.5	WH	92	Windshield Wiper Motor High Speed Control	I	—
10	—	—	—	Not Occupied	—	—
11	0.75	RD / BU	540	Battery Positive Voltage	II	KA6
12	0.5	RD / WH	1040	Battery Positive Voltage	II	—
13	0.35	RD / BN	440	Battery Positive Voltage	II	—
14	0.5	VT / BK	1239	Run/Crank Ignition 1 Voltage	II	—
15	0.35	RD / GN	1540	Battery Positive Voltage	II	—
16	—	—	—	Not Occupied	—	—
17	0.5	RD / VT	2640	Battery Positive Voltage	II	—
18	0.5	VT / GN	1339	Run/Crank Ignition 1 Voltage	II	—
19	—	—	—	Not Occupied	—	—

X50A Fuse Block - Underhood X3 (cont'd)

Pin	Size	Color	Circuit	Function	Terminal Type ID	Option
20	1	BU	393	Rear Window Wiper Motor Control	IV	—
21	2	RD / GN	1540	Battery Positive Voltage	IV	—
22	0.35	GY	5127	Turbocharger Coolant Pump Relay Control	II	—
23	—	—	—	Not Occupied	—	—
24	0.5 0.5	RD / BU RD / BU	6040 6040	Battery Positive Voltage Battery Positive Voltage	II II	UKL - UKL
25	—	—	—	Not Occupied	—	—
26	0.35	RD / GN	40	Battery Positive Voltage	II	—
27	0.35	BN / WH	419	Check Engine Indicator Control	II	—
28	0.35	RD / YE	3740	Battery Positive Voltage	II	—
29	1	RD / YE	3040	Battery Positive Voltage	II	—
30	—	—	—	Not Occupied	—	—
31	0.75	GN / VT	1315	Right Front Turn Signal Lamp Control	II	—
32 - 33	—	—	—	Not Occupied	—	—
34	0.5	RD / GN	2440	Battery Positive Voltage	II	UKL
35	0.5	RD / WH	640	Battery Positive Voltage	II	A2X
36 - 37	—	—	—	Not Occupied	—	—
38	0.35	BN / YE	2267	Outside Rearview Mirror Heater Control	II	DWK/ DXD
39	0.35	BN / YE	2267	Outside Rearview Mirror Heater Control	II	DWK/ DXD
40	0.35	GN / VT	5199	Run/Crank Relay Coil Control	II	—
41	—	—	—	Not Occupied	—	—
42	0.35	YE	5420	Rear Wiper Motor Relay Coil Control	II	—
43	1	BK	350	Ground	IV	—
44 - 46	—	—	—	Not Occupied	—	—
47	0.35	BN / VT	193	Rear Defogger Relay Control	II	—
48 - 51	—	—	—	Not Occupied	—	—
52	2.5	BN / VT	293	Rear Defogger Grid Control	I	—
53	2.5	RD / YE	3042	Battery Positive Voltage	I	—
54	4	RD / BN	3142	Battery Positive Voltage	III	—

X50A Fuse Block - Underhood X4

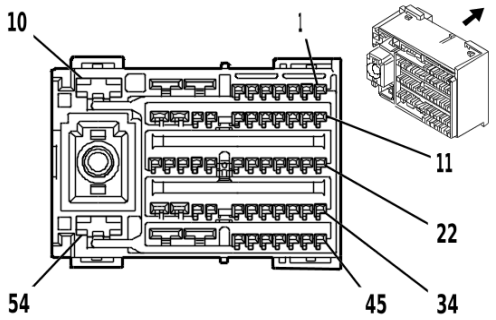

1827033

Connector Part Information

Harness Type: Engine Wiring Harness
OEM Connector: 7283-9457-3W
Service Connector: 19153182
Description: 54-Way F YESC Kaizen Series(BK)

Terminal Part Information

Terminal Type ID	Terminated Lead	Diagnostic Test Probe	Terminal Removal Tool
I	13575835	J-35616-42 (RD)	J-38125-11A
II	13575850	J-35616-14 (GN)	J-38125-557
III	85544080	J-35616-4A (PU)	J-38125-11A

X50A Fuse Block - Underhood X4

Pin	Size	Color	Circuit	Function	Terminal Type ID	Option
1 - 4	—	—	—	Not Occupied	—	—
5	0.5	VT / BU	5290	Powertrain Main Relay Fused Supply Voltage 1	II	—
6	—	—	—	Not Occupied	—	—
7	0.5	VT / BU	5292	Powertrain Main Relay Fused Supply Voltage 3	II	—
8	2.5	RD / GY	642	Battery Positive Voltage	I	—
9	4	RD / BU	302	Battery Positive Voltage	I	—
10	—	—	—	Not Occupied	—	—
11	0.5	VT / WH	1539	Run/Crank Ignition 1 Voltage	II	—
12	0.5	VT / BK	1639	Run/Crank Ignition 1 Voltage	II	—
13	0.5	VT / GY	1439	Run/Crank Ignition 1 Voltage	II	—
14	0.5	RD / WH	3440	Battery Positive Voltage	II	—
15	—	—	—	Not Occupied	—	—
16	0.5	RD / WH	140	Battery Positive Voltage	II	—
17	—	—	—	Not Occupied	—	—
18	0.5	YE	5991	Powertrain Relay Coil Control	II	—
19	0.5	VT / BU	5705	Powertrain Main Relay Control	II	—
20	—	—	—	Not Occupied	—	—
21	1	RD / BU	3240	Battery Positive Voltage	III	—
22	0.5	VT / WH	1139	Run/Crank Ignition 1 Voltage	II	—
23	0.5	VT / GN	839	Run/Crank Ignition 1 Voltage	II	—

X50A Fuse Block - Underhood X4 (cont'd)

Pin	Size	Color	Circuit	Function	Terminal Type ID	Option
24	0.5	VT / GY	139	Run/Crank Ignition 1 Voltage	II	—
25	0.5	RD / YE	740	Battery Positive Voltage	II	—
26	—	—	—	Not Occupied	—	—
27	0.5	RD / WH	2740	Battery Positive Voltage	II	—
28	0.5	RD / VT	3340	Battery Positive Voltage	II	—
29 - 30	—	—	—	Not Occupied	—	—
31	0.5	RD / GY	2140	Battery Positive Voltage	II	—
32	0.5	RD / GY	3540	Battery Positive Voltage	II	—
33	0.5	VT / BU	5293	Powertrain Main Relay Fused Supply Voltage 4	II	—
34 - 46	—	—	—	Not Occupied	—	—
47	0.5	BN / WH	419	Check Engine Indicator Control	II	—
48 - 54	—	—	—	Not Occupied	—	—

X50A Fuse Block - Underhood X5

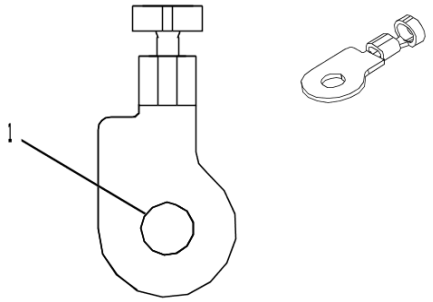

4381418

Connector Part Information

Harness Type: Battery Positive Cable
OEM Connector: 33194395
Service Connector: Service by Cable Assembly — See Part Catalog
Description: 1-Way Ring Terminal

Terminal Part Information

Terminal Type ID	Terminated Lead	Diagnostic Test Probe	Terminal Removal Tool
I	Not required	No Tool Required	No Tool Required

X50A Fuse Block - Underhood X5

Pin	Size	Color	Circuit	Function	Terminal Type ID	Option
1	25	RD / WH	4042	Battery Positive Voltage	I	—

X50D Fuse Block - Battery Top View

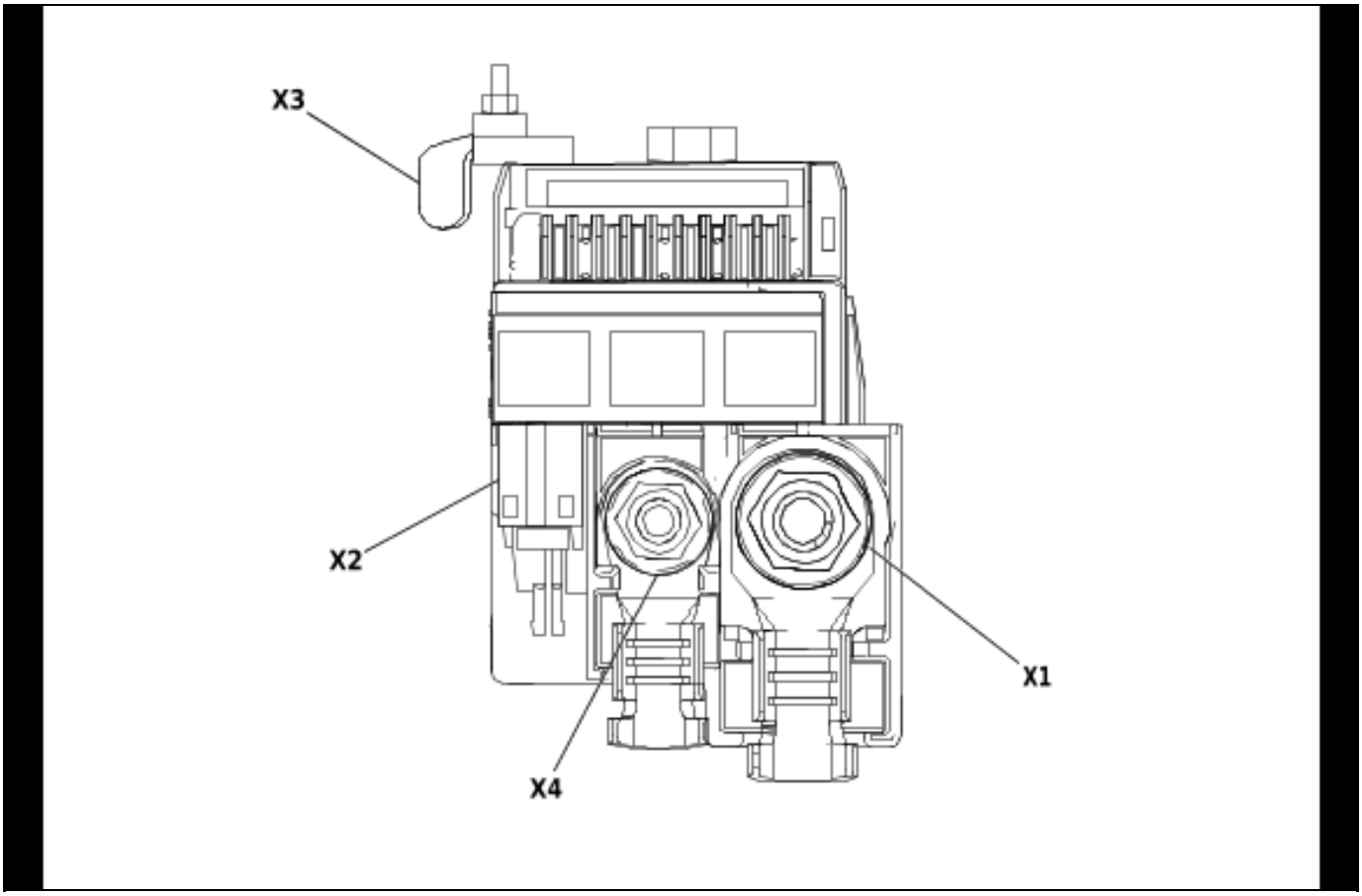

5750781

Usage Table

No.	Device Label Name	Device Assigned Name	Rating	Description
Fuses				
1	UEC	F1BA	175A	• X50A Fuse Block - Underhood
2	EPS	F2BA	80A	• K43 Power Steering Control Module
3	IEC	F3BA	80A	• X51A Fuse Block - Instrument Panel
4	APM	F4BA	150A	• K1 14V Power Module

X50D Fuse Block - Battery X1

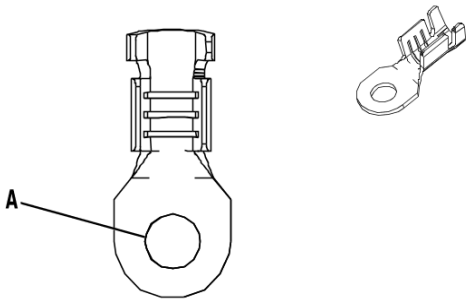

4539335

Connector Part Information

Harness Type: Battery Positive Cable
OEM Connector: CBR742-012
Service Connector: Service by Cable Assembly — See Part Catalog
Description: 1-Way Ring Terminal

Terminal Part Information

Terminal Type ID	Terminated Lead	Diagnostic Test Probe	Terminal Removal Tool
I	Not required	No Tool Required	No Tool Required

X50D Fuse Block - Battery X1

Pin	Size	Color	Circuit	Function	Terminal Type ID	Option
A	25	RD / WH	4042	Battery Positive Voltage	I	—

X50D Fuse Block - Battery X2

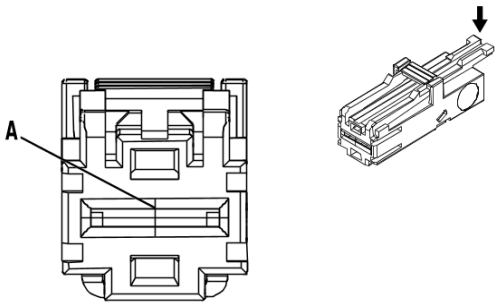

4539276

Connector Part Information

Harness Type: Body Wiring Harness
OEM Connector: 13231526
Service Connector: Service by Harness - See Part Catalog
Description: 1-Way F 8.0 Timer(BK)

Terminal Part Information

Terminal Type ID	Terminated Lead	Diagnostic Test Probe	Terminal Removal Tool
I	Not required	J-35616-22 (RD)	No Tool Required

X50D Fuse Block - Battery X2

Pin	Size	Color	Circuit	Function	Terminal Type ID	Option
A	8	RD / GN	40	Battery Positive Voltage	I	—

X50D Fuse Block - Battery X3

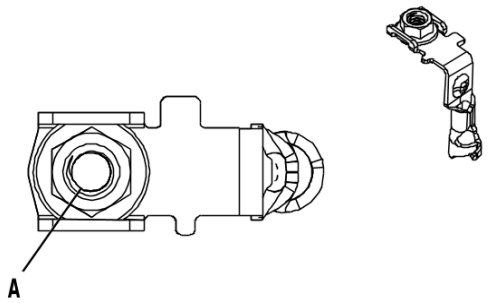

2759564

Connector Part Information

Harness Type: Body Wiring Harness
OEM Connector: 13371974
Service Connector: Service by Cable Assembly — See Part Catalog
Description: 1-Way Ring Terminal

Terminal Part Information

Terminal Type ID	Terminated Lead	Diagnostic Test Probe	Terminal Removal Tool
I	Not required	No Tool Required	No Tool Required

X50D Fuse Block - Battery X3

Pin	Size	Color	Circuit	Function	Terminal Type ID	Option
A	8	RD / BU	42	Battery Positive Voltage	I	—

X50D Fuse Block - Battery X4

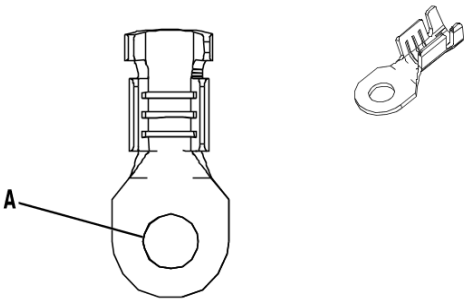

4539335

Connector Part Information

Harness Type: Battery Positive Cable
OEM Connector: CBR742-012
Service Connector: Service by Cable Assembly — See Part Catalog
Description: 1-Way Ring Terminal

Terminal Part Information

Terminal Type ID	Terminated Lead	Diagnostic Test Probe	Terminal Removal Tool
I	Not required	No Tool Required	No Tool Required

X50D Fuse Block - Battery X4

Pin	Size	Color	Circuit	Function	Terminal Type ID	Option
A	25	RD / YE	2	Battery Positive Voltage	I	—

X51A Fuse Block - Instrument Panel Label

5956088

X51A Fuse Block - Instrument Panel Top View

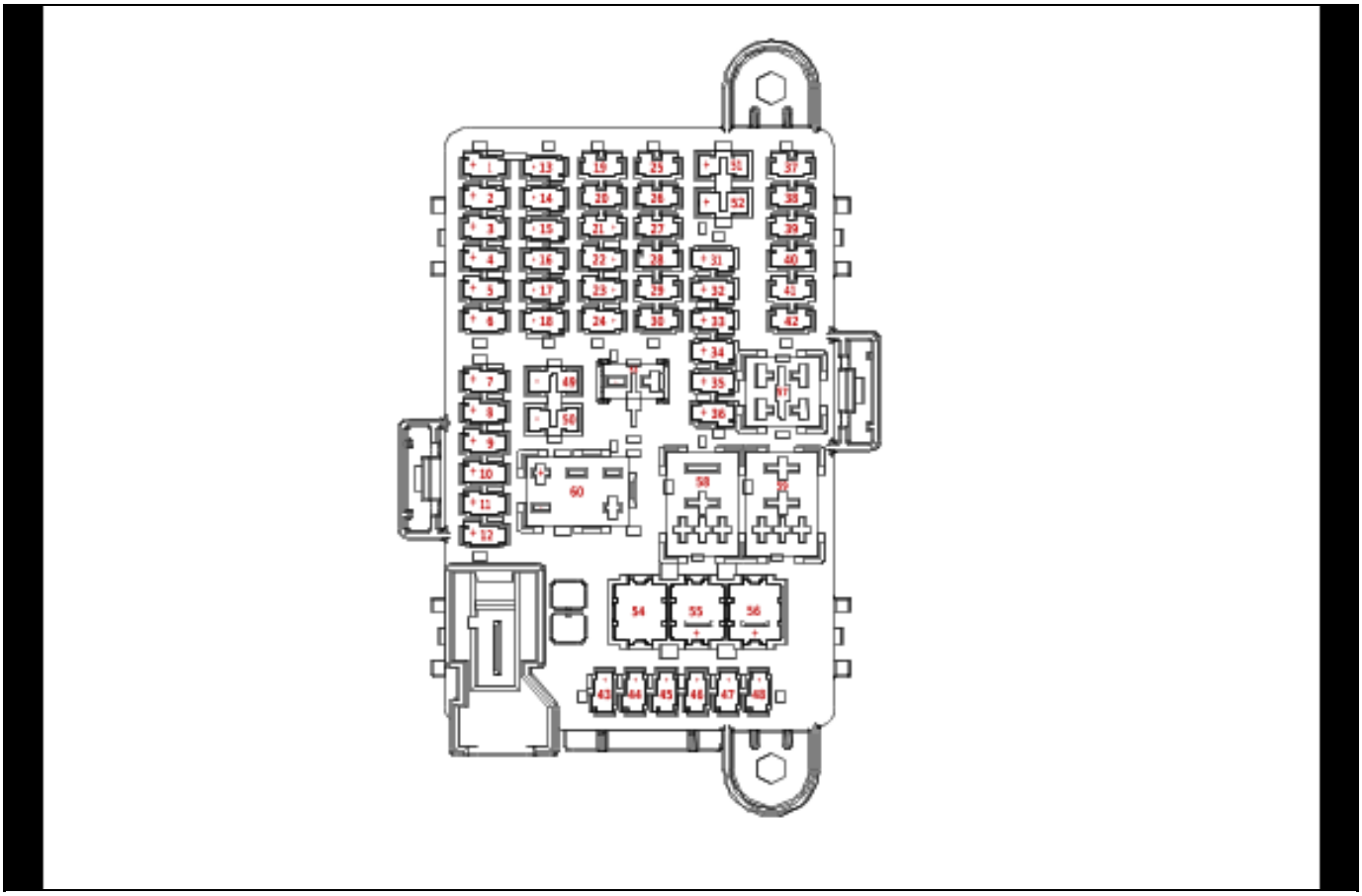

5750784

Usage Table

No.	Device Label Name	Device Assigned Name	Rating	Description
Fuses				
1	VPM	F1DA	10A	• K157 Video Processing Control Module (UV2)
2	TCP	F2DA	10A	• K73 Telematics Communication Interface Control Module (UE1+TDM)
3	SBZA	F3DA	10A	• B218L Side Object Sensor Module - Left (UKC) • B218R Side Object Sensor Module - Right (UKC)
4	PEPS	F4DA	10A	• K84 Keyless Entry Control Module
5	CGM 1	F5DA	7.5A	• K56 Serial Data Gateway Module
6	BCM 4	F6DA	15A	• K9 Body Control Module
7	BCM 3	F7DA	15A	• K9 Body Control Module
8	BCM 2	F8DA	15A	• K9 Body Control Module
9	BCM 1	F9DA	15A	• K9 Body Control Module
10	SUNROOF	F10DA	25A	• K61 Sunroof Control Module (CAJ)
11	AMP	F11DA	25A	• T3 Audio Amplifier (UQA)
12	BCM 8	F12DA	30A	• K9 Body Control Module
13	DLC	F13DA	10A	• X84 Data Link Connector
14	PA	F14DA	10A	• K182 Parking Assist Control Module (UD7)
15	HDLP LH	F15DA	10A	• E13LA Headlamp Assembly - Left
16	SPIM 1	F16DA	15A	• T6 Power Inverter Module

Usage Table (cont'd)

No.	Device Label Name	Device Assigned Name	Rating	Description
17	BCM 6	F17DA	15A	• K9 Body Control Module
18	BCM 5	F18DA	15A	• K9 Body Control Module
19	EOCM 2	F19DA	10A	• K124A Active Safety Control Module 1 (UKL)
20	AMM	F20DA	10A	• K179 Digital Map Control Module (UKL)
21	DMS	F21DA	10A	• K180 Driver Monitoring System Control Module (UKL)
22	PROVISION	F22DA	—	• Not Used
23	USB	F23DA	5A	• X92 USB Receptacle (USS)
24	WCM	F24DA	7.5A	• T22 Mobile Device Wireless Charger Module
25	RLAD	F25DA	5A	• P43 Collision Alert Indicators
26	HTD STR WHL	F26DA	7.5A	• K32 Steering Wheel Heating Control Module (KI3-UKL) • K93 Active Steering Control Module (KI3+UKL) • X85 Steering Wheel Air Bag Coil
27	CGM 2	F27DA	7.5A	• K56 Serial Data Gateway Module
28	IPC 2	F28DA	7.5A	• P16 Instrument Cluster
29	POLICE SSV	F29DA	20A	• Not Used
30	PROVISION	F30DA	10A	• S30 Headlamp Switch
31	TCP	F31DA	10A	• K73 Telematics Communication Interface Control Module (UER/UE1-TDM)
32	IONIZER	F32DA	5A	• A26 HVAC Controls • P17 Info Display Module
33	HVAC MDL	F33DA	10A	• K33 HVAC Control Module
34	HVAC DISPLAY/ ICS	F34DA	10A	• V1 Air Ionizer (KEM)
35	IPC 1	F35DA	7.5A	• P16 Instrument Cluster
36	CSM	F36DA	15A	• A11 Radio
37	PROVISION	F37DA	7.5A	• B305 Ambient Light/Sunload Sensor and Battery State of Charge Indicator
38	PROVISION	F38DA	—	• Not Used
39	PROVISION	F39DA	—	• Not Used
40	ILSS	F40DA	7.5A	• Not Used
41	PROVISION	F41DA	—	• Not Used
42	PROVISION	F42DA	—	• Not Used
43	BCM 7	F43DA	15A	• K9 Body Control Module
44	SDM	F44DA	7.5A	• K36 Inflatable Restraint Sensing and Diagnostic Module
45	FCM	F45DA	7.5A	• B174W Frontview Camera - Windshield
46	VICM	F46DA	10A	• K114B Hybrid/EV Powertrain Control Module 2
47	SPIM 2	F47DA	10A	• T6 Power Inverter Module
48	HDLP RH	F48DA	10A	• E13RA Headlamp Assembly - Right
49	AUX JACK	F49DA	2A	• X83 Auxiliary Audio Input
50	SWC	F50DA	2A	• K93 Active Steering Control Module (UKL) • S70L Steering Wheel Controls Switch - Left • S70R Steering Wheel Controls Switch - Right • X85 Steering Wheel Air Bag Coil
51	PROVISION	F51DA	—	• Not Used

Usage Table (cont'd)

No.	Device Label Name	Device Assigned Name	Rating	Description
52	PROVISION	F52DA	—	• Not Used
53	APO	F53DA	15A	• X80 Accessory Power Receptacle
54	PROVISION	F54DA	—	• Not Used
55	LOGISTIC	F55DA	30A	• KR104A Battery Saver Relay 1
56	POLICE SSV	F56DA	30A	• Not Used
Relays				
57	POLICE SSV	KR161A Configurable Provision Relay 1	—	• Not Used
58	LOGISTICS RLY	KR104A Battery Saver Relay 1	—	• F31DA Fuse • F32DA Fuse • F33DA Fuse • F34DA Fuse • F35DA Fuse • F36DA Fuse • F52DA Fuse
59	PROVISION	—	—	• Not Used
60	ACC/RAP RLY	KR76 Retained Accessory Power Relay	—	• F22DA Fuse • F23DA Fuse • F24DA Fuse • F53DA Circuit Breaker

X51A Fuse Block - Instrument Panel Wire Entry

—

Connector Part Information

Harness Type: Instrument Panel Wiring Harness
OEM Connector: 7271-1068-30
Service Connector: Service by Component Assembly - See Part Catalog
Description: Wire Entry Fuse Block

Terminal Part Information

Terminal Type ID	Terminated Lead	Diagnostic Test Probe	Terminal Removal Tool
I	13575836	J-35616-4A (PU)	J-38125-36
II	13575838	J-35616-4A (PU)	J-38125-36
III	13578858	J-35616-4A (PU)	J-38125-36
IV	13578860	J-35616-4A (PU)	J-38125-36
V	13579915	J-35616-40 (BU)	J-38125-556
VI	19354836	J-35616-43 (RD)	J-38125-11A
VII	19368264	J-35616-4A (PU)	J-38125-36

X51A Fuse Block - Instrument Panel Wire Entry

Pin	Size	Color	Circuit	Function	Terminal Type ID	Option
2	0.35	RD / VT	4640	Battery Positive Voltage	II	—
3	0.35	RD / GN	6140	Battery Positive Voltage	I	—
4	0.35	RD / GY	6240	Battery Positive Voltage	I	—
5	0.35	RD / BU	5240	Battery Positive Voltage	II	—
6	0.35	RD / YE	240	Battery Positive Voltage	I	—
7	0.5	RD / GN	5140	Battery Positive Voltage	I	—
14	2	RD / WH	2040	Battery Positive Voltage	VI	5W4
18	2.5	RD / VT	7140	Battery Positive Voltage	VI	—
21	0.5	BK	1250	Ground	III	—
22	0.5	GY / GN	4083	Retained Accessory Power Relay 2 Coil Control	III	—
25	0.35	GY / VT	3264	Logistics Mode Relay Close Control	III	—
26	0.35	BK	1250	Ground	III	—
27	0.35	VT / BU	3263	Logistics Mode Relay Open Control	III	—
28	2.5	RD / VT	7140	Battery Positive Voltage	V	—
35	2	RD / WH	4740	Battery Positive Voltage	VII	—
36	2	RD / VT	5640	Battery Positive Voltage	VII	UQA
37	0.35	RD / GY	5540	Battery Positive Voltage	VII	—
38	0.75	RD / VT	4040	Battery Positive Voltage	II	—
39	0.75	RD / GY	4140	Battery Positive Voltage	II	—
40	0.75	RD / BN	4240	Battery Positive Voltage	II	—
47	0.75	RD / YE	4340	Battery Positive Voltage	II	—
48	0.35	GN / YE	6840	Auxiliary Device 2 Switched Voltage	I	—
49	0.35	RD / WH	5740	Battery Positive Voltage	I	—
50	0.35	RD / YE	5840	Battery Positive Voltage	I	UKC
51	0.35	RD / BU	6740	Battery Positive Voltage	I	—
52	0.35	RD / BN	7540	Battery Positive Voltage	I	UV2

X51A Fuse Block - Instrument Panel Wire Entry (cont'd)

Pin	Size	Color	Circuit	Function	Terminal Type ID	Option
60	0.5 0.35	RD / BU RD / YE	8340 5040	Battery Positive Voltage Battery Positive Voltage	III III	UKL - UKL
62	0.35	RD / GN	6940	Battery Positive Voltage	III	—
69	0.75	RD / GN	4440	Battery Positive Voltage	II	—
70	0.75	RD / BU	4540	Battery Positive Voltage	II	—
71	0.5	RD / VT	340	Battery Positive Voltage	I	—
72	0.5	RD / BN	4940	Battery Positive Voltage	I	—
73	0.35	RD / WH	5440	Battery Positive Voltage	I	UD7
74	0.35	RD / GY	4840	Battery Positive Voltage	I	—
78	1	VT	1701	Retained Accessory Power Control	IV	—
79	0.35	VT	4601	Retained Accessory Power Control	I	
80	0.35	VT	2801	Retained Accessory Power Control	I	USS
82	2	RD / WH	2040	Battery Positive Voltage	VII	UKL
83	2	RD / WH	2040	Battery Positive Voltage	VII	UKL
84	0.35	RD / WH	2040	Battery Positive Voltage	VII	UKL
88	0.35	RD / VT	5340	Battery Positive Voltage	I	UKL
89	0.5	RD / GN	7740	Battery Positive Voltage	I	UKL
90	0.5	RD / GY	7840	Battery Positive Voltage	I	UKL
91	2	VT / GN	39	Run/Crank Ignition 1 Voltage	VII	—
92	1	RD / BN	8940	Battery Positive Voltage	II	5W4
93	2	VT / GN	39	Run/Crank Ignition 1 Voltage	VII	—
94	2	VT / GN	39	Run/Crank Ignition 1 Voltage	VII	—
95	2	VT / GN	39	Run/Crank Ignition 1 Voltage	VII	—
96	2	VT / GN	39	Run/Crank Ignition 1 Voltage	VII	—
97	0.5	VT / GN	2639	Run/Crank Ignition 1 Voltage	I	—
99	0.35	VT / WH	2439	Run/Crank Ignition 1 Voltage	I	—
100	0.35	VT / GY	2339	Run/Crank Ignition 1 Voltage	I	—
101	0.35 0.5	VT / GN VT / GN	2239 2239	Run/Crank Ignition 1 Voltage Run/Crank Ignition 1 Voltage	I I	KI3+ UKL KI3- UKL
102	0.35	VT / BK	2139	Run/Crank Ignition 1 Voltage	I	—
109	1.5	RD / WH	6440	Battery Positive Voltage	VII	—
110	0.35	RD / VT	6340	Battery Positive Voltage	I	—
111	0.35	RD / YE	6540	Battery Positive Voltage	II	—
112	0.35	RD / BN	6640	Battery Positive Voltage	I	—
113	0.5	RD / YE	7440	Battery Positive Voltage	I	KEM
114	0.35	RD / GY	7040	Battery Positive Voltage	I	UE1/ UER
119	0.5	BK	1250	Ground	III	5W4
120	2	RD / WH	2040	Battery Positive Voltage	III	5W4
121	1	RD / BN	8940	Battery Positive Voltage	IV	5W4
122	0.5	GY / VT	755	Retained Accessory Power Relay Coil Control	III	5W4

X51A Fuse Block - Instrument Panel X1

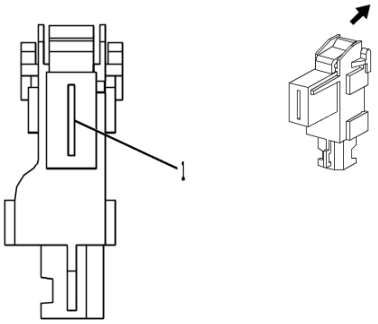

2537257

Connector Part Information

Harness Type: Instrument Panel Wiring Harness
OEM Connector: 95016684
Service Connector: Service by Harness - See Part Catalog
Description: 1-Way F 120 Series(BK)

Terminal Part Information

Terminal Type ID	Terminated Lead	Diagnostic Test Probe	Terminal Removal Tool
I	Not required	J-35616-22 (RD)	No Tool Required

X51A Fuse Block - Instrument Panel X1

Pin	Size	Color	Circuit	Function	Terminal Type ID	Option
1	8	RD / BU	42	Battery Positive Voltage	I	—

Component Connector End Views
A4 Hybrid/EV Battery Pack X3

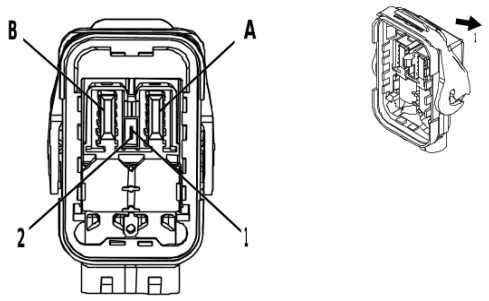

4277732

Connector Part Information

Harness Type: High Voltage Wiring Harness
OEM Connector: 13584040
Service Connector: Service by Harness - See Part Catalog
Description: 2-Way F Power Pack 2000 Series, Sealed

Terminal Part Information

Terminal Type ID	Terminated Lead	Diagnostic Test Probe	Terminal Removal Tool
I	Not required	No Tool Required	No Tool Required

A4 Hybrid/EV Battery Pack X3

Pin	Size	Color	Circuit	Function	Terminal Type ID	Option
1 - 2	—	—	—	Not Occupied	—	—
A	—	OG	5084	Hybrid/EV Battery [+]	I	—
B	—	OG / BK	5083	Hybrid/EV Battery [-]	I	—

A4 Hybrid/EV Battery Pack X4

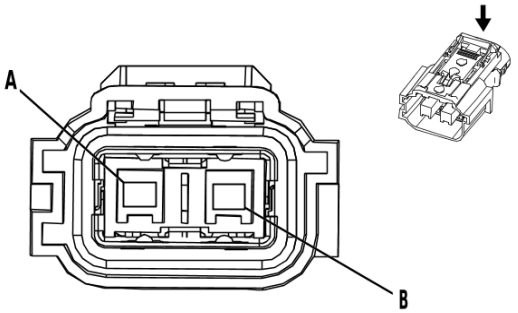

3818808

Connector Part Information

Harness Type: High Voltage Wiring Harness
OEM Connector: 13511582
Service Connector: Service by Harness - See Part Catalog
Description: 2-Way F 280 Metri-Pack Series, Sealed(OG)

Terminal Part Information

Terminal Type ID	Terminated Lead	Diagnostic Test Probe	Terminal Removal Tool
I	Not required	J-35616-4A (PU)	No Tool Required

A4 Hybrid/EV Battery Pack X4

Pin	Size	Color	Circuit	Function	Terminal Type ID	Option
A	—	OG	2427	Hybrid/EV Battery 6 [+]	I	—
B	—	OG / BK	2429	Hybrid/EV Battery 6 [-]	I	—

A10 Inside Rearview Mirror X1

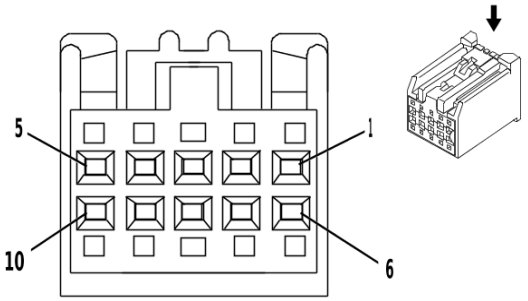

2180211

Connector Part Information

Harness Type: Roof Wiring Harness
OEM Connector: 13577390
Service Connector: 13577390
Description: 10-Way F 0.64 Kaizen Series(BK)

Terminal Part Information

Terminal Type ID	Terminated Lead	Diagnostic Test Probe	Terminal Removal Tool
I	13575742	J-35616-64B (L-BU)	J-38125-215A

A10 Inside Rearview Mirror X1

Pin	Size	Color	Circuit	Function	Terminal Type ID	Option
1	0.5	GN / WH	24	Backup Lamp Control	I	DD8/ DRZ
2	0.5	VT / BK	339	Run/Crank Ignition 1 Voltage	I	DD8/ DRZ
3 - 4	—	—	—	Not Occupied	—	—
5	0.5	BK	550	Ground	I	DD8/ DRZ
6 - 10	—	—	—	Not Occupied	—	—

A10 Inside Rearview Mirror X2 (DRZ)

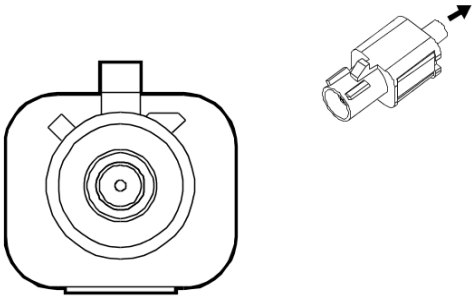

4496217

Connector Part Information

Harness Type: Antenna COAX
OEM Connector: 13594293
Service Connector: Service by Cable Assembly — See Part Catalog
Description: 1-Way M Coax Type(BK)

Terminal Part Information

Terminal Type ID	Terminated Lead	Diagnostic Test Probe	Terminal Removal Tool
I	Not required	No Tool Required	No Tool Required

A10 Inside Rearview Mirror X2 (DRZ)

Pin	Size	Color	Circuit	Function	Terminal Type ID	Option
—	—	Coax Cable	—	Rear Vision Camera Coaxial Video Signal	I	—

A11 Radio X1

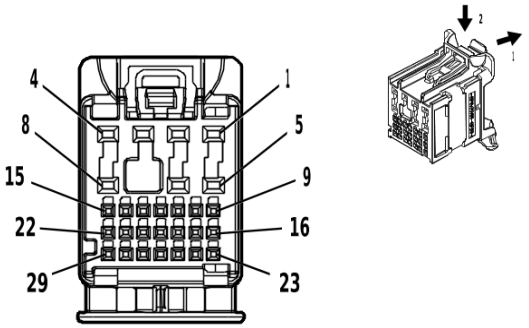

4496253

Connector Part Information

Harness Type: Instrument Panel Wiring Harness
OEM Connector: 13534974
Service Connector: 13534974
Description: 29-Way F 0.5 NANO, 1.2 MCON, stAK50h Series(BK)

Terminal Part Information

Terminal Type ID	Terminated Lead	Diagnostic Test Probe	Terminal Removal Tool
I	19370262	EL-35616-58 (BK)	EL-38125-58
II	84729890	J-35616-12 (BU)	J-38125-553

A11 Radio X1

Pin	Size	Color	Circuit	Function	Terminal Type ID	Option
1	0.75	RD / WH	6440	Battery Positive Voltage	II	—
2	0.75	RD / WH	6440	Battery Positive Voltage	II	—
3	0.75 0.35	BK / WH BK	151 2550	Signal Ground Ground	II II	UQ3 UQA
4 - 5	—	—	—	Not Occupied	—	—
6	0.75 0.35	BK / WH BK	251 2550	Signal Ground Ground	II II	UQ3 UQA
7	—	—	—	Not Occupied	—	—
8	0.75 0.75	GN / BK BN / VT	116 1999	Left Rear Speaker [-] Control Left Rear Low Level Audio [-] Signal	II II	UQ3 UQA
9	0.35 0.35	GY / YE BU	5149 655	Voice Recognition Audio Signal Cellular Telephone Microphone Signal	I I	UE1/ UER - UE1- UER
10	0.35 0.35	BK / GY BK / BN	5152 654	Voice Recognition Audio [-] Control Cellular Telephone Microphone Low Reference	I I	UE1/ UER - UE1- UER
11	0.35	VT / YE	7043	Microphone [+] Signal	I	—
12	0.35	BU / BK	7044	Microphone [-] Signal	I	—
13 - 29	—	—	—	Not Occupied	—	—

A11 Radio X2

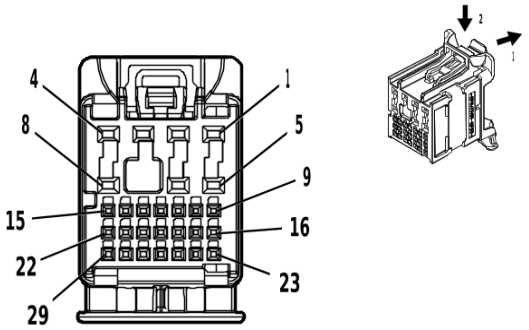

4578560

Connector Part Information

Harness Type: Instrument Panel Wiring Harness
OEM Connector: 13534971
Service Connector: 13534971
Description: 29-Way F 0.5 NANO, 1.2 MCON, stAK50h Series(GY)

Terminal Part Information

Terminal Type ID	Terminated Lead	Diagnostic Test Probe	Terminal Removal Tool
I	19370262	EL-35616-58 (BK)	EL-38125-58
II	84729890	J-35616-12 (BU)	J-38125-553

A11 Radio X2

Pin	Size	Color	Circuit	Function	Terminal Type ID	Option
1	0.75 0.75	GN GN / BK	199 599	Left Rear Speaker [+] Control Left Rear Low Level Audio Signal	II II	UQ3 UQA
2	0.75 0.75	BU BU	201 511	Left Front Speaker 1 [+] Control Left Front Low Level Audio Signal	II II	UQ3 UQA
3	0.75 0.75	YE / BK YE / BK	117 1948	Right Front Speaker [-] Control 1 Right Front Low Level Audio [-] Signal	II II	UQ3 UQA
4	0.35 0.75	BU / BK BU / BK	115 1946	Right Rear Speaker [-] Control Right Rear Low Level Audio [-] Signal	II II	UQ3 UQA
5	0.75 0.75	BN / BU BN / BU	118 1947	Left Front Speaker [-] Control 1 Left Front Low Level Audio [-] Signal	II II	UQ3 UQA
6	0.75 0.75	YE YE	200 512	Right Front Speaker 1 [+] Control Right Front Low Level Audio Signal	II II	UQ3 UQA
7	—	—	—	Not Occupied	—	—
8	0.75 0.75	WH BN / WH	46 546	Right Rear Speaker [+] Control Right Rear Low Level Audio Signal	II II	UQ3 UQA
9	0.35 0.35	BU / GN BU / GN	1304 1304	High Speed GMLAN Serial Data [+] 9 High Speed GMLAN Serial Data [+] 9	I I	UKL - UKL
10	0.35 0.35	WH / GN WH / GN	1305 1305	High Speed GMLAN Serial Data [-] 9 High Speed GMLAN Serial Data [-] 9	I I	UKL - UKL
11	0.35 0.35	BU / GN BU / GN	1304 1304	High Speed GMLAN Serial Data [+] 9 High Speed GMLAN Serial Data [+] 9	I I	UE1/ UER - UE1- UER
12	0.35 0.35	WH / GN WH / GN	1305 1305	High Speed GMLAN Serial Data [-] 9 High Speed GMLAN Serial Data [-] 9	I I	UE1/ UER - UE1- UER

A11 Radio X2 (cont'd)

Pin	Size	Color	Circuit	Function	Terminal Type ID	Option
13	0.35	GN / WH	24	Backup Lamp Control	I	—
14	0.35	GN / YE	7066	Entertainment Remote Enable Signal	I	UQA
15	0.35	VT / BU	6978	Audio Amplifier Control	I	UQA
16 - 17	—	—	—	Not Occupied	—	—
18	0.35	GY / GN	1102	Low Speed GMLAN Serial Data 2	I	—
19 - 27	—	—	—	Not Occupied	—	—
28	0.35	WH / BU	5986	Serial Data Communication Enable	I	—
29	—	—	—	Not Occupied	—	—

A11 Radio X3

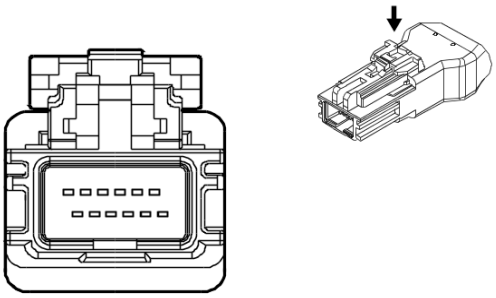

4578624

Connector Part Information

Harness Type: Instrument Panel Wiring Harness LVDS
OEM Connector: 13510920
Service Connector: Service by Cable Assembly — See Part Catalog
Description: 12-Way M 2.0 HSAL-2 Series(GY)

Terminal Part Information

Terminal Type ID	Terminated Lead	Diagnostic Test Probe	Terminal Removal Tool
I	Not required	No Tool Required	No Tool Required

A11 Radio X3

Pin	Size	Color	Circuit	Function	Terminal Type ID	Option
—	—	LVDS	—	(Infotainment) Infotainment Display Signal	I	—

A11 Radio X4

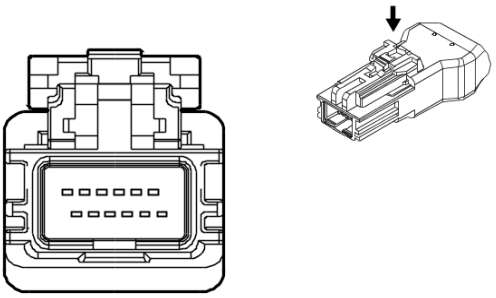

4527210

Connector Part Information

Harness Type: Instrument Panel Wiring Harness USB
OEM Connector: 13510919
Service Connector: Service by Cable Assembly — See Part Catalog
Description: 12-Way M 2.0 HSAL-2 Series(BK)

Terminal Part Information

Terminal Type ID	Terminated Lead	Diagnostic Test Probe	Terminal Removal Tool
I	Not required	No Tool Required	No Tool Required

A11 Radio X4

Pin	Size	Color	Circuit	Function	Terminal Type ID	Option
—	—	USB	—	USB Serial Data	I	—

A11 Radio X5

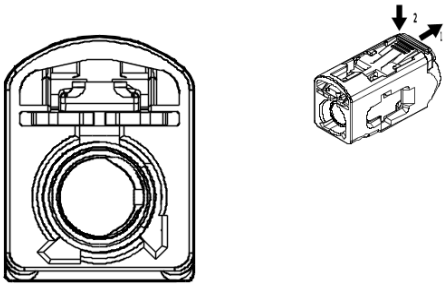

5161804

Connector Part Information

Harness Type: Instrument Panel Wiring Harness COAX
OEM Connector: 13515635
Service Connector: Service by Cable Assembly — See Part Catalog
Description: 1-Way F Coax Type(OG)

Terminal Part Information

Terminal Type ID	Terminated Lead	Diagnostic Test Probe	Terminal Removal Tool
I	Not required	No Tool Required	No Tool Required

A11 Radio X5

Pin	Size	Color	Circuit	Function	Terminal Type ID	Option
—	—	Coax Cable	—	Video Processing Module Coaxial Video Signal	I	—

A11 Radio X6

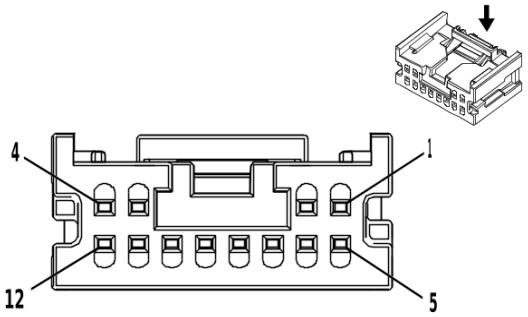

3824362

Connector Part Information

Harness Type: Instrument Panel Wiring Harness
OEM Connector: 13507121
Service Connector: 13507121
Description: 12-Way F Mini 50 Series(BK)

Terminal Part Information

Terminal Type ID	Terminated Lead	Diagnostic Test Probe	Terminal Removal Tool
I	19333221	EL-35616-58 (BK)	EL-38125-58

A11 Radio X6

Pin	Size	Color	Circuit	Function	Terminal Type ID	Option
1 - 2	—	—	—	Not Occupied	—	—
3	0.35	GN	7217	Ethernet Bus 7 [+]	I	—
4	0.35	WH	7216	Ethernet Bus 7 [-]	I	—
5 - 10	—	—	—	Not Occupied	—	—
11	0.35	GN	7211	Ethernet Bus 4 [+]	I	UE1/ UER
12	0.35	WH	7210	Ethernet Bus 4 [-]	I	UE1/ UER

A11 Radio X7

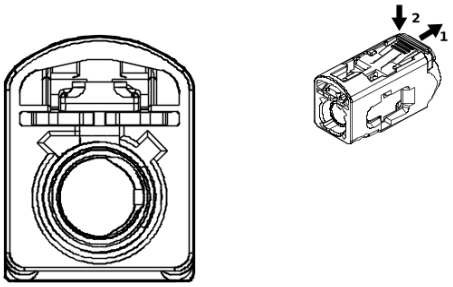

5205095

Connector Part Information

Harness Type: Instrument Panel Wiring Harness COAX
OEM Connector: 13515624
Service Connector: Service by Cable Assembly — See Part Catalog
Description: 1-Way F Coax Type(BK)

Terminal Part Information

Terminal Type ID	Terminated Lead	Diagnostic Test Probe	Terminal Removal Tool
I	Not required	No Tool Required	No Tool Required

A11 Radio X7

Pin	Size	Color	Circuit	Function	Terminal Type ID	Option
—	—	Coax Cable	—	(AM/FM) Antenna RF Signal	I	—

A11 Radio X11

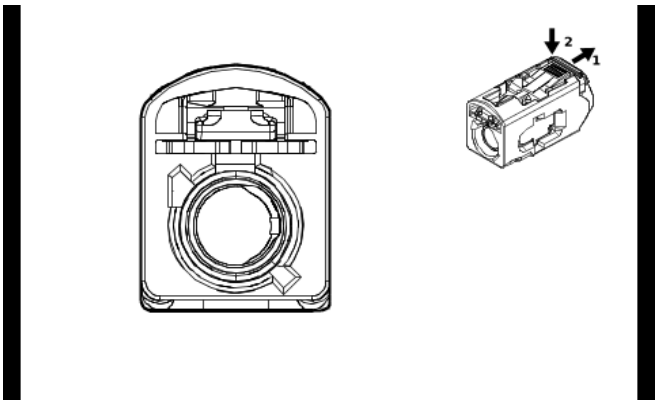

5408588

Connector Part Information

Harness Type: Instrument Panel Wiring Harness COAX
OEM Connector: 13515632
Service Connector: Service by Cable Assembly — See Part Catalog
Description: 1-Way F Coax Type(BG)

Terminal Part Information

Terminal Type ID	Terminated Lead	Diagnostic Test Probe	Terminal Removal Tool
I	Not required	No Tool Required	No Tool Required

A11 Radio X11

Pin	Size	Color	Circuit	Function	Terminal Type ID	Option
—	—	Coax Cable	—	Rear Vision Camera Coaxial Video Signal	I	—

A11 Radio X8 (-U2K/U2Q/UE1/UER)

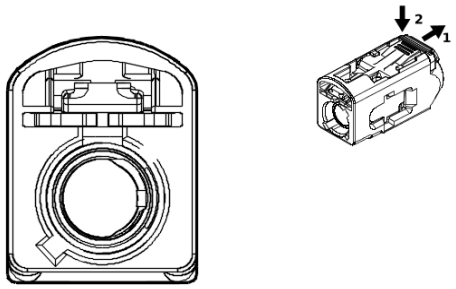

5277091

Connector Part Information

Harness Type: Instrument Panel Wiring Harness COAX
OEM Connector: 13515626
Service Connector: Service by Cable Assembly — See Part Catalog
Description: 1-Way F Coax Type(BU)

Terminal Part Information

Terminal Type ID	Terminated Lead	Diagnostic Test Probe	Terminal Removal Tool
I	Not required	No Tool Required	No Tool Required

A11 Radio X8 (-U2K/U2Q/UE1/UER)

Pin	Size	Color	Circuit	Function	Terminal Type ID	Option
—	—	Coax Cable	—	(GPS only) Coaxial Antenna GPS Signal	I	—

A11 Radio X9 (U2K)

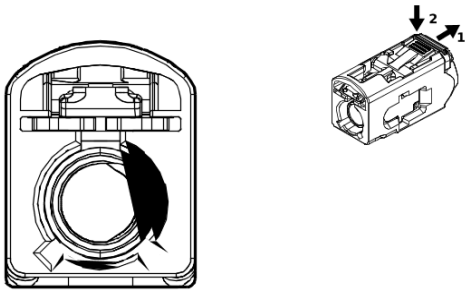

5277111

Connector Part Information

Harness Type: Instrument Panel Wiring Harness COAX
OEM Connector: 13515633
Service Connector: Service by Cable Assembly — See Part Catalog
Description: 1-Way F Coax Type(CU)

Terminal Part Information

Terminal Type ID	Terminated Lead	Diagnostic Test Probe	Terminal Removal Tool
I	Not required	No Tool Required	No Tool Required

A11 Radio X9 (U2K)

Pin	Size	Color	Circuit	Function	Terminal Type ID	Option
—	—	Coax Cable	—	(XM +/-HD) Coaxial Antenna XM Signal	I	—

A11 Radio X10 (U2Q)

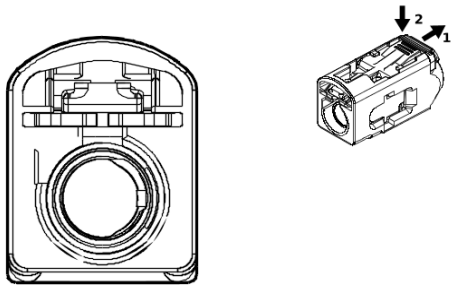

5277137

Connector Part Information

Harness Type: Instrument Panel Wiring Harness COAX
OEM Connector: 13515628
Service Connector: Service by Cable Assembly — See Part Catalog
Description: 1-Way F Coax Type(GN)

Terminal Part Information

Terminal Type ID	Terminated Lead	Diagnostic Test Probe	Terminal Removal Tool
I	Not required	No Tool Required	No Tool Required

A11 Radio X10 (U2Q)

Pin	Size	Color	Circuit	Function	Terminal Type ID	Option
—	—	Coax Cable	—	(DAB/DMB) Coaxial Antenna DAB Signal	I	—

A23C Liftgate Latch Assembly

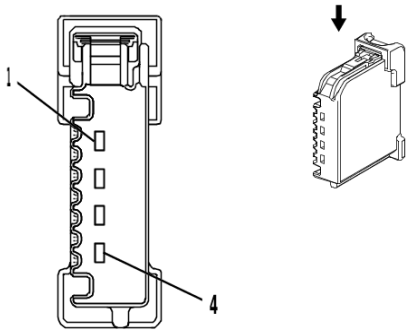

2408185

Connector Part Information

Harness Type: Liftgate Wiring Harness
OEM Connector: 19115646
Service Connector: Service by Harness - See Part Catalog
Description: 4-Way F 1.5 Series(BK)

Terminal Part Information

Terminal Type ID	Terminated Lead	Diagnostic Test Probe	Terminal Removal Tool
I	Not required	J-35616-14 (GN)	No Tool Required

A23C Liftgate Latch Assembly

Pin	Size	Color	Circuit	Function	Terminal Type ID	Option
1	0.5	BK	1950	Ground	I	—
2	0.5	VT / GY	1303	Liftgate Ajar Switch Signal 1	I	—
3	0.5	BU / WH	6128	Rear Closure Unlatch Actuator Unlatch Control	I	—
4	—	—	—	Not Occupied	—	—

A23D Door Latch Assembly - Driver

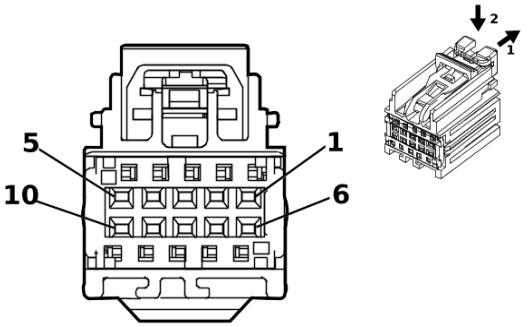

4622549

Connector Part Information

Harness Type: Front Side Door Door Wiring Harness - Driver
OEM Connector: 13508196
Service Connector: Service by Harness - See Part Catalog
Description: 10-Way F 0.64 YESC Kaizen Series(GN)

Terminal Part Information

Terminal Type ID	Terminated Lead	Diagnostic Test Probe	Terminal Removal Tool
I	Not required	J-35616-64B (L-BU)	No Tool Required

A23D Door Latch Assembly - Driver

Pin	Size	Color	Circuit	Function	Terminal Type ID	Option
1	0.35	GY	745	Left Front Door Ajar Switch Signal	I	—
2	0.5	WH / YE	3574	Driver Door Open Switch Signal	I	—
3	0.35	WH / VT	3270	Driver Door Lock Motor Status Signal	I	—
4	0.5	BK	550	Ground	I	—
5	0.35	BU / VT	1124	Door Lock Key Switch Unlock Signal	I	—
6 - 8	—	—	—	Not Occupied	—	—
9	0.75	GY	5911	Door Lock Actuator Lock Control 2	I	—
10	0.75	BN / YE	294	Door Lock Actuator Unlock Control	I	—

A23LR Door Latch Assembly - Left Rear

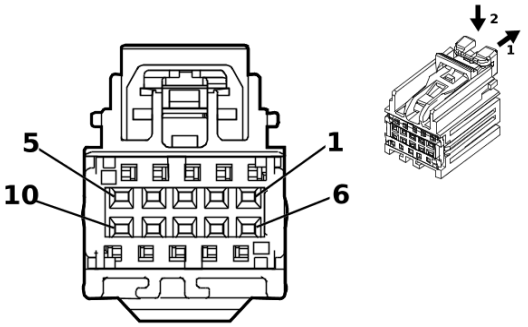

4622549

Connector Part Information

Harness Type: Rear Door Door Wiring Harness - Left
OEM Connector: 13508196
Service Connector: Service by Harness - See Part Catalog
Description: 10-Way F 0.64 YESC Kaizen Series(GN)

Terminal Part Information

Terminal Type ID	Terminated Lead	Diagnostic Test Probe	Terminal Removal Tool
I	Not required	J-35616-64B (L-BU)	No Tool Required

A23LR Door Latch Assembly - Left Rear

Pin	Size	Color	Circuit	Function	Terminal Type ID	Option
1	0.35	GY	747	Left Rear Door Ajar Switch Signal	I	
2 - 3	—	—	—	Not Occupied	—	—
4	0.5	BK	550	Ground	I	—
5 - 8	—	—	—	Not Occupied	—	—
9	0.75	GY	295	Door Lock Actuator Lock Control	I	—
10	0.75	BN / YE	294	Door Lock Actuator Unlock Control	I	—

A23P Door Latch Assembly - Passenger

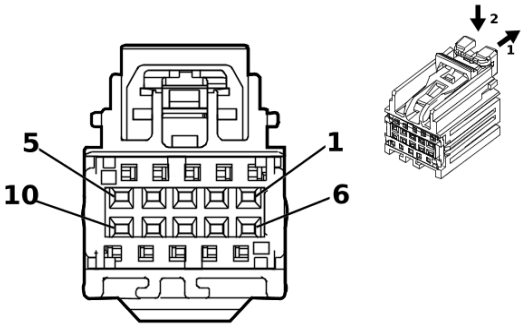

4622549

Connector Part Information

Harness Type: Front Side Door Door Wiring Harness - Passenger
OEM Connector: 13508196
Service Connector: Service by Harness - See Part Catalog
Description: 10-Way F 0.64 YESC Kaizen Series(GN)

Terminal Part Information

Terminal Type ID	Terminated Lead	Diagnostic Test Probe	Terminal Removal Tool
I	Not required	J-35616-64B (L-BU)	No Tool Required

A23P Door Latch Assembly - Passenger

Pin	Size	Color	Circuit	Function	Terminal Type ID	Option
1	—	—	—	Not Occupied	—	—
2	0.5	BK	750	Ground	I	—
3 - 4	—	—	—	Not Occupied	—	—
5	0.35	GY	746	Right Front Door Ajar Switch Signal	I	—
6	—	—	—	Not Occupied	—	—
7	0.75	GY	295	Door Lock Actuator Lock Control	I	—
8	0.75	BN / YE	294	Door Lock Actuator Unlock Control	I	—
9 - 10	—	—	—	Not Occupied	—	—

A23RR Door Latch Assembly - Right Rear

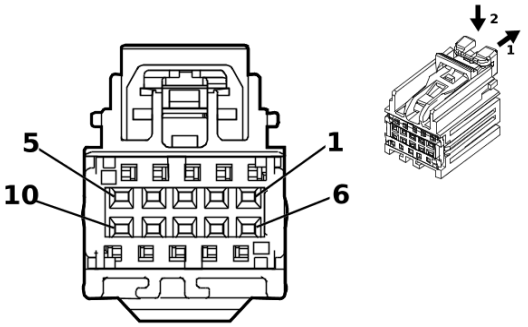

4622549

Connector Part Information

Harness Type: Rear Door Door Wiring Harness - Right
OEM Connector: 13508196
Service Connector: Service by Harness - See Part Catalog
Description: 10-Way F 0.64 YESC Kaizen Series(GN)

Terminal Part Information

Terminal Type ID	Terminated Lead	Diagnostic Test Probe	Terminal Removal Tool
I	Not required	J-35616-64B (L-BU)	No Tool Required

A23RR Door Latch Assembly - Right Rear

Pin	Size	Color	Circuit	Function	Terminal Type ID	Option
1	—	—	—	Not Occupied	—	—
2	0.5	BK	750	Ground	I	—
3 - 4	—	—	—	Not Occupied	—	—
5	0.35	GY	748	Right Rear Door Ajar Switch Signal	I	
6	—	—	—	Not Occupied	—	—
7	0.75	GY	295	Door Lock Actuator Lock Control	I	—
8	0.75	BN / YE	294	Door Lock Actuator Unlock Control	I	—
9 - 10	—	—	—	Not Occupied	—	—

A24D Door Handle Assembly - Driver Exterior

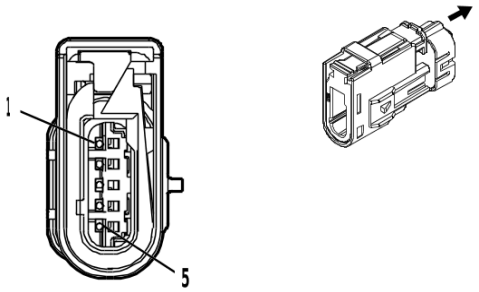

4808321

Connector Part Information

Harness Type: Front Side Door Door Wiring Harness - Driver
OEM Connector: 13519366
Service Connector: Service by Harness - See Part Catalog
Description: 5-Way M 1.2 Series, Sealed(NA)

Terminal Part Information

Terminal Type ID	Terminated Lead	Diagnostic Test Probe	Terminal Removal Tool
I	Not required	J-35616-13 (BU)	No Tool Required

A24D Door Handle Assembly - Driver Exterior

Pin	Size	Color	Circuit	Function	Terminal Type ID	Option
1	0.5	GN / WH	3570	Driver Door Handle Switch Signal	I	—
2	0.5	VT	3560	Driver Door Passive Entry Antenna High Signal	I	—
3	—	—	—	Not Occupied	—	—
4	0.5	VT / GY	3561	Driver Door Passive Entry Antenna Low Signal	I	—
5	0.5	BK	550	Ground	I	—

A24P Door Handle Assembly - Passenger Exterior

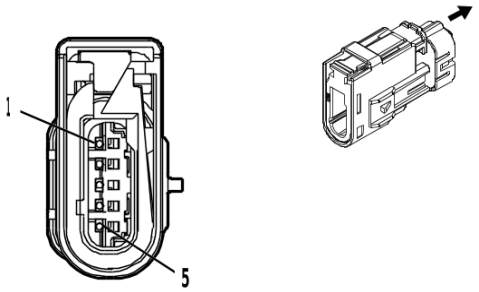

4808321

Connector Part Information

Harness Type: Front Side Door Door Wiring Harness - Passenger
OEM Connector: 13519366
Service Connector: Service by Harness - See Part Catalog
Description: 5-Way M 1.2 Series, Sealed(NA)

Terminal Part Information

Terminal Type ID	Terminated Lead	Diagnostic Test Probe	Terminal Removal Tool
I	Not required	J-35616-13 (BU)	No Tool Required

A24P Door Handle Assembly - Passenger Exterior

Pin	Size	Color	Circuit	Function	Terminal Type ID	Option
1	0.5	VT / WH	3571	Passenger Door Handle Switch Signal	I	—
2	0.5	GN / YE	3562	Passenger Door Passive Entry Antenna High Signal	I	—
3	—	—	—	Not Occupied	—	—
4	0.5	GN / BK	3563	Passenger Door Passive Entry Antenna Low Signal	I	—
5	0.5	BK	750	Ground	I	—

A26 HVAC Controls

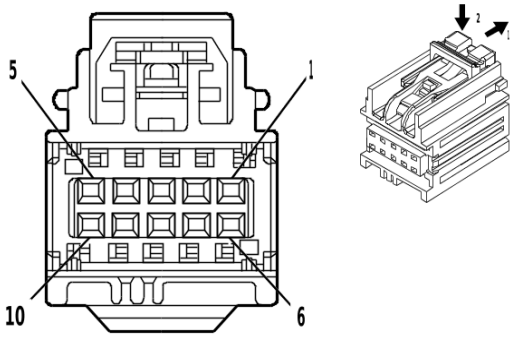

4891168

Connector Part Information

Harness Type: Instrument Panel Wiring Harness
OEM Connector: 13509649
Service Connector: 13509649
Description: 10-Way F 0.64 YESC Kaizen Series(NA)

Terminal Part Information

Terminal Type ID	Terminated Lead	Diagnostic Test Probe	Terminal Removal Tool
I	19300629	J-35616-64B (L-BU)	J-38125-215A

A26 HVAC Controls

Pin	Size	Color	Circuit	Function	Terminal Type ID	Option
1	0.35	RD / YE	6540	Battery Positive Voltage	I	—
2	—	—	—	Not Occupied	—	—
3	0.35	GN	5060	Low Speed GMLAN Serial Data	I	—
4	—	—	—	Not Occupied	—	—
5	0.5 0.5	YE / GY YE / GY	5883 5883	Steering Wheel Heating Switch Signal Steering Wheel Heating Switch Signal	I I	KI3+ UKL KI3- UKL
6	0.5 0.5	BN / WH BN / WH	5884 5884	Steering Wheel Heating Switch LED Control Steering Wheel Heating Switch LED Control	I I	KI3+ UKL KI3- UKL
7 - 8	—	—	—	Not Occupied	—	—
9	0.35	GN / YE	7531	HVAC Control Module LIN Bus 1	I	—
10	0.35	BK	1250	Ground	I	—

B1 A/C Refrigerant Pressure Sensor

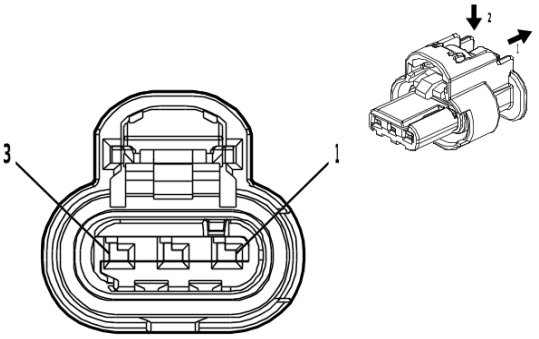

4581126

Connector Part Information

Harness Type: Engine Wiring Harness
OEM Connector: 13514590
Service Connector: 86792094
Description: 3-Way F 1.2 MCON-CB Series, Sealed(BK)

Terminal Part Information

Terminal Type ID	Terminated Lead	Diagnostic Test Probe	Terminal Removal Tool
I	Not required	J-35616-16 (L-GN)	No Tool Required

B1 A/C Refrigerant Pressure Sensor

Pin	Size	Color	Circuit	Function	Terminal Type ID	Option
1	0.5	BN / RD	2700	A/C Pressure Sensor 5V Reference	I	—
2	0.5	GN	380	A/C Refrigerant Pressure Sensor Signal	I	—
3	0.5	BK / BN	5514	A/C Refrigerant Pressure Sensor Low Reference	I	—

B1C A/C Low Side Pressure Sensor

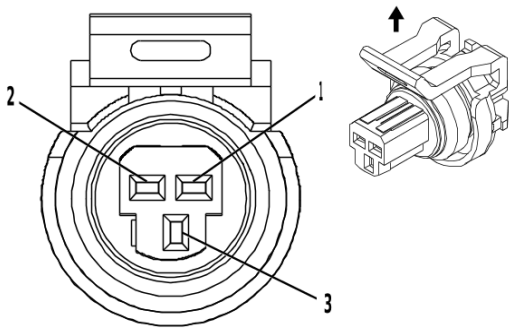

1519475

Connector Part Information

Harness Type: Engine Wiring Harness
OEM Connector: 13532244
Service Connector: 19368669
Description: 3-Way F 150 GT Series, Sealed(BK)

Terminal Part Information

Terminal Type ID	Terminated Lead	Diagnostic Test Probe	Terminal Removal Tool
I	Not required	J-35616-14 (GN)	No Tool Required

B1C A/C Low Side Pressure Sensor

Pin	Size	Color	Circuit	Function	Terminal Type ID	Option
1	0.5	BK / GN	3800	A/C Refrigerant Sensor Low Reference	I	—
2	0.5	BU / RD	474	5V Reference	I	—
3	0.5	BU	204	A/C Low Side Pressure Sensor Signal	I	—

B5LF Wheel Speed Sensor - Left Front

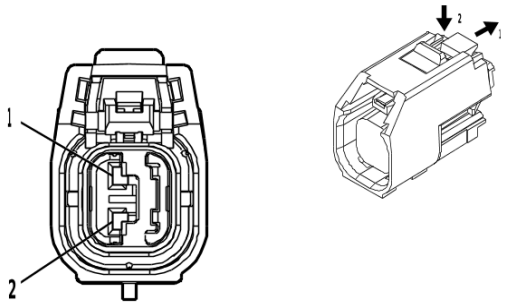

4822769

Connector Part Information

Harness Type: Forward Lamp Wiring Harness
OEM Connector: 13599819
Service Connector: 19368562
Description: 2-Way F 1.5 YESC Series, Sealed(BK)

Terminal Part Information

Terminal Type ID	Terminated Lead	Diagnostic Test Probe	Terminal Removal Tool
I	Not required	J-35616-14 (GN)	No Tool Required

B5LF Wheel Speed Sensor - Left Front

Pin	Size	Color	Circuit	Function	Terminal Type ID	Option
1	0.5	GY / WH	7064	Left Front Wheel Speed Sensor Control	I	—
2	0.5	GY	830	Left Front Wheel Speed Sensor Signal	I	—

B5LR Wheel Speed Sensor - Left Rear

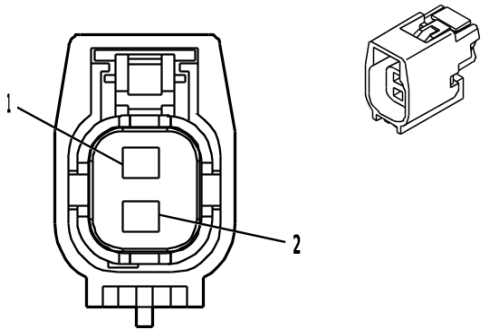

2152684

Connector Part Information

Harness Type: Body Wiring Harness
OEM Connector: 13597058
Service Connector: 19371210
Description: 2-Way F 1.5 GT Series, Sealed(BK)

Terminal Part Information

Terminal Type ID	Terminated Lead	Diagnostic Test Probe	Terminal Removal Tool
I	Not required	J-35616-2A (GY)	No Tool Required

B5LR Wheel Speed Sensor - Left Rear

Pin	Size	Color	Circuit	Function	Terminal Type ID	Option
1	0.5	GY / BK	7127	Left Rear Wheel Speed Sensor Control	I	—
2	0.5	BU	884	Left Rear Wheel Speed Sensor Signal	I	—

B5RF Wheel Speed Sensor - Right Front

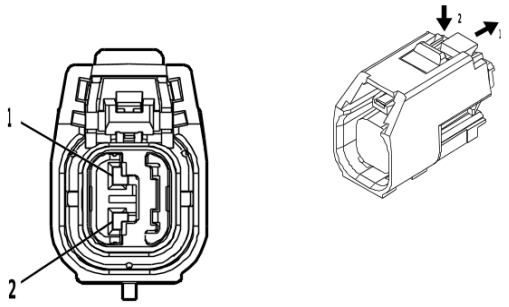

4822769

Connector Part Information

Harness Type: Body Wiring Harness
OEM Connector: 13599819
Service Connector: 19368562
Description: 2-Way F 1.5 YESC Series, Sealed(BK)

Terminal Part Information

Terminal Type ID	Terminated Lead	Diagnostic Test Probe	Terminal Removal Tool
I	Not required	J-35616-14 (GN)	No Tool Required

B5RF Wheel Speed Sensor - Right Front

Pin	Size	Color	Circuit	Function	Terminal Type ID	Option
1	0.5	GY / BN	7065	Right Front Wheel Speed Sensor Control	I	—
2	0.5	YE	872	Right Front Wheel Speed Sensor Signal	I	—

B5RR Wheel Speed Sensor - Right Rear

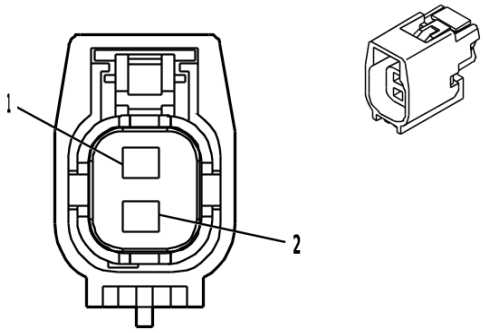

2152684

Connector Part Information

Harness Type: Body Wiring Harness
OEM Connector: 13597058
Service Connector: 19371210
Description: 2-Way F 1.5 GT Series, Sealed(BK)

Terminal Part Information

Terminal Type ID	Terminated Lead	Diagnostic Test Probe	Terminal Removal Tool
I	Not required	J-35616-2A (GY)	No Tool Required

B5RR Wheel Speed Sensor - Right Rear

Pin	Size	Color	Circuit	Function	Terminal Type ID	Option
1	0.5	GY / YE	7128	Right Rear Wheel Speed Sensor Control	I	—
2	0.5	VT	882	Right Rear Wheel Speed Sensor Signal	I	—

B7B Air Temperature Sensor - Duct Lower

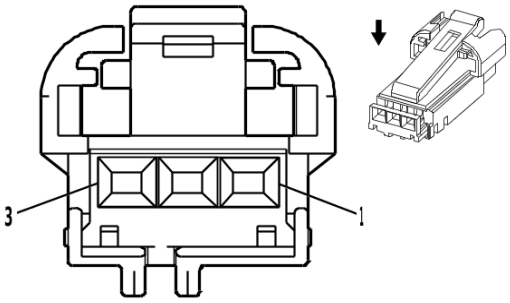

2523153

Connector Part Information

Harness Type: HVAC Wiring Harness
OEM Connector: 31067-1010
Service Connector: Service by Harness - See Part Catalog
Description: 3-Way F 0.64 GET Series(BK)

Terminal Part Information

Terminal Type ID	Terminated Lead	Diagnostic Test Probe	Terminal Removal Tool
I	Not required	No Tool Required	No Tool Required

B7B Air Temperature Sensor - Duct Lower

Pin	Size	Color	Circuit	Function	Terminal Type ID	Option
1	0.5	BN / VT	518	Lower Left Duct Air Temperature Sensor Signal	I	—
2	—	—	—	Not Occupied	—	—
3	0.5	BK / YE	407	Sensor Low Reference	I	—

B7F Air Temperature Sensor - Duct Upper

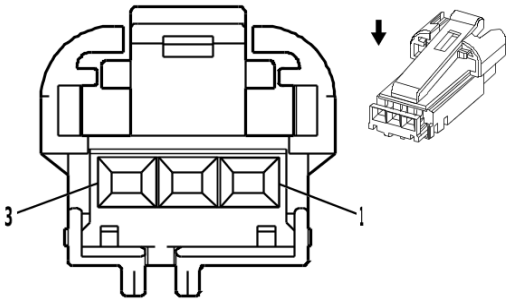

2523153

Connector Part Information

Harness Type: HVAC Wiring Harness
OEM Connector: 31067-1010
Service Connector: Service by Harness - See Part Catalog
Description: 3-Way F 0.64 GET Series(BK)

Terminal Part Information

Terminal Type ID	Terminated Lead	Diagnostic Test Probe	Terminal Removal Tool
I	Not required	No Tool Required	No Tool Required

B7F Air Temperature Sensor - Duct Upper

Pin	Size	Color	Circuit	Function	Terminal Type ID	Option
1	0.5	BK / YE	516	Left Upper Duct Air Temperature Sensor Signal	I	—
2	—	—	—	Not Occupied	—	—
3	0.5	GY / GN	407	Sensor Low Reference	I	—

B9 Ambient Air Temperature Sensor

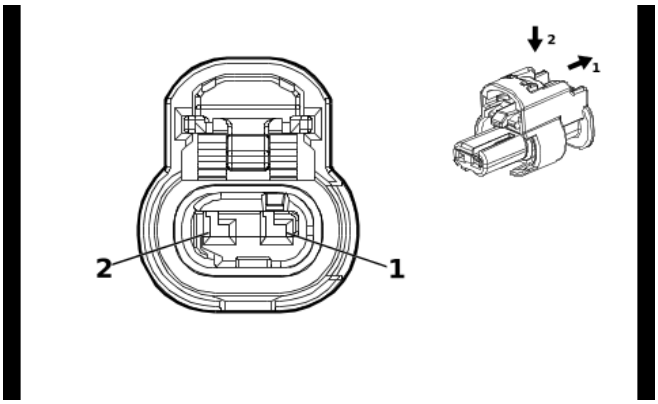

4649903

Connector Part Information

Harness Type: Front Object Alarm Sensor Wiring Harness
OEM Connector: 13512365
Service Connector: Service by Harness - See Part Catalog
Description: 2-Way F 1.2 MCON Series, Sealed(BK)

Terminal Part Information

Terminal Type ID	Terminated Lead	Diagnostic Test Probe	Terminal Removal Tool
I	Not required	J-35616-16 (L-GN)	No Tool Required

B9 Ambient Air Temperature Sensor

Pin	Size	Color	Circuit	Function	Terminal Type ID	Option
1	0.5	BU / GY	636	Ambient Air Temperature Sensor Signal	I	—
2	0.5	BK / BU	61	Ambient Air Temperature Sensor Low Reference	I	—

B18 Battery Current Sensor

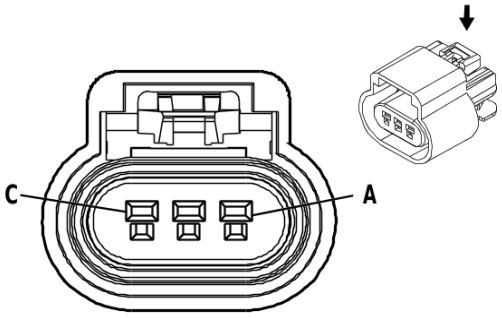

646415

Connector Part Information

Harness Type: Body Wiring Harness
OEM Connector: 13583070
Service Connector: 19119468
Description: 3-Way F 150 GT Series, Sealed(BK)

Terminal Part Information

Terminal Type ID	Terminated Lead	Diagnostic Test Probe	Terminal Removal Tool
I	Not required	J-35616-14 (GN)	No Tool Required

B18 Battery Current Sensor

Pin	Size	Color	Circuit	Function	Terminal Type ID	Option
A	0.5	BU / VT	5076	Current Sensor Voltage Reference	I	—
B	0.5	BK / VT	5077	Current Sensor Low Reference	I	—
C	0.5	WH / YE	5075	Current Sensor Signal	I	—

B20 Brake Fluid Level Switch

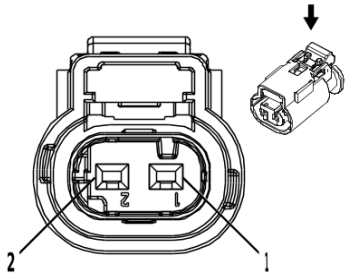

2717066

Connector Part Information

Harness Type: Body Wiring Harness
OEM Connector: 13503566
Service Connector: 13587326
Description: 2-Way F 1.2 Multilock Series, Sealed(BK)

Terminal Part Information

Terminal Type ID	Terminated Lead	Diagnostic Test Probe	Terminal Removal Tool
I	Not required	J-35616-12 (BU)	No Tool Required

B20 Brake Fluid Level Switch

Pin	Size	Color	Circuit	Function	Terminal Type ID	Option
1	0.5	GN / GY	333	Brake Fluid Level Signal	I	—
2	0.5	BK	550	Ground	I	—

B22 Brake Pedal Position Sensor

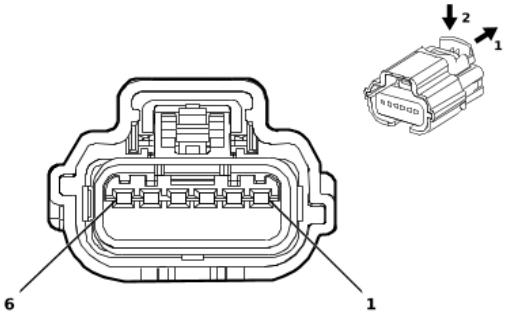

4773396

Connector Part Information

Harness Type: Body Wiring Harness
OEM Connector: 13526329
Service Connector: 84683650
Description: 6-Way F 64 Series, Sealed(NA)

Terminal Part Information

Terminal Type ID	Terminated Lead	Diagnostic Test Probe	Terminal Removal Tool
I	Not required	J-35616-64B (L-BU)	No Tool Required

B22 Brake Pedal Position Sensor

Pin	Size	Color	Circuit	Function	Terminal Type ID	Option
1	0.5	WH	5359	Brake Apply Sensor Control	I	—
2	0.5	BK / BN	5360	Brake Apply Sensor Low Reference	I	—
3	0.5	BU / YE	5361	Brake Apply Sensor Signal	I	—
4	0.5	WH / GN	5380	Brake Position Sensor Signal	I	—
5	0.5	WH / RD	5381	Brake Position Sensor 5V Reference	I	—
6	0.5	BK / YE	5382	Brake Position Sensor Low Reference	I	—

B24LF Mobile Telephone Microphone - Left Front

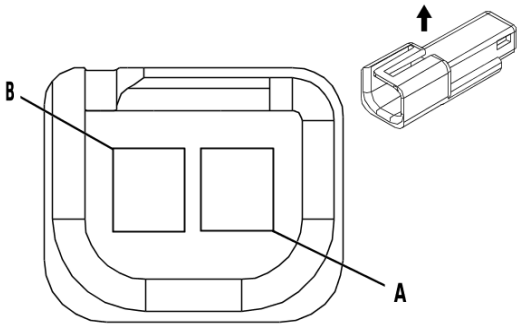

35441

Connector Part Information

Harness Type: Roof Wiring Harness
OEM Connector: 12047663
Service Connector: 13584278
Description: 2-Way M 150 Metri-Pack Series(BK)

Terminal Part Information

Terminal Type ID	Terminated Lead	Diagnostic Test Probe	Terminal Removal Tool
I	Not required	J-35616-3 (GY)	No Tool Required

B24LF Mobile Telephone Microphone - Left Front

Pin	Size	Color	Circuit	Function	Terminal Type ID	Option
A	0.35	BK / BN	654	Cellular Telephone Microphone Low Reference	I	—
B	0.35	BU	655	Cellular Telephone Microphone Signal	I	—

B24RF Mobile Telephone Microphone - Right Front

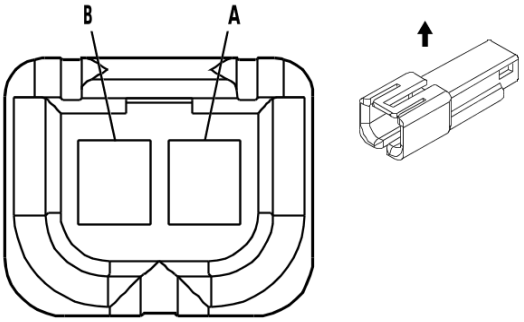

258301

Connector Part Information

Harness Type: Roof Wiring Harness
OEM Connector: 12059254
Service Connector: 12126020
Description: 2-Way M 150 Metri-Pack Series(GN)

Terminal Part Information

Terminal Type ID	Terminated Lead	Diagnostic Test Probe	Terminal Removal Tool
I	Not required	J-35616-3 (GY)	No Tool Required

B24RF Mobile Telephone Microphone - Right Front

Pin	Size	Color	Circuit	Function	Terminal Type ID	Option
A	0.35	BU / BK	7044	Microphone [-] Signal	I	—
B	0.35	VT / YE	7043	Microphone [+] Signal	I	—

B55 Engine Hood Switch

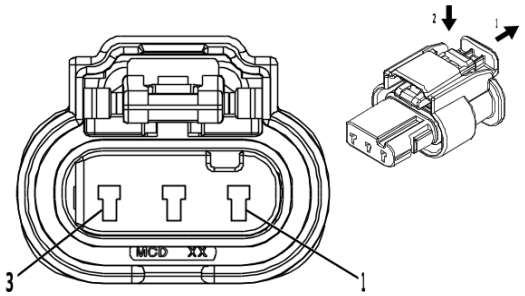

4421568

Connector Part Information

Harness Type: Forward Lamp Wiring Harness
OEM Connector: 13506522
Service Connector: 19368220
Description: 3-Way F 1.2 MCON-LL Series, Sealed(BK)

Terminal Part Information

Terminal Type ID	Terminated Lead	Diagnostic Test Probe	Terminal Removal Tool
I	Not required	J-35616-16 (L-GN)	No Tool Required

B55 Engine Hood Switch

Pin	Size	Color	Circuit	Function	Terminal Type ID	Option
1	0.5	YE	4063	Hood Status A Signal	I	—
2	0.5	BN / GN	4064	Hood Status B Signal	I	—
3	0.5	BK	250	Ground	I	—

B59L Front Impact Sensor - Left

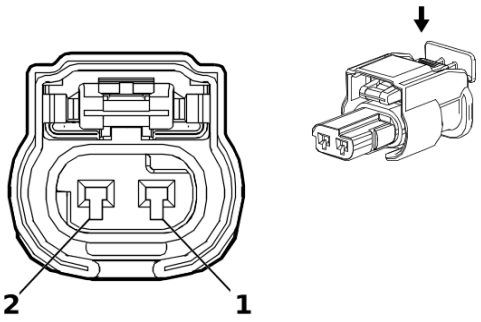

5340211

Connector Part Information

Harness Type: Forward Lamp Wiring Harness
OEM Connector: 13509970
Service Connector: 84869316
Description: 2-Way F 1.2 MCON Series, Sealed(BK)

Terminal Part Information

Terminal Type ID	Terminated Lead	Diagnostic Test Probe	Terminal Removal Tool
I	Not required	J-35616-16 (L-GN)	No Tool Required

B59L Front Impact Sensor - Left

Pin	Size	Color	Circuit	Function	Terminal Type ID	Option
1	0.5	OG / YE	354	Left Front Impact Discriminating Sensor Signal	I	UKL
	0.5	OG / YE	354	Left Front Impact Discriminating Sensor Signal	I	- UKL
2	0.5	BK / OG	5045	Left Front Impact Discriminating Sensor Low Reference	I	UKL
	0.5	BK / OG	5045	Left Front Impact Discriminating Sensor Low Reference	I	- UKL

B59R Front Impact Sensor - Right

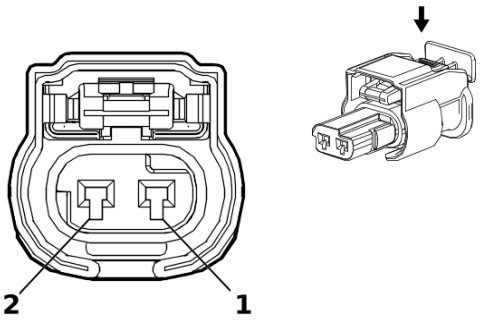

5340211

Connector Part Information

Harness Type: Forward Lamp Wiring Harness
OEM Connector: 13509970
Service Connector: 84869316
Description: 2-Way F 1.2 MCON Series, Sealed(BK)

Terminal Part Information

Terminal Type ID	Terminated Lead	Diagnostic Test Probe	Terminal Removal Tool
I	Not required	J-35616-16 (L-GN)	No Tool Required

B59R Front Impact Sensor - Right

Pin	Size	Color	Circuit	Function	Terminal Type ID	Option
1	0.5	OG / GN	1409	Right Front Impact Discriminating Sensor Signal	I	UKL
	0.5	OG / GN	1409	Right Front Impact Discriminating Sensor Signal	I	- UKL
2	0.5	BK / OG	5600	Right Front Impact Discriminating Sensor Low Reference	I	UKL
	0.5	BK / OG	5600	Right Front Impact Discriminating Sensor Low Reference	I	- UKL

B61P Seat Belt Tension Sensor - Passenger

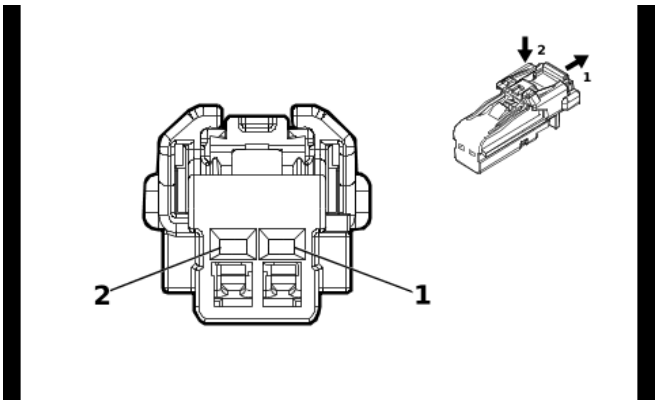

4115691

Connector Part Information

Harness Type: Body Wiring Harness
OEM Connector: 13532422
Service Connector: Service by Harness - See Part Catalog
Description: 2-Way F 1.2 MCON Series(BK)

Terminal Part Information

Terminal Type ID	Terminated Lead	Diagnostic Test Probe	Terminal Removal Tool
I	Not required	J-35616-12 (BU)	No Tool Required

B61P Seat Belt Tension Sensor - Passenger

Pin	Size	Color	Circuit	Function	Terminal Type ID	Option
1	0.5	GY / OG	3946	Passenger Automatic Locking Retractor Switch Low Reference	I	
2	0.5	OG / BN	3947	Passenger Automatic Locking Retractor Switch Signal	I	

B63LF Side Impact Sensor - Left Front

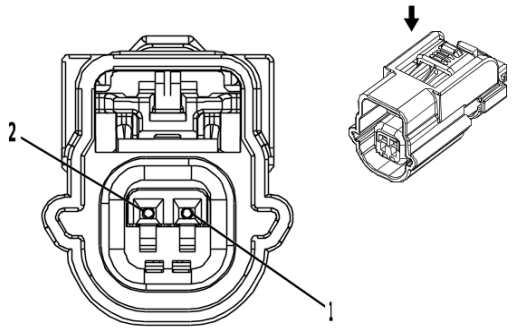

3556418

Connector Part Information

Harness Type: Front Side Door Door Wiring Harness - Driver
OEM Connector: 89047492
Service Connector: Service by Harness - See Part Catalog
Description: 2-Way F 0.64 Series, Sealed(GY)

Terminal Part Information

Terminal Type ID	Terminated Lead	Diagnostic Test Probe	Terminal Removal Tool
I	Not required	J-35616-64B (L-BU)	No Tool Required

B63LF Side Impact Sensor - Left Front

Pin	Size	Color	Circuit	Function	Terminal Type ID	Option
1	0.5	OG / GN	2132	Left Front Side Impact Sensor Signal	I	
2	0.5	BK / OG	6628	Left Front Side Impact Sensor Low Reference	I	

B63LR Side Impact Sensor - Left Rear

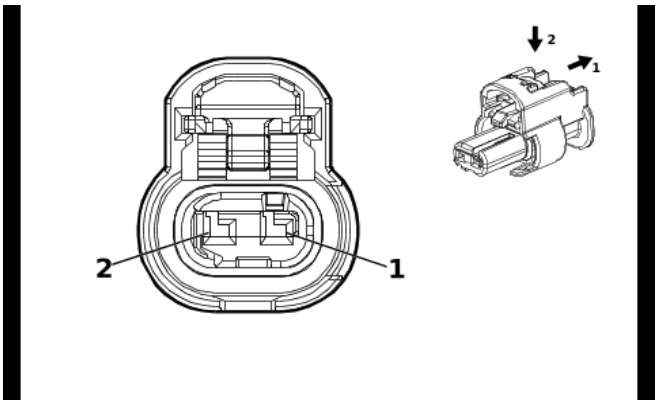

4649903

Connector Part Information

Harness Type: Body Wiring Harness
OEM Connector: 13512365
Service Connector: 85519075
Description: 2-Way F 1.2 MCON Series, Sealed(BK)

Terminal Part Information

Terminal Type ID	Terminated Lead	Diagnostic Test Probe	Terminal Removal Tool
I	Not required	J-35616-16 (L-GN)	No Tool Required

B63LR Side Impact Sensor - Left Rear

Pin	Size	Color	Circuit	Function	Terminal Type ID	Option
1	0.5	OG / BU	6622	Left Rear Side Impact Sensor Signal	I	
2	0.5	BK / OG	6623	Left Rear Side Impact Sensor Low Reference	I	

B63RF Side Impact Sensor - Right Front

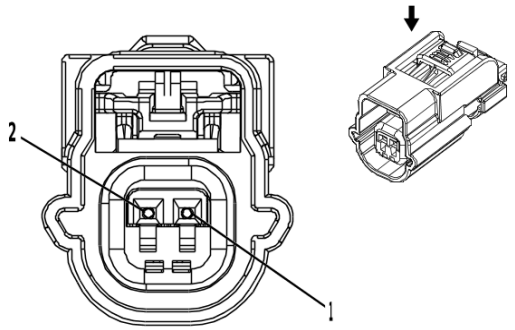

3556418

Connector Part Information

Harness Type: Front Side Door Door Wiring Harness - Passenger
OEM Connector: 89047492
Service Connector: Service by Harness - See Part Catalog
Description: 2-Way F 0.64 Series, Sealed(GY)

Terminal Part Information

Terminal Type ID	Terminated Lead	Diagnostic Test Probe	Terminal Removal Tool
I	Not required	J-35616-64B (L-BU)	No Tool Required

B63RF Side Impact Sensor - Right Front

Pin	Size	Color	Circuit	Function	Terminal Type ID	Option
1	0.5	BN / OG	2134	Right Front Side Impact Sensor Signal	I	
2	0.5	BK / OG	6629	Right Front Side Impact Sensor Low Reference	I	

B63RR Side Impact Sensor - Right Rear

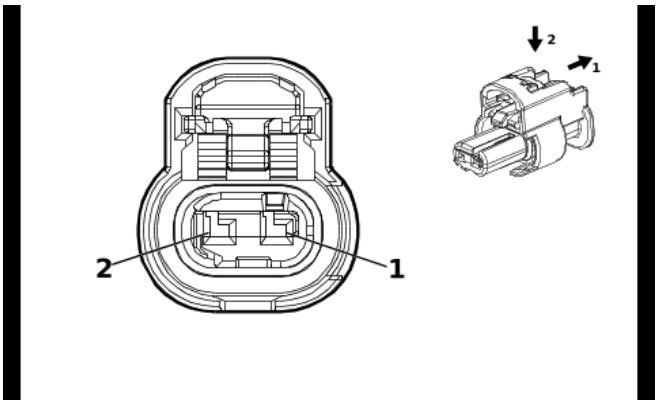

4649903

Connector Part Information

Harness Type: Body Wiring Harness
OEM Connector: 13512365
Service Connector: 85519075
Description: 2-Way F 1.2 MCON Series, Sealed(BK)

Terminal Part Information

Terminal Type ID	Terminated Lead	Diagnostic Test Probe	Terminal Removal Tool
I	Not required	J-35616-16 (L-GN)	No Tool Required

B63RR Side Impact Sensor - Right Rear

Pin	Size	Color	Circuit	Function	Terminal Type ID	Option
1	0.5	OG / WH	6626	Right Rear Side Impact Sensor Signal	I	UKL
	0.5	OG / WH	6626	Right Rear Side Impact Sensor Signal	I	- UKL
2	0.5	BK / OG	6627	Right Rear Side Impact Sensor Low Reference	I	UKL
	0.5	BK / OG	6627	Right Rear Side Impact Sensor Low Reference	I	- UKL

B87 Rearview Camera (UV2)

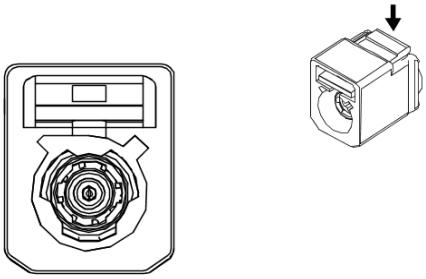

3293633

Connector Part Information

Harness Type: Rear License Plate Lamp Wiring Harness Extension Harness COAX
OEM Connector: 13519801
Service Connector: Service by Cable Assembly — See Part Catalog
Description: 1-Way F Coax Type(BK)

Terminal Part Information

Terminal Type ID	Terminated Lead	Diagnostic Test Probe	Terminal Removal Tool
I	Not required	No Tool Required	No Tool Required

B87 Rearview Camera (UV2)

Pin	Size	Color	Circuit	Function	Terminal Type ID	Option
—	—	Coax Cable	—	Rear Vision Camera Coaxial Video Signal	I	—

B87 Rearview Camera (UVB)

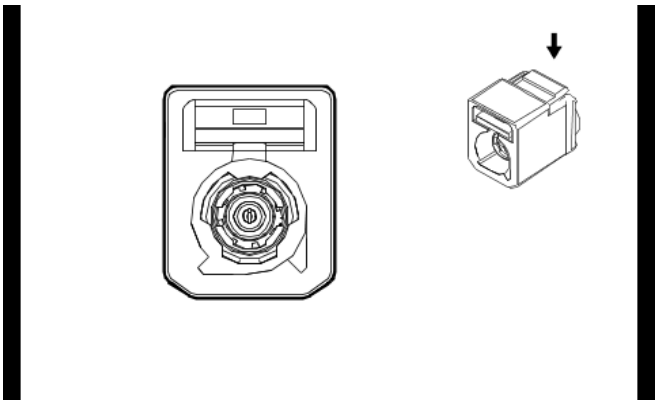

4895598

Connector Part Information

Harness Type: Rear License Plate Lamp Wiring Harness Extension Harness COAX
OEM Connector: 13519802
Service Connector: Service by Cable Assembly — See Part Catalog
Description: 1-Way F Coax Type(OG)

Terminal Part Information

Terminal Type ID	Terminated Lead	Diagnostic Test Probe	Terminal Removal Tool
I	Not required	No Tool Required	No Tool Required

B87 Rearview Camera (UVB)

Pin	Size	Color	Circuit	Function	Terminal Type ID	Option
—	—	Coax Cable	—	Rear Vision Camera Coaxial Video Signal	I	—

B88D Seat Belt Switch - Driver

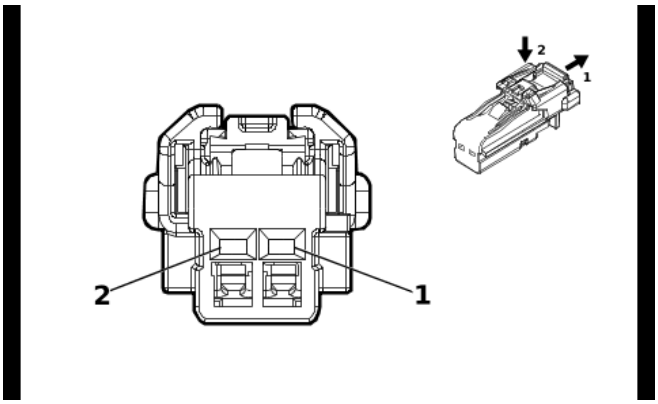

4115691

Connector Part Information

Harness Type: Front Driver Seat Wiring Harness
OEM Connector: 6098-8988
Service Connector: Service by Harness - See Part Catalog
Description: 2-Way F 1.2 MCON Series(BK)

Terminal Part Information

Terminal Type ID	Terminated Lead	Diagnostic Test Probe	Terminal Removal Tool
I	Not required	J-35616-16 (L-GN)	No Tool Required

B88D Seat Belt Switch - Driver

Pin	Size	Color	Circuit	Function	Terminal Type ID	Option
1	0.5	OG / BN	238	Driver Seat Belt Switch Signal	I	—
2	0.5	BK / OG	1363	Driver Seat Belt Switch Low Reference	I	—

B88P Seat Belt Switch - Passenger

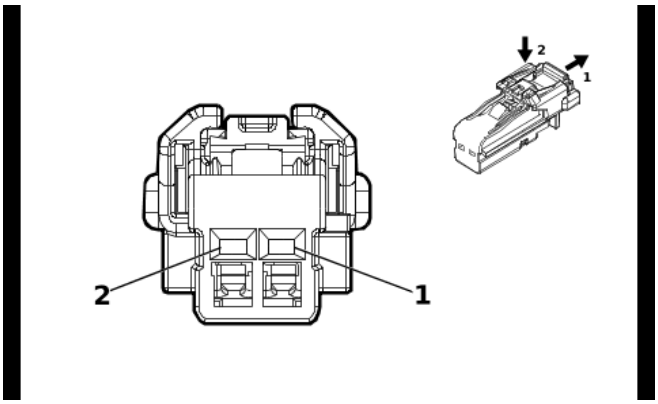

4115691

Connector Part Information

Harness Type: Front Passenger Seat Wiring Harness
OEM Connector: 6098-8988
Service Connector: Service by Harness - See Part Catalog
Description: 2-Way F 1.2 MCON Series(BK)

Terminal Part Information

Terminal Type ID	Terminated Lead	Diagnostic Test Probe	Terminal Removal Tool
I	Not required	J-35616-16 (L-GN)	No Tool Required

B88P Seat Belt Switch - Passenger

Pin	Size	Color	Circuit	Function	Terminal Type ID	Option
1	0.5	OG / VT	1362	Passenger Seat Belt Switch Signal	I	—
2	0.5	BK / OG	1361	Passenger Seat Belt Switch Low Reference	I	—

B107 Accelerator Pedal Position Sensor

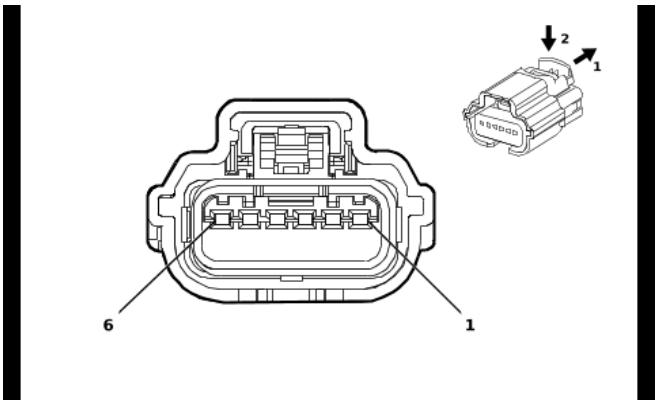

5157678

Connector Part Information

Harness Type: Body Wiring Harness
OEM Connector: 13526320
Service Connector: 84773558
Description: 6-Way F 64 Series, Sealed(BK)

Terminal Part Information

Terminal Type ID	Terminated Lead	Diagnostic Test Probe	Terminal Removal Tool
I	Not required	J-35616-64B (L-BU)	No Tool Required

B107 Accelerator Pedal Position Sensor

Pin	Size	Color	Circuit	Function	Terminal Type ID	Option
1	0.5	BN / RD	1274	Accelerator Pedal Position 5V Reference 2	I	—
2	0.5	GN / WH	1162	Accelerator Pedal Position Signal 2	I	—
3	0.5	BK / VT	1272	Accelerator Pedal Position Low Reference 2	I	—
4	0.5	BK / BU	1271	Accelerator Pedal Position Low Reference 1	I	—
5	0.5	YE / WH	1161	Accelerator Pedal Position Signal 1	I	—
6	0.5	WH / RD	1164	Accelerator Pedal Position 5V Reference 1	I	—

B118 Windshield Washer Fluid Level Sensor

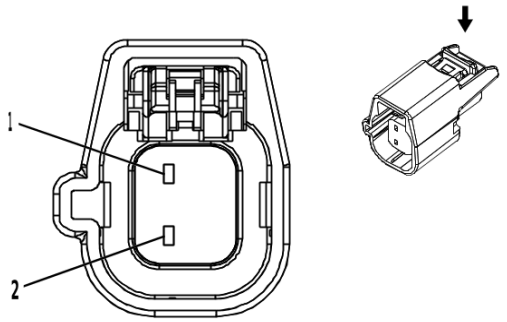

3958652

Connector Part Information

Harness Type: Forward Lamp Wiring Harness
OEM Connector: 13593220
Service Connector: 13593220
Description: 2-Way F 1.5 Series, Sealed(L-GY)

Terminal Part Information

Terminal Type ID	Terminated Lead	Diagnostic Test Probe	Terminal Removal Tool
I	Not required	J-35616-14 (GN)	No Tool Required

B118 Windshield Washer Fluid Level Sensor

Pin	Size	Color	Circuit	Function	Terminal Type ID	Option
1	0.35	VT	185	Low Washer Fluid Indicator Control	I	—
2	0.35	BK	250	Ground	I	—

B119 Multi-axis Acceleration Sensor (UKL)

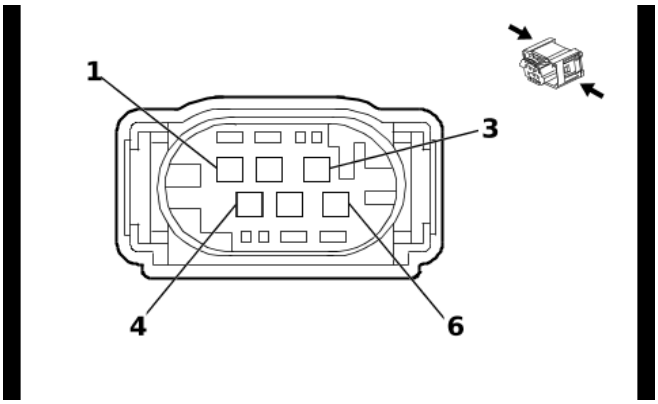

831393

Connector Part Information

Harness Type: Body Wiring Harness
OEM Connector: 1-0967616-1
Service Connector: 15306420
Description: 6-Way F 0.64 Micro-Quadlock Series, Sealed(BK)

Terminal Part Information

Terminal Type ID	Terminated Lead	Diagnostic Test Probe	Terminal Removal Tool
I	Not required	J-35616-64B (L-BU)	No Tool Required

B119 Multi-axis Acceleration Sensor (UKL)

Pin	Size	Color	Circuit	Function	Terminal Type ID	Option
1	0.5	BN / BU	2176	Inertia Sensor 2 Supply Voltage	I	UKL
2	0.5	BU / VT	3813	High Speed GMLAN Serial Data [+] 4	I	UKL
3	0.5	WH	3811	High Speed GMLAN Serial Data [-] 4	I	UKL
4	0.5	BU / VT	3813	High Speed GMLAN Serial Data [+] 4	I	UKL
5	0.5	WH	3811	High Speed GMLAN Serial Data [-] 4	I	UKL
6	0.5	BK	1050	Ground	I	UKL

B160 Windshield Temperature and Inside Moisture Sensor (-CE1)

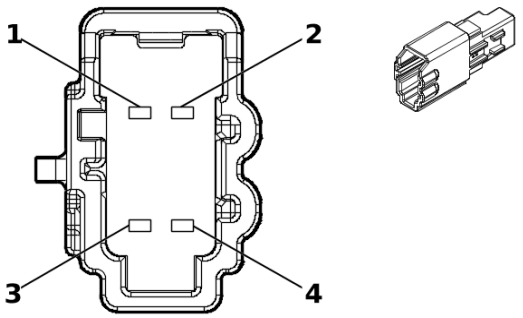

5360963

Connector Part Information

Harness Type: Roof Wiring Harness
OEM Connector: 13530132
Service Connector: 84847258
Description: 4-Way M 1.2 MCON Series(BK)

Terminal Part Information

Terminal Type ID	Terminated Lead	Diagnostic Test Probe	Terminal Removal Tool
I	Not required	J-35616-17 (L-GN)	No Tool Required

B160 Windshield Temperature and Inside Moisture Sensor (-CE1)

Pin	Size	Color	Circuit	Function	Terminal Type ID	Option
1	0.35	RD / YE	3740	Battery Positive Voltage	I	- CE1
2	0.5	BK	550	Ground	I	- CE1
3	0.35	GN / BU	4119	HVAC Control Module LIN Bus 2	I	- CE1
4	—	—	—	Not Occupied	—	—

B174G Frontview Camera - Grille (UV2)

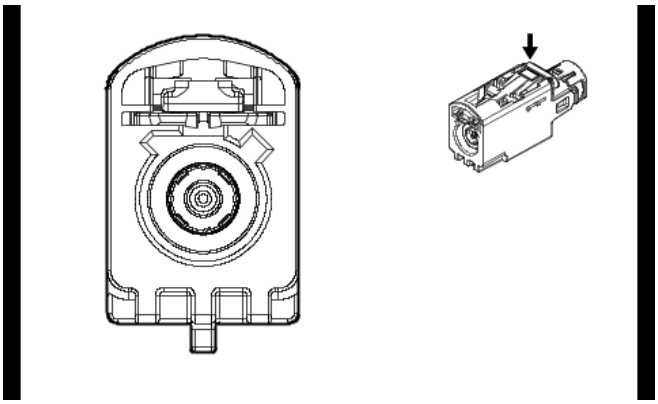

5263386

Connector Part Information

Harness Type: Front Object Alarm Sensor Wiring Harness COAX
OEM Connector: 13517364
Service Connector: Service by Cable Assembly — See Part Catalog
Description: 1-Way F Coax Type(BK)

Terminal Part Information

Terminal Type ID	Terminated Lead	Diagnostic Test Probe	Terminal Removal Tool
I	Not required	No Tool Required	No Tool Required

B174G Frontview Camera - Grille (UV2)

Pin	Size	Color	Circuit	Function	Terminal Type ID	Option
—	—	Coax Cable	—	Front Vision Camera 1 Coaxial Video Signal	I	—

B174W Frontview Camera - Windshield (-UKL)

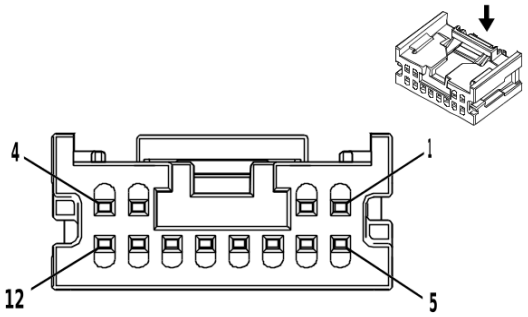

3824362

Connector Part Information

Harness Type: Roof Wiring Harness
OEM Connector: 13507121
Service Connector: 13507121
Description: 12-Way F Mini 50 Series(BK)

Terminal Part Information

Terminal Type ID	Terminated Lead	Diagnostic Test Probe	Terminal Removal Tool
I	19333221	EL-35616-58 (BK)	EL-38125-58

B174W Frontview Camera - Windshield (-UKL)

Pin	Size	Color	Circuit	Function	Terminal Type ID	Option
1	0.35	BK	550	Ground	I	- UKL
2	—	—	—	Not Occupied	—	—
3	0.35	RD / GY	6240	Battery Positive Voltage	I	- UKL
4	0.35	WH	3152	Lane Departure Warning Indicator Control	I	- UKL
5	0.35 0.35	BU BU / GY	2500 3935	High Speed GMLAN Serial Data [+] 1 High Speed GMLAN Serial Data [+] 8	I I	K34 KSG- UKL
6	0.35 0.35	WH WH / GY	2501 3936	High Speed GMLAN Serial Data [-] 1 High Speed GMLAN Serial Data [-] 8	I I	K34 KSG- UKL
7	0.35 0.35	BU BU / GY	2500 3935	High Speed GMLAN Serial Data [+] 1 High Speed GMLAN Serial Data [+] 8	I I	K34 KSG- UKL
8	0.35 0.35	WH WH / GY	2501 3936	High Speed GMLAN Serial Data [-] 1 High Speed GMLAN Serial Data [-] 8	I I	K34 KSG- UKL
9	0.35	WH / BU	5986	Serial Data Communication Enable	I	- UKL
10	0.35	GY / WH	3153	Lane Departure Warning Disable Switch Signal	I	- UKL
11	0.35	GN	5060	Low Speed GMLAN Serial Data	I	- UKL
12	—	—	—	Not Occupied	—	—

B174W Frontview Camera - Windshield (UKL)

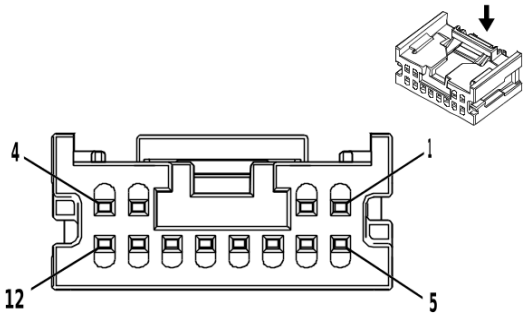

3824362

Connector Part Information

Harness Type: Roof Wiring Harness
OEM Connector: 13507121
Service Connector: 13507121
Description: 12-Way F Mini 50 Series(BK)

Terminal Part Information

Terminal Type ID	Terminated Lead	Diagnostic Test Probe	Terminal Removal Tool
I	19333221	EL-35616-58 (BK)	EL-38125-58

B174W Frontview Camera - Windshield (UKL)

Pin	Size	Color	Circuit	Function	Terminal Type ID	Option
1	0.35	BK	550	Ground	I	UKL
2	0.35	GY / BU	2164	FlexRay Communication Enable Signal	I	UKL
3	0.35	RD / GY	6240	Battery Positive Voltage	I	UKL
4	0.35	GN	4744	FlexRay Serial Data [+] 10	I	UKL
5	0.35	BU / VT	3813	High Speed GMLAN Serial Data [+] 4	I	UKL
6	0.35	WH	3811	High Speed GMLAN Serial Data [-] 4	I	UKL
7	0.35	BU / VT	3813	High Speed GMLAN Serial Data [+] 4	I	UKL
8	0.35	WH	3811	High Speed GMLAN Serial Data [-] 4	I	UKL
9	0.35	BN / VT	3809	Front Object Sensor 1 Reference Voltage	I	UKL
10	0.35	WH	4738	FlexRay Serial Data [-] 9	I	UKL
11	0.35	GN / YE	4737	FlexRay Serial Data [+] 9	I	UKL
12	0.35	WH	4745	FlexRay Serial Data [-] 10	I	UKL

B197 Charge Port Door Position Switch

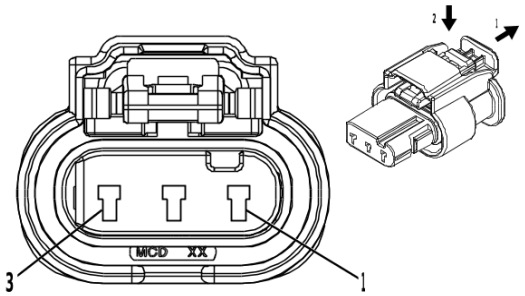

4421568

Connector Part Information

Harness Type: High Voltage Wiring Harness
OEM Connector: 13506522
Service Connector: Service by Harness - See Part Catalog
Description: 3-Way F 1.2 MCON-LL Series, Sealed(BK)

Terminal Part Information

Terminal Type ID	Terminated Lead	Diagnostic Test Probe	Terminal Removal Tool
I	Not required	J-35616-12 (BU)	No Tool Required

B197 Charge Port Door Position Switch

Pin	Size	Color	Circuit	Function	Terminal Type ID	Option
1	—	WH / BU	3697	Charge Port Door Position Sensor Signal	I	—
2	—	—	—	Not Occupied	—	—
3	—	BK	550	Ground	I	—

B200 Rain Sensor Module (CE1)

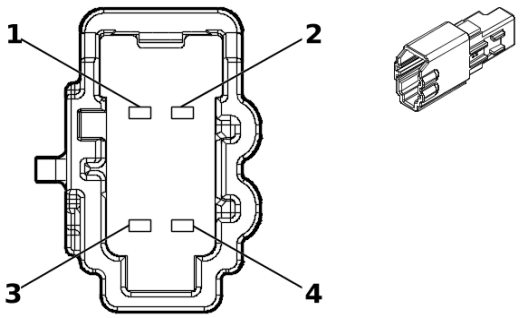

5360963

Connector Part Information

Harness Type: Roof Wiring Harness
OEM Connector: 13530132
Service Connector: 84847258
Description: 4-Way M 1.2 MCON Series(BK)

Terminal Part Information

Terminal Type ID	Terminated Lead	Diagnostic Test Probe	Terminal Removal Tool
I	Not required	J-35616-17 (L-GN)	No Tool Required

B200 Rain Sensor Module (CE1)

Pin	Size	Color	Circuit	Function	Terminal Type ID	Option
1	0.35	RD / YE	3740	Battery Positive Voltage	I	CE1
2	0.35	GN / BN	6132	Body Control Module LIN Bus 1	I	CE1
3	0.5	BK	550	Ground	I	CE1
4	—	—	—	Not Occupied	—	—

B201 Brake Control Brake Pedal Position Sensor

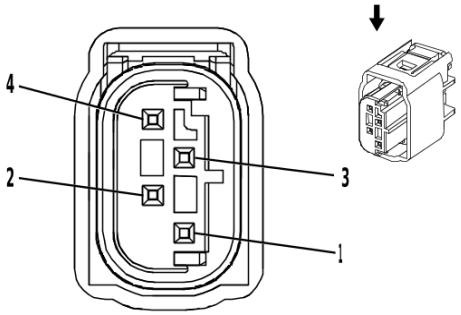

2173574

Connector Part Information

Harness Type: Body Wiring Harness
OEM Connector: 90484986
Service Connector: 13314098
Description: 4-Way F 0.64 Micro-Quadlock Series, Sealed(BK)

Terminal Part Information

Terminal Type ID	Terminated Lead	Diagnostic Test Probe	Terminal Removal Tool
I	Not required	J-35616-64B (L-BU)	No Tool Required

B201 Brake Control Brake Pedal Position Sensor

Pin	Size	Color	Circuit	Function	Terminal Type ID	Option
1	0.5	BU / RD	3335	Brake Pedal Travel Sensor 1 High Reference	I	—
2	0.35	BU / YE	3334	Brake Pedal Travel Sensor 1 Signal	I	—
3	0.5	BK / GY	3417	Brake Pedal Travel Sensor 1 Low Reference	I	—
4	0.35	VT / BN	3333	Brake Pedal Travel Sensor 2 Signal	I	—

B202 Hybrid/EV Electronics Coolant Temperature Sensor

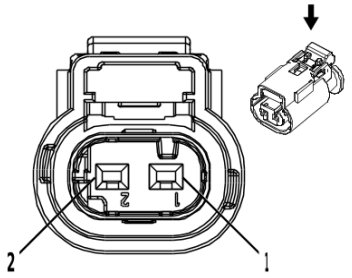

2717066

Connector Part Information

Harness Type: Engine Wiring Harness
OEM Connector: 13503566
Service Connector: 13587326
Description: 2-Way F 1.2 Multilock Series, Sealed(BK)

Terminal Part Information

Terminal Type ID	Terminated Lead	Diagnostic Test Probe	Terminal Removal Tool
I	Not required	J-35616-16 (L-GN)	No Tool Required

B202 Hybrid/EV Electronics Coolant Temperature Sensor

Pin	Size	Color	Circuit	Function	Terminal Type ID	Option
1	0.5	YE / BK	3000	Coolant Temperature Sensor 2 Signal	I	—
2	0.5	BK / BU	6813	Coolant Temperature Sensor 2 Low Reference	I	—

B207 Drive Motor Temperature Sensor

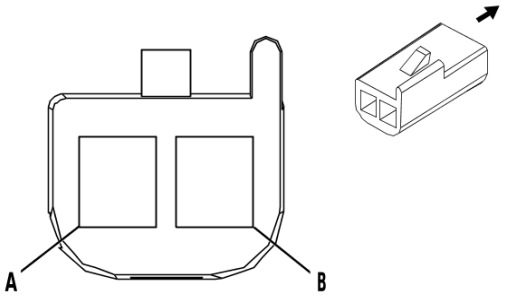

82383

Connector Part Information

Harness Type: Transmission
OEM Connector: 12047662
Service Connector: Service by Harness - See Part Catalog
Description: 2-Way F 150 Metri-Pack Series(BK)

Terminal Part Information

Terminal Type ID	Terminated Lead	Diagnostic Test Probe	Terminal Removal Tool
I	Not required	J-35616-2A (GY)	No Tool Required

B207 Drive Motor Temperature Sensor

Pin	Size	Color	Circuit	Function	Terminal Type ID	Option
A	0.8	BK	7654	Traction Power Inverter Motor 1 Temperature Sensor Low Reference	I	—
B	0.8	BK	7653	Traction Power Inverter Motor 1 Temperature Sensor Signal	I	—

B218L Side Object Sensor Module - Left (UKC)

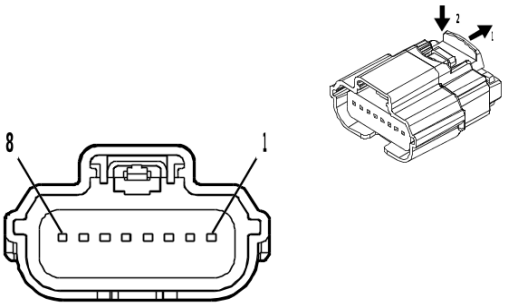

4708234

Connector Part Information

Harness Type: Rear Object Alarm Sensor Wiring Harness
OEM Connector: 13534140
Service Connector: Service by Harness - See Part Catalog
Description: 8-Way F 64 Series, Sealed(BK)

Terminal Part Information

Terminal Type ID	Terminated Lead	Diagnostic Test Probe	Terminal Removal Tool
I	Not required	J-35616-64B (L-BU)	No Tool Required

B218L Side Object Sensor Module - Left (UKC)

Pin	Size	Color	Circuit	Function	Terminal Type ID	Option
1	0.5	WH	4087	Private Serial Data Side Obstacle Detection CAN Bus [-] Serial Data	I	UKC
2	0.5	BU / VT	4088	Private Serial Data Side Obstacle Detection CAN Bus [+] Serial Data	I	UKC
3	0.5	BK	1550	Ground	I	UKC
4 - 5	—	—	—	Not Occupied	—	—
6	0.35	GN	5060	Low Speed GMLAN Serial Data	I	UKC
7	0.5	GY / YE	1760	Left Side Object Detection LED Control	I	UKC
8	0.35	RD / YE	5840	Battery Positive Voltage	I	UKC

B218R Side Object Sensor Module - Right (UKC)

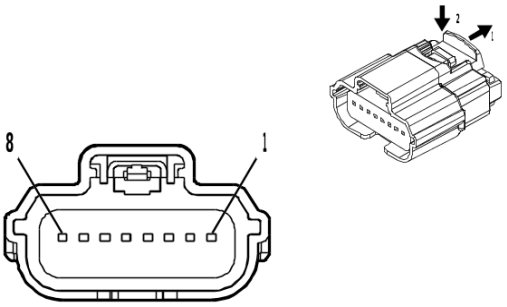

4708234

Connector Part Information

Harness Type: Rear Object Alarm Sensor Wiring Harness
OEM Connector: 13534140
Service Connector: Service by Harness - See Part Catalog
Description: 8-Way F 64 Series, Sealed(BK)

Terminal Part Information

Terminal Type ID	Terminated Lead	Diagnostic Test Probe	Terminal Removal Tool
I	Not required	J-35616-64B (L-BU)	No Tool Required

B218R Side Object Sensor Module - Right (UKC)

Pin	Size	Color	Circuit	Function	Terminal Type ID	Option
1	0.5	WH	4087	Private Serial Data Side Obstacle Detection CAN Bus [-] Serial Data	I	UKC
2	0.5	BU / VT	4088	Private Serial Data Side Obstacle Detection CAN Bus [+] Serial Data	I	UKC
3	0.5	BK	1550	Ground	I	UKC
4 - 5	—	—	—	Not Occupied	—	—
6	0.35	GN	5060	Low Speed GMLAN Serial Data	I	UKC
7	0.5	GY	1761	Right Side Object Detection LED Control	I	UKC
8	0.35	RD / YE	5840	Battery Positive Voltage	I	UKC

B228 Drive Motor Position Sensor

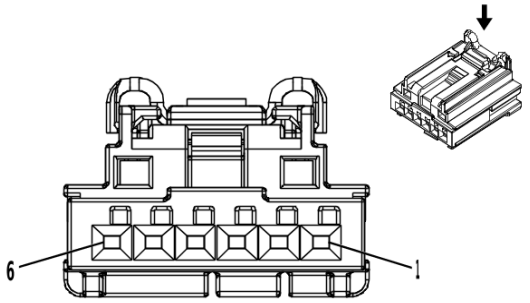

3960313

Connector Part Information

Harness Type: Transmission
OEM Connector: 13583825
Service Connector: Service by Harness - See Part Catalog
Description: 6-Way F 0.64 Generation Y Series(BK)

Terminal Part Information

Terminal Type ID	Terminated Lead	Diagnostic Test Probe	Terminal Removal Tool
I	Not required	J-35616-64B (L-BU)	No Tool Required

B228 Drive Motor Position Sensor

Pin	Size	Color	Circuit	Function	Terminal Type ID	Option
1	—	BK	7652	Drive Motor 1 Position Sensor Sensor 3 Signal	I	—
2	—	BK	7649	Drive Motor 1 Position Sensor Sensor 1 Signal	I	—
3	—	BK	7645	Drive Motor 1 Position Sensor Excitation Signal Positive	I	—
4	—	BK	7648	Drive Motor 1 Position Sensor Excitation Signal Negative	I	—
5	—	BK	7647	Drive Motor 1 Position Sensor Sensor 2 Signal	I	—
6	—	BK	7646	Drive Motor 1 Position Sensor Sensor 4 Signal	I	—

B233B Radar Sensor Module - Long Range (UKL)

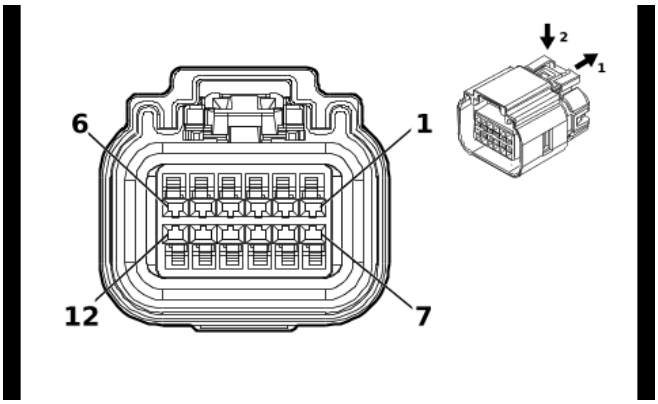

3293624

Connector Part Information

Harness Type: Forward Lamp Wiring Harness
OEM Connector: 13593496
Service Connector: 19333329
Description: 12-Way F 1.2 OCS Series, Sealed(BK)

Terminal Part Information

Terminal Type ID	Terminated Lead	Diagnostic Test Probe	Terminal Removal Tool
I	19371217	J-35616-12 (BU)	J-38125-553

B233B Radar Sensor Module - Long Range (UKL)

Pin	Size	Color	Circuit	Function	Terminal Type ID	Option
1	0.5	WH	4717	FlexRay Serial Data [-] 5	I	UKL
2	0.5	GN / BU	4716	FlexRay Serial Data [+] 5	I	UKL
3	0.5	GY / BU	2164	FlexRay Communication Enable Signal	I	UKL
4	0.5	WH	4715	FlexRay Serial Data [-] 4	I	UKL
5	0.5	GN / BN	4714	FlexRay Serial Data [+] 4	I	UKL
6	0.5	RD / GN	3140	Battery Positive Voltage	I	UKL
7	0.5	BK	1850	Ground	I	UKL
8 - 9	—	—	—	Not Occupied	—	—
10	0.5	WH	3811	High Speed GMLAN Serial Data [-] 4	I	UKL
11	0.5	BU / VT	3813	High Speed GMLAN Serial Data [+] 4	I	UKL
12	0.5	BN / VT	3809	Front Object Sensor 1 Reference Voltage	I	UKL

B258 Hybrid/EV Battery Coolant Level Switch

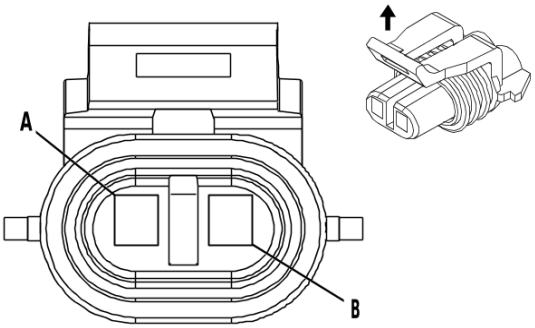

635009

Connector Part Information

Harness Type: Forward Lamp Wiring Harness
OEM Connector: 12052641
Service Connector: 13586114
Description: 2-Way F 150 Metri-Pack Series, Sealed(BK)

Terminal Part Information

Terminal Type ID	Terminated Lead	Diagnostic Test Probe	Terminal Removal Tool
I	Not required	J-35616-14 (GN)	No Tool Required

B258 Hybrid/EV Battery Coolant Level Switch

Pin	Size	Color	Circuit	Function	Terminal Type ID	Option
A	0.5	BU / YE	68	Low Coolant Level Indicator Control	I	—
B	0.5	BK / GN	476	Sensor Low Reference	I	—

B292 Driver Monitoring System Camera (UKL)

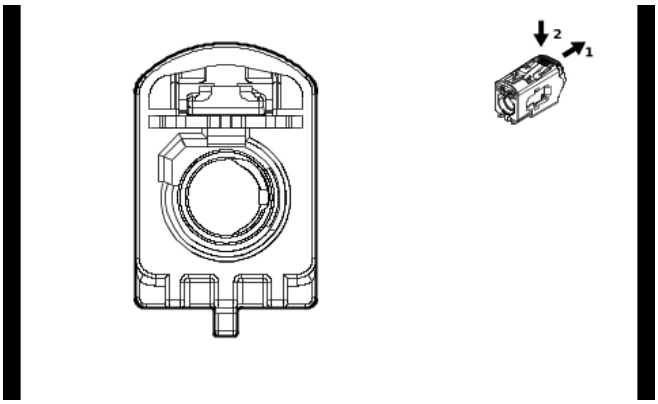

5721677

Connector Part Information

Harness Type: Instrument Panel Wiring Harness COAX
OEM Connector: 13516217
Service Connector: Service by Cable Assembly — See Part Catalog
Description: 1-Way F Coax Type(GN)

Terminal Part Information

Terminal Type ID	Terminated Lead	Diagnostic Test Probe	Terminal Removal Tool
I	Not required	No Tool Required	No Tool Required

B292 Driver Monitoring System Camera (UKL)

Pin	Size	Color	Circuit	Function	Terminal Type ID	Option
—	—	Coax Cable	—	Driver Monitoring System Camera Coaxial Signal	I	—

B305 Ambient Light/Sunload Sensor and Battery State of Charge Indicator

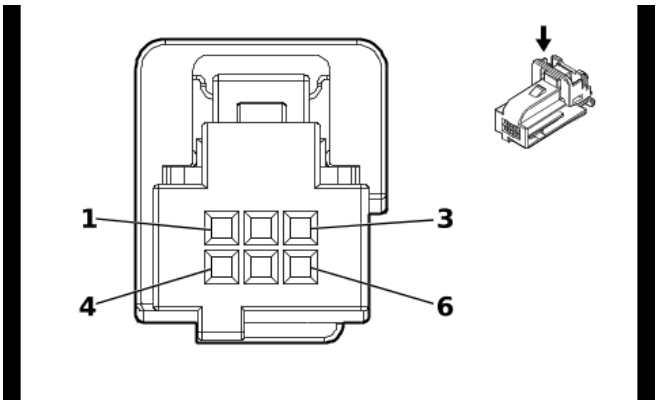

2282896

Connector Part Information

Harness Type: Instrument Panel Wiring Harness
OEM Connector: 13590886
Service Connector: 85587649
Description: 6-Way F 0.64 Micro-Quadlock Series(BK)

Terminal Part Information

Terminal Type ID	Terminated Lead	Diagnostic Test Probe	Terminal Removal Tool
I	Not required	J-35616-64B (L-BU)	No Tool Required

B305 Ambient Light/Sunload Sensor and Battery State of Charge Indicator

Pin	Size	Color	Circuit	Function	Terminal Type ID	Option
1	0.5	BK	1450	Ground	I	—
2	0.35	GN / WH	4115	Body Control Module LIN Bus 5	I	—
3	0.5	YE / VT	3956	Charging Status Indicator Control	I	—
4	0.5	GY / GN	3957	Control Pilot Signal Indicator Control	I	—
5	0.35	RD / BU	6740	Battery Positive Voltage	I	—
6	0.5	BK	1450	Ground	I	—

B306E Parking Assist Sensor - Rear Left Outer (UD7)

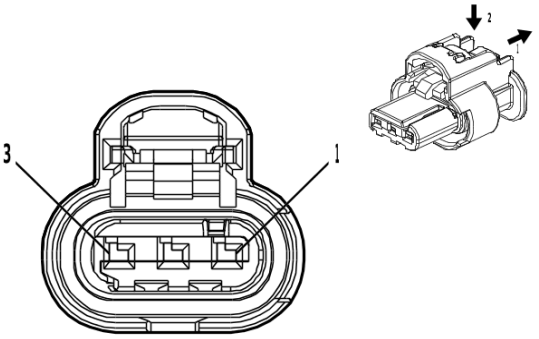

4581126

Connector Part Information

Harness Type: Rear Object Alarm Sensor Wiring Harness
OEM Connector: 13514590
Service Connector: Service by Harness - See Part Catalog
Description: 3-Way F 1.2 MCON-CB Series, Sealed(BK)

Terminal Part Information

Terminal Type ID	Terminated Lead	Diagnostic Test Probe	Terminal Removal Tool
I	Not required	J-35616-16 (L-GN)	No Tool Required

B306E Parking Assist Sensor - Rear Left Outer (UD7)

Pin	Size	Color	Circuit	Function	Terminal Type ID	Option
1	0.35	BN / WH	2374	Object Sensor Voltage Reference	I	UD7
2	0.35	YE	2375	Left Rear Outer Parking Assist Sensor Signal	I	UD7
3	0.35	BK / GY	2379	Object Sensor Low Reference	I	UD7

B306F Parking Assist Sensor - Rear Left Middle (UD7)

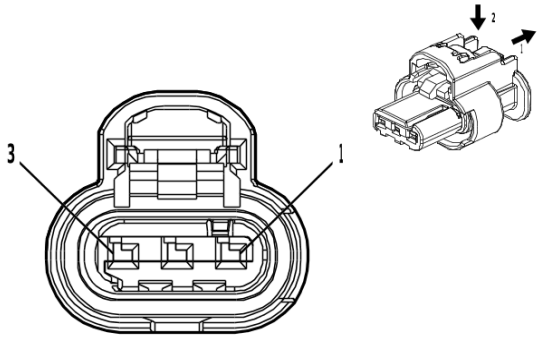

4581126

Connector Part Information

Harness Type: Rear Object Alarm Sensor Wiring Harness
OEM Connector: 13514590
Service Connector: Service by Harness - See Part Catalog
Description: 3-Way F 1.2 MCON-CB Series, Sealed(BK)

Terminal Part Information

Terminal Type ID	Terminated Lead	Diagnostic Test Probe	Terminal Removal Tool
I	Not required	J-35616-16 (L-GN)	No Tool Required

B306F Parking Assist Sensor - Rear Left Middle (UD7)

Pin	Size	Color	Circuit	Function	Terminal Type ID	Option
1	0.35	BN / WH	2374	Object Sensor Voltage Reference	I	UD7
2	0.35	YE / BU	2376	Left Rear Middle Parking Assist Sensor Signal	I	UD7
3	0.35	BK / GY	2379	Object Sensor Low Reference	I	UD7

B306G Parking Assist Sensor - Rear Right Middle (UD7)

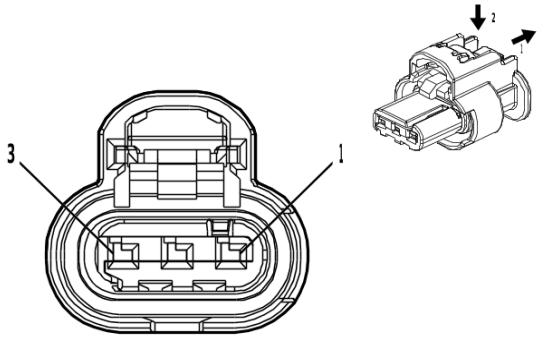

4581126

Connector Part Information

Harness Type: Rear Object Alarm Sensor Wiring Harness
OEM Connector: 13514590
Service Connector: Service by Harness - See Part Catalog
Description: 3-Way F 1.2 MCON-CB Series, Sealed(BK)

Terminal Part Information

Terminal Type ID	Terminated Lead	Diagnostic Test Probe	Terminal Removal Tool
I	Not required	J-35616-16 (L-GN)	No Tool Required

B306G Parking Assist Sensor - Rear Right Middle (UD7)

Pin	Size	Color	Circuit	Function	Terminal Type ID	Option
1	0.35	BN / WH	2374	Object Sensor Voltage Reference	I	UD7
2	0.35	YE / WH	2377	Right Rear Middle Parking Assist Sensor Signal	I	UD7
3	0.35	BK / GY	2379	Object Sensor Low Reference	I	UD7

B306H Parking Assist Sensor - Rear Right Outer (UD7)

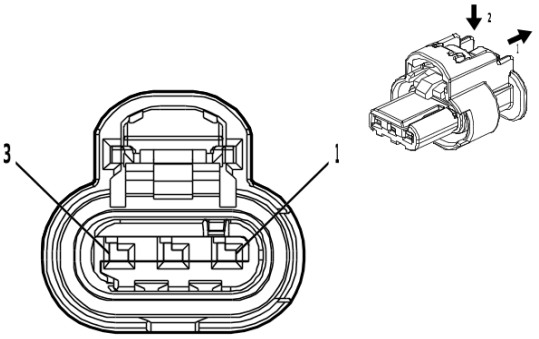

4581126

Connector Part Information

Harness Type: Rear Object Alarm Sensor Wiring Harness
OEM Connector: 13514590
Service Connector: Service by Harness - See Part Catalog
Description: 3-Way F 1.2 MCON-CB Series, Sealed(BK)

Terminal Part Information

Terminal Type ID	Terminated Lead	Diagnostic Test Probe	Terminal Removal Tool
I	Not required	J-35616-16 (L-GN)	No Tool Required

B306H Parking Assist Sensor - Rear Right Outer (UD7)

Pin	Size	Color	Circuit	Function	Terminal Type ID	Option
1	0.35	BN / WH	2374	Object Sensor Voltage Reference	I	UD7
2	0.35	YE / VT	2378	Right Rear Outer Parking Assist Sensor Signal	I	UD7
3	0.35	BK / GY	2379	Object Sensor Low Reference	I	UD7

B352 Video Display Inside Rearview Mirror Camera (DRZ)

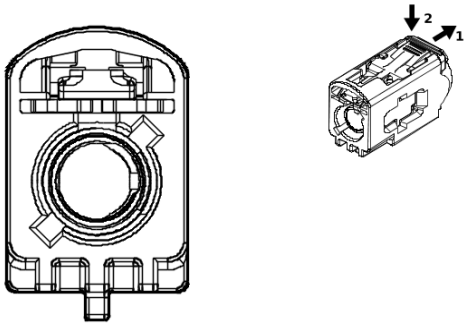

5215274

Connector Part Information

Harness Type: Liftgate COAX
OEM Connector: 2289730-3
Service Connector: Service by Cable Assembly — See Part Catalog
Description: 1-Way F Coax Type(BU)

Terminal Part Information

Terminal Type ID	Terminated Lead	Diagnostic Test Probe	Terminal Removal Tool
I	Not required	No Tool Required	No Tool Required

B352 Video Display Inside Rearview Mirror Camera (DRZ)

Pin	Size	Color	Circuit	Function	Terminal Type ID	Option
—	—	Coax Cable	—	Rear Vision Camera Coaxial Video Signal	I	—

C1 Battery ((-))

—

Connector Part Information

Harness Type: Battery Negative Cable
OEM Connector: CBT308-018
Service Connector: Service by Harness - See Part Catalog
Description: —

Terminal Part Information

Terminal Type ID	Terminated Lead	Diagnostic Test Probe	Terminal Removal Tool
I	Not required	No Tool Required	No Tool Required

C1 Battery ((-))

Pin	Size	Color	Circuit	Function	Terminal Type ID	Option
1	25	BK	50	Ground	I	—

C1 Battery ((-)+(BODY))

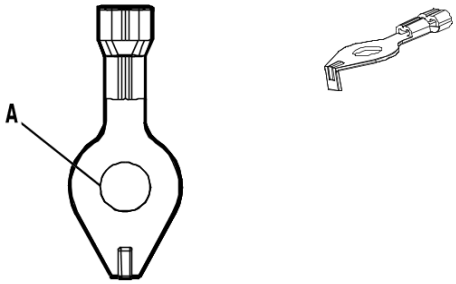

4663368

Connector Part Information

Harness Type: Body Wiring Harness
OEM Connector: ST711059-3
Service Connector: Service by Cable Assembly — See Part Catalog
Description: 1-Way Ring Terminal

Terminal Part Information

Terminal Type ID	Terminated Lead	Diagnostic Test Probe	Terminal Removal Tool
I	Not required	No Tool Required	No Tool Required

C1 Battery ((-)+(BODY))

Pin	Size	Color	Circuit	Function	Terminal Type ID	Option
A	0.5	BK / WH	51	Signal Ground	I	—

C5A Hybrid/EV Battery Module 1 X1

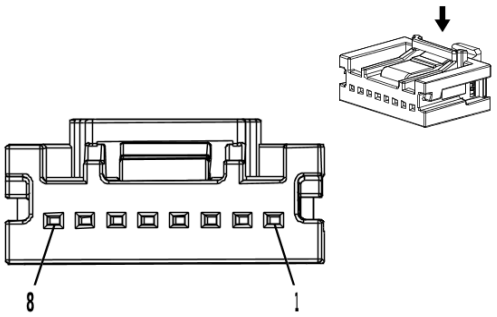

4017639

Connector Part Information

Harness Type: Internal Battery Low Voltage
OEM Connector: 34791-5180
Service Connector: Service by Harness - See Part Catalog
Description: 8-Way F Mini 50 Series(BK)

Terminal Part Information

Terminal Type ID	Terminated Lead	Diagnostic Test Probe	Terminal Removal Tool
I	Not required	EL-35616-58 (BK)	No Tool Required

C5A Hybrid/EV Battery Module 1 X1

Pin	Size	Color	Circuit	Function	Terminal Type ID	Option
1	—	PK	5403	Hybrid/EV Battery Pack Monitor Low Reference	I	—
2	—	BU	5394	Hybrid/EV Battery Cell Voltage Signal 2	I	—
3	—	VT	5396	Hybrid/EV Battery Cell Voltage Signal 4	I	—
4	—	WH	5398	Hybrid/EV Battery Cell Voltage Signal 6	I	—
5	—	BN	5400	Hybrid/EV Battery Cell Voltage Signal 8	I	—
6	—	BU	5392	Hybrid/EV Battery Cell Voltage Signal 10	I	—
7 - 8	—	—	—	Not Occupied	—	—

C5A Hybrid/EV Battery Module 1 X2

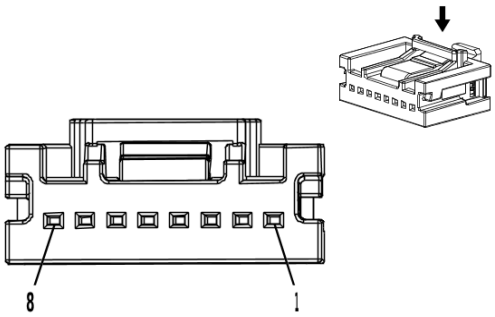

4017639

Connector Part Information

Harness Type: Internal Battery Low Voltage
OEM Connector: 34791-5180
Service Connector: Service by Harness - See Part Catalog
Description: 8-Way F Mini 50 Series(BK)

Terminal Part Information

Terminal Type ID	Terminated Lead	Diagnostic Test Probe	Terminal Removal Tool
I	Not required	EL-35616-58 (BK)	No Tool Required

C5A Hybrid/EV Battery Module 1 X2

Pin	Size	Color	Circuit	Function	Terminal Type ID	Option
1	—	GN	5391	Hybrid/EV Battery Cell Voltage Signal 1	I	—
2	—	YE	5395	Hybrid/EV Battery Cell Voltage Signal 3	I	—
3	—	OG	5397	Hybrid/EV Battery Cell Voltage Signal 5	I	—
4	—	GY	5399	Hybrid/EV Battery Cell Voltage Signal 7	I	—
5	—	OG / RD	5401	Hybrid/EV Battery Cell Voltage Signal 9	I	—
6 - 8	—	—	—	Not Occupied	—	—

C5B Hybrid/EV Battery Module 2 X1

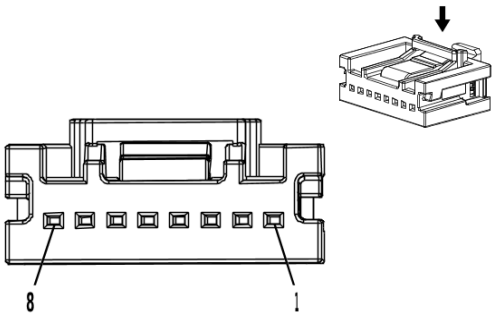

4017639

Connector Part Information

Harness Type: Internal Battery Low Voltage
OEM Connector: 34791-5180
Service Connector: Service by Harness - See Part Catalog
Description: 8-Way F Mini 50 Series(BK)

Terminal Part Information

Terminal Type ID	Terminated Lead	Diagnostic Test Probe	Terminal Removal Tool
I	Not required	EL-35616-58 (BK)	No Tool Required

C5B Hybrid/EV Battery Module 2 X1

Pin	Size	Color	Circuit	Function	Terminal Type ID	Option
1	—	BN	5579	Hybrid/EV Battery Cell Voltage Signal 20	I	—
2	—	WH	5577	Hybrid/EV Battery Cell Voltage Signal 18	I	—
3	—	VT	5575	Hybrid/EV Battery Cell Voltage Signal 16	I	—
4	—	BU	5573	Hybrid/EV Battery Cell Voltage Signal 14	I	—
5	—	PK	5571	Hybrid/EV Battery Cell Voltage Signal 12	I	—
6	—	GN / WH	5403	Hybrid/EV Battery Pack Monitor Low Reference	I	—
7 - 8	—	—	—	Not Occupied	—	—

C5B Hybrid/EV Battery Module 2 X2

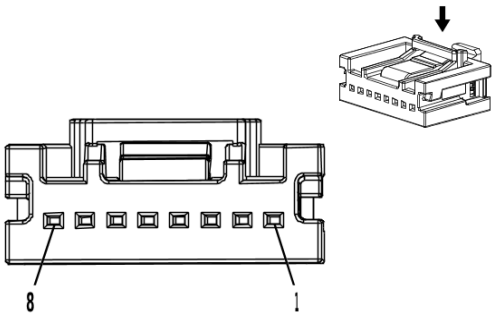

4017639

Connector Part Information

Harness Type: Internal Battery Low Voltage
OEM Connector: 34791-5180
Service Connector: Service by Harness - See Part Catalog
Description: 8-Way F Mini 50 Series(BK)

Terminal Part Information

Terminal Type ID	Terminated Lead	Diagnostic Test Probe	Terminal Removal Tool
I	Not required	EL-35616-58 (BK)	No Tool Required

C5B Hybrid/EV Battery Module 2 X2

Pin	Size	Color	Circuit	Function	Terminal Type ID	Option
1	—	GY	5578	Hybrid/EV Battery Cell Voltage Signal 19	I	—
2	—	OG	5576	Hybrid/EV Battery Cell Voltage Signal 17	I	—
3	—	YE	5574	Hybrid/EV Battery Cell Voltage Signal 15	I	—
4	—	GN	5572	Hybrid/EV Battery Cell Voltage Signal 13	I	—
5	—	GN	5593	Module Temperature Low Reference 2	I	—
6 - 8	—	—	—	Not Occupied	—	—

C5C Hybrid/EV Battery Module 3 X1

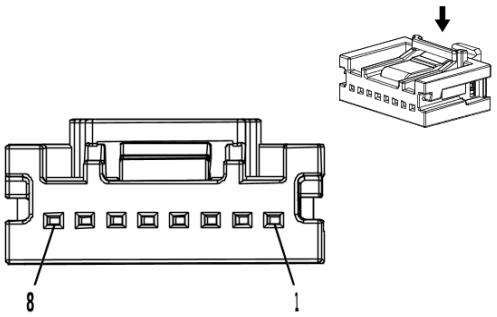

4017639

Connector Part Information

Harness Type: Internal Battery Low Voltage
OEM Connector: 34791-5180
Service Connector: Service by Harness - See Part Catalog
Description: 8-Way F Mini 50 Series(BK)

Terminal Part Information

Terminal Type ID	Terminated Lead	Diagnostic Test Probe	Terminal Removal Tool
I	Not required	EL-35616-58 (BK)	No Tool Required

C5C Hybrid/EV Battery Module 3 X1

Pin	Size	Color	Circuit	Function	Terminal Type ID	Option
1	—	OG / RD	5403	Hybrid/EV Battery Pack Monitor Low Reference	I	—
2	—	GN / WH	5581	Hybrid/EV Battery Cell Voltage Signal 22	I	—
3	—	PK	5583	Hybrid/EV Battery Cell Voltage Signal 24	I	—
4	—	BU	5585	Hybrid/EV Battery Cell Voltage Signal 26	I	—
5	—	VT	5587	Hybrid/EV Battery Cell Voltage Signal 28	I	—
6	—	WH	5589	Hybrid/EV Battery Cell Voltage Signal 30	I	—
7 - 8	—	—	—	Not Occupied	—	—

C5C Hybrid/EV Battery Module 3 X2

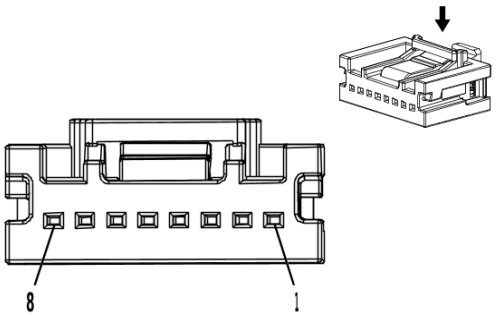

4017639

Connector Part Information

Harness Type: Internal Battery Low Voltage
OEM Connector: 34791-5180
Service Connector: Service by Harness - See Part Catalog
Description: 8-Way F Mini 50 Series(BK)

Terminal Part Information

Terminal Type ID	Terminated Lead	Diagnostic Test Probe	Terminal Removal Tool
I	Not required	EL-35616-58 (BK)	No Tool Required

C5C Hybrid/EV Battery Module 3 X2

Pin	Size	Color	Circuit	Function	Terminal Type ID	Option
1	—	BU	5580	Hybrid/EV Battery Cell Voltage Signal 21	I	—
2	—	GN	5582	Hybrid/EV Battery Cell Voltage Signal 23	I	—
3	—	GN	5584	Hybrid/EV Battery Cell Voltage Signal 25	I	—
4	—	YE	5586	Hybrid/EV Battery Cell Voltage Signal 27	I	—
5	—	OG	5588	Hybrid/EV Battery Cell Voltage Signal 29	I	—
6 - 8	—	—	—	Not Occupied	—	—

C5D Hybrid/EV Battery Module 4 X1

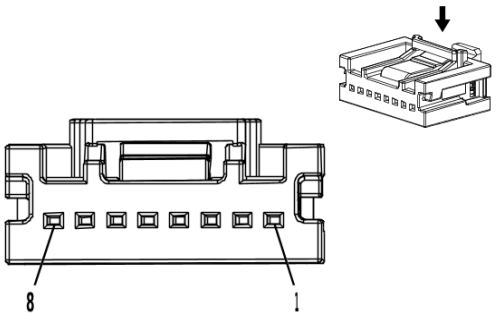

4017639

Connector Part Information

Harness Type: Internal Battery Low Voltage
OEM Connector: 34791-5180
Service Connector: Service by Harness - See Part Catalog
Description: 8-Way F Mini 50 Series(BK)

Terminal Part Information

Terminal Type ID	Terminated Lead	Diagnostic Test Probe	Terminal Removal Tool
I	Not required	EL-35616-58 (BK)	No Tool Required

C5D Hybrid/EV Battery Module 4 X1

Pin	Size	Color	Circuit	Function	Terminal Type ID	Option
1	—	VT	4521	Hybrid/EV Battery Cell Voltage Signal 40	I	—
2	—	BU	4519	Hybrid/EV Battery Cell Voltage Signal 38	I	—
3	—	PK	4517	Hybrid/EV Battery Cell Voltage Signal 36	I	—
4	—	GN / WH	4514	Hybrid/EV Battery Cell Voltage Signal 34	I	—
5	—	OG / RD	5591	Hybrid/EV Battery Cell Voltage Signal 32	I	—
6	—	GY	5403	Hybrid/EV Battery Pack Monitor Low Reference	I	—
7 - 8	—	—	—	Not Occupied	—	—

C5D Hybrid/EV Battery Module 4 X2

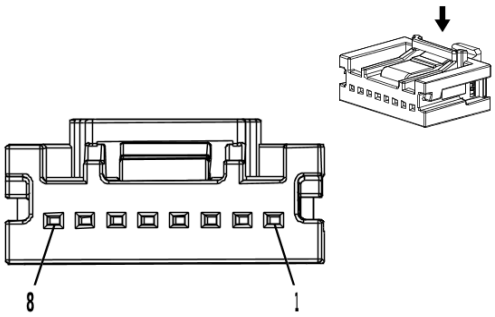

4017639

Connector Part Information

Harness Type: Internal Battery Low Voltage
OEM Connector: 34791-5180
Service Connector: Service by Harness - See Part Catalog
Description: 8-Way F Mini 50 Series(BK)

Terminal Part Information

Terminal Type ID	Terminated Lead	Diagnostic Test Probe	Terminal Removal Tool
I	Not required	EL-35616-58 (BK)	No Tool Required

C5D Hybrid/EV Battery Module 4 X2

Pin	Size	Color	Circuit	Function	Terminal Type ID	Option
1	—	YE	4520	Hybrid/EV Battery Cell Voltage Signal 39	I	—
2	—	GN	4518	Hybrid/EV Battery Cell Voltage Signal 37	I	—
3	—	BU / GN	4516	Hybrid/EV Battery Cell Voltage Signal 35	I	—
4	—	BU	5592	Hybrid/EV Battery Cell Voltage Signal 33	I	—
5	—	BN	5590	Hybrid/EV Battery Cell Voltage Signal 31	I	—
6 - 8	—	—	—	Not Occupied	—	—

C5E Hybrid/EV Battery Module 5 X1

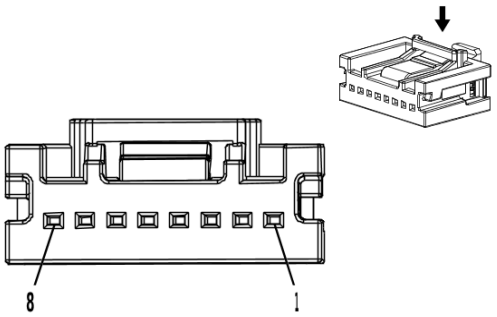

4017639

Connector Part Information

Harness Type: Internal Battery Low Voltage
OEM Connector: 34791-5180
Service Connector: Service by Harness - See Part Catalog
Description: 8-Way F Mini 50 Series(BK)

Terminal Part Information

Terminal Type ID	Terminated Lead	Diagnostic Test Probe	Terminal Removal Tool
I	Not required	EL-35616-58 (BK)	No Tool Required

C5E Hybrid/EV Battery Module 5 X1

Pin	Size	Color	Circuit	Function	Terminal Type ID	Option
1	—	PK	4529	Hybrid/EV Battery Cell Voltage Signal 48	I	—
2	—	GN / WH	4527	Hybrid/EV Battery Cell Voltage Signal 46	I	—
3	—	OG / RD	4525	Hybrid/EV Battery Cell Voltage Signal 44	I	—
4	—	GY	4523	Hybrid/EV Battery Cell Voltage Signal 42	I	—
5	—	OG	5403	Hybrid/EV Battery Pack Monitor Low Reference	I	—
6 - 8	—	—	—	Not Occupied	—	—

C5E Hybrid/EV Battery Module 5 X2

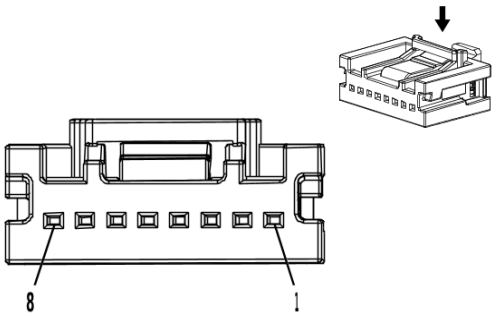

4017639

Connector Part Information

Harness Type: Internal Battery Low Voltage
OEM Connector: 34791-5180
Service Connector: Service by Harness - See Part Catalog
Description: 8-Way F Mini 50 Series(BK)

Terminal Part Information

Terminal Type ID	Terminated Lead	Diagnostic Test Probe	Terminal Removal Tool
I	Not required	EL-35616-58 (BK)	No Tool Required

C5E Hybrid/EV Battery Module 5 X2

Pin	Size	Color	Circuit	Function	Terminal Type ID	Option
1	—	BU	4528	Hybrid/EV Battery Cell Voltage Signal 47	I	—
2	—	BU	4526	Hybrid/EV Battery Cell Voltage Signal 45	I	—
3	—	BN	4524	Hybrid/EV Battery Cell Voltage Signal 43	I	—
4	—	WH	4522	Hybrid/EV Battery Cell Voltage Signal 41	I	—
5 - 8	—	—	—	Not Occupied	—	—

C5F Hybrid/EV Battery Module 6 X1

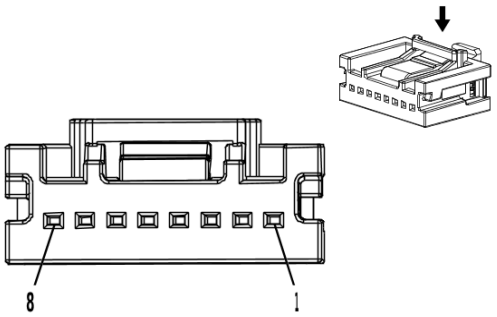

4017639

Connector Part Information

Harness Type: Internal Battery Low Voltage
OEM Connector: 34791-5180
Service Connector: Service by Harness - See Part Catalog
Description: 8-Way F Mini 50 Series(BK)

Terminal Part Information

Terminal Type ID	Terminated Lead	Diagnostic Test Probe	Terminal Removal Tool
I	Not required	EL-35616-58 (BK)	No Tool Required

C5F Hybrid/EV Battery Module 6 X1

Pin	Size	Color	Circuit	Function	Terminal Type ID	Option
1	—	GN	5403	Hybrid/EV Battery Pack Monitor Low Reference	I	—
2	—	YE	4530	Hybrid/EV Battery Cell Voltage Signal 49	I	—
3	—	OG	4532	Hybrid/EV Battery Cell Voltage Signal 51	I	—
4	—	GY	4535	Hybrid/EV Battery Cell Voltage Signal 53	I	—
5	—	OG / RD	4538	Hybrid/EV Battery Cell Voltage Signal 56	I	—
6	—	GN / WH	4543	Hybrid/EV Battery Cell Voltage Signal 58	I	—
7 - 8	—	—	—	Not Occupied	—	—

C5F Hybrid/EV Battery Module 6 X2

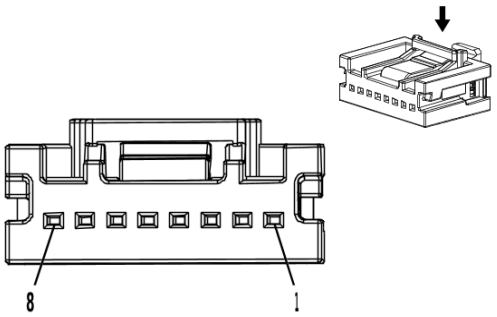

4017639

Connector Part Information

Harness Type: Internal Battery Low Voltage
OEM Connector: 34791-5180
Service Connector: Service by Harness - See Part Catalog
Description: 8-Way F Mini 50 Series(BK)

Terminal Part Information

Terminal Type ID	Terminated Lead	Diagnostic Test Probe	Terminal Removal Tool
I	Not required	EL-35616-58 (BK)	No Tool Required

C5F Hybrid/EV Battery Module 6 X2

Pin	Size	Color	Circuit	Function	Terminal Type ID	Option
1	—	BU	4529	Hybrid/EV Battery Cell Voltage Signal 48	I	—
2	—	VT	4531	Hybrid/EV Battery Cell Voltage Signal 50	I	—
3	—	WH	4533	Hybrid/EV Battery Cell Voltage Signal 52	I	—
4	—	GN / WH	4537	Hybrid/EV Battery Cell Voltage Signal 55	I	—
5	—	BU	4541	Hybrid/EV Battery Cell Voltage Signal 57	I	—
6 - 8	—	—	—	Not Occupied	—	—

C5G Hybrid/EV Battery Module 7 X1

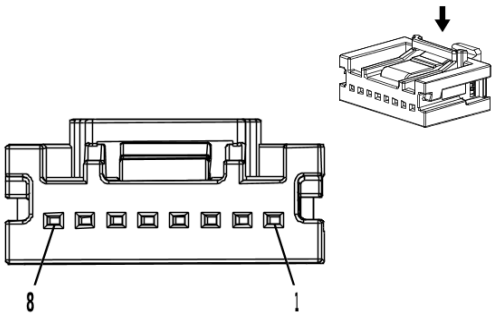

4017639

Connector Part Information

Harness Type: Internal Battery Low Voltage
OEM Connector: 34791-5180
Service Connector: Service by Harness - See Part Catalog
Description: 8-Way F Mini 50 Series(BK)

Terminal Part Information

Terminal Type ID	Terminated Lead	Diagnostic Test Probe	Terminal Removal Tool
I	Not required	EL-35616-58 (BK)	No Tool Required

C5G Hybrid/EV Battery Module 7 X1

Pin	Size	Color	Circuit	Function	Terminal Type ID	Option
1	—	GY	4519	Hybrid/EV Battery Cell Voltage Signal 38	I	—
2	—	OG	4549	Hybrid/EV Battery Cell Voltage Signal 64	I	—
3	—	YE	4547	Hybrid/EV Battery Cell Voltage Signal 62	I	—
4	—	GN	4545	Hybrid/EV Battery Cell Voltage Signal 60	I	—
5	—	GN	5403	Hybrid/EV Battery Pack Monitor Low Reference	I	—
6 - 8	—	—	—	Not Occupied	—	—

C5G Hybrid/EV Battery Module 7 X2

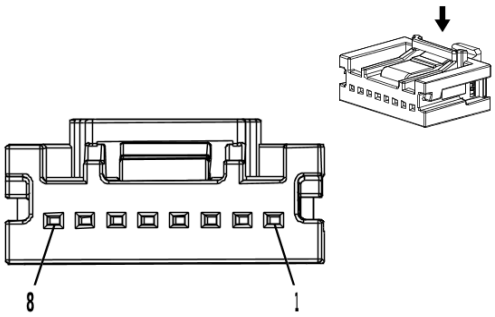

4017639

Connector Part Information

Harness Type: Internal Battery Low Voltage
OEM Connector: 34791-5180
Service Connector: Service by Harness - See Part Catalog
Description: 8-Way F Mini 50 Series(BK)

Terminal Part Information

Terminal Type ID	Terminated Lead	Diagnostic Test Probe	Terminal Removal Tool
I	Not required	EL-35616-58 (BK)	No Tool Required

C5G Hybrid/EV Battery Module 7 X2

Pin	Size	Color	Circuit	Function	Terminal Type ID	Option
1	—	WH	4518	Hybrid/EV Battery Cell Voltage Signal 37	I	—
2	—	VT	4548	Hybrid/EV Battery Cell Voltage Signal 63	I	—
3	—	BU	4546	Hybrid/EV Battery Cell Voltage Signal 61	I	—
4	—	PK	4544	Hybrid/EV Battery Cell Voltage Signal 59	I	—
5 - 8	—	—	—	Not Occupied	—	—

C5H Hybrid/EV Battery Module 8 X1

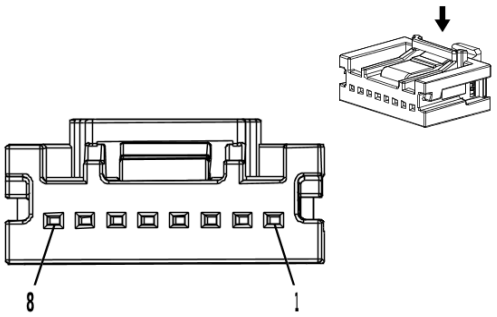

4017639

Connector Part Information

Harness Type: Internal Battery Low Voltage
OEM Connector: 34791-5180
Service Connector: Service by Harness - See Part Catalog
Description: 8-Way F Mini 50 Series(BK)

Terminal Part Information

Terminal Type ID	Terminated Lead	Diagnostic Test Probe	Terminal Removal Tool
I	Not required	EL-35616-58 (BK)	No Tool Required

C5H Hybrid/EV Battery Module 8 X1

Pin	Size	Color	Circuit	Function	Terminal Type ID	Option
1	—	BN	5403	Hybrid/EV Battery Pack Monitor Low Reference	I	—
2	—	BU	4556	Hybrid/EV Battery Cell Voltage Signal 68	I	—
3	—	GN	4558	Hybrid/EV Battery Cell Voltage Signal 70	I	—
4	—	GN	4561	Hybrid/EV Battery Cell Voltage Signal 72	I	—
5	—	YE	4563	Hybrid/EV Battery Cell Voltage Signal 74	I	—
6	—	OG	4565	Hybrid/EV Battery Cell Voltage Signal 76	I	—
7 - 8	—	—	—	Not Occupied	—	—

C5H Hybrid/EV Battery Module 8 X2

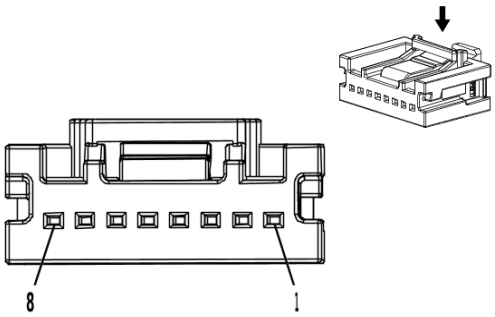

4017639

Connector Part Information

Harness Type: Internal Battery Low Voltage
OEM Connector: 34791-5180
Service Connector: Service by Harness - See Part Catalog
Description: 8-Way F Mini 50 Series(BK)

Terminal Part Information

Terminal Type ID	Terminated Lead	Diagnostic Test Probe	Terminal Removal Tool
I	Not required	EL-35616-58 (BK)	No Tool Required

C5H Hybrid/EV Battery Module 8 X2

Pin	Size	Color	Circuit	Function	Terminal Type ID	Option
1	—	OG	4555	Hybrid/EV Battery Cell Voltage Signal 67	I	—
2	—	GN / WH	4557	Hybrid/EV Battery Cell Voltage Signal 69	I	—
3	—	PK	4560	Hybrid/EV Battery Cell Voltage Signal 71	I	—
4	—	BU	4562	Hybrid/EV Battery Cell Voltage Signal 73	I	—
5	—	VT	4564	Hybrid/EV Battery Cell Voltage Signal 75	I	—
6 - 8	—	—	—	Not Occupied	—	—

C5J Hybrid/EV Battery Module 9 X1

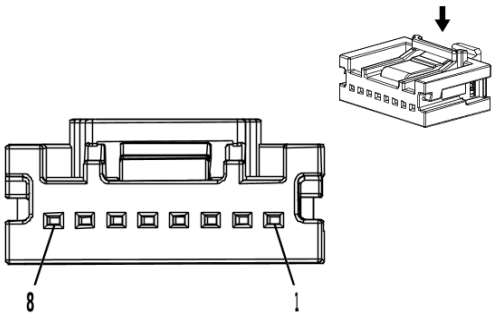

4017639

Connector Part Information

Harness Type: Internal Battery Low Voltage
OEM Connector: 34791-5180
Service Connector: Service by Harness - See Part Catalog
Description: 8-Way F Mini 50 Series(BK)

Terminal Part Information

Terminal Type ID	Terminated Lead	Diagnostic Test Probe	Terminal Removal Tool
I	Not required	EL-35616-58 (BK)	No Tool Required

C5J Hybrid/EV Battery Module 9 X1

Pin	Size	Color	Circuit	Function	Terminal Type ID	Option
1	—	YE	4575	Hybrid/EV Battery Cell Voltage Signal 86	I	—
2	—	GN	4573	Hybrid/EV Battery Cell Voltage Signal 84	I	—
3	—	GN	4571	Hybrid/EV Battery Cell Voltage Signal 82	I	—
4	—	BU	4569	Hybrid/EV Battery Cell Voltage Signal 80	I	—
5	—	BN	4567	Hybrid/EV Battery Cell Voltage Signal 78	I	—
6	—	WH	5403	Hybrid/EV Battery Pack Monitor Low Reference	I	—
7 - 8	—	—	—	Not Occupied	—	—

C5J Hybrid/EV Battery Module 9 X2

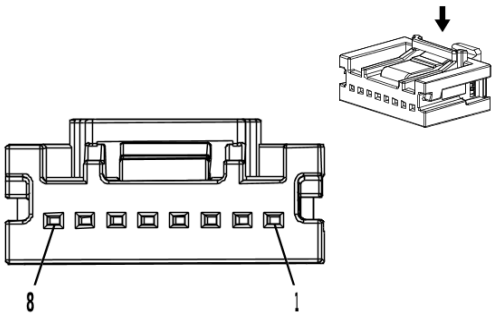

4017639

Connector Part Information

Harness Type: Internal Battery Low Voltage
OEM Connector: 34791-5180
Service Connector: Service by Harness - See Part Catalog
Description: 8-Way F Mini 50 Series(BK)

Terminal Part Information

Terminal Type ID	Terminated Lead	Diagnostic Test Probe	Terminal Removal Tool
I	Not required	EL-35616-58 (BK)	No Tool Required

C5J Hybrid/EV Battery Module 9 X2

Pin	Size	Color	Circuit	Function	Terminal Type ID	Option
1	—	BU	4574	Hybrid/EV Battery Cell Voltage Signal 85	I	—
2	—	PK	4572	Hybrid/EV Battery Cell Voltage Signal 83	I	—
3	—	GN / WH	4570	Hybrid/EV Battery Cell Voltage Signal 81	I	—
4	—	OG	4568	Hybrid/EV Battery Cell Voltage Signal 79	I	—
5	—	GY	4566	Hybrid/EV Battery Cell Voltage Signal 77	I	—
6 - 8	—	—	—	Not Occupied	—	—

C5K Hybrid/EV Battery Module 10 X1

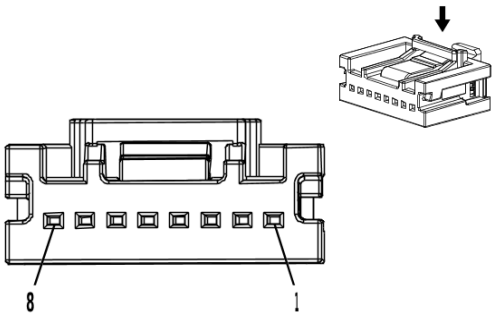

4017639

Connector Part Information

Harness Type: Internal Battery Low Voltage
OEM Connector: 34791-5180
Service Connector: Service by Harness - See Part Catalog
Description: 8-Way F Mini 50 Series(BK)

Terminal Part Information

Terminal Type ID	Terminated Lead	Diagnostic Test Probe	Terminal Removal Tool
I	Not required	EL-35616-58 (BK)	No Tool Required

C5K Hybrid/EV Battery Module 10 X1

Pin	Size	Color	Circuit	Function	Terminal Type ID	Option
1	—	VT	5403	Hybrid/EV Battery Pack Monitor Low Reference	I	—
2	—	WH	4577	Hybrid/EV Battery Cell Voltage Signal 88	I	—
3	—	BN	2390	Hybrid/EV Battery Cell Voltage Signal 90	I	—
4	—	BU	2392	Hybrid/EV Battery Cell Voltage Signal 92	I	—
5	—	GN	2394	Hybrid/EV Battery Cell Voltage Signal 94	I	—
6	—	PK	2396	Hybrid/EV Battery Cell Voltage Signal 96	I	—
7 - 8	—	—	—	Not Occupied	—	—

C5K Hybrid/EV Battery Module 10 X2

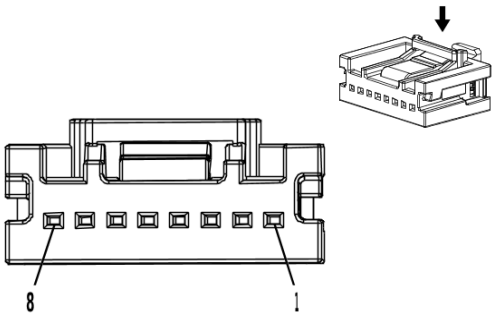

4017639

Connector Part Information

Harness Type: Internal Battery Low Voltage
OEM Connector: 34791-5180
Service Connector: Service by Harness - See Part Catalog
Description: 8-Way F Mini 50 Series(BK)

Terminal Part Information

Terminal Type ID	Terminated Lead	Diagnostic Test Probe	Terminal Removal Tool
I	Not required	EL-35616-58 (BK)	No Tool Required

C5K Hybrid/EV Battery Module 10 X2

Pin	Size	Color	Circuit	Function	Terminal Type ID	Option
1	—	OG	4576	Hybrid/EV Battery Cell Voltage Signal 87	I	—
2	—	GY	2389	Hybrid/EV Battery Cell Voltage Signal 89	I	—
3	—	OG	2391	Hybrid/EV Battery Cell Voltage Signal 91	I	—
4	—	GN / WH	2393	Hybrid/EV Battery Cell Voltage Signal 93	I	—
5	—	BU	2395	Hybrid/EV Battery Cell Voltage Signal 95	I	—
6 - 8	—	—	—	Not Occupied	—	—

E1AC Accent Lamp - Center Console Cupholder

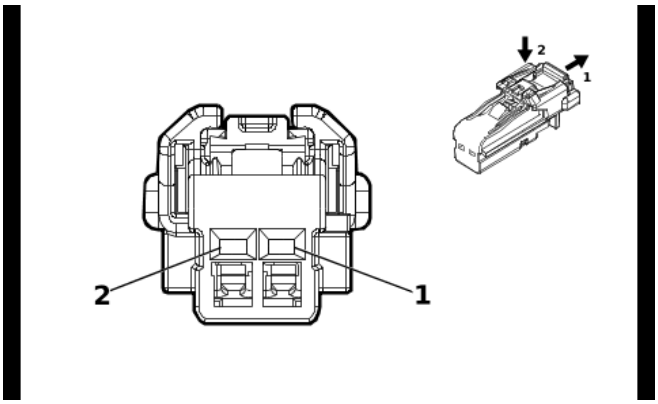

4115691

Connector Part Information

Harness Type: Front Floor Console Wiring Harness
OEM Connector: 13532422
Service Connector: Service by Harness - See Part Catalog
Description: 2-Way F 1.2 MCON Series(BK)

Terminal Part Information

Terminal Type ID	Terminated Lead	Diagnostic Test Probe	Terminal Removal Tool
I	Not required	J-35616-16 (L-GN)	No Tool Required

E1AC Accent Lamp - Center Console Cupholder

Pin	Size	Color	Circuit	Function	Terminal Type ID	Option
1	0.5	GY	157	Interior Lamp Control	I	—
2	0.5	BK	550	Ground	I	—

E1D Accent Lamp - Driver Door

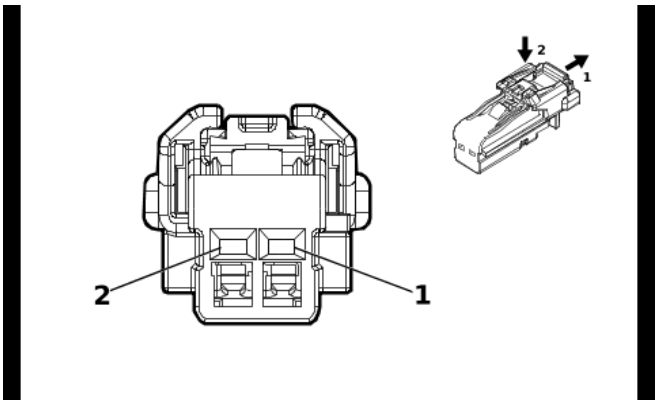

4115691

Connector Part Information

Harness Type: Front Side Door Door Wiring Harness - Driver
OEM Connector: 13532422
Service Connector: Service by Harness - See Part Catalog
Description: 2-Way F 1.2 MCON Series(BK)

Terminal Part Information

Terminal Type ID	Terminated Lead	Diagnostic Test Probe	Terminal Removal Tool
I	Not required	J-35616-16 (L-GN)	No Tool Required

E1D Accent Lamp - Driver Door

Pin	Size	Color	Circuit	Function	Terminal Type ID	Option
1	0.5	BK	550	Ground	I	C9B
2	0.5	WH / YE	7557	Interior Door Handle Accent Lighting Control	I	C9B

E1H Accent Lamp - Right Instrument Panel

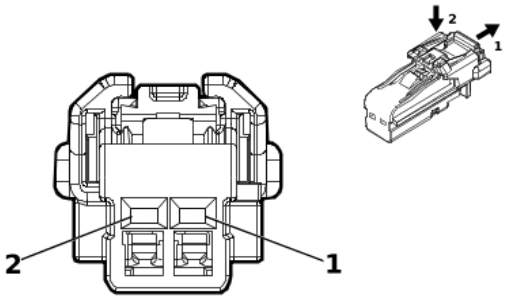

4115691

Connector Part Information

Harness Type: Instrument Panel Wiring Harness
OEM Connector: 13532422
Service Connector: 19352066
Description: 2-Way F 1.2 MCON Series(BK)

Terminal Part Information

Terminal Type ID	Terminated Lead	Diagnostic Test Probe	Terminal Removal Tool
I	Not required	J-35616-16 (L-GN)	No Tool Required

E1H Accent Lamp - Right Instrument Panel

Pin	Size	Color	Circuit	Function	Terminal Type ID	Option
1	0.35	WH / YE	7557	Interior Door Handle Accent Lighting Control	I	
2	0.35	BK	1250	Ground	I	

E1P Accent Lamp - Passenger Door

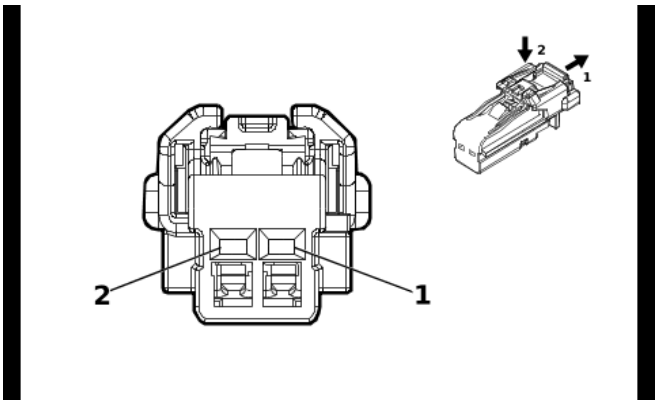

4115691

Connector Part Information

Harness Type: Front Side Door Door Wiring Harness - Passenger
OEM Connector: 13532422
Service Connector: Service by Harness - See Part Catalog
Description: 2-Way F 1.2 MCON Series(BK)

Terminal Part Information

Terminal Type ID	Terminated Lead	Diagnostic Test Probe	Terminal Removal Tool
I	Not required	J-35616-16 (L-GN)	No Tool Required

E1P Accent Lamp - Passenger Door

Pin	Size	Color	Circuit	Function	Terminal Type ID	Option
1	0.5	BK	750	Ground	I	C9B
2	0.5	WH / YE	7557	Interior Door Handle Accent Lighting Control	I	C9B

E2LR Side Marker Lamp - Left Rear

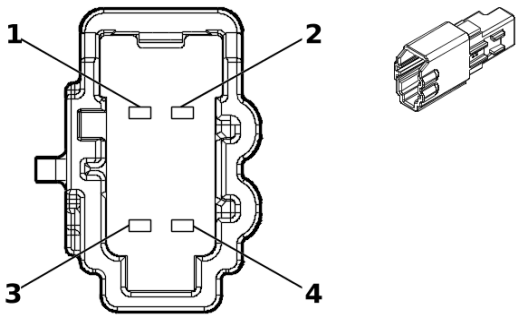

5360963

Connector Part Information

Harness Type: Body Wiring Harness
OEM Connector: 13530132
Service Connector: 84847258
Description: 4-Way M 1.2 MCON Series(BK)

Terminal Part Information

Terminal Type ID	Terminated Lead	Diagnostic Test Probe	Terminal Removal Tool
I	Not required	J-35616-17 (L-GN)	No Tool Required

E2LR Side Marker Lamp - Left Rear

Pin	Size	Color	Circuit	Function	Terminal Type ID	Option
1	0.5	VT / GY	709	Left Park Lamp Control	I	—
2 - 3	—	—	—	Not Occupied	—	—
4	0.5	BK	1150	Ground	I	—

E2RR Side Marker Lamp - Right Rear

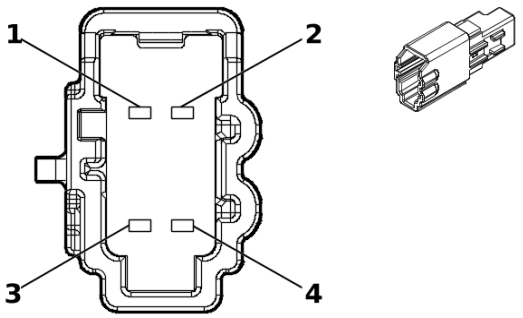

5360963

Connector Part Information

Harness Type: Body Wiring Harness
OEM Connector: 13530132
Service Connector: 84847258
Description: 4-Way M 1.2 MCON Series(BK)

Terminal Part Information

Terminal Type ID	Terminated Lead	Diagnostic Test Probe	Terminal Removal Tool
I	Not required	J-35616-17 (L-GN)	No Tool Required

E2RR Side Marker Lamp - Right Rear

Pin	Size	Color	Circuit	Function	Terminal Type ID	Option
1	0.5	GY / BN	309	Right Park Lamp Control	I	—
2 - 3	—	—	—	Not Occupied	—	—
4	0.5	BK	1950	Ground	I	—

E5 Backup Lamp

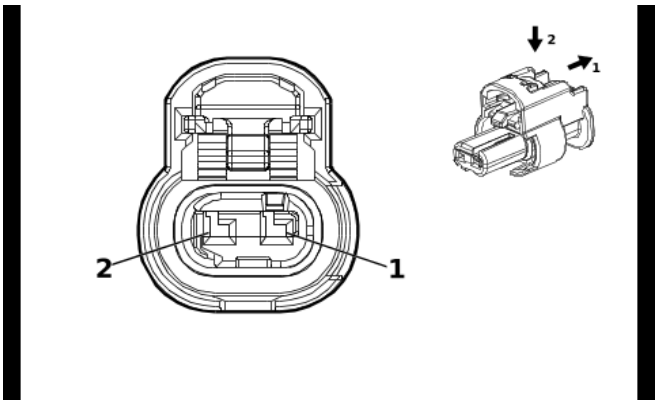

4649903

Connector Part Information

Harness Type: Rear Object Alarm Sensor Wiring Harness
OEM Connector: 13512365
Service Connector: Service by Harness - See Part Catalog
Description: 2-Way F 1.2 MCON Series, Sealed(BK)

Terminal Part Information

Terminal Type ID	Terminated Lead	Diagnostic Test Probe	Terminal Removal Tool
I	Not required	J-35616-16 (L-GN)	No Tool Required

E5 Backup Lamp

Pin	Size	Color	Circuit	Function	Terminal Type ID	Option
1	0.5	GN / WH	24	Backup Lamp Control	I	—
2	0.5	BK	1950	Ground	I	—

E5AA Tail/Stop Lamp - Left

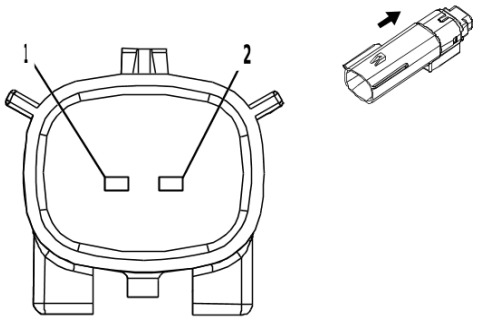

3338703

Connector Part Information

Harness Type: Rear License Plate Lamp Wiring Harness Extension Harness
OEM Connector: 13526818
Service Connector: Service by Harness - See Part Catalog
Description: 2-Way M 1.5 MX Series, Sealed(BK)

Terminal Part Information

Terminal Type ID	Terminated Lead	Diagnostic Test Probe	Terminal Removal Tool
I	Not required	J-35616-3 (GY)	No Tool Required

E5AA Tail/Stop Lamp - Left

Pin	Size	Color	Circuit	Function	Terminal Type ID	Option
1	0.5	VT / GY	709	Left Park Lamp Control	I	—
2	0.5	BK	1150	Ground	I	—

E5AB Tail/Stop Lamp - Right

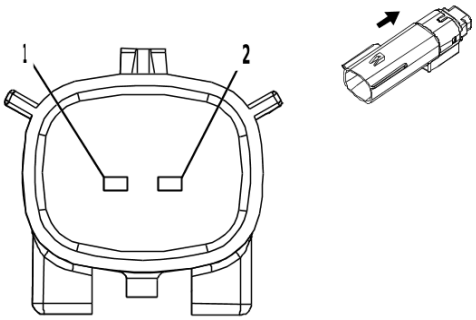

3338703

Connector Part Information

Harness Type: Rear License Plate Lamp Wiring Harness Extension Harness
OEM Connector: 13526818
Service Connector: Service by Harness - See Part Catalog
Description: 2-Way M 1.5 MX Series, Sealed(BK)

Terminal Part Information

Terminal Type ID	Terminated Lead	Diagnostic Test Probe	Terminal Removal Tool
I	Not required	J-35616-3 (GY)	No Tool Required

E5AB Tail/Stop Lamp - Right

Pin	Size	Color	Circuit	Function	Terminal Type ID	Option
1	0.5	GY / BN	309	Right Park Lamp Control	I	—
2	0.5	BK	1950	Ground	I	—

E6 Center High Mounted Stop Lamp

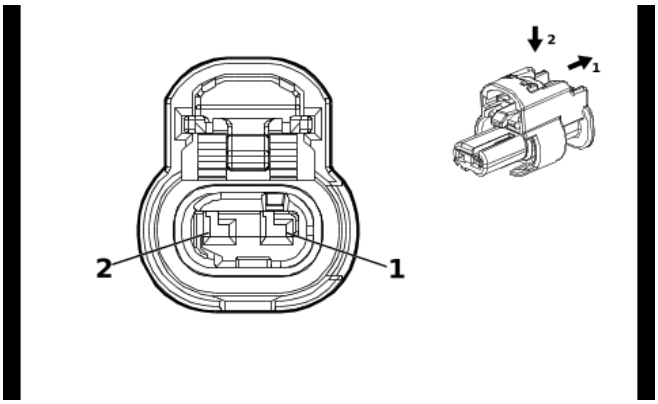

4649903

Connector Part Information

Harness Type: Liftgate Wiring Harness Extension Harness
OEM Connector: 13512365
Service Connector: Service by Harness - See Part Catalog
Description: 2-Way F 1.2 MCON Series, Sealed(BK)

Terminal Part Information

Terminal Type ID	Terminated Lead	Diagnostic Test Probe	Terminal Removal Tool
I	Not required	J-35616-16 (L-GN)	No Tool Required

E6 Center High Mounted Stop Lamp

Pin	Size	Color	Circuit	Function	Terminal Type ID	Option
1	0.5	BK	1050	Ground	I	—
2	0.5	BN / YE	820	Center High Mounted Stop Lamp Supply Voltage	I	—

E7 License Plate Lamp

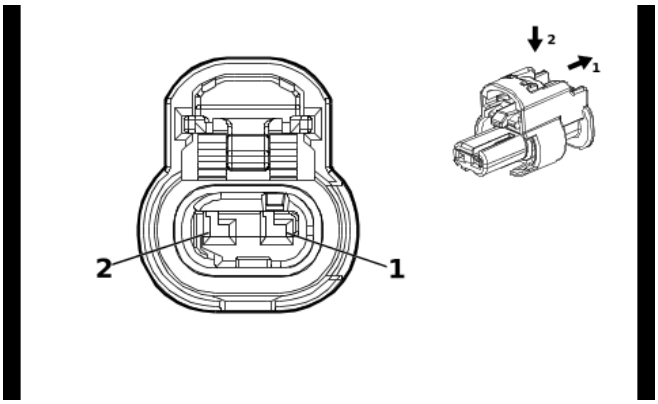

4649903

Connector Part Information

Harness Type: Rear License Plate Lamp Wiring Harness Extension Harness
OEM Connector: 13512365
Service Connector: Service by Harness - See Part Catalog
Description: 2-Way F 1.2 MCON Series, Sealed(BK)

Terminal Part Information

Terminal Type ID	Terminated Lead	Diagnostic Test Probe	Terminal Removal Tool
I	Not required	J-35616-16 (L-GN)	No Tool Required

E7 License Plate Lamp

Pin	Size	Color	Circuit	Function	Terminal Type ID	Option
1	0.5	BK	1050	Ground	I	—
2	0.35	GN / YE	6846	Rear License Plate Lamp Control	I	—

E8S Rear Compartment Courtesy Lamp

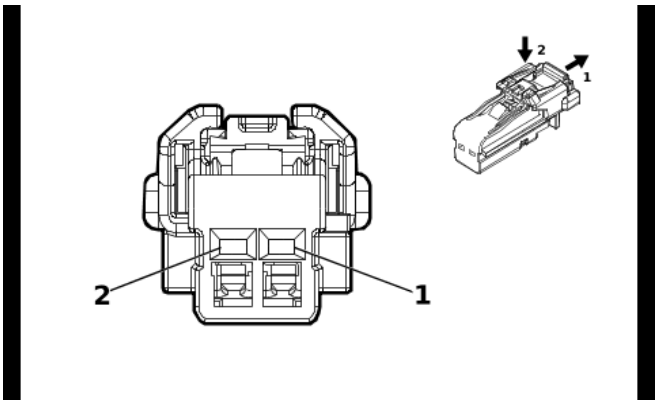

4115691

Connector Part Information

Harness Type: Body Wiring Harness
OEM Connector: 13532422
Service Connector: 19352066
Description: 2-Way F 1.2 MCON Series(BK)

Terminal Part Information

Terminal Type ID	Terminated Lead	Diagnostic Test Probe	Terminal Removal Tool
I	Not required	J-35616-16 (L-GN)	No Tool Required

E8S Rear Compartment Courtesy Lamp

Pin	Size	Color	Circuit	Function	Terminal Type ID	Option
1	0.5	GN / GY	737	Rear Compartment Courtesy Lamp Control	I	—
2	0.5	BK	1150	Ground	I	—

E14A Seat Heating Element - Driver Back (KA1)

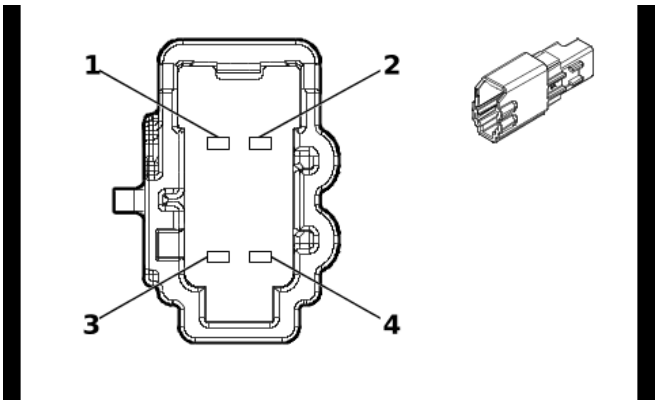

5423974

Connector Part Information

Harness Type: Front Driver Seat Wiring Harness
OEM Connector: 6098-9049
Service Connector: Service by Harness - See Part Catalog
Description: 4-Way M 1.2 MCON Series(GY)

Terminal Part Information

Terminal Type ID	Terminated Lead	Diagnostic Test Probe	Terminal Removal Tool
I	Not required	J-35616-17 (L-GN)	No Tool Required

E14A Seat Heating Element - Driver Back (KA1)

Pin	Size	Color	Circuit	Function	Terminal Type ID	Option
1	0.75	BN / VT	2077	Driver Seat Heating Element Control	I	—
2	0.5	BU	2425	Driver Seat Back Heating Temperature Sensor Signal	I	—
3	0.5	BK / YE	2080	Driver Heated Seat Thermistor Low Reference	I	—
4	0.75	VT / BK	2424	Driver Seat Back Heating Element Low Reference	I	—

E14B Seat Heating Element - Driver Cushion (KA1)

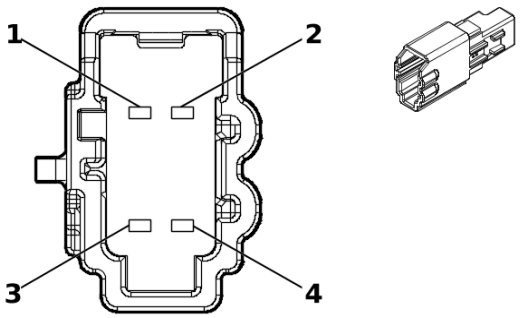

5360963

Connector Part Information

Harness Type: Front Driver Seat Wiring Harness
OEM Connector: 6098-9046
Service Connector: Service by Harness - See Part Catalog
Description: 4-Way M 1.2 MCON Series(BK)

Terminal Part Information

Terminal Type ID	Terminated Lead	Diagnostic Test Probe	Terminal Removal Tool
I	Not required	J-35616-17 (L-GN)	No Tool Required

E14B Seat Heating Element - Driver Cushion (KA1)

Pin	Size	Color	Circuit	Function	Terminal Type ID	Option
1	0.75	BN / VT	2077	Driver Seat Heating Element Control	I	—
2	0.5	YE / GY	2079	Driver Seat Heating Temperature Sensor Signal	I	—
3	0.5	BK / YE	2080	Driver Heated Seat Thermistor Low Reference	I	—
4	0.75	VT / BK	2424	Driver Seat Back Heating Element Low Reference	I	—

E14C Seat Heating Element - Passenger Back (KA1)

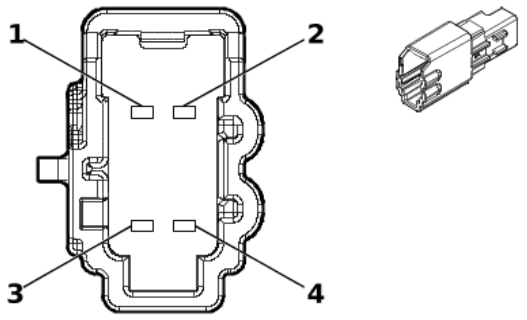

5423974

Connector Part Information

Harness Type: Front Passenger Seat Wiring Harness
OEM Connector: 6098-9049
Service Connector: Service by Harness - See Part Catalog
Description: 4-Way M 1.2 MCON Series(GY)

Terminal Part Information

Terminal Type ID	Terminated Lead	Diagnostic Test Probe	Terminal Removal Tool
I	Not required	J-35616-17 (L-GN)	No Tool Required

E14C Seat Heating Element - Passenger Back (KA1)

Pin	Size	Color	Circuit	Function	Terminal Type ID	Option
1	0.75	BN / BU	2479	Passenger Seat Heating Element Control	I	—
2	0.5	WH / BU	2436	Passenger Seat Back Heating Temperature Sensor Signal	I	—
3	0.5	BK / GY	2435	Passenger Heated Seat Thermistor Low Reference	I	—
4	0.75	GY / BK	2480	Passenger Seat Heating Element Low Reference	I	—

E14D Seat Heating Element - Passenger Cushion (KA1)

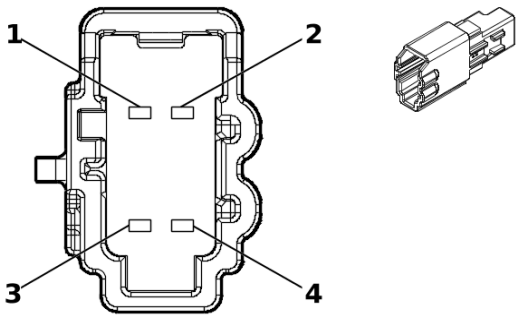

5360963

Connector Part Information

Harness Type: Front Passenger Seat Wiring Harness
OEM Connector: 6098-9046
Service Connector: Service by Harness - See Part Catalog
Description: 4-Way M 1.2 MCON Series(BK)

Terminal Part Information

Terminal Type ID	Terminated Lead	Diagnostic Test Probe	Terminal Removal Tool
I	Not required	J-35616-17 (L-GN)	No Tool Required

E14D Seat Heating Element - Passenger Cushion (KA1)

Pin	Size	Color	Circuit	Function	Terminal Type ID	Option
1	0.75	BN / BU	2479	Passenger Seat Heating Element Control	I	—
2	0.5	WH / GY	2434	Passenger Seat Heating Temperature Sensor Signal	I	—
3	0.5	BK / GY	2435	Passenger Heated Seat Thermistor Low Reference	I	—
4	0.75	GY / BK	2480	Passenger Seat Heating Element Low Reference	I	—

E14F Seat Heating Element - Left Rear Cushion (KA6)

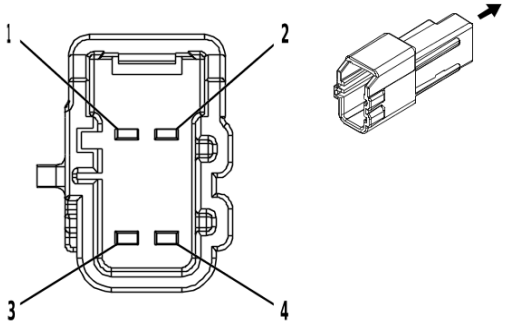

4210503

Connector Part Information

Harness Type: Rear Seat
OEM Connector: 13595572
Service Connector: Service by Harness - See Part Catalog
Description: 4-Way M 1.2 Series(BK)

Terminal Part Information

Terminal Type ID	Terminated Lead	Diagnostic Test Probe	Terminal Removal Tool
I	Not required	J-35616-13 (BU)	No Tool Required

E14F Seat Heating Element - Left Rear Cushion (KA6)

Pin	Size	Color	Circuit	Function	Terminal Type ID	Option
1	0.75	GY	2294	Left Rear Seat Cushion Heating Element Control	I	—
2	0.5	GY / BU	7047	Left Rear Seat Cushion Temperature Sensor Signal	I	—
3	0.5	VT / RD	7048	Left Rear Cushion Thermistor Feedback Signal	I	—
4	0.75	BN / BK	2295	Left Rear Seat Cushion Heating Element Low Reference	I	—

E14H Seat Heating Element - Right Rear Cushion (KA6)

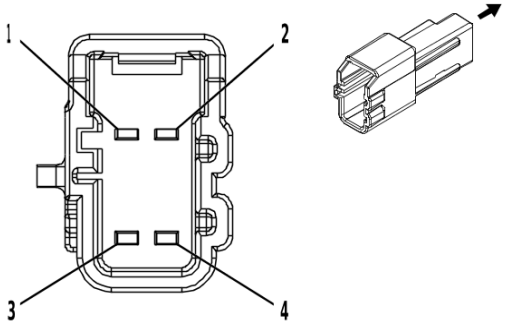

4210503

Connector Part Information

Harness Type: Rear Seat
OEM Connector: 13595572
Service Connector: Service by Harness - See Part Catalog
Description: 4-Way M 1.2 Series(BK)

Terminal Part Information

Terminal Type ID	Terminated Lead	Diagnostic Test Probe	Terminal Removal Tool
I	Not required	J-35616-13 (BU)	No Tool Required

E14H Seat Heating Element - Right Rear Cushion (KA6)

Pin	Size	Color	Circuit	Function	Terminal Type ID	Option
1	0.75	GN / BN	2296	Right Rear Seat Cushion Heating Element Control	I	—
2	0.5	YE / WH	7053	Right Rear Seat Cushion Temperature Sensor Signal	I	—
3	0.5	WH / BK	7054	Right Rear Cushion Thermistor Feedback Signal	I	—
4	0.75	GN / BK	2297	Right Rear Seat Cushion Heating Element Low Reference	I	—

E18 Rear Defogger Grid X1

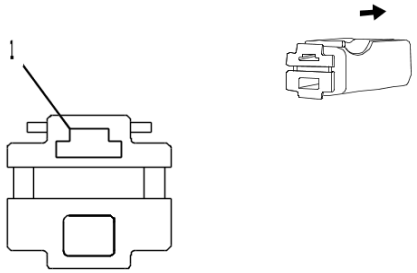

1413086

Connector Part Information

Harness Type: Liftgate Wiring Harness
OEM Connector: 13585268
Service Connector: Service by Harness - See Part Catalog
Description: 1-Way F 250 Series(BK)

Terminal Part Information

Terminal Type ID	Terminated Lead	Diagnostic Test Probe	Terminal Removal Tool
I	Not required	J-35616-42 (RD)	No Tool Required

E18 Rear Defogger Grid X1

Pin	Size	Color	Circuit	Function	Terminal Type ID	Option
1	2.5	BN / VT	293	Rear Defogger Grid Control	I	—

E18 Rear Defogger Grid X2

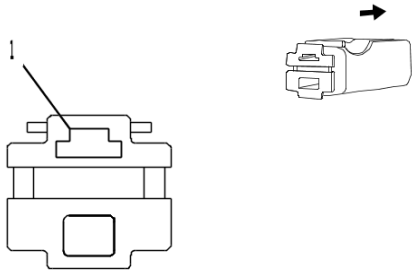

1413086

Connector Part Information

Harness Type: Liftgate Wiring Harness
OEM Connector: 13585268
Service Connector: Service by Harness - See Part Catalog
Description: 1-Way F 250 Series(BK)

Terminal Part Information

Terminal Type ID	Terminated Lead	Diagnostic Test Probe	Terminal Removal Tool
I	Not required	J-35616-42 (RD)	No Tool Required

E18 Rear Defogger Grid X2

Pin	Size	Color	Circuit	Function	Terminal Type ID	Option
1	2.5	BK	1950	Ground	I	—

E31L Sunshade Mirror Lamp - Left (DMS)

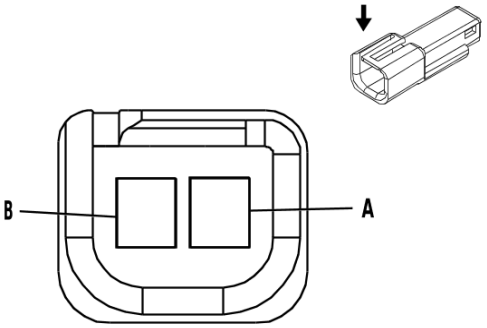

2179758

Connector Part Information

Harness Type: Roof Wiring Harness
OEM Connector: 90565972
Service Connector: 13584278
Description: 2-Way M 150 Metri-Pack Series(BK)

Terminal Part Information

Terminal Type ID	Terminated Lead	Diagnostic Test Probe	Terminal Removal Tool
I	Not required	J-35616-3 (GY)	No Tool Required

E31L Sunshade Mirror Lamp - Left (DMS)

Pin	Size	Color	Circuit	Function	Terminal Type ID	Option
A	0.5	WH / BN	6815	Inadvertent Load Control	I	DMS
B	0.5	BK	650	Ground	I	DMS

E31R Sunshade Mirror Lamp - Right (DMS)

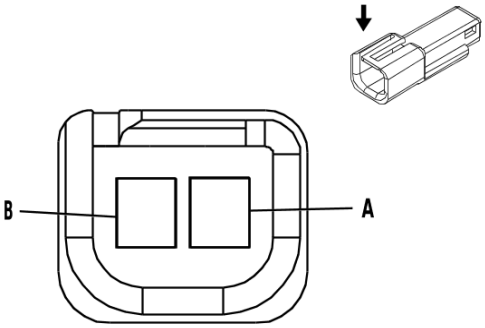

2179758

Connector Part Information

Harness Type: Roof Wiring Harness
OEM Connector: 90565972
Service Connector: 13584278
Description: 2-Way M 150 Metri-Pack Series(BK)

Terminal Part Information

Terminal Type ID	Terminated Lead	Diagnostic Test Probe	Terminal Removal Tool
I	Not required	J-35616-3 (GY)	No Tool Required

E31R Sunshade Mirror Lamp - Right (DMS)

Pin	Size	Color	Circuit	Function	Terminal Type ID	Option
A	0.5	WH / BN	6815	Inadvertent Load Control	I	DMS
B	0.5	BK	650	Ground	I	DMS

E36AC Dome Lamp - Left Roof Rail (CAJ)

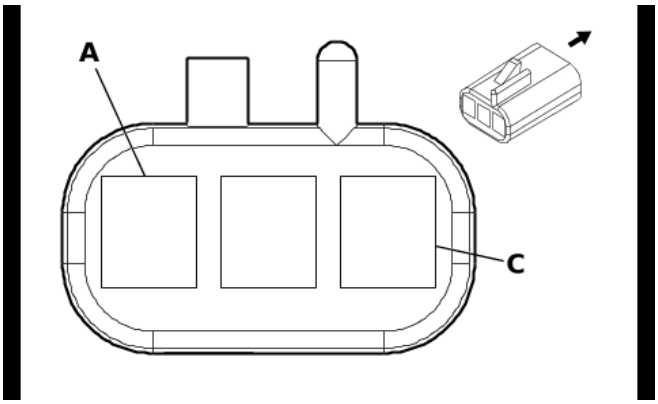

333035

Connector Part Information

Harness Type: Roof Wiring Harness
OEM Connector: 12047781
Service Connector: 13586139
Description: 3-Way F 150 Metri-Pack Series(BK)

Terminal Part Information

Terminal Type ID	Terminated Lead	Diagnostic Test Probe	Terminal Removal Tool
I	Not required	J-35616-14 (GN)	No Tool Required

E36AC Dome Lamp - Left Roof Rail (CAJ)

Pin	Size	Color	Circuit	Function	Terminal Type ID	Option
A	0.5	WH / BN	6815	Inadvertent Load Control	I	CAJ
B	0.5	BK	650	Ground	I	CAJ
C	0.5	GY	157	Interior Lamp Control	I	CAJ

E36AD Dome Lamp - Right Roof Rail (CAJ)

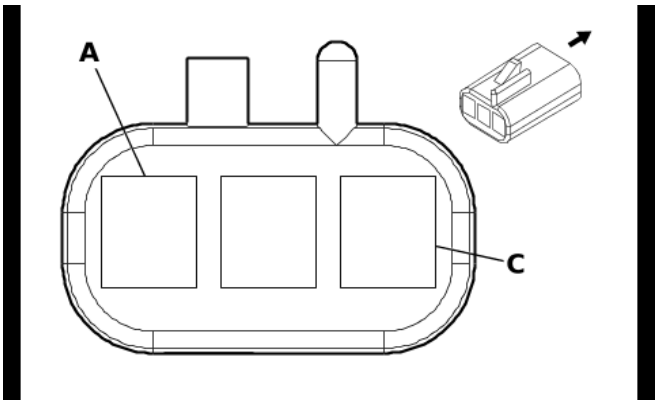

333035

Connector Part Information

Harness Type: Roof Wiring Harness
OEM Connector: 12047781
Service Connector: 13586139
Description: 3-Way F 150 Metri-Pack Series(BK)

Terminal Part Information

Terminal Type ID	Terminated Lead	Diagnostic Test Probe	Terminal Removal Tool
I	Not required	J-35616-14 (GN)	No Tool Required

E36AD Dome Lamp - Right Roof Rail (CAJ)

Pin	Size	Color	Circuit	Function	Terminal Type ID	Option
A	0.5	WH / BN	6815	Inadvertent Load Control	I	CAJ
B	0.5	BK	650	Ground	I	CAJ
C	0.5	GY	157	Interior Lamp Control	I	CAJ

E37D Dome/Reading Lamps - Overhead Console

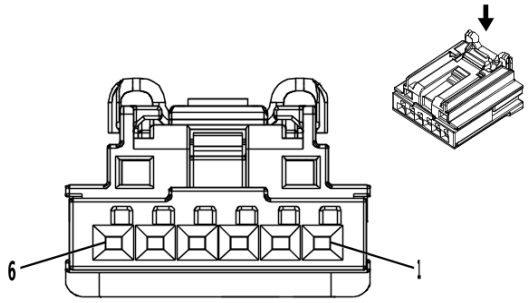

4145138

Connector Part Information

Harness Type: Roof Wiring Harness
OEM Connector: 13583823
Service Connector: 19356359
Description: 6-Way F 0.64 Generation Y Series(BK)

Terminal Part Information

Terminal Type ID	Terminated Lead	Diagnostic Test Probe	Terminal Removal Tool
I	Not required	J-35616-64B (L-BU)	No Tool Required

E37D Dome/Reading Lamps - Overhead Console

Pin	Size	Color	Circuit	Function	Terminal Type ID	Option
1	—	—	—	Not Occupied	—	—
2	0.5	WH / BN	6815	Inadvertent Load Control	I	—
3	0.5	GY	157	Interior Lamp Control	I	—
4	0.5	BK	650	Ground	I	—
5	0.5	GY	156	Courtesy Lamp Switch Signal	I	—
6	0.5	GY / GN	328	Interior Lamp Defeat Switch Signal	I	—

E37R Dome/Reading Lamps - Rear (-CAJ)

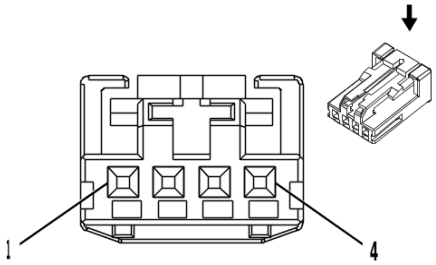

2717162

Connector Part Information

Harness Type: Roof Wiring Harness
OEM Connector: 13577853
Service Connector: 19367524
Description: 4-Way F 0.64 Micro-Quadlock Series(BK)

Terminal Part Information

Terminal Type ID	Terminated Lead	Diagnostic Test Probe	Terminal Removal Tool
I	Not required	J-35616-64B (L-BU)	No Tool Required

E37R Dome/Reading Lamps - Rear (-CAJ)

Pin	Size	Color	Circuit	Function	Terminal Type ID	Option
1	0.5	WH / BN	6815	Inadvertent Load Control	I	- CAJ
2	—	—	—	Not Occupied	—	—
3	0.5	BK	650	Ground	I	- CAJ
4	0.5	GY	157	Interior Lamp Control	I	- CAJ

E54 Hybrid/EV Battery Pack Coolant Heater X1

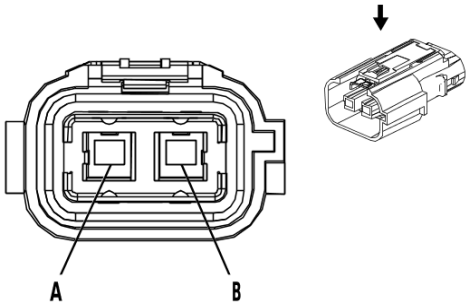

2474682

Connector Part Information

Harness Type: High Voltage Wiring Harness
OEM Connector: 13511378
Service Connector: Service by Harness - See Part Catalog
Description: 2-Way F 280 Metri-Pack Series, Sealed(OG)

Terminal Part Information

Terminal Type ID	Terminated Lead	Diagnostic Test Probe	Terminal Removal Tool
I	Not required	J-35616-4A (PU)	No Tool Required

E54 Hybrid/EV Battery Pack Coolant Heater X1

Pin	Size	Color	Circuit	Function	Terminal Type ID	Option
A	—	OG	2483	Hybrid/EV Battery 7 [+]	I	—
B	—	OG / BK	2485	Hybrid/EV Battery 7 [-]	I	—

E54 Hybrid/EV Battery Pack Coolant Heater X2

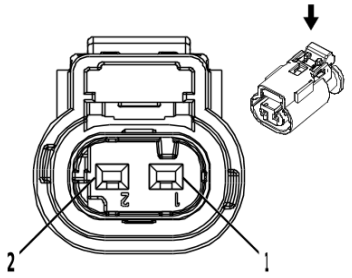

2717066

Connector Part Information

Harness Type: Body Wiring Harness
OEM Connector: 13503566
Service Connector: 13587326
Description: 2-Way F 1.2 Multilock Series, Sealed(BK)

Terminal Part Information

Terminal Type ID	Terminated Lead	Diagnostic Test Probe	Terminal Removal Tool
I	Not required	J-35616-16 (L-GN)	No Tool Required

E54 Hybrid/EV Battery Pack Coolant Heater X2

Pin	Size	Color	Circuit	Function	Terminal Type ID	Option
1	0.5	YE	5411	Hybrid/EV Battery Temperature Signal 7	I	—
2	0.5	BK / BU	3779	Hybrid/EV Battery Temperature Sensor Low Reference 7	I	—

E73L Rear Fascia Tail Lamp Assembly - Left

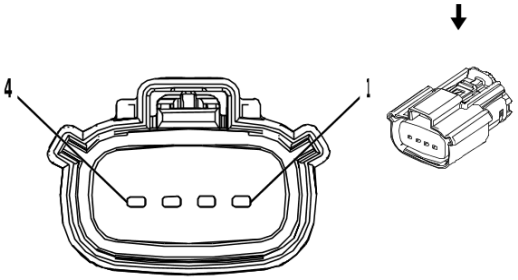

2474747

Connector Part Information

Harness Type: Rear Object Alarm Sensor Wiring Harness
OEM Connector: 13576312
Service Connector: Service by Harness - See Part Catalog
Description: 4-Way F 1.5 Series, Sealed(BK)

Terminal Part Information

Terminal Type ID	Terminated Lead	Diagnostic Test Probe	Terminal Removal Tool
I	Not required	J-35616-14 (GN)	No Tool Required

E73L Rear Fascia Tail Lamp Assembly - Left

Pin	Size	Color	Circuit	Function	Terminal Type ID	Option
1	—	—	—	Not Occupied	—	—
2	0.5	BU / WH	1334	Left Rear Turn Signal Lamp Control 2	I	
3	0.5	BK	1150	Ground	I	
4	0.5	WH / VT	6567	Rear Turn Signal Lamp Feedback Signal	I	

E73R Rear Fascia Tail Lamp Assembly - Right

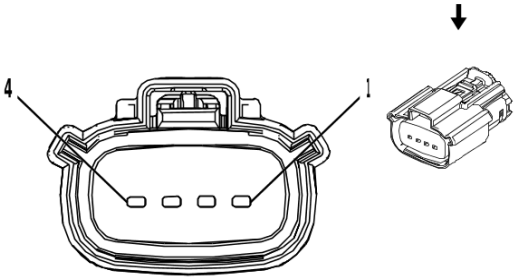

2474747

Connector Part Information

Harness Type: Rear Object Alarm Sensor Wiring Harness
OEM Connector: 13576312
Service Connector: Service by Harness - See Part Catalog
Description: 4-Way F 1.5 Series, Sealed(BK)

Terminal Part Information

Terminal Type ID	Terminated Lead	Diagnostic Test Probe	Terminal Removal Tool
I	Not required	J-35616-14 (GN)	No Tool Required

E73R Rear Fascia Tail Lamp Assembly - Right

Pin	Size	Color	Circuit	Function	Terminal Type ID	Option
1	—	—	—	Not Occupied	—	—
2	0.5	BU / VT	1335	Right Rear Turn Signal Lamp Control 2	I	
3	0.5	BK	1950	Ground	I	
4	0.5	WH / BK	7544	Right Rear Turn Signal Lamp Feedback Signal	I	

F101 Passenger Instrument Panel Air Bag

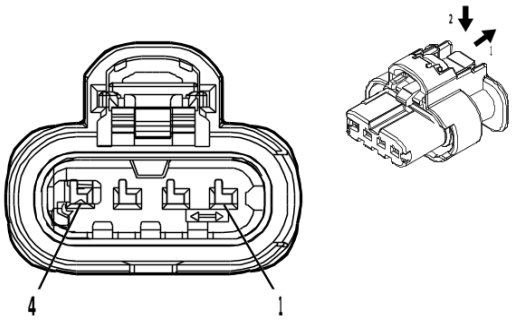

4280383

Connector Part Information

Harness Type: Instrument Panel Wiring Harness
OEM Connector: 13515956
Service Connector: 19368563
Description: 4-Way F 1.2 MCON-CB Series, Sealed(YE)

Terminal Part Information

Terminal Type ID	Terminated Lead	Diagnostic Test Probe	Terminal Removal Tool
I	Not required	J-35616-16 (L-GN)	No Tool Required

F101 Passenger Instrument Panel Air Bag

Pin	Size	Color	Circuit	Function	Terminal Type ID	Option
1	0.5	OG / WH	3024	Passenger Instrument Panel Air Bag Stage 1 Low Control	I	
2	0.5	YE / OG	3025	Passenger Instrument Panel Air Bag Stage 1 High Control	I	
3	0.35	OG / VT	3026	Passenger Instrument Panel Air Bag Stage 2 Low Control	I	
4	0.35	GY / OG	3027	Passenger Instrument Panel Air Bag Stage 2 High Control	I	

F105L Roof Rail Air Bag - Left

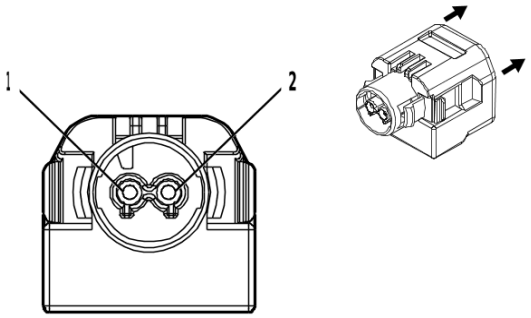

4676225

Connector Part Information

Harness Type: Body Wiring Harness
OEM Connector: 1-1802367-3
Service Connector: 13529172
Description: 2-Way F ABX-5 Series(GY with YE Cover)

Terminal Part Information

Terminal Type ID	Terminated Lead	Diagnostic Test Probe	Terminal Removal Tool
I	Not required	J-35616-64B (L-BU)	No Tool Required

F105L Roof Rail Air Bag - Left

Pin	Size	Color	Circuit	Function	Terminal Type ID	Option
1	0.5	OG / GN	5019	Left Front Roof Rail Air Bag High Control	I	
2	0.5	VT / OG	5020	Left Front Roof Rail Air Bag Low Control	I	

F105R Roof Rail Air Bag - Right

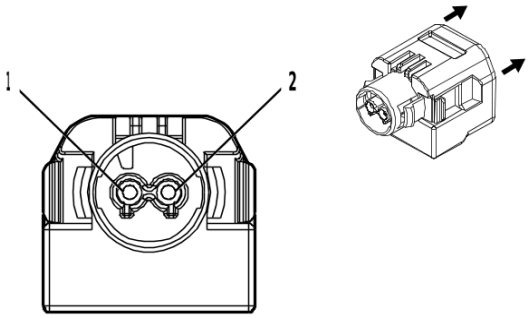

4676225

Connector Part Information

Harness Type: Body Wiring Harness
OEM Connector: 1-1802367-3
Service Connector: 13529172
Description: 2-Way F ABX-5 Series(GY with YE Cover)

Terminal Part Information

Terminal Type ID	Terminated Lead	Diagnostic Test Probe	Terminal Removal Tool
I	Not required	J-35616-64B (L-BU)	No Tool Required

F105R Roof Rail Air Bag - Right

Pin	Size	Color	Circuit	Function	Terminal Type ID	Option
1	0.5	OG / GY	5021	Right Front Roof Rail Air Bag High Control	I	
2	0.5	WH / OG	5022	Right Front Roof Rail Air Bag Low Control	I	

F106LF Seat Side Air Bag - Left Front

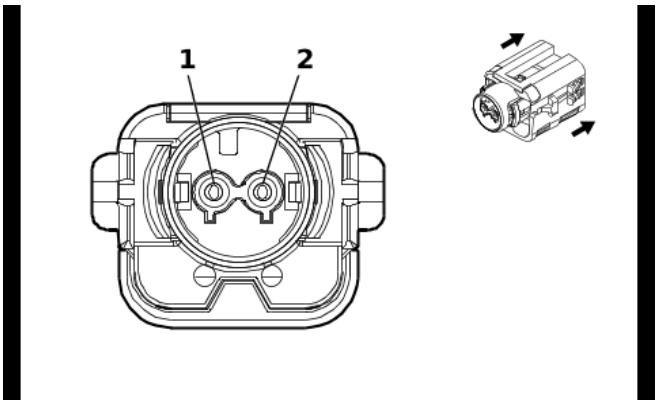

5499727

Connector Part Information

Harness Type: Front Driver Seat Wiring Harness
OEM Connector: 35212936
Service Connector: Service by Harness - See Part Catalog
Description: 2-Way F ABX-5 Series(PK with YE Cover)

Terminal Part Information

Terminal Type ID	Terminated Lead	Diagnostic Test Probe	Terminal Removal Tool
I	Not required	J-35616-10 (GN)	No Tool Required

F106LF Seat Side Air Bag - Left Front

Pin	Size	Color	Circuit	Function	Terminal Type ID	Option
1	0.5	OG / BU	3068	Driver Seat Side Air Bag High Control	I	—
2	0.5	BK / OG	3069	Driver Seat Side Air Bag Low Control	I	—

F106LR Seat Side Air Bag - Left Rear

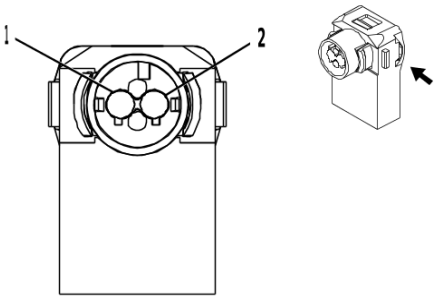

4241364

Connector Part Information

Harness Type: Body Wiring Harness
OEM Connector: 33345774
Service Connector: 19355490
Description: 2-Way F ABX-5 Series(PU with YE Cover)

Terminal Part Information

Terminal Type ID	Terminated Lead	Diagnostic Test Probe	Terminal Removal Tool
I	Not required	J-35616-64B (L-BU)	No Tool Required

F106LR Seat Side Air Bag - Left Rear

Pin	Size	Color	Circuit	Function	Terminal Type ID	Option
1	0.5	OG / GY	5223	Left Rear Seat Side Air Bag High Control	I	
2	0.5	BN / OG	5224	Left Rear Seat Side Air Bag Low Control	I	

F106RF Seat Side Air Bag - Right Front

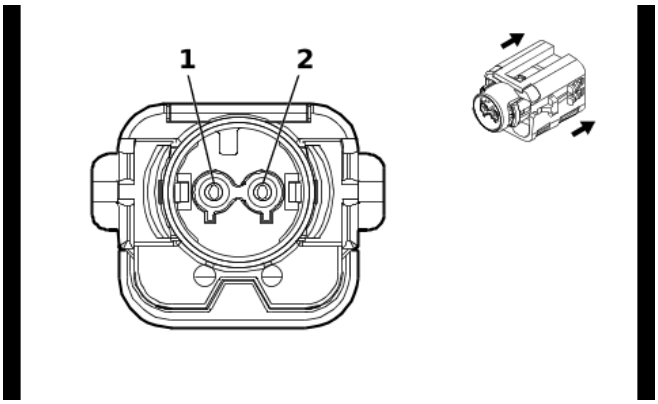

5499727

Connector Part Information

Harness Type: Front Passenger Seat Wiring Harness
OEM Connector: 35212936
Service Connector: Service by Harness - See Part Catalog
Description: 2-Way F ABX-5 Series(PK with YE Cover)

Terminal Part Information

Terminal Type ID	Terminated Lead	Diagnostic Test Probe	Terminal Removal Tool
I	Not required	J-35616-10 (GN)	No Tool Required

F106RF Seat Side Air Bag - Right Front

Pin	Size	Color	Circuit	Function	Terminal Type ID	Option
1	0.5	OG / GY	3066	Passenger Seat Side Air Bag High Control	I	—
2	0.5	BU / OG	3067	Passenger Seat Side Air Bag Low Control	I	—

F106RR Seat Side Air Bag - Right Rear

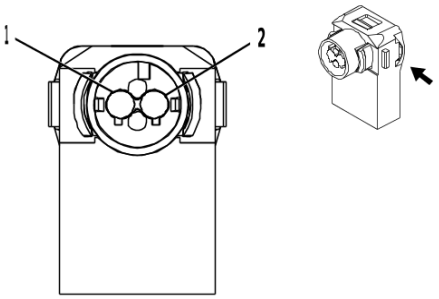

4241364

Connector Part Information

Harness Type: Body Wiring Harness
OEM Connector: 33345774
Service Connector: 19355490
Description: 2-Way F ABX-5 Series(PU with YE Cover)

Terminal Part Information

Terminal Type ID	Terminated Lead	Diagnostic Test Probe	Terminal Removal Tool
I	Not required	J-35616-64B (L-BU)	No Tool Required

F106RR Seat Side Air Bag - Right Rear

Pin	Size	Color	Circuit	Function	Terminal Type ID	Option
1	0.5	VT / OG	5225	Right Rear Seat Side Air Bag High Control	I	
2	0.5	OG / GY	5226	Right Rear Seat Side Air Bag Low Control	I	

F107 Steering Wheel Air Bag X1

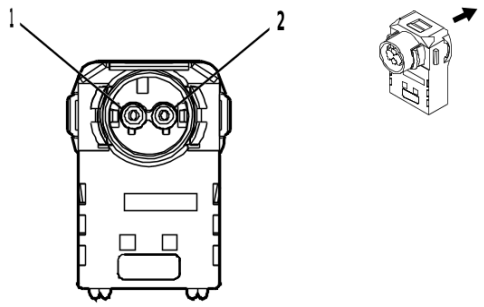

4231869

Connector Part Information

Harness Type: Steering Wheel Wiring Harness
OEM Connector: 33345777
Service Connector: Service by Harness - See Part Catalog
Description: 2-Way F ABX-5 Series(PK with YE Cover)

Terminal Part Information

Terminal Type ID	Terminated Lead	Diagnostic Test Probe	Terminal Removal Tool
I	Not required	No Tool Required	No Tool Required

F107 Steering Wheel Air Bag X1

Pin	Size	Color	Circuit	Function	Terminal Type ID	Option
1	0.5	OG / VT	3021	Steering Wheel Air Bag Stage 1 High Control	I	UKL
	0.5	YE / OG	3021	Steering Wheel Air Bag Stage 1 High Control	I	- UKL
2	0.5	BN / OG	3020	Steering Wheel Air Bag Stage 1 Low Control	I	UKL
	0.5	OG / WH	3020	Steering Wheel Air Bag Stage 1 Low Control	I	- UKL

F107 Steering Wheel Air Bag X2

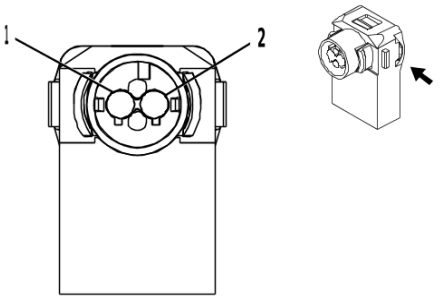

4241364

Connector Part Information

Harness Type: Steering Wheel Wiring Harness
OEM Connector: 33345778
Service Connector: Service by Harness - See Part Catalog
Description: 2-Way F ABX-5 Series(PU with YE Cover)

Terminal Part Information

Terminal Type ID	Terminated Lead	Diagnostic Test Probe	Terminal Removal Tool
I	Not required	No Tool Required	No Tool Required

F107 Steering Wheel Air Bag X2

Pin	Size	Color	Circuit	Function	Terminal Type ID	Option
1	0.5	OG / GN	3023	Steering Wheel Air Bag Stage 2 High Control	I	UKL
	0.5	GY / OG	3023	Steering Wheel Air Bag Stage 2 High Control	I	- UKL
2	0.5	GY / VT	3022	Steering Wheel Air Bag Stage 2 Low Control	I	- KI3- UKL
	0.5	OG / VT	3022	Steering Wheel Air Bag Stage 2 Low Control	I	KI3- UKL
	0.5	WH / OG	3022	Steering Wheel Air Bag Stage 2 Low Control	I	UKL

F112D Seat Belt Retractor Pretensioner - Driver

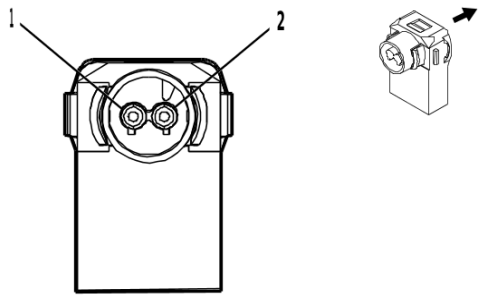

4847297

Connector Part Information

Harness Type: Body Wiring Harness
OEM Connector: 33345784
Service Connector: 19355416
Description: 2-Way F ABX-5 Series(GN with YE Cover)

Terminal Part Information

Terminal Type ID	Terminated Lead	Diagnostic Test Probe	Terminal Removal Tool
I	Not required	J-35616-64B (L-BU)	No Tool Required

F112D Seat Belt Retractor Pretensioner - Driver

Pin	Size	Color	Circuit	Function	Terminal Type ID	Option
1	0.5	OG / WH	3477	Driver Seat Belt Retractor Pretensioner High Control	I	
2	0.5	GY / OG	3478	Driver Seat Belt Retractor Pretensioner Low Control	I	

F112LR Seat Belt Retractor Pretensioner - Left Rear (SBK)

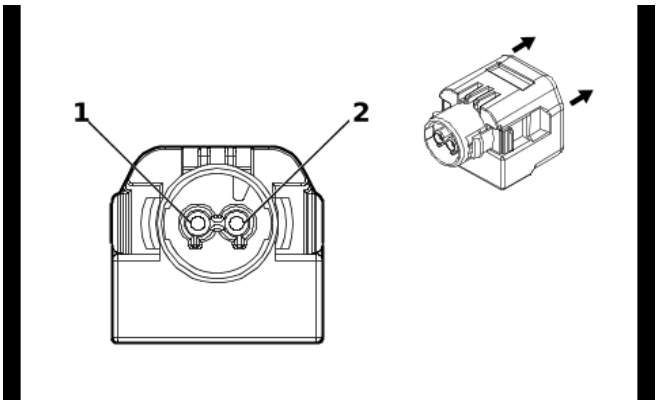

5482896

Connector Part Information

Harness Type: Body Wiring Harness
OEM Connector: 1-1802367-4
Service Connector: 13529173
Description: 2-Way F ABX-5 Series(GN with YE Cover)

Terminal Part Information

Terminal Type ID	Terminated Lead	Diagnostic Test Probe	Terminal Removal Tool
I	Not required	J-35616-64B (L-BU)	No Tool Required

F112LR Seat Belt Retractor Pretensioner - Left Rear (SBK)

Pin	Size	Color	Circuit	Function	Terminal Type ID	Option
1	0.5	OG / VT	5155	Left Rear Seat Belt Pretensioner Control	I	SBK
2	0.5	BK / OG	5156	Left Rear Seat Belt Pretensioner Low Reference	I	SBK

F112P Seat Belt Retractor Pretensioner - Passenger

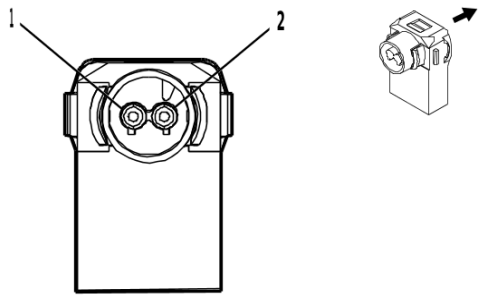

4847297

Connector Part Information

Harness Type: Body Wiring Harness
OEM Connector: 33345784
Service Connector: 19355416
Description: 2-Way F ABX-5 Series(GN with YE Cover)

Terminal Part Information

Terminal Type ID	Terminated Lead	Diagnostic Test Probe	Terminal Removal Tool
I	Not required	J-35616-64B (L-BU)	No Tool Required

F112P Seat Belt Retractor Pretensioner - Passenger

Pin	Size	Color	Circuit	Function	Terminal Type ID	Option
1	0.5	OG / GN	3475	Passenger Seat Belt Retractor Pretensioner High Control	I	
2	0.5	WH / OG	3476	Passenger Seat Belt Retractor Pretensioner Low Control	I	

F112RR Seat Belt Retractor Pretensioner - Right Rear (SBK)

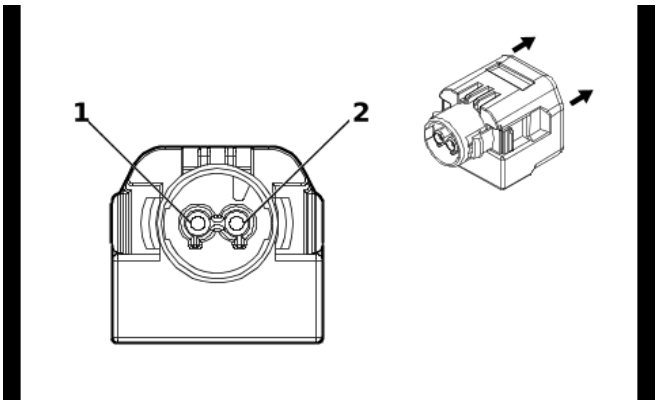

5482896

Connector Part Information

Harness Type: Body Wiring Harness
OEM Connector: 1-1802367-4
Service Connector: 13529173
Description: 2-Way F ABX-5 Series(GN with YE Cover)

Terminal Part Information

Terminal Type ID	Terminated Lead	Diagnostic Test Probe	Terminal Removal Tool
I	Not required	J-35616-64B (L-BU)	No Tool Required

F112RR Seat Belt Retractor Pretensioner - Right Rear (SBK)

Pin	Size	Color	Circuit	Function	Terminal Type ID	Option
1	0.5	OG / WH	5157	Right Rear Seat Belt Pretensioner Control	I	SBK
2	0.5	BK / OG	5158	Right Rear Seat Belt Pretensioner Low Reference	I	SBK

F113D Seat Belt Anchor Pretensioner - Driver

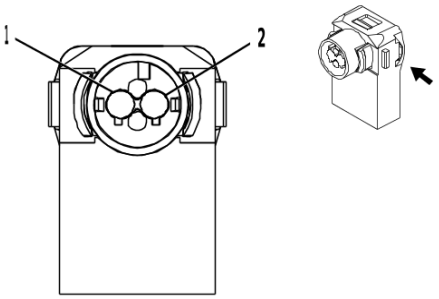

4241364

Connector Part Information

Harness Type: Body Wiring Harness
OEM Connector: 33345778
Service Connector: 19355490
Description: 2-Way F ABX-5 Series(PU with YE Cover)

Terminal Part Information

Terminal Type ID	Terminated Lead	Diagnostic Test Probe	Terminal Removal Tool
I	Not required	J-35616-64B (L-BU)	No Tool Required

F113D Seat Belt Anchor Pretensioner - Driver

Pin	Size	Color	Circuit	Function	Terminal Type ID	Option
1	0.5	OG / YE	3481	Driver Seat Belt Anchor Pretensioner High Control	I	
2	0.5	WH / OG	3482	Driver Seat Belt Anchor Pretensioner Low Control	I	

F113P Seat Belt Anchor Pretensioner - Passenger

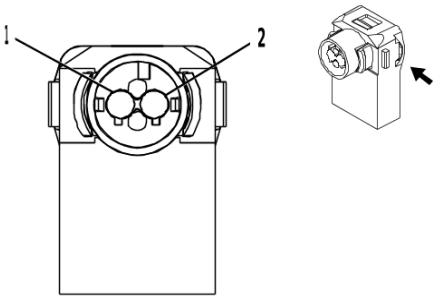

4241364

Connector Part Information

Harness Type: Body Wiring Harness
OEM Connector: 33345778
Service Connector: 19355490
Description: 2-Way F ABX-5 Series(PU with YE Cover)

Terminal Part Information

Terminal Type ID	Terminated Lead	Diagnostic Test Probe	Terminal Removal Tool
I	Not required	J-35616-64B (L-BU)	No Tool Required

F113P Seat Belt Anchor Pretensioner - Passenger

Pin	Size	Color	Circuit	Function	Terminal Type ID	Option
1	0.5	OG / BN	3479	Passenger Seat Belt Anchor Pretensioner High Control	I	
2	0.5	GY / OG	3480	Passenger Seat Belt Anchor Pretensioner Low Control	I	

F114D Knee Air Bag - Driver

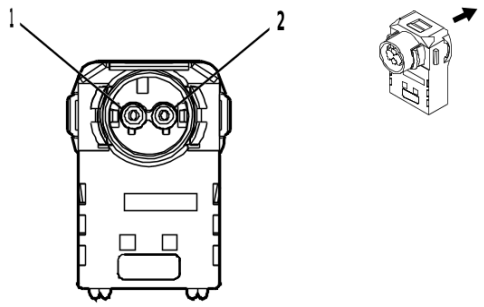

4231869

Connector Part Information

Harness Type: Instrument Panel Wiring Harness
OEM Connector: 33345777
Service Connector: 19355489
Description: 2-Way F ABX-5 Series(PK with YE Cover)

Terminal Part Information

Terminal Type ID	Terminated Lead	Diagnostic Test Probe	Terminal Removal Tool
I	Not required	J-35616-64B (L-BU)	No Tool Required

F114D Knee Air Bag - Driver

Pin	Size	Color	Circuit	Function	Terminal Type ID	Option
1	0.5	OG / BU	3078	Driver Knee Air Bag High Control	I	
2	0.35	GY / OG	3079	Driver Knee Air Bag Low Control	I	

F114P Knee Air Bag - Passenger

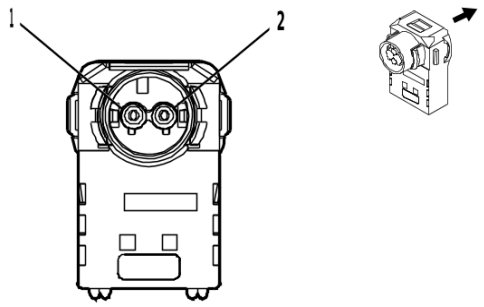

4231869

Connector Part Information

Harness Type: Instrument Panel Wiring Harness
OEM Connector: 33345777
Service Connector: 19355489
Description: 2-Way F ABX-5 Series(PK with YE Cover)

Terminal Part Information

Terminal Type ID	Terminated Lead	Diagnostic Test Probe	Terminal Removal Tool
I	Not required	J-35616-64B (L-BU)	No Tool Required

F114P Knee Air Bag - Passenger

Pin	Size	Color	Circuit	Function	Terminal Type ID	Option
1	0.5	OG / BU	3076	Passenger Knee Air Bag High Control	I	
2	0.5	WH / OG	3077	Passenger Knee Air Bag Low Control	I	

G1 A/C Compressor X1

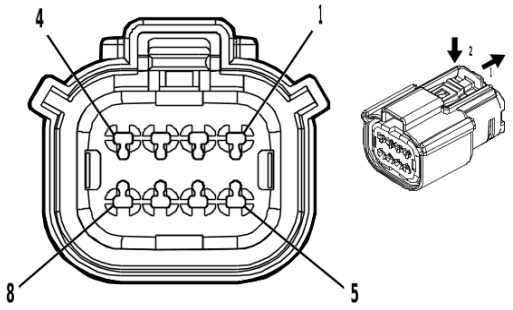

4846407

Connector Part Information

Harness Type: Engine Wiring Harness
OEM Connector: 13520069
Service Connector: 84928314
Description: 8-Way F 1.5 MX Series, Sealed(BK)

Terminal Part Information

Terminal Type ID	Terminated Lead	Diagnostic Test Probe	Terminal Removal Tool
I	Not required	J-35616-14 (GN)	No Tool Required

G1 A/C Compressor X1

Pin	Size	Color	Circuit	Function	Terminal Type ID	Option
1	0.5	BK	150	Ground	I	—
2	0.5	BU / WH	3977	Accessory Wake-Up Serial Data 2	I	—
3	0.5	VT / WH	1139	Run/Crank Ignition 1 Voltage	I	—
4	0.5	RD / GY	2140	Battery Positive Voltage	I	—
5	0.5	WH	2501	High Speed GMLAN Serial Data [-] 1	I	—
6	0.5	WH	2501	High Speed GMLAN Serial Data [-] 1	I	—
7	0.5	BU	2500	High Speed GMLAN Serial Data [+] 1	I	—
8	0.5	BU	2500	High Speed GMLAN Serial Data [+] 1	I	—

G1 A/C Compressor X2

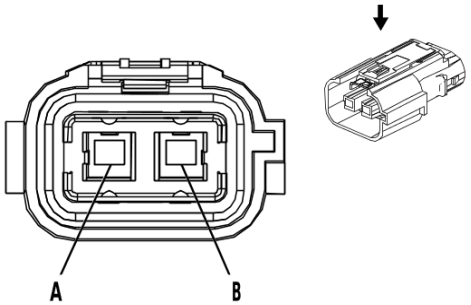

2474682

Connector Part Information

Harness Type: High Voltage Wiring Harness
OEM Connector: 13511378
Service Connector: Service by Harness - See Part Catalog
Description: 2-Way F 280 Metri-Pack Series, Sealed(OG)

Terminal Part Information

Terminal Type ID	Terminated Lead	Diagnostic Test Probe	Terminal Removal Tool
I	Not required	J-35616-4A (PU)	No Tool Required

G1 A/C Compressor X2

Pin	Size	Color	Circuit	Function	Terminal Type ID	Option
A	—	OG	3974	Hybrid/EV Battery 5 [+]	I	—
B	—	OG / BK	3973	Hybrid/EV Battery 5 [-]	I	—

G5 Transmission Fluid Pump - Electric/Auxiliary

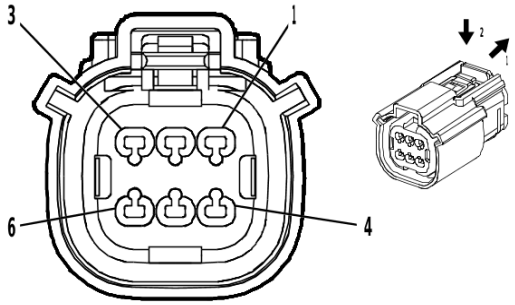

4574736

Connector Part Information

Harness Type: Engine Wiring Harness
OEM Connector: 13592504
Service Connector: 13578533
Description: 6-Way F 1.5 MX Series, Sealed(BK)

Terminal Part Information

Terminal Type ID	Terminated Lead	Diagnostic Test Probe	Terminal Removal Tool
I	Not required	J-35616-2A (GY)	No Tool Required

G5 Transmission Fluid Pump - Electric/Auxiliary

Pin	Size	Color	Circuit	Function	Terminal Type ID	Option
1	1	RD / BU	3240	Battery Positive Voltage	I	—
2	—	—	—	Not Occupied	—	—
3	0.5	VT / BU	5290	Powertrain Main Relay Fused Supply Voltage 1	I	—
4	0.5	GY / BK	2967	Transmission Auxiliary Fluid Pump Relay Control	I	—
5	0.5	GY / BU	4324	Transmission Auxiliary Fluid Pump Feedback Signal	I	—
6	1	BK	350	Ground	I	—

G10 Cooling Fan Motor

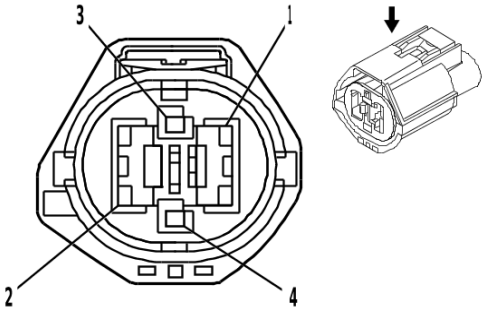

1745131

Connector Part Information

Harness Type: Engine Wiring Harness
OEM Connector: 13583217
Service Connector: 19368655
Description: 4-Way F 1.5, 9.5 Series, Sealed(BK)

Terminal Part Information

Terminal Type ID	Terminated Lead	Diagnostic Test Probe	Terminal Removal Tool
I	Not required	J-35616-14 (GN)	No Tool Required
II	Not required	J-35616-22 (RD)	No Tool Required

G10 Cooling Fan Motor

Pin	Size	Color	Circuit	Function	Terminal Type ID	Option
1	4	RD / BU	302	Battery Positive Voltage	II	—
2	4	BK	2150	Ground	II	—
3	—	—	—	Not Occupied	—	—
4	0.75	WH	2368	Cooling Fan Control Signal	I	—

G24 Windshield Washer Pump

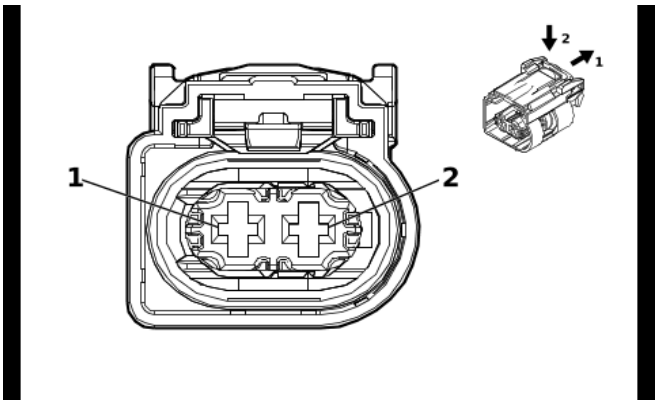

5580410

Connector Part Information

Harness Type: Forward Lamp Wiring Harness
OEM Connector: 13536182
Service Connector: 85005016
Description: 2-Way F 2.8 MCP Series, Sealed(BK)

Terminal Part Information

Terminal Type ID	Terminated Lead	Diagnostic Test Probe	Terminal Removal Tool
I	Not required	J-35616-4A (PU)	No Tool Required

G24 Windshield Washer Pump

Pin	Size	Color	Circuit	Function	Terminal Type ID	Option
1	0.5	GY / VT	228	Windshield Washer Pump Control	I	—
2	0.5	BU / VT	392	Rear Window Washer Pump Control	I	—

G35 Hybrid/EV Electronics Coolant Pump

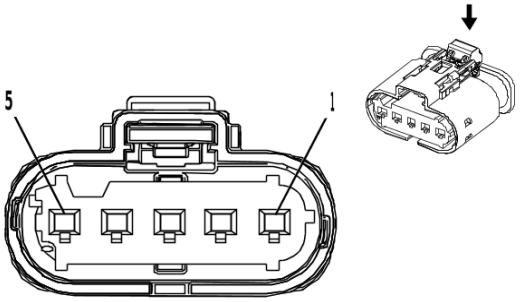

2474671

Connector Part Information

Harness Type: Engine Wiring Harness
OEM Connector: 13576828
Service Connector: 19368265
Description: 5-Way F 1.2 Multilock Series, Sealed(BK)

Terminal Part Information

Terminal Type ID	Terminated Lead	Diagnostic Test Probe	Terminal Removal Tool
I	Not required	J-35616-16 (L-GN)	No Tool Required

G35 Hybrid/EV Electronics Coolant Pump

Pin	Size	Color	Circuit	Function	Terminal Type ID	Option
1	0.5	BN / BU	3788	Electric Coolant Motor Control	I	—
2	0.5	VT / BU	3790	Electric Coolant Motor Feedback Signal	I	—
3	0.5	YE / GN	3789	Electric Coolant Motor Control	I	—
4	0.5	BK	350	Ground	I	—
5	0.5	RD / VT	3340	Battery Positive Voltage	I	—

G36 Auxiliary Heater Coolant Pump

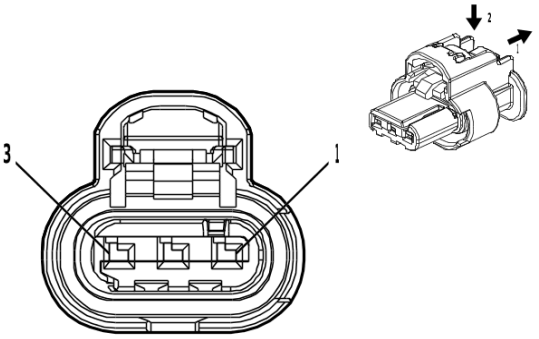

4581126

Connector Part Information

Harness Type: Engine Wiring Harness
OEM Connector: 13514590
Service Connector: 86792094
Description: 3-Way F 1.2 MCON-CB Series, Sealed(BK)

Terminal Part Information

Terminal Type ID	Terminated Lead	Diagnostic Test Probe	Terminal Removal Tool
I	Not required	J-35616-16 (L-GN)	No Tool Required

G36 Auxiliary Heater Coolant Pump

Pin	Size	Color	Circuit	Function	Terminal Type ID	Option
1	0.5	BK	350	Ground	I	—
2	0.5	RD / WH	3440	Battery Positive Voltage	I	—
3	—	—	—	Not Occupied	—	—

G37 Hybrid/EV Battery Pack Coolant Pump

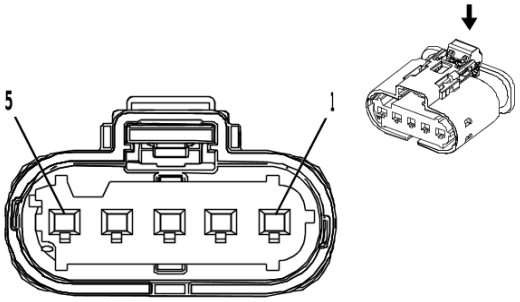

2474671

Connector Part Information

Harness Type: Engine Wiring Harness
OEM Connector: 13576828
Service Connector: 19368265
Description: 5-Way F 1.2 Multilock Series, Sealed(BK)

Terminal Part Information

Terminal Type ID	Terminated Lead	Diagnostic Test Probe	Terminal Removal Tool
I	Not required	J-35616-16 (L-GN)	No Tool Required

G37 Hybrid/EV Battery Pack Coolant Pump

Pin	Size	Color	Circuit	Function	Terminal Type ID	Option
1	0.5	WH / GN	3794	Hybrid/EV Battery Pack Coolant Pump 1 Control	I	—
2	0.5	YE / GY	3796	Hybrid/EV Battery Pack Coolant Pump 1 Feed-back Signal	I	—
3	0.5	BU / VT	3795	Hybrid/EV Battery Pack Coolant Pump 1 Control	I	—
4	0.5	BK	350	Ground	I	—
5	0.5	RD / GY	3540	Battery Positive Voltage	I	—

K1 14V Power Module X1

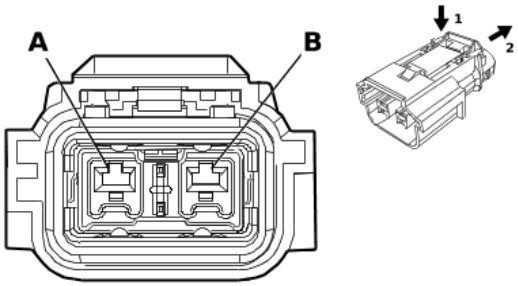

4278443

Connector Part Information

Harness Type: High Voltage Wiring Harness
OEM Connector: 13511583
Service Connector: Service by Harness - See Part Catalog
Description: 2-Way F 280 Metri-Pack Series, Sealed(OG)

Terminal Part Information

Terminal Type ID	Terminated Lead	Diagnostic Test Probe	Terminal Removal Tool
I	Not required	J-35616-4A (PU)	No Tool Required

K1 14V Power Module X1

Pin	Size	Color	Circuit	Function	Terminal Type ID	Option
A	—	OG / BK	3833	Hybrid/EV Battery 2 [-]	I	—
B	—	OG	3834	Hybrid/EV Battery 2 [+]	I	—

K1 14V Power Module X2

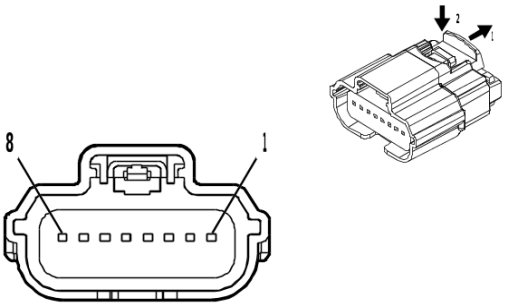

4708234

Connector Part Information

Harness Type: Engine Wiring Harness
OEM Connector: 13529239
Service Connector: 84677313
Description: 8-Way F 64 Series, Sealed(BK)

Terminal Part Information

Terminal Type ID	Terminated Lead	Diagnostic Test Probe	Terminal Removal Tool
I	Not required	J-35616-64B (L-BU)	No Tool Required

K1 14V Power Module X2

Pin	Size	Color	Circuit	Function	Terminal Type ID	Option
1	0.5	BN	25	Charge Indicator Control	I	—
2	—	—	—	Not Occupied	—	—
3	0.5	GY	23	Generator Field Duty Cycle Signal	I	—
4 - 8	—	—	—	Not Occupied	—	—

K1 14V Power Module X3

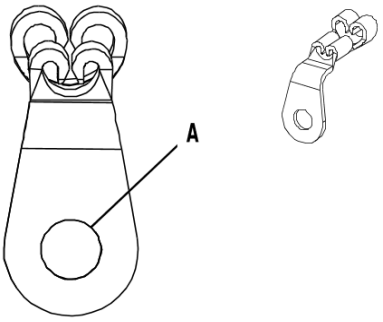

3655830

Connector Part Information

Harness Type: Battery Positive Cable
OEM Connector: CBR514-012
Service Connector: Service by Cable Assembly — See Part Catalog
Description: 1-Way Ring Terminal

Terminal Part Information

Terminal Type ID	Terminated Lead	Diagnostic Test Probe	Terminal Removal Tool
I	Not required	No Tool Required	No Tool Required

K1 14V Power Module X3

Pin	Size	Color	Circuit	Function	Terminal Type ID	Option
A	25	RD / YE	2	Battery Positive Voltage	I	—

K1 14V Power Module X4

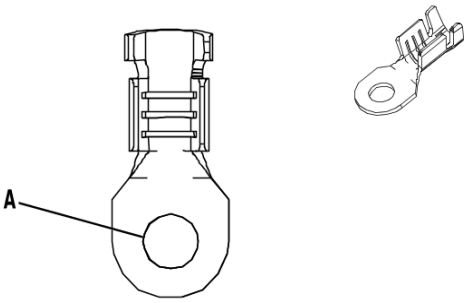

4539335

Connector Part Information

Harness Type: Battery Negative Cable Extension Cable
OEM Connector: 95176337
Service Connector: Service by Cable Assembly — See Part Catalog
Description: 1-Way Ring Terminal

Terminal Part Information

Terminal Type ID	Terminated Lead	Diagnostic Test Probe	Terminal Removal Tool
I	Not required	No Tool Required	No Tool Required

K1 14V Power Module X4

Pin	Size	Color	Circuit	Function	Terminal Type ID	Option
A	25	BK	750	Ground	I	—

K8 Blower Motor Control Module X1

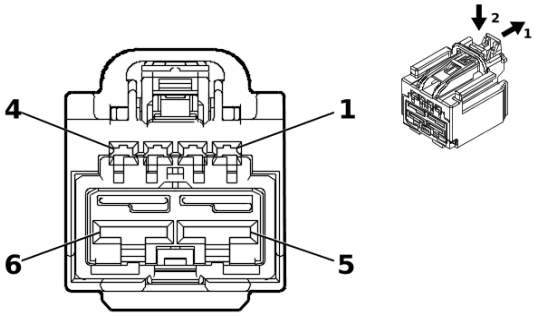

5355899

Connector Part Information

Harness Type: Instrument Panel Wiring Harness
OEM Connector: 13522994
Service Connector: 84815543
Description: 6-Way F 1.5, 6.3 YESC Series(BK)

Terminal Part Information

Terminal Type ID	Terminated Lead	Diagnostic Test Probe	Terminal Removal Tool
I	Not required	J-35616-2A (GY)	No Tool Required
II	Not required	J-35616-42 (RD)	No Tool Required

K8 Blower Motor Control Module X1

Pin	Size	Color	Circuit	Function	Terminal Type ID	Option
1 - 2	—	—	—	Not Occupied	—	—
3	0.35	BU / GY	754	Blower Motor Speed Control	I	—
4	—	—	—	Not Occupied	—	—
5	2.5	BK	1350	Ground	II	—
6	0.35	RD / BU	840	Battery Positive Voltage	II	—

K8 Blower Motor Control Module X2

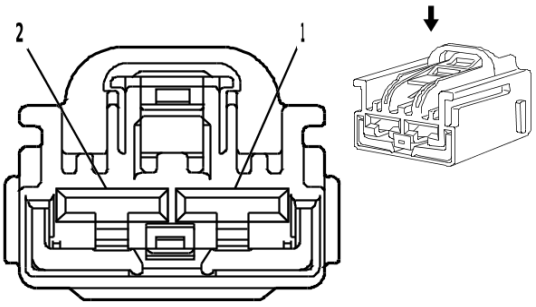

1817814

Connector Part Information

Harness Type: Blower
OEM Connector: 15226103
Service Connector: Service by Harness - See Part Catalog
Description: 2-Way F 6.3 Series(L-GY)

Terminal Part Information

Terminal Type ID	Terminated Lead	Diagnostic Test Probe	Terminal Removal Tool
I	Not required	No Tool Required	No Tool Required

K8 Blower Motor Control Module X2

Pin	Size	Color	Circuit	Function	Terminal Type ID	Option
1	3	VT	65	Blower Motor Control	I	—
2	3	VT / BK	5987	Front Blower Motor Low Reference	I	—

K9 Body Control Module X1

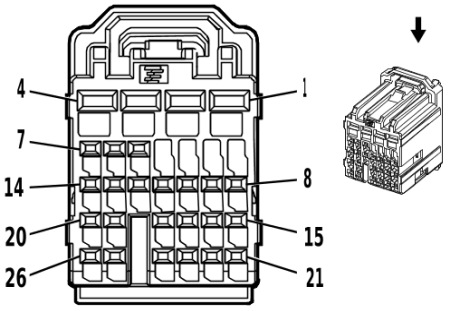

2537268

Connector Part Information

Harness Type: Instrument Panel Wiring Harness
OEM Connector: 13576031
Service Connector: 13576031
Description: 26-Way F 0.64, 2.8 Series(NA)

Terminal Part Information

Terminal Type ID	Terminated Lead	Diagnostic Test Probe	Terminal Removal Tool
I	13582298	J-35616-64B (L-BU)	J-38125-215A
II	19354201	J-35616-35 (VT)	J-38125-553

K9 Body Control Module X1

Pin	Size	Color	Circuit	Function	Terminal Type ID	Option
1	0.75	BK	1350	Ground	II	—
2	0.75	RD / YE	4340	Battery Positive Voltage	II	—
3	0.75	RD / BN	4240	Battery Positive Voltage	II	—
4	0.75	RD / GY	4140	Battery Positive Voltage	II	—
5	0.35	WH	6816	Indicator Dimming Control	I	—
6	0.35	GN / WH	2270	Rear Window Washer Relay Control	I	—
7	0.35	BK / YE	5005	Instrument Panel Lamp Dimmer Switch Low Reference	I	—
8 - 10	—	—	—	Not Occupied	—	—
11	0.35	GN / BN	306	Headlamp Switch Off Signal	I	—
12	0.35	BU / GY	187	Rear Fog Lamp Switch Signal	I	—
13	0.35	BU / RD	1688	12V Reference	I	—
14	0.35	BN / VT	245	Passenger Door Lock Switch Unlock Control	I	—
15	0.35	GN	4512	Wireless Charging System Charge Indicator Control	I	
16	0.35	WH / VT	103	Headlamp Switch On Signal	I	—
17	0.35	GY / YE	7543	Hazard Warning Indicator LED Dimming Signal	I	—
18	—	—	—	Not Occupied	—	—
19	0.5	BK / BN	5360	Brake Apply Sensor Low Reference	I	—
20	0.35	BU / BK	5719	Ignition Mode Switch Start LED Signal	I	—
21	—	—	—	Not Occupied	—	—
22	0.35	GN / GY	13	Headlamp Switch Park Lamp Signal	I	—

K9 Body Control Module X1 (cont'd)

Pin	Size	Color	Circuit	Function	Terminal Type ID	Option
23	—	—	—	Not Occupied	—	—
24	0.35	WH	2501	High Speed GMLAN Serial Data [-] 1	I	—
25	0.35	BU	2500	High Speed GMLAN Serial Data [+] 1	I	—
26	0.35	BU / WH	3275	Remote Control Door Lock Receiver Receive Signal	I	—

K9 Body Control Module X2

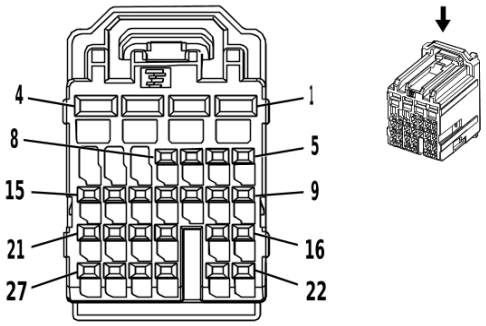

2537269

Connector Part Information

Harness Type: Instrument Panel Wiring Harness
OEM Connector: 13576032
Service Connector: 13576032
Description: 27-Way F 0.64, 2.8 Series(BU)

Terminal Part Information

Terminal Type ID	Terminated Lead	Diagnostic Test Probe	Terminal Removal Tool
I	13582298	J-35616-64B (L-BU)	J-38125-215A
II	19354201	J-35616-35 (VT)	J-38125-553

K9 Body Control Module X2

Pin	Size	Color	Circuit	Function	Terminal Type ID	Option
1	0.75	RD / VT	4040	Battery Positive Voltage	II	—
2	0.75	BK	1350	Ground	II	—
3	0.75	RD / GN	4440	Battery Positive Voltage	II	—
4	2	RD / WH	4740	Battery Positive Voltage	II	—
5 - 6	—	—	—	Not Occupied	—	—
7	0.5	BU / YE	5361	Brake Apply Sensor Signal	I	—
8	0.35	YE	6817	LED Backlight Dimming Control 1	I	—
9	0.35	YE / GY	44	Instrument Panel Lamp Dimmer Switch Signal	I	—
10 - 11	—	—	—	Not Occupied	—	—
12	0.35	BN / BU	391	Rear Window Wiper Switch Signal	I	—
13	0.5	WH	5359	Brake Apply Sensor Control	I	—
14	0.35	BU / VT	1788	Traction Control Switch Signal 1	I	—
15	0.35	BN / WH	781	Driver Door Lock Switch Unlock Signal	I	—
16	0.35	GY	3273	Remote Control Door Lock Receiver Low Reference	I	—
17	0.35	BU / GN	5723	Ignition Mode Switch Mode Voltage	I	—
18	0.35	BU	6856	Headlamp Automatic High Beam Control	I	—
19	0.35	BN / YE	780	Driver Door Lock Switch Lock Signal	I	—
20	—	—	—	Not Occupied	—	—
21	0.35	GN / GY	6135	Body Control Module LIN Bus 4	I	—
22	0.35	GN	5060	Low Speed GMLAN Serial Data	I	—

K9 Body Control Module X2 (cont'd)

Pin	Size	Color	Circuit	Function	Terminal Type ID	Option
23 - 24	—	—	—	Not Occupied	—	—
25	0.35	GY / WH	3272	Remote Control Door Lock Receiver Control	I	—
26	0.35	GN / WH	111	Hazard Warning Switch Signal	I	—
27	0.35	YE / GN	3274	Remote Control Door Lock Receiver Transmit Signal	I	—

K9 Body Control Module X3

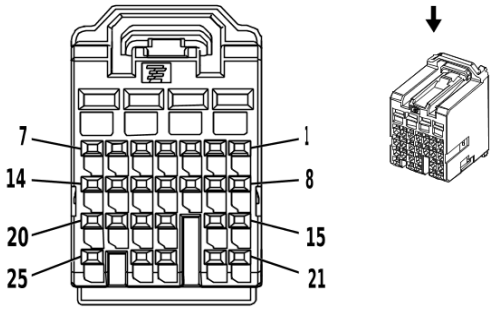

2537274

Connector Part Information

Harness Type: Instrument Panel Wiring Harness
OEM Connector: 13576037
Service Connector: 13576037
Description: 25-Way F 0.64, 2.8 Series(GN)

Terminal Part Information

Terminal Type ID	Terminated Lead	Diagnostic Test Probe	Terminal Removal Tool
I	13582298	J-35616-64B (L-BU)	J-38125-215A

K9 Body Control Module X3

Pin	Size	Color	Circuit	Function	Terminal Type ID	Option
1	0.35	GN / GY	3277	Vehicle Anti-Theft System Immobilizer Low Reference	I	—
2	0.35	GN / VT	7533	Immobilizer LIN Bus 1	I	—
3	0.35	GY / BK	3276	Immobilizer Control Module Control	I	—
4	0.5 0.5	WH / RD WH / RD	1444 1444	12V Reference 12V Reference	I I	UKL - UKL
5	0.35	VT / YE	4	Accessory Ignition Voltage	I	—
6	0.35	VT / BK	3	Run/Crank Ignition 1 Voltage	I	—
7	0.5	GY / VT	755	Retained Accessory Power Relay Coil Control	I	5W4
8	—	—	—	Not Occupied	—	—
9	0.5 0.5	BN / GN BN / GN	1884 1884	Cruise Control Set/Coast/Resume/Accelerate Switch Signal Cruise Control Set/Coast/Resume/Accelerate Switch Signal	I I	UKL - UKL
10	0.35	BK / GY	6009	Windshield Wiper Switch Low Reference	I	—
11	0.35	WH	524	High Beam Select Switch High Beam Signal	I	—
12	0.35	WH / GN	663	Hazard Switch Left Turn Signal	I	—
13	0.35	YE / BU	1714	Windshield Wiper Switch Low Signal	I	—
14 - 15	—	—	—	Not Occupied	—	—
16	0.5 0.5	GY / GN GY / GN	5737 5737	Distance Sensing Cruise Control Gap Up/Down Switch Signal Distance Sensing Cruise Control Gap Up/Down Switch Signal	I I	UKL - UKL
17	0.35	YE / BN	307	Headlamp Switch Flash Signal	I	—

K9 Body Control Module X3 (cont'd)

Pin	Size	Color	Circuit	Function	Terminal Type ID	Option
18	0.5 0.5	GN / WH GN / WH	3287 3287	Horn Switch Signal Horn Switch Signal	I I	UKL - UKL
19	0.35	GN / WH	4115	Body Control Module LIN Bus 5	I	—
20	0.35	GY	1715	Windshield Wiper Switch High Signal	I	—
21	0.5 0.35	VT / YE VT / YE	5526 5526	Tap Up/Tap Down Switch Signal Tap Up/Tap Down Switch Signal	I I	UKL - UKL
22 - 23	—	—	—	Not Occupied	—	—
24	0.35	VT / BU	664	Hazard Switch Right Turn Signal	I	—
25	0.35	WH / BK	94	Windshield Washer Switch Signal	I	—

K9 Body Control Module X4

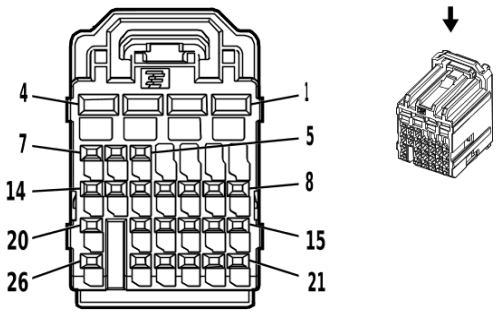

2537270

Connector Part Information

Harness Type: Body Wiring Harness
OEM Connector: 13576033
Service Connector: 13576033
Description: 26-Way F 0.64, 2.8 Series(BK)

Terminal Part Information

Terminal Type ID	Terminated Lead	Diagnostic Test Probe	Terminal Removal Tool
I	13582298	J-35616-64B (L-BU)	J-38125-215A
II	19354201	J-35616-35 (VT)	J-38125-553

K9 Body Control Module X4

Pin	Size	Color	Circuit	Function	Terminal Type ID	Option
1	0.5	YE	312	Right Headlamp Low Beam Control	II	—
2	0.5	YE	712	Left Headlamp Low Beam Control	II	—
3	0.75	GN / VT	1315	Right Front Turn Signal Lamp Control	II	—
4	0.5	BU / VT	1335	Right Rear Turn Signal Lamp Control 2	II	—
5	0.5	GY / BN	309	Right Park Lamp Control	I	—
6	0.5	VT / GY	709	Left Park Lamp Control	I	—
7	0.5	GY / BU	7538	Left Front DRL Control	I	—
8	—	—	—	Not Occupied	—	—
9	0.35	GY / VT	3264	Logistics Mode Relay Close Control	I	—
10	0.35	YE	5420	Rear Wiper Motor Relay Coil Control	I	—
11	0.5	BN / YE	820	Center High Mounted Stop Lamp Supply Voltage	I	—
12	0.5	WH	711	Left Headlamp High Beam Control	I	—
13	0.35	GN / YE	6846	Rear License Plate Lamp Control	I	—
14	0.35	BN / GY	2268	Windshield Washer Relay Control	I	—
15	0.35	GN / VT	5199	Run/Crank Relay Coil Control	I	—
16	0.35	GY	91	Windshield Wiper Motor Relay Coil Control	I	—
17	0.35	BN / GN	196	Windshield Wiper Motor Park Switch Signal	I	—
18	0.5	WH / YE	5075	Current Sensor Signal	I	—
19	0.35	BN	4511	Wireless Charging System Fault Indicator Control	I	
20	0.35	RD / GN	40	Battery Positive Voltage	I	—

K9 Body Control Module X4 (cont'd)

Pin	Size	Color	Circuit	Function	Terminal Type ID	Option
21	0.5	BU / VT	5076	Current Sensor Voltage Reference	I	—
22	0.5	VT / YE	5985	Accessory Wake-Up Serial Data	I	—
23	0.5	WH / BU	5986	Serial Data Communication Enable	I	—
24	0.5	BN / GN	4064	Hood Status B Signal	I	—
25	0.5	YE / BU	4086	Ignition Mode Switch Challenge Active Signal	I	—
26	0.5	BK / WH	51	Signal Ground	I	—

K9 Body Control Module X5

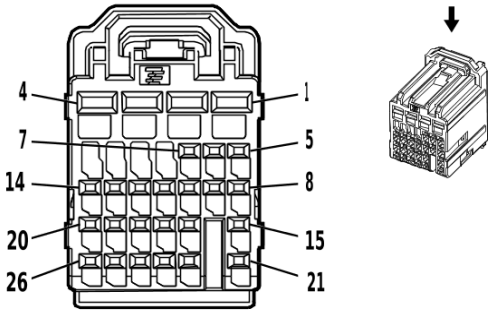

2537271

Connector Part Information

Harness Type: Body Wiring Harness
OEM Connector: 13576034
Service Connector: 13576034
Description: 26-Way F 0.64, 2.8 Series(BN)

Terminal Part Information

Terminal Type ID	Terminated Lead	Diagnostic Test Probe	Terminal Removal Tool
I	13582298	J-35616-64B (L-BU)	J-38125-215A
II	19354201	J-35616-35 (VT)	J-38125-553

K9 Body Control Module X5

Pin	Size	Color	Circuit	Function	Terminal Type ID	Option
1	0.5	BU / WH	1334	Left Rear Turn Signal Lamp Control 2	II	—
2	0.75	BU / WH	1314	Left Front Turn Signal Lamp Control	II	—
3	0.75	RD / VT	4640	Battery Positive Voltage	II	—
4	0.75	RD / BU	4540	Battery Positive Voltage	II	—
5	—	—	—	Not Occupied	—	—
6	0.5	BK / VT	5077	Current Sensor Low Reference	I	—
7	0.5	BU / BN	7539	Right Front DRL Control	I	—
8 - 10	—	—	—	Not Occupied	—	—
11	0.35	GN / BN	5706	Endgate Latch Relay Control	I	—
12	0.5	WH / BU	6311	Cruise/ETC/TCC Brake Signal	I	—
13	—	—	—	Not Occupied	—	—
14	0.35	VT / BN	541	Run Ignition 3 Voltage	I	—
15	0.5	BN / WH	1635	Right Rear Seat Heating High Indicator Control	I	KA6
16 - 18	—	—	—	Not Occupied	—	—
19	0.35	BN / WH	28	Horn Relay Control	I	
20	0.35	YE	5704	Endgate Latch Relay Coil Control	I	—
21	0.5	WH	1638	Left Rear Seat Heating High Indicator Control	I	KA6
22 - 23	—	—	—	Not Occupied	—	—
24	0.35	WH / VT	860	Windshield Wiper Switch High Signal	I	—
25 - 26	—	—	—	Not Occupied	—	—

K9 Body Control Module X6

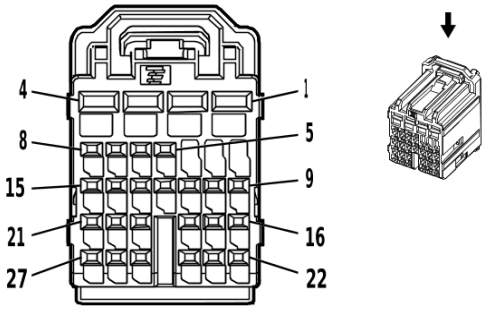

2537272

Connector Part Information

Harness Type: Body Wiring Harness
OEM Connector: 13576035
Service Connector: 13576035
Description: 27-Way F 0.64, 2.8 Series(PK)

Terminal Part Information

Terminal Type ID	Terminated Lead	Diagnostic Test Probe	Terminal Removal Tool
I	13582298	J-35616-64B (L-BU)	J-38125-215A
II	19354201	J-35616-35 (VT)	J-38125-553

K9 Body Control Module X6

Pin	Size	Color	Circuit	Function	Terminal Type ID	Option
1	0.75	GY	5911	Door Lock Actuator Lock Control 2	II	—
2	1.5	GY	295	Door Lock Actuator Lock Control	II	—
3	2	BK	650	Ground	II	—
4	1.5	BN / YE	294	Door Lock Actuator Unlock Control	II	—
5	0.5	VT / GY	1303	Liftgate Ajar Switch Signal 1	I	—
6	—	—	—	Not Occupied	—	—
7	0.35	WH / YE	7557	Interior Door Handle Accent Lighting Control	I	C9B
8	—	—	—	Not Occupied	—	—
9	0.5 0.5	GN / BU GN / BU	6133 6133	Body Control Module LIN Bus 2 Body Control Module LIN Bus 2	I I	KA1+ KA6 KA1- KA6
10	0.35	GN / YE	6134	Body Control Module LIN Bus 3	I	—
11 - 12	—	—	—	Not Occupied	—	—
13	0.5	VT / BK	6568	Front Turn Signal Lamp Feedback Signal	I	—
14	0.5	WH / YE	7545	Right Front Turn Signal Lamp Feedback Signal	I	—
15	0.5	YE / BU	5797	Rear Closure Handle Switch Open Signal	I	—
16	0.35 0.35	GN / BN GN / BN	6132 6132	Body Control Module LIN Bus 1 Body Control Module LIN Bus 1	I I	CAJ CE1- CAJ
17	—	—	—	Not Occupied	—	—
18	0.5	BU	2500	High Speed GMLAN Serial Data [+] 1	I	—
19	0.5	WH	2501	High Speed GMLAN Serial Data [-] 1	I	—
20 - 21	—	—	—	Not Occupied	—	—

K9 Body Control Module X6 (cont'd)

Pin	Size	Color	Circuit	Function	Terminal Type ID	Option
22	0.35	GY	5054	Sport Mode Switch Signal	I	—
23	—	—	—	Not Occupied	—	—
24	0.5	BU	2500	High Speed GMLAN Serial Data [+] 1	I	—
25	0.5	WH	2501	High Speed GMLAN Serial Data [-] 1	I	—
26	—	—	—	Not Occupied	—	—
27	0.5	BN / WH	1637	Left Rear Seat Heating Switch Signal	I	KA6

K9 Body Control Module X7

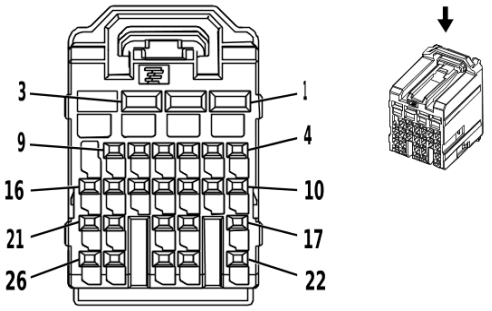

2537273

Connector Part Information

Harness Type: Body Wiring Harness
OEM Connector: 13576036
Service Connector: 13576036
Description: 26-Way F 0.64, 2.8 Series(GY)

Terminal Part Information

Terminal Type ID	Terminated Lead	Diagnostic Test Probe	Terminal Removal Tool
I	13582298	J-35616-64B (L-BU)	J-38125-215A
II	19354201	J-35616-35 (VT)	J-38125-553

K9 Body Control Module X7

Pin	Size	Color	Circuit	Function	Terminal Type ID	Option
1	0.5	GY	157	Interior Lamp Control	II	—
2	0.5	WH / BN	6815	Inadvertent Load Control	II	—
3	0.5	GN / WH	24	Backup Lamp Control	II	—
4	0.5	GY / BN	10749	Sequential Turn Lamp Enable Signal	I	—
5 - 6	—	—	—	Not Occupied	—	—
7	0.5	GN / GY	737	Rear Compartment Courtesy Lamp Control	I	—
8	—	—	—	Not Occupied	—	—
9	0.35	YE	6817	LED Backlight Dimming Control 1	I	—
10	—	—	—	Not Occupied	—	—
11	0.5	BN / GN	1634	Right Rear Seat Heating Switch Signal	I	KA6
12	0.5	WH / VT	6567	Rear Turn Signal Lamp Feedback Signal	I	—
13	0.5	WH / BK	7544	Right Rear Turn Signal Lamp Feedback Signal	I	—
14	0.35	YE / VT	244	Passenger Door Lock Switch Lock Control	I	—
15	—	—	—	Not Occupied	—	—
16	0.35	VT / BU	3263	Logistics Mode Relay Open Control	I	—
17 - 18	—	—	—	Not Occupied	—	—
19	0.5	GY	156	Courtesy Lamp Switch Signal	I	—
20 - 23	—	—	—	Not Occupied	—	—
24	0.5	GY / GN	328	Interior Lamp Defeat Switch Signal	I	—
25 - 26	—	—	—	Not Occupied	—	—

K10 Coolant Heater Control Module X1

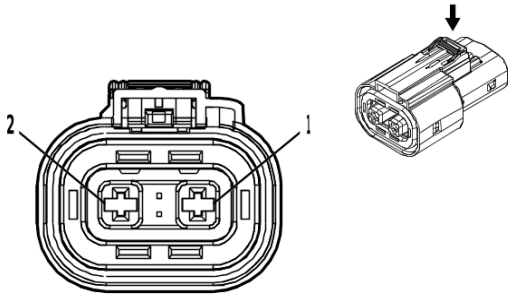

5113362

Connector Part Information

Harness Type: High Voltage Wiring Harness
OEM Connector: 13595518
Service Connector: Service by Harness - See Part Catalog
Description: 2-Way F HVA280-2PHI Series, Sealed(OG)

Terminal Part Information

Terminal Type ID	Terminated Lead	Diagnostic Test Probe	Terminal Removal Tool
I	Not required	No Tool Required	No Tool Required

K10 Coolant Heater Control Module X1

Pin	Size	Color	Circuit	Function	Terminal Type ID	Option
1	—	OG	3970	Hybrid/EV Battery 4 [+]	I	—
2	—	OG / BK	3969	Hybrid/EV Battery 4 [-]	I	—

K10 Coolant Heater Control Module X2

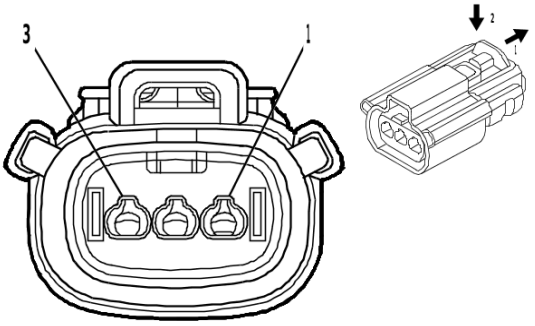

5095610

Connector Part Information

Harness Type: Body Wiring Harness
OEM Connector: 13526813
Service Connector: 84719651
Description: 3-Way F 1.5 Series, Sealed(BK)

Terminal Part Information

Terminal Type ID	Terminated Lead	Diagnostic Test Probe	Terminal Removal Tool
I	Not required	J-35616-14 (GN)	No Tool Required

K10 Coolant Heater Control Module X2

Pin	Size	Color	Circuit	Function	Terminal Type ID	Option
1	0.5	GN / BU	4119	HVAC Control Module LIN Bus 2	I	—
2	0.5	RD / WH	2740	Battery Positive Voltage	I	—
3	0.5	BK	750	Ground	I	—

K16 Battery Energy Control Module X1

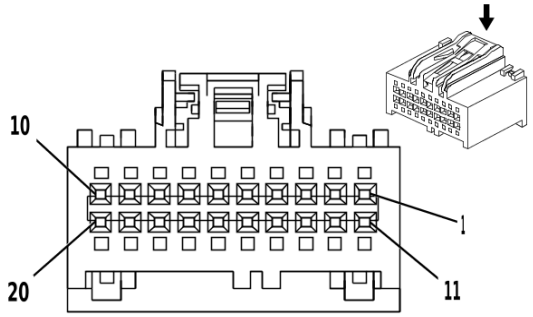

1715223

Connector Part Information

Harness Type: Hybrid/EV Battery
OEM Connector: 31410-0200
Service Connector: Service by Harness - See Part Catalog
Description: 20-Way F 64 Series,(BK)

Terminal Part Information

Terminal Type ID	Terminated Lead	Diagnostic Test Probe	Terminal Removal Tool
I	Not required	J-35616-64B (L-BU)	No Tool Required

K16 Battery Energy Control Module X1

Pin	Size	Color	Circuit	Function	Terminal Type ID	Option
1	—	RD / VT	1640	Battery Positive Voltage	I	—
2	—	GN	5391	Hybrid/EV Battery Cell Voltage Signal 1	I	—
3	—	YE	5395	Hybrid/EV Battery Cell Voltage Signal 3	I	—
4	—	OG	5397	Hybrid/EV Battery Cell Voltage Signal 5	I	—
5	—	WH	5398	Hybrid/EV Battery Cell Voltage Signal 6	I	—
6	—	BN	5400	Hybrid/EV Battery Cell Voltage Signal 8	I	—
7	—	BU	5392	Hybrid/EV Battery Cell Voltage Signal 10	I	—
8	—	GN	5593	Module Temperature Low Reference 2	I	—
9	—	GN	5572	Hybrid/EV Battery Cell Voltage Signal 13	I	—
10	—	YE	5574	Hybrid/EV Battery Cell Voltage Signal 15	I	—
11	—	PK	5403	Hybrid/EV Battery Pack Monitor Low Reference	I	—
12	—	BU	5394	Hybrid/EV Battery Cell Voltage Signal 2	I	—
13	—	VT	5396	Hybrid/EV Battery Cell Voltage Signal 4	I	—
14	—	OG	5397	Hybrid/EV Battery Cell Voltage Signal 5	I	—
15	—	GY	5399	Hybrid/EV Battery Cell Voltage Signal 7	I	—
16	—	OG / RD	5401	Hybrid/EV Battery Cell Voltage Signal 9	I	—
17	—	GN / WH	5403	Hybrid/EV Battery Pack Monitor Low Reference	I	—
18	—	PK	5571	Hybrid/EV Battery Cell Voltage Signal 12	I	—
19	—	BU	5573	Hybrid/EV Battery Cell Voltage Signal 14	I	—
20	—	VT	5575	Hybrid/EV Battery Cell Voltage Signal 16	I	—

K16 Battery Energy Control Module X2

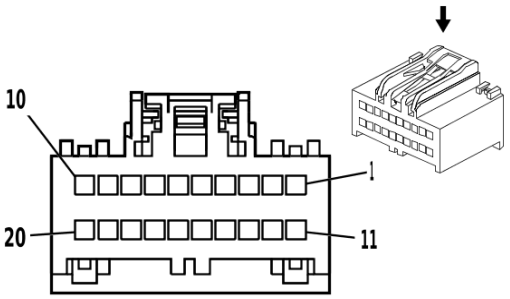

1715228

Connector Part Information

Harness Type: Hybrid/EV Battery
OEM Connector: 31410-0201
Service Connector: Service by Harness - See Part Catalog
Description: 20-Way F USCAR 64 Series(GY)

Terminal Part Information

Terminal Type ID	Terminated Lead	Diagnostic Test Probe	Terminal Removal Tool
I	Not required	J-35616-64B (L-BU)	No Tool Required

K16 Battery Energy Control Module X2

Pin	Size	Color	Circuit	Function	Terminal Type ID	Option
1	—	VT	5575	Hybrid/EV Battery Cell Voltage Signal 16	I	—
2	—	WH	5577	Hybrid/EV Battery Cell Voltage Signal 18	I	—
3	—	BN	5579	Hybrid/EV Battery Cell Voltage Signal 20	I	—
4	—	BU	5580	Hybrid/EV Battery Cell Voltage Signal 21	I	—
5	—	GN	5582	Hybrid/EV Battery Cell Voltage Signal 23	I	—
6	—	GN	5584	Hybrid/EV Battery Cell Voltage Signal 25	I	—
7	—	YE	5586	Hybrid/EV Battery Cell Voltage Signal 27	I	—
8	—	OG	5588	Hybrid/EV Battery Cell Voltage Signal 29	I	—
9	—	GY	5403	Hybrid/EV Battery Pack Monitor Low Reference	I	—
10	—	OG / RD	5591	Hybrid/EV Battery Cell Voltage Signal 32	I	—
11	—	OG	5576	Hybrid/EV Battery Cell Voltage Signal 17	I	—
12	—	GY	5578	Hybrid/EV Battery Cell Voltage Signal 19	I	—
13	—	OG / RD	5403	Hybrid/EV Battery Pack Monitor Low Reference	I	—
14	—	GN / WH	5581	Hybrid/EV Battery Cell Voltage Signal 22	I	—
15	—	PK	5583	Hybrid/EV Battery Cell Voltage Signal 24	I	—
16	—	BU	5585	Hybrid/EV Battery Cell Voltage Signal 26	I	—
17	—	VT	5587	Hybrid/EV Battery Cell Voltage Signal 28	I	—
18	—	WH	5589	Hybrid/EV Battery Cell Voltage Signal 30	I	—
19	—	BN	5590	Hybrid/EV Battery Cell Voltage Signal 31	I	—
20	—	BU	5592	Hybrid/EV Battery Cell Voltage Signal 33	I	—

K16 Battery Energy Control Module X3

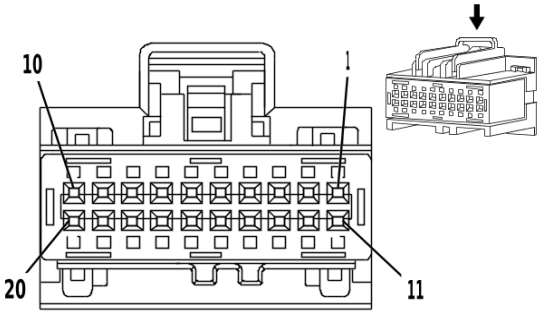

1664552

Connector Part Information

Harness Type: Hybrid/EV Battery
OEM Connector: 31410-0202
Service Connector: Service by Harness - See Part Catalog
Description: 20-Way F USCAR 64 Series(BN)

Terminal Part Information

Terminal Type ID	Terminated Lead	Diagnostic Test Probe	Terminal Removal Tool
I	Not required	J-35616-64B (L-BU)	No Tool Required

K16 Battery Energy Control Module X3

Pin	Size	Color	Circuit	Function	Terminal Type ID	Option
1	—	BU	5592	Hybrid/EV Battery Cell Voltage Signal 33	I	—
2	—	BU / GN	4516	Hybrid/EV Battery Cell Voltage Signal 35	I	—
3	—	GN	4518	Hybrid/EV Battery Cell Voltage Signal 37	I	—
4	—	YE	4520	Hybrid/EV Battery Cell Voltage Signal 39	I	—
5	—	OG	5403	Hybrid/EV Battery Pack Monitor Low Reference	I	—
6	—	GY	4523	Hybrid/EV Battery Cell Voltage Signal 42	I	—
7	—	OG / RD	4525	Hybrid/EV Battery Cell Voltage Signal 44	I	—
8	—	OG / RD	4525	Hybrid/EV Battery Cell Voltage Signal 44	I	—
9	—	BU	4526	Hybrid/EV Battery Cell Voltage Signal 45	I	—
10	—	BU	4528	Hybrid/EV Battery Cell Voltage Signal 47	I	—
11	—	GN / WH	4514	Hybrid/EV Battery Cell Voltage Signal 34	I	—
12	—	PK	4517	Hybrid/EV Battery Cell Voltage Signal 36	I	—
13	—	BU	4519	Hybrid/EV Battery Cell Voltage Signal 38	I	—
14	—	VT	4521	Hybrid/EV Battery Cell Voltage Signal 40	I	—
15	—	WH	4522	Hybrid/EV Battery Cell Voltage Signal 41	I	—
16	—	BN	4524	Hybrid/EV Battery Cell Voltage Signal 43	I	—
17	—	OG / RD	4525	Hybrid/EV Battery Cell Voltage Signal 44	I	—
18	—	OG / RD	4525	Hybrid/EV Battery Cell Voltage Signal 44	I	—
19	—	GN / WH	4527	Hybrid/EV Battery Cell Voltage Signal 46	I	—
20	—	PK	4529	Hybrid/EV Battery Cell Voltage Signal 48	I	—

K16 Battery Energy Control Module X4

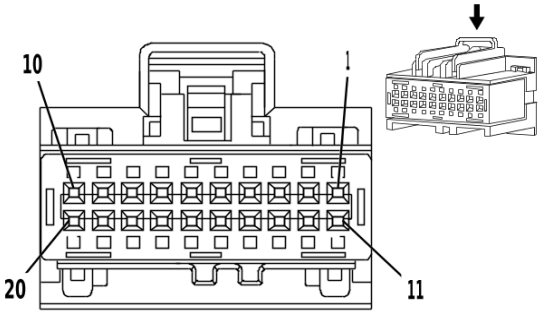

1664552

Connector Part Information

Harness Type: Hybrid/EV Battery
OEM Connector: 31410-0202
Service Connector: Service by Harness - See Part Catalog
Description: 20-Way F USCAR 64 Series(BN)

Terminal Part Information

Terminal Type ID	Terminated Lead	Diagnostic Test Probe	Terminal Removal Tool
I	Not required	J-35616-64B (L-BU)	No Tool Required

K16 Battery Energy Control Module X4

Pin	Size	Color	Circuit	Function	Terminal Type ID	Option
1	—	GN	5403	Hybrid/EV Battery Pack Monitor Low Reference	I	—
2	—	YE	4530	Hybrid/EV Battery Cell Voltage Signal 49	I	—
3	—	OG	4532	Hybrid/EV Battery Cell Voltage Signal 51	I	—
4	—	WH	4533	Hybrid/EV Battery Cell Voltage Signal 52	I	—
5	—	GN / WH	4537	Hybrid/EV Battery Cell Voltage Signal 55	I	—
6	—	BU	4541	Hybrid/EV Battery Cell Voltage Signal 57	I	—
7	—	GN / WH	4543	Hybrid/EV Battery Cell Voltage Signal 58	I	—
8	—	PK	4544	Hybrid/EV Battery Cell Voltage Signal 59	I	—
9	—	BU	4546	Hybrid/EV Battery Cell Voltage Signal 61	I	—
10	—	VT	4548	Hybrid/EV Battery Cell Voltage Signal 63	I	—
11	—	BU	4529	Hybrid/EV Battery Cell Voltage Signal 48	I	—
12	—	VT	4531	Hybrid/EV Battery Cell Voltage Signal 50	I	—
13	—	WH	4533	Hybrid/EV Battery Cell Voltage Signal 52	I	—
14	—	GY	4535	Hybrid/EV Battery Cell Voltage Signal 53	I	—
15	—	OG / RD	4538	Hybrid/EV Battery Cell Voltage Signal 56	I	—
16	—	GN / WH	4543	Hybrid/EV Battery Cell Voltage Signal 58	I	—
17	—	GN	5403	Hybrid/EV Battery Pack Monitor Low Reference	I	—
18	—	GN	4545	Hybrid/EV Battery Cell Voltage Signal 60	I	—
19	—	YE	4547	Hybrid/EV Battery Cell Voltage Signal 62	I	—
20	—	OG	4549	Hybrid/EV Battery Cell Voltage Signal 64	I	—

K16 Battery Energy Control Module X5

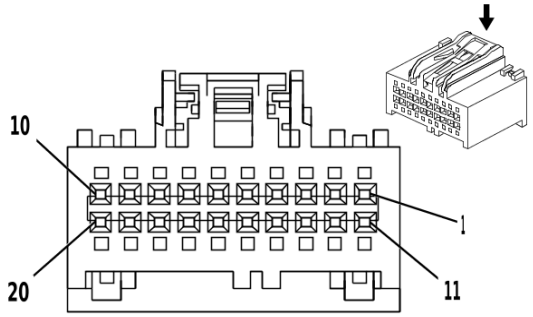

1715223

Connector Part Information

Harness Type: Hybrid/EV Battery
OEM Connector: 31410-0200
Service Connector: Service by Harness - See Part Catalog
Description: 20-Way F 64 Series,(BK)

Terminal Part Information

Terminal Type ID	Terminated Lead	Diagnostic Test Probe	Terminal Removal Tool
I	Not required	J-35616-64B (L-BU)	No Tool Required

K16 Battery Energy Control Module X5

Pin	Size	Color	Circuit	Function	Terminal Type ID	Option
1	—	OG	4549	Hybrid/EV Battery Cell Voltage Signal 64	I	—
2	—	GY	4554	Hybrid/EV Battery Cell Voltage Signal 66	I	—
3	—	OG	4555	Hybrid/EV Battery Cell Voltage Signal 67	I	—
4	—	GN / WH	4557	Hybrid/EV Battery Cell Voltage Signal 69	I	—
5	—	PK	4560	Hybrid/EV Battery Cell Voltage Signal 71	I	—
6	—	BU	4562	Hybrid/EV Battery Cell Voltage Signal 73	I	—
7	—	VT	4564	Hybrid/EV Battery Cell Voltage Signal 75	I	—
8	—	OG	4565	Hybrid/EV Battery Cell Voltage Signal 76	I	—
9	—	GY	4566	Hybrid/EV Battery Cell Voltage Signal 77	I	—
10	—	OG	4568	Hybrid/EV Battery Cell Voltage Signal 79	I	—
11	—	WH	4553	Hybrid/EV Battery Cell Voltage Signal 65	I	—
12	—	BN	5403	Hybrid/EV Battery Pack Monitor Low Reference	I	—
13	—	BU	4556	Hybrid/EV Battery Cell Voltage Signal 68	I	—
14	—	GN	4558	Hybrid/EV Battery Cell Voltage Signal 70	I	—
15	—	GN	4561	Hybrid/EV Battery Cell Voltage Signal 72	I	—
16	—	YE	4563	Hybrid/EV Battery Cell Voltage Signal 74	I	—
17	—	OG	4565	Hybrid/EV Battery Cell Voltage Signal 76	I	—
18	—	WH	5403	Hybrid/EV Battery Pack Monitor Low Reference	I	—
19	—	BN	4567	Hybrid/EV Battery Cell Voltage Signal 78	I	—
20	—	BU	4569	Hybrid/EV Battery Cell Voltage Signal 80	I	—

K16 Battery Energy Control Module X6

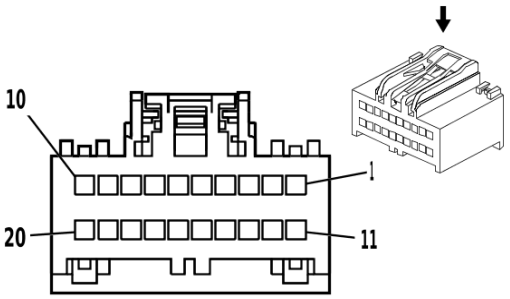

1715228

Connector Part Information

Harness Type: Hybrid/EV Battery
OEM Connector: 31410-0201
Service Connector: Service by Harness - See Part Catalog
Description: 20-Way F USCAR 64 Series(GY)

Terminal Part Information

Terminal Type ID	Terminated Lead	Diagnostic Test Probe	Terminal Removal Tool
I	Not required	J-35616-64B (L-BU)	No Tool Required

K16 Battery Energy Control Module X6

Pin	Size	Color	Circuit	Function	Terminal Type ID	Option
1	—	BU	4569	Hybrid/EV Battery Cell Voltage Signal 80	I	—
2	—	GN	4571	Hybrid/EV Battery Cell Voltage Signal 82	I	—
3	—	GN	4573	Hybrid/EV Battery Cell Voltage Signal 84	I	—
4	—	YE	4575	Hybrid/EV Battery Cell Voltage Signal 86	I	—
5	—	OG	4576	Hybrid/EV Battery Cell Voltage Signal 87	I	—
6	—	GY	2389	Hybrid/EV Battery Cell Voltage Signal 89	I	—
7	—	OG	2391	Hybrid/EV Battery Cell Voltage Signal 91	I	—
8	—	GN / WH	2393	Hybrid/EV Battery Cell Voltage Signal 93	I	—
9	—	GN	2394	Hybrid/EV Battery Cell Voltage Signal 94	I	—
10	—	PK	2396	Hybrid/EV Battery Cell Voltage Signal 96	I	—
11	—	GN / WH	4570	Hybrid/EV Battery Cell Voltage Signal 81	I	—
12	—	PK	4572	Hybrid/EV Battery Cell Voltage Signal 83	I	—
13	—	BU	4574	Hybrid/EV Battery Cell Voltage Signal 85	I	—
14	—	VT	5403	Hybrid/EV Battery Pack Monitor Low Reference	I	—
15	—	WH	4577	Hybrid/EV Battery Cell Voltage Signal 88	I	—
16	—	BN	2390	Hybrid/EV Battery Cell Voltage Signal 90	I	—
17	—	BU	2392	Hybrid/EV Battery Cell Voltage Signal 92	I	—
18	—	GN / WH	2393	Hybrid/EV Battery Cell Voltage Signal 93	I	—
19	—	BU	2395	Hybrid/EV Battery Cell Voltage Signal 95	I	—
20	—	—	—	Not Occupied	—	—

K16 Battery Energy Control Module X7

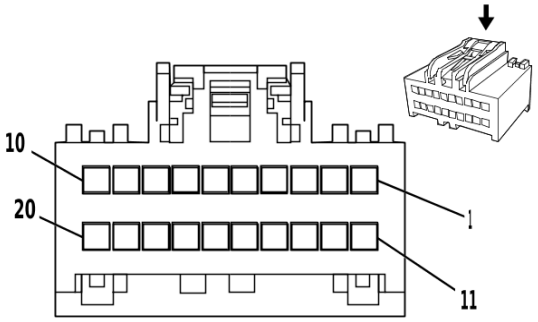

2180227

Connector Part Information

Harness Type: Hybrid/EV Battery
OEM Connector: 31410-0203
Service Connector: Service by Harness - See Part Catalog
Description: 20-Way F 0.64 Series(GN)

Terminal Part Information

Terminal Type ID	Terminated Lead	Diagnostic Test Probe	Terminal Removal Tool
I	Not required	J-35616-64B (L-BU)	No Tool Required

K16 Battery Energy Control Module X7

Pin	Size	Color	Circuit	Function	Terminal Type ID	Option
1	—	VT	5404	Charge Port Paddle Temperature Sensor Low Reference	I	—
2	—	VT	5406	Hybrid/EV Battery Temperature Signal 2	I	—
3	—	VT	5407	Hybrid/EV Battery Temperature Signal 3	I	—
4	—	VT	5408	Hybrid/EV Battery Temperature Signal 4	I	—
5	—	VT	5409	Hybrid/EV Battery Temperature Signal 5	I	—
6	—	VT	5410	Hybrid/EV Battery Temperature Signal 6	I	—
7	—	YE	5411	Hybrid/EV Battery Temperature Signal 7	I	—
8	—	—	—	Not Occupied	—	—
9	—	VT / RD	2965	Hybrid/EV Battery Current Sensor Voltage Reference	I	—
10	—	BK / YE	2962	Hybrid/EV Battery Current Sensor Coarse Signal	I	—
11	—	BK / WH	3373	Auxiliary Video High Signal 2	I	—
12	—	BK / WH	3774	Hybrid/EV Battery Temperature Sensor Low Reference 2	I	—
13	—	BK / WH	3775	Hybrid/EV Battery Temperature Sensor Low Reference 3	I	—
14	—	BK / WH	3778	Hybrid/EV Battery Temperature Sensor Low Reference 6	I	—
15	—	BK / WH	3777	Hybrid/EV Battery Temperature Sensor Low Reference 5	I	—
16	—	BK / WH	3778	Hybrid/EV Battery Temperature Sensor Low Reference 6	I	—
17	—	BK / BU	3779	Hybrid/EV Battery Temperature Sensor Low Reference 7	I	—

K16 Battery Energy Control Module X7 (cont'd)

Pin	Size	Color	Circuit	Function	Terminal Type ID	Option
18	—	—	—	Not Occupied	—	—
19	—	BK / GY	2963	Hybrid/EV Battery Current Sensor Low Reference	I	—
20	—	GN / BN	2961	Hybrid/EV Battery Current Sensor Fine Signal	I	—

K16 Battery Energy Control Module X8

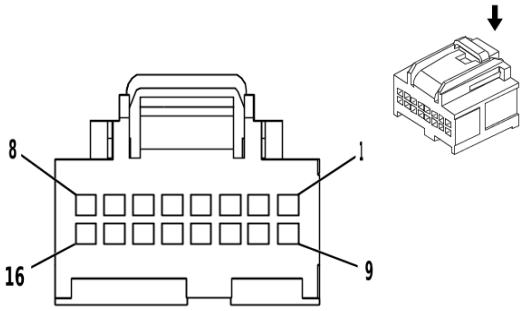

3240102

Connector Part Information

Harness Type: Hybrid/EV Battery
OEM Connector: 33104224
Service Connector: Service by Harness - See Part Catalog
Description: 16-Way F 0.64 OCS Series(BK)

Terminal Part Information

Terminal Type ID	Terminated Lead	Diagnostic Test Probe	Terminal Removal Tool
I	Not required	J-35616-64B (L-BU)	No Tool Required

K16 Battery Energy Control Module X8

Pin	Size	Color	Circuit	Function	Terminal Type ID	Option
1	—	RD / VT	1640	Battery Positive Voltage	I	—
2	—	—	—	Not Occupied	—	—
3	—	BU / WH	3977	Accessory Wake-Up Serial Data 2	I	—
4	—	WH	3832	High Speed GMLAN Serial Data [-] 6	I	—
5	—	YE	3831	High Speed GMLAN Serial Data [+] 6	I	—
6	—	WH	2501	High Speed GMLAN Serial Data [-] 1	I	—
7	—	BU	2500	High Speed GMLAN Serial Data [+] 1	I	—
8	—	BU / GY	5139	High Voltage System Interlock Signal	I	—
9	—	VT / GN	1339	Run/Crank Ignition 1 Voltage	I	—
10	—	BU / BN	3787	High Voltage Energy Management Communication Bus Enable Signal	I	—
11	—	BK	750	Ground	I	—
12 - 13	—	—	—	Not Occupied	—	—
14	—	WH	2501	High Speed GMLAN Serial Data [-] 1	I	—
15	—	BU	2500	High Speed GMLAN Serial Data [+] 1	I	—
16	—	—	—	Not Occupied	—	—

K17 Electronic Brake Control Module

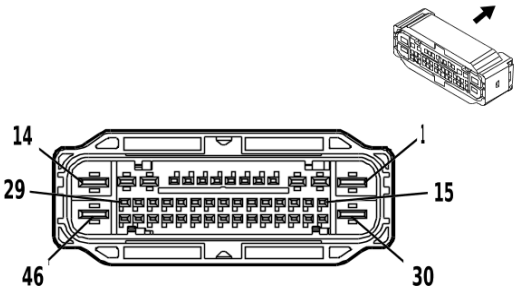

4162046

Connector Part Information

Harness Type: Body Wiring Harness
OEM Connector: 13509437
Service Connector: 19333357
Description: 46-Way F 1.2 OCS, 2.8, 6.3 CTS Series, Sealed(GY)

Terminal Part Information

Terminal Type ID	Terminated Lead	Diagnostic Test Probe	Terminal Removal Tool
I	19330700	J-35616-35 (VT)	J-38125-553
II	19333312	J-35616-12 (BU)	J-38125-215A
III	19369189	J-35616-40 (BU)	J-38125-553

K17 Electronic Brake Control Module

Pin	Size	Color	Circuit	Function	Terminal Type ID	Option
1	4	RD / BN	3142	Battery Positive Voltage	III	—
2	2.5	GN / VT	1988	Right Park Brake Motor Apply Control	I	—
3	2.5	GY	4368	Right Park Brake Motor Low Reference	I	—
4	0.5	BU	2500	High Speed GMLAN Serial Data [+] 1	II	—
5	0.5	BU	2500	High Speed GMLAN Serial Data [+] 1	II	—
6	—	—	—	Not Occupied	—	—
7	0.5	GY	830	Left Front Wheel Speed Sensor Signal	II	—
8	0.35	YE / RD	7683	Park Brake Release Switch Voltage Reference	II	—
9	0.35	BU / VT	1134	Park Brake Switch Signal	II	—
10	—	—	—	Not Occupied	—	—
11	0.5	BU / YE	6105	High Speed GMLAN Serial Data [+] 2	II	—
12	2.5	GY / BK	4369	Left Park Brake Motor Low Reference	I	—
13	2.5	WH	2001	Left Park Brake Motor Apply Control	I	—
14	4	BK	1650	Ground	III	—
15	0.35	BU / BK	6108	Park Brake Release Switch Signal	II	—
16	0.35	YE	1492	Park Brake Switch Supply Voltage	II	—
17	—	—	—	Not Occupied	—	—
18	0.5	WH	2501	High Speed GMLAN Serial Data [-] 1	II	—
19	0.5	WH	2501	High Speed GMLAN Serial Data [-] 1	II	—
20	—	—	—	Not Occupied	—	—

K17 Electronic Brake Control Module (cont'd)

Pin	Size	Color	Circuit	Function	Terminal Type ID	Option
21	0.5	GY / BN	7065	Right Front Wheel Speed Sensor Control	II	—
22	0.5	GY / YE	7128	Right Rear Wheel Speed Sensor Control	II	—
23	0.5	BU	884	Left Rear Wheel Speed Sensor Signal	II	—
24	0.5	GY / WH	7064	Left Front Wheel Speed Sensor Control	II	—
25	0.5	WH	6106	High Speed GMLAN Serial Data [-] 2	II	—
26	0.5	YE	872	Right Front Wheel Speed Sensor Signal	II	—
27 - 29	—	—	—	Not Occupied	—	—
30	2.5	RD / BU	3242	Battery Positive Voltage	III	—
31	0.35	BN	6107	Park Brake Apply Switch Signal	II	—
32	0.35	GY / RD	7684	Park Brake Apply Switch Voltage Reference	II	—
33 - 35	—	—	—	Not Occupied	—	—
36	0.5	WH / BU	5986	Serial Data Communication Enable	II	—
37	0.5	VT	882	Right Rear Wheel Speed Sensor Signal	II	—
38	—	—	—	Not Occupied	—	—
39	0.5	GY / BK	7127	Left Rear Wheel Speed Sensor Control	II	—
40 - 41	—	—	—	Not Occupied	—	—
42	0.5	GN / GY	333	Brake Fluid Level Signal	II	—
43 - 45	—	—	—	Not Occupied	—	—
46	2.5	BK	1650	Ground	III	—

K20 Engine Control Module X1

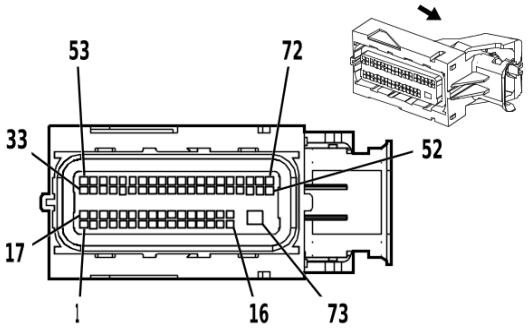

1968294

Connector Part Information

Harness Type: Engine Wiring Harness
OEM Connector: 34566-1303
Service Connector: 13574947
Description: 73-Way F 0.64, 2.8 Series, Sealed(BK with BK Terminal Position Assurance)

Terminal Part Information

Terminal Type ID	Terminated Lead	Diagnostic Test Probe	Terminal Removal Tool
I	13587518	J-35616-35 (VT)	J-38125-11A
II	19354746	J-35616-64B (L-BU)	J-38125-215A

K20 Engine Control Module X1

Pin	Size	Color	Circuit	Function	Terminal Type ID	Option
1	—	—	—	Not Occupied	—	—
2	0.5	WH / BU	6311	Cruise/ETC/TCC Brake Signal	II	—
3 - 4	—	—	—	Not Occupied	—	—
5	0.5	GN	380	A/C Refrigerant Pressure Sensor Signal	II	—
6 - 9	—	—	—	Not Occupied	—	—
10	0.5	BK / YE	5382	Brake Position Sensor Low Reference	II	—
11 - 17	—	—	—	Not Occupied	—	—
18	0.5	VT / GN	4320	Powertrain Sensor Bus Enable	II	—
19 - 28	—	—	—	Not Occupied	—	—
29	0.5	BN / WH	419	Check Engine Indicator Control	II	—
30	0.5	BU / VT	2364	Cooling Fan Speed Signal	II	—
31 - 33	—	—	—	Not Occupied	—	—
34	0.5	BK / VT	1272	Accelerator Pedal Position Low Reference 2	II	—
35	0.5	GN / WH	1162	Accelerator Pedal Position Signal 2	II	—
36 - 37	—	—	—	Not Occupied	—	—
38	0.5	BK / BU	1271	Accelerator Pedal Position Low Reference 1	II	—
39	0.5	YE / WH	1161	Accelerator Pedal Position Signal 1	II	—
40	—	—	—	Not Occupied	—	—
41	0.5	BN / RD	1274	Accelerator Pedal Position 5V Reference 2	II	—
42	—	—	—	Not Occupied	—	—
43	0.5	WH	7494	High Speed GMLAN Serial Data [-] 3	II	—

K20 Engine Control Module X1 (cont'd)

Pin	Size	Color	Circuit	Function	Terminal Type ID	Option
44	0.5	WH	2501	High Speed GMLAN Serial Data [-] 1	II	—
45 - 47	—	—	—	Not Occupied	—	—
48	0.5	BU / WH	3977	Accessory Wake-Up Serial Data 2	II	—
49 - 51	—	—	—	Not Occupied	—	—
52	0.5	VT / GY	139	Run/Crank Ignition 1 Voltage	II	—
53 - 58	—	—	—	Not Occupied	—	—
59	0.5	WH / RD	5381	Brake Position Sensor 5V Reference	II	—
60	—	—	—	Not Occupied	—	—
61	0.5	WH / RD	1164	Accelerator Pedal Position 5V Reference 1	II	—
62	—	—	—	Not Occupied	—	—
63	0.5	BU / BK	7493	High Speed GMLAN Serial Data [+] 3	II	—
64	0.5	BU	2500	High Speed GMLAN Serial Data [+] 1	II	—
65 - 68	—	—	—	Not Occupied	—	—
69	0.5	YE	5991	Powertrain Relay Coil Control	II	—
70	—	—	—	Not Occupied	—	—
71	0.5	WH	4499	High Speed GMLAN Serial Data [-] 7	II	—
72	0.5	BU / BN	4498	High Speed GMLAN Serial Data [+] 7	II	—
73	2	BK	150	Ground	I	—

K20 Engine Control Module X2

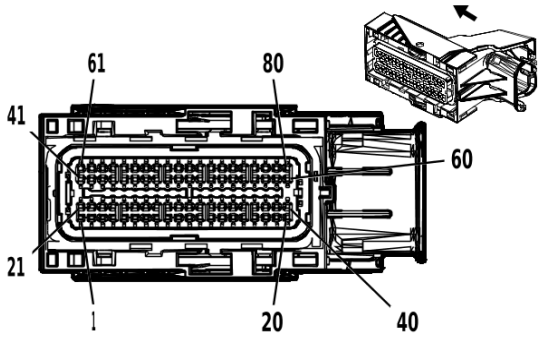

4166698

Connector Part Information

Harness Type: Engine Wiring Harness
OEM Connector: 12672873
Service Connector: 85136259
Description: 80-Way F 0.64 Series, Sealed(BK with BU Terminal Position Assurance)

Terminal Part Information

Terminal Type ID	Terminated Lead	Diagnostic Test Probe	Terminal Removal Tool
I	19351723	J-35616-64B (L-BU)	J-38125-213

K20 Engine Control Module X2

Pin	Size	Color	Circuit	Function	Terminal Type ID	Option
1 - 19	—	—	—	Not Occupied	—	—
20	0.5	RD / WH	140	Battery Positive Voltage	I	—
21 - 29	—	—	—	Not Occupied	—	—
30	0.5	BK / BN	5514	A/C Refrigerant Pressure Sensor Low Reference	I	—
31 - 38	—	—	—	Not Occupied	—	—
39	0.5	GY	23	Generator Field Duty Cycle Signal	I	—
40 - 56	—	—	—	Not Occupied	—	—
57	0.5	WH / GN	5380	Brake Position Sensor Signal	I	—
58	—	—	—	Not Occupied	—	—
59	0.5	BN	25	Charge Indicator Control	I	—
60 - 63	—	—	—	Not Occupied	—	—
64	0.5	GN / VT	4621	Engine Control Module LIN Bus 1	I	—
65	—	—	—	Not Occupied	—	—
66	0.5	BN / RD	2700	A/C Pressure Sensor 5V Reference	I	—
67 - 79	—	—	—	Not Occupied	—	—
80	0.5	VT / BU	5292	Powertrain Main Relay Fused Supply Voltage 3	I	—

K29F Seat Heating Control Module - Front X1 (KA1)

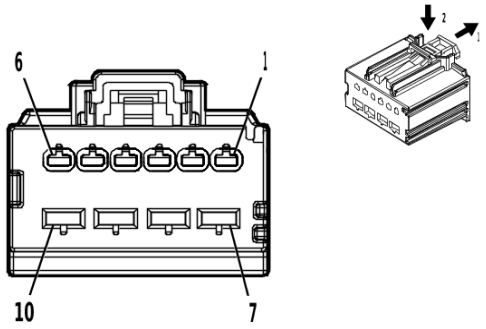

5035058

Connector Part Information

Harness Type: Front Passenger Seat Wiring Harness
OEM Connector: 31372-1600
Service Connector: Service by Harness - See Part Catalog
Description: 10-Way F 1.5, 2.8 MX Series(BK)

Terminal Part Information

Terminal Type ID	Terminated Lead	Diagnostic Test Probe	Terminal Removal Tool
I	Not required	J-35616-2A (GY)	No Tool Required
II	Not required	J-35616-35 (VT)	No Tool Required

K29F Seat Heating Control Module - Front X1 (KA1)

Pin	Size	Color	Circuit	Function	Terminal Type ID	Option
1	—	—	—	Not Occupied	—	—
2	0.75	BN / BU	2479	Passenger Seat Heating Element Control	I	—
3	0.75	GY / BK	2480	Passenger Seat Heating Element Low Reference	I	—
4	0.75	VT / BK	2424	Driver Seat Back Heating Element Low Reference	I	—
5	—	—	—	Not Occupied	—	—
6	0.75	BN / VT	2077	Driver Seat Heating Element Control	I	—
7	1.5	RD / WH	540	Battery Positive Voltage	II	—
8	2	BK	850	Ground	II	—
9	—	—	—	Not Occupied	—	—
10	2	RD / BU	540	Battery Positive Voltage	II	—

K29F Seat Heating Control Module - Front X2 (KA1)

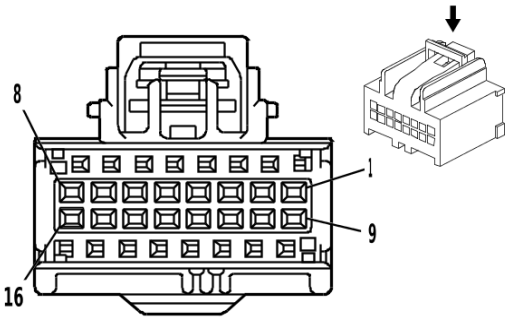

1653409

Connector Part Information

Harness Type: Front Passenger Seat Wiring Harness
OEM Connector: 7283-9076-30
Service Connector: Service by Harness - See Part Catalog
Description: 16-Way F 0.64 Kaizen Series(BK)

Terminal Part Information

Terminal Type ID	Terminated Lead	Diagnostic Test Probe	Terminal Removal Tool
I	Not required	J-35616-64B (L-BU)	No Tool Required

K29F Seat Heating Control Module - Front X2 (KA1)

Pin	Size	Color	Circuit	Function	Terminal Type ID	Option
1	0.5	BK / YE	2080	Driver Heated Seat Thermistor Low Reference	I	—
2	0.5	BK / GY	2435	Passenger Heated Seat Thermistor Low Reference	I	—
3	0.5	BU	2425	Driver Seat Back Heating Temperature Sensor Signal	I	—
4	0.5	WH / BU	2436	Passenger Seat Back Heating Temperature Sensor Signal	I	—
5	0.5	WH / GY	2434	Passenger Seat Heating Temperature Sensor Signal	I	—
6	0.5	YE / GY	2079	Driver Seat Heating Temperature Sensor Signal	I	—
7	—	—	—	Not Occupied	—	—
8	0.5	GN / BU	6133	Body Control Module LIN Bus 2	I	—
9	0.5	GN / VT	5906	Driver Seat Blower Motor Control 1	I	—
10	0.5	VT / WH	5908	Passenger Seat Blower Motor Control 1	I	—
11 - 16	—	—	—	Not Occupied	—	—

K29R Seat Heating Control Module - Rear X1 (KA6)

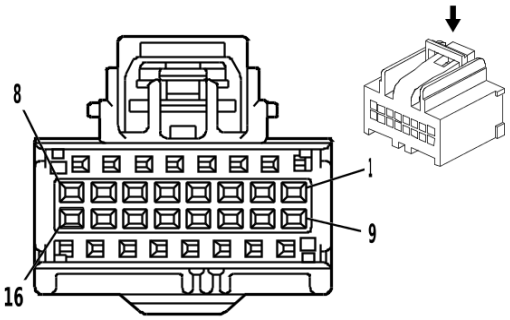

1653409

Connector Part Information

Harness Type: Rear Seat
OEM Connector: 15136073
Service Connector: Service by Harness - See Part Catalog
Description: 16-Way F 0.64 Kaizen Series(BK)

Terminal Part Information

Terminal Type ID	Terminated Lead	Diagnostic Test Probe	Terminal Removal Tool
I	Not required	J-35616-64B (L-BU)	No Tool Required

K29R Seat Heating Control Module - Rear X1 (KA6)

Pin	Size	Color	Circuit	Function	Terminal Type ID	Option
1	—	—	—	Not Occupied	—	—
2	—	GN / BN	2296	Right Rear Seat Cushion Heating Element Control	I	—
3	—	GN / BK	2297	Right Rear Seat Cushion Heating Element Low Reference	I	—
4	—	BN / BK	2295	Left Rear Seat Cushion Heating Element Low Reference	I	—
5	—	—	—	Not Occupied	—	—
6	—	GY	2294	Left Rear Seat Cushion Heating Element Control	I	—
7	—	RD / BU	540	Battery Positive Voltage	I	—
8	—	BK	2250	Ground	I	—
9	—	—	—	Not Occupied	—	—
10	—	RD / BU	540	Battery Positive Voltage	I	—
11 - 16	—	—	—	Not Occupied	—	—

K29R Seat Heating Control Module - Rear X2 (KA6)

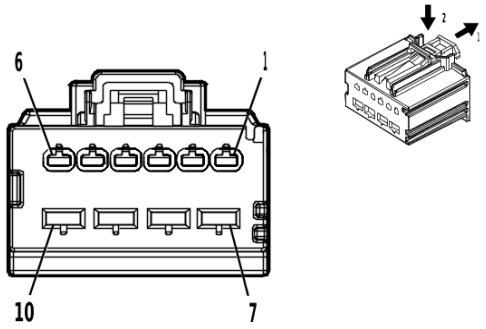

5035058

Connector Part Information

Harness Type: Rear Seat
OEM Connector: 13525907
Service Connector: Service by Harness - See Part Catalog
Description: 10-Way F 1.5, 2.8 MX Series(BK)

Terminal Part Information

Terminal Type ID	Terminated Lead	Diagnostic Test Probe	Terminal Removal Tool
I	Not required	J-35616-64B (L-BU)	No Tool Required

K29R Seat Heating Control Module - Rear X2 (KA6)

Pin	Size	Color	Circuit	Function	Terminal Type ID	Option
1	0.5	VT / RD	7048	Left Rear Cushion Thermistor Feedback Signal	I	—
2	0.5	WH / BK	7054	Right Rear Cushion Thermistor Feedback Signal	I	—
3 - 4	—	—	—	Not Occupied	—	—
5	0.5	YE / WH	7053	Right Rear Seat Cushion Temperature Sensor Signal	I	—
6	0.5	GY / BU	7047	Left Rear Seat Cushion Temperature Sensor Signal	I	—
7	0.5	BK	2250	Ground	I	—
8	0.5	GN / BU	6133	Body Control Module LIN Bus 2	I	—
9 - 10	—	—	—	Not Occupied	—	—

K32 Steering Wheel Heating Control Module X1 (KI3-UKL)

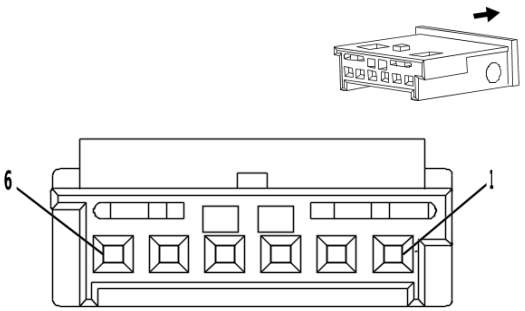

1862024

Connector Part Information

Harness Type: Steering Wheel
OEM Connector: 1-1241370-3
Service Connector: Service by Harness - See Part Catalog
Description: 6-Way F 0.64 Micro-Quadlock Series(BK)

Terminal Part Information

Terminal Type ID	Terminated Lead	Diagnostic Test Probe	Terminal Removal Tool
I	Not required	J-35616-16 (L-GN)	No Tool Required

K32 Steering Wheel Heating Control Module X1 (KI3-UKL)

Pin	Size	Color	Circuit	Function	Terminal Type ID	Option
1	0.35	YE / GY	5883	Steering Wheel Heating Switch Signal	I	—
2	0.35	BN / WH	5884	Steering Wheel Heating Switch LED Control	I	—
3	0.5	OG	2239	Run/Crank Ignition 1 Voltage	I	—
4	0.5	BK	1650	Ground	I	—
5	0.35	BK	1650	Ground	I	—
6	0.35	GN / BU	4119	HVAC Control Module LIN Bus 2	I	—

K32 Steering Wheel Heating Control Module X2 (KI3)

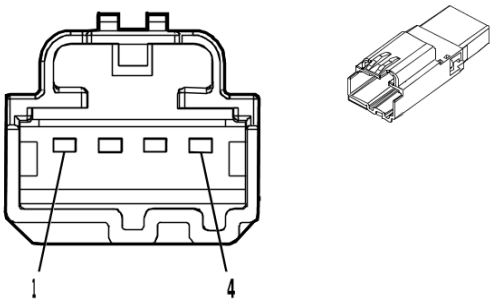

5093948

Connector Part Information

Harness Type: Steering Wheel Wiring Harness
OEM Connector: 31068-1040
Service Connector: Service by Harness - See Part Catalog
Description: 4-Way M 0.64 H-DAC Series(BK)

Terminal Part Information

Terminal Type ID	Terminated Lead	Diagnostic Test Probe	Terminal Removal Tool
I	Not required	No Tool Required	No Tool Required

K32 Steering Wheel Heating Control Module X2 (KI3)

Pin	Size	Color	Circuit	Function	Terminal Type ID	Option
1	0.8	BK / BK	5886	Steering Wheel Heating Temperature Sensor Signal	I	KI3
2	0.8	GY / BK	5885	Steering Wheel Heating Voltage Reference	I	KI3
3	0.8	WH	5888	Steering Wheel Heating High Control	I	KI3
4	0.8	BK	1150	Ground	I	KI3

K33 HVAC Control Module X1

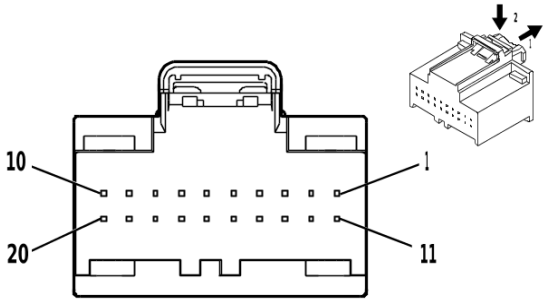

5109511

Connector Part Information

Harness Type: Instrument Panel Wiring Harness
OEM Connector: 13525993
Service Connector: 13525993
Description: 20-Way F 0.64 Series(GN)

Terminal Part Information

Terminal Type ID	Terminated Lead	Diagnostic Test Probe	Terminal Removal Tool
I	13584547	J-35616-64B (L-BU)	J-38125-215A

K33 HVAC Control Module X1

Pin	Size	Color	Circuit	Function	Terminal Type ID	Option
1 - 17	—	—	—	Not Occupied	—	—
18	0.35	BN	518	Lower Left Duct Air Temperature Sensor Signal	I	—
19 - 20	—	—	—	Not Occupied	—	—

K33 HVAC Control Module X2

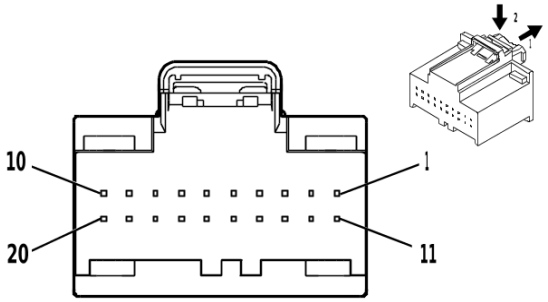

5109514

Connector Part Information

Harness Type: Instrument Panel Wiring Harness
OEM Connector: 13525992
Service Connector: 13525992
Description: 20-Way F 0.64 Series(BN)

Terminal Part Information

Terminal Type ID	Terminated Lead	Diagnostic Test Probe	Terminal Removal Tool
I	13584547	J-35616-64B (L-BU)	J-38125-215A

K33 HVAC Control Module X2

Pin	Size	Color	Circuit	Function	Terminal Type ID	Option
1	0.35	RD / BN	6640	Battery Positive Voltage	I	—
2	0.35	GN	5060	Low Speed GMLAN Serial Data	I	—
3	—	—	—	Not Occupied	—	—
4	0.35	GN / YE	7531	HVAC Control Module LIN Bus 1	I	—
5	—	—	—	Not Occupied	—	—
6	0.5 0.5	GN / BU GN / BU	4119 4119	HVAC Control Module LIN Bus 2 HVAC Control Module LIN Bus 2	I I	(KI3- UKL) / (KEM) (UKL- KEM) / (- KEM- KI3)
7	—	—	—	Not Occupied	—	—
8	0.5	BK	1250	Ground	I	—
9	0.35	VT / BN	541	Run Ignition 3 Voltage	I	—
10 - 12	—	—	—	Not Occupied	—	—
13	0.5	GY	5127	Turbocharger Coolant Pump Relay Control	I	—
14	—	—	—	Not Occupied	—	—
15	0.35	BU / GY	754	Blower Motor Speed Control	I	—
16 - 18	—	—	—	Not Occupied	—	—
19	0.35	BN / VT	193	Rear Defogger Relay Control	I	—
20	—	—	—	Not Occupied	—	—

K33 HVAC Control Module X3

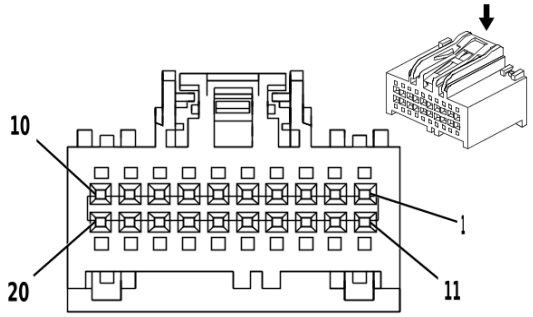

1715223

Connector Part Information

Harness Type: HVAC Wiring Harness
OEM Connector: 31410-0200
Service Connector: Service by Harness - See Part Catalog
Description: 20-Way F 64 Series,(BK)

Terminal Part Information

Terminal Type ID	Terminated Lead	Diagnostic Test Probe	Terminal Removal Tool
I	Not required	No Tool Required	No Tool Required

K33 HVAC Control Module X3

Pin	Size	Color	Circuit	Function	Terminal Type ID	Option
1	0.5	GY / GN	516	Left Upper Duct Air Temperature Sensor Signal	I	—
2	0.5	BU / BN	3167	Mode Door Actuator Control 3	I	—
3	0.5	GY / RD	3165	Mode Door Actuator Control 1	I	—
4	0.5	BN / GY	3168	Mode Door Actuator Control 4	I	—
5	0.5	BN / GN	3166	Mode Door Actuator Control 2	I	—
6 - 8	—	—	—	Not Occupied	—	—
9	0.5	BK / YE	407	Sensor Low Reference	I	—
10	—	—	—	Not Occupied	—	—
11	0.5	WH / BK	3169	Air Temperature Door Actuator Control 1	I	—
12	0.5	VT / GN	3170	Air Temperature Door Actuator Control 2	I	—
13	0.5	YE / GN	3171	Air Temperature Door Actuator Control 3	I	—
14	0.5	GY / BU	3172	Air Temperature Door Actuator Control 4	I	—
15	0.75	BN / VT	7572	HVAC Door Actuator Control	I	—
16	0.5	BU / GY	3173	Air Inlet Door Actuator Control 1	I	—
17	0.5	BN / WH	3174	Air Inlet Door Actuator Control 2	I	—
18	0.5	YE / GN	3175	Air Inlet Door Actuator Control 3	I	—
19	0.5	WH	3176	Air Inlet Door Actuator Control 4	I	—
20	—	—	—	Not Occupied	—	—

K36 Inflatable Restraint Sensing and Diagnostic Module X1

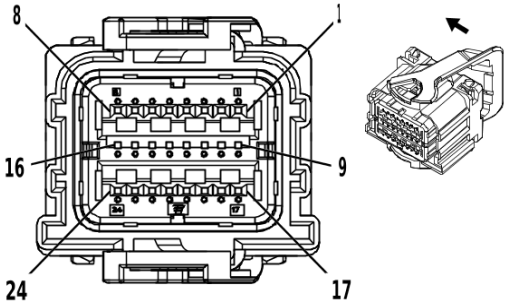

2829824

Connector Part Information

Harness Type: Instrument Panel Wiring Harness
OEM Connector: 13580322
Service Connector: 13579297
Description: 24-Way F 0.64 Series, Sealed(YE)

Terminal Part Information

Terminal Type ID	Terminated Lead	Diagnostic Test Probe	Terminal Removal Tool
I	13587521	J-35616-64B (L-BU)	J-38125-11A
II	Not required	J-35616-64B (L-BU)	No Tool Required

K36 Inflatable Restraint Sensing and Diagnostic Module X1

Pin	Size	Color	Circuit	Function	Terminal Type ID	Option
1	0.35 0.35	OG / GN OG / GN	3023 3023	Steering Wheel Air Bag Stage 2 High Control Steering Wheel Air Bag Stage 2 High Control	I I	UKL - UKL
2	0.35 0.35	WH / OG WH / OG	3022 3022	Steering Wheel Air Bag Stage 2 Low Control Steering Wheel Air Bag Stage 2 Low Control	I I	UKL - UKL
3	0.35 0.35	BN / OG BN / OG	3020 3020	Steering Wheel Air Bag Stage 1 Low Control Steering Wheel Air Bag Stage 1 Low Control	I I	UKL - UKL
4	0.35 0.35	OG / VT OG / VT	3021 3021	Steering Wheel Air Bag Stage 1 High Control Steering Wheel Air Bag Stage 1 High Control	I I	UKL - UKL
5	0.5	YE / OG	3025	Passenger Instrument Panel Air Bag Stage 1 High Control	I	
6	0.5	OG / WH	3024	Passenger Instrument Panel Air Bag Stage 1 Low Control	I	
7	0.35	OG / VT	3026	Passenger Instrument Panel Air Bag Stage 2 Low Control	I	
8	0.35	GY / OG	3027	Passenger Instrument Panel Air Bag Stage 2 High Control	I	
9	0.35	RD / GN	6140	Battery Positive Voltage	I	
10	0.35	VT / WH	5234	Passenger Seat Belt Indicator Control	I	—
11	0.35	BU	2307	Passenger Air Bag On Indicator Control	I	
12	0.35	GN	2308	Passenger Air Bag Off Indicator Control	I	
13 - 14	—	—	—	Not Occupied	—	—
15	0.35	GN	5060	Low Speed GMLAN Serial Data	I	
16	—	—	—	Not Occupied	—	—

K36 Inflatable Restraint Sensing and Diagnostic Module X1 (cont'd)

Pin	Size	Color	Circuit	Function	Terminal Type ID	Option
17	0.5	WH / BU	5986	Serial Data Communication Enable	I	
18	0.35	BU / YE	6105	High Speed GMLAN Serial Data [+] 2	I	—
19	0.35	BK / WH	1751	Signal Ground	I	
20	0.35	WH	6106	High Speed GMLAN Serial Data [-] 2	I	—
21	0.5	OG / BU	3078	Driver Knee Air Bag High Control	II	
22	0.35	GY / OG	3079	Driver Knee Air Bag Low Control	II	
23	0.5	WH / OG	3077	Passenger Knee Air Bag Low Control	II	
24	0.5	OG / BU	3076	Passenger Knee Air Bag High Control	II	

K36 Inflatable Restraint Sensing and Diagnostic Module X2

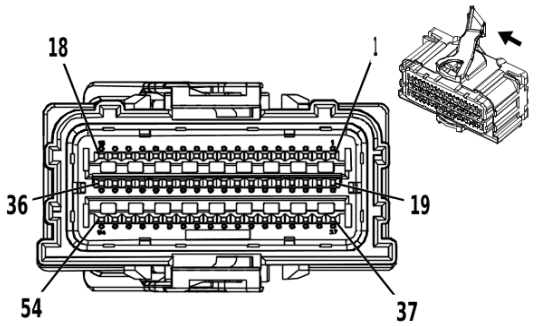

4166475

Connector Part Information

Harness Type: Body Wiring Harness
OEM Connector: 4-2098922-6
Service Connector: 19303770
Description: 54-Way F 0.64 Series, Sealed(YE)

Terminal Part Information

Terminal Type ID	Terminated Lead	Diagnostic Test Probe	Terminal Removal Tool
I	19328872	J-35616-64B (L-BU)	J-38125-11A
II	Not required	J-35616-64B (L-BU)	No Tool Required

K36 Inflatable Restraint Sensing and Diagnostic Module X2

Pin	Size	Color	Circuit	Function	Terminal Type ID	Option
1	0.5	OG / VT	5155	Left Rear Seat Belt Pretensioner Control	II	SBK
2	0.5	BK / OG	5156	Left Rear Seat Belt Pretensioner Low Reference	II	SBK
3	0.5	BK / OG	5158	Right Rear Seat Belt Pretensioner Low Reference	II	SBK
4	0.5	OG / WH	5157	Right Rear Seat Belt Pretensioner Control	II	SBK
5	0.5	OG / GY	5223	Left Rear Seat Side Air Bag High Control	II	
6	0.5	BN / OG	5224	Left Rear Seat Side Air Bag Low Control	II	
7	0.5	OG / GY	5226	Right Rear Seat Side Air Bag Low Control	II	
8	0.5	VT / OG	5225	Right Rear Seat Side Air Bag High Control	II	
9	0.5	OG / YE	3481	Driver Seat Belt Anchor Pretensioner High Control	II	
10	0.5	WH / OG	3482	Driver Seat Belt Anchor Pretensioner Low Control	II	
11	0.5	GY / OG	3480	Passenger Seat Belt Anchor Pretensioner Low Control	II	
12	0.5	OG / BN	3479	Passenger Seat Belt Anchor Pretensioner High Control	II	
13	0.5	OG / BU	3068	Driver Seat Side Air Bag High Control	I	
14	0.5	GN / OG	3069	Driver Seat Side Air Bag Low Control	I	
15	0.5	BU / OG	3067	Passenger Seat Side Air Bag Low Control	I	
16	0.5	OG / GY	3066	Passenger Seat Side Air Bag High Control	I	
17	0.5	OG / GN	5019	Left Front Roof Rail Air Bag High Control	II	
18	0.5	VT / OG	5020	Left Front Roof Rail Air Bag Low Control	II	

K36 Inflatable Restraint Sensing and Diagnostic Module X2 (cont'd)

Pin	Size	Color	Circuit	Function	Terminal Type ID	Option
19	0.5	OG / GN	2132	Left Front Side Impact Sensor Signal	I	
20	0.5	BK / OG	6628	Left Front Side Impact Sensor Low Reference	I	
21	0.5	BK / OG	6629	Right Front Side Impact Sensor Low Reference	I	
22	0.5	BN / OG	2134	Right Front Side Impact Sensor Signal	I	
23	0.5 0.5	OG / YE OG / YE	354 354	Left Front Impact Discriminating Sensor Signal Left Front Impact Discriminating Sensor Signal	I I	UKL - UKL
24	0.5 0.5	BK / OG BK / OG	5045 5045	Left Front Impact Discriminating Sensor Low Reference Left Front Impact Discriminating Sensor Low Reference	I I	UKL - UKL
25	0.5 0.5	BK / OG BK / OG	5600 5600	Right Front Impact Discriminating Sensor Low Reference Right Front Impact Discriminating Sensor Low Reference	I I	UKL - UKL
26	0.5 0.5	OG / GN OG / GN	1409 1409	Right Front Impact Discriminating Sensor Signal Right Front Impact Discriminating Sensor Signal	I I	UKL - UKL
27	0.5	OG / BU	6622	Left Rear Side Impact Sensor Signal	I	
28	0.5	BK / OG	6623	Left Rear Side Impact Sensor Low Reference	I	
29	0.5 0.5	BK / OG BK / OG	6627 6627	Right Rear Side Impact Sensor Low Reference Right Rear Side Impact Sensor Low Reference	I I	UKL - UKL
30	0.5 0.5	OG / WH OG / WH	6626 6626	Right Rear Side Impact Sensor Signal Right Rear Side Impact Sensor Signal	I I	UKL - UKL
31 - 36	—	—	—	Not Occupied	—	—
37	0.5	OG / WH	3477	Driver Seat Belt Retractor Pretensioner High Control	II	
38	0.5	GY / OG	3478	Driver Seat Belt Retractor Pretensioner Low Control	II	
39	0.5	WH / OG	3476	Passenger Seat Belt Retractor Pretensioner Low Control	II	
40	0.5	OG / GN	3475	Passenger Seat Belt Retractor Pretensioner High Control	II	
41	0.5	OG / BN	238	Driver Seat Belt Switch Signal	I	—
42	—	—	—	Not Occupied	—	—
43	0.5	BK / OG	1363	Driver Seat Belt Switch Low Reference	I	—
44	0.5	BK / OG	1361	Passenger Seat Belt Switch Low Reference	I	—
45	0.5	OG / VT	1362	Passenger Seat Belt Switch Signal	I	—
46 - 52	—	—	—	Not Occupied	—	—
53	0.5	OG / GY	5021	Right Front Roof Rail Air Bag High Control	II	
54	0.5	WH / OG	5022	Right Front Roof Rail Air Bag Low Control	II	

K43 Power Steering Control Module X1

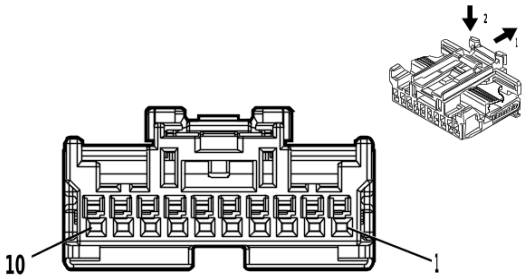

4051038

Connector Part Information

Harness Type: Instrument Panel Wiring Harness
OEM Connector: 2291594-1
Service Connector: 13508399
Description: 10-Way F 0.64 Generation Y Series(BN)

Terminal Part Information

Terminal Type ID	Terminated Lead	Diagnostic Test Probe	Terminal Removal Tool
I	19300631	J-35616-64B (L-BU)	J-38125-215A

K43 Power Steering Control Module X1

Pin	Size	Color	Circuit	Function	Terminal Type ID	Option
1	—	—	—	Not Occupied	—	—
2	0.35	BU	2500	High Speed GMLAN Serial Data [+] 1	I	—
3	0.35	WH	2501	High Speed GMLAN Serial Data [-] 1	I	—
4	0.5	BU	2500	High Speed GMLAN Serial Data [+] 1	I	—
5	0.35	WH	2501	High Speed GMLAN Serial Data [-] 1	I	—
6	0.5	WH	6106	High Speed GMLAN Serial Data [-] 2	I	—
7	0.35	BU / YE	6105	High Speed GMLAN Serial Data [+] 2	I	—
8	0.35	WH	6106	High Speed GMLAN Serial Data [-] 2	I	—
9	0.35	BU / YE	6105	High Speed GMLAN Serial Data [+] 2	I	—
10	0.35	WH / BU	5986	Serial Data Communication Enable	I	—

K43 Power Steering Control Module X2

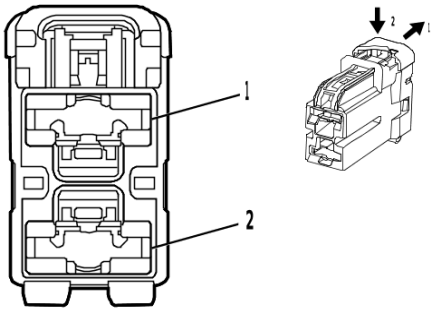

2453116

Connector Part Information

Harness Type: Instrument Panel Wiring Harness
OEM Connector: 13512002
Service Connector: Service by Harness - See Part Catalog
Description: 2-Way F 9.5 Series(BK)

Terminal Part Information

Terminal Type ID	Terminated Lead	Diagnostic Test Probe	Terminal Removal Tool
I	Not required	J-35616-22 (RD)	No Tool Required

K43 Power Steering Control Module X2

Pin	Size	Color	Circuit	Function	Terminal Type ID	Option
1	8	RD / GN	40	Battery Positive Voltage	I	—
2	0.35	BK	1750	Ground	I	—

K53D Seat Blower Assembly - Driver Back (KU1)

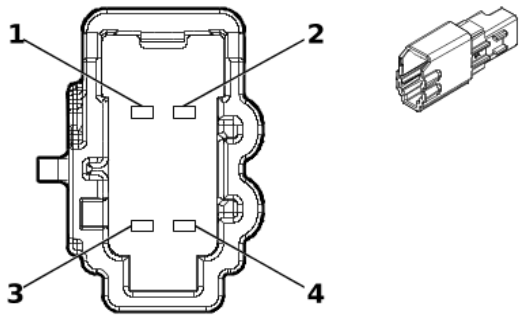

5423974

Connector Part Information

Harness Type: Front Driver Seat Wiring Harness
OEM Connector: 6098-9049
Service Connector: Service by Harness - See Part Catalog
Description: 4-Way M 1.2 MCON Series(GY)

Terminal Part Information

Terminal Type ID	Terminated Lead	Diagnostic Test Probe	Terminal Removal Tool
I	Not required	J-35616-17 (L-GN)	No Tool Required

K53D Seat Blower Assembly - Driver Back (KU1)

Pin	Size	Color	Circuit	Function	Terminal Type ID	Option
1	0.75	VT / GN	439	Run/Crank Ignition 1 Voltage	I	—
2	0.5	GN / VT	5906	Driver Seat Blower Motor Control 1	I	—
3	0.75	BK	1550	Ground	I	—
4	—	—	—	Not Occupied	—	—

K53P Seat Blower Assembly - Passenger Back (KU3)

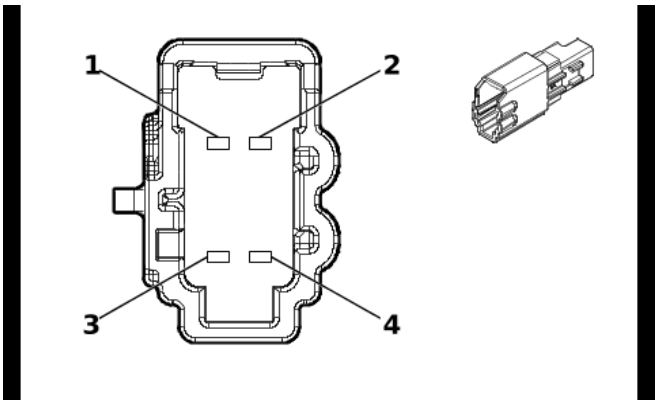

5423974

Connector Part Information

Harness Type: Front Passenger Seat Wiring Harness
OEM Connector: 6098-9049
Service Connector: Service by Harness - See Part Catalog
Description: 4-Way M 1.2 MCON Series(GY)

Terminal Part Information

Terminal Type ID	Terminated Lead	Diagnostic Test Probe	Terminal Removal Tool
I	Not required	J-35616-17 (L-GN)	No Tool Required

K53P Seat Blower Assembly - Passenger Back (KU3)

Pin	Size	Color	Circuit	Function	Terminal Type ID	Option
1	0.75	VT / GN	439	Run/Crank Ignition 1 Voltage	I	—
2	0.5	VT / WH	5908	Passenger Seat Blower Motor Control 1	I	—
3	0.75	BK	850	Ground	I	—
4	—	—	—	Not Occupied	—	—

K55D Seat Blower Assembly - Driver Cushion (KU1)

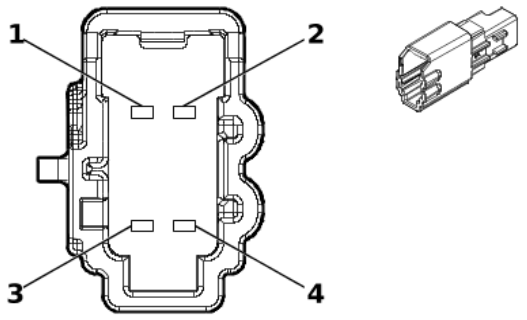

5423974

Connector Part Information

Harness Type: Front Driver Seat Wiring Harness
OEM Connector: 6098-9049
Service Connector: Service by Harness - See Part Catalog
Description: 4-Way M 1.2 MCON Series(GY)

Terminal Part Information

Terminal Type ID	Terminated Lead	Diagnostic Test Probe	Terminal Removal Tool
I	Not required	J-35616-17 (L-GN)	No Tool Required

K55D Seat Blower Assembly - Driver Cushion (KU1)

Pin	Size	Color	Circuit	Function	Terminal Type ID	Option
1	0.75	VT / GN	439	Run/Crank Ignition 1 Voltage	I	—
2	0.5	GN / VT	5906	Driver Seat Blower Motor Control 1	I	—
3	0.75	BK	1550	Ground	I	—
4	—	—	—	Not Occupied	—	—

K55P Seat Blower Assembly - Passenger Cushion (KU3)

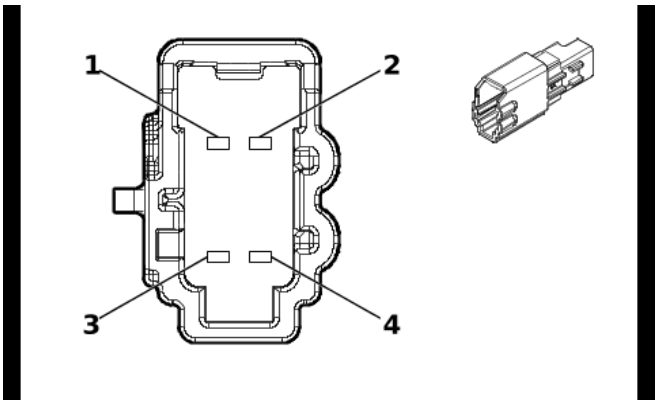

5423974

Connector Part Information

Harness Type: Front Passenger Seat Wiring Harness
OEM Connector: 6098-9049
Service Connector: Service by Harness - See Part Catalog
Description: 4-Way M 1.2 MCON Series(GY)

Terminal Part Information

Terminal Type ID	Terminated Lead	Diagnostic Test Probe	Terminal Removal Tool
I	Not required	J-35616-17 (L-GN)	No Tool Required

K55P Seat Blower Assembly - Passenger Cushion (KU3)

Pin	Size	Color	Circuit	Function	Terminal Type ID	Option
1	0.75	VT / GN	439	Run/Crank Ignition 1 Voltage	I	—
2	0.5	VT / WH	5908	Passenger Seat Blower Motor Control 1	I	—
3	0.75	BK	850	Ground	I	—
4	—	—	—	Not Occupied	—	—

K56 Serial Data Gateway Module X1

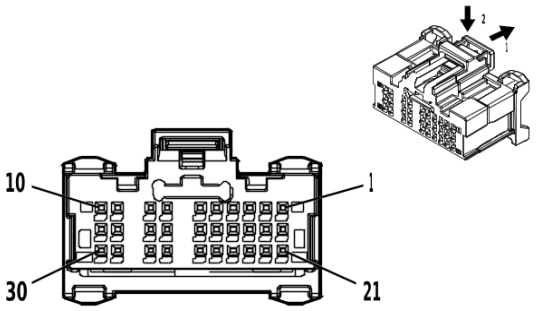

4900333

Connector Part Information

Harness Type: Instrument Panel Wiring Harness
OEM Connector: 13519319
Service Connector: 13519319
Description: 30-Way F 0.5 MQS Series(BK with GY Terminal Position Assurance)

Terminal Part Information

Terminal Type ID	Terminated Lead	Diagnostic Test Probe	Terminal Removal Tool
I	19370262	EL-35616-58 (BK)	EL-38125-58

K56 Serial Data Gateway Module X1

Pin	Size	Color	Circuit	Function	Terminal Type ID	Option
1	0.35	GN / YE	6840	Auxiliary Device 2 Switched Voltage	I	—
2 - 6	—	—	—	Not Occupied	—	—
7	0.35	BK	1250	Ground	I	—
8	0.35 0.35	BU / GN BU / GN	1304 1304	High Speed GMLAN Serial Data [+] 9 High Speed GMLAN Serial Data [+] 9	I I	UE1/ UER - UE1- UER
9	0.35 0.35	WH / GN WH / GN	1305 1305	High Speed GMLAN Serial Data [-] 9 High Speed GMLAN Serial Data [-] 9	I I	UE1/ UER - UE1- UER
10 - 12	—	—	—	Not Occupied	—	—
13	0.35	BU / WH	2089	High Speed GMLAN Serial Data [+] 13	I	—
14	0.35	WH	2090	High Speed GMLAN Serial Data [-] 13	I	—
15	0.35	BU / BK	1978	High Speed GMLAN Serial Data [+] 11	I	—
16	0.35	WH	1979	High Speed GMLAN Serial Data [-] 11	I	—
17	0.35	BU / BN	1980	High Speed GMLAN Serial Data [+] 12	I	—
18	0.35	WH	1981	High Speed GMLAN Serial Data [-] 12	I	—
19	—	—	—	Not Occupied	—	—
20	0.35	GN	5060	Low Speed GMLAN Serial Data	I	—
21 - 25	—	—	—	Not Occupied	—	—
26	0.35	GN / WH	2100	Low Speed GMLAN Serial Data 3	I	—
27 - 30	—	—	—	Not Occupied	—	—

K56 Serial Data Gateway Module X2

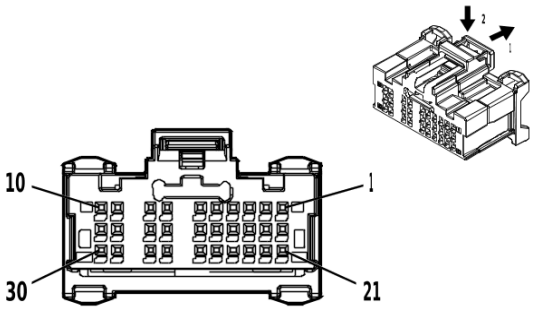

4897967

Connector Part Information

Harness Type: Instrument Panel Wiring Harness
OEM Connector: 13519320
Service Connector: 13519320
Description: 30-Way F 0.5 MQS Series(BK with BU Terminal Position Assurance)

Terminal Part Information

Terminal Type ID	Terminated Lead	Diagnostic Test Probe	Terminal Removal Tool
I	19370262	EL-35616-58 (BK)	EL-38125-58

K56 Serial Data Gateway Module X2

Pin	Size	Color	Circuit	Function	Terminal Type ID	Option
1	0.35	BU / VT	3813	High Speed GMLAN Serial Data [+] 4	I	UKL
2	0.35	BU / VT	3813	High Speed GMLAN Serial Data [+] 4	I	UKL
3	0.35	WH	3811	High Speed GMLAN Serial Data [-] 4	I	UKL
4	0.35	BU	2500	High Speed GMLAN Serial Data [+] 1	I	—
5	0.35	WH	2501	High Speed GMLAN Serial Data [-] 1	I	—
6	0.35	BU / GY	3935	High Speed GMLAN Serial Data [+] 8	I	KSG
7	0.35	WH / GY	3936	High Speed GMLAN Serial Data [-] 8	I	KSG
8	0.35	BU / YE	6105	High Speed GMLAN Serial Data [+] 2	I	—
9	0.35	WH	6106	High Speed GMLAN Serial Data [-] 2	I	—
10	0.35	BU / GY	3935	High Speed GMLAN Serial Data [+] 8	I	KSG
11	—	—	—	Not Occupied	—	—
12	0.35	WH	3811	High Speed GMLAN Serial Data [-] 4	I	UKL
13	—	—	—	Not Occupied	—	—
14	0.35	BU	2500	High Speed GMLAN Serial Data [+] 1	I	—
15	0.35	WH	2501	High Speed GMLAN Serial Data [-] 1	I	—
16	0.35	BU / GY	3935	High Speed GMLAN Serial Data [+] 8	I	KSG
17	0.35	WH / GY	3936	High Speed GMLAN Serial Data [-] 8	I	KSG
18	0.35	BU / YE	6105	High Speed GMLAN Serial Data [+] 2	I	—
19	0.35	WH	6106	High Speed GMLAN Serial Data [-] 2	I	—
20	0.35	WH / GY	3936	High Speed GMLAN Serial Data [-] 8	I	KSG
21	0.35	GY / GN	1102	Low Speed GMLAN Serial Data 2	I	—
22	—	—	—	Not Occupied	—	—

K56 Serial Data Gateway Module X2 (cont'd)

Pin	Size	Color	Circuit	Function	Terminal Type ID	Option
23	0.35	VT / GY	2339	Run/Crank Ignition 1 Voltage	I	—
24	—	—	—	Not Occupied	—	—
25	0.35	WH / BU	5986	Serial Data Communication Enable	I	—
26 - 30	—	—	—	Not Occupied	—	—

K61 Sunroof Control Module (CAJ)

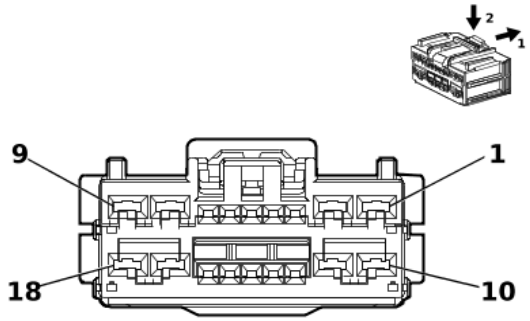

5671221

Connector Part Information

Harness Type: Sunroof Wiring Harness
OEM Connector: 7289-9762-30
Service Connector: Service by Harness - See Part Catalog
Description: 18-Way F 0.64 GEN-Y, 2.8 YESC Series(BK)

Terminal Part Information

Terminal Type ID	Terminated Lead	Diagnostic Test Probe	Terminal Removal Tool
I	Not required	J-35616-64B (L-BU)	No Tool Required

K61 Sunroof Control Module (CAJ)

Pin	Size	Color	Circuit	Function	Terminal Type ID	Option
1	2.5	RD	5938	Sunshade Motor Up Control	I	—
2	2.5	BK	5939	Sunshade Motor Down Control	I	—
3	0.35	OG	5033	Sunroof Obstruction Sensor Voltage Reference	I	—
4	—	—	—	Not Occupied	—	—
5	0.35	BN	5034	Sunroof Obstruction Sensor Signal 1	I	—
6	—	—	—	Not Occupied	—	—
7	0.5	GN	6132	Body Control Module LIN Bus 1	I	—
8	—	—	—	Not Occupied	—	—
9	2.5	RD / GY	5540	Battery Positive Voltage	I	—
10	0.35	BK	151	Signal Ground	I	—
11 - 14	—	—	—	Not Occupied	—	—
15	0.35	BU / VT	5027	Sunroof Switch Serial Data 1 Signal	I	—
16	0.35	BU / GY	3032	Front Sunshade Switch Signal	I	—
17	2.5	BK	1950	Ground	I	—
18	—	—	—	Not Occupied	—	—

K73 Telematics Communication Interface Control Module X1 (UE1/UER)

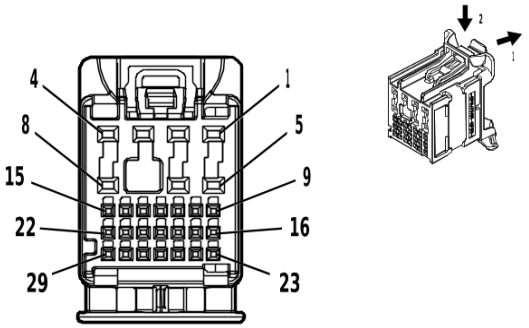

4496253

Connector Part Information

Harness Type: Instrument Panel Wiring Harness
OEM Connector: 13534974
Service Connector: 13534974
Description: 29-Way F 0.5 NANO, 1.2 MCON, stAK50h Series(BK)

Terminal Part Information

Terminal Type ID	Terminated Lead	Diagnostic Test Probe	Terminal Removal Tool
I	19370262	EL-35616-58 (BK)	EL-38125-58
II	84729890	J-35616-12 (BU)	J-38125-553

K73 Telematics Communication Interface Control Module X1 (UE1/UER)

Pin	Size	Color	Circuit	Function	Terminal Type ID	Option
1	0.35	RD / GY	7040	Battery Positive Voltage	II	UE1/ UER
2 - 3	—	—	—	Not Occupied	—	—
4	0.35	BK / WH	351	Signal Ground	II	UE1/ UER
5	—	—	—	Not Occupied	—	—
6	0.35	GN / BK	2515	Telematics Switch Supply Voltage	II	UE1/ UER
7	—	—	—	Not Occupied	—	—
8	0.35	BK / WH	451	Signal Ground	II	UE1/ UER
9	0.35	WH / GN	1305	High Speed GMLAN Serial Data [-] 9	I	UE1/ UER
10	0.35	BU / GN	1304	High Speed GMLAN Serial Data [+] 9	I	UE1/ UER
11	0.35	GN / WH	2514	Telematics Switch Signal	I	UE1/ UER
12	0.35	WH / BU	5986	Serial Data Communication Enable	I	UE1/ UER
13	0.35	BK / WH	551	Signal Ground	I	UE1/ UER
14	0.35	BK / GY	5152	Voice Recognition Audio [-] Control	I	UE1/ UER
15	0.35	GY / YE	5149	Voice Recognition Audio Signal	I	UE1/ UER
16	0.35	WH / GN	1305	High Speed GMLAN Serial Data [-] 9	I	UE1/ UER
17	0.35	BU / GN	1304	High Speed GMLAN Serial Data [+] 9	I	UE1/ UER
18	0.35	GY / GN	7271	Emergency Response Accident Speaker [-] Control	I	UER
19	0.35	YE / VT	2516	Telematics Switch Green LED Indicator Control	I	UE1/ UER
20	—	—	—	Not Occupied	—	—
21	0.35	BK / BN	654	Cellular Telephone Microphone Low Reference	I	UE1/ UER

K73 Telematics Communication Interface Control Module X1 (UE1/UER) (cont'd)

Pin	Size	Color	Circuit	Function	Terminal Type ID	Option
22	0.35	BU	655	Cellular Telephone Microphone Signal	I	UE1/ UER
23	0.35	GY / GN	1102	Low Speed GMLAN Serial Data 2	I	UE1/ UER
24	—	—	—	Not Occupied	—	—
25	0.35	WH / VT	7270	Emergency Response Accident Speaker [+] Control	I	UER
26	0.35	BN / WH	2517	Telematics Switch Red LED Indicator Control	I	UE1/ UER
27	—	—	—	Not Occupied	—	—
28	0.35	GN	7211	Ethernet Bus 4 [+]	I	UE1/ UER
29	0.35	WH	7210	Ethernet Bus 4 [-]	I	UE1/ UER

K73 Telematics Communication Interface Control Module X2 (UE1/UER)

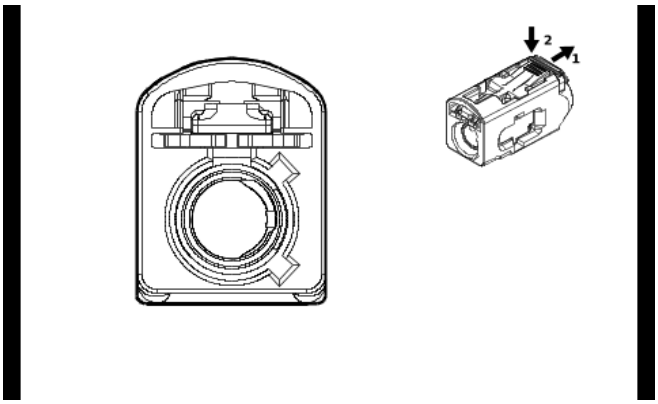

5429349

Connector Part Information

Harness Type: Instrument Panel Wiring Harness COAX
OEM Connector: 13515627
Service Connector: Service by Cable Assembly — See Part Catalog
Description: 1-Way F Coax Type(VT)

Terminal Part Information

Terminal Type ID	Terminated Lead	Diagnostic Test Probe	Terminal Removal Tool
I	Not required	No Tool Required	No Tool Required

K73 Telematics Communication Interface Control Module X2 (UE1/UER)

Pin	Size	Color	Circuit	Function	Terminal Type ID	Option
—	—	Coax Cable	—	(Cell only) Coaxial Antenna Cell Phone Signal	I	—

K73 Telematics Communication Interface Control Module X3 (UE1/UER)

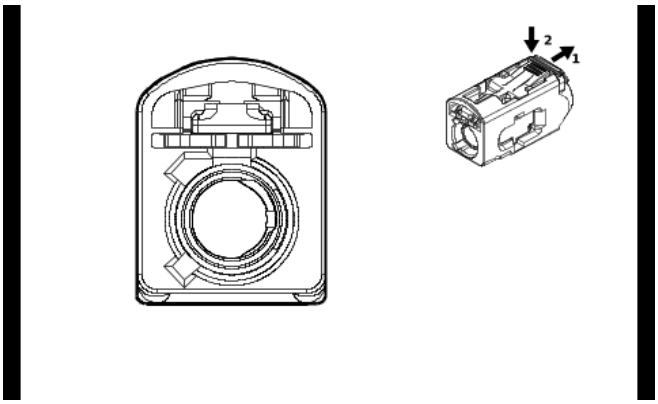

5483027

Connector Part Information

Harness Type: Instrument Panel Wiring Harness COAX
OEM Connector: 13515629
Service Connector: Service by Cable Assembly — See Part Catalog
Description: 1-Way F Coax Type(BN)

Terminal Part Information

Terminal Type ID	Terminated Lead	Diagnostic Test Probe	Terminal Removal Tool
I	Not required	No Tool Required	No Tool Required

K73 Telematics Communication Interface Control Module X3 (UE1/UER)

Pin	Size	Color	Circuit	Function	Terminal Type ID	Option
—	—	Coax Cable	—	(GPS only) Coaxial Antenna GPS Signal	I	—

K77 Remote Control Door Lock Receiver

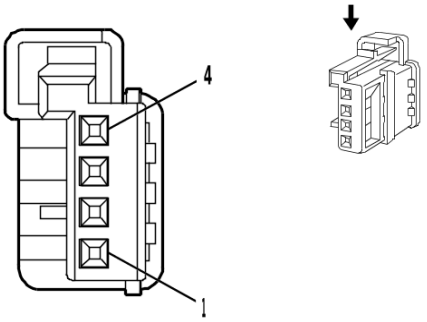

2490867

Connector Part Information

Harness Type: Body Wiring Harness
OEM Connector: 13271140
Service Connector: 19371213
Description: 4-Way F 0.64 Micro-Quadlock Series(BU)

Terminal Part Information

Terminal Type ID	Terminated Lead	Diagnostic Test Probe	Terminal Removal Tool
I	Not required	J-35616-64B (L-BU)	No Tool Required

K77 Remote Control Door Lock Receiver

Pin	Size	Color	Circuit	Function	Terminal Type ID	Option
1	0.35	GY	3273	Remote Control Door Lock Receiver Low Reference	I	—
2	0.35	YE / GN	3274	Remote Control Door Lock Receiver Transmit Signal	I	—
3	0.35	BU / WH	3275	Remote Control Door Lock Receiver Receive Signal	I	—
4	0.35	GY / WH	3272	Remote Control Door Lock Receiver Control	I	—

K84 Keyless Entry Control Module X1

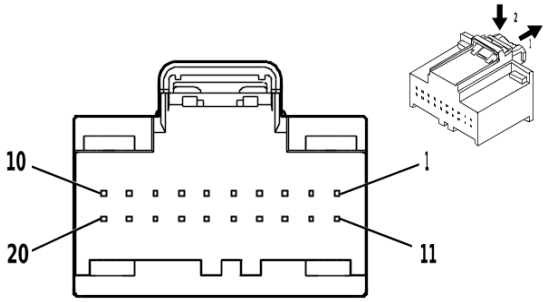

5109514

Connector Part Information

Harness Type: Instrument Panel Wiring Harness
OEM Connector: 13525992
Service Connector: 13525992
Description: 20-Way F 0.64 Series(BN)

Terminal Part Information

Terminal Type ID	Terminated Lead	Diagnostic Test Probe	Terminal Removal Tool
I	13584547	J-35616-64B (L-BU)	J-38125-215A

K84 Keyless Entry Control Module X1

Pin	Size	Color	Circuit	Function	Terminal Type ID	Option
1	—	—	—	Not Occupied	—	—
2	0.35	RD / WH	5740	Battery Positive Voltage	I	—
3	0.35	GN	5060	Low Speed GMLAN Serial Data	I	—
4	—	—	—	Not Occupied	—	—
5	0.35	VT / YE	4	Accessory Ignition Voltage	I	—
6	—	—	—	Not Occupied	—	—
7	0.5	GY / GN	4083	Retained Accessory Power Relay 2 Coil Control	I	—
8	—	—	—	Not Occupied	—	—
9	0.5	WH / YE	3574	Driver Door Open Switch Signal	I	—
10	0.5	YE / BU	4086	Ignition Mode Switch Challenge Active Signal	I	—
11	0.35	GN / BK	3558	Passive Start Switch Signal 2	I	—
12	0.35	BK / GY	3559	Passive Start Switch 2 Low Reference	I	—
13	0.35	VT / BK	3	Run/Crank Ignition 1 Voltage	I	—
14	0.35	BK	1250	Ground	I	—
15	0.35	GY / BK	3555	Interior Passive Entry Antenna 2 Low Signal	I	—
16	0.5	BN / BK	3552	Interior Passive Entry Antenna 1 High Signal	I	—
17	0.5	WH	3553	Interior Passive Entry Antenna 1 Low Signal	I	—
18	0.5	WH / GN	3556	Interior Passive Entry Antenna 3 High Signal	I	—
19	0.5	GN	3557	Interior Passive Entry Antenna 3 Low Signal	I	—
20	0.5	BU	3554	Interior Passive Entry Antenna 2 High Signal	I	—

K84 Keyless Entry Control Module X2

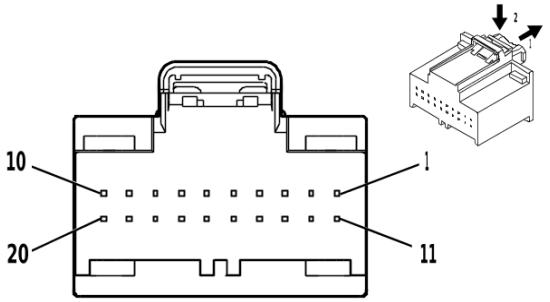

5109537

Connector Part Information

Harness Type: Instrument Panel Wiring Harness
OEM Connector: 13525991
Service Connector: 13525991
Description: 20-Way F 0.64 Series(GY)

Terminal Part Information

Terminal Type ID	Terminated Lead	Diagnostic Test Probe	Terminal Removal Tool
I	13584547	J-35616-64B (L-BU)	J-38125-215A

K84 Keyless Entry Control Module X2

Pin	Size	Color	Circuit	Function	Terminal Type ID	Option
1 - 5	—	—	—	Not Occupied	—	—
6	0.5	VT	3560	Driver Door Passive Entry Antenna High Signal	I	—
7	0.5	VT / GY	3561	Driver Door Passive Entry Antenna Low Signal	I	—
8	—	—	—	Not Occupied	—	—
9	0.5	GN / BK	3563	Passenger Door Passive Entry Antenna Low Signal	I	—
10	—	—	—	Not Occupied	—	—
11	0.5	VT / WH	3571	Passenger Door Handle Switch Signal	I	—
12	0.5	GN / WH	3570	Driver Door Handle Switch Signal	I	—
13 - 15	—	—	—	Not Occupied	—	—
16	0.5	BN / GN	3568	Rear Closure Passive Entry Antenna High Signal	I	—
17	—	—	—	Not Occupied	—	—
18	0.5	GN / GY	3569	Rear Closure Passive Entry Antenna Low Signal	I	—
19	—	—	—	Not Occupied	—	—
20	0.35	GN / YE	3562	Passenger Door Passive Entry Antenna High Signal	I	—

K85 Passenger Presence Module

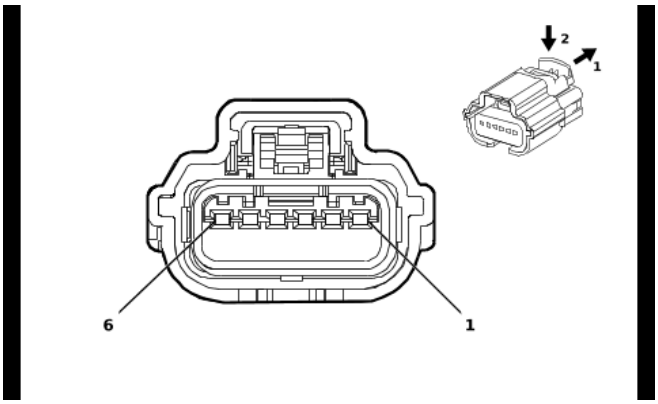

5157678

Connector Part Information

Harness Type: Front Passenger Seat Wiring Harness
OEM Connector: 31404-7132
Service Connector: Service by Harness - See Part Catalog
Description: 6-Way F 64 Series, Sealed(BK)

Terminal Part Information

Terminal Type ID	Terminated Lead	Diagnostic Test Probe	Terminal Removal Tool
I	Not required	J-35616-64B (L-BU)	No Tool Required

K85 Passenger Presence Module

Pin	Size	Color	Circuit	Function	Terminal Type ID	Option
1	0.5	RD / VT	2640	Battery Positive Voltage	I	—
2	0.5	GN	5060	Low Speed GMLAN Serial Data	I	—
3	—	—	—	Not Occupied	—	—
4	0.5	BK	750	Ground	I	—
5	0.5	GY / OG	3946	Passenger Automatic Locking Retractor Switch Low Reference	I	—
6	0.5	OG / BN	3947	Passenger Automatic Locking Retractor Switch Signal	I	—

K89 Immobilizer Control Module

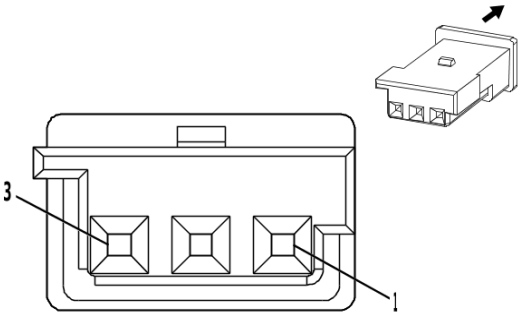

2179789

Connector Part Information

Harness Type: Front Floor Console Wiring Harness
OEM Connector: 19153569
Service Connector: Service by Harness - See Part Catalog
Description: 3-Way F Micro-Quadlock Series(PU)

Terminal Part Information

Terminal Type ID	Terminated Lead	Diagnostic Test Probe	Terminal Removal Tool
I	Not required	J-35616-64B (L-BU)	No Tool Required

K89 Immobilizer Control Module

Pin	Size	Color	Circuit	Function	Terminal Type ID	Option
1	0.35	GN / GY	3277	Vehicle Anti-Theft System Immobilizer Low Reference	I	—
2	0.35	GN / VT	7533	Immobilizer LIN Bus 1	I	—
3	0.35	GY / BK	3276	Immobilizer Control Module Control	I	—

K93 Active Steering Control Module X1 (UKL)

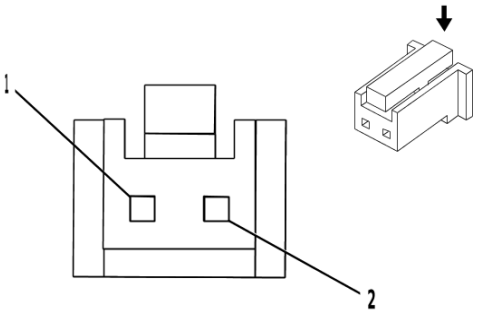

3623867

Connector Part Information

Harness Type: Steering Wheel Wiring Harness
OEM Connector: PAP-02V-S
Service Connector: Service by Harness - See Part Catalog
Description: 2-Way F 050 Series(WH)

Terminal Part Information

Terminal Type ID	Terminated Lead	Diagnostic Test Probe	Terminal Removal Tool
I	Not required	EL-35616-58 (BK)	No Tool Required

K93 Active Steering Control Module X1 (UKL)

Pin	Size	Color	Circuit	Function	Terminal Type ID	Option
1	—	VT / GN	5888	Steering Wheel Heating High Control	I	—
2	—	BK	1650	Ground	I	—

K93 Active Steering Control Module X2 (UKL)

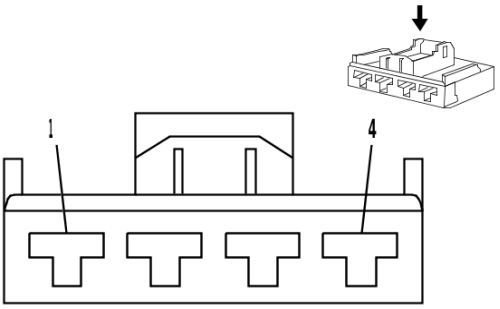

2091092

Connector Part Information

Harness Type: Steering Wheel Wiring Harness
OEM Connector: Not Available
Service Connector: Service by Harness - See Part Catalog
Description: 4-Way

Terminal Part Information

Terminal Type ID	Terminated Lead	Diagnostic Test Probe	Terminal Removal Tool
I	Not required	No Tool Required	No Tool Required

K93 Active Steering Control Module X2 (UKL)

Pin	Size	Color	Circuit	Function	Terminal Type ID	Option
1	—	VT / YE	7747	Steering Wheel Lightbar Green Control	I	—
2	—	GY / BU	7746	Steering Wheel Lightbar Red Control	I	—
3	—	BN / VT	7745	Steering Wheel Lightbar Control	I	—
4	—	BU / GN	7748	Steering Wheel Lightbar Blue Control	I	—

K93 Active Steering Control Module X3 (UKL)

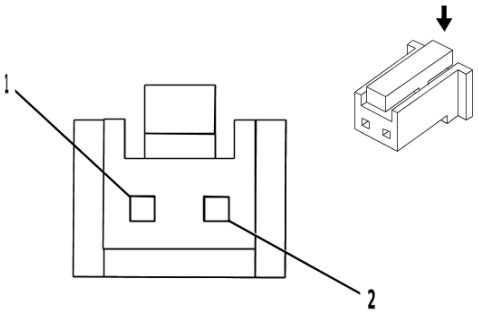

3623867

Connector Part Information

Harness Type: Steering Wheel Wiring Harness
OEM Connector: PAP-02V-S
Service Connector: Service by Harness - See Part Catalog
Description: 2-Way F 050 Series(WH)

Terminal Part Information

Terminal Type ID	Terminated Lead	Diagnostic Test Probe	Terminal Removal Tool
I	Not required	EL-35616-58 (BK)	No Tool Required

K93 Active Steering Control Module X3 (UKL)

Pin	Size	Color	Circuit	Function	Terminal Type ID	Option
1	—	VT / GN	5886	Steering Wheel Heating Temperature Sensor Signal	I	—
2	—	GY	5885	Steering Wheel Heating Voltage Reference	I	—

K93 Active Steering Control Module X4 (UKL)

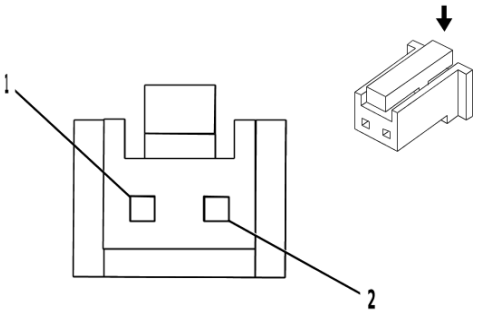

3623867

Connector Part Information

Harness Type: Steering Wheel Wiring Harness
OEM Connector: PAP-02V-S
Service Connector: Service by Harness - See Part Catalog
Description: 2-Way F 050 Series(WH)

Terminal Part Information

Terminal Type ID	Terminated Lead	Diagnostic Test Probe	Terminal Removal Tool
I	Not required	EL-35616-58 (BK)	No Tool Required

K93 Active Steering Control Module X4 (UKL)

Pin	Size	Color	Circuit	Function	Terminal Type ID	Option
1	0.35	YE / GY	5883	Steering Wheel Heating Switch Signal	I	—
2	0.35	BN / WH	5884	Steering Wheel Heating Switch LED Control	I	—

K93 Active Steering Control Module X5 (UKL)

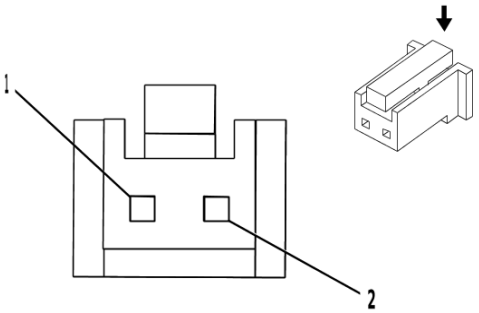

3623867

Connector Part Information

Harness Type: Steering Wheel Wiring Harness
OEM Connector: PAP-02V-S
Service Connector: Service by Harness - See Part Catalog
Description: 2-Way F 050 Series(WH)

Terminal Part Information

Terminal Type ID	Terminated Lead	Diagnostic Test Probe	Terminal Removal Tool
I	Not required	EL-35616-58 (BK)	No Tool Required

K93 Active Steering Control Module X5 (UKL)

Pin	Size	Color	Circuit	Function	Terminal Type ID	Option
1	—	—	Not Available	Touch Sensor Signal	I	—
2	—	—	Not Available	Low Reference	I	—

K93 Active Steering Control Module X6 (UKL)

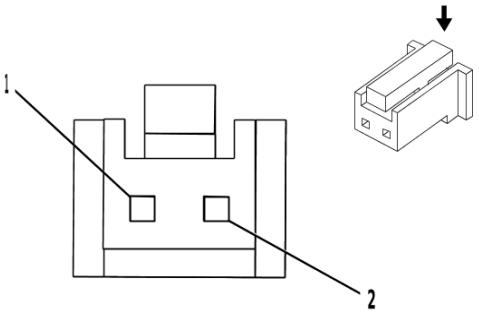

3623867

Connector Part Information

Harness Type: Steering Wheel Wiring Harness
OEM Connector: PAP-02V-S
Service Connector: Service by Harness - See Part Catalog
Description: 2-Way F 050 Series(WH)

Terminal Part Information

Terminal Type ID	Terminated Lead	Diagnostic Test Probe	Terminal Removal Tool
I	Not required	Not Available	No Tool Required

K93 Active Steering Control Module X6 (UKL)

Pin	Size	Color	Circuit	Function	Terminal Type ID	Option
1	0.35	BK	1350	Ground	I	—
2	0.35	BK	1350	Ground	I	—

K93 Active Steering Control Module X7 (UKL)

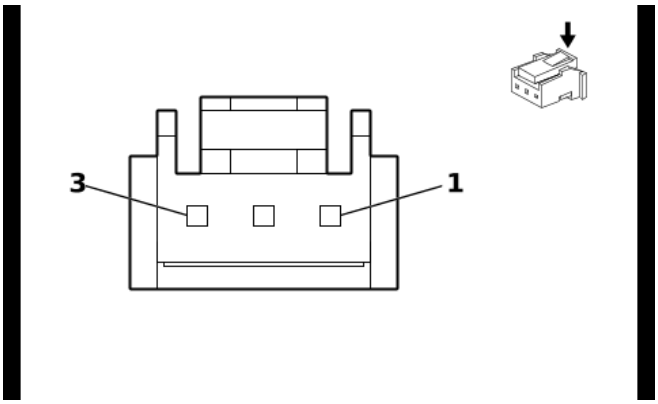

5867324

Connector Part Information

Harness Type: Steering Wheel Wiring Harness
OEM Connector: PAP-03V-S
Service Connector: Service by Harness - See Part Catalog
Description: 3-Way F 050 Series(WH)

Terminal Part Information

Terminal Type ID	Terminated Lead	Diagnostic Test Probe	Terminal Removal Tool
I	Not required	EL-35616-58 (BK)	No Tool Required

K93 Active Steering Control Module X7 (UKL)

Pin	Size	Color	Circuit	Function	Terminal Type ID	Option
1	0.35	RD / BN	5040	Battery Positive Voltage	I	—
2	0.35	GN / GY	4627	Image Processing Module LIN Bus 1	I	—
3	0.35	BK	1650	Ground	I	—

K93 Active Steering Control Module X8 (UKL)

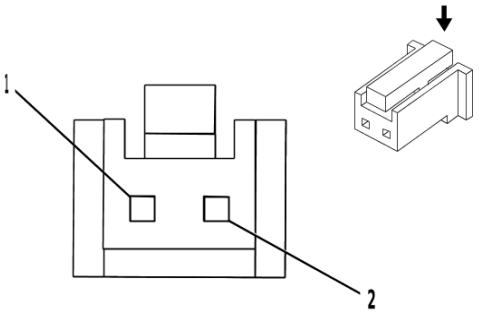

3623867

Connector Part Information

Harness Type: Steering Wheel Wiring Harness
OEM Connector: PAP-02V-S
Service Connector: Service by Harness - See Part Catalog
Description: 2-Way F 050 Series(WH)

Terminal Part Information

Terminal Type ID	Terminated Lead	Diagnostic Test Probe	Terminal Removal Tool
I	Not required	J-35616-18 (BK)	No Tool Required

K93 Active Steering Control Module X8 (UKL)

Pin	Size	Color	Circuit	Function	Terminal Type ID	Option
1	0.5	VT / GN	1650	Ground	I	—
2	0.5	BK / GN	2239	Run/Crank Ignition 1 Voltage	I	—

K93 Active Steering Control Module X9 (UKL)

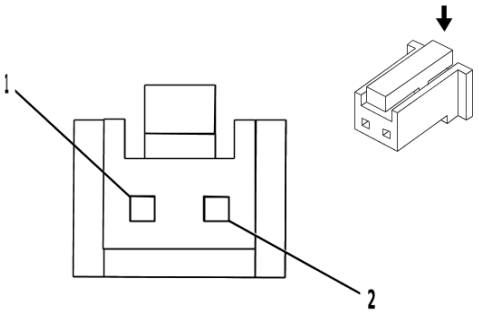

3623867

Connector Part Information

Harness Type: Steering Wheel Wiring Harness
OEM Connector: PAP-02V-S
Service Connector: Service by Harness - See Part Catalog
Description: 2-Way F 050 Series(WH)

Terminal Part Information

Terminal Type ID	Terminated Lead	Diagnostic Test Probe	Terminal Removal Tool
I	Not required	EL-35616-58 (BK)	No Tool Required

K93 Active Steering Control Module X9 (UKL)

Pin	Size	Color	Circuit	Function	Terminal Type ID	Option
1	—	—	—	Touch Sensor Signal	I	—
2	—	—	—	Low Reference	I	—

K93 Active Steering Control Module X10 (UKL)

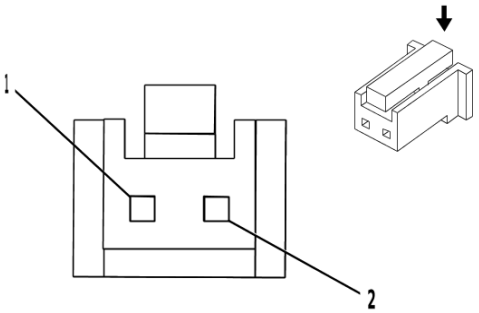

3623867

Connector Part Information

Harness Type: Steering Wheel Wiring Harness
OEM Connector: PAP-02V-S
Service Connector: Service by Harness - See Part Catalog
Description: 2-Way F 050 Series(WH)

Terminal Part Information

Terminal Type ID	Terminated Lead	Diagnostic Test Probe	Terminal Removal Tool
I	Not required	EL-35616-58 (BK)	No Tool Required

K93 Active Steering Control Module X10 (UKL)

Pin	Size	Color	Circuit	Function	Terminal Type ID	Option
1	—	—	Not Available	Touch Sensor Signal	I	—
2	—	—	Not Available	Low Reference	I	—

K114B Hybrid/EV Powertrain Control Module 2 X1

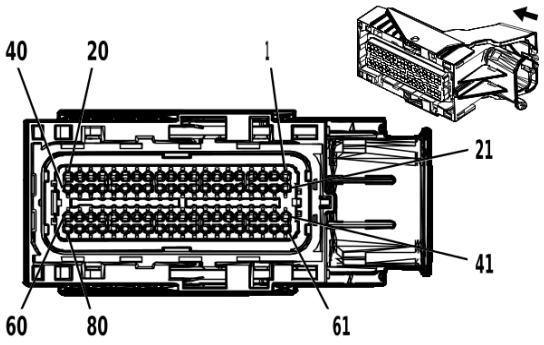

2474736

Connector Part Information

Harness Type: Body Wiring Harness
OEM Connector: 34566-8193
Service Connector: 13577545
Description: 80-Way F MX123 Series, Sealed(BK with BU Terminal Position Assurance)

Terminal Part Information

Terminal Type ID	Terminated Lead	Diagnostic Test Probe	Terminal Removal Tool
I	19354746	J-35616-64B (L-BU)	J-38125-215A

K114B Hybrid/EV Powertrain Control Module 2 X1

Pin	Size	Color	Circuit	Function	Terminal Type ID	Option
1	0.75	BK	850	Ground	I	—
2	0.75	RD / BU	5240	Battery Positive Voltage	I	—
3	0.5	YE / VT	3962	Hybrid/EV Battery 3 [+] Relay Control	I	—
4	0.5	BU / GY	4326	High Power Contactor Ground Relay Control	I	—
5	0.5	WH / VT	2246	Driver Illumination Lamp 1 Control	I	—
6	0.5	VT / GY	3961	Hybrid/EV Battery [-] Relay Control	I	—
7	0.5	YE	4327	High Power Contactor Positive Relay Control	I	—
8	0.5	GY	5138	Precharge Relay	I	—
9	0.5	BN / GN	3959	Hybrid/EV Battery 1 [+] Relay Control	I	—
10	0.5	VT	4334	Hybrid/EV Battery Coolant Heater Control	I	—
11	0.5	GN / VT	5243	Inside Rearview Mirror Position Sensor Ground	I	—
12 - 16	—	—	—	Not Occupied	—	—
17	0.5	BU	2500	High Speed GMLAN Serial Data [+] 1	I	—
18	0.5	WH	2501	High Speed GMLAN Serial Data [-] 1	I	—
19	—	—	—	Not Occupied	—	—
20	0.5	BK / BU	6813	Coolant Temperature Sensor 2 Low Reference	I	—
21 - 25	—	—	—	Not Occupied	—	—
26	0.5	BU / GY	636	Ambient Air Temperature Sensor Signal	I	—
27	0.5	YE / BK	3000	Coolant Temperature Sensor 2 Signal	I	—
28	—	—	—	Not Occupied	—	—
29	0.5	GN	4330	High Power Contactor Positive Voltage Sense Signal	I	—

K114B Hybrid/EV Powertrain Control Module 2 X1 (cont'd)

Pin	Size	Color	Circuit	Function	Terminal Type ID	Option
30	0.5	GY	4329	High Power Contactor Ground Voltage Sense Signal	I	—
31	0.5	BU	204	A/C Low Side Pressure Sensor Signal	I	—
32	0.5	BU / YE	68	Low Coolant Level Indicator Control	I	—
33	0.5	BK / GN	476	Sensor Low Reference	I	—
34 - 36	—	—	—	Not Occupied	—	—
37	0.5 0.5	BU BU	2500 2500	High Speed GMLAN Serial Data [+] 1 High Speed GMLAN Serial Data [+] 1	I I	UKL - UKL
38	0.5 0.5	WH WH	2501 2501	High Speed GMLAN Serial Data [-] 1 High Speed GMLAN Serial Data [-] 1	I I	UKL - UKL
39	—	—	—	Not Occupied	—	—
40	0.5	BK / BU	61	Ambient Air Temperature Sensor Low Reference	I	—
41 - 42	—	—	—	Not Occupied	—	—
43	0.5	YE / GY	5241	Inside Rearview Mirror Horizontal Position Sensor	I	—
44	—	—	—	Not Occupied	—	—
45	0.5	BK / BN	5088	High Voltage System Interlock Low Reference 1	I	—
46	—	—	—	Not Occupied	—	—
47	0.5	VT	5087	High Voltage System Interlock Signal 1	I	—
48 - 51	—	—	—	Not Occupied	—	—
52	0.5	YE	4063	Hood Status A Signal	I	—
53	—	—	—	Not Occupied	—	—
54	0.5	BU / BK	7493	High Speed GMLAN Serial Data [+] 3	I	—
55	0.5	WH	7494	High Speed GMLAN Serial Data [-] 3	I	—
56	0.5	BU / BK	7493	High Speed GMLAN Serial Data [+] 3	I	—
57	0.5	YE	3831	High Speed GMLAN Serial Data [+] 6	I	—
58	0.5	WH	3832	High Speed GMLAN Serial Data [-] 6	I	—
59	0.5	YE	3831	High Speed GMLAN Serial Data [+] 6	I	—
60	0.5	BK / GN	3800	A/C Refrigerant Sensor Low Reference	I	—
61 - 62	—	—	—	Not Occupied	—	—
63	0.5	BU / RD	474	5V Reference	I	—
64	—	—	—	Not Occupied	—	—
65	0.5	BK / VT	5596	High Voltage System Interlock Low Reference 2	I	—
66	—	—	—	Not Occupied	—	—
67	0.5	GY / VT	5595	High Voltage System Interlock Signal 2	I	—
68 - 70	—	—	—	Not Occupied	—	—
71	0.5	VT / BN	3699	Charge Port Door Open Request Switch Signal	I	—
72 - 73	—	—	—	Not Occupied	—	—
74	0.5	BU / BK	7493	High Speed GMLAN Serial Data [+] 3	I	—
75	0.5	WH	7494	High Speed GMLAN Serial Data [-] 3	I	—
76	0.5	WH	7494	High Speed GMLAN Serial Data [-] 3	I	—
77	0.5	YE	3831	High Speed GMLAN Serial Data [+] 6	I	—
78	0.5	WH	3832	High Speed GMLAN Serial Data [-] 6	I	—
79	0.5	WH	3832	High Speed GMLAN Serial Data [-] 6	I	—
80	—	—	—	Not Occupied	—	—

K114B Hybrid/EV Powertrain Control Module 2 X2

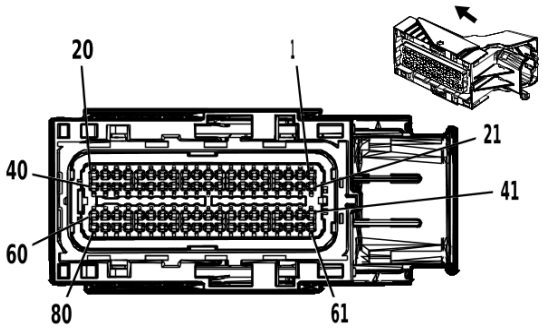

3604216

Connector Part Information

Harness Type: Body Wiring Harness
OEM Connector: 34566-8213
Service Connector: 19115670
Description: 80-Way F 0.64 Series, Sealed(BK with GY Terminal Position Assurance)

Terminal Part Information

Terminal Type ID	Terminated Lead	Diagnostic Test Probe	Terminal Removal Tool
I	19351723	J-35616-64B (L-BU)	J-38125-213

K114B Hybrid/EV Powertrain Control Module 2 X2

Pin	Size	Color	Circuit	Function	Terminal Type ID	Option
1	—	—	—	Not Occupied	—	—
2	0.5	BU / RD	4331	High Power Contactor Signal Conditioner Voltage Reference	I	—
3 - 4	—	—	—	Not Occupied	—	—
5	0.5	WH / GY	5239	Inside Rearview Mirror Vertical Position Sensor	I	—
6	0.5	GY / BU	213	Charge Port Paddle Temperature Sensor Signal	I	—
7	—	—	—	Not Occupied	—	—
8	0.75	GY / GN	3954	Control Pilot Signal 1	I	—
9	0.5	BU / VT	2364	Cooling Fan Speed Signal	I	—
10	0.5	BU / GY	5139	High Voltage System Interlock Signal	I	—
11	—	—	—	Not Occupied	—	—
12	0.5	GN / GY	3644	High Voltage Onboard Charging AC Voltage Sense Signal	I	—
13	0.5	VT / WH	3643	High Voltage Onboard Charging DC Voltage Sense Signal	I	—
14	0.5	VT / BU	3790	Electric Coolant Motor Feedback Signal	I	—
15	0.75	BU / YE	3953	Proximity Status Signal 1	I	—
16	0.5	BK / BU	5404	Charge Port Paddle Temperature Sensor Low Reference	I	—
17 - 19	—	—	—	Not Occupied	—	—
20	0.5	BK / BN	4332	High Power Contactor Signal Conditioner Low Reference	I	—
21 - 24	—	—	—	Not Occupied	—	—
25	0.5	WH / BU	3697	Charge Port Door Position Sensor Signal	I	—

K114B Hybrid/EV Powertrain Control Module 2 X2 (cont'd)

Pin	Size	Color	Circuit	Function	Terminal Type ID	Option
26	—	—	—	Not Occupied	—	—
27	0.5	VT / BK	1239	Run/Crank Ignition 1 Voltage	I	—
28 - 32	—	—	—	Not Occupied	—	—
33	0.5	YE / GY	3796	Hybrid/EV Battery Pack Coolant Pump 1 Feedback Signal	I	—
34 - 37	—	—	—	Not Occupied	—	—
38	0.35	GN	5060	Low Speed GMLAN Serial Data	I	—
39 - 40	—	—	—	Not Occupied	—	—
41	0.5	BN / YE	2231	Charge Port Valve Motor Close Control	I	—
42	0.5	WH / GN	3794	Hybrid/EV Battery Pack Coolant Pump 1 Control	I	—
43	0.5	BU / WH	3977	Accessory Wake-Up Serial Data 2	I	—
44	0.5	BU / YE	3646	High Voltage Onboard Charging Enable Signal	I	—
45 - 51	—	—	—	Not Occupied	—	—
52	0.75	WH	2368	Cooling Fan Control Signal	I	—
53	0.5	YE / GY	3645	High Voltage Onboard Charging Control	I	—
54 - 60	—	—	—	Not Occupied	—	—
61	0.5	BU / WH	2230	Charge Port Valve Motor Open Control	I	—
62	0.5	GY / GN	3957	Control Pilot Signal Indicator Control	I	—
63	0.5	BN / BU	3788	Electric Coolant Motor Control	I	—
64	0.5	YE / VT	3956	Charging Status Indicator Control	I	—
65	0.5	BU / BN	3787	High Voltage Energy Management Communication Bus Enable Signal	I	—
66	—	—	—	Not Occupied	—	—
67	0.5	VT / YE	5985	Accessory Wake-Up Serial Data	I	—
68 - 72	—	—	—	Not Occupied	—	—
73	0.5	BU / VT	3795	Hybrid/EV Battery Pack Coolant Pump 1 Control	I	—
74	0.5	YE / GN	3789	Electric Coolant Motor Control	I	—
75 - 80	—	—	—	Not Occupied	—	—

K124A Active Safety Control Module 1 X1 (UKL)

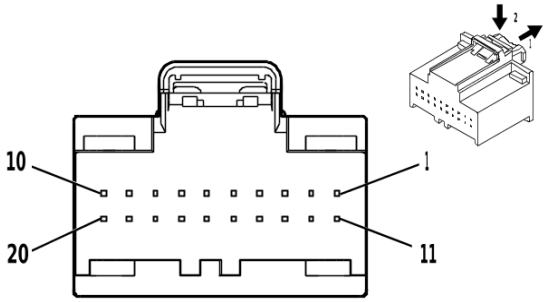

5109511

Connector Part Information

Harness Type: Body Wiring Harness
OEM Connector: 13525993
Service Connector: 13525993
Description: 20-Way F 0.64 Series(GN)

Terminal Part Information

Terminal Type ID	Terminated Lead	Diagnostic Test Probe	Terminal Removal Tool
I	13584547	J-35616-64B (L-BU)	J-38125-215A

K124A Active Safety Control Module 1 X1 (UKL)

Pin	Size	Color	Circuit	Function	Terminal Type ID	Option
1 - 3	—	—	—	Not Occupied	—	—
4	0.35	GN	5060	Low Speed GMLAN Serial Data	I	UKL
5 - 6	—	—	—	Not Occupied	—	—
7	0.35	BU / GY	3935	High Speed GMLAN Serial Data [+] 8	I	UKL
8	0.35	WH / GY	3936	High Speed GMLAN Serial Data [-] 8	I	UKL
9	0.35	BU / GY	3935	High Speed GMLAN Serial Data [+] 8	I	UKL
10	0.35	WH / GY	3936	High Speed GMLAN Serial Data [-] 8	I	UKL
11 - 14	—	—	—	Not Occupied	—	—
15	0.5	BU / VT	3813	High Speed GMLAN Serial Data [+] 4	I	UKL
16	0.5	WH	3811	High Speed GMLAN Serial Data [-] 4	I	UKL
17	0.5	BU / VT	3813	High Speed GMLAN Serial Data [+] 4	I	UKL
18	0.5	WH	3811	High Speed GMLAN Serial Data [-] 4	I	UKL
19	0.5	BU / VT	3813	High Speed GMLAN Serial Data [+] 4	I	UKL
20	0.5	WH	3811	High Speed GMLAN Serial Data [-] 4	I	UKL

K124A Active Safety Control Module 1 X2 (UKL)

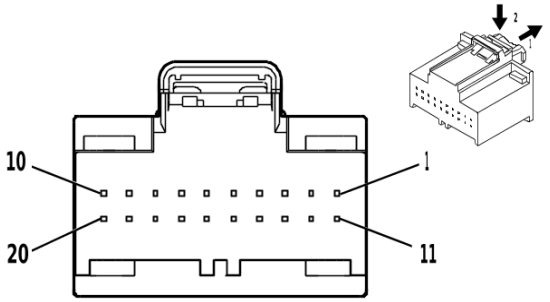

5109537

Connector Part Information

Harness Type: Body Wiring Harness
OEM Connector: 13525991
Service Connector: 13525991
Description: 20-Way F 0.64 Series(GY)

Terminal Part Information

Terminal Type ID	Terminated Lead	Diagnostic Test Probe	Terminal Removal Tool
I	13584547	J-35616-64B (L-BU)	J-38125-215A

K124A Active Safety Control Module 1 X2 (UKL)

Pin	Size	Color	Circuit	Function	Terminal Type ID	Option
1	0.5	BU / YE	6105	High Speed GMLAN Serial Data [+] 2	I	UKL
2	0.5	WH	6106	High Speed GMLAN Serial Data [-] 2	I	UKL
3	0.5	BU / YE	6105	High Speed GMLAN Serial Data [+] 2	I	UKL
4	0.5	WH	6106	High Speed GMLAN Serial Data [-] 2	I	UKL
5	0.5	WH	4736	FlexRay Serial Data [-] 8	I	UKL
6	0.5	GN / WH	4735	FlexRay Serial Data [+] 8	I	UKL
7 - 8	—	—	—	Not Occupied	—	—
9	0.35	WH	3152	Lane Departure Warning Indicator Control	I	UKL
10	—	—	—	Not Occupied	—	—
11	0.5	WH	4738	FlexRay Serial Data [-] 9	I	UKL
12	0.5	GN / YE	4737	FlexRay Serial Data [+] 9	I	UKL
13	0.5	WH	4734	FlexRay Serial Data [-] 7	I	UKL
14	0.5	GN / VT	4720	FlexRay Serial Data [+] 7	I	UKL
15 - 16	—	—	—	Not Occupied	—	—
17	0.5	WH	4715	FlexRay Serial Data [-] 4	I	UKL
18	0.5	GN / BN	4714	FlexRay Serial Data [+] 4	I	UKL
19	—	—	—	Not Occupied	—	—
20	0.35	GY / WH	3153	Lane Departure Warning Disable Switch Signal	I	UKL

K124A Active Safety Control Module 1 X3 (UKL)

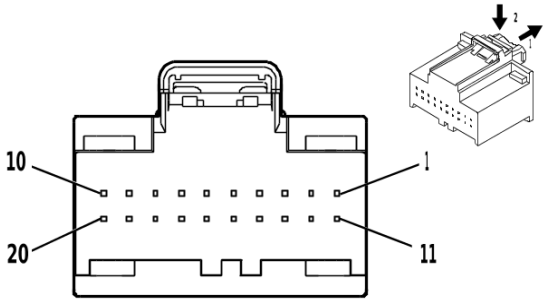

5109514

Connector Part Information

Harness Type: Body Wiring Harness
OEM Connector: 13525992
Service Connector: 13525992
Description: 20-Way F 0.64 Series(BN)

Terminal Part Information

Terminal Type ID	Terminated Lead	Diagnostic Test Probe	Terminal Removal Tool
I	13584547	J-35616-64B (L-BU)	J-38125-215A

K124A Active Safety Control Module 1 X3 (UKL)

Pin	Size	Color	Circuit	Function	Terminal Type ID	Option
1	—	—	—	Not Occupied	—	—
2	0.5	BK	3050	Ground	I	UKL
3	0.5	BK	3050	Ground	I	UKL
4 - 8	—	—	—	Not Occupied	—	—
9	0.5	RD / GY	7840	Battery Positive Voltage	I	UKL
10	0.5	RD / GY	7840	Battery Positive Voltage	I	UKL
11	—	—	—	Not Occupied	—	—
12	0.5	BN / VT	3809	Front Object Sensor 1 Reference Voltage	I	UKL
13	0.5	GY / BU	2164	FlexRay Communication Enable Signal	I	UKL
14	0.5	BU / WH	3977	Accessory Wake-Up Serial Data 2	I	UKL
15	0.5	VT / GN	839	Run/Crank Ignition 1 Voltage	I	UKL
16 - 20	—	—	—	Not Occupied	—	—

K124B Active Safety Control Module 2 X1 (UKL)

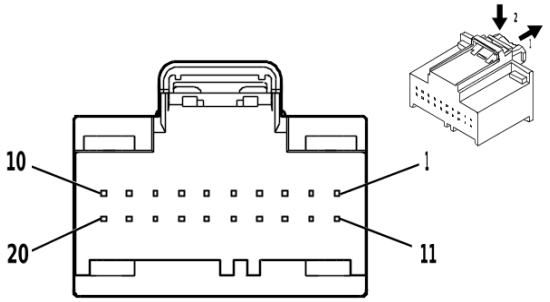

5112891

Connector Part Information

Harness Type: Body Wiring Harness
OEM Connector: 13525990
Service Connector: 13525990
Description: 20-Way F 0.64 Series(BK)

Terminal Part Information

Terminal Type ID	Terminated Lead	Diagnostic Test Probe	Terminal Removal Tool
I	13584547	J-35616-64B (L-BU)	J-38125-215A

K124B Active Safety Control Module 2 X1 (UKL)

Pin	Size	Color	Circuit	Function	Terminal Type ID	Option
1	—	—	—	Not Occupied	—	—
2	0.5	GN / GY	4627	Image Processing Module LIN Bus 1	I	UKL
3	—	—	—	Not Occupied	—	—
4	0.35	GN	5060	Low Speed GMLAN Serial Data	I	UKL
5 - 6	—	—	—	Not Occupied	—	—
7	0.35	BU / GY	3935	High Speed GMLAN Serial Data [+] 8	I	UKL
8	0.35	WH / GY	3936	High Speed GMLAN Serial Data [-] 8	I	UKL
9	0.35	BU / GY	3935	High Speed GMLAN Serial Data [+] 8	I	UKL
10	0.35	WH / GY	3936	High Speed GMLAN Serial Data [-] 8	I	UKL
11 - 14	—	—	—	Not Occupied	—	—
15	0.5	BU / VT	3813	High Speed GMLAN Serial Data [+] 4	I	UKL
16	0.5	WH	3811	High Speed GMLAN Serial Data [-] 4	I	UKL
17	0.5	BU / VT	3813	High Speed GMLAN Serial Data [+] 4	I	UKL
18	0.5	WH	3811	High Speed GMLAN Serial Data [-] 4	I	UKL
19 - 20	—	—	—	Not Occupied	—	—

K124B Active Safety Control Module 2 X2 (UKL)

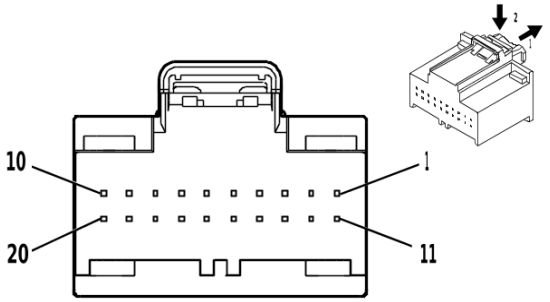

5109537

Connector Part Information

Harness Type: Body Wiring Harness
OEM Connector: 13525991
Service Connector: 13525991
Description: 20-Way F 0.64 Series(GY)

Terminal Part Information

Terminal Type ID	Terminated Lead	Diagnostic Test Probe	Terminal Removal Tool
I	13584547	J-35616-64B (L-BU)	J-38125-215A

K124B Active Safety Control Module 2 X2 (UKL)

Pin	Size	Color	Circuit	Function	Terminal Type ID	Option
1	0.5	BU / YE	6105	High Speed GMLAN Serial Data [+] 2	I	UKL
2	0.5	WH	6106	High Speed GMLAN Serial Data [-] 2	I	UKL
3	0.5	BU / YE	6105	High Speed GMLAN Serial Data [+] 2	I	UKL
4	0.5	WH	6106	High Speed GMLAN Serial Data [-] 2	I	UKL
5	0.5	WH	4734	FlexRay Serial Data [-] 7	I	UKL
6	0.5	GN / VT	4720	FlexRay Serial Data [+] 7	I	UKL
7 - 8	—	—	—	Not Occupied	—	—
9	0.35	WH	3152	Lane Departure Warning Indicator Control	I	UKL
10	—	—	—	Not Occupied	—	—
11	0.5	WH	4745	FlexRay Serial Data [-] 10	I	UKL
12	0.5	GN	4744	FlexRay Serial Data [+] 10	I	UKL
13	0.5	WH	4736	FlexRay Serial Data [-] 8	I	UKL
14	0.5	GN / WH	4735	FlexRay Serial Data [+] 8	I	UKL
15 - 16	—	—	—	Not Occupied	—	—
17	0.5	WH	4717	FlexRay Serial Data [-] 5	I	UKL
18	0.5	GN / BU	4716	FlexRay Serial Data [+] 5	I	UKL
19	—	—	—	Not Occupied	—	—
20	0.35	GY / WH	3153	Lane Departure Warning Disable Switch Signal	I	UKL

K124B Active Safety Control Module 2 X3 (UKL)

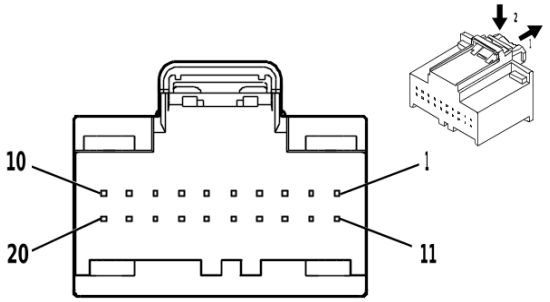

5109514

Connector Part Information

Harness Type: Body Wiring Harness
OEM Connector: 13525992
Service Connector: 13525992
Description: 20-Way F 0.64 Series(BN)

Terminal Part Information

Terminal Type ID	Terminated Lead	Diagnostic Test Probe	Terminal Removal Tool
I	13584547	J-35616-64B (L-BU)	J-38125-215A

K124B Active Safety Control Module 2 X3 (UKL)

Pin	Size	Color	Circuit	Function	Terminal Type ID	Option
1	—	—	—	Not Occupied	—	—
2	0.5	BK	3050	Ground	I	UKL
3	0.5	BK	3050	Ground	I	UKL
4 - 8	—	—	—	Not Occupied	—	—
9	0.5	RD / GN	2440	Battery Positive Voltage	I	UKL
10	0.5	RD / GN	2440	Battery Positive Voltage	I	UKL
11	—	—	—	Not Occupied	—	—
12	0.5	BN / VT	3809	Front Object Sensor 1 Reference Voltage	I	UKL
13	0.5	GY / BU	2164	FlexRay Communication Enable Signal	I	UKL
14	0.5	BU / WH	3977	Accessory Wake-Up Serial Data 2	I	UKL
15	0.5	VT / BK	1639	Run/Crank Ignition 1 Voltage	I	UKL
16 - 17	—	—	—	Not Occupied	—	—
18	0.5	BN / BU	2176	Inertia Sensor 2 Supply Voltage	I	UKL
19 - 20	—	—	—	Not Occupied	—	—

K132 Pedestrian Alert Sound Control Module (-UKL)

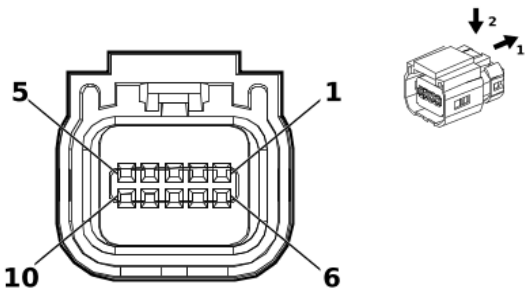

2586629

Connector Part Information

Harness Type: Body Wiring Harness
OEM Connector: 19178082
Service Connector: 19178082
Description: 10-Way F 0.64 Kaizen Series, Sealed(BK)

Terminal Part Information

Terminal Type ID	Terminated Lead	Diagnostic Test Probe	Terminal Removal Tool
I	13579945	J-35616-64B (L-BU)	J-38125-215A

K132 Pedestrian Alert Sound Control Module (-UKL)

Pin	Size	Color	Circuit	Function	Terminal Type ID	Option
1	0.5	WH	2501	High Speed GMLAN Serial Data [-] 1	I	- UKL
2	0.5	BU	2500	High Speed GMLAN Serial Data [+] 1	I	- UKL
3	0.5	BK	550	Ground	I	- UKL
4	0.5	WH / BU	5986	Serial Data Communication Enable	I	- UKL
5	—	—	—	Not Occupied	—	—
6	0.5 0.5	WH WH	2501 2501	High Speed GMLAN Serial Data [-] 1 High Speed GMLAN Serial Data [-] 1	I I	K34 - K34- UKL
7	0.5 0.5	BU BU	2500 2500	High Speed GMLAN Serial Data [+] 1 High Speed GMLAN Serial Data [+] 1	I I	K34 - K34- UKL
8	0.5	VT / BN	4337	Pedestrian Alert Sound Speaker [-] Control	I	- UKL
9	0.5	GY / GN	4338	Pedestrian Alert Sound Speaker [+] Control	I	- UKL
10	0.5	RD / BU	6040	Battery Positive Voltage	I	- UKL

K132 Pedestrian Alert Sound Control Module (UKL)

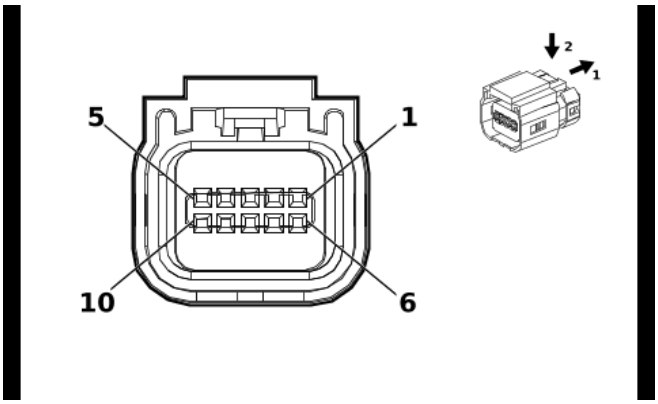

2586629

Connector Part Information

Harness Type: Front Floor Console Wiring Harness
OEM Connector: 19178082
Service Connector: Service by Harness - See Part Catalog
Description: 10-Way F 0.64 Kaizen Series, Sealed(BK)

Terminal Part Information

Terminal Type ID	Terminated Lead	Diagnostic Test Probe	Terminal Removal Tool
I	Not required	J-35616-64B (L-BU)	No Tool Required

K132 Pedestrian Alert Sound Control Module (UKL)

Pin	Size	Color	Circuit	Function	Terminal Type ID	Option
1	0.5	WH	2501	High Speed GMLAN Serial Data [-] 1	I	UKL
2	0.5	BU	2500	High Speed GMLAN Serial Data [+] 1	I	UKL
3	0.5	BK	550	Ground	I	UKL
4	0.5	WH / BU	5986	Serial Data Communication Enable	I	UKL
5	—	—	—	Not Occupied	—	—
6	0.5	WH	2501	High Speed GMLAN Serial Data [-] 1	I	UKL
7	0.5	BU	2500	High Speed GMLAN Serial Data [+] 1	I	UKL
8	0.5	VT / BN	4337	Pedestrian Alert Sound Speaker [-] Control	I	UKL
9	0.5	GY / GN	4338	Pedestrian Alert Sound Speaker [+] Control	I	UKL
10	0.5	RD / BU	6040	Battery Positive Voltage	I	UKL

K157 Video Processing Control Module X1 (UV2)

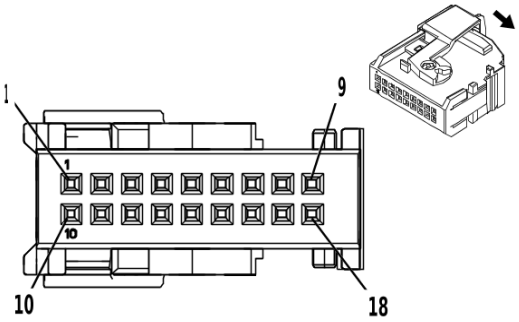

4329088

Connector Part Information

Harness Type: Body Wiring Harness
OEM Connector: 13528967
Service Connector: 84976200
Description: 18-Way F Micro-Quadlock Series(BK)

Terminal Part Information

Terminal Type ID	Terminated Lead	Diagnostic Test Probe	Terminal Removal Tool
I	19300632	J-35616-64B (L-BU)	J-38125-215A

K157 Video Processing Control Module X1 (UV2)

Pin	Size	Color	Circuit	Function	Terminal Type ID	Option
1	0.5	RD / BN	7540	Battery Positive Voltage	I	UV2
2	—	—	—	Not Occupied	—	—
3	0.5	BK	2050	Ground	I	UV2
4 - 8	—	—	—	Not Occupied	—	—
9	0.35	GY / GN	1102	Low Speed GMLAN Serial Data 2	I	UV2
10	0.5	RD / BN	7540	Battery Positive Voltage	I	UV2
11	—	—	—	Not Occupied	—	—
12	0.5	BK	2050	Ground	I	UV2
13	0.35	WH / GN	1305	High Speed GMLAN Serial Data [-] 9	I	UKL
14	0.35	WH / GN	1305	High Speed GMLAN Serial Data [-] 9	I	UKL
15	0.35	BU / GN	1304	High Speed GMLAN Serial Data [+] 9	I	UKL
16	0.35	BU / GN	1304	High Speed GMLAN Serial Data [+] 9	I	UKL
17	0.35	WH / GN	1305	High Speed GMLAN Serial Data [-] 9	I	UKL
18	0.35	BU / GN	1304	High Speed GMLAN Serial Data [+] 9	I	UKL

K157 Video Processing Control Module X3 (UV2)

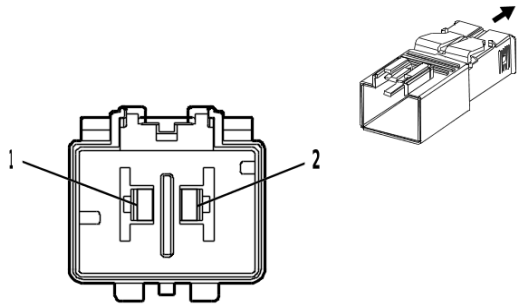

4891120

Connector Part Information

Harness Type: Body Wiring Harness COAX
OEM Connector: 13516237
Service Connector: Service by Cable Assembly — See Part Catalog
Description: 2-Way M 9.5 MCON-LL Series(BK)

Terminal Part Information

Terminal Type ID	Terminated Lead	Diagnostic Test Probe	Terminal Removal Tool
I	Not required	No Tool Required	No Tool Required

K157 Video Processing Control Module X3 (UV2)

Pin	Size	Color	Circuit	Function	Terminal Type ID	Option
—	—	Coax Cable	—	Video Processing Module Coaxial Video Signal	I	—

K157 Video Processing Control Module X4 (UV2)

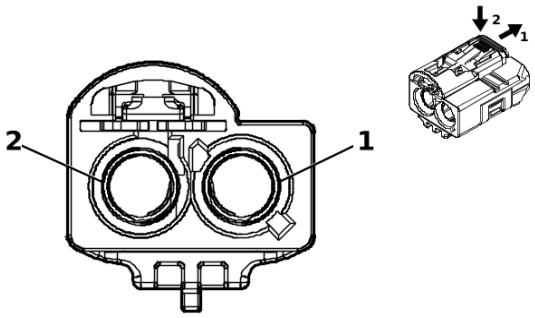

5215287

Connector Part Information

Harness Type: Body Wiring Harness COAX
OEM Connector: 13516235
Service Connector: Service by Cable Assembly — See Part Catalog
Description: 2-Way F Coax Type(BG)

Terminal Part Information

Terminal Type ID	Terminated Lead	Diagnostic Test Probe	Terminal Removal Tool
I	Not required	No Tool Required	No Tool Required

K157 Video Processing Control Module X4 (UV2)

Pin	Size	Color	Circuit	Function	Terminal Type ID	Option
—	—	Coax Cable	—	Video Processing Module Coaxial Video Signal	I	—

K157 Video Processing Control Module X5 (UV2+UKL)

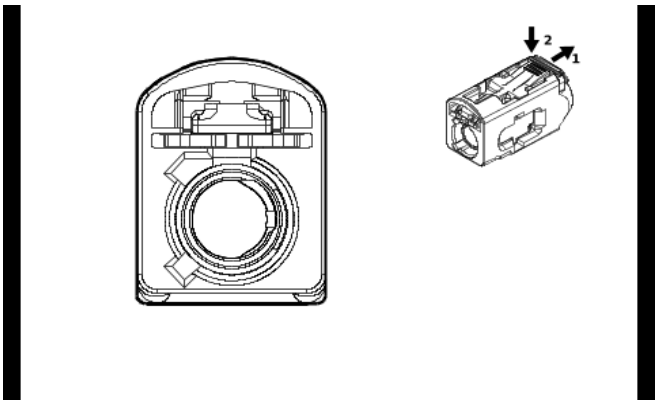

5483027

Connector Part Information

Harness Type: Body Wiring Harness COAX
OEM Connector: 13515629
Service Connector: Service by Cable Assembly — See Part Catalog
Description: 1-Way F Coax Type(BN)

Terminal Part Information

Terminal Type ID	Terminated Lead	Diagnostic Test Probe	Terminal Removal Tool
I	Not required	No Tool Required	No Tool Required

K157 Video Processing Control Module X5 (UV2+UKL)

Pin	Size	Color	Circuit	Function	Terminal Type ID	Option
—	—	Coax Cable	—	Front Vision Camera 1 Coaxial Video Signal	I	—

K157 Video Processing Control Module X5 (UV2-UKL)

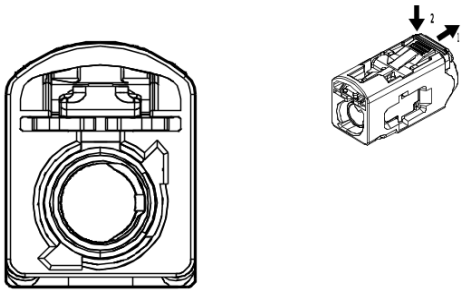

5160972

Connector Part Information

Harness Type: Body Wiring Harness COAX
OEM Connector: 13515636
Service Connector: Service by Cable Assembly — See Part Catalog
Description: 1-Way F Coax Type(GN)

Terminal Part Information

Terminal Type ID	Terminated Lead	Diagnostic Test Probe	Terminal Removal Tool
I	Not required	No Tool Required	No Tool Required

K157 Video Processing Control Module X5 (UV2-UKL)

Pin	Size	Color	Circuit	Function	Terminal Type ID	Option
—	—	Coax Cable	—	Video Processing Module Coaxial Video Signal	I	—

K173 Transmission Range Control Module

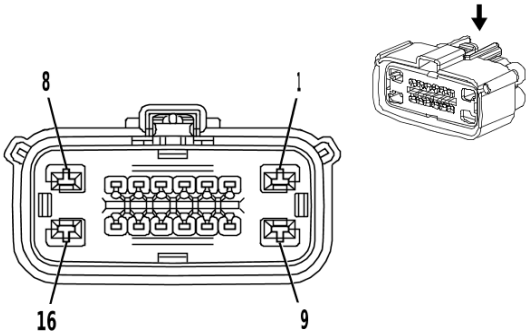

3684497

Connector Part Information

Harness Type: Engine Wiring Harness
OEM Connector: 13599854
Service Connector: 19352906
Description: 16-Way F 1.5, 2.8 MX Series, Sealed(BK)

Terminal Part Information

Terminal Type ID	Terminated Lead	Diagnostic Test Probe	Terminal Removal Tool
I	13576377	J-35616-35 (VT)	J-38125-12A
II	85528055	J-35616-2A (GY)	J-38125-217

K173 Transmission Range Control Module

Pin	Size	Color	Circuit	Function	Terminal Type ID	Option
1	0.5	VT / BU	5293	Powertrain Main Relay Fused Supply Voltage 4	I	—
2	0.5	VT / WH	1539	Run/Crank Ignition 1 Voltage	II	—
3	0.5	BU / WH	3977	Accessory Wake-Up Serial Data 2	II	—
4	0.5	WH	2501	High Speed GMLAN Serial Data [-] 1	II	—
5	0.5	BU	2500	High Speed GMLAN Serial Data [+] 1	II	—
6	0.5	WH	7494	High Speed GMLAN Serial Data [-] 3	II	—
7	0.5	BU / BK	7493	High Speed GMLAN Serial Data [+] 3	II	—
8	2.5	BK	350	Ground	I	—
9 - 10	—	—	—	Not Occupied	—	—
11	0.5	GN / VT	4621	Engine Control Module LIN Bus 1	II	—
12	0.5	WH	2501	High Speed GMLAN Serial Data [-] 1	II	—
13	0.5	BU	2500	High Speed GMLAN Serial Data [+] 1	II	—
14	0.5	WH	7494	High Speed GMLAN Serial Data [-] 3	II	—
15	0.5	BU / BK	7493	High Speed GMLAN Serial Data [+] 3	II	—
16	2.5	RD / GY	642	Battery Positive Voltage	I	—

K177 Brake Booster Control Module

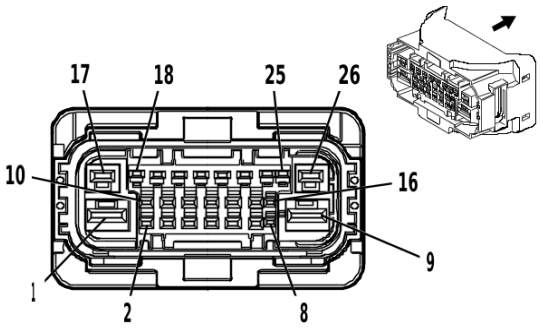

4112348

Connector Part Information

Harness Type: Body Wiring Harness
OEM Connector: 13590059
Service Connector: 19332378
Description: 26-Way F 1.5, 2.8, 4.8 Series, Sealed(BK)

Terminal Part Information

Terminal Type ID	Terminated Lead	Diagnostic Test Probe	Terminal Removal Tool
I	13584537	J-35616-14 (GN)	J-38125-557
II	19330700	J-35616-35 (VT)	J-38125-553
III	19369189	J-35616-40 (BU)	J-38125-553

K177 Brake Booster Control Module

Pin	Size	Color	Circuit	Function	Terminal Type ID	Option
1	2.5	RD / YE	3042	Battery Positive Voltage	III	—
2	0.5	BU / RD	3335	Brake Pedal Travel Sensor 1 High Reference	I	—
3 - 7	—	—	—	Not Occupied	—	—
8	0.5	BK / GY	3417	Brake Pedal Travel Sensor 1 Low Reference	I	—
9	2.5	BK	650	Ground	III	—
10	0.5	WH	2501	High Speed GMLAN Serial Data [-] 1	I	—
11	0.5	WH	2501	High Speed GMLAN Serial Data [-] 1	I	—
12 - 14	—	—	—	Not Occupied	—	—
15	0.5 0.5	WH WH	6106 6106	High Speed GMLAN Serial Data [-] 2 High Speed GMLAN Serial Data [-] 2	I I	UKL - UKL
16	0.5	WH	6106	High Speed GMLAN Serial Data [-] 2	I	—
17	1.5	RD / YE	3040	Battery Positive Voltage	II	—
18	0.5	BU	2500	High Speed GMLAN Serial Data [+] 1	I	—
19	0.5	BU	2500	High Speed GMLAN Serial Data [+] 1	I	—
20	0.5	BU / WH	3977	Accessory Wake-Up Serial Data 2	I	—
21	0.35	VT / GY	539	Run/Crank Ignition 1 Voltage	I	—
22	0.35	BU / YE	3334	Brake Pedal Travel Sensor 1 Signal	I	—
23	0.35	VT / BN	3333	Brake Pedal Travel Sensor 2 Signal	I	—
24	0.5 0.5	BU / YE BU / YE	6105 6105	High Speed GMLAN Serial Data [+] 2 High Speed GMLAN Serial Data [+] 2	I I	UKL - UKL

K177 Brake Booster Control Module (cont'd)

Pin	Size	Color	Circuit	Function	Terminal Type ID	Option
25	0.5	BU / YE	6105	High Speed GMLAN Serial Data [+] 2	I	—
26	—	—	—	Not Occupied	—	—

K179 Digital Map Control Module (UKL)

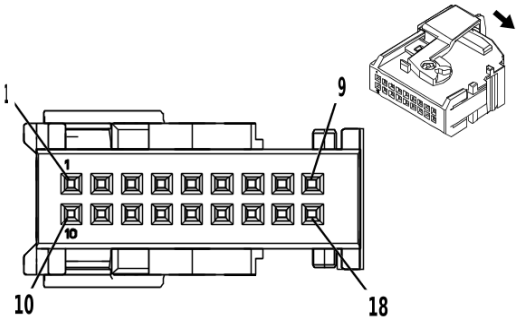

4329088

Connector Part Information

Harness Type: Body Wiring Harness
OEM Connector: 13528967
Service Connector: 84976200
Description: 18-Way F Micro-Quadlock Series(BK)

Terminal Part Information

Terminal Type ID	Terminated Lead	Diagnostic Test Probe	Terminal Removal Tool
I	19300632	J-35616-64B (L-BU)	J-38125-215A

K179 Digital Map Control Module (UKL)

Pin	Size	Color	Circuit	Function	Terminal Type ID	Option
1	0.5	WH	3811	High Speed GMLAN Serial Data [-] 4	I	UKL
2	0.5	BU / VT	3813	High Speed GMLAN Serial Data [+] 4	I	UKL
3 - 9	—	—	—	Not Occupied	—	—
10	0.5	WH	3811	High Speed GMLAN Serial Data [-] 4	I	UKL
11	0.5	BU / VT	3813	High Speed GMLAN Serial Data [+] 4	I	UKL
12	0.5	BK	1050	Ground	I	UKL
13	0.5	BN / VT	3809	Front Object Sensor 1 Reference Voltage	I	UKL
14	—	—	—	Not Occupied	—	—
15	0.5	RD / GN	7740	Battery Positive Voltage	I	UKL
16 - 18	—	—	—	Not Occupied	—	—

K180 Driver Monitoring System Control Module X1 (UKL)

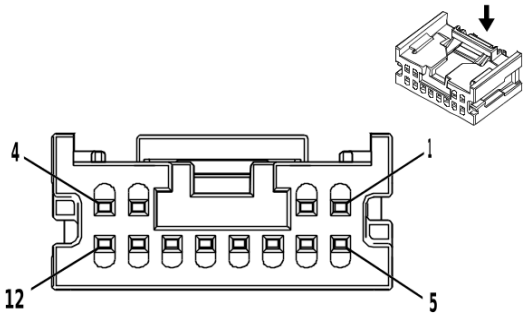

3824362

Connector Part Information

Harness Type: Instrument Panel Wiring Harness
OEM Connector: 13507121
Service Connector: 13507121
Description: 12-Way F Mini 50 Series(BK)

Terminal Part Information

Terminal Type ID	Terminated Lead	Diagnostic Test Probe	Terminal Removal Tool
I	19333221	EL-35616-58 (BK)	EL-38125-58

K180 Driver Monitoring System Control Module X1 (UKL)

Pin	Size	Color	Circuit	Function	Terminal Type ID	Option
1	0.35	RD / VT	5340	Battery Positive Voltage	I	UKL
2	0.35	BK	1250	Ground	I	UKL
3	0.35	BU / VT	3813	High Speed GMLAN Serial Data [+] 4	I	UKL
4	0.35	WH	3811	High Speed GMLAN Serial Data [-] 4	I	UKL
5 - 6	—	—	—	Not Occupied	—	—
7	0.35	BU / BN	7744	Driver Illumination Lamp Ground	I	UKL
8	0.35	YE / BU	2245	Driver Illumination Lamp 2 Control	I	UKL
9	0.35	WH / VT	2246	Driver Illumination Lamp 1 Control	I	UKL
10	0.35	BN / VT	3809	Front Object Sensor 1 Reference Voltage	I	UKL
11	0.35	BU / VT	3813	High Speed GMLAN Serial Data [+] 4	I	UKL
12	0.35	WH	3811	High Speed GMLAN Serial Data [-] 4	I	UKL

K180 Driver Monitoring System Control Module X2 (UKL)

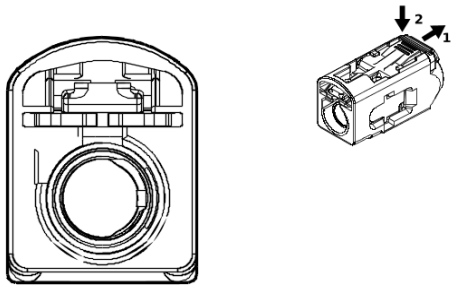

5277137

Connector Part Information

Harness Type: Instrument Panel Wiring Harness COAX
OEM Connector: 13515628
Service Connector: Service by Cable Assembly — See Part Catalog
Description: 1-Way F Coax Type(GN)

Terminal Part Information

Terminal Type ID	Terminated Lead	Diagnostic Test Probe	Terminal Removal Tool
I	Not required	No Tool Required	No Tool Required

K180 Driver Monitoring System Control Module X2 (UKL)

Pin	Size	Color	Circuit	Function	Terminal Type ID	Option
—	—	Coax Cable	—	Driver Monitoring System Camera Coaxial Signal	I	—

K182 Parking Assist Control Module X1 (UD7)

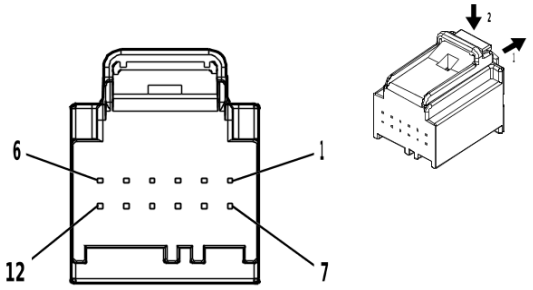

5095565

Connector Part Information

Harness Type: Body Wiring Harness
OEM Connector: 13525987
Service Connector: 13525987
Description: 12-Way F 0.64 Series(BK)

Terminal Part Information

Terminal Type ID	Terminated Lead	Diagnostic Test Probe	Terminal Removal Tool
I	13584547	J-35616-64B (L-BU)	J-38125-215A

K182 Parking Assist Control Module X1 (UD7)

Pin	Size	Color	Circuit	Function	Terminal Type ID	Option
1	0.35	RD / WH	5440	Battery Positive Voltage	I	UD7
2 - 8	—	—	—	Not Occupied	—	—
9	0.35	GN	5060	Low Speed GMLAN Serial Data	I	UD7
10	0.5	BK	1050	Ground	I	UD7
11 - 12	—	—	—	Not Occupied	—	—

K182 Parking Assist Control Module X2 (UD7)

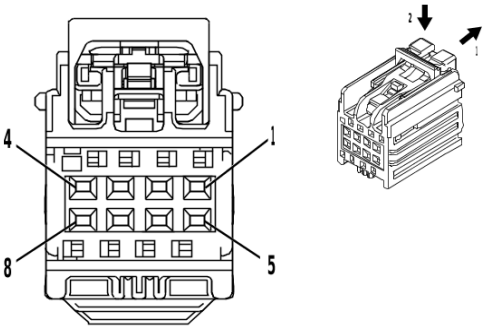

4280711

Connector Part Information

Harness Type: Body Wiring Harness
OEM Connector: 13593893
Service Connector: 19355209
Description: 8-Way F YESC Kaizen Series(GY)

Terminal Part Information

Terminal Type ID	Terminated Lead	Diagnostic Test Probe	Terminal Removal Tool
I	Not required	J-35616-64B (L-BU)	No Tool Required

K182 Parking Assist Control Module X2 (UD7)

Pin	Size	Color	Circuit	Function	Terminal Type ID	Option
1	—	—	—	Not Occupied	—	—
2	0.35	YE / WH	2377	Right Rear Middle Parking Assist Sensor Signal	I	UD7
3	0.35	YE	2375	Left Rear Outer Parking Assist Sensor Signal	I	UD7
4	0.35	BN / WH	2374	Object Sensor Voltage Reference	I	UD7
5	0.35	YE / VT	2378	Right Rear Outer Parking Assist Sensor Signal	I	UD7
6	0.35	YE / BU	2376	Left Rear Middle Parking Assist Sensor Signal	I	UD7
7	—	—	—	Not Occupied	—	—
8	0.35	BK / GY	2379	Object Sensor Low Reference	I	UD7

K190 Power Line Communication Module X1

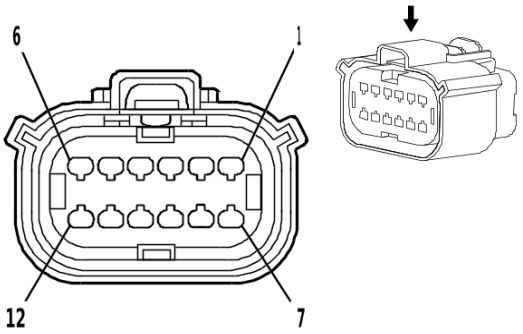

1825165

Connector Part Information

Harness Type: Body Wiring Harness
OEM Connector: 19150019
Service Connector: 19352907
Description: 12-Way F 1.5 Series, Sealed(BK)

Terminal Part Information

Terminal Type ID	Terminated Lead	Diagnostic Test Probe	Terminal Removal Tool
I	19368973	J-35616-2A (GY)	J-38125-217

K190 Power Line Communication Module X1

Pin	Size	Color	Circuit	Function	Terminal Type ID	Option
1	0.5	BK	550	Ground	I	—
2	—	—	—	Not Occupied	—	—
3	0.5	BK	550	Ground	I	—
4 - 6	—	—	—	Not Occupied	—	—
7	0.5	RD / WH	1040	Battery Positive Voltage	I	—
8	0.5 0.5	WH WH	2501 2501	High Speed GMLAN Serial Data [-] 1 High Speed GMLAN Serial Data [-] 1	I I	UKL - UKL
9	0.5 0.5	WH WH	2501 2501	High Speed GMLAN Serial Data [-] 1 High Speed GMLAN Serial Data [-] 1	I I	UKL - UKL
10	0.5 0.5	BU BU	2500 2500	High Speed GMLAN Serial Data [+] 1 High Speed GMLAN Serial Data [+] 1	I I	UKL - UKL
11	0.5 0.5	BU BU	2500 2500	High Speed GMLAN Serial Data [+] 1 High Speed GMLAN Serial Data [+] 1	I I	UKL - UKL
12	0.5	BU / WH	3977	Accessory Wake-Up Serial Data 2	I	—

K190 Power Line Communication Module X2

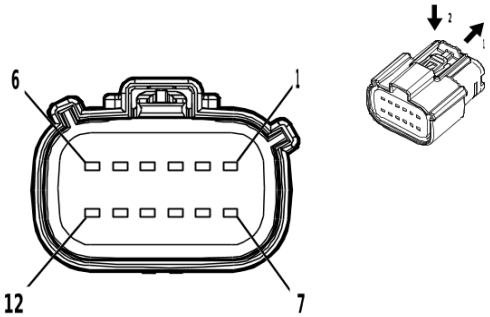

4584248

Connector Part Information

Harness Type: Body Wiring Harness
OEM Connector: 13586052
Service Connector: 19333239
Description: 12-Way F 1.5 MX Series, Sealed(D-GY)

Terminal Part Information

Terminal Type ID	Terminated Lead	Diagnostic Test Probe	Terminal Removal Tool
I	85528055	J-35616-2A (GY)	J-38125-217

K190 Power Line Communication Module X2

Pin	Size	Color	Circuit	Function	Terminal Type ID	Option
1	0.5	BU / BN	3787	High Voltage Energy Management Communication Bus Enable Signal	I	—
2	0.5	WH	3832	High Speed GMLAN Serial Data [-] 6	I	—
3	0.5	WH	3832	High Speed GMLAN Serial Data [-] 6	I	—
4	0.5	YE	3831	High Speed GMLAN Serial Data [+] 6	I	—
5	0.5	YE	3831	High Speed GMLAN Serial Data [+] 6	I	—
6 - 7	—	—	—	Not Occupied	—	—
8	0.75	GY / GN	3954	Control Pilot Signal 1	I	—
9 - 12	—	—	—	Not Occupied	—	—

K212 Electronic Transmission Shift Control Pushbutton Circuit Board

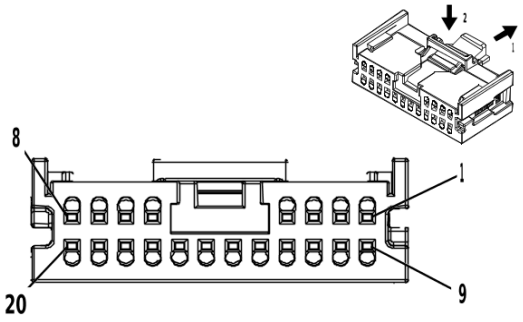

4231339

Connector Part Information

Harness Type: Front Floor Console Wiring Harness
OEM Connector: 13544280
Service Connector: Service by Harness - See Part Catalog
Description: 20-Way F Mini 50 Series(BK)

Terminal Part Information

Terminal Type ID	Terminated Lead	Diagnostic Test Probe	Terminal Removal Tool
I	Not required	EL-35616-58 (BK)	No Tool Required

K212 Electronic Transmission Shift Control Pushbutton Circuit Board

Pin	Size	Color	Circuit	Function	Terminal Type ID	Option
1	0.35	BU / BK	7493	High Speed GMLAN Serial Data [+] 3	I	—
2	0.35	BU / BK	7493	High Speed GMLAN Serial Data [+] 3	I	—
3	0.35	WH	7494	High Speed GMLAN Serial Data [-] 3	I	—
4	0.35	WH	7494	High Speed GMLAN Serial Data [-] 3	I	—
5	0.35	BU / BN	4498	High Speed GMLAN Serial Data [+] 7	I	—
6	0.35	BU / BN	4498	High Speed GMLAN Serial Data [+] 7	I	—
7	0.35	WH	4499	High Speed GMLAN Serial Data [-] 7	I	—
8	0.35	WH	4499	High Speed GMLAN Serial Data [-] 7	I	—
9	0.35	RD / BN	440	Battery Positive Voltage	I	—
10 - 13	—	—	—	Not Occupied	—	—
14	0.35	BU / BN	4498	High Speed GMLAN Serial Data [+] 7	I	—
15	0.35	WH	4499	High Speed GMLAN Serial Data [-] 7	I	—
16	0.35	VT / GN	4320	Powertrain Sensor Bus Enable	I	—
17	0.35	VT / WH	639	Run/Crank Ignition 1 Voltage	I	—
18	0.35	BU / WH	3977	Accessory Wake-Up Serial Data 2	I	—
19	—	—	—	Not Occupied	—	—
20	0.35	BK	750	Ground	I	—

M6 Air Temperature Door Actuator

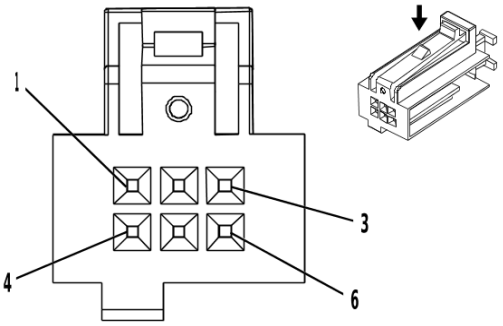

2220563

Connector Part Information

Harness Type: HVAC Wiring Harness
OEM Connector: 1355881-1
Service Connector: Service by Harness - See Part Catalog
Description: 6-Way F Micro-Quadlock Series(BK)

Terminal Part Information

Terminal Type ID	Terminated Lead	Diagnostic Test Probe	Terminal Removal Tool
I	Not required	No Tool Required	No Tool Required

M6 Air Temperature Door Actuator

Pin	Size	Color	Circuit	Function	Terminal Type ID	Option
1	0.5	WH / BK	3169	Air Temperature Door Actuator Control 1	I	—
2	0.75	BN / VT	7572	HVAC Door Actuator Control	I	—
3	0.5	VT / GN	3170	Air Temperature Door Actuator Control 2	I	—
4	0.5	YE / GN	3171	Air Temperature Door Actuator Control 3	I	—
5	—	—	—	Not Occupied	—	—
6	0.5	GY / BU	3172	Air Temperature Door Actuator Control 4	I	—

M8 Blower Motor

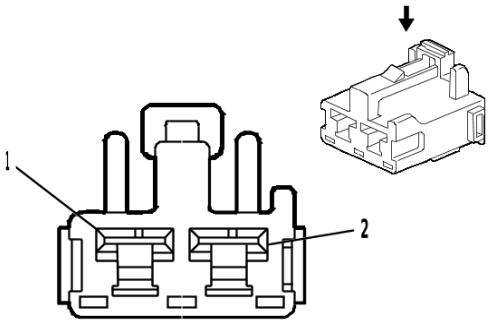

1411605

Connector Part Information

Harness Type: HVAC Wiring Harness
OEM Connector: 6098-0325
Service Connector: Service by Harness - See Part Catalog
Description: 2-Way F TS 187 Series(NA)

Terminal Part Information

Terminal Type ID	Terminated Lead	Diagnostic Test Probe	Terminal Removal Tool
I	Not required	No Tool Required	No Tool Required

M8 Blower Motor

Pin	Size	Color	Circuit	Function	Terminal Type ID	Option
1	3	VT	5987	Front Blower Motor Low Reference	I	—
2	3	VT / BK	65	Blower Motor Control	I	—

M15 Drive Motor

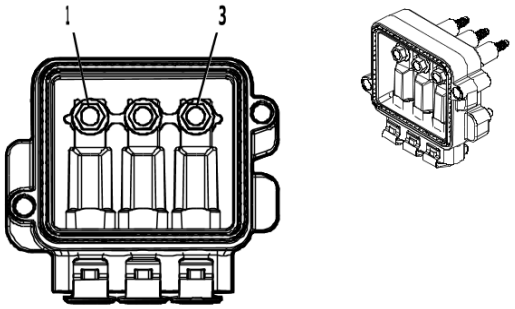

5143055

Connector Part Information

Harness Type: High Voltage Wiring Harness
OEM Connector: EMH-045C
Service Connector: Service by Cable Assembly — See Part Catalog
Description: 3-Way High Voltage Ring Terminal Housing(Aluminum)

Terminal Part Information

Terminal Type ID	Terminated Lead	Diagnostic Test Probe	Terminal Removal Tool
I	Not required	No Tool Required	No Tool Required

M15 Drive Motor

Pin	Size	Color	Circuit	Function	Terminal Type ID	Option
1	—	OG	3770	Motor Generator Unit Phase W Control	I	—
2	—	OG	3771	Motor Generator Unit Phase V Control	I	—
3	—	OG	3772	Motor Generator Unit Phase U Control	I	—

M35D Window Motor Module - Driver

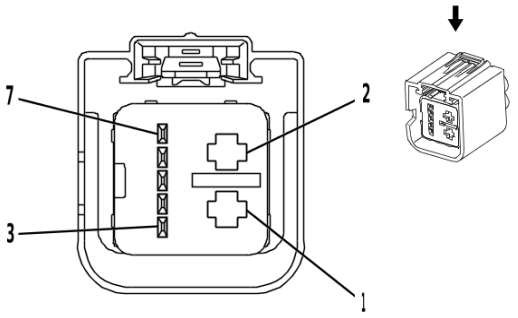

2282932

Connector Part Information

Harness Type: Front Side Door Door Wiring Harness - Driver
OEM Connector: 13590001
Service Connector: Service by Harness - See Part Catalog
Description: 7-Way F 0.64, 2.8 Kaizen Timer Series, Sealed(GY)

Terminal Part Information

Terminal Type ID	Terminated Lead	Diagnostic Test Probe	Terminal Removal Tool
I	Not required	J-35616-4A (PU)	No Tool Required
II	Not required	J-35616-64B (L-BU)	No Tool Required

M35D Window Motor Module - Driver

Pin	Size	Color	Circuit	Function	Terminal Type ID	Option
1	2	BK	650	Ground	I	—
2	2	RD / GN	1540	Battery Positive Voltage	I	—
3	0.5	GN / WH	3379	Window Switch Driver Up Signal	II	—
4	0.5	GN / YE	6134	Body Control Module LIN Bus 3	II	—
5	0.5	GN	3381	Window Switch Driver Express Signal	II	—
6	0.35	GY	745	Left Front Door Ajar Switch Signal	II	—
7	0.5	GY	3380	Driver Window Main Control Down Switch Signal	II	—

M35P Window Motor Module - Passenger

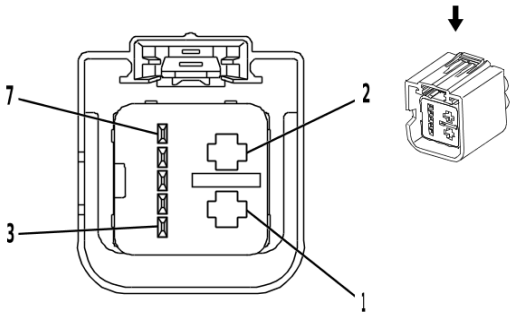

2282932

Connector Part Information

Harness Type: Front Side Door Door Wiring Harness - Passenger
OEM Connector: 13590001
Service Connector: Service by Harness - See Part Catalog
Description: 7-Way F 0.64, 2.8 Kaizen Timer Series, Sealed(GY)

Terminal Part Information

Terminal Type ID	Terminated Lead	Diagnostic Test Probe	Terminal Removal Tool
I	Not required	J-35616-4A (PU)	No Tool Required
II	Not required	J-35616-64B (L-BU)	No Tool Required

M35P Window Motor Module - Passenger

Pin	Size	Color	Circuit	Function	Terminal Type ID	Option
1	2	BK	850	Ground	I	
2	2	RD / GN	1540	Battery Positive Voltage	I	
3	0.5	YE / BK	3384	Window Switch Passenger Up Signal	II	
4	0.5	GN / YE	6134	Body Control Module LIN Bus 3	II	
5	0.5	VT / GY	3386	Window Switch Passenger Express Signal	II	
6	0.35	GY	746	Right Front Door Ajar Switch Signal	II	
7	0.5	BN / YE	3385	Window Switch Passenger Down Signal	II	

M37 Mode Door Actuator

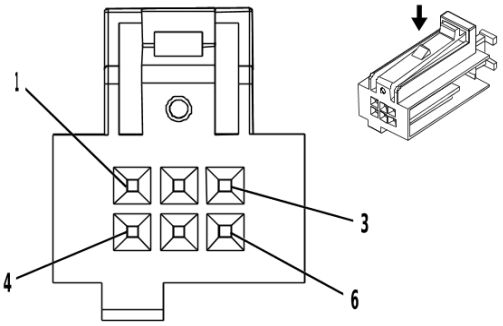

2220563

Connector Part Information

Harness Type: HVAC Wiring Harness
OEM Connector: 1355881-1
Service Connector: Service by Harness - See Part Catalog
Description: 6-Way F Micro-Quadlock Series(BK)

Terminal Part Information

Terminal Type ID	Terminated Lead	Diagnostic Test Probe	Terminal Removal Tool
I	Not required	No Tool Required	No Tool Required

M37 Mode Door Actuator

Pin	Size	Color	Circuit	Function	Terminal Type ID	Option
1	0.5	BU / BN	3167	Mode Door Actuator Control 3	I	—
2	0.75	BN / VT	7572	HVAC Door Actuator Control	I	—
3	0.5	GY / RD	3165	Mode Door Actuator Control 1	I	—
4	0.5	BN / GY	3168	Mode Door Actuator Control 4	I	—
5	—	—	—	Not Occupied	—	—
6	0.5	BN / GN	3166	Mode Door Actuator Control 2	I	—

M45 Rear Wiper Motor

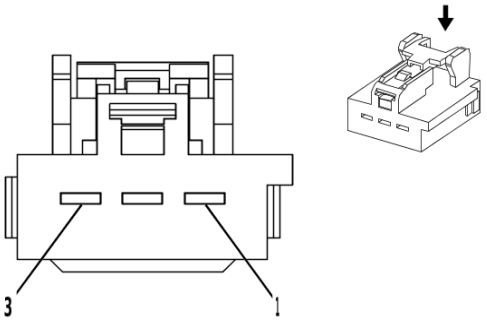

3961929

Connector Part Information

Harness Type: Liftgate Wiring Harness
OEM Connector: 13581043
Service Connector: Service by Harness - See Part Catalog
Description: 3-Way F 2.8 Series(GY)

Terminal Part Information

Terminal Type ID	Terminated Lead	Diagnostic Test Probe	Terminal Removal Tool
I	Not required	J-35616-4A (PU)	No Tool Required

M45 Rear Wiper Motor

Pin	Size	Color	Circuit	Function	Terminal Type ID	Option
1	1	GY / VT	5780	Windshield Wiper Motor Park Switch Fused Signal	I	—
2	1	BK	1950	Ground	I	—
3	1	BU	393	Rear Window Wiper Motor Control	I	—

M46 Air Recirculation Door Actuator

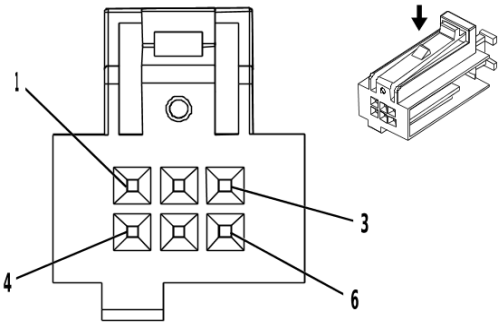

2220563

Connector Part Information

Harness Type: HVAC Wiring Harness
OEM Connector: 1355881-1
Service Connector: Service by Harness - See Part Catalog
Description: 6-Way F Micro-Quadlock Series(BK)

Terminal Part Information

Terminal Type ID	Terminated Lead	Diagnostic Test Probe	Terminal Removal Tool
I	Not required	No Tool Required	No Tool Required

M46 Air Recirculation Door Actuator

Pin	Size	Color	Circuit	Function	Terminal Type ID	Option
1	0.5	BU / GY	3173	Air Inlet Door Actuator Control 1	I	—
2	0.75	BN / VT	7572	HVAC Door Actuator Control	I	—
3	0.5	BN / WH	3174	Air Inlet Door Actuator Control 2	I	—
4	0.5	YE / GN	3175	Air Inlet Door Actuator Control 3	I	—
5	—	—	—	Not Occupied	—	—
6	0.5	WH	3176	Air Inlet Door Actuator Control 4	I	—

M50D Seat Front Vertical Motor - Driver (A2X)

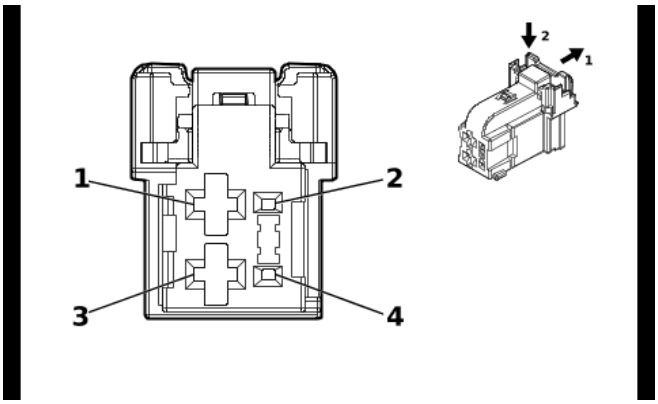

5410027

Connector Part Information

Harness Type: Front Driver Seat Wiring Harness
OEM Connector: 2316171-1
Service Connector: Service by Harness - See Part Catalog
Description: 4-Way F 0.64, 2.8 Series(BK)

Terminal Part Information

Terminal Type ID	Terminated Lead	Diagnostic Test Probe	Terminal Removal Tool
I	Not required	J-35616-35 (VT)	No Tool Required

M50D Seat Front Vertical Motor - Driver (A2X)

Pin	Size	Color	Circuit	Function	Terminal Type ID	Option
1	1.5	BU / VT	287	Driver Seat Front Vertical Motor Down Control	I	—
2	—	—	—	Not Occupied	—	—
3	1.5	GN / BN	286	Driver Seat Front Vertical Motor Up Control	I	—
4	—	—	—	Not Occupied	—	—

M51D Seat Horizontal Motor - Driver (A2X)

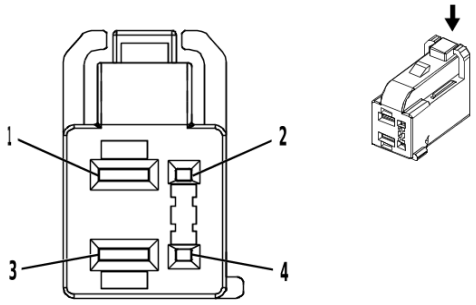

3683652

Connector Part Information

Harness Type: Front Driver Seat Wiring Harness
OEM Connector: 13583828
Service Connector: Service by Harness - See Part Catalog
Description: 4-Way F 0.64, 2.8 Series(BK)

Terminal Part Information

Terminal Type ID	Terminated Lead	Diagnostic Test Probe	Terminal Removal Tool
I	Not required	J-35616-4A (PU)	No Tool Required

M51D Seat Horizontal Motor - Driver (A2X)

Pin	Size	Color	Circuit	Function	Terminal Type ID	Option
1	1.5	GY / GN	284	Driver Seat Horizontal Motor Rearward Control	I	—
2	—	—	—	Not Occupied	—	—
3	1.5	YE / BU	285	Driver Seat Horizontal Motor Forward Control	I	—
4	—	—	—	Not Occupied	—	—

M53D Seat Lumbar Support Motor - Driver (A2X)

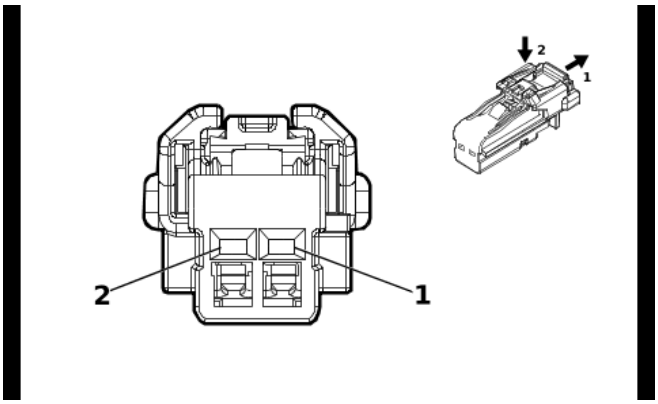

4115691

Connector Part Information

Harness Type: Front Driver Seat Wiring Harness
OEM Connector: 6098-8988
Service Connector: Service by Harness - See Part Catalog
Description: 2-Way F 1.2 MCON Series(BK)

Terminal Part Information

Terminal Type ID	Terminated Lead	Diagnostic Test Probe	Terminal Removal Tool
I	Not required	J-35616-16 (L-GN)	No Tool Required

M53D Seat Lumbar Support Motor - Driver (A2X)

Pin	Size	Color	Circuit	Function	Terminal Type ID	Option
1	0.5	BU	611	Driver Seat Lumbar Support Motor Forward Control	I	—
2	0.5	VT	610	Driver Seat Lumbar Support Motor Backward Control	I	—

M55D Seat Rear Vertical Motor - Driver (A2X)

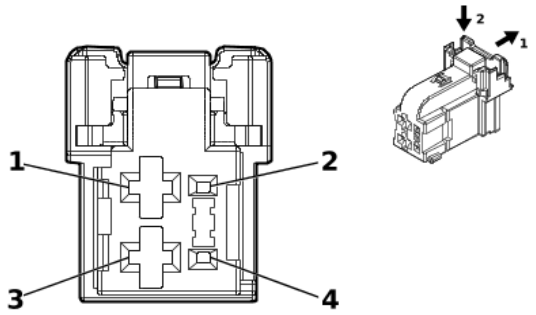

5410027

Connector Part Information

Harness Type: Front Driver Seat Wiring Harness
OEM Connector: 2316171-1
Service Connector: Service by Harness - See Part Catalog
Description: 4-Way F 0.64, 2.8 Series(BK)

Terminal Part Information

Terminal Type ID	Terminated Lead	Diagnostic Test Probe	Terminal Removal Tool
I	Not required	J-35616-35 (VT)	No Tool Required

M55D Seat Rear Vertical Motor - Driver (A2X)

Pin	Size	Color	Circuit	Function	Terminal Type ID	Option
1	1.5	GY / BU	283	Driver Seat Rear Vertical Motor Down Control	I	—
2	—	—	—	Not Occupied	—	—
3	1.5	YE	282	Driver Seat Rear Vertical Motor Up Control	I	—
4	—	—	—	Not Occupied	—	—

M56D Seat Recline Motor - Driver (A2X)

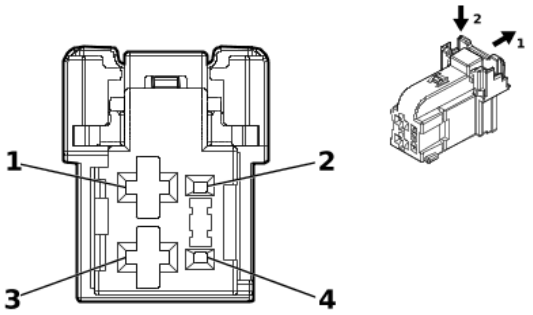

5410027

Connector Part Information

Harness Type: Front Driver Seat Wiring Harness
OEM Connector: 2316171-1
Service Connector: Service by Harness - See Part Catalog
Description: 4-Way F 0.64, 2.8 Series(BK)

Terminal Part Information

Terminal Type ID	Terminated Lead	Diagnostic Test Probe	Terminal Removal Tool
I	Not required	J-35616-35 (VT)	No Tool Required

M56D Seat Recline Motor - Driver (A2X)

Pin	Size	Color	Circuit	Function	Terminal Type ID	Option
1	1.5	GN / YE	276	Driver Seat Recline Motor Forward Control	I	—
2	—	—	—	Not Occupied	—	—
3	1.5	BU / YE	277	Driver Seat Recline Motor Rearward Control	I	—
4	—	—	—	Not Occupied	—	—

M74LR Window Motor - Left Rear

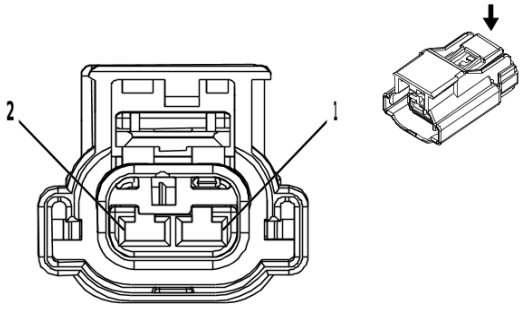

2716333

Connector Part Information

Harness Type: Rear Door Door Wiring Harness - Left
OEM Connector: 13579062
Service Connector: Service by Harness - See Part Catalog
Description: 2-Way F 2.8 Series, Sealed(BK)

Terminal Part Information

Terminal Type ID	Terminated Lead	Diagnostic Test Probe	Terminal Removal Tool
I	Not required	J-35616-35 (VT)	No Tool Required

M74LR Window Motor - Left Rear

Pin	Size	Color	Circuit	Function	Terminal Type ID	Option
1	1.5	BU / VT	668	Left Rear Window Motor Up Control	I	
2	1.5	YE / BU	669	Left Rear Window Motor Down Control	I	

M74RR Window Motor - Right Rear

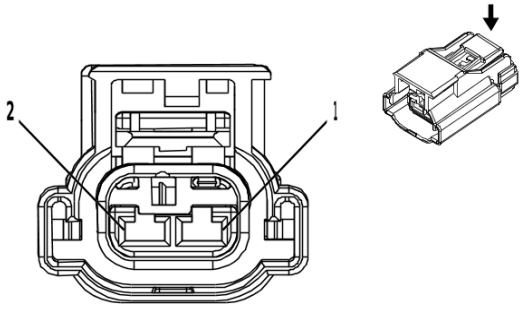

2716333

Connector Part Information

Harness Type: Rear Door Door Wiring Harness - Right
OEM Connector: 13579062
Service Connector: Service by Harness - See Part Catalog
Description: 2-Way F 2.8 Series, Sealed(BK)

Terminal Part Information

Terminal Type ID	Terminated Lead	Diagnostic Test Probe	Terminal Removal Tool
I	Not required	J-35616-35 (VT)	No Tool Required

M74RR Window Motor - Right Rear

Pin	Size	Color	Circuit	Function	Terminal Type ID	Option
1	1.5	BU / GY	670	Right Rear Window Motor Up Control	I	
2	1.5	GN / BK	671	Right Rear Window Motor Down Control	I	

M75 Windshield Wiper Motor

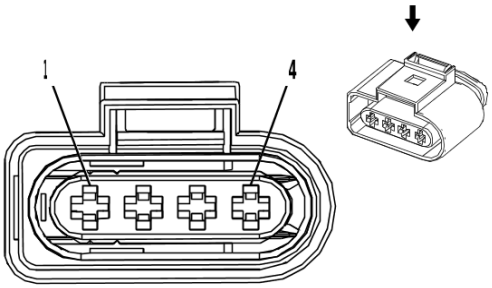

2474722

Connector Part Information

Harness Type: Body Wiring Harness
OEM Connector: 19207310
Service Connector: 85596545
Description: 4-Way F Junior Power Timer Series, Sealed(BK)

Terminal Part Information

Terminal Type ID	Terminated Lead	Diagnostic Test Probe	Terminal Removal Tool
I	Not required	J-35616-4A (PU)	No Tool Required

M75 Windshield Wiper Motor

Pin	Size	Color	Circuit	Function	Terminal Type ID	Option
1	2.5	BK	450	Ground	I	—
2	0.35	BN / GN	196	Windshield Wiper Motor Park Switch Signal	I	—
3	2.5	WH	92	Windshield Wiper Motor High Speed Control	I	—
4	2.5	YE / BN	95	Windshield Wiper Motor Low Speed Control	I	—

M81 Sunroof Sunshade Motor (CAJ)

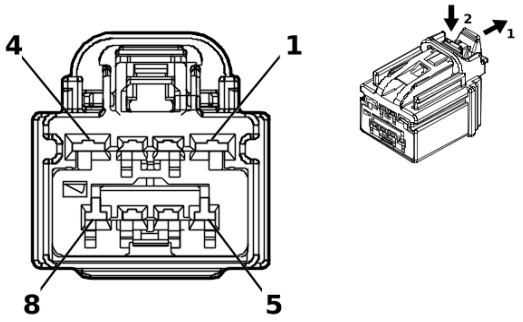

5202274

Connector Part Information

Harness Type: Sunroof Wiring Harness
OEM Connector: 13518749
Service Connector: Service by Harness - See Part Catalog
Description: 8-Way F 1.5, 2.8 YESC Series(GY)

Terminal Part Information

Terminal Type ID	Terminated Lead	Diagnostic Test Probe	Terminal Removal Tool
I	Not required	No Tool Required	No Tool Required

M81 Sunroof Sunshade Motor (CAJ)

Pin	Size	Color	Circuit	Function	Terminal Type ID	Option
1	2.5	BN / GY	5938	Sunshade Motor Up Control	I	—
2	0.35	YE / BK	5034	Sunroof Obstruction Sensor Signal 1	I	—
3	0.35	BK / WH	151	Signal Ground	I	—
4	2.5	WH / YE	5939	Sunshade Motor Down Control	I	—
5	0.35	GY / RD	5033	Sunroof Obstruction Sensor Voltage Reference	I	—
6 - 8	—	—	—	Not Occupied	—	—

M96A Active Grille Air Shutter 1 Actuator

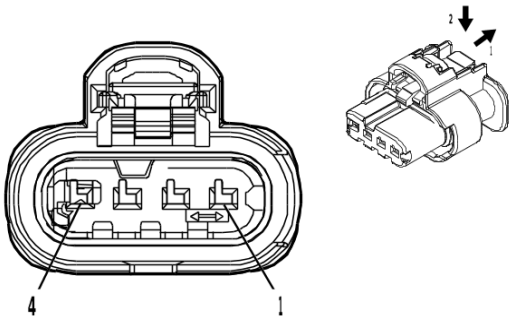

4934614

Connector Part Information

Harness Type: Engine Wiring Harness
OEM Connector: 13514087
Service Connector: 85519071
Description: 4-Way F 1.2 MCON-CB Series, Sealed(BK)

Terminal Part Information

Terminal Type ID	Terminated Lead	Diagnostic Test Probe	Terminal Removal Tool
I	Not required	J-35616-16 (L-GN)	No Tool Required

M96A Active Grille Air Shutter 1 Actuator

Pin	Size	Color	Circuit	Function	Terminal Type ID	Option
1	0.5	VT / BU	5705	Powertrain Main Relay Control	I	—
2	0.5	GN / VT	4621	Engine Control Module LIN Bus 1	I	—
3	—	—	—	Not Occupied	—	—
4	0.5	BK	350	Ground	I	—

M104L Park Brake Actuator - Left

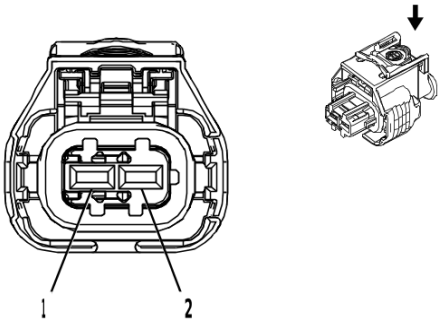

2845578

Connector Part Information

Harness Type: Body Wiring Harness
OEM Connector: 13343445
Service Connector: 19368140
Description: 2-Way F 2.8 Series, Sealed(BK)

Terminal Part Information

Terminal Type ID	Terminated Lead	Diagnostic Test Probe	Terminal Removal Tool
I	Not required	J-35616-35 (VT)	No Tool Required

M104L Park Brake Actuator - Left

Pin	Size	Color	Circuit	Function	Terminal Type ID	Option
1	2.5	WH	2001	Left Park Brake Motor Apply Control	I	—
2	2.5	GY / BK	4369	Left Park Brake Motor Low Reference	I	—

M104R Park Brake Actuator - Right

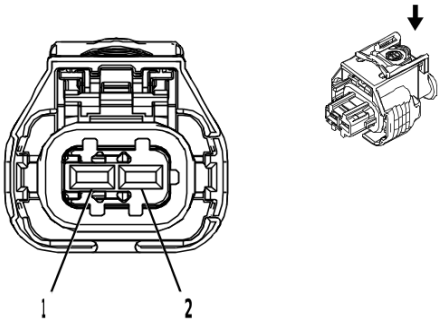

2845578

Connector Part Information

Harness Type: Body Wiring Harness
OEM Connector: 13343445
Service Connector: 19368140
Description: 2-Way F 2.8 Series, Sealed(BK)

Terminal Part Information

Terminal Type ID	Terminated Lead	Diagnostic Test Probe	Terminal Removal Tool
I	Not required	J-35616-35 (VT)	No Tool Required

M104R Park Brake Actuator - Right

Pin	Size	Color	Circuit	Function	Terminal Type ID	Option
1	2.5	GN / VT	1988	Right Park Brake Motor Apply Control	I	—
2	2.5	GY	4368	Right Park Brake Motor Low Reference	I	—

P12L Horn - Left

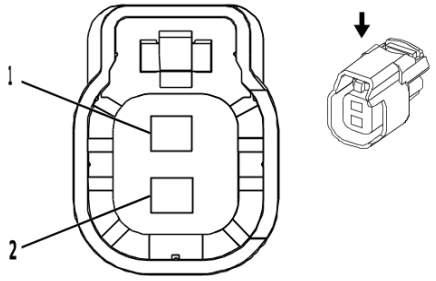

2422378

Connector Part Information

Harness Type: Forward Lamp Wiring Harness
OEM Connector: 13503511
Service Connector: 13579002
Description: 2-Way F 1.5 Series, Sealed(BK)

Terminal Part Information

Terminal Type ID	Terminated Lead	Diagnostic Test Probe	Terminal Removal Tool
I	Not required	J-35616-2A (GY)	No Tool Required

P12L Horn - Left

Pin	Size	Color	Circuit	Function	Terminal Type ID	Option
1	1	BK	50	Ground	I	—
2	1	BN / GY	29	Horn Control	I	—

P12R Horn - Right

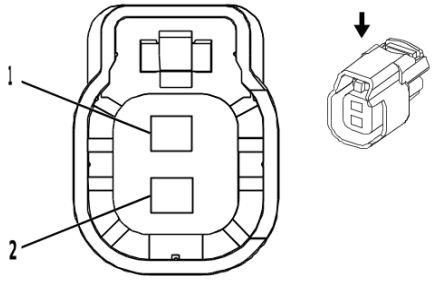

2422378

Connector Part Information

Harness Type: Forward Lamp Wiring Harness
OEM Connector: 13503511
Service Connector: 13579002
Description: 2-Way F 1.5 Series, Sealed(BK)

Terminal Part Information

Terminal Type ID	Terminated Lead	Diagnostic Test Probe	Terminal Removal Tool
I	Not required	J-35616-2A (GY)	No Tool Required

P12R Horn - Right

Pin	Size	Color	Circuit	Function	Terminal Type ID	Option
1	1	BK	250	Ground	I	—
2	1	BN / GY	29	Horn Control	I	—

P14 Passenger Air Bag Disabled Indicator

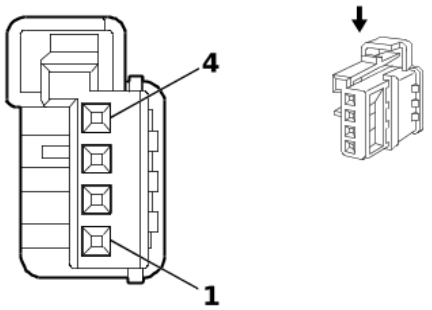

2904464

Connector Part Information

Harness Type: Roof Wiring Harness
OEM Connector: 13580945
Service Connector: 84766302
Description: 4-Way F 0.64 Micro-Quadlock Series(GY)

Terminal Part Information

Terminal Type ID	Terminated Lead	Diagnostic Test Probe	Terminal Removal Tool
I	Not required	J-35616-64B (L-BU)	No Tool Required

P14 Passenger Air Bag Disabled Indicator

Pin	Size	Color	Circuit	Function	Terminal Type ID	Option
1	0.35	BK	550	Ground	I	—
2	0.35	BU	2307	Passenger Air Bag On Indicator Control	I	
3	0.35	GN	2308	Passenger Air Bag Off Indicator Control	I	
4	0.35	VT / WH	5234	Passenger Seat Belt Indicator Control	I	—

P16 Instrument Cluster

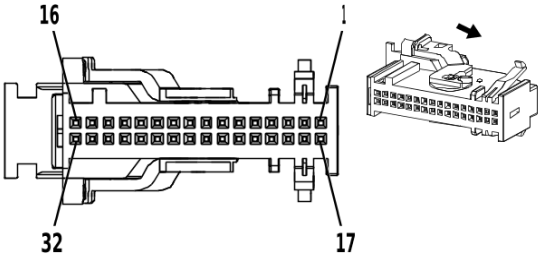

627214

Connector Part Information

Harness Type: Instrument Panel Wiring Harness
OEM Connector: 13511333
Service Connector: 13511333
Description: 32-Way F 0.64 Micro-Quadlock Series(GY)

Terminal Part Information

Terminal Type ID	Terminated Lead	Diagnostic Test Probe	Terminal Removal Tool
I	19300632	J-35616-64B (L-BU)	J-38125-215A

P16 Instrument Cluster

Pin	Size	Color	Circuit	Function	Terminal Type ID	Option
1	0.35	GN	7217	Ethernet Bus 7 [+]	I	—
2	—	—	—	Not Occupied	—	—
3	0.35	GY / GN	1102	Low Speed GMLAN Serial Data 2	I	—
4 - 6	—	—	—	Not Occupied	—	—
7	0.35	RD / VT	6340	Battery Positive Voltage	I	—
8	0.35	VT / WH	2439	Run/Crank Ignition 1 Voltage	I	—
9 - 11	—	—	—	Not Occupied	—	—
12	0.35	GY / YE	3885	Forward Collision Alert LED Control	I	—
13 - 15	—	—	—	Not Occupied	—	—
16	0.35	BN / WH	419	Check Engine Indicator Control	I	—
17	0.35	WH	7216	Ethernet Bus 7 [-]	I	—
18	—	—	—	Not Occupied	—	—
19	0.35	BK	1250	Ground	I	—
20	0.5 0.5	GN / BK GN / BK	3894 3894	Instrument Panel Cluster Control Module LIN Bus 1 Instrument Panel Cluster Control Module LIN Bus 1	I I	UKL - UKL
21 - 23	—	—	—	Not Occupied	—	—
24	0.35	VT	185	Low Washer Fluid Indicator Control	I	—
25 - 29	—	—	—	Not Occupied	—	—
30	0.35	WH / GN	3535	Reflected LED Display Dimming Control	I	—
31 - 32	—	—	—	Not Occupied	—	—

P17 Info Display Module X1

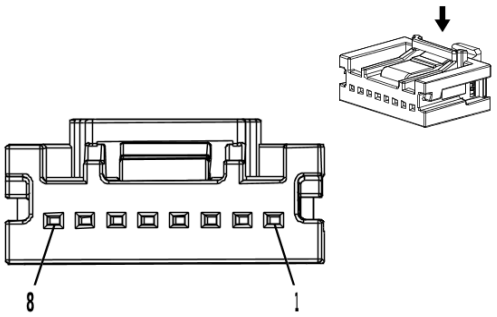

4017639

Connector Part Information

Harness Type: Instrument Panel Wiring Harness
OEM Connector: 13507118
Service Connector: 19354223
Description: 8-Way F Mini 50 Series(BK)

Terminal Part Information

Terminal Type ID	Terminated Lead	Diagnostic Test Probe	Terminal Removal Tool
I	Not required	EL-35616-58 (BK)	No Tool Required

P17 Info Display Module X1

Pin	Size	Color	Circuit	Function	Terminal Type ID	Option
1	0.35	RD / YE	6540	Battery Positive Voltage	I	—
2 - 7	—	—	—	Not Occupied	—	—
8	0.35	BK / WH	651	Signal Ground	I	—

P17 Info Display Module X2

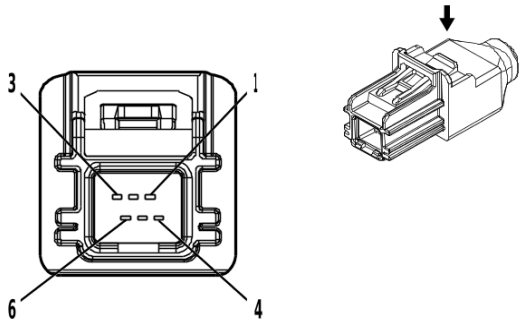

4806625

Connector Part Information

Harness Type: Instrument Panel Wiring Harness LVDS
OEM Connector: 13522802
Service Connector: Service by Cable Assembly — See Part Catalog
Description: 6-Way M HSAL-2 Series(BK)

Terminal Part Information

Terminal Type ID	Terminated Lead	Diagnostic Test Probe	Terminal Removal Tool
I	Not required	No Tool Required	No Tool Required

P17 Info Display Module X2

Pin	Size	Color	Circuit	Function	Terminal Type ID	Option
—	—	LVDS	—	(Infotainment) Infotainment Display Signal	I	—

P19AC Speaker - Subwoofer (UQA)

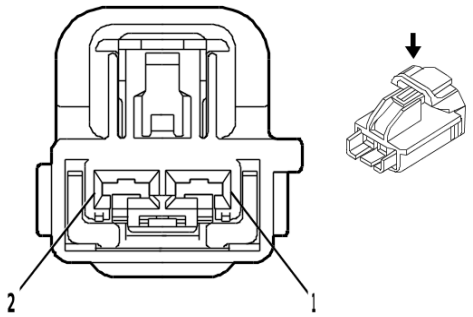

1803142

Connector Part Information

Harness Type: Body Wiring Harness
OEM Connector: 13581045
Service Connector: 19367562
Description: 2-Way F YESC Kaizen Series(L-GY)

Terminal Part Information

Terminal Type ID	Terminated Lead	Diagnostic Test Probe	Terminal Removal Tool
I	Not required	J-35616-4A (PU)	No Tool Required

P19AC Speaker - Subwoofer (UQA)

Pin	Size	Color	Circuit	Function	Terminal Type ID	Option
1	2	GN / BK	1794	Left/Rear Subwoofer [-] Control	I	UQA
2	2	BU / GY	346	Left/Rear Subwoofer [+] Control	I	UQA

P19AG Speaker - Left Front Door (UQ3)

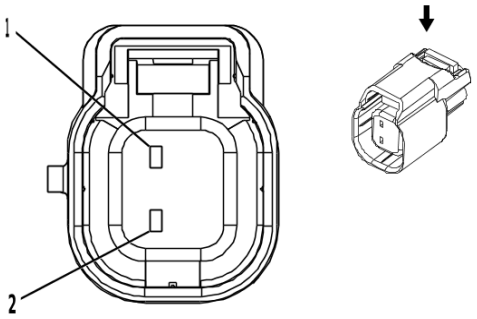

4115616

Connector Part Information

Harness Type: Front Side Door Door Wiring Harness - Driver
OEM Connector: 13582919
Service Connector: Service by Harness - See Part Catalog
Description: 2-Way F 1.5 Series, Sealed(BK)

Terminal Part Information

Terminal Type ID	Terminated Lead	Diagnostic Test Probe	Terminal Removal Tool
I	Not required	J-35616-2A (GY)	No Tool Required

P19AG Speaker - Left Front Door (UQ3)

Pin	Size	Color	Circuit	Function	Terminal Type ID	Option
1	0.75	BN / BU	118	Left Front Speaker [-] Control 1	I	UQ3
2	0.75	BU	201	Left Front Speaker 1 [+] Control	I	UQ3

P19AG Speaker - Left Front Door (UQA)

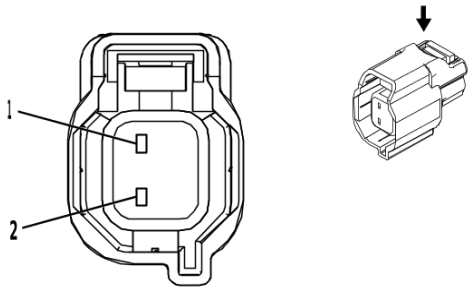

2900396

Connector Part Information

Harness Type: Front Side Door Door Wiring Harness - Driver
OEM Connector: 13582637
Service Connector: Service by Harness - See Part Catalog
Description: 2-Way F 1.5 Series, Sealed(L-GY)

Terminal Part Information

Terminal Type ID	Terminated Lead	Diagnostic Test Probe	Terminal Removal Tool
I	Not required	J-35616-2A (GY)	No Tool Required

P19AG Speaker - Left Front Door (UQA)

Pin	Size	Color	Circuit	Function	Terminal Type ID	Option
1	0.75	BN / BU	118	Left Front Speaker [-] Control 1	I	UQA
2	0.75	BU	201	Left Front Speaker 1 [+] Control	I	UQA

P19AH Speaker - Right Front Door (UQ3)

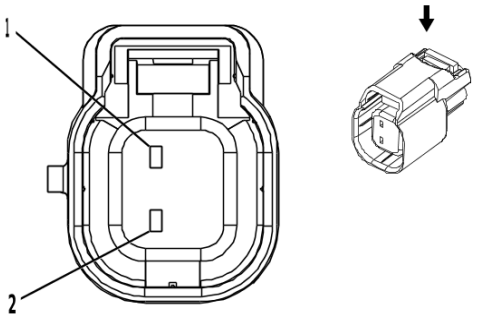

4115616

Connector Part Information

Harness Type: Front Side Door Door Wiring Harness - Passenger
OEM Connector: 13582919
Service Connector: Service by Harness - See Part Catalog
Description: 2-Way F 1.5 Series, Sealed(BK)

Terminal Part Information

Terminal Type ID	Terminated Lead	Diagnostic Test Probe	Terminal Removal Tool
I	Not required	J-35616-2A (GY)	No Tool Required

P19AH Speaker - Right Front Door (UQ3)

Pin	Size	Color	Circuit	Function	Terminal Type ID	Option
1	0.75	YE / BK	117	Right Front Speaker [-] Control 1	I	UQ3
2	0.75	YE	200	Right Front Speaker 1 [+] Control	I	UQ3

P19AH Speaker - Right Front Door (UQA)

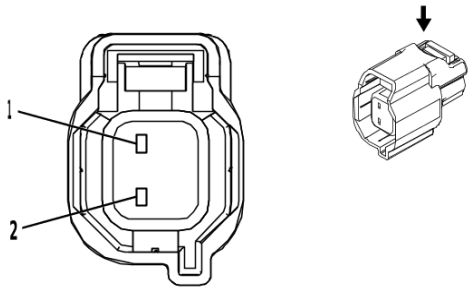

2900396

Connector Part Information

Harness Type: Front Side Door Door Wiring Harness - Passenger
OEM Connector: 13582637
Service Connector: Service by Harness - See Part Catalog
Description: 2-Way F 1.5 Series, Sealed(L-GY)

Terminal Part Information

Terminal Type ID	Terminated Lead	Diagnostic Test Probe	Terminal Removal Tool
I	Not required	J-35616-2A (GY)	No Tool Required

P19AH Speaker - Right Front Door (UQA)

Pin	Size	Color	Circuit	Function	Terminal Type ID	Option
1	0.75	YE / BK	117	Right Front Speaker [-] Control 1	I	UQA
2	0.75	YE	200	Right Front Speaker 1 [+] Control	I	UQA

P19AL Speaker - Left Rear Door (UQ3)

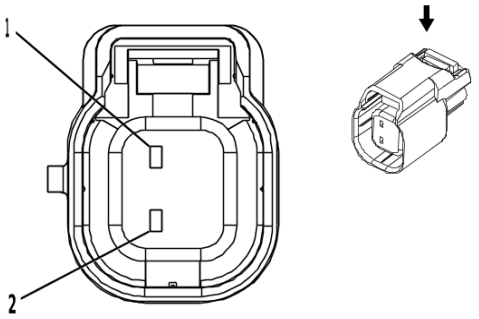

4115616

Connector Part Information

Harness Type: Rear Door Door Wiring Harness - Left
OEM Connector: 13582919
Service Connector: Service by Harness - See Part Catalog
Description: 2-Way F 1.5 Series, Sealed(BK)

Terminal Part Information

Terminal Type ID	Terminated Lead	Diagnostic Test Probe	Terminal Removal Tool
I	Not required	J-35616-2A (GY)	No Tool Required

P19AL Speaker - Left Rear Door (UQ3)

Pin	Size	Color	Circuit	Function	Terminal Type ID	Option
1	0.75	GN / BK	116	Left Rear Speaker [-] Control	I	UQ3
2	0.75	GN	199	Left Rear Speaker [+] Control	I	UQ3

P19AL Speaker - Left Rear Door (UQA)

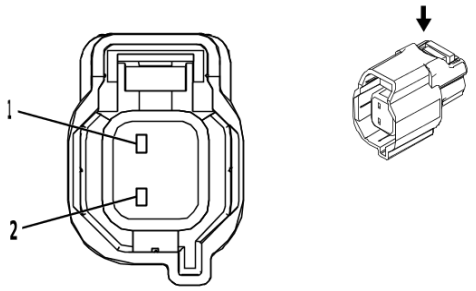

2900396

Connector Part Information

Harness Type: Rear Door Door Wiring Harness - Left
OEM Connector: 13582637
Service Connector: Service by Harness - See Part Catalog
Description: 2-Way F 1.5 Series, Sealed(L-GY)

Terminal Part Information

Terminal Type ID	Terminated Lead	Diagnostic Test Probe	Terminal Removal Tool
I	Not required	J-35616-2A (GY)	No Tool Required

P19AL Speaker - Left Rear Door (UQA)

Pin	Size	Color	Circuit	Function	Terminal Type ID	Option
1	0.75	GN / BK	116	Left Rear Speaker [-] Control	I	UQA
2	0.75	GN	199	Left Rear Speaker [+] Control	I	UQA

P19AM Speaker - Right Rear Door (UQ3)

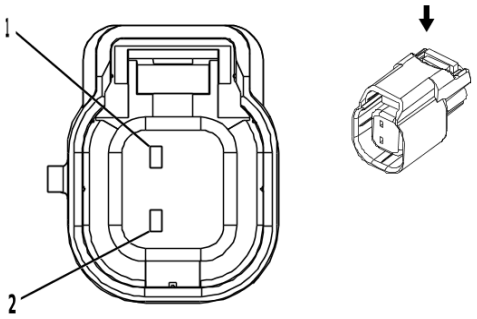

4115616

Connector Part Information

Harness Type: Rear Door Door Wiring Harness - Right
OEM Connector: 13582919
Service Connector: Service by Harness - See Part Catalog
Description: 2-Way F 1.5 Series, Sealed(BK)

Terminal Part Information

Terminal Type ID	Terminated Lead	Diagnostic Test Probe	Terminal Removal Tool
I	Not required	J-35616-2A (GY)	No Tool Required

P19AM Speaker - Right Rear Door (UQ3)

Pin	Size	Color	Circuit	Function	Terminal Type ID	Option
1	0.75	BU / BK	115	Right Rear Speaker [-] Control	I	UQ3
2	0.75	WH	46	Right Rear Speaker [+] Control	I	UQ3

P19AM Speaker - Right Rear Door (UQA)

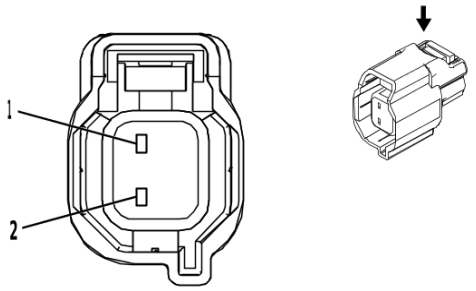

2900396

Connector Part Information

Harness Type: Rear Door Door Wiring Harness - Right
OEM Connector: 13582637
Service Connector: Service by Harness - See Part Catalog
Description: 2-Way F 1.5 Series, Sealed(L-GY)

Terminal Part Information

Terminal Type ID	Terminated Lead	Diagnostic Test Probe	Terminal Removal Tool
I	Not required	J-35616-2A (GY)	No Tool Required

P19AM Speaker - Right Rear Door (UQA)

Pin	Size	Color	Circuit	Function	Terminal Type ID	Option
1	0.75	BU / BK	115	Right Rear Speaker [-] Control	I	UQA
2	0.75	WH	46	Right Rear Speaker [+] Control	I	UQA

P19H Speaker - Left Front Tweeter

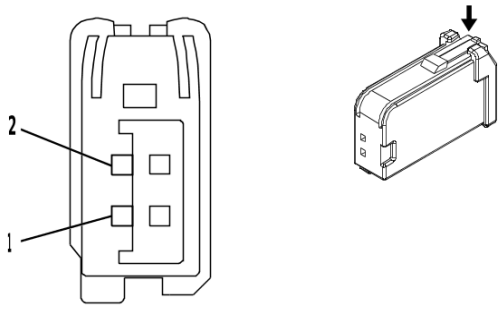

3989818

Connector Part Information

Harness Type: Instrument Panel Wiring Harness
OEM Connector: 13585901
Service Connector: 19332379
Description: 2-Way F 0.64 Series(BK)

Terminal Part Information

Terminal Type ID	Terminated Lead	Diagnostic Test Probe	Terminal Removal Tool
I	Not required	J-35616-64B (L-BU)	No Tool Required

P19H Speaker - Left Front Tweeter

Pin	Size	Color	Circuit	Function	Terminal Type ID	Option
1	0.35	BN / BU	118	Left Front Speaker [-] Control 1	I	UQ3
	0.75	GY / BK	1974	Left Front Speaker [-] Control 2	I	UQA
2	0.75	BU	201	Left Front Speaker 1 [+] Control	I	UQ3
	0.75	BU / VT	1874	Left Front Speaker [+] Control 2	I	UQA

P19V Speaker - Right Front Tweeter

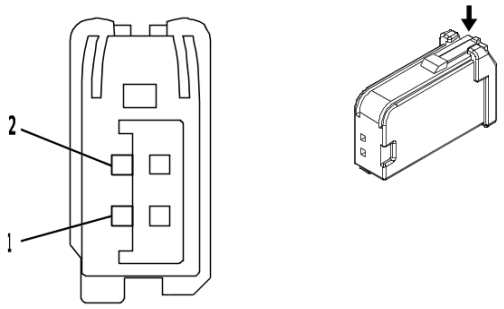

3989818

Connector Part Information

Harness Type: Instrument Panel Wiring Harness
OEM Connector: 13585901
Service Connector: 19332379
Description: 2-Way F 0.64 Series(BK)

Terminal Part Information

Terminal Type ID	Terminated Lead	Diagnostic Test Probe	Terminal Removal Tool
I	Not required	J-35616-64B (L-BU)	No Tool Required

P19V Speaker - Right Front Tweeter

Pin	Size	Color	Circuit	Function	Terminal Type ID	Option
1	0.75	YE / BK	117	Right Front Speaker [-] Control 1	I	UQ3
	0.75	BN / BK	1975	Right Front Speaker [-] Control 2	I	UQA
2	0.75	YE	200	Right Front Speaker 1 [+] Control	I	UQ3
	0.75	GN / BU	1875	Right Front Speaker [+] Control 2	I	UQA

P43 Collision Alert Indicators

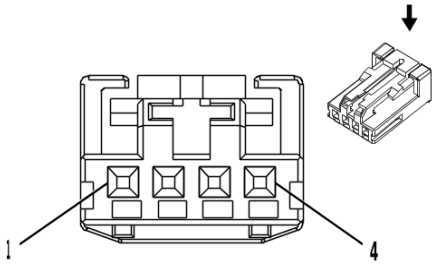

2717162

Connector Part Information

Harness Type: Instrument Panel Wiring Harness
OEM Connector: 13582963
Service Connector: 19367524
Description: 4-Way F 0.64 Micro-Quadlock Series(BK)

Terminal Part Information

Terminal Type ID	Terminated Lead	Diagnostic Test Probe	Terminal Removal Tool
I	Not required	J-35616-64B (L-BU)	No Tool Required

P43 Collision Alert Indicators

Pin	Size	Color	Circuit	Function	Terminal Type ID	Option
1	0.35	VT / BK	2139	Run/Crank Ignition 1 Voltage	I	—
2	0.35	GY / YE	3885	Forward Collision Alert LED Control	I	—
3	0.35	WH / GN	3535	Reflected LED Display Dimming Control	I	—
4	0.5	BK	1250	Ground	I	—

P48F Pedestrian Alert Sound Speaker - Front

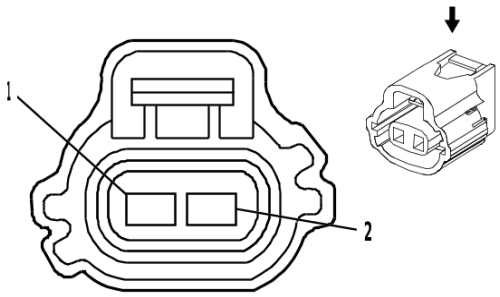

1331453

Connector Part Information

Harness Type: Engine Wiring Harness
OEM Connector: 89047244
Service Connector: 86778122
Description: 2-Way F 090 Series, Sealed(BK)

Terminal Part Information

Terminal Type ID	Terminated Lead	Diagnostic Test Probe	Terminal Removal Tool
I	Not required	J-35616-18 (BK)	No Tool Required

P48F Pedestrian Alert Sound Speaker - Front

Pin	Size	Color	Circuit	Function	Terminal Type ID	Option
1	0.5	GY / GN	4338	Pedestrian Alert Sound Speaker [+] Control	I	—
2	0.5	VT / BN	4337	Pedestrian Alert Sound Speaker [-] Control	I	—

P48R Pedestrian Alert Sound Speaker - Rear

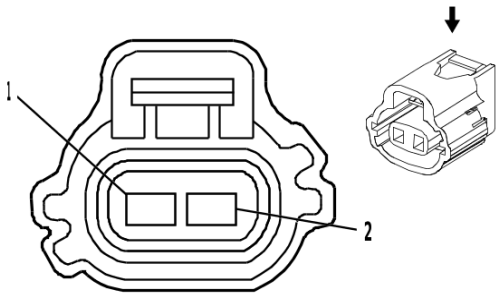

1331453

Connector Part Information

Harness Type: Body Wiring Harness
OEM Connector: 89047244
Service Connector: 86778122
Description: 2-Way F 090 Series, Sealed(BK)

Terminal Part Information

Terminal Type ID	Terminated Lead	Diagnostic Test Probe	Terminal Removal Tool
I	Not required	J-35616-18 (BK)	No Tool Required

P48R Pedestrian Alert Sound Speaker - Rear

Pin	Size	Color	Circuit	Function	Terminal Type ID	Option
1	0.5	GY / GN	4338	Pedestrian Alert Sound Speaker [+] Control	I	—
2	0.5	VT / BN	4337	Pedestrian Alert Sound Speaker [-] Control	I	—

P50 Emergency Call Backup Speaker (UER)

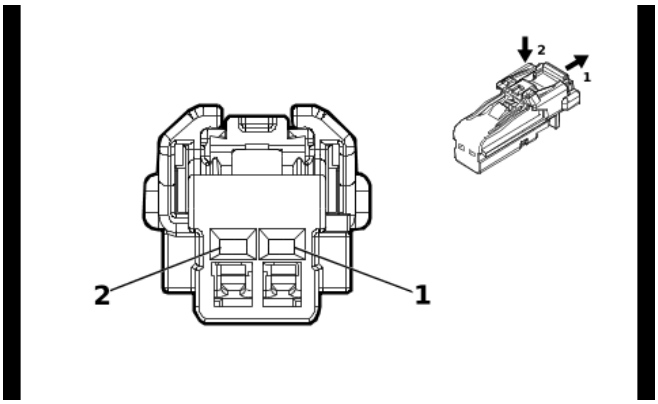

4115691

Connector Part Information

Harness Type: Instrument Panel Wiring Harness
OEM Connector: 13532422
Service Connector: 19352066
Description: 2-Way F 1.2 MCON Series(BK)

Terminal Part Information

Terminal Type ID	Terminated Lead	Diagnostic Test Probe	Terminal Removal Tool
I	Not required	J-35616-16 (L-GN)	No Tool Required

P50 Emergency Call Backup Speaker (UER)

Pin	Size	Color	Circuit	Function	Terminal Type ID	Option
1	0.35	GY / GN	7271	Emergency Response Accident Speaker [-] Control	I	UER
2	0.35	WH / VT	7270	Emergency Response Accident Speaker [+] Control	I	UER

R6E Terminating Resistor - High Speed Extension Bus 1

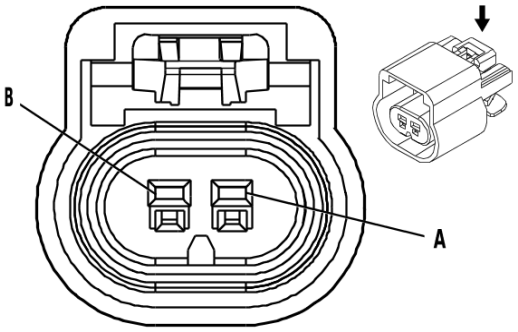

523630

Connector Part Information

Harness Type: Body Wiring Harness
OEM Connector: 19153731
Service Connector: Service by Harness - See Part Catalog
Description: 2-Way F 150 GT Series, Sealed(BK)

Terminal Part Information

Terminal Type ID	Terminated Lead	Diagnostic Test Probe	Terminal Removal Tool
I	Not required	J-35616-14 (GN)	No Tool Required

R6E Terminating Resistor - High Speed Extension Bus 1

Pin	Size	Color	Circuit	Function	Terminal Type ID	Option
A	0.35	BU / GY	3935	High Speed GMLAN Serial Data [+] 8	I	KSG- UKL
	0.35	BU / GY	3935	High Speed GMLAN Serial Data [+] 8	I	UKL
B	0.35	WH / GY	3936	High Speed GMLAN Serial Data [-] 8	I	KSG- UKL
	0.35	WH / GY	3936	High Speed GMLAN Serial Data [-] 8	I	UKL

R6F Terminating Resistor - High Speed Extension Bus 2 (-UKL)

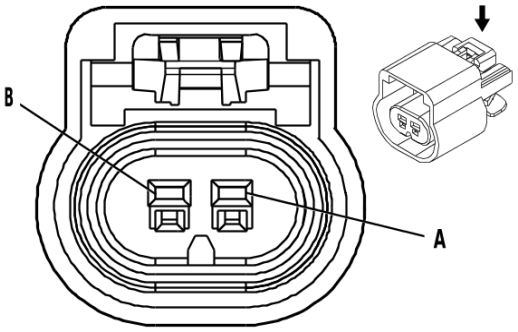

523630

Connector Part Information

Harness Type: Instrument Panel Wiring Harness
OEM Connector: 19153731
Service Connector: Service by Harness - See Part Catalog
Description: 2-Way F 150 GT Series, Sealed(BK)

Terminal Part Information

Terminal Type ID	Terminated Lead	Diagnostic Test Probe	Terminal Removal Tool
I	Not required	J-35616-14 (GN)	No Tool Required

R6F Terminating Resistor - High Speed Extension Bus 2 (-UKL)

Pin	Size	Color	Circuit	Function	Terminal Type ID	Option
A	0.35	BU / GN	1304	High Speed GMLAN Serial Data [+] 9	I	- UKL
B	0.35	WH / GN	1305	High Speed GMLAN Serial Data [-] 9	I	- UKL

R44 Radio AM Antenna Signal Filter Module - Center High Mounted Stop Lamp X1

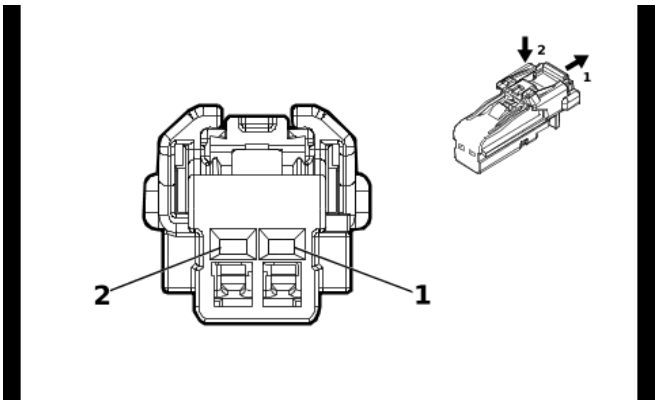

4115691

Connector Part Information

Harness Type: Liftgate Wiring Harness
OEM Connector: 13532422
Service Connector: Service by Harness - See Part Catalog
Description: 2-Way F 1.2 MCON Series(BK)

Terminal Part Information

Terminal Type ID	Terminated Lead	Diagnostic Test Probe	Terminal Removal Tool
I	Not required	J-35616-16 (L-GN)	No Tool Required

R44 Radio AM Antenna Signal Filter Module - Center High Mounted Stop Lamp X1

Pin	Size	Color	Circuit	Function	Terminal Type ID	Option
1	0.5	BK	1050	Ground	I	—
2	0.5	BN / YE	820	Center High Mounted Stop Lamp Supply Voltage	I	—

R44 Radio AM Antenna Signal Filter Module - Center High Mounted Stop Lamp X2

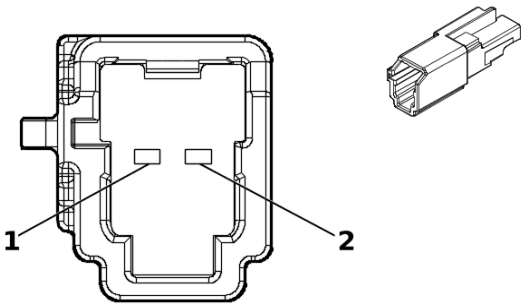

5355341

Connector Part Information

Harness Type: Liftgate Wiring Harness
OEM Connector: 13530128
Service Connector: Service by Harness - See Part Catalog
Description: 2-Way M 1.2 MCON Series(BK)

Terminal Part Information

Terminal Type ID	Terminated Lead	Diagnostic Test Probe	Terminal Removal Tool
I	Not required	J-35616-17 (L-GN)	No Tool Required

R44 Radio AM Antenna Signal Filter Module - Center High Mounted Stop Lamp X2

Pin	Size	Color	Circuit	Function	Terminal Type ID	Option
1	0.5	BK	1050	Ground	I	—
2	0.5	BN / YE	820	Center High Mounted Stop Lamp Supply Voltage	I	—

S13D Door Lock Switch - Driver

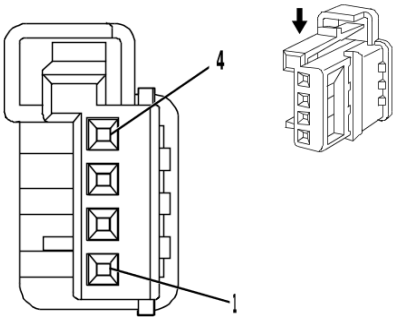

2173576

Connector Part Information

Harness Type: Front Side Door Door Wiring Harness - Driver
OEM Connector: 13271139
Service Connector: Service by Harness - See Part Catalog
Description: 4-Way F 0.64 Micro-Quadlock Series(WH)

Terminal Part Information

Terminal Type ID	Terminated Lead	Diagnostic Test Probe	Terminal Removal Tool
I	Not required	J-35616-64B (L-BU)	No Tool Required

S13D Door Lock Switch - Driver

Pin	Size	Color	Circuit	Function	Terminal Type ID	Option
1	0.5	YE	6817	LED Backlight Dimming Control 1	I	—
2	0.5	BN / YE	780	Driver Door Lock Switch Lock Signal	I	—
3	0.5	BN / WH	781	Driver Door Lock Switch Unlock Signal	I	—
4	0.5	BK	550	Ground	I	—

S13P Door Lock Switch - Passenger

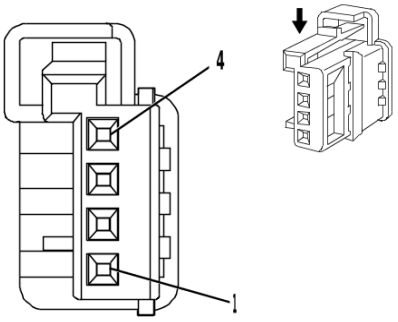

2173576

Connector Part Information

Harness Type: Front Side Door Door Wiring Harness - Passenger
OEM Connector: 13271139
Service Connector: Service by Harness - See Part Catalog
Description: 4-Way F 0.64 Micro-Quadlock Series(WH)

Terminal Part Information

Terminal Type ID	Terminated Lead	Diagnostic Test Probe	Terminal Removal Tool
I	Not required	J-35616-64B (L-BU)	No Tool Required

S13P Door Lock Switch - Passenger

Pin	Size	Color	Circuit	Function	Terminal Type ID	Option
1	0.5	YE	6817	LED Backlight Dimming Control 1	I	—
2	0.5	YE / VT	244	Passenger Door Lock Switch Lock Control	I	—
3	0.5	BN / VT	245	Passenger Door Lock Switch Unlock Control	I	—
4	0.5	BK	750	Ground	I	—

S26 Hazard Warning Switch

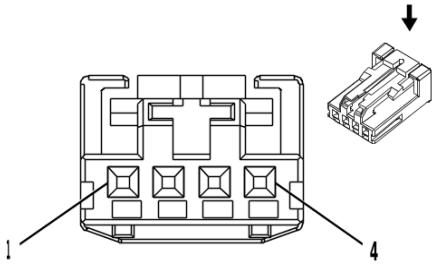

2717162

Connector Part Information

Harness Type: Instrument Panel Wiring Harness
OEM Connector: 13582963
Service Connector: 19367524
Description: 4-Way F 0.64 Micro-Quadlock Series(BK)

Terminal Part Information

Terminal Type ID	Terminated Lead	Diagnostic Test Probe	Terminal Removal Tool
I	Not required	J-35616-64B (L-BU)	No Tool Required

S26 Hazard Warning Switch

Pin	Size	Color	Circuit	Function	Terminal Type ID	Option
1	0.35	GN / WH	111	Hazard Warning Switch Signal	I	—
2	0.5	BK	1450	Ground	I	—
3	—	—	—	Not Occupied	—	—
4	0.35	GY / YE	7543	Hazard Warning Indicator LED Dimming Signal	I	—

S30 Headlamp Switch

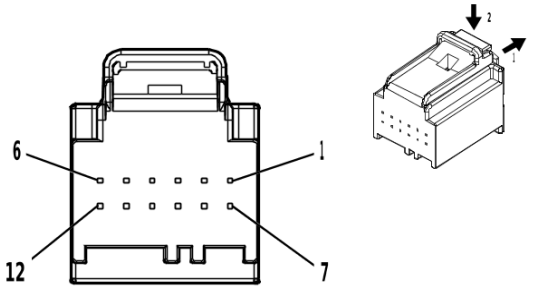

5095565

Connector Part Information

Harness Type: Instrument Panel Wiring Harness
OEM Connector: 13525987
Service Connector: 13525987
Description: 12-Way F 0.64 Series(BK)

Terminal Part Information

Terminal Type ID	Terminated Lead	Diagnostic Test Probe	Terminal Removal Tool
I	13584547	J-35616-64B (L-BU)	J-38125-215A

S30 Headlamp Switch

Pin	Size	Color	Circuit	Function	Terminal Type ID	Option
1	0.35	WH / VT	103	Headlamp Switch On Signal	I	—
2	0.35	YE	6817	LED Backlight Dimming Control 1	I	—
3	0.35	GN / BN	306	Headlamp Switch Off Signal	I	—
4	0.5	VT / GN	2639	Run/Crank Ignition 1 Voltage	I	—
5	0.35	GN / GY	13	Headlamp Switch Park Lamp Signal	I	—
6	0.35	BU / GY	187	Rear Fog Lamp Switch Signal	I	—
7	0.35	BK / YE	5005	Instrument Panel Lamp Dimmer Switch Low Reference	I	—
8	0.5	BK	1250	Ground	I	—
9 - 10	—	—	—	Not Occupied	—	—
11	0.35	YE / GY	44	Instrument Panel Lamp Dimmer Switch Signal	I	—
12	0.35	BU / RD	1688	12V Reference	I	—

S32LR Seat Heating Switch - Left Rear (KA6)

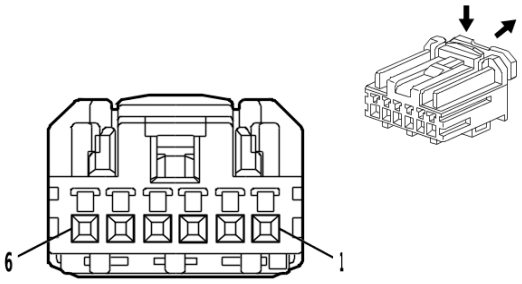

4650256

Connector Part Information

Harness Type: Rear Door Door Wiring Harness - Left
OEM Connector: 13597262
Service Connector: Service by Harness - See Part Catalog
Description: 6-Way F 0.64 HCM Series(BK)

Terminal Part Information

Terminal Type ID	Terminated Lead	Diagnostic Test Probe	Terminal Removal Tool
I	Not required	J-35616-64B (L-BU)	No Tool Required

S32LR Seat Heating Switch - Left Rear (KA6)

Pin	Size	Color	Circuit	Function	Terminal Type ID	Option
1	0.5	BK	550	Ground	I	KA6
2	0.5	YE	6817	LED Backlight Dimming Control 1	I	KA6
3	0.5	WH	1638	Left Rear Seat Heating High Indicator Control	I	KA6
4	0.5	BN / WH	1637	Left Rear Seat Heating Switch Signal	I	KA6
5	—	—	—	Not Occupied	—	—
6	0.5	WH	6816	Indicator Dimming Control	I	KA6

S32RR Seat Heating Switch - Right Rear (KA6)

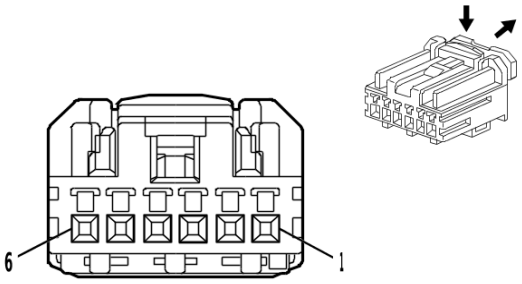

4650256

Connector Part Information

Harness Type: Rear Door Door Wiring Harness - Right
OEM Connector: 13597262
Service Connector: Service by Harness - See Part Catalog
Description: 6-Way F 0.64 HCM Series(BK)

Terminal Part Information

Terminal Type ID	Terminated Lead	Diagnostic Test Probe	Terminal Removal Tool
I	Not required	J-35616-64B (L-BU)	No Tool Required

S32RR Seat Heating Switch - Right Rear (KA6)

Pin	Size	Color	Circuit	Function	Terminal Type ID	Option
1	0.5	BK	750	Ground	I	KA6
2	0.5	YE	6817	LED Backlight Dimming Control 1	I	KA6
3	0.5	BN / WH	1635	Right Rear Seat Heating High Indicator Control	I	KA6
4	0.5	BN / GN	1634	Right Rear Seat Heating Switch Signal	I	KA6
5	—	—	—	Not Occupied	—	—
6	0.5	WH	6816	Indicator Dimming Control	I	KA6

S33 Horn Switch X1

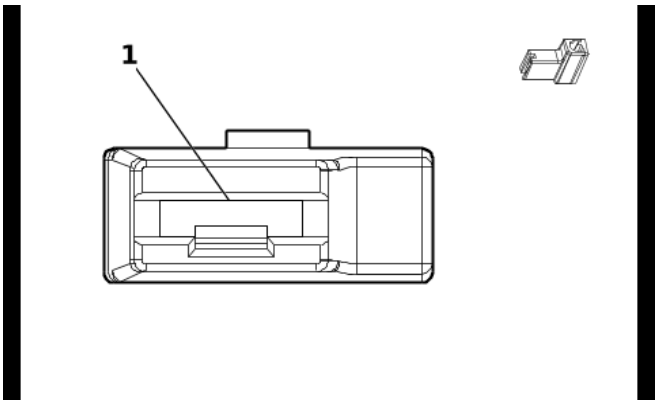

5823911

Connector Part Information

Harness Type: Steering Wheel Wiring Harness
OEM Connector: 35391186
Service Connector: Service by Harness - See Part Catalog
Description: 1-Way F 187 Faston(NA)

Terminal Part Information

Terminal Type ID	Terminated Lead	Diagnostic Test Probe	Terminal Removal Tool
I	Not required	Not Available	No Tool Required

S33 Horn Switch X1

Pin	Size	Color	Circuit	Function	Terminal Type ID	Option
1	0.35	GN / WH	3287	Horn Switch Signal	I	UKL
	0.35	RD	3287	Horn Switch Signal	I	- UKL

S33 Horn Switch X2

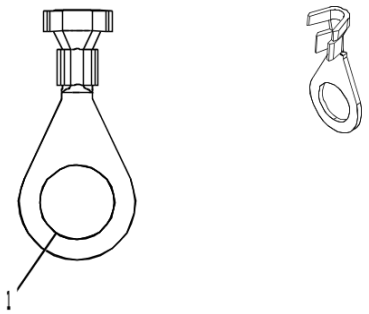

2753130

Connector Part Information

Harness Type: Steering Wheel Wiring Harness
OEM Connector: 42037-1
Service Connector: Service by Cable Assembly — See Part Catalog
Description: 1-Way Ring Terminal

Terminal Part Information

Terminal Type ID	Terminated Lead	Diagnostic Test Probe	Terminal Removal Tool
I	Not required	No Tool Required	No Tool Required

S33 Horn Switch X2

Pin	Size	Color	Circuit	Function	Terminal Type ID	Option
1	0.5	BK	1650	Ground	I	—

S46B Liftgate Unlatch Switch

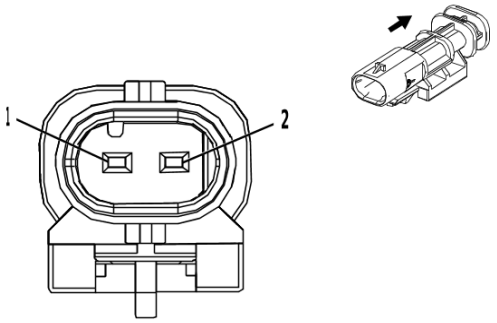

2474755

Connector Part Information

Harness Type: Liftgate Wiring Harness
OEM Connector: 13591337
Service Connector: Service by Harness - See Part Catalog
Description: 2-Way M 1.2 MCON Series, Sealed(BK)

Terminal Part Information

Terminal Type ID	Terminated Lead	Diagnostic Test Probe	Terminal Removal Tool
I	Not required	J-35616-17 (L-GN)	No Tool Required

S46B Liftgate Unlatch Switch

Pin	Size	Color	Circuit	Function	Terminal Type ID	Option
1	0.5	YE / BU	5797	Rear Closure Handle Switch Open Signal	I	—
2	0.5	BK	1050	Ground	I	—

S48E Multifunction Switch - Center Console

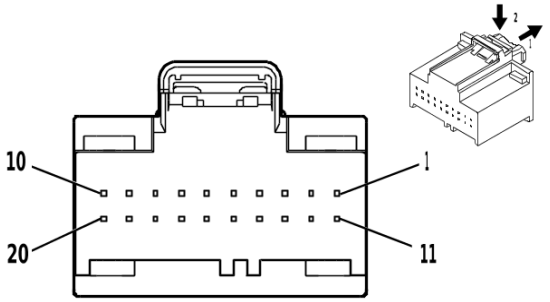

5112891

Connector Part Information

Harness Type: Front Floor Console Wiring Harness
OEM Connector: 13525990
Service Connector: Service by Harness - See Part Catalog
Description: 20-Way F 0.64 Series(BK)

Terminal Part Information

Terminal Type ID	Terminated Lead	Diagnostic Test Probe	Terminal Removal Tool
I	Not required	J-35616-64B (L-BU)	No Tool Required

S48E Multifunction Switch - Center Console

Pin	Size	Color	Circuit	Function	Terminal Type ID	Option
1	0.35	GY / WH	3153	Lane Departure Warning Disable Switch Signal	I	
2	0.35	BU / VT	1788	Traction Control Switch Signal 1	I	—
3	—	—	—	Not Occupied	—	—
4	0.35	GY	5054	Sport Mode Switch Signal	I	—
5	0.35	WH	6816	Indicator Dimming Control	I	
6	0.5	YE	6817	LED Backlight Dimming Control 1	I	—
7	0.35	WH	3152	Lane Departure Warning Indicator Control	I	
8	—	—	—	Not Occupied	—	—
9	0.5	BK	750	Ground	I	—
10 - 20	—	—	—	Not Occupied	—	—

S51 Telematics Button Assembly (UE1)

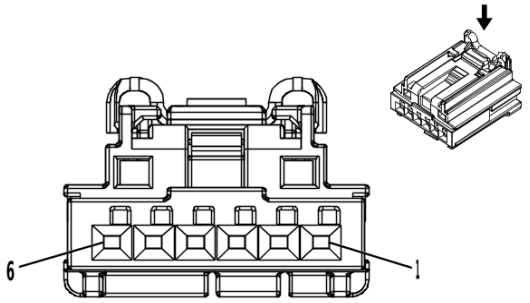

3960313

Connector Part Information

Harness Type: Roof Wiring Harness
OEM Connector: 13583825
Service Connector: 19332786
Description: 6-Way F 0.64 Generation Y Series(BK)

Terminal Part Information

Terminal Type ID	Terminated Lead	Diagnostic Test Probe	Terminal Removal Tool
I	Not required	J-35616-64B (L-BU)	No Tool Required

S51 Telematics Button Assembly (UE1)

Pin	Size	Color	Circuit	Function	Terminal Type ID	Option
1	0.35	GN / BK	2515	Telematics Switch Supply Voltage	I	(UE1- UER) / (UER)
2	—	—	—	Not Occupied	—	—
3	0.35	GN / WH	2514	Telematics Switch Signal	I	(UE1- UER) / (UER)
4	0.35	YE / VT	2516	Telematics Switch Green LED Indicator Control	I	(UE1- UER) / (UER)
5	0.35	BN / WH	2517	Telematics Switch Red LED Indicator Control	I	(UE1- UER) / (UER)
6	0.5	BK	550	Ground	I	(UE1- UER) / (UER)

S64D Seat Adjuster Switch - Driver (A2X)

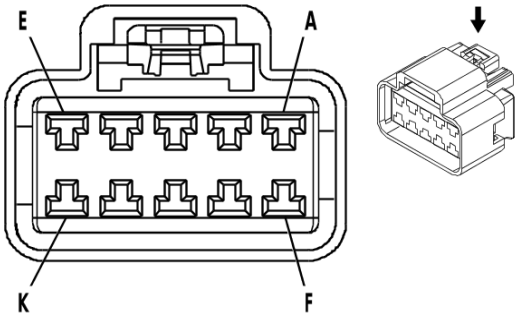

623046

Connector Part Information

Harness Type: Front Driver Seat Wiring Harness
OEM Connector: 15326931
Service Connector: Service by Harness - See Part Catalog
Description: 10-Way F 280 GT Series(BK)

Terminal Part Information

Terminal Type ID	Terminated Lead	Diagnostic Test Probe	Terminal Removal Tool
I	Not required	J-35616-4A (PU)	No Tool Required

S64D Seat Adjuster Switch - Driver (A2X)

Pin	Size	Color	Circuit	Function	Terminal Type ID	Option
A	1.5	GN / BN	286	Driver Seat Front Vertical Motor Up Control	I	—
B	2.5	BK	1550	Ground	I	—
C	1.5	GY / GN	284	Driver Seat Horizontal Motor Rearward Control	I	—
D	1.5	YE / BU	285	Driver Seat Horizontal Motor Forward Control	I	—
E	2.5	RD / WH	640	Battery Positive Voltage	I	—
F	1.5	YE	282	Driver Seat Rear Vertical Motor Up Control	I	—
G	1.5	BU / YE	277	Driver Seat Recline Motor Rearward Control	I	—
H	1.5	GN / YE	276	Driver Seat Recline Motor Forward Control	I	—
J	1.5	GY / BU	283	Driver Seat Rear Vertical Motor Down Control	I	—
K	1.5	BU / VT	287	Driver Seat Front Vertical Motor Down Control	I	—

S65D Seat Lumbar Support Switch - Driver (A2X)

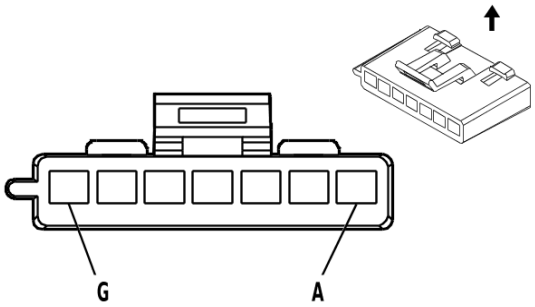

73146

Connector Part Information

Harness Type: Front Driver Seat Wiring Harness
OEM Connector: 12052854
Service Connector: Service by Harness - See Part Catalog
Description: 7-Way F 280 Metri-Pack Series(BK)

Terminal Part Information

Terminal Type ID	Terminated Lead	Diagnostic Test Probe	Terminal Removal Tool
I	Not required	J-35616-4A (PU)	No Tool Required

S65D Seat Lumbar Support Switch - Driver (A2X)

Pin	Size	Color	Circuit	Function	Terminal Type ID	Option
A	—	—	—	Not Occupied	—	—
B	0.5	VT	610	Driver Seat Lumbar Support Motor Backward Control	I	—
C	0.5	BU	611	Driver Seat Lumbar Support Motor Forward Control	I	—
D	—	—	—	Not Occupied	—	—
E	0.5	BK	1550	Ground	I	—
F	—	—	—	Not Occupied	—	—
G	0.5	RD / WH	640	Battery Positive Voltage	I	—

S70E Steering Wheel Controls Switch - Radio Presets

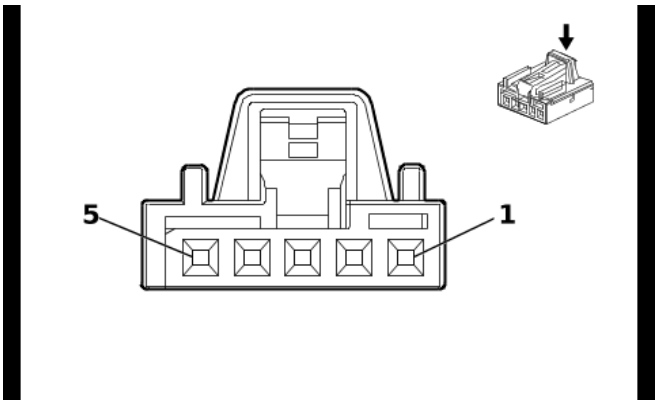

5730934

Connector Part Information

Harness Type: Steering Wheel
OEM Connector: 1-1418775-1/1-1418776-1
Service Connector: Service by Harness - See Part Catalog
Description: 5-Way F MQS Series(BN)

Terminal Part Information

Terminal Type ID	Terminated Lead	Diagnostic Test Probe	Terminal Removal Tool
I	Not required	J-35616-64B (L-BU)	No Tool Required

S70E Steering Wheel Controls Switch - Radio Presets

Pin	Size	Color	Circuit	Function	Terminal Type ID	Option
1	0.35	BK	1650	Ground	I	—
2	0.35	GN / RD	4312	Radio Favorite Back Switch Signal	I	—
3	0.35	GY / RD	4313	Radio Favorite Forward Switch Signal	I	—
4	0.35 0.35	VT / YE WH	5526 5526	Tap Up/Tap Down Switch Signal Tap Up/Tap Down Switch Signal	I I	UKL - UKL
5	—	—	—	Not Occupied	—	—

S70F Steering Wheel Controls Switch - Radio Volume

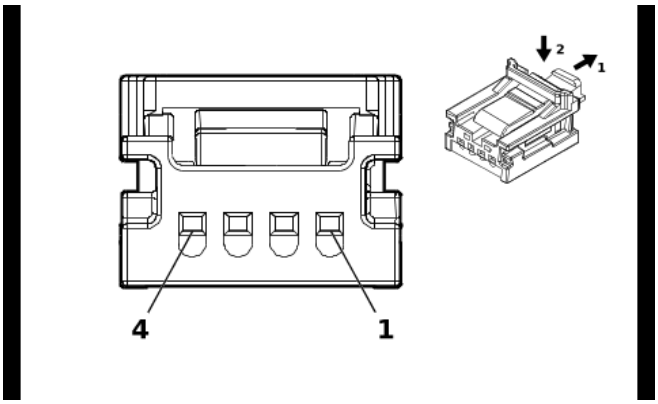

5493584

Connector Part Information

Harness Type: Steering Wheel
OEM Connector: 13507115
Service Connector: Service by Harness - See Part Catalog
Description: 4-Way F Mini 50 Series(GY)

Terminal Part Information

Terminal Type ID	Terminated Lead	Diagnostic Test Probe	Terminal Removal Tool
I	Not required	EL-35616-58 (BK)	No Tool Required

S70F Steering Wheel Controls Switch - Radio Volume

Pin	Size	Color	Circuit	Function	Terminal Type ID	Option
1	0.35	BK / BU	1650	Ground	I	—
2	0.35	BU / RD	4314	Radio Volume Down Switch Signal	I	—
3	0.35	BK / RD	4315	Radio Volume Up Switch Signal	I	—
4	—	—	—	Not Occupied	—	—

S70L Steering Wheel Controls Switch - Left

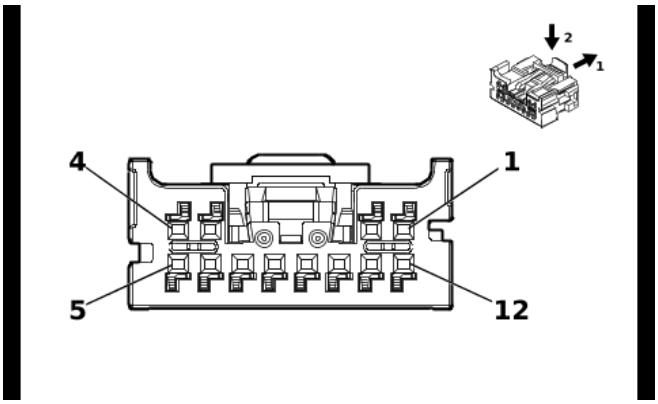

5823882

Connector Part Information

Harness Type: Steering Wheel
OEM Connector: 13541202
Service Connector: Service by Harness - See Part Catalog
Description: 12-Way F Mini 50 Series(BK)

Terminal Part Information

Terminal Type ID	Terminated Lead	Diagnostic Test Probe	Terminal Removal Tool
I	Not required	EL-35616-58 (BK)	No Tool Required

S70L Steering Wheel Controls Switch - Left

Pin	Size	Color	Circuit	Function	Terminal Type ID	Option
1	0.35 0.35	RD / YE BK	5040 5040	Battery Positive Voltage Battery Positive Voltage	I I	UKL - UKL
2	0.35	GY / GN	3893	Steering Wheel LED Backlight Dimming Control	I	—
3	0.35 0.35	BN / GN YE / BK	1884 1884	Cruise Control Set/Coast/Resume/Accelerate Switch Signal Cruise Control Set/Coast/Resume/Accelerate Switch Signal	I I	UKL - UKL
4	0.35 0.35	GY / GN WH	5737 5737	Distance Sensing Cruise Control Gap Up/Down Switch Signal Distance Sensing Cruise Control Gap Up/Down Switch Signal	I I	UKL - UKL
5	—	—	—	Not Occupied	—	—
6	0.35	RD / YE	1650	Ground	I	—
7 - 9	—	—	—	Not Occupied	—	—
10	0.35 0.35	WH / RD BU	1444 1444	12V Reference 12V Reference	I I	UKL - UKL
11 - 12	—	—	—	Not Occupied	—	—

S70R Steering Wheel Controls Switch - Right

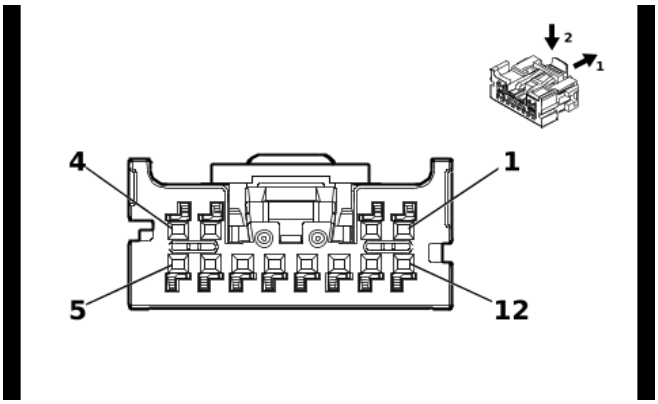

5823893

Connector Part Information

Harness Type: Steering Wheel
OEM Connector: 13541203
Service Connector: Service by Harness - See Part Catalog
Description: 12-Way F Mini 50 Series(GY)

Terminal Part Information

Terminal Type ID	Terminated Lead	Diagnostic Test Probe	Terminal Removal Tool
I	Not required	EL-35616-58 (BK)	No Tool Required

S70R Steering Wheel Controls Switch - Right

Pin	Size	Color	Circuit	Function	Terminal Type ID	Option
1	0.35 0.35	RD / YE BK	5040 5040	Battery Positive Voltage Battery Positive Voltage	I I	UKL - UKL
2	0.35	PK	3893	Steering Wheel LED Backlight Dimming Control	I	—
3	0.35 0.35	GN / BK YE / BK	3894 3894	Instrument Panel Cluster Control Module LIN Bus 1 Instrument Panel Cluster Control Module LIN Bus 1	I I	UKL - UKL
4 - 5	—	—	—	Not Occupied	—	—
6	0.35	BK	1650	Ground	I	—
7	0.35	GN / RD	4313	Radio Favorite Forward Switch Signal	I	—
8	0.35	GY / RD	4312	Radio Favorite Back Switch Signal	I	—
9	—	—	—	Not Occupied	—	—
10	0.35	BK / BU	4315	Radio Volume Up Switch Signal	I	—
11	0.35	RD / YE	4314	Radio Volume Down Switch Signal	I	—
12	—	—	—	Not Occupied	—	—

S72 Sunroof Switch (CAJ)

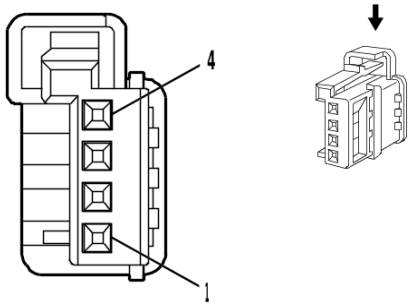

2179793

Connector Part Information

Harness Type: Roof Wiring Harness
OEM Connector: 13216377
Service Connector: 84724190
Description: 4-Way F 0.64 Micro-Quadlock Series(BK)

Terminal Part Information

Terminal Type ID	Terminated Lead	Diagnostic Test Probe	Terminal Removal Tool
I	Not required	J-35616-64B (L-BU)	No Tool Required

S72 Sunroof Switch (CAJ)

Pin	Size	Color	Circuit	Function	Terminal Type ID	Option
1	0.35	BK / WH	151	Signal Ground	I	CAJ
2	0.35	YE	6817	LED Backlight Dimming Control 1	I	CAJ
3	0.35	BK	550	Ground	I	CAJ
4	0.35	BU / VT	5027	Sunroof Switch Serial Data 1 Signal	I	CAJ

S78 Turn Signal/Multifunction Switch

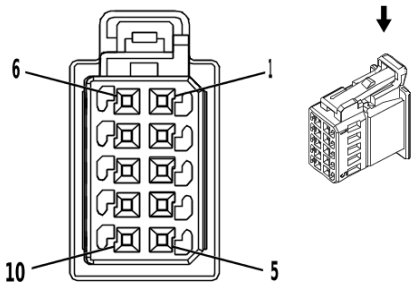

2830955

Connector Part Information

Harness Type: Instrument Panel Wiring Harness
OEM Connector: 13582766
Service Connector: 19299776
Description: 10-Way F 0.64 Micro-Quadlock Series(BK)

Terminal Part Information

Terminal Type ID	Terminated Lead	Diagnostic Test Probe	Terminal Removal Tool
I	19300632	J-35616-64B (L-BU)	J-38125-215A

S78 Turn Signal/Multifunction Switch

Pin	Size	Color	Circuit	Function	Terminal Type ID	Option
1	0.35	WH / GN	663	Hazard Switch Left Turn Signal	I	—
2	0.35	VT / BU	664	Hazard Switch Right Turn Signal	I	—
3	0.75	BK	1250	Ground	I	—
4	0.35	BU	6856	Headlamp Automatic High Beam Control	I	—
5	—	—	—	Not Occupied	—	—
6	0.35	YE / BN	307	Headlamp Switch Flash Signal	I	—
7	0.35	WH	524	High Beam Select Switch High Beam Signal	I	—
8 - 10	—	—	—	Not Occupied	—	—

S79LR Window Switch - Left Rear

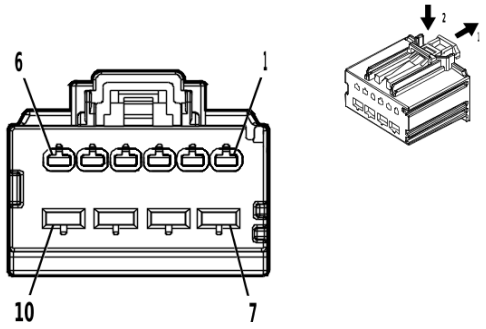

5035058

Connector Part Information

Harness Type: Rear Door Door Wiring Harness - Left
OEM Connector: 13525907
Service Connector: Service by Harness - See Part Catalog
Description: 10-Way F 1.5, 2.8 MX Series(BK)

Terminal Part Information

Terminal Type ID	Terminated Lead	Diagnostic Test Probe	Terminal Removal Tool
I	Not required	J-35616-14 (GN)	No Tool Required
II	Not required	J-35616-4A (PU)	No Tool Required

S79LR Window Switch - Left Rear

Pin	Size	Color	Circuit	Function	Terminal Type ID	Option
1	0.5	GN / GY	6135	Body Control Module LIN Bus 4	I	
2	0.35	GY	747	Left Rear Door Ajar Switch Signal	I	
3	0.5	BK	550	Ground	I	
4 - 6	—	—	—	Not Occupied	—	—
7	2	BK	650	Ground	II	
8	2	RD / BN	2940	Battery Positive Voltage	II	
9	1.5	BU / VT	668	Left Rear Window Motor Up Control	II	
10	1.5	YE / BU	669	Left Rear Window Motor Down Control	II	

S79P Window Switch - Passenger

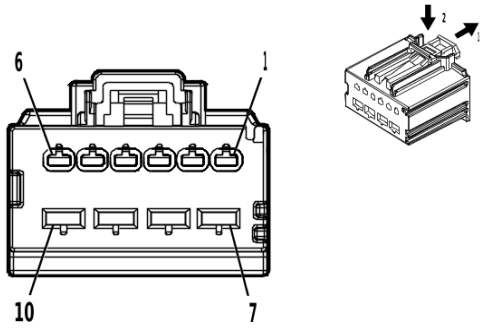

5035058

Connector Part Information

Harness Type: Front Side Door Door Wiring Harness - Passenger
OEM Connector: 13525907
Service Connector: Service by Harness - See Part Catalog
Description: 10-Way F 1.5, 2.8 MX Series(BK)

Terminal Part Information

Terminal Type ID	Terminated Lead	Diagnostic Test Probe	Terminal Removal Tool
I	Not required	J-35616-14 (GN)	No Tool Required

S79P Window Switch - Passenger

Pin	Size	Color	Circuit	Function	Terminal Type ID	Option
1	0.5	BK	750	Ground	I	
2	—	—	—	Not Occupied	—	—
3	0.5	BN / YE	3385	Window Switch Passenger Down Signal	I	
4	0.5	VT / GY	3386	Window Switch Passenger Express Signal	I	
5	0.5	YE / BK	3384	Window Switch Passenger Up Signal	I	
6	0.5	YE	6817	LED Backlight Dimming Control 1	I	
7 - 10	—	—	—	Not Occupied	—	—

S79RR Window Switch - Right Rear

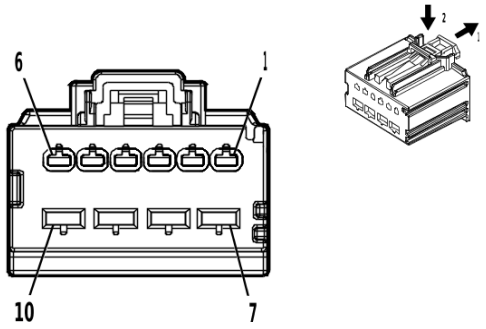

5035058

Connector Part Information

Harness Type: Rear Door Door Wiring Harness - Right
OEM Connector: 13525907
Service Connector: Service by Harness - See Part Catalog
Description: 10-Way F 1.5, 2.8 MX Series(BK)

Terminal Part Information

Terminal Type ID	Terminated Lead	Diagnostic Test Probe	Terminal Removal Tool
I	Not required	J-35616-14 (GN)	No Tool Required
II	Not required	J-35616-4A (PU)	No Tool Required

S79RR Window Switch - Right Rear

Pin	Size	Color	Circuit	Function	Terminal Type ID	Option
1	0.5	GN / GY	6135	Body Control Module LIN Bus 4	I	
2	0.35	GY	748	Right Rear Door Ajar Switch Signal	I	
3 - 6	—	—	—	Not Occupied	—	—
7	2	BK	850	Ground	II	
8	2	RD / BN	2940	Battery Positive Voltage	II	
9	1.5	BU / GY	670	Right Rear Window Motor Up Control	II	
10	1.5	GN / BK	671	Right Rear Window Motor Down Control	II	

S82 Windshield Wiper/Washer Switch

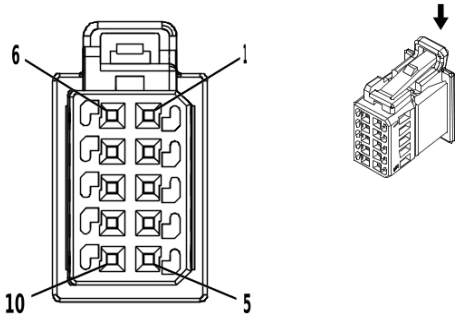

3824564

Connector Part Information

Harness Type: Instrument Panel Wiring Harness
OEM Connector: 13582767
Service Connector: 19330677
Description: 10-Way F 0.64 Micro-Quadlock Series(BK)

Terminal Part Information

Terminal Type ID	Terminated Lead	Diagnostic Test Probe	Terminal Removal Tool
I	19300632	J-35616-64B (L-BU)	J-38125-215A

S82 Windshield Wiper/Washer Switch

Pin	Size	Color	Circuit	Function	Terminal Type ID	Option
1	0.35	BK / GY	6009	Windshield Wiper Switch Low Reference	I	—
2	0.35	GY	1715	Windshield Wiper Switch High Signal	I	—
3	0.35	YE / BU	1714	Windshield Wiper Switch Low Signal	I	—
4	—	—	—	Not Occupied	—	—
5	0.35	BN / BU	391	Rear Window Wiper Switch Signal	I	—
6	—	—	—	Not Occupied	—	—
7	0.35	WH / BK	94	Windshield Washer Switch Signal	I	—
8 - 10	—	—	—	Not Occupied	—	—

S83 Vehicle On/Off Switch

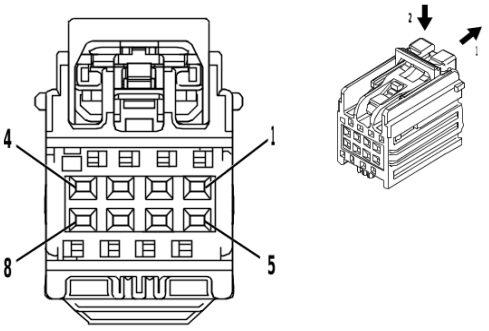

4280711

Connector Part Information

Harness Type: Instrument Panel Wiring Harness
OEM Connector: 13593893
Service Connector: 19355209
Description: 8-Way F YESC Kaizen Series(GY)

Terminal Part Information

Terminal Type ID	Terminated Lead	Diagnostic Test Probe	Terminal Removal Tool
I	Not required	J-35616-64B (L-BU)	No Tool Required

S83 Vehicle On/Off Switch

Pin	Size	Color	Circuit	Function	Terminal Type ID	Option
1 - 2	—	—	—	Not Occupied	—	—
3	0.35	GN / BK	3558	Passive Start Switch Signal 2	I	—
4	0.5	BK	1250	Ground	I	—
5	0.35	BU / BK	5719	Ignition Mode Switch Start LED Signal	I	—
6	0.35	BU / GN	5723	Ignition Mode Switch Mode Voltage	I	—
7	0.35	BK / GY	3559	Passive Start Switch 2 Low Reference	I	—
8	0.35	YE	6817	LED Backlight Dimming Control 1	I	—

S90 Sunroof Sunshade Switch (CAJ)

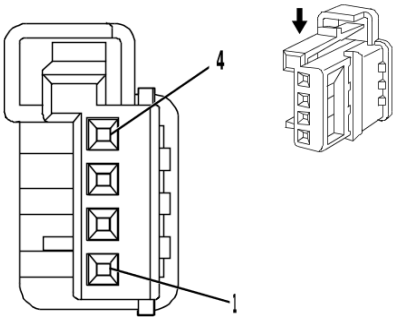

2173576

Connector Part Information

Harness Type: Roof Wiring Harness
OEM Connector: 13271139
Service Connector: 84880893
Description: 4-Way F 0.64 Micro-Quadlock Series(WH)

Terminal Part Information

Terminal Type ID	Terminated Lead	Diagnostic Test Probe	Terminal Removal Tool
I	Not required	J-35616-64B (L-BU)	No Tool Required

S90 Sunroof Sunshade Switch (CAJ)

Pin	Size	Color	Circuit	Function	Terminal Type ID	Option
1	0.35	BK / BU	5307	Front Sunshade Switch Low Reference	I	CAJ
2	0.35	YE	6817	LED Backlight Dimming Control 1	I	CAJ
3	0.35	BK	550	Ground	I	CAJ
4	0.35	BU / GY	3032	Front Sunshade Switch Signal	I	CAJ

S91 Park Brake Control Switch

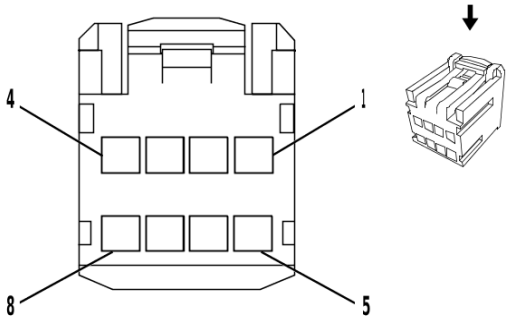

2180203

Connector Part Information

Harness Type: Front Floor Console Wiring Harness
OEM Connector: 19153437
Service Connector: Service by Harness - See Part Catalog
Description: 8-Way F 1.2 HCM Series(BK)

Terminal Part Information

Terminal Type ID	Terminated Lead	Diagnostic Test Probe	Terminal Removal Tool
I	Not required	J-35616-64B (L-BU)	No Tool Required

S91 Park Brake Control Switch

Pin	Size	Color	Circuit	Function	Terminal Type ID	Option
1	0.35	YE	1492	Park Brake Switch Supply Voltage	I	—
2	0.35	BU / VT	1134	Park Brake Switch Signal	I	—
3	0.35	YE / RD	7683	Park Brake Release Switch Voltage Reference	I	—
4	0.35	BN	6107	Park Brake Apply Switch Signal	I	—
5	0.35	BU / BK	6108	Park Brake Release Switch Signal	I	—
6	0.35	YE	6817	LED Backlight Dimming Control 1	I	—
7	0.35	GY / RD	7684	Park Brake Apply Switch Voltage Reference	I	—
8	0.35	BK	750	Ground	I	—

S146 Window/Outside Rearview Mirror Switch - Driver

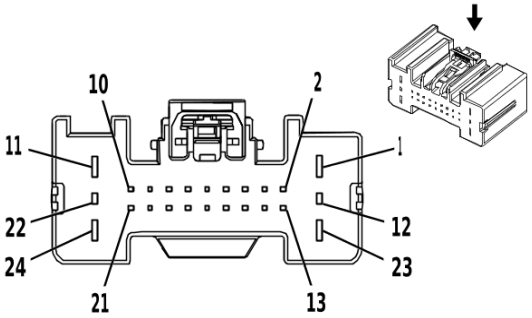

2871905

Connector Part Information

Harness Type: Front Side Door Door Wiring Harness - Driver
OEM Connector: 13581061
Service Connector: Service by Harness - See Part Catalog
Description: 24-Way F 0.64, 1.5, 2.8 Series(BK)

Terminal Part Information

Terminal Type ID	Terminated Lead	Diagnostic Test Probe	Terminal Removal Tool
I	Not required	J-35616-14 (GN)	No Tool Required
II	Not required	J-35616-35 (VT)	No Tool Required
III	Not required	J-35616-64B (L-BU)	No Tool Required

S146 Window/Outside Rearview Mirror Switch - Driver

Pin	Size	Color	Circuit	Function	Terminal Type ID	Option
1	0.5	GY	3380	Driver Window Main Control Down Switch Signal	II	—
2	0.5	YE / VT	3397	Passenger Outside Rearview Mirror Motor Up [+] Down [-] Control	III	DWK/ DXD
3	0.5	WH	3398	Passenger Outside Rearview Mirror Motor Common Control	III	DWK/ DXD
4	0.5	GN / BK	3396	Passenger Outside Rearview Mirror Motor Right [+] Left [-] Control	III	DWK/ DXD
5	0.5	GN	3381	Window Switch Driver Express Signal	III	—
6	0.5	BN / BK	3389	Driver Outside Rearview Mirror Motor Right [+] Left [-] Control	III	DWK/ DXD
7	0.5	VT / BU	3390	Driver Outside Rearview Mirror Motor Up [+] Down [-] Control	III	DWK/ DXD
8	0.5	YE / BN	3391	Driver Mirror Motor Common Control	III	DWK/ DXD
9	0.5	GN / YE	6134	Body Control Module LIN Bus 3	III	—
10	—	—	—	Not Occupied	—	—
11	0.5	GN / WH	3379	Window Switch Driver Up Signal	II	—
12	0.5	WH / BN	3410	Mirror Outside Rearview Mirror Fold Control	I	DXD
13	—	—	—	Not Occupied	—	—
14	0.35	WH / VT	3270	Driver Door Lock Motor Status Signal	III	—
15	0.35	BU / VT	1124	Door Lock Key Switch Unlock Signal	III	—
16 - 21	—	—	—	Not Occupied	—	—
22	0.5	VT / YE	3409	Outside Rearview Mirror Motor Unfold Control	I	DXD

S146 Window/Outside Rearview Mirror Switch - Driver (cont'd)

Pin	Size	Color	Circuit	Function	Terminal Type ID	Option
23	0.5	RD / GN	1540	Battery Positive Voltage	II	—
24	0.5	BK	550	Ground	II	—

T2RR Antenna - Roof Rear X1

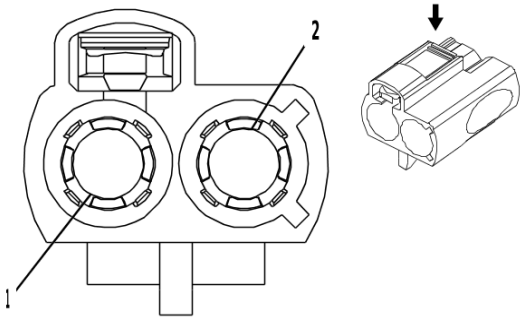

3418133

Connector Part Information

Harness Type: Roof COAX
OEM Connector: 13583911
Service Connector: Service by Cable Assembly — See Part Catalog
Description: 2-Way F Coax Type(PU)

Terminal Part Information

Terminal Type ID	Terminated Lead	Diagnostic Test Probe	Terminal Removal Tool
I	Not required	No Tool Required	No Tool Required

T2RR Antenna - Roof Rear X1

Pin	Size	Color	Circuit	Function	Terminal Type ID	Option
1	—	—	Coax Cable	Coax Cable	I	—
2	—	—	Coax Cable	Coax Cable	I	—

T2RR Antenna - Roof Rear X2

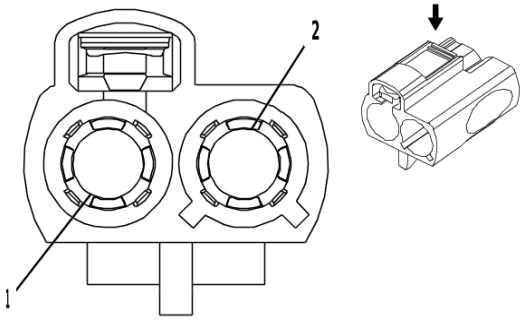

4039627

Connector Part Information

Harness Type: Roof COAX
OEM Connector: 59Z067-C00-K
Service Connector: Service by Cable Assembly — See Part Catalog
Description: 2-Way F Coax Type(YE)

Terminal Part Information

Terminal Type ID	Terminated Lead	Diagnostic Test Probe	Terminal Removal Tool
I	Not required	No Tool Required	No Tool Required

T2RR Antenna - Roof Rear X2

Pin	Size	Color	Circuit	Function	Terminal Type ID	Option
—	—	Coax Cable	—	(AM/FM) Antenna RF Signal	I	—

T3 Audio Amplifier X1 (UQA)

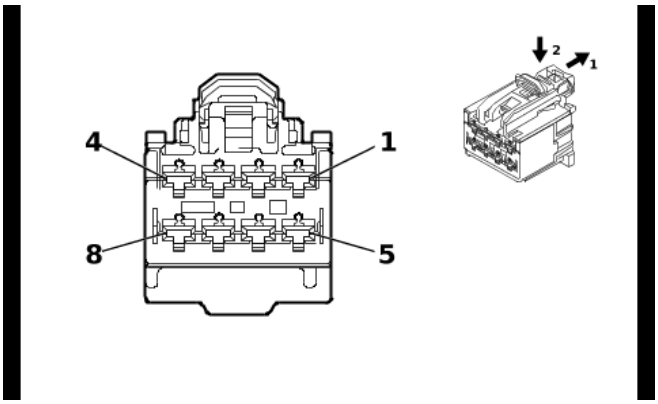

5482929

Connector Part Information

Harness Type: Body Wiring Harness
OEM Connector: 13507064
Service Connector: 85135197
Description: 8-Way F 2.8 OCS Series(GY)

Terminal Part Information

Terminal Type ID	Terminated Lead	Diagnostic Test Probe	Terminal Removal Tool
I	Not required	J-35616-4A (PU)	No Tool Required

T3 Audio Amplifier X1 (UQA)

Pin	Size	Color	Circuit	Function	Terminal Type ID	Option
1	2	GN / BK	1794	Left/Rear Subwoofer [-] Control	I	UQA
2	1.5	YE / BK	117	Right Front Speaker [-] Control 1	I	UQA
3	1.5	BN / BU	118	Left Front Speaker [-] Control 1	I	UQA
4	2	RD / VT	5640	Battery Positive Voltage	I	UQA
5	2	BU / GY	346	Left/Rear Subwoofer [+] Control	I	UQA
6	1.5	YE	200	Right Front Speaker 1 [+] Control	I	UQA
7	1.5	BU	201	Left Front Speaker 1 [+] Control	I	UQA
8	2	BK	2050	Ground	I	UQA

T3 Audio Amplifier X2 (UQA)

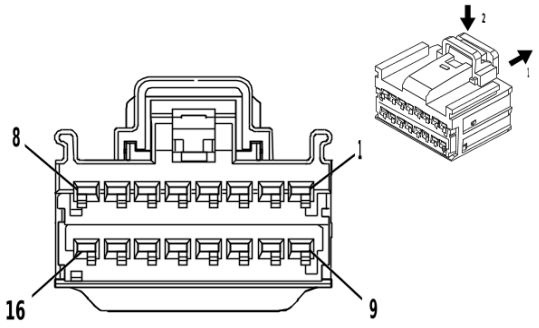

4332214

Connector Part Information

Harness Type: Body Wiring Harness
OEM Connector: 13591061
Service Connector: 13591061
Description: 16-Way F 1.5 OCS Series(BK)

Terminal Part Information

Terminal Type ID	Terminated Lead	Diagnostic Test Probe	Terminal Removal Tool
I	84757974	J-35616-2A (GY)	J-38125-215A

T3 Audio Amplifier X2 (UQA)

Pin	Size	Color	Circuit	Function	Terminal Type ID	Option
1	0.75	BU / BK	115	Right Rear Speaker [-] Control	I	UQA
2	0.75	WH	46	Right Rear Speaker [+] Control	I	UQA
3	0.75	GY / BK	1974	Left Front Speaker [-] Control 2	I	UQA
4	0.75	BU / VT	1874	Left Front Speaker [+] Control 2	I	UQA
5	0.75	BN / BK	1975	Right Front Speaker [-] Control 2	I	UQA
6	0.75	GN / BU	1875	Right Front Speaker [+] Control 2	I	UQA
7 - 14	—	—	—	Not Occupied	—	—
15	0.75	GN	199	Left Rear Speaker [+] Control	I	UQA
16	0.75	GN / BK	116	Left Rear Speaker [-] Control	I	UQA

T3 Audio Amplifier X3 (UQA)

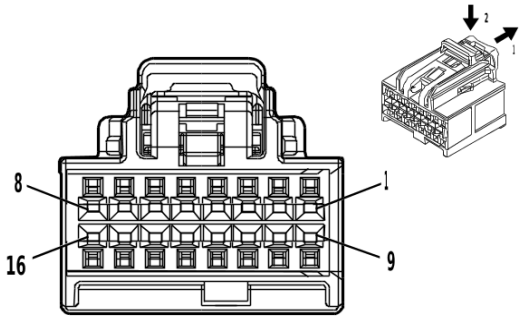

4873243

Connector Part Information

Harness Type: Body Wiring Harness
OEM Connector: 13519738
Service Connector: 13519738
Description: 16-Way F 0.64 OCS Series(BK)

Terminal Part Information

Terminal Type ID	Terminated Lead	Diagnostic Test Probe	Terminal Removal Tool
I	19354230	J-35616-64B (L-BU)	J-38125-215A

T3 Audio Amplifier X3 (UQA)

Pin	Size	Color	Circuit	Function	Terminal Type ID	Option
1 - 3	—	—	—	Not Occupied	—	—
4	0.75	BU / BK	1946	Right Rear Low Level Audio [-] Signal	I	UQA
5	0.75	BN / VT	1999	Left Rear Low Level Audio [-] Signal	I	UQA
6	0.75	YE / BK	1948	Right Front Low Level Audio [-] Signal	I	UQA
7	0.75	BN / BU	1947	Left Front Low Level Audio [-] Signal	I	UQA
8	0.5	GN / YE	7066	Entertainment Remote Enable Signal	I	UQA
9 - 10	—	—	—	Not Occupied	—	—
11	0.5	VT / BU	6978	Audio Amplifier Control	I	UQA
12	0.75	BN / WH	546	Right Rear Low Level Audio Signal	I	UQA
13	0.75	GN / BK	599	Left Rear Low Level Audio Signal	I	UQA
14	0.75	YE	512	Right Front Low Level Audio Signal	I	UQA
15	0.75	BU	511	Left Front Low Level Audio Signal	I	UQA
16	—	—	—	Not Occupied	—	—

T4T Wireless Communication Antenna - WLAN

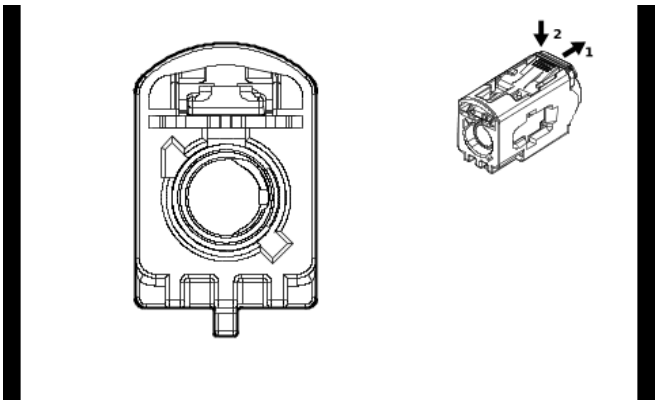

5402059

Connector Part Information

Harness Type: Instrument Panel Wiring Harness COAX
OEM Connector: 13516221
Service Connector: Service by Cable Assembly — See Part Catalog
Description: 1-Way F Coax Type(BG)

Terminal Part Information

Terminal Type ID	Terminated Lead	Diagnostic Test Probe	Terminal Removal Tool
I	Not required	No Tool Required	No Tool Required

T4T Wireless Communication Antenna - WLAN

Pin	Size	Color	Circuit	Function	Terminal Type ID	Option
—	—	Coax Cable	—	WiFi Antenna Coaxial Signal	I	—

T6 Power Inverter Module X1

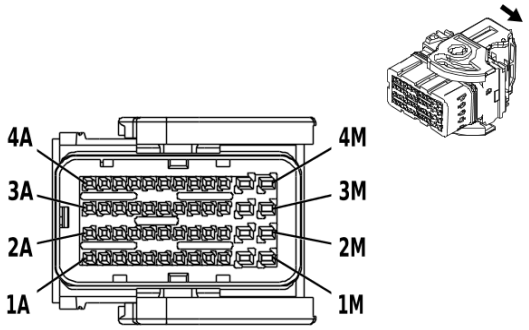

4539653

Connector Part Information

Harness Type: Engine Wiring Harness
OEM Connector: 13595462
Service Connector: 19354859
Description: 48-Way F 0.6, 1.5 Sealed, Series(BK)

Terminal Part Information

Terminal Type ID	Terminated Lead	Diagnostic Test Probe	Terminal Removal Tool
I	19371226	J-35616-64B (L-BU)	J-38125-215A
II	19371227	J-35616-2A (GY)	J-38125-215A

T6 Power Inverter Module X1

Pin	Size	Color	Circuit	Function	Terminal Type ID	Option
1A - 4M	—	—	—	Not Occupied	—	—
B1	0.75	WH / GN	7648	Drive Motor 1 Position Sensor Excitation Signal Negative	I	—
B2	0.75	BU	7645	Drive Motor 1 Position Sensor Excitation Signal Positive	I	—
B4	0.5	VT / WH	5981	Transmission Range Switch Signal A	I	—
C1	0.75	BN	7652	Drive Motor 1 Position Sensor Sensor 3 Signal	I	—
C2	0.75	YE	7649	Drive Motor 1 Position Sensor Sensor 1 Signal	I	—
C3	0.5	GY / BN	5982	Transmission Range Switch Signal B	I	—
C4	0.5	GY / WH	4168	Transmission Range Switch Signal P	I	—
D1	0.75	GY	7646	Drive Motor 1 Position Sensor Sensor 4 Signal	I	—
D2	0.75	VT / GN	7647	Drive Motor 1 Position Sensor Sensor 2 Signal	I	—
D3	0.5	WH / BK	5983	Transmission Range Switch Signal C	I	—
D4	0.5	GY / YE	4169	Transmission Range Switch Signal S	I	—
E3	0.5	WH	2501	High Speed GMLAN Serial Data [-] 1	I	—
E4	0.5	BU	2500	High Speed GMLAN Serial Data [+] 1	I	—
F1	0.5	GY / BK	2967	Transmission Auxiliary Fluid Pump Relay Control	I	—
F2	0.5	GY / BU	4324	Transmission Auxiliary Fluid Pump Feedback Signal	I	—
F3	0.5	WH	2501	High Speed GMLAN Serial Data [-] 1	I	—
F4	0.5	BU	2500	High Speed GMLAN Serial Data [+] 1	I	—

T6 Power Inverter Module X1 (cont'd)

Pin	Size	Color	Circuit	Function	Terminal Type ID	Option
G1	0.5	BK / VT	5596	High Voltage System Interlock Low Reference 2	I	—
G2	0.5	YE	5690	High Voltage System Interlock Signal 3	I	—
G3	0.5	WH	7494	High Speed GMLAN Serial Data [-] 3	I	—
G4	0.5	BU / BK	7493	High Speed GMLAN Serial Data [+] 3	I	—
H1	0.5	BN / WH	585	Transmission Fluid Temperature Sensor Signal	I	—
H2	0.5	BK / BN	586	Transmission Fluid Temperature Sensor Low Reference	I	—
H3	0.5	WH	7494	High Speed GMLAN Serial Data [-] 3	I	—
H4	0.5	BU / BK	7493	High Speed GMLAN Serial Data [+] 3	I	—
J1	0.5	WH / BU	7653	Traction Power Inverter Motor 1 Temperature Sensor Signal	I	—
J2	0.5	GN	7654	Traction Power Inverter Motor 1 Temperature Sensor Low Reference	I	—
J3	0.5	WH	6106	High Speed GMLAN Serial Data [-] 2	I	—
J4	0.5	BU / YE	6105	High Speed GMLAN Serial Data [+] 2	I	—
K2	0.5	BK	150	Ground	I	—
L1	0.5	YE / BU	3992	Internal Mode Switch Voltage Supply A	II	—
L3	0.5	VT / GY	1439	Run/Crank Ignition 1 Voltage	II	—
L4	0.5	VT / BU	3991	Internal Mode Switch Voltage Supply B	II	—
M1	0.5	RD / VT	340	Battery Positive Voltage	II	—
M2	0.5	BU / WH	3977	Accessory Wake-Up Serial Data 2	II	—
M4	0.5	RD / YE	240	Battery Positive Voltage	II	—

T6 Power Inverter Module X2

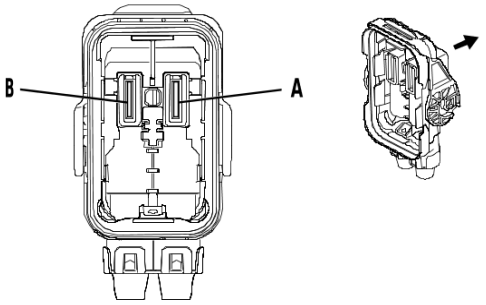

4074318

Connector Part Information

Harness Type: High Voltage Wiring Harness
OEM Connector: 13598848
Service Connector: Service by Harness - See Part Catalog
Description: 2-Way F Power Pack 2000 Series, Sealed(OG)

Terminal Part Information

Terminal Type ID	Terminated Lead	Diagnostic Test Probe	Terminal Removal Tool
I	Not required	No Tool Required	No Tool Required

T6 Power Inverter Module X2

Pin	Size	Color	Circuit	Function	Terminal Type ID	Option
A	—	OG	3966	Hybrid/EV Battery 3 [+]	I	—
B	—	OG / BK	3965	Hybrid/EV Battery 3 [-]	I	—

T6 Power Inverter Module X3

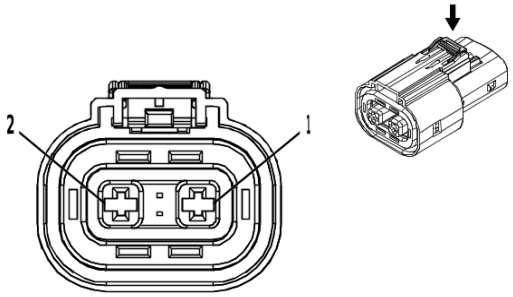

4432661

Connector Part Information

Harness Type: High Voltage Wiring Harness
OEM Connector: 13595515
Service Connector: Service by Harness - See Part Catalog
Description: 2-Way F HVA280-2PHI Series, Sealed(OG)

Terminal Part Information

Terminal Type ID	Terminated Lead	Diagnostic Test Probe	Terminal Removal Tool
I	Not required	No Tool Required	No Tool Required

T6 Power Inverter Module X3

Pin	Size	Color	Circuit	Function	Terminal Type ID	Option
1	—	OG	3770	Motor Generator Unit Phase W Control	I	—
2	—	OG	3771	Motor Generator Unit Phase V Control	I	—
3	—	OG	3772	Motor Generator Unit Phase U Control	I	—

T10E Keyless Entry Antenna - Rear Compartment

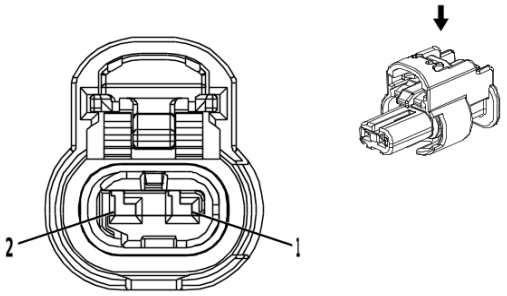

4335931

Connector Part Information

Harness Type: Body Wiring Harness
OEM Connector: 13512366
Service Connector: 19366843
Description: 2-Way F 1.2 MCON-CB Series, Sealed(BK)

Terminal Part Information

Terminal Type ID	Terminated Lead	Diagnostic Test Probe	Terminal Removal Tool
I	Not required	J-35616-16 (L-GN)	No Tool Required

T10E Keyless Entry Antenna - Rear Compartment

Pin	Size	Color	Circuit	Function	Terminal Type ID	Option
1	0.5	WH / GN	3556	Interior Passive Entry Antenna 3 High Signal	I	—
2	0.5	GN	3557	Interior Passive Entry Antenna 3 Low Signal	I	—

T10G Keyless Entry Antenna - Rear Fascia

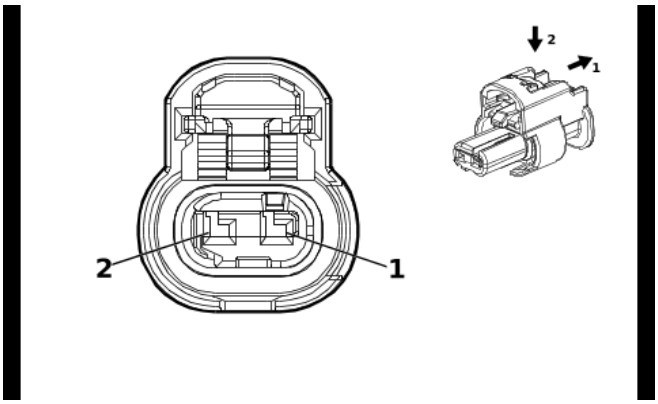

4649903

Connector Part Information

Harness Type: Rear Object Alarm Sensor Wiring Harness
OEM Connector: 13512365
Service Connector: Service by Harness - See Part Catalog
Description: 2-Way F 1.2 MCON Series, Sealed(BK)

Terminal Part Information

Terminal Type ID	Terminated Lead	Diagnostic Test Probe	Terminal Removal Tool
I	Not required	J-35616-16 (L-GN)	No Tool Required

T10G Keyless Entry Antenna - Rear Fascia

Pin	Size	Color	Circuit	Function	Terminal Type ID	Option
1	0.5	BN / GN	3568	Rear Closure Passive Entry Antenna High Signal	I	—
2	0.5	GN / GY	3569	Rear Closure Passive Entry Antenna Low Signal	I	—

T10J Keyless Entry Antenna - Center Console Front

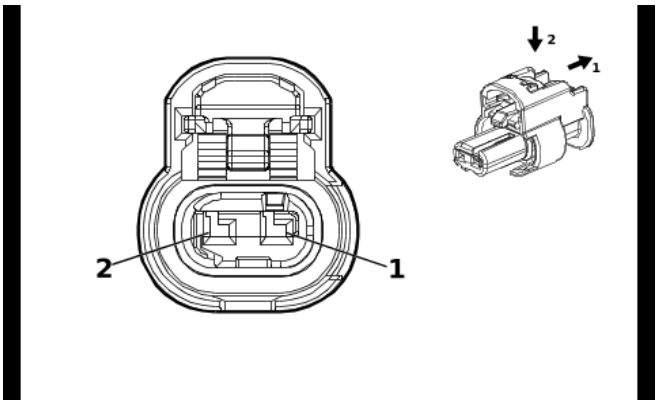

4649903

Connector Part Information

Harness Type: Instrument Panel Wiring Harness
OEM Connector: 13512365
Service Connector: 85519075
Description: 2-Way F 1.2 MCON Series, Sealed(BK)

Terminal Part Information

Terminal Type ID	Terminated Lead	Diagnostic Test Probe	Terminal Removal Tool
I	Not required	J-35616-16 (L-GN)	No Tool Required

T10J Keyless Entry Antenna - Center Console Front

Pin	Size	Color	Circuit	Function	Terminal Type ID	Option
1	0.5	BN / BK	3552	Interior Passive Entry Antenna 1 High Signal	I	—
2	0.5	WH	3553	Interior Passive Entry Antenna 1 Low Signal	I	—

T10K Keyless Entry Antenna - Center Console Rear

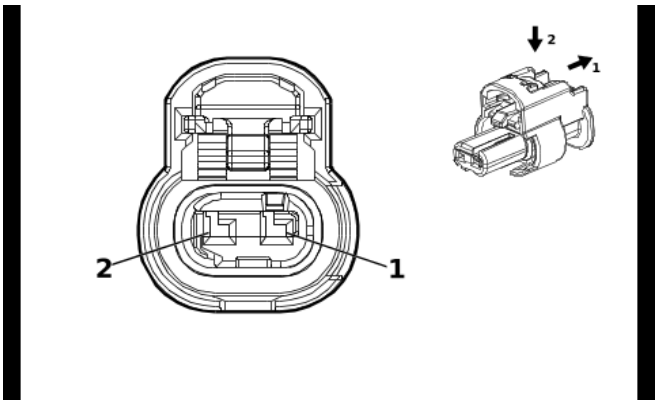

4649903

Connector Part Information

Harness Type: Front Floor Console Wiring Harness
OEM Connector: 13512365
Service Connector: Service by Harness - See Part Catalog
Description: 2-Way F 1.2 MCON Series, Sealed(BK)

Terminal Part Information

Terminal Type ID	Terminated Lead	Diagnostic Test Probe	Terminal Removal Tool
I	Not required	J-35616-16 (L-GN)	No Tool Required

T10K Keyless Entry Antenna - Center Console Rear

Pin	Size	Color	Circuit	Function	Terminal Type ID	Option
1	0.5	BU	3554	Interior Passive Entry Antenna 2 High Signal	I	—
2	0.5	GY / BK	3555	Interior Passive Entry Antenna 2 Low Signal	I	—

T12 Automatic Transmission Assembly X1

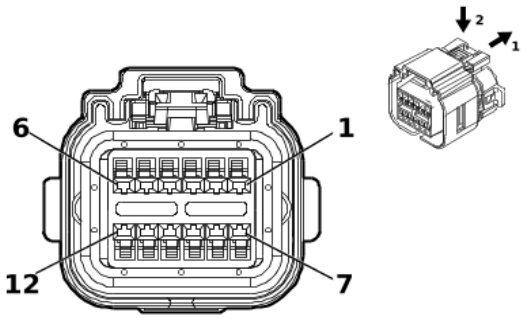

5539504

Connector Part Information

Harness Type: Engine Wiring Harness
OEM Connector: 13510393
Service Connector: 19354851
Description: 12-Way F 1.2 OCS Series, Sealed(BK)

Terminal Part Information

Terminal Type ID	Terminated Lead	Diagnostic Test Probe	Terminal Removal Tool
I	19119884	J-35616-12 (BU)	J-38125-215A

T12 Automatic Transmission Assembly X1

Pin	Size	Color	Circuit	Function	Terminal Type ID	Option
1	—	—	—	Not Occupied	—	—
2	0.5	BK / GY	9005	—	I	—
3	0.5	VT	9005	—	I	—
4	0.5	YE / BU	3992	Internal Mode Switch Voltage Supply A	I	—
5	0.5	VT / WH	5981	Transmission Range Switch Signal A	I	—
6	0.5	WH / BK	5983	Transmission Range Switch Signal C	I	—
7	0.5	GY / YE	4169	Transmission Range Switch Signal S	I	—
8	0.5	GY / BN	5982	Transmission Range Switch Signal B	I	—
9	0.5	GY / WH	4168	Transmission Range Switch Signal P	I	—
10	0.5	VT / BU	3991	Internal Mode Switch Voltage Supply B	I	—
11	0.5	BN	9005	—	I	—
12	0.5	YE / BK	9005	—	I	—

T12 Automatic Transmission Assembly X2

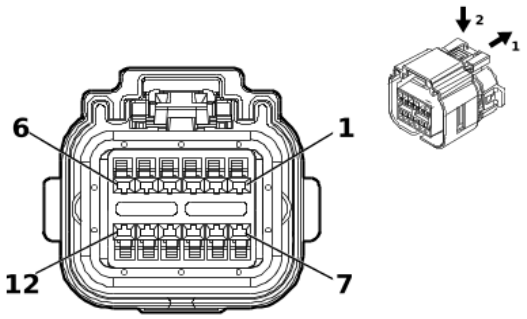

5539504

Connector Part Information

Harness Type: Engine Wiring Harness
OEM Connector: 13510393
Service Connector: 19354851
Description: 12-Way F 1.2 OCS Series, Sealed(BK)

Terminal Part Information

Terminal Type ID	Terminated Lead	Diagnostic Test Probe	Terminal Removal Tool
I	Service by Harness	J-35616-12 (BU)	No Tool Required

T12 Automatic Transmission Assembly X2

Pin	Size	Color	Circuit	Function	Terminal Type ID	Option
1	—	—	—	Not Occupied	—	—
2	0.5	BN / WH	585	Transmission Fluid Temperature Sensor Signal	I	—
3	0.5	BK / BN	586	Transmission Fluid Temperature Sensor Low Reference	I	—
4	0.75	BN	7652	Drive Motor 1 Position Sensor Sensor 3 Signal	I	—
5	0.75	YE	7649	Drive Motor 1 Position Sensor Sensor 1 Signal	I	—
6	0.75	BU	7645	Drive Motor 1 Position Sensor Excitation Signal Positive	I	—
7	0.75	WH / GN	7648	Drive Motor 1 Position Sensor Excitation Signal Negative	I	—
8	0.75	VT / GN	7647	Drive Motor 1 Position Sensor Sensor 2 Signal	I	—
9	0.75	GY	7646	Drive Motor 1 Position Sensor Sensor 4 Signal	I	—
10	0.5	GN	7654	Traction Power Inverter Motor 1 Temperature Sensor Low Reference	I	—
11	0.5	WH / BU	7653	Traction Power Inverter Motor 1 Temperature Sensor Signal	I	—
12	0.5	BU	9005	—	I	—

T12 Automatic Transmission Assembly X3

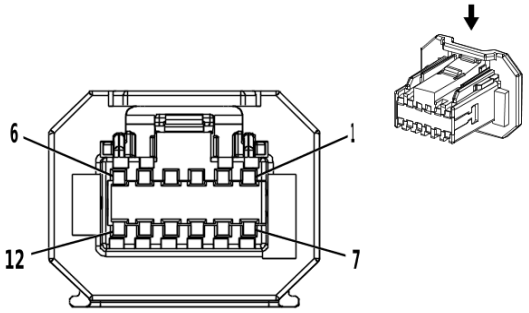

3988684

Connector Part Information

Harness Type: Transmission
OEM Connector: 15504257
Service Connector: Service by Harness - See Part Catalog
Description: 12-Way F 0.64 MTS-B Series(NA)

Terminal Part Information

Terminal Type ID	Terminated Lead	Diagnostic Test Probe	Terminal Removal Tool
I	Not required	J-35616-64B (L-BU)	No Tool Required

T12 Automatic Transmission Assembly X3

Pin	Size	Color	Circuit	Function	Terminal Type ID	Option
1	—	BK	5983	Transmission Range Switch Signal C	I	—
2	—	BK	5981	Transmission Range Switch Signal A	I	—
3	—	BK	3992	Internal Mode Switch Voltage Supply A	I	—
4 - 8	—	—	—	Not Occupied	—	—
9	—	BK	3991	Internal Mode Switch Voltage Supply B	I	—
10	—	BK	4168	Transmission Range Switch Signal P	I	—
11	—	BK	5982	Transmission Range Switch Signal B	I	—
12	—	BK	4169	Transmission Range Switch Signal S	I	—

T12 Automatic Transmission Assembly X4

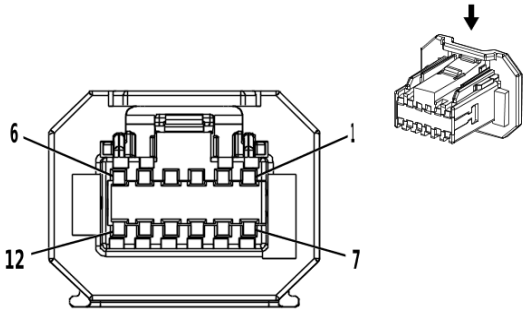

3988684

Connector Part Information

Harness Type: Transmission
OEM Connector: 15504257
Service Connector: Service by Harness - See Part Catalog
Description: 12-Way F 0.64 MTS-B Series(NA)

Terminal Part Information

Terminal Type ID	Terminated Lead	Diagnostic Test Probe	Terminal Removal Tool
I	Not required	J-35616-64B (L-BU)	No Tool Required
II	Not required	No Tool Required	No Tool Required

T12 Automatic Transmission Assembly X4

Pin	Size	Color	Circuit	Function	Terminal Type ID	Option
1	—	BK	7645	Drive Motor 1 Position Sensor Excitation Signal Positive	I	—
2	—	BK	7649	Drive Motor 1 Position Sensor Sensor 1 Signal	I	—
3	—	BK	7652	Drive Motor 1 Position Sensor Sensor 3 Signal	I	—
4	—	BK	586	Transmission Fluid Temperature Sensor Low Reference	I	—
5	—	BK	585	Transmission Fluid Temperature Sensor Signal	I	—
6 - 7	—	—	—	Not Occupied	—	—
8	—	BK	7653	Traction Power Inverter Motor 1 Temperature Sensor Signal	II	—
9	—	BK	7654	Traction Power Inverter Motor 1 Temperature Sensor Low Reference	II	—
10	—	BK	7646	Drive Motor 1 Position Sensor Sensor 4 Signal	I	—
11	—	BK	7647	Drive Motor 1 Position Sensor Sensor 2 Signal	I	—
12	—	BK	7648	Drive Motor 1 Position Sensor Excitation Signal Negative	I	—

T18 Battery Charger X1

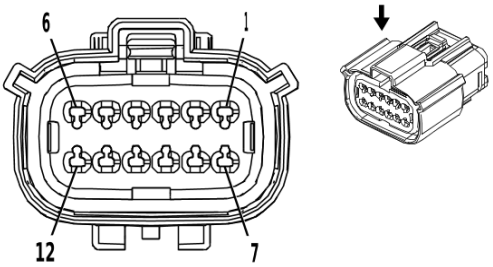

2424960

Connector Part Information

Harness Type: Engine Wiring Harness
OEM Connector: 13596025
Service Connector: 19352907
Description: 12-Way F 1.5 MX Series, Sealed(BK)

Terminal Part Information

Terminal Type ID	Terminated Lead	Diagnostic Test Probe	Terminal Removal Tool
I	19368973	J-35616-2A (GY)	J-38125-217

T18 Battery Charger X1

Pin	Size	Color	Circuit	Function	Terminal Type ID	Option
1	—	—	—	Not Occupied	—	—
2	0.5	BK	150	Ground	I	—
3	0.5	VT / WH	3643	High Voltage Onboard Charging DC Voltage Sense Signal	I	—
4	0.5	YE / GY	3645	High Voltage Onboard Charging Control	I	—
5 - 8	—	—	—	Not Occupied	—	—
9	0.5	RD / YE	740	Battery Positive Voltage	I	—
10	0.5	GN / GY	3644	High Voltage Onboard Charging AC Voltage Sense Signal	I	—
11	0.5	BU / YE	3646	High Voltage Onboard Charging Enable Signal	I	—
12	—	—	—	Not Occupied	—	—

T18 Battery Charger X2

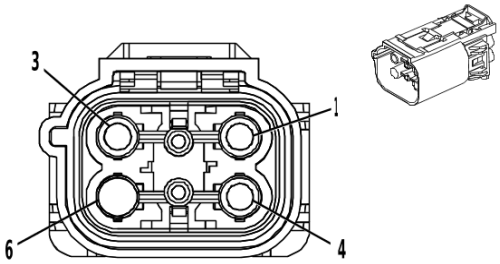

4073910

Connector Part Information

Harness Type: High Voltage Wiring Harness
OEM Connector: 15525753
Service Connector: Service by Harness - See Part Catalog
Description: 6-Way F 1.0, 2.4 HES Sealed(OG)

Terminal Part Information

Terminal Type ID	Terminated Lead	Diagnostic Test Probe	Terminal Removal Tool
I	Not required	No Tool Required	No Tool Required

T18 Battery Charger X2

Pin	Size	Color	Circuit	Function	Terminal Type ID	Option
1	—	BU	3837	AC Voltage Line 1	I	—
2	—	—	—	Not Occupied	—	—
3	—	GN	3952	AC Voltage Ground	I	—
4	—	WH	3838	AC Voltage Neutral Line 2	I	—
5 - 6	—	—	—	Not Occupied	—	—

T18 Battery Charger X3

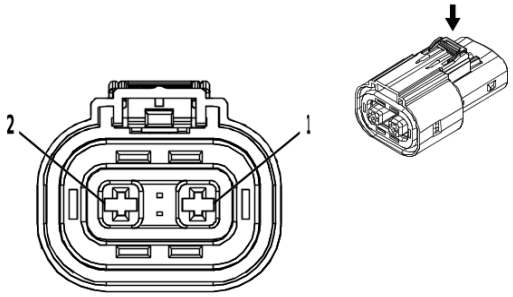

4432661

Connector Part Information

Harness Type: High Voltage Wiring Harness
OEM Connector: 13595515
Service Connector: Service by Harness - See Part Catalog
Description: 2-Way F HVA280-2PHI Series, Sealed(OG)

Terminal Part Information

Terminal Type ID	Terminated Lead	Diagnostic Test Probe	Terminal Removal Tool
I	Not required	No Tool Required	No Tool Required

T18 Battery Charger X3

Pin	Size	Color	Circuit	Function	Terminal Type ID	Option
1	—	OG	3834	Hybrid/EV Battery 2 [+]	I	—
2	—	OG / BK	3833	Hybrid/EV Battery 2 [-]	I	—

T22 Mobile Device Wireless Charger Module

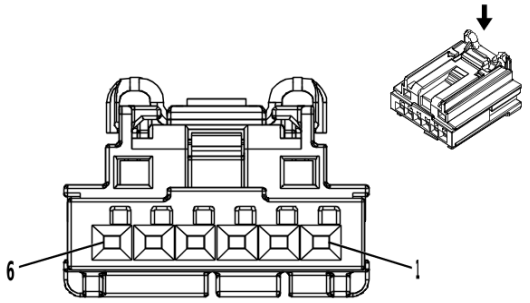

3960313

Connector Part Information

Harness Type: Instrument Panel Wiring Harness
OEM Connector: 13583825
Service Connector: 19332786
Description: 6-Way F 0.64 Generation Y Series(BK)

Terminal Part Information

Terminal Type ID	Terminated Lead	Diagnostic Test Probe	Terminal Removal Tool
I	Not required	J-35616-64B (L-BU)	No Tool Required

T22 Mobile Device Wireless Charger Module

Pin	Size	Color	Circuit	Function	Terminal Type ID	Option
1	0.35	VT	4601	Retained Accessory Power Control	I	
2	0.5	BK	1450	Ground	I	
3	0.35	GN	4512	Wireless Charging System Charge Indicator Control	I	
4	0.35	BN	4511	Wireless Charging System Fault Indicator Control	I	
5 - 6	—	—	—	Not Occupied	—	—

T23 Radio Antenna Amplifier X1

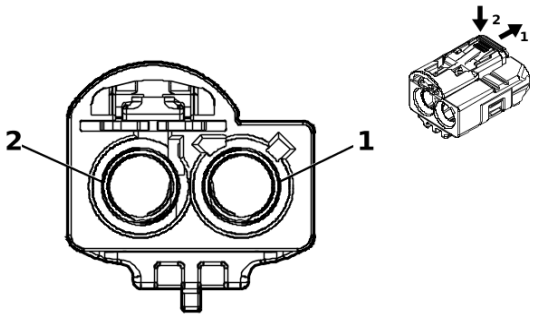

5217209

Connector Part Information

Harness Type: Instrument Panel Wiring Harness COAX
OEM Connector: 13516227
Service Connector: Service by Cable Assembly — See Part Catalog
Description: 2-Way F Coax Type(BK)

Terminal Part Information

Terminal Type ID	Terminated Lead	Diagnostic Test Probe	Terminal Removal Tool
I	Not required	No Tool Required	No Tool Required

T23 Radio Antenna Amplifier X1

Pin	Size	Color	Circuit	Function	Terminal Type ID	Option
—	—	Coax Cable	—	(AM/FM) Antenna RF Signal	I	—

T23 Radio Antenna Amplifier X2

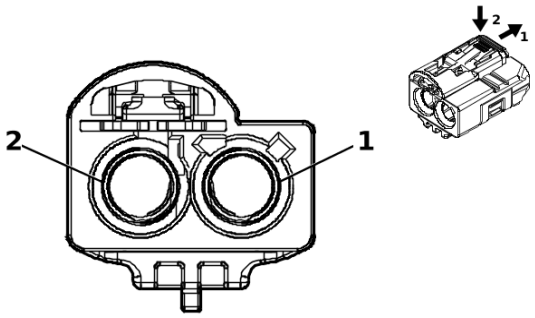

5217209

Connector Part Information

Harness Type: Instrument Panel Wiring Harness COAX
OEM Connector: 13516227
Service Connector: Service by Cable Assembly — See Part Catalog
Description: 2-Way F Coax Type(BK)

Terminal Part Information

Terminal Type ID	Terminated Lead	Diagnostic Test Probe	Terminal Removal Tool
I	Not required	No Tool Required	No Tool Required

T23 Radio Antenna Amplifier X2

Pin	Size	Color	Circuit	Function	Terminal Type ID	Option
—	—	Coax Cable	—	(AM/FM) Antenna RF Signal	I	—

T24 Battery Charger - DC X1

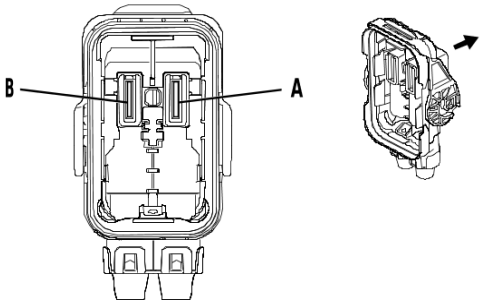

4074318

Connector Part Information

Harness Type: High Voltage Wiring Harness
OEM Connector: 33181062
Service Connector: Service by Harness - See Part Catalog
Description: 2-Way F Power Pack 2000 Series, Sealed(OG)

Terminal Part Information

Terminal Type ID	Terminated Lead	Diagnostic Test Probe	Terminal Removal Tool
I	Not required	No Tool Required	No Tool Required

T24 Battery Charger - DC X1

Pin	Size	Color	Circuit	Function	Terminal Type ID	Option
A	—	OG	3966	Hybrid/EV Battery 3 [+]	I	—
B	—	OG / BK	3965	Hybrid/EV Battery 3 [-]	I	—

T24 Battery Charger - DC X2

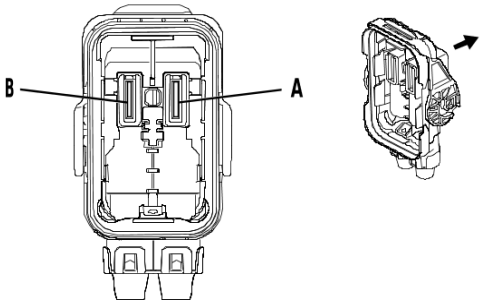

4074318

Connector Part Information

Harness Type: High Voltage Wiring Harness
OEM Connector: 13598848
Service Connector: Service by Harness - See Part Catalog
Description: 2-Way F Power Pack 2000 Series, Sealed(OG)

Terminal Part Information

Terminal Type ID	Terminated Lead	Diagnostic Test Probe	Terminal Removal Tool
I	Not required	No Tool Required	No Tool Required

T24 Battery Charger - DC X2

Pin	Size	Color	Circuit	Function	Terminal Type ID	Option
A	—	OG	4336	B+ (360V DC)	I	—
B	—	OG / BK	4335	360V DC Ground	I	—

T24 Battery Charger - DC X3

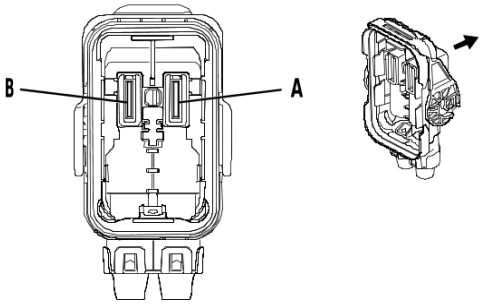

4074318

Connector Part Information

Harness Type: High Voltage Wiring Harness
OEM Connector: 13598848
Service Connector: Service by Harness - See Part Catalog
Description: 2-Way F Power Pack 2000 Series, Sealed(OG)

Terminal Part Information

Terminal Type ID	Terminated Lead	Diagnostic Test Probe	Terminal Removal Tool
I	Not required	No Tool Required	No Tool Required

T24 Battery Charger - DC X3

Pin	Size	Color	Circuit	Function	Terminal Type ID	Option
A	—	OG	5084	Hybrid/EV Battery [+]	I	—
B	—	OG / BK	5083	Hybrid/EV Battery [-]	I	—

T24 Battery Charger - DC X4

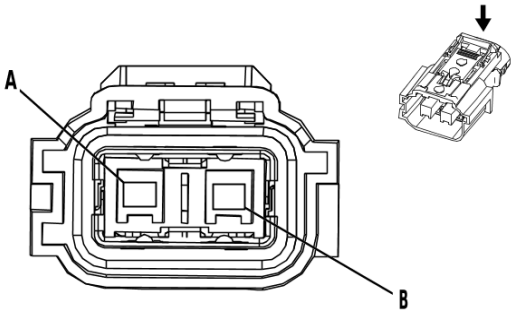

3818808

Connector Part Information

Harness Type: High Voltage Wiring Harness
OEM Connector: 33280354
Service Connector: Service by Harness - See Part Catalog
Description: 2-Way F 280 Metri-Pack Series, Sealed(OG)

Terminal Part Information

Terminal Type ID	Terminated Lead	Diagnostic Test Probe	Terminal Removal Tool
I	Not required	J-35616-4A (PU)	No Tool Required

T24 Battery Charger - DC X4

Pin	Size	Color	Circuit	Function	Terminal Type ID	Option
A	—	OG	3970	Hybrid/EV Battery 4 [+]	I	—
B	—	OG / BK	3969	Hybrid/EV Battery 4 [-]	I	—

T24 Battery Charger - DC X5

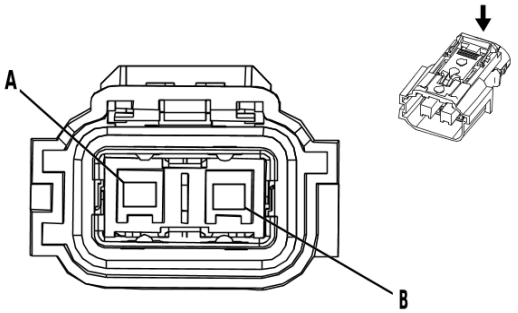

3818808

Connector Part Information

Harness Type: High Voltage Wiring Harness
OEM Connector: 13511584
Service Connector: Service by Harness - See Part Catalog
Description: 2-Way F 280 Metri-Pack Series, Sealed(OG)

Terminal Part Information

Terminal Type ID	Terminated Lead	Diagnostic Test Probe	Terminal Removal Tool
I	Not required	J-35616-4A (PU)	No Tool Required

T24 Battery Charger - DC X5

Pin	Size	Color	Circuit	Function	Terminal Type ID	Option
A	—	OG	3974	Hybrid/EV Battery 5 [+]	I	—
B	—	OG / BK	3973	Hybrid/EV Battery 5 [-]	I	—

T24 Battery Charger - DC X6

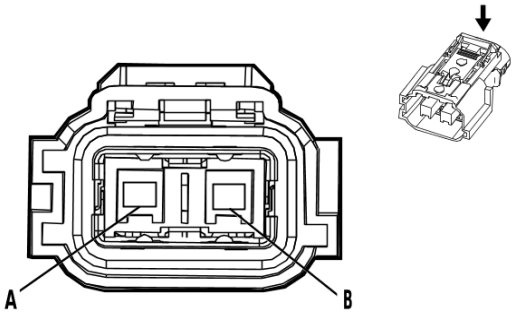

4693603

Connector Part Information

Harness Type: High Voltage Wiring Harness
OEM Connector: 13511585
Service Connector: Service by Harness - See Part Catalog
Description: 2-Way F 280 Metri-Pack Series, Sealed(OG)

Terminal Part Information

Terminal Type ID	Terminated Lead	Diagnostic Test Probe	Terminal Removal Tool
I	Not required	J-35616-4A (PU)	No Tool Required

T24 Battery Charger - DC X6

Pin	Size	Color	Circuit	Function	Terminal Type ID	Option
A	—	OG	3834	Hybrid/EV Battery 2 [+]	I	—
B	—	OG / BK	3833	Hybrid/EV Battery 2 [-]	I	—

T24 Battery Charger - DC X7

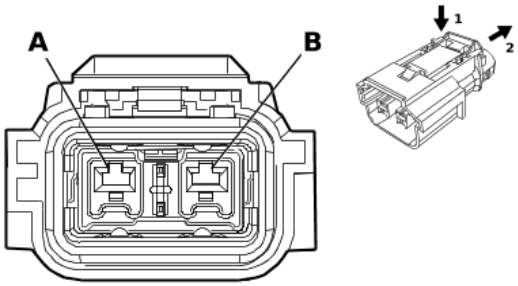

4278443

Connector Part Information

Harness Type: High Voltage Wiring Harness
OEM Connector: 13511583
Service Connector: Service by Harness - See Part Catalog
Description: 2-Way F 280 Metri-Pack Series, Sealed(OG)

Terminal Part Information

Terminal Type ID	Terminated Lead	Diagnostic Test Probe	Terminal Removal Tool
I	Not required	J-35616-4A (PU)	No Tool Required

T24 Battery Charger - DC X7

Pin	Size	Color	Circuit	Function	Terminal Type ID	Option
A	—	OG	2427	Hybrid/EV Battery 6 [+]	I	—
B	—	OG / BK	2429	Hybrid/EV Battery 6 [-]	I	—

T24 Battery Charger - DC X8

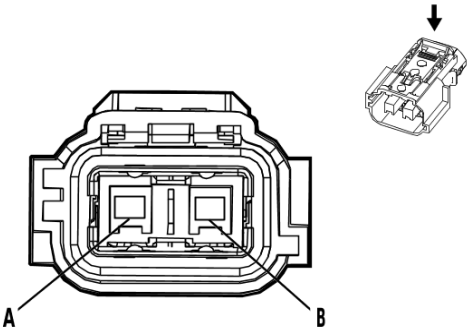

4693629

Connector Part Information

Harness Type: High Voltage Wiring Harness
OEM Connector: 13511586
Service Connector: Service by Harness - See Part Catalog
Description: 2-Way F 280 Metri-Pack Series, Sealed(OG)

Terminal Part Information

Terminal Type ID	Terminated Lead	Diagnostic Test Probe	Terminal Removal Tool
I	Not required	J-35616-4A (PU)	No Tool Required

T24 Battery Charger - DC X8

Pin	Size	Color	Circuit	Function	Terminal Type ID	Option
A	—	OG	2483	Hybrid/EV Battery 7 [+]	I	—
B	—	OG / BK	2485	Hybrid/EV Battery 7 [-]	I	—

T24 Battery Charger - DC X9

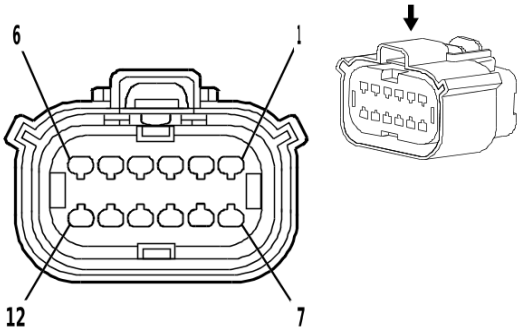

1825165

Connector Part Information

Harness Type: Engine Wiring Harness
OEM Connector: 13503526
Service Connector: 19352907
Description: 12-Way F 1.5 Series, Sealed(BK)

Terminal Part Information

Terminal Type ID	Terminated Lead	Diagnostic Test Probe	Terminal Removal Tool
I	19368973	J-35616-2A (GY)	J-38125-217

T24 Battery Charger - DC X9

Pin	Size	Color	Circuit	Function	Terminal Type ID	Option
1	0.5	BK	350	Ground	I	—
2	0.5	YE	4327	High Power Contactor Positive Relay Control	I	—
3	0.5	BK	350	Ground	I	—
4	0.5	BU / GY	4326	High Power Contactor Ground Relay Control	I	—
5	—	—	—	Not Occupied	—	—
6	0.5	VT	4334	Hybrid/EV Battery Coolant Heater Control	I	—
7	0.5	GY / VT	5595	High Voltage System Interlock Signal 2	I	—
8	0.5	BU / RD	4331	High Power Contactor Signal Conditioner Voltage Reference	I	—
9	0.5	BK / BN	4332	High Power Contactor Signal Conditioner Low Reference	I	—
10	0.5	GN	4330	High Power Contactor Positive Voltage Sense Signal	I	—
11	0.5	GY	4329	High Power Contactor Ground Voltage Sense Signal	I	—
12	0.5	YE	5690	High Voltage System Interlock Signal 3	I	—

V1 Air Ionizer X1 (KEM)

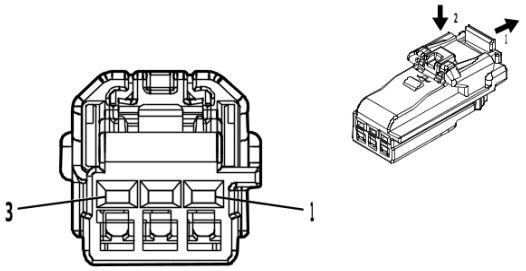

4971604

Connector Part Information

Harness Type: Instrument Panel Wiring Harness
OEM Connector: 13588643
Service Connector: 84644600
Description: 3-Way F 1.2 MCON Series(BK)

Terminal Part Information

Terminal Type ID	Terminated Lead	Diagnostic Test Probe	Terminal Removal Tool
I	Not required	J-35616-16 (L-GN)	No Tool Required

V1 Air Ionizer X1 (KEM)

Pin	Size	Color	Circuit	Function	Terminal Type ID	Option
1	0.5	GN / BU	4119	HVAC Control Module LIN Bus 2	I	KEM
2	0.5	BK	1250	Ground	I	KEM
3	0.5	RD / YE	7440	Battery Positive Voltage	I	KEM

V1 Air Ionizer X2 (KEM)

—

Connector Part Information

Harness Type: HVAC Wiring Harness
OEM Connector: Not Available
Service Connector: Service by Harness - See Part Catalog
Description: 2-Way

Terminal Part Information

Terminal Type ID	Terminated Lead	Diagnostic Test Probe	Terminal Removal Tool
I	Not required	No Tool Required	No Tool Required

V1 Air Ionizer X2 (KEM)

Pin	Size	Color	Circuit	Function	Terminal Type ID	Option
1	0.5	WH / BU	594	Air Purification Ionizer Probe Supply Voltage 1	I	—
2	0.5	WH / YE	595	Air Purification Ionizer Probe Supply Voltage 2	I	—

V2 Air Ionizer Electrode (KEM)

—

Connector Part Information

Harness Type: HVAC Wiring Harness
OEM Connector: Not Available
Service Connector: Service by Harness - See Part Catalog
Description: 2-Way

Terminal Part Information

Terminal Type ID	Terminated Lead	Diagnostic Test Probe	Terminal Removal Tool
I	Not required	No Tool Required	No Tool Required

V2 Air Ionizer Electrode (KEM)

Pin	Size	Color	Circuit	Function	Terminal Type ID	Option
1	0.5	WH / BU	594	Air Purification Ionizer Probe Supply Voltage 1	I	—
2	0.5	WH / YE	595	Air Purification Ionizer Probe Supply Voltage 2	I	—

X21 Manual Service Disconnect Receptacle X1

—

Connector Part Information

Harness Type: Manual Service Disconnect
OEM Connector: Not Available
Service Connector: Service by Harness - See Part Catalog
Description: 1-Way

Terminal Part Information

Terminal Type ID	Terminated Lead	Diagnostic Test Probe	Terminal Removal Tool
I	Not required	No Tool Required	No Tool Required

X21 Manual Service Disconnect Receptacle X1

Pin	Size	Color	Circuit	Function	Terminal Type ID	Option
1	—	BAR_OG	BUS	—	I	—

X21 Manual Service Disconnect Receptacle X2

—

Connector Part Information

Harness Type: Manual Service Disconnect
OEM Connector: Not Available
Service Connector: Service by Harness - See Part Catalog
Description: 1-Way

Terminal Part Information

Terminal Type ID	Terminated Lead	Diagnostic Test Probe	Terminal Removal Tool
I	Not required	No Tool Required	No Tool Required

X21 Manual Service Disconnect Receptacle X2

Pin	Size	Color	Circuit	Function	Terminal Type ID	Option
1	—	BAR_OG	BUS	—	I	—

X21 Manual Service Disconnect Receptacle X3

—

Connector Part Information

Harness Type: Manual Service Disconnect
OEM Connector: Not Available
Service Connector: Service by Harness - See Part Catalog
Description: 2-Way

Terminal Part Information

Terminal Type ID	Terminated Lead	Diagnostic Test Probe	Terminal Removal Tool
I	Not required	No Tool Required	No Tool Required

X21 Manual Service Disconnect Receptacle X3

Pin	Size	Color	Circuit	Function	Terminal Type ID	Option
1	0.5	VT	5087	High Voltage System Interlock Signal 1	I	—
2	0.5	BK / BN	5088	High Voltage System Interlock Low Reference 1	I	—

X80 Accessory Power Receptacle

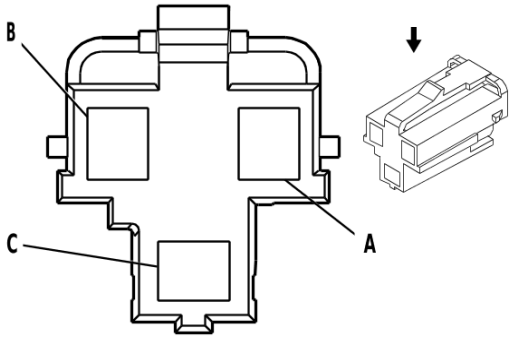

320518

Connector Part Information

Harness Type: Instrument Panel Wiring Harness
OEM Connector: 12176446
Service Connector: 19369634
Description: 3-Way F 280 Metri-Pack Flexlock Series(BK)

Terminal Part Information

Terminal Type ID	Terminated Lead	Diagnostic Test Probe	Terminal Removal Tool
I	Not required	J-35616-4A (PU)	No Tool Required

X80 Accessory Power Receptacle

Pin	Size	Color	Circuit	Function	Terminal Type ID	Option
A	1	VT	1701	Retained Accessory Power Control	I	—
B	—	—	—	Not Occupied	—	—
C	1	BK	1350	Ground	I	—

X83 Auxiliary Audio Input X1

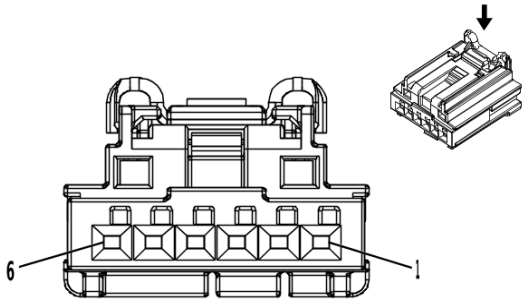

3960313

Connector Part Information

Harness Type: Instrument Panel Wiring Harness
OEM Connector: 13583825
Service Connector: 19332786
Description: 6-Way F 0.64 Generation Y Series(BK)

Terminal Part Information

Terminal Type ID	Terminated Lead	Diagnostic Test Probe	Terminal Removal Tool
I	Not required	J-35616-64B (L-BU)	No Tool Required

X83 Auxiliary Audio Input X1

Pin	Size	Color	Circuit	Function	Terminal Type ID	Option
1	0.35	RD / GN	6940	Battery Positive Voltage	I	—
2	0.35	WH	6816	Indicator Dimming Control	I	—
3	0.35	BK / WH	551	Signal Ground	I	—
4 - 6	—	—	—	Not Occupied	—	—

X83 Auxiliary Audio Input X2

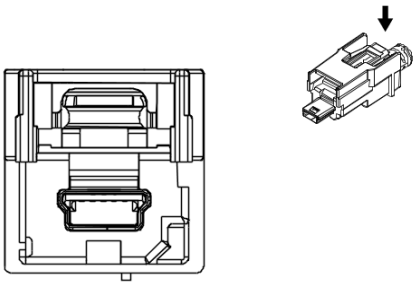

2807759

Connector Part Information

Harness Type: Instrument Panel Wiring Harness USB
OEM Connector: 13581303
Service Connector: Service by Cable Assembly — See Part Catalog
Description: 5-Way M 2.0 Mini-B USB Type(BU)

Terminal Part Information

Terminal Type ID	Terminated Lead	Diagnostic Test Probe	Terminal Removal Tool
I	Not required	No Tool Required	No Tool Required

X83 Auxiliary Audio Input X2

Pin	Size	Color	Circuit	Function	Terminal Type ID	Option
—	—	USB	—	USB Serial Data	I	—

X84 Data Link Connector

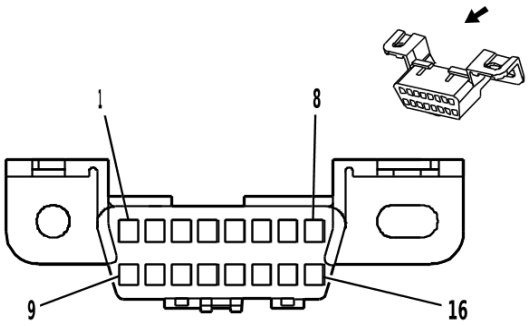

68793

Connector Part Information

Harness Type: Instrument Panel Wiring Harness
OEM Connector: 19177614
Service Connector: 12110250
Description: 16-Way F 150 Metri-Pack Series(BK)

Terminal Part Information

Terminal Type ID	Terminated Lead	Diagnostic Test Probe	Terminal Removal Tool
I	13580059	J-35616-14 (GN)	J-38125-12A

X84 Data Link Connector

Pin	Size	Color	Circuit	Function	Terminal Type ID	Option
1	0.35	GN / WH	2100	Low Speed GMLAN Serial Data 3	I	—
2	—	—	—	Not Occupied	—	—
3	0.35	BU / WH	2089	High Speed GMLAN Serial Data [+] 13	I	—
4	0.5	BK	1350	Ground	I	—
5	0.35	BK	1250	Ground	I	—
6	0.35	BU / BK	1978	High Speed GMLAN Serial Data [+] 11	I	—
7 - 10	—	—	—	Not Occupied	—	—
11	0.35	WH	2090	High Speed GMLAN Serial Data [-] 13	I	—
12	0.35	BU / BN	1980	High Speed GMLAN Serial Data [+] 12	I	—
13	0.35	WH	1981	High Speed GMLAN Serial Data [-] 12	I	—
14	0.35	WH	1979	High Speed GMLAN Serial Data [-] 11	I	—
15	—	—	—	Not Occupied	—	—
16	0.35	RD / GY	4840	Battery Positive Voltage	I	—

X85 Steering Wheel Air Bag Coil X1

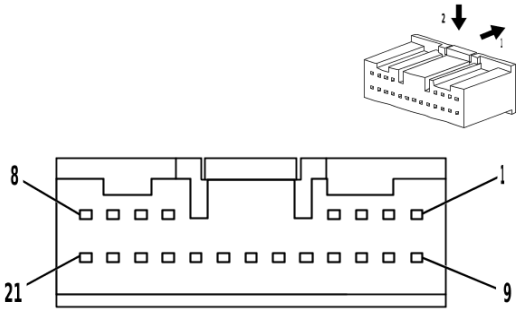

3960237

Connector Part Information

Harness Type: Instrument Panel Wiring Harness
OEM Connector: 13510218
Service Connector: 13510218
Description: 21-Way F 0.64 Series(YE)

Terminal Part Information

Terminal Type ID	Terminated Lead	Diagnostic Test Probe	Terminal Removal Tool
I	13575742	J-35616-64B (L-BU)	J-38125-215A
II	13575865	J-35616-64B (L-BU)	J-38125-215A

X85 Steering Wheel Air Bag Coil X1

Pin	Size	Color	Circuit	Function	Terminal Type ID	Option
1	0.5 0.35	GN / GY OG / VT	4627 3021	Image Processing Module LIN Bus 1 Steering Wheel Air Bag Stage 1 High Control	I II	UKL - UKL
2	0.35 0.35	WH / VT BN / OG	2246 3020	Driver Illumination Lamp 1 Control Steering Wheel Air Bag Stage 1 Low Control	I II	UKL - UKL
3	0.35 0.35	YE / BU WH / OG	2245 3022	Driver Illumination Lamp 2 Control Steering Wheel Air Bag Stage 2 Low Control	I II	UKL - UKL
4	0.35 0.35	BU / BN OG / GN	7744 3023	Driver Illumination Lamp Ground Steering Wheel Air Bag Stage 2 High Control	I II	UKL - UKL
5	0.35 0.5	OG / GN GN / WH	3023 3287	Steering Wheel Air Bag Stage 2 High Control Horn Switch Signal	II I	UKL - UKL
6	0.35 0.5	WH / OG BK	3022 1350	Steering Wheel Air Bag Stage 2 Low Control Ground	II I	UKL - UKL
7	0.35	BN / OG	3020	Steering Wheel Air Bag Stage 1 Low Control	II	UKL
8	0.35 0.35	BK OG / VT	1350 3021	Ground Steering Wheel Air Bag Stage 1 High Control	I II	KI3- UKL UKL
9	0.5 0.5	WH / RD GN / BK	1444 3894	12V Reference Instrument Panel Cluster Control Module LIN Bus 1	I I	UKL - UKL
10	0.5	GY / GN	5737	Distance Sensing Cruise Control Gap Up/Down Switch Signal	I	UKL
11	0.5 0.5	BN / GN BN / GN	1884 1884	Cruise Control Set/Coast/Resume/Accelerate Switch Signal Cruise Control Set/Coast/Resume/Accelerate Switch Signal	I I	UKL - UKL

X85 Steering Wheel Air Bag Coil X1 (cont'd)

Pin	Size	Color	Circuit	Function	Terminal Type ID	Option
12	0.5 0.5	GN / BU GN / WH	4119 3287	HVAC Control Module LIN Bus 2 Horn Switch Signal	I I	KI3- UKL UKL
13	0.5 0.5	BN / WH WH / RD	5884 1444	Steering Wheel Heating Switch LED Control 12V Reference	I I	KI3+ UKL - UKL
14	0.5 0.35	YE / GY RD / YE	5883 5040	Steering Wheel Heating Switch Signal Battery Positive Voltage	I I	KI3+ UKL - UKL
15	0.5 0.5	VT / YE GY / GN	5526 5737	Tap Up/Tap Down Switch Signal Distance Sensing Cruise Control Gap Up/Down Switch Signal	I I	UKL - UKL
16	0.5 0.35	BK VT / YE	1350 5526	Ground Tap Up/Tap Down Switch Signal	I I	UKL - UKL
17	0.5 0.5	BN / WH GN / BK	5884 3894	Steering Wheel Heating Switch LED Control Instrument Panel Cluster Control Module LIN Bus 1	I I	KI3- UKL UKL
18	0.5 0.5	YE / GY RD / BU	5883 8340	Steering Wheel Heating Switch Signal Battery Positive Voltage	I I	KI3- UKL UKL
19	—	—	—	Not Occupied	—	—
20	0.5	BK	1350	Ground	I	KI3+ UKL
21	0.5	VT / GN	2239	Run/Crank Ignition 1 Voltage	I	KI3

X85 Steering Wheel Air Bag Coil X2 (-UKL)

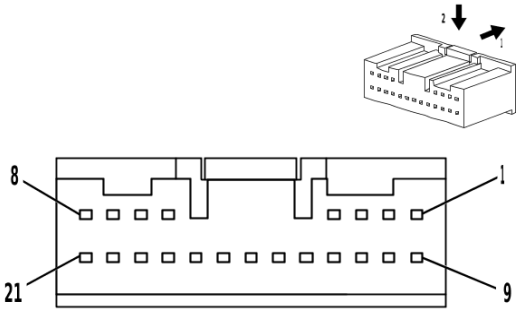

3960237

Connector Part Information

Harness Type: Steering Wheel Wiring Harness
OEM Connector: 13510218
Service Connector: Service by Harness - See Part Catalog
Description: 21-Way F 0.64 Series(YE)

Terminal Part Information

Terminal Type ID	Terminated Lead	Diagnostic Test Probe	Terminal Removal Tool
I	Not required	J-35616-64B (L-BU)	No Tool Required
II	Not required	Not Available	No Tool Required

X85 Steering Wheel Air Bag Coil X2 (-UKL)

Pin	Size	Color	Circuit	Function	Terminal Type ID	Option
1	0.5	BK	1650	Ground	I	KI3
2	—	—	—	Not Occupied	—	—
3	0.35	BK	1650	Ground	I	—
4	0.35	RD	3287	Horn Switch Signal	I	—
5	0.5	GY / OG	3023	Steering Wheel Air Bag Stage 2 High Control	II	—
6	0.5 0.5	OG / VT GY / VT	3022 3022	Steering Wheel Air Bag Stage 2 Low Control Steering Wheel Air Bag Stage 2 Low Control	II II	KI3 - KI3
7	0.5	OG / WH	3020	Steering Wheel Air Bag Stage 1 Low Control	II	—
8	0.5	YE / OG	3021	Steering Wheel Air Bag Stage 1 High Control	II	—
9	0.5	OG	2239	Run/Crank Ignition 1 Voltage	I	KI3
10 - 11	—	—	—	Not Occupied	—	—
12	0.35	GN	5883	Steering Wheel Heating Switch Signal	I	KI3
13	0.35	GY / OG	5884	Steering Wheel Heating Switch LED Control	I	KI3
14	0.35	WH	5526	Tap Up/Tap Down Switch Signal	I	—
15	0.35	PU	5737	Distance Sensing Cruise Control Gap Up/Down Switch Signal	I	—
16	0.35	GN	5040	Battery Positive Voltage	I	—
17	0.35	BU	1444	12V Reference	I	—
18	0.35	BK / RD	4119	HVAC Control Module LIN Bus 2	I	KI3
19	0.35	GN / OG	1884	Cruise Control Set/Coast/Resume/Accelerate Switch Signal	I	—
20	—	—	—	Not Occupied	—	—

X85 Steering Wheel Air Bag Coil X2 (-UKL) (cont'd)

Pin	Size	Color	Circuit	Function	Terminal Type ID	Option
21	0.35	BK / BU	3894	Instrument Panel Cluster Control Module LIN Bus 1	I	—

X85 Steering Wheel Air Bag Coil X2 (UKL)

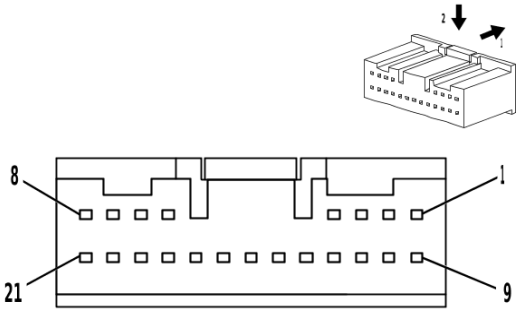

3960237

Connector Part Information

Harness Type: Steering Wheel Wiring Harness
OEM Connector: 13510218
Service Connector: Service by Harness - See Part Catalog
Description: 21-Way F 0.64 Series(YE)

Terminal Part Information

Terminal Type ID	Terminated Lead	Diagnostic Test Probe	Terminal Removal Tool
I	Not required	J-35616-64B (L-BU)	No Tool Required

X85 Steering Wheel Air Bag Coil X2 (UKL)

Pin	Size	Color	Circuit	Function	Terminal Type ID	Option
1	0.35	GN / GY	4627	Image Processing Module LIN Bus 1	I	—
2	0.35	WH / VT	2246	Driver Illumination Lamp 1 Control	I	—
3	0.35	YE / BU	2245	Driver Illumination Lamp 2 Control	I	—
4	0.35	BU / BN	7744	Driver Illumination Lamp Ground	I	—
5	0.5	OG / GN	3023	Steering Wheel Air Bag Stage 2 High Control	I	—
6	0.5	WH / OG	3022	Steering Wheel Air Bag Stage 2 Low Control	I	—
7	0.5	BN / OG	3020	Steering Wheel Air Bag Stage 1 Low Control	I	—
8	0.5	OG / VT	3021	Steering Wheel Air Bag Stage 1 High Control	I	—
9	0.5	VT / GN	2239	Run/Crank Ignition 1 Voltage	I	—
10	0.5	BK	1650	Ground	I	—
11	—	—	—	Not Occupied	—	—
12	0.35	RD / YE	5040	Battery Positive Voltage	I	—
13	0.35	GN / BK	3894	Instrument Panel Cluster Control Module LIN Bus 1	I	—
14	0.35	BK	1650	Ground	I	—
15	0.35	VT / YE	5526	Tap Up/Tap Down Switch Signal	I	—
16	0.35	YE / GY	5883	Steering Wheel Heating Switch Signal	I	—
17	0.35	BN / WH	5884	Steering Wheel Heating Switch LED Control	I	—
18	0.35	GN / WH	3287	Horn Switch Signal	I	—
19	0.35	BN / GN	1884	Cruise Control Set/Coast/Resume/Accelerate Switch Signal	I	—
20	0.35	GY / GN	5737	Distance Sensing Cruise Control Gap Up/Down Switch Signal	I	—

X85 Steering Wheel Air Bag Coil X2 (UKL) (cont'd)

Pin	Size	Color	Circuit	Function	Terminal Type ID	Option
21	0.35	WH / RD	1444	12V Reference	I	—

X92 USB Receptacle (USS)

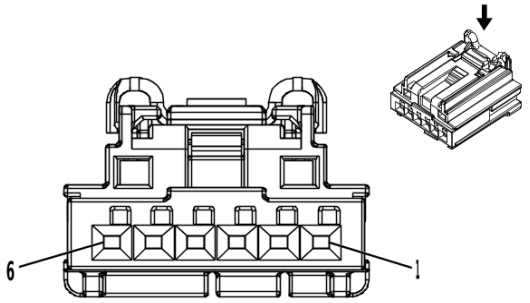

3960313

Connector Part Information

Harness Type: Front Floor Console Wiring Harness
OEM Connector: 13583825
Service Connector: Service by Harness - See Part Catalog
Description: 6-Way F 0.64 Generation Y Series(BK)

Terminal Part Information

Terminal Type ID	Terminated Lead	Diagnostic Test Probe	Terminal Removal Tool
I	Not required	J-35616-64B (L-BU)	No Tool Required

X92 USB Receptacle (USS)

Pin	Size	Color	Circuit	Function	Terminal Type ID	Option
1	0.5	VT	2801	Retained Accessory Power Control	I	USS
2	0.5	YE	6817	LED Backlight Dimming Control 1	I	USS
3	0.5	BK	550	Ground	I	USS
4 - 6	—	—	—	Not Occupied	—	—

X98 Hybrid/EV Battery Charger Receptacle X1

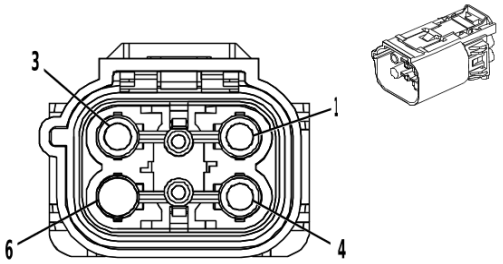

4073910

Connector Part Information

Harness Type: High Voltage Wiring Harness
OEM Connector: 13593533
Service Connector: Service by Harness - See Part Catalog
Description: 6-Way F 1.0, 2.4 HES Sealed(OG)

Terminal Part Information

Terminal Type ID	Terminated Lead	Diagnostic Test Probe	Terminal Removal Tool
I	Not required	No Tool Required	No Tool Required

X98 Hybrid/EV Battery Charger Receptacle X1

Pin	Size	Color	Circuit	Function	Terminal Type ID	Option
1	—	—	—	Not Occupied	—	—
2	—	GY / GN	3954	Control Pilot Signal 1	I	—
3	—	BU	3837	AC Voltage Line 1	I	—
4	—	WH	3838	AC Voltage Neutral Line 2	I	—
5	—	BU / YE	3953	Proximity Status Signal 1	I	—
6	—	—	—	Not Occupied	—	—

X98 Hybrid/EV Battery Charger Receptacle X2

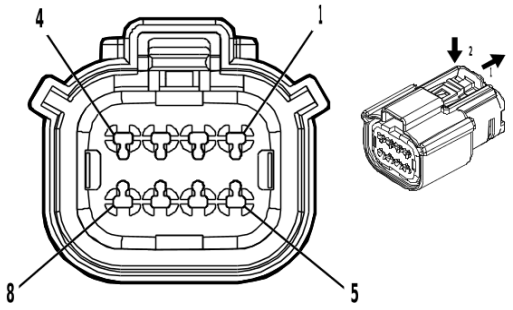

4846407

Connector Part Information

Harness Type: High Voltage Wiring Harness
OEM Connector: 13520069
Service Connector: Service by Harness - See Part Catalog
Description: 8-Way F 1.5 MX Series, Sealed(BK)

Terminal Part Information

Terminal Type ID	Terminated Lead	Diagnostic Test Probe	Terminal Removal Tool
I	Not required	J-35616-2A (GY)	No Tool Required

X98 Hybrid/EV Battery Charger Receptacle X2

Pin	Size	Color	Circuit	Function	Terminal Type ID	Option
1	—	WH / GY	5239	Inside Rearview Mirror Vertical Position Sensor	I	—
2	—	YE / GY	5241	Inside Rearview Mirror Horizontal Position Sensor	I	—
3	—	GN / VT	5243	Inside Rearview Mirror Position Sensor Ground	I	—
4	—	VT / BN	3699	Charge Port Door Open Request Switch Signal	I	—
5	—	GY / BU	213	Charge Port Paddle Temperature Sensor Signal	I	—
6	—	BK / BU	5404	Charge Port Paddle Temperature Sensor Low Reference	I	—
7	—	BN / YE	2231	Charge Port Valve Motor Close Control	I	—
8	—	BU / WH	2230	Charge Port Valve Motor Open Control	I	—

X98 Hybrid/EV Battery Charger Receptacle X4

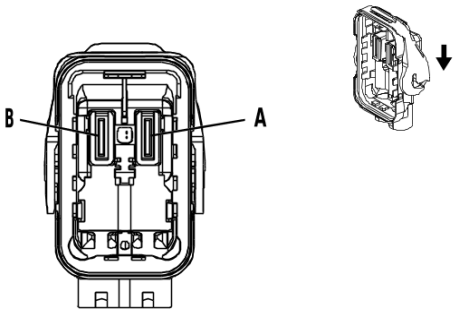

4116299

Connector Part Information

Harness Type: High Voltage Wiring Harness
OEM Connector: 13590343
Service Connector: Service by Harness - See Part Catalog
Description: 2-Way F Power Pack 2000 Series, Sealed

Terminal Part Information

Terminal Type ID	Terminated Lead	Diagnostic Test Probe	Terminal Removal Tool
I	Not required	No Tool Required	No Tool Required

X98 Hybrid/EV Battery Charger Receptacle X4

Pin	Size	Color	Circuit	Function	Terminal Type ID	Option
A	—	OG	4336	B+ (360V DC)	I	—
B	—	OG / BK	4335	360V DC Ground	I	—

Inline Harness Connector End Views

X101 Front Object Alarm Sensor Wiring Harness to Forward Lamp Wiring Harness

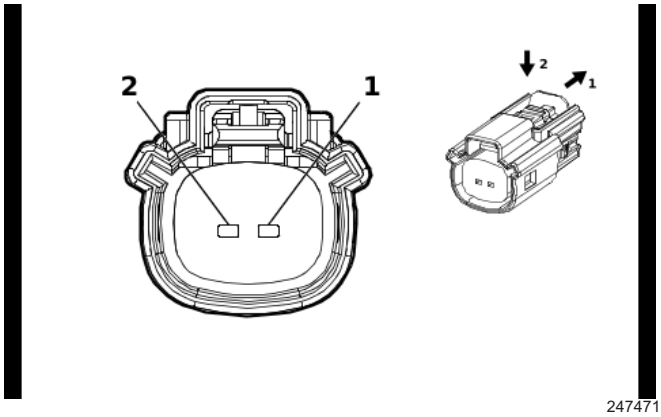

2474713

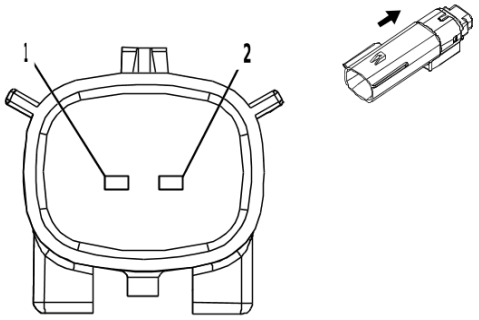

3338703

Connector Part Information

Harness Type: Front Object Alarm Sensor Wiring Harness
OEM Connector: 13583151
Service Connector: Service by Harness - See Part Catalog
Description: 2-Way F 1.5 MX Series, Sealed(BK)

Connector Part Information

Harness Type: Forward Lamp Wiring Harness
OEM Connector: 13526818
Service Connector: 84867146
Description: 2-Way M 1.5 MX Series, Sealed(BK)

Terminal Part Information

Terminal Type ID	Terminated Lead	Diagnostic Test Probe	Terminal Removal Tool
I	Not required	J-35616-14 (GN)	No Tool Required
II	Not required	J-35616-3 (GY)	No Tool Required

X101 Front Object Alarm Sensor Wiring Harness to Forward Lamp Wiring Harness

Pin	Size	Color	Circuit	Terminal Type ID	Option	Function	Pin	Size	Color	Circuit	Terminal Type ID	Option
1	0.5	BK / BU	61	I	—	Ambient Air Temperature Sensor Low Reference	1	0.5	BK / BU	61	II	—
2	0.5	BU / GY	636	I	—	Ambient Air Temperature Sensor Sig-nal	2	0.5	BU / GY	636	II	—

X103 Forward Lamp Wiring Harness to Front Object Alarm Sensor Wiring Harness (UV2)

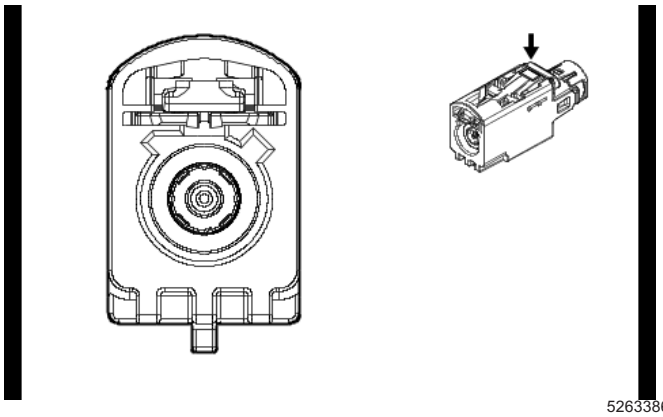

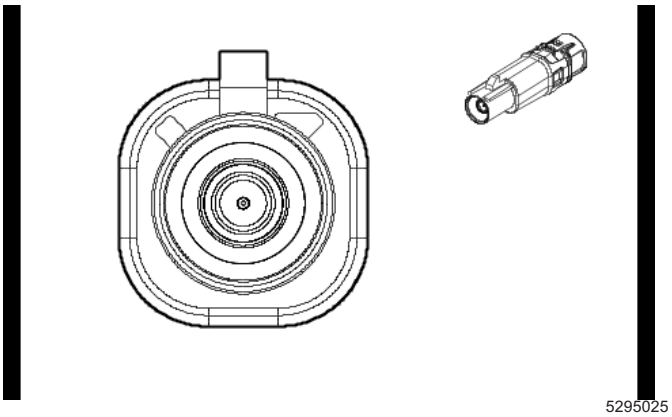

Connector Part Information

Harness Type: Forward Lamp Wiring Harness COAX

OEM Connector: 2-2304242-1

Service Connector: Service by Cable Assembly — See Part Catalog

Description: 1-Way F Coax Type(BK)

Connector Part Information

Harness Type: Front Object Alarm Sensor Wiring Harness COAX

OEM Connector: 2304240-1

Service Connector: Service by Cable Assembly — See Part Catalog

Description: 1-Way M Coax Type(BK)

Terminal Part Information

Terminal Type ID	Terminated Lead	Diagnostic Test Probe	Terminal Removal Tool
I	Not required	No Tool Required	No Tool Required

X103 Forward Lamp Wiring Harness to Front Object Alarm Sensor Wiring Harness (UV2)

Pin	Size	Color	Circuit	Terminal Type ID	Option	Function	Pin	Size	Color	Circuit	Terminal Type ID	Option
—	—	Coax Cable	—	I	—	Front Vision Camera 1 Coaxial Video Signal	—	—	Coax Cable	—	I	—

X105 Body Wiring Harness to Engine Wiring Harness

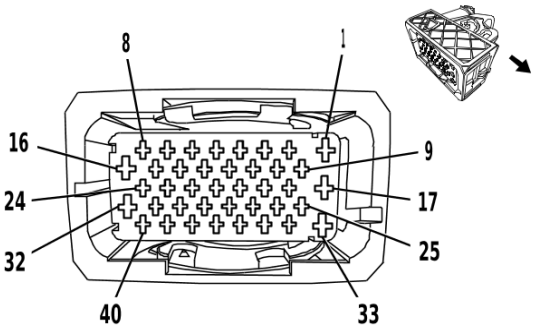

2220548

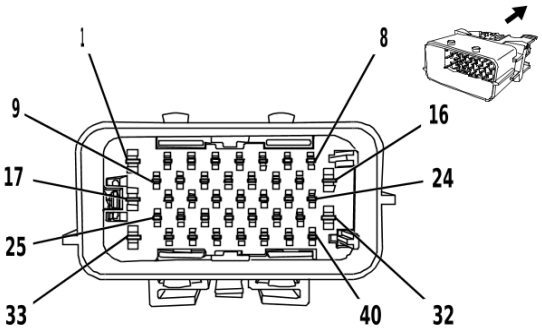

2220545

Connector Part Information

Harness Type: Body Wiring Harness

OEM Connector: 13589782

Service Connector: 13576549

Description: 40-Way F 1.5 DSQ, 2.8 ATS Series, Sealed(BK)

Connector Part Information

Harness Type: Engine Wiring Harness

OEM Connector: 13506109

Service Connector: 13576551

Description: 40-Way M 1.5 DSQ, 2.8 ATS Series, Sealed(BK)

Terminal Part Information

Terminal Type ID	Terminated Lead	Diagnostic Test Probe	Terminal Removal Tool
I	19368143	J-35616-14 (GN)	J-38125-215A
II	19368136	J-35616-3 (GY)	EL-38125-560A

X105 Body Wiring Harness to Engine Wiring Harness

Pin	Size	Color	Circuit	Terminal Type ID	Option	Function	Pin	Size	Color	Circuit	Terminal Type ID	Option
1	—	—	—	—	—	Not Occupied	1	—	—	—	—	—
2	0.5	BU	204	I	—	A/C Low Side Pressure Sensor Signal	2	0.5	BU	204	II	—
3	0.5	BU / RD	474	I	—	5V Reference	3	0.5	BU / RD	474	II	—
4	0.5	BK / GN	3800	I	—	A/C Refrigerant Sensor Low Reference	4	0.5	BK / GN	3800	II	—
5	0.5	RD / WH	2740	I	—	Battery Positive Voltage	5	0.5	RD / WH	2740	II	—
6 - 7	—	—	—	—	—	Not Occupied	6 - 7	—	—	—	—	—
8	0.5	RD / YE	240	I	—	Battery Positive Voltage	8	0.5	RD / YE	240	II	—
9	0.5	GY / VT	5595	I	—	High Voltage System Interlock Signal 2	9	0.5	GY / VT	5595	II	—
10	0.5	BU / BK	7493	I	—	High Speed GMLAN Serial Data [+] 3	10	0.5	BU / BK	7493	II	—
11	—	—	—	—	—	Not Occupied	11	—	—	—	—	—

X105 Body Wiring Harness to Engine Wiring Harness (cont'd)

Pin	Size	Color	Circuit	Terminal Type ID	Option	Function	Pin	Size	Color	Circuit	Terminal Type ID	Option
12	0.5	BU	2500	I	—	High Speed GMLAN Serial Data [+] 1	12	0.5	BU	2500	II	—
13	—	—	—	—	—	Not Occupied	13	—	—	—	—	—
14	0.5	BU / YE	6105	I	—	High Speed GMLAN Serial Data [+] 2	14	0.5	BU / YE	6105	II	—
15	0.5	BU / WH	3977	I	—	Accessory Wake-Up Serial Data 2	15	0.5	BU / WH	3977	II	—
16 - 17	—	—	—	—	—	Not Occupied	16 - 17	—	—	—	—	—
18	0.5	BK / VT	5596	I	—	High Voltage System Interlock Low Reference 2	18	0.5	BK / VT	5596	II	—
19	0.5	WH	7494	I	—	High Speed GMLAN Serial Data [-] 3	19	0.5	WH	7494	II	—
20	0.5	VT / BK	1639	I	UKL	Run/Crank Ignition 1 Voltage	20	0.5	VT / BK	1639	II	—
21	0.5	WH	2501	I	—	High Speed GMLAN Serial Data [-] 1	21	0.5	WH	2501	II	—
22	—	—	—	—	—	Not Occupied	22	—	—	—	—	—
23	0.5	WH	6106	I	—	High Speed GMLAN Serial Data [-] 2	23	0.5	WH	6106	II	—
24	0.5	RD / VT	340	I	—	Battery Positive Voltage	24	0.5	RD / VT	340	II	—
25	0.5	VT	4334	I	—	Hybrid/EV Battery Coolant Heater Control	25	0.5	VT	4334	II	—
26	0.5	BK / BN	4332	I	—	High Power Contactor Signal Conditioner Low Reference	26	0.5	BK / BN	4332	II	—
27	0.5	BU / RD	4331	I	—	High Power Contactor Signal Conditioner Voltage Reference	27	0.5	BU / RD	4331	II	—
28	0.5	BU / YE	3646	I	—	High Voltage Onboard Charging Enable Signal	28	0.5	BU / YE	3646	II	—
29	0.5	YE / GY	3645	I	—	High Voltage Onboard Charging Control	29	0.5	YE / GY	3645	II	—

X105 Body Wiring Harness to Engine Wiring Harness (cont'd)

Pin	Size	Color	Circuit	Terminal Type ID	Option	Function	Pin	Size	Color	Circuit	Terminal Type ID	Option
30	0.5	VT / WH	3643	I	—	High Voltage Onboard Charging DC Voltage Sense Signal	30	0.5	VT / WH	3643	II	—
31	0.5	GN / GY	3644	I	—	High Voltage Onboard Charging AC Voltage Sense Signal	31	0.5	GN / GY	3644	II	—
32 - 33	—	—	—	—	—	Not Occupied	32 - 33	—	—	—	—	—
34	0.5	GY	4329	I	—	High Power Contactor Ground Voltage Sense Signal	34	0.5	GY	4329	II	—
35	0.5	GN	4330	I	—	High Power Contactor Positive Voltage Sense Signal	35	0.5	GN	4330	II	—
36	0.5	YE	4327	I	—	High Power Contactor Positive Relay Control	36	0.5	YE	4327	II	—
37	0.5	BU / GY	4326	I	—	High Power Contactor Ground Relay Control	37	0.5	BU / GY	4326	II	—
38	0.5	YE / BK	3000	I	—	Coolant Temperature Sensor 2 Signal	38	0.5	YE / BK	3000	II	—
39	0.5	BK / BU	6813	I	—	Coolant Temperature Sensor 2 Low Reference	39	0.5	BK / BU	6813	II	—
40	0.75	WH	2368	I	—	Cooling Fan Control Signal	40	0.75	WH	2368	II	—

X106 Body Wiring Harness to Engine Wiring Harness

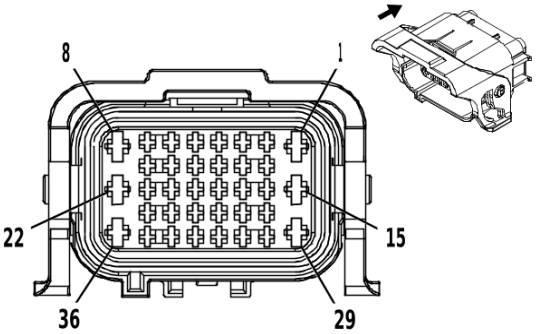

1869605

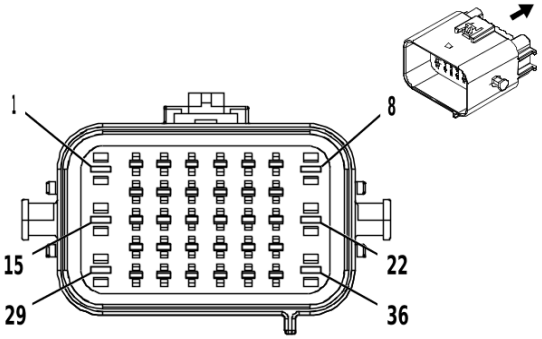

1869606

Connector Part Information

Harness Type: Body Wiring Harness

OEM Connector: 1743059-2

Service Connector: 13580088

Description: 36-Way F Micro-Timer II, Junior Power Timer Series, Sealed(BK)

Connector Part Information

Harness Type: Engine Wiring Harness

OEM Connector: 1743062-2

Service Connector: 13580089

Description: 36-Way M Micro-Timer II, Junior Power Timer Hybrid Series, Sealed(BK)

Terminal Part Information

Terminal Type ID	Terminated Lead	Diagnostic Test Probe	Terminal Removal Tool
I	19368953	J-35616-33 (YE)	EL-38125-560A
II	13576348	J-35616-34 (YE)	EL-38125-560A

X106 Body Wiring Harness to Engine Wiring Harness

Pin	Size	Color	Circuit	Terminal Type ID	Option	Function	Pin	Size	Color	Circuit	Terminal Type ID	Option
1	—	—	—	—	—	Not Occupied	1	—	—	—	—	—
2	0.5	WH / GN	3794	I	—	Hybrid/EV Battery Pack Coolant Pump 1 Control	2	0.5	WH / GN	3794	II	—
3	0.5	BU / VT	3795	I	—	Hybrid/EV Battery Pack Coolant Pump 1 Control	3	0.5	BU / VT	3795	II	—
4	0.5	YE / GY	3796	I	—	Hybrid/EV Battery Pack Coolant Pump 1 Feedback Signal	4	0.5	YE / GY	3796	II	—
5	0.5	VT / GN	839	I	UKL	Run/Crank Ignition 1 Voltage	5	0.5	VT / GN	839	II	—
6	0.5	WH / VT	2246	I	—	Driver Illumination Lamp 1 Control	6	—	—	—	—	—
7	0.5	BK	650	I	—	Ground	7	—	—	—	—	—
8	—	—	—	—	—	Not Occupied	8	—	—	—	—	—

X106 Body Wiring Harness to Engine Wiring Harness (cont'd)

Pin	Size	Color	Circuit	Terminal Type ID	Option	Function	Pin	Size	Color	Circuit	Terminal Type ID	Option
9	0.5	WH / RD	5381	I	—	Brake Position Sensor 5V Reference	9	0.5	WH / RD	5381	II	—
10	0.5	WH / GN	5380	I	—	Brake Position Sensor Signal	10	0.5	WH / GN	5380	II	—
11	0.5	BK / YE	5382	I	—	Brake Position Sensor Low Reference	11	0.5	BK / YE	5382	II	—
12	0.5	WH / BU	6311	I	—	Cruise/ETC/ TCC Brake Signal	12	0.5	WH / BU	6311	II	—
13	0.5	WH	4499	I	—	High Speed GMLAN Serial Data [-] 7	13	0.5	WH	4499	II	—
14	0.5	BU / BN	4498	I	—	High Speed GMLAN Serial Data [+] 7	14	0.5	BU / BN	4498	II	—
15	—	—	—	—	—	Not Occupied	15	—	—	—	—	—
16	0.5	YE / WH	1161	I	—	Accelerator Pedal Position Signal 1	16	0.5	YE / WH	1161	II	—
17	0.5	GN / WH	1162	I	—	Accelerator Pedal Position Signal 2	17	0.5	GN / WH	1162	II	—
18	0.5	WH / RD	1164	I	—	Accelerator Pedal Position 5V Reference 1	18	0.5	WH / RD	1164	II	—
19	0.5	BK / BU	1271	I	—	Accelerator Pedal Position Low Reference 1	19	0.5	BK / BU	1271	II	—
20	0.5	BK / VT	1272	I	—	Accelerator Pedal Position Low Reference 2	20	0.5	BK / VT	1272	II	—
21	0.5	BN / RD	1274	I	—	Accelerator Pedal Position 5V Reference 2	21	0.5	BN / RD	1274	II	—
22	—	—	—	—	—	Not Occupied	22	—	—	—	—	—
23	0.5	BN / BU	3788	I	—	Electric Coolant Motor Control	23	0.5	BN / BU	3788	II	—
24	0.5	YE / GN	3789	I	—	Electric Coolant Motor Control	24	0.5	YE / GN	3789	II	—
25	0.5	VT / BU	3790	I	—	Electric Coolant Motor Feedback Signal	25	0.5	VT / BU	3790	II	—
26	0.35	VT / GN	4320	I	—	Powertrain Sensor Bus Enable	26	0.5	VT / GN	4320	II	—

X106 Body Wiring Harness to Engine Wiring Harness (cont'd)

Pin	Size	Color	Circuit	Terminal Type ID	Option	Function	Pin	Size	Color	Circuit	Terminal Type ID	Option
27	0.5	WH	6106	I	—	High Speed GMLAN Serial Data [-] 2	27	0.5	WH	6106	II	—
28	0.5	BU / YE	6105	I	—	High Speed GMLAN Serial Data [+] 2	28	0.5	BU / YE	6105	II	—
29	—	—	—	—	—	Not Occupied	29	—	—	—	—	—
30	0.5	GY / GN	4338	I	—	Pedestrian Alert Sound Speaker [+] Control	30	0.5	GY / GN	4338	II	—
31	0.5	VT / BN	4337	I	—	Pedestrian Alert Sound Speaker [-] Control	31	0.5	VT / BN	4337	II	—
32	0.5	BU / VT	2364	I	—	Cooling Fan Speed Signal	32	0.5	BU / VT	2364	II	—
33 - 36	—	—	—	—	—	Not Occupied	33 - 36	—	—	—	—	—

X107 Body Wiring Harness to Forward Lamp Wiring Harness

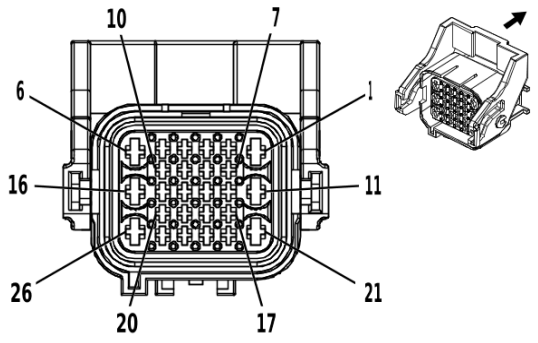

3814542

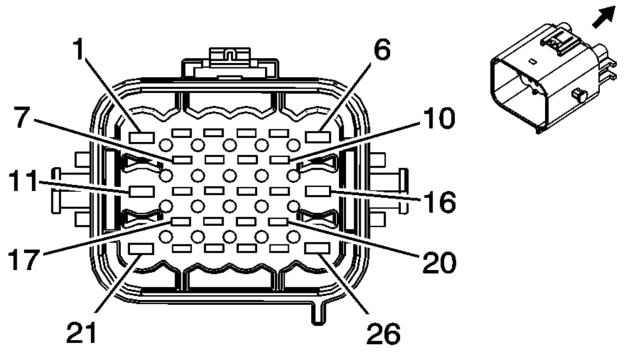

2969696

Connector Part Information

Harness Type: Body Wiring Harness

OEM Connector: 1897009-2

Service Connector: 13579377

Description: 26-Way F 1.5 Micro-Timer 2, 2.8 Junior Power Timer Series, Sealed(BK)

Connector Part Information

Harness Type: Forward Lamp Wiring Harness

OEM Connector: 1897013-2

Service Connector: 13579378

Description: 26-Way M Micro-Timer II, Junior Power Timer Series, Sealed(BK)

Terminal Part Information

Terminal Type ID	Terminated Lead	Diagnostic Test Probe	Terminal Removal Tool
I	13578837	J-35616-35 (VT)	J-38125-36
II	19368953	J-35616-33 (YE)	EL-38125-560A
III	13576348	J-35616-34 (YE)	EL-38125-560A
IV	13578827	J-35616-5 (PU)	J-38125-36

X107 Body Wiring Harness to Forward Lamp Wiring Harness

Pin	Size	Color	Circuit	Terminal Type ID	Option	Function	Pin	Size	Color	Circuit	Terminal Type ID	Option
1	—	—	—	—	—	Not Occupied	1	—	—	—	—	—
2	0.5	BU / GY	636	II	—	Ambient Air Temperature Sensor Signal	2	0.5	BU / GY	636	III	—
3	0.5	WH	4715	II	UKL	FlexRay Serial Data [-] 4	3	0.5	WH	4715	III	UKL
4	0.5	GN / BN	4714	II	UKL	FlexRay Serial Data [+] 4	4	0.5	GN / BN	4714	III	UKL
5	0.5	BK / BU	61	II	—	Ambient Air Temperature Sensor Low Reference	5	0.5	BK / BU	61	III	—
6	—	—	—	—	—	Not Occupied	6	—	—	—	—	—
7	0.5	GY / BN	10749	II	—	Sequential Turn Lamp Enable Signal	7	0.5	GY / BN	10749	III	—
8	0.5	GY / WH	7064	II	—	Left Front Wheel Speed Sensor Control	8	0.5	GY / WH	7064	III	—

X107 Body Wiring Harness to Forward Lamp Wiring Harness (cont'd)

Pin	Size	Color	Circuit	Terminal Type ID	Option	Function	Pin	Size	Color	Circuit	Terminal Type ID	Option
9	0.5	GY	830	II	—	Left Front Wheel Speed Sensor Signal	9	0.5	GY	830	III	—
10	—	—	—	—	—	Not Occupied	10	—	—	—	—	—
11	0.5	RD / BN	4940	I	—	Battery Positive Voltage	11	0.5	RD / BN	4940	IV	—
12	0.5	WH	711	II	—	Left Headlamp High Beam Control	12	0.5	WH	711	III	—
13	0.5	YE	712	II	—	Left Headlamp Low Beam Control	13	0.5	YE	712	III	—
14	0.5	BU / BN	7539	II	—	Right Front DRL Control	14	0.5	BU / BN	7539	III	—
15	—	—	—	—	—	Not Occupied	15	—	—	—	—	—
16	0.5	RD / GN	5140	I	—	Battery Positive Voltage	16	0.5	RD / GN	5140	IV	—
17	0.35	VT	185	II	—	Low Washer Fluid Indicator Control	17	0.35	VT	185	III	—
18	0.5	GY / BU	7538	II	—	Left Front DRL Control	18	0.5	GY / BU	7538	III	—
19	0.5	YE	312	II	—	Right Headlamp Low Beam Control	19	0.5	YE	312	III	—
20	0.35	WH / VT	860	II	—	Windshield Wiper Switch High Signal	20	0.35	WH / VT	860	III	—
21	—	—	—	—	—	Not Occupied	21	—	—	—	—	—
22	0.5	YE	4063	II	—	Hood Status A Signal	22	0.5	YE	4063	III	—
23	0.5	BN / GN	4064	II	—	Hood Status B Signal	23	0.5	BN / GN	4064	III	—
24	0.5	BK / GN	476	II	—	Sensor Low Reference	24	0.5	BK / GN	476	III	—
25	0.5	BU / YE	68	II	—	Low Coolant Level Indicator Control	25	0.5	BU / YE	68	III	—
26	—	—	—	—	—	Not Occupied	26	—	—	—	—	—

X108 Body Wiring Harness to Forward Lamp Wiring Harness (-UKL)

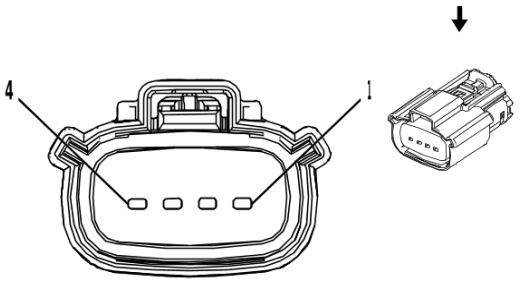

2474747

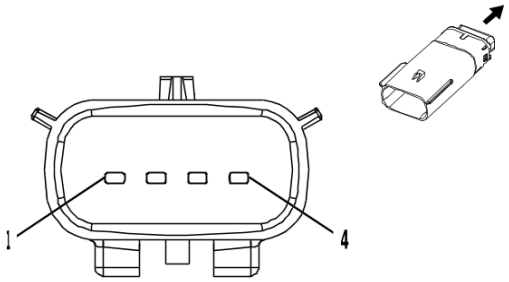

2917338

Connector Part Information

Harness Type: Body Wiring Harness
OEM Connector: 13503502
Service Connector: 19371211
Description: 4-Way F 1.5 MX Series, Sealed(BK)

Connector Part Information

Harness Type: Forward Lamp Wiring Harness
OEM Connector: 13526827
Service Connector: 19330690
Description: 4-Way M 1.5 Series, Sealed(BK)

Terminal Part Information

Terminal Type ID	Terminated Lead	Diagnostic Test Probe	Terminal Removal Tool
I	Not required	J-35616-14 (GN)	No Tool Required
II	Not required	J-35616-3 (GY)	No Tool Required

X108 Body Wiring Harness to Forward Lamp Wiring Harness (-UKL)

Pin	Size	Color	Circuit	Terminal Type ID	Option	Function	Pin	Size	Color	Circuit	Terminal Type ID	Option
1	0.5	OG / YE	354	I	- UKL	Left Front Impact Discriminating Sensor Signal	1	0.5	OG / YE	354	II	- UKL
2	0.5	BK / OG	5045	I	- UKL	Left Front Impact Discriminating Sensor Low Reference	2	0.5	BK / OG	5045	II	- UKL
3	0.5	OG / GN	1409	I	- UKL	Right Front Impact Discriminating Sensor Signal	3	0.5	OG / GN	1409	II	- UKL
4	0.5	BK / OG	5600	I	- UKL	Right Front Impact Discriminating Sensor Low Reference	4	0.5	BK / OG	5600	II	- UKL

X108 Body Wiring Harness to Forward Lamp Wiring Harness (UKL)

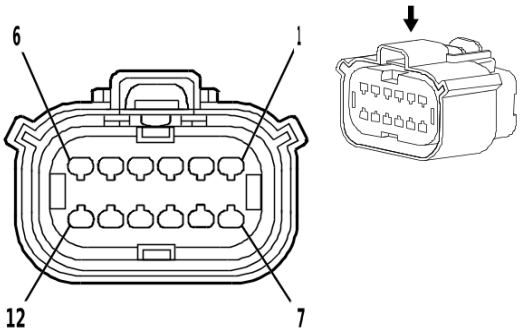

1825165

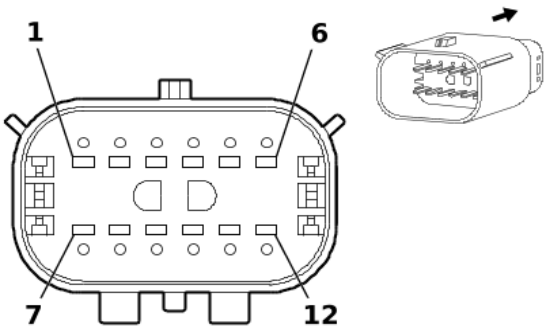

1825167

Connector Part Information

Harness Type: Body Wiring Harness
OEM Connector: 13503526
Service Connector: 19352907
Description: 12-Way F 1.5 Series, Sealed(BK)

Connector Part Information

Harness Type: Forward Lamp Wiring Harness
OEM Connector: 13520579
Service Connector: 19369242
Description: 12-Way M 1.5 MX Series, Sealed(BK)

Terminal Part Information

Terminal Type ID	Terminated Lead	Diagnostic Test Probe	Terminal Removal Tool
I	19368973	J-35616-2A (GY)	J-38125-217
II	19119842	J-35616-3 (GY)	J-38125-217

X108 Body Wiring Harness to Forward Lamp Wiring Harness (UKL)

Pin	Size	Color	Circuit	Terminal Type ID	Option	Function	Pin	Size	Color	Circuit	Terminal Type ID	Option
1	—	—	—	—	—	Not Occupied	1	—	—	—	—	—
2	0.5	OG / YE	354	I	UKL	Left Front Impact Discriminating Sensor Signal	2	0.5	OG / YE	354	II	UKL
3	0.5	BK / OG	5045	I	UKL	Left Front Impact Discriminating Sensor Low Reference	3	0.5	BK / OG	5045	II	UKL
4	0.5	BK / OG	5600	I	UKL	Right Front Impact Discriminating Sensor Low Reference	4	0.5	BK / OG	5600	II	UKL
5	0.5	OG / GN	1409	I	UKL	Right Front Impact Discriminating Sensor Signal	5	0.5	OG / GN	1409	II	UKL
6	—	—	—	—	—	Not Occupied	6	—	—	—	—	—
7	0.5	GY / BU	2164	I	UKL	FlexRay Communication Enable Signal	7	0.5	GY / BU	2164	II	UKL

X108 Body Wiring Harness to Forward Lamp Wiring Harness (UKL) (cont'd)

Pin	Size	Color	Circuit	Terminal Type ID	Option	Function	Pin	Size	Color	Circuit	Terminal Type ID	Option
8	0.5	WH	4717	I	UKL	FlexRay Serial Data [-] 5	8	0.5	WH	4717	II	UKL
9	0.5	GN / BU	4716	I	UKL	FlexRay Serial Data [+] 5	9	0.5	GN / BU	4716	II	UKL
10	0.5	WH	3811	I	UKL	High Speed GMLAN Serial Data [-] 4	10	0.5	WH	3811	II	UKL
11	0.5	BU / VT	3813	I	UKL	High Speed GMLAN Serial Data [+] 4	11	0.5	BU / VT	3813	II	UKL
12	0.5	BN / VT	3809	I	UKL	Front Object Sensor 1 Reference Voltage	12	0.5	BN / VT	3809	II	UKL

X110 Forward Lamp Wiring Harness to Left Front Headlamp

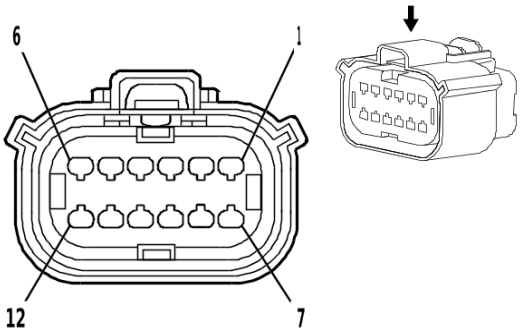

1825165

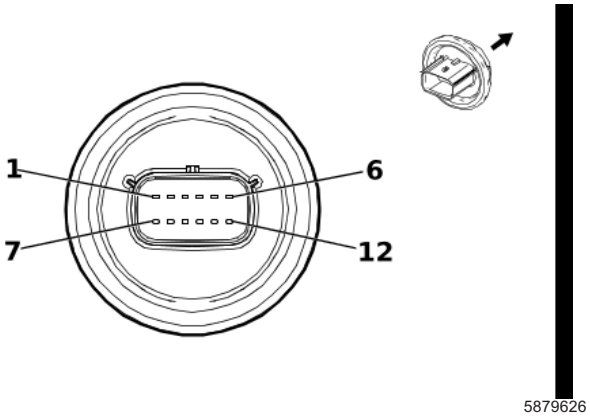

5879626

Connector Part Information

Harness Type: Forward Lamp Wiring Harness
OEM Connector: 13503526
Service Connector: 19352907
Description: 12-Way F 1.5 Series, Sealed(BK)

Connector Part Information

Harness Type: Left Front Headlamp
OEM Connector: 0-A1000063-2
Service Connector: Service by Harness - See Part Catalog
Description: 12-Way M 1.5 MX Series, Sealed(BK)

Terminal Part Information

Terminal Type ID	Terminated Lead	Diagnostic Test Probe	Terminal Removal Tool
I	19368973	J-35616-2A (GY)	J-38125-217
II	Not required	J-35616-3 (GY)	No Tool Required

X110 Forward Lamp Wiring Harness to Left Front Headlamp

Pin	Size	Color	Circuit	Terminal Type ID	Option	Function	Pin	Size	Color	Circuit	Terminal Type ID	Option
1	0.5	YE	712	I	—	Left Head-lamp Low Beam Con-trol	1	0.35	YE	712	II	—
2	0.5	WH	711	I	—	Left Head-lamp High Beam Con-trol	2	0.35	WH	711	II	—
3	—	—	—	—	—	Not Occu-pied	3	—	—	—	—	—
4	0.5	GY / BU	7538	I	—	Left Front DRL Control	4	0.35	GY / BU	7538	II	—
5	0.5	VT / GY	709	I	—	Left Park Lamp Control	5	0.35	VT / GY	709	II	—
6	0.75	BU / WH	1314	I	—	Left Front Turn Signal Lamp Control	6	0.35	WH / WH	1314	II	—
7	0.5	BK	50	I	—	Ground	7	1.5	BK	50	II	—
8	0.75	VT / BK	6568	I	—	Front Turn Signal Lamp Feedback Signal	8	0.35	VT / BK	6568	II	—
9 - 10	—	—	—	—	—	Not Occu-pied	9 - 10	—	—	—	—	—
11	0.5	RD / BN	4940	I	—	Battery Posi-tive Voltage	11	1.5	RD / BN	4940	II	—

X110 Forward Lamp Wiring Harness to Left Front Headlamp (cont'd)

Pin	Size	Color	Circuit	Terminal Type ID	Option	Function	Pin	Size	Color	Circuit	Terminal Type ID	Option
12	0.5	GY / BN	10749	I	—	Sequential Turn Lamp Enable Signal	12	0.35	GN / BN	10749	II	—

X116 Forward Lamp Wiring Harness to Body Wiring Harness (UV2)

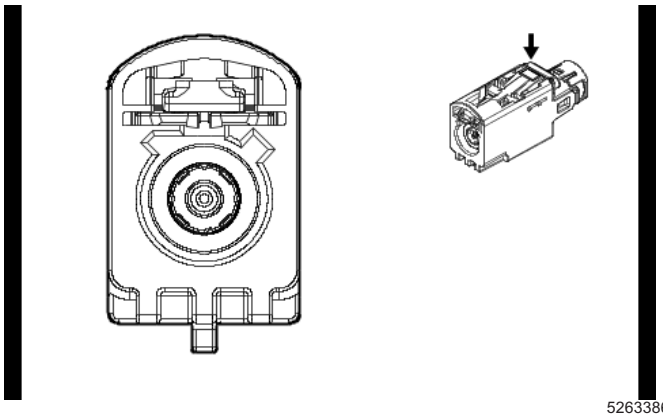

Connector Part Information

Harness Type: Forward Lamp Wiring Harness COAX

OEM Connector: 13517364

Service Connector: Service by Cable Assembly — See Part Catalog

Description: 1-Way F Coax Type(BK)

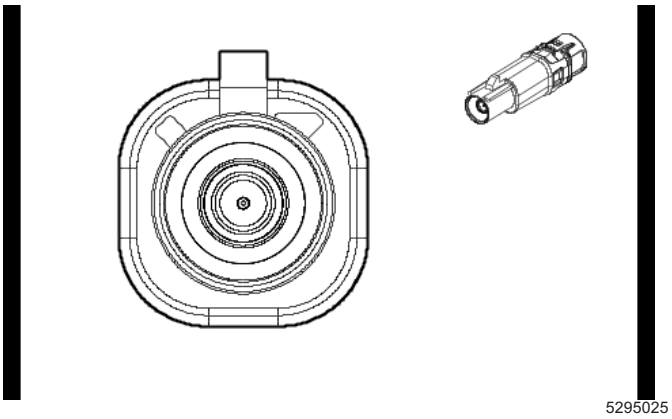

Connector Part Information

Harness Type: Body Wiring Harness COAX

OEM Connector: 2304240-1

Service Connector: Service by Cable Assembly — See Part Catalog

Description: 1-Way M Coax Type(BK)

Terminal Part Information

Terminal Type ID	Terminated Lead	Diagnostic Test Probe	Terminal Removal Tool
I	Not required	No Tool Required	No Tool Required

X116 Forward Lamp Wiring Harness to Body Wiring Harness (UV2)

Pin	Size	Color	Circuit	Terminal Type ID	Option	Function	Pin	Size	Color	Circuit	Terminal Type ID	Option
—	—	Coax Cable	—	I	—	Front Vision Camera 1 Coaxial Vid-eo Signal	—	—	Coax Cable	—	I	—

X117 High Voltage Wiring Harness to Body Wiring Harness

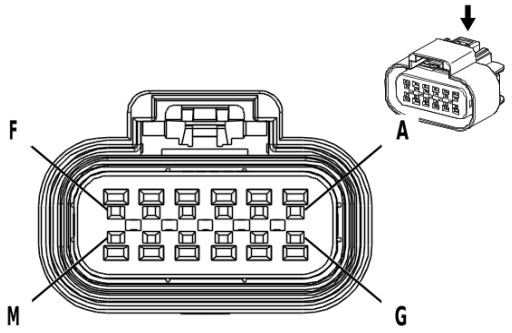

2180214

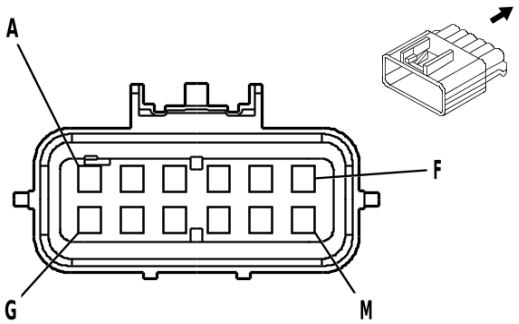

831369

Connector Part Information

Harness Type: High Voltage Wiring Harness
OEM Connector: 19153740
Service Connector: Service by Harness - See Part Catalog
Description: 12-Way F 150 GT Series, Sealed(BK)

Connector Part Information

Harness Type: Body Wiring Harness
OEM Connector: 88986190
Service Connector: 88986252
Description: 12-Way M 150 GT Series, Sealed(BK)

Terminal Part Information

Terminal Type ID	Terminated Lead	Diagnostic Test Probe	Terminal Removal Tool
I	Not required	No Tool Required	No Tool Required
II	19369873	J-35616-3 (GY)	J-38125-215A

X117 High Voltage Wiring Harness to Body Wiring Harness

Pin	Size	Color	Circuit	Terminal Type ID	Option	Function	Pin	Size	Color	Circuit	Terminal Type ID	Option
A	0.5	WH / GY	5239	I	—	Inside Rear-view Mirror Vertical Position Sensor	A	0.5	WH / GY	5239	II	—
B	0.5	YE / GY	5241	I	—	Inside Rear-view Mirror Horizontal Position Sensor	B	0.5	YE / GY	5241	II	—
C	0.5	GN / VT	5243	I	—	Inside Rear-view Mirror Position Sensor Ground	C	0.5	GN / VT	5243	II	—
D	0.5	VT / BN	3699	I	—	Charge Port Door Open Request Switch Signal	D	0.5	VT / BN	3699	II	—
E	0.5	GY / BU	213	I	—	Charge Port Paddle Temperature Sensor Signal	E	0.5	GY / BU	213	II	—
F	0.5	BK / BU	5404	I	—	Charge Port Paddle Temperature Sensor Low Reference	F	0.5	BK / BU	5404	II	—

X117 High Voltage Wiring Harness to Body Wiring Harness (cont'd)

Pin	Size	Color	Circuit	Terminal Type ID	Option	Function	Pin	Size	Color	Circuit	Terminal Type ID	Option
G	0.5	BN / YE	2231	I	—	Charge Port Valve Motor Close Control	G	0.5	BN / YE	2231	II	—
H	0.5	BU / WH	2230	I	—	Charge Port Valve Motor Open Control	H	0.5	BU / WH	2230	II	—
J	0.75	BU / YE	3953	I	—	Proximity Status Signal 1	J	0.75	BU / YE	3953	II	—
K	0.75	GY / GN	3954	I	—	Control Pilot Signal 1	K	0.75	GY / GN	3954	II	—
L	0.5	WH / BU	3697	I	—	Charge Port Door Position Sensor Signal	L	0.5	WH / BU	3697	II	—
M	0.5	BK	550	I	—	Ground	M	0.5	BK	550	II	—

X120 Forward Lamp Wiring Harness to Right Front Headlamp

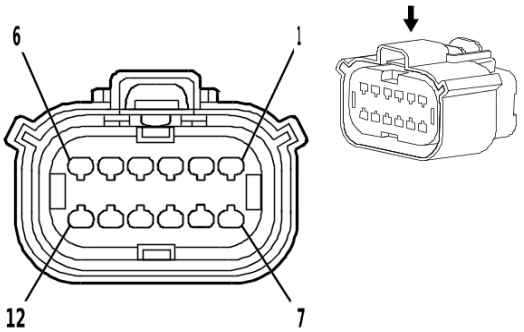

1825165

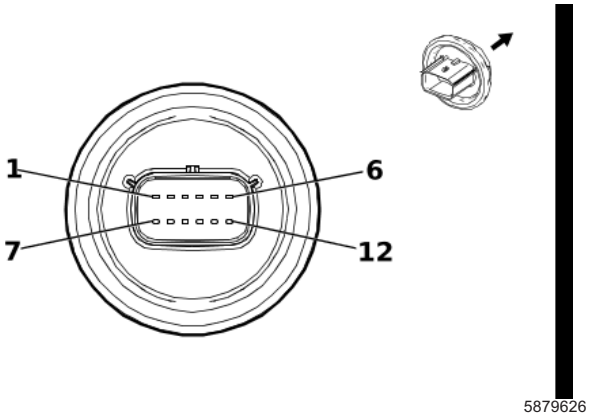

5879626

Connector Part Information

Harness Type: Forward Lamp Wiring Harness
OEM Connector: 13503526
Service Connector: 19352907
Description: 12-Way F 1.5 Series, Sealed(BK)

Connector Part Information

Harness Type: Right Front Headlamp
OEM Connector: 0-A1000063-2
Service Connector: Service by Harness - See Part Catalog
Description: 12-Way M 1.5 MX Series, Sealed(BK)

Terminal Part Information

Terminal Type ID	Terminated Lead	Diagnostic Test Probe	Terminal Removal Tool
I	19368973	J-35616-2A (GY)	J-38125-217
II	Not required	J-35616-3 (GY)	No Tool Required

X120 Forward Lamp Wiring Harness to Right Front Headlamp

Pin	Size	Color	Circuit	Terminal Type ID	Option	Function	Pin	Size	Color	Circuit	Terminal Type ID	Option
1	0.5	YE	312	I	—	Right Head-lamp Low Beam Con-trol	1	0.35	YE	312	II	—
2	0.5	WH	311	I	—	Right Head-lamp High Beam Con-trol	2	0.35	WH	311	II	—
3	—	—	—	—	—	Not Occu-pied	3	—	—	—	—	—
4	0.5	BU / BN	7539	I	—	Right Front DRL Control	4	0.35	GY / BU	7539	II	—
5	0.5	GY / BN	309	I	—	Right Park Lamp Control	5	0.35	VT / GY	309	II	—
6	0.75	GN / VT	1315	I	—	Right Front Turn Signal Lamp Control	6	0.35	WH / VT	1315	II	—
7	0.5	BK	250	I	—	Ground	7	1.5	BK	250	II	—
8	0.75	WH / YE	7545	I	—	Right Front Turn Signal Lamp Feed-back Signal	8	0.35	VT / YE	7545	II	—
9 - 10	—	—	—	—	—	Not Occu-pied	9 - 10	—	—	—	—	—
11	0.5	RD / GN	5140	I	—	Battery Posi-tive Voltage	11	1.5	RD / GN	5140	II	—

X120 Forward Lamp Wiring Harness to Right Front Headlamp (cont'd)

Pin	Size	Color	Circuit	Terminal Type ID	Option	Function	Pin	Size	Color	Circuit	Terminal Type ID	Option
12	0.5	GY / BN	10749	I	—	Sequential Turn Lamp Enable Signal	12	0.35	GN / BN	10749	II	—

X200 Instrument Panel Wiring Harness to Body Wiring Harness

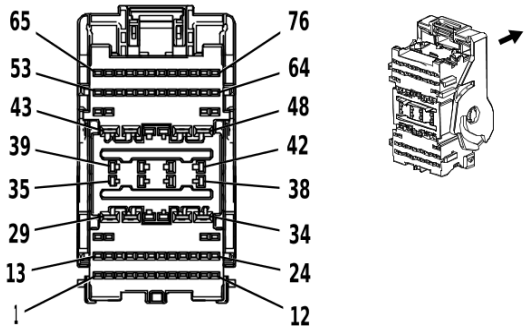

3960183

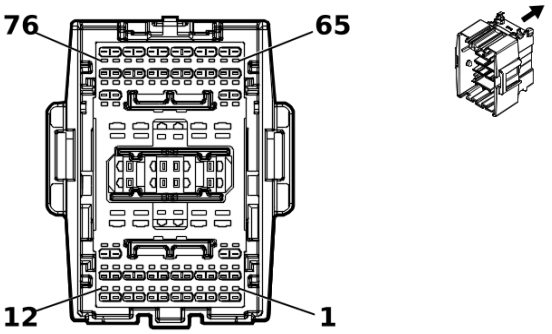

5277492

Connector Part Information

Harness Type: Instrument Panel Wiring Harness
OEM Connector: 6098-8758
Service Connector: 84581287
Description: 76-Way F 1.2, 1.5, 2.8 YESC Series(BK)

Connector Part Information

Harness Type: Body Wiring Harness
OEM Connector: 13526160
Service Connector: 13526160
Description: 76-Way M 1.2 MCON-CB, 1.5, 2.8 YESC Series(BK)

Terminal Part Information

Terminal Type ID	Terminated Lead	Diagnostic Test Probe	Terminal Removal Tool
I	13575708	J-35616-2A (GY)	J-38125-11A
II	13587516	J-35616-4A (PU)	J-38125-11A
III	84962854	J-35616-12 (BU)	J-38125-215A
IV	84616651	J-35616-13 (BU)	J-38125-215A
V	84888592	J-35616-5 (PU)	J-38125-11A
VI	85119177	J-35616-3 (GY)	J-38125-553

X200 Instrument Panel Wiring Harness to Body Wiring Harness

Pin	Size	Color	Circuit	Terminal Type ID	Option	Function	Pin	Size	Color	Circuit	Terminal Type ID	Option
1	0.35	BU / VT	3813	III	UKL	High Speed GMLAN Serial Data [+] 4	1	0.5	BU / VT	3813	IV	UKL
2	0.35	BN / WH	419	III	—	Check Engine Indicator Control	2	0.35	BN / WH	419	IV	—
3	0.35	VT / BN	541	III	—	Run Ignition 3 Voltage	3	0.35	VT / BN	541	IV	—
4	0.35	GN / BK	2515	III	UE1/ UER	Telematics Switch Supply Voltage	4	0.35	GN / BK	2515	IV	(UE1- UER) / (UER)
5	0.35	GN / WH	2514	III	UE1/ UER	Telematics Switch Signal	5	0.35	GN / WH	2514	IV	(UE1- UER) / (UER)
6	0.35	YE / VT	2516	III	UE1/ UER	Telematics Switch Green LED Indicator Control	6	0.35	YE / VT	2516	IV	(UE1- UER) / (UER)
7	0.35	BN / WH	2517	III	UE1/ UER	Telematics Switch Red LED Indicator Control	7	0.35	BN / WH	2517	IV	(UE1- UER) / (UER)

X200 Instrument Panel Wiring Harness to Body Wiring Harness (cont'd)

Pin	Size	Color	Circuit	Terminal Type ID	Option	Function	Pin	Size	Color	Circuit	Terminal Type ID	Option
8	0.35	BN / VT	193	III	—	Rear Defogger Relay Control	8	0.35	BN / VT	193	IV	—
9	0.35	GN / GY	3277	III	—	Vehicle Anti-Theft System Immobilizer Low Reference	9	0.35	GN / GY	3277	IV	—
10	0.35	GY / BK	3276	III	—	Immobilizer Control Module Control	10	0.35	GY / BK	3276	IV	—
11	0.35	GN / VT	7533	III	—	Immobilizer LIN Bus 1	11	0.35	GN / VT	7533	IV	—
12	0.35	WH / YE	7557	III	—	Interior Door Handle Accent Lighting Control	12	0.35	WH / YE	7557	IV	—
13	0.35	WH	3811	III	UKL	High Speed GMLAN Serial Data [-] 4	13	0.5	WH	3811	IV	UKL
14	0.5	GY	5127	III	—	Turbocharger Coolant Pump Relay Control	14	0.35	GY	5127	IV	—
15	0.5	BK / BN	5360	III	—	Brake Apply Sensor Low Reference	15	0.5	BK / BN	5360	IV	—
16	0.5	BU / YE	5361	III	—	Brake Apply Sensor Signal	16	0.5	BU / YE	5361	IV	—
17	0.5	WH	5359	III	—	Brake Apply Sensor Control	17	0.5	WH	5359	IV	—
18	0.35	GY / WH	3272	III	—	Remote Control Door Lock Receiver Control	18	0.35	GY / WH	3272	IV	—
19	0.35	GY	3273	III	—	Remote Control Door Lock Receiver Low Reference	19	0.35	GY	3273	IV	—
20	0.35	YE / GN	3274	III	—	Remote Control Door Lock Receiver Transmit Signal	20	0.35	YE / GN	3274	IV	—
21	0.35	BU / WH	3275	III	—	Remote Control Door Lock Receiver Receive Signal	21	0.35	BU / WH	3275	IV	—
22	0.35	WH / BU	5986	III	—	Serial Data Communication Enable	22	0.5	WH / BU	5986	IV	—
23	0.35	WH	3811	III	UKL	High Speed GMLAN Serial Data [-] 4	23	0.5	WH	3811	IV	UKL

X200 Instrument Panel Wiring Harness to Body Wiring Harness (cont'd)

Pin	Size	Color	Circuit	Terminal Type ID	Option	Function	Pin	Size	Color	Circuit	Terminal Type ID	Option
24	0.35	BU / VT	3813	III	UKL	High Speed GMLAN Serial Data [+] 4	24	0.5	BU / VT	3813	IV	UKL
25	0.35	RD / YE	5840	III	UKC	Battery Positive Voltage	25	0.35	RD / YE	5840	IV	UKC
26	0.35	GN / WH	2270	III	—	Rear Window Washer Relay Control	26	0.35	GN / WH	2270	IV	—
27	0.35	RD / GY	6240	III	—	Battery Positive Voltage	27	0.35	RD / GY	6240	IV	—
28	0.35	RD / WH	5440	III	UD7	Battery Positive Voltage	28	0.35	RD / WH	5440	IV	UD7
29	0.35	RD / BU	840	II	—	Battery Positive Voltage	29	2.5	RD / BU	840	V	—
30	—	—	—	—	—	Not Occupied	30	—	—	—	—	—
31	0.5	WH / GN	3556	I	—	Interior Passive Entry Antenna 3 High Signal	31	0.5	WH / GN	3556	VI	—
32	0.5	GN	3557	I	—	Interior Passive Entry Antenna 3 Low Signal	32	0.5	GN	3557	VI	—
33	0.35	RD / BU	5240	II	—	Battery Positive Voltage	33	0.75	RD / BU	5240	V	—
34	2	RD / WH	2040	II	UKL/ 5W4	Battery Positive Voltage	34	2	RD / WH	2040	V	—
35	0.35	RD / GN	6140	I	—	Battery Positive Voltage	35	0.35	RD / GN	6140	VI	—
36	0.5	BN / GN	3568	I	—	Rear Closure Passive Entry Antenna High Signal	36	0.5	BN / GN	3568	VI	—
37	0.35	BU / GY	3935	I	KSG	High Speed GMLAN Serial Data [+] 8	37	0.35	BU / GY	3935	VI	KSG
38	0.5	BU	2500	I	—	High Speed GMLAN Serial Data [+] 1	38	0.5	BU	2500	VI	—
39	0.35	RD / GN	6140	I	—	Battery Positive Voltage	39	0.35	RD / GN	6140	VI	—
40	0.5	GN / GY	3569	I	—	Rear Closure Passive Entry Antenna Low Signal	40	0.5	GN / GY	3569	VI	—
41	0.35	WH / GY	3936	I	KSG	High Speed GMLAN Serial Data [-] 8	41	0.35	WH / GY	3936	VI	KSG
42	0.35	WH	2501	I	—	High Speed GMLAN Serial Data [-] 1	42	0.5	WH	2501	VI	—
43	2	VT / GN	39	II	—	Run/Crank Ignition 1 Voltage	43	2	VT / GN	39	V	—
44	0.35	RD / GY	5540	II	—	Battery Positive Voltage	44	2	RD / GY	5540	V	CAJ

X200 Instrument Panel Wiring Harness to Body Wiring Harness (cont'd)

Pin	Size	Color	Circuit	Terminal Type ID	Option	Function	Pin	Size	Color	Circuit	Terminal Type ID	Option
45	0.5	BU	3554	I	—	Interior Passive Entry Antenna 2 High Signal	45	0.5	BU	3554	VI	—
46	0.35	GY / BK	3555	I	—	Interior Passive Entry Antenna 2 Low Signal	46	0.5	GY / BK	3555	VI	—
47	0.75	RD / BU	4540	II	—	Battery Positive Voltage	47	0.75	RD / BU	4540	V	—
48	0.35	RD / VT	4640	II	—	Battery Positive Voltage	48	0.75	RD / VT	4640	V	—
49 - 50	—	—	—	—	—	Not Occupied	49 - 50	—	—	—	—	—
51	0.5	RD / GN	5140	III	—	Battery Positive Voltage	51	0.5	RD / GN	5140	IV	—
52	0.5	WH / YE	3574	III	—	Driver Door Open Switch Signal	52	0.5	WH / YE	3574	IV	—
53 - 55	—	—	—	—	—	Not Occupied	53 - 55	—	—	—	—	—
56	0.5	RD / BN	4940	III	—	Battery Positive Voltage	56	0.5	RD / BN	4940	IV	—
57	0.5	VT	3560	III	—	Driver Door Passive Entry Antenna High Signal	57	0.5	VT	3560	IV	—
58	0.5	VT / GY	3561	III	—	Driver Door Passive Entry Antenna Low Signal	58	0.5	VT / GY	3561	IV	—
59	0.35	BU / YE	6105	III	—	High Speed GMLAN Serial Data [+] 2	59	0.5	BU / YE	6105	IV	—
60	0.5	WH	6106	III	—	High Speed GMLAN Serial Data [-] 2	60	0.5	WH	6106	IV	—
61	0.35	BK / BN	654	III	UE1/ UER	Cellular Telephone Microphone Low Reference	61	0.35	BK / BN	654	IV	—
62	0.35	BU	655	III	- UE1- UER	Cellular Telephone Microphone Signal	62	0.35	BU	655	IV	—
63	0.35	GY / GN	1102	III	UV2	Low Speed GMLAN Serial Data 2	63	0.35	GY / GN	1102	IV	UV2
64	0.35	BU / VT	1788	III	—	Traction Control Switch Signal 1	64	0.35	BU / VT	1788	IV	—
65	0.35	BN	4511	III	—	Wireless Charging System Fault Indicator Control	65	0.35	BN	4511	IV	—

X200 Instrument Panel Wiring Harness to Body Wiring Harness (cont'd)

Pin	Size	Color	Circuit	Terminal Type ID	Option	Function	Pin	Size	Color	Circuit	Terminal Type ID	Option
66 - 67	—	—	—	—	—	Not Occupied	66 - 67	—	—	—	—	—
68	0.35	VT	2801	III	USS	Retained Accessory Power Control	68	0.5	VT	2801	IV	USS
69	0.5	YE / BU	4086	III	—	Ignition Mode Switch Challenge Active Signal	69	0.5	YE / BU	4086	IV	—
70	0.35	BN / YE	780	III	—	Driver Door Lock Switch Lock Signal	70	0.35	BN / YE	780	IV	—
71	0.35	BN / WH	781	III	—	Driver Door Lock Switch Unlock Signal	71	0.35	BN / WH	781	IV	—
72	0.35	VT / BU	3263	III	—	Logistics Mode Relay Open Control	72	0.35	VT / BU	3263	IV	—
73	0.35	BU / BK	7044	III	—	Microphone [-] Signal	73	0.35	BU / BK	7044	IV	—
74	0.35	VT / YE	7043	III	—	Microphone [+] Signal	74	0.35	VT / YE	7043	IV	—
75	0.35	GY / VT	3264	III	—	Logistics Mode Relay Close Control	75	0.35	GY / VT	3264	IV	—
76	0.5	GN / WH	3570	III	—	Driver Door Handle Switch Signal	76	0.5	GN / WH	3570	IV	—

X205 Instrument Panel Wiring Harness to Body Wiring Harness

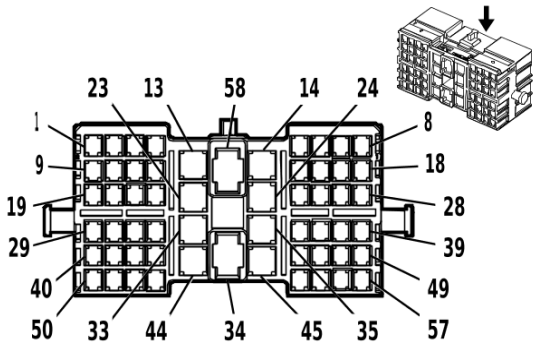

2537267

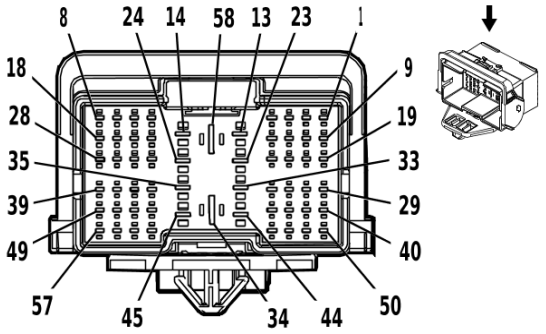

2537266

Connector Part Information

Harness Type: Instrument Panel Wiring Harness
OEM Connector: 96947001
Service Connector: 13395410
Description: 58-Way F 1.6, 2.8, 4.8 Timer Series(GY)

Connector Part Information

Harness Type: Body Wiring Harness
OEM Connector: 13541394
Service Connector: 13395409
Description: 58-Way M 1.6, 2.8, 5.8 Timer Series(GY)

Terminal Part Information

Terminal Type ID	Terminated Lead	Diagnostic Test Probe	Terminal Removal Tool
I	13575860	J-35616-4A (PU)	J-38125-36
II	13582280	J-35616-33 (YE)	EL-38125-560A
III	13575574	J-35616-5 (PU)	J-38125-215A
IV	13575593	J-35616-34 (YE)	EL-38125-560A

X205 Instrument Panel Wiring Harness to Body Wiring Harness

Pin	Size	Color	Circuit	Terminal Type ID	Option	Function	Pin	Size	Color	Circuit	Terminal Type ID	Option
1 - 2	—	—	—	—	—	Not Occupied	1 - 2	—	—	—	—	—
3	0.5	YE / VT	3956	I	—	Charging Status Indicator Control	3	0.5	YE / VT	3956	IV	—
4	0.5	GY / GN	3957	I	—	Control Pilot Signal Indicator Control	4	0.5	GY / GN	3957	IV	—
5	0.35	VT / WH	5234	I	—	Passenger Seat Belt Indicator Control	5	0.35	VT / WH	5234	IV	—
6	0.35	BU	2307	I	—	Passenger Air Bag On Indicator Control	6	0.35	BU	2307	IV	—
7	0.35	GN	2308	I	—	Passenger Air Bag Off Indicator Control	7	0.35	GN	2308	IV	—
8	—	—	—	—	—	Not Occupied	8	—	—	—	—	—
9	0.75	GY / BK	1974	II	UQA	Left Front Speaker [-] Control 2	9	0.75	GY / BK	1974	IV	UQA

X205 Instrument Panel Wiring Harness to Body Wiring Harness (cont'd)

Pin	Size	Color	Circuit	Terminal Type ID	Option	Function	Pin	Size	Color	Circuit	Terminal Type ID	Option
10	0.75	BU / VT	1874	II	UQA	Left Front Speaker [+] Control 2	10	0.75	BU / VT	1874	IV	UQA
11	0.75	BN / BK	1975	II	UQA	Right Front Speaker [-] Control 2	11	0.75	BN / BK	1975	IV	UQA
12	0.75	GN / BU	1875	II	UQA	Right Front Speaker [+] Control 2	12	0.75	GN / BU	1875	IV	UQA
13	0.5	RD / GY	7840	I	UKL	Battery Positive Voltage	13	0.5	RD / GY	7840	III	UKL
14	0.5	RD / GN	7740	I	UKL	Battery Positive Voltage	14	0.5	RD / GN	7740	III	UKL
15 - 16	—	—	—	—	—	Not Occupied	15 - 16	—	—	—	—	—
17	0.5	GN / BU	4119	I	—	HVAC Control Module LIN Bus 2	17	0.5 0.35	GN / BU GN / BU	4119 4119	IV IV	CE1 - CE1
18	0.5	GN / GY	4627	I	UKL	Image Processing Module LIN Bus 1	18	0.5	GN / GY	4627	IV	UKL
19	0.35	BU / GN	1304	I	UKL	High Speed GMLAN Serial Data [+] 9	19	0.35	BU / GN	1304	IV	UKL
20	0.35	WH / GN	1305	I	UKL	High Speed GMLAN Serial Data [-] 9	20	0.35	WH / GN	1305	IV	UKL
21	0.35	GN / GY	6135	I	—	Body Control Module LIN Bus 4	21	0.35	GN / GY	6135	IV	—
22	0.35	WH	6816	I	—	Indicator Dimming Control	22	0.35	WH	6816	IV	—
23	—	—	—	—	—	Not Occupied	23	—	—	—	—	—
24	0.35	RD / BN	7540	I	UV2	Battery Positive Voltage	24	0.5	RD / BN	7540	III	UV2
25	0.35	GN	5060	I	—	Low Speed GMLAN Serial Data	25	0.35	GN	5060	IV	—
26	0.35	BN / VT	3809	I	UKL	Front Object Sensor 1 Reference Voltage	26	0.5	BN / VT	3809	IV	UKL
27	0.35	VT	185	I	—	Low Washer Fluid Indicator Control	27	0.35	VT	185	IV	—
28	—	—	—	—	—	Not Occupied	28	—	—	—	—	—
29	0.35	VT / BU	6978	I	UQA	Audio Amplifier Control	29	0.5	VT / BU	6978	IV	UQA
30	0.35	GN / YE	7066	I	UQA	Entertainment Remote Enable Signal	30	0.5	GN / YE	7066	IV	UQA

X205 Instrument Panel Wiring Harness to Body Wiring Harness (cont'd)

Pin	Size	Color	Circuit	Terminal Type ID	Option	Function	Pin	Size	Color	Circuit	Terminal Type ID	Option
31	—	—	—	—	—	Not Occupied	31	—	—	—	—	—
32	0.5	VT / WH	3571	I	—	Passenger Door Handle Switch Signal	32	0.5	VT / WH	3571	IV	—
33	0.35	RD / YE	240	I	—	Battery Positive Voltage	33	0.5	RD / YE	240	III	—
34	—	—	—	—	—	Not Occupied	34	—	—	—	—	—
35	0.5	RD / VT	340	I	—	Battery Positive Voltage	35	0.5	RD / VT	340	III	—
36 - 37	—	—	—	—	—	Not Occupied	36 - 37	—	—	—	—	—
38	0.35	GN / YE	3562	I	—	Passenger Door Passive Entry Antenna High Signal	38	0.5	GN / YE	3562	IV	—
39	0.5	GN / BK	3563	I	—	Passenger Door Passive Entry Antenna Low Signal	39	0.5	GN / BK	3563	IV	—
40	0.75 0.75	WH BN / WH	46 546	II II	UQ3 UQA	Right Rear Speaker [+] Control Right Rear Low Level Audio Signal	40	0.75 0.75	WH BN / WH	46 546	IV IV	UQ3 UQA
41	0.35 0.75	BU / BK BU / BK	115 1946	II II	UQ3 UQA	Right Rear Speaker [-] Control Right Rear Low Level Audio [-] Signal	41	0.75 0.75	BU / BK BU / BK	115 1946	IV IV	UQ3 UQA
42	0.75 0.75	GN / BK BN / VT	116 1999	II II	UQ3 UQA	Left Rear Speaker [-] Control Left Rear Low Level Audio [-] Signal	42	0.75 0.75	GN / BK BN / VT	116 1999	IV IV	UQ3 UQA
43	0.75 0.75	GN GN / BK	199 599	II II	UQ3 UQA	Left Rear Speaker [+] Control Left Rear Low Level Audio Signal	43	0.75 0.75	GN GN / BK	199 599	IV IV	UQ3 UQA
44	2	RD / VT	5640	I	UQA	Battery Positive Voltage	44	2	RD / VT	5640	III	UQA
45	—	—	—	—	—	Not Occupied	45	—	—	—	—	—

X205 Instrument Panel Wiring Harness to Body Wiring Harness (cont'd)

Pin	Size	Color	Circuit	Terminal Type ID	Option	Function	Pin	Size	Color	Circuit	Terminal Type ID	Option
46	0.35 0.75	YE / BK YE / BK	117 1948	II II	UQ3 UQA	Right Front Speaker [-] Control 1 Right Front Low Level Audio [-] Signal	46	0.75 0.75	YE / BK YE / BK	117 1948	IV IV	UQ3 UQA
47	0.35 0.75	YE YE	200 512	II II	UQ3 UQA	Right Front Speaker 1 [+] Control Right Front Low Level Audio Signal	47	0.75 0.75	YE YE	200 512	IV IV	UQ3 UQA
48	0.35 0.75	BN / BU BN / BU	118 1947	II II	UQ3 UQA	Left Front Speaker [-] Control 1 Left Front Low Level Audio [-] Signal	48	0.75 0.75	BN / BU BN / BU	118 1947	IV IV	UQ3 UQA
49	0.35 0.75	BU BU	201 511	II II	UQ3 UQA	Left Front Speaker 1 [+] Control Left Front Low Level Audio Signal	49	0.75 0.75	BU BU	201 511	IV IV	UQ3 UQA
50 - 51	—	—	—	—	—	Not Occupied	50 - 51	—	—	—	—	—
52	0.35	GN / WH	24	I	—	Backup Lamp Control	52	0.5	GN / WH	24	IV	—
53	0.5	BK	2550	I	UQA	Ground	53	0.5	BK	2550	IV	UQA
54	0.35	BN / VT	245	I	—	Passenger Door Lock Switch Unlock Control	54	0.35	BN / VT	245	IV	—
55 - 56	—	—	—	—	—	Not Occupied	55 - 56	—	—	—	—	—
57	0.5	BK	2550	I	UQA	Ground	57	0.5	BK	2550	IV	UQA
58	—	—	—	—	—	Not Occupied	58	—	—	—	—	—

X208 Roof Wiring Harness to Body Wiring Harness

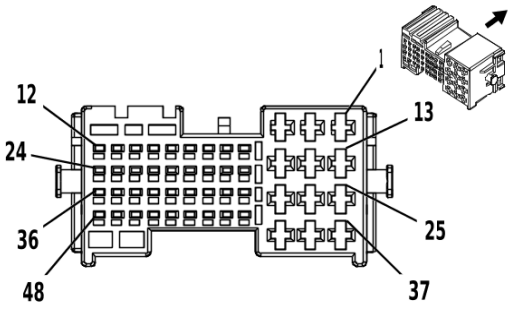

3277913

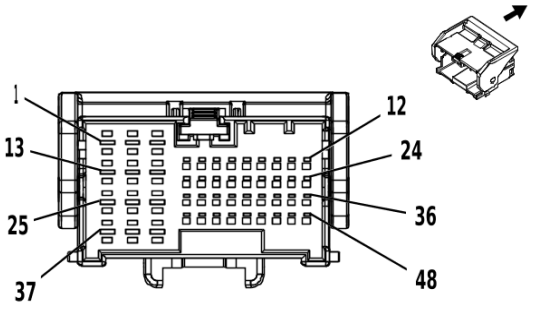

3277901

Connector Part Information

Harness Type: Roof Wiring Harness
OEM Connector: 13582058
Service Connector: 19329739
Description: 48-Way F 1.2 MCON, 2.8 MCP Series(BK)

Connector Part Information

Harness Type: Body Wiring Harness
OEM Connector: 13519688
Service Connector: 19329740
Description: 48-Way M 1.2 MCON, 2.8 MCP Series(BK)

Terminal Part Information

Terminal Type ID	Terminated Lead	Diagnostic Test Probe	Terminal Removal Tool
I	13575435	J-35616-4A (PU)	J-38125-557
II	19329758	J-35616-12 (BU)	J-38125-215A
III	13575574	J-35616-5 (PU)	J-38125-215A
IV	19329749	J-35616-13 (BU)	J-38125-215A

X208 Roof Wiring Harness to Body Wiring Harness

Pin	Size	Color	Circuit	Terminal Type ID	Option	Function	Pin	Size	Color	Circuit	Terminal Type ID	Option
1	0.5	GN / WH	24	I	DD8/ DRZ	Backup Lamp Control	1	0.5	GN / WH	24	III	DD8/ DRZ
2	0.5	BK	550	I	DD8/ DRZ	Ground	2	0.5	BK	550	III	DD8/ DRZ
3	0.5	VT / BK	339	I	DD8/ DRZ	Run/Crank Ignition 1 Voltage	3	0.35	VT / BK	339	III	DD8/ DRZ
4	0.35	RD / GY	6240	II	—	Battery Positive Voltage	4	0.35	RD / GY	6240	IV	—
5	0.35	GN	5060	II	- UKL	Low Speed GMLAN Serial Data	5	0.35	GN	5060	IV	- UKL
6	0.35	WH / BU	5986	II	- UKL	Serial Data Communication Enable	6	0.35	WH / BU	5986	IV	- UKL
7	0.35	BK	550	II	—	Ground	7	0.5	BK	550	IV	—
8 - 12	—	—	—	—	—	Not Occupied	8 - 12	—	—	—	—	—
13	0.5	GY / GN	328	I	—	Interior Lamp Defeat Switch Signal	13	0.5	GY / GN	328	III	—

X208 Roof Wiring Harness to Body Wiring Harness (cont'd)

Pin	Size	Color	Circuit	Terminal Type ID	Option	Function	Pin	Size	Color	Circuit	Terminal Type ID	Option
14	0.5	GY	156	I	—	Courtesy Lamp Switch Signal	14	0.5	GY	156	III	—
15	0.5	BK	650	I	—	Ground	15	0.5	BK	650	III	—
16	0.35 0.35 0.35	BU BU / GY BU / VT	2500 3935 3813	II II II	K34 KSG- UKL UKL	High Speed GMLAN Serial Data [+] 1 High Speed GMLAN Serial Data [+] 8 High Speed GMLAN Serial Data [+] 4	16	0.5 0.35 0.5	BU BU / GY BU / VT	2500 3935 3813	IV IV IV	K34 KSG- UKL UKL
17	0.35 0.35 0.35	WH WH / GY WH	2501 3936 3811	II II II	K34 KSG- UKL UKL	High Speed GMLAN Serial Data [-] 1 High Speed GMLAN Serial Data [-] 8 High Speed GMLAN Serial Data [-] 4	17	0.5 0.35 0.5	WH WH / GY WH	2501 3936 3811	IV IV IV	K34 KSG- UKL UKL
18	0.35	WH	3152	II	- UKL	Lane Departure Warning Indicator Control	18	0.35	WH	3152	IV	- UKL
19	0.35	GY / WH	3153	II	- UKL	Lane Departure Warning Disable Switch Signal	19	0.35	GY / WH	3153	IV	- UKL
20	0.35 0.35 0.35	BU BU / GY BU / VT	2500 3935 3813	II II II	K34 KSG- UKL UKL	High Speed GMLAN Serial Data [+] 1 High Speed GMLAN Serial Data [+] 8 High Speed GMLAN Serial Data [+] 4	20	0.5 0.35 0.5	BU BU / GY BU / VT	2500 3935 3813	IV IV IV	K34 KSG- UKL UKL
21	0.35 0.35 0.35	WH WH / GY WH	2501 3936 3811	II II II	K34 KSG- UKL UKL	High Speed GMLAN Serial Data [-] 1 High Speed GMLAN Serial Data [-] 8 High Speed GMLAN Serial Data [-] 4	21	0.5 0.35 0.5	WH WH / GY WH	2501 3936 3811	IV IV IV	K34 KSG- UKL UKL
22	0.35 0.35	GN / BN GN / BU	6132 4119	II II	CE1 - CE1	Body Control Module LIN Bus 1 HVAC Control Module LIN Bus 2	22	0.35 0.35	GN / BN GN / BU	6132 4119	IV IV	CE1 - CE1
23	0.5	BK	550	II	—	Ground	23	0.5	BK	550	IV	—
24	0.35	RD / YE	3740	II	—	Battery Positive Voltage	24	0.35	RD / YE	3740	IV	—
25	0.5	GY	157	I	—	Interior Lamp Control	25	0.5	GY	157	III	—

X208 Roof Wiring Harness to Body Wiring Harness (cont'd)

Pin	Size	Color	Circuit	Terminal Type ID	Option	Function	Pin	Size	Color	Circuit	Terminal Type ID	Option
26	0.5	WH / BN	6815	I	—	Inadvertent Load Control	26	0.5	WH / BN	6815	III	—
27	0.35	BN / VT	3809	I	UKL	Front Object Sensor 1 Reference Voltage	27	0.5	BN / VT	3809	III	UKL
28	0.35	BK / BN	654	II	—	Cellular Telephone Microphone Low Reference	28	0.35	BK / BN	654	IV	—
29	0.35	BU	655	II	—	Cellular Telephone Microphone Signal	29	0.35	BU	655	IV	—
30	0.35	WH	4745	II	UKL	FlexRay Serial Data [-] 10	30	0.5	WH	4745	IV	UKL
31	0.35	GN	4744	II	UKL	FlexRay Serial Data [+] 10	31	0.5	GN	4744	IV	UKL
32	0.35	GN / BK	2515	II	(UE1-UER) / (UER)	Telematics Switch Supply Voltage	32	0.35	GN / BK	2515	IV	(UE1-UER) / (UER)
33	0.35	GN / WH	2514	II	(UE1-UER) / (UER)	Telematics Switch Signal	33	0.35	GN / WH	2514	IV	(UE1-UER) / (UER)
34	0.35	YE / VT	2516	II	(UE1-UER) / (UER)	Telematics Switch Green LED Indicator Control	34	0.35	YE / VT	2516	IV	(UE1-UER) / (UER)
35	0.35	BN / WH	2517	II	(UE1-UER) / (UER)	Telematics Switch Red LED Indicator Control	35	0.35	BN / WH	2517	IV	(UE1-UER) / (UER)
36	0.5	BK	550	II	(UE1-UER) / (UER)	Ground	36	0.5	BK	550	IV	(UE1-UER) / (UER)
37	0.35	GY / BU	2164	I	UKL	FlexRay Communication Enable Signal	37	0.5	GY / BU	2164	III	UKL
38	0.35	BK	550	I	—	Ground	38	0.5	BK	550	III	—
39	0.35	VT / WH	5234	I	—	Passenger Seat Belt Indicator Control	39	0.35	VT / WH	5234	III	—
40	0.35	BU / BK	7044	II	—	Microphone [-] Signal	40	0.35	BU / BK	7044	IV	—
41	0.35	VT / YE	7043	II	—	Microphone [+] Signal	41	0.35	VT / YE	7043	IV	—
42	0.35	BU	2307	II	—	Passenger Air Bag On Indicator Control	42	0.35	BU	2307	IV	—
43	0.35	GN	2308	II	—	Passenger Air Bag Off Indicator Control	43	0.35	GN	2308	IV	—

X208 Roof Wiring Harness to Body Wiring Harness (cont'd)

Pin	Size	Color	Circuit	Terminal Type ID	Option	Function	Pin	Size	Color	Circuit	Terminal Type ID	Option
44	0.35	YE	6817	II	CAJ	LED Back-light Dim-ming Control 1	44	0.35	YE	6817	IV	CAJ
45	0.35	BK	550	II	CAJ	Ground	45	0.5	BK	550	IV	CAJ
46	0.35	BK / WH	151	II	CAJ	Signal Ground	46	0.35	BK / WH	151	IV	CAJ
47	0.35	BU / VT	5027	II	CAJ	Sunroof Switch Serial Data 1 Signal	47	0.35	BU / VT	5027	IV	CAJ
48	0.35	BU / GY	3032	II	CAJ	Front Sun-shade Switch Signal	48	0.35	BU / GY	3032	IV	CAJ

X209 Instrument Panel Wiring Harness to Body Wiring Harness ((UE1)+(MAH/MBC/MCX))

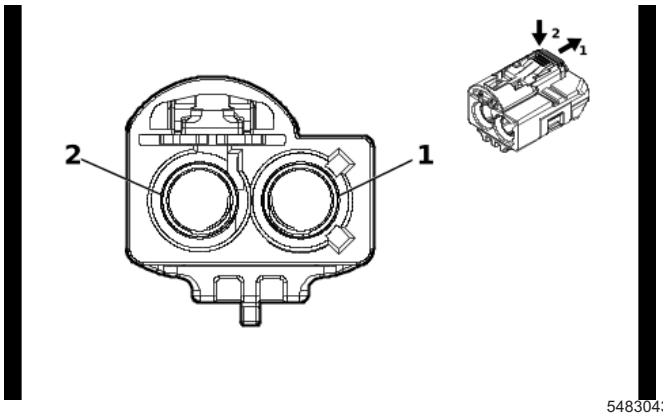

5483043

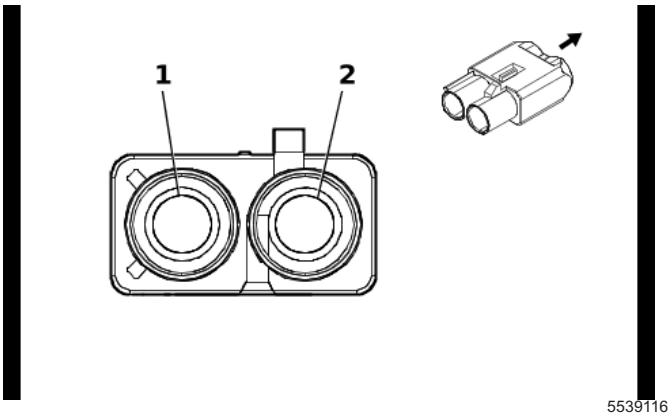

5539116

Connector Part Information

Harness Type: Instrument Panel Wiring Harness COAX

OEM Connector: 13516230

Service Connector: Service by Cable Assembly — See Part Catalog

Description: 2-Way F Coax Type(VT)

Connector Part Information

Harness Type: Body Wiring Harness COAX

OEM Connector: 13515672

Service Connector: Service by Cable Assembly — See Part Catalog

Description: 2-Way M Coax Type(VT)

Terminal Part Information

Terminal Type ID	Terminated Lead	Diagnostic Test Probe	Terminal Removal Tool
I	Not required	No Tool Required	No Tool Required

X209 Instrument Panel Wiring Harness to Body Wiring Harness ((UE1)+(MAH/MBC/MCX))

Pin	Size	Color	Circuit	Terminal Type ID	Option	Function	Pin	Size	Color	Circuit	Terminal Type ID	Option
—	—	Coax Cable	—	I	—	(GPS/Cell) Coaxial Antenna Cell/ GPS combined Signal	—	—	Coax Cable	—	I	—

X209 Instrument Panel Wiring Harness to Body Wiring Harness ((UE1/UER)+(MAM/MBA/MAY))

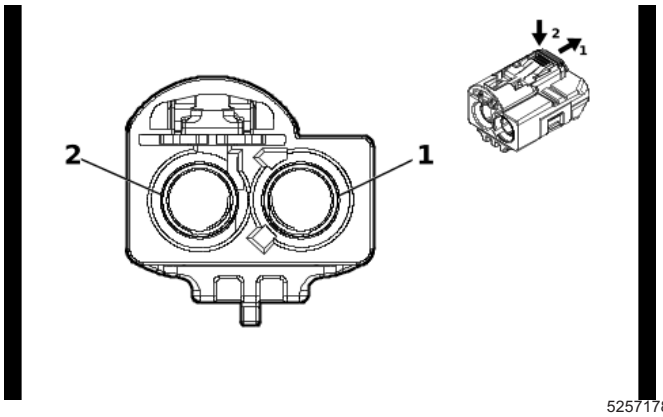

5257178

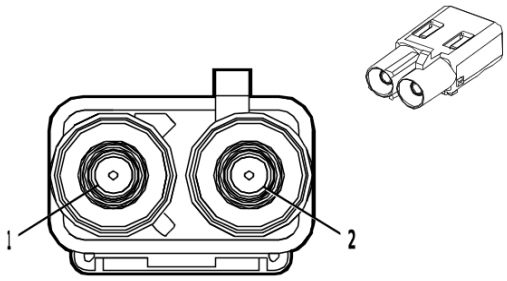

4955786

Connector Part Information

Harness Type: Instrument Panel Wiring Harness COAX

OEM Connector: 13516232

Service Connector: Service by Cable Assembly — See Part Catalog

Description: 2-Way F Coax Type(BN)

Connector Part Information

Harness Type: Body Wiring Harness COAX

OEM Connector: 13592026

Service Connector: Service by Cable Assembly — See Part Catalog

Description: 2-Way M Coax Type(BN)

Terminal Part Information

Terminal Type ID	Terminated Lead	Diagnostic Test Probe	Terminal Removal Tool
I	Not required	No Tool Required	No Tool Required

X209 Instrument Panel Wiring Harness to Body Wiring Harness ((UE1/UER)+(MAM/MBA/MAY))

Pin	Size	Color	Circuit	Terminal Type ID	Option	Function	Pin	Size	Color	Circuit	Terminal Type ID	Option
—	—	Coax Cable	—	I	—	(GPS/Cell) Coaxial Antenna Cell/ GPS combined Signal	—	—	Coax Cable	—	I	—

X210 Instrument Panel Wiring Harness to Body Wiring Harness

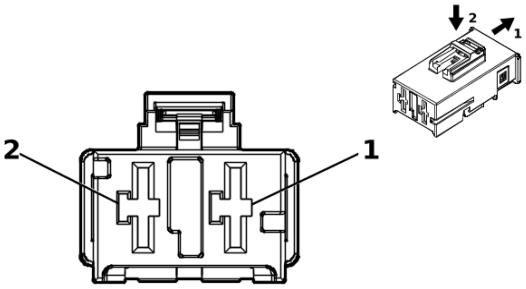

5187955

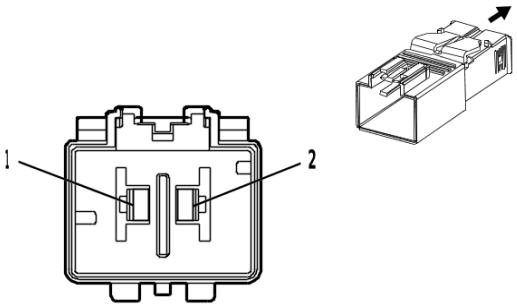

4891120

Connector Part Information

Harness Type: Instrument Panel Wiring Harness
OEM Connector: 13525311
Service Connector: Service by Harness - See Part Catalog
Description: 2-Way F 9.5 MCON-LL Series(BK)

Connector Part Information

Harness Type: Body Wiring Harness
OEM Connector: 13525313
Service Connector: Service by Harness - See Part Catalog
Description: 2-Way M 9.5 MCON-LL Series(BK)

Terminal Part Information

Terminal Type ID	Terminated Lead	Diagnostic Test Probe	Terminal Removal Tool
I	Not required	J-35616-22 (RD)	No Tool Required
II	Not required	J-35616-21 (RD)	No Tool Required

X210 Instrument Panel Wiring Harness to Body Wiring Harness

Pin	Size	Color	Circuit	Terminal Type ID	Option	Function	Pin	Size	Color	Circuit	Terminal Type ID	Option
1	8	RD / GN	40	I	—	Battery Positive Voltage	1	8	RD / GN	40	II	—
2	8	RD / BU	42	I	—	Battery Positive Voltage	2	8	RD / BU	42	II	—

X211 Instrument Panel Wiring Harness to Body Wiring Harness (U2Q)

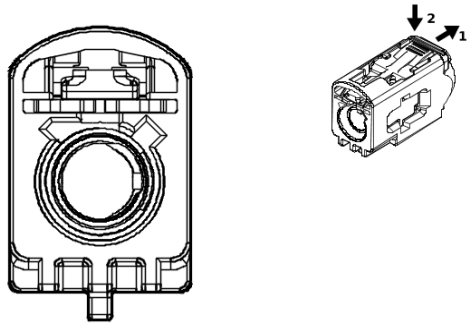

5215396

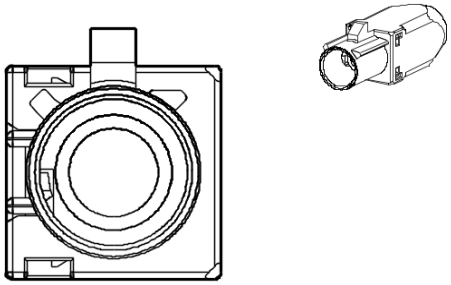

5215603

Connector Part Information

Harness Type: Instrument Panel Wiring Harness COAX

OEM Connector: 13516213

Service Connector: Service by Cable Assembly — See Part Catalog

Description: 1-Way F Coax Type(BK)

Connector Part Information

Harness Type: Body Wiring Harness COAX

OEM Connector: 13515639

Service Connector: Service by Cable Assembly — See Part Catalog

Description: 1-Way M Coax Type(BK)

Terminal Part Information

Terminal Type ID	Terminated Lead	Diagnostic Test Probe	Terminal Removal Tool
I	Not required	No Tool Required	No Tool Required

X211 Instrument Panel Wiring Harness to Body Wiring Harness (U2Q)

Pin	Size	Color	Circuit	Terminal Type ID	Option	Function	Pin	Size	Color	Circuit	Terminal Type ID	Option
—	—	Coax Cable	—	I	—	(DAB/DMB) Coaxial Antenna DAB Signal	—	—	Coax Cable	—	I	—

X211 Instrument Panel Wiring Harness to Body Wiring Harness (U2K)

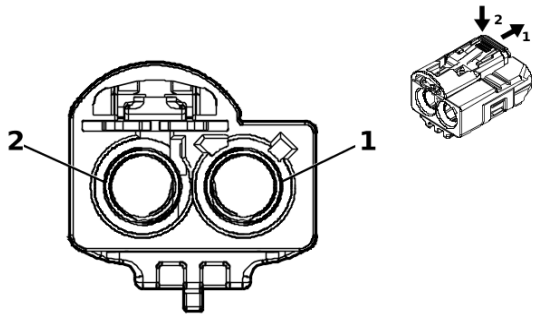

5217209

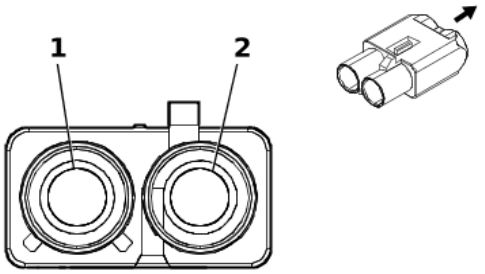

5429382

Connector Part Information

Harness Type: Instrument Panel Wiring Harness COAX

OEM Connector: 13516227

Service Connector: Service by Cable Assembly — See Part Catalog

Description: 2-Way F Coax Type(BK)

Connector Part Information

Harness Type: Body Wiring Harness COAX

OEM Connector: 13515678

Service Connector: Service by Cable Assembly — See Part Catalog

Description: 2-Way M Coax Type(CU)

Terminal Part Information

Terminal Type ID	Terminated Lead	Diagnostic Test Probe	Terminal Removal Tool
I	Not required	No Tool Required	No Tool Required

X211 Instrument Panel Wiring Harness to Body Wiring Harness (U2K)

Pin	Size	Color	Circuit	Terminal Type ID	Option	Function	Pin	Size	Color	Circuit	Terminal Type ID	Option
—	—	Coax Cable	—	I	—	(AM/FM) Antenna RF Signal	—	—	Coax Cable	—	I	—

X213 Instrument Panel Wiring Harness to Body Wiring Harness (-U2K/U2Q/UE1/UER)

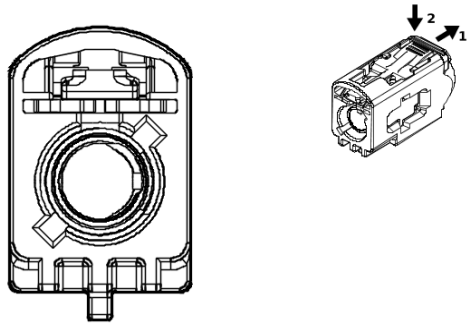

5215274

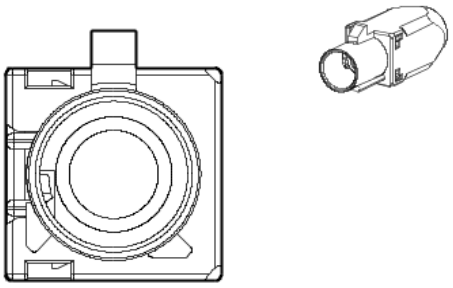

5318805

Connector Part Information

Harness Type: Instrument Panel Wiring Harness COAX

OEM Connector: 13516215

Service Connector: Service by Cable Assembly — See Part Catalog

Description: 1-Way F Coax Type(BU)

Connector Part Information

Harness Type: Body Wiring Harness COAX

OEM Connector: 13515650

Service Connector: Service by Cable Assembly — See Part Catalog

Description: 1-Way M Coax Type(OG)

Terminal Part Information

Terminal Type ID	Terminated Lead	Diagnostic Test Probe	Terminal Removal Tool
I	Not required	No Tool Required	No Tool Required

X213 Instrument Panel Wiring Harness to Body Wiring Harness (-U2K/U2Q/UE1/UER)

Pin	Size	Color	Circuit	Terminal Type ID	Option	Function	Pin	Size	Color	Circuit	Terminal Type ID	Option
—	—	Coax Cable	—	I	—	(GPS only) Coaxial Antenna GPS Signal	—	—	Coax Cable	—	I	—

X220 Steering Wheel Wiring Harness to Light Bar Wiring Harness (UKL)

—

Connector Part Information

Harness Type: Steering Wheel Wiring Harness
OEM Connector: 1-968700-1
Service Connector: Service by Harness - See Part Catalog
Description: 3-Way F

—

Connector Part Information

Harness Type: Light Bar Wiring Harness
OEM Connector: Not Available
Service Connector: Service by Harness - See Part Catalog
Description: 3-Way M

Terminal Part Information

Terminal Type ID	Terminated Lead	Diagnostic Test Probe	Terminal Removal Tool
I	Not required	J-35616-65B (L-BU)	No Tool Required
II	Not required	No Tool Required	No Tool Required

X220 Steering Wheel Wiring Harness to Light Bar Wiring Harness (UKL)

Pin	Size	Color	Circuit	Terminal Type ID	Option	Function	Pin	Size	Color	Circuit	Terminal Type ID	Option
1	—	BU / BN	7744	I	—	Driver Illumination Lamp Ground	1	—	BU / BN	7744	II	—
2	—	WH / VT	2246	I	—	Driver Illumination Lamp 1 Control	2	—	WH / VT	2246	II	—
3	—	YE / BU	2245	I	—	Driver Illumination Lamp 2 Control	3	—	YE / BU	2245	II	—

X236 Instrument Panel Wiring Harness to HVAC Wiring Harness

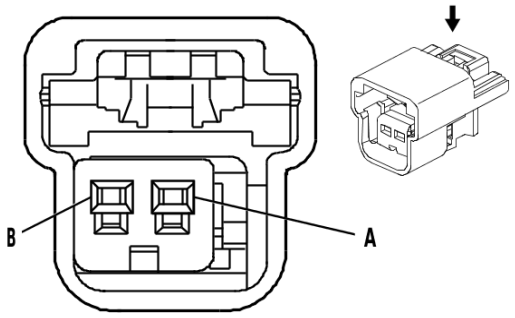

1385747

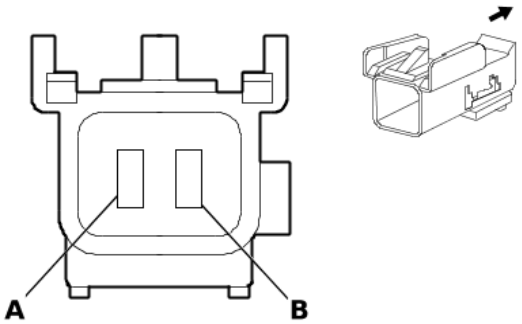

872877

Connector Part Information

Harness Type: Instrument Panel Wiring Harness
OEM Connector: 19177520
Service Connector: 19354839
Description: 2-Way F 150 GT Series(BK)

Connector Part Information

Harness Type: HVAC Wiring Harness
OEM Connector: Not Available
Service Connector: Service by Harness - See Part Catalog
Description: 2-Way M (BK)

Terminal Part Information

Terminal Type ID	Terminated Lead	Diagnostic Test Probe	Terminal Removal Tool
I	Not required	J-35616-14 (GN)	No Tool Required
II	Not required	No Tool Required	No Tool Required

X236 Instrument Panel Wiring Harness to HVAC Wiring Harness

Pin	Size	Color	Circuit	Terminal Type ID	Option	Function	Pin	Size	Color	Circuit	Terminal Type ID	Option
A	—	—	—	—	—	Not Occupied	A	—	—	—	—	—
B	0.35	BN	518	I	—	Lower Left Duct Air Temperature Sensor Signal	B	0.5	WH / VT	518	II	—

X300 Body Wiring Harness to Front Floor Console Wiring Harness

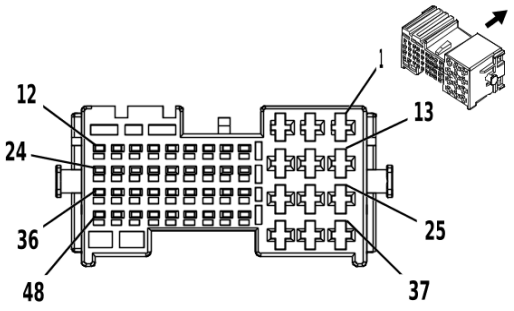

3277913

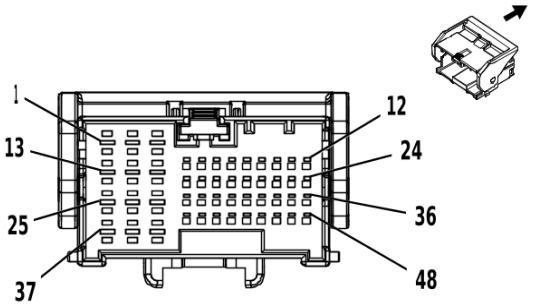

3277901

Connector Part Information

Harness Type: Body Wiring Harness
OEM Connector: 13582058
Service Connector: 19329739
Description: 48-Way F 1.2 MCON, 2.8 MCP Series(BK)

Connector Part Information

Harness Type: Front Floor Console Wiring Harness
OEM Connector: 13582054
Service Connector: Service by Harness - See Part Catalog
Description: 48-Way M 1.2 MCON, 2.8 MCP Series(BK)

Terminal Part Information

Terminal Type ID	Terminated Lead	Diagnostic Test Probe	Terminal Removal Tool
I	13575435	J-35616-4A (PU)	J-38125-557
II	19329758	J-35616-12 (BU)	J-38125-215A
III	Not required	J-35616-13 (BU)	No Tool Required
IV	Not required	J-35616-17 (L-GN)	No Tool Required
V	Not required	J-35616-5 (PU)	No Tool Required

X300 Body Wiring Harness to Front Floor Console Wiring Harness

Pin	Size	Color	Circuit	Terminal Type ID	Option	Function	Pin	Size	Color	Circuit	Terminal Type ID	Option
1	0.5	RD / BU	6040	I	UKL	Battery Positive Voltage	1	0.5	RD / BU	6040	V	UKL
2	0.5	BK	750	I	—	Ground	2	0.5	BK	750	V	—
3	0.5	YE	6817	I	—	LED Backlight Dimming Control 1	3	0.5	YE	6817	V	—
4	0.35	WH	6816	II		Indicator Dimming Control	4	0.35	WH	6816	III	
5	0.35 0.35	WH WH	3152 3152	II II	UKL - UKL	Lane Departure Warning Indicator Control Lane Departure Warning Indicator Control	5	0.35	WH	3152	III	
6	—	—	—	—	—	Not Occupied	6	—	—	—	—	—

X300 Body Wiring Harness to Front Floor Console Wiring Harness (cont'd)

Pin	Size	Color	Circuit	Terminal Type ID	Option	Function	Pin	Size	Color	Circuit	Terminal Type ID	Option
7	0.35 0.35	GY / WH GY / WH	3153 3153	II II	UKL - UKL	Lane Departure Warning Disable Switch Signal Lane Departure Warning Disable Switch Signal	7	0.35	GY / WH	3153	III	
8	0.35	BU / VT	1788	II	—	Traction Control Switch Signal 1	8	0.35	BU / VT	1788	III	—
9	—	—	—	—	—	Not Occupied	9	—	—	—	—	—
10	0.35	GY	5054	II	—	Sport Mode Switch Signal	10	0.35	GY	5054	III	—
11	0.5	BU	2500	II	UKL	High Speed GMLAN Serial Data [+] 1	11	0.5	BU	2500	IV	UKL
12	0.5	WH	2501	II	UKL	High Speed GMLAN Serial Data [-] 1	12	0.5	WH	2501	IV	UKL
13	—	—	—	—	—	Not Occupied	13	—	—	—	—	—
14	0.5	VT / BN	4337	I	UKL	Pedestrian Alert Sound Speaker [-] Control	14	0.5	VT / BN	4337	V	UKL
15	0.5	GY / GN	4338	I	UKL	Pedestrian Alert Sound Speaker [+] Control	15	0.5	GY / GN	4338	V	UKL
16	0.5	WH	2501	II	UKL	High Speed GMLAN Serial Data [-] 1	16	0.5	WH	2501	IV	UKL
17	0.5	BU	2500	II	UKL	High Speed GMLAN Serial Data [+] 1	17	0.5	BU	2500	IV	UKL
18	0.35	BK	750	II	—	Ground	18	0.35	BK	750	III	—
19	0.5	WH	7494	II	—	High Speed GMLAN Serial Data [-] 3	19	0.35	WH	7494	III	—
20	0.35	BU / WH	3977	II	—	Accessory Wake-Up Serial Data 2	20	0.35	BU / WH	3977	III	—
21	0.35	VT / GN	4320	II	—	Powertrain Sensor Bus Enable	21	0.35	VT / GN	4320	III	—
22	0.5	WH	7494	II	—	High Speed GMLAN Serial Data [-] 3	22	0.35	WH	7494	III	—
23	0.35	RD / BN	440	II	—	Battery Positive Voltage	23	0.35	RD / BN	440	III	—
24	0.5	GY	157	II	—	Interior Lamp Control	24	0.5	GY	157	IV	—

X300 Body Wiring Harness to Front Floor Console Wiring Harness (cont'd)

Pin	Size	Color	Circuit	Terminal Type ID	Option	Function	Pin	Size	Color	Circuit	Terminal Type ID	Option
25	0.5	VT	2801	I	USS	Retained Accessory Power Control	25	0.5	VT	2801	V	USS
26	0.5	BK	550	I	USS	Ground	26	0.5	BK	550	V	USS
27	—	—	—	—	—	Not Occupied	27	—	—	—	—	—
28	0.35	GY / BK	3276	II	—	Immobilizer Control Module Control	28	0.35	GY / BK	3276	III	—
29	0.35	GN / VT	7533	II	—	Immobilizer LIN Bus 1	29	0.35	GN / VT	7533	III	—
30	0.35	GN / GY	3277	II	—	Vehicle Anti-Theft System Immobilizer Low Reference	30	0.35	GN / GY	3277	III	—
31	0.5	BU / BK	7493	II	—	High Speed GMLAN Serial Data [+] 3	31	0.35	BU / BK	7493	III	—
32	0.5	WH	4499	II	—	High Speed GMLAN Serial Data [-] 7	32	0.35	WH	4499	III	—
33	0.5	BU / BN	4498	II	—	High Speed GMLAN Serial Data [+] 7	33	0.35	BU / BN	4498	III	—
34	0.5	BU / BK	7493	II	—	High Speed GMLAN Serial Data [+] 3	34	0.35	BU / BK	7493	III	—
35	0.35	VT / WH	639	II	—	Run/Crank Ignition 1 Voltage	35	0.35	VT / WH	639	III	—
36	0.5	WH / BU	5986	II	UKL	Serial Data Communication Enable	36	0.5	WH / BU	5986	IV	UKL
37	0.5	BK	550	I	UKL	Ground	37	0.5	BK	550	V	UKL
38	0.5	GY / BK	3555	I	—	Interior Passive Entry Antenna 2 Low Signal	38	0.5	GY / BK	3555	V	—
39	0.5	BU	3554	I	—	Interior Passive Entry Antenna 2 High Signal	39	0.5	BU	3554	V	—
40	0.35	YE	1492	II	—	Park Brake Switch Supply Voltage	40	0.35	YE	1492	III	—
41	0.35	BU / VT	1134	II	—	Park Brake Switch Signal	41	0.35	BU / VT	1134	III	—
42	0.35	GY / RD	7684	II	—	Park Brake Apply Switch Voltage Reference	42	0.35	GY / RD	7684	III	—
43	0.35	BN	6107	II	—	Park Brake Apply Switch Signal	43	0.35	BN	6107	III	—

X300 Body Wiring Harness to Front Floor Console Wiring Harness (cont'd)

Pin	Size	Color	Circuit	Terminal Type ID	Option	Function	Pin	Size	Color	Circuit	Terminal Type ID	Option
44	0.35	BU / BK	6108	II	—	Park Brake Release Switch Signal	44	0.35	BU / BK	6108	III	—
45	0.35	YE / RD	7683	II	—	Park Brake Release Switch Voltage Reference	45	0.35	YE / RD	7683	III	—
46	0.35	BK	750	II	—	Ground	46	0.35	BK	750	III	—
47	0.35	YE	6817	II	—	LED Backlight Dimming Control 1	47	0.35	YE	6817	III	—
48	0.5	BK	550	II	—	Ground	48	0.5	BK	550	IV	—

X310 Front Driver Seat Wiring Harness to Body Wiring Harness (A2X)

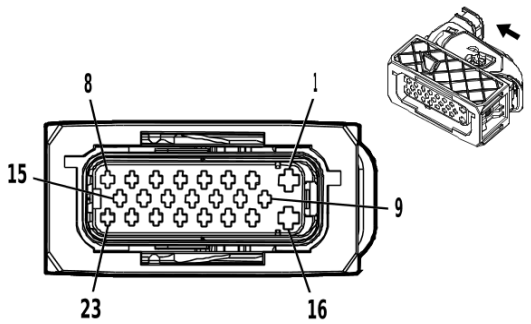

4538855

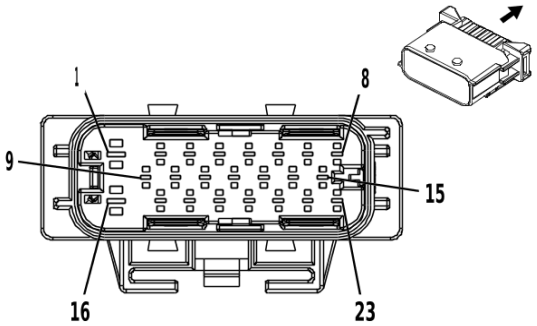

2906943

Connector Part Information

Harness Type: Front Driver Seat Wiring Harness

OEM Connector: 13674806

Service Connector: Service by Harness - See Part Catalog

Description: 23-Way F 1.5 DSQ, 2.8 ATS Series, Sealed(BK)

Connector Part Information

Harness Type: Body Wiring Harness

OEM Connector: 13750010

Service Connector: 19332380

Description: 23-Way M 1.5 DSQ, 2.8 ATS Series, Sealed(BK)

Terminal Part Information

Terminal Type ID	Terminated Lead	Diagnostic Test Probe	Terminal Removal Tool
I	Not required	J-35616-14 (GN)	No Tool Required
II	Not required	J-35616-4A (PU)	No Tool Required
III	13575364	J-35616-5 (PU)	J-38125-36
IV	19368136	J-35616-3 (GY)	EL-38125-560A

X310 Front Driver Seat Wiring Harness to Body Wiring Harness (A2X)

Pin	Size	Color	Circuit	Terminal Type ID	Option	Function	Pin	Size	Color	Circuit	Terminal Type ID	Option
1	2.5	RD / WH	640	II	—	Battery Positive Voltage	1	2.5	RD / WH	640	III	—
2	—	—	—	—	—	Not Occupied	2	—	—	—	—	—
3	0.5	OG / BN	238	I	—	Driver Seat Belt Switch Signal	3	0.5	OG / BN	238	IV	—
4	0.5	BK / OG	1363	I	—	Driver Seat Belt Switch Low Reference	4	0.5	BK / OG	1363	IV	—
5	0.5	BK / YE	2080	I	—	Driver Heated Seat Thermistor Low Reference	5	0.5	BK / YE	2080	IV	KA1
6	0.5	YE / GY	2079	I	—	Driver Seat Heating Temperature Sensor Signal	6	0.5	YE / GY	2079	IV	KA1

X310 Front Driver Seat Wiring Harness to Body Wiring Harness (A2X) (cont'd)

Pin	Size	Color	Circuit	Terminal Type ID	Option	Function	Pin	Size	Color	Circuit	Terminal Type ID	Option
7	0.5	BU	2425	I	—	Driver Seat Back Heating Temperature Sensor Signal	7	0.5	BU	2425	IV	KA1
8	0.75	BN / VT	2077	I	—	Driver Seat Heating Element Control	8	0.5 0.75	BN / VT BN / VT	2077 2077	IV IV	- KA1 KA1
9	0.75	VT / BK	2424	I	—	Driver Seat Back Heating Element Low Reference	9	0.5 0.75	VT / BK VT / BK	2424 2424	IV IV	- KA1 KA1
10	0.5	OG / BU	3068	I	—	Driver Seat Side Air Bag High Control	10	0.5	OG / BU	3068	IV	—
11	0.5	BK / OG	3069	I	—	Driver Seat Side Air Bag Low Control	11	0.5	GN / OG	3069	IV	—
12 - 15	—	—	—	—	—	Not Occupied	12 - 15	—	—	—	—	—
16	2.5	BK	1550	II	—	Ground	16	2.5	BK	1550	III	A2X/ KU1
17 - 18	—	—	—	—	—	Not Occupied	17 - 18	—	—	—	—	—
19	0.75	VT / GN	439	I	—	Run/Crank Ignition 1 Voltage	19	0.75	VT / GN	439	IV	KU1
20 - 21	—	—	—	—	—	Not Occupied	20 - 21	—	—	—	—	—
22	0.5	GN / VT	5906	I	—	Driver Seat Blower Motor Control 1	22	0.5	GN / VT	5906	IV	KU1
23	0.5	RD / WH	640	I	—	Battery Positive Voltage	23	0.5	RD / WH	640	IV	A2X

X320 Front Passenger Seat Wiring Harness to Body Wiring Harness

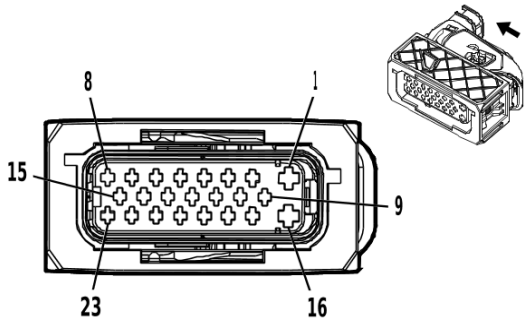

4538855

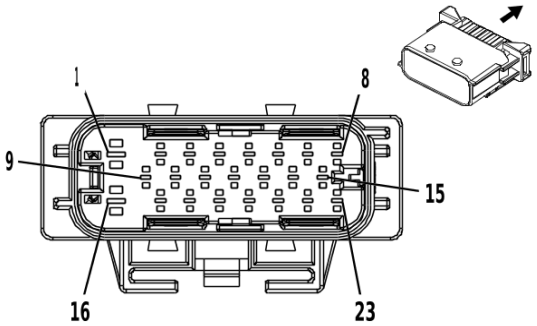

2906943

Connector Part Information

Harness Type: Front Passenger Seat Wiring Harness

OEM Connector: 13674806

Service Connector: Service by Harness - See Part Catalog

Description: 23-Way F 1.5 DSQ, 2.8 ATS Series, Sealed(BK)

Connector Part Information

Harness Type: Body Wiring Harness

OEM Connector: 13750010

Service Connector: 19332380

Description: 23-Way M 1.5 DSQ, 2.8 ATS Series, Sealed(BK)

Terminal Part Information

Terminal Type ID	Terminated Lead	Diagnostic Test Probe	Terminal Removal Tool
I	Not required	J-35616-14 (GN)	No Tool Required
II	Not required	J-35616-4A (PU)	No Tool Required
III	13575364	J-35616-5 (PU)	J-38125-36
IV	19368136	J-35616-3 (GY)	EL-38125-560A

X320 Front Passenger Seat Wiring Harness to Body Wiring Harness

Pin	Size	Color	Circuit	Terminal Type ID	Option	Function	Pin	Size	Color	Circuit	Terminal Type ID	Option
1	2	RD / BU	540	II	—	Battery Positive Voltage	1	1	RD / BU	540	III	KA1
2	—	—	—	—	—	Not Occupied	2	—	—	—	—	—
3	0.5	OG / VT	1362	I	—	Passenger Seat Belt Switch Signal	3	0.5	OG / VT	1362	IV	—
4	0.5	BK / OG	1361	I	—	Passenger Seat Belt Switch Low Reference	4	0.5	BK / OG	1361	IV	—
5	0.75	VT / BK	2424	I	—	Driver Seat Back Heating Element Low Reference	5	0.75 0.5	VT / BK VT / BK	2424 2424	IV IV	KA1 - KA1
6	0.5	BK / YE	2080	I	—	Driver Heated Seat Thermistor Low Reference	6	0.5	BK / YE	2080	IV	KA1

X320 Front Passenger Seat Wiring Harness to Body Wiring Harness (cont'd)

Pin	Size	Color	Circuit	Terminal Type ID	Option	Function	Pin	Size	Color	Circuit	Terminal Type ID	Option
7	0.5	YE / GY	2079	I	—	Driver Seat Heating Temperature Sensor Signal	7	0.5	YE / GY	2079	IV	KA1
8	0.75	BN / VT	2077	I	—	Driver Seat Heating Element Control	8	0.75 0.5	BN / VT BN / VT	2077 2077	IV IV	KA1 - KA1
9	0.5	GN / BU	6133	I	—	Body Control Module LIN Bus 2	9	0.5 0.5	GN / BU GN / BU	6133 6133	IV IV	KA1+ KA6 KA1- KA6
10	0.5	OG / GY	3066	I	—	Passenger Seat Side Air Bag High Control	10	0.5	OG / GY	3066	IV	—
11	0.5	BU / OG	3067	I	—	Passenger Seat Side Air Bag Low Control	11	0.5	BU / OG	3067	IV	—
12	—	—	—	—	—	Not Occupied	12	—	—	—	—	—
13	0.5	RD / VT	2640	I	—	Battery Positive Voltage	13	0.5	RD / VT	2640	IV	—
14	0.5	GN	5060	I	—	Low Speed GMLAN Serial Data	14	0.35	GN	5060	IV	—
15	0.5	BK	750	I	—	Ground	15	0.5	BK	750	IV	—
16	2	BK	850	II	—	Ground	16	2	BK	850	III	KA1
17	—	—	—	—	—	Not Occupied	17	—	—	—	—	—
18	0.5	OG / BN	3947	I	—	Passenger Automatic Locking Retractor Switch Signal	18	0.5	OG / BN	3947	IV	—
19	0.5	GY / OG	3946	I	—	Passenger Automatic Locking Retractor Switch Low Reference	19	0.5	GY / OG	3946	IV	—
20	0.75	VT / GN	439	I	—	Run/Crank Ignition 1 Voltage	20	0.75	VT / GN	439	IV	KU3
21	1.5	RD / WH	540	I	—	Battery Positive Voltage	21	1	RD / BU	540	IV	KA1
22	0.5	GN / VT	5906	I	—	Driver Seat Blower Motor Control 1	22	0.5	GN / VT	5906	IV	KU1
23	0.5	BU	2425	I	—	Driver Seat Back Heating Temperature Sensor Signal	23	0.5	BU	2425	IV	KA1

X330 Instrument Panel Wiring Harness to Roof Wiring Harness

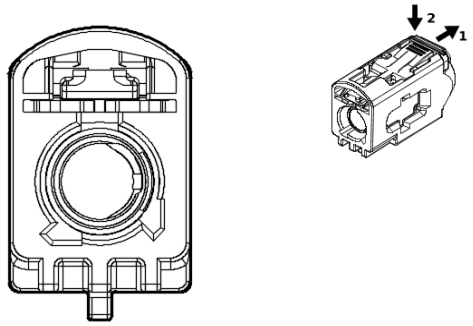

5313405

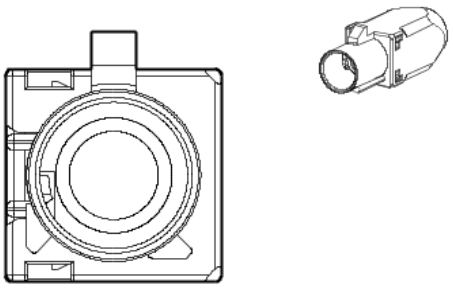

5318805

Connector Part Information

Harness Type: Instrument Panel Wiring Harness COAX

OEM Connector: 13516224

Service Connector: Service by Cable Assembly — See Part Catalog

Description: 1-Way F Coax Type(OG)

Connector Part Information

Harness Type: Roof Wiring Harness COAX

OEM Connector: 13515650

Service Connector: Service by Cable Assembly — See Part Catalog

Description: 1-Way M Coax Type(OG)

Terminal Part Information

Terminal Type ID	Terminated Lead	Diagnostic Test Probe	Terminal Removal Tool
I	Not required	No Tool Required	No Tool Required

X330 Instrument Panel Wiring Harness to Roof Wiring Harness

Pin	Size	Color	Circuit	Terminal Type ID	Option	Function	Pin	Size	Color	Circuit	Terminal Type ID	Option
—	—	Coax Cable	—	I	—	Video Processing Module Coaxial Video Signal	—	—	Coax Cable	—	I	—

X355 Low Voltage Battery Harness to Battery Module 4 Jumper

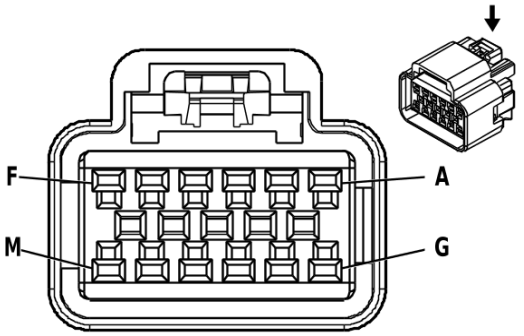

647976

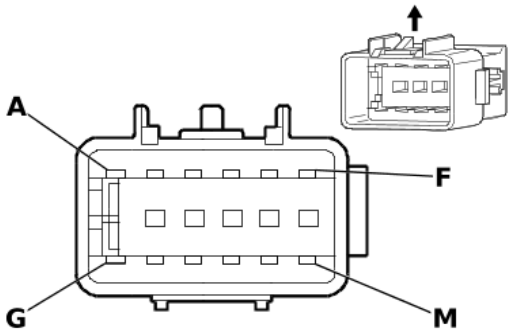

847286

Connector Part Information

Harness Type: Low Voltage Battery Harness
OEM Connector: 15332161
Service Connector: Service by Harness - See Part Catalog
Description: 12-Way F 150 GT Series(BK)

Connector Part Information

Harness Type: Battery Module 4 Jumper
OEM Connector: 15332166
Service Connector: Service by Harness - See Part Catalog
Description: 12-Way M 150 GT Series(BK)

Terminal Part Information

Terminal Type ID	Terminated Lead	Diagnostic Test Probe	Terminal Removal Tool
I	Not required	J-35616-2A (GY)	No Tool Required
II	Not required	J-35616-3 (GY)	No Tool Required

X355 Low Voltage Battery Harness to Battery Module 4 Jumper

Pin	Size	Color	Circuit	Terminal Type ID	Option	Function	Pin	Size	Color	Circuit	Terminal Type ID	Option
A	—	GY	5403	I	—	Hybrid/EV Battery Pack Monitor Low Reference	A	—	GY	5403	II	—
B	—	OG / RD	5591	I	—	Hybrid/EV Battery Cell Voltage Signal 32	B	—	OG / RD	5591	II	—
C	—	GN / WH	4514	I	—	Hybrid/EV Battery Cell Voltage Signal 34	C	—	GN / WH	4514	II	—
D	—	PK	4517	I	—	Hybrid/EV Battery Cell Voltage Signal 36	D	—	PK	4517	II	—
E	—	BU	4519	I	—	Hybrid/EV Battery Cell Voltage Signal 38	E	—	BU	4519	II	—
F	—	VT	4521	I	—	Hybrid/EV Battery Cell Voltage Signal 40	F	—	VT	4521	II	—
G	—	BN	5590	I	—	Hybrid/EV Battery Cell Voltage Signal 31	G	—	BN	5590	II	—

X355 Low Voltage Battery Harness to Battery Module 4 Jumper (cont'd)

Pin	Size	Color	Circuit	Terminal Type ID	Option	Function	Pin	Size	Color	Circuit	Terminal Type ID	Option
H	—	BU	5592	I	—	Hybrid/EV Battery Cell Voltage Signal 33	H	—	BU	5592	II	—
J	—	BU / GN	4516	I	—	Hybrid/EV Battery Cell Voltage Signal 35	J	—	BU / GN	4516	II	—
K	—	GN	4518	I	—	Hybrid/EV Battery Cell Voltage Signal 37	K	—	GN	4518	II	—
L	—	YE	4520	I	—	Hybrid/EV Battery Cell Voltage Signal 39	L	—	YE	4520	II	—
M	—	—	—	—	—	Not Occupied	M	—	—	—	—	—

X356 Low Voltage Battery Harness to Battery Module 7 Jumper

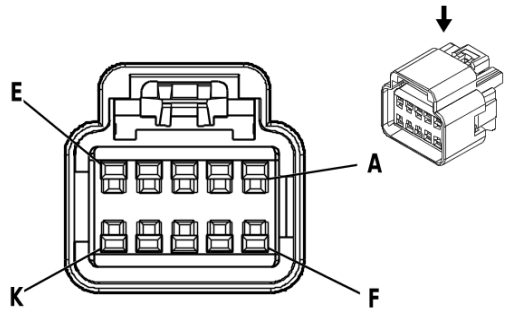

646384

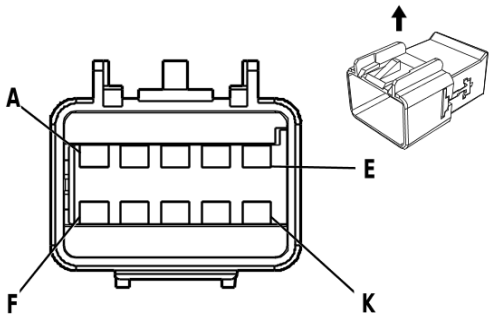

646388

Connector Part Information

Harness Type: Low Voltage Battery Harness
OEM Connector: 15459918
Service Connector: Service by Harness - See Part Catalog
Description: 10-Way F 150 GT Series(BK)

Connector Part Information

Harness Type: Battery Module 7 Jumper
OEM Connector: 15459917
Service Connector: Service by Harness - See Part Catalog
Description: 10-Way M 150 GT Series(BK)

Terminal Part Information

Terminal Type ID	Terminated Lead	Diagnostic Test Probe	Terminal Removal Tool
I	Not required	J-35616-2A (GY)	No Tool Required
II	Not required	J-35616-3 (GY)	No Tool Required

X356 Low Voltage Battery Harness to Battery Module 7 Jumper

Pin	Size	Color	Circuit	Terminal Type ID	Option	Function	Pin	Size	Color	Circuit	Terminal Type ID	Option
A	—	GN	5403	I	—	Hybrid/EV Battery Pack Monitor Low Reference	A	—	GN	5403	II	—
B	—	GN	4545	I	—	Hybrid/EV Battery Cell Voltage Signal 60	B	—	GN	4545	II	—
C	—	YE	4547	I	—	Hybrid/EV Battery Cell Voltage Signal 62	C	—	YE	4547	II	—
D	—	OG	4549	I	—	Hybrid/EV Battery Cell Voltage Signal 64	D	—	OG	4549	II	—
E	—	GY	4554	I	—	Hybrid/EV Battery Cell Voltage Signal 66	E	—	GY	4519	II	—
F	—	PK	4544	I	—	Hybrid/EV Battery Cell Voltage Signal 59	F	—	PK	4544	II	—
G	—	BU	4546	I	—	Hybrid/EV Battery Cell Voltage Signal 61	G	—	BU	4546	II	—

X356 Low Voltage Battery Harness to Battery Module 7 Jumper (cont'd)

Pin	Size	Color	Circuit	Terminal Type ID	Option	Function	Pin	Size	Color	Circuit	Terminal Type ID	Option
H	—	VT	4548	I	—	Hybrid/EV Battery Cell Voltage Signal 63	H	—	VT	4548	II	—
J	—	WH	4553	I	—	Hybrid/EV Battery Cell Voltage Signal 65	J	—	WH	4518	II	—
K	—	—	—	—	—	Not Occupied	K	—	—	—	—	—

X357 Body Wiring Harness to Voltage Current Temperature Module

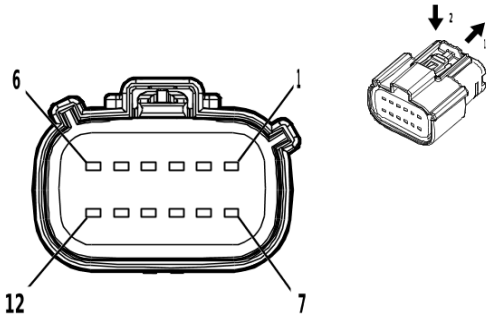

4584248

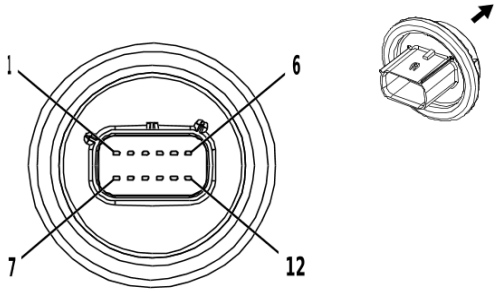

3610369

Connector Part Information

Harness Type: Body Wiring Harness
OEM Connector: 13586052
Service Connector: 19333239
Description: 12-Way F 1.5 MX Series, Sealed(D-GY)

Connector Part Information

Harness Type: Voltage Current Temperature Module
OEM Connector: Not Available
Service Connector: Service by Harness - See Part Catalog
Description: 12-Way M (D-GY)

Terminal Part Information

Terminal Type ID	Terminated Lead	Diagnostic Test Probe	Terminal Removal Tool
I	85528055	J-35616-2A (GY)	J-38125-217
II	Not required	No Tool Required	No Tool Required

X357 Body Wiring Harness to Voltage Current Temperature Module

Pin	Size	Color	Circuit	Terminal Type ID	Option	Function	Pin	Size	Color	Circuit	Terminal Type ID	Option
1	0.5	RD / VT	1640	I	—	Battery Positive Voltage	1	0.5	RD / VT	1640	II	—
2	0.5	BU / WH	3977	I	—	Accessory Wake-Up Serial Data 2	2	0.5	BU / WH	3977	II	—
3	0.5	YE	3831	I	—	High Speed GMLAN Serial Data [+] 6	3	0.5	YE	3831	II	—
4	0.5	WH	3832	I	—	High Speed GMLAN Serial Data [-] 6	4	0.5	WH	3832	II	—
5	0.5	BU	2500	I	—	High Speed GMLAN Serial Data [+] 1	5	0.5	BU	2500	II	—
6	0.5	WH	2501	I	—	High Speed GMLAN Serial Data [-] 1	6	0.5	WH	2501	II	—
7	0.5 0.5 0.5	BU BU BU	2500 2500 2500	I I I	K34 - K34-UKL UKL	High Speed GMLAN Serial Data [+] 1 High Speed GMLAN Serial Data [+] 1 High Speed GMLAN Serial Data [+] 1	7	0.5	BU	2500	II	—

X357 Body Wiring Harness to Voltage Current Temperature Module (cont'd)

Pin	Size	Color	Circuit	Terminal Type ID	Option	Function	Pin	Size	Color	Circuit	Terminal Type ID	Option
8	0.5 0.5	WH WH	2501 2501	I I	K34 - K34-UKL	High Speed GMLAN Serial Data [-] 1 High Speed GMLAN Serial Data [-] 1	8	0.5	WH	2501	II	—
9	0.5	BU / GY	5139	I	—	High Voltage System Interlock Signal	9	0.5	BU / GY	5139	II	—
10	0.5	VT / GN	1339	I	—	Run/Crank Ignition 1 Voltage	10	0.5	VT / GN	1339	II	—
11	0.5	BU / BN	3787	I	—	High Voltage Energy Management Communication Bus Enable Signal	11	0.5	BU / BN	3787	II	—
12	0.5	BK	750	I	—	Ground	12	0.5	BK	750	II	—

X358 Body Wiring Harness to Battery Disconnect Module

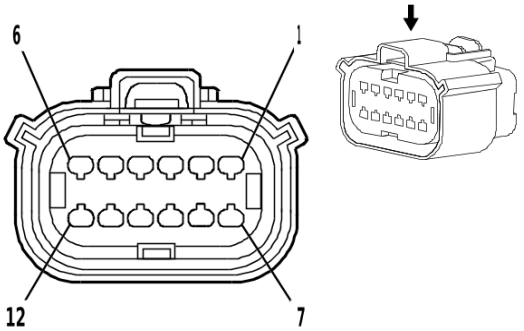

1825165

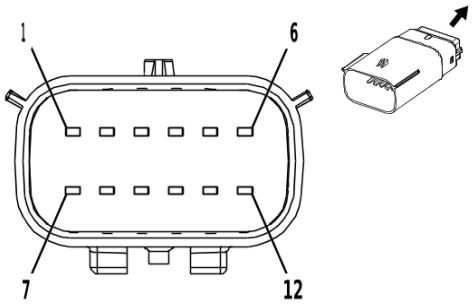

2687960

Connector Part Information

Harness Type: Body Wiring Harness
OEM Connector: 13589660
Service Connector: 19352907
Description: 12-Way F 1.5 Series, Sealed(BK)

Connector Part Information

Harness Type: Battery Disconnect Module
OEM Connector: Not Available
Service Connector: Service by Harness - See Part Catalog
Description: 12-Way M (BK)

Terminal Part Information

Terminal Type ID	Terminated Lead	Diagnostic Test Probe	Terminal Removal Tool
I	19368973	J-35616-2A (GY)	J-38125-217
II	Not required	No Tool Required	No Tool Required

X358 Body Wiring Harness to Battery Disconnect Module

Pin	Size	Color	Circuit	Terminal Type ID	Option	Function	Pin	Size	Color	Circuit	Terminal Type ID	Option
1	0.5	VT	5087	I	—	High Voltage System Interlock Signal 1	1	0.5	VT	5087	II	—
2	0.5	BK / BN	5088	I	—	High Voltage System Interlock Low Reference 1	2	0.5	BK / BN	5088	II	—
3	0.5	BN / GN	3959	I	—	Hybrid/EV Battery 1 [+] Relay Control	3	0.5	BN / GN	3959	II	—
4	0.5	VT / GY	3961	I	—	Hybrid/EV Battery [-] Relay Control	4	0.5	VT / GY	3961	II	—
5	0.5	YE / VT	3962	I	—	Hybrid/EV Battery 3 [+] Relay Control	5	0.5	YE / VT	3962	II	—
6	—	—	—	—	—	Not Occupied	6	—	—	—	—	—
7	0.5	GY	5138	I	—	Precharge Relay	7	0.5	GY	5138	II	—
8	0.5	YE	5411	I	—	Hybrid/EV Battery Temperature Signal 7	8	0.5	YE	5411	II	—

X358 Body Wiring Harness to Battery Disconnect Module (cont'd)

Pin	Size	Color	Circuit	Terminal Type ID	Option	Function	Pin	Size	Color	Circuit	Terminal Type ID	Option
9	0.5	BK / BU	3779	I	—	Hybrid/EV Battery Temperature Sensor Low Reference 7	9	0.5	BK / BU	3779	II	—
10	0.5	BK	850	I	—	Ground	10	0.5	BK	850	II	—
11 - 12	—	—	—	—	—	Not Occupied	11 - 12	—	—	—	—	—

X360 Rear Seat Wiring Harness to Body Wiring Harness (KA6)

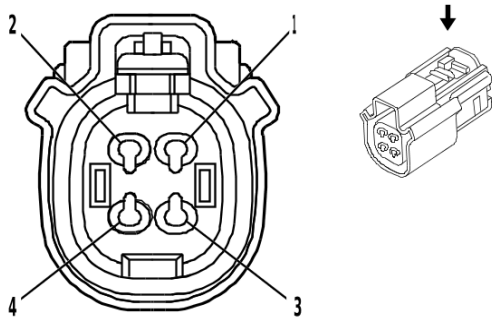

1960031

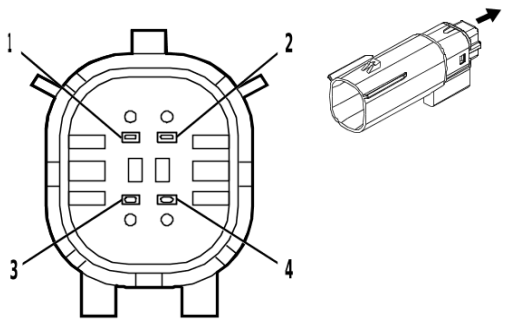

2368875

Connector Part Information

Harness Type: Rear Seat Wiring Harness
OEM Connector: Not Available
Service Connector: Service by Harness - See Part Catalog
Description: 4-Way F

Connector Part Information

Harness Type: Body Wiring Harness
OEM Connector: 13510901
Service Connector: 84838880
Description: 4-Way M 1.5 MX Series, Sealed(BK)

Terminal Part Information

Terminal Type ID	Terminated Lead	Diagnostic Test Probe	Terminal Removal Tool
I	Not required	No Tool Required	No Tool Required
II	Not required	J-35616-3 (GY)	No Tool Required

X360 Rear Seat Wiring Harness to Body Wiring Harness (KA6)

Pin	Size	Color	Circuit	Terminal Type ID	Option	Function	Pin	Size	Color	Circuit	Terminal Type ID	Option
1	0.75	RD / BU	540	I	KA6	Battery Positive Voltage	1	0.75	RD / BU	540	II	KA6
2	0.5	GN / BU	6133	I	KA1+ KA6	Body Control Module LIN Bus 2	2	0.5	GN / BU	6133	II	KA1+ KA6
3	0.75	BK	2250	I	KA6	Ground	3	0.75	BK	2250	II	KA6
4	—	—	—	—	—	Not Occupied	4	—	—	—	—	—

X375 Body Wiring Harness to Sunroof Wiring Harness (CAJ)

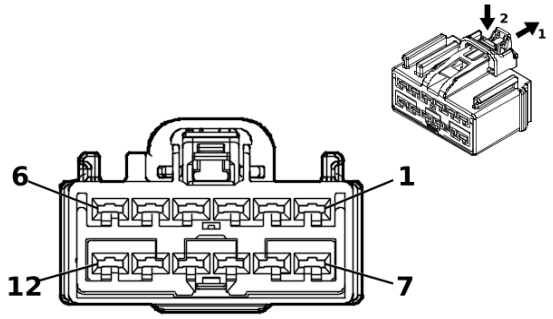

5254826

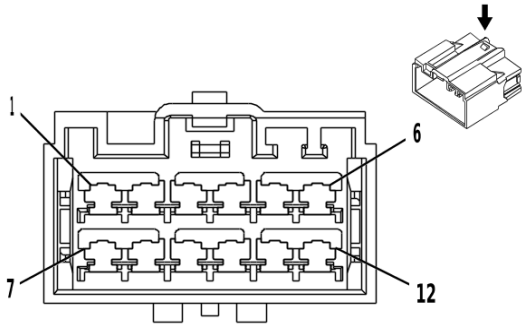

3277914

Connector Part Information

Harness Type: Body Wiring Harness
OEM Connector: 13518424
Service Connector: 13518424
Description: 12-Way F 2.8 Kaizen Series(L-GY)

Connector Part Information

Harness Type: Sunroof Wiring Harness
OEM Connector: 19179143
Service Connector: Service by Harness - See Part Catalog
Description: 12-Way M 2.8 Series(L-GY)

Terminal Part Information

Terminal Type ID	Terminated Lead	Diagnostic Test Probe	Terminal Removal Tool
I	19368264	J-35616-4A (PU)	J-38125-11A
II	Not required	J-35616-5 (PU)	No Tool Required

X375 Body Wiring Harness to Sunroof Wiring Harness (CAJ)

Pin	Size	Color	Circuit	Terminal Type ID	Option	Function	Pin	Size	Color	Circuit	Terminal Type ID	Option
1	2	RD / GY	5540	I	—	Battery Positive Voltage	1	2	RD / GY	5540	II	—
2	0.35	BU / VT	5027	I	—	Sunroof Switch Serial Data 1 Signal	2	0.35	BU	5027	II	—
3	0.35	GN / BN	6132	I	—	Body Control Module LIN Bus 1	3	0.35	GN	6132	II	—
4	0.35	BK / WH	151	I	—	Signal Ground	4	0.35	BK	151	II	—
5	2	BK	1950	I	—	Ground	5	2	BK	1950	II	—
6	—	—	—	—	—	Not Occupied	6	—	—	—	—	—
7	0.35	BU / GY	3032	I	—	Front Sunshade Switch Signal	7	0.35	YE	3032	II	—
8 - 12	—	—	—	—	—	Not Occupied	8 - 12	—	—	—	—	—

X401 Body Wiring Harness to Antenna

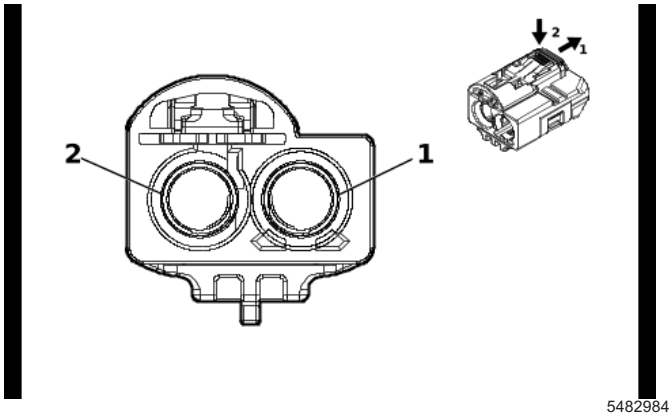

5482984

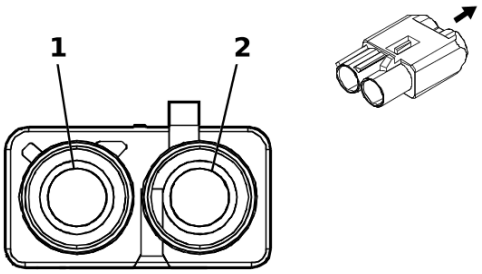

5205178

Connector Part Information

Harness Type: Body Wiring Harness COAX

OEM Connector: 1-2289732-1

Service Connector: Service by Cable Assembly — See Part Catalog

Description: 2-Way F Coax Type(RD)

Connector Part Information

Harness Type: Antenna COAX

OEM Connector: 13515669

Service Connector: Service by Cable Assembly — See Part Catalog

Description: 2-Way M Coax Type(BK)

Terminal Part Information

Terminal Type ID	Terminated Lead	Diagnostic Test Probe	Terminal Removal Tool
I	Not required	No Tool Required	No Tool Required

X401 Body Wiring Harness to Antenna

Pin	Size	Color	Circuit	Terminal Type ID	Option	Function	Pin	Size	Color	Circuit	Terminal Type ID	Option
—	—	Coax Cable	—	I	—	Video Processing Module Coaxial Video Signal	—	—	Coax Cable	—	I	—

X405 Liftgate Jumper Wiring Harness to Roof Wiring Harness

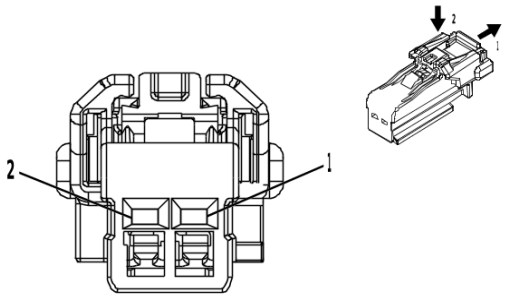

4373379

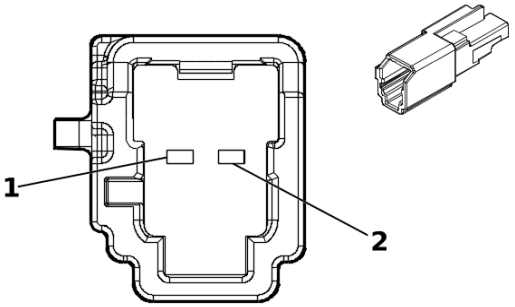

5360948

Connector Part Information

Harness Type: Liftgate Jumper Wiring Harness
OEM Connector: 13532423
Service Connector: Service by Harness - See Part Catalog
Description: 2-Way F 1.2 MCON Series(GY)

Connector Part Information

Harness Type: Roof Wiring Harness
OEM Connector: 13530129
Service Connector: 84847259
Description: 2-Way M 1.2 MCON Series(GY)

Terminal Part Information

Terminal Type ID	Terminated Lead	Diagnostic Test Probe	Terminal Removal Tool
I	Not required	J-35616-16 (L-GN)	No Tool Required
II	Not required	J-35616-17 (L-GN)	No Tool Required

X405 Liftgate Jumper Wiring Harness to Roof Wiring Harness

Pin	Size	Color	Circuit	Terminal Type ID	Option	Function	Pin	Size	Color	Circuit	Terminal Type ID	Option
1	0.5	GN / YE	4737	I	UKL	FlexRay Serial Data [+] 9	1	0.35	GN / YE	4737	II	UKL
2	0.5	WH	4738	I	UKL	FlexRay Serial Data [-] 9	2	0.35	WH	4738	II	UKL

X415 Body Wiring Harness to Rear Object Alarm Sensor Wiring Harness

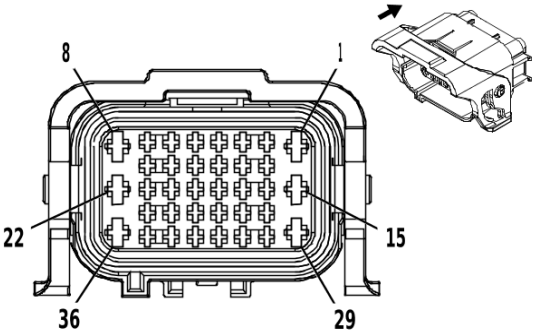

1869605

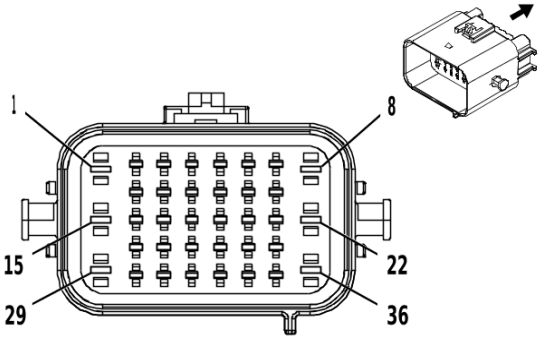

1869606

Connector Part Information

Harness Type: Body Wiring Harness

OEM Connector: 1743059-2

Service Connector: 13580088

Description: 36-Way F Micro-Timer II, Junior Power Timer Series, Sealed(BK)

Connector Part Information

Harness Type: Rear Object Alarm Sensor Wiring Harness

OEM Connector: 1743062-2

Service Connector: Service by Harness - See Part Catalog

Description: 36-Way M Micro-Timer II, Junior Power Timer Hybrid Series, Sealed(BK)

Terminal Part Information

Terminal Type ID	Terminated Lead	Diagnostic Test Probe	Terminal Removal Tool
I	19368953	J-35616-33 (YE)	EL-38125-560A
II	Not required	J-35616-34 (YE)	No Tool Required

X415 Body Wiring Harness to Rear Object Alarm Sensor Wiring Harness

Pin	Size	Color	Circuit	Terminal Type ID	Option	Function	Pin	Size	Color	Circuit	Terminal Type ID	Option
1 - 2	—	—	—	—	—	Not Occupied	1 - 2	—	—	—	—	—
3	0.5	GY / YE	1760	I	UKC	Left Side Object Detection LED Control	3	0.5	GY / YE	1760	II	UKC
4	0.35	RD / YE	5840	I	UKC	Battery Positive Voltage	4	0.35	RD / YE	5840	II	UKC
5	0.5	BK	1550	I	UKC	Ground	5	0.5	BK	1550	II	UKC
6	0.5	GY	1761	I	UKC	Right Side Object Detection LED Control	6	0.5	GY	1761	II	UKC
7 - 8	—	—	—	—	—	Not Occupied	7 - 8	—	—	—	—	—
9	0.5	WH / VT	6567	I	—	Rear Turn Signal Lamp Feedback Signal	9	0.5	WH / VT	6567	II	
10	0.5	BU / WH	1334	I	—	Left Rear Turn Signal Lamp Control 2	10	0.5	BU / WH	1334	II	
11	—	—	—	—	—	Not Occupied	11	—	—	—	—	—

X415 Body Wiring Harness to Rear Object Alarm Sensor Wiring Harness (cont'd)

Pin	Size	Color	Circuit	Terminal Type ID	Option	Function	Pin	Size	Color	Circuit	Terminal Type ID	Option
12	0.35	GN	5060	I	UKC	Low Speed GMLAN Serial Data	12	0.35	GN	5060	II	UKC
13	0.5	BU / VT	1335	I	—	Right Rear Turn Signal Lamp Control 2	13	0.5	BU / VT	1335	II	
14	0.5	WH / BK	7544	I	—	Right Rear Turn Signal Lamp Feedback Signal	14	0.5	WH / BK	7544	II	
15	—	—	—	—	—	Not Occupied	15	—	—	—	—	—
16	0.35	YE / BU	2376	I	UD7	Left Rear Middle Parking Assist Sensor Signal	16	0.35	YE / BU	2376	II	UD7
17	0.5	BK	1150	I	—	Ground	17	0.5	BK	1150	II	
18	0.5	BN / GN	3568	I	—	Rear Closure Passive Entry Antenna High Signal	18	0.5	BN / GN	3568	II	—
19	0.5	GN / GY	3569	I	—	Rear Closure Passive Entry Antenna Low Signal	19	0.5	GN / GY	3569	II	—
20	0.5	BK	1950	I	—	Ground	20	0.5	BK	1950	II	
21	0.35	YE / WH	2377	I	UD7	Right Rear Middle Parking Assist Sensor Signal	21	0.35	YE / WH	2377	II	UD7
22	—	—	—	—	—	Not Occupied	22	—	—	—	—	—
23	0.35	YE	2375	I	UD7	Left Rear Outer Parking Assist Sensor Signal	23	0.35	YE	2375	II	UD7
24	—	—	—	—	—	Not Occupied	24	—	—	—	—	—
25	0.5	GN / WH	24	I	—	Backup Lamp Control	25	0.5	GN / WH	24	II	—
26	0.5	BK	1950	I	—	Ground	26	0.5	BK	1950	II	—
27	—	—	—	—	—	Not Occupied	27	—	—	—	—	—
28	0.35	YE / VT	2378	I	UD7	Right Rear Outer Parking Assist Sensor Signal	28	0.35	YE / VT	2378	II	UD7
29 - 31	—	—	—	—	—	Not Occupied	29 - 31	—	—	—	—	—
32	0.35	BN / WH	2374	I	UD7	Object Sensor Voltage Reference	32	0.35	BN / WH	2374	II	UD7

X415 Body Wiring Harness to Rear Object Alarm Sensor Wiring Harness (cont'd)

Pin	Size	Color	Circuit	Terminal Type ID	Option	Function	Pin	Size	Color	Circuit	Terminal Type ID	Option
33	0.35	BK / GY	2379	I	UD7	Object Sensor Low Reference	33	0.35	BK / GY	2379	II	UD7
34 - 36	—	—	—	—	—	Not Occupied	34 - 36	—	—	—	—	—

X500 Front Side Door Door Wiring Harness - Driver to Body Wiring Harness

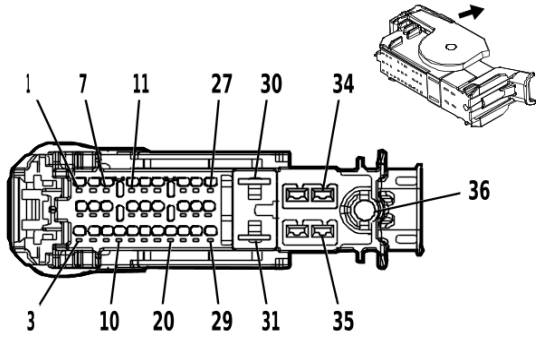

4883352

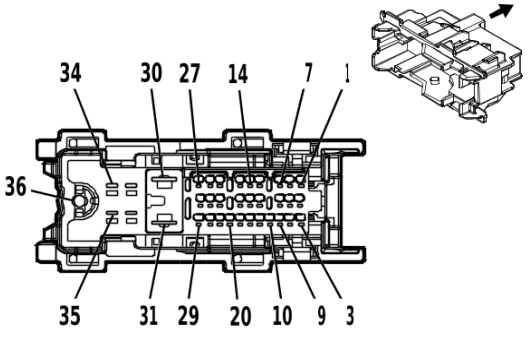

4877473

Connector Part Information

Harness Type: Front Side Door Door Wiring Harness - Driver
OEM Connector: 13519700
Service Connector: Service by Harness - See Part Catalog
Description: 36-Way F 1.2, 2.8, 6.3, Coaxial Series(BK)

Connector Part Information

Harness Type: Body Wiring Harness
OEM Connector: 13519701
Service Connector: 13519701
Description: 36-Way M 1.2, 2.8, 6.3, Coaxial Series(BK)

Terminal Part Information

Terminal Type ID	Terminated Lead	Diagnostic Test Probe	Terminal Removal Tool
I	Not required	J-35616-16 (L-GN)	No Tool Required
II	Not required	J-35616-42 (RD)	No Tool Required
III	Not required	J-35616-4A (PU)	No Tool Required
IV	Not required	No Tool Required	No Tool Required
V	19301536	J-35616-43 (RD)	J-38125-11A
VI	84616651	J-35616-13 (BU)	J-38125-215A
VII	84726946	J-35616-13 (BU)	J-38125-215A
VIII	84888592	J-35616-5 (PU)	J-38125-11A
IX	Service by Cable	No Tool Required	J-38125-12A

X500 Front Side Door Door Wiring Harness - Driver to Body Wiring Harness

Pin	Size	Color	Circuit	Terminal Type ID	Option	Function	Pin	Size	Color	Circuit	Terminal Type ID	Option
1	0.5	BK	650	I	—	Ground	1	0.5	BK	650	VI	—
2	0.5	BN / YE	2267	I	DWK/ DXD	Outside Rearview Mirror Heater Control	2	0.35	BN / YE	2267	VI	DWK/ DXD
3	0.5	YE	6817	I	—	LED Back-light Dim-ming Control 1	3	0.35	YE	6817	VI	—
4	0.5	BU / WH	1314	I	—	Left Front Turn Signal Lamp Control	4	0.5	BU / WH	1314	VI	—
5	0.5	GY / YE	1760	I	UKC	Left Side Ob-ject Detec-tion LED Control	5	0.5	GY / YE	1760	VI	UKC

X500 Front Side Door Door Wiring Harness - Driver to Body Wiring Harness (cont'd)

Pin	Size	Color	Circuit	Terminal Type ID	Option	Function	Pin	Size	Color	Circuit	Terminal Type ID	Option
6	0.5	BN / WH	781	I	—	Driver Door Lock Switch Unlock Signal	6	0.35	BN / WH	781	VI	—
7	0.5	GN / WH	3570	I	—	Driver Door Handle Switch Signal	7	0.5	GN / WH	3570	VI	—
8	—	—	—	—	—	Not Occupied	8	—	—	—	—	—
9	0.5	BN / YE	780	I	—	Driver Door Lock Switch Lock Signal	9	0.35	BN / YE	780	VI	—
10	0.5	BK	550	I	—	Ground	10	0.5	BK	550	VI	—
11	0.5	BK	550	I	—	Ground	11	0.5	BK	550	VI	—
12	0.5	BK	550	I	C9B	Ground	12	0.5	BK	550	VI	C9B
13	0.5	WH / YE	7557	I	C9B	Interior Door Handle Accent Lighting Control	13	0.35	WH / YE	7557	VI	C9B
14	0.5	VT / GY	3561	I	—	Driver Door Passive Entry Antenna Low Signal	14	0.5	VT / GY	3561	VI	—
15	0.5	OG / GN	2132	I	—	Left Front Side Impact Sensor Signal	15	0.5	OG / GN	2132	VI	—
16	0.5	GN / YE	6134	I	—	Body Control Module LIN Bus 3	16	0.35	GN / YE	6134	VI	—
17	0.5	VT	3560	I	—	Driver Door Passive Entry Antenna High Signal	17	0.5	VT	3560	VI	—
18	0.5	BK / OG	6628	I	—	Left Front Side Impact Sensor Low Reference	18	0.5	BK / OG	6628	VI	—
19	0.5	WH / YE	3574	I	—	Driver Door Open Switch Signal	19	0.5	WH / YE	3574	VI	—
20	0.5	GN / BK	3396	I	DWK/ DXD	Passenger Outside Rearview Mirror Motor Right [+] Left [-] Control	20	0.5	GN / BK	3396	VI	DWK/ DXD
21	0.5	VT / YE	3409	I	DXD	Outside Rearview Mirror Motor Unfold Control	21	0.5	VT / YE	3409	VI	DXD
22	0.5	WH / BN	3410	I	DXD	Mirror Outside Rearview Mirror Fold Control	22	0.5	WH / BN	3410	VI	DXD

X500 Front Side Door Door Wiring Harness - Driver to Body Wiring Harness (cont'd)

Pin	Size	Color	Circuit	Terminal Type ID	Option	Function	Pin	Size	Color	Circuit	Terminal Type ID	Option
23	0.5	YE / VT	3397	I	DWK/ DXD	Passenger Outside Rearview Mirror Motor Up [+] Down [-] Control	23	0.5	YE / VT	3397	VI	DWK/ DXD
24	0.5	BK	550	I	—	Ground	24	0.5	BK	550	VI	—
25	0.5	RD / GN	1540	I	—	Battery Positive Voltage	25	0.35	RD / GN	1540	VI	—
26	0.5	WH	3398	I	DWK/ DXD	Passenger Outside Rearview Mirror Motor Common Control	26	0.5	WH	3398	VI	DWK/ DXD
27	0.75	BN / YE	294	I	—	Door Lock Actuator Unlock Control	27	0.75	BN / YE	294	VII	—
28	0.5	BK	550	I	—	Ground	28	0.5	BK	550	VI	—
29	0.75	GY	5911	I	—	Door Lock Actuator Lock Control 2	29	0.75	GY	5911	VII	—
30	2	RD / GN	1540	II	—	Battery Positive Voltage	30	2	RD / GN	1540	V	—
31	2	BK	650	II	—	Ground	31	2	BK	650	V	—
32 - 33	—	—	—	—	—	Not Occupied	32 - 33	—	—	—	—	—
34	0.75 0.75	BN / BU BN / BU	118 118	III III	UQ3 UQA	Left Front Speaker [-] Control 1 Left Front Speaker [-] Control 1	34	0.75 1.5	BN / BU BN / BU	118 118	VIII VIII	UQ3 UQA
35	0.75 0.75	BU BU	201 201	III III	UQ3 UQA	Left Front Speaker 1 [+] Control Left Front Speaker 1 [+] Control	35	0.75 1.5	BU BU	201 201	VIII VIII	UQ3 UQA
36	0	BK	Coax Cable	IV	UV2	Coax Cable	36	0	BK	Coax Cable	IX	UV2

X510 Front Side Door Door Wiring Harness - Driver to Outside Rearview Mirror Wiring Harness - Driver

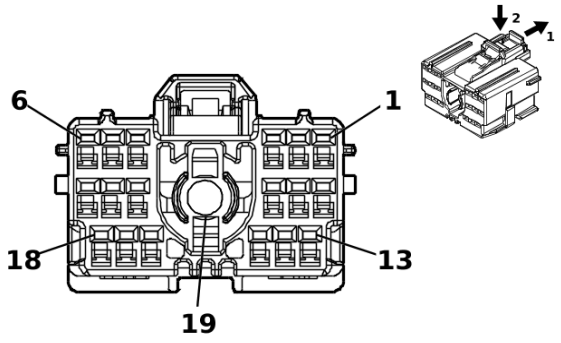

5253439

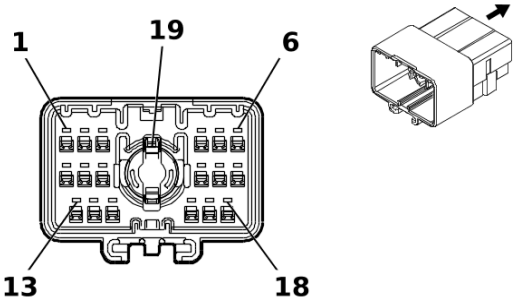

4969165

Connector Part Information

Harness Type: Front Side Door Door Wiring Harness - Driver
OEM Connector: 13518413
Service Connector: Service by Harness - See Part Catalog
Description: 19-Way F 1.2 MCON, Coaxial Series(BK)

Connector Part Information

Harness Type: Outside Rearview Mirror Wiring Harness - Driver
OEM Connector: Not Available
Service Connector: Service by Harness - See Part Catalog
Description: 19-Way M (BK)

Terminal Part Information

Terminal Type ID	Terminated Lead	Diagnostic Test Probe	Terminal Removal Tool
I	Not required	J-35616-16 (L-GN)	No Tool Required
II	Not required	No Tool Required	No Tool Required
III	Not required	No Tool Required	No Tool Required

X510 Front Side Door Door Wiring Harness - Driver to Outside Rearview Mirror Wiring Harness - Driver

Pin	Size	Color	Circuit	Terminal Type ID	Option	Function	Pin	Size	Color	Circuit	Terminal Type ID	Option
1	0.5	BN / BK	3389	I	DWK/ DXD	Driver Outside Rearview Mirror Motor Right [+] Left [-] Control	1	0.5	BN / BK	3389	III	(DWK/ DXD)
2	0.5	VT / BU	3390	I	DWK/ DXD	Driver Outside Rearview Mirror Motor Up [+] Down [-] Control	2	0.5	VT / BU	3390	III	(DWK/ DXD)
3	0.5	WH / BN	3410	I	DXD	Mirror Outside Rearview Mirror Fold Control	3	0.5	WH / BN	3410	III	DXD
4	0.5	GY / YE	1760	I	UKC	Left Side Object Detection LED Control	4	0.5	GY / YE	1760	III	UKC
5 - 6	—	—	—	—	—	Not Occupied	5 - 6	—	—	—	—	—

X510 Front Side Door Door Wiring Harness - Driver to Outside Rearview Mirror Wiring Harness - Driver (cont'd)

Pin	Size	Color	Circuit	Terminal Type ID	Option	Function	Pin	Size	Color	Circuit	Terminal Type ID	Option
7	0.5	BN / YE	2267	I	DWK/ DXD	Outside Rearview Mirror Heater Control	7	0.5	BN / YE	2267	III	(DWK/ DXD)
8	0.5	BU / WH	1314	I	—	Left Front Turn Signal Lamp Control	8	0.5	BU / WH	1314	III	—
9	0.5	BK	650	I	—	Ground	9	0.5	BK	650	III	(DWK/ DXD/ UKC)
10 - 13	—	—	—	—	—	Not Occu- pied	10 - 13	—	—	—	—	—
14	0.5	YE / BN	3391	I	DWK/ DXD	Driver Mirror Motor Com- mon Control	14	0.5	YE / BN	3391	III	(DWK/ DXD)
15	0.5	VT / YE	3409	I	DXD	Outside Rearview Mirror Motor Unfold Con- trol	15	0.5	VT / YE	3409	III	DXD
16 - 18	—	—	—	—	—	Not Occu- pied	16 - 18	—	—	—	—	—
19	0	BK	Coax Cable	II	UV2	Coax Cable	19	0	—	Coax Cable	III	UV2

X600 Front Side Door Door Wiring Harness - Passenger to Body Wiring Harness

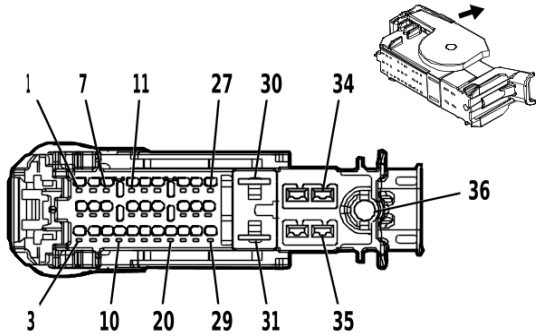

4883352

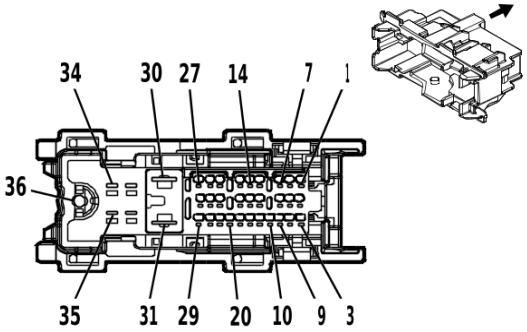

4877473

Connector Part Information

Harness Type: Front Side Door Door Wiring Harness - Passenger

OEM Connector: 13519700

Service Connector: Service by Harness - See Part Catalog

Description: 36-Way F 1.2, 2.8, 6.3, Coaxial Series(BK)

Connector Part Information

Harness Type: Body Wiring Harness

OEM Connector: 13519701

Service Connector: 13519701

Description: 36-Way M 1.2, 2.8, 6.3, Coaxial Series(BK)

Terminal Part Information

Terminal Type ID	Terminated Lead	Diagnostic Test Probe	Terminal Removal Tool
I	Not required	J-35616-16 (L-GN)	No Tool Required
II	Not required	J-35616-42 (RD)	No Tool Required
III	Not required	J-35616-4A (PU)	No Tool Required
IV	Not required	No Tool Required	No Tool Required
V	19301536	J-35616-43 (RD)	J-38125-11A
VI	84616651	J-35616-13 (BU)	J-38125-215A
VII	84726946	J-35616-13 (BU)	J-38125-215A
VIII	84888592	J-35616-5 (PU)	J-38125-11A
IX	Service by Cable	No Tool Required	J-38125-12A

X600 Front Side Door Door Wiring Harness - Passenger to Body Wiring Harness

Pin	Size	Color	Circuit	Terminal Type ID	Option	Function	Pin	Size	Color	Circuit	Terminal Type ID	Option
1	0.5	BK	850	I	—	Ground	1	0.5	BK	850	VI	—
2	0.5	BN / YE	2267	I	DWK/ DXD	Outside Rearview Mirror Heater Control	2	0.35	BN / YE	2267	VI	DWK/ DXD
3	0.5	YE	6817	I	—	LED Back-light Dim-ming Control 1	3	0.35	YE	6817	VI	—
4	0.5	GN / VT	1315	I	—	Right Front Turn Signal Lamp Control	4	0.5	GN / VT	1315	VI	—
5	0.5	GY	1761	I	UKC	Right Side Object De-tection LED Control	5	0.5	GY	1761	VI	UKC

X600 Front Side Door Door Wiring Harness - Passenger to Body Wiring Harness (cont'd)

Pin	Size	Color	Circuit	Terminal Type ID	Option	Function	Pin	Size	Color	Circuit	Terminal Type ID	Option
6	0.5	BN / VT	245	I	—	Passenger Door Lock Switch Unlock Control	6	0.35	BN / VT	245	VI	—
7	0.5	VT / WH	3571	I	—	Passenger Door Handle Switch Signal	7	0.5	VT / WH	3571	VI	—
8	0.5	YE	6817	I	—	LED Backlight Dimming Control 1	8	0.5	YE	6817	VI	—
9	0.5	YE / VT	244	I	—	Passenger Door Lock Switch Lock Control	9	0.35	YE / VT	244	VI	—
10	0.5	BK	750	I	—	Ground	10	0.5	BK	750	VI	—
11	0.5	BK	750	I	—	Ground	11	0.5	BK	750	VI	—
12	0.5	BK	750	I	C9B	Ground	12	0.5	BK	750	VI	C9B
13	0.5	WH / YE	7557	I	C9B	Interior Door Handle Accent Lighting Control	13	0.35	WH / YE	7557	VI	C9B
14	0.5	GN / BK	3563	I	—	Passenger Door Passive Entry Antenna Low Signal	14	0.5	GN / BK	3563	VI	—
15	0.5	BN / OG	2134	I	—	Right Front Side Impact Sensor Signal	15	0.5	BN / OG	2134	VI	—
16	0.5	GN / YE	6134	I	—	Body Control Module LIN Bus 3	16	0.35	GN / YE	6134	VI	—
17	0.5	GN / YE	3562	I	—	Passenger Door Passive Entry Antenna High Signal	17	0.5	GN / YE	3562	VI	—
18	0.5	BK / OG	6629	I	—	Right Front Side Impact Sensor Low Reference	18	0.5	BK / OG	6629	VI	—
19	—	—	—	—	—	Not Occupied	19	—	—	—	—	—
20	0.5	GN / BK	3396	I	DWK/ DXD	Passenger Outside Rearview Mirror Motor Right [+] Left [-] Control	20	0.5	GN / BK	3396	VI	DWK/ DXD
21	0.5	VT / YE	3409	I	DXD	Outside Rearview Mirror Motor Unfold Control	21	0.5	VT / YE	3409	VI	DXD
22	0.5	WH / BN	3410	I	DXD	Mirror Outside Rearview Mirror Fold Control	22	0.5	WH / BN	3410	VI	DXD

X600 Front Side Door Door Wiring Harness - Passenger to Body Wiring Harness (cont'd)

Pin	Size	Color	Circuit	Terminal Type ID	Option	Function	Pin	Size	Color	Circuit	Terminal Type ID	Option
23	0.5	YE / VT	3397	I	DWK/ DXD	Passenger Outside Rearview Mirror Motor Up [+] Down [-] Control	23	0.5	YE / VT	3397	VI	DWK/ DXD
24	0.5	BK	750	I	—	Ground	24	0.5	BK	750	VI	—
25	—	—	—	—	—	Not Occupied	25	—	—	—	—	—
26	0.5	WH	3398	I	DWK/ DXD	Passenger Outside Rearview Mirror Motor Common Control	26	0.5	WH	3398	VI	DWK/ DXD
27	0.75	BN / YE	294	I	—	Door Lock Actuator Unlock Control	27	1	BN / YE	294	VII	—
28	0.5	BK	750	I	—	Ground	28	0.5	BK	750	VI	—
29	0.75	GY	295	I	—	Door Lock Actuator Lock Control	29	1	GY	295	VII	—
30	2	RD / GN	1540	II	—	Battery Positive Voltage	30	2	RD / GN	1540	V	—
31	2	BK	850	II	—	Ground	31	2	BK	850	V	—
32 - 33	—	—	—	—	—	Not Occupied	32 - 33	—	—	—	—	—
34	0.75 0.75	YE / BK YE / BK	117 117	III III	UQ3 UQA	Right Front Speaker [-] Control 1 Right Front Speaker [-] Control 1	34	0.75 1.5	YE / BK YE / BK	117 117	VIII VIII	UQ3 UQA
35	0.75 0.75	YE YE	200 200	III III	UQ3 UQA	Right Front Speaker 1 [+] Control Right Front Speaker 1 [+] Control	35	0.75 1.5	YE YE	200 200	VIII VIII	UQ3 UQA
36	0	BK	Coax Cable	IV	UV2	Coax Cable	36	0	BK	Coax Cable	IX	UV2

X610 Front Side Door Door Wiring Harness - Passenger to Outside Rearview Mirror Wiring Harness - Passenger

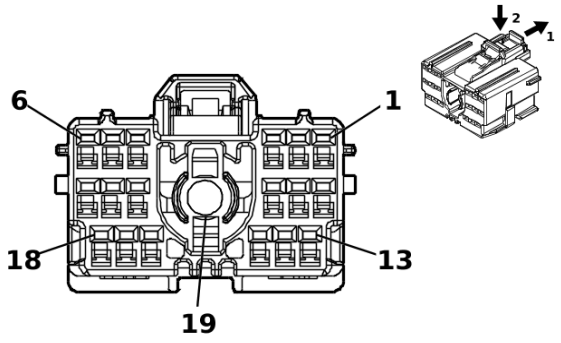

5253439

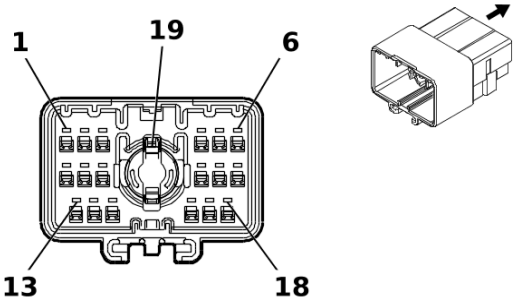

4969165

Connector Part Information

Harness Type: Front Side Door Door Wiring Harness - Passenger

OEM Connector: 13518413

Service Connector: Service by Harness - See Part Catalog

Description: 19-Way F 1.2 MCON, Coaxial Series(BK)

Connector Part Information

Harness Type: Outside Rearview Mirror Wiring Harness - Passenger

OEM Connector: Not Available

Service Connector: Service by Harness - See Part Catalog

Description: 19-Way M (BK)

Terminal Part Information

Terminal Type ID	Terminated Lead	Diagnostic Test Probe	Terminal Removal Tool
I	Not required	J-35616-16 (L-GN)	No Tool Required
II	Not required	No Tool Required	No Tool Required
III	Not required	No Tool Required	No Tool Required

X610 Front Side Door Door Wiring Harness - Passenger to Outside Rearview Mirror Wiring Harness - Passenger

Pin	Size	Color	Circuit	Terminal Type ID	Option	Function	Pin	Size	Color	Circuit	Terminal Type ID	Option
1	0.5	GN / BK	3396	I	DWK/ DXD	Passenger Outside Rearview Mirror Motor Right [+] Left [-] Control	1	0.5	GN / BK	3396	III	(DWK/ DXD)
2	0.5	YE / VT	3397	I	DWK/ DXD	Passenger Outside Rearview Mirror Motor Up [+] Down [-] Control	2	0.5	YE / VT	3397	III	(DWK/ DXD)
3	0.5	WH / BN	3410	I	DXD	Mirror Outside Rearview Mirror Fold Control	3	0.5	WH / BN	3410	III	DXD
4	0.5	GY	1761	I	UKC	Right Side Object Detection LED Control	4	0.5	GY	1761	III	UKC
5 - 6	—	—	—	—	—	Not Occupied	5 - 6	—	—	—	—	—

X610 Front Side Door Door Wiring Harness - Passenger to Outside Rearview Mirror Wiring Harness - Passenger (cont'd)

Pin	Size	Color	Circuit	Terminal Type ID	Option	Function	Pin	Size	Color	Circuit	Terminal Type ID	Option
7	0.5	BN / YE	2267	I	DWK/ DXD	Outside Rearview Mirror Heater Control	7	0.5	BN / YE	2267	III	(DWK/ DXD)
8	0.5	GN / VT	1315	I	—	Right Front Turn Signal Lamp Control	8	0.5	GN / VT	1315	III	—
9	0.5	BK	850	I	—	Ground	9	0.5	BK	850	III	(DWK/ DXD/ UKC)
10 - 13	—	—	—	—	—	Not Occu- pied	10 - 13	—	—	—	—	—
14	0.5	WH	3398	I	DWK/ DXD	Passenger Outside Rearview Mirror Motor Common Control	14	0.5	WH	3398	III	(DWK/ DXD)
15	0.5	VT / YE	3409	I	DXD	Outside Rearview Mirror Motor Unfold Con- trol	15	0.5	VT / YE	3409	III	DXD
16 - 18	—	—	—	—	—	Not Occu- pied	16 - 18	—	—	—	—	—
19	0	BK	Coax Cable	II	UV2	Coax Cable	19	0	—	Coax Cable	III	UV2

X700 Rear Door Door Wiring Harness - Left to Body Wiring Harness

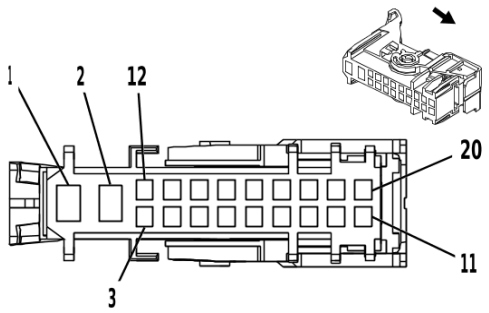

2474676

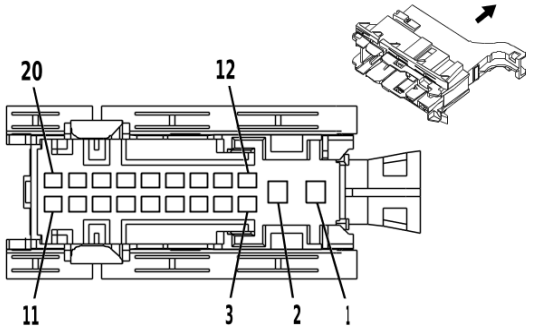

3621541

Connector Part Information

Harness Type: Rear Door Door Wiring Harness - Left
OEM Connector: 13590959
Service Connector: Service by Harness - See Part Catalog
Description: 20-Way F 1.5 DSQ, 4.8 Timer Series(GY)

Connector Part Information

Harness Type: Body Wiring Harness
OEM Connector: 13680032
Service Connector: 13577518
Description: 20-Way M 1.5, 2.8 DSQ Series(GY)

Terminal Part Information

Terminal Type ID	Terminated Lead	Diagnostic Test Probe	Terminal Removal Tool
I	Not required	J-35616-14 (GN)	No Tool Required
II	Not required	J-35616-42 (RD)	No Tool Required
III	19368242	J-35616-32 (OG)	J-38125-36
IV	19368263	J-35616-3 (GY)	J-38125-215A

X700 Rear Door Door Wiring Harness - Left to Body Wiring Harness

Pin	Size	Color	Circuit	Terminal Type ID	Option	Function	Pin	Size	Color	Circuit	Terminal Type ID	Option
1	2	RD / BN	2940	II		Battery Positive Voltage	1	2	RD / BN	2940	III	—
2	2	BK	650	II		Ground	2	2	BK	650	III	—
3	0.75	BN / YE	294	I	—	Door Lock Actuator Unlock Control	3	0.75	BN / YE	294	IV	—
4	—	—	—	—	—	Not Occupied	4	—	—	—	—	—
5	0.75 0.75	GN GN	199 199	I I	UQ3 UQA	Left Rear Speaker [+] Control Left Rear Speaker [+] Control	5	0.75 0.75	GN GN	199 199	IV IV	UQ3 UQA
6 - 9	—	—	—	—	—	Not Occupied	6 - 9	—	—	—	—	—
10	0.5	BK	550	I	KA6	Ground	10	0.5	BK	550	IV	KA6
11	0.5	YE	6817	I	KA6	LED Backlight Dimming Control 1	11	0.35	YE	6817	IV	KA6
12	0.75	GY	295	I	—	Door Lock Actuator Lock Control	12	0.75	GY	295	IV	—

X700 Rear Door Door Wiring Harness - Left to Body Wiring Harness (cont'd)

Pin	Size	Color	Circuit	Terminal Type ID	Option	Function	Pin	Size	Color	Circuit	Terminal Type ID	Option
13	—	—	—	—	—	Not Occupied	13	—	—	—	—	—
14	0.75 0.75	GN / BK GN / BK	116 116	I I	UQ3 UQA	Left Rear Speaker [-] Control Left Rear Speaker [-] Control	14	0.75 0.75	GN / BK GN / BK	116 116	IV IV	UQ3 UQA
15	—	—	—	—	—	Not Occupied	15	—	—	—	—	—
16	0.5	BK	550	I	—	Ground	16	0.5	BK	550	IV	—
17	0.5	GN / GY	6135	I		Body Control Module LIN Bus 4	17	0.35	GN / GY	6135	IV	—
18	0.5	WH	1638	I	KA6	Left Rear Seat Heating High Indicator Control	18	0.5	WH	1638	IV	KA6
19	0.5	BN / WH	1637	I	KA6	Left Rear Seat Heating Switch Signal	19	0.5	BN / WH	1637	IV	KA6
20	0.5	WH	6816	I	KA6	Indicator Dimming Control	20	0.35	WH	6816	IV	KA6

X800 Rear Door Door Wiring Harness - Right to Body Wiring Harness

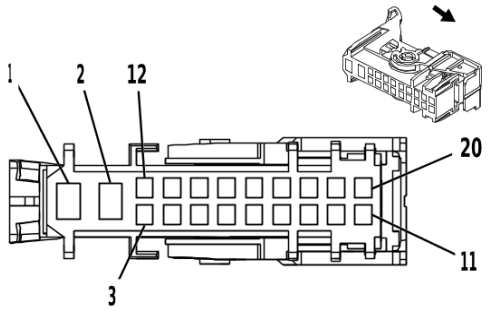

2474676

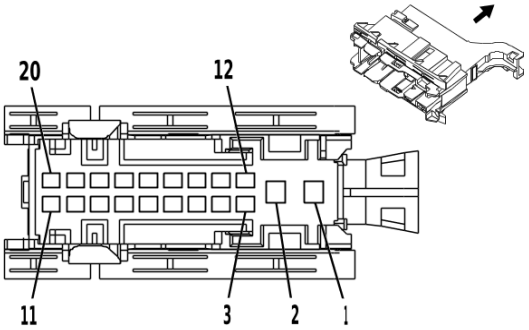

3621541

Connector Part Information

Harness Type: Rear Door Door Wiring Harness - Right
OEM Connector: 13590959
Service Connector: Service by Harness - See Part Catalog
Description: 20-Way F 1.5 DSQ, 4.8 Timer Series(GY)

Connector Part Information

Harness Type: Body Wiring Harness
OEM Connector: 13680032
Service Connector: 13577518
Description: 20-Way M 1.5, 2.8 DSQ Series(GY)

Terminal Part Information

Terminal Type ID	Terminated Lead	Diagnostic Test Probe	Terminal Removal Tool
I	Not required	J-35616-14 (GN)	No Tool Required
II	Not required	J-35616-42 (RD)	No Tool Required
III	19368242	J-35616-32 (OG)	J-38125-36
IV	19368263	J-35616-3 (GY)	J-38125-215A

X800 Rear Door Door Wiring Harness - Right to Body Wiring Harness

Pin	Size	Color	Circuit	Terminal Type ID	Option	Function	Pin	Size	Color	Circuit	Terminal Type ID	Option
1	2	RD / BN	2940	II		Battery Positive Voltage	1	2	RD / BN	2940	III	—
2	2	BK	850	II		Ground	2	2	BK	850	III	—
3	0.75	BN / YE	294	I	—	Door Lock Actuator Unlock Control	3	1	BN / YE	294	IV	—
4	—	—	—	—	—	Not Occupied	4	—	—	—	—	—
5	0.75 0.75	WH WH	46 46	I I	UQ3 UQA	Right Rear Speaker [+] Control Right Rear Speaker [+] Control	5	0.75 0.75	WH WH	46 46	IV IV	UQ3 UQA
6 - 9	—	—	—	—	—	Not Occupied	6 - 9	—	—	—	—	—
10	0.5	BK	750	I	KA6	Ground	10	0.5	BK	750	IV	KA6
11	0.5	YE	6817	I	KA6	LED Backlight Dimming Control 1	11	0.35	YE	6817	IV	KA6
12	0.75	GY	295	I	—	Door Lock Actuator Lock Control	12	1	GY	295	IV	—

X800 Rear Door Door Wiring Harness - Right to Body Wiring Harness (cont'd)

Pin	Size	Color	Circuit	Terminal Type ID	Option	Function	Pin	Size	Color	Circuit	Terminal Type ID	Option
13	—	—	—	—	—	Not Occupied	13	—	—	—	—	—
14	0.75 0.75	BU / BK BU / BK	115 115	I I	UQ3 UQA	Right Rear Speaker [-] Control Right Rear Speaker [-] Control	14	0.75 0.75	BU / BK BU / BK	115 115	IV IV	UQ3 UQA
15	—	—	—	—	—	Not Occupied	15	—	—	—	—	—
16	0.5	BK	750	I	—	Ground	16	0.5	BK	750	IV	—
17	0.5	GN / GY	6135	I		Body Control Module LIN Bus 4	17	0.35	GN / GY	6135	IV	—
18	0.5	BN / WH	1635	I	KA6	Right Rear Seat Heating High Indicator Control	18	0.5	BN / WH	1635	IV	KA6
19	0.5	BN / GN	1634	I	KA6	Right Rear Seat Heating Switch Signal	19	0.5	BN / GN	1634	IV	KA6
20	0.5	WH	6816	I	KA6	Indicator Dimming Control	20	0.35	WH	6816	IV	KA6

X900 Liftgate Jumper Wiring Harness to Body Wiring Harness

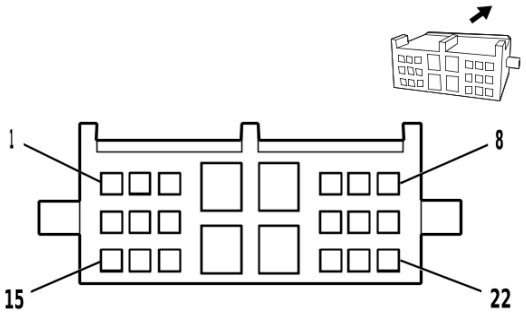

2173982

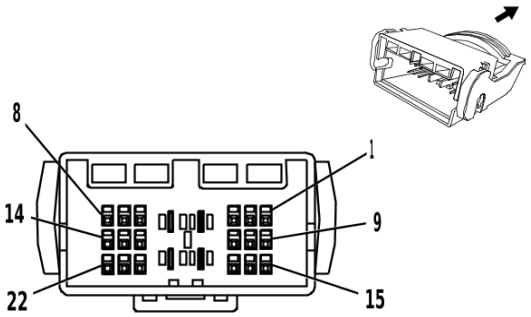

2220413

Connector Part Information

Harness Type: Liftgate Jumper Wiring Harness
OEM Connector: 96947014
Service Connector: Service by Harness - See Part Catalog
Description: 22-Way F Micro-Quadlock, MCP 2.8 Series(BK)

Connector Part Information

Harness Type: Body Wiring Harness
OEM Connector: 96947013
Service Connector: 13580994
Description: 22-Way M 0.64 MQS, 2.8 MCP Series(BK)

Terminal Part Information

Terminal Type ID	Terminated Lead	Diagnostic Test Probe	Terminal Removal Tool
I	Not required	J-35616-35 (VT)	No Tool Required
II	Not required	J-35616-64B (L-BU)	No Tool Required
III	13582305	J-35616-3 (GY)	J-38125-557
IV	13587482	J-35616-65B (L-BU)	J-38125-12A

X900 Liftgate Jumper Wiring Harness to Body Wiring Harness

Pin	Size	Color	Circuit	Terminal Type ID	Option	Function	Pin	Size	Color	Circuit	Terminal Type ID	Option
1	0.5	BK	1050	II	—	Ground	1	0.5	BK	1050	IV	—
2	0.5	GN / YE	6846	II	—	Rear License Plate Lamp Control	2	0.35	GN / YE	6846	IV	—
3	0.5	YE / BU	5797	II	—	Rear Closure Handle Switch Open Signal	3	0.5	YE / BU	5797	IV	—
4	2.5	BN / VT	293	I	—	Rear Defog-ger Grid Con-trol	4	2.5	BN / VT	293	III	—
5	2.5	BK	1950	I	—	Ground	5	2.5	BK	1950	III	—
6	0.5	VT / GY	1303	II	—	Liftgate Ajar Switch Sig-nal 1	6	0.5	VT / GY	1303	IV	—
7	0.5	BU / WH	6128	II	—	Rear Closure Unlatch Ac-tuator Un-latch Control	7	0.5	BU / WH	6128	IV	—
8	—	—	—	—	—	Not Occu-pied	8	—	—	—	—	—
9	0.5	BK	1050	II	—	Ground	9	0.5	BK	1050	IV	—

X900 Liftgate Jumper Wiring Harness to Body Wiring Harness (cont'd)

Pin	Size	Color	Circuit	Terminal Type ID	Option	Function	Pin	Size	Color	Circuit	Terminal Type ID	Option
10	0.5	VT / GY	709	II	—	Left Park Lamp Control	10	0.5	VT / GY	709	IV	—
11	0.5	BK	1150	II	—	Ground	11	0.5	BK	1150	IV	—
12	0.5	BK	1950	II	—	Ground	12	0.5	BK	1950	IV	—
13	0.5	GY / BN	309	II	—	Right Park Lamp Control	13	0.5	GY / BN	309	IV	—
14 - 15	—	—	—	—	—	Not Occupied	14 - 15	—	—	—	—	—
16	0.5	GN / YE	4737	II	UKL	FlexRay Serial Data [+] 9	16	0.5	GN / YE	4737	IV	UKL
17	0.5	WH	4738	II	UKL	FlexRay Serial Data [-] 9	17	0.5	WH	4738	IV	UKL
18	1	BU	393	I	—	Rear Window Wiper Motor Control	18	1	BU	393	III	—
19	1	GY / VT	5780	I	—	Windshield Wiper Motor Park Switch Fused Signal	19	1	GY / VT	5780	III	—
20	0.5	BK	1050	II	—	Ground	20	0.5	BK	1050	IV	—
21	0.5	BN / YE	820	II	—	Center High Mounted Stop Lamp Supply Voltage	21	0.5	BN / YE	820	IV	—
22	—	—	—	—	—	Not Occupied	22	—	—	—	—	—

X901 Liftgate Jumper Wiring Harness to Liftgate Wiring Harness

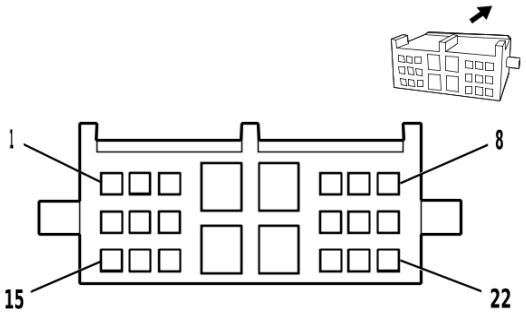

2173982

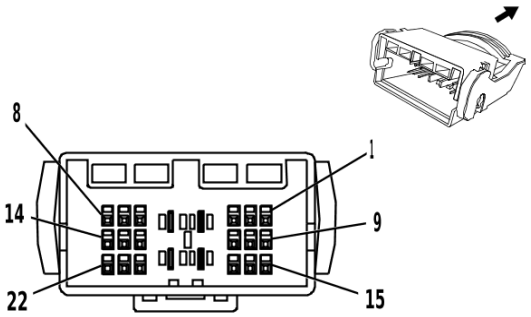

2220413

Connector Part Information

Harness Type: Liftgate Jumper Wiring Harness
OEM Connector: 96947014
Service Connector: Service by Harness - See Part Catalog
Description: 22-Way F Micro-Quadlock, MCP 2.8 Series(BK)

Connector Part Information

Harness Type: Liftgate Wiring Harness
OEM Connector: 96947013
Service Connector: Service by Harness - See Part Catalog
Description: 22-Way M 0.64 MQS, 2.8 MCP Series(BK)

Terminal Part Information

Terminal Type ID	Terminated Lead	Diagnostic Test Probe	Terminal Removal Tool
I	Not required	J-35616-35 (VT)	No Tool Required
II	Not required	J-35616-64B (L-BU)	No Tool Required
III	Not required	J-35616-5 (PU)	No Tool Required
IV	Not required	J-35616-65B (L-BU)	No Tool Required

X901 Liftgate Jumper Wiring Harness to Liftgate Wiring Harness

Pin	Size	Color	Circuit	Terminal Type ID	Option	Function	Pin	Size	Color	Circuit	Terminal Type ID	Option
1	0.5	BK	1050	II	—	Ground	1	0.5	BK	1050	IV	—
2	0.5	GN / YE	6846	II	—	Rear License Plate Lamp Control	2	0.35	GN / YE	6846	IV	—
3	0.5	YE / BU	5797	II	—	Rear Closure Handle Switch Open Signal	3	0.5	YE / BU	5797	IV	—
4	2.5	BN / VT	293	I	—	Rear Defog-ger Grid Con-trol	4	2.5	BN / VT	293	III	—
5	2.5	BK	1950	I	—	Ground	5	2.5	BK	1950	III	—
6	0.5	VT / GY	1303	II	—	Liftgate Ajar Switch Sig-nal 1	6	0.5	VT / GY	1303	IV	—
7	0.5	BU / WH	6128	II	—	Rear Closure Unlatch Ac-tuator Un-latch Control	7	0.5	BU / WH	6128	IV	—
8	—	—	—	—	—	Not Occu-pied	8	—	—	—	—	—
9	0.5	BK	1050	II	—	Ground	9	0.5	BK	1050	IV	—

X901 Liftgate Jumper Wiring Harness to Liftgate Wiring Harness (cont'd)

Pin	Size	Color	Circuit	Terminal Type ID	Option	Function	Pin	Size	Color	Circuit	Terminal Type ID	Option
10	0.5	VT / GY	709	II	—	Left Park Lamp Control	10	0.5	VT / GY	709	IV	—
11	0.5	BK	1150	II	—	Ground	11	0.5	BK	1150	IV	—
12	0.5	BK	1950	II	—	Ground	12	0.5	BK	1950	IV	—
13	0.5	GY / BN	309	II	—	Right Park Lamp Control	13	0.5	GY / BN	309	IV	—
14 - 15	—	—	—	—	—	Not Occu-pied	14 - 15	—	—	—	—	—
16	0.5	BK	1050	II	—	Ground	16	0.5	BK	1050	IV	—
17	0.5	BN / YE	820	II	—	Center High Mounted Stop Lamp Supply Volt-age	17	0.5	BN / YE	820	IV	—
18	1	BU	393	I	—	Rear Window Wiper Motor Control	18	1	BU	393	III	—
19	1	GY / VT	5780	I	—	Windshield Wiper Motor Park Switch Fused Signal	19	1	GY / VT	5780	III	—
20	0.5	BN / YE	820	II	—	Center High Mounted Stop Lamp Supply Volt-age	20	0.5	BN / YE	820	IV	—
21	0.5	BK	1050	II	—	Ground	21	0.5	BK	1050	IV	—
22	—	—	—	—	—	Not Occu-pied	22	—	—	—	—	—

X902 Rear License Plate Lamp Wiring Harness Extension Harness to Liftgate Wiring Harness

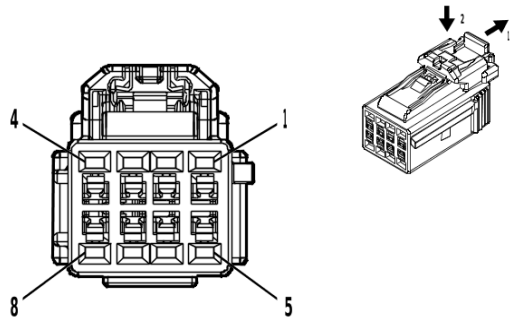

5086387

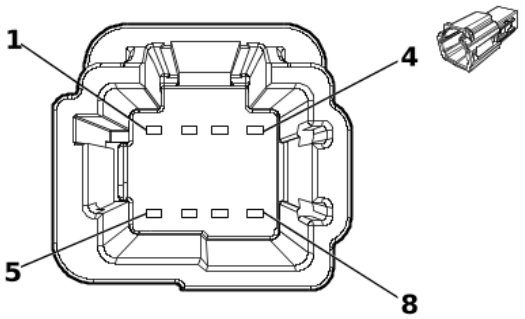

5751475

Connector Part Information

Harness Type: Rear License Plate Lamp Wiring Harness Extension Harness

OEM Connector: 13533339

Service Connector: Service by Harness - See Part Catalog

Description: 8-Way F 1.2 Series(BK)

Connector Part Information

Harness Type: Liftgate Wiring Harness

OEM Connector: 13536188

Service Connector: Service by Harness - See Part Catalog

Description: 8-Way M 1.2 MBS Series(BK)

Terminal Part Information

Terminal Type ID	Terminated Lead	Diagnostic Test Probe	Terminal Removal Tool
I	Not required	J-35616-16 (L-GN)	No Tool Required
II	Not required	J-35616-17 (L-GN)	No Tool Required

X902 Rear License Plate Lamp Wiring Harness Extension Harness to Liftgate Wiring Harness

Pin	Size	Color	Circuit	Terminal Type ID	Option	Function	Pin	Size	Color	Circuit	Terminal Type ID	Option
1	0.5	BK	1150	I	—	Ground	1	0.5	BK	1150	II	—
2	0.5	VT / GY	709	I	—	Left Park Lamp Control	2	0.5	VT / GY	709	II	—
3	0.5	GY / BN	309	I	—	Right Park Lamp Control	3	0.5	GY / BN	309	II	—
4	0.5	BK	1950	I	—	Ground	4	0.5	BK	1950	II	—
5	—	—	—	—	—	Not Occu-pied	5	—	—	—	—	—
6	0.35	GN / YE	6846	I	—	Rear License Plate Lamp Control	6	0.35	GN / YE	6846	II	—
7	0.5	BK	1050	I	—	Ground	7	0.5	BK	1050	II	—
8	—	—	—	—	—	Not Occu-pied	8	—	—	—	—	—

X903 Liftgate Jumper Wiring Harness to Liftgate Wiring Harness Extension Harness

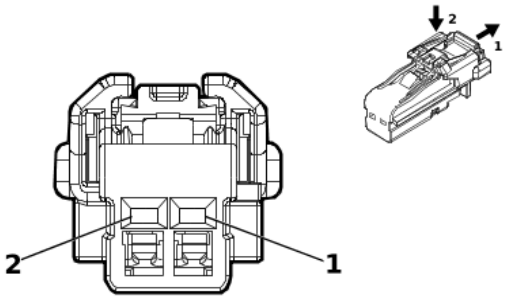

4115691

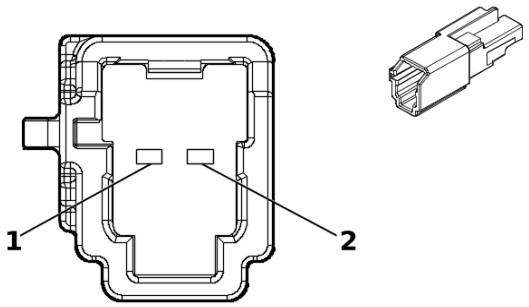

5355341

Connector Part Information

Harness Type: Liftgate Jumper Wiring Harness
OEM Connector: 13532422
Service Connector: Service by Harness - See Part Catalog
Description: 2-Way F 1.2 MCON Series(BK)

Connector Part Information

Harness Type: Liftgate Wiring Harness Extension Harness
OEM Connector: 13530128
Service Connector: Service by Harness - See Part Catalog
Description: 2-Way M 1.2 MCON Series(BK)

Terminal Part Information

Terminal Type ID	Terminated Lead	Diagnostic Test Probe	Terminal Removal Tool
I	Not required	J-35616-16 (L-GN)	No Tool Required
II	Not required	J-35616-17 (L-GN)	No Tool Required

X903 Liftgate Jumper Wiring Harness to Liftgate Wiring Harness Extension Harness

Pin	Size	Color	Circuit	Terminal Type ID	Option	Function	Pin	Size	Color	Circuit	Terminal Type ID	Option
1	0.5	BK	1050	I	—	Ground	1	0.5	BK	1050	II	—
2	0.5	BN / YE	820	I	—	Center High Mounted Stop Lamp Supply Voltage	2	0.5	BN / YE	820	II	—

X904 Antenna Harness to Antenna Harness

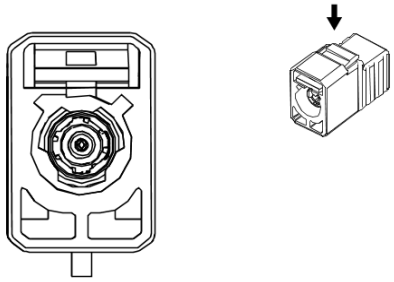

2893647

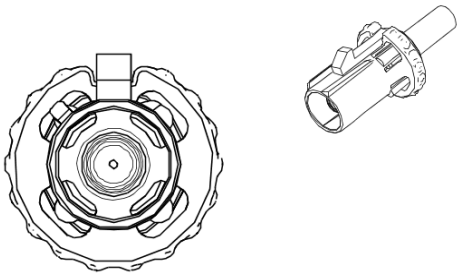

4109605

Connector Part Information

Harness Type: Antenna Harness COAX

OEM Connector: 13581685

Service Connector: Service by Cable Assembly — See Part Catalog

Description: 1-Way F Coax Type(BK)

Connector Part Information

Harness Type: Antenna Harness COAX

OEM Connector: 13581672

Service Connector: Service by Cable Assembly — See Part Catalog

Description: 1-Way M Coax Type(BK)

Terminal Part Information

Terminal Type ID	Terminated Lead	Diagnostic Test Probe	Terminal Removal Tool
I	Not required	No Tool Required	No Tool Required

X904 Antenna Harness to Antenna Harness

Pin	Size	Color	Circuit	Terminal Type ID	Option	Function	Pin	Size	Color	Circuit	Terminal Type ID	Option
—	—	Coax Cable	—	I	—	(AM/FM) Antenna RF Signal	—	—	Coax Cable	—	I	—

X905 Liftgate Wiring Harness to Antenna (UV2)

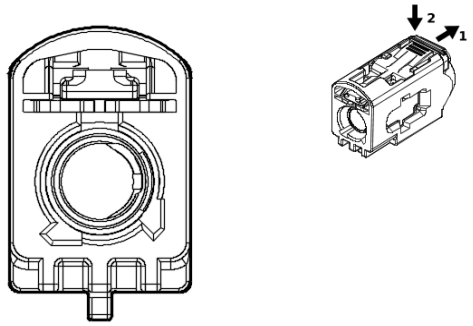

5313405

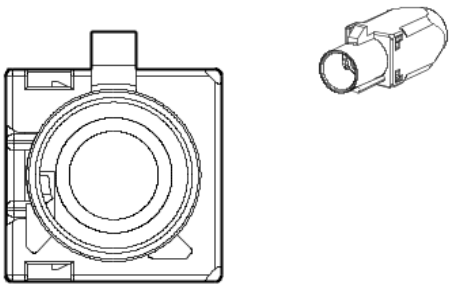

5318805

Connector Part Information

Harness Type: Liftgate Wiring Harness COAX

OEM Connector: 13516224

Service Connector: Service by Cable Assembly — See Part Catalog

Description: 1-Way F Coax Type(OG)

Connector Part Information

Harness Type: Antenna COAX

OEM Connector: 13515650

Service Connector: Service by Cable Assembly — See Part Catalog

Description: 1-Way M Coax Type(OG)

Terminal Part Information

Terminal Type ID	Terminated Lead	Diagnostic Test Probe	Terminal Removal Tool
I	Not required	No Tool Required	No Tool Required

X905 Liftgate Wiring Harness to Antenna (UV2)

Pin	Size	Color	Circuit	Terminal Type ID	Option	Function	Pin	Size	Color	Circuit	Terminal Type ID	Option
—	—	Coax Cable	—	I	—	Rear Vision Camera Co-axial Video Signal	—	—	Coax Cable	—	I	—

X905 Liftgate Wiring Harness to Antenna (UVB)

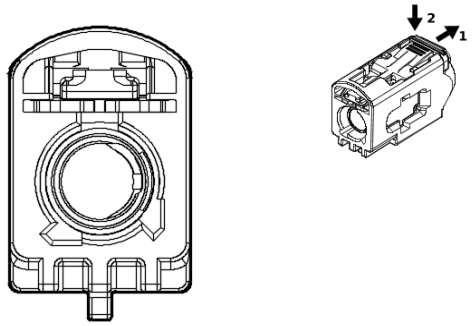

5313405

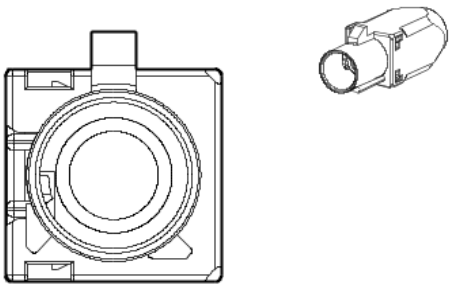

5318805

Connector Part Information

Harness Type: Liftgate Wiring Harness COAX

OEM Connector: 13516224

Service Connector: Service by Cable Assembly — See Part Catalog

Description: 1-Way F Coax Type(OG)

Connector Part Information

Harness Type: Antenna COAX

OEM Connector: 13515650

Service Connector: Service by Cable Assembly — See Part Catalog

Description: 1-Way M Coax Type(OG)

Terminal Part Information

Terminal Type ID	Terminated Lead	Diagnostic Test Probe	Terminal Removal Tool
I	Not required	No Tool Required	No Tool Required

X905 Liftgate Wiring Harness to Antenna (UVB)

Pin	Size	Color	Circuit	Terminal Type ID	Option	Function	Pin	Size	Color	Circuit	Terminal Type ID	Option
—	—	Coax Cable	—	I	—	Rear Vision Camera Co-axial Video Signal	—	—	Coax Cable	—	I	—

X906 Roof Antenna Wiring Harness to Liftgate Antenna Wiring Harness

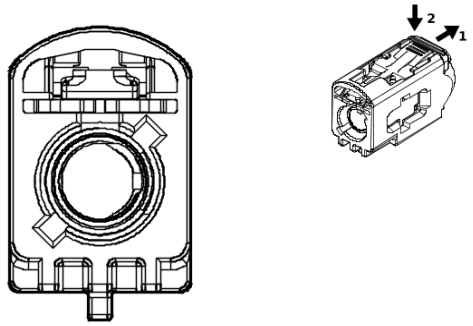

5215274

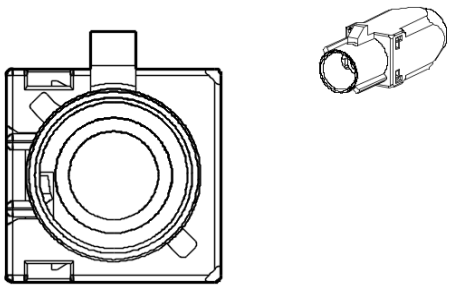

5215257

Connector Part Information

Harness Type: Roof Antenna Wiring Harness COAX

OEM Connector: 13516215

Service Connector: Service by Cable Assembly — See Part Catalog

Description: 1-Way F Coax Type(BU)

Connector Part Information

Harness Type: Liftgate Antenna Wiring Harness COAX

OEM Connector: 13515641

Service Connector: Service by Cable Assembly — See Part Catalog

Description: 1-Way M Coax Type(BU)

Terminal Part Information

Terminal Type ID	Terminated Lead	Diagnostic Test Probe	Terminal Removal Tool
I	Not required	No Tool Required	No Tool Required

X906 Roof Antenna Wiring Harness to Liftgate Antenna Wiring Harness

Pin	Size	Color	Circuit	Terminal Type ID	Option	Function	Pin	Size	Color	Circuit	Terminal Type ID	Option
—	—	Coax Cable	—	I	—	Rear Vision Camera Co-axial Video Signal	—	—	Coax Cable	—	I	—

X908 Liftgate Wiring Harness to Rear License Plate Lamp Wiring Harness Extension Harness (UV2)

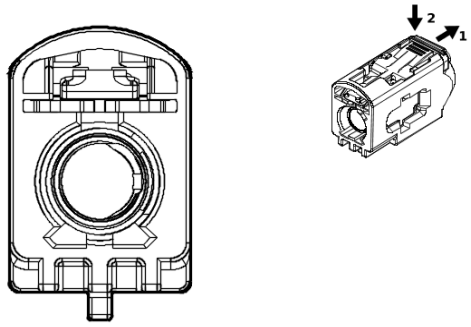

5279104

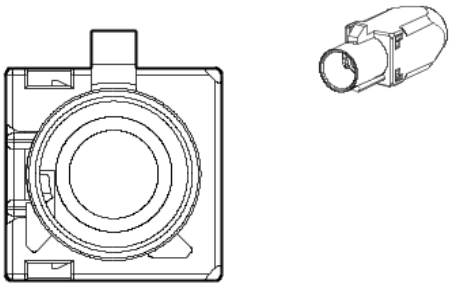

5318805

Connector Part Information

Harness Type: Liftgate Wiring Harness COAX

OEM Connector: 1-2289730-1

Service Connector: Service by Cable Assembly — See Part Catalog

Description: 1-Way F Coax Type(RD)

Connector Part Information

Harness Type: Rear License Plate Lamp Wiring Harness Extension Harness COAX

OEM Connector: 1-2272518-2

Service Connector: Service by Cable Assembly — See Part Catalog

Description: 1-Way M Coax Type(OG)

Terminal Part Information

Terminal Type ID	Terminated Lead	Diagnostic Test Probe	Terminal Removal Tool
I	Not required	No Tool Required	No Tool Required

X908 Liftgate Wiring Harness to Rear License Plate Lamp Wiring Harness Extension Harness (UV2)

Pin	Size	Color	Circuit	Terminal Type ID	Option	Function	Pin	Size	Color	Circuit	Terminal Type ID	Option
—	—	Coax Cable	—	I	—	Rear Vision Camera Co-axial Video Signal	—	—	Coax Cable	—	I	—

X908 Liftgate Wiring Harness to Rear License Plate Lamp Wiring Harness Extension Harness (UVB)

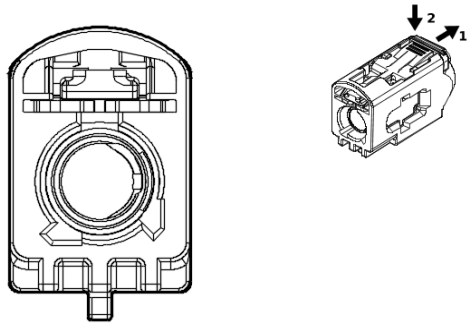

5313405

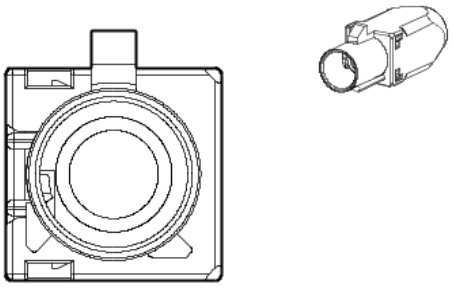

5318805

Connector Part Information

Harness Type: Liftgate Wiring Harness COAX

OEM Connector: 1-2289730-2

Service Connector: Service by Cable Assembly — See Part Catalog

Description: 1-Way F Coax Type(OG)

Connector Part Information

Harness Type: Rear License Plate Lamp Wiring Harness Extension Harness COAX

OEM Connector: 13515650

Service Connector: Service by Cable Assembly — See Part Catalog

Description: 1-Way M Coax Type(OG)

Terminal Part Information

Terminal Type ID	Terminated Lead	Diagnostic Test Probe	Terminal Removal Tool
I	Not required	No Tool Required	No Tool Required

X908 Liftgate Wiring Harness to Rear License Plate Lamp Wiring Harness Extension Harness (UVB)

Pin	Size	Color	Circuit	Terminal Type ID	Option	Function	Pin	Size	Color	Circuit	Terminal Type ID	Option
—	—	Coax Cable	—	I	—	Rear Vision Camera Co-axial Video Signal	—	—	Coax Cable	—	I	—

Electrical Component Locator and Harness Routing Views

Schematic and Routing Diagrams

Harness Routing Views (Front Fascia Harness Routing)

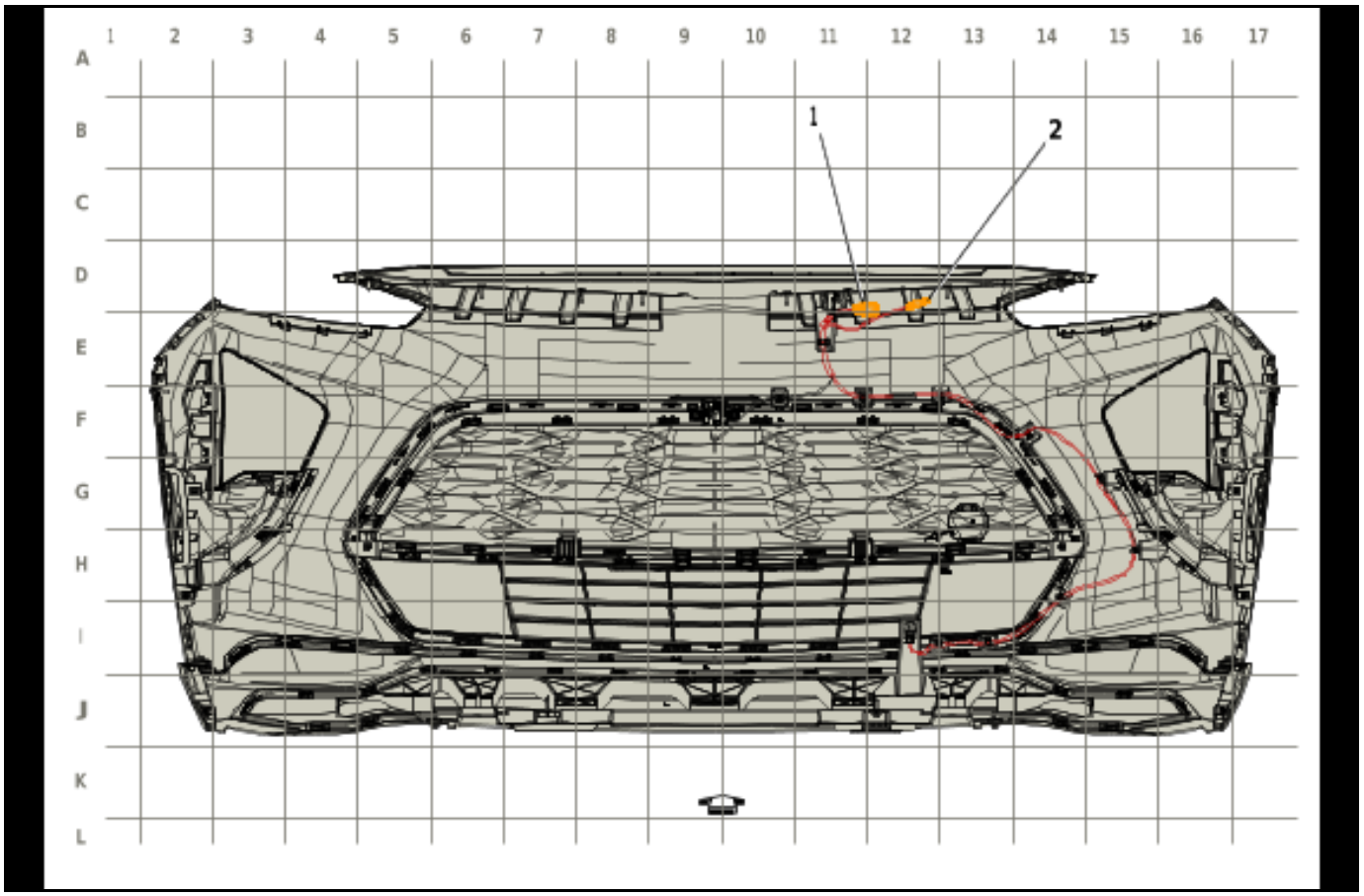

5979284

Items

(1) X101 Front Object Alarm Sensor Wiring Harness to Forward Lamp Wiring Harness

(2) X103 Forward Lamp Wiring Harness to Front Object Alarm Sensor Wiring Harness (UV2)

Harness Routing Views (Engine Compartment Harness Routing)

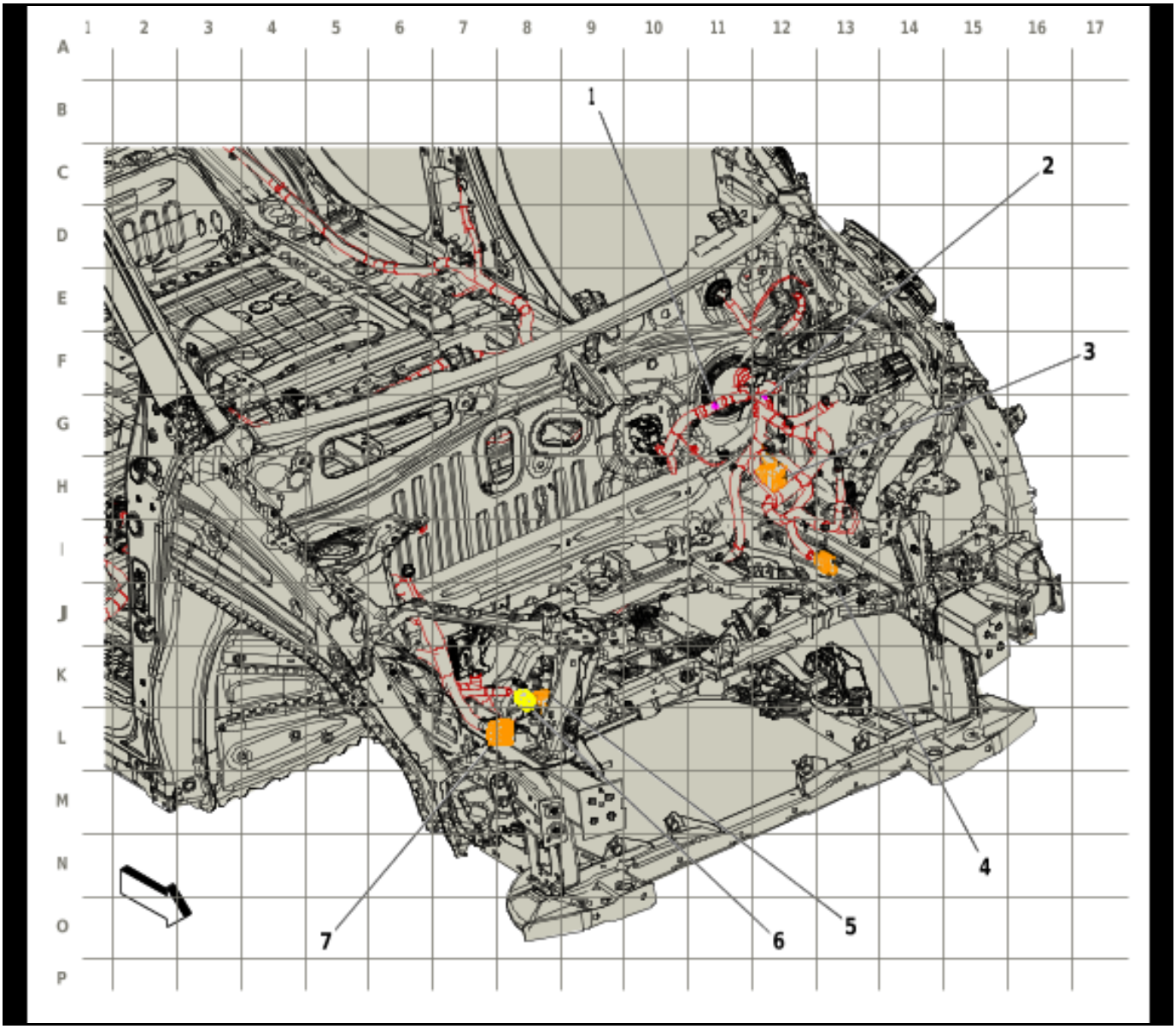

5979286

Items

(1) J102 Body Wiring Harness

(2) J236 Body Wiring Harness

(3) X106 Body Wiring Harness to Engine Wiring Harness

(4) X117 High Voltage Wiring Harness to Body Wiring Harness

(5) X105 Body Wiring Harness to Engine Wiring Harness

(6) X108 Body Wiring Harness to Forward Lamp Wiring Harness

(7) X107 Body Wiring Harness to Forward Lamp Wiring Harness

Harness Routing Views (Driver Door Harness Routing (1 of 2))

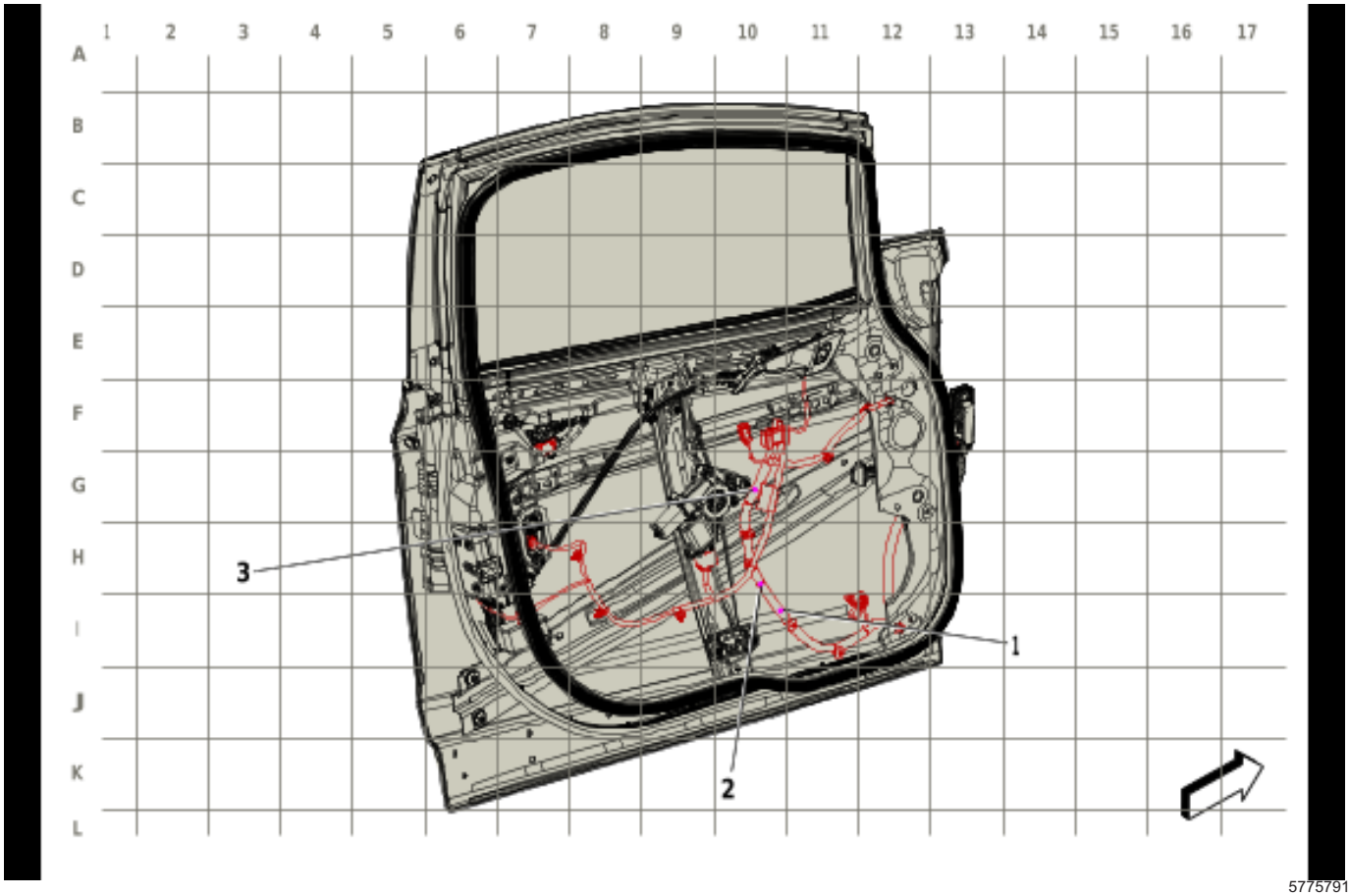

Items

(1) J501 Driver Door Wiring Harness

(2) J500 Driver Door Wiring Harness

(3) J504 Driver Door Wiring Harness

Harness Routing Views (Driver Door Harness Routing (2 of 2))

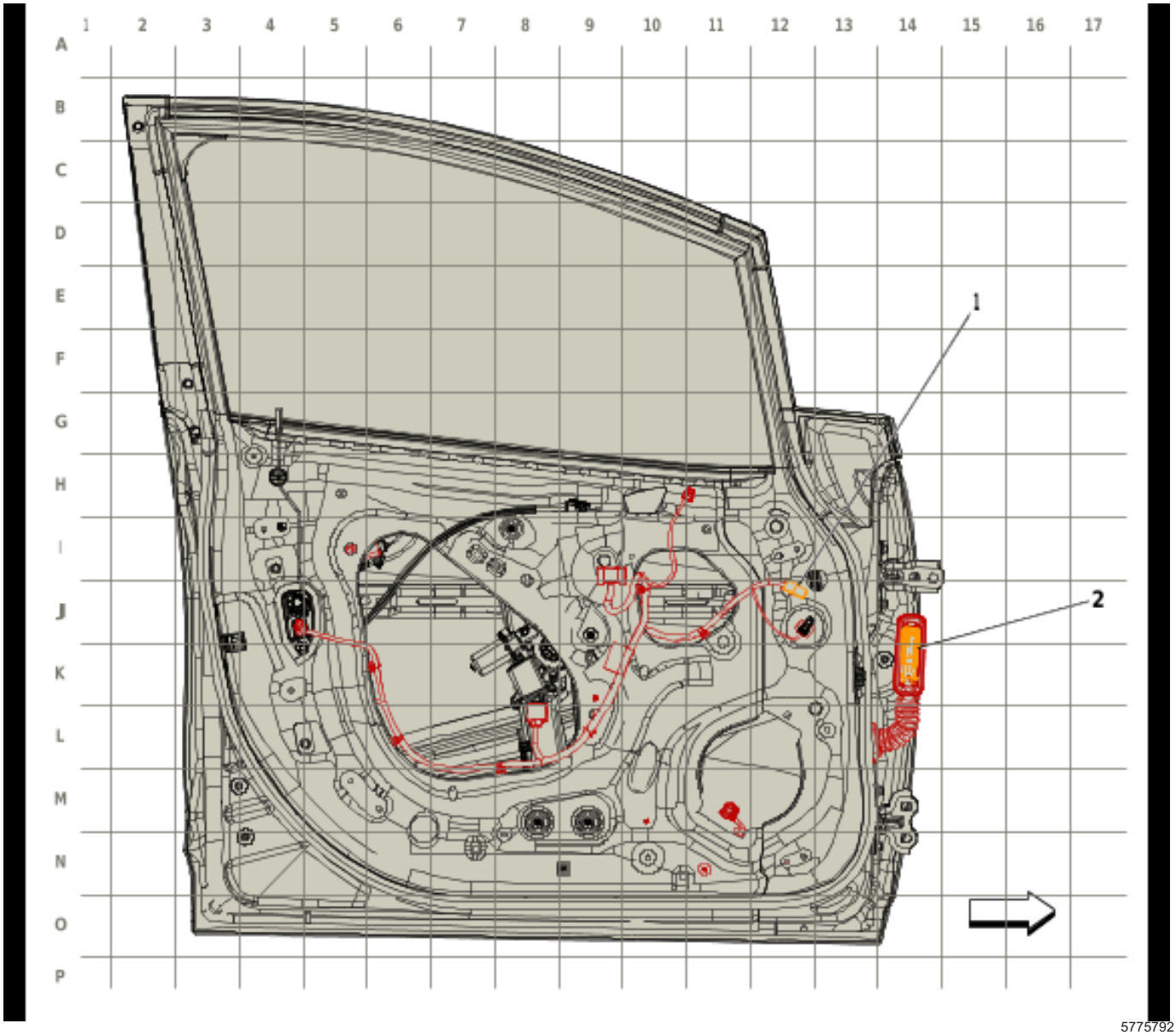

Items

(1) X510 Front Side Door Door Wiring Harness - Driver to Outside Rearview Mirror Wiring Harness - Driver

(2) X500 Front Side Door Door Wiring Harness - Driver to Body Wiring Harness

Harness Routing Views (Passenger Door Harness Routing)

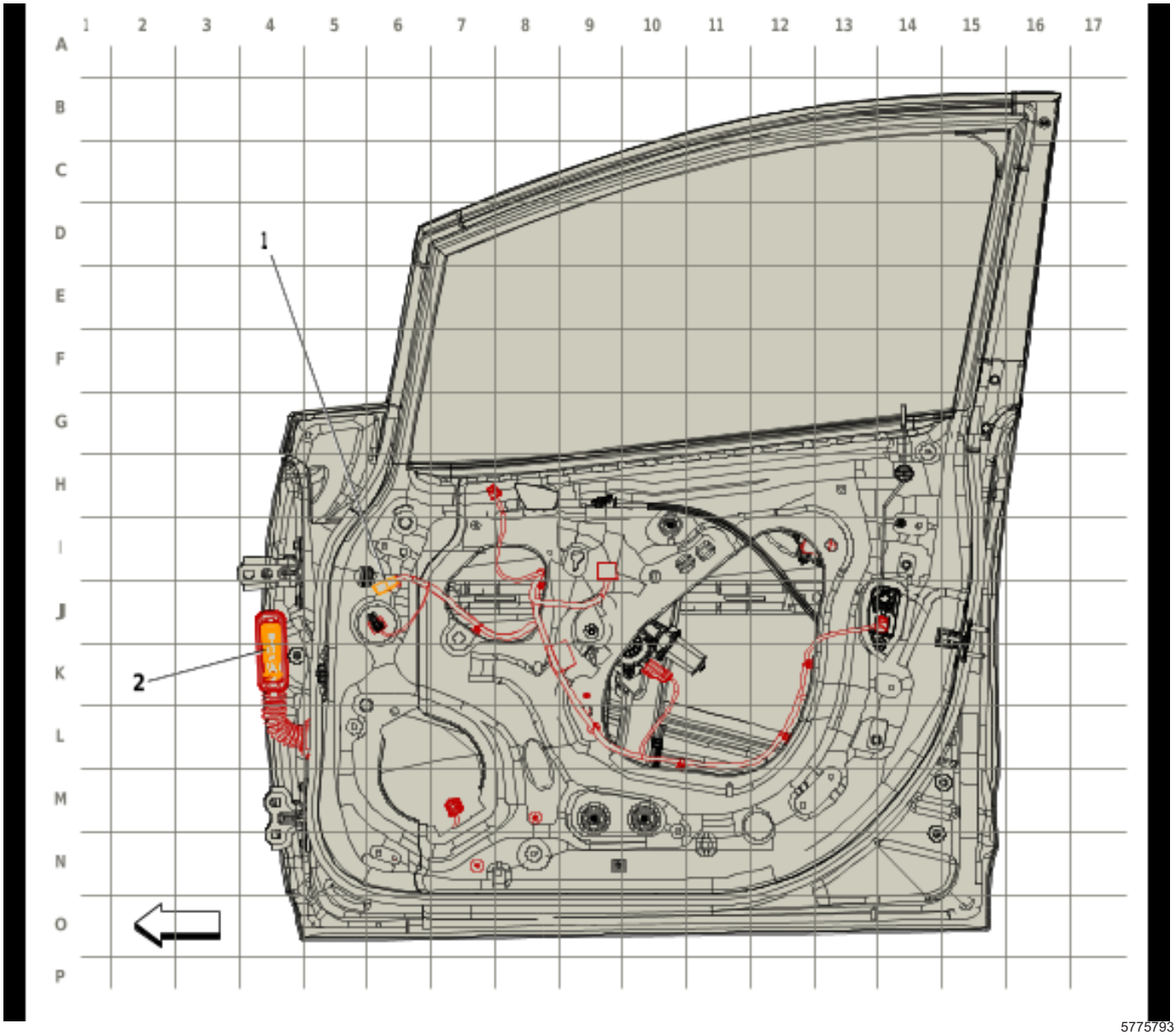

Items

(1) X610 Front Side Door Door Wiring Harness - Passenger to Outside Rearview Mirror Wiring Harness - Passeng

(2) X600 Front Side Door Door Wiring Harness - Passenger to Body Wiring Harness

Harness Routing Views (Left Rear Door Harness Routing)

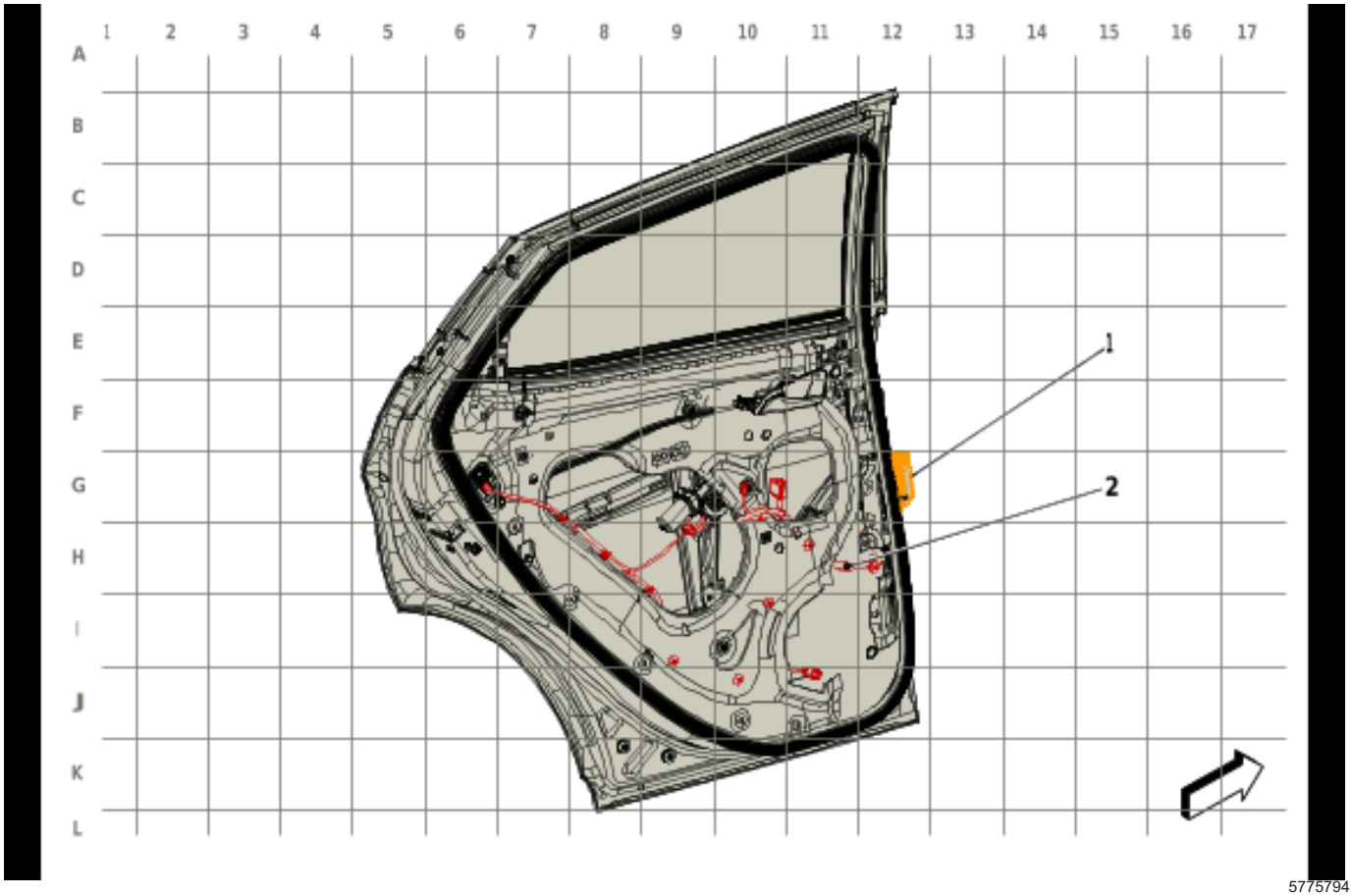

Items

(1) X700 Rear Door Door Wiring Harness - Left to Body Wiring Harness

(2) J700 Left Rear Door Wiring Harness

Harness Routing Views (Right Rear Door Harness Routing)

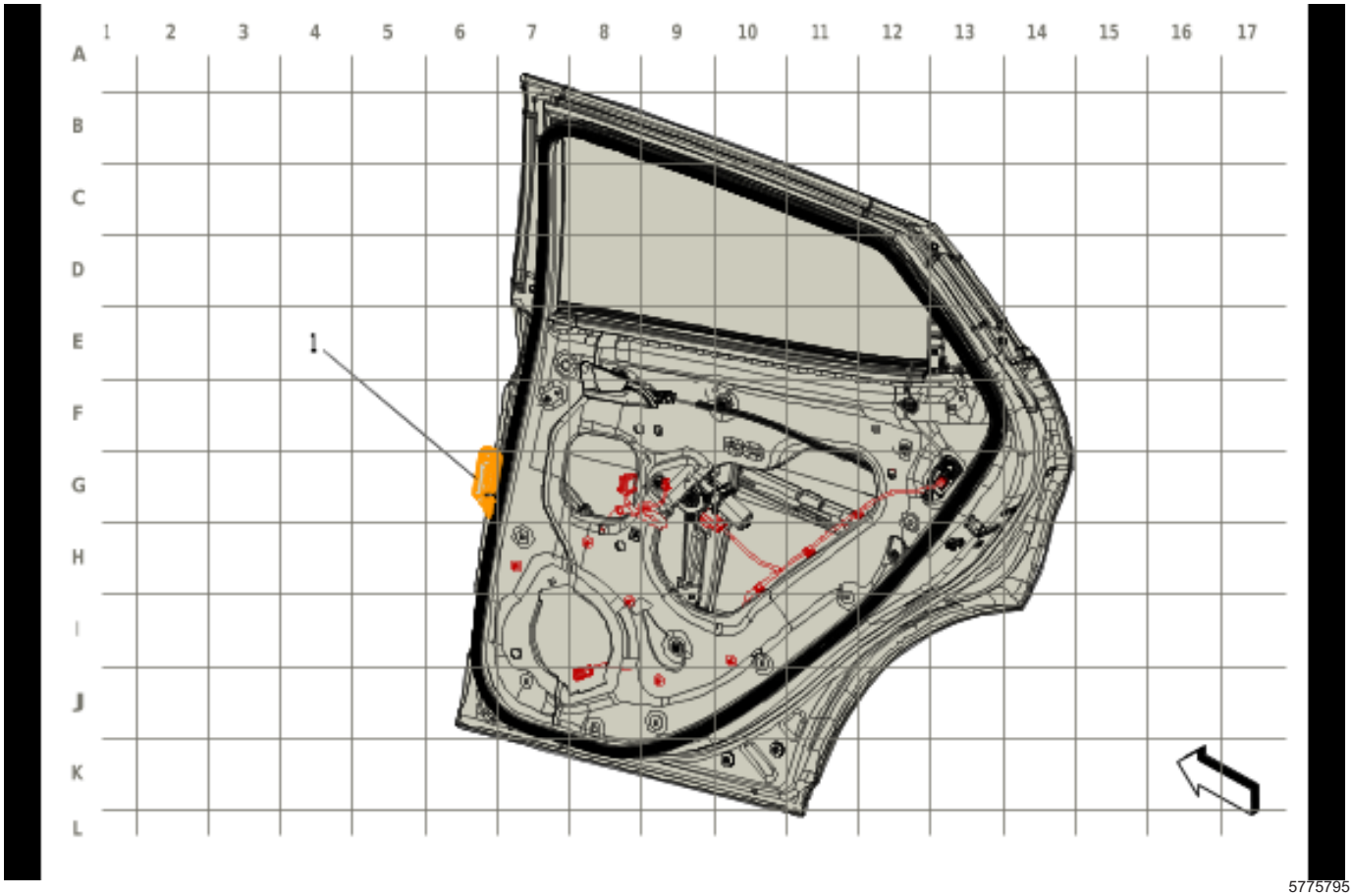

5775795

Items

(1) X800 Rear Door Door Wiring Harness - Right to Body Wiring Harness

Harness Routing Views (Driver Seat Harness Routing)

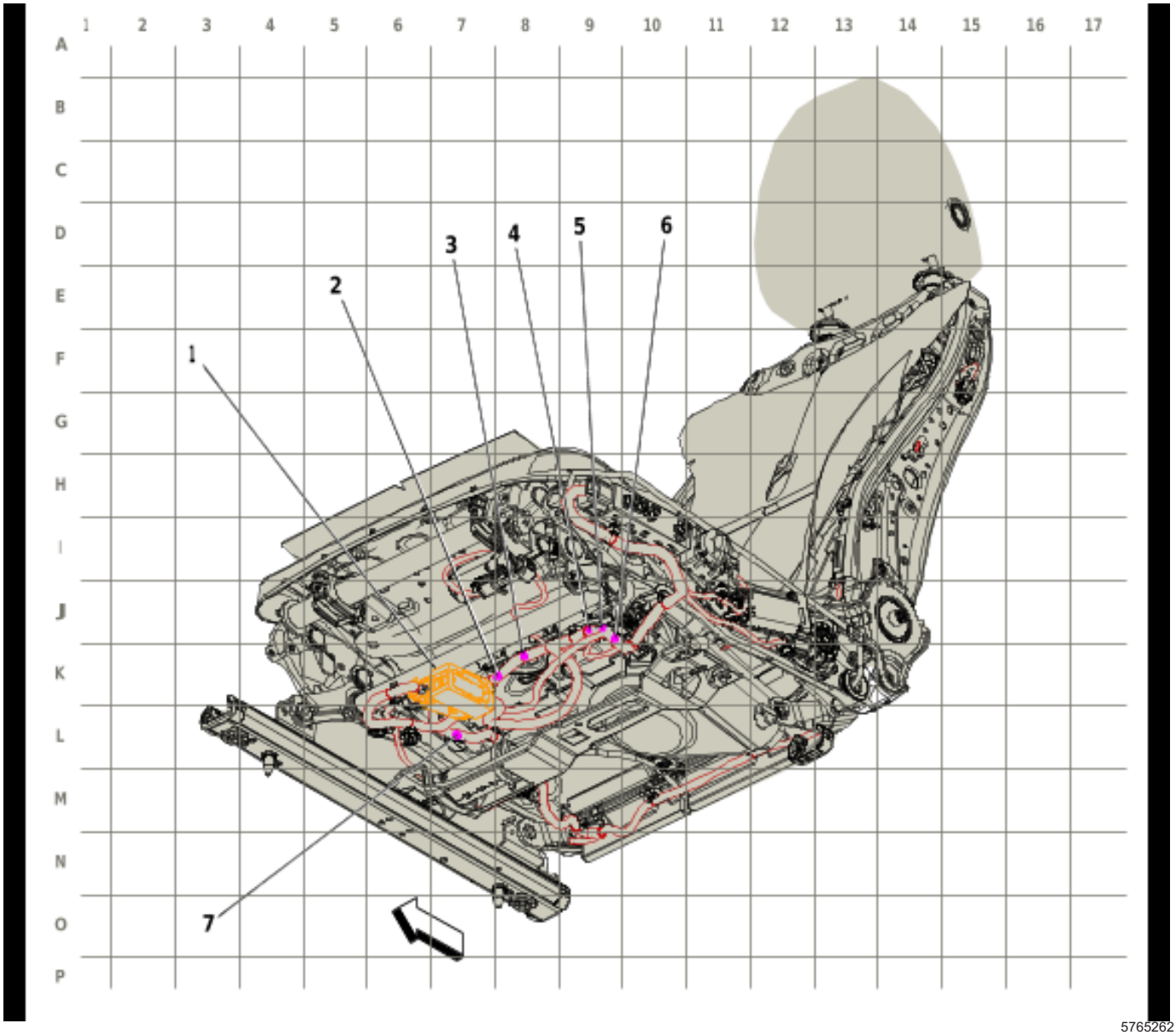

5765262

Items

(1) X310 Front Driver Seat Wiring Harness to Body Wiring Harness (A2X)

(2) J337 Driver Seat Wiring Harness

(3) J338 Driver Seat Wiring Harness

(4) J360 Driver Seat Wiring Harness

(5) J361 Driver Seat Wiring Harness

(6) J329 Driver Seat Wiring Harness

(7) J338 Driver Seat Wiring Harness

Harness Routing Views (Passenger Seat Harness Routing)

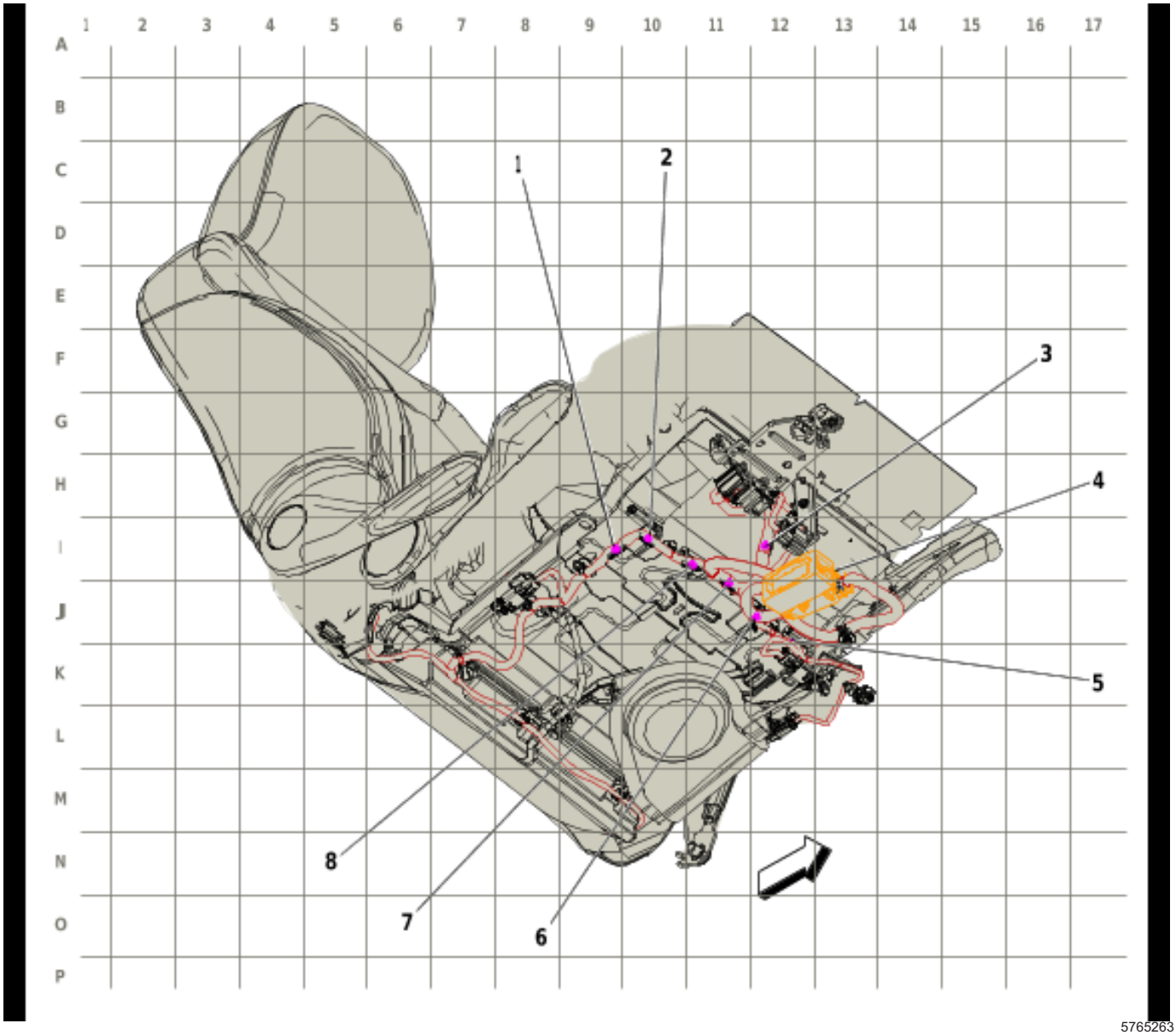

5765263

Items

(1) J341 Passenger Seat Wiring Harness

(2) J360 Driver Seat Wiring Harness

(3) J340 Passenger Seat Wiring Harness

(4) X320 Front Passenger Seat Wiring Harness to Body Wiring Harness

(5) J365 Passenger Seat Wiring Harness

(6) J366 Passenger Seat Wiring Harness

(7) J361 Driver Seat Wiring Harness

(8) J342 Passenger Seat Wiring Harness

Harness Routing Views (Engine Harness Routing - Left Front)

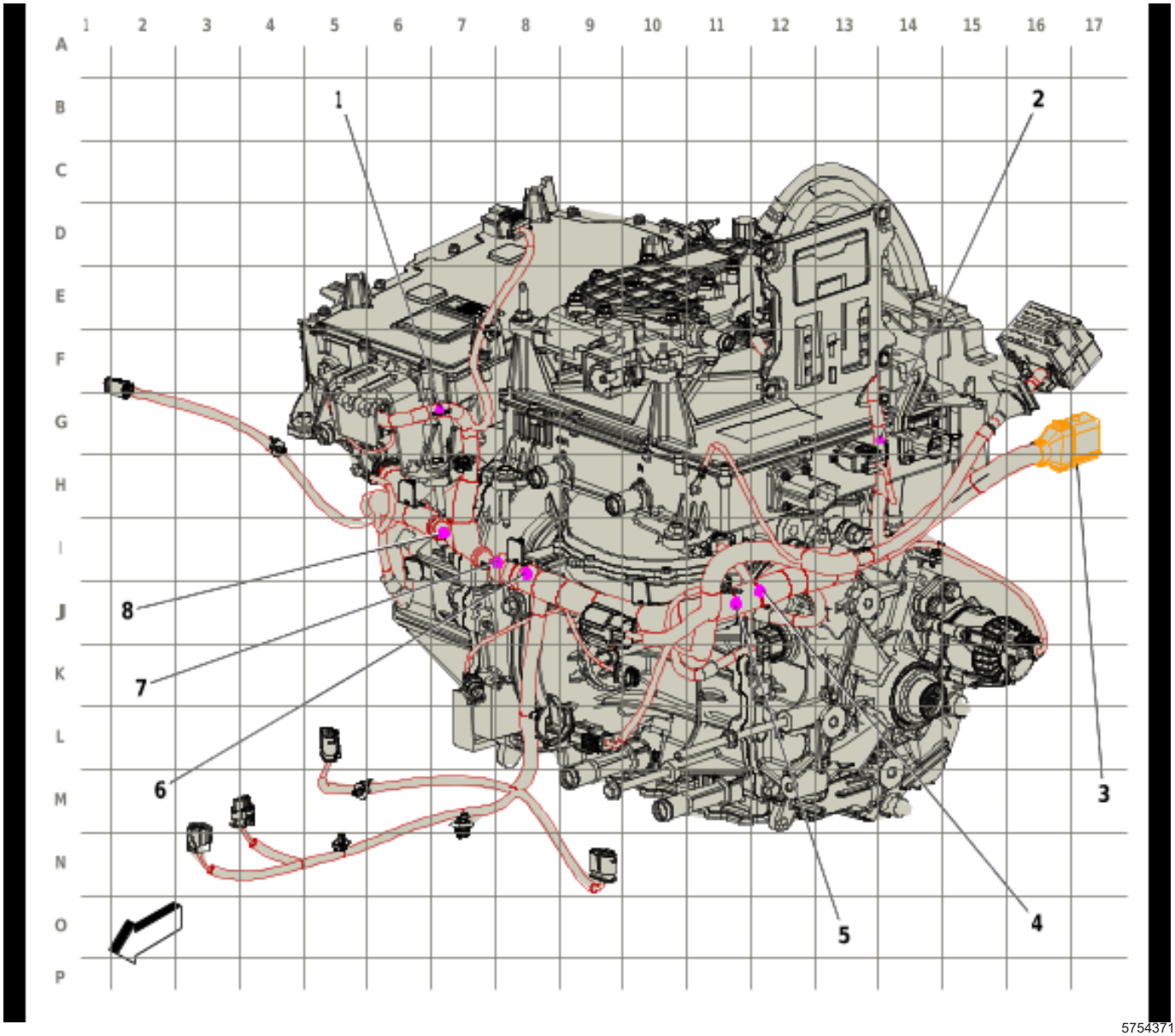

Items

(1) J108 Engine Wiring Harness

(2) J104 Engine Wiring Harness

(3) X106 Body Wiring Harness to Engine Wiring Harness

(4) J130 Engine Wiring Harness

(5) J101 Engine Wiring Harness

(6) J123 Engine Wiring Harness

(7) J122 Engine Wiring Harness

(8) J100 Engine Wiring Harness

Harness Routing Views (Engine Harness Routing - Right Front)

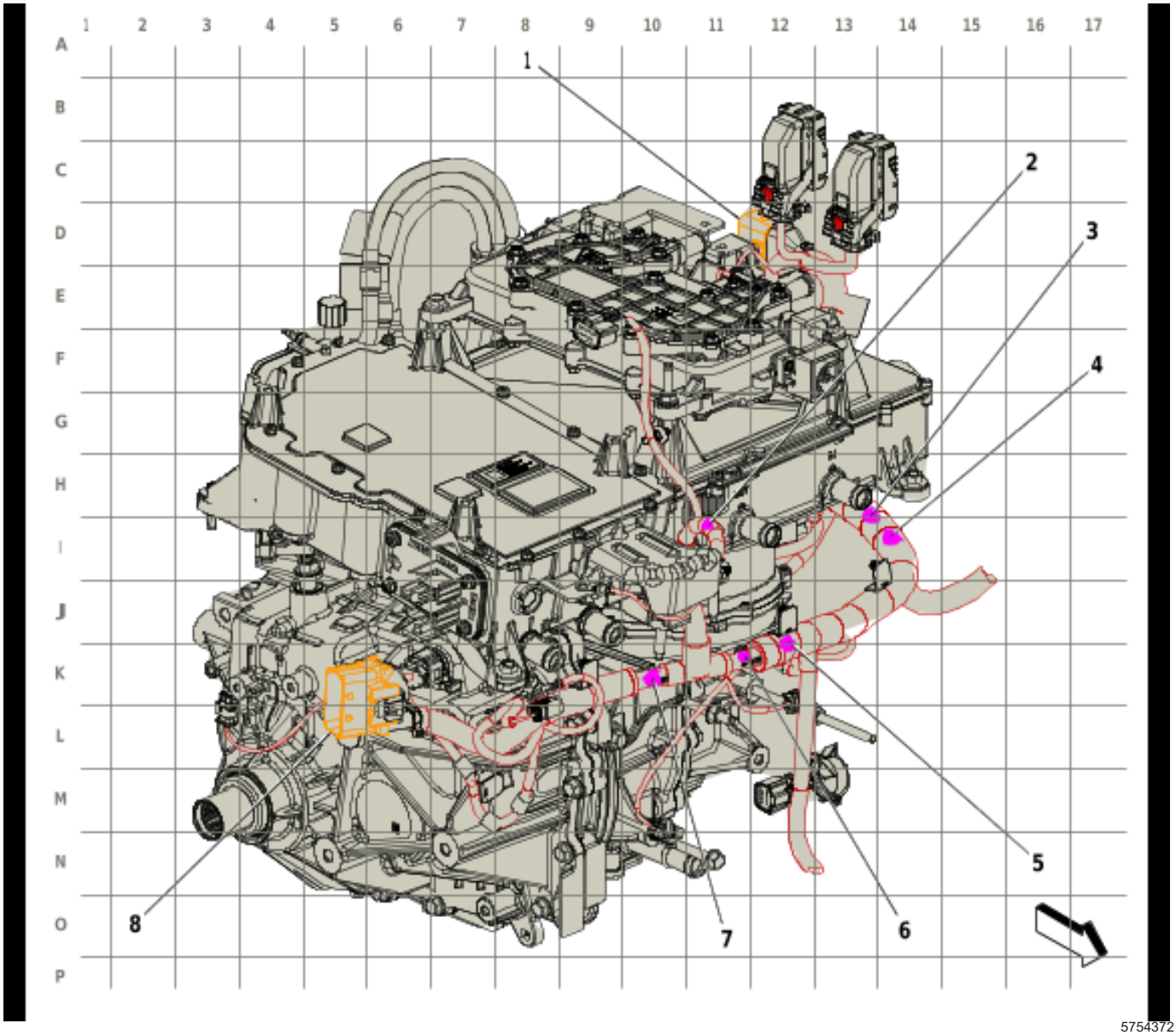

Items

(1) X106 Body Wiring Harness to Engine Wiring Harness

(2) J108 Engine Wiring Harness

(3) J130 Engine Wiring Harness

(4) J101 Engine Wiring Harness

(5) J123 Engine Wiring Harness

(6) J122 Engine Wiring Harness

(7) J100 Engine Wiring Harness

(8) X105 Body Wiring Harness to Engine Wiring Harness

Harness Routing Views (Rear Fascia Harness Routing)

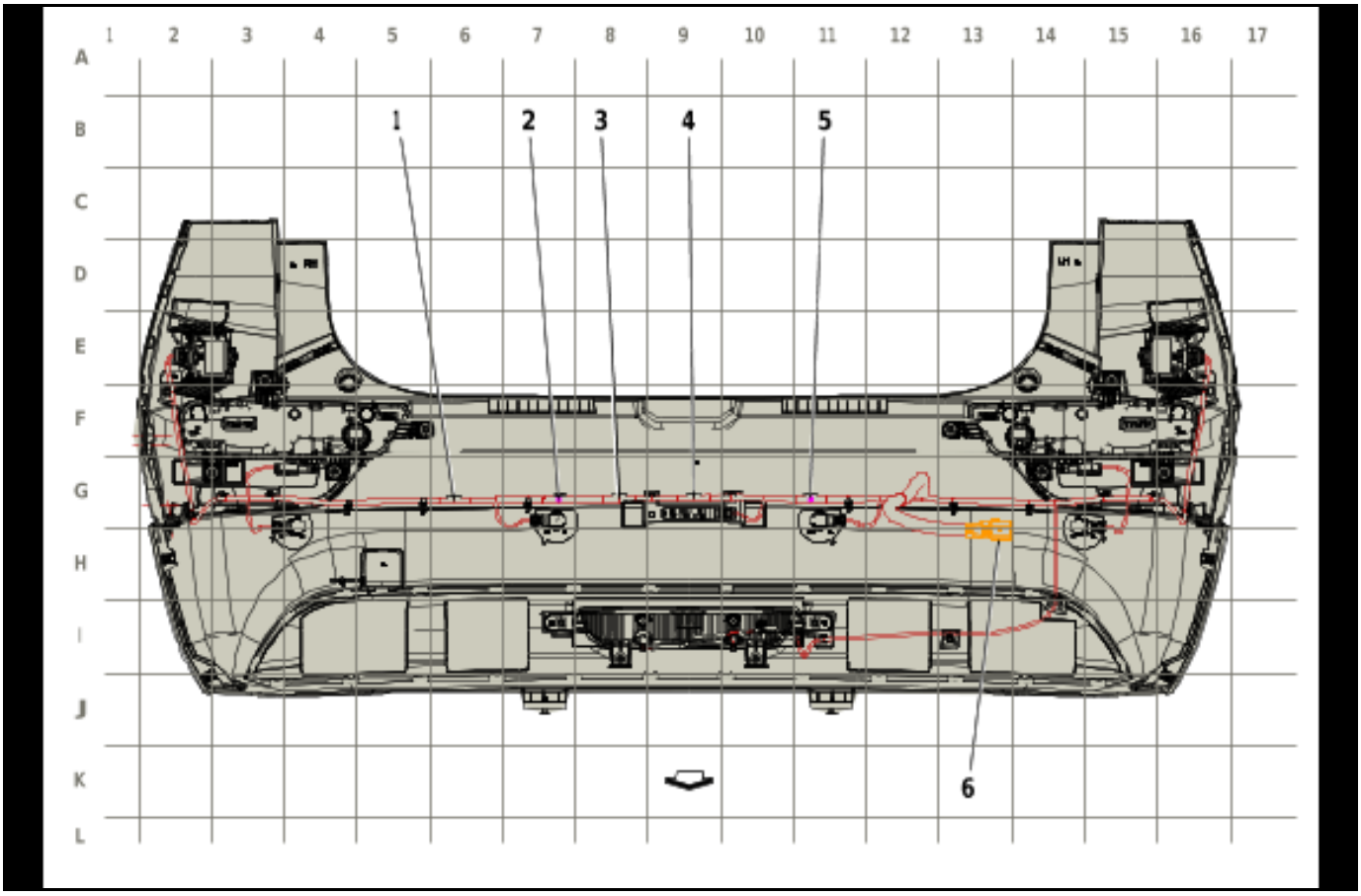

5754370

Items

(1) J406 Rear Object Alarm Sensor Wiring Harness

(2) J409 Rear Object Alarm Sensor Wiring Harness

(3) J407 Rear Object Alarm Sensor Wiring Harness

(4) J402 Rear Object Alarm Sensor Wiring Harness

(5) J403 Rear Object Alarm Sensor Wiring Harness

(6) X415 Body Wiring Harness to Rear Object Alarm Sensor Wiring Harness

Harness Routing Views (Instrument Panel Harness Routing)

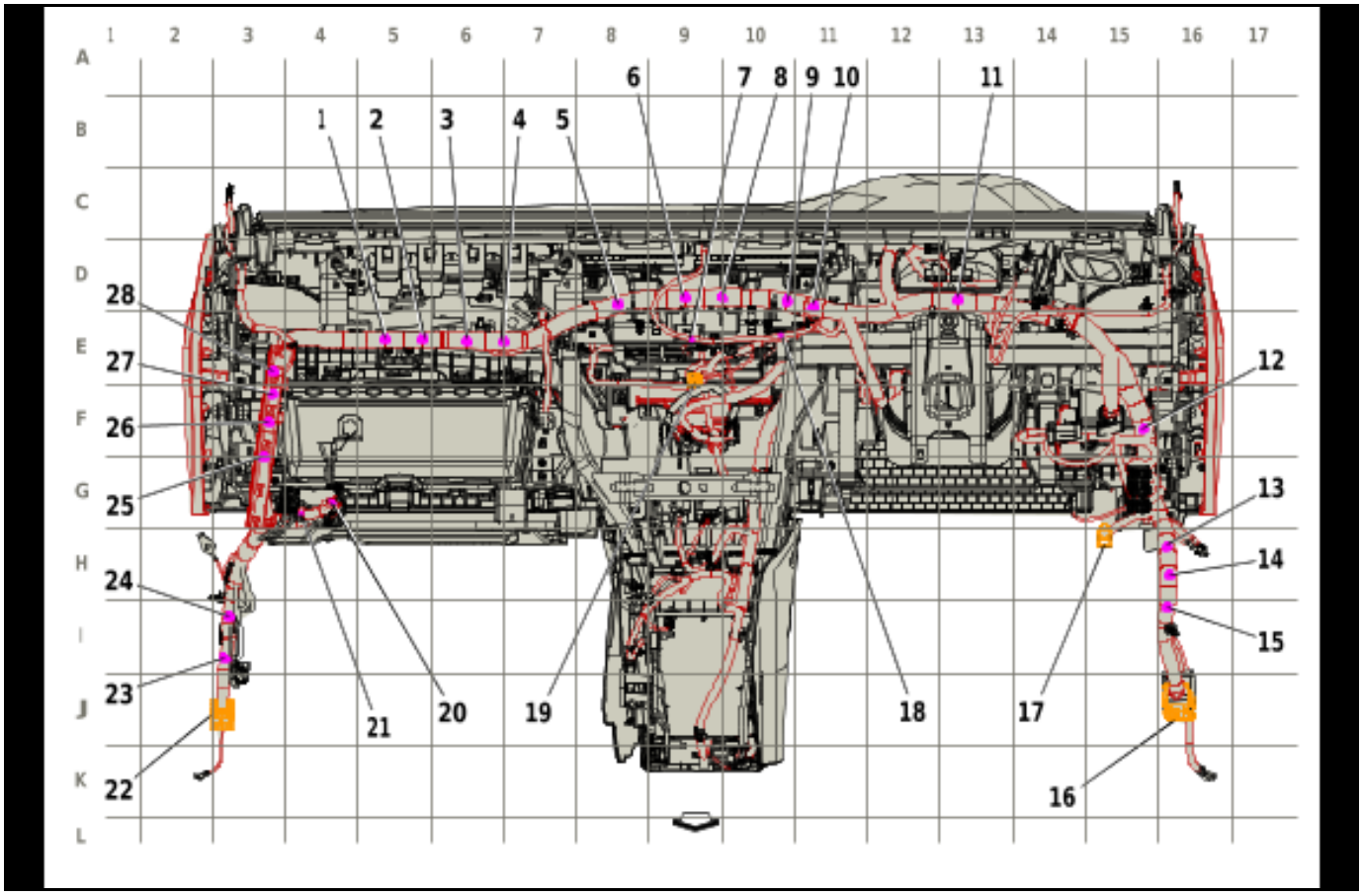

5754914

Items

(1) J249 Instrument Panel Wiring Harness
(2) J250 Instrument Panel Wiring Harness
(3) J225 Instrument Panel Wiring Harness
(4) J205 Instrument Panel Wiring Harness
(5) J208 Instrument Panel Wiring Harness
(6) J227 Instrument Panel Wiring Harness
(7) J221 Instrument Panel Wiring Harness
(8) J203 Instrument Panel Wiring Harness
(9) J201 Instrument Panel Wiring Harness
(10) J219 Instrument Panel Harness
(11) J226 Instrument Panel Wiring Harness
(12) J200 Instrument Panel Wiring Harness
(13) J202 Instrument Panel Wiring Harness
(14) J220 Instrument Panel Wiring Harness
(15) J223 Instrument Panel Wiring Harness
(16) X200 Instrument Panel Wiring Harness to Body Wiring Harness
(17) X210 Instrument Panel Wiring Harness to Body Wiring Harness
(18) J253 Instrument Panel Wiring Harness
(19) X236 Instrument Panel Wiring Harness to HVAC Wiring Harness
(20) J209 Instrument Panel Wiring Harness
(21) J210 Instrument Panel Wiring Harness
(22) X205 Instrument Panel Wiring Harness to Body Wiring Harness
(23) J212 Instrument Panel Wiring Harness
(24) J211 Instrument Panel Wiring Harness
(25) J204 Instrument Panel Wiring Harness
(26) J224 Instrument Panel Wiring Harness
(27) J252 Instrument Panel Wiring Harness
(28) J251 Instrument Panel Wiring Harness

Harness Routing Views (Steering Wheel Harness Routing)

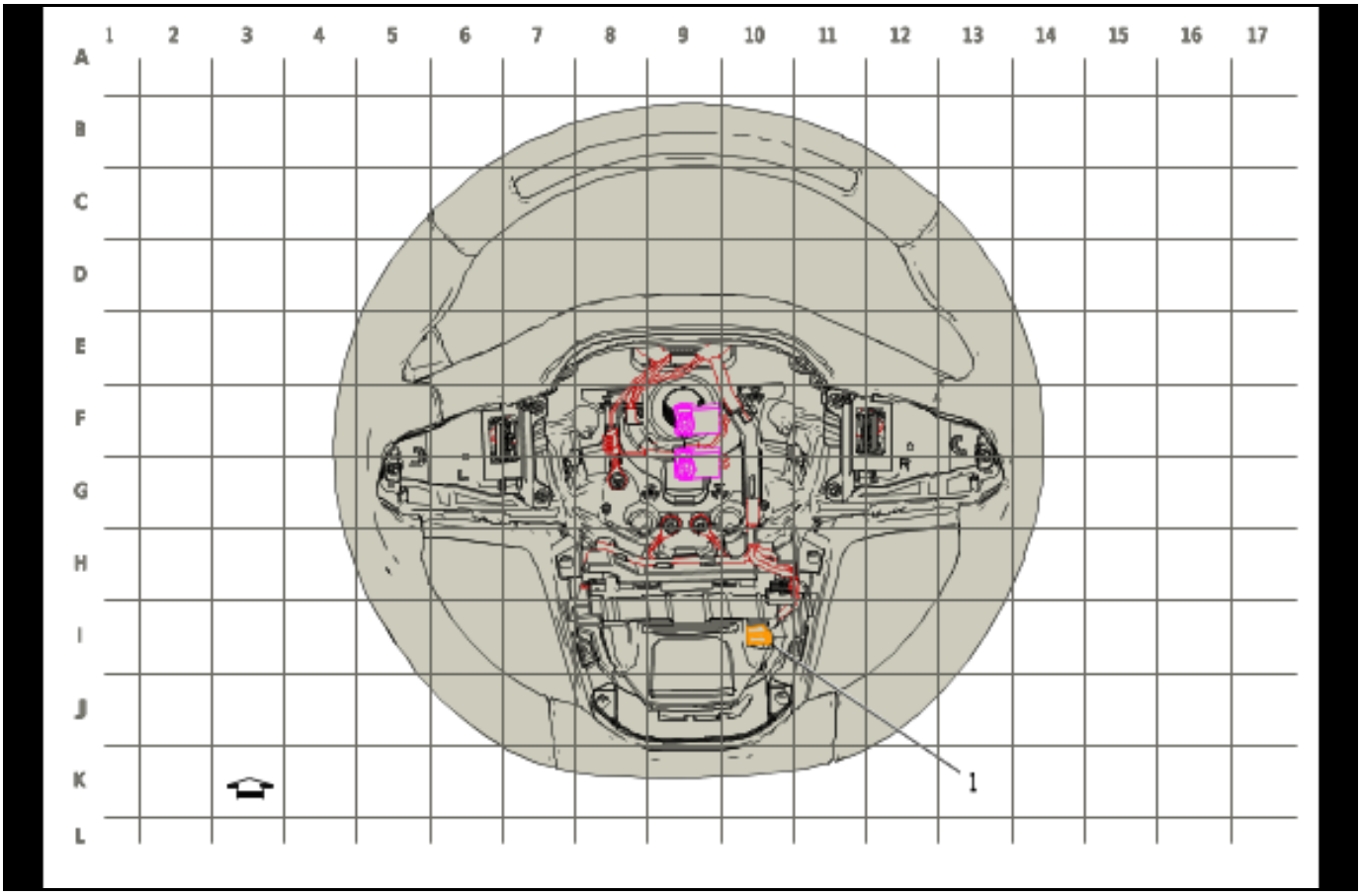

5898604

Items

(1) X220 Steering Wheel Wiring Harness to Light Bar Wiring Harness (UKL)

Harness Routing Views (Center Console Harness Routing)

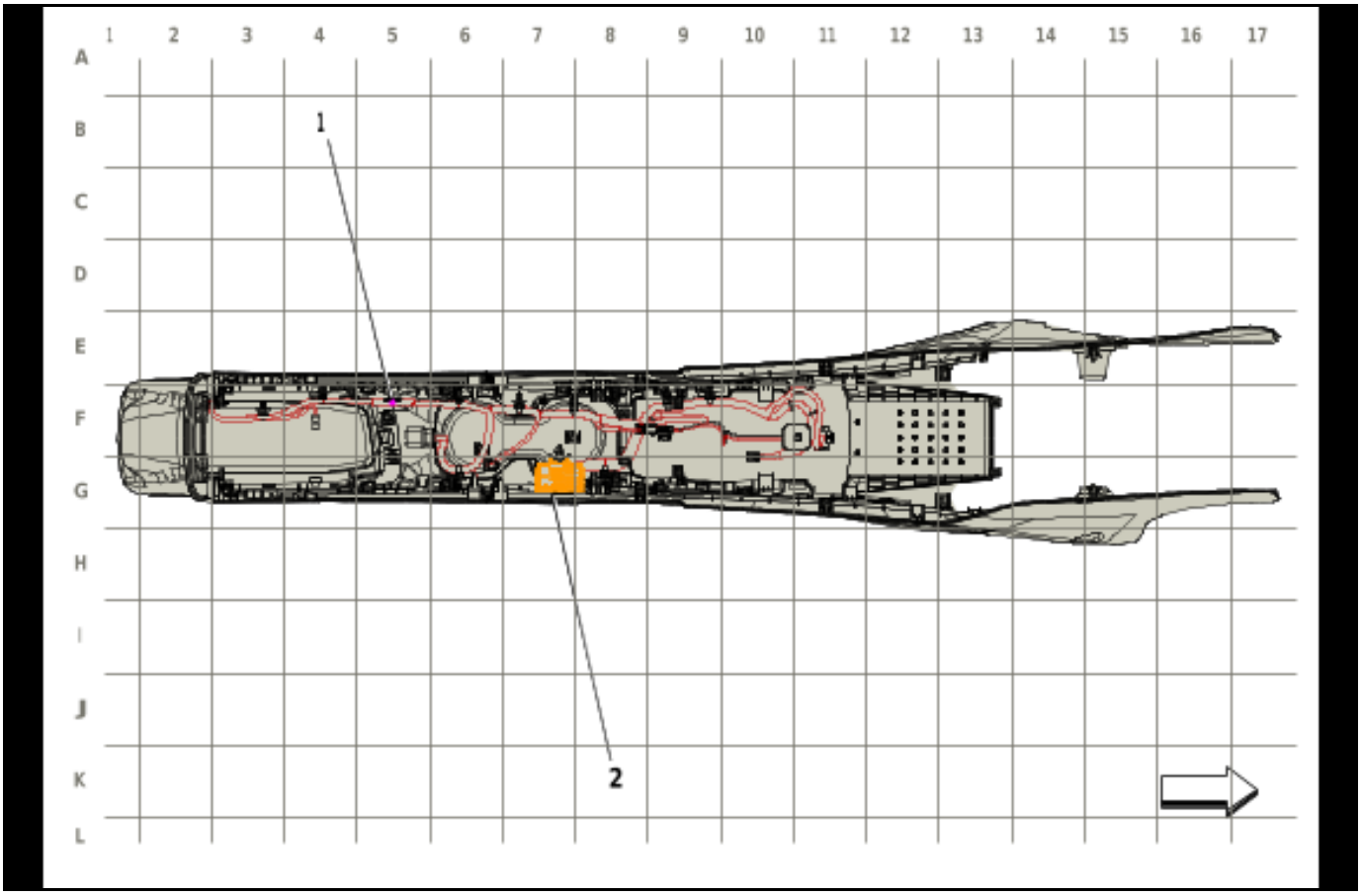

5754915

Items

(1) J217 Center Wiring Console

(2) X300 Body Wiring Harness to Front Floor Console Wiring Harness

Harness Routing Views (Headliner Harness Routing)

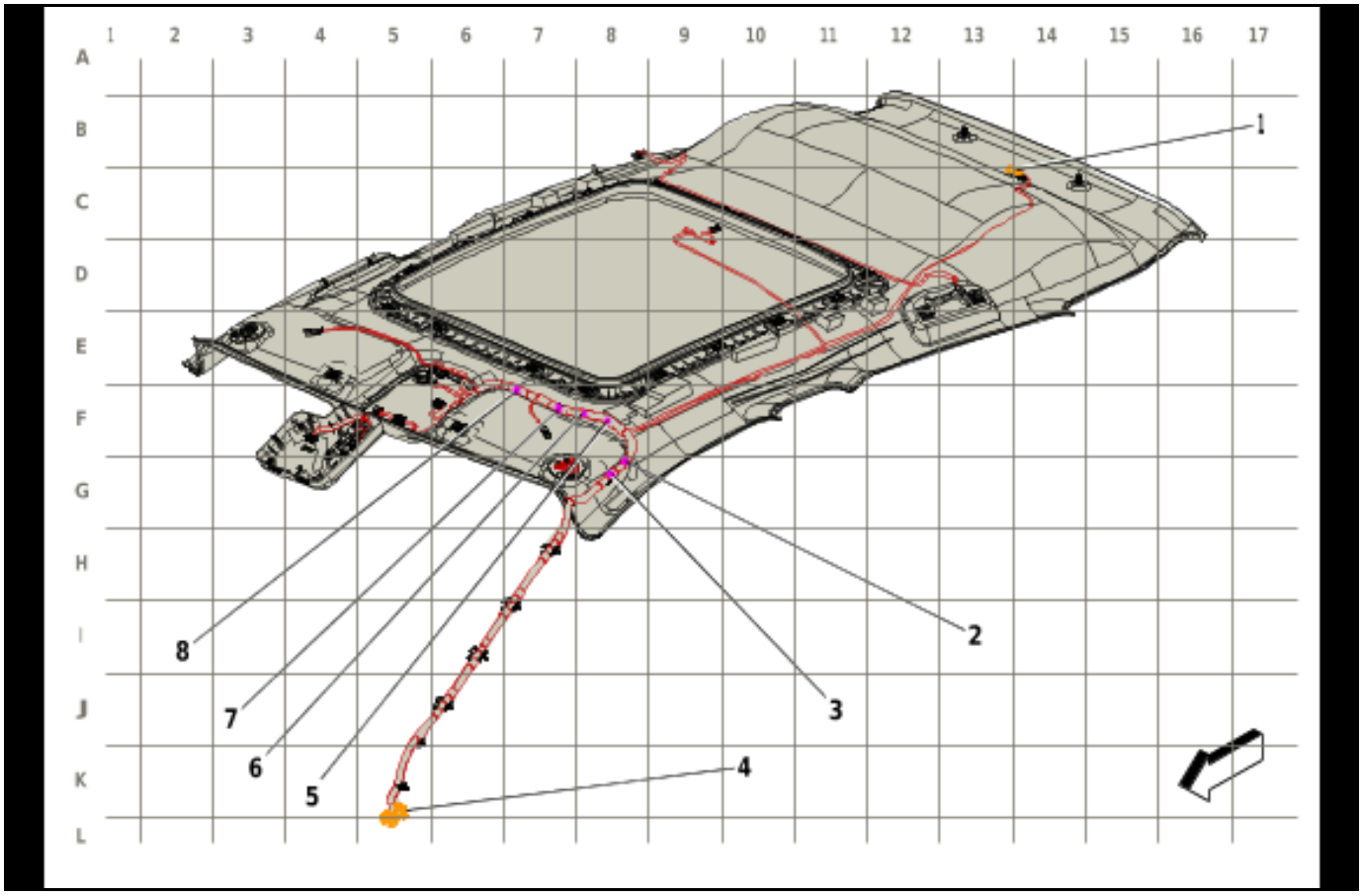

5754916

Items

(1) X405 Liftgate Jumper Wiring Harness to Roof Wiring Harness

(2) J324 Headliner Wiring Harness

(3) J323 Headliner Wiring Harness

(4) X208 Roof Wiring Harness to Body Wiring Harness

(5) J325 Headliner Wiring Harness

(6) J312 Headliner Wiring Harness

(7) J311 Headliner Wiring Harness

(8) J300 Headliner Wiring Harness

Harness Routing Views (Left Side of Passenger Compartment Harness Routing)

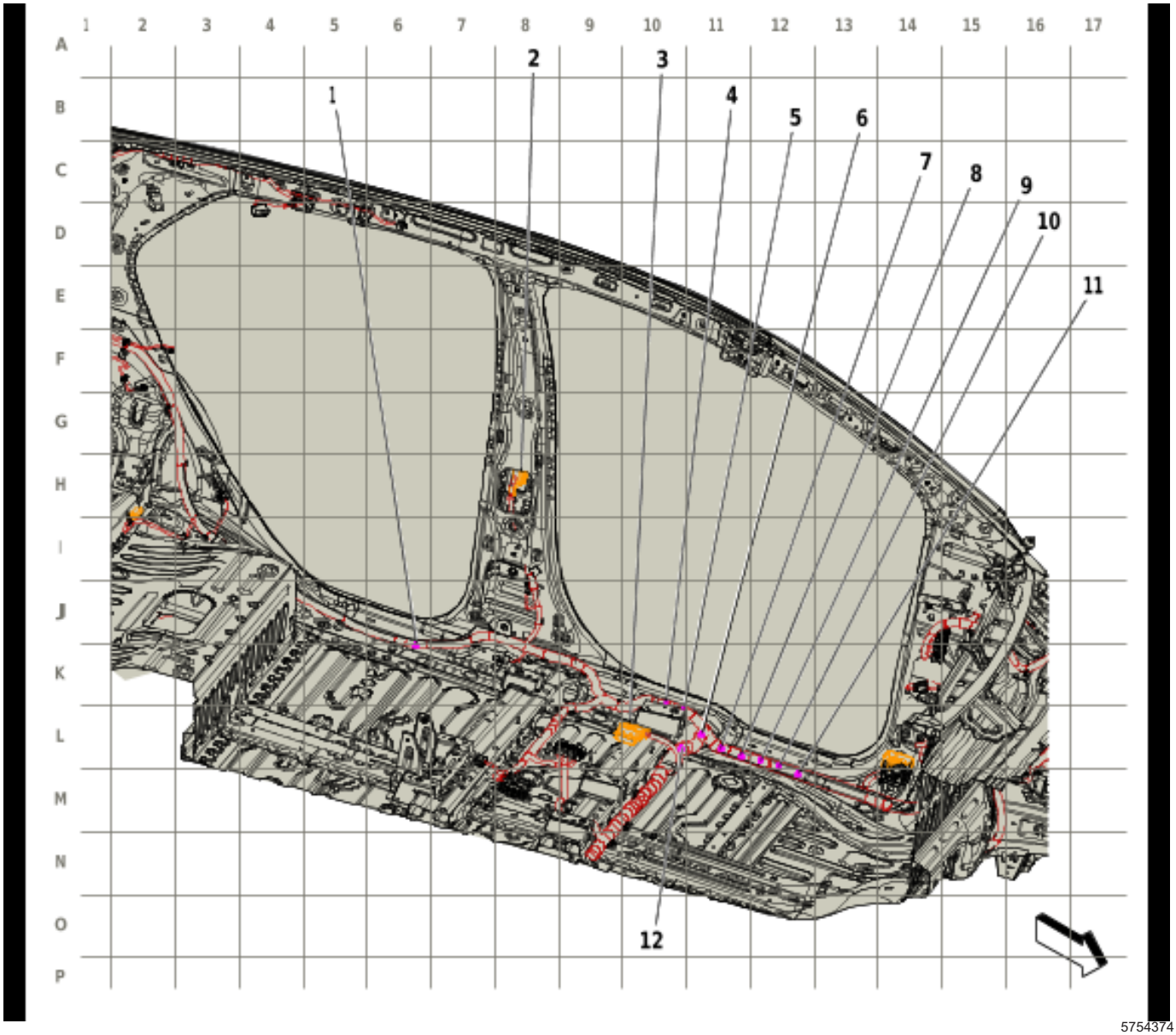

Items

(1) J320 Body Wiring Harness

(2) X700 Rear Door Door Wiring Harness - Left to Body Wiring Harness

(3) X310 Front Driver Seat Wiring Harness to Body Wiring Harness (A2X)

(4) J368 Body Wiring Harness

(5) J349 Body Wiring Harness

(6) J356 Body Wiring Harness

(7) J360 Driver Seat Wiring Harness

(8) J363 Body Wiring Harness

(9) J362 Body Wiring Harness

(10) J311 Headliner Wiring Harness

(11) J303 Body Wiring Harness

(12) J355 Body Wiring Harness

Harness Routing Views (Left Front of Passenger Compartment Harness Routing)

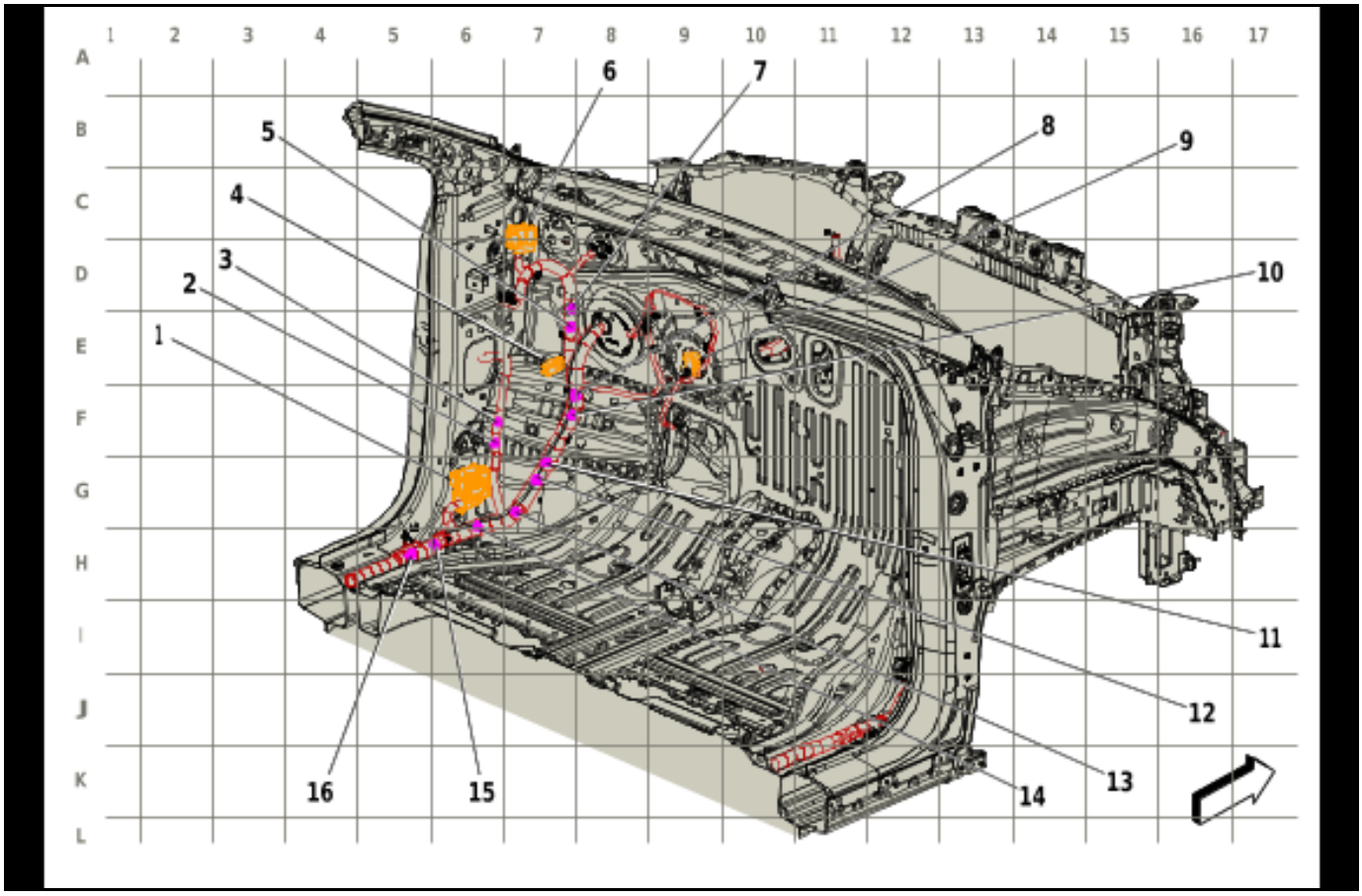

5754376

Items

(1) X200 Instrument Panel Wiring Harness to Body Wiring Harness

(2) J244 Body Wiring Harness

(3) J325 Headliner Wiring Harness

(4) X210 Instrument Panel Wiring Harness to Body Wiring Harness

(5) J128 Body Wiring Harness

(6) X208 Roof Wiring Harness to Body Wiring Harness

(7) J237 Body Wiring Harness

(8) J238 Body Wiring Harness

(9) X106 Body Wiring Harness to Engine Wiring Harness

(10) J241 Body Wiring Harness

(11) J240 Body Wiring Harness

(12) J239 Body Wiring Harness

(13) J242 Body Wiring Harness

(14) J243 Body Wiring Harness

(15) J323 Headliner Wiring Harness

(16) J350 Body Wiring Harness

Harness Routing Views (Right Side of Passenger Compartment Harness Routing)

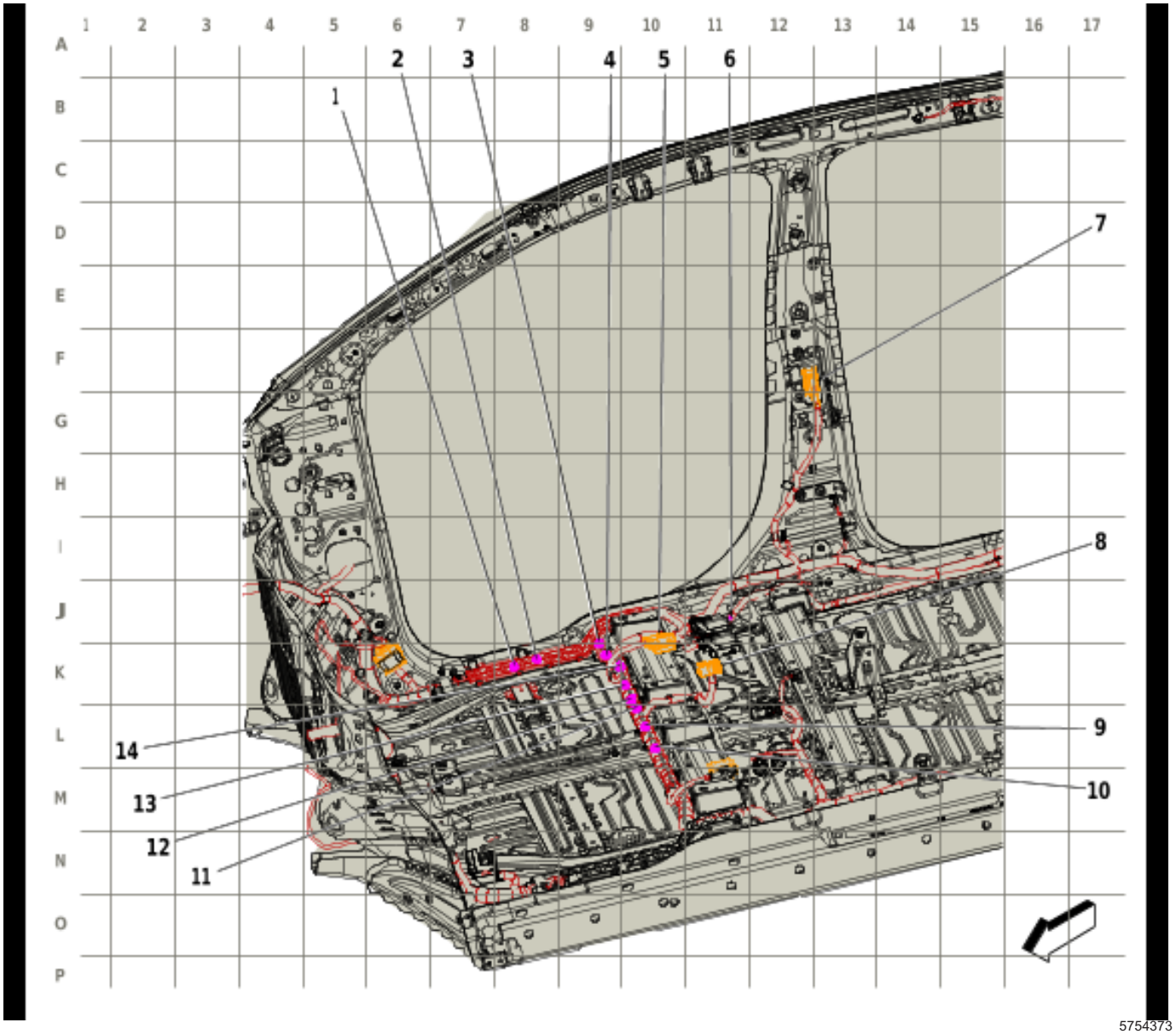

Items

(1) J350 Body Wiring Harness

(2) J351 Body Wiring Harness

(3) J322 Body Wiring Harness

(4) J305 Body Wiring Harness

(5) X320 Front Passenger Seat Wiring Harness to Body Wiring Harness

(6) J358 Body Wiring Harness

(7) X800 Rear Door Door Wiring Harness - Right to Body Wiring Harness

(8) X300 Body Wiring Harness to Front Floor Console Wiring Harness

(9) J326 Body Wiring Harness

(10) J346 Body Wiring Harness

(11) J359 Body Wiring Harness

(12) J367 Body Wiring Harness

(13) J370 Hybrid/EV Battery Pack Low Voltage Wiring Harness

(14) J307 Body Wiring Harness

Harness Routing Views (Right Front of Passenger Compartment Harness Routing)

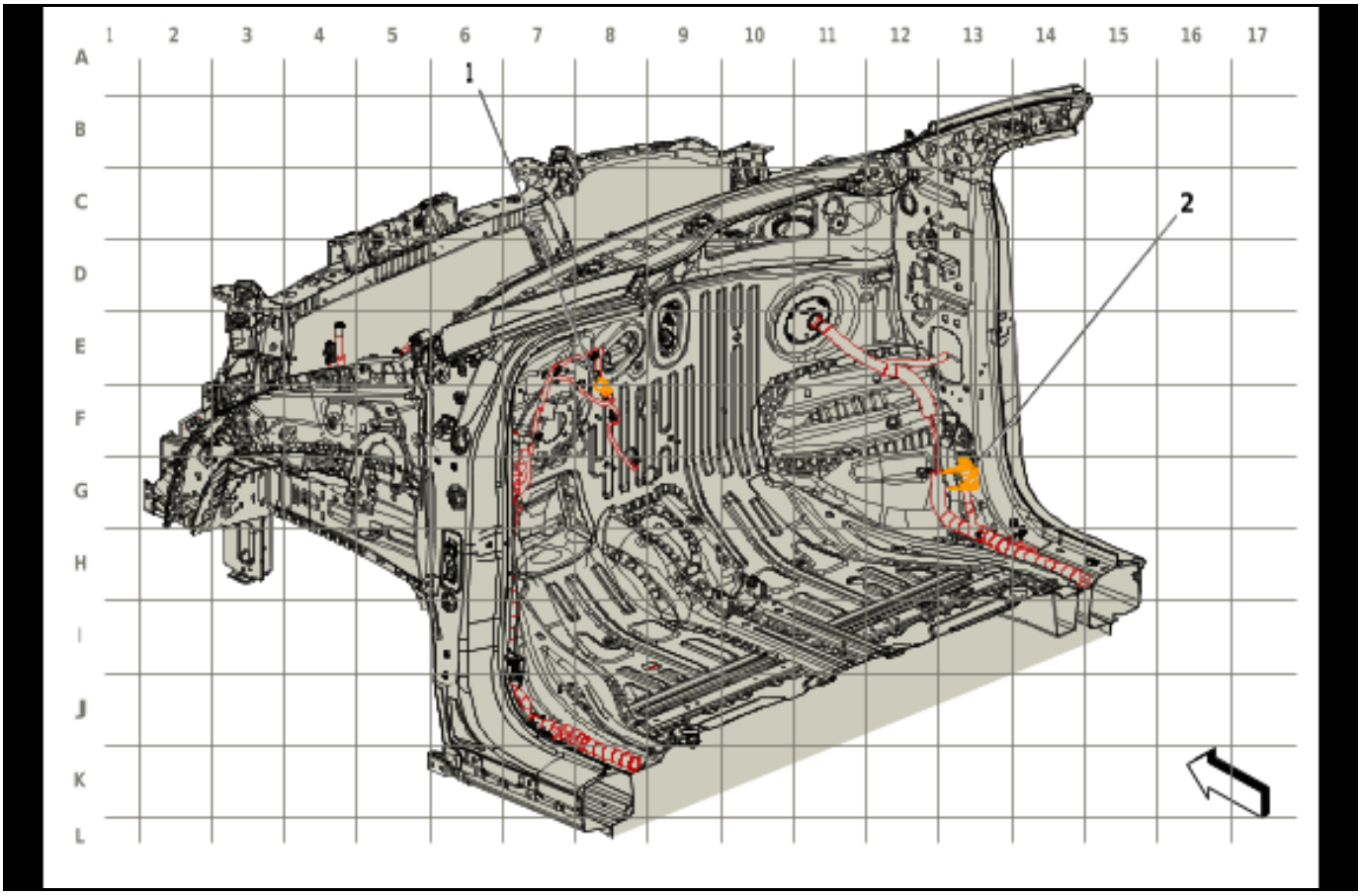

5754375

Items

(1) X105 Body Wiring Harness to Engine Wiring Harness

(2) X205 Instrument Panel Wiring Harness to Body Wiring Harness

Harness Routing Views (Right Rear of Passenger Compartment Harness Routing)

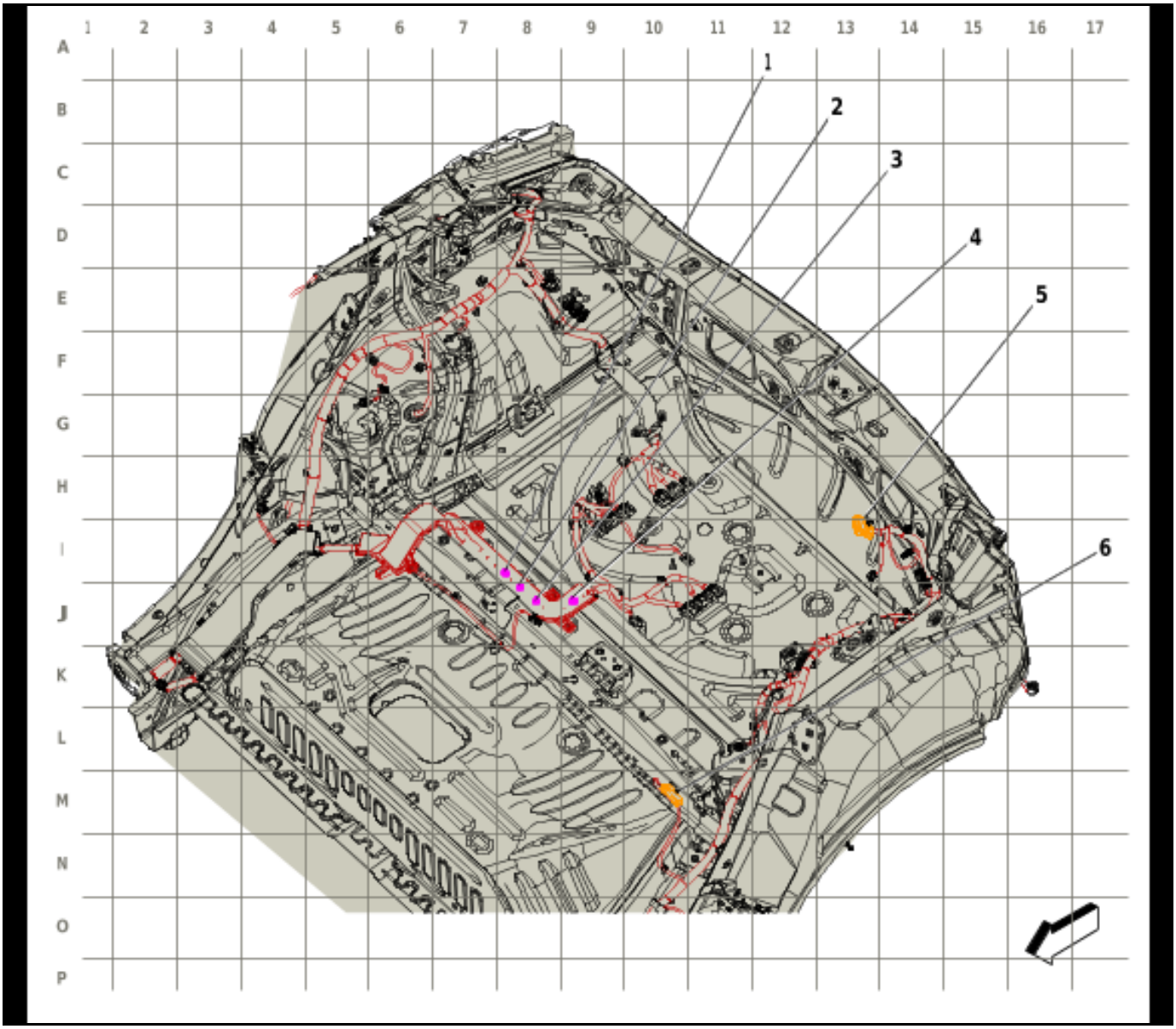

5754913

Items

(1) J353 Body Wiring Harness

(2) J369 Hybrid/EV Battery Pack Low Voltage Wiring Harness

(3) J352 Body Wiring Harness

(4) J351 Body Wiring Harness

(5) X900 Liftgate Jumper Wiring Harness to Body Wiring Harness

(6) X360 Rear Seat Wiring Harness to Body Wiring Harness (KA6)

Harness Routing Views (Under Vehicle Harness Routing)

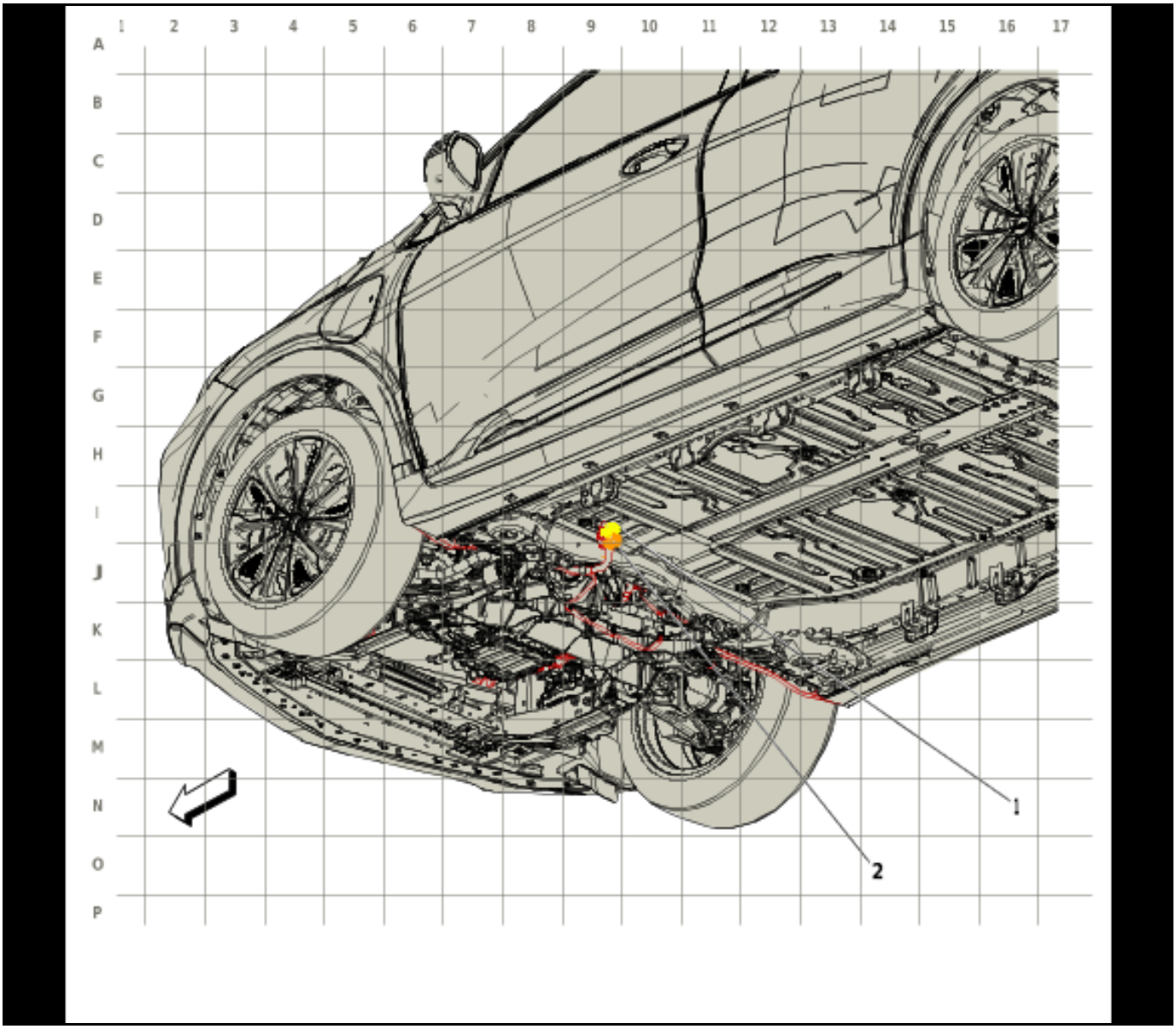

5979288

Items

(1) X357 Body Wiring Harness to Voltage Current Temperature Module

(2) X358 Body Wiring Harness to Battery Disconnect Module

Harness Routing Views (Liftgate Harness Routing)

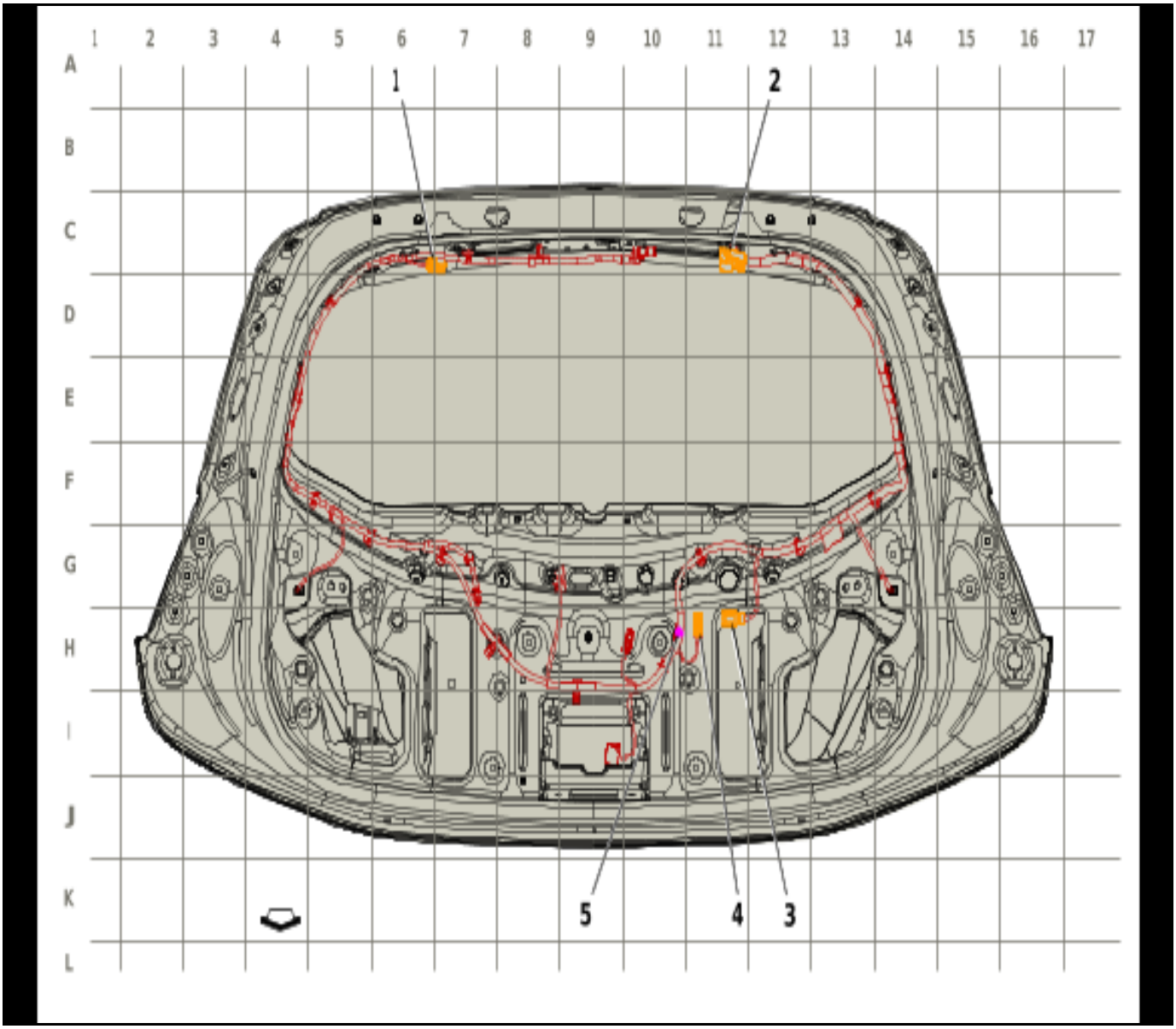

5989806

Items

(1) X905 Liftgate Wiring Harness to Antenna (UV2)

(2) X901 Liftgate Jumper Wiring Harness to Liftgate Wiring Harness

(3) X902 Rear License Plate Lamp Wiring Harness Extension Harness to Liftgate Wiring Harness

(4) X908 Liftgate Wiring Harness to Rear License Plate Lamp Wiring Harness Extension Harness

(5) J903 Liftgate Wiring Harness

Harness Routing Views (Liftgate Extension Harness Routing)

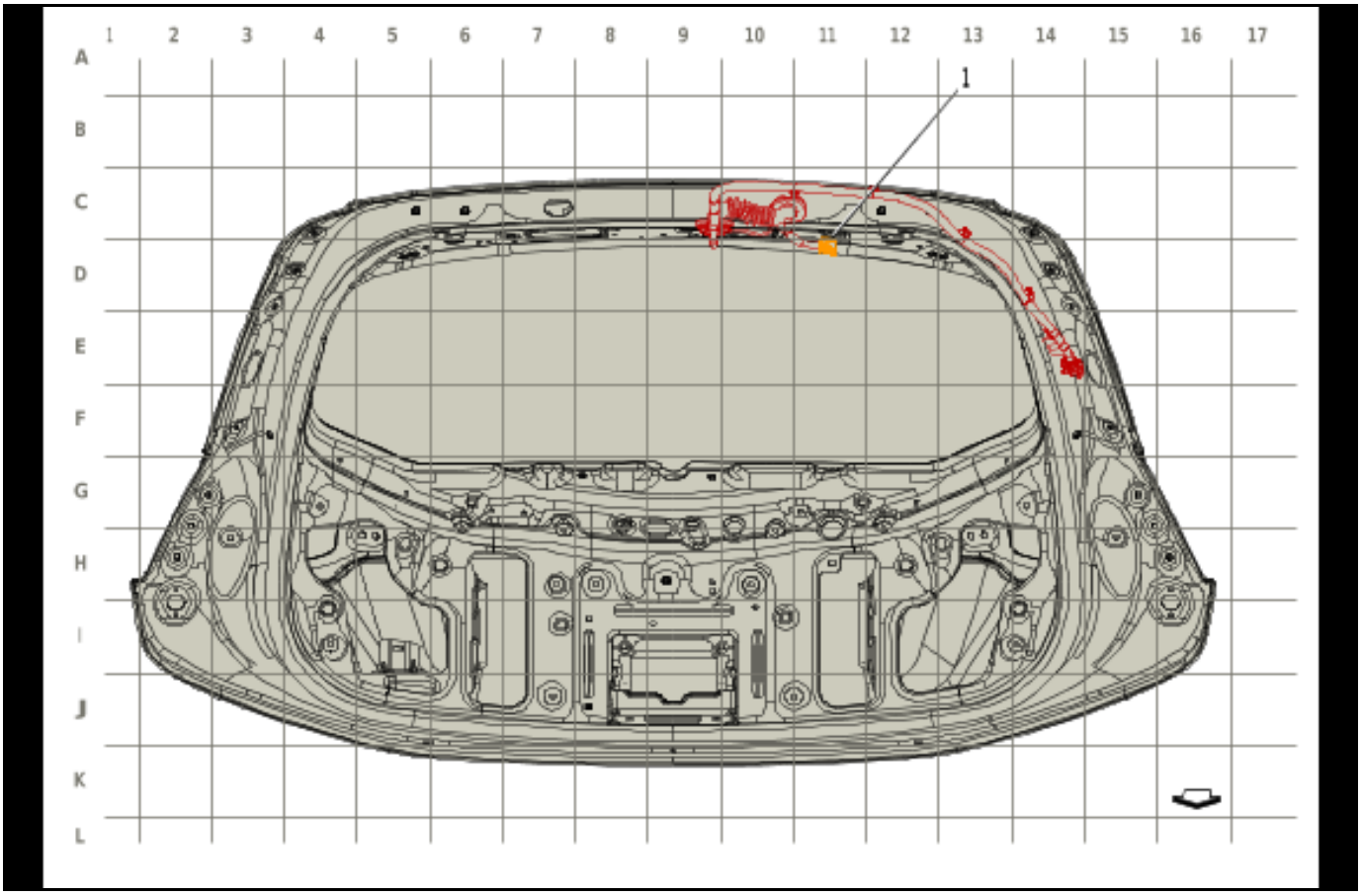

5989807

Items

(1) X901 Liftgate Jumper Wiring Harness to Liftgate Wiring Harness

Harness Routing Views (License Lamp Harness Routing)

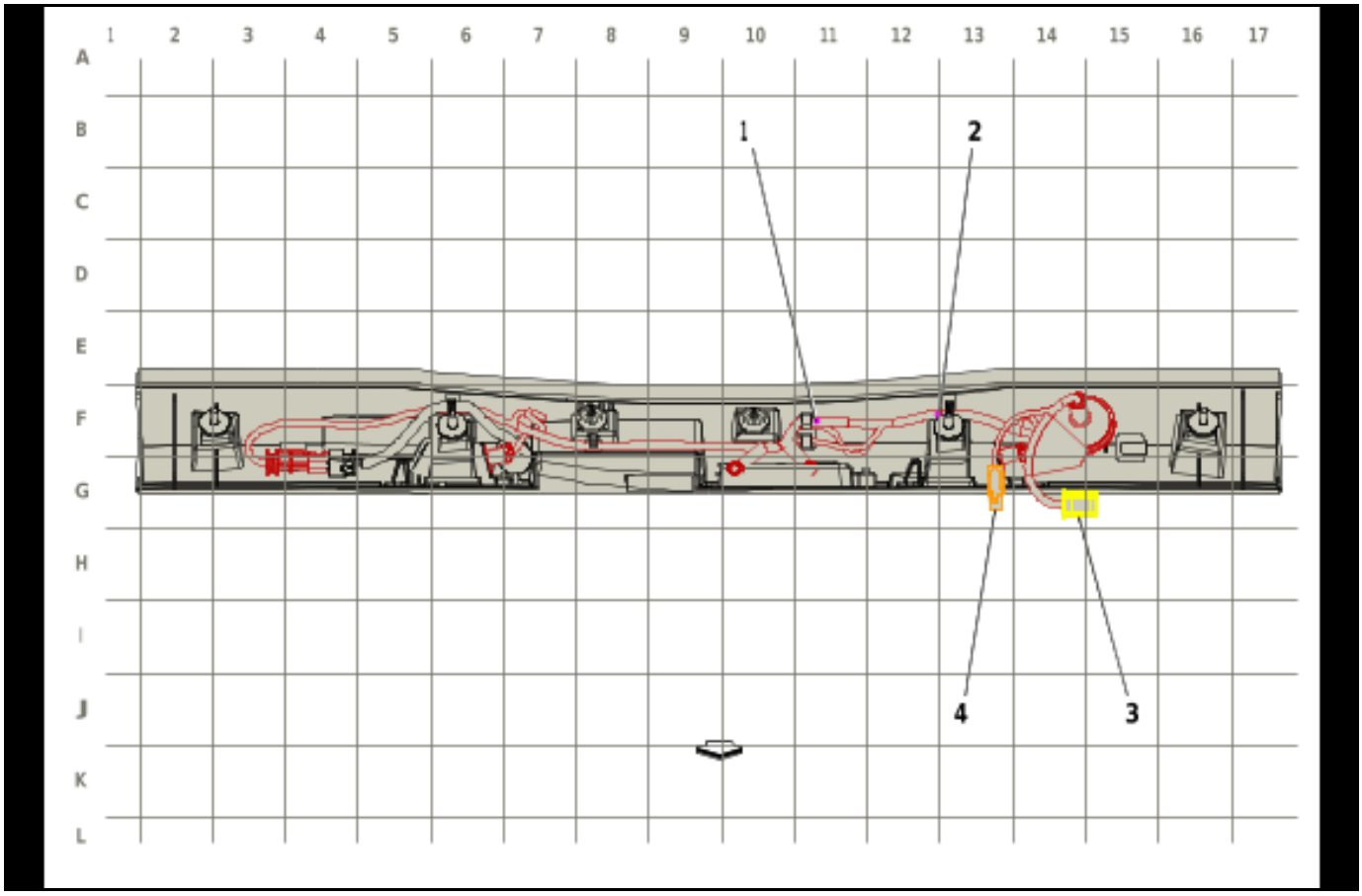

5775784

Items

(1) J901 Liftgate Wiring Harness

(2) J900 License Plate Lamp Wiring Harness

(3) X902 Rear License Plate Lamp Wiring Harness Extension Harness to Liftgate Wiring Harness

(4) X908 Liftgate Wiring Harness to Rear License Plate Lamp Wiring Harness Extension Harness

Component Locator

Front of Vehicle/Engine Compartment Component Views

Front of Vehicle

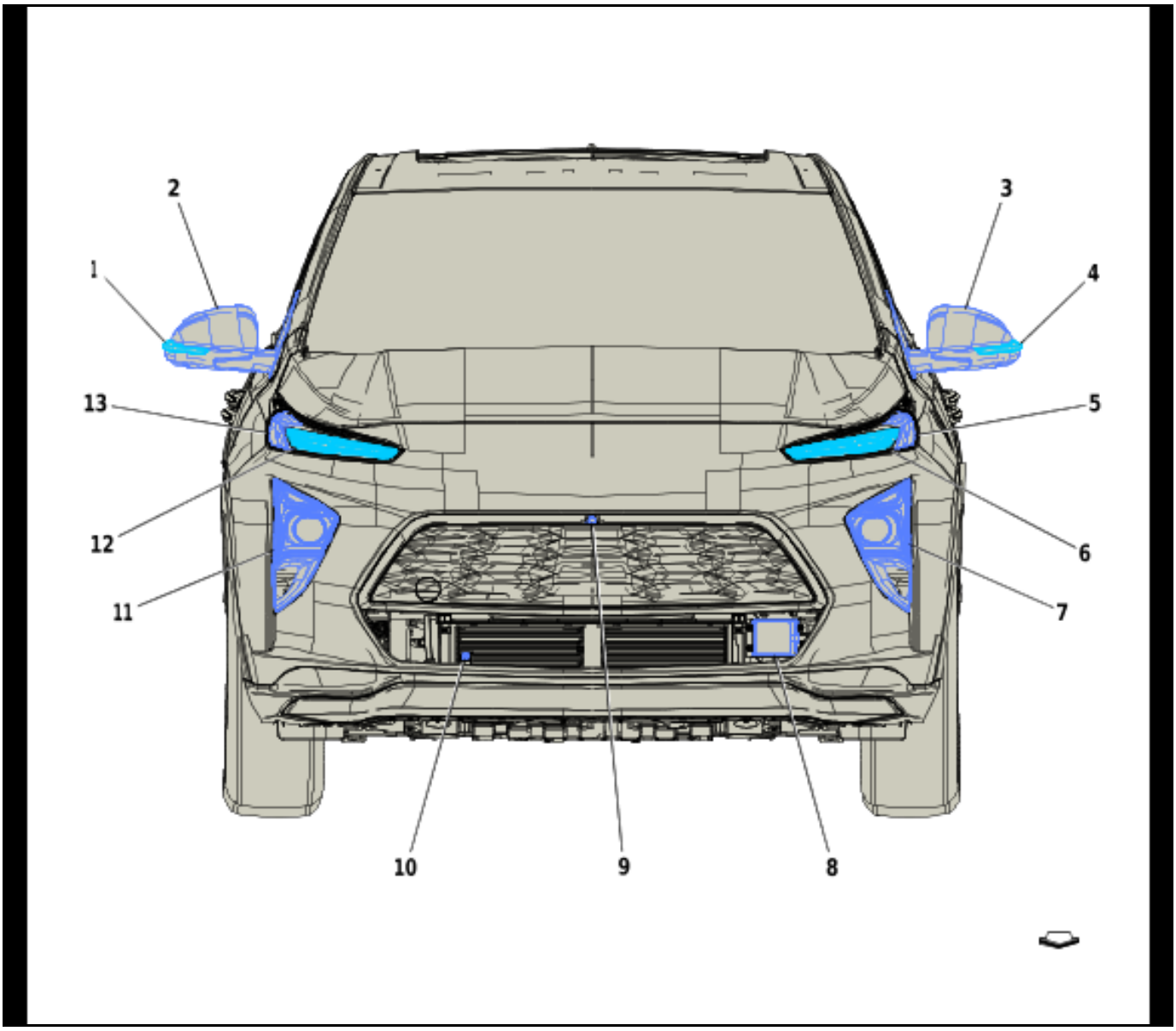

5774959

Items

(1) E4Z Turn Signal Repeater Lamp - Right
(2) A9B Outside Rearview Mirror - Passenger
(3) A9A Outside Rearview Mirror - Driver
(4) E4Y Turn Signal Repeater Lamp - Left
(5) E4J Park Lamp - Left Front
(6) E4C Daytime Running Lamp - Left
(7) E13LA Headlamp Assembly - Left
(8) B233B Radar Sensor Module - Long Range (UKL)
(9) B174G Frontview Camera - Grille (UV2)
(10) B9 Ambient Air Temperature Sensor
(11) E13RA Headlamp Assembly - Right
(12) E4D Daytime Running Lamp - Right
(13) E4K Park Lamp - Right Front

Behind Front Fascia Components

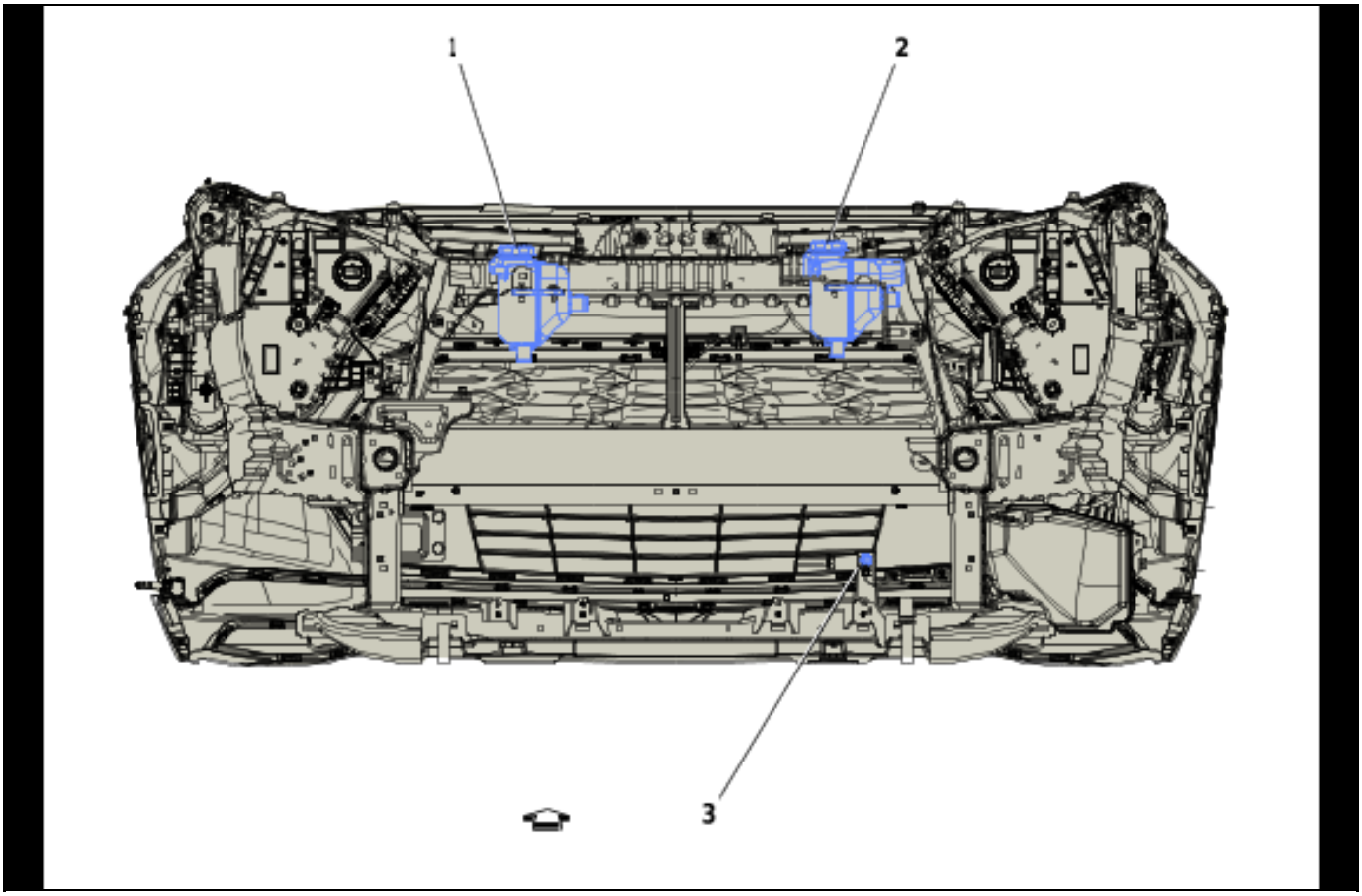

5979259

Items

(1) B59L Front Impact Sensor - Left

(2) B59R Front Impact Sensor - Right

(3) B9 Ambient Air Temperature Sensor

Behind Front of Vehicle Components

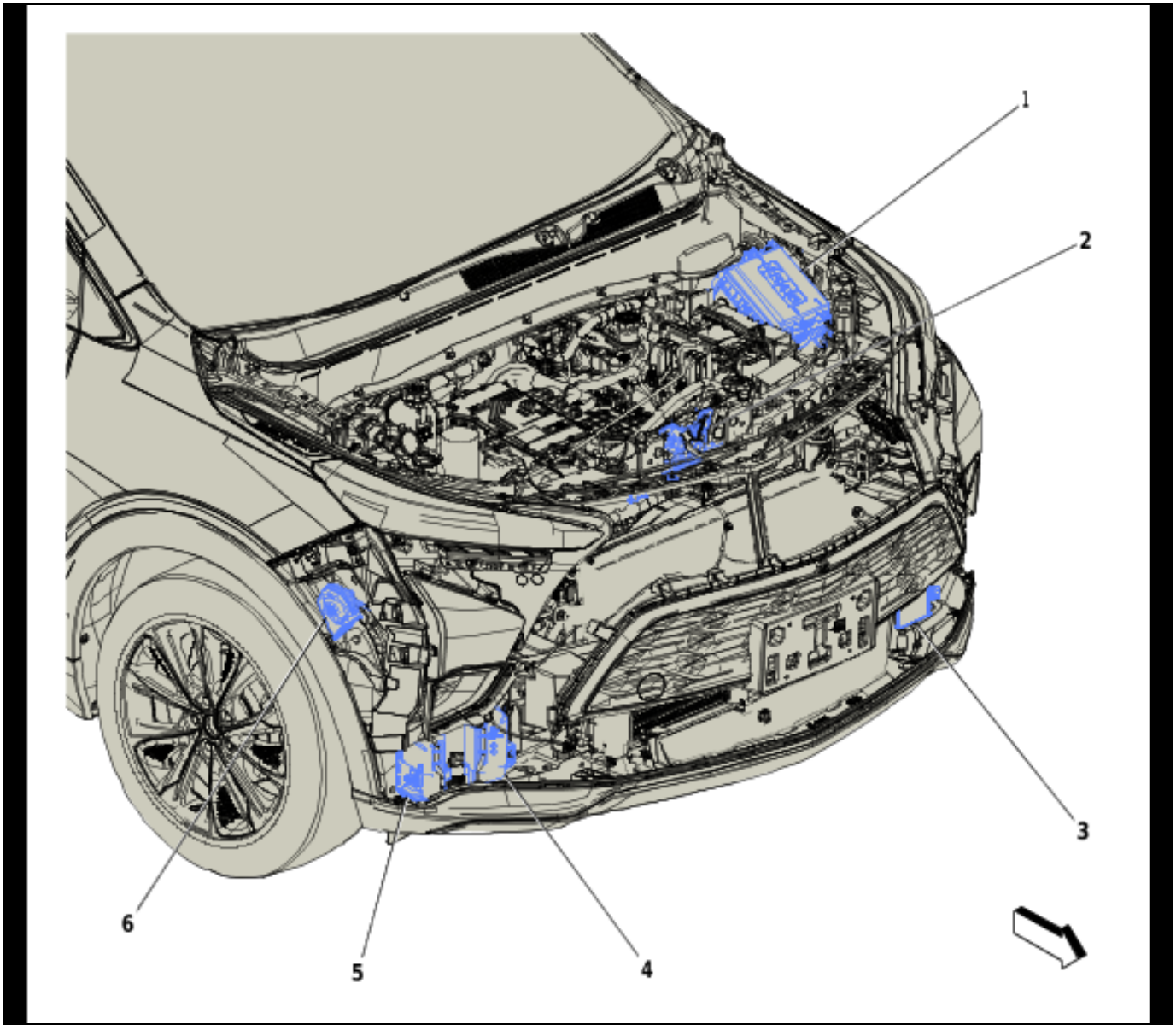

5979266

Items

(1) X50A Fuse Block - Underhood

(2) B55 Engine Hood Switch

(3) B233B Radar Sensor Module - Long Range (UKL)

(4) G24 Windshield Washer Pump

(5) B118 Windshield Washer Fluid Level Sensor

(6) P12L Horn - Left

Left Side Engine Compartment

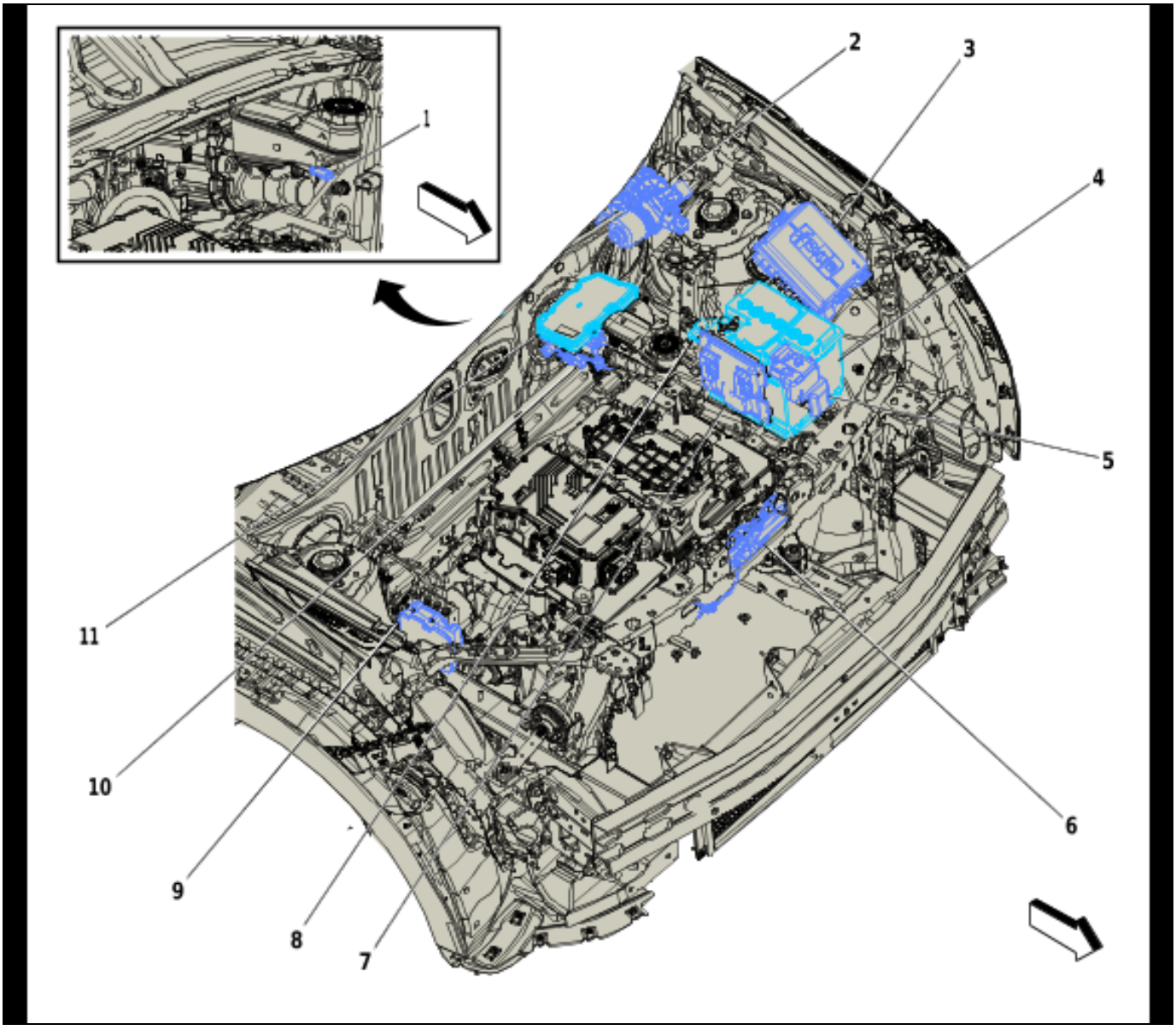

5752721

Items

(1) B20 Brake Fluid Level Switch
(2) M75 Windshield Wiper Motor
(3) X50A Fuse Block - Underhood
(4) C1 Battery
(5) X50D Fuse Block - Battery
(6) B55 Engine Hood Switch
(7) K20 Engine Control Module
(8) B18 Battery Current Sensor
(9) K17 Electronic Brake Control Module
(10) B201 Brake Control Brake Pedal Position Sensor
(11) K177 Brake Booster Control Module

Engine Compartment Top

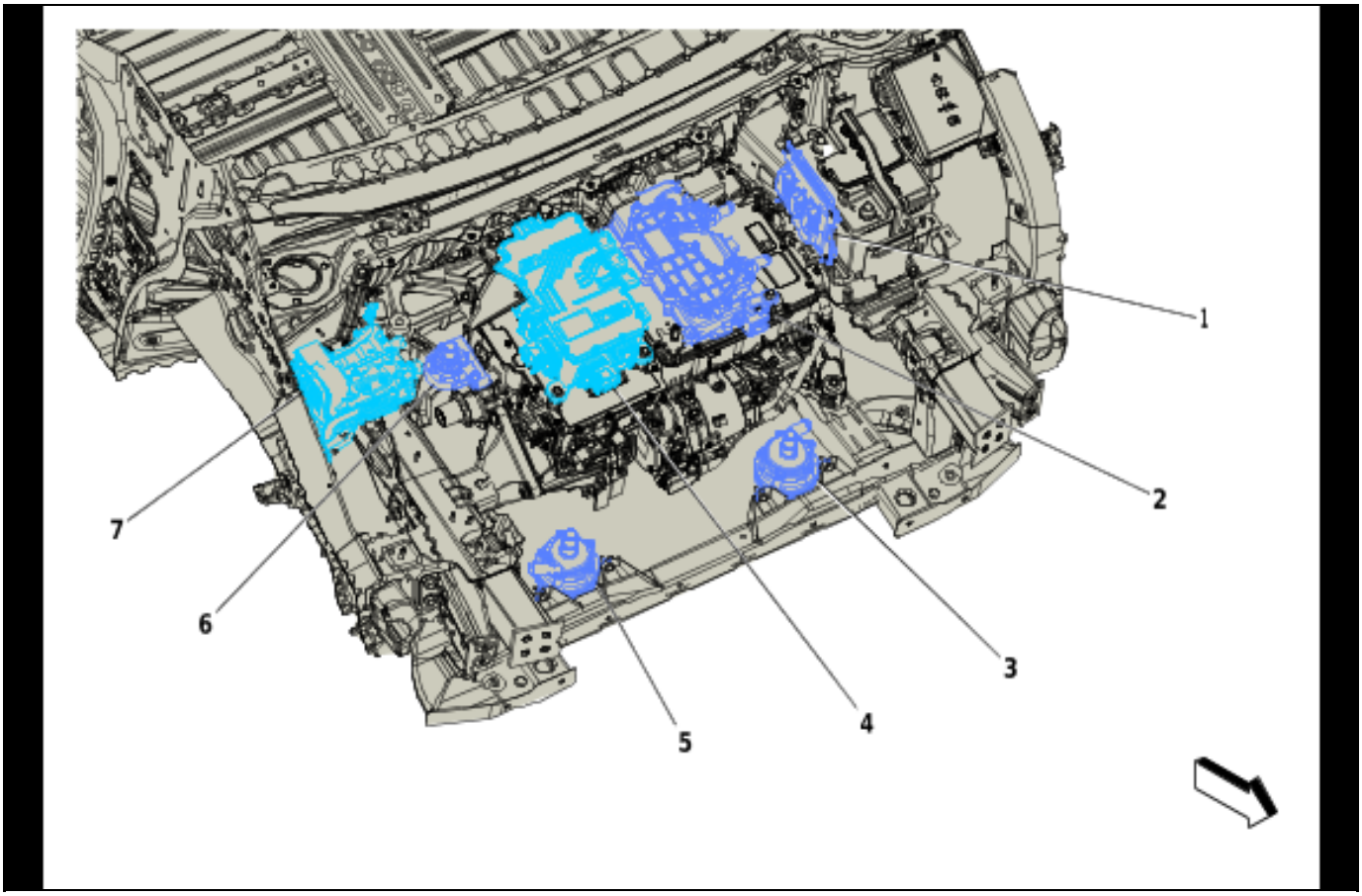

5752725

Items

(1) K20 Engine Control Module
(2) K1 14V Power Module
(3) G35 Hybrid/EV Electronics Coolant Pump
(4) T24 Battery Charger - DC
(5) G37 Hybrid/EV Battery Pack Coolant Pump
(6) G36 Auxiliary Heater Coolant Pump
(7) K10 Coolant Heater Control Module

Front of Engine Compartment

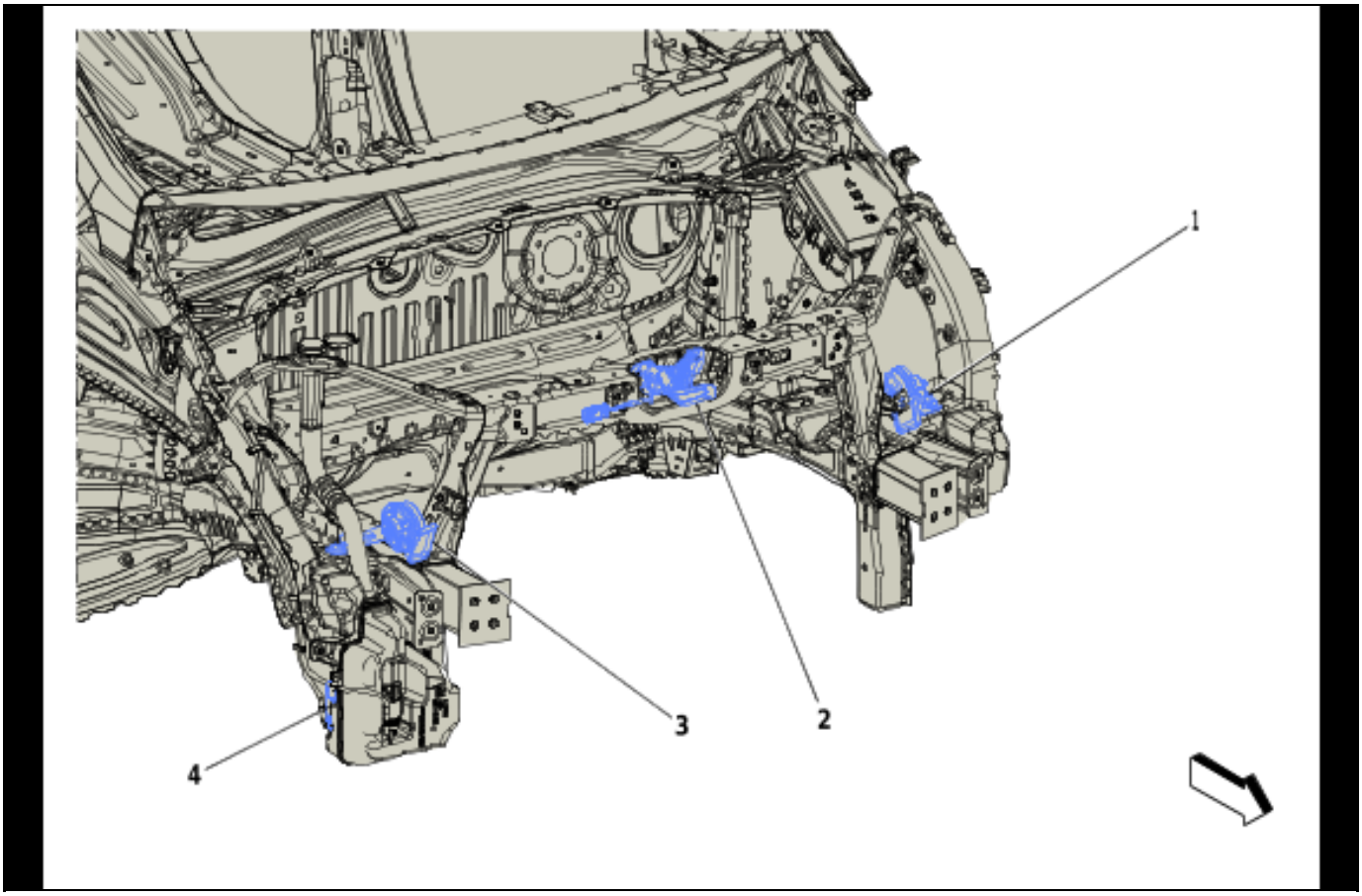

5752708

Items

(1) P12L Horn - Left
(2) B55 Engine Hood Switch
(3) P12R Horn - Right
(4) G24 Windshield Washer Pump

Front of Engine Components

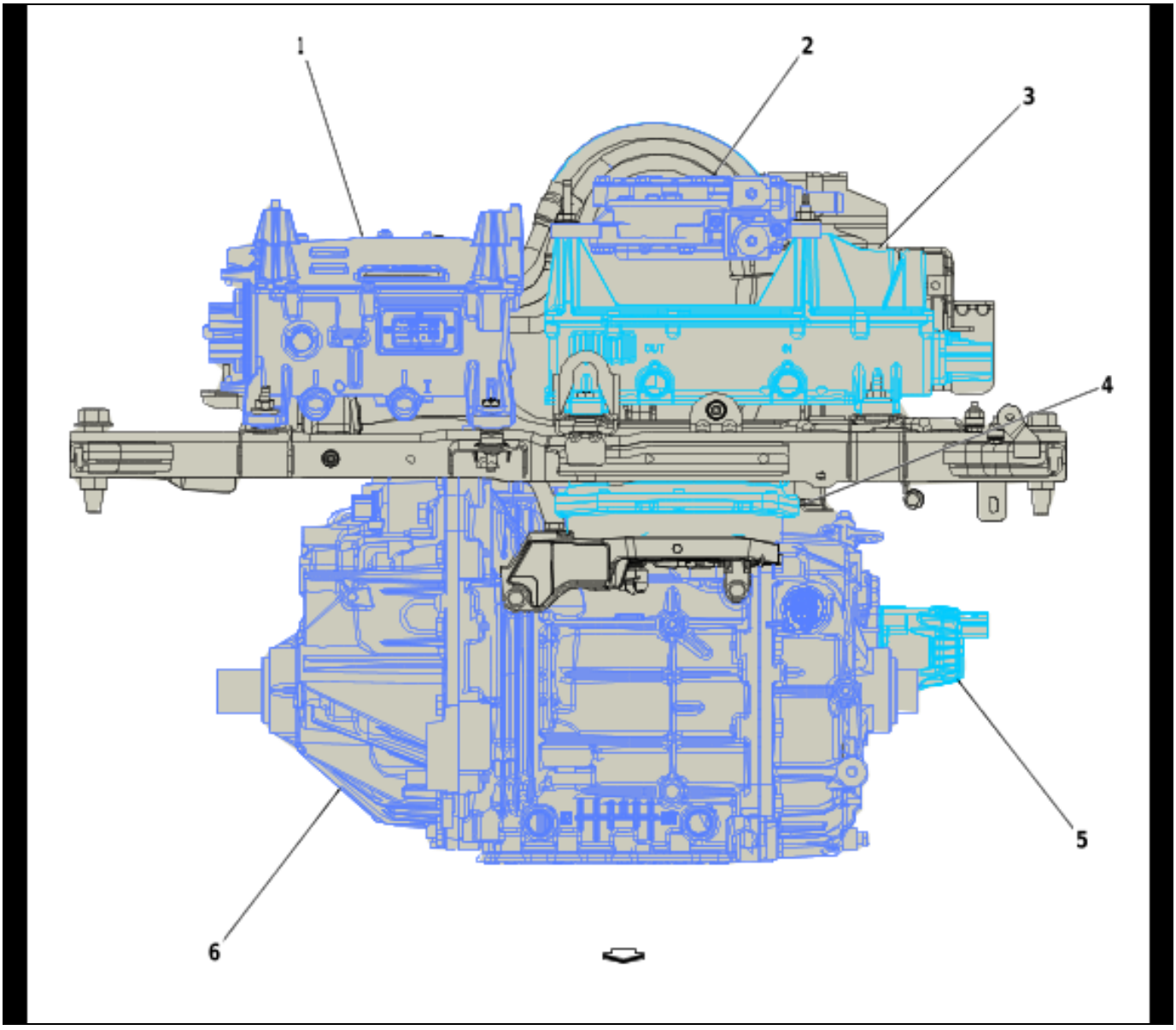

5979270

Items

(1) T6 Power Inverter Module
(2) K1 14V Power Module
(3) T18 Battery Charger
(4) K173 Transmission Range Control Module
(5) G5 Transmission Fluid Pump - Electric/Auxiliary
(6) T12 Automatic Transmission Assembly

Powertrain Component Views

Transmission Components

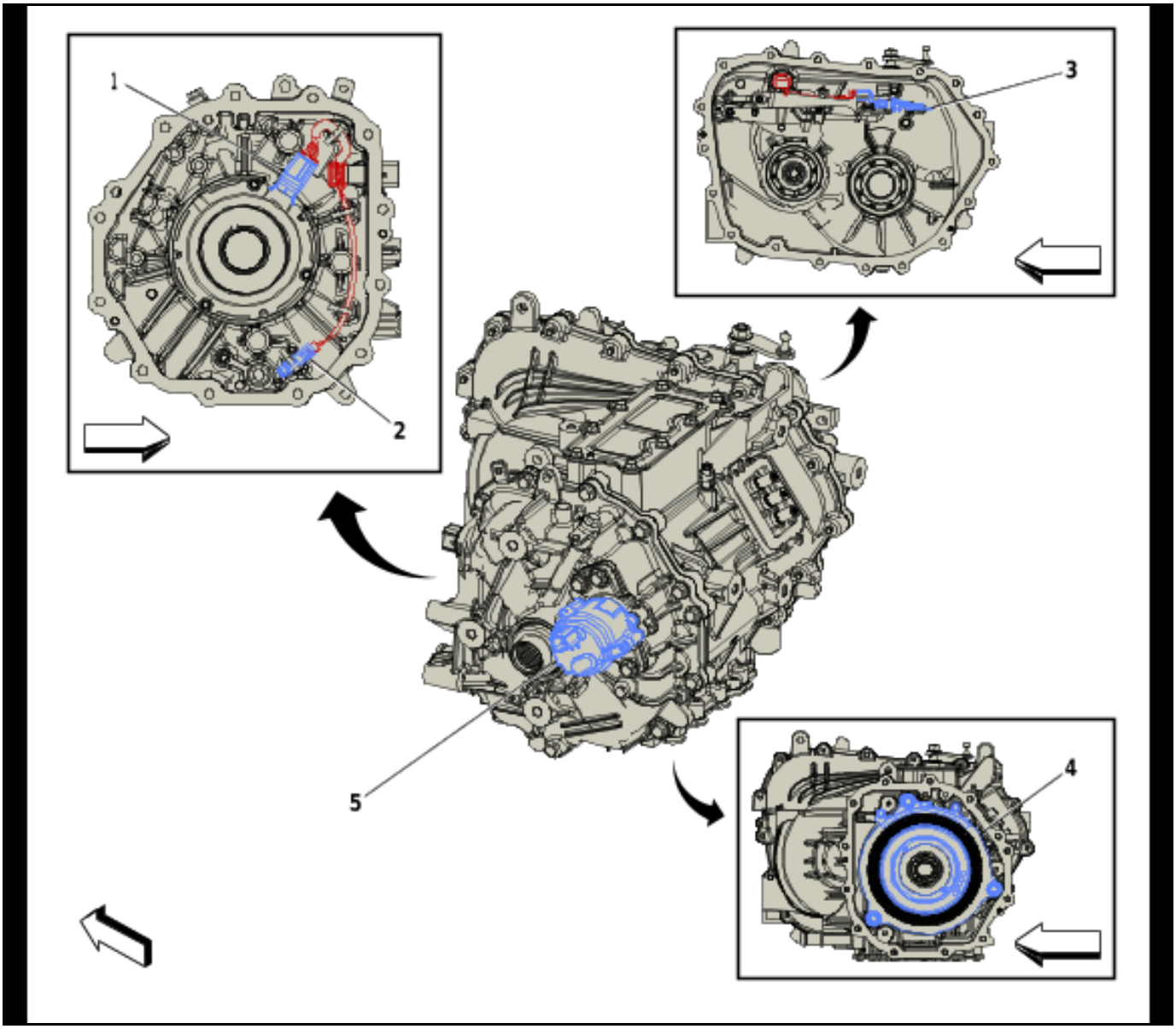

5752766

Items

(1) B228 Drive Motor Position Sensor

(2) B13 Transmission Fluid Temperature Sensor

(3) B15 Transmission Internal Mode Switch

(4) M15 Drive Motor

(5) G5 Transmission Fluid Pump - Electric/Auxiliary

Instrument Panel/Center Console Component Views

Center Console Right Side

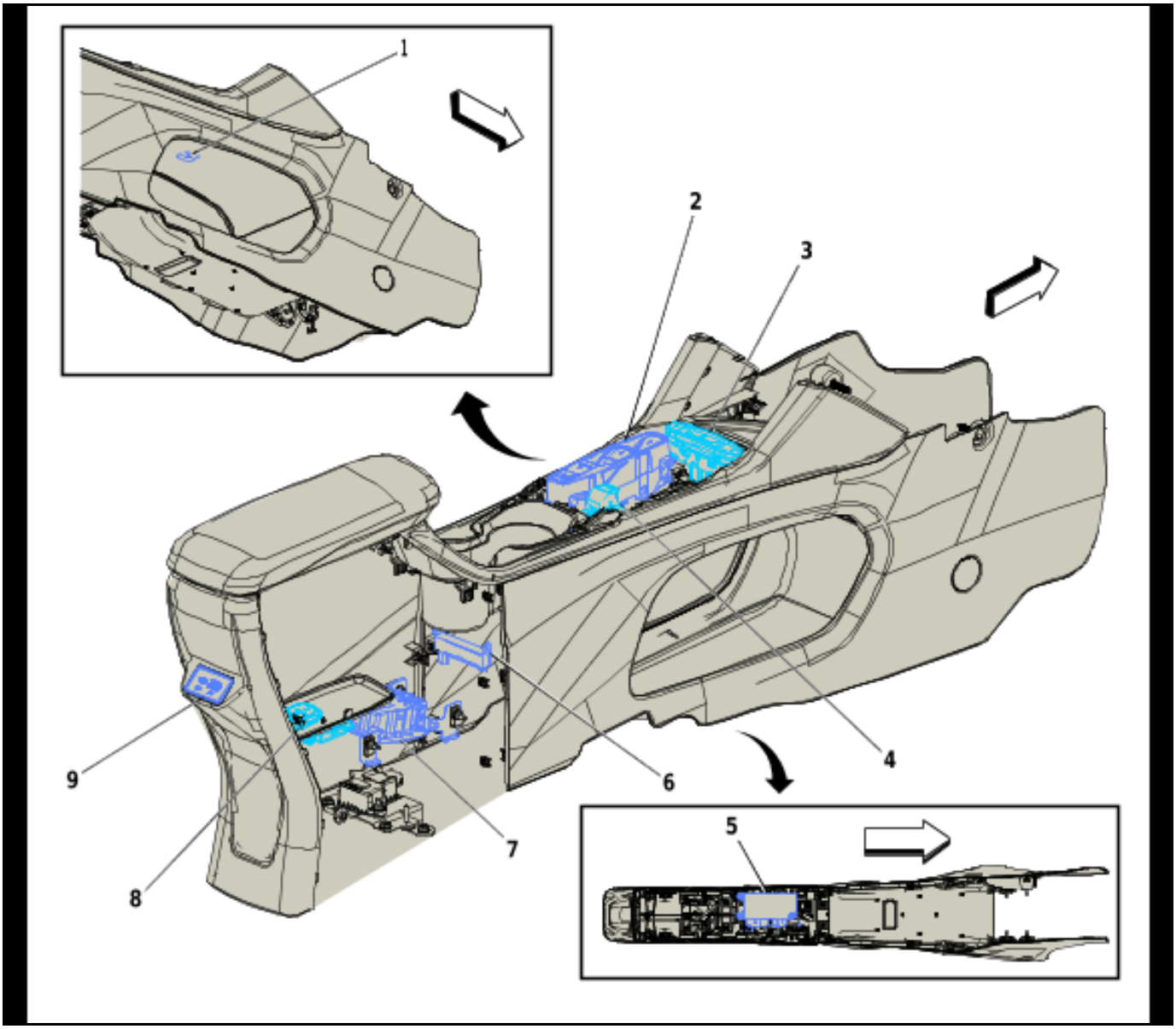

5752875

Items

(1) E1AC Accent Lamp - Center Console Cupholder

(2) K212 Electronic Transmission Shift Control Pushbutton Circuit Board

(3) S48E Multifunction Switch - Center Console

(4) S91 Park Brake Control Switch

(5) K36 Inflatable Restraint Sensing and Diagnostic Module

(6) T10K Keyless Entry Antenna - Center Console Rear

(7) K132 Pedestrian Alert Sound Control Module

(8) K89 Immobilizer Control Module

(9) X92 USB Receptacle (USS)

Behind Left Side of Instrument Panel Components

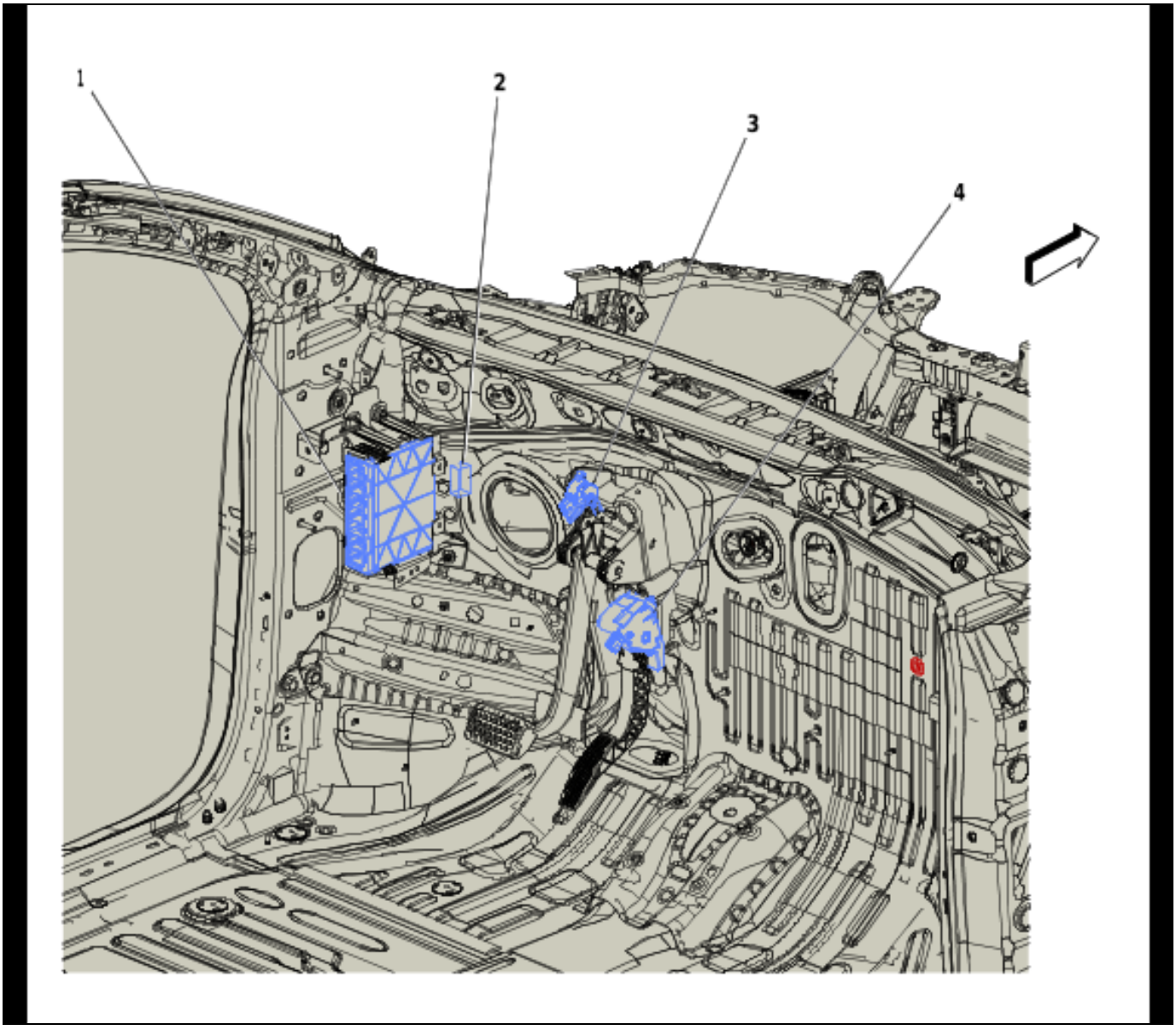

5979272

Items

(1) K9 Body Control Module

(2) R6E Terminating Resistor - High Speed Extension Bus 1

(3) B22 Brake Pedal Position Sensor

(4) B107 Accelerator Pedal Position Sensor

Front of Instrument Panel Components

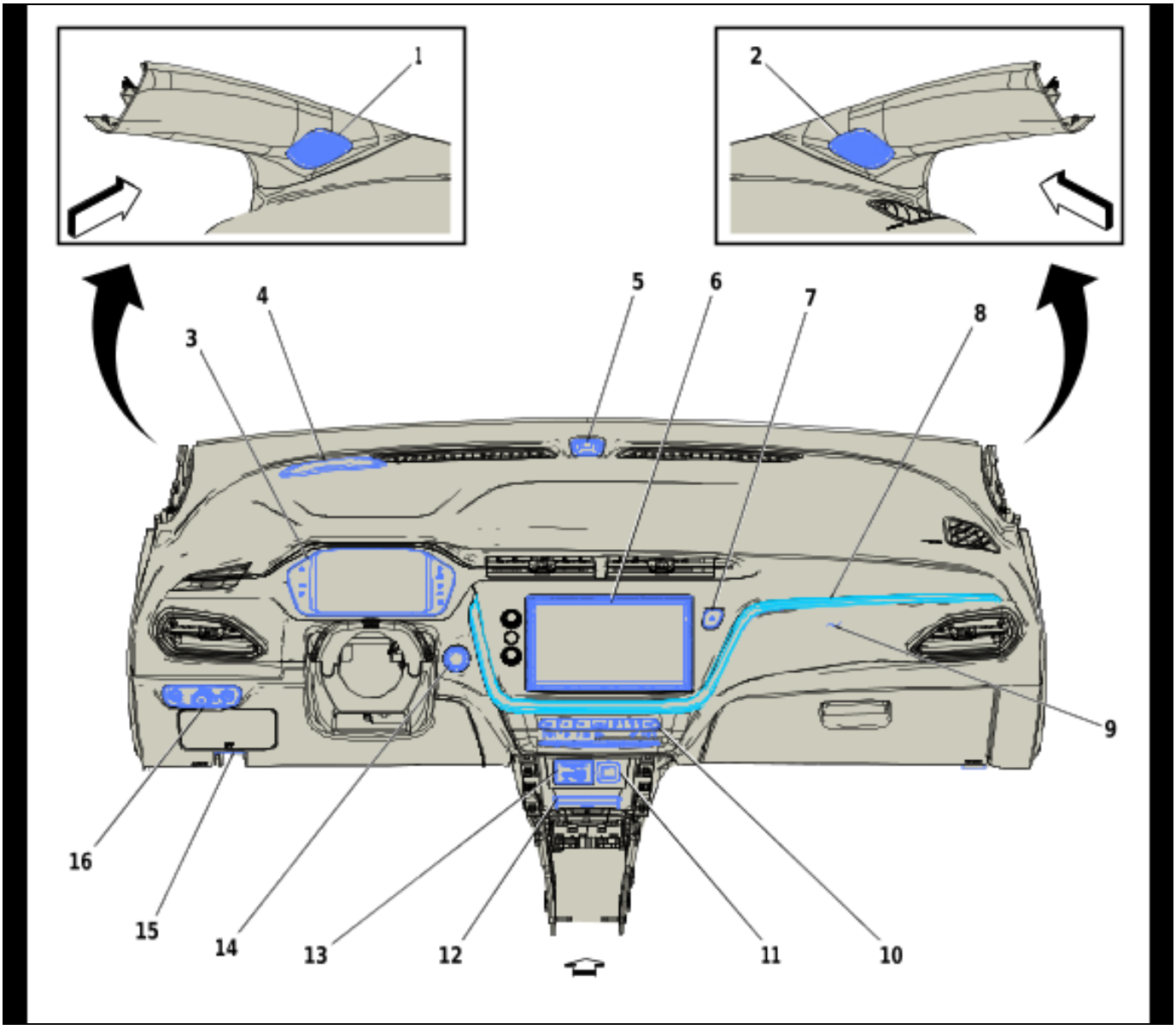

5753896

Items

(1) P19H Speaker - Left Front Tweeter
(2) P19V Speaker - Right Front Tweeter
(3) P16 Instrument Cluster
(4) P43 Collision Alert Indicators
(5) B305 Ambient Light/Sunload Sensor and Battery State of Charge Indicator
(6) P17 Info Display Module
(7) S26 Hazard Warning Switch
(8) E1H Accent Lamp - Right Instrument Panel
(9) F101 Passenger Instrument Panel Air Bag
(10) A26 HVAC Controls
(11) X80 Accessory Power Receptacle
(12) T22 Mobile Device Wireless Charger Module
(13) X83 Auxiliary Audio Input
(14) S83 Vehicle On/Off Switch
(15) X84 Data Link Connector
(16) S30 Headlamp Switch

Rear of Instrument Panel Components

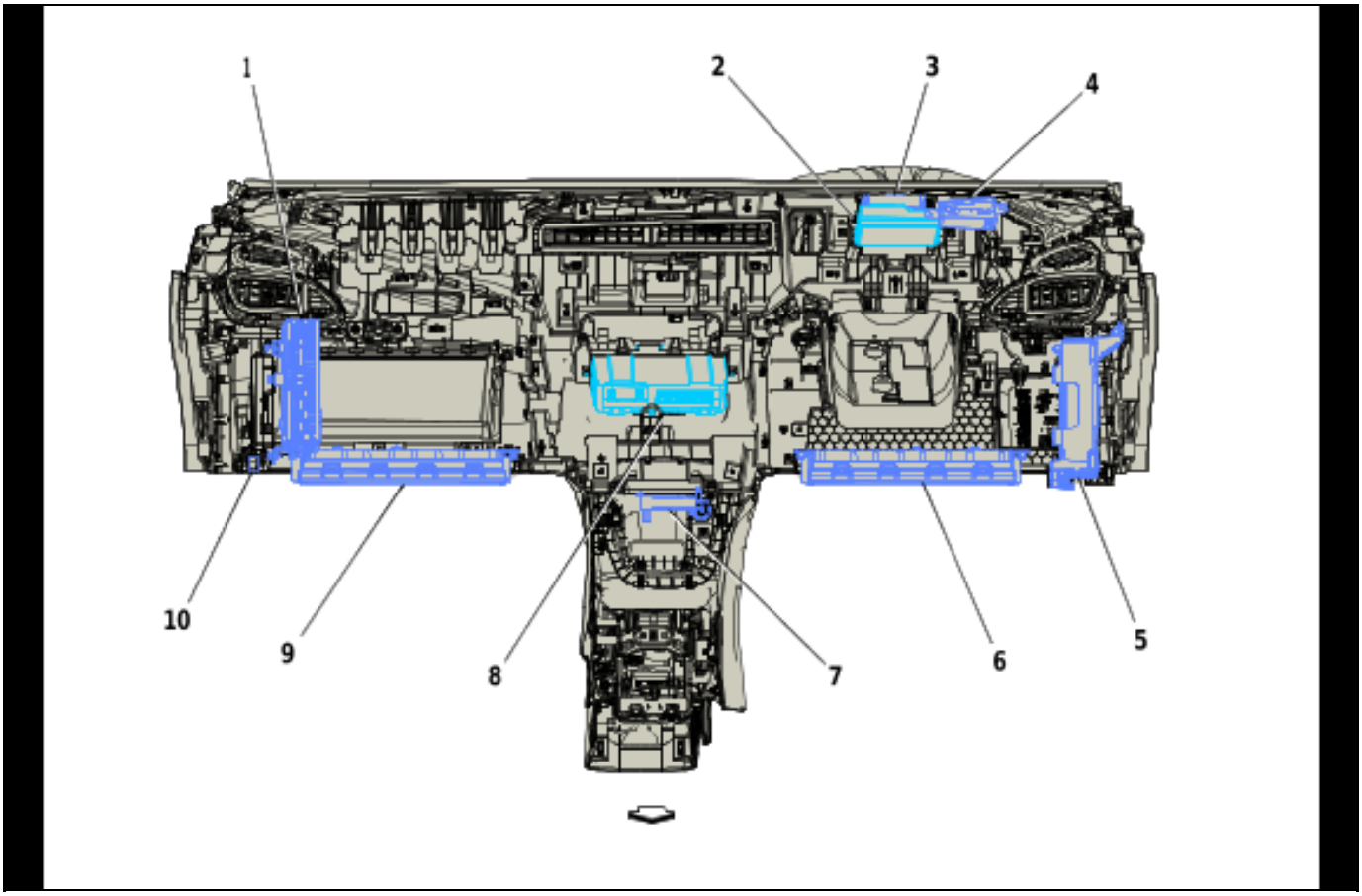

5366451

Items

(1) A11 Radio

(2) K84 Keyless Entry Control Module

(3) K56 Serial Data Gateway Module

(4) P43 Collision Alert Indicators

(5) K9 Body Control Module

(6) F114D Knee Air Bag - Driver

(7) T10J Keyless Entry Antenna - Center Console Front

(8) K73 Telematics Communication Interface Control Module (UE1 or UER)

(9) F114P Knee Air Bag - Passenger

(10) R6F Terminating Resistor - High Speed Extension Bus 2 (without UKL)

HVAC Assembly Components

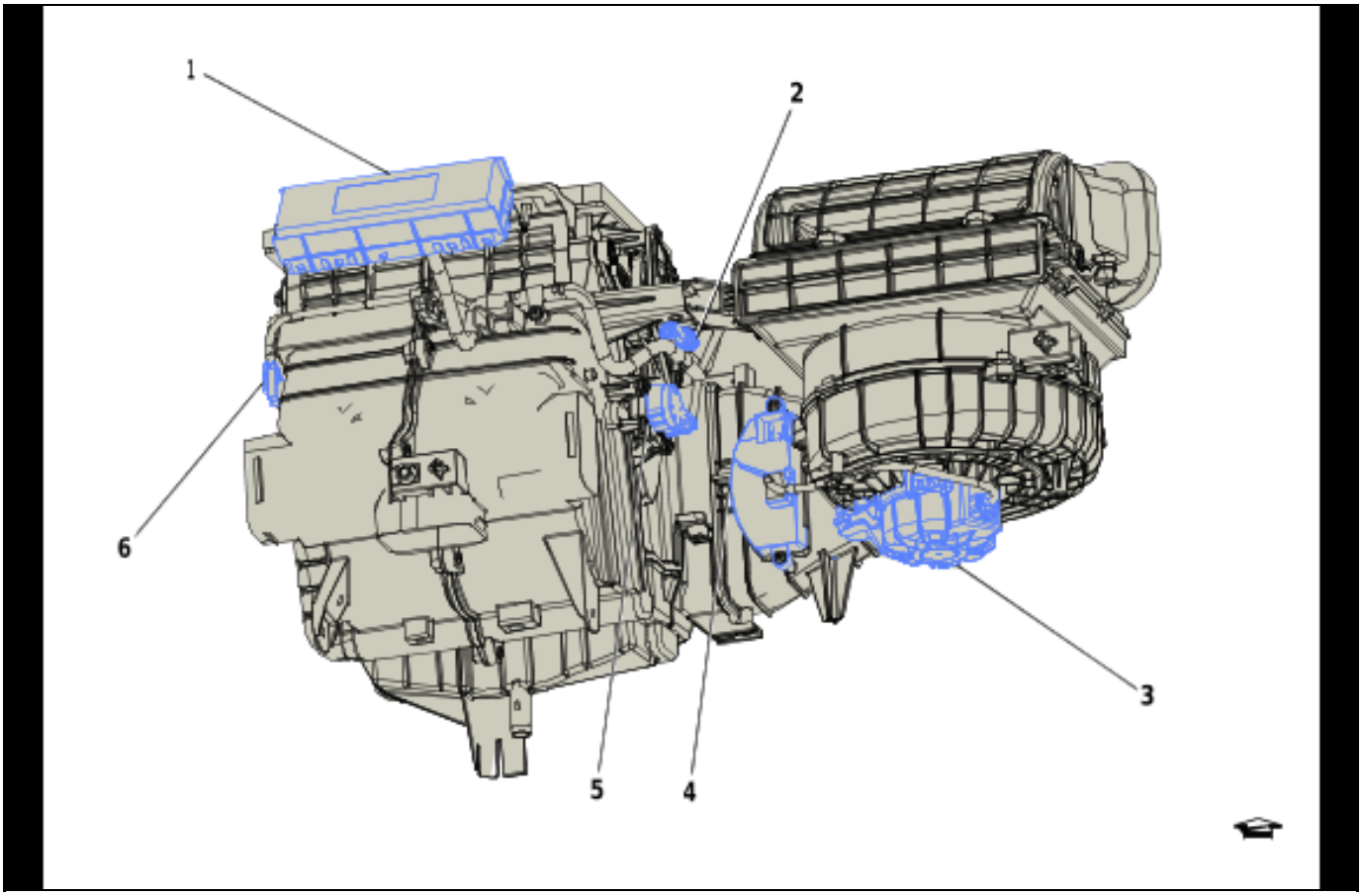

5753898

Items

(1) K33 HVAC Control Module
(2) M37 Mode Door Actuator
(3) M8 Blower Motor
(4) K8 Blower Motor Control Module
(5) M6 Air Temperature Door Actuator
(6) B7F Air Temperature Sensor - Duct Upper

Steering Column Components

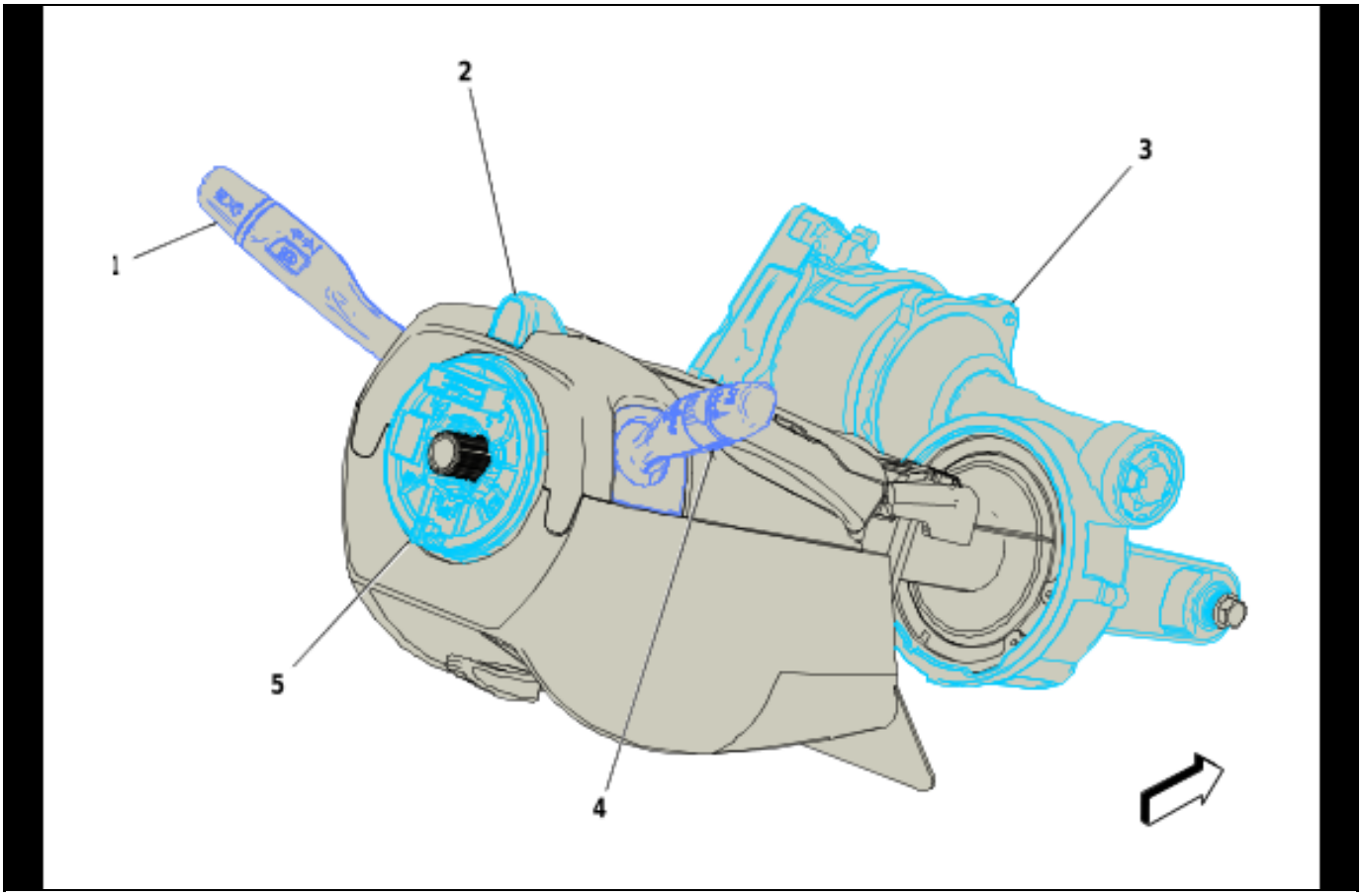

5753899

Items

(1) S78 Turn Signal/Multifunction Switch
(2) B292 Driver Monitoring Camera (UKL)
(3) K43 Power Steering Control Module
(4) S82 Windshield Wiper/Washer Switch
(5) X85 Steering Wheel Air Bag Coil

Steering Wheel Components

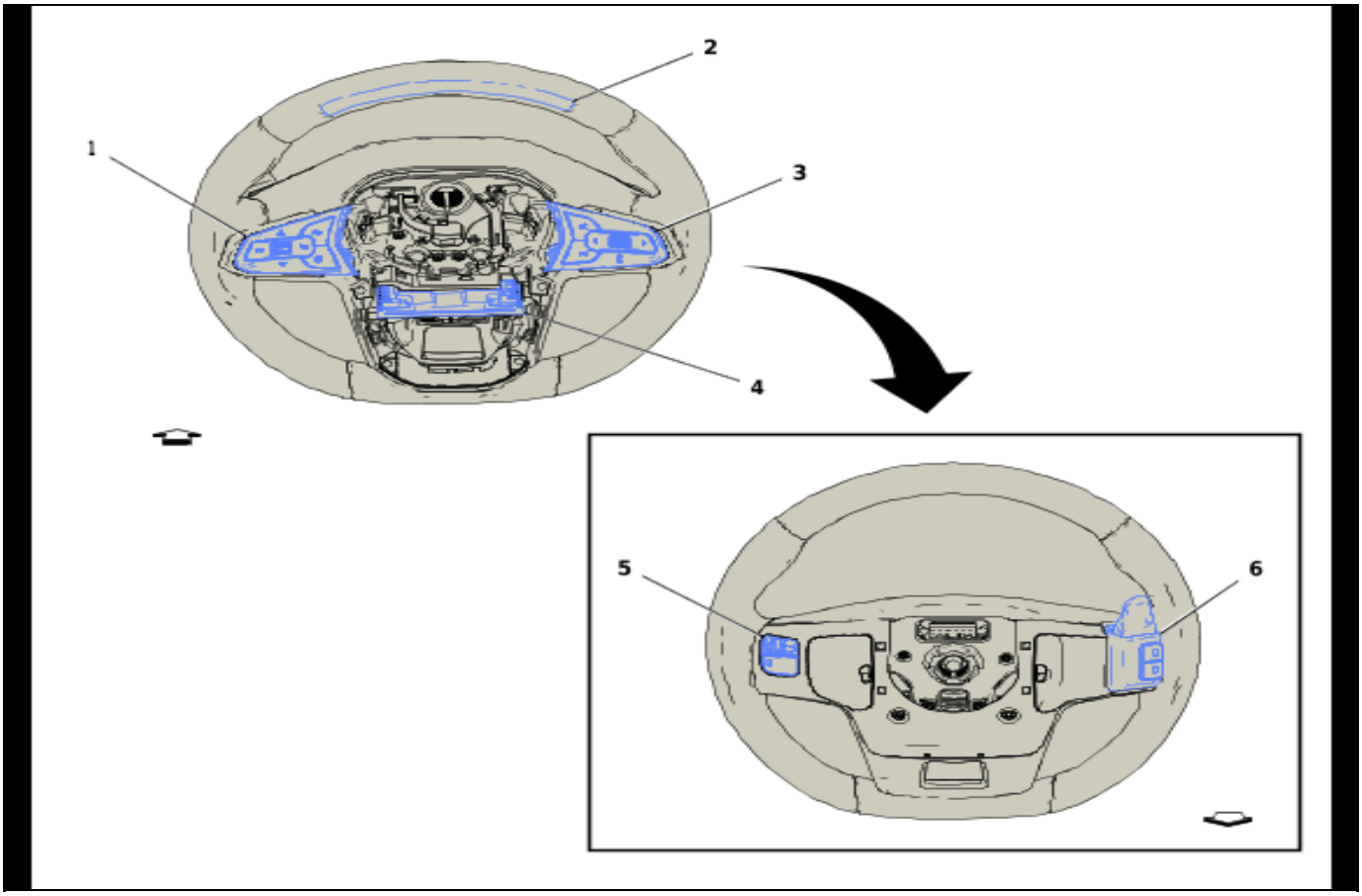

5898606

Items

(1) S70L Steering Wheel Controls Switch - Left

(2) P51 Lane Centering Indicators - Steering Wheel

(3) S70R Steering Wheel Controls Switch - Right

(4) K93 Active Steering Control Module (UKL)

(5) S70F Steering Wheel Controls Switch - Radio Volume

(6) S70E Steering Wheel Controls Switch - Radio Presets

Passenger Compartment/Roof Component Views

Driver Seat Components (1 of 4)

5754917

Items

(1) F106LF Seat Side Air Bag - Left Front

Driver Seat Components (2 of 4)

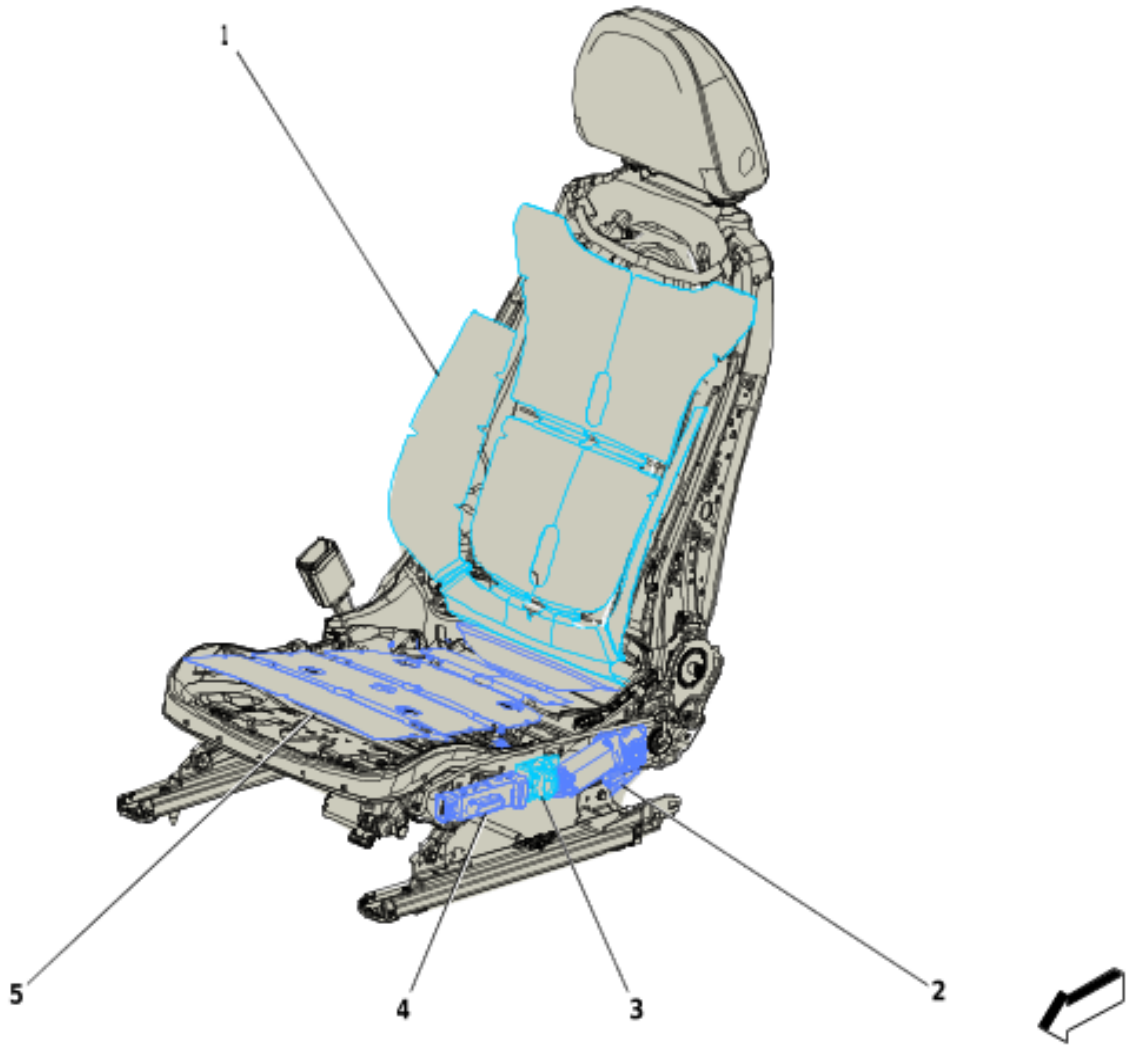

5754918

Items

(1) E14A Seat Heating Element - Driver Back (KA1)

(2) M55D Seat Rear Vertical Motor - Driver (A2X)

(3) S65D Seat Lumbar Support Switch - Driver (A2X)

(4) S64D Seat Adjuster Switch - Driver (A2X)

(5) E14B Seat Heating Element - Driver Cushion (KA1)

Driver Seat Components (3 of 4)

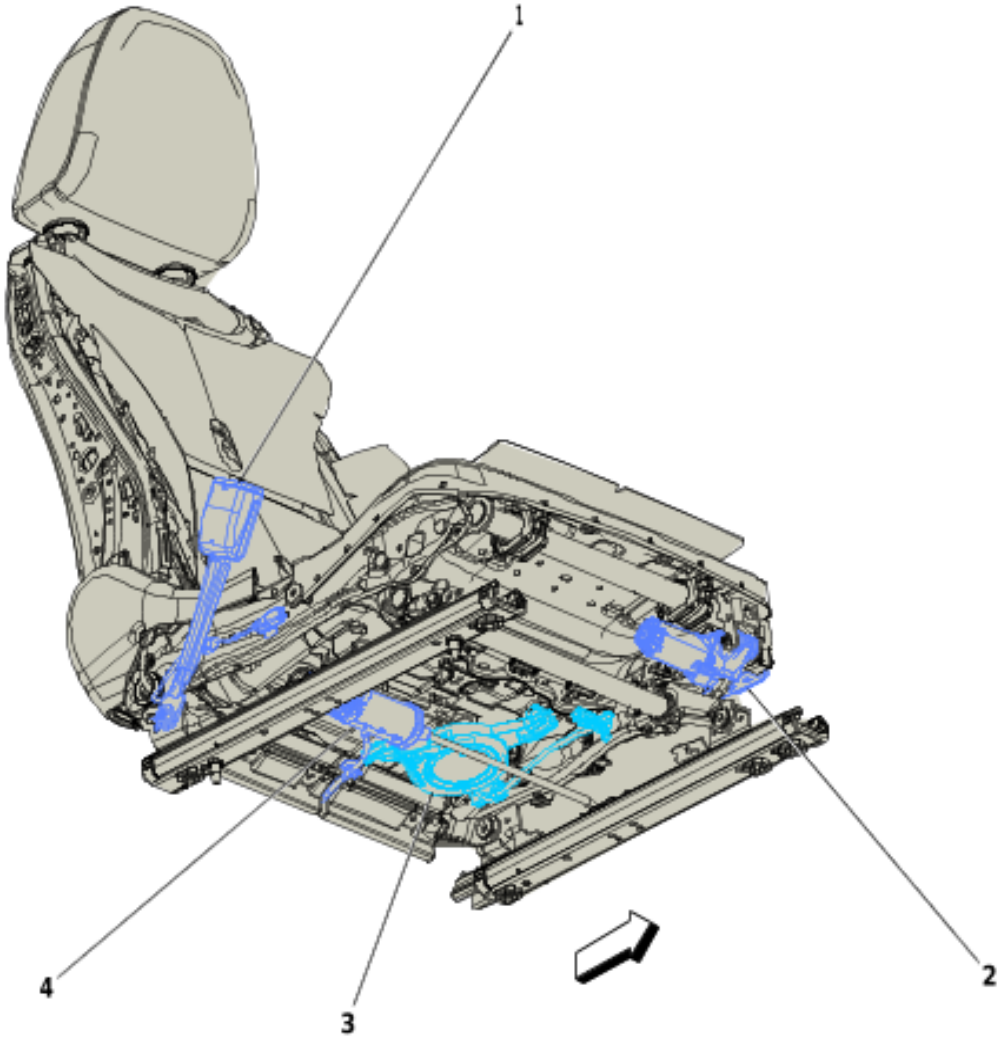

5754919

Items

(1) B88D Seat Belt Switch - Driver

(2) M50D Seat Front Vertical Motor - Driver (A2X)

(3) K55D Seat Blower Assembly - Driver Cushion (KU1)

(4) M51D Seat Horizontal Motor - Driver (A2X)

Driver Seat Components (4 of 4)

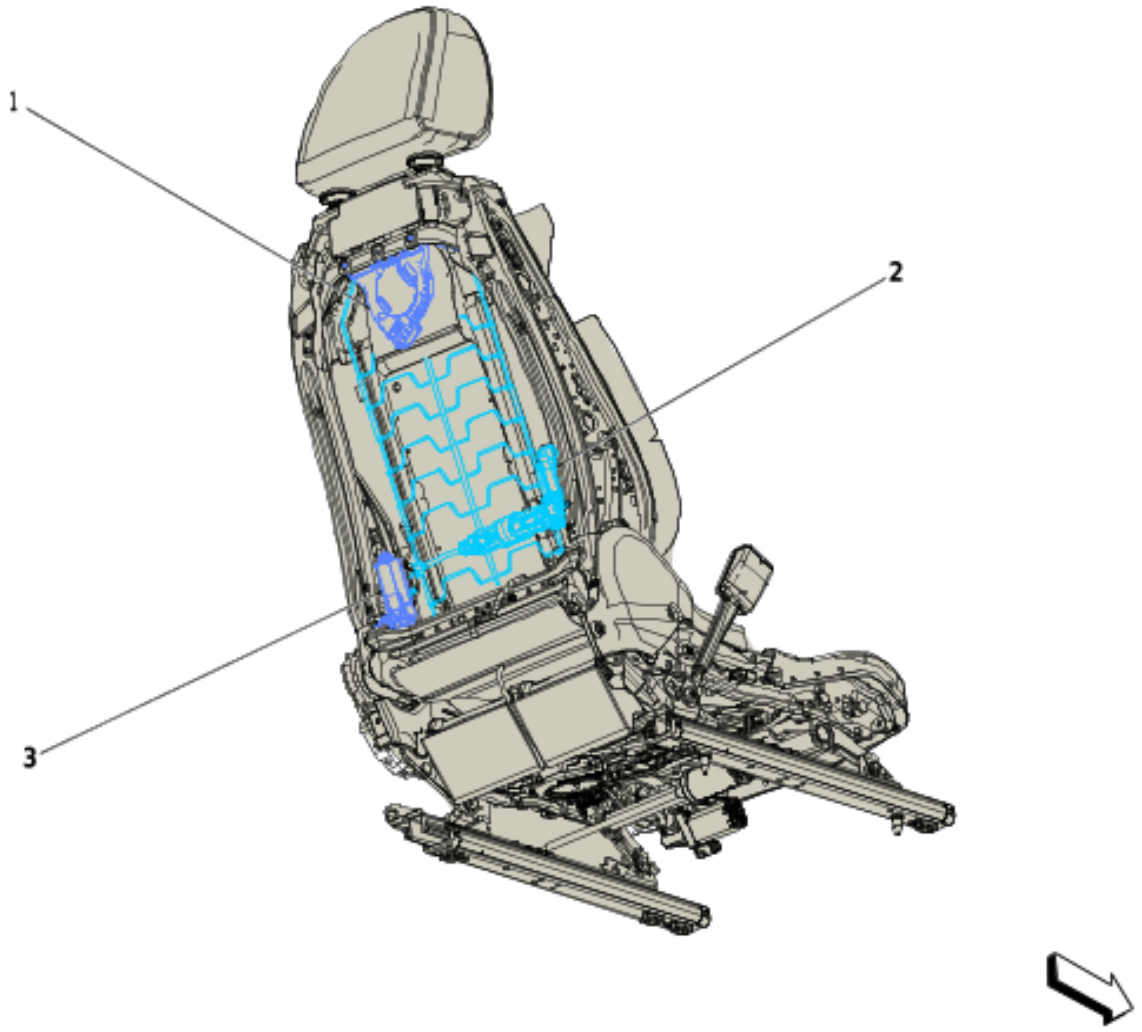

5754920

Items

(1) K55D Seat Blower Assembly - Driver Cushion (KU1)

(2) M53D Seat Lumbar Support Motor - Driver (A2X)

(3) M56D Seat Recline Motor - Driver (A2X)

Passenger Seat Components (1 of 4)

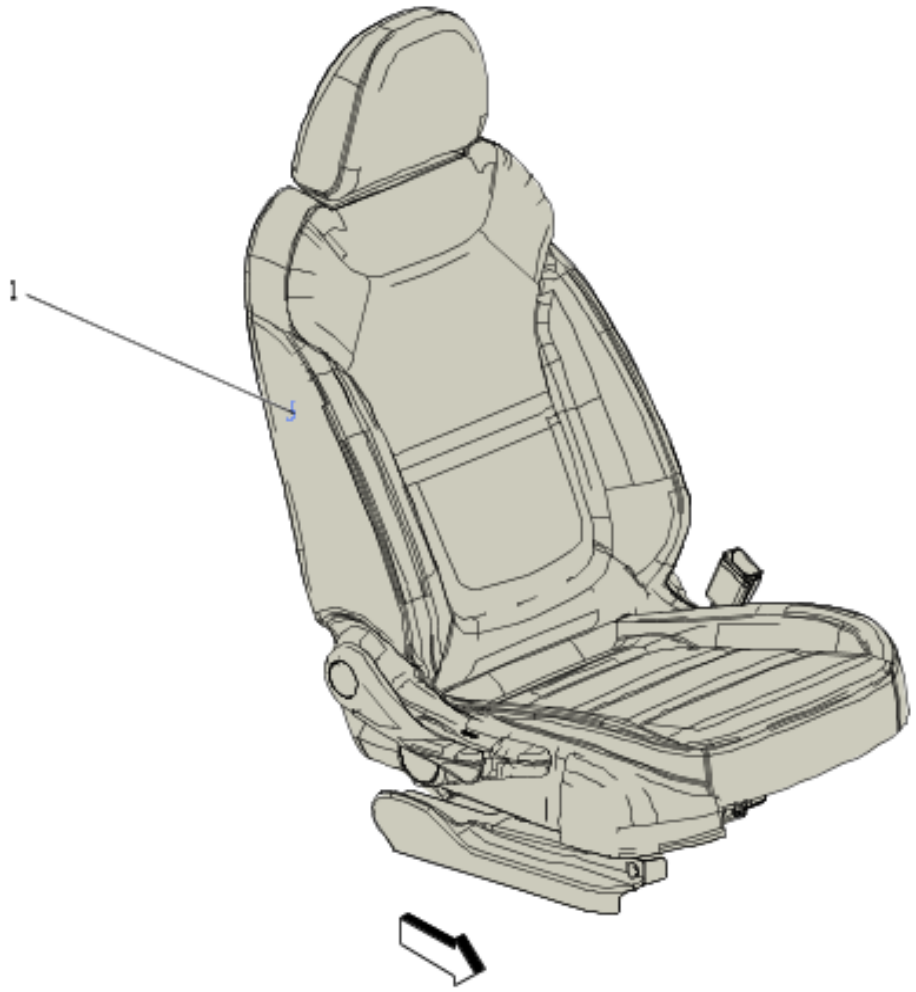

5754921

Items

(1) F106RF Seat Side Air Bag - Right Front

Passenger Seat Components (2 of 4)

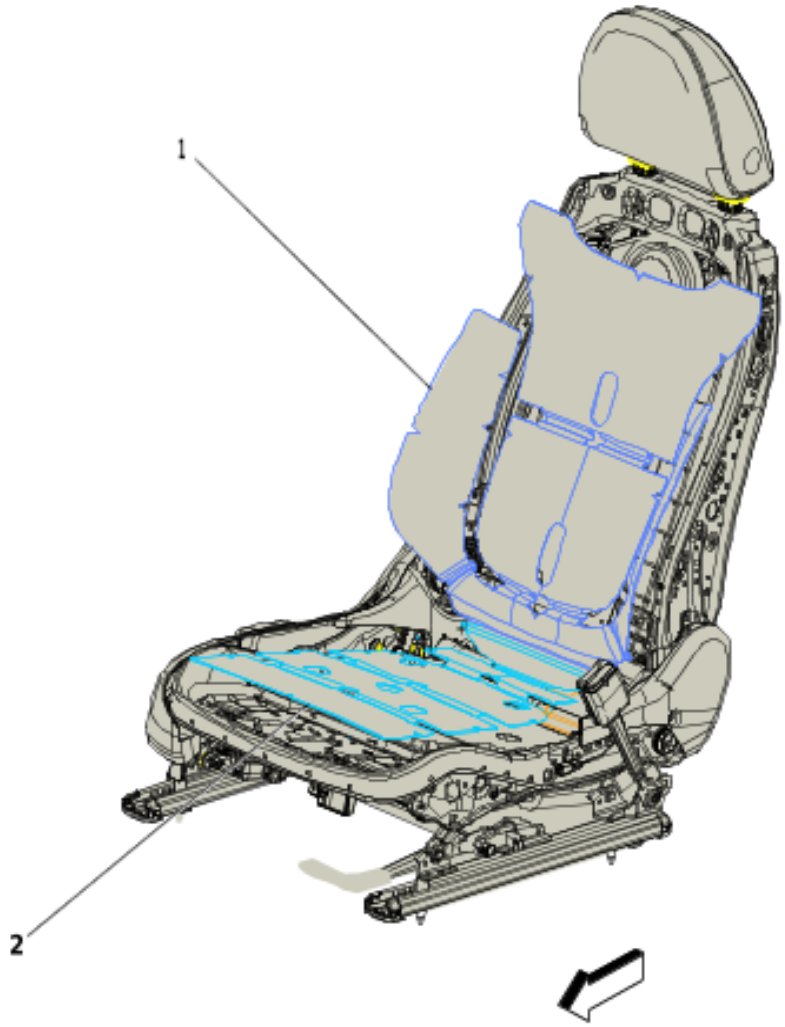

5754922

Items

(1) E14C Seat Heating Element - Passenger Back (KA1)

(2) E14D Seat Heating Element - Passenger Cushion (KA1)

Passenger Seat Components (3 of 4)

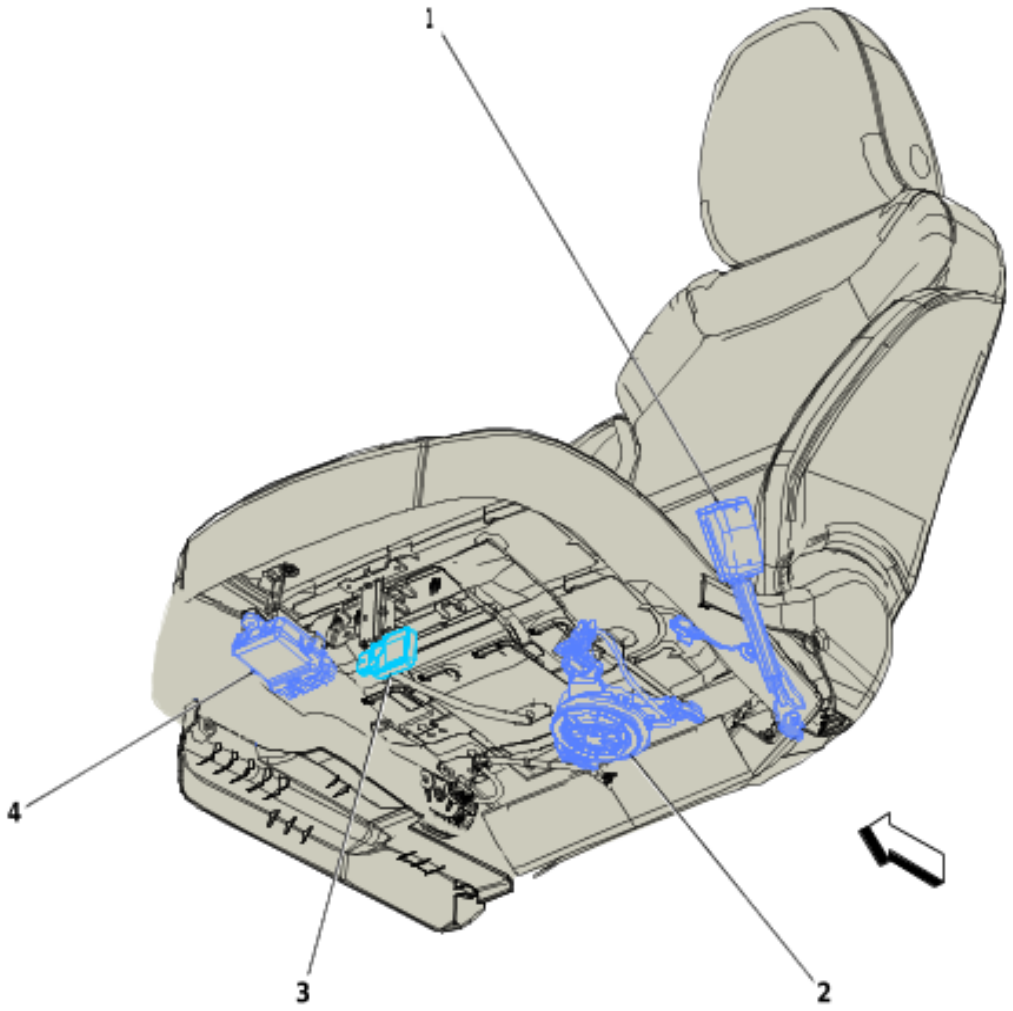

5765260

Items

(1) B88P Seat Belt Switch - Passenger

(2) K55P Seat Blower Assembly - Passenger Cushion (KU3)

(3) K85 Passenger Presence Module

(4) K29F Seat Heating Control Module - Front (KA1)

Passenger Seat Components (4 of 4)

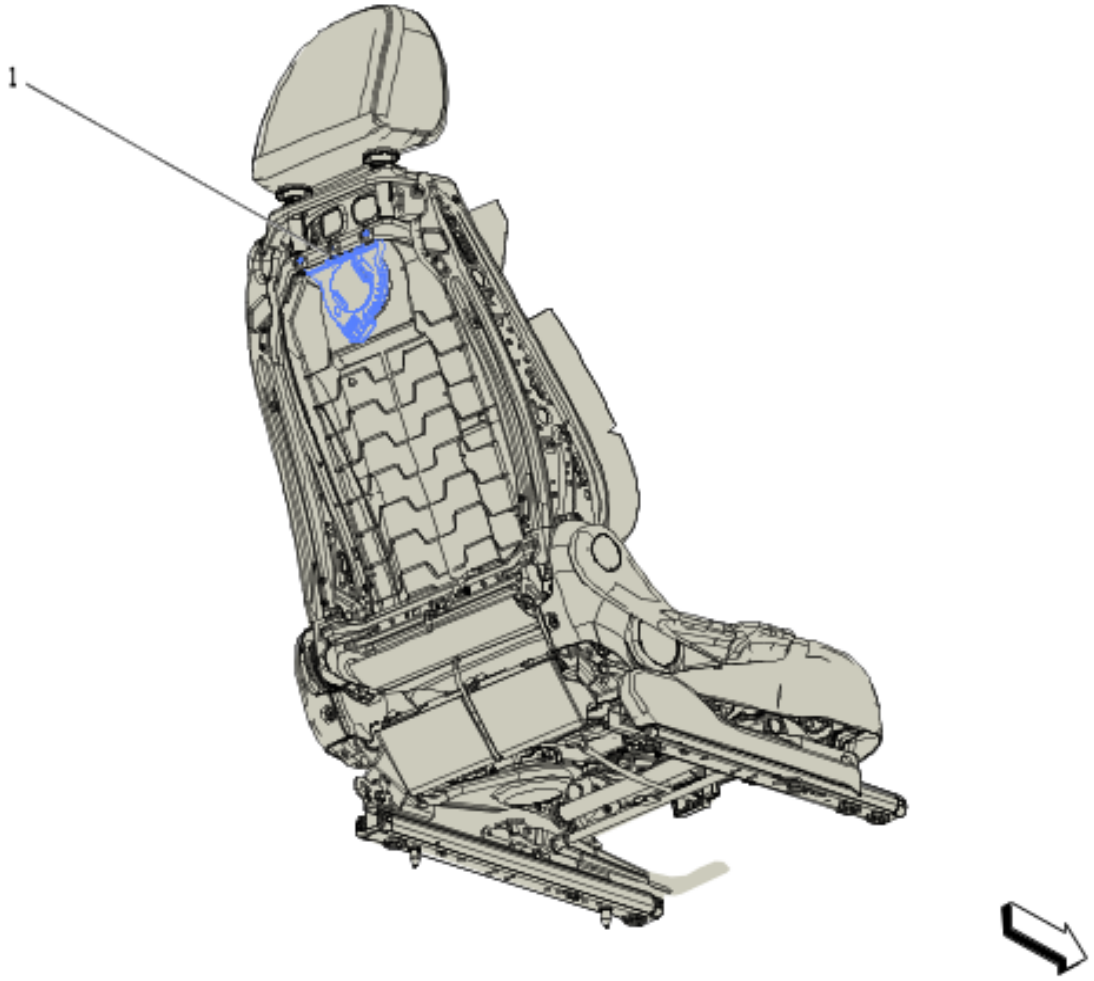

5765261

Items

(1) K53P Seat Blower Assembly - Passenger Back (KU3)

Left Side of Passenger Compartment Components

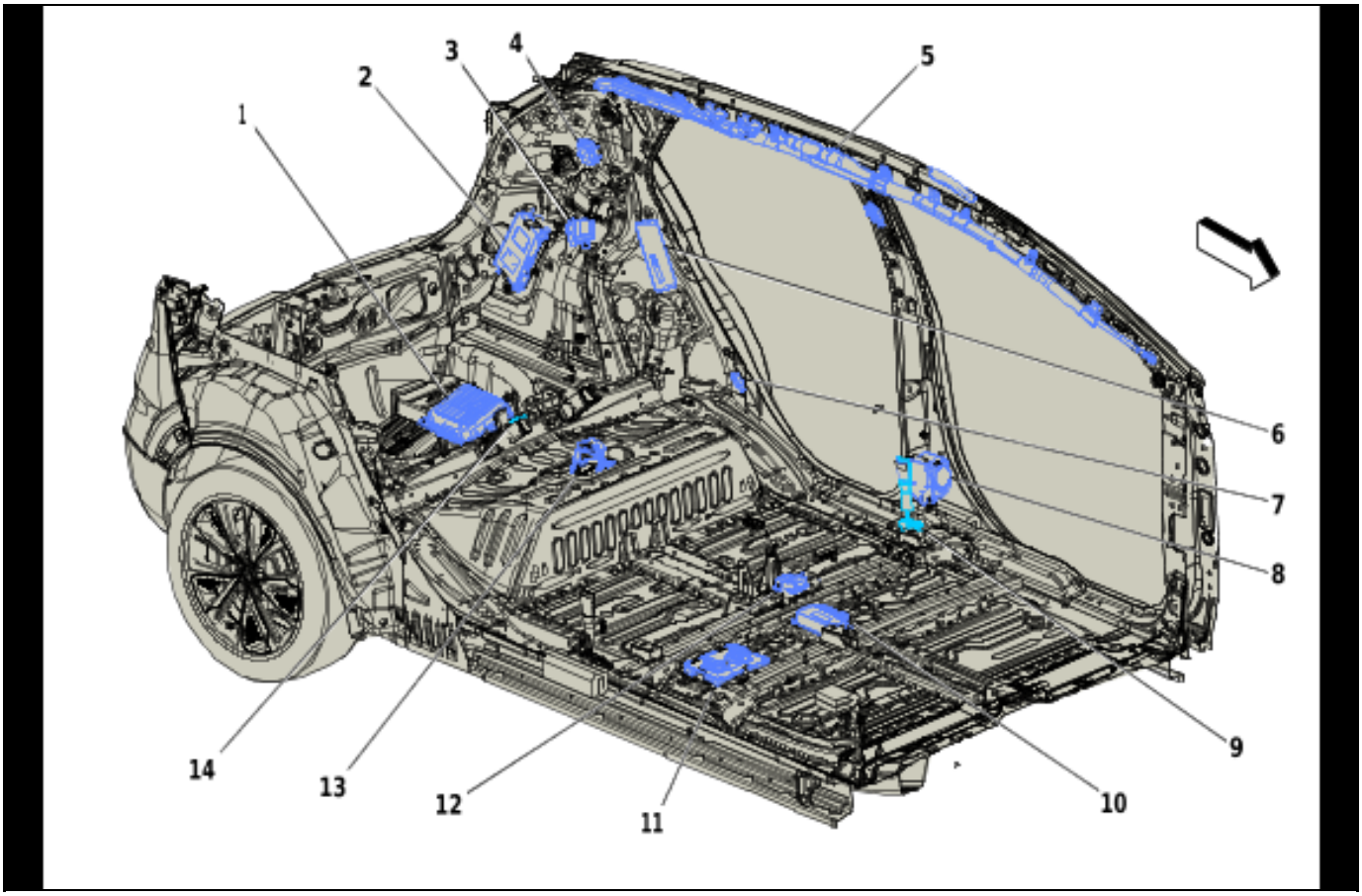

5979275

Items

(1) K124B Active Safety Control Module 2 (UKL)

(2) K179 Digital Map Control Module (UKL)

(3) K182 Parking Assist Control Module (UD7)

(4) K77 Remote Control Door Lock Receiver

(5) F105L Roof Rail Air Bag - Left

(6) F106LR Seat Side Air Bag - Left Rear

(7) B63LR Side Impact Sensor - Left Rear

(8) F112D Seat Belt Retractor Pretensioner - Driver

(9) F113D Seat Belt Anchor Pretensioner - Driver

(10) K132 Pedestrian Alert Sound Control Module

(11) K114B Hybrid/Electric Vehicle Powertrain Control Module 2

(12) B119 Multi-axis Acceleration Sensor (UKL)

(13) S15 Manual Service Disconnect

(14) T10E Keyless Entry Antenna - Rear Compartment

Headliner Components (1 of 2)

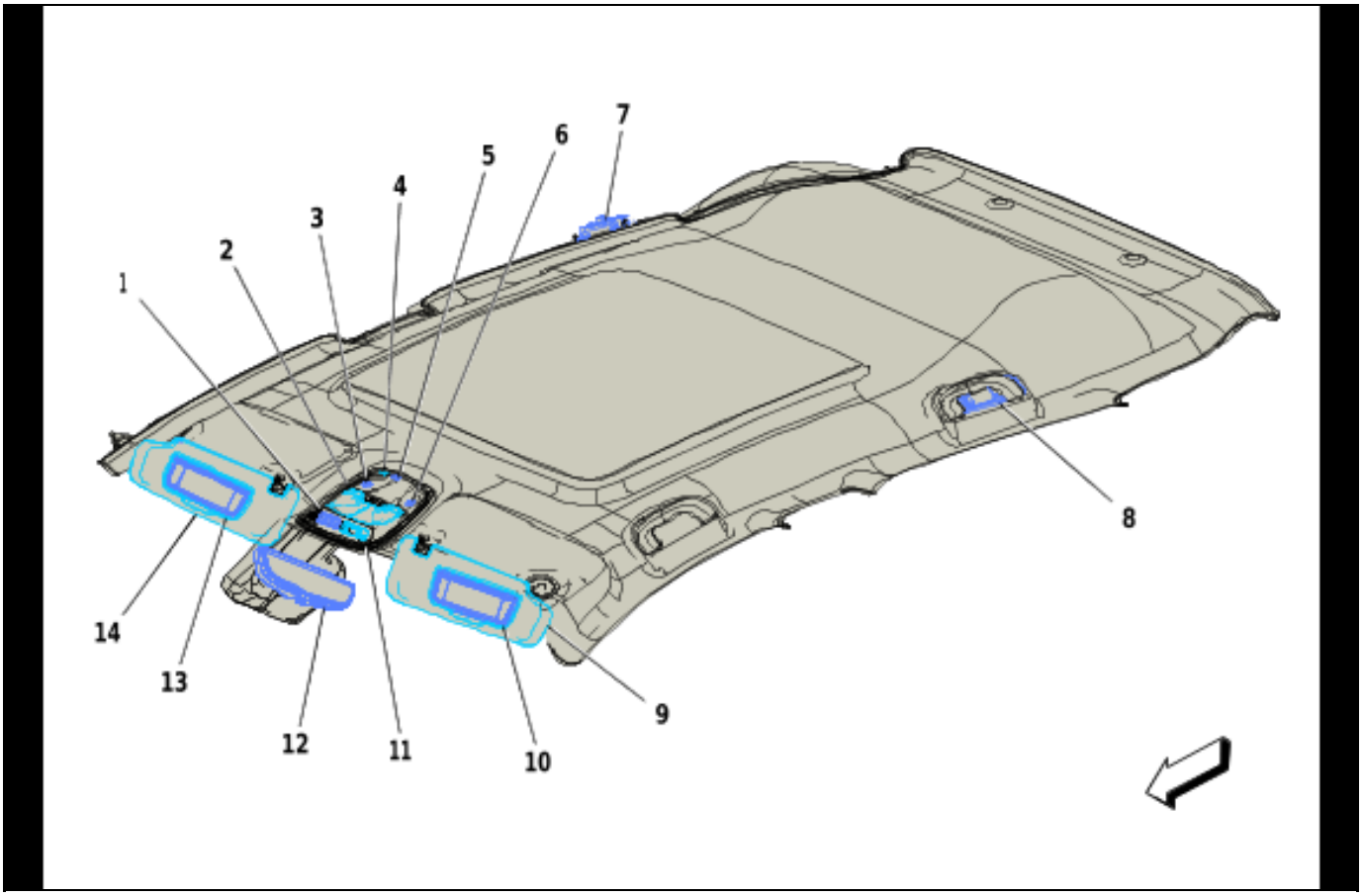

5765264

Items

(1) S51 Telematics Button Assembly (UE1)

(2) E37D Dome/Reading Lamps - Overhead Console

(3) B24LF Mobile Telephone Microphone - Left Front

(4) S72 Sunroof Switch (CAJ)

(5) S90 Sunroof Sunshade Switch (CAJ)

(6) B24RF Mobile Telephone Microphone - Right Front

(7) E36AC Dome Lamp - Left Roof Rail (CAJ)

(8) E36AD Dome Lamp - Right Roof Rail (CAJ)

(9) E31R Sunshade Mirror Lamp - Right (DMS)

(10) A3R Sunshade - Right

(11) P14 Passenger Air Bag Disabled Indicator

(12) A10 Inside Rearview Mirror

(13) A3L Sunshade - Left

(14) E31L Sunshade Mirror Lamp - Left (DMS)

Headliner Components (2 of 2)

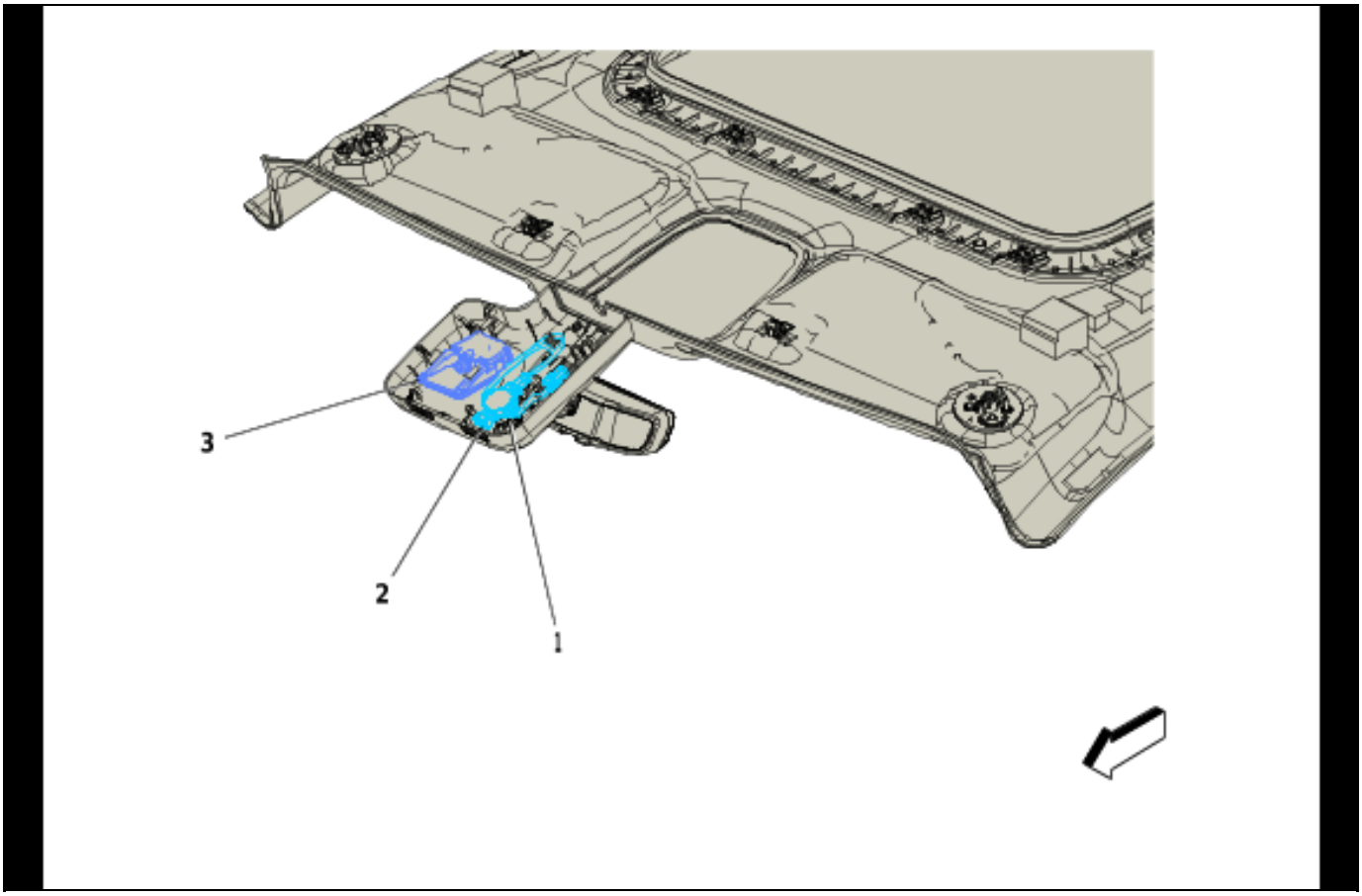

5765265

Items

(1) B200 Rain Sensor Module (CE1)

(2) B160 Windshield Temperature and Inside Moisture Sensor (without CE1)

(3) B174W Frontview Camera - Windshield

Door Component Views

Driver Door Components

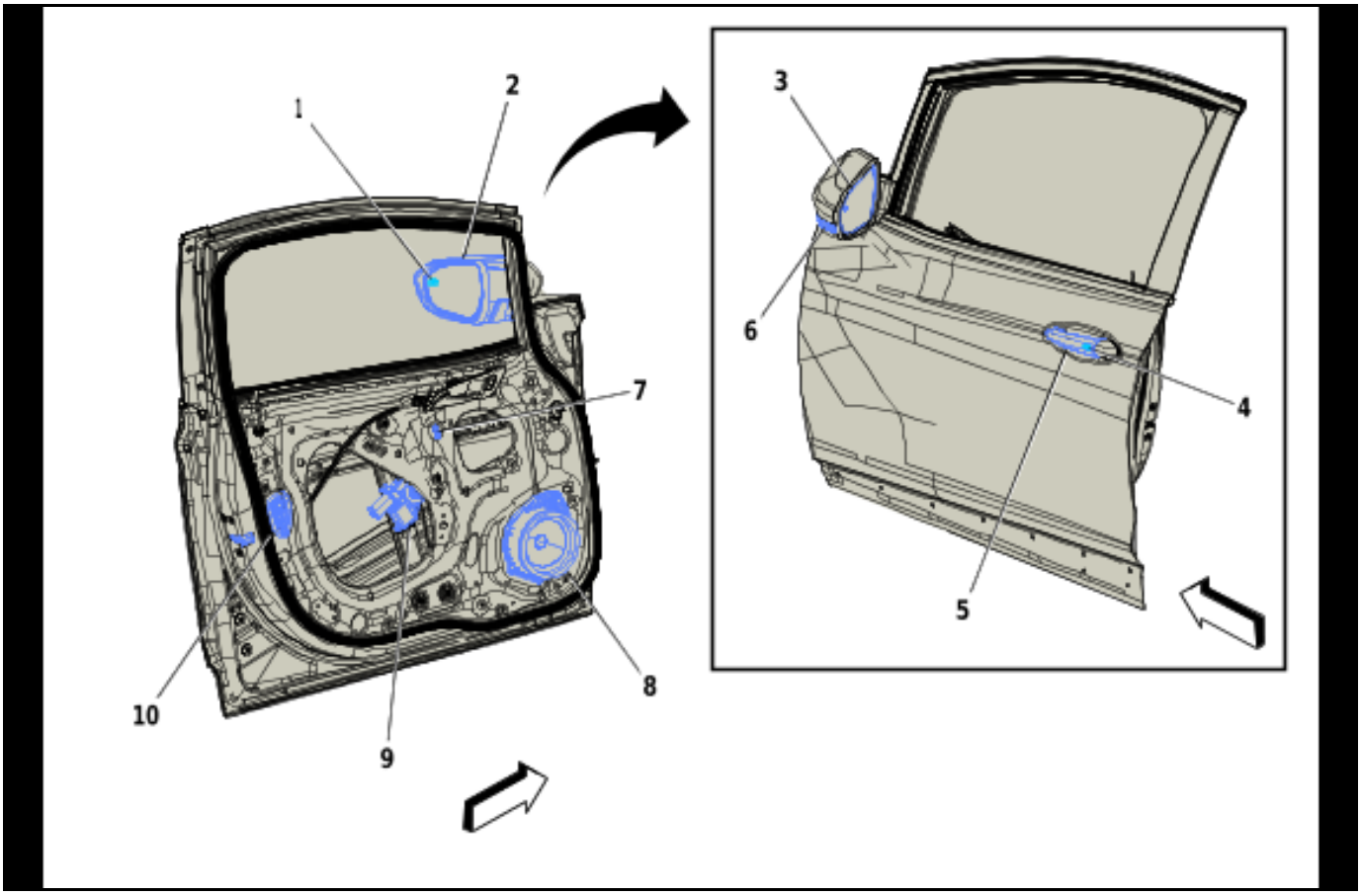

5765142

Items

(1) P34D Side Object Detection Indicator - Driver

(2) A9A Outside Rearview Mirror - Driver

(3) E17D Outside Rearview Mirror Glass - Driver

(4) B27D Door Handle Switch - Driver Exterior

(5) A24D Door Handle Assembly - Driver Exterior

(6) E4Y Turn Signal Repeater Lamp - Left

(7) B63LF Side Impact Sensor - Left Front

(8) P19AG Speaker - Left Front Door

(9) M35D Window Motor Module - Driver

(10) A23D Door Latch Assembly - Driver

Driver Door Trim Components

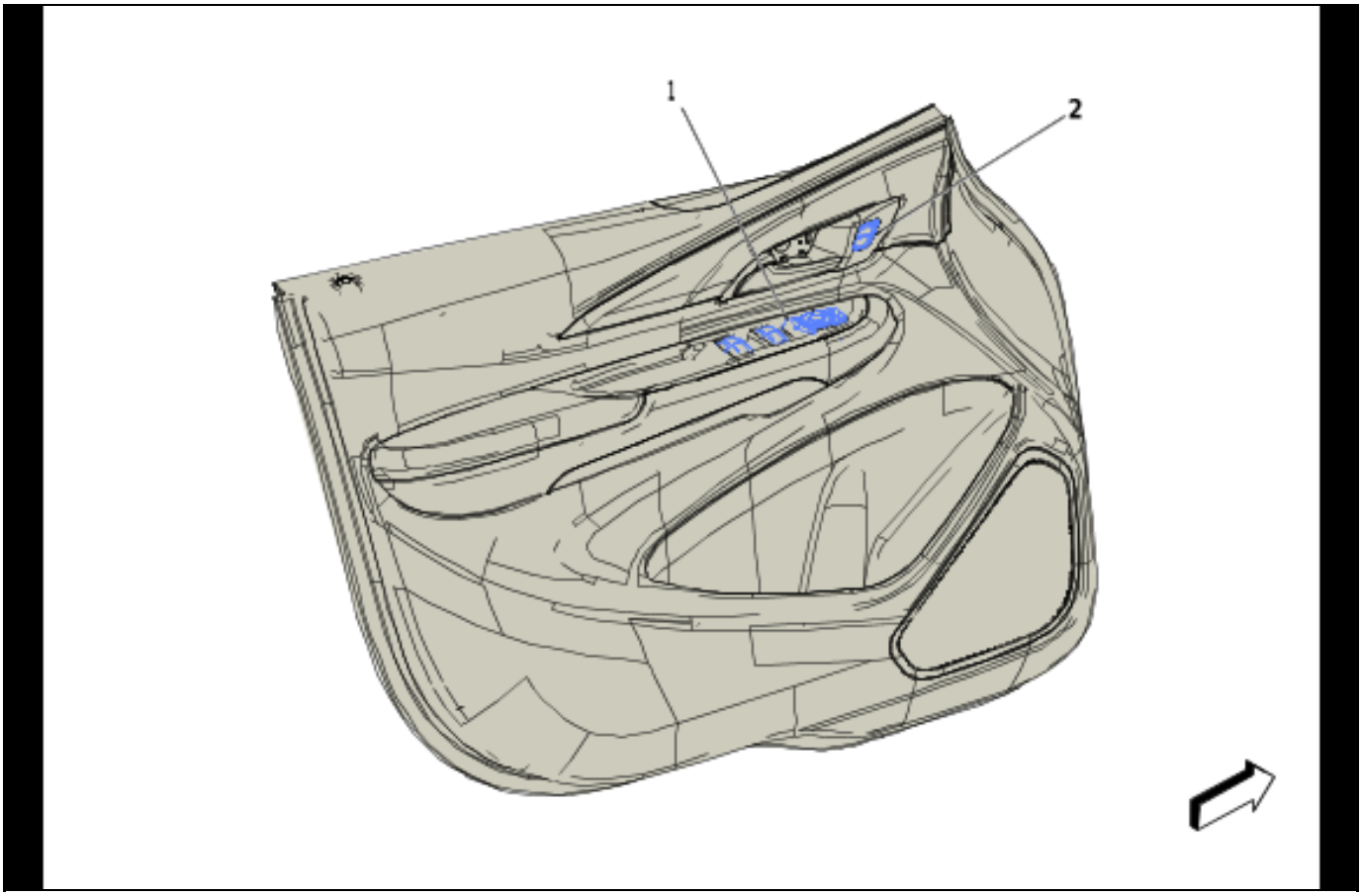

5765143

Items

(1) S146 Window/Outside Rearview Mirror Switch - Driver

(2) S13D Door Lock Switch - Driver

Passenger Door Components

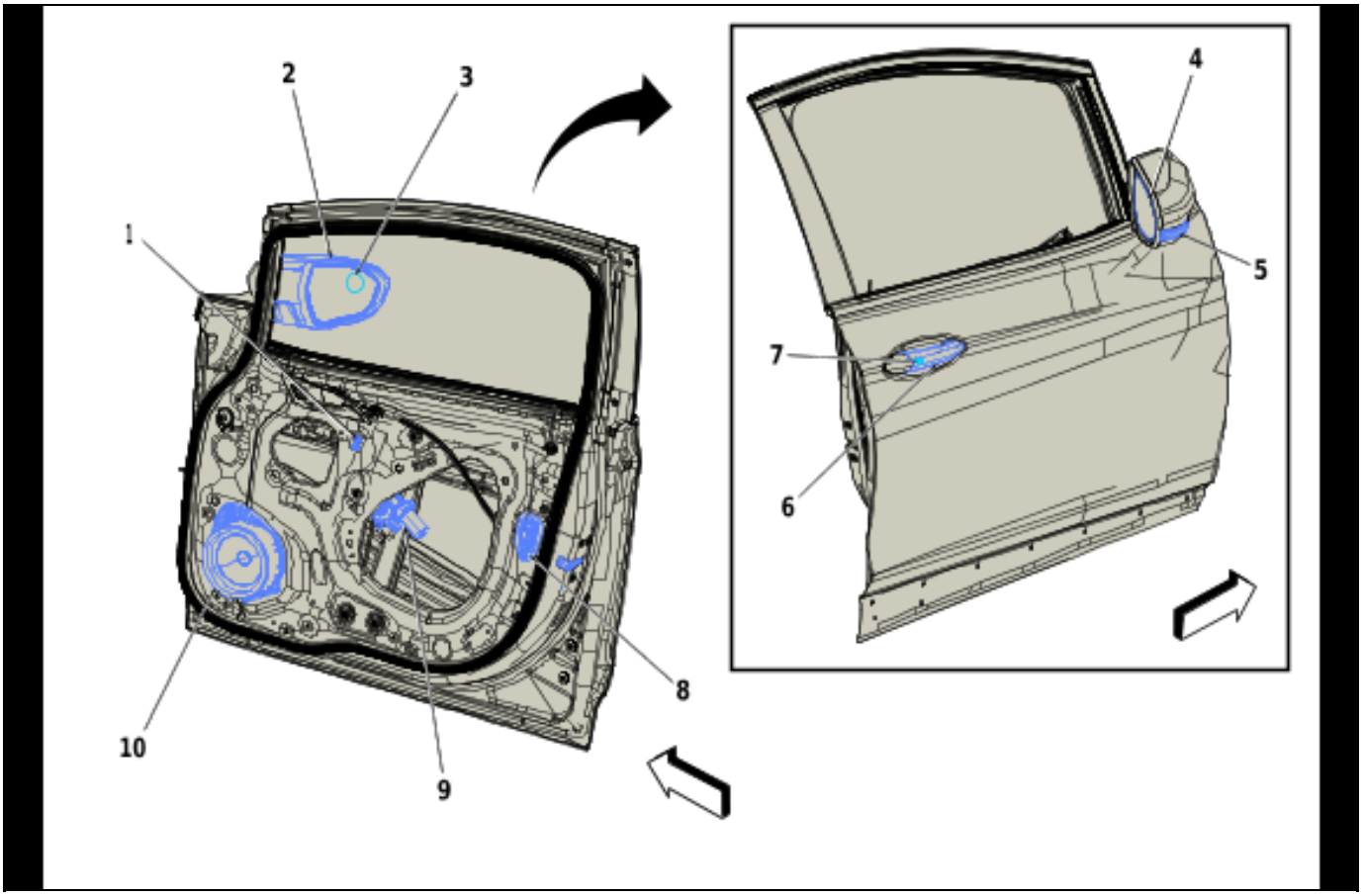

5765144

Items

(1) B63RF Side Impact Sensor - Right Front

(2) A9B Outside Rearview Mirror - Passenger

(3) P34P Side Object Detection Indicator - Passenger

(4) E17P Outside Rearview Mirror Glass - Passenger

(5) E4Z Turn Signal Repeater Lamp - Right

(6) A24P Door Handle Assembly - Passenger Exterior

(7) B27P Door Handle Switch - Passenger Exterior

(8) A23P Door Latch Assembly - Passenger

(9) M35P Window Motor Module - Passenger

(10) P19AH Speaker - Right Front Door

Passenger Door Trim Components

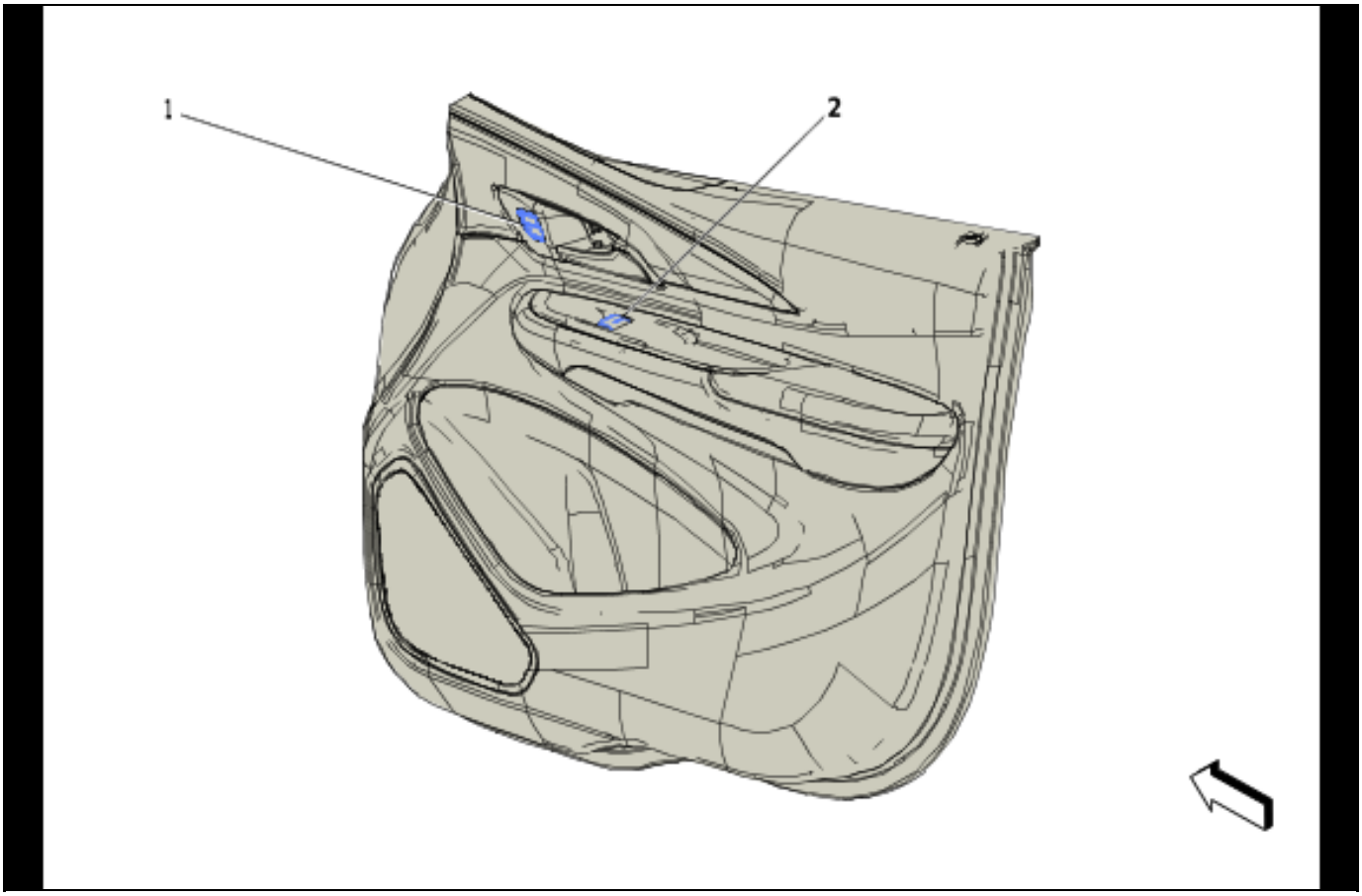

5765145

Items

(1) S13P Door Lock Switch - Passenger

(2) S79P Window Switch - Passenger

Left Rear Door Components

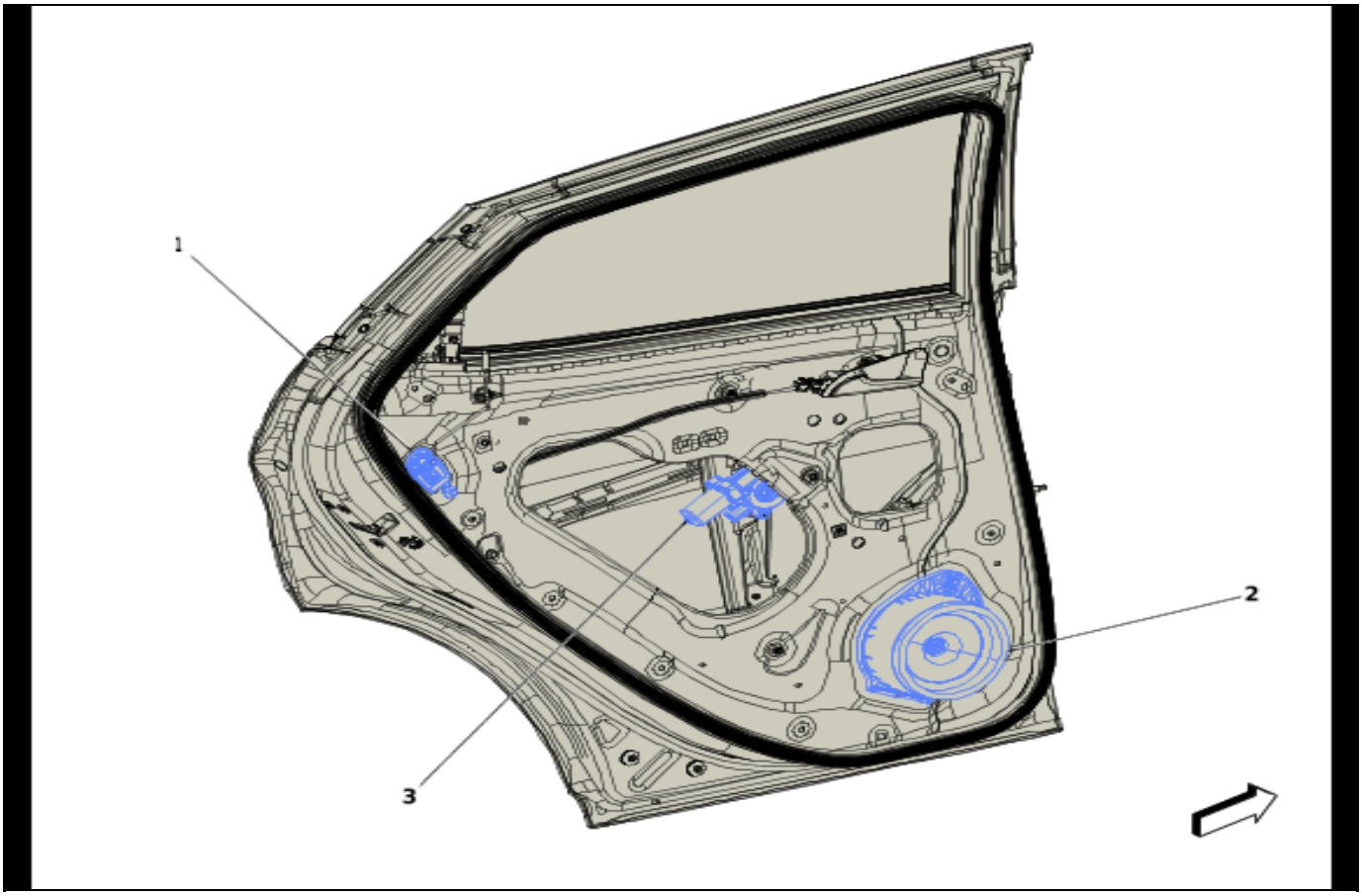

5765146

Items

(1) A23LR Door Latch Assembly - Left Rear

(2) P19AL Speaker - Left Rear Door

(3) M74LR Window Motor - Left Rear

Left Rear Door Trim Components

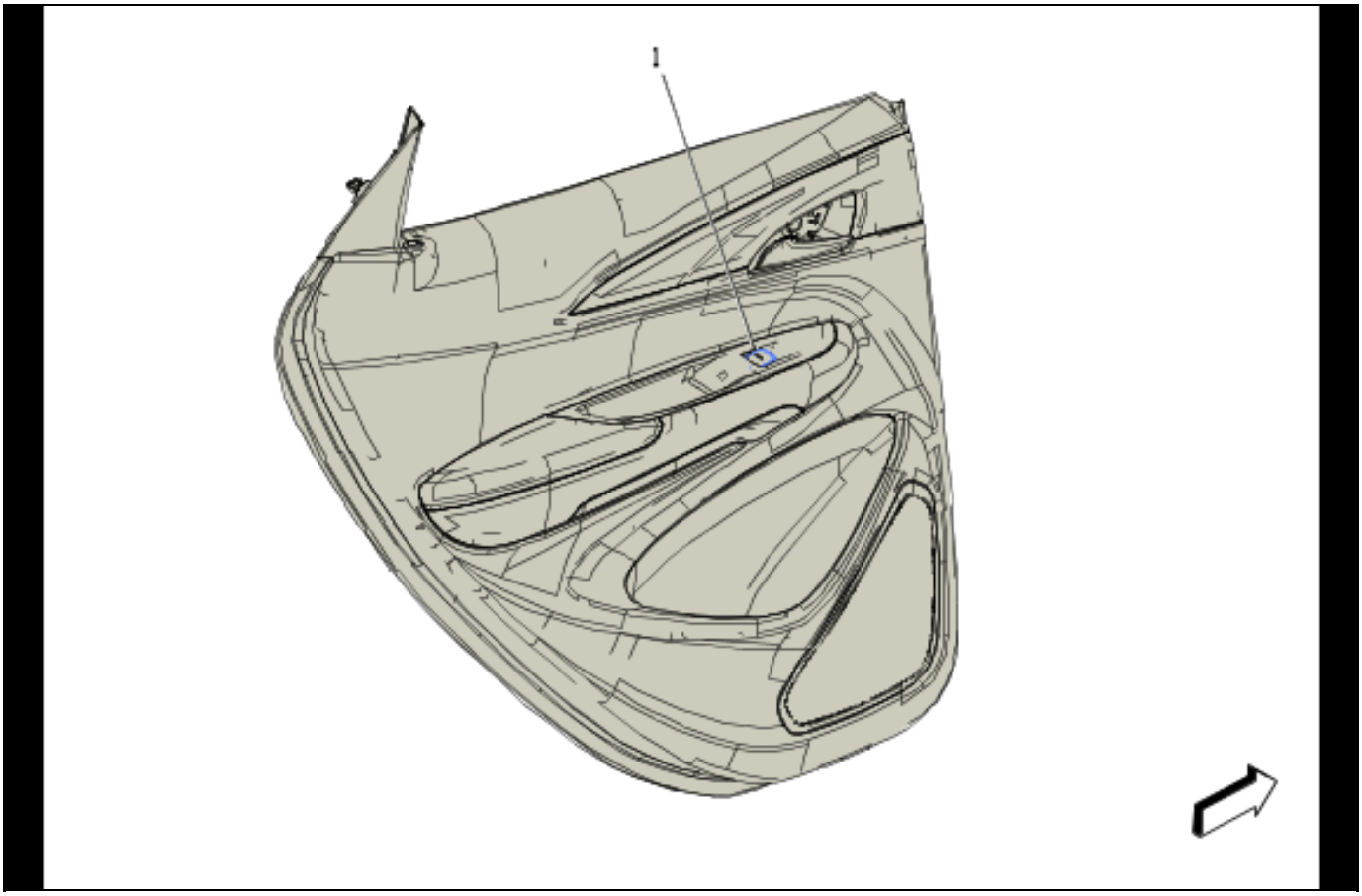

5765147

Items

(1) S79LR Window Switch - Left Rear

Right Rear Door Components

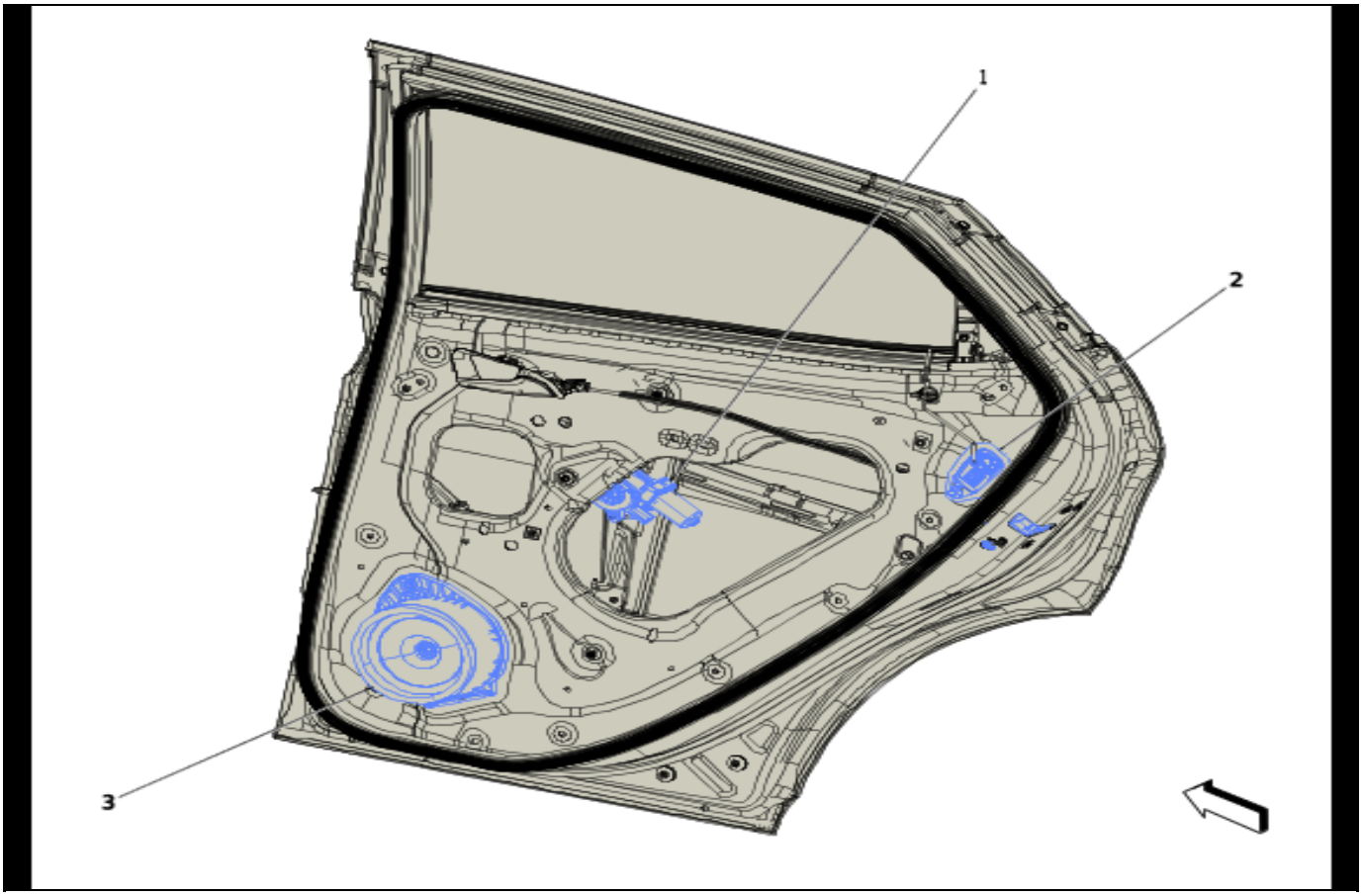

5765148

Items

(1) M74RR Window Motor - Right Rear

(2) A23RR Door Latch Assembly - Right Rear

(3) P19AM Speaker - Right Rear Door

Right Rear Door Trim Components

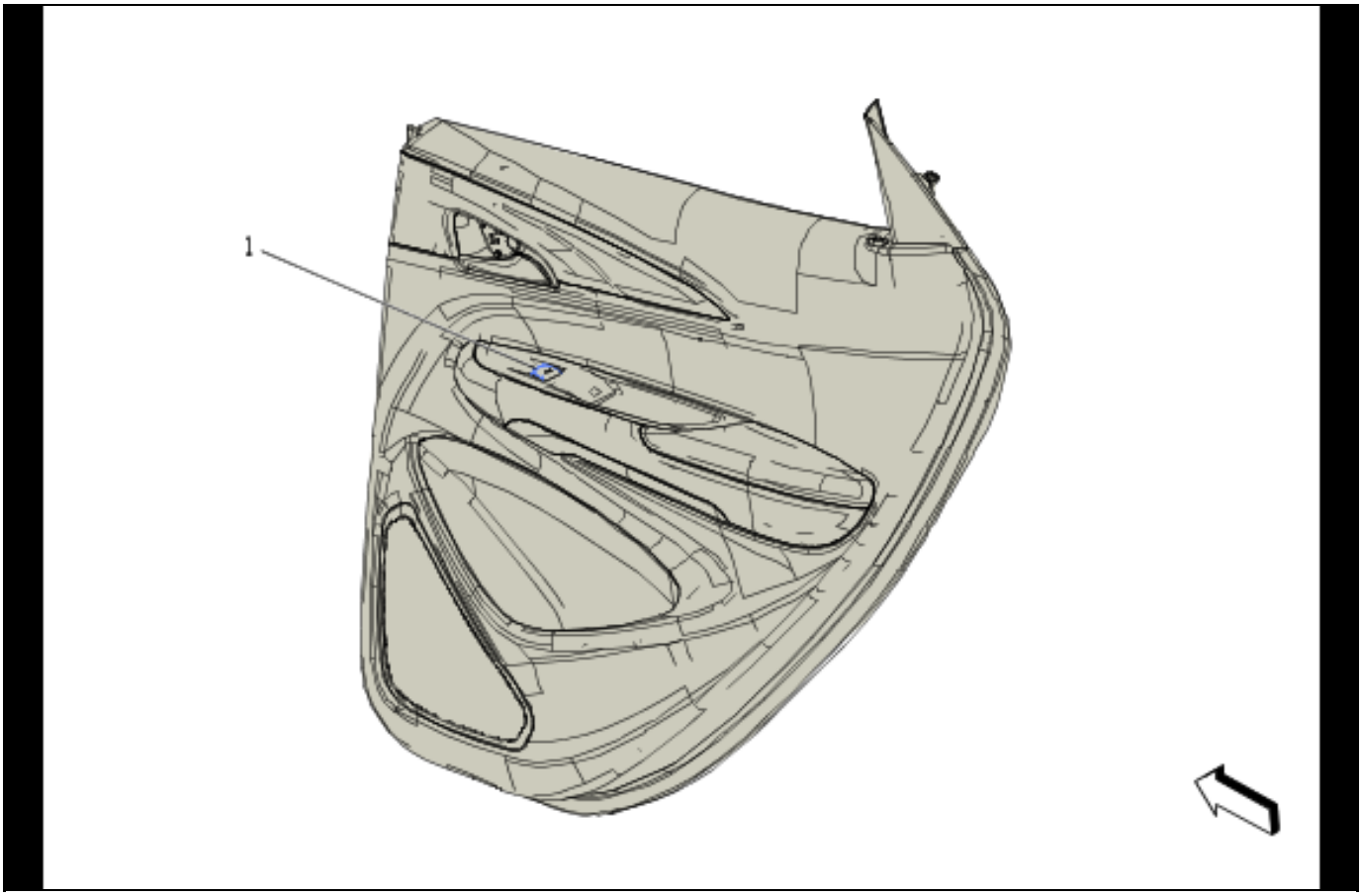

5765149

Items

(1) S79RR Window Switch - Right Rear

Luggage Compartment/Rear of Vehicle Component Views

Left Side Luggage Compartment Components

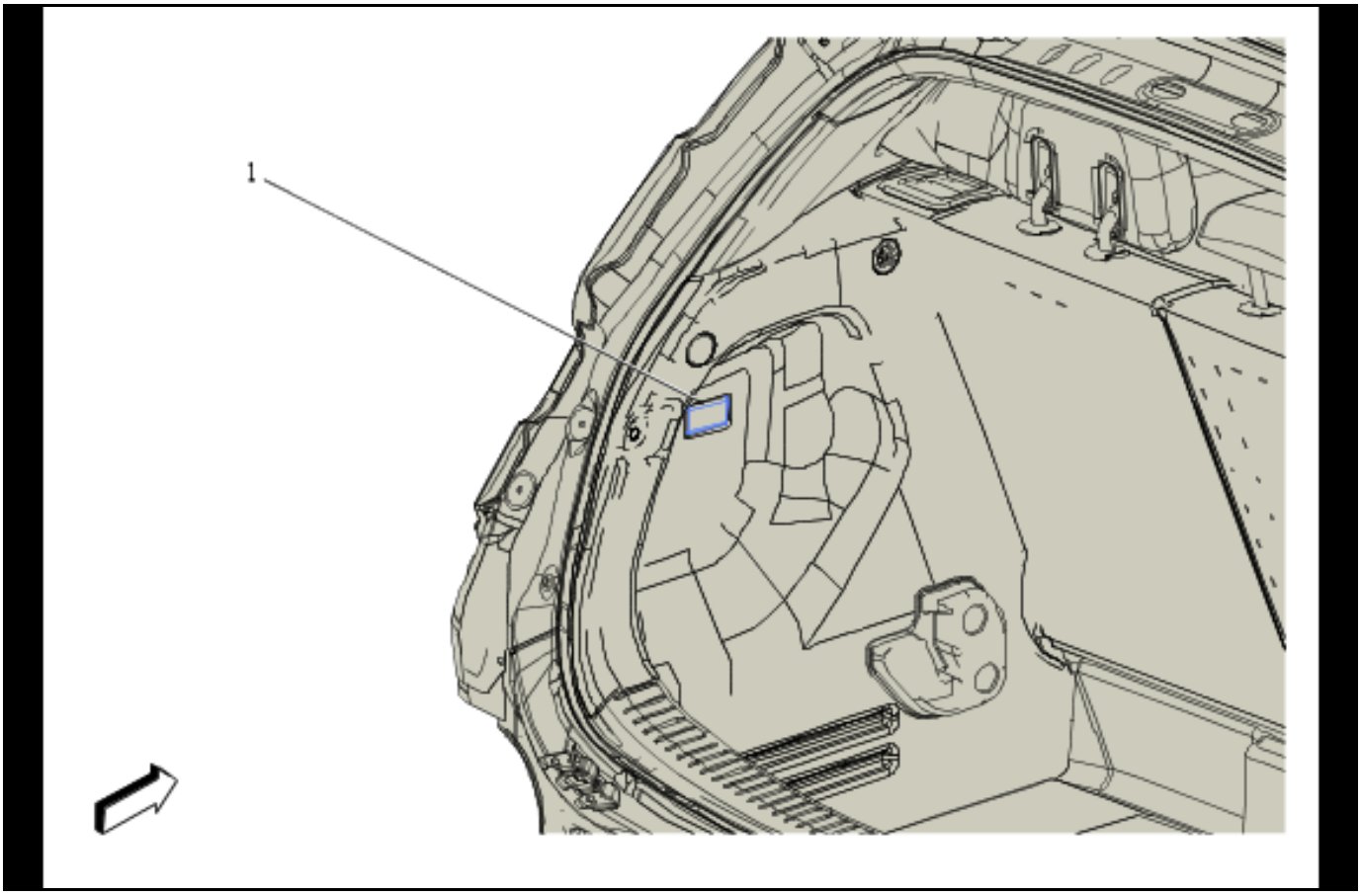

5775773

Items

(1) E8S Rear Compartment Courtesy Lamp

Bottom of Luggage Compartment Components

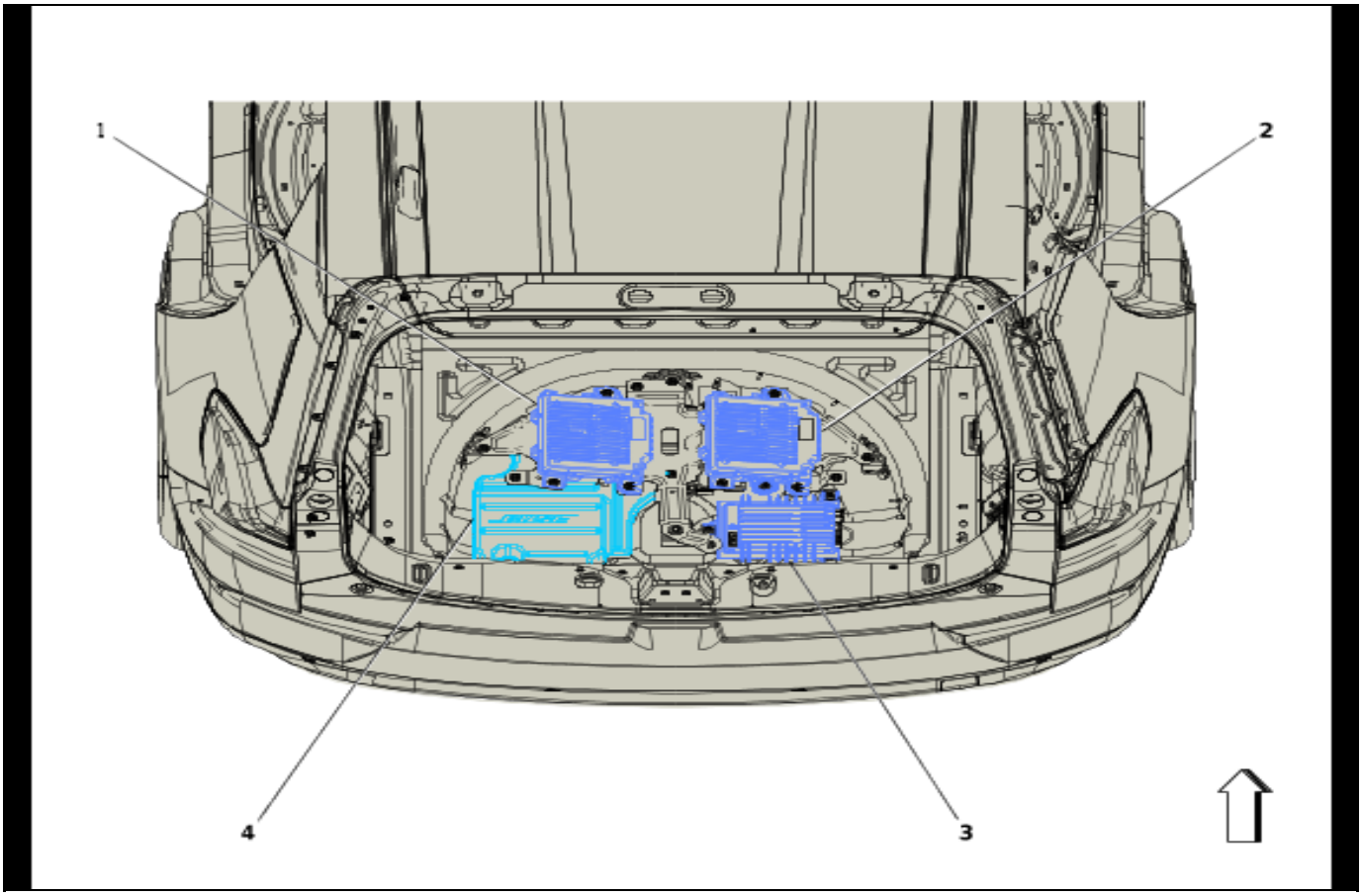

5775774

Items

(1) K124B Active Safety Control Module 2 (UKL)

(2) K124A Active Safety Control Module 1 (UKL)

(3) T3 Audio Amplifier (UQA)

(4) P19AC Speaker - Subwoofer (UQA)

Liftgate Components (1 of 3)

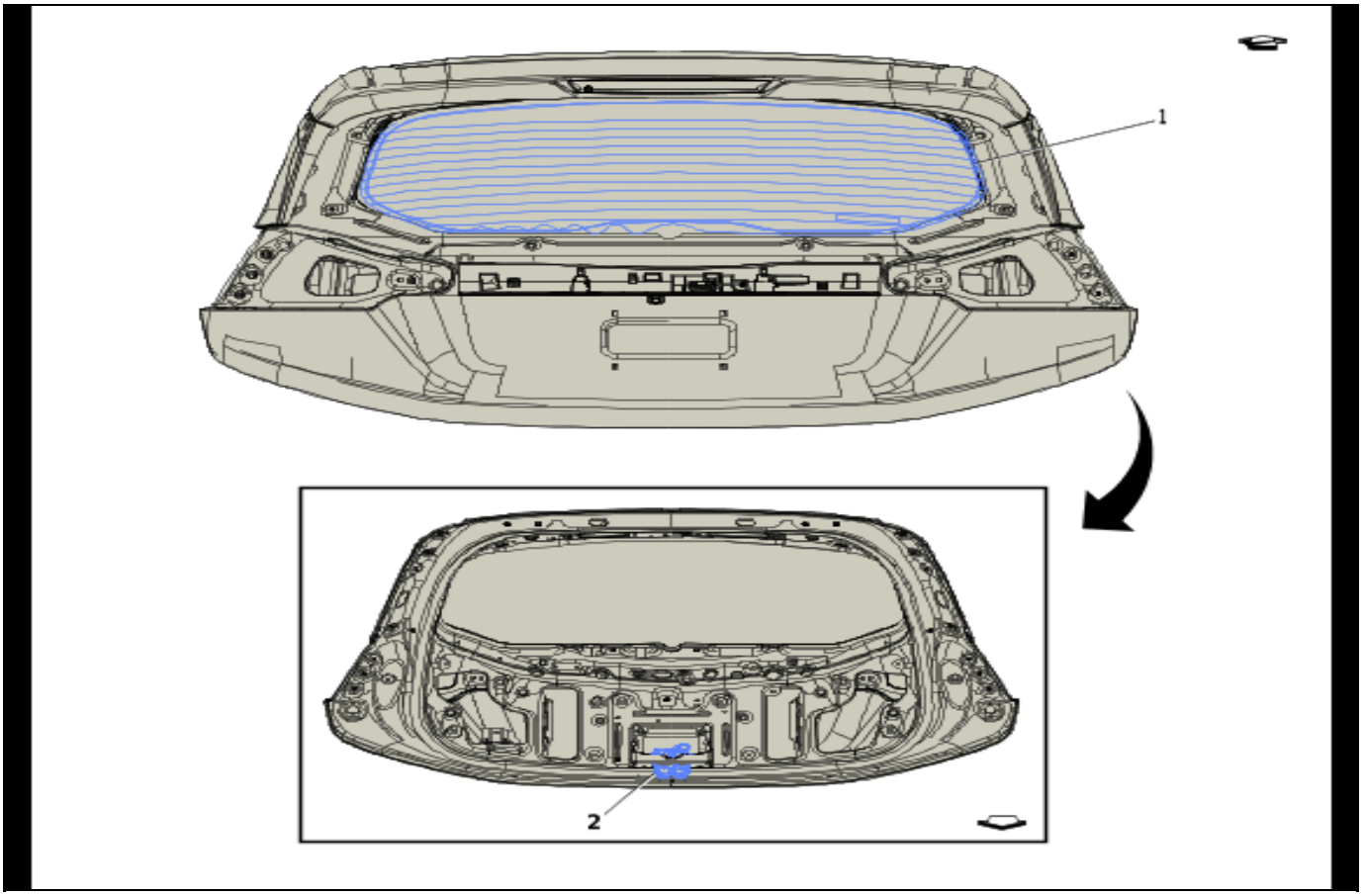

5752690

Items

(1) E18 Rear Defogger Grid

(2) A23C Liftgate Latch Assembly

Liftgate Components (2 of 3)

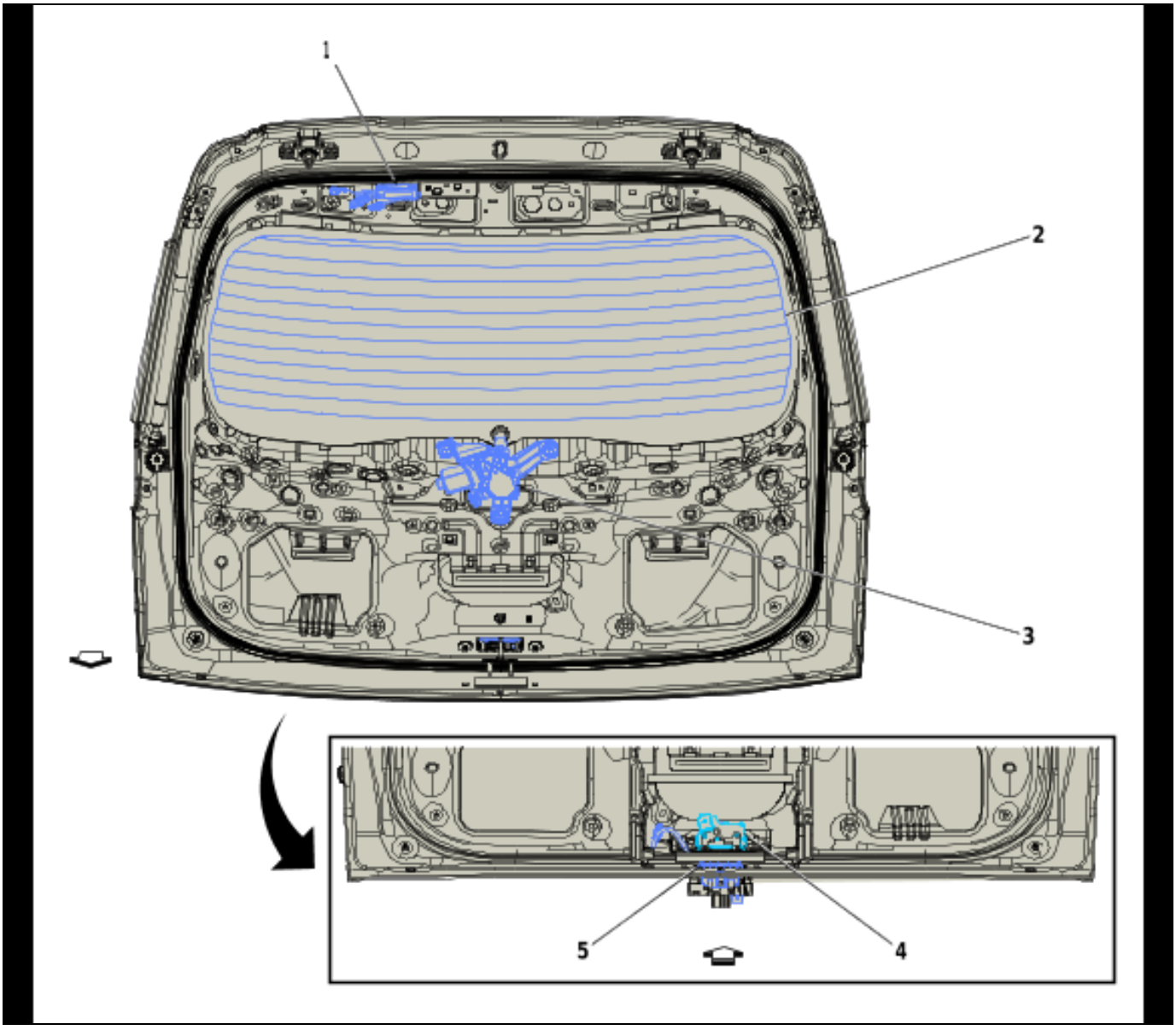

5752691

Items

(1) R44 Radio AM Antenna Signal Filter Module - Center High Mounted Stop Lamp

(2) E18 Rear Defogger Grid

(3) M45 Rear Wiper Motor

(4) A23C Liftgate Latch Assembly

(5) S46B Liftgate Unlatch Switch

Liftgate Components (3 of 3)

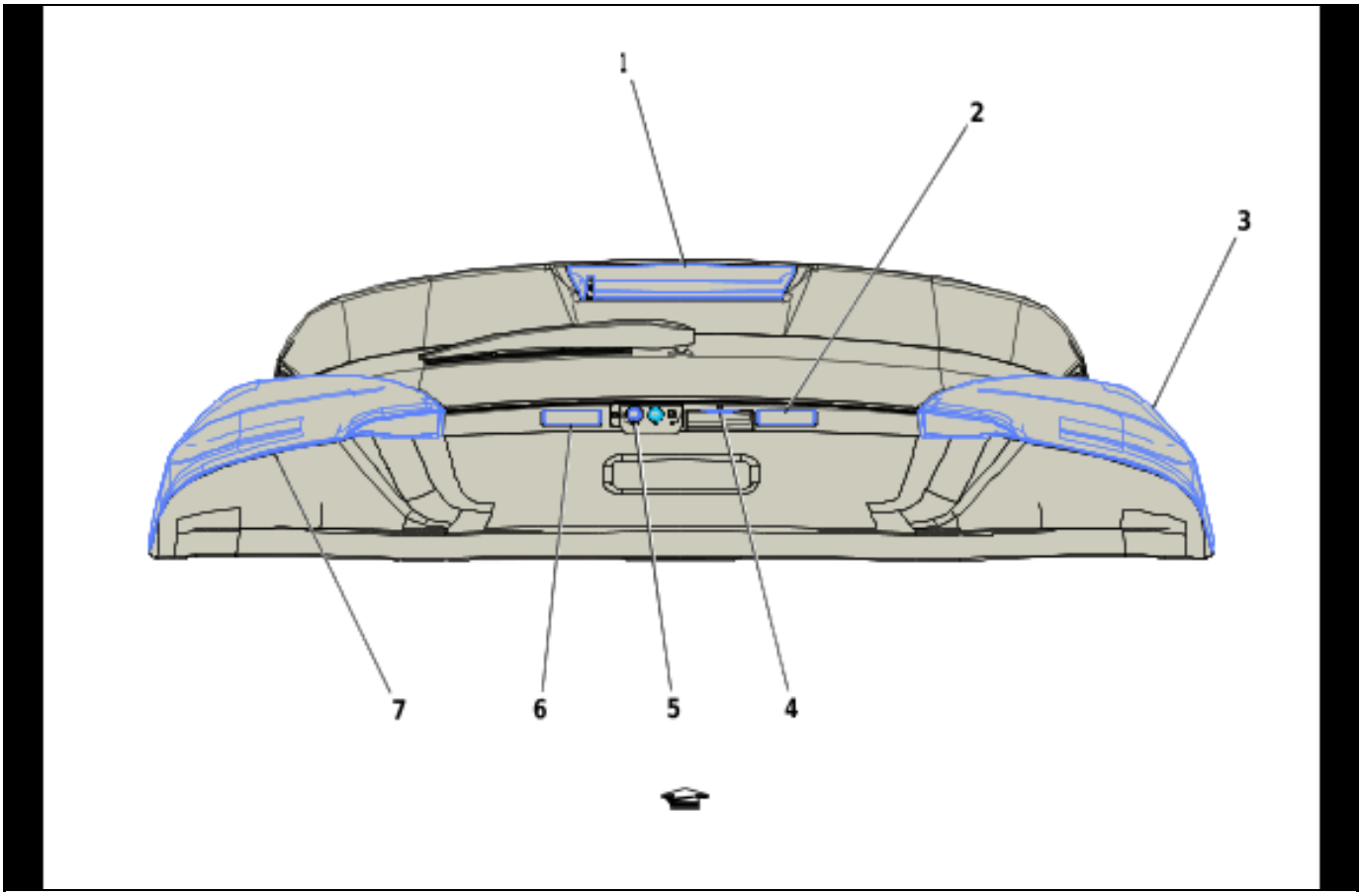

5989802

Items

(1) E6 Center High Mounted Stop Lamp
(2) E7R License Plate Lamp - Right
(3) E5AB Tail/Stop Lamp - Right
(4) S46B Liftgate Unlatch Switch
(5) B87 Rearview Camera
(6) E7L License Plate Lamp - Left
(7) E5AA Tail/Stop Lamp - Left

Left Rear of Vehicle Components

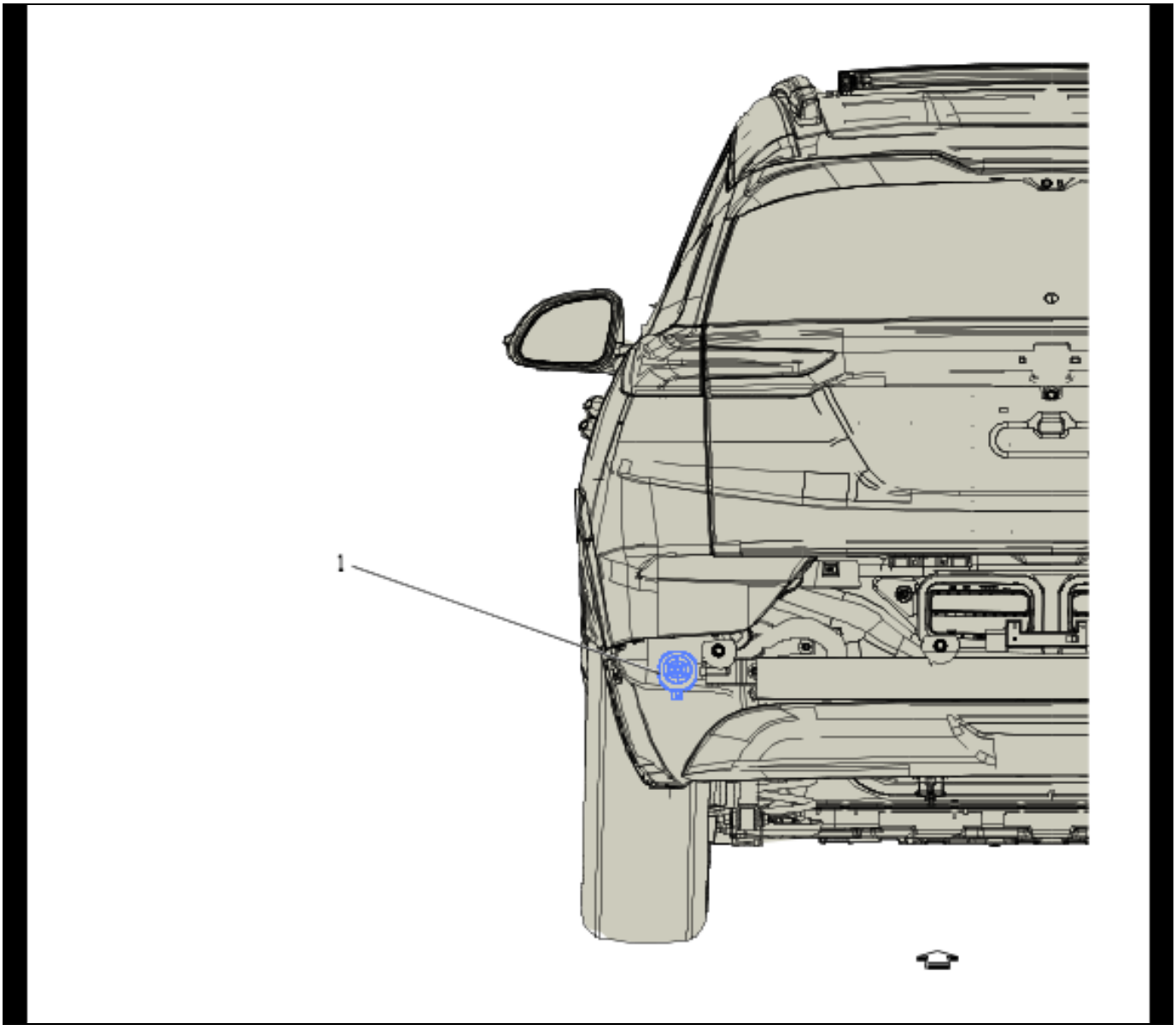

5979279

Items

(1) P48R Pedestrian Alert Sound Speaker - Rear

Behind the Rear Fascia Components

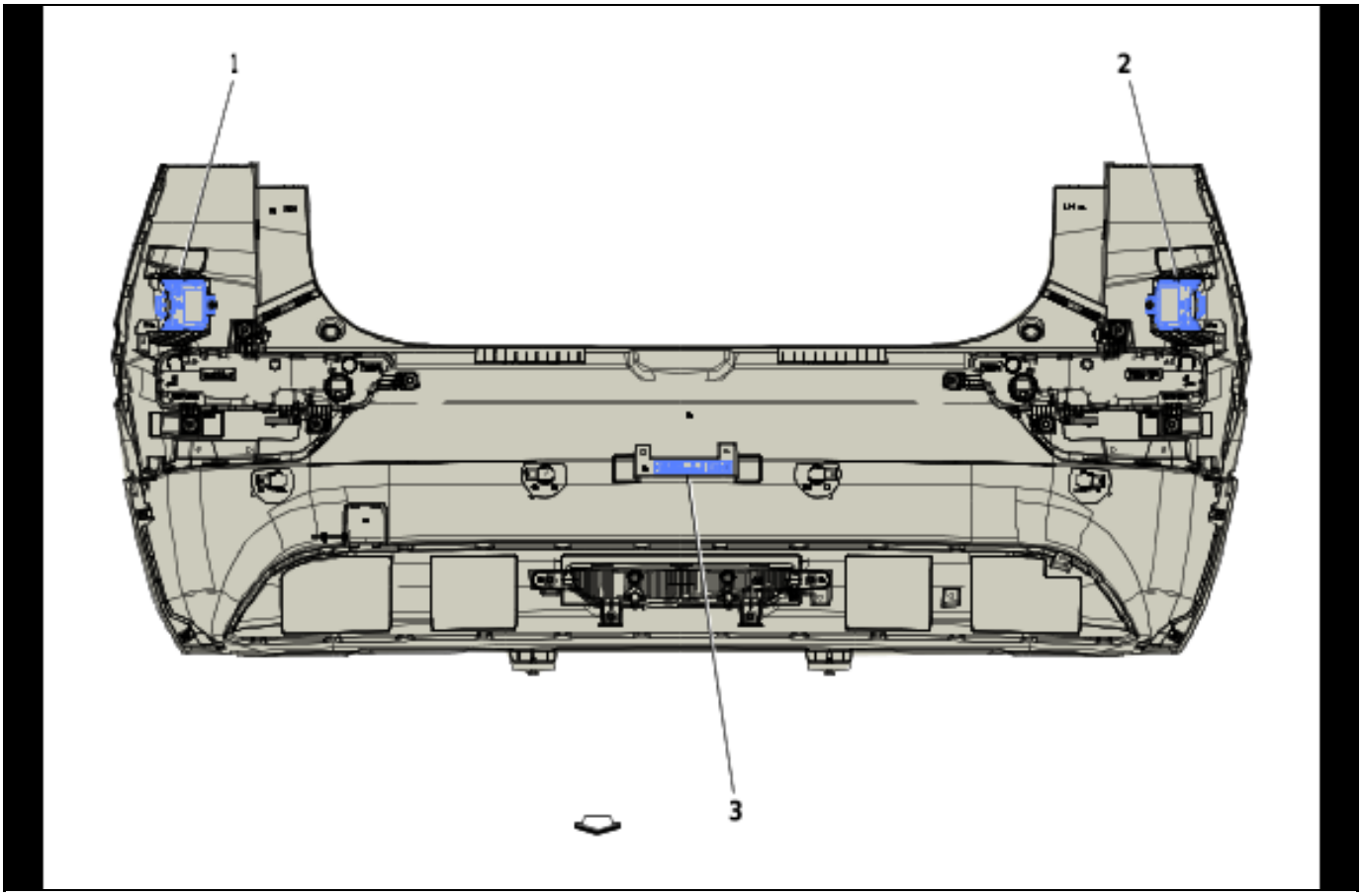

5979281

Items

(1) B218R Side Object Sensor Module - Right (UKC)

(2) B218L Side Object Sensor Module - Left (UKC)

(3) T10G Keyless Entry Antenna - Rear Fascia

Rear of Vehicle

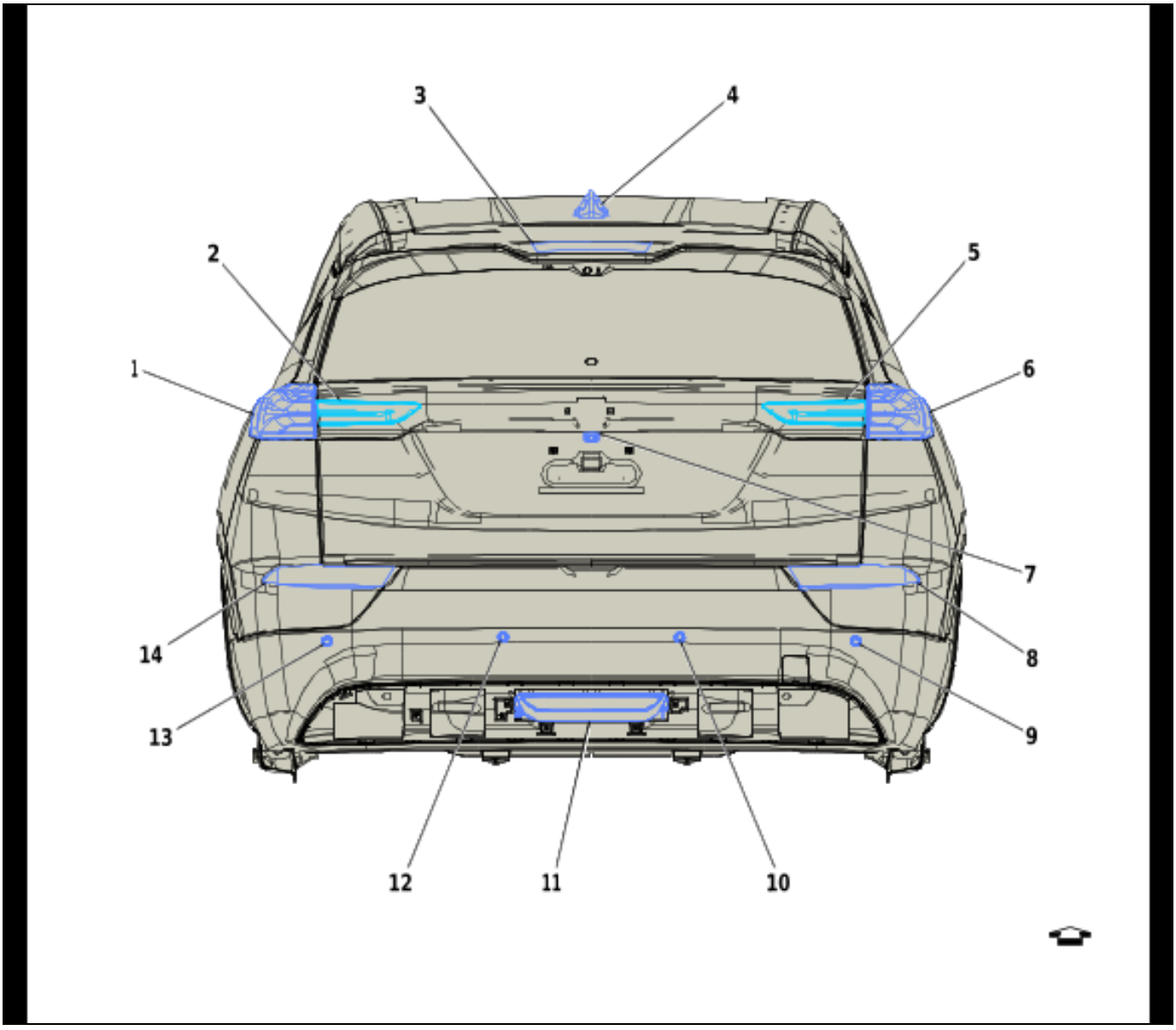

5989805

Items

(1) E2LR Side Marker Lamp - Left Rear
(2) E5AA Tail/Stop Lamp - Left
(3) E6 Center High Mounted Stop Lamp
(4) T2RR Antenna - Roof Rear
(5) E5AB Tail/Stop Lamp - Right
(6) E2RR Side Marker Lamp - Right Rear
(7) B87 Rearview Camera
(8) E73R Rear Fascia Tail Lamp Assembly - Right
(9) B306H Parking Assist Sensor - Rear Right Outer (UD7)
(10) B306G Parking Assist Sensor - Rear Right Middle (UD7)
(11) E5 Backup Lamp
(12) B306F Parking Assist Sensor - Rear Left Middle (UD7)
(13) B306E Parking Assist Sensor - Rear Left Outer (UD7)
(14) E73L Rear Fascia Tail Lamp Assembly - Left

Wheels/Vehicle Underbody Component Views

Underbody - Hybrid/EV Battery Pack Components

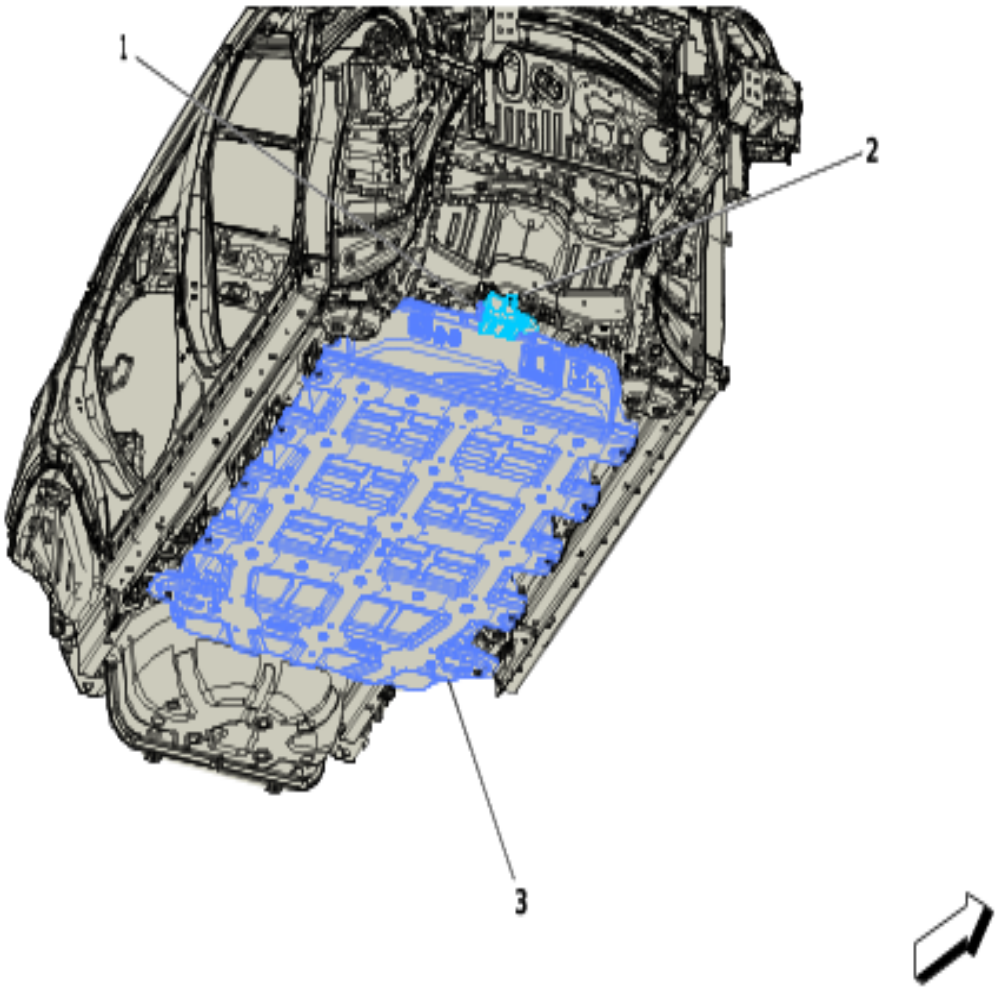

5754367

Items

(1) B204A Hybrid/EV Battery Pack Coolant Temperature Sensor 1

(2) E54 Hybrid/EV Battery Pack Coolant Heater

(3) A4 Hybrid/EV Battery Pack

Wheel Well Components - Front

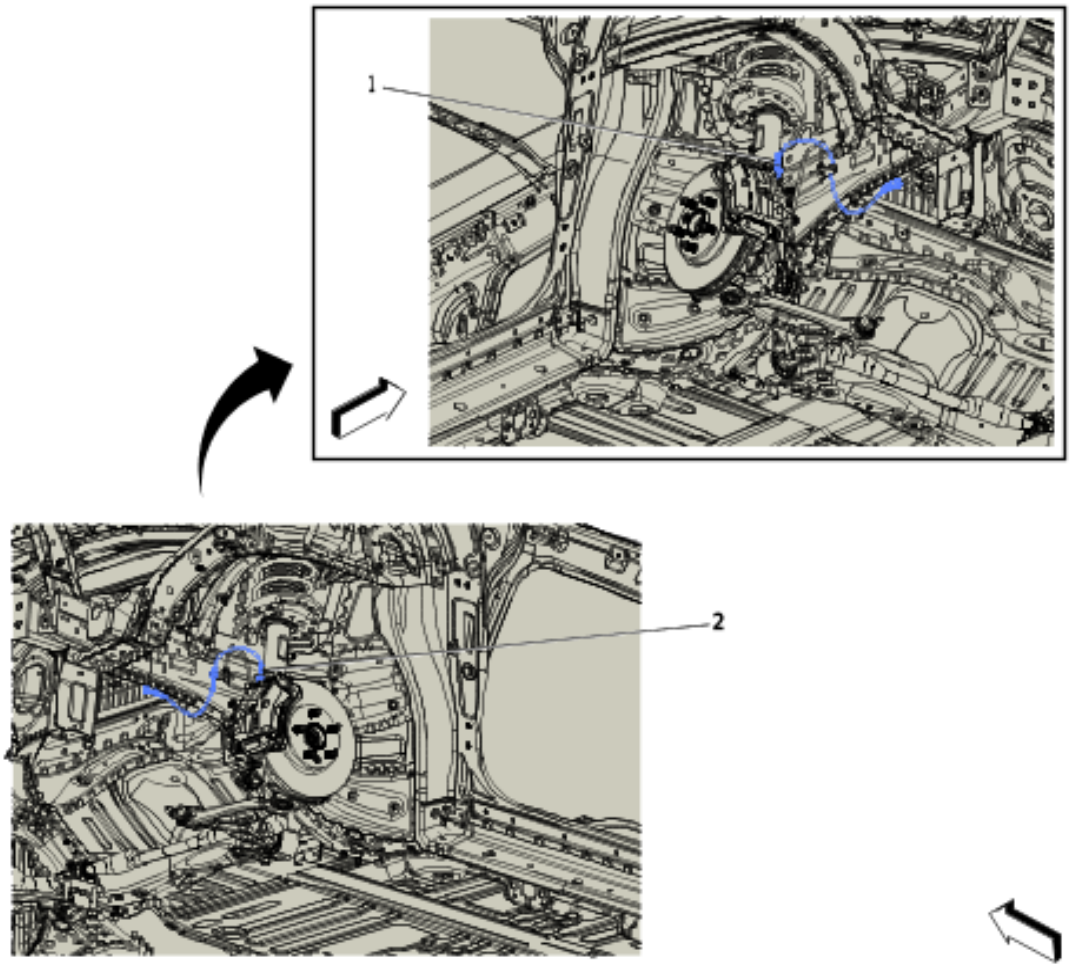

5754368

Items

(1) B5RF Wheel Speed Sensor - Right Front

(2) B5LF Wheel Speed Sensor - Left Front

Wheel Well Components - Rear

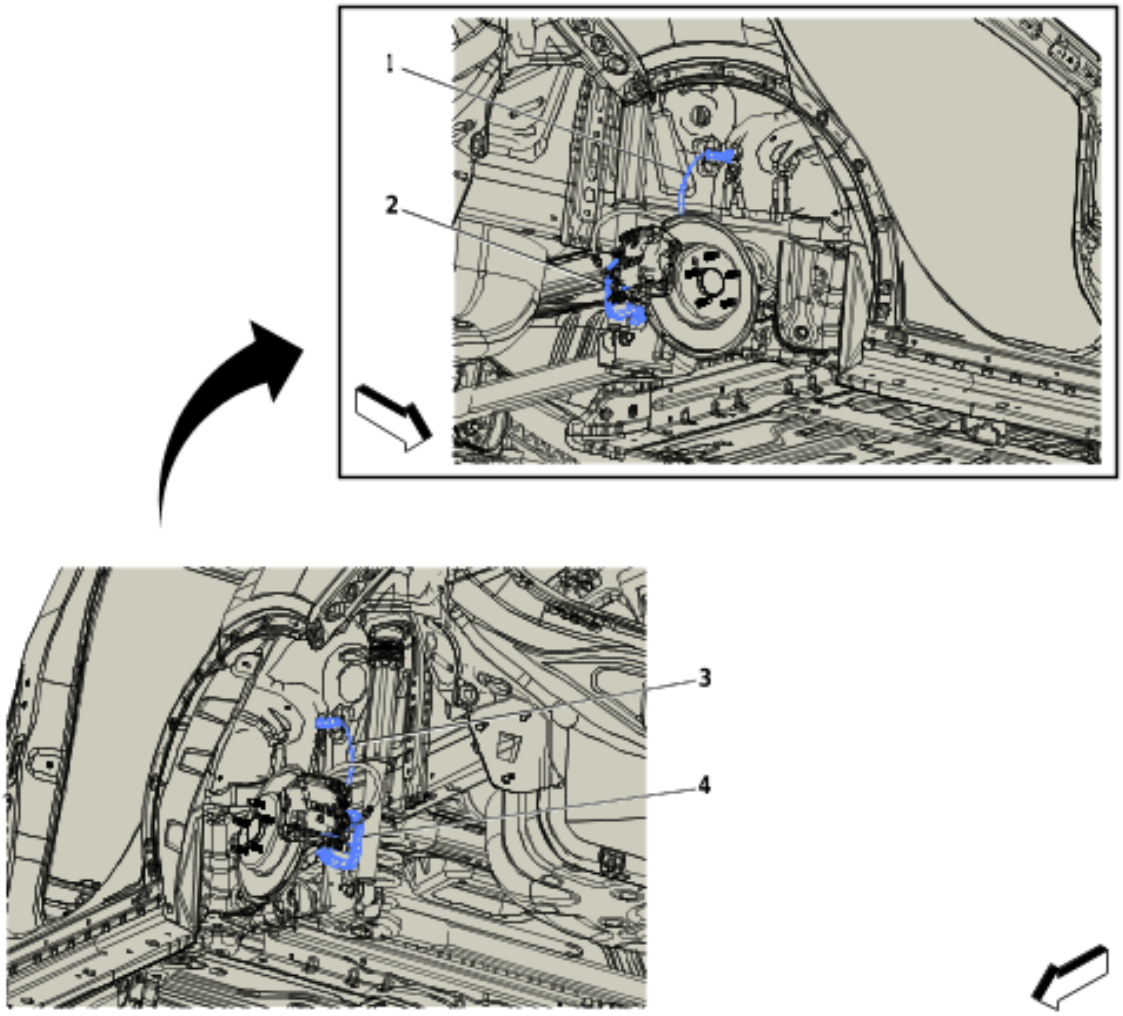

5754369

Items

(1) B5RR Wheel Speed Sensor - Right Rear
(2) M104R Park Brake Actuator - Right
(3) B5LR Wheel Speed Sensor - Left Rear
(4) M104L Park Brake Actuator - Left

Ground Views

G100

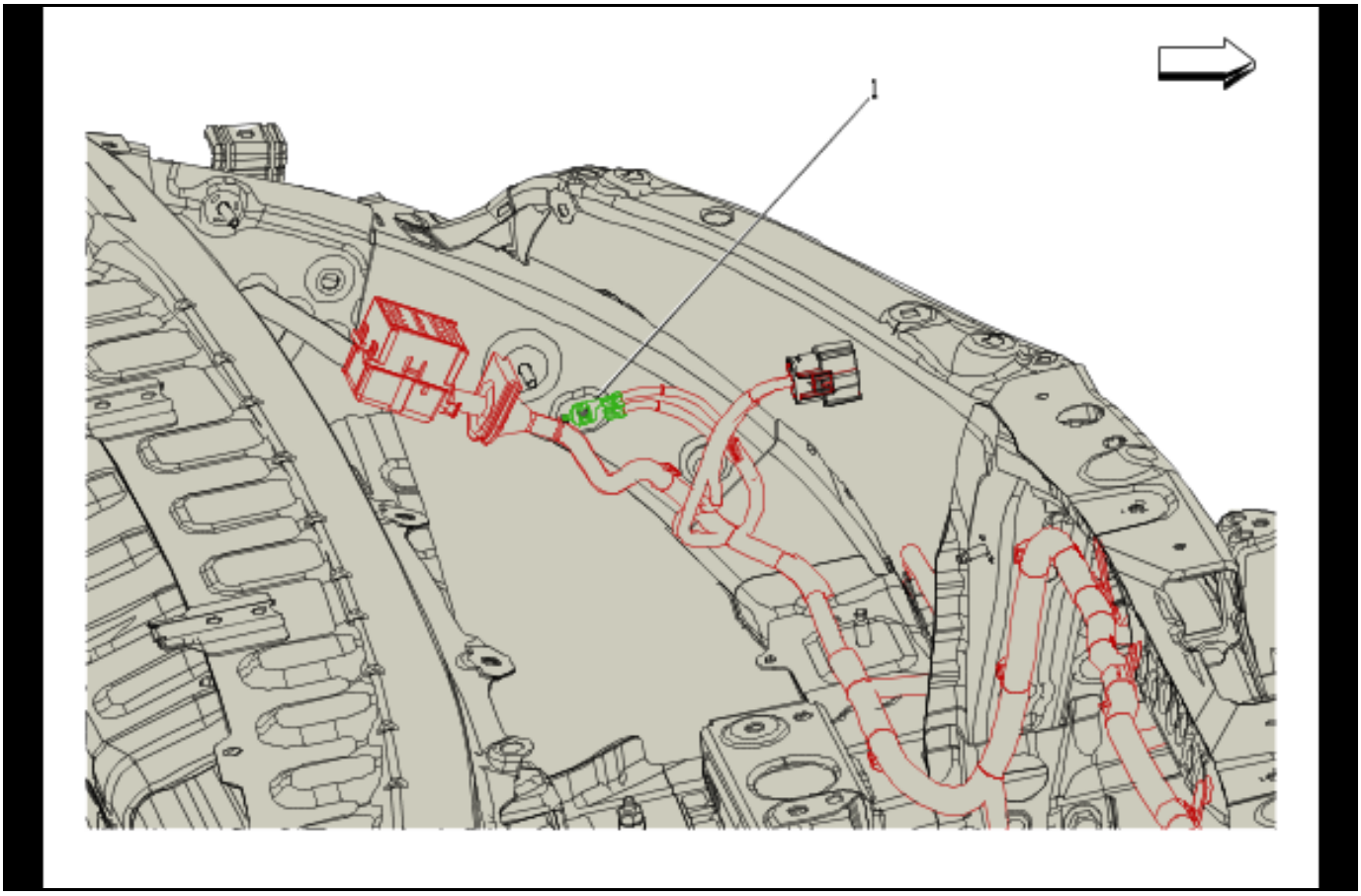

5774975

Items

(1) G100 Forward Lamp Wiring Harness

G101

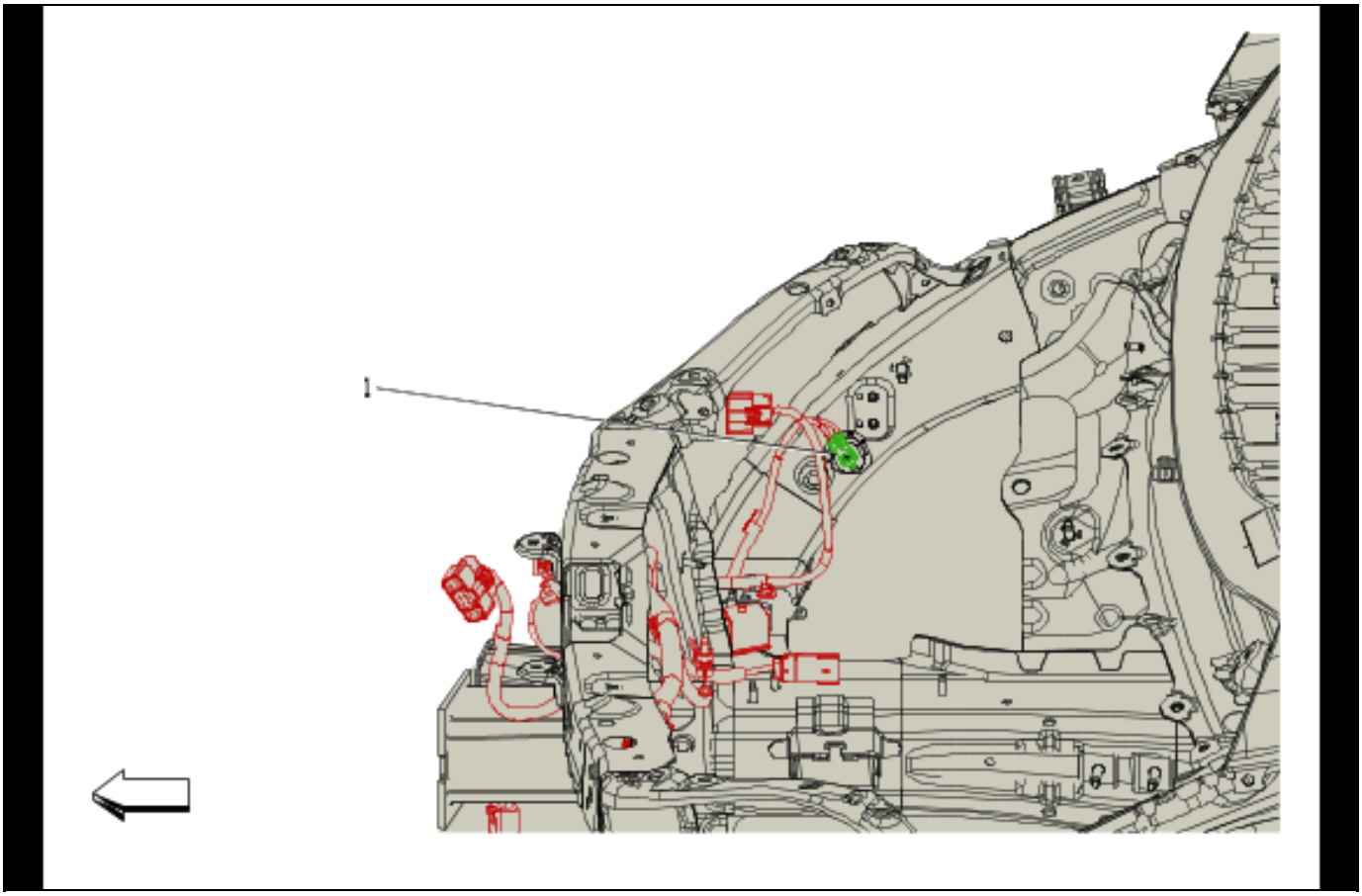

5774977

Items

(1) G101 Forward Lamp Wiring Harness

G102

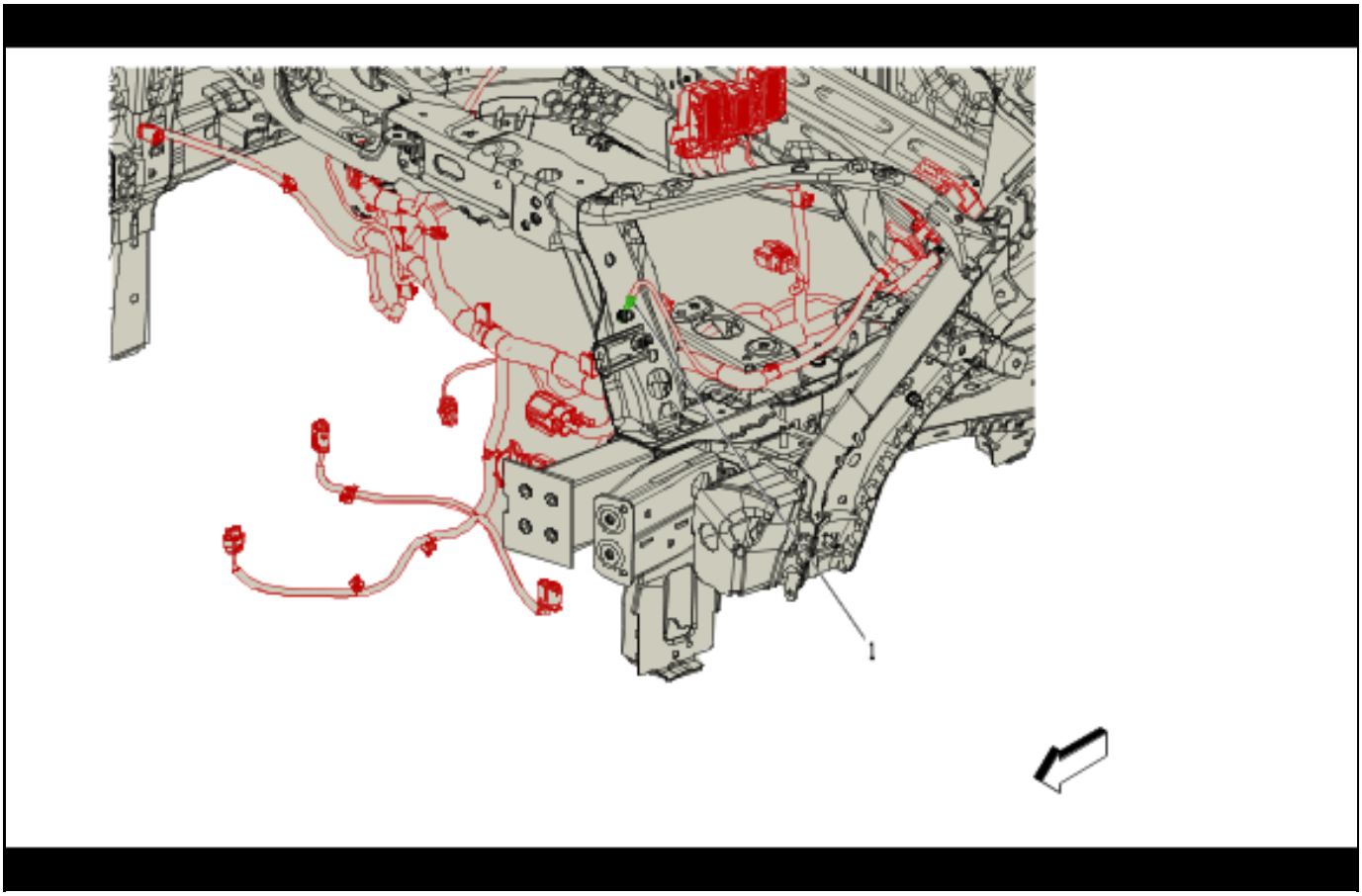

5774978

Items

(1) G102 Engine Wiring Harness

G103

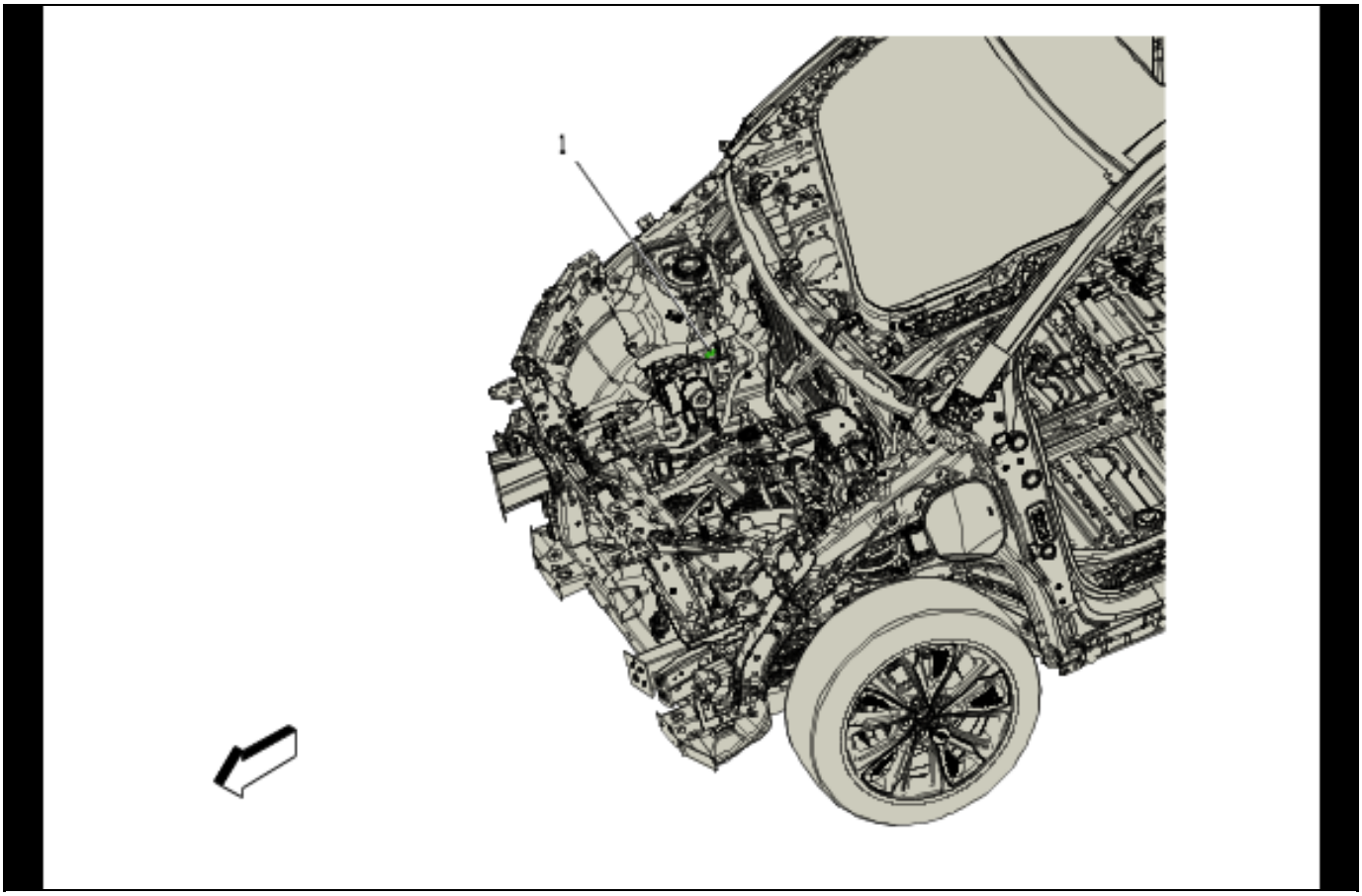

5765266

Items

(1) G103 Body Wiring Harness

G104 and G105

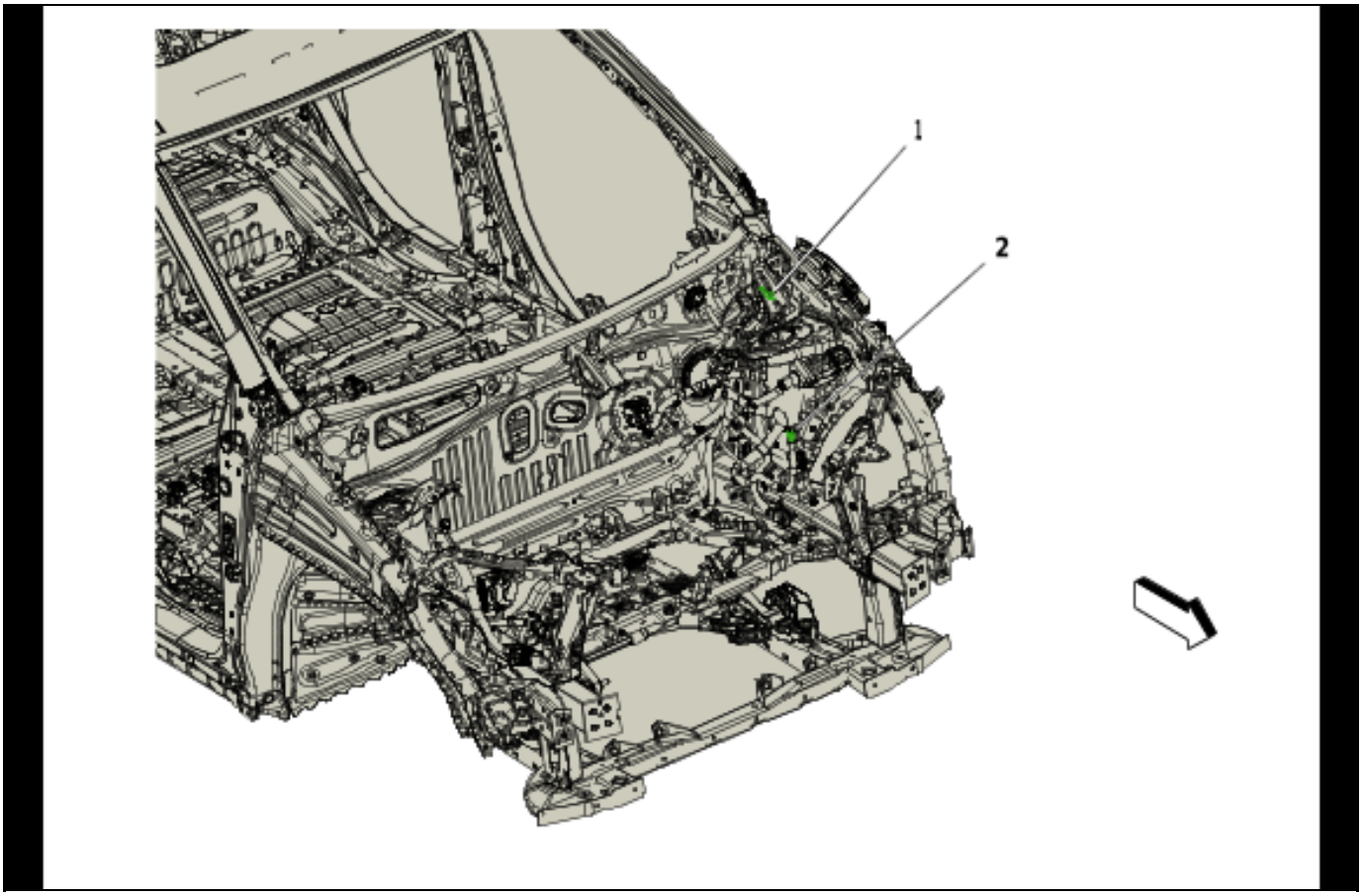

5765267

Items

(1) G105 Body Wiring Harness

(2) G104 Body Wiring Harness

G107

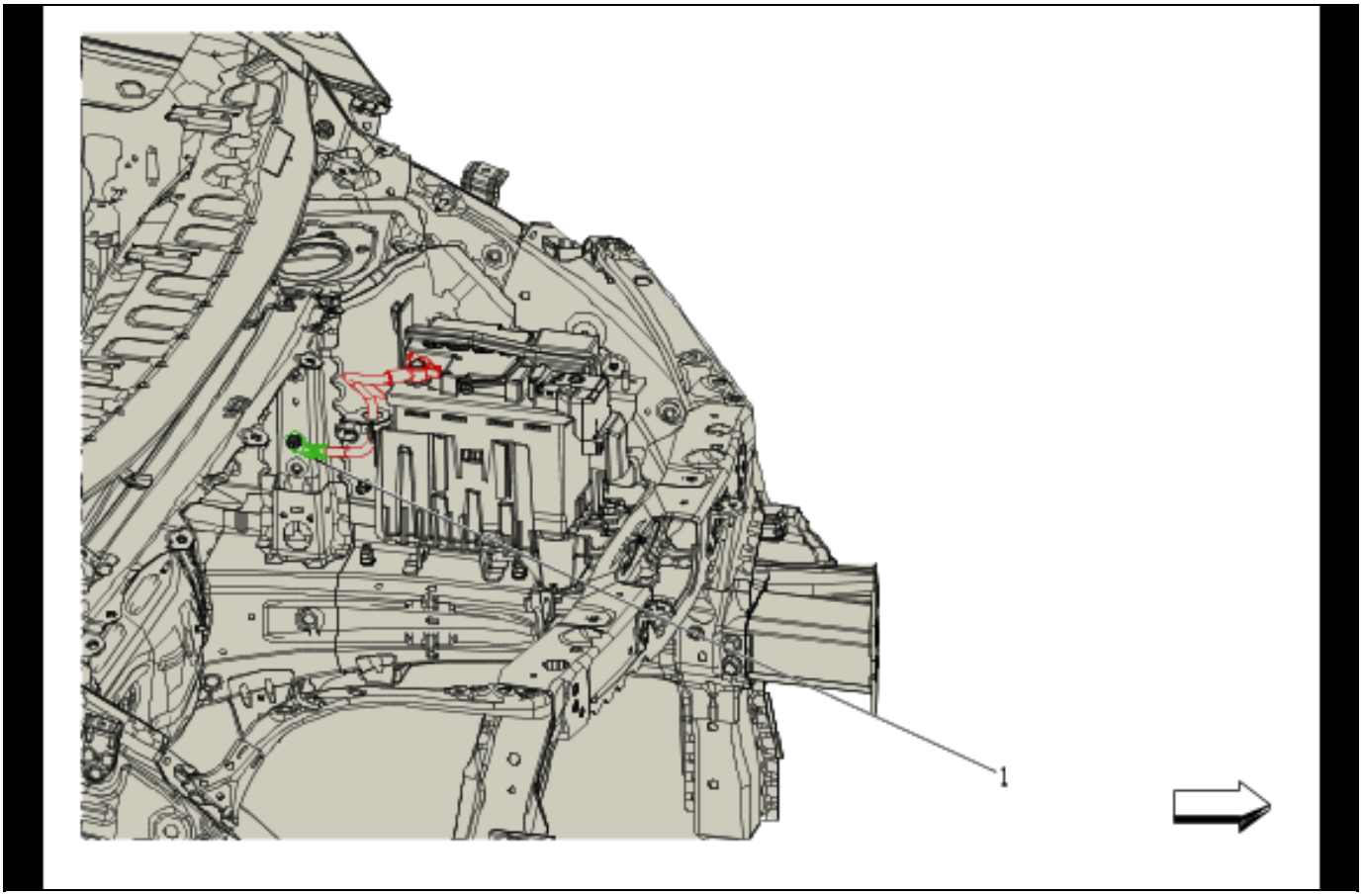

5774988

Items

(1) G107 Battery Negative Wiring Harness

G111

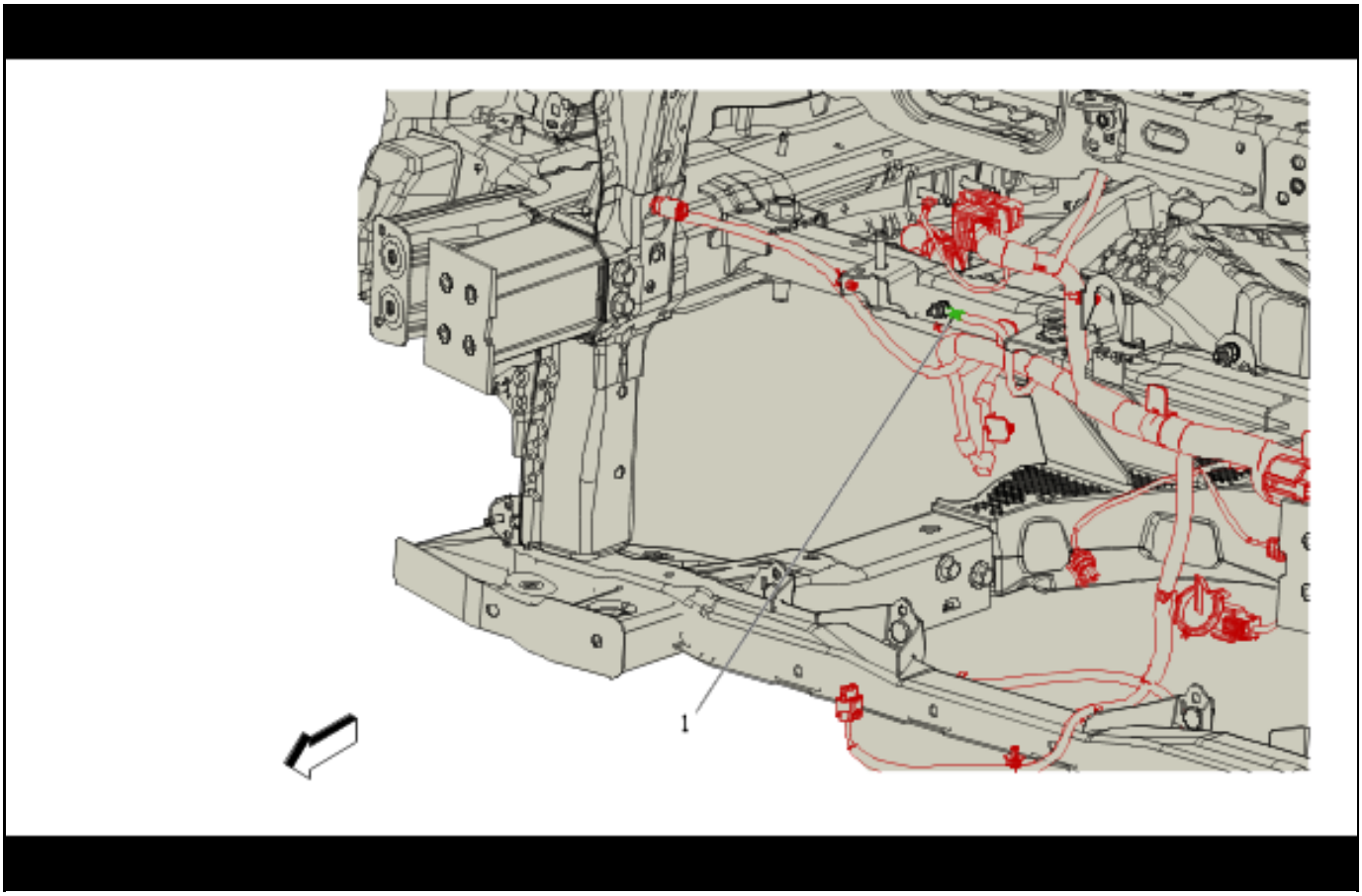

5774989

Items

(1) G111 Engine Wiring Harness

G112

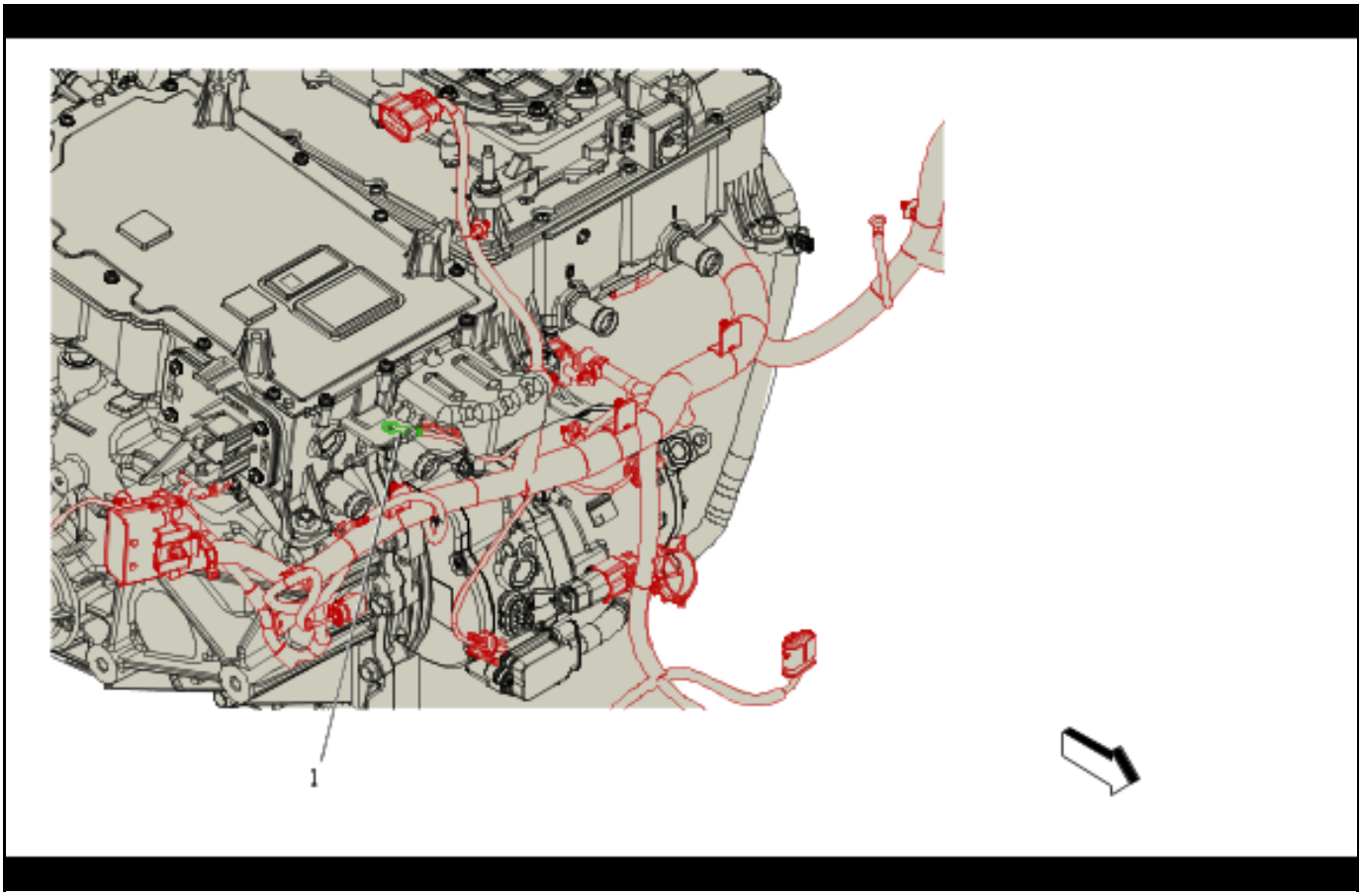

5774990

Items

(1) G112 Engine Wiring Harness

G116

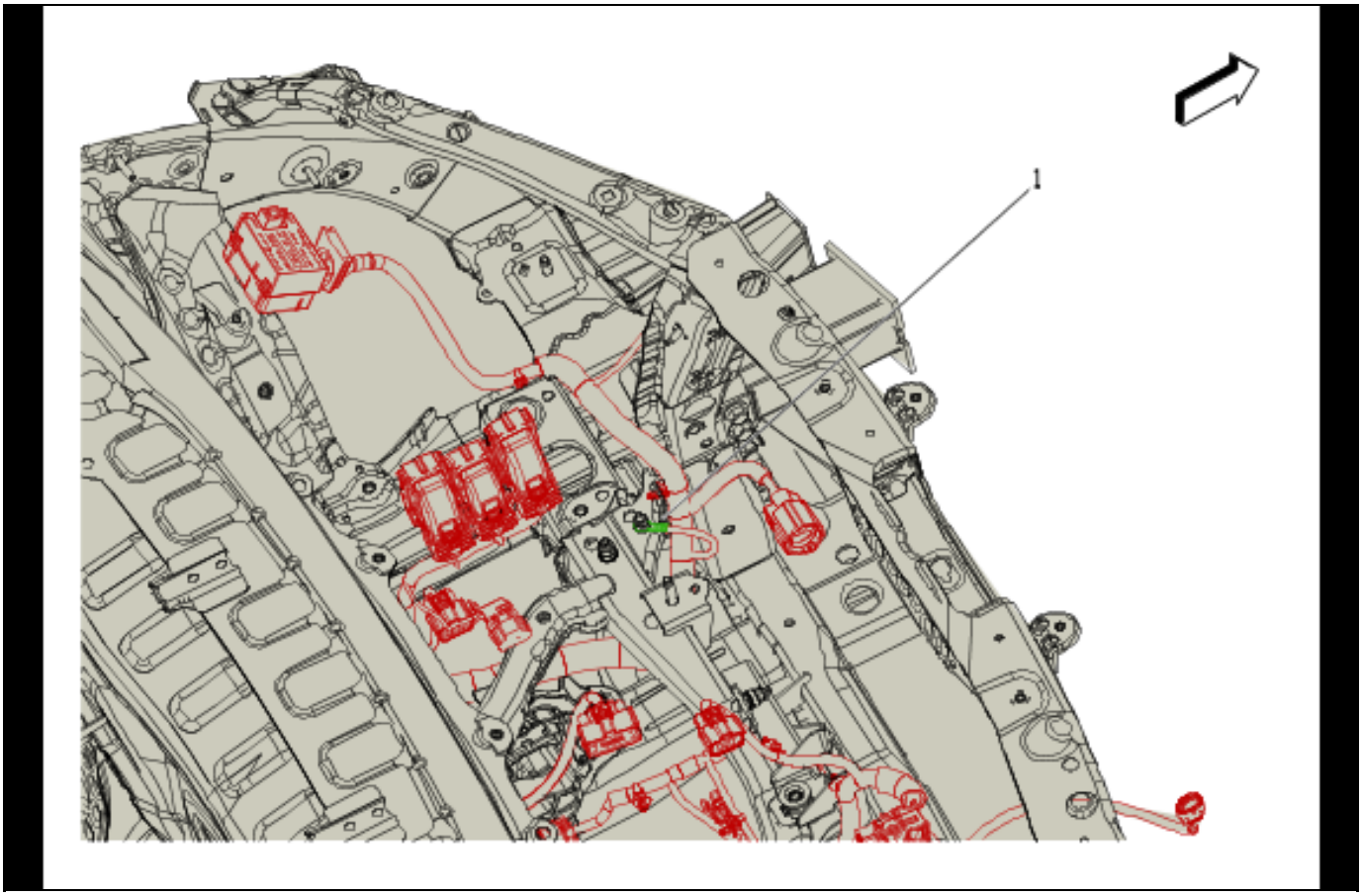

5774992

Items

(1) G116 Engine Wiring Harness

G150, G151, G153 and G154

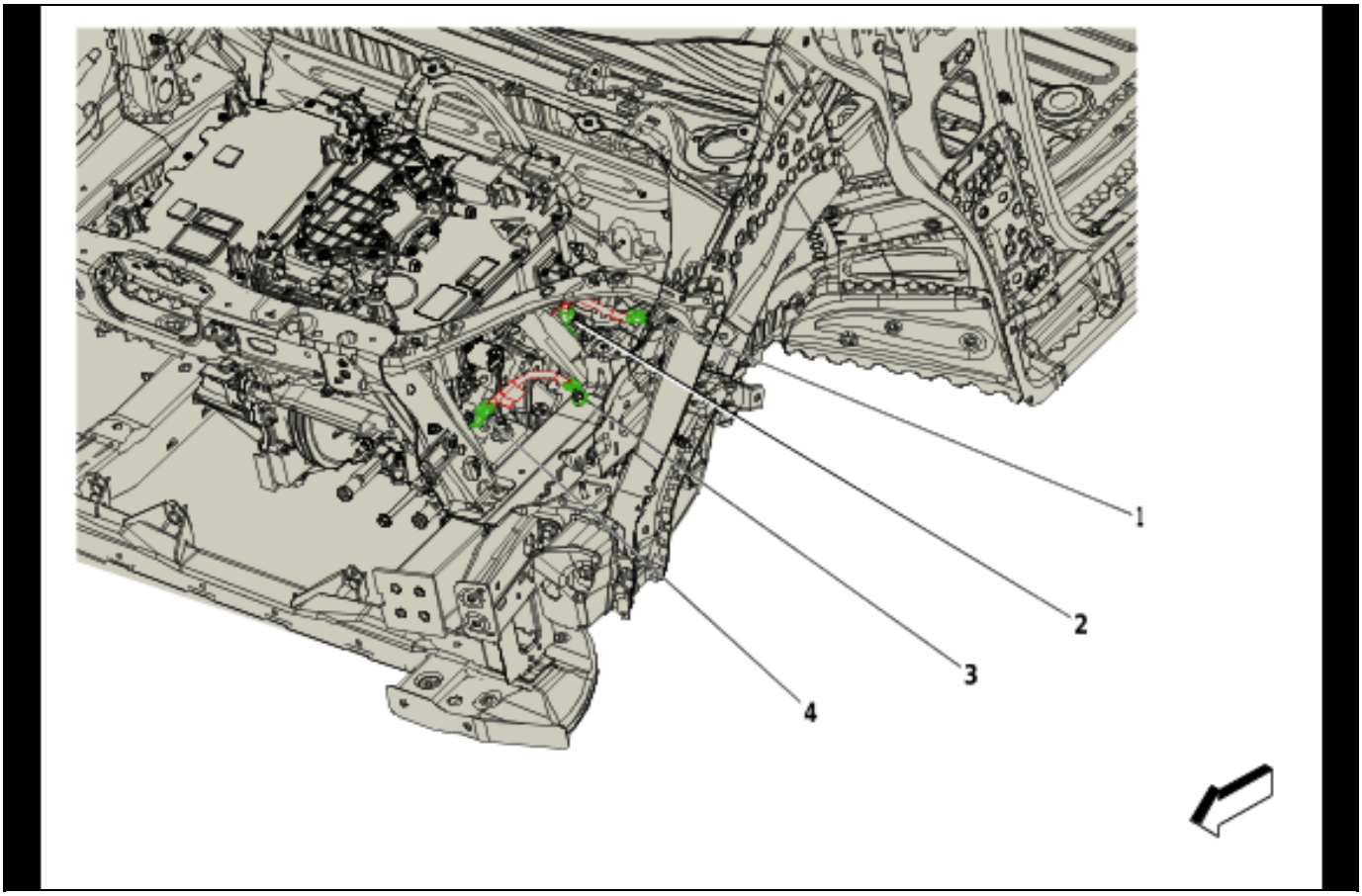

5774993

Items

(1) G154 Ground Jumper Wiring Harness
(2) G153 Ground Jumper Wiring Harness
(3) G151 Ground Jumper Wiring Harness
(4) G150 Ground Jumper Wiring Harness

G155 and G156

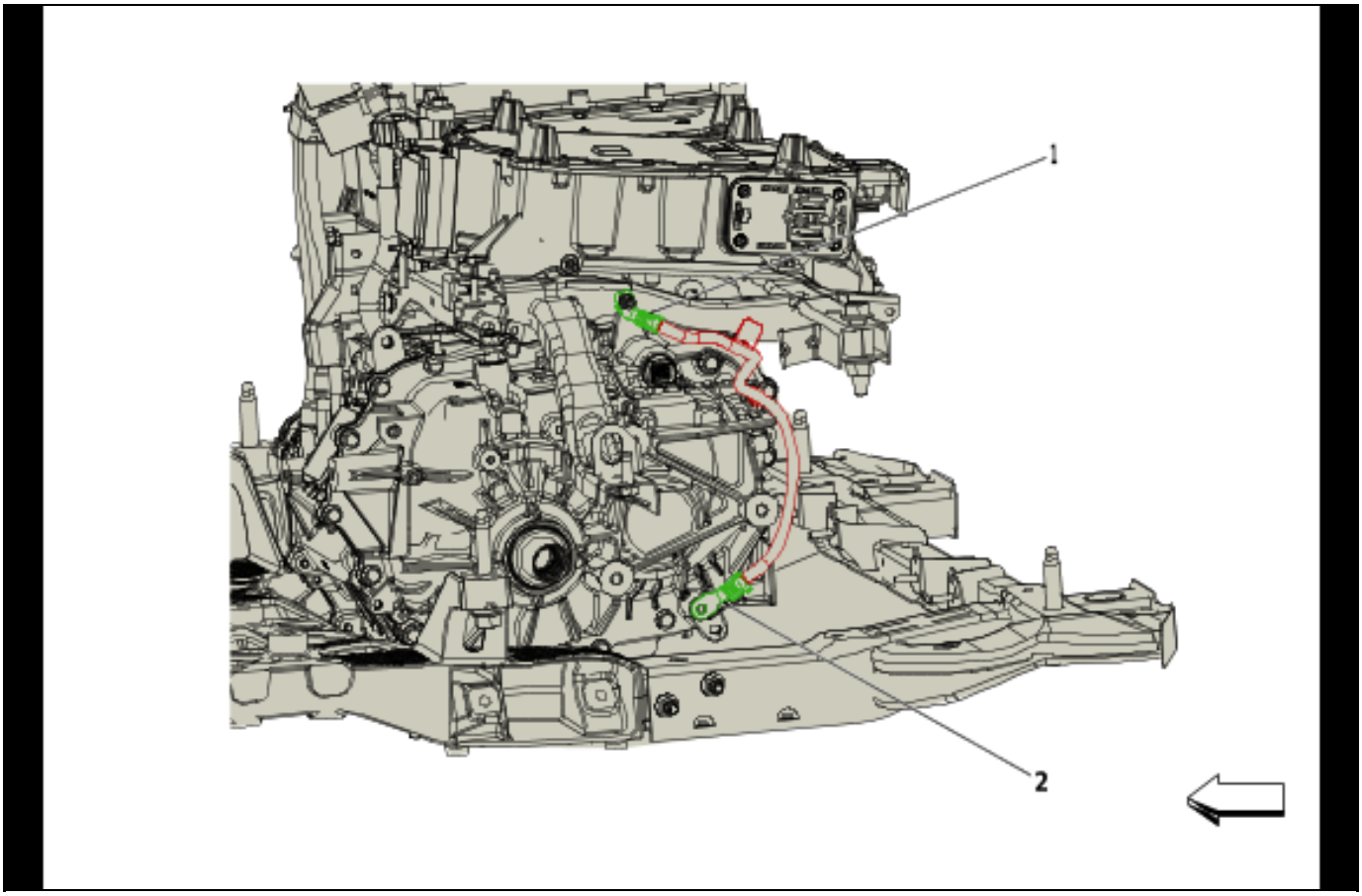

5774995

Items

(1) G155 Ground Jumper Wiring Harness

(2) G156 Ground Jumper Wiring Harness

G157 and G158

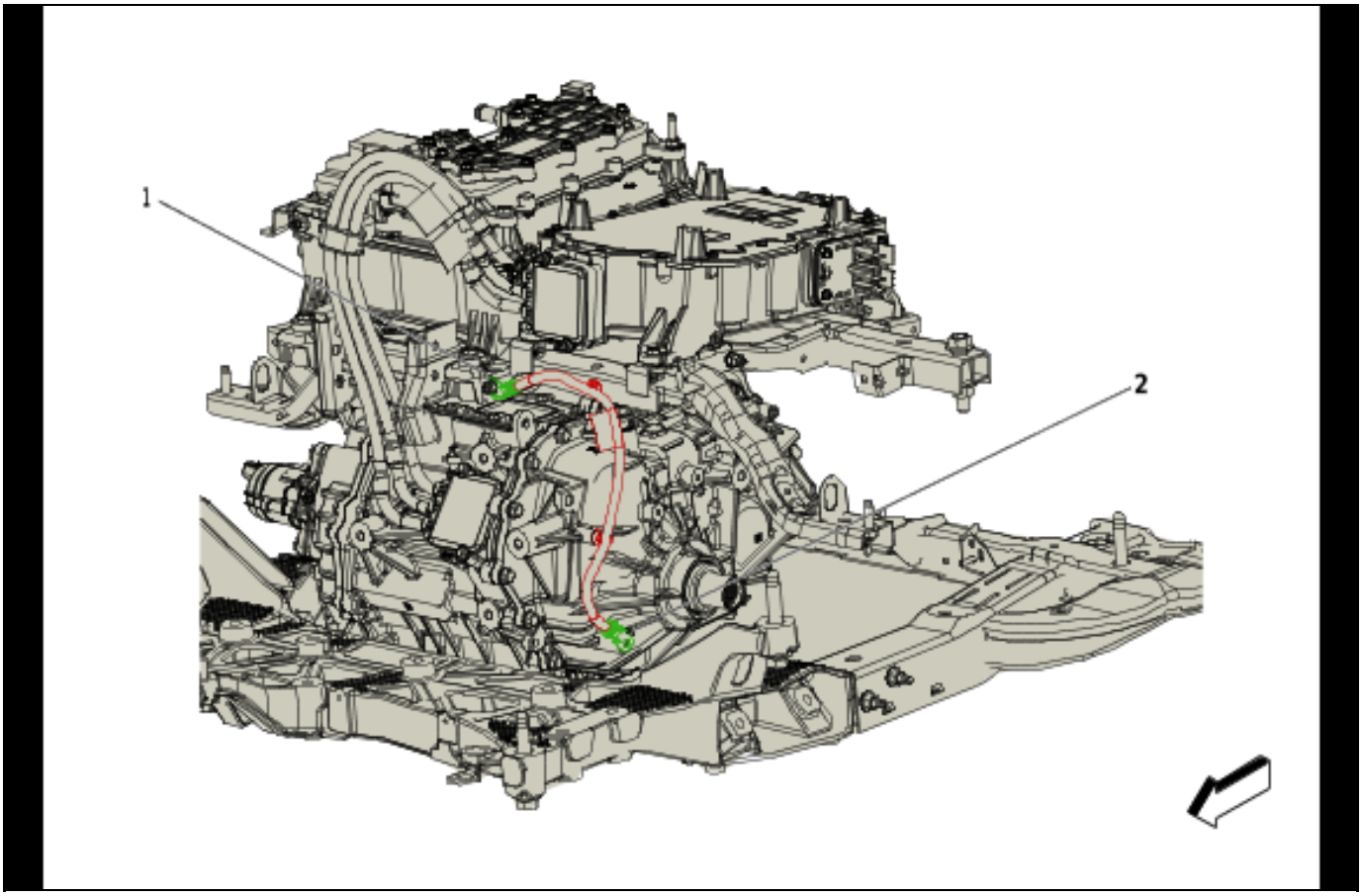

5774996

Items

(1) G157 Ground Jumper Wiring Harness

(2) G158 Ground Jumper Wiring Harness

G200

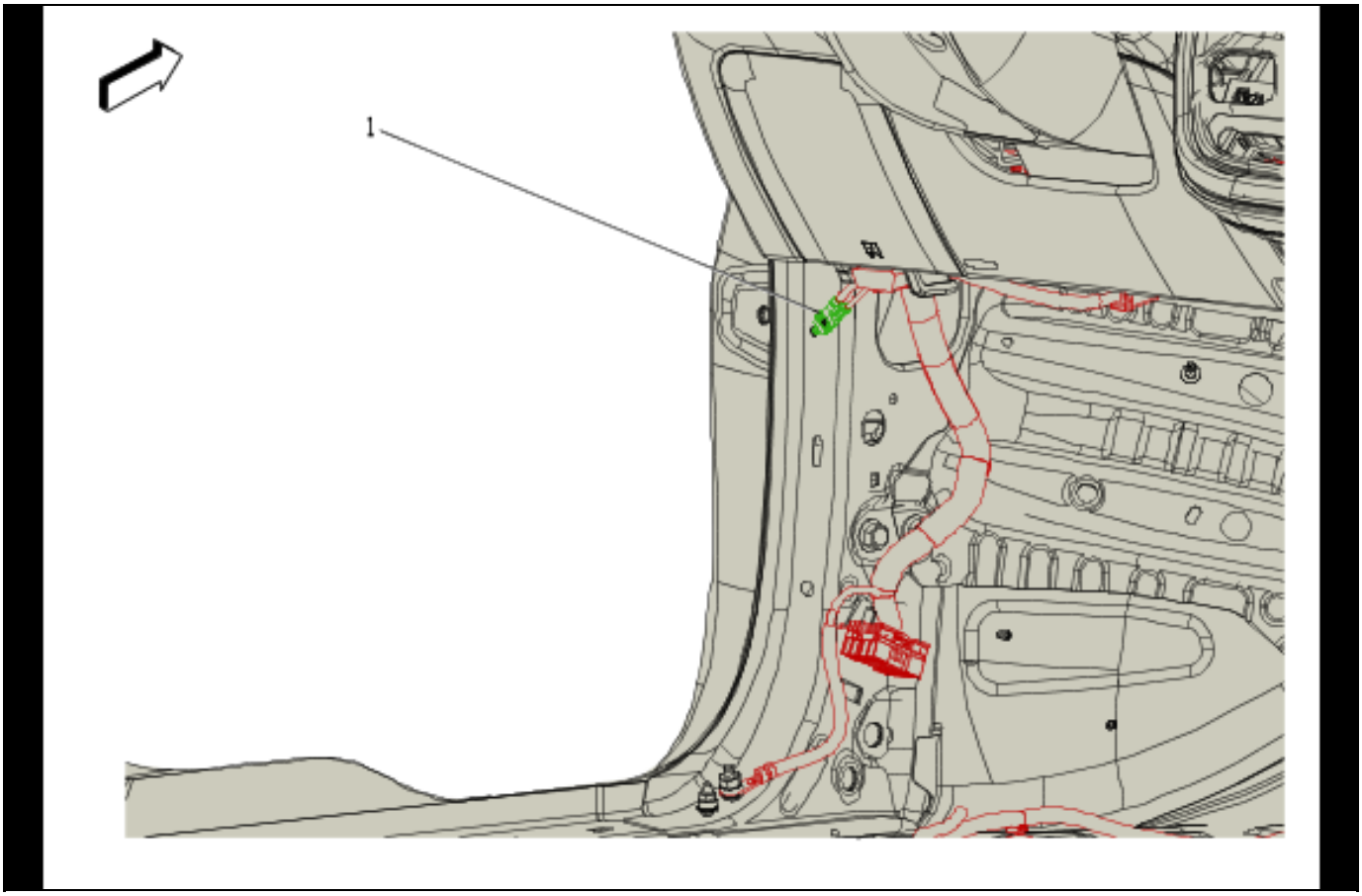

5774998

Items

(1) G200 Instrument Panel Wiring Harness

G201 and G304

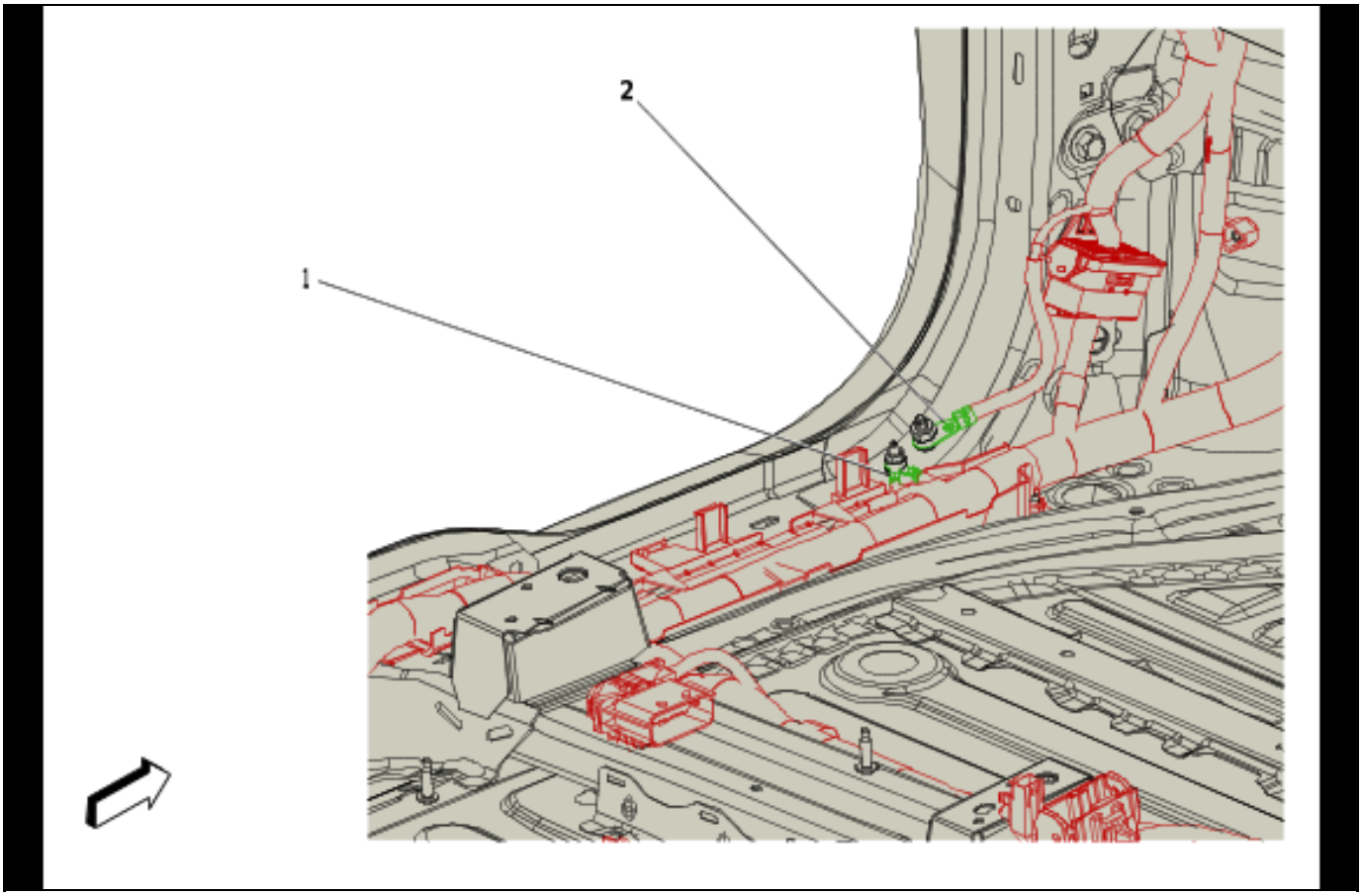

5774999

Items

(1) G304 Body Wiring Harness

(2) G201 Instrument Panel Wiring Harness

G202 and G305

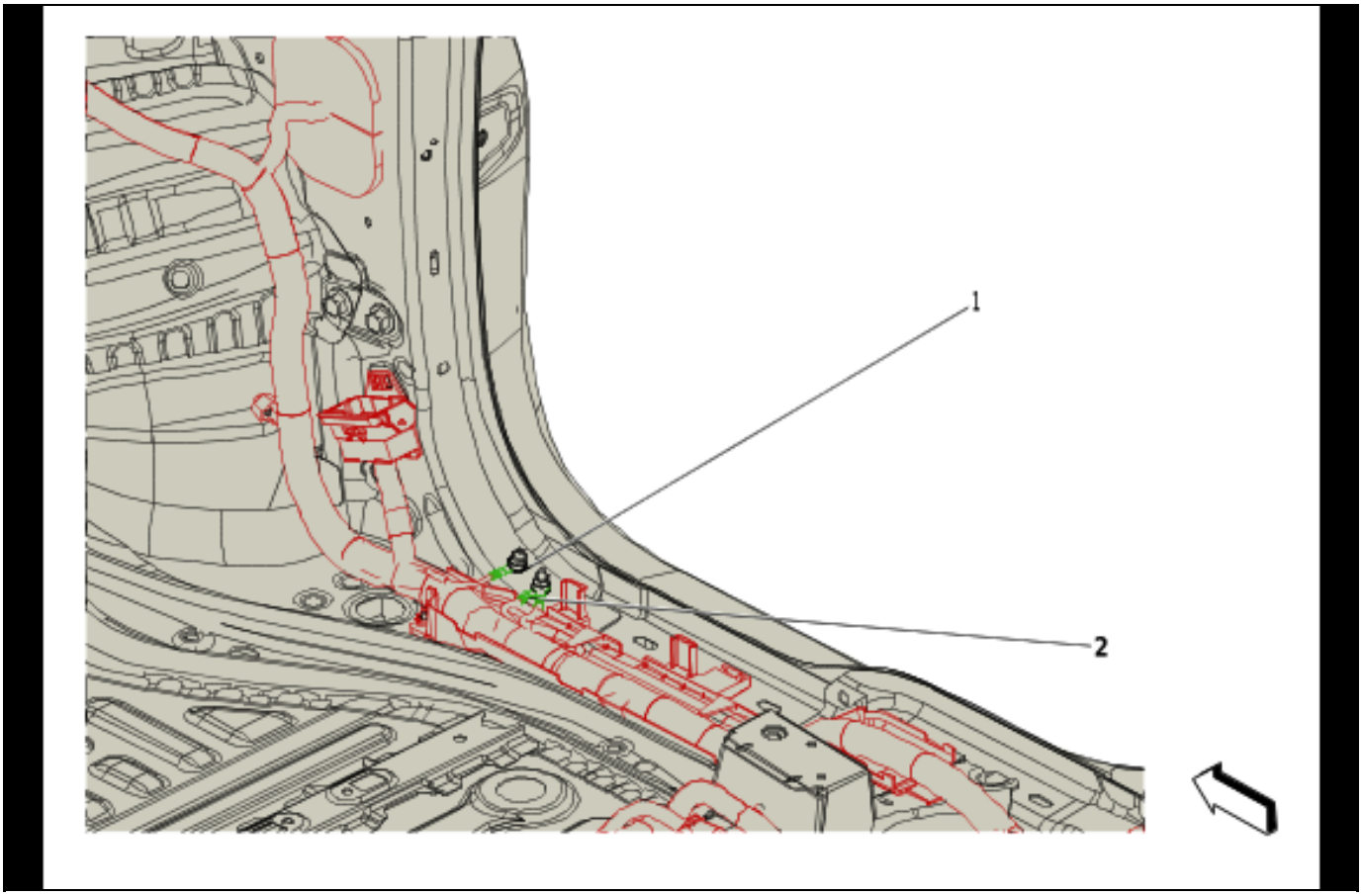

5775000

Items

(1) G202 Instrument Panel Wiring Harness

(2) G305 Body Wiring Harness

G203

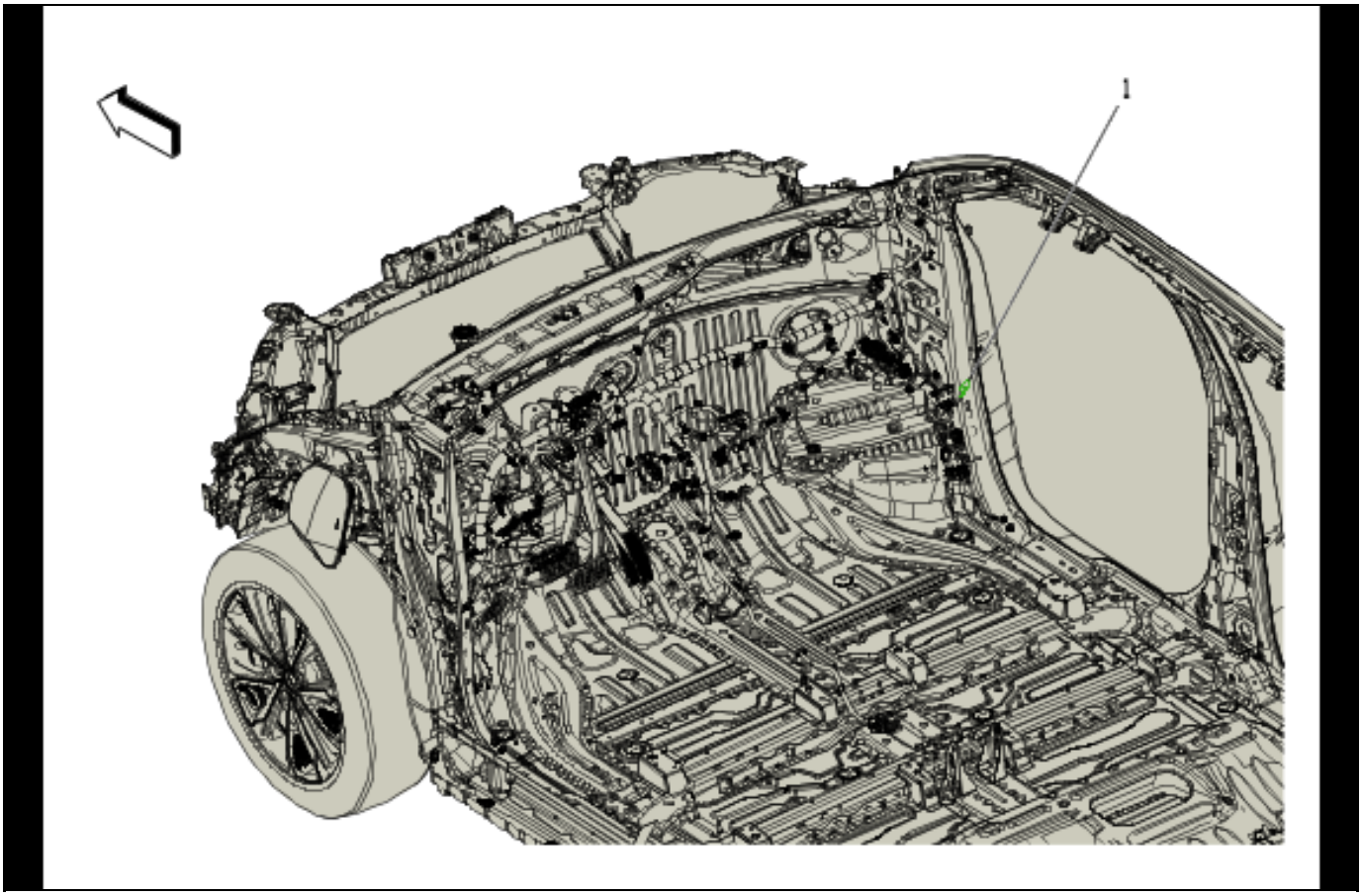

5765268

Items

(1) G203 Instrument Panel Wiring Harness

G260, G261, G262 and G263

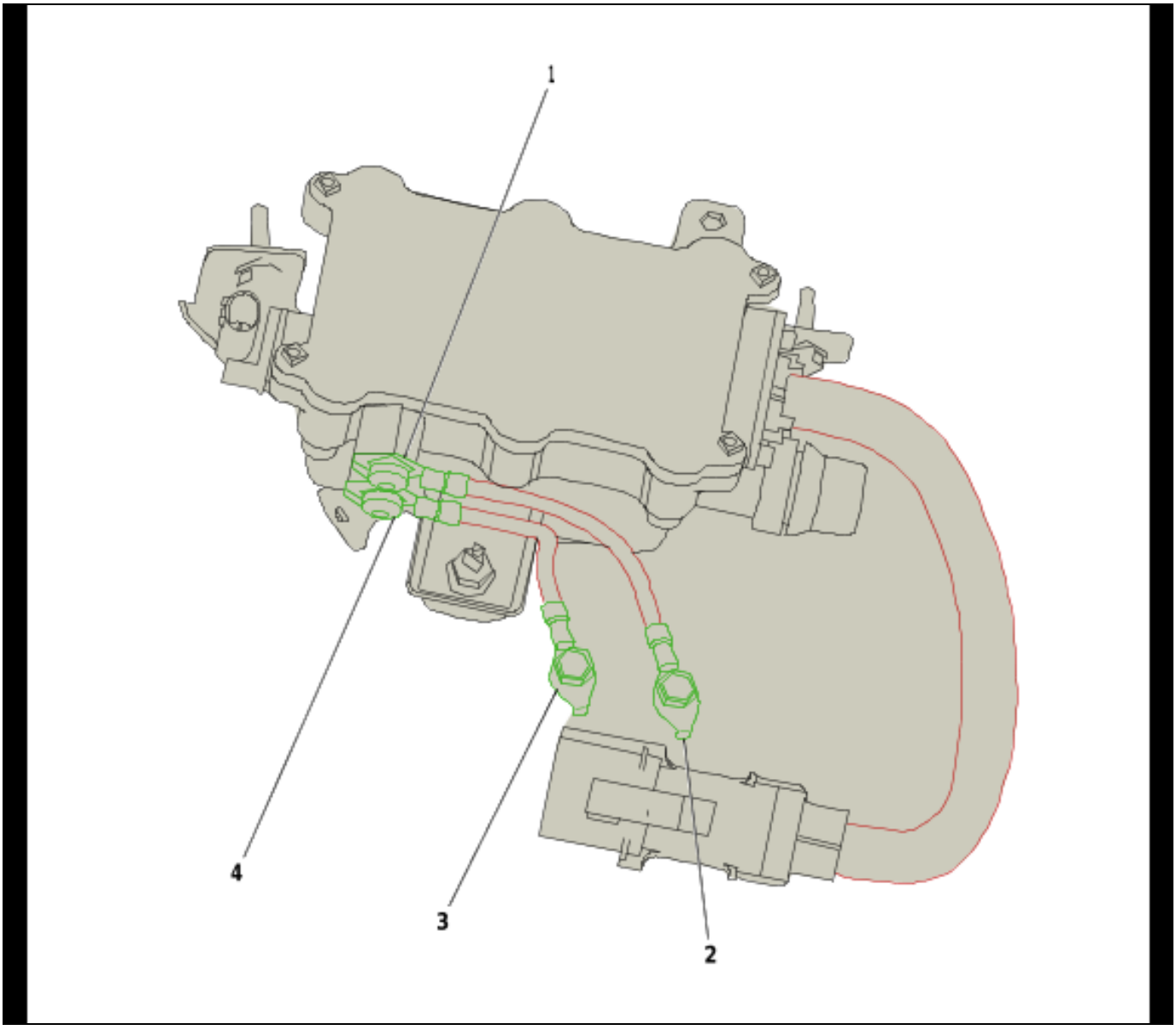

5775002

Items

(1) G261 Ground Jumper Wiring Harness
(2) G260 Ground Jumper Wiring Harness
(3) G262 Ground Jumper Wiring Harness
(4) G263 Ground Jumper Wiring Harness

G297, G298 and G299

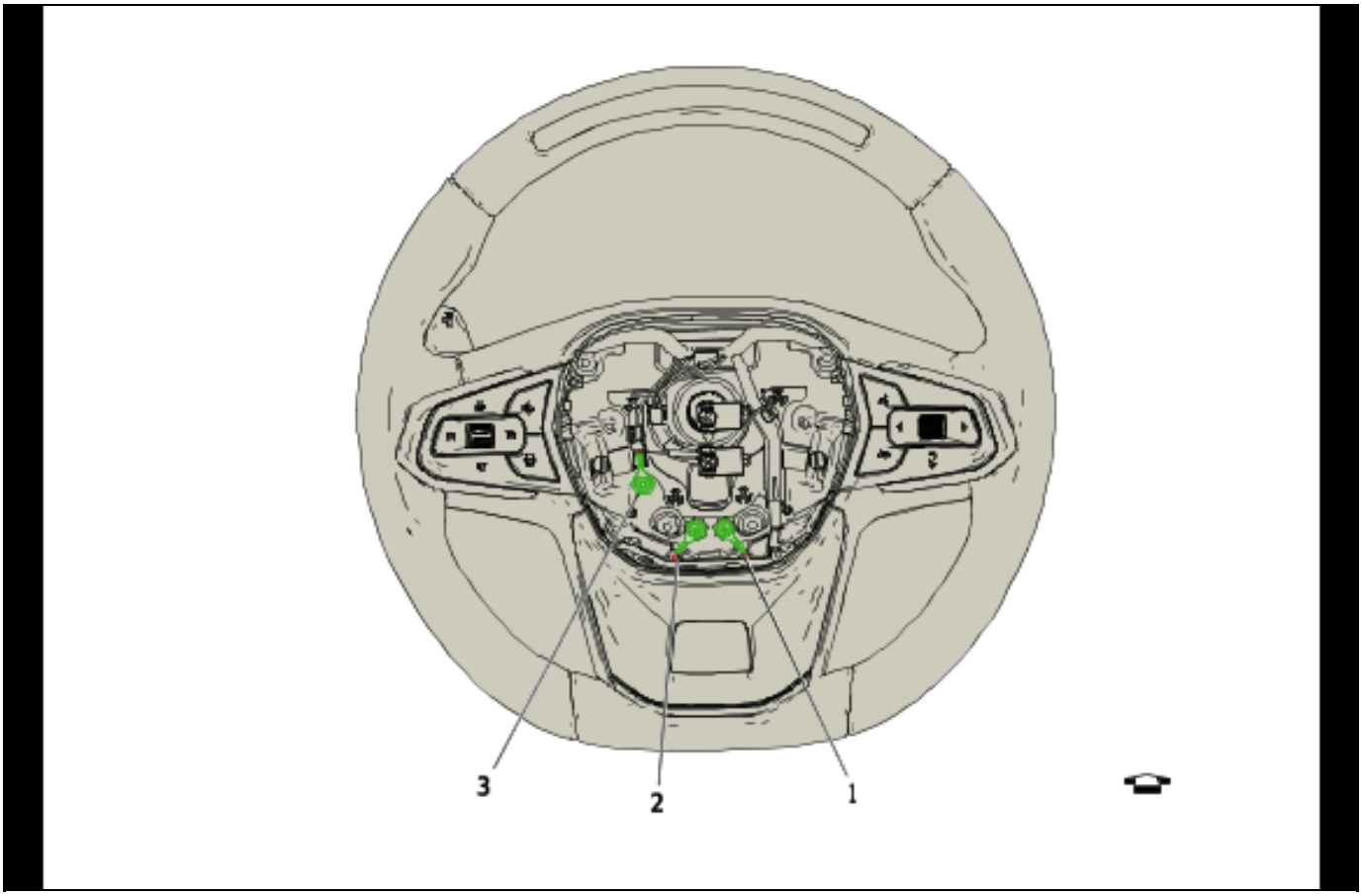

5898605

Items

(1) G299 Steering Wheel Pad Accessory Wiring Harness

(2) G298 Steering Wheel Pad Accessory Wiring Harness

(3) G297

G310

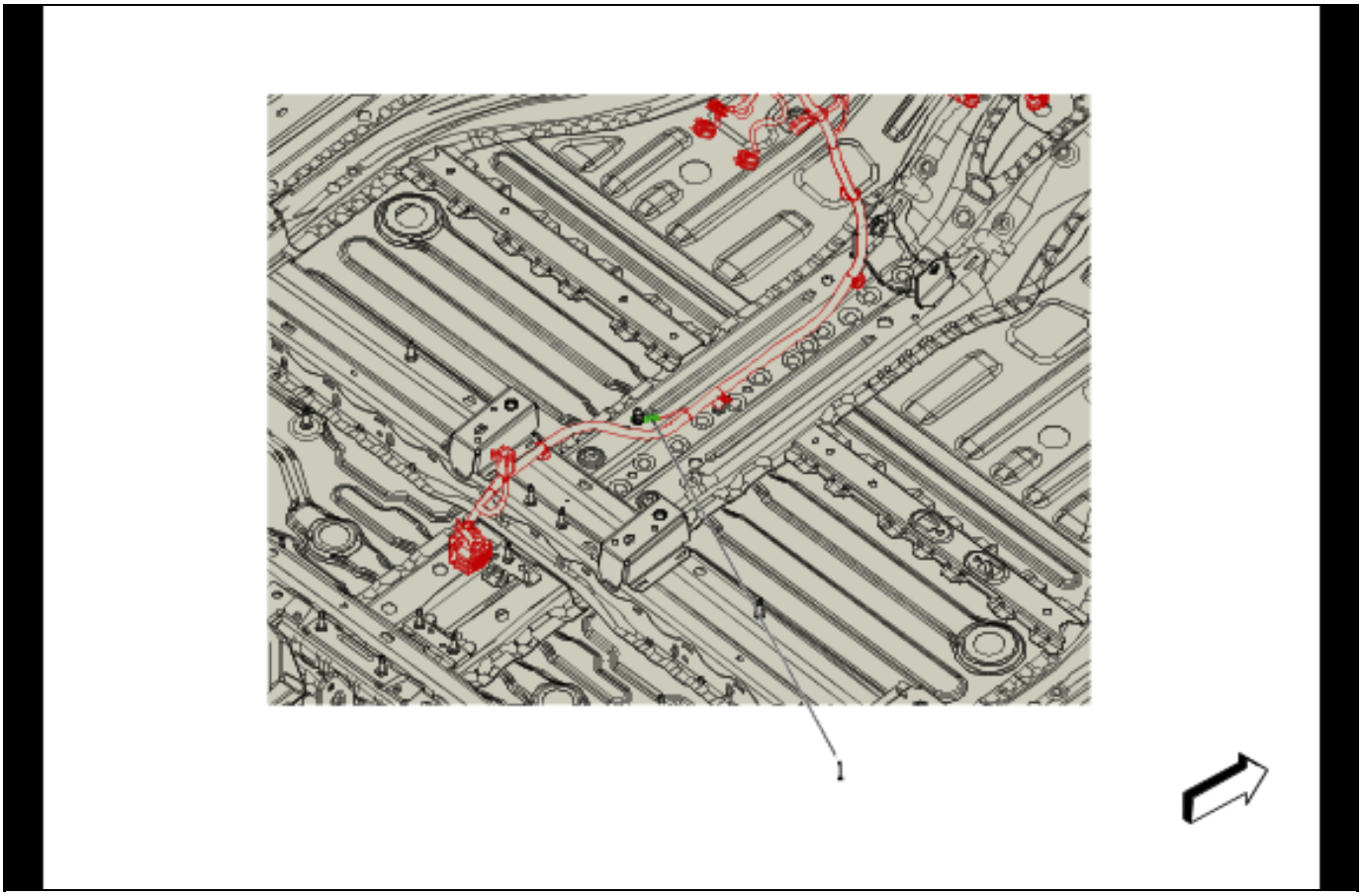

5775003

Items

(1) G310 Instrument Panel Wiring Harness

G355, G356, G357 and G358

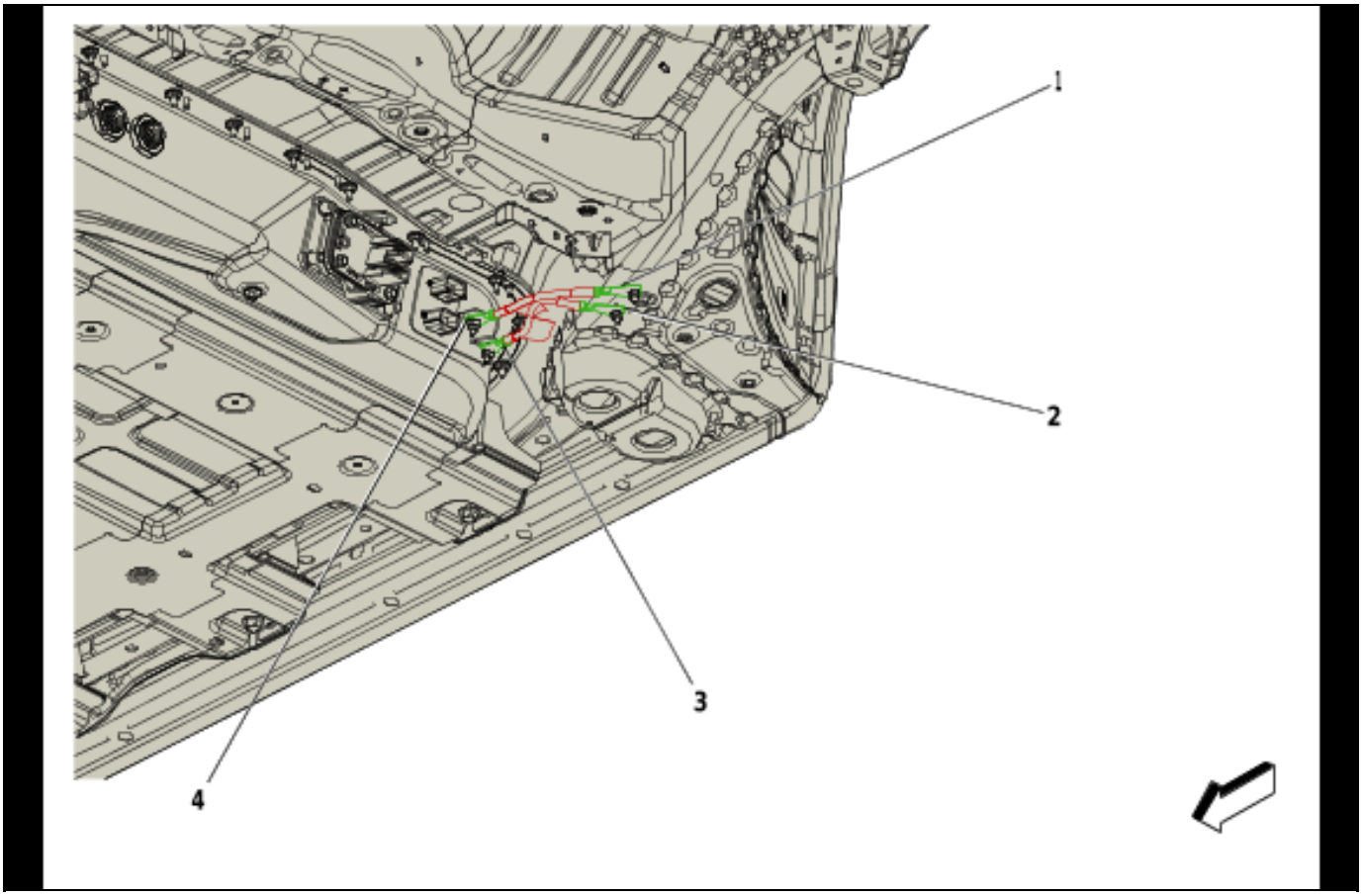

5775004

Items

(1) G357 Ground Jumper Wiring Harness
(2) G355 Ground Jumper Wiring Harness
(3) G356 Ground Jumper Wiring Harness
(4) G358 Ground Jumper Wiring Harness

G401, G404, G407 and G408

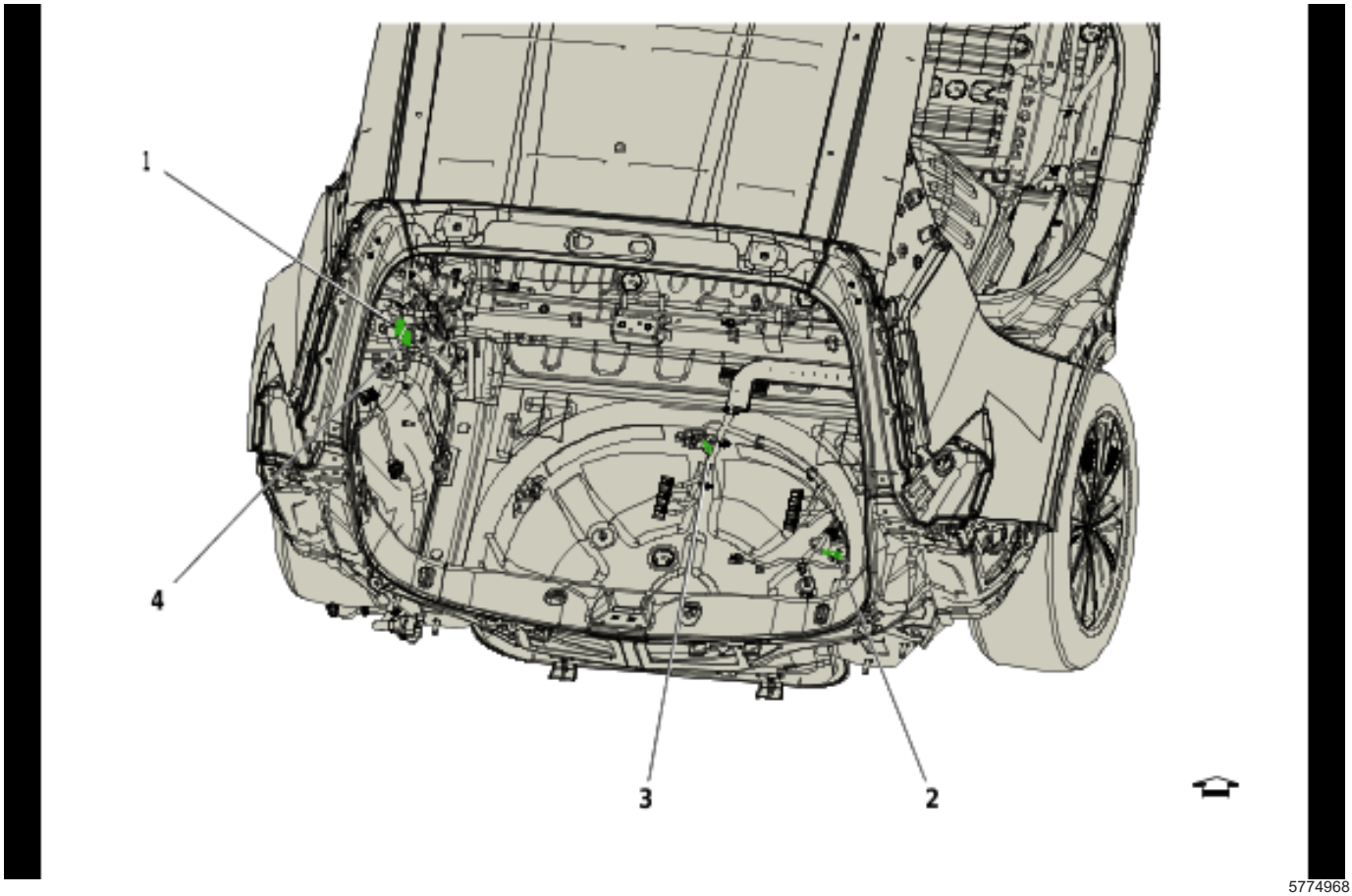

5774968

Items

(1) G404 Body Wiring Harness
(2) G408 Body Wiring Harness
(3) G407 Body Wiring Harness
(4) G401 Body Wiring Harness

G405

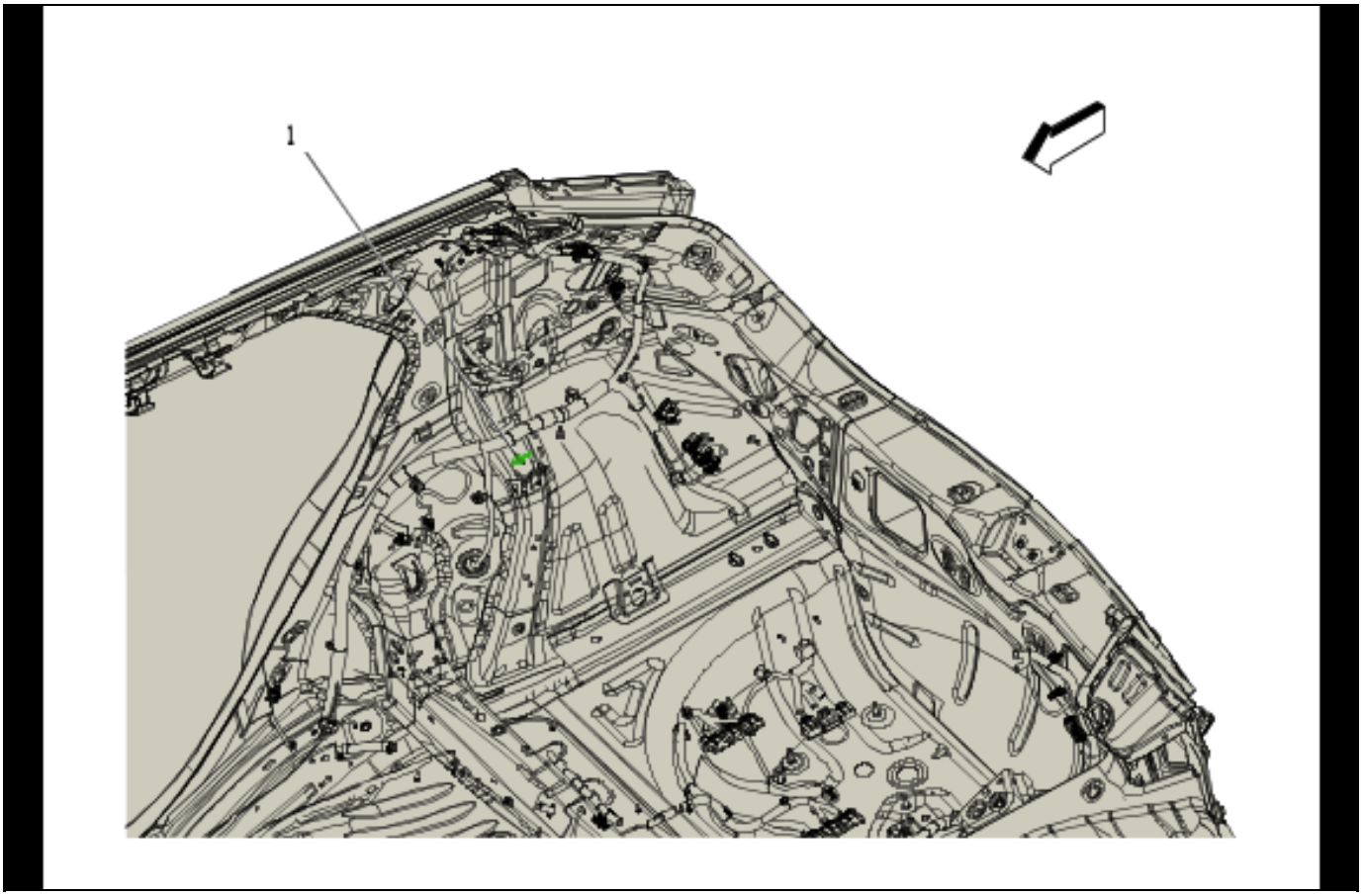

5765269

Items

(1) G405 Body Wiring Harness

Power Outlets

Schematic and Routing Diagrams

Cigar Lighter/Power Outlet Schematics (Accessory Power Receptacles and Wireless Charging)

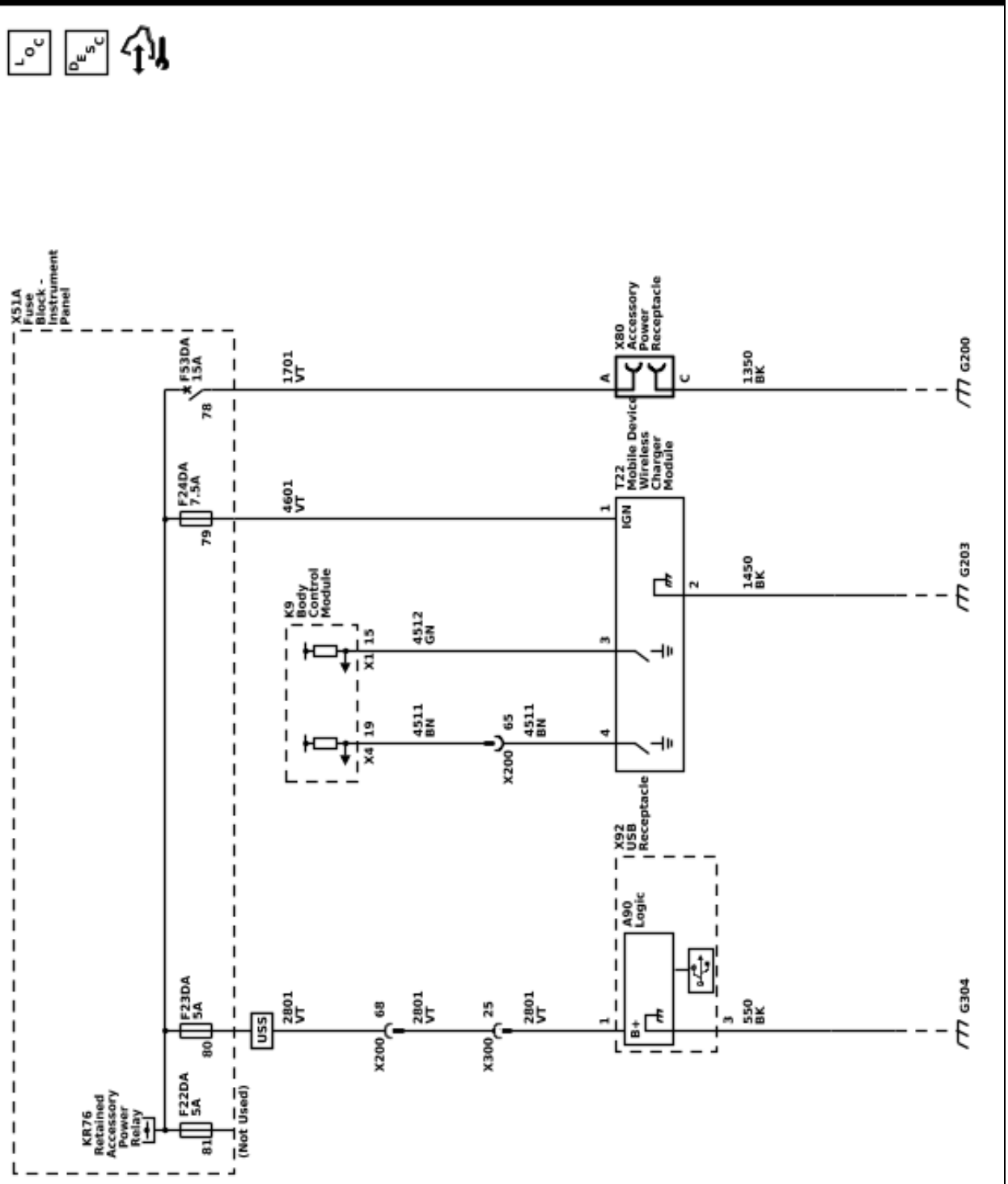

5910027

Description and Operation

Mobile Device Wireless Charger Description and Operation

Mobile Device Wireless Charging System

Mobile Device Wireless Charging System Block Diagram

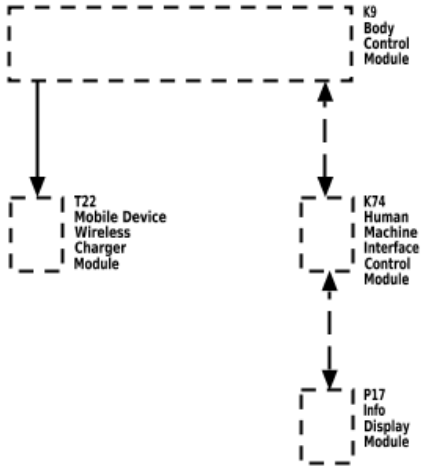

3607745

The Mobile Device Wireless Charging System (WCS) is an system for wirelessly charging mobile devices. It is capable of charging the batteries of compatible mobile devices. A compatible device is one that is compliant with Power Matters Alliance (PMA) or Wireless Power Consortium (WPC) Standard, meaning that it is equipped with a PMA or WPC wireless charge "receiver" that will work with the charge "transmitter" installed in the vehicle. The devices may utilize built-in charging circuitry or an adapter (external plug-in device which contains the charging circuitry). To check for phone or other device compatibility, refer to GM Total Connect.

Warning: Remove all objects from the charging pad before charging your mobile device. Objects, such as coins, keys, rings, paper clips, or cards, between the phone and charging pad will become very hot. On the rare occasion that the charging system does not detect an object, and the object gets wedged between the phone and charger, remove the phone and allow the object to cool before removing it from the charging pad, to prevent burns.

Charging

To charge a device, place it on the charging surface in the vehicle. There is a charging coil located in the center of the charging surface. The device has a charging coil typically near the center of the device. These coils must be lined up in order for charging to proceed. When the interruptible retained accessory power (IRAP) relay is closed (this is true typically when vehicle ignition is in Run or Accessory position), the WCS will detect the device, establish communications with the device to confirm it is a compatible device, and then deliver charging power to the device via wireless interface. The WCS will be able to deliver up to 5W of power to compatible devices. It shall only enter a charging state if communication is established and a compatible device is identified.

The WCS shall not enter a charging state if there is no communication established with a compatible device. If a non-compatible device or metallic foreign object is detected, the WCS will not transfer power. The charger monitors its internal temperature and will shut down if the charger temperature exceeds 185F (85C).

Indicator

The body control module will detect the device battery is charging and send a serial data message on the GMLAN bus to the radio display. The radio display will indicate a device is currently charging. When the indicator is toggling on and off this indicates a thermal limit has been reached and the device will not charge. For more information refer to the owners manual.

Cooling

The wireless charger is kept cool using the HVAC system. There is a dedicated HVAC duct that connects to the Wireless Charging Module bracket (which holds the module and the mat).

Power Outlets Description and Operation

12 Volt Power Outlet Receptacle Description and Operation

The 12 V accessory power receptacles are supplied with power by the accessory relay.

The vehicle is fitted with a 12 V accessory power receptacle. The accessory power outlets are controlled by an ignition operated relay. The accessory power receptacle is operational when the ignition is turned to either the On or the Accessories positions. The The X80C Accessory Power Receptacle-Cargo is controlled by B+ and is operational all the time.

220 Volt Power Outlet Receptacle System Description

The alternating current (AC) accessory power outlet system consists of the accessory DC/AC power inverter module and the accessory power receptacle – 220 V AC. The accessory DC/AC power inverter module converts 12 V direct current (DC) battery power to 220 V at 60 Hertz (Hz) AC power to operate AC powered devices. The accessory DC/AC power inverter module provides up to 150 watts of power. The accessory power receptacle – 220 V AC provides the usual connection for AC powered devices.

220 Volt Power Outlet Receptacle System Operation

The accessory DC/AC power inverter module receives fuse protected battery voltage and is connected to the 12 V electrical system ground. The accessory power receptacle – 220 V AC has an internal switch, that detects when an AC powered device is plugged into the outlet. When the ignition is ON, and an AC powered device is plugged into the accessory power receptacle – 220 V AC, the normally open switch in the accessory power receptacle – 220 V AC, closes. When the accessory DC/AC power inverter module detects the voltage from the accessory power receptacle – 220 V AC switch, the inverter module begins to supply 220 V AC to the accessory power receptacle – 220 V AC after a 1.5 s delay. The accessory AC power system is protected against circuit overload and circuit shorts to ground.

220 Volt Power Outlet Receptacle Isolation Fault Protection

The accessory DC/AC power inverter module contains a ground fault circuit interrupter (GFCI). GFCI monitors the 220 V circuit for a short to vehicle chassis ground. If a 220 V AC short to ground is detected, the accessory DC/AC power inverter module will turn OFF. The module remains OFF, until the AC powered device is unplugged from the outlet, and then plugged into the outlet after a 3 s delay.

220 Volt Power Outlet Receptacle Overload Shutdown

The accessory DC/AC power inverter module will turn OFF if the current in the 220 V circuit is greater than 3.8 A for 1 s , or 2.5 A for 10 s . The module will turn ON again, when the AC powered device is unplugged from the outlet, and then plugged into the outlet after a 3 s delay.

220 Volt Power Outlet Receptacle Internal Shutdown

The accessory DC/AC power inverter module will turn OFF if the B+ supply voltage is greater than 16.5 V or less than 11 V. The module will also turn OFF if the device temperature is greater than 85°C (185°F). The module will turn ON again, after the shutdown condition is corrected, and the AC powered device is unplugged from the outlet, and then plugged into the outlet.

USB Receptacle Description and Operation (USS)

The vehicle is fitted with USB charge port receptacles at the rear of the floor console. These USB receptacles are for charging devices only. The USB receptacles are controlled by an ignition operated relay and are operational when the ignition is turned to either the On or the Accessories positions.

Wiring Systems and Power Management

Schematic and Routing Diagrams

5909995

Power Distribution Schematics (B+ Bus (1 of 2))

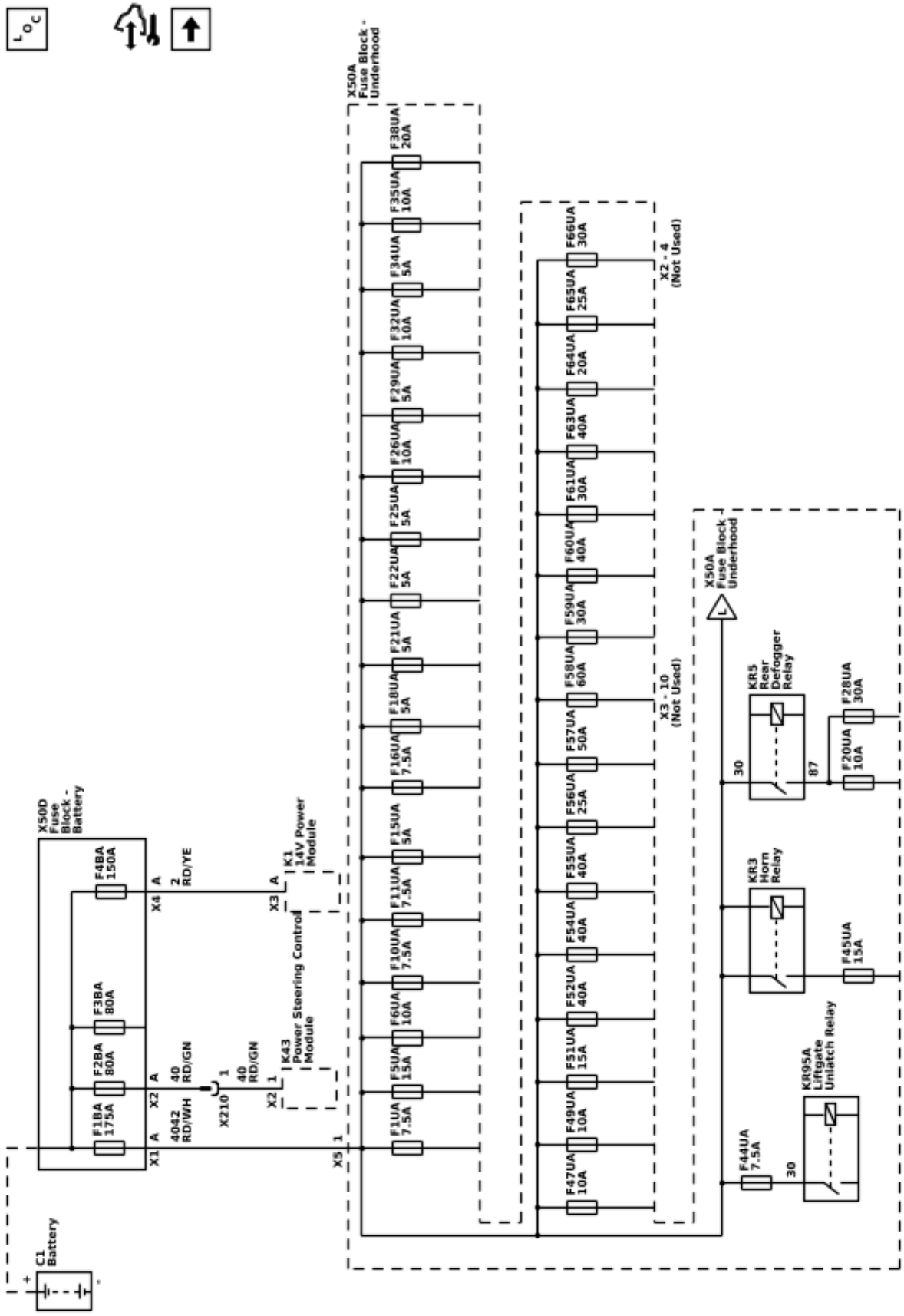

Power Distribution Schematics (B+ Bus (2 of 2))

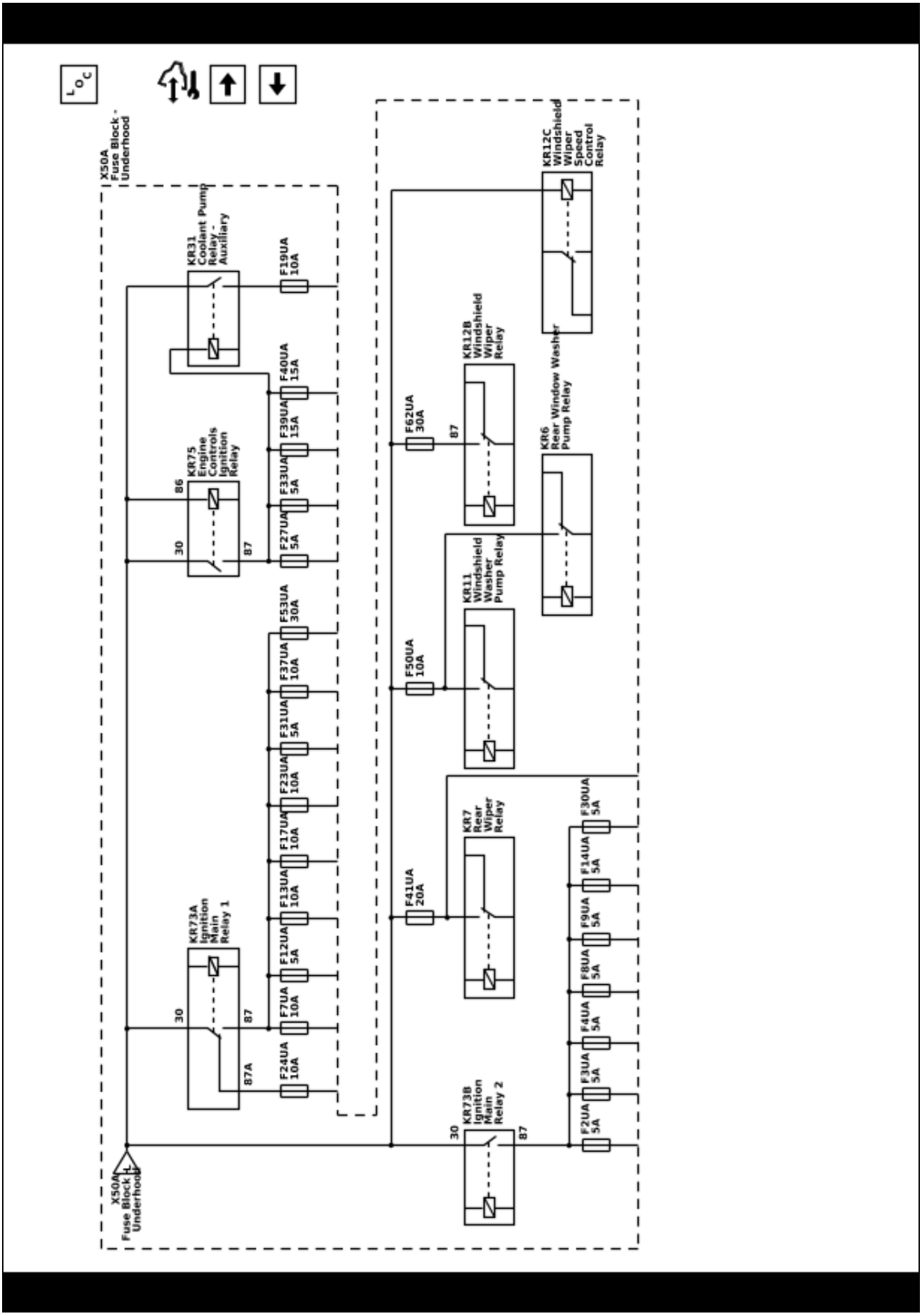

5909996

Power Distribution Schematics (F1UA, F6UA, F10UA, F11UA, F15UA, F16UA, F18UA, F21UA, F22UA, and F25UA Fuses)

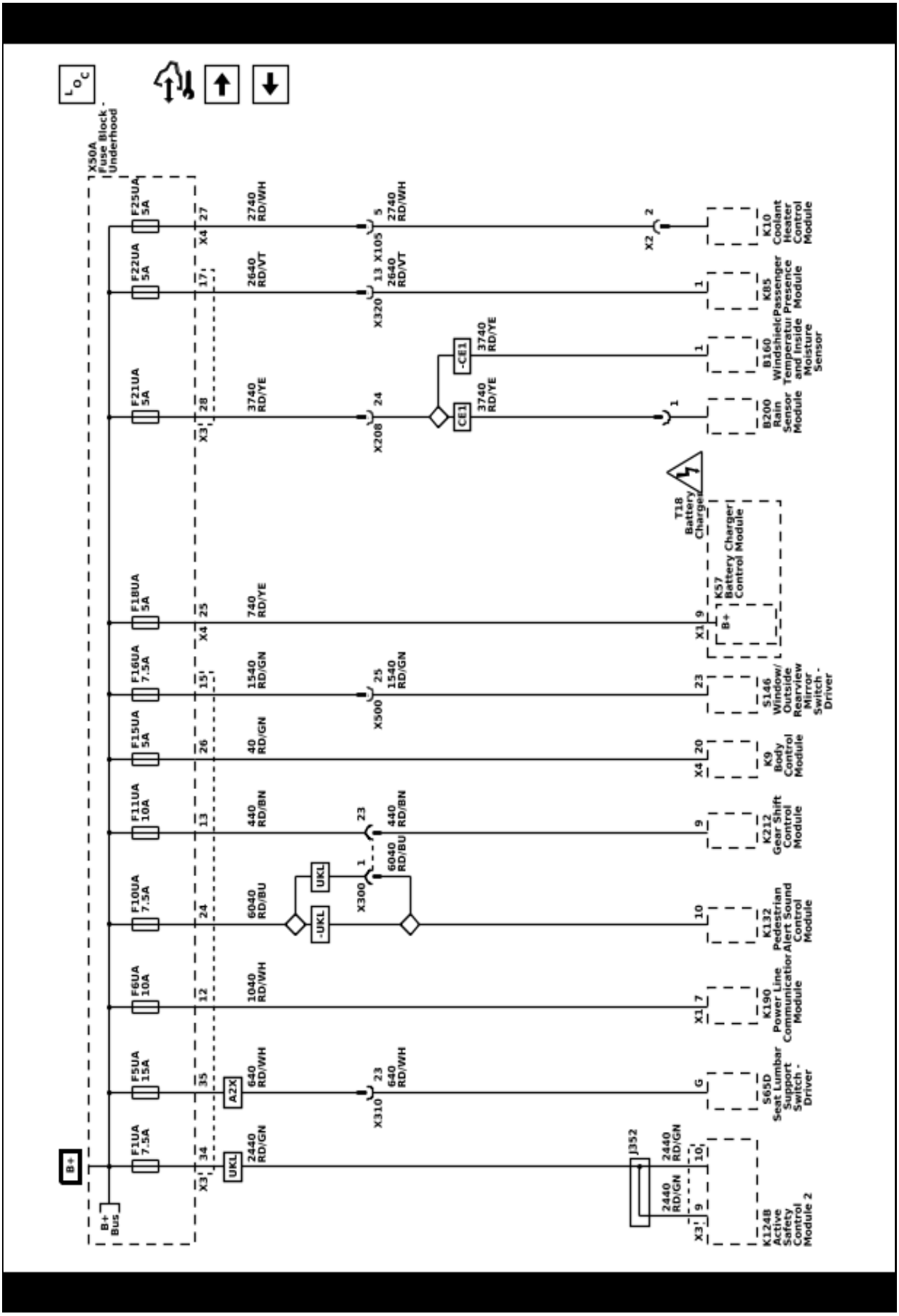

Power Distribution Schematics (F26UA, F29UA, F32UA, F34UA, F35UA, F38UA, F47UA, F49UA, F51UA, F52UA, F54UA, F55UA, and F56UA Fuses)

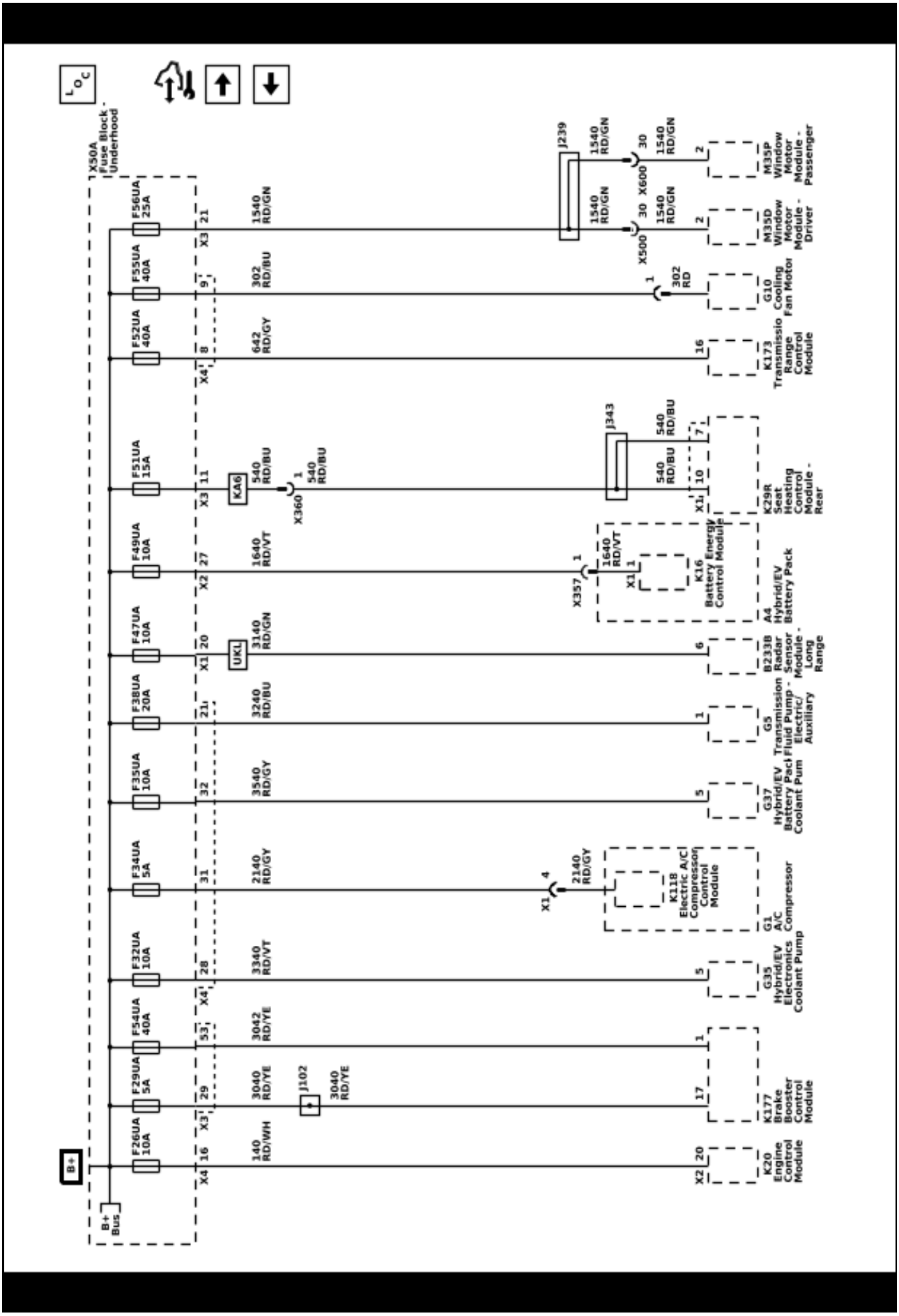

Power Distribution Schematics (F19DA, F20DA, F21DA, F54DA, F57UA, F59UA, F60UA, F61UA, F63UA, F64UA, and F65UA Fuses)

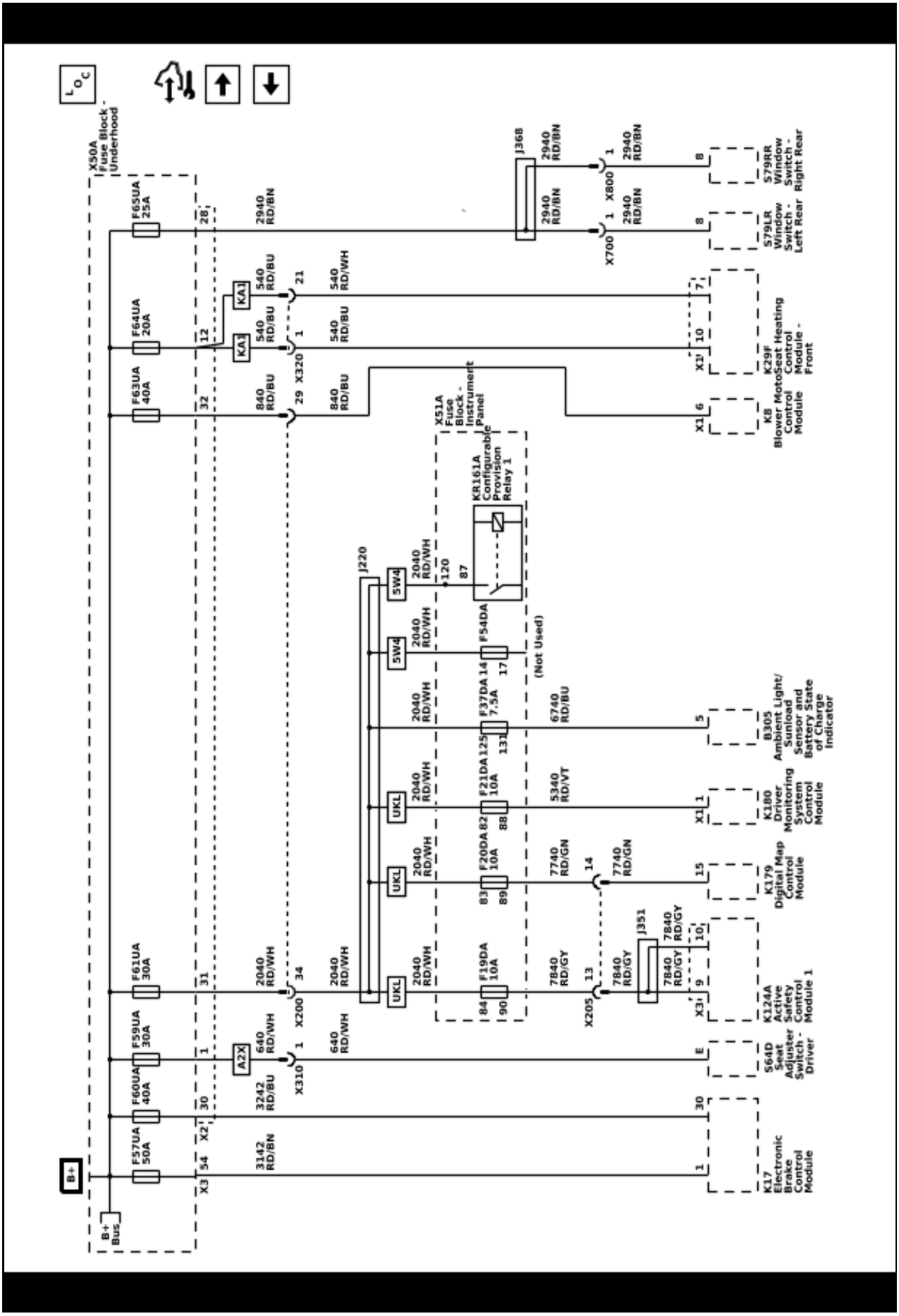

Power Distribution Schematics (F25DA, F26DA, F27DA, F28DA, F30DA, F7UA, F12UA, F13UA, F17UA, F23UA, F24UA, F31UA, F37UA, and F53UA Fuses)

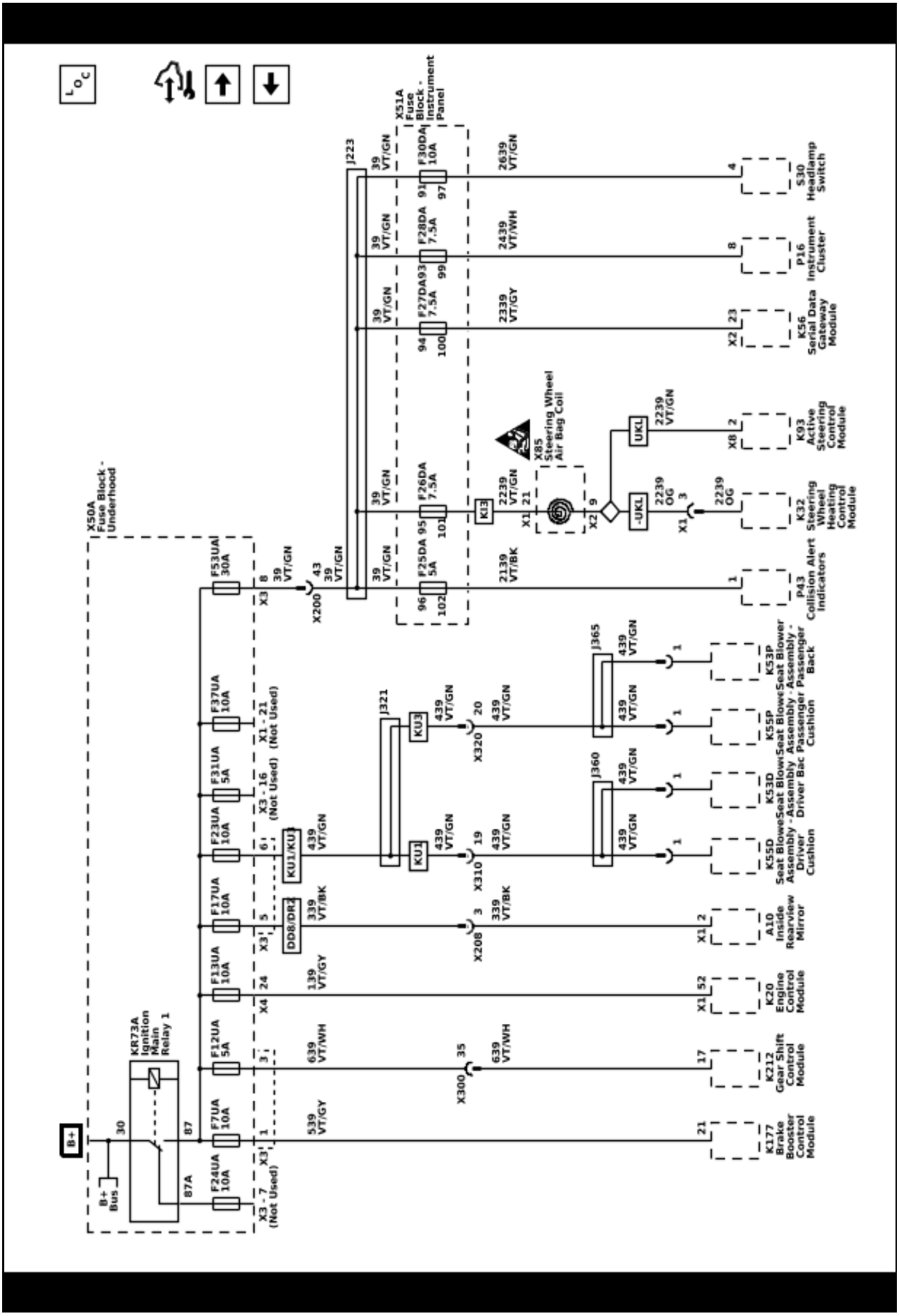

Power Distribution Schematics (F2UA, F3UA, F4UA, F8UA, F9UA, F14UA, F19UA, F27UA, F30UA, F33UA, F39UA, and F40UA Fuses)

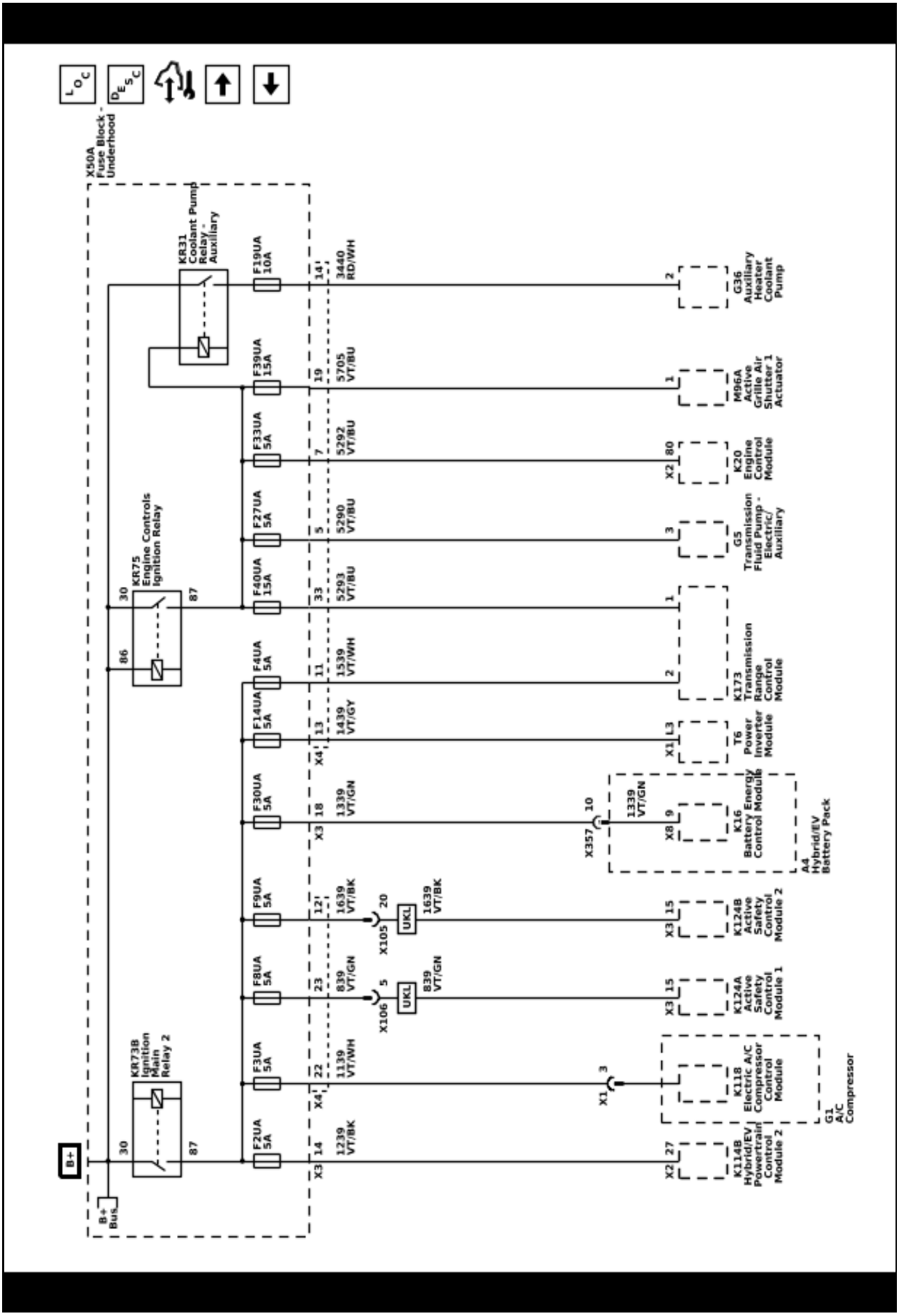

Power Distribution Schematics (F20UA, F28UA, F41UA, and F45UA Fuses)

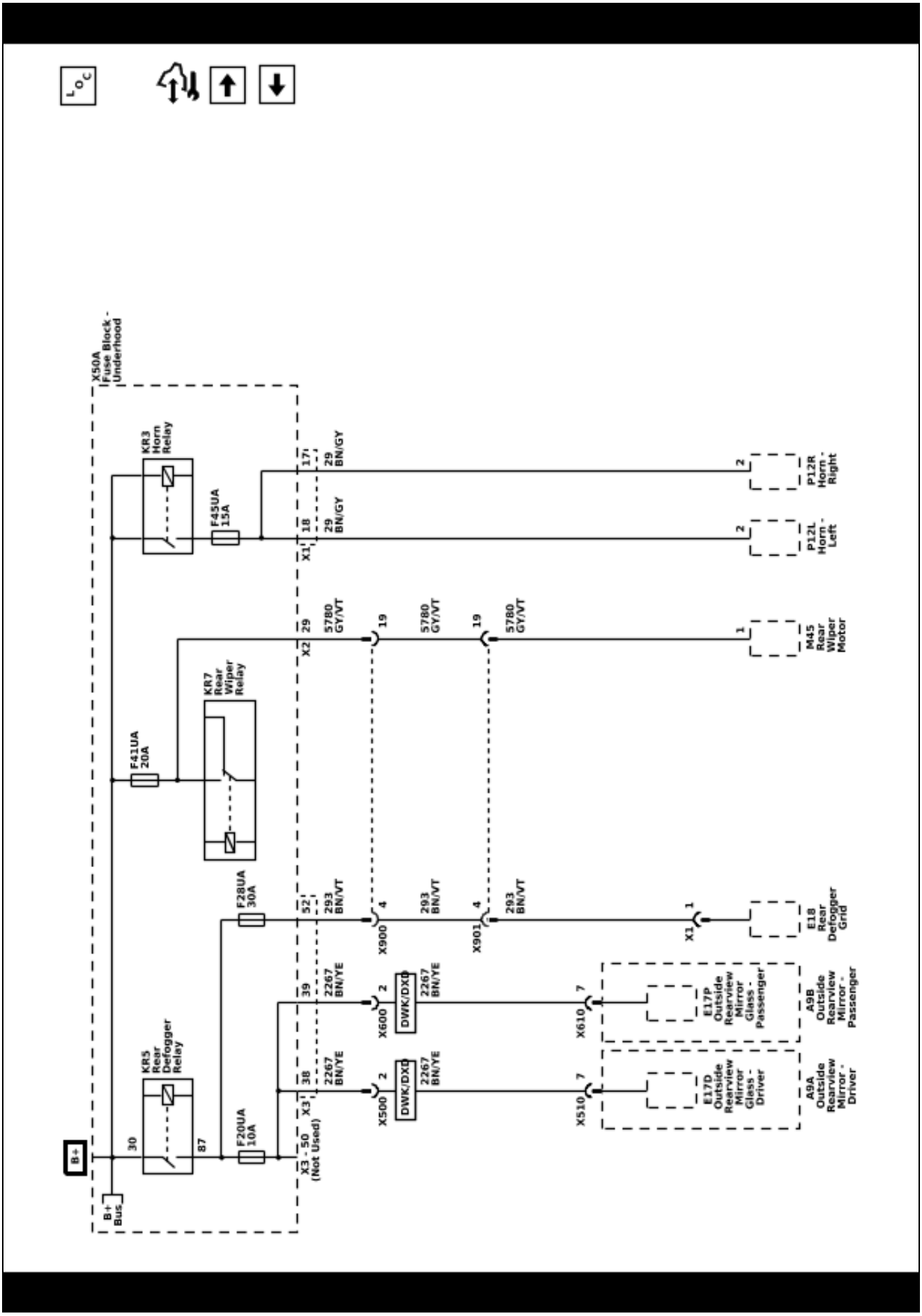

Power Distribution Schematics (F3BA, F1DA, F2DA, F3DA, F4DA, F5DA, F6DA, F7DA, F8DA, F9DA, F12DA, F17DA, F18DA, and F43DA Fuses)

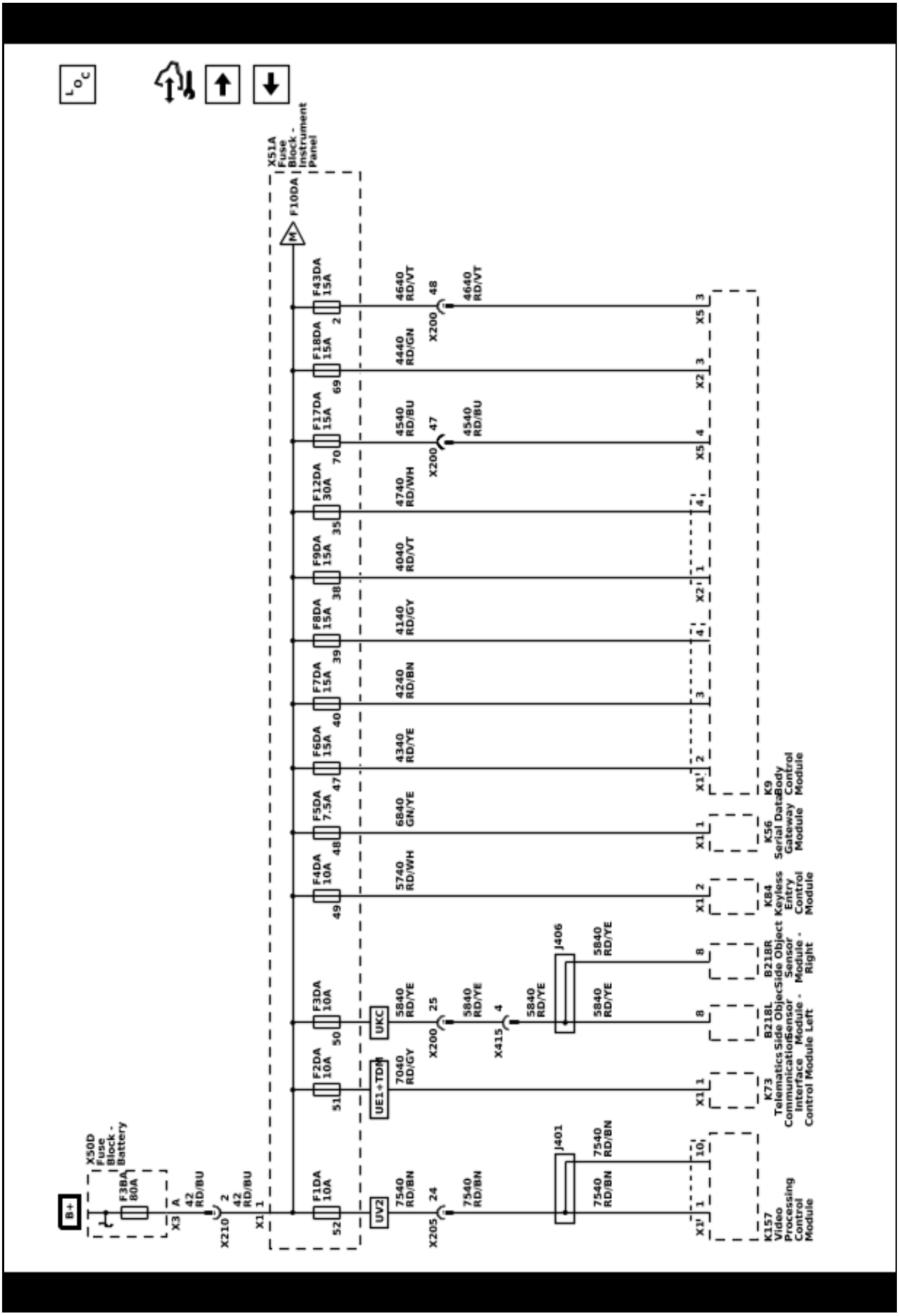

Power Distribution Schematics (F10DA, F11DA, F13DA, F14DA, F15DA, F16DA, F44DA, F45DA, F46DA, F47DA, F48DA, F49DA, F50DA, and F56DA Fuses)

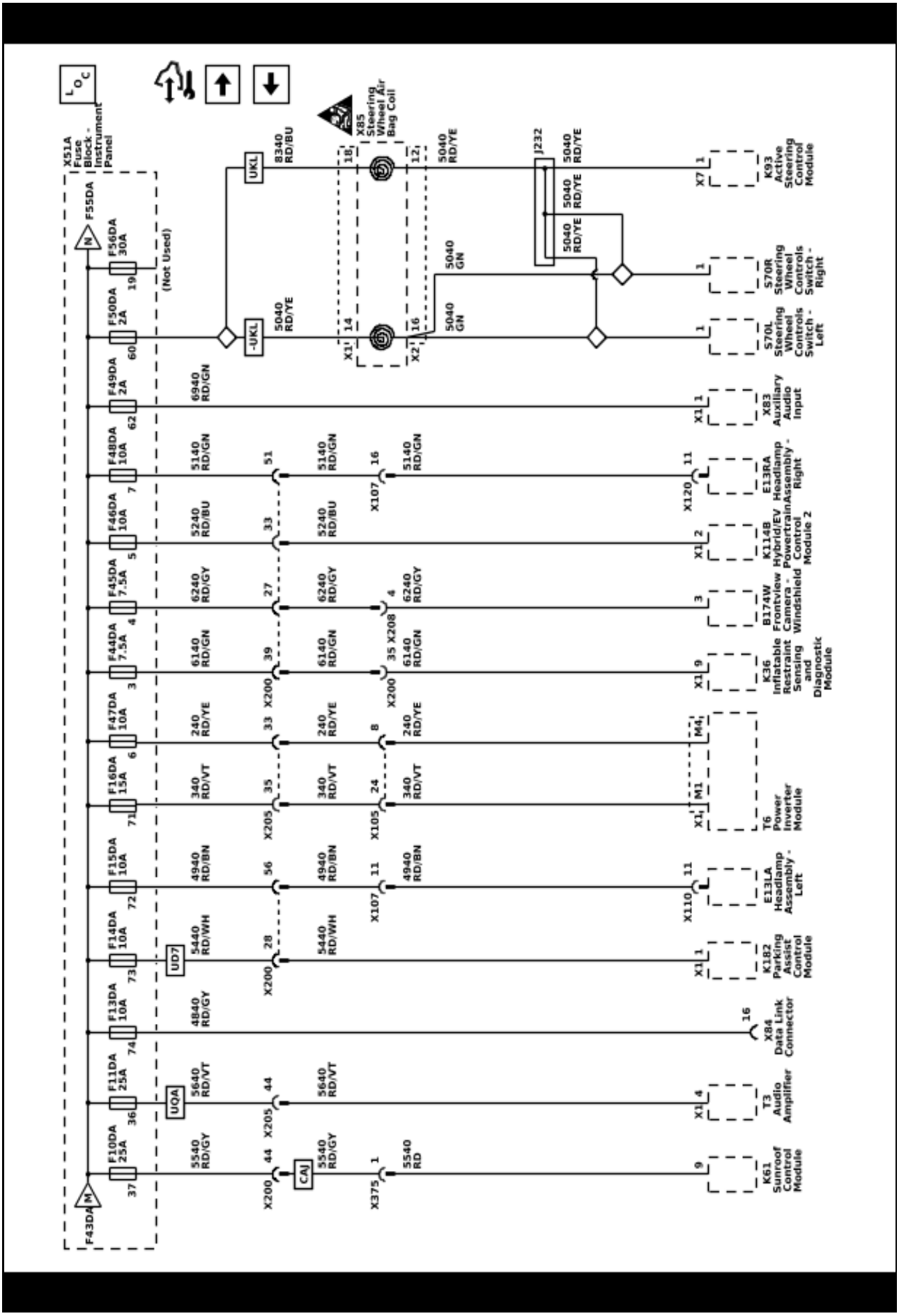

Power Distribution Schematics (F22DA, F23DA, F24DA, F31DA, F32DA, F33DA, F34DA, F35DA, F36DA, F52DA, F53DA, and F55DA Fuses)

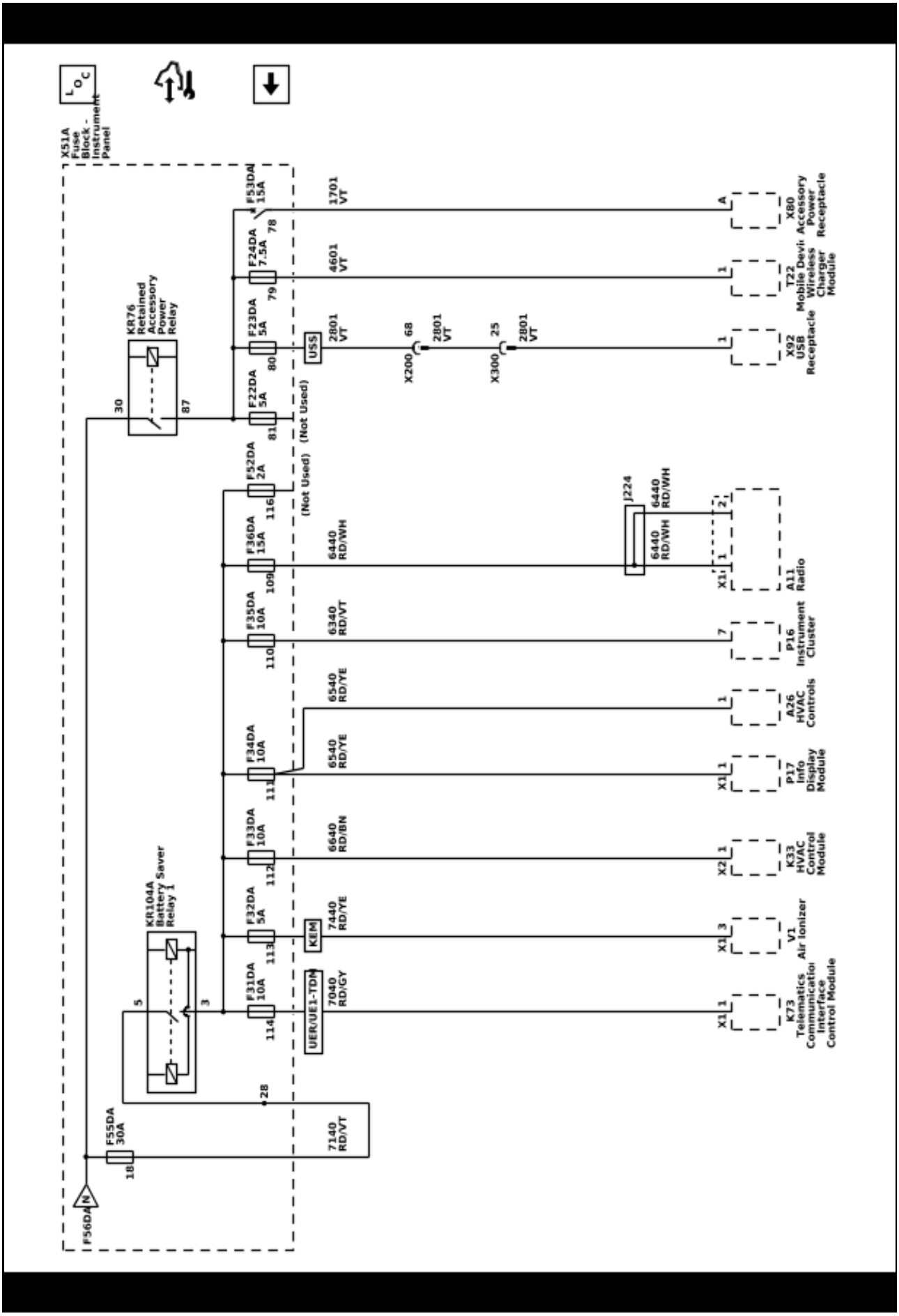

Power Moding Schematics (Ignition Mode Switch)

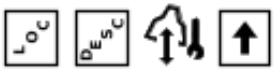

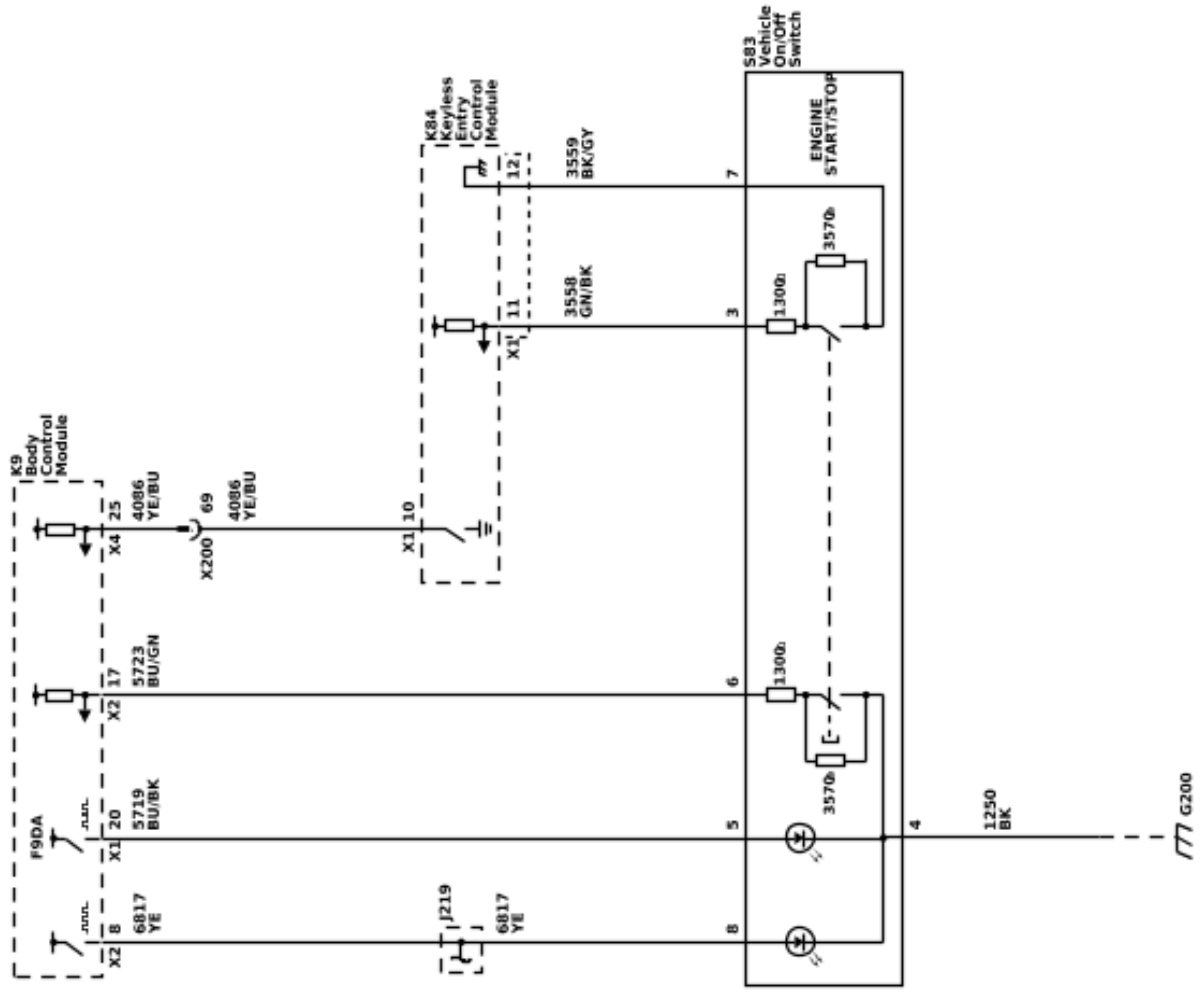

5910011

Power Moding Schematics (Ignition Power and Ignition Main Relay 1 and Ignition Main Relay 2)

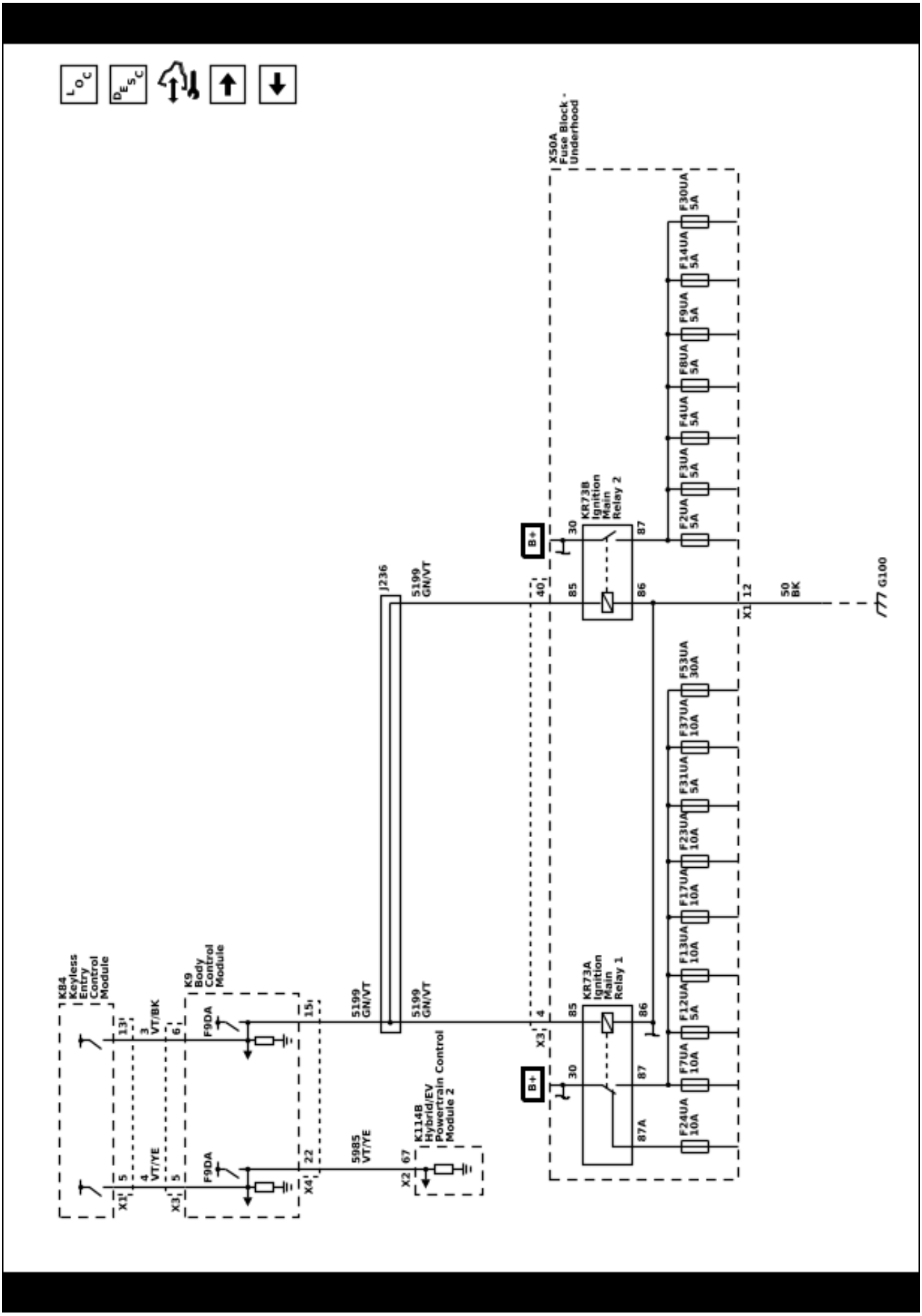

5910012

Power Moding Schematics (Retained Accessory Power and Battery Saver Relay 1)

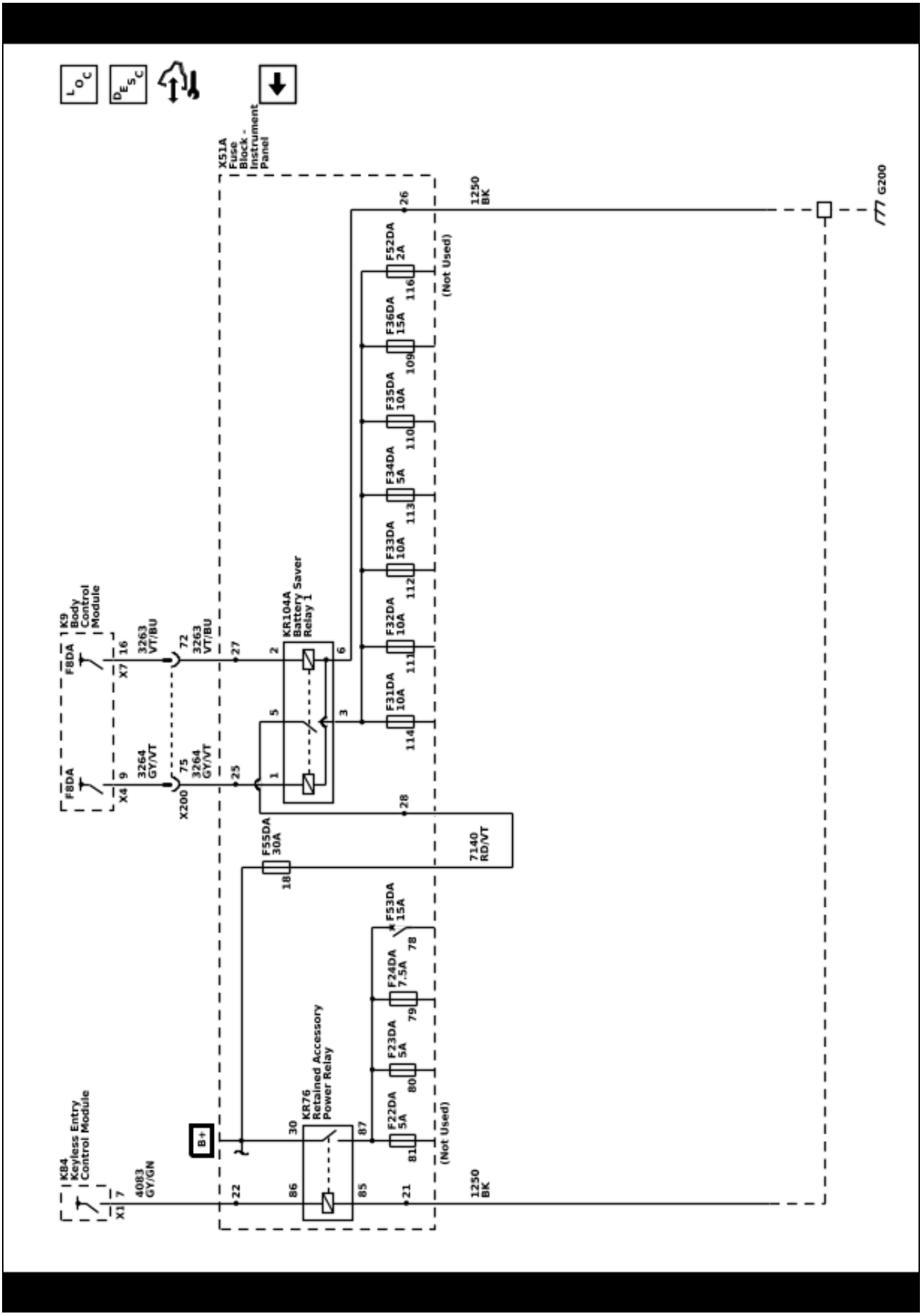

5910013

Ground Distribution Schematics (G100, G101, G102, G103, G104, G106 G108, and G152)

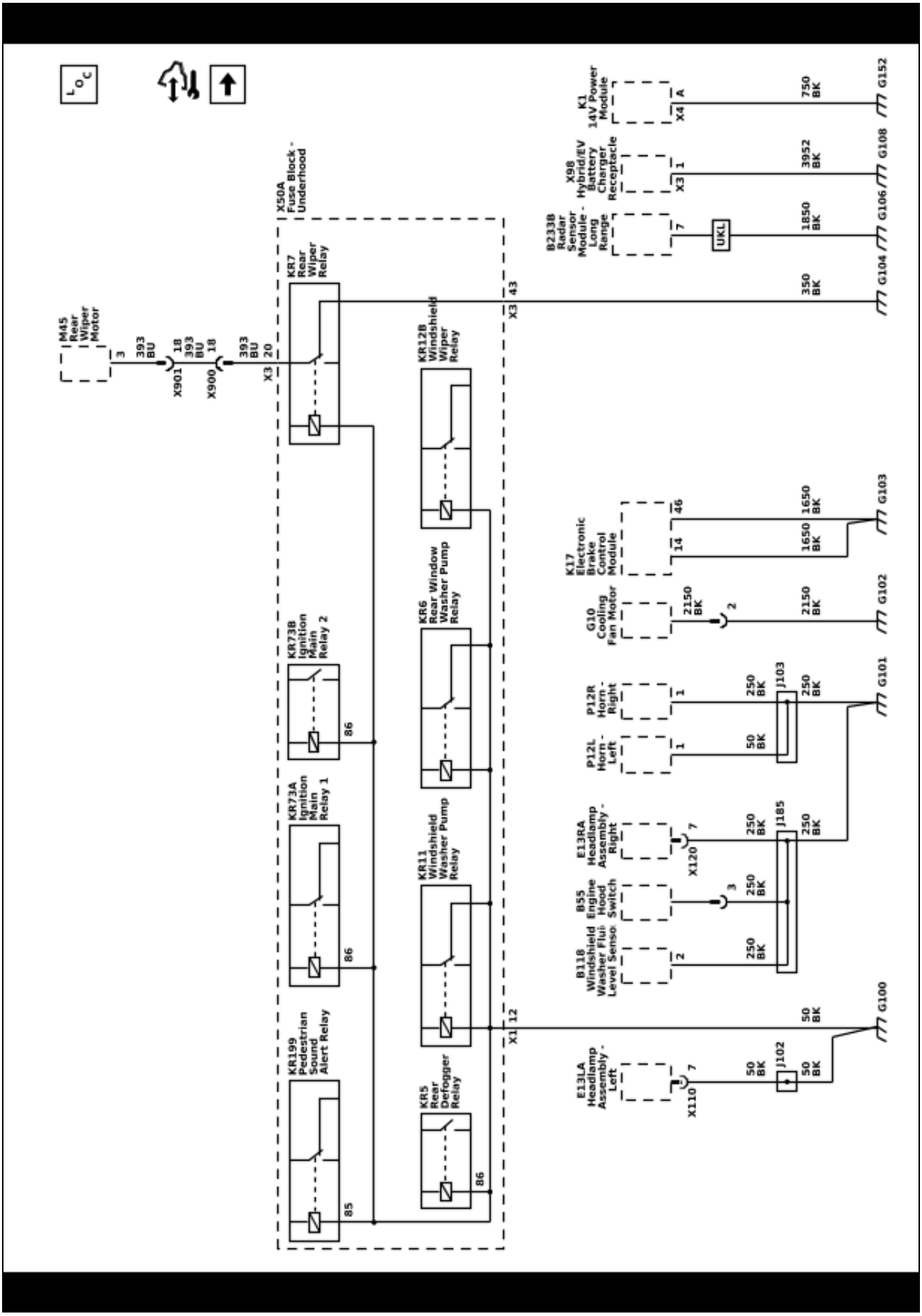

Ground Distribution Schematics (G105, G107, G116, G201 and G310)

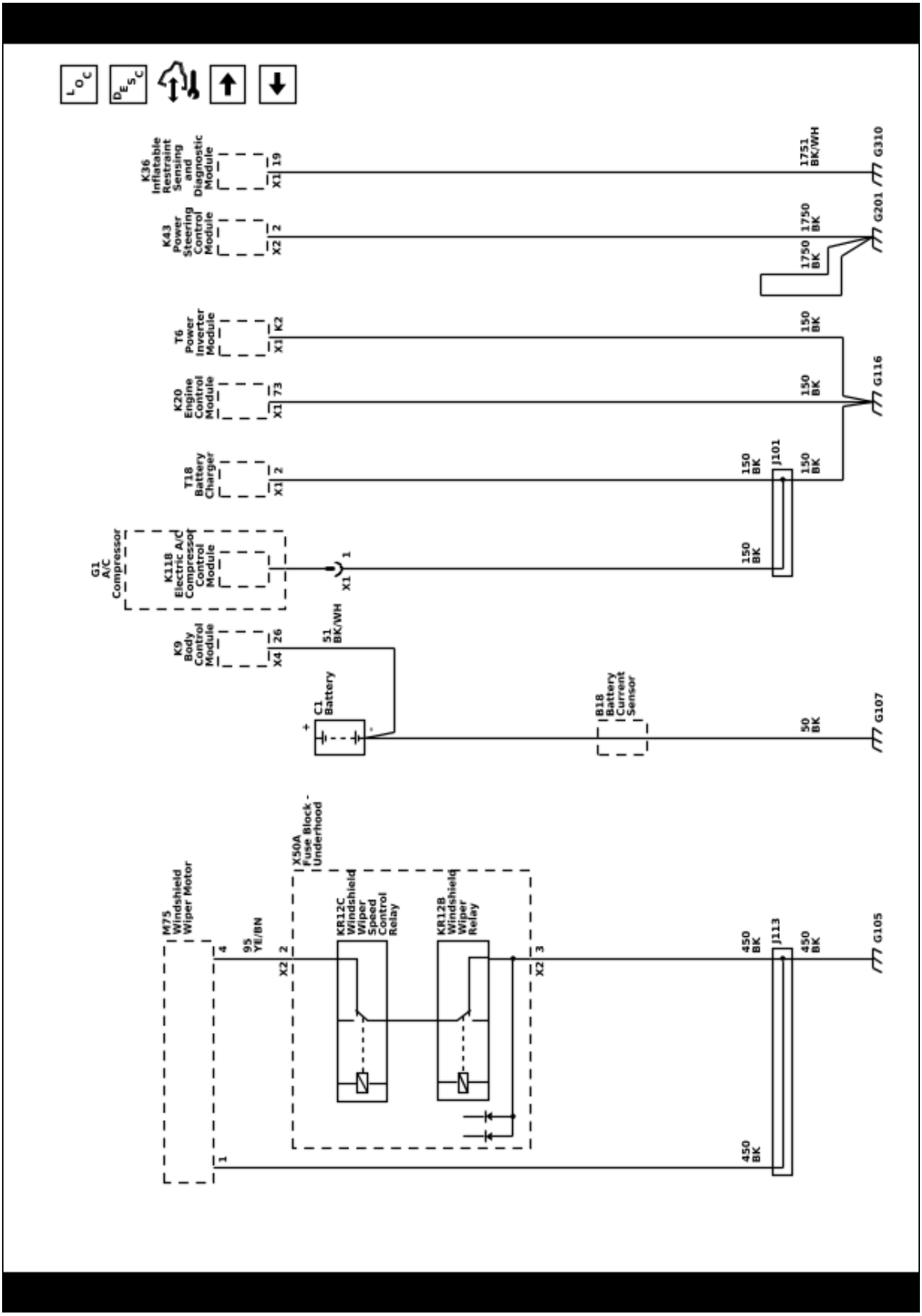

5910017

Ground Distribution Schematics (G111, G112, G150, G151, G153, G154, G155, G156, G157 and G158)

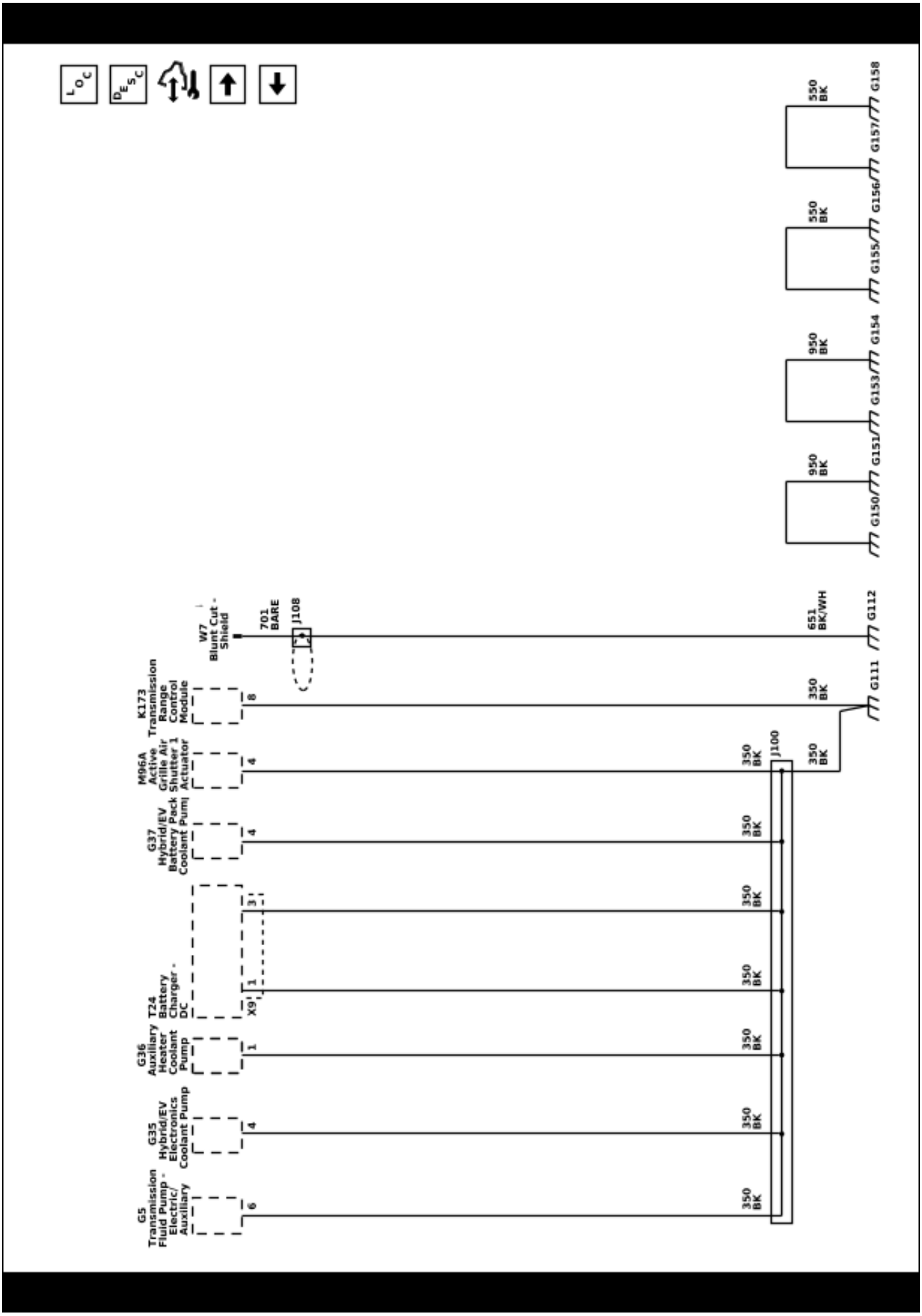

Ground Distribution Schematics (G200 (1 of 2))

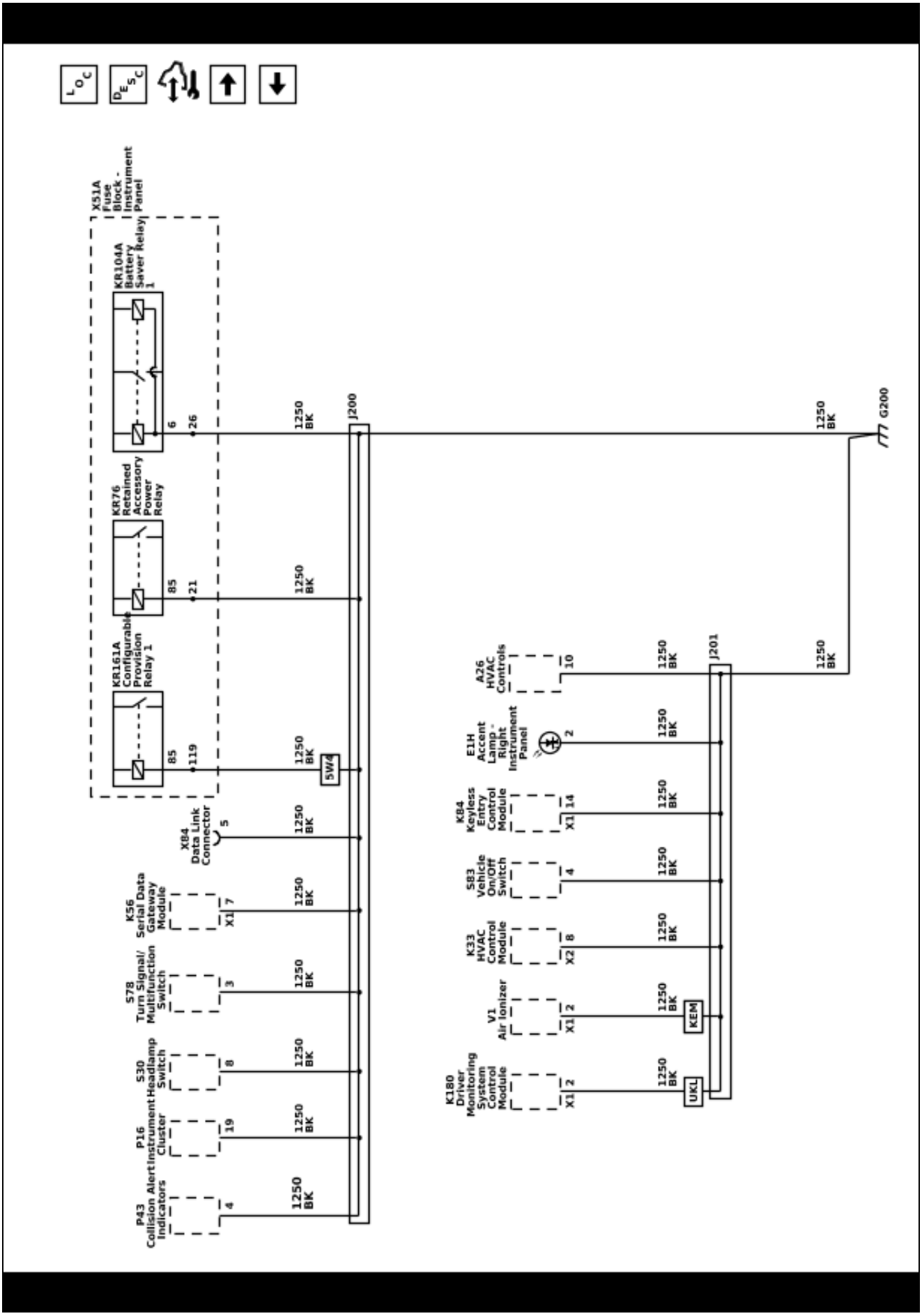

Ground Distribution Schematics (G200 (2 of 2))

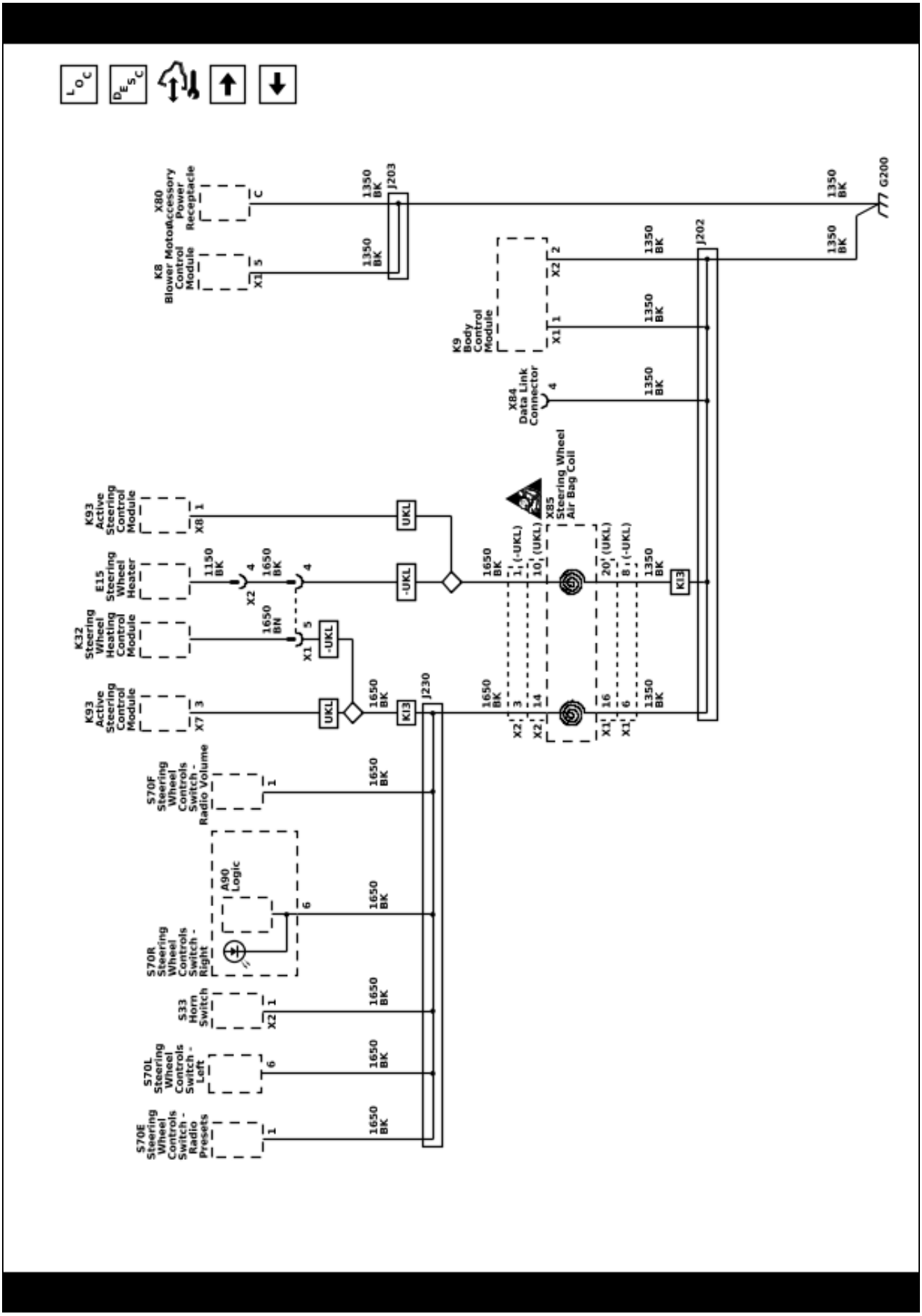

Ground Distribution Schematics (G202, G203, G260, G261, G262, G263, G298, G299, and G405)

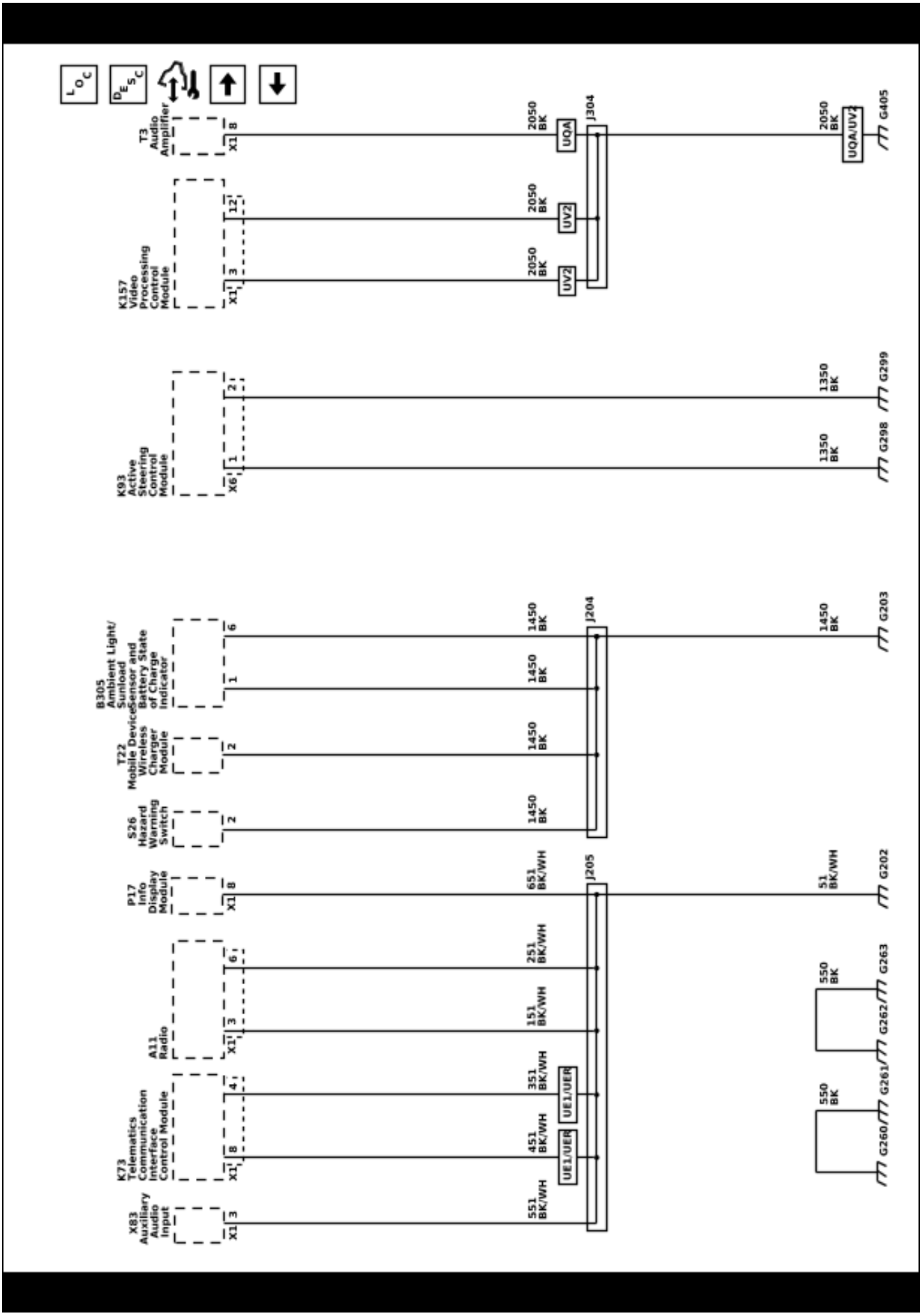

Ground Distribution Schematics (G304)

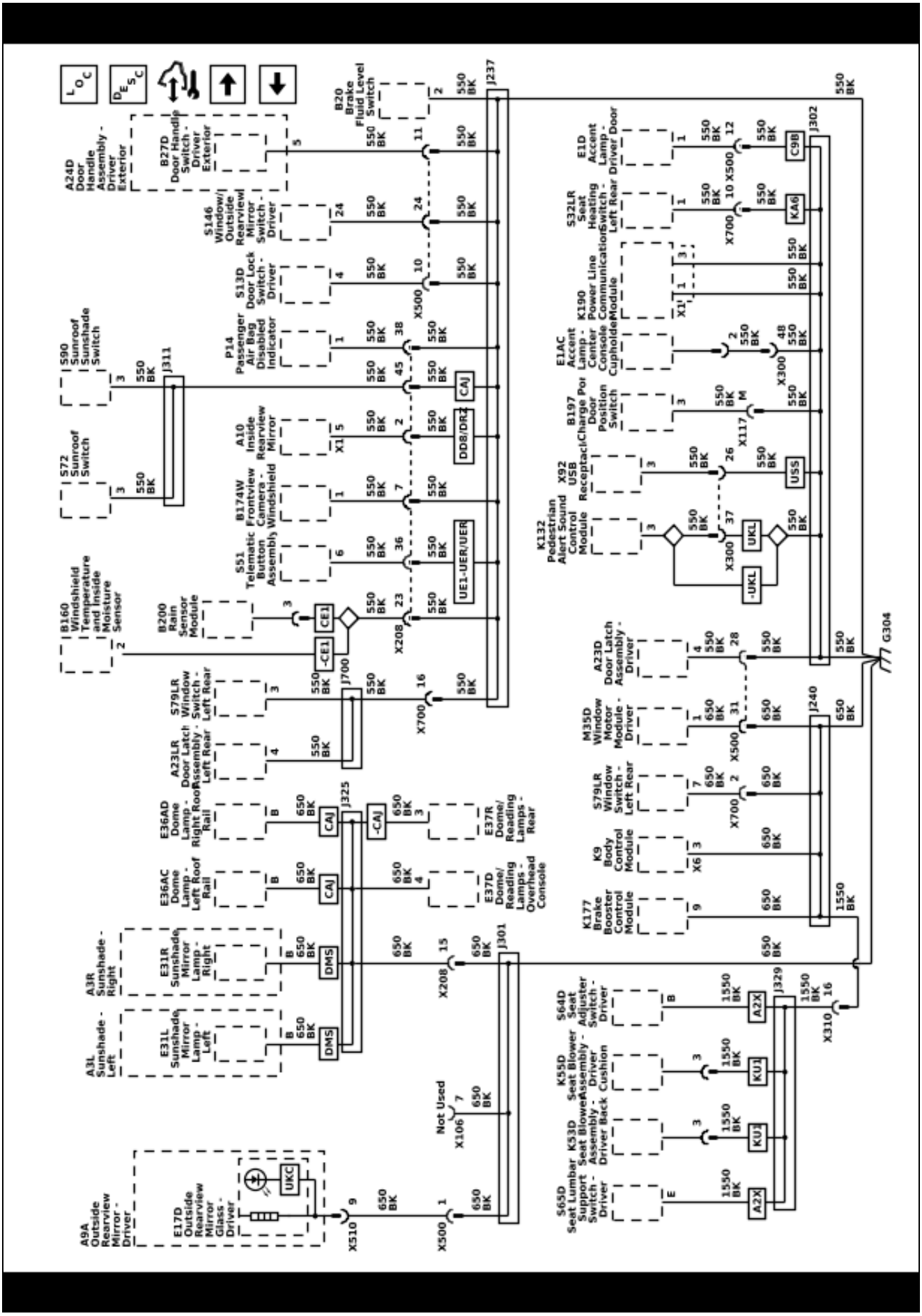

Ground Distribution Schematics (G305)

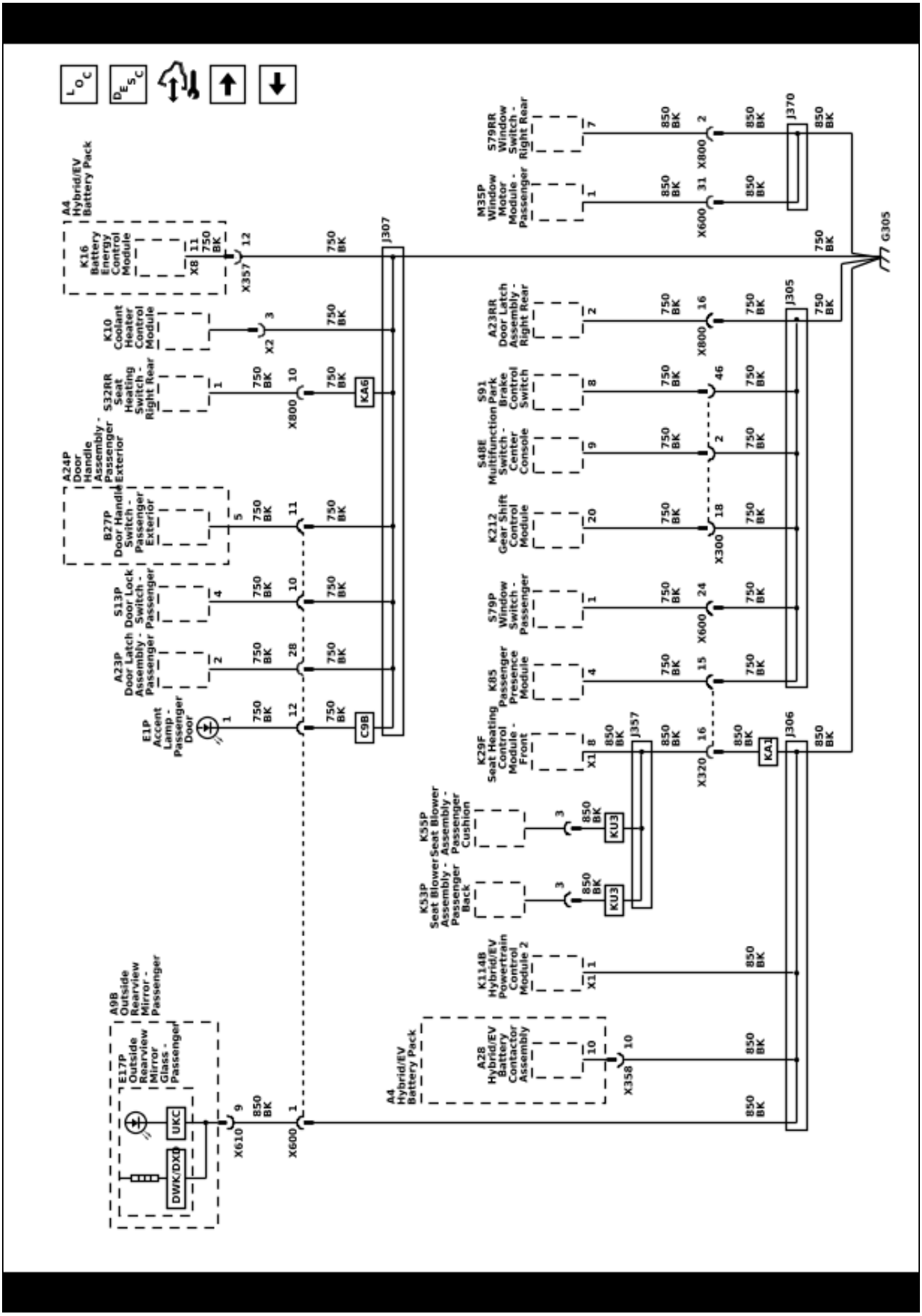

Ground Distribution Schematics (G355, G356, G357, G358 and G401)

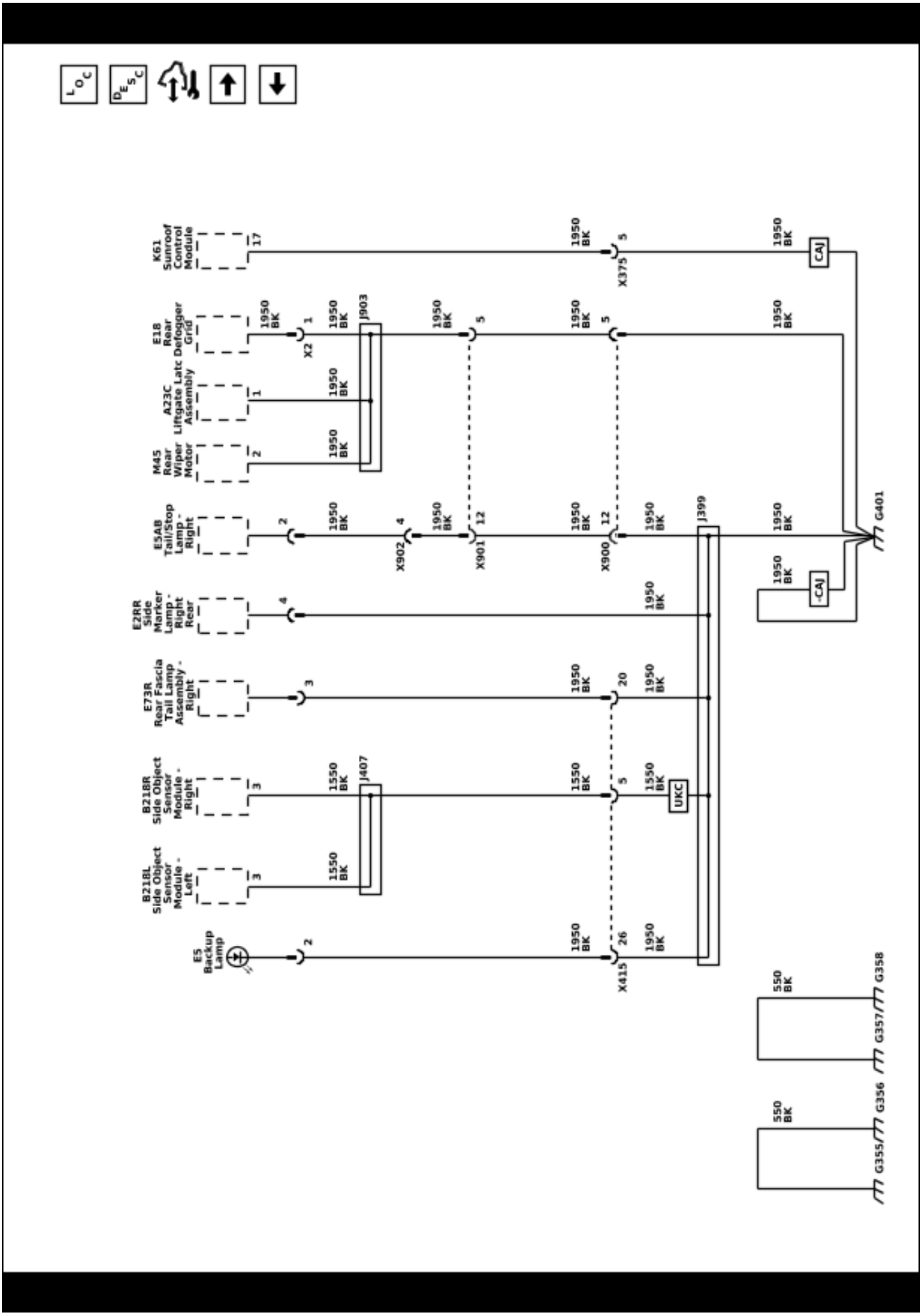

Ground Distribution Schematics (G404, G407 and G408)

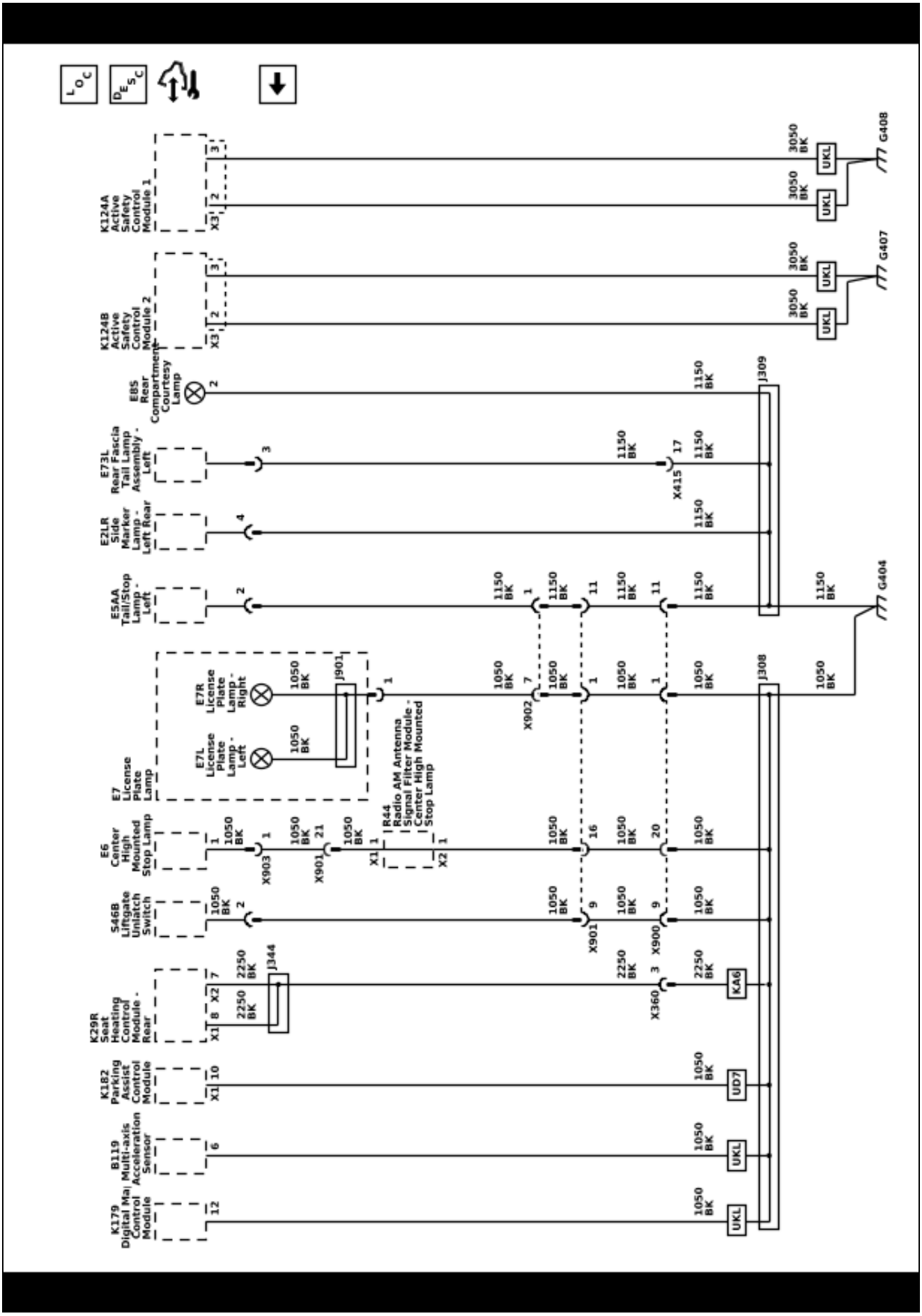

Component Locator

Master Electrical Component List

Code	Name	Option	Location	Locator View	Connector End View
A3L	Sunshade - Left	—	In the passenger compartment, at the front of the headliner, left side.	Headliner Components (1 of 2)	—
A3R	Sunshade - Right	—	In the passenger compartment, at the front of the headliner, right side.	Headliner Components (1 of 2)	—
A4	Hybrid/EV Battery Pack	—	Underbody in rear of vehicle mounted above the rear axle.	Underbody - Hybrid/EV Battery Pack Components	• A4 Hybrid/EV Battery Pack X3 • A4 Hybrid/EV Battery Pack X4
A9A	Outside Rearview Mirror - Driver	—	On the outside of the driver door, near the front of the door.	• Driver Door Components • Front of Vehicle	—
A9B	Outside Rearview Mirror - Passenger	—	On the outside of the front passenger door, near the front of the door.	• Front of Vehicle • Passenger Door Components	—
A10	Inside Rearview Mirror	—	In the passenger compartment, front center, at top of windshield, at center.	Headliner Components (1 of 2)	• A10 Inside Rearview Mirror X1 • A10 Inside Rearview Mirror X2 (DRZ)
A11	Radio	—	In the passenger compartment, in the center of the instrument panel.	Rear of Instrument Panel Components	• A11 Radio X1 • A11 Radio X2 • A11 Radio X3 • A11 Radio X4 • A11 Radio X5 • A11 Radio X6 • A11 Radio X7 • A11 Radio X11 • A11 Radio X8 (-U2K/U2Q/UE1/UER) • A11 Radio X9 (U2K) • A11 Radio X10 (U2Q)
A23C	Liftgate Latch Assembly	—	In the passenger compartment, at the bottom middle of the liftgate.	• Liftgate Components (1 of 3) • Liftgate Components (2 of 3)	A23C Liftgate Latch Assembly
A23D	Door Latch Assembly - Driver	—	Inside the driver door, at rear below middle.	Driver Door Components	A23D Door Latch Assembly - Driver
A23LR	Door Latch Assembly - Left Rear	—	Inside the left rear door, at rear below middle.	Left Rear Door Components	A23LR Door Latch Assembly - Left Rear
A23P	Door Latch Assembly - Passenger	—	Inside the passenger door, at rear below middle.	Passenger Door Components	A23P Door Latch Assembly - Passenger
A23RR	Door Latch Assembly - Right Rear	—	Inside the right rear door, at rear below middle.	Right Rear Door Components	A23RR Door Latch Assembly - Right Rear
A24D	Door Handle Assembly - Driver Exterior	—	On outside of driver door, at rear.	Driver Door Components	A24D Door Handle Assembly - Driver Exterior

Master Electrical Component List (cont'd)

Code	Name	Option	Location	Locator View	Connector End View
A24P	Door Handle Assembly - Passenger Exterior	—	On outside of passenger door, at rear.	Passenger Door Components	A24P Door Handle Assembly - Passenger Exterior
A26	HVAC Controls	—	In the passenger compartment, center of instrument panel.	Front of Instrument Panel Components	A26 HVAC Controls
A28	Hybrid/EV Battery Contactor Assembly	—	Inside battery pack assembly in front of battery sections.	—	—
B1	A/C Refrigerant Pressure Sensor	—	In the engine compartment in the high pressure line.	—	B1 A/C Refrigerant Pressure Sensor
B1C	A/C Low Side Pressure Sensor	—	In the engine compartment, attached to the A/C line.	—	B1C A/C Low Side Pressure Sensor
B5LF	Wheel Speed Sensor - Left Front	—	Near the left front wheel, to the rear of the knuckle.	Wheel Well Components - Front	B5LF Wheel Speed Sensor - Left Front
B5LR	Wheel Speed Sensor - Left Rear	—	Near the left rear wheel, inside the hub.	Wheel Well Components - Rear	B5LR Wheel Speed Sensor - Left Rear
B5RF	Wheel Speed Sensor - Right Front	—	Near the right front wheel, to the rear of the knuckle.	Wheel Well Components - Front	B5RF Wheel Speed Sensor - Right Front
B5RR	Wheel Speed Sensor - Right Rear	—	Near the right rear wheel, inside the hub.	Wheel Well Components - Rear	B5RR Wheel Speed Sensor - Right Rear
B7B	Air Temperature Sensor - Duct Lower	—	In the passenger compartment, behind the instrument panel, attached to the left lower HVAC duct.	—	B7B Air Temperature Sensor - Duct Lower
B7F	Air Temperature Sensor - Duct Upper	—	In the passenger compartment, behind the instrument panel, attached to the left upper HVAC duct.	HVAC Assembly Components	B7F Air Temperature Sensor - Duct Upper
B9	Ambient Air Temperature Sensor	—	On the front of the vehicle, to the right of the A/C condenser, mounted in the grill.	• Behind Front Fascia Components • Front of Vehicle	B9 Ambient Air Temperature Sensor
B13	Transmission Fluid Temperature Sensor	—	In the engine compartment, internal to the automatic transmission assembly on the left side.	Transmission Components	—
B15	Transmission Internal Mode Switch	—	In the engine compartment, internal to the automatic transmission assembly on the right side.	Transmission Components	—
B18	Battery Current Sensor	—	In the engine compartment, left front, forward of battery, mounted to battery negative cable.	Left Side Engine Compartment	B18 Battery Current Sensor
B20	Brake Fluid Level Switch	—	In the left rear of the engine compartment, at the bottom of the brake fluid reservoir.	Left Side Engine Compartment	B20 Brake Fluid Level Switch
B22	Brake Pedal Position Sensor	—	In the passenger compartment, left front, left of accelerator pedal, mounted to bracket on lower bulkhead.	Behind Left Side of Instrument Panel Components	B22 Brake Pedal Position Sensor
B24LF	Mobile Telephone Microphone - Left Front	—	In the pasenger compartment, left front, above driver.	Headliner Components (1 of 2)	B24LF Mobile Telephone Microphone - Left Front

Master Electrical Component List (cont'd)

Code	Name	Option	Location	Locator View	Connector End View
B24RF	Mobile Telephone Microphone - Right Front	—	In the pasenger compartment, right front, above passneger.	Headliner Components (1 of 2)	B24RF Mobile Telephone Microphone - Right Front
B27D	Door Handle Switch - Driver Exterior	—	On outside of driver door, at rear, part of door handle assembly.	Driver Door Components	—
B27P	Door Handle Switch - Passenger Exterior	—	On outside of passenger door, at rear, part of door handle assembly.	Passenger Door Components	—
B30	Hybrid/EV Battery Pack Current Sensor	—	Internal component to hybrid/EV battery pack.	—	—
B32A	Hybrid/EV Battery Temperature Sensor 1	—	Under the vehicle, in the Hybrid/EV Battery part of Hybrid/EV Battery Module 1.	—	—
B32B	Hybrid/EV Battery Temperature Sensor 2	—	Under the vehicle, in the Hybrid/EV Battery part of Hybrid/EV Battery Module 2.	—	—
B32C	Hybrid/EV Battery Temperature Sensor 3	—	Under the vehicle, in the Hybrid/EV Battery part of Hybrid/EV Battery Module 3.	—	—
B32D	Hybrid/EV Battery Temperature Sensor 4	—	Under the vehicle, in the Hybrid/EV Battery part of Hybrid/EV Battery Module 4.	—	—
B32E	Hybrid/EV Battery Temperature Sensor 5	—	Under the vehicle, in the Hybrid/EV Battery part of Hybrid/EV Battery Module 5.	—	—
B32F	Hybrid/EV Battery Temperature Sensor 6	—	Under the vehicle, in the Hybrid/EV Battery part of Hybrid/EV Battery Module 6.	—	—
B55	Engine Hood Switch	—	In the engine compartment, to the left of the hood latch.	• Behind Front of Vehicle Components • Front of Engine Compartment • Left Side Engine Compartment	B55 Engine Hood Switch
B59L	Front Impact Sensor - Left	—	In the engine compartment, left of the hood latch.	Behind Front Fascia Components	B59L Front Impact Sensor - Left
B59R	Front Impact Sensor - Right	—	In the engine compartment, right of the hood latch.	Behind Front Fascia Components	B59R Front Impact Sensor - Right
B61P	Seat Belt Tension Sensor - Passenger	—	Part of passenger seat belt buckle.	—	B61P Seat Belt Tension Sensor - Passenger
B63LF	Side Impact Sensor - Left Front	—	In the driver door, near middle, mounted to door beam.	Driver Door Components	B63LF Side Impact Sensor - Left Front
B63LR	Side Impact Sensor - Left Rear	—	In the passenger compartment, left rear, near outboard seat belt anchor bolt.	Left Side of Passenger Compartment Components	B63LR Side Impact Sensor - Left Rear
B63RF	Side Impact Sensor - Right Front	—	In the passenger door, near middle, mounted to door beam.	Passenger Door Components	B63RF Side Impact Sensor - Right Front

Master Electrical Component List (cont'd)

Code	Name	Option	Location	Locator View	Connector End View
B63RR	Side Impact Sensor - Right Rear	—	In the passenger compartment, right rear, near outboard seat belt anchor bolt.	—	B63RR Side Impact Sensor - Right Rear
B87	Rearview Camera	—	At the rear of vehicle, mounted to liftgate above license plate, left of center.	• Liftgate Components (3 of 3) • Rear of Vehicle	• B87 Rearview Camera (UV2) • B87 Rearview Camera (UVB)
B88D	Seat Belt Switch - Driver	—	In the passenger compartment, in the driver seat belt buckle.	Driver Seat Components (3 of 4)	B88D Seat Belt Switch - Driver
B88P	Seat Belt Switch - Passenger	—	In the passenger compartment, in the passenger seat belt buckle.	Passenger Seat Components (3 of 4)	B88P Seat Belt Switch - Passenger
B107	Accelerator Pedal Position Sensor	—	In the passenger compartment, under the instrument panel near the accelerator pedal.	Behind Left Side of Instrument Panel Components	B107 Accelerator Pedal Position Sensor
B118	Windshield Washer Fluid Level Sensor	—	In the front of vehicle, behind front fascia in the right front corner, in the washer fluid reservoir.	Behind Front of Vehicle Components	B118 Windshield Washer Fluid Level Sensor
B119	Multi-axis Acceleration Sensor	UKL	In the passenger compartment mounted to the inboard side of the passenger seat.	Left Side of Passenger Compartment Components	B119 Multi-axis Acceleration Sensor (UKL)
B153D	Seat Belt Buckle - Driver	—	In the passenger compartment mounted to the inboard side of the driver seat.	—	—
B153P	Seat Belt Buckle - Passenger	—	In the passenger compartment mounted to the inboard side of the passenger seat.	—	—
B160	Windshield Temperature and Inside Moisture Sensor	without CE1	In the passenger compartment, front center, mounted to top of windshield, near inside rearview mirror.	Headliner Components (2 of 2)	B160 Windshield Temperature and Inside Moisture Sensor (-CE1)
B174G	Frontview Camera - Grille	UV2	On the front of the vehicle, on the center of the grille.	Front of Vehicle	B174G Frontview Camera - Grille (UV2)
B174W	Frontview Camera - Windshield	—	In the passenger compartment, at the top center of the windshield.	Headliner Components (2 of 2)	• B174W Frontview Camera - Windshield (-UKL) • B174W Frontview Camera - Windshield (UKL)
B197	Charge Port Door Position Switch	—	Left front of the vehicle, behind the rear of the left front fender.	—	B197 Charge Port Door Position Switch
B200	Rain Sensor Module	CE1	In the passenger compartment, front center, mounted to top of windshield, near inside rearview mirror.	Headliner Components (2 of 2)	B200 Rain Sensor Module (CE1)
B201	Brake Control Brake Pedal Position Sensor	—	In the passenger compartment, under the driver side of the instrument panel, mounted to the brake pedal.	Left Side Engine Compartment	B201 Brake Control Brake Pedal Position Sensor
B202	Hybrid/EV Electronics Coolant Temperature Sensor	—	Right front of the engine compartment, mounted in the Hybrid/EV electronics radiator.	—	B202 Hybrid/EV Electronics Coolant Temperature Sensor

Master Electrical Component List (cont'd)

Code	Name	Option	Location	Locator View	Connector End View
B204A	Hybrid/EV Battery Pack Coolant Temperature Sensor 1	—	Rear of engine compartment, mounted within E54 Hybrid/EV Battery Pack Coolant Heater.	Underbody - Hybrid/EV Battery Pack Components	—
B207	Drive Motor Temperature Sensor	—	In the engine compartment, internal to the automatic transmission assembly on the left side.	—	B207 Drive Motor Temperature Sensor
B218L	Side Object Sensor Module - Left	UKC	Left rear of vehicle, mounted to back side of rear fascia.	Behind the Rear Fascia Components	B218L Side Object Sensor Module - Left (UKC)
B218R	Side Object Sensor Module - Right	UKC	Right rear of vehicle, mounted to back side of rear fascia.	Behind the Rear Fascia Components	B218R Side Object Sensor Module - Right (UKC)
B225L	Sideview Camera - Left	UV2	Outside of vehicle, left front, mounted to left outside rearview mirror.	—	—
B225R	Sideview Camera - Right	UV2	Outside of vehicle, right front, mounted to right outside rearview mirror.	—	—
B228	Drive Motor Position Sensor	—	In the engine compartment, internal to the automatic transmission assembly on the left side.	Transmission Components	B228 Drive Motor Position Sensor
B233B	Radar Sensor Module - Long Range	UKL	At the front of the vehicle, behind front fascia, right of center.	• Behind Front of Vehicle Components • Front of Vehicle	B233B Radar Sensor Module - Long Range (UKL)
B258	Hybrid/EV Battery Coolant Level Switch	—	In the engine compartment, right side front mounted battery coolant bottle.	—	B258 Hybrid/EV Battery Coolant Level Switch
B282	Hybrid/EV Battery Charger Receptacle Temperature Sensor	—	At the left front of the vehicle, behind the rear of the left front fender.	—	—
B292	Driver Monitoring System Camera	UKL	In the passenger compartment, steering wheel, about horn switch.	Steering Column Components	B292 Driver Monitoring System Camera (UKL)
B305	Ambient Light/ Sunload Sensor and Battery State of Charge Indicator	—	In passenger compartment, front of center, mounted in the instrument panel at base of windshield.	Front of Instrument Panel Components	B305 Ambient Light/ Sunload Sensor and Battery State of Charge Indicator
B306E	Parking Assist Sensor - Rear Left Outer	UD7	At the rear of the vehicle, on the rear fascia, near the left rear corner.	Rear of Vehicle	B306E Parking Assist Sensor - Rear Left Outer (UD7)
B306F	Parking Assist Sensor - Rear Left Middle	UD7	At the rear of the vehicle, on the rear fascia, near the right middle.	Rear of Vehicle	B306F Parking Assist Sensor - Rear Left Middle (UD7)
B306G	Parking Assist Sensor - Rear Right Middle	UD7	At the rear of the vehicle, on the rear fascia, near the left middle.	Rear of Vehicle	B306G Parking Assist Sensor - Rear Right Middle (UD7)
B306H	Parking Assist Sensor - Rear Right Outer	UD7	At the rear of the vehicle, on the rear fascia, near the right rear corner.	Rear of Vehicle	B306H Parking Assist Sensor - Rear Right Outer (UD7)
B307	Touch Sensors - Steering Wheel	—	In passenger compartment inside the steering wheel.	—	—

Master Electrical Component List (cont'd)

Code	Name	Option	Location	Locator View	Connector End View
B319	Hybrid/EV Battery Charger Receptacle Lock Actuator Latched Position Switch	—	On left side of vehicle, mounted with charge port assembly.	—	—
B352	Video Display Inside Rearview Mirror Camera	DRZ	Outside the vehicle, at the top center of the rear window bridge, within E6 Center High Mounted Stop Lamp.	—	B352 Video Display Inside Rearview Mirror Camera (DRZ)
C1	Battery	—	In the engine compartment, left side, near front, mounted to battery tray, below battery cover.	Left Side Engine Compartment	• C1 Battery ((-)) • C1 Battery ((-) +(BODY))
C4A	Hybrid/EV Battery Section 1	—	Internal component to Hybrid/EV Battery Pack.	—	—
C4B	Hybrid/EV Battery Section 2	—	Internal component to Hybrid/EV Battery Pack.	—	—
C4C	Hybrid/EV Battery Section 3	—	Internal component to Hybrid/EV Battery Pack.	—	—
C4D	Hybrid/EV Battery Section 4	—	Internal component to Hybrid/EV Battery Pack.	—	—
C4E	Hybrid/EV Battery Section 5	—	Internal component to Hybrid/EV Battery Pack.	—	—
C5A	Hybrid/EV Battery Module 1	—	Internal component to Hybrid/EV Battery Pack.	—	• C5A Hybrid/EV Battery Module 1 X1 • C5A Hybrid/EV Battery Module 1 X2
C5B	Hybrid/EV Battery Module 2	—	Internal component to Hybrid/EV Battery Pack.	—	• C5B Hybrid/EV Battery Module 2 X1 • C5B Hybrid/EV Battery Module 2 X2
C5C	Hybrid/EV Battery Module 3	—	Internal component to Hybrid/EV Battery Pack.	—	• C5C Hybrid/EV Battery Module 3 X1 • C5C Hybrid/EV Battery Module 3 X2
C5D	Hybrid/EV Battery Module 4	—	Internal component to Hybrid/EV Battery Pack.	—	• C5D Hybrid/EV Battery Module 4 X1 • C5D Hybrid/EV Battery Module 4 X2
C5E	Hybrid/EV Battery Module 5	—	Internal component to Hybrid/EV Battery Pack.	—	• C5E Hybrid/EV Battery Module 5 X1 • C5E Hybrid/EV Battery Module 5 X2
C5F	Hybrid/EV Battery Module 6	—	Internal component to Hybrid/EV Battery Pack.	—	• C5F Hybrid/EV Battery Module 6 X1 • C5F Hybrid/EV Battery Module 6 X2

Master Electrical Component List (cont'd)

Code	Name	Option	Location	Locator View	Connector End View
C5G	Hybrid/EV Battery Module 7	—	Internal component to Hybrid/EV Battery Pack.	—	• C5G Hybrid/EV Battery Module 7 X1 • C5G Hybrid/EV Battery Module 7 X2
C5H	Hybrid/EV Battery Module 8	—	Internal component to Hybrid/EV Battery Pack.	—	• C5H Hybrid/EV Battery Module 8 X1 • C5H Hybrid/EV Battery Module 8 X2
C5J	Hybrid/EV Battery Module 9	—	Internal component to Hybrid/EV Battery Pack.	—	• C5J Hybrid/EV Battery Module 9 X1 • C5J Hybrid/EV Battery Module 9 X2
C5K	Hybrid/EV Battery Module 10	—	Internal component to Hybrid/EV Battery Pack.	—	• C5K Hybrid/EV Battery Module 10 X1 • C5K Hybrid/EV Battery Module 10 X2
E1AC	Accent Lamp - Center Console Cupholder	—	In the passenger compartment, in the center console at the cupholder.	Center Console Right Side	E1AC Accent Lamp - Center Console Cupholder
E1D	Accent Lamp - Driver Door	—	In the passenger compartment, forward of center, left side, on the driver door, near the door handle.	—	E1D Accent Lamp - Driver Door
E1H	Accent Lamp - Right Instrument Panel	—	In the passenger compartment, right front, in the instrument panel, below right outboard vent.	Front of Instrument Panel Components	E1H Accent Lamp - Right Instrument Panel
E1P	Accent Lamp - Passenger Door	—	In the passenger compartment, forward of center, right side, on the passenger door, near the door handle.	—	E1P Accent Lamp - Passenger Door
E2LR	Side Marker Lamp - Left Rear	—	The left rear side of the vehicle.	Rear of Vehicle	E2LR Side Marker Lamp - Left Rear
E2RR	Side Marker Lamp - Right Rear	—	The right rear side of the vehicle.	Rear of Vehicle	E2RR Side Marker Lamp - Right Rear
E4C	Daytime Running Lamp - Left	—	LED within the left front head lamp assembly.	Front of Vehicle	—
E4D	Daytime Running Lamp - Right	—	LED within the right front headlamp assembly.	Front of Vehicle	—
E4E	Headlamp - Left High Beam	—	Within left front headlamp assembly.	—	—
E4F	Headlamp - Right High Beam	—	Within right front headlamp assembly.	—	—
E4G	Headlamp - Left Low Beam	—	At the front of vehicle, left side, within headlamp assembly.	—	—
E4H	Headlamp - Right Low Beam	—	At the front of vehicle, right side, within headlamp assembly.	—	—

Master Electrical Component List (cont'd)

Code	Name	Option	Location	Locator View	Connector End View
E4J	Park Lamp - Left Front	—	At the front of vehicle, left side, within headlamp assembly, outboard bottom position.	Front of Vehicle	—
E4K	Park Lamp - Right Front	—	At the front of vehicle, right side, within headlamp assembly, outboard bottom position.	Front of Vehicle	—
E4LF	Turn Signal Lamp - Left Front	—	At the front of vehicle, left side, within headlamp assembly.	—	—
E4RF	Turn Signal Lamp - Right Front	—	At the front of vehicle, Right side, within headlamp assembly.	—	—
E4Y	Turn Signal Repeater Lamp - Left	—	On the left outside rearview mirror glass.	• Driver Door Components • Front of Vehicle	—
E4Z	Turn Signal Repeater Lamp - Right	—	On the right outside rearview mirror glass.	• Front of Vehicle • Passenger Door Components	—
E5	Backup Lamp	—	On the lower rear center of the vehicle.	Rear of Vehicle	E5 Backup Lamp
E5AA	Tail/Stop Lamp - Left	—	Rear of the vehicle, on the left side of the liftgate.	• Liftgate Components (3 of 3) • Rear of Vehicle	E5AA Tail/Stop Lamp - Left
E5AB	Tail/Stop Lamp - Right	—	Rear of the vehicle, on the right side of the liftgate.	• Liftgate Components (3 of 3) • Rear of Vehicle	E5AB Tail/Stop Lamp - Right
E5AM	Stop/Turn Signal Lamp - Left	—	Left rear of the vehicle, in the rear fascia tail lamp assembly - left.	—	—
E5AN	Stop/Turn Signal Lamp - Right	—	Right rear of the vehicle, in the rear fascia tail lamp assembly - right.	—	—
E6	Center High Mounted Stop Lamp	—	Rear of the vehicle, at the top center of the liftgate.	• Liftgate Components (3 of 3) • Rear of Vehicle	E6 Center High Mounted Stop Lamp
E7	License Plate Lamp	—	Center rear of the vehicle, above the license plate.	—	E7 License Plate Lamp
E7L	License Plate Lamp - Left	—	On the outside of the liftgate, near the left side of the outside handle.	Liftgate Components (3 of 3)	—
E7R	License Plate Lamp - Right	—	On the outside of the liftgate, near the right side of the outside handle.	Liftgate Components (3 of 3)	—
E8S	Rear Compartment Courtesy Lamp	—	Inside luggage compartment in the left rear quarter trim.	Left Side Luggage Compartment Components	E8S Rear Compartment Courtesy Lamp
E13LA	Headlamp Assembly - Left	—	On the outside of the vehicle, at the left front corner of the vehicle.	Front of Vehicle	—
E13RA	Headlamp Assembly - Right	—	On the outside of the vehicle, at the right front corner of the vehicle.	Front of Vehicle	—
E14A	Seat Heating Element - Driver Back	KA1	In the passenger compartment, inside the driver seat back.	Driver Seat Components (2 of 4)	E14A Seat Heating Element - Driver Back (KA1)

Master Electrical Component List (cont'd)

Code	Name	Option	Location	Locator View	Connector End View
E14B	Seat Heating Element - Driver Cushion	KA1	In the passenger compartment, inside the driver seat cushion.	Driver Seat Components (2 of 4)	E14B Seat Heating Element - Driver Cushion (KA1)
E14C	Seat Heating Element - Passenger Back	KA1	In the passenger compartment, inside the front passenger seat back.	Passenger Seat Components (2 of 4)	E14C Seat Heating Element - Passenger Back (KA1)
E14D	Seat Heating Element - Passenger Cushion	KA1	In the passenger compartment, inside the front passenger seat cushion.	Passenger Seat Components (2 of 4)	E14D Seat Heating Element - Passenger Cushion (KA1)
E14F	Seat Heating Element - Left Rear Cushion	KA6	In the passenger compartment, in the left rear seat cushion.	—	E14F Seat Heating Element - Left Rear Cushion (KA6)
E14H	Seat Heating Element - Right Rear Cushion	KA6	In the passenger compartment, in the right rear seat cushion.	—	E14H Seat Heating Element - Right Rear Cushion (KA6)
E15	Steering Wheel Heater	KI3	In the passenger compartment, left front, within the steering wheel rim.	—	—
E17D	Outside Rearview Mirror Glass - Driver	—	On the outside of the driver door, part of the outside rearview mirror - driver, at front.	Driver Door Components	—
E17P	Outside Rearview Mirror Glass - Passenger	—	On the outside of the passenger door, part of the outside rearview mirror - passenger, at front.	Passenger Door Components	—
E18	Rear Defogger Grid	—	Inside the passenger compartment, attached to the rear window.	• Liftgate Components (1 of 3) • Liftgate Components (2 of 3)	• E18 Rear Defogger Grid X1 • E18 Rear Defogger Grid X2
E31L	Sunshade Mirror Lamp - Left	DMS	In the passenger compartment, at the left front of the headliner, part of A3L Sunshade - Left.	Headliner Components (1 of 2)	E31L Sunshade Mirror Lamp - Left (DMS)
E31R	Sunshade Mirror Lamp - Right	DMS	In the passenger compartment, at the right front of the headliner, part of A3R Sunshade - Right.	Headliner Components (1 of 2)	E31R Sunshade Mirror Lamp - Right (DMS)
E36AC	Dome Lamp - Left Roof Rail	CAJ	In the passenger compartment, left side of headliner, at grab handle.	Headliner Components (1 of 2)	E36AC Dome Lamp - Left Roof Rail (CAJ)
E36AD	Dome Lamp - Right Roof Rail	CAJ	In the passenger compartment, right side of headliner, at grab handle.	Headliner Components (1 of 2)	E36AD Dome Lamp - Right Roof Rail (CAJ)
E37D	Dome/Reading Lamps - Overhead Console	—	In the passenger compartment, front center of the headliner between the sunshades.	Headliner Components (1 of 2)	E37D Dome/Reading Lamps - Overhead Console
E37R	Dome/Reading Lamps - Rear	without CAJ	In the passenger compartment, center of the headliner.	—	E37R Dome/Reading Lamps - Rear (-CAJ)
E54	Hybrid/EV Battery Pack Coolant Heater	—	Rear of engine compartment, mounted by Hybrid/EV Battery Pack.	Underbody - Hybrid/EV Battery Pack Components	• E54 Hybrid/EV Battery Pack Coolant Heater X1 • E54 Hybrid/EV Battery Pack Coolant Heater X2
E73L	Rear Fascia Tail Lamp Assembly - Left	—	Rear of the vehicle, on the upper left side of the rear fascia.	Rear of Vehicle	E73L Rear Fascia Tail Lamp Assembly - Left

Master Electrical Component List (cont'd)

Code	Name	Option	Location	Locator View	Connector End View
E73R	Rear Fascia Tail Lamp Assembly - Right	—	Rear of the vehicle, on the upper right side of the rear fascia.	Rear of Vehicle	E73R Rear Fascia Tail Lamp Assembly - Right
F101	Passenger Instrument Panel Air Bag	—	In the passenger compartment, in the passenger side of the instrument panel.	Front of Instrument Panel Components	F101 Passenger Instrument Panel Air Bag
F105L	Roof Rail Air Bag - Left	—	In the passenger compartment, on the left side of the roof.	Left Side of Passenger Compartment Components	F105L Roof Rail Air Bag - Left
F105R	Roof Rail Air Bag - Right	—	In the passenger compartment, on the right side of the roof.	—	F105R Roof Rail Air Bag - Right
F106LF	Seat Side Air Bag - Left Front	—	In the passenger compartment, in the left front seat back.	Driver Seat Components (1 of 4)	F106LF Seat Side Air Bag - Left Front
F106LR	Seat Side Air Bag - Left Rear	—	In the passenger compartment, on the left side of the rear seat back.	Left Side of Passenger Compartment Components	F106LR Seat Side Air Bag - Left Rear
F106RF	Seat Side Air Bag - Right Front	—	In the passenger compartment, in the right front seat back.	Passenger Seat Components (1 of 4)	F106RF Seat Side Air Bag - Right Front
F106RR	Seat Side Air Bag - Right Rear	—	In the passenger compartment, on the right side of the rear seat back.	—	F106RR Seat Side Air Bag - Right Rear
F107	Steering Wheel Air Bag	—	In the passenger compartment, in the steering wheel.	—	• F107 Steering Wheel Air Bag X1 • F107 Steering Wheel Air Bag X2
F112D	Seat Belt Retractor Pretensioner - Driver	—	In the passenger compartment, at the bottom of the left B-pillar.	Left Side of Passenger Compartment Components	F112D Seat Belt Retractor Pretensioner - Driver
F112LR	Seat Belt Retractor Pretensioner - Left Rear	SBK	In the passenger compartment, left side, within C-pillar.	—	F112LR Seat Belt Retractor Pretensioner - Left Rear (SBK)
F112P	Seat Belt Retractor Pretensioner - Passenger	—	In the passenger compartment, at the bottom of the right B-pillar.	—	F112P Seat Belt Retractor Pretensioner - Passenger
F112RR	Seat Belt Retractor Pretensioner - Right Rear	SBK	In the passenger compartment, right side, within C-pillar.	—	F112RR Seat Belt Retractor Pretensioner - Right Rear (SBK)
F113D	Seat Belt Anchor Pretensioner - Driver	—	In the passenger compartment, on the lower outside of the driver seat, mounted to the floor.	Left Side of Passenger Compartment Components	F113D Seat Belt Anchor Pretensioner - Driver
F113P	Seat Belt Anchor Pretensioner - Passenger	—	In the passenger compartment, on the lower outside of the passenger seat, mounted to the floor.	—	F113P Seat Belt Anchor Pretensioner - Passenger
F114D	Knee Air Bag - Driver	—	In the passenger compartment, at the bottom of the driver side of the instrument panel.	Rear of Instrument Panel Components	F114D Knee Air Bag - Driver
F114P	Knee Air Bag - Passenger	—	In the passenger compartment, at the bottom of the passenger side of the instrument panel.	Rear of Instrument Panel Components	F114P Knee Air Bag - Passenger

Master Electrical Component List (cont'd)

Code	Name	Option	Location	Locator View	Connector End View
G1	A/C Compressor	—	In the engine compartment, at the bottom, front center of drive motor.	—	• G1 A/C Compressor X1 • G1 A/C Compressor X2
G5	Transmission Fluid Pump - Electric/ Auxiliary	—	In the engine compartment, internal to the transmission assembly.	• Front of Engine Components • Transmission Components	G5 Transmission Fluid Pump - Electric/ Auxiliary
G10	Cooling Fan Motor	—	In the engine compartment, attached to the radiator shroud.	—	G10 Cooling Fan Motor
G24	Windshield Washer Pump	—	In the front of vehicle, behind front fascia in the right front corner, in the washer fluid reservoir.	• Behind Front of Vehicle Components • Front of Engine Compartment	G24 Windshield Washer Pump
G35	Hybrid/EV Electronics Coolant Pump	—	In the engine compartment, right front lower.	Engine Compartment Top	G35 Hybrid/EV Electronics Coolant Pump
G36	Auxiliary Heater Coolant Pump	—	At the right side of the engine compartment, mounted to the suspension cradle.	Engine Compartment Top	G36 Auxiliary Heater Coolant Pump
G37	Hybrid/EV Battery Pack Coolant Pump	—	At the front of the engine compartment, mounted to the center of the lower core support.	Engine Compartment Top	G37 Hybrid/EV Battery Pack Coolant Pump
K1	14V Power Module	—	In the engine compartment on top of drive motor and under the power inverter module.	• Engine Compartment Top • Front of Engine Components	• K1 14V Power Module X1 • K1 14V Power Module X2 • K1 14V Power Module X3 • K1 14V Power Module X4
K6	Transmission Fluid Pump Control Module - Electric/ Auxiliary	—	In the engine compartment, under the power inverter module assembly cable cover, inside the drive motor power inverter module.	—	—
K8	Blower Motor Control Module	—	In the passenger compartment, under the passenger side of the instrument panel, mounted to the HVAC module assembly.	HVAC Assembly Components	• K8 Blower Motor Control Module X1 • K8 Blower Motor Control Module X2
K9	Body Control Module	—	In the passenger compartment, behind the left side of the instrument panel.	• Behind Left Side of Instrument Panel Components • Rear of Instrument Panel Components	• K9 Body Control Module X1 • K9 Body Control Module X2 • K9 Body Control Module X3 • K9 Body Control Module X4 • K9 Body Control Module X5 • K9 Body Control Module X6 • K9 Body Control Module X7

Master Electrical Component List (cont'd)

Code	Name	Option	Location	Locator View	Connector End View
K10	Coolant Heater Control Module	—	At the center rear of the engine compartment, mounted to the bulkhead.	Engine Compartment Top	• K10 Coolant Heater Control Module X1 • K10 Coolant Heater Control Module X2
K16	Battery Energy Control Module	—	Underbody Integrated to the Hybrid/EV Battery Pack.	—	• K16 Battery Energy Control Module X1 • K16 Battery Energy Control Module X2 • K16 Battery Energy Control Module X3 • K16 Battery Energy Control Module X4 • K16 Battery Energy Control Module X5 • K16 Battery Energy Control Module X6 • K16 Battery Energy Control Module X7 • K16 Battery Energy Control Module X8
K17	Electronic Brake Control Module	—	In the left rear of the engine compartment, mounted to the right of the strut tower.	Left Side Engine Compartment	K17 Electronic Brake Control Module
K20	Engine Control Module	—	In the engine compartment, mounted on top of the on board charging module.	• Engine Compartment Top • Left Side Engine Compartment	• K20 Engine Control Module X1 • K20 Engine Control Module X2
K29F	Seat Heating Control Module - Front	KA1	In the passenger compartment, under the passenger seat cushion.	Passenger Seat Components (3 of 4)	• K29F Seat Heating Control Module - Front X1 (KA1) • K29F Seat Heating Control Module - Front X2 (KA1)
K29R	Seat Heating Control Module - Rear	KA6	In the passenger compartment, rear center, underneath the right rear seat cushion.	—	• K29R Seat Heating Control Module - Rear X1 (KA6) • K29R Seat Heating Control Module - Rear X2 (KA6)
K32	Steering Wheel Heating Control Module	KI3 without UKL	In the passenger compartment, left front, attached to front steering wheel cover left of center.	—	• K32 Steering Wheel Heating Control Module X1 (KI3-UKL) • K32 Steering Wheel Heating Control Module X2 (KI3)

Master Electrical Component List (cont'd)

Code	Name	Option	Location	Locator View	Connector End View
K33	HVAC Control Module	—	In the passenger compartment, in the center of the instrument panel, behind the HVAC controls.	HVAC Assembly Components	• K33 HVAC Control Module X1 • K33 HVAC Control Module X2 • K33 HVAC Control Module X3
K36	Inflatable Restraint Sensing and Diagnostic Module	—	In the passenger compartment, under center console.	Center Console Right Side	• K36 Inflatable Restraint Sensing and Diagnostic Module X1 • K36 Inflatable Restraint Sensing and Diagnostic Module X2
K43	Power Steering Control Module	—	In the passenger compartment, behind the instrument panel.	Steering Column Components	• K43 Power Steering Control Module X1 • K43 Power Steering Control Module X2
K53D	Seat Blower Assembly - Driver Back	KU1	In the passenger compartment, internal to driver seat.	—	K53D Seat Blower Assembly - Driver Back (KU1)
K53P	Seat Blower Assembly - Passenger Back	KU3	In the passenger compartment, internal to passenger seat.	Passenger Seat Components (4 of 4)	K53P Seat Blower Assembly - Passenger Back (KU3)
K55D	Seat Blower Assembly - Driver Cushion	KU1	In the passenger compartment, internal to driver seat.	• Driver Seat Components (3 of 4) • Driver Seat Components (4 of 4)	K55D Seat Blower Assembly - Driver Cushion (KU1)
K55P	Seat Blower Assembly - Passenger Cushion	KU3	In the passenger compartment, internal to passenger seat.	Passenger Seat Components (3 of 4)	K55P Seat Blower Assembly - Passenger Cushion (KU3)
K56	Serial Data Gateway Module	—	In the passenger compartment, driver side front, in the instrument panel, outboard of steering column, near the Body Control Module.	Rear of Instrument Panel Components	• K56 Serial Data Gateway Module X1 • K56 Serial Data Gateway Module X2
K57	Battery Charger Control Module	—	Underhood, Internal component of battery charger.	—	—
K61	Sunroof Control Module	CAJ	In the passenger compartment, above headliner, at the rear of the sunroof.	—	K61 Sunroof Control Module (CAJ)
K73	Telematics Communication Interface Control Module	UE1 or UER	In the passenger compartment, mounted under passenger seat.	Rear of Instrument Panel Components	• K73 Telematics Communication Interface Control Module X1 (UE1/UER) • K73 Telematics Communication Interface Control Module X2 (UE1/UER) • K73 Telematics Communication Interface Control Module X3 (UE1/UER)

Master Electrical Component List (cont'd)

Code	Name	Option	Location	Locator View	Connector End View
K77	Remote Control Door Lock Receiver	—	In the passenger compartment, mounted at top rear left of C-pillar.	Left Side of Passenger Compartment Components	K77 Remote Control Door Lock Receiver
K84	Keyless Entry Control Module	—	In the passenger compartment, behind the instrument panel near the instrument cluster.	Rear of Instrument Panel Components	• K84 Keyless Entry Control Module X1 • K84 Keyless Entry Control Module X2
K85	Passenger Presence Module	—	Under passenger seat mounted to seat frame.	Passenger Seat Components (3 of 4)	K85 Passenger Presence Module
K89	Immobilizer Control Module	—	In the passenger compartment, behind the instrument panel near the steering column.	Center Console Right Side	K89 Immobilizer Control Module
K93	Active Steering Control Module	UKL	In the passenger compartment, internal to the steering wheel.	Steering Wheel Components	• K93 Active Steering Control Module X1 (UKL) • K93 Active Steering Control Module X2 (UKL) • K93 Active Steering Control Module X3 (UKL) • K93 Active Steering Control Module X4 (UKL) • K93 Active Steering Control Module X5 (UKL) • K93 Active Steering Control Module X6 (UKL) • K93 Active Steering Control Module X7 (UKL) • K93 Active Steering Control Module X8 (UKL) • K93 Active Steering Control Module X9 (UKL) • K93 Active Steering Control Module X10 (UKL)
K107	Drive Motor Control Module	—	In the engine compartment, under the power inverter module assembly cable cover, inside the drive motor power inverter module.	—	—
K114A	Hybrid/EV Powertrain Control Module 1	—	In the engine compartment internal component of the power inverter module.	—	—
K114B	Hybrid/EV Powertrain Control Module 2	—	In the passenger compartment, Under the front passenger seat.	Left Side of Passenger Compartment Components	• K114B Hybrid/EV Powertrain Control Module 2 X1 • K114B Hybrid/EV Powertrain Control Module 2 X2

Master Electrical Component List (cont'd)

Code	Name	Option	Location	Locator View	Connector End View
K118	Electric A/C Compressor Control Module	—	In the engine compartment, at the bottom, front center of drive motor, part of the air conditioning compressor.	—	—
K124A	Active Safety Control Module 1	UKL	In the luggage compartment, in the center of the rear well.	Bottom of Luggage Compartment Components	• K124A Active Safety Control Module 1 X1 (UKL) • K124A Active Safety Control Module 1 X2 (UKL) • K124A Active Safety Control Module 1 X3 (UKL)
K124B	Active Safety Control Module 2	UKL	In the luggage compartment, in the center of the rear well.	• Bottom of Luggage Compartment Components • Left Side of Passenger Compartment Components	• K124B Active Safety Control Module 2 X1 (UKL) • K124B Active Safety Control Module 2 X2 (UKL) • K124B Active Safety Control Module 2 X3 (UKL)
K132	Pedestrian Alert Sound Control Module	—	In the passenger compartment, under center console.	• Center Console Right Side • Left Side of Passenger Compartment Components	• K132 Pedestrian Alert Sound Control Module (-UKL) • K132 Pedestrian Alert Sound Control Module (UKL)
K157	Video Processing Control Module	UV2	In the passenger compartment, mounted under center console.	—	• K157 Video Processing Control Module X1 (UV2) • K157 Video Processing Control Module X3 (UV2) • K157 Video Processing Control Module X4 (UV2) • K157 Video Processing Control Module X5 (UV2 +UKL) • K157 Video Processing Control Module X5 (UV2-UKL)
K173	Transmission Range Control Module	—	In the left side of the engine compartment, mounted on the top front of the transmission.	Front of Engine Components	K173 Transmission Range Control Module
K177	Brake Booster Control Module	—	In the engine compartment, mounted behind the brake master cylinder.	Left Side Engine Compartment	K177 Brake Booster Control Module

Master Electrical Component List (cont'd)

Code	Name	Option	Location	Locator View	Connector End View
K179	Digital Map Control Module	UKL	In the luggage compartment, behind the left trim panel mounted near the center rear of the wheel well.	Left Side of Passenger Compartment Components	K179 Digital Map Control Module (UKL)
K180	Driver Monitoring System Control Module	UKL	In the passenger compartment, behind the driver side of the instrument panel, outboard of the steering column.	—	• K180 Driver Monitoring System Control Module X1 (UKL) • K180 Driver Monitoring System Control Module X2 (UKL)
K182	Parking Assist Control Module	UD7	In the luggage compartment, mounted at the base of the C-pillar.	Left Side of Passenger Compartment Components	• K182 Parking Assist Control Module X1 (UD7) • K182 Parking Assist Control Module X2 (UD7)
K190	Power Line Communication Module	—	In the passenger compartment, mounted under drivers seat.	—	• K190 Power Line Communication Module X1 • K190 Power Line Communication Module X2
K212	Gear Shift Control Module	—	In passenger compartment, within center console.	Center Console Right Side	K212 Electronic Transmission Shift Control Pushbutton Circuit Board
M6	Air Temperature Door Actuator	—	In the passenger compartment, behind the center of the instrument panel.	HVAC Assembly Components	M6 Air Temperature Door Actuator
M8	Blower Motor	—	In the passenger compartment, behind the passenger side of the instrument panel.	HVAC Assembly Components	M8 Blower Motor
M15	Drive Motor	—	In the engine compartment, inside the automatic transmission assembly.	Transmission Components	M15 Drive Motor
M35D	Window Motor Module - Driver	—	In the passenger compartment, inside the driver door.	Driver Door Components	M35D Window Motor Module - Driver
M35P	Window Motor Module - Passenger	—	In the passenger compartment, inside the passenger door.	Passenger Door Components	M35P Window Motor Module - Passenger
M37	Mode Door Actuator	—	In the passenger compartment, left front, within the instrument panel, mounted to left of HVAC assembly.	HVAC Assembly Components	M37 Mode Door Actuator
M38	Power Steering Motor	—	In the passenger compartment, behind the instrument panel, attached to the power steering control module.	—	—
M45	Rear Wiper Motor	—	In the vehicle interior, inside the liftgate.	Liftgate Components (2 of 3)	M45 Rear Wiper Motor
M46	Air Recirculation Door Actuator	—	In the passenger compartment, left front, within the instrument panel, mounted to right of HVAC assembly.	—	M46 Air Recirculation Door Actuator

Master Electrical Component List (cont'd)

Code	Name	Option	Location	Locator View	Connector End View
M50D	Seat Front Vertical Motor - Driver	A2X	In the passenger compartment, within driver seat.	Driver Seat Components (3 of 4)	M50D Seat Front Vertical Motor - Driver (A2X)
M51D	Seat Horizontal Motor - Driver	A2X	In the passenger compartment, within driver seat.	Driver Seat Components (3 of 4)	M51D Seat Horizontal Motor - Driver (A2X)
M53D	Seat Lumbar Support Motor - Driver	A2X	In the passenger compartment, within driver seat.	Driver Seat Components (4 of 4)	M53D Seat Lumbar Support Motor - Driver (A2X)
M55D	Seat Rear Vertical Motor - Driver	A2X	In the passenger compartment, within driver seat.	Driver Seat Components (2 of 4)	M55D Seat Rear Vertical Motor - Driver (A2X)
M56D	Seat Recline Motor - Driver	A2X	In the passenger compartment, within driver seat.	Driver Seat Components (4 of 4)	M56D Seat Recline Motor - Driver (A2X)
M74LR	Window Motor - Left Rear	—	In the passenger compartment, inside the left rear door.	Left Rear Door Components	M74LR Window Motor - Left Rear
M74RR	Window Motor - Right Rear	—	In the passenger compartment, inside the right rear door.	Right Rear Door Components	M74RR Window Motor - Right Rear
M75	Windshield Wiper Motor	—	In the cowl panel, at the base of the windshield left side.	Left Side Engine Compartment	M75 Windshield Wiper Motor
M77D	Outside Rearview Mirror Motor - Driver	—	Outside of driver door, part of outside rearview mirror assembly.	—	—
M77P	Outside Rearview Mirror Motor - Passenger	—	Outside of passenger door, part of outside rearview mirror assembly.	—	—
M78D	Outside Rearview Mirror Folding Motor - Driver	—	Outside of driver door, part of outside rearview mirror assembly.	—	—
M78P	Outside Rearview Mirror Folding Motor - Passenger	—	Outside of passenger door, part of outside rearview mirror assembly.	—	—
M81	Sunroof Sunshade Motor	CAJ	In the passenger compartment, above headliner, at the rear of the sunroof.	—	M81 Sunroof Sunshade Motor (CAJ)
M96A	Active Grille Air Shutter 1 Actuator	—	At front of vehicle, at center, rear of lower center grille opening.	—	M96A Active Grille Air Shutter 1 Actuator
M104L	Park Brake Actuator - Left	—	In the vehicle underbody, left rear, mounted to the left rear caliper bracket.	Wheel Well Components - Rear	M104L Park Brake Actuator - Left
M104R	Park Brake Actuator - Right	—	In the vehicle underbody, right rear, mounted to the right rear caliper bracket.	Wheel Well Components - Rear	M104R Park Brake Actuator - Right
M110	Hybrid/EV Battery Charger Receptacle Lock Actuator	—	In the charging port, on the left front side of the vehicle.	—	—
P2	Transmission Shift Lever Position Indicator	—	In the passenger compartment, at the front of the center console.	—	—
P12L	Horn - Left	—	In the left front of the engine compartment, at the frame rail just behind the radiator.	• Behind Front of Vehicle Components • Front of Engine Compartment	P12L Horn - Left

Master Electrical Component List (cont'd)

Code	Name	Option	Location	Locator View	Connector End View
P12R	Horn - Right	—	In the right front of the engine compartment, at the frame rail just behind the radiator.	Front of Engine Compartment	P12R Horn - Right
P14	Passenger Air Bag Disabled Indicator	—	in the passenger compartment, mounted in the headliner, part of over head console assembly.	Headliner Components (1 of 2)	P14 Passenger Air Bag Disabled Indicator
P16	Instrument Cluster	—	In the passenger compartment, in the driver side of the instrument panel.	Front of Instrument Panel Components	P16 Instrument Cluster
P17	Info Display Module	—	In the passenger compartment, in the Center of the instrument panel, above the HVAC controls.	Front of Instrument Panel Components	• P17 Info Display Module X1 • P17 Info Display Module X2
P19AC	Speaker - Subwoofer	UQA	In the passenger compartment, in the center of the rear well.	Bottom of Luggage Compartment Components	P19AC Speaker - Subwoofer (UQA)
P19AG	Speaker - Left Front Door	—	On the left front door, front lower, behind door trim.	Driver Door Components	• P19AG Speaker - Left Front Door (UQ3) • P19AG Speaker - Left Front Door (UQA)
P19AH	Speaker - Right Front Door	—	On the right front door, front lower, behind door trim.	Passenger Door Components	• P19AH Speaker - Right Front Door (UQ3) • P19AH Speaker - Right Front Door (UQA)
P19AL	Speaker - Left Rear Door	—	On the left rear door, front lower, behind door trim.	Left Rear Door Components	• P19AL Speaker - Left Rear Door (UQ3) • P19AL Speaker - Left Rear Door (UQA)
P19AM	Speaker - Right Rear Door	—	On the right rear door, front lower, behind door trim.	Right Rear Door Components	• P19AM Speaker - Right Rear Door (UQ3) • P19AM Speaker - Right Rear Door (UQA)
P19H	Speaker - Left Front Tweeter	—	In the passenger compartment, left front, mounted to rear of A-pillar trim.	Front of Instrument Panel Components	P19H Speaker - Left Front Tweeter
P19V	Speaker - Right Front Tweeter	—	In the passenger compartment, right front, mounted to rear of A-pillar trim.	Front of Instrument Panel Components	P19V Speaker - Right Front Tweeter
P34D	Side Object Detection Indicator - Driver	—	On outside of driver door, front middle, forward of window opening, part of outside rearview mirror glass.	Driver Door Components	—
P34P	Side Object Detection Indicator - Passenger	—	On outside of passenger door, front middle, forward of window opening, part of outside rearview mirror glass.	Passenger Door Components	—

Master Electrical Component List (cont'd)

Code	Name	Option	Location	Locator View	Connector End View
P43	Collision Alert Indicators	—	In the passenger compartment, left front, mounted to instrument panel, forward of instrument cluster.	• Front of Instrument Panel Components • Rear of Instrument Panel Components	P43 Collision Alert Indicators
P48F	Pedestrian Alert Sound Speaker - Front	—	At the front of the vehicle, in the middle behind the front fascia.	—	P48F Pedestrian Alert Sound Speaker - Front
P48R	Pedestrian Alert Sound Speaker - Rear	—	At the rear of the vehicle, on the left side near the wheel well, behind the rear fascia.	Left Rear of Vehicle Components	P48R Pedestrian Alert Sound Speaker - Rear
P50	Emergency Call Backup Speaker	UER	In the passenger compartment, front center, near the top of the instrument panel.	—	P50 Emergency Call Backup Speaker (UER)
P51	Lane Centering Indicators - Steering Wheel	—	In the passenger compartment, at the top of the steering wheel.	Steering Wheel Components	—
Q5	Brake Pressure Modulator	—	In the left rear of the engine compartment, mounted to the right of the strut tower, attached to the electronic brake control module.	—	—
R6E	Terminating Resistor - High Speed Extension Bus 1	—	In the passenger compartment, behind left side of the instrument panel.	Behind Left Side of Instrument Panel Components	R6E Terminating Resistor - High Speed Extension Bus 1
R6F	Terminating Resistor - High Speed Extension Bus 2	without UKL	In the passenger compartment, behind instrument panel near the radio.	Rear of Instrument Panel Components	R6F Terminating Resistor - High Speed Extension Bus 2 (-UKL)
R25	Hybrid/EV Battery Pre-Charge Resistor	—	Inside Hybrid/EV Battery Pack.	—	—
R44	Radio AM Antenna Signal Filter Module - Center High Mounted Stop Lamp	—	At the rear of the vehicle, mounted to the liftgate, top right of center.	Liftgate Components (2 of 3)	• R44 Radio AM Antenna Signal Filter Module - Center High Mounted Stop Lamp X1 • R44 Radio AM Antenna Signal Filter Module - Center High Mounted Stop Lamp X2
S13D	Door Lock Switch - Driver	—	In the passenger compartment, inside the driver door.	Driver Door Trim Components	S13D Door Lock Switch - Driver
S13P	Door Lock Switch - Passenger	—	In the passenger compartment, inside the passenger door.	Passenger Door Trim Components	S13P Door Lock Switch - Passenger
S15	Manual Service Disconnect	—	In the passenger compartment under rear seat lower cushion.	Left Side of Passenger Compartment Components	—
S26	Hazard Warning Switch	—	In the passenger compartment, center front, right of HVAC controls.	Front of Instrument Panel Components	S26 Hazard Warning Switch

Master Electrical Component List (cont'd)

Code	Name	Option	Location	Locator View	Connector End View
S30	Headlamp Switch	—	In the passenger compartment, on the left side of the instrument panel, between the steering column, and the driver door.	Front of Instrument Panel Components	S30 Headlamp Switch
S32LR	Seat Heating Switch - Left Rear	KA6	In the passenger compartment, within left rear seat.	—	S32LR Seat Heating Switch - Left Rear (KA6)
S32RR	Seat Heating Switch - Right Rear	KA6	In the passenger compartment, within right rear seat.	—	S32RR Seat Heating Switch - Right Rear (KA6)
S33	Horn Switch	—	In the passenger compartment, within the steering wheel, forward of the air bag.	—	• S33 Horn Switch X1 • S33 Horn Switch X2
S46B	Liftgate Unlatch Switch	—	In the passenger compartment, on the instrument panel left of steering column.	• Liftgate Components (2 of 3) • Liftgate Components (3 of 3)	S46B Liftgate Unlatch Switch
S48E	Multifunction Switch - Center Console	—	In the passenger compartment, in the forward of the center console.	Center Console Right Side	S48E Multifunction Switch - Center Console
S51	Telematics Button Assembly	UE1	In the passenger compartment, front center, within the overhead console, at front left.	Headliner Components (1 of 2)	S51 Telematics Button Assembly (UE1)
S64D	Seat Adjuster Switch - Driver	A2X	In the passenger compartment, within driver seat.	Driver Seat Components (2 of 4)	S64D Seat Adjuster Switch - Driver (A2X)
S65D	Seat Lumbar Support Switch - Driver	A2X	In the passenger compartment, within driver seat.	Driver Seat Components (2 of 4)	S65D Seat Lumbar Support Switch - Driver (A2X)
S70E	Steering Wheel Controls Switch - Radio Presets	—	In the passenger compartment, left front, on steering wheel, left spoke facing driver.	Steering Wheel Components	S70E Steering Wheel Controls Switch - Radio Presets
S70F	Steering Wheel Controls Switch - Radio Volume	—	In the passenger compartment, left front, on steering wheel, right spoke facing driver.	Steering Wheel Components	S70F Steering Wheel Controls Switch - Radio Volume
S70L	Steering Wheel Controls Switch - Left	—	In the passenger compartment, left front, on steering wheel, left spoke facing driver.	Steering Wheel Components	S70L Steering Wheel Controls Switch - Left
S70R	Steering Wheel Controls Switch - Right	—	In the passenger compartment, left front, on steering wheel, right spoke facing driver.	Steering Wheel Components	S70R Steering Wheel Controls Switch - Right
S72	Sunroof Switch	CAJ	In the passenger compartment, front center, within the overhead console, at rear left.	Headliner Components (1 of 2)	S72 Sunroof Switch (CAJ)
S78	Turn Signal/Multifunction Switch	—	In the passenger compartment, on the steering column.	Steering Column Components	S78 Turn Signal/Multifunction Switch
S79LR	Window Switch - Left Rear	—	In the passenger compartment, in the left rear door.	Left Rear Door Trim Components	S79LR Window Switch - Left Rear
S79P	Window Switch - Passenger	—	In the passenger compartment, in the passenger door.	Passenger Door Trim Components	S79P Window Switch - Passenger

Master Electrical Component List (cont'd)

Code	Name	Option	Location	Locator View	Connector End View
S79RR	Window Switch - Right Rear	—	In the passenger compartment, in the right rear door.	Right Rear Door Trim Components	S79RR Window Switch - Right Rear
S82	Windshield Wiper/ Washer Switch	—	In the passenger compartment, left front, within the steering column, forward of the steering wheel, on right side.	Steering Column Components	S82 Windshield Wiper/Washer Switch
S83	Vehicle On/Off Switch	—	In the passenger compartment, in the center of the instrument panel left of HVAC controls.	Front of Instrument Panel Components	S83 Vehicle On/Off Switch
S90	Sunroof Sunshade Switch	CAJ	In the passenger compartment, front center, within the overhead console, at rear right.	Headliner Components (1 of 2)	S90 Sunroof Sunshade Switch (CAJ)
S91	Park Brake Control Switch	—	In the passenger compartment, in the center console below shift lever.	Center Console Right Side	S91 Park Brake Control Switch
S146	Window/Outside Rearview Mirror Switch - Driver	—	In the driver door trim panel, forward of the arm rest.	Driver Door Trim Components	S146 Window/Outside Rearview Mirror Switch - Driver
T2E	Antenna - Rear End Spoiler	—	In the passenger compartment, mounted behind the trim of the rear liftgate.	—	—
T2RR	Antenna - Roof Rear	—	In passenger compartment, rear of vehicle, mounted to the roof.	Rear of Vehicle	• T2RR Antenna - Roof Rear X1 • T2RR Antenna - Roof Rear X2
T3	Audio Amplifier	UQA	In the luggage compartment, in the center of the rear well.	Bottom of Luggage Compartment Components	• T3 Audio Amplifier X1 (UQA) • T3 Audio Amplifier X2 (UQA) • T3 Audio Amplifier X3 (UQA)
T4S	Wireless Communication Antenna - Bluetooth	—	In the passenger compartment, attached to the telematics control module.	—	—
T4T	Wireless Communication Antenna - WLAN	—	In the passenger compartment, under the left side of the instrument panel near the serial data gateway module.	—	T4T Wireless Communication Antenna - WLAN
T6	Power Inverter Module	—	In the engine compartment, under the power inverter module assembly cable cover.	Front of Engine Components	• T6 Power Inverter Module X1 • T6 Power Inverter Module X2 • T6 Power Inverter Module X3
T10E	Keyless Entry Antenna - Rear Compartment	—	In the luggage compartment, left front, behind trim on liftgate opening.	Left Side of Passenger Compartment Components	T10E Keyless Entry Antenna - Rear Compartment
T10G	Keyless Entry Antenna - Rear Fascia	—	At the rear of vehicle, near center, above bumper behind fascia.	Behind the Rear Fascia Components	T10G Keyless Entry Antenna - Rear Fascia
T10J	Keyless Entry Antenna - Center Console Front	—	Inside the passenger compartment, mounted to the front of shift lever.	Rear of Instrument Panel Components	T10J Keyless Entry Antenna - Center Console Front
T10K	Keyless Entry Antenna - Center Console Rear	—	Inside the passenger compartment, mounted to the rear of shift lever.	Center Console Right Side	T10K Keyless Entry Antenna - Center Console Rear

Master Electrical Component List (cont'd)

Code	Name	Option	Location	Locator View	Connector End View
T10M	Keyless Entry Antenna - Driver Door Handle	—	On outside of driver door, at rear, part of door handle assembly.	—	—
T10N	Keyless Entry Antenna - Passenger Door Handle	—	On outside of driver door, at rear, part of passenger handle assembly.	—	—
T12	Automatic Transmission Assembly	—	In the engine compartment, mounted to the left side of the drive motor.	Front of Engine Components	• T12 Automatic Transmission Assembly X1 • T12 Automatic Transmission Assembly X2 • T12 Automatic Transmission Assembly X3 • T12 Automatic Transmission Assembly X4
T18	Battery Charger	—	In the engine compartment mounted above transmission assembly and below engine control module.	Front of Engine Components	• T18 Battery Charger X1 • T18 Battery Charger X2 • T18 Battery Charger X3
T22	Mobile Device Wireless Charger Module	—	In the passenger compartment, middle center, mounted to center console, in front of center console compartment.	Front of Instrument Panel Components	T22 Mobile Device Wireless Charger Module
T23	Radio Antenna Amplifier	—	In the rear compartment, under the center rear of the headliner, just forward of the liftgate.	—	• T23 Radio Antenna Amplifier X1 • T23 Radio Antenna Amplifier X2
T24	Battery Charger - DC	—	In the engine compartment mounted above the power inverter module.	Engine Compartment Top	• T24 Battery Charger - DC X1 • T24 Battery Charger - DC X2 • T24 Battery Charger - DC X3 • T24 Battery Charger - DC X4 • T24 Battery Charger - DC X5 • T24 Battery Charger - DC X6 • T24 Battery Charger - DC X7 • T24 Battery Charger - DC X8 • T24 Battery Charger - DC X9
V1	Air Ionizer	KEM	In the passenger compartment, behind the instrument panel, towards the left of the vehicle.	—	• V1 Air Ionizer X1 (KEM) • V1 Air Ionizer X2 (KEM)
V2	Air Ionizer Electrode	KEM	In the passenger compartment, behind the instrument panel, towards the left of the vehicle.	—	V2 Air Ionizer Electrode (KEM)

Master Electrical Component List (cont'd)

Code	Name	Option	Location	Locator View	Connector End View
X21	Manual Service Disconnect Receptacle	—	Under the vehicle at the top of the Hybrid/EV Battery, under the battery cover at the top rear of section 2.	—	• X21 Manual Service Disconnect Receptacle X1 • X21 Manual Service Disconnect Receptacle X2 • X21 Manual Service Disconnect Receptacle X3
X50A	Fuse Block - Underhood	—	In the engine compartment, in the left rear corner of the engine compartment.	• Behind Front of Vehicle Components • Left Side Engine Compartment	Electrical Center Identification Views on page 6-34
X50D	Fuse Block - Battery	—	In the engine compartment, on the left side of the engine compartment.	Left Side Engine Compartment	Electrical Center Identification Views on page 6-34
X51A	Fuse Block - Instrument Panel	—	In the passenger compartment, on the driver side of the instrument panel.	—	Electrical Center Identification Views on page 6-34
X55QA	Fuse Holder 1 - Hybrid/EV Battery Pack	—	Internal component to Hybrid/EV battery pack.	—	Electrical Center Identification Views on page 6-34
X80	Accessory Power Receptacle	—	In the passenger compartment, mounted under hvac controls, left center in instrument panel.	Front of Instrument Panel Components	X80 Accessory Power Receptacle
X83	Auxiliary Audio Input	—	In the passenger compartment, center middle, Instrument panel under HVAC control head.	Front of Instrument Panel Components	• X83 Auxiliary Audio Input X1 • X83 Auxiliary Audio Input X2
X84	Data Link Connector	—	In the passenger compartment, on the driver side of the instrument panel.	Front of Instrument Panel Components	X84 Data Link Connector
X85	Steering Wheel Air Bag Coil	—	In the passenger compartment, behind the steering wheel, on the steering column.	Steering Column Components	• X85 Steering Wheel Air Bag Coil X1 • X85 Steering Wheel Air Bag Coil X2 (-UKL) • X85 Steering Wheel Air Bag Coil X2 (UKL)
X92	USB Receptacle	USS	in the passenger compartment, mounted in rear of center console.	Center Console Right Side	X92 USB Receptacle (USS)
X98	Hybrid/EV Battery Charger Receptacle	—	Left side of the vehicle, forward of the driver door.	—	• X98 Hybrid/EV Battery Charger Receptacle X1 • X98 Hybrid/EV Battery Charger Receptacle X2 • X98 Hybrid/EV Battery Charger Receptacle X4
X101	Front Object Alarm Sensor Wiring Harness to Forward Lamp Wiring Harness	—	In the engine compartment, front center, between front fascia and core support.	Front Fascia Harness Routing	X101 Front Object Alarm Sensor Wiring Harness to Forward Lamp Wiring Harness

Master Electrical Component List (cont'd)

Code	Name	Option	Location	Locator View	Connector End View
X103	Forward Lamp Wiring Harness to Front Object Alarm Sensor Wiring Harness	UV2	In the engine compartment, front center, between front fascia and core support.	Front Fascia Harness Routing	X103 Forward Lamp Wiring Harness to Front Object Alarm Sensor Wiring Harness (UV2)
X105	Body Wiring Harness to Engine Wiring Harness	—	In the engine compartment, left rear, near battery.	• Engine Compartment Harness Routing • Engine Harness Routing - Right Front • Right Front of Passenger Compartment Harness Routing	X105 Body Wiring Harness to Engine Wiring Harness
X106	Body Wiring Harness to Engine Wiring Harness	—	In the engine compartment, right rear, near top of right strut tower.	• Engine Compartment Harness Routing • Engine Harness Routing - Left Front • Engine Harness Routing - Right Front • Left Front of Passenger Compartment Harness Routing	X106 Body Wiring Harness to Engine Wiring Harness
X107	Body Wiring Harness to Forward Lamp Wiring Harness	—	In the engine compartment, right front, mounted on the front frame rail.	Engine Compartment Harness Routing	X107 Body Wiring Harness to Forward Lamp Wiring Harness
X108	Body Wiring Harness to Forward Lamp Wiring Harness	—	In the engine compartment, right front, mounted on the front frame rail.	Engine Compartment Harness Routing	• X108 Body Wiring Harness to Forward Lamp Wiring Harness (-UKL) • X108 Body Wiring Harness to Forward Lamp Wiring Harness (UKL)
X110	Forward Lamp Wiring Harness to Left Front Headlamp	—	At the front of vehicle, at the bottom of headlamp assembly – left.	—	X110 Forward Lamp Wiring Harness to Left Front Headlamp
X116	Forward Lamp Wiring Harness to Body Wiring Harness	UV2	In the engine compartment, right front, near the front frame rail.	—	X116 Forward Lamp Wiring Harness to Body Wiring Harness (UV2)
X117	High Voltage Wiring Harness to Body Wiring Harness	—	At the front of vehicle, at the bottom of headlamp assembly – left.	Engine Compartment Harness Routing	X117 High Voltage Wiring Harness to Body Wiring Harness
X120	Forward Lamp Wiring Harness to Right Front Headlamp	—	At the front of vehicle, at the bottom of headlamp assembly – Right.	—	X120 Forward Lamp Wiring Harness to Right Front Headlamp
X200	Instrument Panel Wiring Harness to Body Wiring Harness	—	In the passenger compartment, at the base of the left A-pillar, behind the kick panel.	• Instrument Panel Harness Routing • Left Front of Passenger Compartment Harness Routing	X200 Instrument Panel Wiring Harness to Body Wiring Harness

Master Electrical Component List (cont'd)

Code	Name	Option	Location	Locator View	Connector End View
X205	Instrument Panel Wiring Harness to Body Wiring Harness	—	In the passenger compartment, at the base of the right A-pillar, behind the kick panel.	• Instrument Panel Harness Routing • Right Front of Passenger Compartment Harness Routing	X205 Instrument Panel Wiring Harness to Body Wiring Harness
X208	Roof Wiring Harness to Body Wiring Harness	—	In the passenger compartment, mounted on the left side of instrument panel.	• Headliner Harness Routing • Left Front of Passenger Compartment Harness Routing	X208 Roof Wiring Harness to Body Wiring Harness
X209	Instrument Panel Wiring Harness to Body Wiring Harness	UE1 or UER	In the passenger compartment, at base of the right A-pillar, behind the kick panel.	—	• X209 Instrument Panel Wiring Harness to Body Wiring Harness ((UE1)+(MAH/MBC/MCX)) • X209 Instrument Panel Wiring Harness to Body Wiring Harness ((UE1/UER) +(MAM/MBA/MAY))
X210	Instrument Panel Wiring Harness to Body Wiring Harness	—	In the passenger compartment, behind the left side of the instrument panel.	• Instrument Panel Harness Routing • Left Front of Passenger Compartment Harness Routing	X210 Instrument Panel Wiring Harness to Body Wiring Harness
X211	Instrument Panel Wiring Harness to Body Wiring Harness	—	In the passenger compartment, behind the right side of the instrument panel.	—	• X211 Instrument Panel Wiring Harness to Body Wiring Harness (U2K) • X211 Instrument Panel Wiring Harness to Body Wiring Harness (U2Q)
X213	Instrument Panel Wiring Harness to Body Wiring Harness	-U2K/U2Q/UE1/UER	In the passenger compartment, at base of the right A-pillar, behind the kick panel.	—	X213 Instrument Panel Wiring Harness to Body Wiring Harness (-U2K/U2Q/UE1/UER)
X220	Steering Wheel Wiring Harness to Light Bar Wiring Harness	UKL	In the passenger compartment, in the steering wheel.	Steering Wheel Harness Routing	X220 Steering Wheel Wiring Harness to Light Bar Wiring Harness (UKL)
X236	Instrument Panel Wiring Harness to HVAC Wiring Harness	—	In the passenger compartment, behind the right side of the instrument panel.	Instrument Panel Harness Routing	X236 Instrument Panel Wiring Harness to HVAC Wiring Harness
X300	Body Wiring Harness to Front Floor Console Wiring Harness	—	In the passenger compartment, under the center console.	• Center Console Harness Routing • Right Side of Passenger Compartment Harness Routing	X300 Body Wiring Harness to Front Floor Console Wiring Harness

Master Electrical Component List (cont'd)

Code	Name	Option	Location	Locator View	Connector End View
X310	Front Driver Seat Wiring Harness to Body Wiring Harness	A2X	In the passenger compartment, under the center console.	• Driver Seat Harness Routing • Left Side of Passenger Compartment Harness Routing	X310 Front Driver Seat Wiring Harness to Body Wiring Harness (A2X)
X320	Front Passenger Seat Wiring Harness to Body Wiring Harness	—	In the passenger compartment, under the passenger seat.	• Passenger Seat Harness Routing • Right Side of Passenger Compartment Harness Routing	X320 Front Passenger Seat Wiring Harness to Body Wiring Harness
X330	Instrument Panel Wiring Harness to Roof Wiring Harness	—	In the passenger compartment, behind the headliner.	—	X330 Instrument Panel Wiring Harness to Roof Wiring Harness
X355	Low Voltage Battery Harness to Battery Module 4 Jumper	—	Internal to Hybrid/EV Battery Pack.	—	X355 Low Voltage Battery Harness to Battery Module 4 Jumper
X356	Low Voltage Battery Harness to Battery Module 7 Jumper	—	Internal to Hybrid/EV Battery Pack.	—	X356 Low Voltage Battery Harness to Battery Module 7 Jumper
X357	Body Wiring Harness to Voltage Current Temperature Module	—	Underbody in rear of vehicle, connected to front of Hybrid/EV Battery Pack.	Under Vehicle Harness Routing	X357 Body Wiring Harness to Voltage Current Temperature Module
X358	Body Wiring Harness to Battery Disconnect Module	—	Underbody in rear of vehicle, connected to left side of Hybrid/EV Battery Pack.	Under Vehicle Harness Routing	X358 Body Wiring Harness to Battery Disconnect Module
X360	Rear Seat Wiring Harness to Body Wiring Harness	KA6	In the passenger compartment, inside rear seat, on the left side.	Right Rear of Passenger Compartment Harness Routing	X360 Rear Seat Wiring Harness to Body Wiring Harness (KA6)
X375	Body Wiring Harness to Sunroof Wiring Harness	CAJ	In the passenger compartment, behind the left rear of the headliner, near the left roof rail air bag.	—	X375 Body Wiring Harness to Sunroof Wiring Harness (CAJ)
X401	Body Wiring Harness to Antenna	—	In the passenger compartment, mounted near the left C-pillar.	—	X401 Body Wiring Harness to Antenna
X405	Liftgate Jumper Wiring Harness to Roof Wiring Harness	—	In the passenger compartment, behind the rear of the headliner just to the left of center.	Headliner Harness Routing	X405 Liftgate Jumper Wiring Harness to Roof Wiring Harness
X415	Body Wiring Harness to Rear Object Alarm Sensor Wiring Harness	—	In the rear of vehicle, on left side, under the rear fasica.	Rear Fascia Harness Routing	X415 Body Wiring Harness to Rear Object Alarm Sensor Wiring Harness
X500	Front Side Door Door Wiring Harness - Driver to Body Wiring Harness	—	In the passenger compartment, at the left front A-pillar.	Driver Door Harness Routing (2 of 2)	X500 Front Side Door Door Wiring Harness - Driver to Body Wiring Harness
X510	Front Side Door Door Wiring Harness - Driver to Outside Rearview Mirror Wiring Harness - Driver	—	In the driver door, behind driver door trim.	Driver Door Harness Routing (2 of 2)	X510 Front Side Door Door Wiring Harness - Driver to Outside Rearview Mirror Wiring Harness - Driver

Master Electrical Component List (cont'd)

Code	Name	Option	Location	Locator View	Connector End View
X600	Front Side Door Door Wiring Harness - Passenger to Body Wiring Harness	—	In the passenger compartment, at the right front A-pillar.	Passenger Door Harness Routing	X600 Front Side Door Door Wiring Harness - Passenger to Body Wiring Harness
X610	Front Side Door Door Wiring Harness - Passenger to Outside Rearview Mirror Wiring Harness - Passenger	—	In the passenger door, behind passenger door trim.	Passenger Door Harness Routing	X610 Front Side Door Door Wiring Harness - Passenger to Outside Rearview Mirror Wiring Harness - Passenger
X700	Rear Door Door Wiring Harness - Left to Body Wiring Harness	—	In the passenger compartment, in the left B-pillar.	• Left Rear Door Harness Routing • Left Side of Passenger Compartment Harness Routing	X700 Rear Door Door Wiring Harness - Left to Body Wiring Harness
X800	Rear Door Door Wiring Harness - Right to Body Wiring Harness	—	In the passenger compartment, in the right B-pillar.	• Right Rear Door Harness Routing • Right Side of Passenger Compartment Harness Routing	X800 Rear Door Door Wiring Harness - Right to Body Wiring Harness
X900	Liftgate Jumper Wiring Harness to Body Wiring Harness	—	In the cargo area, on the left side, behind the trim panel.	Right Rear of Passenger Compartment Harness Routing	X900 Liftgate Jumper Wiring Harness to Body Wiring Harness
X901	Liftgate Jumper Wiring Harness to Liftgate Wiring Harness	—	In the cargo area, on the left side, behind the trim panel.	• Liftgate Extension Harness Routing • Liftgate Harness Routing	X901 Liftgate Jumper Wiring Harness to Liftgate Wiring Harness
X902	Rear License Plate Lamp Wiring Harness Extension Harness to Liftgate Wiring Harness	—	In the rear of the vehicle, behind the liftgate trim panel, below the middle of the rear window.	• License Lamp Harness Routing • Liftgate Harness Routing	X902 Rear License Plate Lamp Wiring Harness Extension Harness to Liftgate Wiring Harness
X903	Liftgate Jumper Wiring Harness to Liftgate Wiring Harness Extension Harness	—	In the rear of the vehicle, behind the liftgate trim panel, below the middle of the rear window.	—	X903 Liftgate Jumper Wiring Harness to Liftgate Wiring Harness Extension Harness
X904	Antenna Harness to Antenna Harness	—	In the passenger compartment, rear of vehicle, behind headliner.	—	X904 Antenna Harness to Antenna Harness
X905	Liftgate Wiring Harness to Antenna	UV2	In the rear of the vehicle, behind the liftgate trim panel, below the middle of the rear window above the license plate lights.	Liftgate Harness Routing	• X905 Liftgate Wiring Harness to Antenna (UV2) • X905 Liftgate Wiring Harness to Antenna (UVB)
X906	Roof Antenna Wiring Harness to Liftgate Antenna Wiring Harness	—	In the rear of the vehicle, behind the liftgate trim panel.	—	X906 Roof Antenna Wiring Harness to Liftgate Antenna Wiring Harness

Master Electrical Component List (cont'd)

Code	Name	Option	Location	Locator View	Connector End View
X908	Liftgate Wiring Harness to Rear License Plate Lamp Wiring Harness Extension Harness	—	In the rear of the vehicle, behind the liftgate trim panel.	• License Lamp Harness Routing • Liftgate Harness Routing	• X908 Liftgate Wiring Harness to Rear License Plate Lamp Wiring Harness Extension Harness (UV2) • X908 Liftgate Wiring Harness to Rear License Plate Lamp Wiring Harness Extension Harness (UVB)
G100	Forward Lamp Wiring Harness	—	In the engine compartment, front left of center, on frame rail forward of battery.	G100	—
G101	Forward Lamp Wiring Harness	—	In the engine compartment, front left of center, on core support under Left headlamp assembly.	G101	—
G102	Engine Wiring Harness	—	In the engine compartment, front right of center, on core support under right headlamp assembly.	G102	—
G103	Body Wiring Harness	—	In the engine compartment, rear center, on frame.	G103	—
G104	Body Wiring Harness	—	In the engine compartment, front right of center, on frame.	G104 and G105	—
G105	Body Wiring Harness	—	In the engine compartment, rear of front frame right of center.	G104 and G105	—
G106	Forward Lamp Wiring Harness	UKL	In the left front of the engine compartment.	—	—
G107	Battery Negative Wiring Harness	—	In the engine compartment, attached to the center of the left strut tower.	G107	—
G108	Battery Charger Receptacle Wiring Harness	—	In the charging port receptacle.	—	—
G111	Engine Wiring Harness	—	In the engine compartment, lift front, mouthed support member.	G111	—
G112	Engine Wiring Harness	—	In the engine compartment, attached to left side of coolant heater control module.	G112	—
G116	Engine Wiring Harness	—	In the engine compartment, left front, mounted to support member.	G116	—
G150	Ground Jumper Wiring Harness	—	In the engine compartment, left front, attached to left frame rail, before left front strut tower.	G150, G151, G153 and G154	—
G151	Ground Jumper Wiring Harness	—	In the engine compartment, attached to right side front of rear frame.	G150, G151, G153 and G154	—
G152	Ground Jumper Wiring Harness	—	In the engine compartment, attached to right side or drive motor.	—	—

Master Electrical Component List (cont'd)

Code	Name	Option	Location	Locator View	Connector End View
G153	Ground Jumper Wiring Harness	—	In the engine compartment, mounted to front center of frame.	G150, G151, G153 and G154	—
G154	Ground Jumper Wiring Harness	—	In the engine compartment, mounted to left front corner of power inverter module.	G150, G151, G153 and G154	—
G155	Ground Jumper Wiring Harness	—	In the engine compartment, attached to left upper frame rail, above electric drive motor.	G155 and G156	—
G156	Ground Jumper Wiring Harness	—	In the engine compartment, attached to base of electric drive motor.	G155 and G156	—
G157	Ground Jumper Wiring Harness	—	In the engine compartment, attached to frame rail, above electric drive motor.	G157 and G158	—
G158	Ground Jumper Wiring Harness	—	In the engine compartment, attached to electric drive motor, on right side at base of electric drive motor.	G157 and G158	—
G200	Instrument Panel Wiring Harness	—	In the passenger compartment, attached to the A-pillar, blow instrument panel, behind trim panel.	G200	—
G201	Instrument Panel Wiring Harness	—	In the passenger compartment, left front, at base of left A-pillar.	G201 and G304	—
G202	Instrument Panel Wiring Harness	—	In the passenger compartment, right front, at base of left A-pillar.	G202 and G305	—
G203	Instrument Panel Wiring Harness	—	In the passenger compartment, mounted behind the center of the instrument panel.	G203	—
G260	Ground Jumper Wiring Harness	—	In the engine compartment.	G260, G261, G262 and G263	—
G261	Ground Jumper Wiring Harness	—	In the engine compartment.	G260, G261, G262 and G263	—
G262	Ground Jumper Wiring Harness	—	In the engine compartment.	G260, G261, G262 and G263	—
G263	Ground Jumper Wiring Harness	—	In the engine compartment.	G260, G261, G262 and G263	—
G298	Steering Wheel Pad Accessory Wiring Harness	—	In the passenger compartment, in the steering wheel.	G297, G298 and G299	—
G299	Steering Wheel Pad Accessory Wiring Harness	—	In the passenger compartment, in the steering wheel.	G297, G298 and G299	—
G304	Body Wiring Harness	—	In the passenger compartment, attache to the base of the left A-pillar, behind trim panel.	G201 and G304	—
G305	Body Wiring Harness	—	In the passenger compartment, right of center rear of middle, on floor below left front seat.	G202 and G305	—

Master Electrical Component List (cont'd)

Code	Name	Option	Location	Locator View	Connector End View
G310	Instrument Panel Wiring Harness	—	In the passenger compartment, under the center console near the inflatable restraint sensing and diagnostic module.	G310	—
G355	Ground Jumper Wiring Harness	—	Outside under body left of center mounted on body frame rail next to G357.	G355, G356, G357 and G358	—
G356	Ground Jumper Wiring Harness	—	Outside under body left of center mounted to battery pack next to G358.	G355, G356, G357 and G358	—
G357	Ground Jumper Wiring Harness	—	Outside under body left of center mounted on Body frame rail next to G355.	G355, G356, G357 and G358	—
G358	Ground Jumper Wiring Harness	—	Outside under body left of center mounted on body frame rail next to G356.	G355, G356, G357 and G358	—
G401	Body Wiring Harness	—	In the luggage compartment, attached to the upper portion of the left rear wheel well.	G401, G404, G407 and G408	—
G404	Body Wiring Harness	—	In the luggage compartment, attached to the upper portion of the left rear wheel well.	G401, G404, G407 and G408	—
G405	Body Wiring Harness	—	In the right side of the luggage compartment, behind the trim panel at the top front of the wheel well.	G405	—
G407	Body Wiring Harness	—	In the luggage compartment, under the forward center of the floor just behind the rear seat.	G401, G404, G407 and G408	—
G408	Body Wiring Harness	—	In the luggage compartment, under the right side of the floor.	G401, G404, G407 and G408	—
J100	Engine Wiring Harness	—	In the engine harness approximately 4 cm (1.57 in) before the breakout to G111.	• Engine Harness Routing - Left Front • Engine Harness Routing - Right Front	—
J101	Engine Wiring Harness	—	In the engine compartment, in main harness bundle.	• Engine Harness Routing - Left Front • Engine Harness Routing - Right Front	—
J102	Body Wiring Harness	—	In the engine compartment, approximately 9.7 cm (3.8 in) from the breakout to the brake fluid level switch towards the battery.	Engine Compartment Harness Routing	—
J103	Forward Lamp Wiring Harness	—	In the Engine Wiring Harness approximately 7.5 cm (2.95 in) from breakout to G101	—	—
J104	Engine Wiring Harness	—	In the engine comparmtent, in main harness bundle.	Engine Harness Routing - Left Front	—

Master Electrical Component List (cont'd)

Code	Name	Option	Location	Locator View	Connector End View
J105	High Voltage Wiring Harness	—	In the Engine Wiring Harness approximately 11 cm (4.33 in) from the Power Inverter Module branch breakout.	—	—
J106	Forward Lamp Wiring Harness	—	In the front of the engine compartment, approximately 12 cm (7.75 in) from breakout to the hood ajar switch towards X108.	—	—
J107	High Voltage Wiring Harness	—	In the Engine Wiring Harness main bundle approximately 4.5 cm (1.77 in) from the G109 branch breakout.	—	—
J108	Engine Wiring Harness	—	In the engine harness approximately 2cm (0.80 in) from the G112 breakout.	• Engine Harness Routing - Left Front • Engine Harness Routing - Right Front	—
J113	Body Wiring Harness	—	In the cowl panel, at the base of the windshield left side, approximately 8.6 cm (3.30 in) from the windshield wiper motor.	—	—
J114	Forward Lamp Wiring Harness	—	In the engine compartment, right of the hood latch.	—	—
J122	Engine Wiring Harness	—	In the engine harness approximately 5 cm (1.96 in) from breakout to G112.	• Engine Harness Routing - Left Front • Engine Harness Routing - Right Front	—
J123	Engine Wiring Harness	—	In the engine harness approximately 2 cm (0.80 in) from breakout to hybrid battery pack coolant pump.	• Engine Harness Routing - Left Front • Engine Harness Routing - Right Front	—
J128	Body Wiring Harness	—	In the passenger compartment, behind the left side of the instrument panel, approximately 6.1 cm (2.5 in) from the breakout to the terminating resister - high speed extension bus 1 towards the body control module.	Left Front of Passenger Compartment Harness Routing	—
J130	Engine Wiring Harness	—	In the engine comparmtent, in main harness bundle.	• Engine Harness Routing - Left Front • Engine Harness Routing - Right Front	—
J185	Forward Lamp Wiring Harness	—	In front of vehicle, within front fascia.	—	—
J200	Instrument Panel Wiring Harness	—	In the Body Wiring Harness approximately 4 cm (2.17 in) from breakout to X51A.	Instrument Panel Harness Routing	—

Master Electrical Component List (cont'd)

Code	Name	Option	Location	Locator View	Connector End View
J201	Instrument Panel Wiring Harness	—	In the body harness approximately 2.5 cm (1 in) from splice J203.	Instrument Panel Harness Routing	—
J202	Instrument Panel Wiring Harness	—	In the body harness approximately 17.5 cm (6.89 in) from X210.	Instrument Panel Harness Routing	—
J203	Instrument Panel Wiring Harness	—	In the body harness approximately 2.5 cm (1 in) from splice J201.	Instrument Panel Harness Routing	—
J204	Instrument Panel Wiring Harness	—	In the instrument panel harness approximately 2.5 cm (0.98 in) from splice pack JX200 branch.	Instrument Panel Harness Routing	—
J205	Instrument Panel Wiring Harness	—	In the instrument panel harness approximately 2.5 cm (0.98 in) from splice J252.	Instrument Panel Harness Routing	—
J206	HVAC Wiring Harness	—	In the HVAC Wiring Harness.	—	—
J207	HVAC Wiring Harness	—	In the HVAC Wiring Harness.	—	—
J208	Instrument Panel Wiring Harness	—	In the passenger compartment, approximately 12 cm (5.8 in) from the breakout to the blower motor control module towards the ambient light/sunload sensor and battery state of charge indicator.	Instrument Panel Harness Routing	—
J209	Instrument Panel Wiring Harness	—	In the passenger compartment, approximately 3.8 cm (1.5 in) from the breakout to the radio connector X2 towards the radio connector X5.	Instrument Panel Harness Routing	—
J210	Instrument Panel Wiring Harness	—	In the passenger compartment, approximately 5.3 cm (2.1 in) from the breakout to the radio connector X2 towards the radio connector X5.	Instrument Panel Harness Routing	—
J211	Instrument Panel Wiring Harness	—	In the passenger compartment, approximately 4 cm (1.6 in) from the breakout to G202 towards connector X211.	Instrument Panel Harness Routing	—
J212	Instrument Panel Wiring Harness	—	In the passenger compartment, approximately 2 cm (0.8 in) from the breakout to G202 towards connector X211.	Instrument Panel Harness Routing	—
J213	Body Wiring Harness	—	In the passenger compartment, approximately 5 cm (2.1 in) from the breakout to G305 towards connector X205.	—	—
J214	Body Wiring Harness	—	In the passenger compartment, approximately 10 cm (4.0 in) from the breakout to G305 towards connector X205.	—	—

Master Electrical Component List (cont'd)

Code	Name	Option	Location	Locator View	Connector End View
J217	Center Wiring Console	—	In the passenger compartment, within center console harness.	Center Console Harness Routing	—
J219	Instrument Panel Harness	—	In the instrument panel harness approximately 14 cm (5.5 in) from splice J217.	Instrument Panel Harness Routing	—
J220	Instrument Panel Wiring Harness	—	In the instrument panel harness on branch leading, approximately 8 cm (3.15 in) from X200.	Instrument Panel Harness Routing	—
J221	Instrument Panel Wiring Harness	—	In the passenger compartment, approximately 5.5 cm (2.2 in) from the telematics communication interface control module connector X1.	Instrument Panel Harness Routing	—
J223	Instrument Panel Wiring Harness	—	In the instrument panel harness on branch leading, approximately 8 cm (3.15 in) from X200.	Instrument Panel Harness Routing	—
J224	Instrument Panel Wiring Harness	—	In the instrument panel harness approximately 12 cm (4.72 in) from branch leading to radio.	Instrument Panel Harness Routing	—
J225	Instrument Panel Wiring Harness	—	In the instrument panel harness approximately 3 cm (1.18 in) in center of instrument panel.	Instrument Panel Harness Routing	—
J226	Instrument Panel Wiring Harness	—	In the instrument panel harness near center inside main bundle approximately 7 cm (2.8 in) from splice J218.	Instrument Panel Harness Routing	—
J227	Instrument Panel Wiring Harness	—	In the instrument panel harness approximately 28.5 cm (11.22 in) in from the accessory power receptacle.	Instrument Panel Harness Routing	—
J230	Steering Wheel Wiring Harness	—	In the Steering Wheel Wiring Harness	—	—
J232	Steering Wheel Wiring Harness	—	In the Steering Wheel Wiring Harness	—	—
J236	Body Wiring Harness	—	In the Body Wiring Harness approximately 5 cm (2 in) from branch leading to body control module.	Engine Compartment Harness Routing	—
J237	Body Wiring Harness	—	In the passenger compartment, behind the left side of the instrument panel, approximately 9.1 cm (3.6 in) from the breakout to the terminating resister - high speed extension bus 1 towards the body control module.	Left Front of Passenger Compartment Harness Routing	—
J238	Body Wiring Harness	—	In the body harness approximately 5 cm (2 in) from splice J239 in the main harness bundle.	Left Front of Passenger Compartment Harness Routing	—
J239	Body Wiring Harness	—	In the body harness approximately 5 cm (2 in) from splice J238 in the main harness bundle.	Left Front of Passenger Compartment Harness Routing	—

Master Electrical Component List (cont'd)

Code	Name	Option	Location	Locator View	Connector End View
J240	Body Wiring Harness	—	In the body harness approximately 5 cm (2 in) from splice J239 in the main harness bundle.	Left Front of Passenger Compartment Harness Routing	—
J241	Body Wiring Harness	—	In the body harness approximately 5 cm (2 in) from splice J239 in the main harness bundle.	Left Front of Passenger Compartment Harness Routing	—
J242	Body Wiring Harness	—	In the body harness approximately 5 cm (2 in) from splice J243 in the main harness bundle.	Left Front of Passenger Compartment Harness Routing	—
J243	Body Wiring Harness	—	In the body harness approximately 5 cm (2 in) from splice J242 in the main harness bundle.	Left Front of Passenger Compartment Harness Routing	—
J244	Body Wiring Harness	—	In the body harness approximately 22.5 cm (8.8 in) from pass through, on the branch leading to X500.	Left Front of Passenger Compartment Harness Routing	—
J249	Instrument Panel Wiring Harness	—	In the instrument panel harness approximately 5 cm (2 in) from splice J250, in main harness bundle.	Instrument Panel Harness Routing	—
J250	Instrument Panel Wiring Harness	—	In the instrument panel harness approximately 5 cm (2 in) from splice J249, in main harness bundle.	Instrument Panel Harness Routing	—
J251	Instrument Panel Wiring Harness	—	In the instrument panel harness approximately 2.5 cm (1 in) from branch leading to splice pack JX200.	Instrument Panel Harness Routing	—
J252	Instrument Panel Wiring Harness	—	In the instrument panel harness approximately 2.5 (1 in) from splice J251.	Instrument Panel Harness Routing	—
J253	Instrument Panel Wiring Harness	—	Behind the instrument panel, approximately 4 cm (1.7 in) from breakout to Connector X235 towards the anbient light/sunload sensor and battery state of charge indicator.	Instrument Panel Harness Routing	—
J300	Headliner Wiring Harness	—	In the headliner harness approximately 5 cm (1.9 in) from breakout for rear dome/reading lamps, in main harness bundle.	Headliner Harness Routing	—
J301	Body Wiring Harness	—	In the Body Wiring Harness approximately 11 cm (4.3 in) from splice J349, in main harness bundle.	—	—
J302	Body Wiring Harness	—	In the Body Wiring Harness approximately 13.5 cm (5.3 in) from breakout to X310.	—	—
J303	Body Wiring Harness	—	In the body harness approximately 20 cm (7.9 in) from the power line communication module.	Left Side of Passenger Compartment Harness Routing	—
J304	Body Wiring Harness	—	In the Body Wiring Harness approximately 3 cm (1 in) from splice J313, in main harness bundle.	—	—

Master Electrical Component List (cont'd)

Code	Name	Option	Location	Locator View	Connector End View
J305	Body Wiring Harness	—	In the passenger compartment, approximately 11 cm (1.3 in) from the second breakout from G305 towards the hybrid/ev powertrain control module.	Right Side of Passenger Compartment Harness Routing	—
J306	Body Wiring Harness	—	In the Body Wiring Harness approximately 5 cm (1.9 in) from branch leading to right side impact sensor.	—	—
J307	Body Wiring Harness	—	In the body harness approximately 5 cm (1.9 in) from branch leading to G202 and X205.	Right Side of Passenger Compartment Harness Routing	—
J308	Body Wiring Harness	—	In the Body Wiring Harness approximately 3 cm (1.1 in) from the breakout to G404.	—	—
J309	Body Wiring Harness	—	In the Body Wiring Harness approximately 5 cm (2 in) from breakout to G404.	—	—
J311	Headliner Wiring Harness	—	In the headliner harness approximately 5 cm (1.9 in) from breakout for rear dome/reading lamps, in main harness bundle.	• Headliner Harness Routing • Left Side of Passenger Compartment Harness Routing	—
J312	Headliner Wiring Harness	—	In the headliner harness approximately 5 cm (1.9 in) from breakout for rear dome/reading lamps, in main harness bundle.	Headliner Harness Routing	—
J313	Sunroof Wiring Harness	—	In the passenger compartment, above the headliner in the sunroof wiring harness.	—	—
J320	Body Wiring Harness	—	In the body harness approximately 13.5 cm (5.3 in) from splice J321, in main harness bundle.	Left Side of Passenger Compartment Harness Routing	—
J321	Body Wiring Harness	—	In the passenger compartment, approximately 21.1 cm (8.4 in) from the breakout to G304 towards the inflatable restraint sensing and diagnostic module.	—	—
J322	Body Wiring Harness	—	In the passenger compartment, approximately 3.3 cm (1.3 in) from the second breakout from G305 towards the hybrid/ev powertrain control module.	Right Side of Passenger Compartment Harness Routing	—
J323	Headliner Wiring Harness	—	In the headliner harness approximately 5 cm (1.9 in) from breakout for rear dome/reading lamps, in main harness bundle.	• Headliner Harness Routing • Left Front of Passenger Compartment Harness Routing	—
J324	Headliner Wiring Harness	—	In the headliner harness approximately 5 cm (1.9 in) from breakout for rear dome/reading lamps, in main harness bundle.	Headliner Harness Routing	—

Master Electrical Component List (cont'd)

Code	Name	Option	Location	Locator View	Connector End View
J325	Headliner Wiring Harness	—	In the headliner harness approximately 15 cm (5.9 in) from breakout for rear dome/reading lamps, in main harness bundle.	• Headliner Harness Routing • Left Front of Passenger Compartment Harness Routing	—
J326	Body Wiring Harness	—	In the body harness approximately 8.5 cm (3.5 in) from breakout to X300.	Right Side of Passenger Compartment Harness Routing	—
J327	Body Wiring Harness	—	In the passenger compartment, approximately 9.2 cm (3.6 in) from the breakout to G304 towards X200.	—	—
J329	Driver Seat Wiring Harness	—	In the passenger compartment, within driver seat harness.	Driver Seat Harness Routing	—
J337	Driver Seat Wiring Harness	—	In the driver seat harness approximately 2 cm (0.7 in) from breakout to X310.	Driver Seat Harness Routing	—
J338	Driver Seat Wiring Harness	—	In the driver seat harness approximately 17 cm (6.6 in) from splice J337, in main harness bundle.	• Driver Seat Harness Routing • Driver Seat Harness Routing	—
J339	Driver Seat Wiring Harness	—	In the driver seat harness approximately 3 cm (1.1 in) from breakout to X310.	—	—
J340	Passenger Seat Wiring Harness	—	In the passenger seat harness approximately 4 cm (1.5 in) from breakout to passenger seat cushion heating element.	Passenger Seat Harness Routing	—
J341	Passenger Seat Wiring Harness	—	In the passenger seat harness approximately 2.5 cm (1 in) from splice J342, in main harness bundle.	Passenger Seat Harness Routing	—
J342	Passenger Seat Wiring Harness	—	In the passenger seat harness approximately 2.5 cm (1 in) from splice J341, in main harness bundle.	Passenger Seat Harness Routing	—
J343	Rear Seat Wiring Harness	—	In the left rear of the passenger compartment, approximately 33 cm (12.25 in) from X360.	—	—
J344	Rear Seat Wiring Harness	—	In the left rear of the passenger compartment, approximately 37 cm (14.75 in) from X360.	—	—
J346	Body Wiring Harness	—	In the body harness approximately 6 cm (2.3 in) from splice J356.	Right Side of Passenger Compartment Harness Routing	—
J349	Body Wiring Harness	—	In the body harness approximately 4 cm (1.5 in) from splice J368.	Left Side of Passenger Compartment Harness Routing	—
J350	Body Wiring Harness	—	In the passenger compartment, approximately 4.2 cm (1.7 in) from the breakout to G304 towards X200.	• Left Front of Passenger Compartment Harness Routing • Right Side of Passenger Compartment Harness Routing	—

Master Electrical Component List (cont'd)

Code	Name	Option	Location	Locator View	Connector End View
J351	Body Wiring Harness	—	In the passenger compartment, approximately 57.3 cm (22.8 in) from the breakout to the rear compartment keyless entry antenna towards G407.	• Right Rear of Passenger Compartment Harness Routing • Right Side of Passenger Compartment Harness Routing	—
J352	Body Wiring Harness	—	In the passenger compartment, approximately 47.5 cm (19 in) from the breakout to the rear compartment keyless entry antenna towards G407.	Right Rear of Passenger Compartment Harness Routing	—
J353	Body Wiring Harness	—	In the passenger compartment, approximately 37.5 cm (15 in) from the breakout to the rear compartment keyless entry antenna towards G407.	Right Rear of Passenger Compartment Harness Routing	—
J354	Body Wiring Harness	—	In the passenger compartment, approximately 32.5 cm (13 in) from the breakout to the rear compartment keyless entry antenna towards G407.	—	—
J355	Body Wiring Harness	—	In the passenger compartment, approximately 14.2 cm (5.6 in) from the breakout to X310 towards G305.	Left Side of Passenger Compartment Harness Routing	—
J356	Body Wiring Harness	—	In the passenger compartment, approximately 25 cm (10 in) from the breakout to X310 towards G305.	Left Side of Passenger Compartment Harness Routing	—
J357	Passenger Seat Wiring Harness	—	In the passenger compartment, approximately 2.5 cm (10 in) from the breakout to X320 towards the seat heating element - passenger cushion.	—	—
J358	Body Wiring Harness	—	In the passenger compartment, approximately 19.5 cm (7.7 in) from the second breakout from the passenger seat belt anchor pretensioner towards the rear compartment keyless entry antenna.	Right Side of Passenger Compartment Harness Routing	—
J359	Body Wiring Harness	—	in the body harness approximately 5 cm (1.9 in) from the breakout to X300.	Right Side of Passenger Compartment Harness Routing	—
J360	Driver Seat Wiring Harness	—	In the passenger compartment, within driver seat harness.	• Driver Seat Harness Routing • Left Side of Passenger Compartment Harness Routing • Passenger Seat Harness Routing	—
J361	Driver Seat Wiring Harness	—	In the passenger compartment, within driver seat harness.	• Driver Seat Harness Routing • Passenger Seat Harness Routing	—

Master Electrical Component List (cont'd)

Code	Name	Option	Location	Locator View	Connector End View
J362	Body Wiring Harness	—	In the body harness approximately 5.5 cm (2.16 in) from X405 branch breakout.	Left Side of Passenger Compartment Harness Routing	—
J363	Body Wiring Harness	—	In the body harness approximately 5.5 cm (2.16 in) from X405 branch breakout.	Left Side of Passenger Compartment Harness Routing	—
J364	Hybrid/EV Battery Pack Low Voltage Wiring Harness	—	Internal to Hybrid/EV Battery Pack.	—	—
J365	Passenger Seat Wiring Harness	—	In the passenger seat harness approximately 4 cm (1.5 in) from breakout to passenger seat cushion heating element.	Passenger Seat Harness Routing	—
J366	Passenger Seat Wiring Harness	—	In the passenger seat harness approximately 2.5 cm (1 in) from splice J342, in main harness bundle.	Passenger Seat Harness Routing	—
J367	Body Wiring Harness	—	In the body harness approximately 6 cm (2.3 in) from splice J359.	Right Side of Passenger Compartment Harness Routing	—
J368	Body Wiring Harness	—	In the body harness approximately 4 cm (1.5 in) from splice J349.	Left Side of Passenger Compartment Harness Routing	—
J369	Hybrid/EV Battery Pack Low Voltage Wiring Harness	—	Internal to Hybrid/EV Battery Pack.	Right Rear of Passenger Compartment Harness Routing	—
J370	Hybrid/EV Battery Pack Low Voltage Wiring Harness	—	Internal to Hybrid/EV Battery Pack.	Right Side of Passenger Compartment Harness Routing	—
J371	Hybrid/EV Battery Pack Low Voltage Wiring Harness	—	Internal to Hybrid/EV Battery Pack.	—	—
J372	Hybrid/EV Battery Pack Low Voltage Wiring Harness	—	Internal to Hybrid/EV Battery Pack.	—	—
J373	Hybrid/EV Battery Pack Low Voltage Wiring Harness	—	Internal to Hybrid/EV Battery Pack.	—	—
J374	Hybrid/EV Battery Pack Low Voltage Wiring Harness	—	Internal to Hybrid/EV Battery Pack.	—	—
J375	Hybrid/EV Battery Pack Low Voltage Wiring Harness	—	Internal to Hybrid/EV Battery Pack.	—	—
J376	Hybrid/EV Battery Pack Low Voltage Wiring Harness	—	Internal to Hybrid/EV Battery Pack.	—	—
J377	Hybrid/EV Battery Pack Low Voltage Wiring Harness	—	Internal to Hybrid/EV Battery Pack.	—	—
J399	Body Wiring Harness	—	In the left side of the luggage compartment, approximately 14 cm (5.5 in) from the breakout to G404 towards the left rear wheel speed sensor.	—	—

Master Electrical Component List (cont'd)

Code	Name	Option	Location	Locator View	Connector End View
J401	Body Wiring Harness	UV2	In the Body Wiring Harness approximately 13.5 cm (5.3 in) from G405.	—	—
J402	Rear Object Alarm Sensor Wiring Harness	—	In the rear fascia harness approximately 11 cm (4.4 in) from breakout to the rear fascia keyless entry antenna towards the right rear fascia tail lamp assembly.	*Rear Fascia Harness Routing*	—
J403	Rear Object Alarm Sensor Wiring Harness	—	In the rear fascia harness approximately 7.6 cm (19.5 in) from breakout to the rear fascia keyless entry antenna towards connector X415.	*Rear Fascia Harness Routing*	—
J406	Rear Object Alarm Sensor Wiring Harness	—	In the rear fascia harness approximately 48.9 cm (19.5 in) from breakout to the rear fascia keyless entry antenna towards the right rear fascia tail lamp assembly.	*Rear Fascia Harness Routing*	—
J407	Rear Object Alarm Sensor Wiring Harness	—	In the rear fascia harness approximately 22.7 cm (9 in) from breakout to the rear fascia keyless entry antenna towards the right rear fascia tail lamp assembly.	*Rear Fascia Harness Routing*	—
J409	Rear Object Alarm Sensor Wiring Harness	—	In the rear fascia harness approximately 32.3 cm (13 in) from breakout to the rear fascia keyless entry antenna towards the right rear fascia tail lamp assembly.	*Rear Fascia Harness Routing*	—
J500	Driver Door Wiring Harness	—	In the driver door harness 5 cm (2 in) from splice J501, in main harness bundle.	*Driver Door Harness Routing (1 of 2)*	—
J501	Driver Door Wiring Harness	—	In the driver door harness 5 cm (2 in) from splice J500, in main harness bundle.	*Driver Door Harness Routing (1 of 2)*	—
J504	Driver Door Wiring Harness	—	In the driver door harness approximately 7.5 cm (3 in) from breakout to X510.	*Driver Door Harness Routing (1 of 2)*	—
J700	Left Rear Door Wiring Harness	—	In the left rear door harness approximately 18.5 cm (7.2 in) from X700, in main harness bundle.	*Left Rear Door Harness Routing*	—
J900	License Plate Lamp Wiring Harness	—	In the license plate lamp harness approximately 8 cm (3.1 in) from breakout to rearview camera.	*License Lamp Harness Routing*	—
J901	Liftgate Wiring Harness	—	In the license plate lamp harness approximately 18.5 cm (7.2 in) from breakout to right license plate lamp.	*License Lamp Harness Routing*	—
J903	Liftgate Wiring Harness	—	In the liftgate harness approximately 12 cm (4.1 in) from breakout X905.	*Liftgate Harness Routing*	—

Description and Operation

Electronic Park Lock Description and Operation

If the vehicle is equipped with automatic transmission and a floor mounted console gear shift, it has an electronic park lock system. The electronic park lock system purpose is to prevent the ignition from being switched to the Vehicle OFF position when the transmission is in any position other than PARK and the vehicle may still be moving. The electronic park lock system incorporates the park position switch that located in the A/T shift lock control switch. When the transmission shift selector is in PARK, the park position switch closes and the BCM allows the ignition to be turned Vehicle OFF.

If the vehicle is not in PARK, the ignition will return to ACC/ACCESSORY and display the message SHIFT TO PARK in the Driver Information Center. When the vehicle is shifted into PARK, the ignition system will switch to Vehicle OFF.

Power Mode Description and Operation

Serial Data Power Mode Master

Power to many of this vehicles circuits is controlled by the module that is designated the power mode master. This vehicles power mode master is the body control module (BCM). The BCM has multiple B+ circuits that feed into it. Each of those circuits are partitioned within the controller to drive certain outputs of the vehicle's body functions. An open or short in any one of the B+ circuits may induce multiple codes/or a section of non-functionality within the BCM with the rest of the BCM functioning normally. In this case it is useful to refer to the power distribution schematics to determine if the non-functional partition of the controller shares a common B+ circuit. The power button switch is a low current push button switch with discrete power button switch signals to the power mode master for determination of the power mode that will be sent over the serial data circuits to the other modules that need this information. The power mode master will also activate relays and other direct outputs of the power mode master as needed. The power mode master determines which power mode (Vehicle Off, Vehicle On, Vehicle in Service Mode) is required, and reports this information to other modules via serial data. Modules which have switched voltage inputs may operate in a default mode if the power mode serial data message does not match what the individual module can see from its own connections.

The power mode master receives power button switch signals and transmitter in range signals to identify the operators desired power mode. The Power Mode Parameters table below illustrates the correct state of these input parameters (circuits) in correspondence to the power button switch position and the transmitter to vehicle range:

Power Mode Parameters

Power Mode	Power Mode Transmitted	Push Button Ignition Switch (Power Button Switch Circuit Input to the BCM)	Push Button Ignition Switch Voltage Push Button Ignition Switch Voltage Input to the BCM	Key in Cylinder Switch/Key Fob in Vehicle (Transmitter in Range to the BCM Signal)
Transmitter in Range	Vehicle Off	Inactive	9 V	Yes
Transmitter out of Range	Vehicle Off	Inactive	9 V	No
Vehicle On Power Mode, then Press the Power Button Switch (Foot on or off the Brake Pedal); Transmitter in Vehicle	Vehicle Off	Active (pushed) / Inactive (not pushed)	6 V (pressed)	Yes
Vehicle Off Power Mode, then Press the Power Button Switch with foot on the Brake Pedal; Transmitter in Vehicle	Vehicle On	Active (pushed) / Inactive (not pushed)	6 V (pressed)	Yes

Power Mode Parameters (cont'd)

Power Mode	Power Mode Transmitted	Push Button Ignition Switch (Power Button Switch Circuit Input to the BCM)	Push Button Ignition Switch Voltage Push Button Ignition Switch Voltage Input to the BCM	Key in Cylinder Switch/Key Fob in Vehicle (Transmitter in Range to the BCM Signal)
Vehicle Off Power Mode, then Press and Hold the Power Button Switch for 5 s with foot off the Brake Pedal; Transmitter in Vehicle	Vehicle in Service Mode	Active (pushed) / Inactive (not pushed)	6 V (pressed)	Yes
Vehicle Off Power Mode, then Press and Hold the Power Button Switch for over 10 s with foot off the Brake Pedal; Transmitter in Vehicle	Vehicle in Service Mode	Active (pushed) / Inactive (not pushed)	6 V (pressed)	Yes

Relay Controlled Power Mode

The BCM uses the discrete power button switch inputs, transmitter in range status, current power mode state, and the brake pedal position state to distinguish the correct power mode (Vehicle Off, Vehicle On, and Vehicle in Service Mode). The BCM, after determining the desired power mode, will activate the appropriate relays for that power mode and send the power mode message out to other modules in a serial data message.

The retained accessory power relay remains on for a timed period after the power mode transitions to Vehicle Off. Refer to *Retained Accessory Power Description and Operation on page 6-695* for more information on the retained accessory power function.

Push Button Vehicle On/Off Switch

The vehicle has an electronic push button vehicle On/Off switch . The power button switch is equipped with two LED's, one for backlighting and one for Vehicle On indication or Vehicle In Service Mode indication. The power button switch light flashes when the driver door is open and the vehicle is not on. The flashing light will eventually time out. The power button switch light is on steady when in Vehicle On or Vehicle In Service Mode. When the vehicle is turned off, the power button switch light will turn off.

Vehicle On

This position is for driving. The Vehicle On mode will be used for service (including maintenance and lubrication) and diagnostics on the electronic propulsion system. With the vehicle off, transmitter in the vehicle and the brake pedal applied, pressing the power button switch once will place the vehicle in Vehicle On mode. The instrument cluster displays an battery gauge, along with an audio startup cue. When the vehicle is ready to be driven the green Vehicle Ready Light will be illuminated. This could take up to 15 s at extremely cold temperatures. The electric propulsion system is active in this power mode. The vehicle cannot be charged in this power mode but the 12 volt system is charging. If the vehicle is left in PARK while in Vehicle On mode and the transmitter is removed from the vehicle, the vehicle will automatically turn off after 1.5 hours. If the vehicle is left in PARK while in Vehicle On mode and the transmitter is in the vehicle, the vehicle will automatically turn OFF after 3 hours. The timer will stop when the vehicle is shifted out of PARK and the timer will reset after the vehicle is placed back in PARK while in Vehicle On mode.

Vehicle In Service Mode

Note: The vehicle will not charge if the charging cable is attached to the vehicle after being placed into the Vehicle In Service Mode. Attach the charging cable to the vehicle before entering the Vehicle In Service Mode to charge the vehicle.

This power mode is available for service and diagnostics, and to verify the proper operation of the MIL as may be required for emission inspection purposes. The Vehicle In Service Mode will be used for service and diagnostics for items not requiring the electronic propulsion to be active. With the vehicle off, and the brake pedal not applied, pressing and holding the power button switch for 5 s will place the vehicle in Vehicle In Service Mode for approximately 3 hours. After being in Vehicle In Service Mode for 1.5 hours, the vehicle will look to see if the transmitter in still present. If the transmitter is not present in the vehicle, it will power down instead of staying powered up for the full 3 hours. Pressing and holding the power button switch for at least 10 s will place the vehicle in Vehicle In Service Mode until the vehicle is manually turned OFF. The instruments and audio systems will operate as they do in Vehicle On mode, but the vehicle will not be able to be driven. The electric propulsion system is inactive in this power mode. The vehicle can only be charged in this power mode if the charging cable is attached before this power mode is enabled.

Vehicle Off

To turn the vehicle off, push the power button switch with the vehicle in P (Park). Retained Accessory Power (RAP) will remain active until the driver door is opened. Refer to *Retained Accessory Power Description and Operation on page 6-695* for more information on the retained accessory power function. When turning off the vehicle, if the vehicle is not in P (Park), the SHIFT TO PARK message is displayed in the Driver

Information Center (DIC). The electric propulsion system is inactive in this power mode. The vehicle can be charged while in this power mode.

Transport Mode (If Equipped)

Transport Mode reduces the parasitic load of some modules during vehicle shipping and/or during vehicle storage. This improves the drain time on the battery (up to 70 days without the battery going dead). When the vehicle is in transport/storage, some features may be disabled or have reduced functionality while in Transport mode, such as disabling the Remote Function Actuator or content theft features.

Transport Mode utilizes a latching relay that when enabled it disconnects some modules from their ignition power or memory power sources. Transport Mode is initiated by turning on the hazard flashers, applying the brake pedal, and then turning and pressing and holding the ignition mode switch for greater than 15 S. The mode is disengaged by repeating the previous process causing the relay to latch in the other direction. This feature can be used as many times as necessary if the vehicle is to be stored for an extended period of time. The driver information center (if equipped) will temporarily display Transport Mode is On when it enables and Transport Mode is OFF when it disables. For vehicles not equipped with a driver information center, the battery indicator light will constantly flash on the Instrument Cluster when enabled. This feature can be used as many times as necessary if the vehicle is to be stored for an extended period of time.

BCM Awake/Sleep States

The BCM is able to control or perform all of the BCM functions in the awake state. The BCM enters the sleep state when active control or normal monitoring of system functions has stopped and a time limit has passed. The BCM must detect certain wake-up inputs before entering the awake state. The BCM monitors for these inputs during the sleep state.

The BCM will enter the awake state if any of the following wake-up inputs are detected:

- Activity on the serial data line (including wake-up circuits)
- Detection of a battery reconnect
- Any door open signal
- Headlamps ON
- Vehicle On
- Vehicle In Service Mode
- Park lamps ON
- Keyless entry or remote start message

The BCM will enter a sleep state when all of the following conditions exist:

- Vehicle Off, transmitter is out of range
- No activity exists on the serial data line (including wake-up circuits)
- No outputs are commanded.
- No delay timers are actively counting.
- No wake-up inputs are present.

If all these conditions are met, the BCM will enter a low power or sleep condition.

Serial Data Wake-Up

Control modules on the serial data wake-up circuit enable or disable communication based on the voltage level of this circuit.

Retained Accessory Power Description and Operation

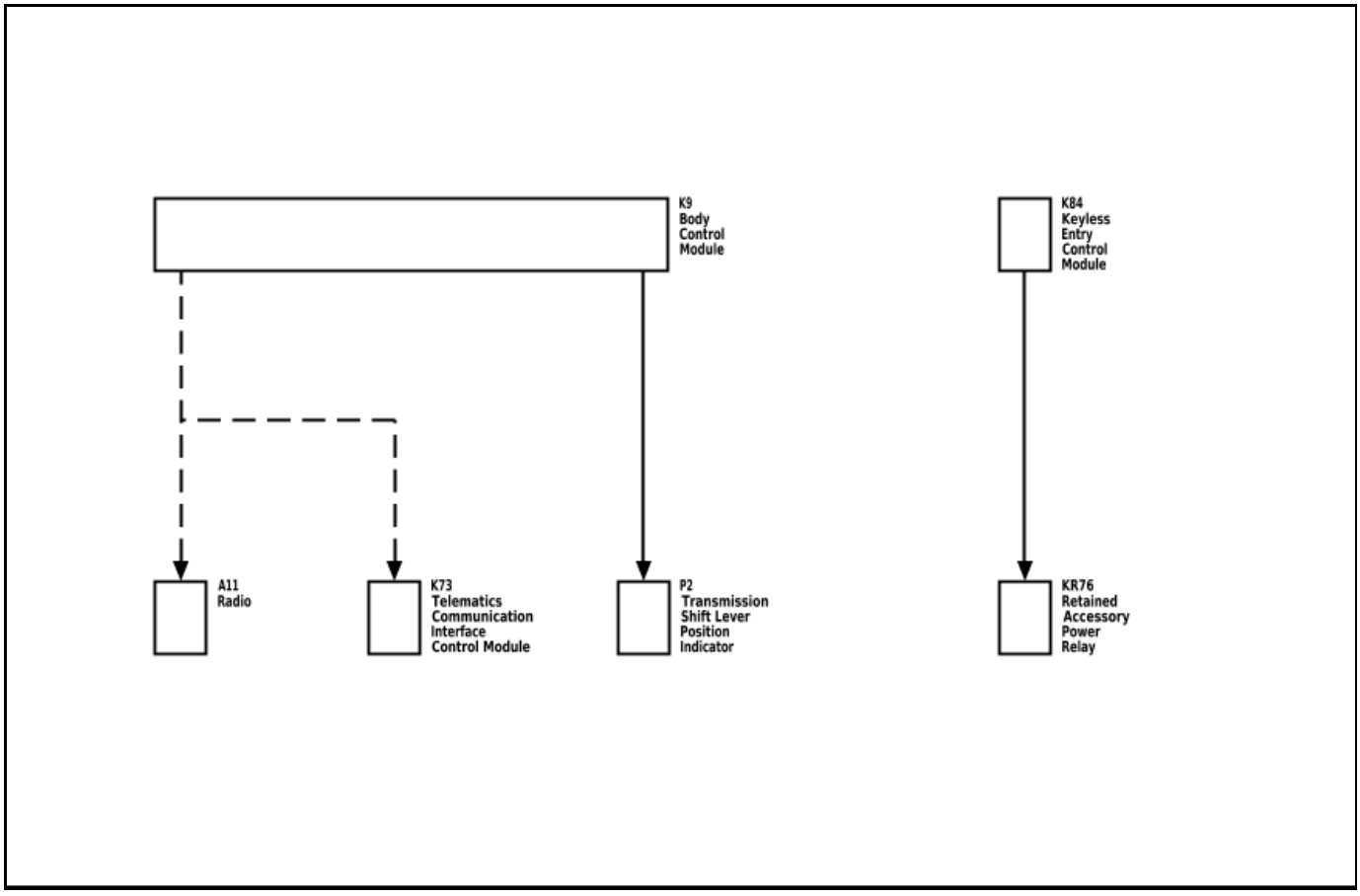

4179264

Retained Accessory Power

The body control module (BCM) monitors the vehicle power modes, battery condition, and each door ajar/open switch status to determine whether the retained accessory power should be initiated or terminated. Retained accessory power is controlled by two different methods; relay control and serial data. Some modules receive a retained accessory power message from the BCM over the serial data circuits. Serial data controlled retained accessory power is deactivated as required by their modules retained accessory power mode operation. Other subsystems are activated directly. Components and systems that are active in retained accessory power are also activated anytime the vehicle power mode is any state other than Vehicle OFF regardless of the door switch signals.

Interruptible Retained Accessory Power Relay Controlled Retained Accessory Power

The Keyless entry control module keeps the relay energized during all power modes, except Vehicle Off. The relay is also energized for approximately 10 minutes after moving to the Vehicle OFF state and moving the transmitter out of range, providing no door is opened. The keyless entry control module controls components in the same manner as BCM direct controlled retained accessory power with one exception; interruptible retained accessory power is deactivated during transmitter authentication. The keyless entry control module will deactivate components that may cause radio frequency (RF) interference when the vehicle On/Off switch is pressed which may result in “NO REMOTE DETECTED” displayed on the driver information center.

Relay controlled retained accessory power will end when one of the following conditions is met:

- The keyless entry control module receives a message that any door ajar or open switch indicating the opening of any door after entering the Vehicle Off state and the transmitter is out of range.

  Note: If the keyless entry control module is receiving any door ajar or open signal from those switches when the Vehicle Off state is entered and the transmitter is out of range, retained accessory power will not initiate.

- The keyless entry control module detects a decrease in battery capacity below a prescribed limit.

Systems powered by the retained accessory power relay during the retained accessory power mode are as follows:

- Accessory Power Receptacle
- Cigarette Lighter Receptacle

Serial Data Controlled Retained Accessory Power

Retained accessory power systems controlled by serial data are as follows:

Radio

Radio retained accessory power activation / termination is the same as relay operation with one exception; the only door switch that will turn off the radio during retained accessory power is the driver door open switch.

Vehicle Communication Interface Module (VCIM) (Onstar®) (If Equipped)

VCIM RAP activation/termination is the same as radio operation with 1 exception; if there is an active call when the ignition key is turned off the VCIM will remain in RAP mode, and keep the radio in RAP mode until the call is terminated.

Section 7

Safety and Security

Immobilizer 7-3
Schematic and Routing Diagrams 7-3
Immobilizer Schematics 7-4
Description and Operation 7-5
Immobilizer Description and Operation 7-5
Remote Vehicle Speed Limiting Description and Operation 7-7

Remote Functions 7-8
Schematic and Routing Diagrams 7-8
Remote Function Schematics 7-9
Description and Operation 7-11
Keyless Entry System Description and Operation 7-11

Seat Belts 7-16
Schematic and Routing Diagrams 7-16
Seat Belt Schematics 7-17
Description and Operation 7-18
Seat Belt System Description and Operation . . . 7-18

Supplemental Restraints 7-20
Schematic and Routing Diagrams 7-20
SIR Schematics 7-21
Description and Operation 7-24
Supplemental Inflatable Restraint System Description and Operation 7-24

BLANK

Immobilizer

Schematic and Routing Diagrams

Immobilizer Schematics (Immobilizer)

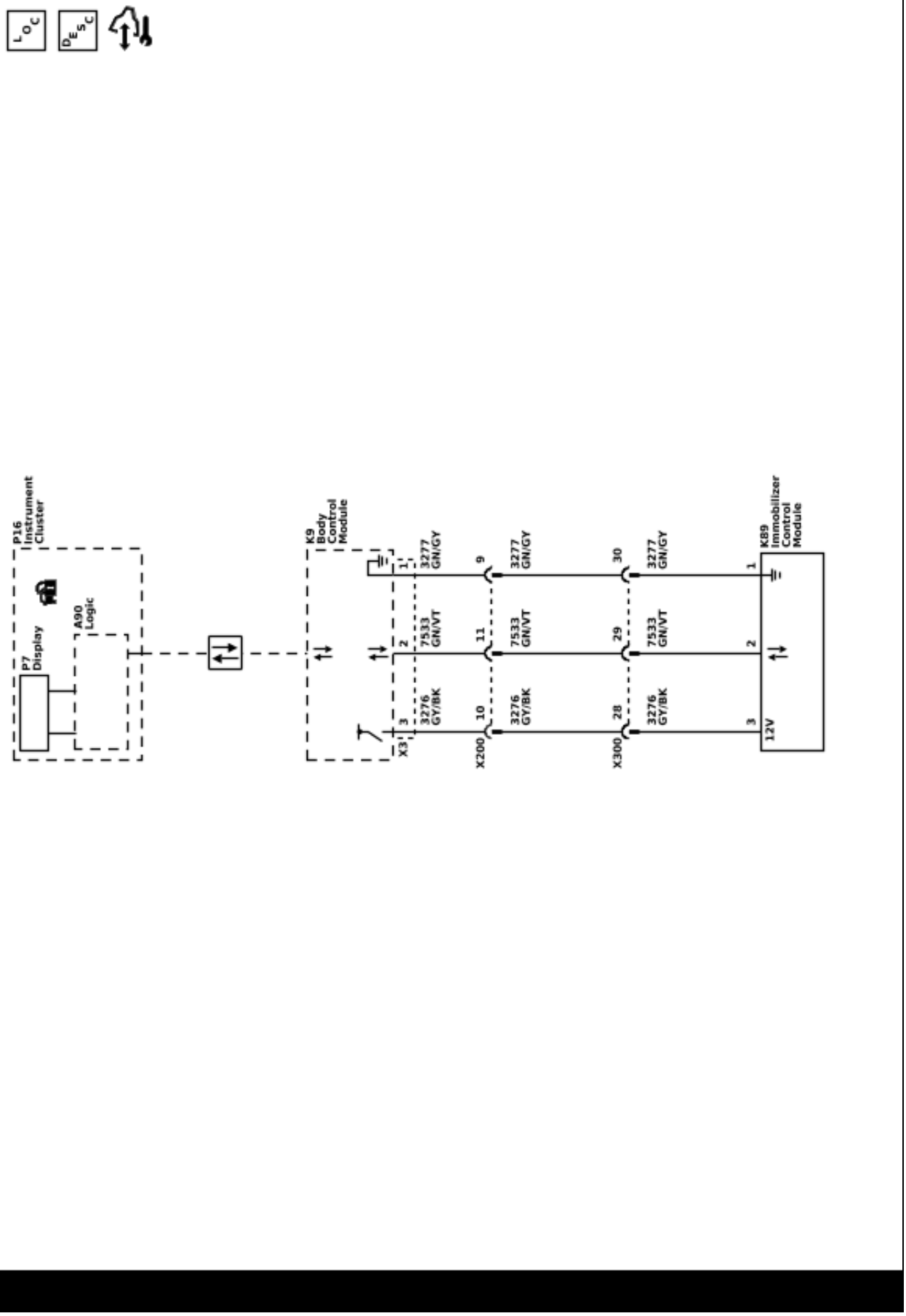

5910158

Description and Operation

Immobilizer Description and Operation

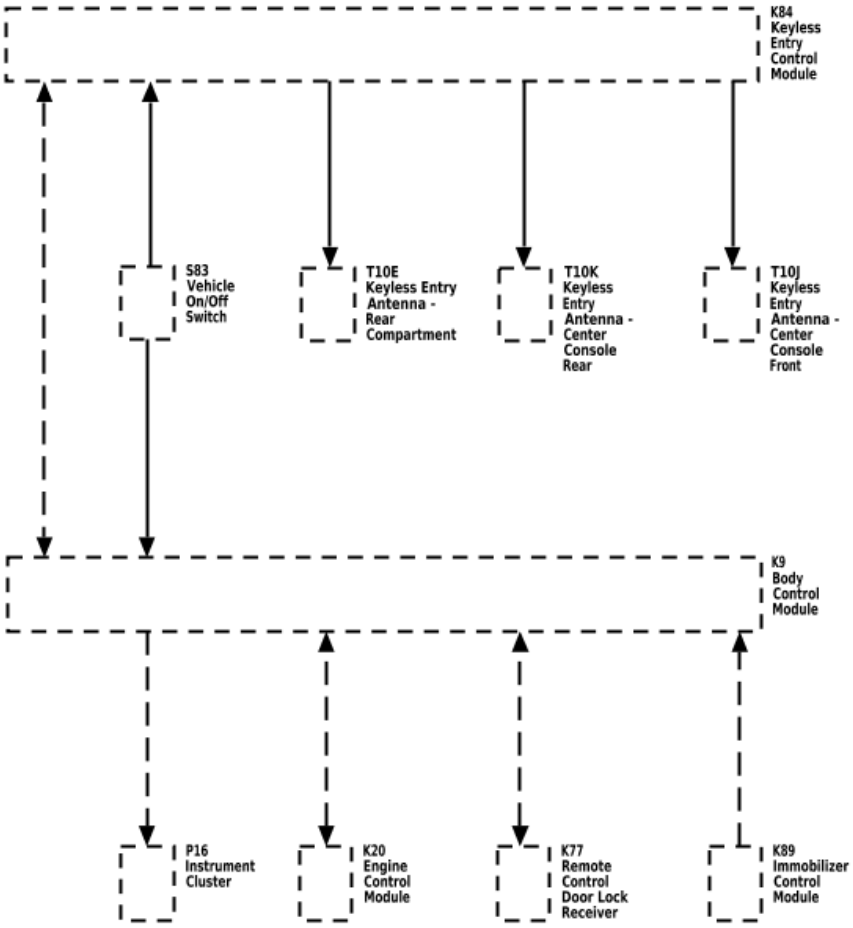

3535456

The immobilizer system functions are provided by the keyless entry control module, remote control door lock receiver, body control module (BCM), hybrid/EV powertrain control module 1, and engine control module (ECM), as well as any modules which store and report the environment identifier. The keyless start system use low frequency antennas in three different locations on the vehicle to determine the location of the transmitter. Multiple antenna are used to ensure complete coverage of the vehicle interior and rear compartment.

When the vehicle ON/OFF switch is pressed, the low frequency antennas emit a challenge to the keyless entry transmitter. The transmitter receives this challenge and emits it's response as an RF message. The transmitter transmits a signal that contains its unique value, which is received by the BCM through the remote control door lock receiver. The BCM then compares this value to a value stored in memory. The BCM also monitors various modules to determine if the stored environment identifiers match.

If both the environment identifier and the value received from the transponder match, the BCM will send the prerelease password via serial data to the hybrid/EV powertrain control module 1. If the encrypted code's unique value is incorrect or the environment identifier does not match, the BCM will send the fuel disable message to the hybrid/EV powertrain control module 1.

When the hybrid/EV powertrain control module 1 receives the BCM prerelease password, the hybrid/EV powertrain control module 1 will challenge the password. The hybrid/EV powertrain control module 1 sends this challenge to the BCM via serial data. Both the hybrid/EV powertrain control module 1 and BCM perform a calculation on this challenge. Additionally, the

ECM will also monitor this challenge and calculate it's own response. If the BCM calculated response to the challenge equals the calculation performed by the hybrid/EV powertrain control module 1 and ECM, the hybrid/EV powertrain control module 1 and ECM will allow vehicle propulsion.

If RF communication is interrupted, a "No Remote Detected" message will be displayed on the DIC. In these cases, the extended transmitter key blade can be placed in the transmitter slot located in the upper instrument panel storage compartment, under the rubber mat. The immobilizer antenna coil is located directly beneath the transmitter slot. Placing the transmitter in the pocket will create a low powered coupling between the transmitter and immobilizer antenna, allowing communications to occur and enabling vehicle starting.

The components of the theft system are as follows:

- BCM
- Hybrid/EV powertrain control module 1
- ECM
- Immobilizer antenna
- Ignition key or keyless entry transmitter
- Security indicator
- Various modules which store and report the environment identifier

Body Control Module (BCM)

The immobilizer system is an integral part of the BCM and is controlled internally within the BCM. The BCM can learn up to 8 keys (transponder values).

The BCM uses the following inputs:

- Environment identifier exchange with various modules
- Encrypted code from the vehicle key, received by the immobilizer antenna

The BCM uses the following outputs:

- Prerelease password communication with ECM
- Challenge/response with ECM

When the vehicle ON/OFF switch is pressed, the low frequency antennas emit a challenge to the keyless entry transmitter. The transmitter receives this challenge and emits it's response as an RF message. The transmitter transmits a signal that contains its unique value, which is received by the BCM through the remote control door lock receiver. The BCM then compares this value to a value stored in memory. The BCM then performs one of the following functions:

- If the encrypted code value matches the values stored in the BCM memory, the BCM will send the prerelease password to the ECM via serial data.
- If the encrypted code unique value does not match the value stored in the BCM, the BCM will send the start disable message to the ECM via serial data.
- If the BCM is unable to measure the ignition key encrypted code value, the BCM will not send any messages to the ECM.

Hybrid/EV Powertrain Control Module 1

When the hybrid/EV powertrain control module 1 receives the BCM prerelease password, the hybrid/EV powertrain control module 1 will challenge the password. The hybrid/EV powertrain control module 1 sends this challenge to the BCM via the serial data circuit. Both the hybrid/EV powertrain control module 1 and BCM perform a calculation on this challenge. If the calculated response from the BCM equals the calculation performed by the hybrid/EV powertrain control module 1, the hybrid/EV powertrain control module 1 will allow vehicle propulsion.

The hybrid/EV powertrain control module 1 will disable vehicle propulsion if any of the following immobilization conditions occur:

- The prerelease password is invalid.
- The start disable password is sent by the BCM.
- No passwords are received. There is no communication with the BCM.
- The BCM calculated response to the challenge does not equal the calculation performed by the hybrid/EV powertrain control module 1.

Engine Control Module (ECM)

The ECM functions in the immobilizer system as a type of slave device. It does not general the password challenge, but it does monitor the challenge and response messages between the BCM and hybrid/EV powertrain control module 1. The ECM will calculate it's own result to the challenge. If the ECM response does not equal the BCM response, the ECM may also disable vehicle propulsion. To allow vehicle propulsion, the response from the BCM, ECM, and hybrid/EV powertrain control module 1 must all match.

The ECM will disable vehicle propulsion if any of the following immobilization conditions occur:

- The start disable password is sent by the BCM.
- No passwords are received. There is no communication with the BCM or hybrid/EV powertrain control module 1.
- The BCM calculated response to the challenge does not equal the calculation performed by the ECM.

Immobilizer Antenna

The immobilizer antenna contains an immobilizer coil. The coil passively powers the transponder located in the ignition key when the key is in the transmitter slot. When powered, the key transmits its unique value to the immobilizer antenna, which is then relayed to the BCM via a LIN serial data circuit. The immobilizer antenna also receives B+ and ground from the BCM.

The immobilizer antenna is used to:

1. Learn keys
2. To start vehicle with or without RF interference
3. To start vehicle when key battery is dead

Keyless Entry Transmitter

Each keyless entry transmitter contains a transponder with a unique encrypted value. The transponder's encrypted value is fixed and unable to be changed. The immobilizer system uses the transponder value to determine if a valid transmitter is being used to start the vehicle.

Environment Identifier

Various modules throughout the vehicle learn a specific environment identifier during the module programming process. The environment identifier is learned by each individual module and matches the environment identifier stored in the BCM. Prior to starting after a battery disconnect, each of the modules which store a environment identifier will compare their identifier to that of the identifier stored in the BCM. If all the identifiers match, the engine starting process will continue. If the environment identifiers do not match, engine starting will be disabled.

Security Indicator

The BCM will command the instrument panel cluster to illuminate the security indicator when the vehicle is in Service Mode to indicate a fault has occurred within the immobilizer system and when the engine starting is disabled.

Remote Vehicle Speed Limiting Description and Operation

Certain vehicles equipped with OnStar® now have an additional feature that allows for remote limiting of the vehicle's speed. This OnStar® feature is called Stolen Vehicle Slow-Down and is now part of the OnStar® Stolen Vehicle Assistance service. This feature, when used in conjunction with local law enforcement and strict guidelines at the OnStar® Call Center, will slow the vehicle by interacting with the engine control system.

When the engine control system receives a valid request from the OnStar® telematics communications interface module, it will enter into a reduced engine power/vehicle speed limiting mode, which will decelerate the vehicle. Once the request is active the engine control module begins reducing engine torque to match requested vehicle speed and a REDUCED ENGINE POWER indication is displayed. No DTCs will be set during this process.

Remote Functions

Schematic and Routing Diagrams

5910159

Remote Function Schematics (Keyless Entry - Active)

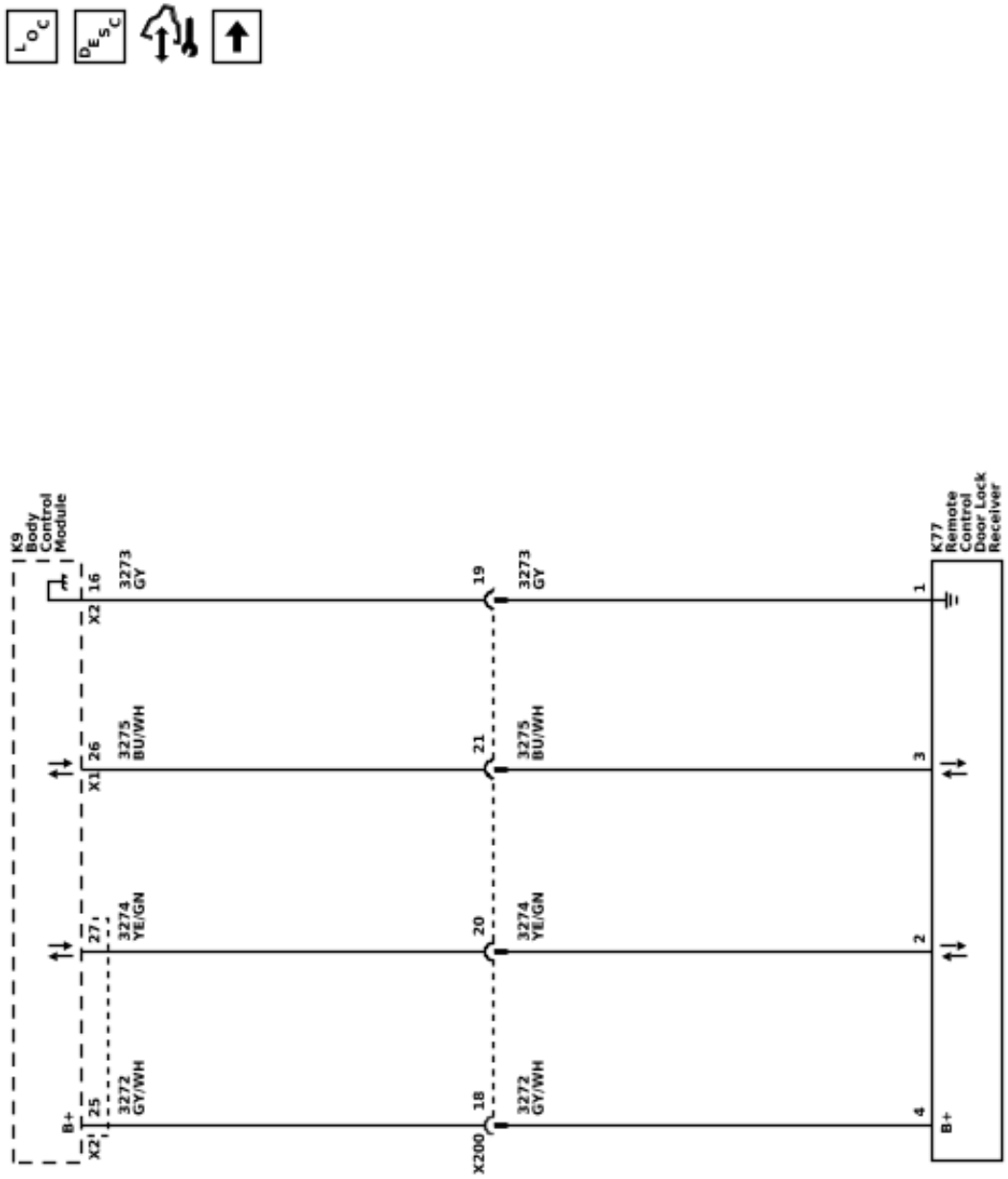

Remote Function Schematics (Keyless Entry - Passive and Keyless Start)

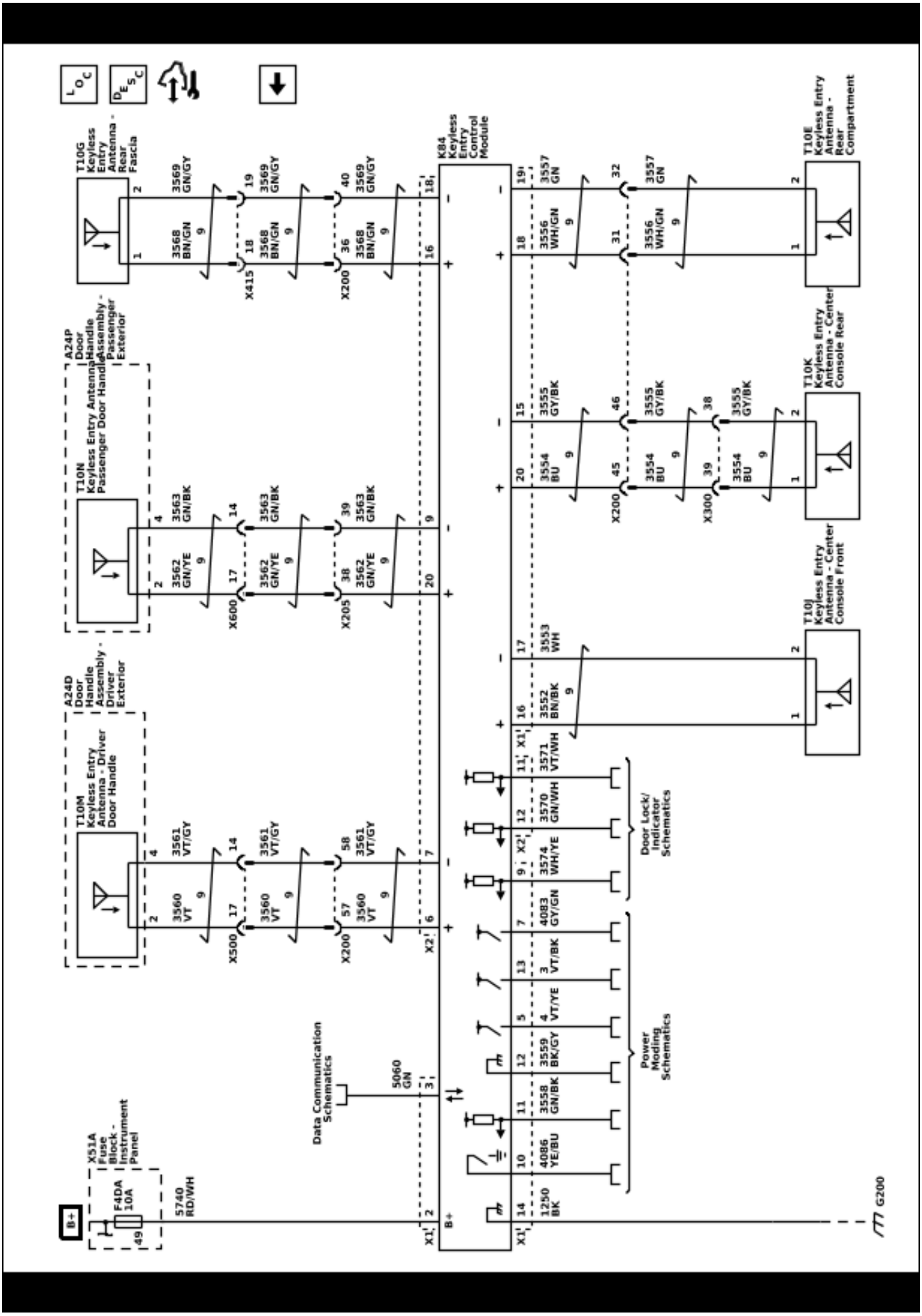

Description and Operation

Keyless Entry System Description and Operation

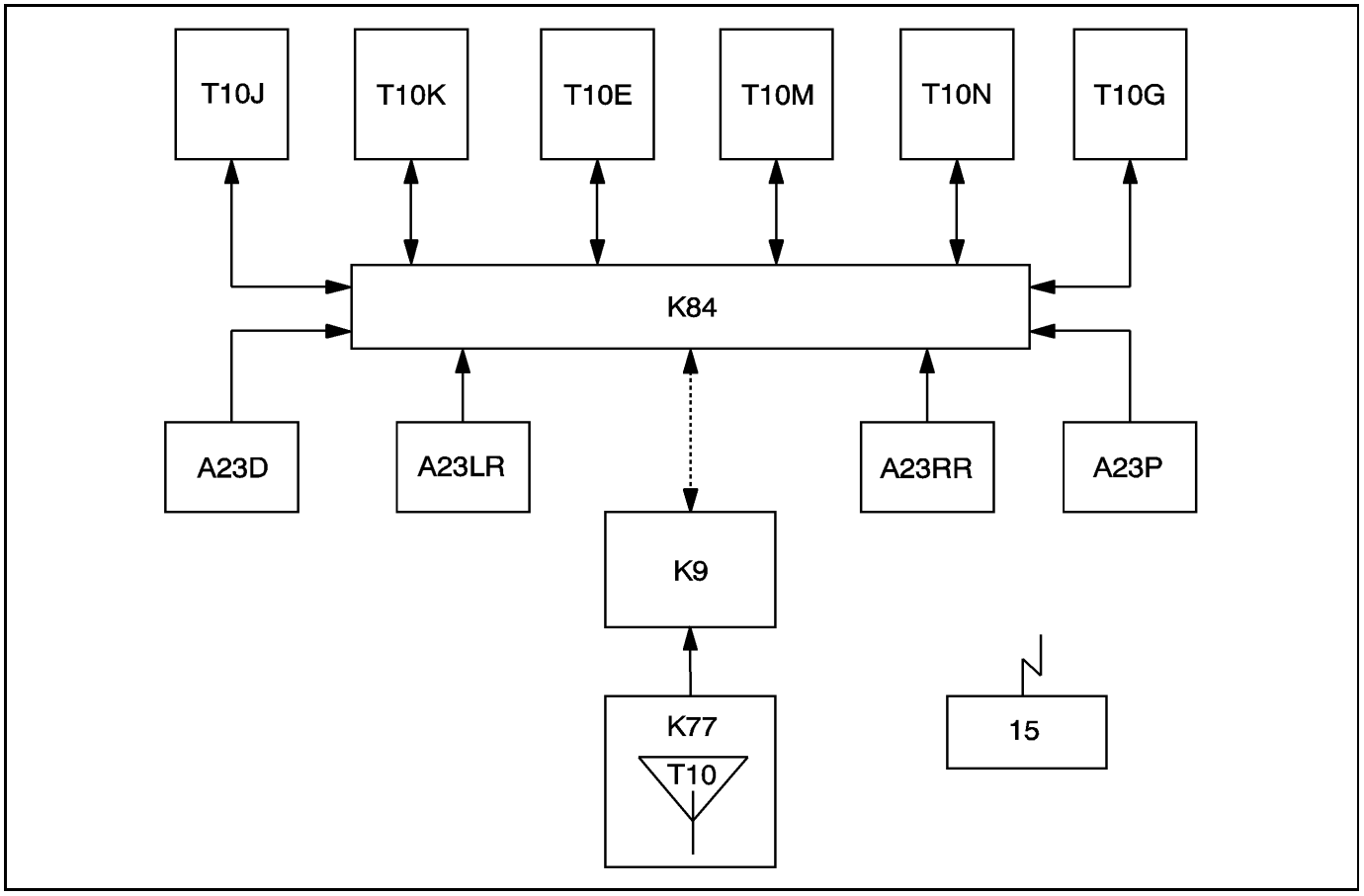

2727001

Solid line - Hard Wire I/O Dash line - Serial Data	
A23D	Door Latch – Driver
A23LR	Door Latch – Left Rear
A23P	Door Latch – Passenger
A23RR	Door Latch – Right Rear
K9	Body Control Module (BCM)
K77	Remote Control Door Lock Receiver
K84	Keyless Entry Control Module
T10	Keyless Entry Antenna
T10E	Keyless Entry Antenna – Rear Compartment
T10G	Keyless Entry Antenna – Rear Fascia
T10J	Keyless Entry Antenna – Center Console Front
T10K	Keyless Entry Antenna – Center Console Rear
T10M	Keyless Entry Antenna – Driver Door Handle
T10N	Keyless Entry Antenna – Passenger Door Handle

Solid line - Hard Wire I/O Dash line - Serial Data	
15	Keyless Entry Transmitter

Keyless Entry System Description and Operation – Active

The keyless entry system is a vehicle entry device. The keyless entry system is used in conjunction with the door locks to unlock the vehicle. Keyless entry will lock/unlock the vehicle doors or open the rear compartment lid when a corresponding button on the keyless entry transmitter is pressed. This is accomplished by the transmitter sending a radio frequency to the remote control door lock receiver antenna that has a direct link to the body control module (BCM). The BCM interprets the signal and activates the requested function or requests the appropriate control module to activate the function via a serial data message. A low transmitter battery or radio frequency interference from aftermarket devices, such as 2-way radios, power inverters, computers, etc., may cause a system malfunction. High radio frequency traffic areas, such as gas stations that use pay-at-the-pump radio frequency transponders,

may also cause interference that could lead to a malfunction. Keyless entry allows you to operate the following features:

- Door lock/unlock
- Remote start
- Illuminated entry lamps
- Panic alarm/vehicle locator
- Remote vehicle start

Keyless Entry System Description and Operation – Passive

Passive keyless entry allows entry to a locked vehicle without pressing any buttons on the keyless entry transmitter. You must only have the transmitter with you. The passive entry system use low frequency antennas in several different areas on the vehicle to determine the location of the transmitter. When passively opening a locked door or the rear compartment, you must have a programmed transmitter with you in your pocket, purse, or briefcase.

When an exterior door handle button is pressed or the rear compartment touch pad is pressed, the low frequency antenna sends out a challenge to the keyless entry transmitter. Because of the low frequency, communication range is limited. The antenna will emit the challenge in a one meter range. The transmitter must be within this range to receive the challenge. The transmitter receives this challenge and emits it's response as an RF message, which is received by the remote control door lock receiver. If the response is correct, the door or rear compartment will unlock and open.

As a customer convenience feature, the keyless entry system will notify the driver if the transmitter has been left in the vehicle after exiting by chirping the vehicle horn three times. This may be turned off using vehicle personalization. Also, if the transmitter is left in the vehicle after the central door lock switch has been used to lock the vehicle, the driver door will remain unlocked after exiting the vehicle. This is intended to prevent locking the transmitter in the vehicle and being unable to access it.

Keyless Entry System Description and Operation – Keyless Start

The keyless start portion of the keyless entry system allows vehicle starting, having only the transmitter as your key. The keyless start system uses low frequency antennas in three different locations on the vehicle to determine the location of the transmitter. Multiple antennas are used to ensure complete coverage of the vehicle interior and rear compartment. When using the keyless start system, a programmed transmitter must be in the vehicle's interior, such as the driver's pocket, purse, or briefcase.

When the ignition mode switch is pressed, the low frequency antennas emit a challenge to the keyless entry transmitter. The transmitter receives this challenge and emits it's response as an RF message, which is received by the remote control door lock receiver. If the response is correct, vehicle starting will be allowed. If RF communication is interrupted, a “No Remote Detected” message will be displayed on the DIC. In these cases, the extended transmitter key blade can be placed in the transmitter slot located in the upper instrument panel storage compartment, under the rubber mat. The immobilizer antenna coil is located directly beneath the transmitter slot. Placing the extended key blade in the slot will create a low powered coupling between the transmitter and immobilizer antenna, allowing communications to occur and enabling vehicle starting.

The keyless entry system has the following components:

- Vehicle key with integrated keyless entry transmitter
- Driver and front passenger door antennas (part of the door handle assembly)
- Driver and front passenger door handle switches (part of the door handle assembly)
- Rear fascia antenna
- Front instrument panel console antenna
- Center console antenna
- Rear compartment antenna
- Body control module (BCM)
- Keyless entry control module
- Immobilizer antenna coil
- Remote control door lock receiver
- Short range remote control transceiver

Keyless Entry Transmitters

The keyless entry transmitters are used to lock and unlock the vehicle door while away from the immediate are of the vehicle. Keyless entry functions may work at up to 20 m (65 ft) from the vehicle. The keyless entry transmitter is an integral part of the vehicle key.

Keypass

Keypass is a function of the vehicle owner’s cell phone. It can perform the same functions as the keyless entry transmitters. In some model year and vehicle applications it can support additional functions.

Door Antenna

The keyless entry door antennas are used to transmit low frequency communications to the keyless entry transmitters.

The keyless entry door antennas are located in the left front and right front exterior door handle bracket. The antennas are serviced as part of the door handle assembly. The antennas are controlled by the keyless entry control module. When the exterior door handle button is pressed, the respective antenna will send out a challenge to the keyless entry transmitter, which begins the passive entry communications.

Rear Fascia Antenna

The rear fascia antenna is used to transmit low frequency communication to the keyless entry transmitters for entry to rear compartment.

The rear fascia antenna is located behind the rear fascia. The antenna is controlled by the keyless entry control module. When the rear compartment touch pad is pressed, the antenna sends out a challenge to the keyless entry transmitter, which begins the passive entry communications.

Front Console Passive (Instrument Panel) Antenna

This antenna is located in the lower instrument panel near the front of the center console.

The front console antenna is used for vehicle starting functions. When the ignition mode switch is pressed, the antenna is energized or "pinged". This emits a low frequency challenge signal that is received by the keyless entry transmitter. The transmitter will then reply to this challenge with a response and, if correct, vehicle starting will occur.

Center Console Antenna

This antenna is located in the rear of the center console.

The rear console antenna is used for vehicle starting functions. When the ignition mode switch is pressed, the antenna is energized or "pinged". This emits a low frequency challenge signal that is received by the keyless entry transmitter. The transmitter will then reply to this challenge with a response and, if correct, vehicle starting will occur.

Rear Compartment Antenna

This antenna is located in the center of the rear compartment metal floor pan, near the seatback.

The rear compartment antenna is used for vehicle starting functions. When the ignition mode switch is pressed, the antenna is energized or "pinged". This emits a low frequency challenge signal that is received by the keyless entry transmitter. The transmitter will then reply to this challenge with a response and, if correct, vehicle starting will occur.

Remote Control Door Lock Receiver

The remote control door lock receiver is located on the vehicle windshield, directly in front of the inside rearview mirror.

The remote control door lock receiver is control by and directly communicates with the body control module (BCM). When the transmitter receives a low frequency challenge from an antenna, it responds with an RF message. This RF message is received by the remote control door lock receiver and communicated to the BCM. If the RF message is a valid response to the low frequency challenge, vehicle access or starting will be allowed.

Immobilizer Antenna Coil Assembly

The keyless entry immobilizer coil assembly is located in the upper instrument panel, directly beneath the upper instrument panel storage compartment. If the transmitter battery is dead, weak, or the RF signal is being interrupted, the extended transmitter key blade can be placed in the transmitter slot located in the upper instrument panel storage compartment, under the rubber mat, to create a low powered coupling between the transmitter and immobilizer antenna, allowing communications to occur and enabling vehicle starting.

The immobilizer antenna coil is controlled by the BCM. The immobilizer control module is also active when learning vehicle keys.

Keyless Entry Control Module

The keyless entry control module is a multi-function module which performs the following keyless entry system functions:

- Activating vehicle antennas for passive keyless entry functions
- Activating vehicle antennas for keyless start functions
- Backup control for the ECM accessory wakeup and the run/crank relay
- If equipped, controls the electronic steering column lock
- Receiver of the exterior door handle switch inputs and door open switch (not the door ajar switch)
- Ignition mode switch monitoring

Short Range Remote Control Transceiver

The short range remote control transceiver is an additional communication device to provide communication between the vehicle owner’s cell phone and the keyless entry control module.

OnStar® Remote Link (if equipped)

A vehicle operator may have the ability to perform some of the keyless entry functions using applications on personal devices such as but not limited to smart phones. A condition may appear as if there is a malfunction in the vehicle. If it is suspected that this may be the case contact Technical Assistance if a condition cannot be determined through normal vehicle diagnostics.

Body Control Module (BCM)

The BCM is a multi-function module that performs the following functions:

- Receive and authenticate active transmitter and keyless start signals from the remote control door lock receiver
- Determines the functionality requested by the transmitter signal
- Performs the function requested by the transmitter signal

Unlock Driver Door Only – Active

Momentarily press the transmitter UNLOCK button to perform the following functions:

- Unlock only the driver door
- Illuminate the interior lamps for a determined length of time or until the ignition mode switch is pressed
- Flash the exterior lights, if enabled through personalization
- Disarm the content theft deterrent system
- Deactivate the content theft deterrent system when in the alarm mode

Unlock All Doors – Second Operation – Active

Momentarily press the transmitter UNLOCK button a second time, within 5 seconds of the first press, to perform the following function:

Unlock the remaining doors and rear compartment

Unlock Driver Door Only – Passive

If enabled through personalization, approach the driver door with a valid keyless entry transmitter and press the door handle button to perform the following functions:

- Unlock and open only the driver door when door handle is operated
- Disarm the content theft deterrent system, if equipped
- Deactivate the content theft deterrent system when in the alarm mode

Unlock All Doors – Passive

Approach any non driver door (front or rear) or, if enabled through personalization, the driver door with a valid keyless entry transmitter and press the door handle button to perform the following functions:

- Unlock all vehicle doors and rear compartment
- Disarm the content theft deterrent system, if equipped
- Deactivate the content theft deterrent system when in the alarm mode

Lock All Doors – Active

Press the transmitter LOCK button to perform the following functions:

- Lock all vehicle doors
- Immediately turn off the interior lamps
- Flash the exterior lights, if enabled through personalization
- Chirp the horn, if enabled through personalization
- Arm the content theft deterrent system

Lock All Doors – Passive

Exit the vehicle (with vehicle off) with the keyless entry transmitter to automatically perform the following functions, if equipped.

- Lock all vehicle doors and rear compartment after a delay
- Flash the exterior lights, if enabled through personalization
- Chirp horn, if enabled through personalization
- Arm the content theft deterrent system

When all doors are closed, they can also be locked from the exterior by pressing the door handle button while having a valid transmitter within range.

If more than one keyless entry transmitter is within a vehicle and the keyless entry system detects that one or more transmitters have been left in the vehicle after vehicle is locked, any transmitter left within the vehicle will be temporarily deactivated until:

- A button on the deactivated transmitter is pressed (will only activate the transmitter whose button is pressed)
- A passive unlock of vehicle occurs
- Change in power mode occurs

Rear Compartment Release – Passive

Approach the rear of the vehicle with a valid keyless entry transmitter. Press the trunk release touch pad. The trunk will open.

Vehicle Locator/Panic Alarm/Active

A single press of the panic button performs the following functions. Some functions may be dependent on personalization settings:

- Pulses the horn three times
- Flashes the exterior lamps three times

A press and hold of the panic button performs the following functions:

- Pulses the horn and flashes the parking lamps for 30 second or until the following conditions occur:
  - The panic button is pressed
  - The ignition mode switch is pressed with a valid key in the vehicle

Remote Start

The remote vehicle start function allows engine starting while not in the vehicle. It also allows the vehicle HVAC system and other vehicle systems to enable, providing a comfortable vehicle upon entry. The remote vehicle start sequence begins by pressing and releasing the lock button and then pressing and holding the remote vehicle start buttons on the keyless entry transmitter. The turn signal lamps will illuminate to indicate the vehicle has received the remote start request. Each time a remote vehicle start is performed, the vehicle doors are locked, however they may then be unlocked/locked with the transmitter at any time. Only the first and second vehicle transmitters are able to control the remote vehicle start function. Any additional remote transmitters programmed to the vehicle will perform all other remote functions. Once activated, the engine is allowed to run for 10 minutes. The remote vehicle start time may be extended by an additional 10 minutes by again pressing and releasing the lock button and then pressing and holding the remote vehicle start buttons on the transmitter. This feature is called a remote vehicle start continue and allows a maximum of 20 minutes of engine running. If the remote vehicle start continue is performed at 7 minutes into the initial 10 minute time-out, a total of 17 minutes of engine running would occur. The remote vehicle start event may be suspended at any time by pressing only the remote vehicle start button on the transmitter or by entering the vehicle and turning ON the hazard lamps.

In between ignition cycles, only two remote start events may occur or be attempted. Once two events or attempts have been made, future remote start events will be suspended until the vehicle is operated using the ignition mode switch.

Enable/Disable Remote Start

Using the driver information center, remote start may be enabled or disabled as a part of vehicle personalization. Refer to the vehicle owners manual for more information.

Remote Start System Disabled

If any of the conditions listed below occur, a remote start event may be aborted or canceled:

- Vehicle is in valet mode
- Vehicle doors are ajar
- Rear compartment lid is ajar
- The hood is open
- The doors are not locked
- The hazard switch is ON
- Vehicle power mode is incorrect
- Vehicle speed is greater than 0
- Transmission is not in P
- Excessive engine coolant temperature
- Low oil pressure
- The malfunction indicator lamp (MIL) is commanded ON
- The low fuel level indicator lamp is commanded ON
- Engine crank time is greater than 30 seconds
- Excessive engine speed
- Accelerator pedal position too high
- Remote start timer equals 0
- Immobilizer system indicates a theft attempt
- Vehicle propulsion system fault conditions
- High voltage battery fault conditions

Keyless Entry Personalization

Vehicle lock/unlock functions and remote start settings may be personalized for the vehicle. For functional descriptions and programming instructions, refer to the vehicle owners manual.

Replace Battery in Remote Key Message

A REPLACE BATTERY IN REMOTE KEY message may be seen on the driver information center when the transmitter's battery voltage has been lower than 2.16 volts for three consecutive ignition cycles.

Seat Belts

Schematic and Routing Diagrams

Seat Belt Schematics (Switches and Indicators)

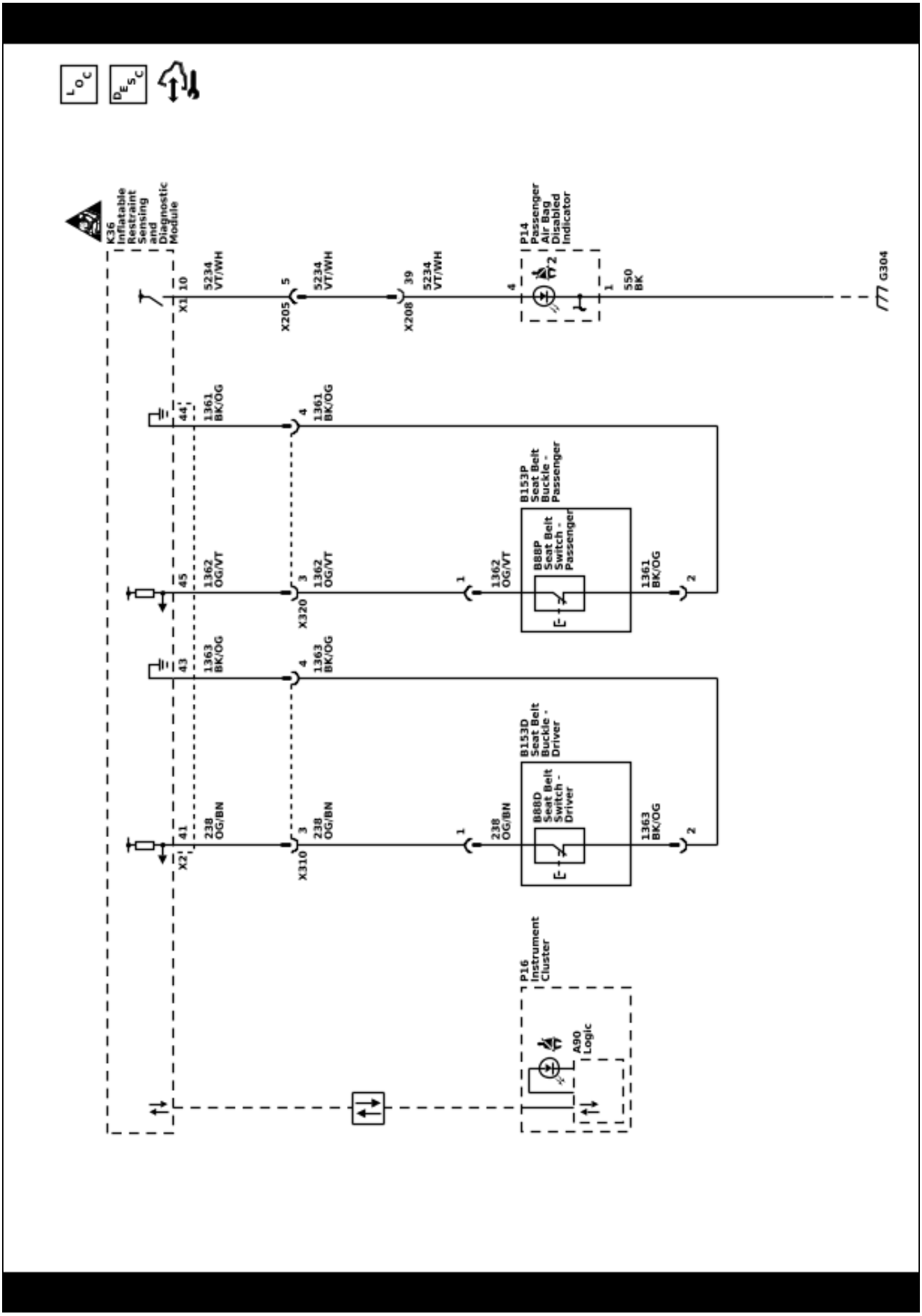

5910111

Description and Operation

Seat Belt System Description and Operation

Restraint System

The vehicle has front and rear seat belts that are the primary means of occupant restraint. Seat belts help to keep the occupants inside the passenger compartment and to gradually reduce the impact forces during the following events:

- Frontal impact type crashes
- Rear impact type crashes
- Side impact type crashes
- Roll-over type crashes

All seat belt retractors have emergency locks. The retractors remain unlocked during normal operation and under normal driving conditions. The retractors remain unlocked during normal conditions in order to allow free movement of the upper body of each occupant.
A pendulum locks the seat belt webbing into position. The pendulum causes a locking bar to engage a cog on the spool of the retractor mechanism when the following conditions occur:

- A rapid extraction of the seat belt webbing from the retractor
- An abrupt change in vehicle speed
- An abrupt change in vehicle direction
- Operation of the vehicle on a steep upgrade
- Operation of the vehicle on a downgrade

The seat belts have an automatic locking (cinch) feature. The cinch feature is activated when the seat belt webbing is completely extended from the retractor. The cinch feature prevents the webbing from extending beyond the position from which it is allowed to retract. Use of the cinch feature is recommended for securing a child seat. The cinch feature may be cancelled by allowing the webbing to wind back completely into the retractor. After the cinch feature is cancelled, the webbing is unlocked. After the cinch feature is cancelled, the webbing will extend from the retractor. This vehicle is also equipped with a supplemental inflatable restraint (SIR) system. Refer to *Supplemental Inflatable Restraint System Description and Operation on page 7-24*

Front Seat Belt System

The front seat belt system includes a driver and passenger seat belt pretensioner retractor. Both front seat belt pretensioners includes a seat belt switch in the seat buckle which controls a reminder lamp and a tone alarm.

Note: The front passenger seat is equipped with a passenger presence detection sensor, which detects an occupant. If the passenger presence detection sensor detects an empty front passenger seat, then the passenger fasten safety belt indicator will be disabled.

- When the driver seat belt is buckled and the ignition switch is turned ON, the following events will occur:
  - The tone alarm will not operate.
  - The reminder lamp will not operate.
- When the driver seat belt is not buckled and the ignition switch is in the ON position, the following events will occur:
  - The tone alarm will operate for 4–8 seconds and then go OFF.
  - The fasten safety belt indicator will turn ON for 20 seconds, until the driver seat belt is buckled.

Rear Seat Belt System

The Rear Seat Belt System includes the following components:

- The rear seat belt retractor is located at the wheelhouse panel and attached to the floor panel by the rear seat shoulder belt retractor bracket.
- The rear seat belt buckles and the center seat belt buckle are attached to each seat.

Child Seat Restraint System

Warning: A child in a rear-facing child restraint can be seriously injured if the front passenger air bag inflates, because the back of a rear-facing child restraint would be very close to the inflating air bag. NEVER use a rear-facing child restraint in this vehicle. If a forward-facing child restraint is suitable for your child, ALWAYS move the front passenger seat as far back as it will go and then install the child restraint. Be sure the child restraint position does not conflict with any additional requirements provided by the manufacturer. For more information, refer to the vehicle owner's manual and the instructions that came with the child restraint.

A child in a rear-facing child restraint can be seriously injured if the right-front passengers air bag inflates. This is because the back of a rear-facing child restraint would be very close to the inflating air bag. NEVER use a rear-facing child restraint in this vehicle. If a forward-facing child restraint is suitable for your child, ALWAYS move the front passenger seat as far back as it will go and then install the child restraint. Be sure the child restraint position does not conflict with any additional requirements provided by the manufacturer. For more information, refer to the vehicle owners manual and the instruction that came with the child restraint.

The child seat may only be used in a forward facing seating location. The child seat should be installed and secured according to the manufacturer's directions. If the child seat has a top strap, the seat will need to be anchored. Passengers should not be allowed to sit at locations where the seat belts are being used to secure the child seat.

All vehicles are equipped with a dual-mode type retractor with emergency and automatic locking features. The automatic locking feature is for restraint of a child seat. The child seat can be secured by pulling the seat belt all the way out to lock it. Then tighten the seat belt around the child seat.

If a child seat is to be used in the second seat position, a special dealer-installed anchor must be used in order to anchor the child seat top strap. This only applies to the seats designed with the top strap provision and for the vehicles sold in Canada. In order to ensure the correct top strap angle, the child seat is only to be used at the seating position for which the top strap anchor is installed.

Fasten Safety Belt Indicators

There is a fasten safety belt indicator for this vehicle. The driver fasten safety belt reminder is displayed in the instrument cluster. The fasten safety belt indicator may only be ON during RUN. The fasten safety belt indicator illuminates under the following conditions:

- During the bulb check
- The inflatable restraint sensing and diagnostic module (SDM) sends the status of the driver seat belt to the instrument cluster via serial data. If any of the seat belts are unfastened, the instrument cluster will send a message requesting a chime sound to be turned ON after a bulb check.

Supplemental Restraints

Schematic and Routing Diagrams

SIR Schematics (Power, Ground, Serial Data, Indicators and Passenger Presence System)

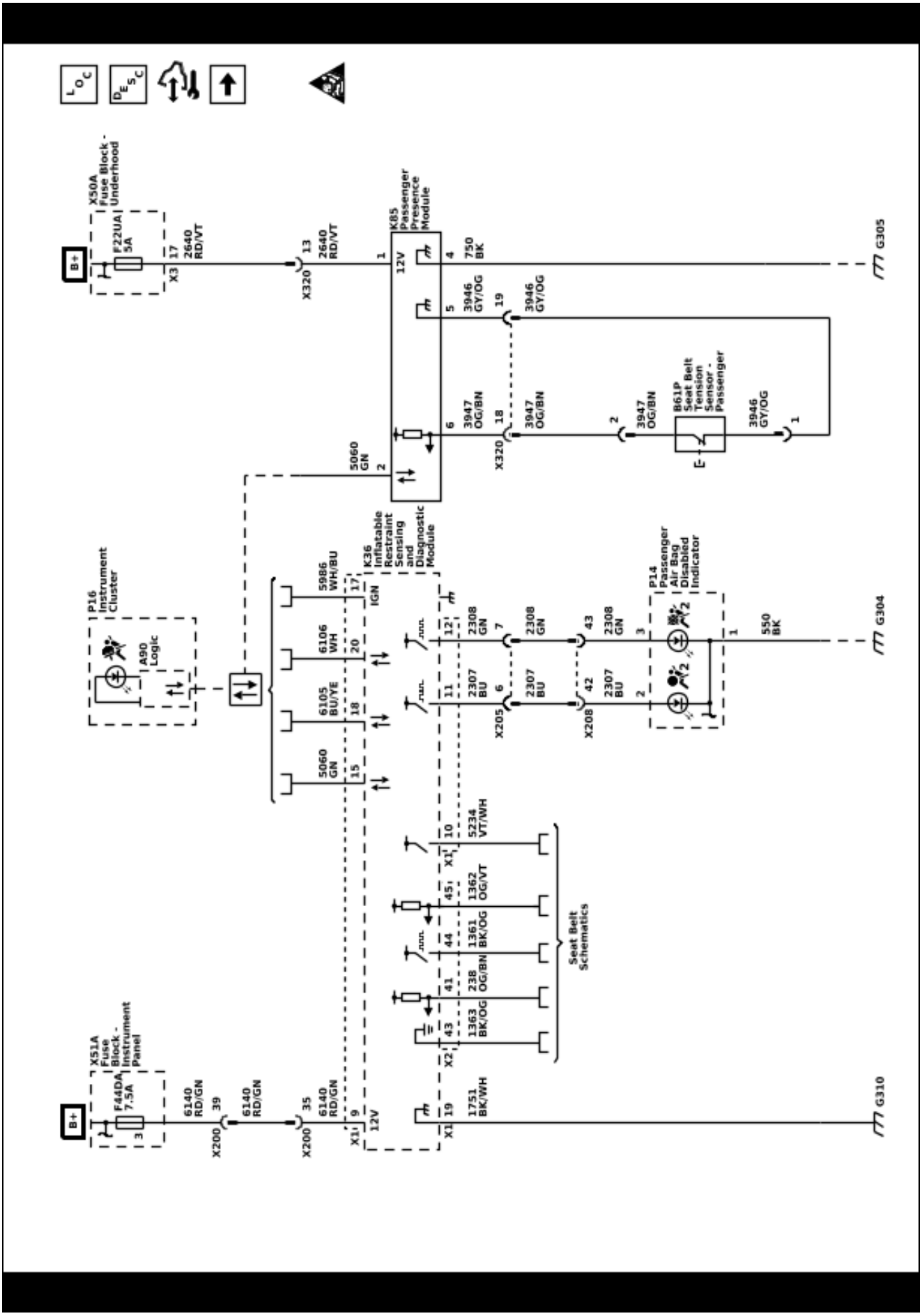

SIR Schematics (Front Impact Sensing and Deployment)

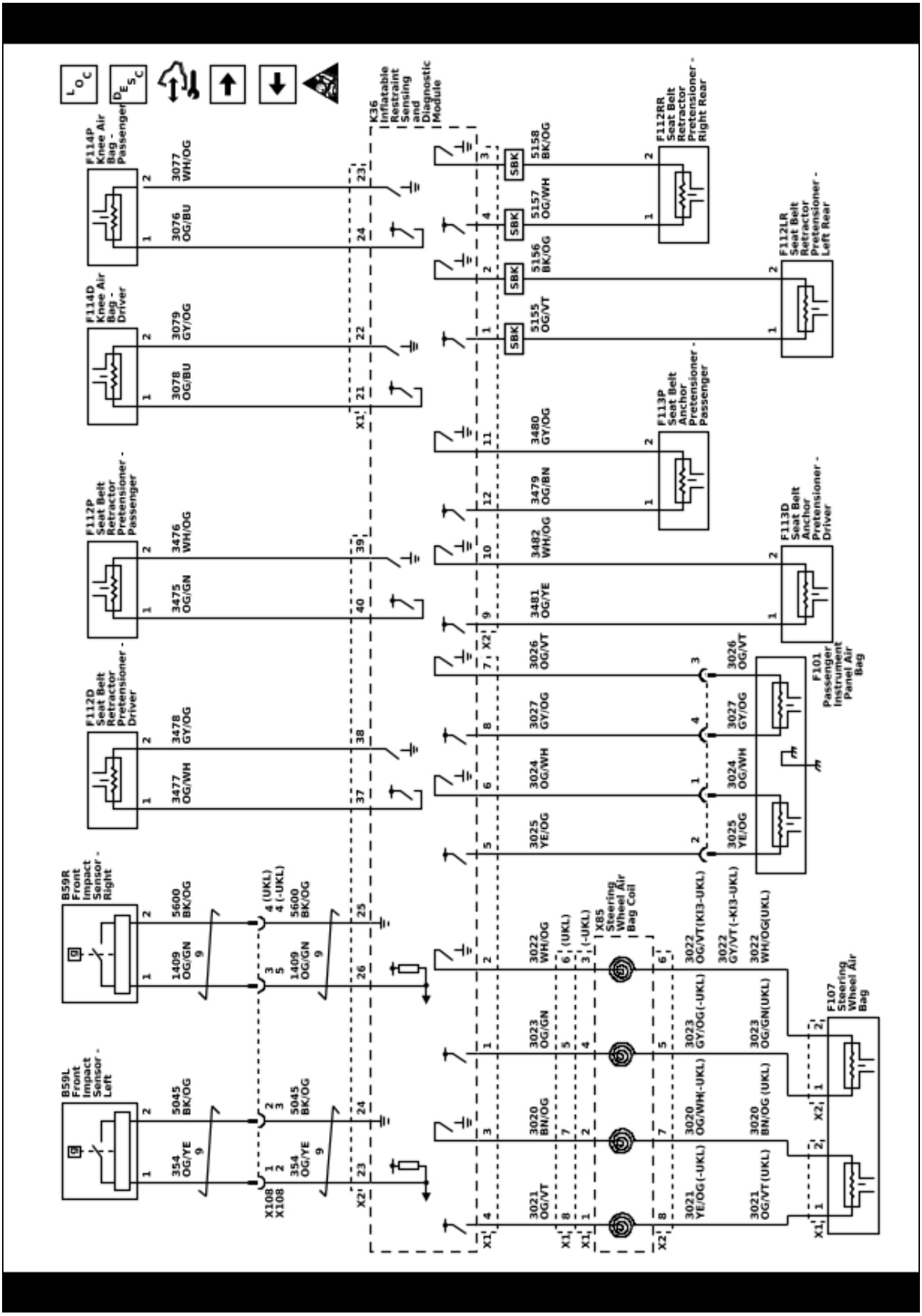

SIR Schematics (Side Impact Sensing and Deployment)

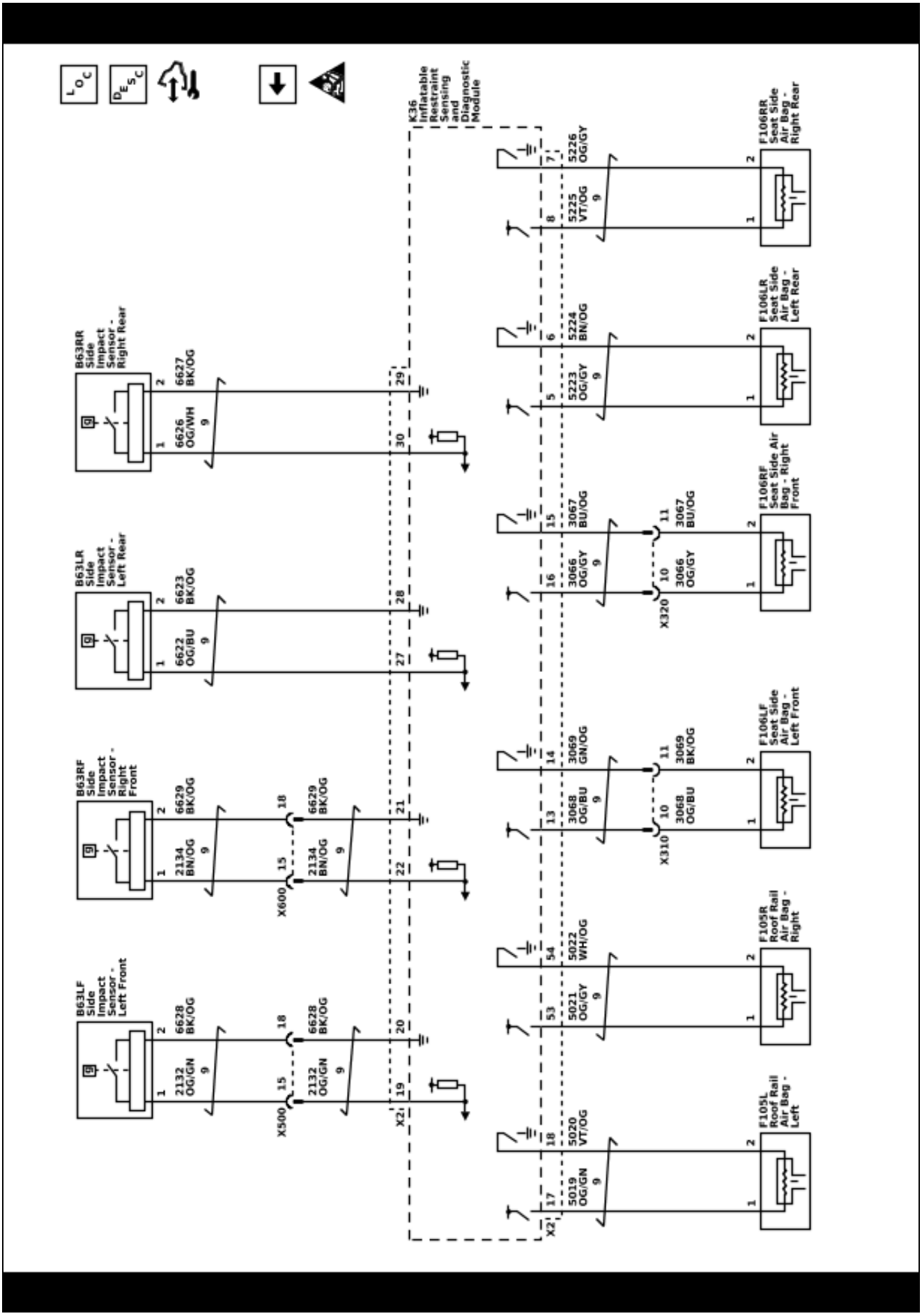

5910110

Description and Operation

Supplemental Inflatable Restraint System Description and Operation

The supplemental inflatable restraint (SIR) system, comprised of the inflatable restraint sensing and diagnostic module (SDM), impact sensors, air bags, and seat belt pretensioners, supplements the protection offered by the seat belts. The SDM determines the severity of a collision using data collected from impact sensors located at strategic points on the vehicle. When the SDM detects a collision, it processes the information provided by the sensors to provide the safest combination of air bag and pretensioner deployment. The SDM will deploy the air bags and pretensioners if it detects a collision of sufficient force. If the force of the impact is not sufficient to warrant air bag deployment, the SDM may still deploy the seat belt pretensioners. The SDM contains a sensing device that translates vehicle acceleration to an electrical signal. The SDM compares these signals to the threshold values stored in memory. If the signals exceed the stored threshold value, the SDM will determine the severity of the event and may deploy restraints. The SDM continuously monitors the deployment loops and electrical components for malfunctions. Upon detection of a circuit malfunction, the SDM will set a DTC and illuminate the SIR system air bag malfunction indicator. The steering column and knee bolsters are designed to absorb energy and compress during frontal collisions to limit leg movement and decrease the chance of injury to the driver and passenger.

The supplemental inflatable restraint system utilizes the following components:

- Inflatable Restraint Sensing and Diagnostic Module
- Air Bag Indicator
- Air Bags
- Seat Belt Pretensioners
- Impact Sensors
- Passenger Presence Sensor
- Passenger Presence System
- Passenger Presence Module
- Passenger Air Bag Indicator
- Passenger Air Bag Disable Switch
- Seat Position Sensor
- Seat Belt Tension Sensor
- Seat Belt Indicators

Inflatable Restraint Sensing and Diagnostic Module

The SDM is the control unit for the SIR system. The SDM contains internal sensors in addition to the external impact sensors. The SDM contains sensor which translate vehicle acceleration into an electrical signal, which may be used by other modules. In the event of a collision, the SDM compares the signals from the internal and external impact sensors to a threshold value stored in memory. When the generated signals exceed the stored value, the SDM will cause current to flow through the appropriate deployment loops to deploy the restraints. The SDM records the SIR system status when a deployment occurs and illuminates the air bag malfunction indicator. The SDM performs continuous diagnostic monitoring of the SIR system electrical components and circuitry when the ignition is on. If the SDM detects a malfunction, a DTC will set and the SDM will command the instrument cluster to illuminate the air bag malfunction indicator, notifying the driver that a malfunction exists. If power is lost during a collision, the SDM maintains a 23 V loop reserve for deployment of the air bags. It is important when disabling the SIR system for servicing or rescue operations to allow the 23 V loop reserve to dissipate, which could take up to 1 minute.

Air Bag Indicator

The SIR system air bag indicator, located in the instrument cluster, is used to notify the driver of SIR system malfunctions and verify that the SDM is communicating with the instrument cluster. When the ignition is turned on, the SDM is supplied with ignition voltage. The instrument cluster will momentarily turn on the SIR system air bag indicator. While the indicator is on, the SDM conducts tests on all SIR system components and circuits. If no malfunctions are detected the SDM will communicate with the instrument cluster through the serial data circuit and command the SIR system air bag malfunction indicator to turn off. The SDM provides continuous monitoring of the air bag circuits by conducting a sequence of checks. If a malfunction is detected the SDM will set a DTC and command the instrument cluster to illuminate the SIR system air bag malfunction indicator via serial data. The presence of an SIR system malfunction could result in non-deployment of the inflatable restraints or deployment in conditions that normally would not warrant deployment. The SIR system air bag malfunction indicator will remain on until the malfunction has been repaired.

Air Bags

The vehicle will contain a number of air bags, depending on vehicle available and optional equipment:

- Steering wheel
- Instrument panel
- Driver side (B-pillar)
- Passenger side (B-pillar)
- Driver side (C-pillar)
- Passenger side (C-pillar)
- Driver knee
- Passenger knee
- Left roof rail
- Right roof rail

To view the locations of the air bags refer to: *Master Electrical Component List on page 6-653*.

Air bags contain a housing, inflatable air bag, an initiating device, a canister of gas generating material and, in some cases, stored compressed gas. Each air bag has a discrete deployment loop to supply current and deploy the air bag. The current passing through the air bags ignite the material in the canister producing a rapid generation of gas and is some cases, the release of compressed gas. The gas produced from this reaction rapidly inflates the air bag. Once the air bag is

inflated, it deflates through the air bag vent holes and/or the bag fabric. A shorting bar (if equipped) is located in the connector.

The steering wheel and instrument panel air bag are a dual-stage design. a dual-stage air bag uses two stages of deployment, which varies the amount of restraint to the occupant according to the collision severity. For moderate frontal collisions, the air bag deploys at less than full deployment which consists of stage 1 of the air bag. During a more severe frontal collision, a full deployment is initiated which consists of stage 1 and stage 2 of the air bag.

Seat Belt Pretensioners

The vehicle will contain a number of seat belt pretensioners, depending on vehicle available and optional equipment:

- Driver – Seat belt anchor
- Driver – Seat belt retractor
- Passenger – Seat belt anchor
- Passenger – Seat belt retractor

To view the locations of the air bags refer to: *Master Electrical Component List on page 6-653*.

The seat belt pretensioners consist of a housing, seat belt retractor, seat belt anchor, seat belt webbing, initiator, and a canister of gas generating materials. The initiator is part of the seat belt pretensioner deployment loop. When the vehicle is involved in a collision of sufficient force, the SDM causes current to flow through the seat belt deployment loops to the initiator. Current passing through the initiator ignites the material in the canister producing a rapid generation of gas. The gas produced from this reaction deploys the seat belt pretensioners which removes the slack in the seat belts. Depending on the severity of the collision, the seat belt pretensioners may deploy without the frontal inflator modules deploying, or they will deploy immediately before the frontal inflator modules deploy. Each seat belt pretensioner connector is equipped with a shorting bar, which shorts the seat belt pretensioner circuitry to prevent unwanted deployment of the seat belt pretensioner when the connector is disconnected.

Impact Sensors

The vehicle will contain a number of impact sensors, depending on vehicle available and optional equipment:

- Front
- Front Left
- Front right
- Door
- B-pillar
- C-pillar

To view the locations of the air bags refer to: *Master Electrical Component List on page 6-653*.

The impact sensors contain a sensing device which monitors vehicle acceleration to detect collisions that are severe enough to warrant air bag deployment. The impact sensors are not part of the deployment loop, but instead provide input to the SDM.

Passenger Presence Sensor

The passenger presence system is used to monitor the type of occupant that is sitting in the front passenger seat and communicate the status to the inflatable restraint sensing and diagnostic module. The inflatable restraint sensing and diagnostic module then uses this information to determine whether to enable or suppress the deployment of the passenger instrument panel air bag. The passenger presence system consists of an electronic control module, a sensor mat in the seat, a harness, and passenger air bag ON/OFF indicators.

The passenger presence system utilizes the passenger presence sensor to determine the type of occupant sitting in the front passenger seat. In some lower featured systems, the passenger presence sensor only determines if an occupant is in the passenger seat, not the occupant type. If an occupant is not detected or the occupant type is not suitable for air bag deployment, the passenger presence sensor will send a serial data signal to the inflatable restraint sensing and diagnostic module to disable the passenger instrument panel air bag. If a suitable occupant is detected, the passenger presence sensor will send a serial data signal to the inflatable restraint sensing and diagnostic module to enable the passenger instrument panel air bag. The inflatable restraint sensing and diagnostic module will notify the customer of the enable/disable status by illuminating one of the passenger air bag ON/OFF indicator. The passenger presence system monitors itself for faults and will displays diagnostic trouble codes (DTCs) on the scan tool. When a fault is detected, the passenger presence module sends out a message to the inflatable restraint sensing and diagnostic module. The inflatable restraint sensing and diagnostic module responds by sending a command message to the instrument cluster to illuminate the supplemental inflatable restraint system air bag indicator.

Passenger Air Bag Indicator

The passenger air bag indicator identifies the status of the instrument panel air bag. If an occupant is not detected in the passenger seat or the occupant type is not suitable for air bag deployment, the inflatable restraint sensing and diagnostic module will illuminate the passenger air bag OFF indicator. If an occupant is detected in the passenger seat, the inflatable restraint sensing and diagnostic module will illuminate the passenger air bag ON indicator.

Seat Position Sensor

The seat position sensor is used to determine the proximity of the driver or front passenger to the respective front air bag. There are two states of seat position – forward and rearward. The SDM will disable the stage 2 deployment when the seat is forward and enable stage 2 deployment when the seat is rearward. The SDM monitors the seat position sensor circuit for malfunctions, and if detected, will set a DTC, illuminate the air bag malfunction indicator, and disable stage 2 deployment. There could be an improper air gap between the seat position sensor and metal bracket causing a malfunction without setting a DTC. An improper air gap will form if the sensor is not mounted

properly, the bracket the sensor is mounted on is damaged, or the metal track the sensor detects is damaged.

Seat Belt Tension Sensor

The seat belt tension sensor is mounted on the passenger seat belt retractor to measure the seat belt tension. If the shoulder portion of a passenger seat belt is fully extended, the infant car seat restraint locking feature may be engaged, disabling the passenger air bag.

Passenger Air Bag Disable Switch

The passenger air bag disable switch provides the means to manually disable the ability for the passenger instrument panel air bag to deploy. The vehicle has a passenger air bag status indicator to inform the driver when the passenger air bag is on or off based on the disable switch position.

Seat Belt Indicators

The seat belt indicators are controlled by the inflatable restraint sensing and diagnostic module. For further information on seat belt indicators refer to: *Seat Belt System Description and Operation on page 7-18*.

A

A/C Diagnostics Chart 5-27
Adhesives, Fluids, Lubricants, and Sealers 5-23
Air Conditioning
O-Ring Seal Replacement 5-95
Refrigerant Pressure Sensor Replacement - High Pressure 5-170
Refrigerant Pressure Sensor Replacement - Low Pressure 5-162
System Performance Test 5-25
Air Conditioning and Drive Motor Battery Cooling Compressor Replacement 5-59
Air Conditioning Compressor Oil Diagnosis 5-31
Air Conditioning Condenser Hose Replacement 5-108
Air Conditioning Evaporator Hose Assembly Replacement 5-125
Replacement 5-312
Thermal Expansion Valve Replacement 5-158
Air Conditioning Evaporator and Blower Module Drain Hose Replacement 5-316
Air Inlet Deflector Water Deflector Replacement 5-395
Air Inlet Housing Replacement 5-407
Approximate Fluid Capacities Heating, Ventilation, and Air Conditioning 5-22
Automatic Day-Night Mirror Description and Operation 2-40
Automatic HVAC Description and Operation 5-612
Auxiliary Heater Inlet Hose Replacement 5-328
Auxiliary Heater Outlet Hose Replacement 5-348

B

Battery Description and Operation 4-5
Blower Lower Case Replacement 5-289
Upper Case Replacement 5-301
Blower Motor Replacement 5-420
Blower Motor Control Replacement 5-414

C

Cabin Heater Coolant Heater System Leak Testing 5-35
Coolant Heater System Loss of Coolant 5-34
Coolant Heater System Pressure Cap Testing 5-35
Charge Port Door Description and Operation 2-49
Charging System Description and Operation .....
Charging System (cont'd) 6-60
Component Connector End Views 6-60
Compressor Hose Assembly Replacement 5-96
Pressure Relief Valve Replacement 5-86
Condenser Replacement 5-178

D

Data Link Communications Description and Operation 6-29
Defrosting Insufficient 5-29
Door Ajar Indicator Description and Operation 2-49
Door Component Views 6-583

E

Electrical Center Identification Views 6-34
Electrical Power Management Description and Operation 4-8
Electronic Park Lock Description and Operation 6-692
Exterior Lighting Systems Description and Operation 2-31

F

Fastener Specifications HVAC Systems 5-3
Floor Front Air Outlet Center Duct Replacement 5-501
Floor Front Air Outlet Duct Replacement - Left Side 5-500
Replacement - Right Side 5-496
Floor Rear Air Outlet Duct Adapter Replacement 5-506
Duct Replacement 5-545
Flushing 5-38
Front of Vehicle/Engine Compartment Component Views 6-557
Full-Cut Method Description 2-8

G

Ground Views 6-602

H

Handling of Refrigerant Lines and Fittings 5-24
Harness Routing Views 6-532
Heater Case Replacement 5-600
Core Replacement 5-571
Heater and Air Conditioning Evaporator Case Replacement 5-284
System Description and Operation 5-602
Heater and Air Conditioning Evaporator and Blower Module Removal and Installation 5-199
Heater Coolant Heater Draining and Filling 5-39

Heater Coolant (cont'd)
Heater Replacement 5-573
Heater Coolant Pump
Replacement 5-374
Heater Inlet Hose
Replacement 5-320
Heater Outlet Hose
Replacement 5-370
Heating
Performance Diagnostic 5-28
Hood Ajar Indicator
Description and Operation 2-50
Horn
System Description and Operation 2-14

I

Immobilizer
Description and Operation 7-5
Inline Harness Connector End Views 6-441
Instrument Panel Center Air Outlet
Replacement 5-467
Instrument Panel Outer Air Outlet
Duct Replacement 5-510
Replacement - Left Side 5-466
Replacement - Right Side 5-494
Instrument Panel/Center Console Component
Views 6-565
Interior Lighting System
Description and Operation 2-33

K

Keyless Entry
System Description and Operation 7-11

L

Leak Testing 5-24
Liftgate
Ajar Indicator Description and Operation 2-50
Luggage Compartment/Rear of Vehicle
Component Views 6-591

M

Master Electrical Component List 6-653
Mobile Device Wireless Charger
Description and Operation 6-626

N

Noise Diagnosis
Blower Motor 5-30
HVAC Module 5-32

O

Odor Correction 5-36
Odor Diagnosis 5-32
Outside Mirror
Description and Operation 2-41

P

Passenger Compartment
Air Filter Replacement 5-406
Passenger Compartment/Roof Component
Views 6-572
Pedestrian Alert
Description and Operation 2-15
Power Door Locks
Description and Operation 2-51
Power Mode Description and Operation 6-692
Power Outlets
Description and Operation 6-627
Power Windows
Description and Operation 2-8
Powertrain Component Views 6-564

R

Rear Hatch/Gate Description and
Operation 2-52
Rear Vision Camera
Description and Operation 3-7
Rear Window Defogger
Description and Operation 2-9
Rearview Camera
Camera Full Display Mirror Description and
Operation 3-7
Receiver and Dehydrator
Replacement 5-135
Refrigerant
Recovery and Recharging 5-36
Refrigerant Label Symbols 5-23
Remote Vehicle Speed Limiting
Description and Operation 7-7
Remote Vehicle Speed Limiting Description and
Operation 7-7
Retained Accessory Power
Description and Operation 6-695
RPO Code List 1-6

S

Schematics
Body Control Systems 6-25
Cigar Lighter/Power Outlet 6-625
Data Communications 6-4
Defogger 2-7
Door Lock/Indicator 2-44
Exterior Lamps 2-20
Fog Lamps 2-19
Ground Distribution 6-643
Headlamps/Daytime Running Lamps 2-17
Hood Latch 2-48
Horns 2-12
HVAC Systems - Automatic 5-606
Image Display Cameras 3-4
Immobilizer 7-4
Inside Rearview Mirror 2-36

Schematics (cont'd)
Interior Lamps 2-25
Interior Lamps Dimming 2-28
Moveable Window 2-4
Outside Rearview Mirror 2-37
Power Distribution 6-629
Power Moding 6-640
Release Systems 2-47
Remote Function 7-9
Seat Belts 7-17
SIR 7-21
Starting and Charging 4-4
Wiper and Washer Systems 2-55
Sealing Washer Replacement 5-94
Seat Belt
System Description and Operation 7-18
Side Window Defogger Outlet
Duct Replacement - Left Side 5-530
Duct Replacement - Right Side 5-538
Grille Replacement - Left Side 5-428
Grille Replacement - Right Side 5-455
Special Tools
HVAC Systems 5-603
Stationary Window
Description 2-10
Supplemental Inflatable Restraint
System Description and Operation 7-24
Surround Vision Camera
Description and Operation 3-7

U

Urethane Adhesive
Description 2-10

V

Vehicle Certification, Tire Placard, and Anti-Theft
Label 1-4
Vehicle, Engine and Transmission ID and VIN
Location, Derivative and Usage 1-3

W

Wheels/Vehicle Underbody Component
Views 6-599
Windshield Defroster
Outlet Duct Replacement 5-516
Wiper/Washer
System Description and Operation 2-58

BLANK