POLICE

GENERAL MOTORS FLEET

2023

EXPRESS VAN CARGO

Shown with equipment from independent suppliers not covered by the GM New Vehicle Limited Warranty GM is not responsible for the safety or quality of independent supplier alterations.

gm FLEET

About This Publication

This catalog is not updated during the model year and should not be used for ordering purposes. It is intended as a source of basic information. All illustrations and specifications in this literature are based on the latest product information available at the time of publication. General Motors reserves the right to make changes at any time without notice. For further details, consult your local dealer.

Care must be taken during customer installation of equipment and wiring to ensure that all holes drilled in the body are corrosion protected, properly sealed and that vehicle wiring harnesses, piping or other components have not been displaced or damaged. Aftermarket equipment installers must be mindful of applicable Federal Motor Vehicle Safety Standards. This information can be obtained directly from the National Highway Traffic Safety Administration. Adding non-dealer accessories or making modifications to the vehicle can affect vehicle performance, aerodynamics, and overall top speed. Please return all police vehicles to factory condition and settings upon decommissioning to prevent civilians from using these new 2023 calibrations, lighting and other features intended only for police and emergency customers. Wiring connection or splice changes are to be removed before the vehicle is returned to civilian use.

These vehicles are equipped with an airbag system. The airbag system in your police vehicle includes frontal driver and front outboard passenger airbags, front seat back side impact airbags and roof rail mounted head-curtain airbags. Customer installed equipment such as security barriers behind the front seats should not be mounted so that the barrier ends are within the side airbag deployment zones. The sensors and other components for the airbag system must not be relocated to accommodate the installation of customer furnished equipment; please refer to the service manual for sensor and other component locations. For information concerning instrument panel top pad mounted equipment and airbag system deployment zones, see the airbag information section in this catalog and the vehicle owners manual.

A note about vehicle alterations by independent suppliers: This catalog shows pictures of vehicles that have been altered or upfitted with equipment or components supplied to Chevrolet or its dealers by independent suppliers. GM is not responsible for the safety or quality of design features, materials or workmanship of any alterations by third parties.

Copyright 2022 General Motors. All rights reserved. Chevrolet and the Chevrolet Emblem are registered trademarks of General Motors LLC.

INDEX

2023 EXPRESS CARGO VAN

- **UPDATES FOR 2023 EXPRESS CARGO VAN**
- **STANDARD 1WT FEATURES**
- **COLORS & INTERIOR TRIM**
- **OPTIONAL EQUIPMENT**
- **POWERTRAIN / TRANSMISSION RATINGS / GCWR RATINGS / EMISSIONS**
- **SPECIFICATIONS**
- **GENERAL MOTORS FLEET OnStar[1]® SIRIUS XM[2] RADIO AND Onstar[1]® VEHICLE INSIGHTS**
- **AIRBAG DIMENSIONS**
- **AIRBAGS[3] FAQ**
- **STABILITRAK**
- **LIMITED WARRANTY**

1. Connected services vary by vehicle model and require active service plan, working electrical system, cell reception and GPS signal. Does not include emergency or security services. Services subject to user terms and limitations. Data plans offered by AT&T. See gmfleet.com/connected services for details. Availability subject to change. OnStar Connected Services availability subject to change. **2.** SiriusXM® Platinum Plan 3-month trial subscription included if you decide to continue service after your trial, your selected subscription plan will automatically renew thereafter. You will be charged at then-current rates. Fees and taxes apply. To cancel you must call SiriusXM at 1-866-635-2349. See SiriusXM Customer Agreement for complete terms at SiriusXM.com. All fees and programming subject to change. ©2018 Sirius XM Radio Inc. All rights reserved. **3.** Always use seat belts and child restraints. Children are safer when properly secured in a rear seat in appropriate child restraint. See the Owner's Manual for more information.

Standard Dashboard

Shown with aftermarket equipment, always use safety belts when seated

UPDATES FOR 2023

DELETIONS

- **(LWN) Engine, 2.8L Duramax Turbo-Diesel**
- **(K08) Auxiliary heat exchanger**
- **(E48) Radiator grille cover**
- **(MQD) Transmission, 8-speed automatic**
- **Exhaust brake**
- **(UXZ) Audio system, radio provision**
- **(R9Y) Fleet Free Maintenance Credit**

NOTE: This vehicle is not designed nor intended for use in high speed emergency vehicle operations. Model G2500 Regular Wheelbase RWD (CG23405), Model G2500 Extended Wheelbase RWD (CG23705) Model G3500 Regular Wheelbase RWD (CG33405), Model G3500 Extended Wheelbase RWD (CG33705)

STANDARD EXPRESS 1WT INTERIOR FEATURES

AIR CONDITIONING	Single-zone manual.
ASSIST HANDLE	Driver and front passenger
AUDIO SYSTEM FEATURES	Audio system, AM/FM stereo with MP3 player, seek-and-scan, digital clock, TheftLock, random select, auxiliary jack and 2 front door speakers. Not available with (U2K) SiriusXM Radio or (WP9) Communications Package on CG23405 and CG23705 models. Not available with (U2K) SiriusXM Radio on CG33405 and CG33705 models.
CARGO TIE DOWNS	6 D-ring attachments on cargo area floor. For all models except CG33705, not available with (Y3H) Paratransit Package or (ZP6) 5-passenger Express Crew Van. For CG33705, not available with (YF2) Ambulance Package, (Y3H) Paratransit Package or (ZP6) 5-passenger Express Crew Van.
CONSOLE	Engine cover with open storage bin
CONVENIENCE PACKAGE	Includes (A31) power windows and (AU3) power door locks
CUP HOLDERS	Three on engine console cover
DEFOGGER	Side windows
DRIVE INFO. CENTER	Includes fuel range, average speed, oil life, tire pressure monitoring, fuel used, ice warning, engine hours, average fuel economy, tachometer, and maintenance reminders. Compass and outside temperature available if equipped
WI-FI HOTSPOT[2]	Wi-Fi Hotspot capable. Visit www.gmfleet.com/technology/connected-vehicle.html for details and system limitations
FLEET CONNECTED ACCESS[1]	Chevrolet Connected Access with 10 years of standard connectivity which enables services such as, Vehicle Diagnostics, Dealer Maintenance Notification, Chevrolet Smart Driver, Marketplace and more. Limitations apply. Not transferable. Standard connectivity available to original purchaser for ten years from the date of initial vehicle purchase for model year 2018 or newer Chevrolet vehicles. Seewww.gmfleet.com/technology/connected-vehicle.html for details and further plan limitations. Connected Access does not include emergency or security services. Availability and additional services enabled by Connected Access are subject to change
FLOOR COVERING	Floor covering, full-length Black rubberized-vinyl. On models CG23405, CG23705 and CG33405 , not available with (RFM) rear floor covering delete or (PCH) Hotel Shuttle Package. On model CG33705, not available with (RFM) rear floor covering delete, (PCH) Hotel Shuttle Package or (YF2) Ambulance Package.
HEADLINER	Cloth over driver and passenger
LIGHTING	Interior with 4 dome lights, 1 overhead and 3 LED's on cross members in cargo area, includes defeat switch and door handleactivated switches
MIRROR	Inside rearview, includes Rear Vision Camera[2] display
ONSTAR®[1]	Fleet orders receive a 3-month trial of Fleet connected services and 3 months of Fleet Safety & Security plan coverage. Connected services include navigation services, Remote Access Plan and 1 month or 3GB of data (whichever comes first) from vehicle delivery date. Data plans offered by AT&T. Certain services require working electrical system, cell service and GPS signal. OnStar[1] links to emergency services. See www.gmfleet.com/technology/connected-vehicle.html for details and limitations
POWER OUTLETS	Two auxiliary on engine console with cover 12-volt and 120-volt power outlet
REAR VISION CAMERA[3]	While in Reverse, provides driver a view of the scene directly behind the vehicle on the inside rear-view mirror to help park and avoid nearby objects.
RESTRAINT SYSTEM[4]	Three point seat belts for driver and front outboard passenger with pretensioners and seat belts for all other designated seating positions. Driver and front outboard passenger frontal airbags with front outboard passenger airbag On-Off switch, driver and front outboard passenger knee bolsters and driver and front outboard passenger seat-mounted side impact airbags and roof-mounted head-curtain airbags for outboard seating positions.
SEATS, FRONT	Seats, front bucket with vinyl trim and head restraints, includes inboard armrests. Not available with (AJ3) driver-side only frontal airbag.
SPEEDOMETER/CLUSTER	Analog with speedometer, odometer, trip odometer, fuel level, volt meter, engine temperature and oil pressure
THEFT DETERRENT SYSTEM	Vehicle Immobilizer (prevents vehicle start without correct key or remote) and Content Theft System (unauthorized entry, or entry without use of keyless remote fob, sounds horn and lamps flash). See your Owner's Manual for System operation information
TRIM PANELS	Hinged rear side doors and hinged rear doors. Not available with (Y3H) Paratransit Package
VISORS	Driver and front passenger, padded with cloth trim.
WARNING TONES	Headlamp on and key-in-ignition

1. Connected services vary by vehicle model and require active service plan, working electrical system, cell reception and GPS signal. Does not include emergency or security services. Services subject to user terms and limitations. Data plans offered by AT&T. See gmfleet.com/connected services for details. Availability subject to change. OnStar Connected Services availability subject to change. **2.** SiriusXM® Platinum Plan 3-month trial subscription included if you decide to continue service after your trial, your selected subscription plan will automatically renew thereafter. You will be charged at then-current rates. Fees and taxes apply. To cancel you must call SiriusXM at 1-866-635-2349. See SiriusXM Customer Agreement for complete terms at SiriusXM.com. All fees and programming subject to change. ©2018 Sirius XM Radio Inc. All rights reserved. **3.** Safety or driver assistance features are no substitute for the driver's responsibility to operate the vehicle in a safe manner. The driver should remain attentive to traffic, surroundings and road conditions at all times. Visibility, weather, and road conditions may affect feature performance. Read the vehicle's owner's manual for more important feature limitations and information. **4.** Always use seat belts and child restraints. Children are safer when properly secured in rear seat in the appropriate child restraint. See the Owner's Manual for more information.

STANDARD EXPRESS 1WT FEATURES EXTERIOR

BUMPER, FRONT	Painted black (V37 Front and Rear Chrome Bumpers are Optional).
BUMPER, REAR	Painted black with step pad (V37 Front and Rear Chrome Bumpers are Optional).
DOOR	Swing-out passenger-side, 60-40 split
DOOR LOCKS	Power
FRONT LICENSE PLATE	Front license plate kit
FUEL FILL	Fuel filler with cap.
GLASS	Solar-Ray light-tinted, all windows.
GRILLE	Black composite
HEADLAMPS	Dual halogen composite. Includes Day time running lamps.
MIRRORS	Outside heated power-adjustable, Black, manual-folding.
TIRES	LT245/75R16E all-seasonal, blackwall, with full size spare tire (Spare tire located at rear underbody of vehicle).
TIRE PRESSURE MONITOR	Tire Pressure Monitoring System (does not apply to spare tire)
TRIM PANELS	Hinged rear side doors and hinged rear doors
WINDOWS	Power
WINDSHIELD WIPERS	Intermittent wet-arm with pulse washers
WHEELS	Steel, 16 inch x 6.5 inch, includes Gray center caps and steel spare

STANDARD EXPRESS 1WT FEATURES MECHANICAL

ALTERNATOR	105 amps. 150 amp is standard when (C69) rear air conditioning is ordered.
AXLE	3.42 Axle ratio
BATTERY	600 cold-cranking amps, maintenance-free with rundown protection and retained accessory power.
BRAKES	4-wheel antilock, 4-wheel disc
ENGINE	4.3L V6 with Direct Injection and Variable Valve Timing, includes aluminum block construction (276 hp with 298 lb-ft of torque
EXHAUST	Aluminized stainless-steel muffler and tailpipe
FUEL TANK CAPACITY	Approximately 31 gallon (117.3 liters)
HILL START ASSIST	This feature is designed to prevent the vehicle from rolling, either forward or rearward, during vehicle drive off.
MONITOR	Oil life
STABILITRAK	Traction assistance and vehicle stability enhancement system. For description see Stability Control and Traction Control section
STEERING	Power
SUSPENSION, FRONT	Independent with coil spring and stabilizer bar
SUSPENSION, REAR	Hypoid drive axle with multi-leaf springs
TOW/HAUL MODE	Tow/haul mode selector mounted on instrument panel
TRANSMISSION	8-speed automatic, electronically controlled with overdrive and tow/haul mode. Includes Cruise Grade Braking and Powertrain Grade Braking. Requires (LV1) 4.3L V6 engine. Heavy duty 6-speed included with optional L8T 6.6L V8 engine.
WARRANTY (LIMITED)	See limited warranty and maintenance section for information

AVAILABLE EXTERIOR COLORS ACTUAL COLORS MAY VARY

GAN	GBA	GAZ	G7C
Silver Ice Metallic WA-636R	Black WA-8555	Summit White WA-8624	Red Hot WA-130X

SEO PAINT AVAILABLE ACTUAL COLORS MAY VARY

Yellow WA-215D	Yellow WA-259L	Blue WA-451N	Yellow WA-478G	Dark Blue Metallic WA-722J
Yellow WA-5456	Green WA-7927	Silver Metallic WA-8867	9V5 Woodland Green WA-9015	Yellow WA-9414
9W4 Tangier Orange WA-9417	Inca Gold WA-7952	Dark Toreador Red WA-257C	Silver Birch Metallic WA-926L	Petro Blue WA-527Y
9W3 Wheatland Yellow WA-253A	Victory Red WA-9260	Blue WA-5665		

Note: All SEO colors require 5 orders before sending to the plant. All extraneous body components formerly color-keyed to body color, will be flat Black.

SEATS

	FRONT SEAT TYPE	SEAT CODE	SEAT TRIM	COLOR	COLOR CODE
Standard	Front bucket with vinyl trim and head restraints, includes inboard armrests.	AR7	Vinyl	Medium Pewter Neutral	93W 52W

NOTE: For cloth front seats see Option AS5 in Interior Optional Equipment page.

OPTIONAL INTERIOR FEATURES

AJ3	**AIRBAG[5]** - Frontal, driver side only (deletes passenger-side) Included and only available with (ZX1) driver-only high-back bucket seat. Not available with (ZX2) driver and front passenger high-back bucket seats or (ZP6) 5-passenger Express Crew Van Package. NOTE: Passenger seat is removed when ordered and cannot be added back in
C69	**AIR CONDITIONING, REAR** - Requires (TR9) auxiliary lighting and (KG4) 150 amp alternator. Included with (ZP6) 5-passenger Express Crew Van Package. Includes (C36) rear heater. (KG4) 150 amp alternator can be upgraded to (KW5) 220 amp alternator.
U0H	**AUDIO SYSTEM** - AM/FM stereo with MP3 player and USB port, includes seek-and-scan, digital clock, TheftLock, random select, auxiliary jack and 2 front door speakers. Includes (U2K) SiriusXM Radio[2]. Not available with UE0 OnStar delete or YF2 Ambulance package.
USR	**AUDIO SYSEM FEATURE** - USB port. Included and only available with (UOH) AM/FM stereo with MP3 player.
UPF	**BLUETOOTH® FOR PHONE[3]** - Personal cell phone connectivity to vehicle audio system. Included with (WP9) Communications Package. Requires (NP5) leather-wrapped steering wheel, (W1Y) steering wheel controls and (ZQ3) Driver Convenience Package.
UJ1	**BRAKE WARNING INDICATOR** - Monitors brake system pressure, with loss of pressure an audible alarm (chime) and cluster telltale is lit On CG33705 model, not available with (YF2) Ambulance Package.
CGN	**CARGO LINER** - Spray-in
WP9	**COMMUNICATION PACKAGE** - includes (L8T) 6.6L gas V8 engine, (NP5) leather-wrapped steering wheel, (P0V) 12 months of OnStar Vehicle Insights, (U2K) SiriusXM Radio, (UPF) Bluetooth for phone, (U0H) AM/FM stereo with MP3 player, USB Port, (W1Y) steering wheel controls and (ZQ3) Driver Convenience Package. Not available with (WPD) Safety Package, (ZL3) Enhanced Convenience Package or (UE0) OnStar delete.
U80	**COMPASS** - 8-point digital located in the Driver Information Center, included and only available with (TR9) Auxiliary Lighting
BA3	**CONSOLE** - Deluxe with swing-out storage bin. Included with (AS5) front bucket seats with custom cloth
K34	**CRUISE CONTROL** - Requires (UF3) high idle switch. For all models except CG33705, cruise is included with (ZQ3) Driver Convenience Package. For CG33705, cruise is included with (ZQ3) Driver Convenience Package or (YF2) Ambulance Package.
ZQ3	**DRIVER CONVENIENCE PACKAGE** - Includes Tilt-Wheel and (K34) cruise control. For CG23405 and CG23705 models, ZQ3 is included with (WP9) Communications Package, (WPD) Safety Package, (ZL3) Enhanced Convenience Package or (PCH) Hotel Shuttle Package. For CG33405 and CG33705, ZQ3 is ~iIncluded with (PCH) Hotel Shuttle Package.
PNC	**DOOR TRIM PANEL PACKAGE** - Included with (ZP6) Express Crew Van 5-passenger seating arrangement. Requires (A19) swing-out rear side door window glass. Not available with (52G) or (52W) Neutral interior, (PPC) door trim panel package
ZL3	**ENHANCED CONVENIENCE PACKAGE** - Includes (ATG) Remote Keyless Entry, (BTV) Remote vehicle starter system, (L8T) 6.6L gas V8 engine, (P0V) 12 months of OnStar Vehicle Insights, (Z82) heavy-duty trailering equipment and (ZQ3) Driver Convenience Package. Not available with (WP9) Communications Package, (WPD) Safety Package or (UE0) OnStar delete.
B31	**FLOOR COVERING** - Black rubberized-vinyl, front only (deletes rear covering behind front seat) For all models except CG33705, B31 is included with (PCH) Hotel Shuttle Package or requires (RFM) Rear floor covering delete. For CG33705, B31 is included with (PCH) Hotel Shuttle Package or (YF2) Ambulance Package, or requires (RFM) Rear floor covering delete.
RFM	**FLOOR COVERING DELETE** - Rear Floor covering
UEU	**FOWARD COLLISION ALERT[4]** - Requires (TR9) auxiliary lighting. Includes (UFL) Lane Departure Warning. UEU is not available on the CG33705 model with (ENC) HVAC system auxiliary provisions
5A1	**HVAC PROVISIONS** - Kit with rear air conditioning control head, retainer and bezel. Designed for installation after upfit is completed. Shipped loose. For CG23405 and CG23705 models, requires RPO (C69) rear air conditioning and RPO (C36) rear auxiliary heater. Not Available with RPO (PCH) Hotel Shuttle Package. For CG33405 and CG33705 models, requires RPO (C69) rear air conditioning and RPO (C36) rear auxiliary heater. Not Available with RPO (PCH) Hotel Shuttle Package or RPO (YF2) Ambulance Package.
RDI	**KEYLESS ENTRY CONTROL MODULE** - Dealer installed LPO. Requires (ATG) Remote Keyless Entry.
5H1	**KEY EQUIPMENT** - Two additional keys for single key system Provides two additional spare keys for a total of (4). (Keys will be cut but not programmed) NOTE: programming of keys is at customer's expense. Programming keys is not a warranty expense. Shipped loose, programing of keys is at customer expense
8X8	**LABEL** - Fasten seat belts "Fasten Seat belts" reminder label on front driver and passenger door window glass
UFL	**LANE DEPARTURE WARNING[4]** - Included and only available with (UEU) Forward Collision Alert[4].
UE0	**OnStar[1] DELETE** - Standard Bluetooth functionality remains. Requires a Fleet or Government Order

1. Connected services vary by vehicle model and require active service plan, working electrical system, cell reception and GPS signal. Does not include emergency or security services. Services subject to user terms and limitations. Data plans offered by AT&T. See gmfleet.com/connected services for details. Availability subject to change. OnStar Connected Services availability subject to change. **2.** If you decide to continue service after your trial, your selected subscription plan will automatically renew thereafter. You will be charged at then-current rates. Fees and taxes apply. To cancel you must call SiriusXM at 1-866-635-2349. See SiriusXM Customer Agreement for complete terms at SiriusXM.com. All fees and programming subject to change. ©2018 Sirius XM Radio Inc. All rights reserved. **3.** Go to my.chevrolet.com/learn to find out which Bluetooth phones are compatible with the vehicle **4.** Safety or driver assistance features are no substitute for the driver's responsibility to operate the vehicle in a safe manner. The driver should remain attentive to traffic, surroundings and road conditions at all times. Visibility, weather, and road conditions may affect feature performance. Read the vehicle's owner's manual for more important feature limitations and information. **5.** Always use seat belts and child restraints. Children are safer when properly secured in a rear seat in the appropriate child restraint. See the Owner's Manual for more information.

OPTIONAL INTERIOR FEATURES (cotinued)

UFA	**OUTSIDE TEMPERATURE DISPLAY** - Located in the Driver Information Center.
UD7	**REAR PARK ASSIST[1]** - Rear Park Assist can provide distance alerts to nearby detected objects behind the vehicle to help you park and avoid objects when in Reverse at low speeds. Sensors located on rear bumper. Included with (WPD) Safety Package. Required with (UFT) Side Blind Zone Alert (all other models)
ATG	**REMOTE KEYLESS ENTRY** - Includes 2 transmitters and remote panic button. For CG23405 and CG23705, remote keyless entry is included with (ZL3) Enhanced Convenience Package. ATG is required with (BTV) remote vehicle starter system.
BTV	**REMOTE VEHICLE STARTER SYSTEM** - Included with (ZL3) Enhanced Convenience Package.Requires (ATG) remote keyless entry
RGI	**ROUTING GROMMET** - Front of instrument panel. Provides an area for putting wires thru the front of dash. Not available with RPO (9L7) 2-30 amp wire leads
8N2	**SEAT BELTS** - Orange belts, Orange, Provides high visibility front Orange seat belts in lieu of Dark Pewter. Requires (93G) Medium Pewter Custom Cloth or (93W) Custom Vinyl, or 93B Cloth seats.
WPD	**SAFETY PACKAGE** - Safety Package, includes (L8T) 6.6L gas V8 engine, (P0V) 12 months of OnStar Vehicle Insights, (UD7) Rear Park Assist,[1] (UFT) Side Blind Zone Alert[1] and (ZQ3) Driver Convenience Package. Not available with (WP9) Communications Package, (ZL3) Enhanced Convenience Package or (UE0) OnStar delete.
AG1	**SEAT ADJUSTER** - Driver 6-way power. Requires (AS5) front bucket with Custom Cloth trim
AG2	**SEAT ADJUSTER** - Front passenger 6-way power. Requires (AS5) front bucket seats with Custom Cloth trim and (AG1) 6-way power driver seat adjuster
AS5	**SEATS , FRONT CLOTH BUCKETS** - Custom Cloth trim, head restraints and inboard armrests. Requires (52G) or (93G) Medium Pewter interior trim. Includes (BA3) console with swing-out storage bin
ZX1	**SEATING ARRANGEMENT** - Driver-only high-back bucket, adjustable, includes head restraint and vinyl or cloth trim. Includes (AJ3) driver-side only frontal airbag. Deletes passenger-side airbags, seat and Seat belt. Components cannot be added back later
VLU	**SECURITY SCREEN PACKAGE** - Without rear window pop-out. Requires a (ZW*) fixed glass. Not available with (A18) rear cargo door windows swing-out glass
U2K	**SIRIUSXM RADIO[2]** - Enjoy a Platinum Plan 3-month trial subscription with over 150 channels including commercial-free music, plus sports, news and entertainment. Plus listening on the SiriusXM[2] app, online and at home on compatible connected devices is included, so you'll hear the best SiriusXM[2] has to offer, anywhere life takes you. Welcome to the world of SiriusXM[2]. Included and only available with the combination of (UE1) OnStar and (UOH) AM/FM stereo with MP3 player and USB port or (WP9) Communications Package.
UFT	**SIDE BLIND ZONE ALERT[1]** - Included with (WPD) Safety Package. Requires (UD7) Rear Park Assist[1]
9J6	**STEERING COLUMN** - Tilt Steering column without cruise control. Not available with RPO (ZQ3) Convenience Package, RPO (K34) cruse control, RPO (UF3) high idle switch
NP5	**STEERING WHEEL** - Leather-wrapped. Model CG23405 and CG23705: Included with (WP9) Communications Package. Requires (ZQ3) Driver Convenience Package and (U0F) AM/FM stereo with MP3 player or (U0H) AM/FM stereo with MP3 player and USB port, Model CG33405 and CG33705 Requires (ZQ3) Driver Convenience Package and (U0F) AM/FM stereo with MP3 player or (U0H) AM/FM stereo with MP3 player and USB port.
5L3	**TRIM PANEL** - Sides, side and rear cargo door. Base level passenger van interior panels and trim on the sides, side cargo doors and rear doors of a cargo van. Does not include rear headliner. Required and only available with (Y3H) Paratransit Package. Not available with (ASF) head curtain side impact airbags and (PPC) Trim panels, hinged rear side doors and hinged rear doors
R6S	**TRIM PANEL (PPC) DELETE** - rear side and rear doors
DAA	**VISORS** - Driver and front passenger, vinyl in lieu of standard cloth. Model CG23405, CG23705 and CG33405: Included with (AR7) front bucket seats with vinyl trim and (Y3H) Paratransit Package. Model CG33705: Included with (AR7) front bucket seats with vinyl trim
DSB	**WINDOW SECURITY BAR DELETE** - Rear side door glass. For models CG23405, CG23705 and CG33405, included and only available with (Y3H) Paratransit Package or (ZP6) 5-passenger Express Crew Van Package. For CG33705, included and only available with (YF2) Ambulance Package, (Y3H) Paratransit Package or (ZP6) 5-passenger Express Crew Van Package.

1. Safety or driver assistance features are no substitute for the driver's responsibility to operate the vehicle in a safe manner. The driver should remain attentive to traffic, surroundings and road conditions at all times. Visibility, weather, and road conditions may affect feature performance. Read the vehicle's owner's manual for more important feature limitations and information.2. If you decide to continue service after your trial, your selected subscription plan will automatically renew thereafter. You will be charged at then-current rates. Fees and taxes apply. To cancel you must call SiriusXM at 1-866-635-2349. See SiriusXM Customer Agreement for complete terms at SiriusXM.com. All fees and programming subject to change. ©2018 Sirius XM Radio Inc. All rights reserved.

OPTIONAL EXTERIOR FEATURES

G7K	**ANTENNA EQUIPMENT** - Includes additional antenna, cable and ground plate. Provides additional ability to relocate standard OnStar[1]® antenna, cable length 25 ft. Ships loose. Requires (UE1) OnStar[1]®
VXW	**ASSIST STEPS -** Molded
8S3	**BACKUP ALARM 97 DECIBELS -** Rear frame mounted back-up alarm. Not available with RPO (ZR7) Chrome Appearance Package or RPO (UJ1) brake warning indicator.
V37	**BUMPERS** - Front and rear chrome with step pad (included with ZR7 Chrome Appearance Package)
ZR7	**CHROME APPEARANCE PACKAGE** - Includes (V37) front and rear chrome bumpers with step-pad and (V22) chrome grille
C49	**DEFOGGER** - Rrear-window electric. Requires (A12) fixed rear doors window glass without (AJ1) Solar-Ray deep-tinted glass or (A18) rear cargo door windows swing-out glass with (AJ1) Solar-Ray deep-tinted glass.
YA2	**DOOR** - Sliding passenger side
ZW1	**GLASS, SWING-OUT REAR CARGO DOOR WINDOW** - Requires (ZW2) rear door glass. Requires (A19) swing-out rear side door window glass when ordered with (ZW3) rear doors and side cargo doors glass, (ZW4) rear doors, side cargo door and rear passenger side quarter fixed glass or (ZW6) full body window package glass
ZW6	**GLASS, FULL BODY WINDOW PACKAGE** - Included with (ZP6) 5-passenger Express Crew Van Package. When ordered with (ZP6) includes (A12) fixed rear doors window glass and (A19) swing-out rear side door window glass. Upgradeable to (A18) swing-out rear cargo door windows glass and (A19) swing-out rear side door window glass. *Only available with (ZP6) 5-passenger Express Crew Van Package*
ZW3	**GLASS, FIXED REAR DOORS AND SIDE CARGO DOORS** - For models except CG33705, includes (A12) fixed rear doors window glass and (A13) fixed rear side door window glass. Upgradeable to (A12) fixed rear doors window glass and (A19) swing-out rear side door window glass or (A18) swing-out rear cargo door windows glass and (A19) swing-out rear side door window glass. Included with (PCH) Hotel Shuttle Package. Not available with (ZP6) 5-passenger Express Crew Van Package or (Y3H) Paratransit Package. For CG33705 Includes (A12) fixed rear doors window glass and (A13) fixed rear side door window glass. Upgradeable to (A12) fixed rear doors window glass and (A19) swingout rear side door window glass or (A18) swing-out rear cargo door windows glass and (A19) swing-out rear side door window glass. Included with (PCH) Hotel Shuttle Package. Required with (YF2) Ambulance Package. Not available with (ZP6) 5-passenger Express Crew Van Package, (Y3H) Paratransit Package.
ZW4	**GLASS, FIXED REAR DOORS, SIDE CARGO DOOR AND REAR PASSENGER-SIDE QUARTER** - For all models except CG33705, includes (A12) fixed rear doors window glass and (A13) fixed rear side door window glass. Upgradeable to (A12) fixed rear doors window glass and (A19) swingout rear side door window glass or (A18) swing-out rear cargo door windows glass and (A19) swing-out rear side door window glass. Not available with (ZP6) 5-passenger Express Crew Van Package,(PCH) Hotel Shuttle Package or (Y3H) Paratransit Package. For CG33705, includes (A12) fixed rear doors window glass and (A13) fixed rear side door window glass. Upgradeable to (A12) fixed rear doors window glass and (A19) swing-out rear side door window glass or (A18) swing-out rear cargo door windows glass and (A19) swing-out rear side door window glass. Not available with (ZP6) 5-passenger Express Crew Van Package,(PCH) Hotel Shuttle Package, (YF2) Ambulance Package or (Y3H) Paratransit Package.
ZW2	**GLASS, FIXED REAR DOORS** - For all models except CG33705 includes (A12) fixed rear doors window glass upgradable to (A18) rear cargo door window swing out glass not available with (ZP6) 5 - passenger Express crew van package (PCH) hotel shuttle package or (Y3H) paratransit package. For CG33705, includes (A12) fixed rear door window glass, upgradable to (A18) rear cargo door with swing - out glass. Not available with (ZP6) 5 - passenger Express crew van package, (PCH) hotel shuttle package, (YF2) ambulance package or (Y3H) paratransit package.
AJ1	**GLASS, SOLAR-RAY DEEP-TINTED** - Deep-tinted (all windows except light-tinted glass on windshield and driver- and front passenger-side glass)
A12	**GLASS, FIXED REAR DOORS WINDOWS** - Included and only available when (ZW*) is ordered. Not available with (ZW1) fixed right side cargo door glass
A13	**GLASS, FIXED REAR DOORS WINDOWS** - Included and only available when (ZW*) is ordered. Not available with (ZW2) rear door glass
A18	**GLASS, SWING-OUT REAR CARGO DOOR WINDOWS** - Requires (ZW2) rear doors fixed glass. Requires (A19) swing-out rear side door window glass when ordered with (ZW3) rear doors and side cargo doors fixed glass, (ZW4) rear doors, side cargo door and rear passenger side quarter fixed glass or (ZW6) full body window package fixed glass.
A19	**GLASS, SWING-OUT REAR SIDE DOOR AND REAR WINDOW** - Requires (AJ1) Solar-Ray deep-tinted glass when ordered with (YA2) sliding passenger-side door. Not available with (ZW2) Seating, Driver and Passenger, High-Back Bucket. If ordered with (A12) fixed rear doors window glass, (C49) window defogger is required
U05	**HORN** - Dual-note high and low
5Z5	**HUBCAP DELETE** - Deletes gray center caps from standard wheels - Not available with RPO (P03) wheel trim chrome center cap
VXW	**MOLDED ASSIST STEPS** - Dealer Installed
5H3	**ORNAMENTATION** - Exterior Delete. Deletes all exterior ornamentation on rear doors
UFA	**OUTSIDE TEMPERATURE DISPLAY** - Located in the Driver Information Center.

OPTIONAL EXTERIOR FEATURES (cotinued)

9W3	**PAINT, SOLID WHEATLAND YELLOW** - All extraneous body components formerly color-keyed to body color, will be flat Black with SEO paint. Requires SEO (TGK) Solid paint, one color. May require extended lead time.
9W4	**PAINT, SOLID, TANGIER ORANGE** - All extraneous body components formerly color-keyed to body color, will be flat Black with SEO paint Requires SEO (TGK) Solid paint, one color. May require extended lead time.
9V5	**PAINT, SOLID, WOODLAND GREEN** - All extraneous body components formerly color-keyed to body color, will be flat Black with SEO paint Requires SEO (TGK) Solid paint, one color. May require extended lead time.
8S3	**REAR BACKUP ALARM** - 97 decibels rear frame mounted back-up alarm. Not available with RPO (ZR7) Chrome Appearance Package or RPO (UJ1) brake warning indicator.
5H6	**SAFETY REFLECTOR TRIANGLE KIT** - Provides a break-down warning kit consisting of 3 reflective triangles, Item shipped loose for later placement and securing in after-market installation
VLU	**SECURITY SCREEN PACKAGE, WITHOUT REAR WINDOW POP-OUT** - Requires a (ZW*) fixed glass. Not available with (A18) rear cargo door windows swing-out glass
ZX9	**TIRE, SPARE DELETE** - Jack is not included
Q8C	**TIRE VALVE STEM CAPS** - Air through valve caps on the tire air valves
40P	**WHEEL FINISH, PAINTED WHITE** - White-painted wheels in lieu of standard Gray painted wheels (includes spare wheel) Not available with option 5GO
5G0	**WHEEL FINISH, PAINTED BLACK** - Wheels painted Black in lieu of standard Gray painted wheels Includes painting of spare wheel. Not available with RPO (P03) wheel trim chrome center cap
P03	**WHEEL TRIM** - Chrome center cap
ASB	**WINDOW SECURITY BAR** - Rear side door glass. Included and only available with Glass window package (ZW3) rear doors and side cargo door glass, (ZW4) rear doors, side cargo door and rear passenger-side quarter fixed glass or SEO (ZW1) side cargo door glass
DSB	**WINDOW SECURITY BAR DELETE** - Rear side door glass Model CG23405, CG23705 and CG33405 Included and only available with (ZP6) 5-passenger Express Crew Van Package. Model CG33705 Included and only available with (ZP6) 5-passenger Express Crew Van Package

OPTIONAL ELECTRICAL FEATURES

9L7	**WIRING JUNCTION BLOCK**, Equipment accessory, includes 2-30 amp circuits. Requires (KG4) alternator 150 amp or (KW5) alternator 220 amp and (TP2) dual 600 and 770 isolated batteries. (Not available with (RGI) front instrument panel routing grommet)

OPTIONAL MECHANICAL FEATURES

KW5	**ALTERNATOR** - 220 amps
TP3	**BATTERY, 770 COLD-CRANKING AMPS PRIMARY** - Isolated 2nd heavy-duty 770 cold-cranking amps, allows 2nd battery to be used when the vehicle is not running without affecting ability to start the vehicle.
UJ1	**BRAKE WANING INDICATOR** - Monitors brake system pressure, with loss of pressure an audible alarm (chime) and cluster telltale is lit
V10	**COLD CLIMATE PACKAGE** - Includes (K05) engine block heater.
G80	**DIFFERENTIAL** - Heavy-duty locking rear
L8T	**ENGINE** - 6.6L V8 with Direct Injection and Variable Valve Timing, gasoline, (401 hp [299 kW] @ 5200 rpm, 464 lb-ft of torque [629 N-m] @ 4000 rpm) 1 - Requires (KG4) 150-amp alternator or (KW5) 220-amp alternator. Includes external engine oil cooler. Reference the Engine/Axle page for availability. Included with (WP9) Communications Package, (WPD) Safety Package and (ZL3) Enhanced Convenience Package. Requires (MYD) 6-speed heavy-duty automatic transmission. 2 - Requires (KG4) 150-amp alternator or (KW5) 220-amp alternator. Includes external engine oil cooler. Reference the Engine/Axle page for availability. Requires (MYD) 6-speed heavy-duty automatic transmission.
K05	**ENGINE BLOCK HEATER** - Included with (V10) Cold Climate Package
5H5	**FIRE EXTINGUISHER** - 2.5 lb. Dry chemical BC rated. Item shipped loose for later placement and securing in after-market installation
8E1	**FUEL, ADDITIONAL 3-GALLONS** - 3 gallons of fuel in addition to normal assembly plant fill
7T6	**FUEL FITTING**, A fuel tank with a fuel take-off fitting that a body builder may utilize to attach an auxiliary engine fueling device.

OPTIONAL MECHANICAL FEATURES (cotinued)

9C2	**GOVERNOR** - Electronic speed sensor set to 65 MPH. Electronic software to facilitate 65-MPH maximum road speed Requires a Fleet order. Not available with (K34) cruise control or ZQ3 Driver Convenience Package.
9B9	**GOVERNOR** - Electronic speed sensor set to 70 MPH. Provides electronic software to limit maximum road speed to 70-MPH. Cruise control limited to 65 MPH. Requires a Fleet order type
9D7	**GOVERNOR** - Electronic speed sensor set to 75 MPH Provides electronic software to limit maximum road speed to 75-MPH with gasoline engine. Cruise control limited to 70 MPH. Requires a Fleet order type.
UF3	**HIGH IDLE SWITCH** - Requires (K34) cruise control. Not available with (LV1) 4.3L V6 engine
PSR	**POWER STEERING RESERVOIR** - With glass sight, for checking fluid level
5C4	**SPRINGS, FRONT** - High Rate Upgrade, Upfitter option. Provides computer selected high rate front springs based on the front weight of the vehicle. Intended for a upfit that requires higher center of gravity loads that are located at or near the front axle. Provides increased front spring capacity but will not change the front GVWR rating. (Replaces standard computer selected suspension). Requires models *G33405 or *G33705 and a shipment to an upfitter or body builder
Z82	**TRAILERING EQUIPMENT** - Heavy-duty, 4-pin/7-pin sealed connector. Includes (UY7) trailering provisions, trailering wire harness only
UY7	**TRAILERING WIRING PROVISIONS** - Trailering wire harness only. Included with (Z82) heavy-duty trailering equipment
MYD	**TRANSMISSION 6-SPEED AUTOMATIC** - heavy-duty, electronically controlled with overdrive and tow/haul mode. Includes Cruise Grade Braking, Powertrain Grade Braking, and Tap-Up/Tap-Down Driver Shift Control. Requires (L8T) 6.6L gas V8 engine. Reference the Engine/Axle page for availability.

THIS PAGE IS INTENTIONALLY BLANK PENDING FINALIZATION.
SEE YOUR DEALER FOR ONSTAR CONNECTED SERVICES OPTIONS.

THIS PAGE IS INTENTIONALLY BLANK PENDING FINALIZATION.
SEE YOUR DEALER FOR ONSTAR CONNECTED SERVICES OPTIONS.

POWERTRAIN

ENGINE					TRANSMISSION		AXLE	
MODEL	**CODE**	**TYPE**	**DISPLACEMENT LITERS/CU. IN.**	**FUEL SYSTEM**	**STANDARD**	**TYPE**	**OPTION CODE**	**RATIO**
Standard	LV1	V6	4.3/262	DI	Automatic M5U	Automatic 8-speed	GU6	3.42
Optional	L8T	V8	6.6/403	DI	Automatic MYD	Automatic HD 6-speed	GU6	3.42

AUTOMATIC TRANSMISSION RATINGS[1]

	(LV1) 4.3L V6 gasoline		(L8T) 6.6L V8 gasoline	
MODEL	**AXLE RATIO**	**Maximum Trailering Capacity lbs. (kg)**	**AXLE RATIO**	**Maximum Trailering Capacity lbs. (kg)**
CG23405	3.42	7400 (3357)	3.42	10000 (4536)
CG23705	3.42	7100 (3221)	3.42	10000 (4536)
CG33405	3.42	7400 (3357)	3.42	10000 (4536)
CG33705	3.42	7200 (3266)	3.42	10000 (4536)

The wiring system is designed to operate with maximum performance and reliability. Adding electrical accessories to the vehicle for which it was not designed, would case abnormalities in the electrical system.
The electrical system was designed to handle one additional stop/turn light bulb per tail light circuit (one added stop/turn light bulb to the right and left side). It is not recommended to add more than one bulb per circuit as it will result in damage to the electrical system (without optional trailer Towing Wiring). It is highly recommended to order the van with the optional (UY7) trailering wire harness only, trailering provisions for towing.

GCWR For Engine/Rear Axle Ratio Combination

(GCWR) GROSS COMBINATION WEIGHT RATINGS LBS. (KG)	
ENGINE	**AXLE**
15,000 (6804) (LV1) 4.3L V6 gasoline	3.42
16,000 (7258) (L8T) 6.6L V8 gasoline	3.42

EMISSIONS - MUST BE SPECIFIED

FE9	**Emissions,** Federal requirements
YF5	**Emissions**, California state requirements
NE1	**Emissions,** Connecticut, Delaware, Maine, Maryland, Massachusetts, New Jersey, New York, Oregon, Pennsylvania, Rhode Island, Vermont and Washington state requirements
NB8	**Emissions override**, California (allows a dealer in states that require California emissions - California, Connecticut, Delaware, Maryland, Massachusetts, New Jersey, New York, Oregon, Pennsylvania, Rhode Island or Washington - to order Federal emissions for a vehicle that will be registered in a state that has Federal emission requirements). Do not use for vehicles that will be registered in California, Connecticut, Delaware, Maryland, Massachusetts, New Jersey, New York, Oregon, Pennsylvania, Rhode Island or Washington. Requires (FE9) Federal emissions requirements. Not available in Maine or Vermont.
NB9	**Emissions override**, state-specific (for dealers ordering vehicles in (YF5) or (NE1) emission states - California, Connecticut, Delaware, Maine, Maryland, Massachusetts, New Jersey, New York, Oregon, Pennsylvania, Rhode Island, Vermont and Washington) Allows a California dealer (YF5 emissions) to order (NE1) emissions with (NB9) emissions override code for registration in (NE1) states; or, a Connecticut, Delaware, Maine, Massachusetts, New Jersey, New York, Oregon, Pennsylvania, Rhode Island, Vermont and Washington dealer (NE1 emissions) to order (YF5) emissions with (NB9) emissions override code for registration in California.
NC7	**Emissions override**, Federal (for vehicles ordered by dealers in Federal emission states with (YF5) or (NE1) emissions - Not required for vehicles being shipped to California, Connecticut, Delaware, Maine, Maryland, Massachusetts, New Jersey, New York, Oregon, Pennsylvania, Rhode Island, Vermont or Washington) Requires (YF5) California state emissions requirements or (NE1) Connecticut, Delaware, Maine, Massachusetts, New York, Pennsylvania, Rhode Island or Vermont state emission requirements.

1. Before you buy a vehicle or use it for trailering, carefully review the Trailering section of the Owner's Manual. The weight of passengers, cargo and options or accessories may reduce the amount you can tow

SPECIFICATIONS - GAS ENGINE

GENERAL

Model G2500 Regular Wheelbase RWD (CG23405)
Model G2500 Extended Wheelbase RWD (CG23705)
Model G3500 Regular Wheelbase RWD (CG33405)
Model G3500 Extended Wheelbase RWD (CG33705)
Projected top speed on all Express Cargo Van models is 98 mph

NOTE: Adding non dealer accessories or making modifications to the vehicle can affect vehicle performance, aerodynamics, and overall top speed.

	CG23405 G2500 Regular Rear Wheel Drive 1WT	**CG23705 G2500 Extended Rear Wheel Drive 1WT**	**CG33405 G3500 Regular Rear Wheel Drive 1WT**	**CG33705 G3500 Extended Rear Wheel Drive 1WT**
ENGINE V6 (LV1)				
Fuel	GAS	GAS	GAS	GAS
Displacement: liters/cu. in.	4.3/262	4.3/262	4.3/262	4.3/262
Horsepower @ rpm	276@5200	276@5200	276@5200	276@5200
Torque lb.-ft. @ rpm	298@3900	298@3900	298@3900	298@3900
Fuel system	DI	DI	DI	DI
Exhaust	Single	Single	Single	Single
Minimum recommended fuel octane	87	87	87	87
Approximate fuel tank capacity (gallons/liters)	31/117.3	31/117.3	31/117.3	31/117.3
ENGINE V8 (L8T)				
Fuel	GAS	GAS	GAS	GAS
Displacement: liters/cu. in.	6.6/403	6.6/403	6.6/403	6.6/403
Horsepower @ rpm	401@5200	401@5200	401@5200	401@5200
Torque lb.-ft. @ rpm	464@4000	464@4000	464@4000	464@4000
Fuel system	DI	DI	DI	DI
Exhaust	Single	Single	Single	Single
Minimum recommended fuel octane	87	87	87	87
Approximate fuel tank capacity (gallons/liters)	31/117.3	31/117.3	31/117.3	31/117.3
TRANSMISSION				
Automatic LV1 V6	8-speed	8-speed	8-speed	8-speed
Automatic L8T V8	6-speed HD	6-speed HD	6-speed HD	6-speed HD
AXLE				
Ratio	3.42	3.42	3.42	3.42
CHASSIS				
Frame	Full length boxed frame	Full length boxed frame	Full length boxed frame	Full length boxed frame
Front suspension	Independent with coil spring and stabilizer bar	Independent with coil springs and stabilizer bar	Independent with coil springs and stabilizer bar	Independent with coil springs and stabilizer bar
Rear suspension	Hypoid driver axle w/multi-leaf springs	Hypoid driver axle w/multi-leaf springs	Hypoid driver axle w/multi-leaf springs	Hypoid driver axle w/multi-leaf springs
Steering type	Speed sensitive, variable ratio, integral power	Speed sensitive, variable ratio, integral power	Speed sensitive, variable ratio, integral power	Speed sensitive, variable ratio, integral power
Steering ratio	17.2:1	17.2:1	17.2:1	17.2:1
BRAKES				
ABS hydra-boost	Disc/Disc	Disc/Disc	Disc/Disc	Disc/Disc
Front size	12.8″	12.8″	12.8″	12.8″
Rear size	13.0″	13.0″	13.0″	13.0″
TIRES				
Type	All-season	All-season	All-season	All-season
Size	LT245/75R16	LT245/75R16	LT245/75R16	LT245/75R16
WHEELS				
Type	Steel	Steel	Steel	Steel
Size	16″ x 6.5″	16″ x 6.5″	16″ x 6.5″	16″ x 6.5″
BATTERY				
Type	Maintenance free	Maintenance free	Maintenance free	Maintenance free
BCI group size	78	78	78	78
Volts	12	12	12	12
Cold cranking amps	600	600	600	600
ALTERNATOR				
Amps	105	105	105	105

SPECIFICATIONS - GAS ENGINE

EXTERIOR (in./mm)	CG23405 G2500 Regular Rear Wheel Drive	CG23705 G2500 Extended Rear Wheel Drive	CG33405 G3500 Regular Rear Wheel Drive	CG33705 G3500 Extended Rear Wheel Drive
Wheelbase	135/3433	155/3941	135/3433	155/3941
Overall length	224.0/5691	244.0/6199	224.0/5691	244.0/6199
Body width (with mirrors)	79.3/2013	79.3/2013	79.3/2013	79.3/2013
Overall height, at roof*	84.7/2153	84.2/2140	84.7/2153	84.2/2140
Front bumper to axle	39.7/1008	39.7/1008	39.7/1008	39.7/1008
Opening height, rear door*	49.4/1255	47.9/1218	49.4/1255	47.9/1218
Opening width, sliding side door	45.3/1150	45.3/1150	45.3/1150	45.3/1150
Opening width, rear door, at beltline	53.4/1357	53.4/1357	53.4/1357	53.4/1357
Step up height, front door*	27.7/703	27.4/697	27.7/703	27.4/697
Step up height, side door*	28.3/718	27.9 709	28.3/718	27.9/709
Ground to top of rear load floor*	30.3/770	29.8/756	30.3/770	29.8/756
Ground clearance, front*	9.72/247	9.65/245	9.72/247	9.65/245
Ground clearance, rear*	8.62/219	8.6/218	8.62/219	8.6/218
Sign panel area, side panel width	116.5/2958.3	136.6/3470.6	116.5/2958.3	136.6/3470.6
Sign panel area, side panel height	61.3/1556.3	61.3/1556.3	61.3/1556.3	61.3/1556.3
Front stabilizer bar diameter, in./mm	1.4/35	1.4/35	1.4/35	1.4/35
Overhang, front	39.7/1008	39.7/1008	39.7/1008	39.7/1008
Overhang, rear	49.2/1250	49.2/1250	49.2/1250	49.2/1250

*Published dimensions indicated are at Base Curb Weight.

INTERIOR (in./mm)				
Head room, front	40.9/1038	40.9/1038	40.9/1038	40.9/1038
Shoulder room, front	68.9/1749	68.9/1749	68.9/1749	68.9/1749
Hip room, front	65.5/1663	65.5/1663	65.5/1663	65.5/1663
Leg room, front	41.4/1050	41.4/1050	41.4/1050	41.4/1050
Load floor length, to front seat, at floor	126.8/3219	146.8/3727	126.8/3219	146.8/3727
Load floor length, to engine cover, at floor	154.7/3929	173.7/4411	154.7/3929	173.7/4411
Inside width, between wheelhousing	52.5/1333	52.5/1333	52.5/1333	52.5/1333
Cargo area height	55.1/1399	55.1/1399	55.1/1399	55.1/1399
Cargo volume behind 1st row seat (cu. ft.)	239.4/6780	283.6/8032	239.4/6780	283.6/8032

CAPACITY LV1-V6				
GVWR[1], lbs./kg	8600/3901	8600/3901	9600/4355	9600/4355
Payload[2], lbs./kg	3280/1488	3060/1388	4250/1928	4060/1842
Base curb weight, lbs./kg	5261/2386	5483/2487	5288/2399	5486/2488
Seating capacity (front)	2	2	2	2
Optional seating capacity (front/rear)	2/3	2/3	2/3	2/3
Fuel capacity, approximate, U.S., gallon/liters	31/117	31/117	31/117	31/117

CAPACITY L8T-V8				
GVWR[1], lbs./kg	8600/3901	8600/3901	9600/4355	9900/4491
Payload[2], lbs./kg	3060/1388	2790/1266	4010/1819	4060/1842
Base curb weight, lbs./kg	5488/2489	5753/2610	5533/2510	5757/2611
Seating capacity (front)	2	2	2	2
Optional seating capacity (front/rear)	2/3	2/3	2/3	2/3
Fuel capacity, approximate, U.S., gallon/liters	31/117	31/117	31/117	31/117

NOTE: See Vehicle Load Limits in your Owner's Manual for loading information.

1. Gross Vehicle Weight Rating (GVWR). When properly equipped, includes vehicle, passengers, cargo and equipment.
2. These maximum payload ratings are intended for comparison purposes only. Before you buy a vehicle or use it to haul people or cargo, carefully review the vehicle loading section of the Owner's Manual and check the carrying capacity of your specific vehicle on the label on the inside of the driver's door jamb.

MATERIAL DIMENSIONS FOR BODY WRAP AND GRAPHIC ESTIMATIONS

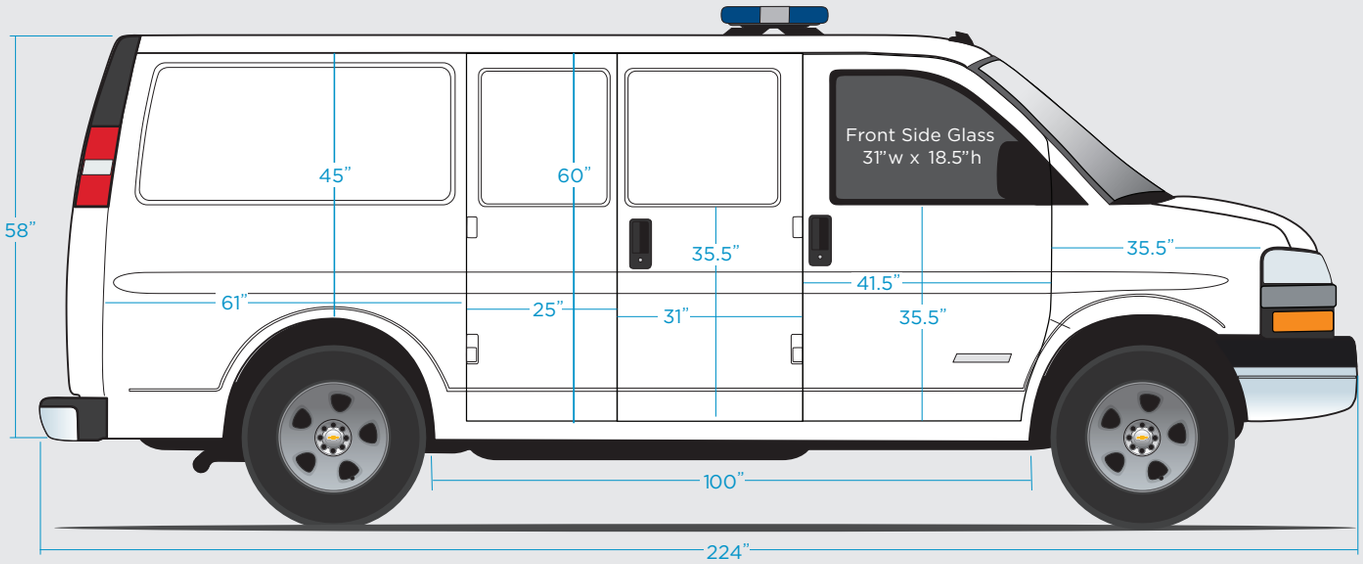

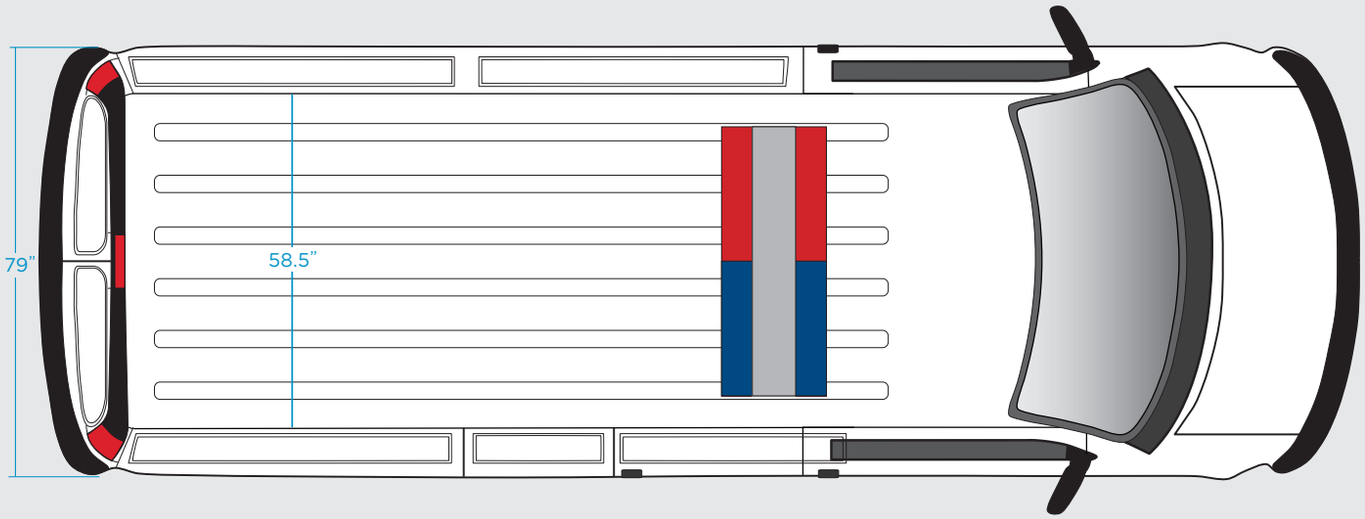

135" Regular Wheelbase G2500 Shown

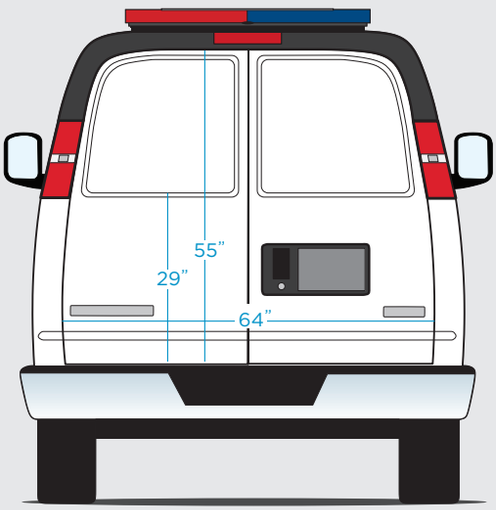

AIRBAGS

TOP VIEW OF INSTRUMENT PANEL AND APPROXIMATE DEPLOYMENT AREA OF THE AIRBAG ZONE

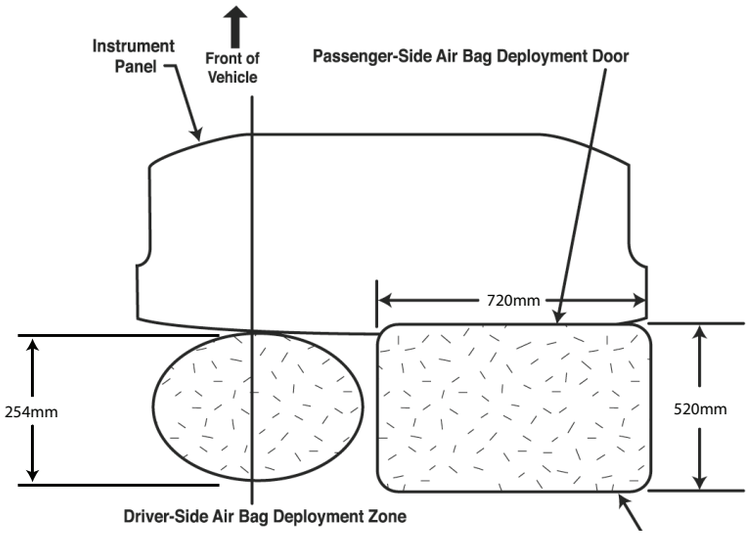

REAR VIEW OF INSTRUMENT PANEL AND APPROXIMATE DEPLOYMENT AREA OF THE AIRBAG ZONE

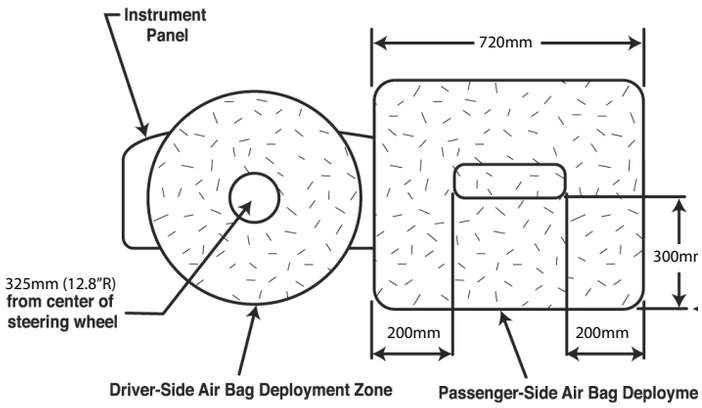

RIGHT SIDE VIEW OF INSTRUMENT PANEL AND APPROXIMATE DEPLOYMENT AREA OF THE AIRBAG ZONE

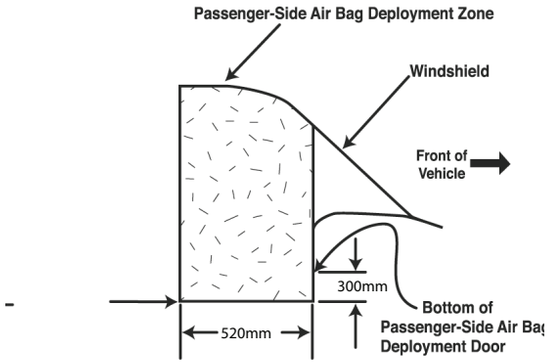

Sitting too close to an airbag when it deploys can increase the risk of serious injury or death. Always properly wear your seat belt. See Owner's Manual for more information.

AIRBAGS

ROOF RAIL-MOUNTED HEAD CURTAIN AND SEAT BACK-MOUNTED SIDE IMPACT AIRBAG DEPLOYMENT ZONES. PASSENGER SIDE SHOWN, DRIVER SIDE SIMILAR

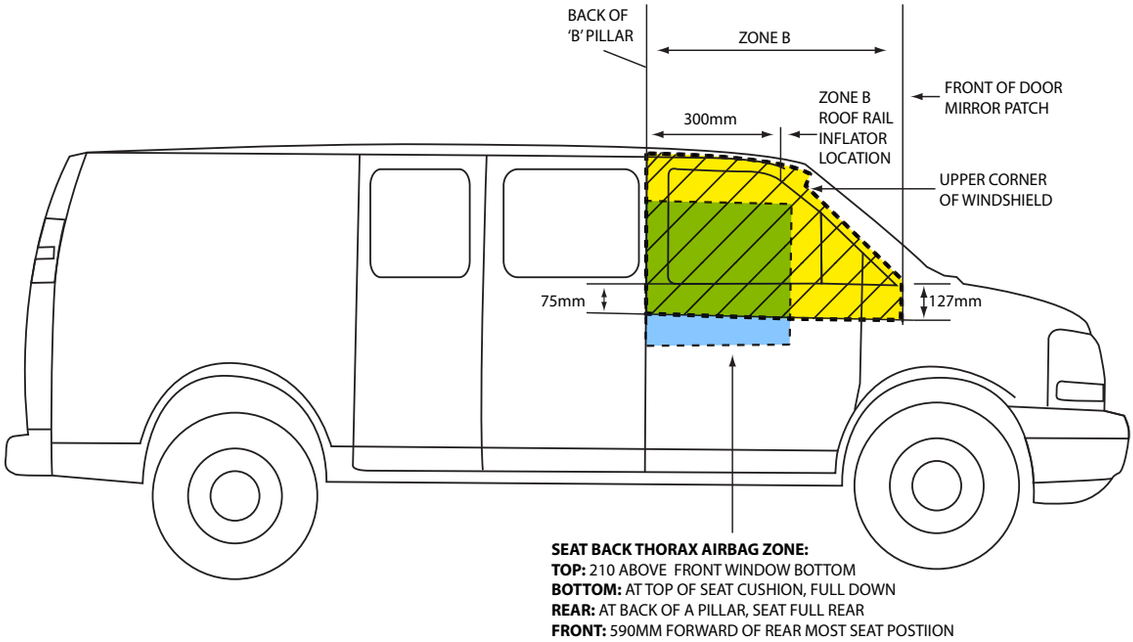

LONG W.B. SHOWN, SHORT W.B. SIMILAR

AIR BAG ZONE	USAGE	VEHICLE DESCRIPTION
B	LH/RH	CARGO/WORK VAN (DRIVER/FRONT PASSENGER ONLY

ROOF RAIL-MOUNTED HEAD CURTAIN AND SEAT BACK-MOUNTED SIDE IMPACT AIRBAG DEPLOYMENT ZONES FOR DRIVER AND FRONT OUTBOARD PASSENGER. VIEW FROM CARGO AREA

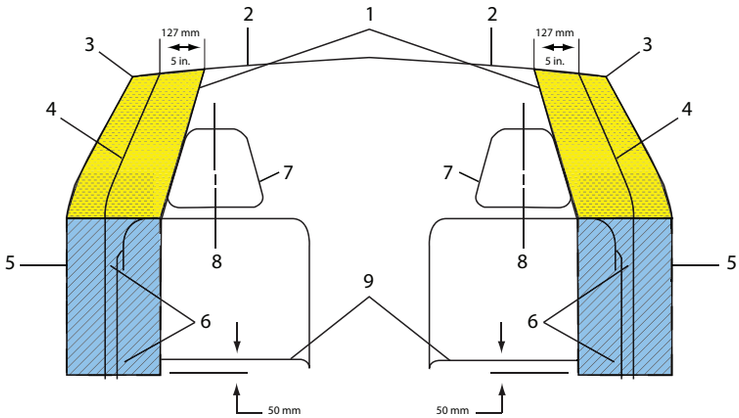

1. Head Curtain Airbag Deployment Zone
2. Underside of Headliner
3. Edge of Headliner
4. Inner Pillar Trim
5. Inner Front Door Trim
6. Front Seatback Side Deployment Zone
   H: 520 mm Above Seat Cushion
   W: 180 mm From Door Trim
7. Front Seat Back
8. Seat Centerline
9. Top of Seat Cushion

Sitting too close to an airbag when it deploys can increase the risk of serious injury or death. Always properly wear your seat belt. See Owner's Manual for more information.

AIRBAGS FAQ

Q: Can equipment such as radar devices, video cameras, and radio trees be mounted in a specialty vehicle equipped with a right front passenger frontal airbag?

A: Yes, but care must be taken to properly mount the equipment outside of the airbag "deployment zone."

Q: What is the airbag "deployment zone"?

A: The term "deployment zone" describes the space an airbag takes up when fully inflated. Airbags need room to work properly, and anything in the "deployment zone" – such as improperly mounted equipment – can greatly affect the performance of the airbag.

Q: How can I identify the airbag "deployment zone" in my vehicle?

A: See Airbag Deployment Diagrams for more information. The diagrams provide the approximate dimensions of the "deployment zones" for your specialty vehicle. Before doing any service work, including the installation of any equipment, consult the appropriate service manual.

Q: Is it possible to shield equipment so it does not interfere with airbag deployment?

A: While shielding may protect certain equipment from being damaged or dislodged, it may also negatively affect how an airbag inflates. Therefore, we do not recommend the placement of any equipment in the deployment zone, even if shielded.

Q: Can the installation of push bumpers on the front end of the vehicle affect the deployment of the airbag?

A: It is not likely that installing push bumpers will affect deployment for the airbag as long as the vehicle structure itself is not modified. GM is not aware of any adverse defects effect on the deployment of the front airbags due to use of many aftermarket push bumpers installed on current GM police vehicles

See "Adding Equipment to the Airbag-Equipped Vehicle" in the owner manual for more information.

Customer-Installed Equipment
Before installing equipment, read the following.
Airbags inflate with great force, faster than the blink of an eye. No objects, such as shotguns, should be placed over or near the airbag covers. Equipment mounted too close to an inflating airbag could prevent the airbag from operating properly to protect the occupants or could be forced into an occupant or break and become a dangerous projectile, causing severe injury or even death. To help prevent injury and to allow the airbag to perform as it was designed, do not mount equipment inside the airbag deployment zones.

Do not attach anything to the steering wheel hub or mount any equipment within the deployment zone for the driver airbag.

Do not mount equipment on the passenger side of the instrument panel top pad deployment zone. Equipment should not be mounted on or around the passenger airbag opening because of a deploying airbag. To allow the airbag to perform as it was designed, do not mount equipment inside the airbag deployment zone.

Do not mount a security barrier such that the ends of the barrier or brackets are within the roof-rail airbag deployment zones.

Avoid installing wiring for roof-rail emergency lighting or radio antennas that may restrict the proper deployment of the roof-rail airbags.

GM approved service procedures must be followed to remove and reinstall the instrument panel to the pad to ensure proper airbag deployment.

The police vehicle has a rollover sensor mounted on the centerline of the vehicle between the driver and front outboard passenger positions. If the vehicle has individual front seats, the rollover sensor will be exposed. Do not mount equipment within 25 mm (1 in) of the rollover sensor. This may affect the performance of multiple restraint systems.

Sitting too close to an airbag when it deploys can increase the risk of serious injury or death. Always properly wear your seat belt. See Owner's Manual for more information.

ELECTRONIC STABILITY CONTROL SYSTEMS (STABILITRAK)

Stabilitrak systems help drivers maintain control of their vehicles, especially during emergency lane changes or avoidance maneuvers. Stabilitrak uses various sensors, such as steering wheel angle, wheel speed, yaw velocity, etc., to detect any difference between the path requested by the steering wheel position and vehicle's actual path. When appropriate, the system selectively controls brakes, engine power, and even suspension settings to enhance control of the vehicle's direction and help keep it on course.

See your owner's manual for additional information about the operation of Stabilitrak.

Q. How do I use Stabilitrak?
A. StabiliTrak operates independently of the driver. You should continue to drive your Stabilitrak equipped vehicle with caution and care. GM's Stabilitrak system, Stabilitrak is designed to be as seamless as possible in operation, and part of the overall vehicle response.

Q. How does Stabilitrak work?
A. Stabilitrak has the ability to apply control forces to the vehicle independent of the driver. Stabilitrak uses sensors to continuously compare the path indicated by the steering wheel position to the vehicle's actual path. If a discrepancy is detected, Stabilitrak selectively controls vehicle brakes and engine torque to create a yaw moment that helps restore the vehicle's actual path to the path indicated by the steering wheel position. Stabilitrak has the ability to help correct both understeer (where the vehicle is not turning as much as the steering wheel position indicates) and oversteer (where the vehicle is turning more than the steering wheel position indicates).

Q. Will a tire change affect Stabilitrak?
A. Use of tires other than original equipment may affect Stabilitrak performance. Stabilitrak is designed to make the best use of available traction. The performance characteristics of the original equipment tires are part of the overall system effectiveness. When you replace tires check the recommendations in your owner's manual. On GM vehicles, the original equipment tires have a "TPC" (Tire Performance Criteria) code on the sidewall. Replacing the tires with the same "TPC" code will help assure proper Stabilitrak performance.

DRIVER OPERATED TRACTION CONTROL BUTTON

An advanced computer controlled stability enhancement system assists the driver with directional control of the vehicle in difficult driving conditions. Each time the vehicle is started, the Stabilitrak system is fully on. Stabilitrak can be controlled by a Traction Control Button. The condition system is displayed by a Stabilitrak indicator light and Driver Information Center (DIC) Message. Push once to disable Traction Control. Push and hold to disable both Traction Control and Stabilitrak. In this condition, Stabilitrak will automatically turn ON when the vehicle speed exceeds 35 mph (56km/hr) while the Traction Control remains OFF. Push again to enable Traction Control and Stabilitrak.

MAINTENACE / LIMITED WARRANTY

SCHEDULED MAINTENANCE	One visit within first year of vehicle delivery[1]
BUMPER-TO-BUMPER LIMITED WARRANTY	3 years/36,000 miles[2]. Bumper-to-Bumper Limited Warranty with no deductible
TRANSFERABLE POWERTRAIN LIMITED WARRANTY	Qualified Fleet Customers: 5 years/100,000 miles[3]
TIRES[4]	3 years/36,000 miles[2]; coverage prorated after first 12,000 miles
ROADSIDE ASSISTANCE AND COURTESY TRANSPORTATION	Qualified Fleet Customers: 5 years/100,000 miles[3]
RUST-THROUGH	6 years/100,000 miles[2]
CORROSION	3 years/36,000 miles[2]
WHEEL ALIGNMENT AND BALANCE	Up to 7,500 miles[6]

1. Includes first required maintenance visit as stated in vehicle maintenance schedule. Maintenance visit consists of oil change, tire rotation and Multi-Point Vehicle Inspection. Does not include air filters. See participating dealer for other restrictions and complete details. Excludes vehicles ordered with fleet delete option RY9. **2.** Whichever comes first. See dealer for limited warranty details. **3.** Whichever comes first. A Qualified Fleet User is defined as a company that has purchased and registered or leased five (5) or more new cars/or trucks solely for use in its operation during the current or preceding calendar year, model year, preceding twelve (12) month period, or that owns or leases fifteen (15) or more cars and trucks. Excludes rental customers. See dealer for details. **4.** Tires also covered under the Bumper-to-Bumper limited Warranty but are prorated based upon mileage. See dealer for limited warranty details. **5.** If the vehicle has a warrantable failure, see your Owner's Manual for full details on the Courtesy Transportation program. **6.** Customer maintenance item after 7,500 miles.

GM reserves the right to make changes at any time, without notice, in prices, colors, materials, equipment, specifications, models, and availability. Specifications, dimensions, measurements, ratings, and other numbers in this catalog and other printed materials provided at the dealership or affixed to vehicles are approximates based upon design and engineering drawings and prototypes and laboratory tests. Your vehicle may differ due to variations in manufacture and equipment. Since some information may have been updated since the time of printing, please check with your GM dealer for complete details. Some of the equipment shown or described throughout this publication may be available at extra cost, and/or is supplied by an independent supplier.

Copyright 2022 General Motors. All rights reserved. All text, images, graphics, and other materials in this publication are subject to the copyright and other intellectual property rights of General Motors. These materials may not be reproduced, distributed, or modified without the express written permission of General Motors. The marks appearing in this publication including, but not limited to: GM and the GM logo; Chevrolet and their respective logos, emblems, slogans, and vehicle model names and body designs; and other marks such as GM Fleet and Commercial are trademarks and/or service marks of General Motors, its subsidiaries, affiliates, or licensors.

For more detailed information, contact your District Sales Manager or see the online order guide at gmfleet.com/police.

Copyright 2022 General Motors. All rights reserved. Chevrolet and the Chevrolet Emblem are registered trademarks of General Motors LLC.